MS/123
Ed. 1

STC

VALVES

APPLICATION REPORT

4X150/250 SERIES FORCED AIR-COOLED U.H.F. POWER TETRODES

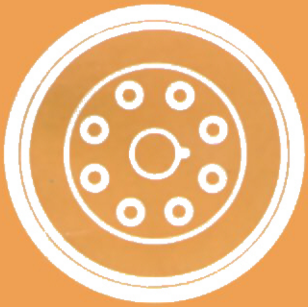

Standard Telephones and Cables Limited

FORCED AIR-COOLED
U.H.F. POWER TETRODES
4X150/250 SERIES

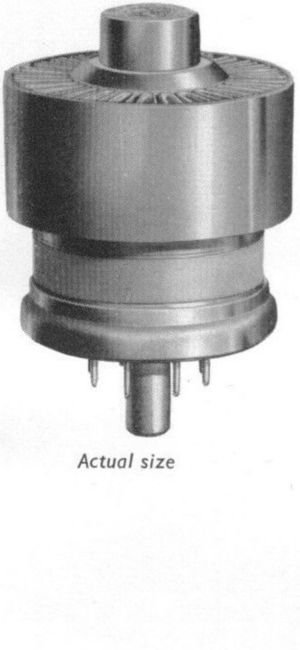
Actual size

Applications include :

- R.F. Power Amplifier
- Linear R.F. Amplifiers
- Pulse Applications, etc.
- High Current Voltage Stabiliser

Standard Telephones and Cables Limited

Registered Office: Connaught House, Aldwych, London, W.C.2

SPECIAL VALVE SALES DEPARTMENT
BRIXHAM ROAD, PAIGNTON, DEVON

CONTENTS

CONTENTS *(continued)*

FIGURES

CONTENTS *(continued)* *Page*

1. INTRODUCTION

The forced-air cooled U.H.F. power tetrode valves dealt with in this report are known as the 4X150/250 series : they comprise the following types :—

4X150A	(4H/135M)	CV2519
4X150D	(4H/136M)	CV3991
4X250B	(4H/160M)	CV2487
4CX250B	(4HC/160M)	

These valves are grouped as a series because the cathode, grid and screen assemblies, together with anode dimensions, are similar. However, they differ in respect of heater voltage and current, weight, cooling requirements and insulation media.

The 4X150A and 4X150D are identical but for heater voltage and current differences.

The 4X250B and 4CX250B differ in that ceramic, instead of glass, insulation is used in the base of the 4CX250B version : this allows a higher maximum seal temperature to be tolerated with safety. Both types have ceramic envelopes between the anode and screen grid ring connectors which allow higher r.f. currents than are permitted with the 4X150A to pass safely through the valves.

While the characteristics for general operation are described in this report, more specialised information on the use of these valves in less common applications may be obtained from the Valve Division of Standard Telephones and Cables Limited.

2. MECHANICAL DATA

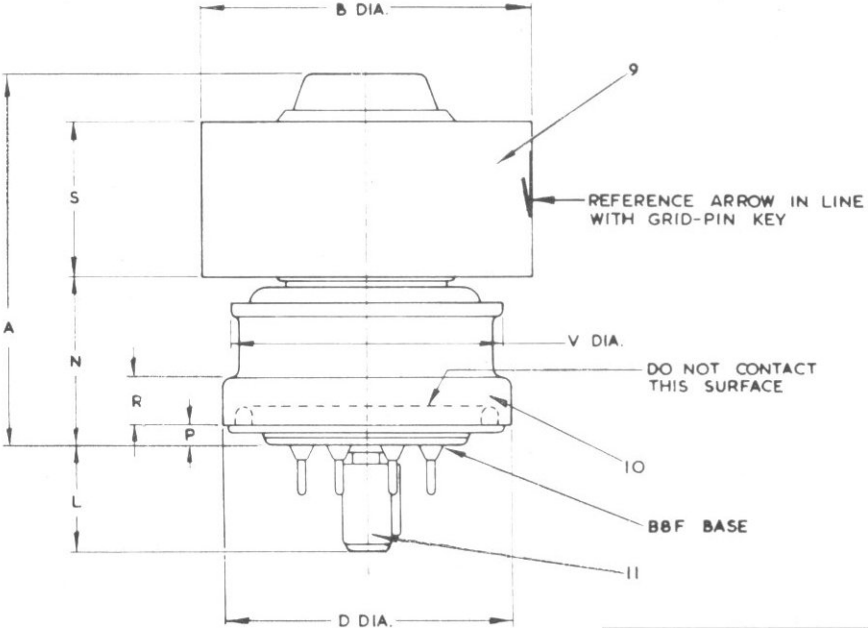

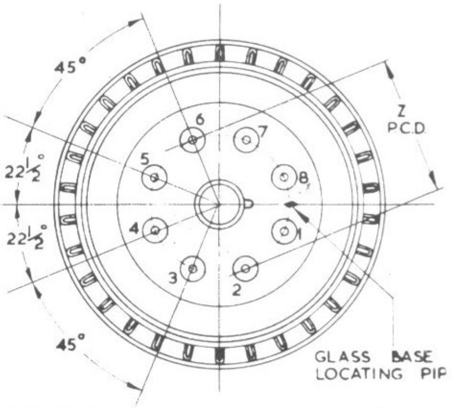

Basing Arrangement	
Pin No.	**Electrode**
1.	Grid 2
2.	Cathode
3.	Heater
4.	Cathode
5.*	Internal Conn.
6.	Cathode
7.	Heater
8.	Cathode

Contact	Electrode
9.	Anode
10.	Grid 2
11.	Grid 1

Dim.	Millimetres	Inches	Dim.	Millimetres	Inches
A	47,0 max.	1·850 max.	P	2,03 nom.	0·080 nom.
B	41,28 ± 0,38	1·625 ± 0·015	R	4,75 min.	0·187 min.
D	36,20 ± 0,20	1·425 ± 0·008	S	19,05 ± 1,02	0·750 ± 0·040
L	13,56 ± 0,51	0·534 ± 0·020	V	35,71 max.	1·406 max.
N	19,81 ± 0,76	0·780 ± 0·030	Z	17,46 nom.	0·687 nom.

Note :—Basic dimensions are inches.

***Denotes :**—Do not use for external connection.

Nett weight : 4X150A, 4X150D—4·25 oz (120 gm)

Fig. 1 Outline Drawing and Basing—4X150A, 4X150D

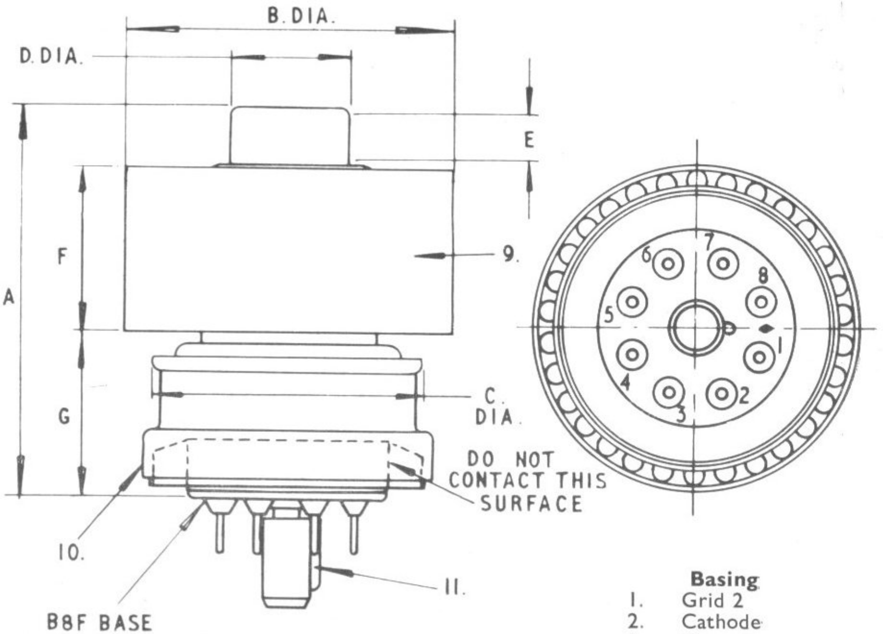

Contact	Electrode
9.	Anode
10.	Grid 2
11.	Grid 1

	Basing
1.	Grid 2
2.	Cathode
3.	Heater
4.	Cathode
*5.	Internal Conn.
6.	Cathode
7.	Heater
8.	Cathode

Dim.	Millimetres	Inches
A	45,98 min., 48,51 max.	1·810 min., 1·910 max.
B	40,89 min., 41,66 max.	1·610 min., 1·640 max.
C	35,71 max.	1·406 Max.
D	14,2 min., 14,55 max.	0·559 min., 0·573 max.
E	6,1 min., 7,11 max.	0·240 min., 0·280 max.
F	18,03 min., 20,07 max.	0·710 min., 0·790 max.
G	19,05 min., 20,57 max.	0·750 min., 0·810 max.

Note.—Basic dimensions are inches.

*Denotes :—Do not use for external connection.

Nett weight : 4X250B—4·25 oz (120 gm)
4CX250B—5·0 oz (140 gm)

Fig. 2 Outline Drawing and Basing—4X250B, 4CX250B

MOUNTING

The use of a special socket which has a " built-in " screen decoupling capacitor is recommended for all applications of these valves, with the possible exception of pulse operation. The following sockets are suitable :

Socket Code	Manufacturer	Value of Screen Decoupling Capacitor
VH88/802	Ediswan	3 000 to 3 600 pF
4X150A/4000	Eimac	2 500 to 3 000 pF

MOUNTING POSITION

There are no restrictions on the mounting position of these valves, but it should be borne in mind that the air flow must be directed in at the base of the valve and that care must be taken not to expose vulnerable components to the hot air emerging from the anode. Vertical positioning is recommended for all general applications where a choice is available.

AIR COOLING REQUIREMENTS

Maximum temperature of anode seal	200°C
Maximum temperature of anode core	250°C
Maximum temperature of base seal	175°C
Forced air cooling of base seals is required at all times :	
For an anode dissipitation of 250W :	
Volume of air required at 20°C	5·6 cu.ft/min 0·16 m^3/min
At a water gauge pressure of	0·6 in 15·2 mm

For other conditions see Fig. 3.

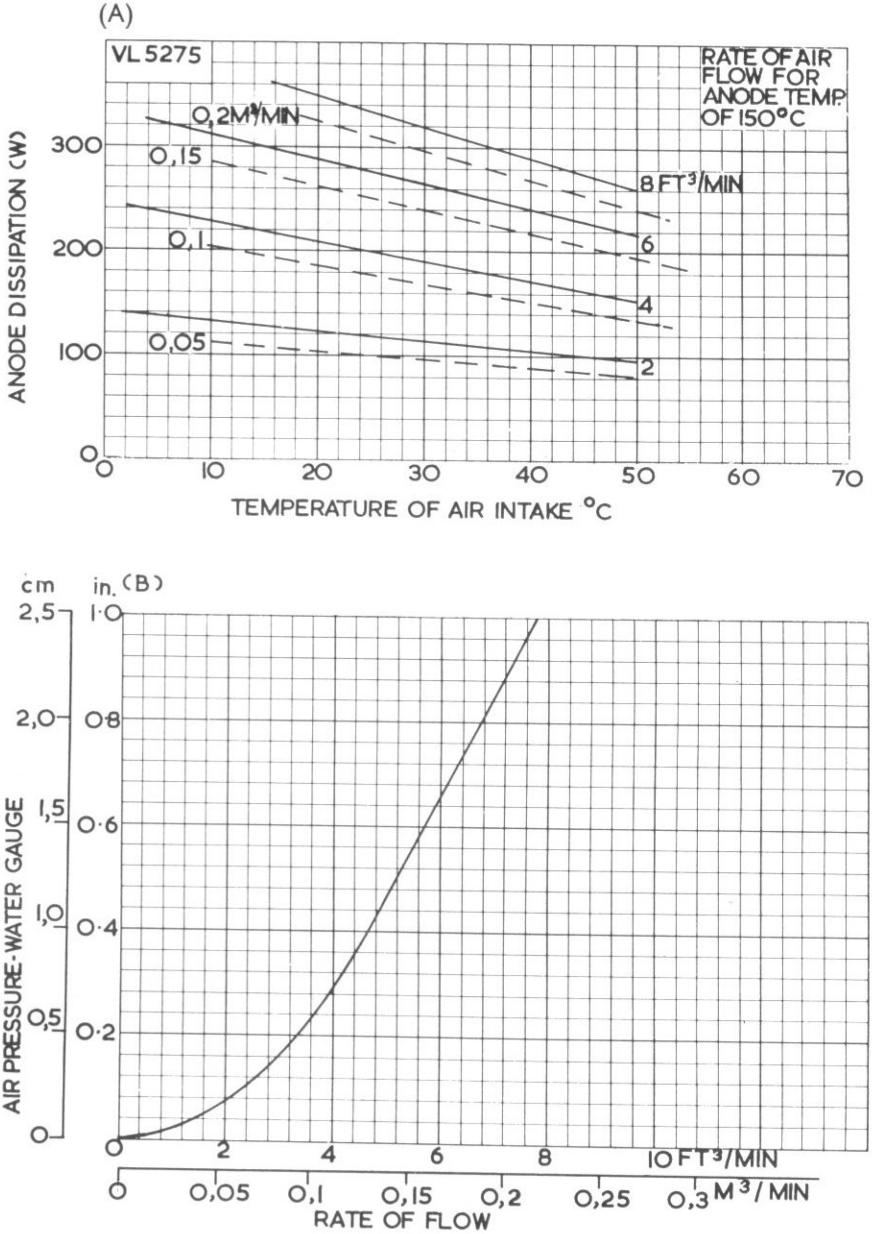

Fig. 3 (A) Forced Air Cooling Requirements
(B) Radiator Characteristics

3. ELECTRICAL DATA

3.1 4X150A, 4X150D

Cathode

	4X150A	4X150D	
Indirectly heated, oxide coated			
Heater voltage (See application notes)	6·0	26·5	V
Heater current (See application notes)	2·6	0·57	A
Minimum cathode heating time	30	30	s

Characteristics

	4X150A, 4X150D	
Mutual conductance (Measured at $V_a = 500V$)	12	mA/V
Screen grid μ ($V_{g2} = 250V$, $I_a = 250mA$)	5	

Direct Interelectrode Capacitances

Input (nominal)	16·5	pF
Output (nominal)	4·5	pF
Anode to grid (max.)	0·06	pF

Maximum Circuit Values

Control grid circuit resistance under any condition	25	k Ω
Cathode bias is not recommended		
Peak heater to cathode voltage (positive or negative heater)	150	V

A.F. Amplifier and Modulator—Class AB_1

Maximum Ratings

D.C. anode voltage	2 000	V
D.C. screen grid voltage	400	V
Maximum signal d.c. anode current	250	mA
Anode dissipation	250	W
Screen grid dissipation	12	W
Control grid dissipation	2	W

Typical Operation (Values are for Two Valves)

D.C. anode voltage	800	1 000	1 500	2 000	V
D.C. screen grid voltage	300	300	300	300	V
D.C. control grid voltage (approx.*)	−40	−43	−50	−50	V
Peak A.F. signal (grid to grid) voltage	80	86	100	100	V
Zero signal d.c. anode current	210	165	100	100	mA
Maximum signal d.c. anode current	435	450	456	470	mA
Zero signal d.c. screen grid current	0	0	0	0	mA
Max. signal d.c. screen grid current	76	52	42	36	mA
Effective load resistance (anode to anode)	3 400	4 250	6 570	8 760	Ω
Maximum signal power output (approx.)	170	230	400	580	W

*Adjust grid voltage to obtain specified zero signal anode current.

A.F. Power Amplifier and Modulator—Class AB_2 **4X150A, 4X150D**

Maximum Ratings

D.C. anode voltage	2 000	V
D.C. screen grid voltage	400	V
Maximum signal d.c. anode current	250	mA
Anode dissipation	250	W
Screen grid dissipation	12	W
Control grid dissipation	2	W

Typical Operation (Values are for Two Valves)

D.C. anode voltage	800	1 000	1 500	2 000	V
D.C. screen grid voltage	300	300	300	300	V
D.C. control grid voltage	−40	−45	−50	−50	V
Peak A.F. signal (grid to grid) voltage	90	98	106	106	V
Zero signal d.c. anode current	210	166	100	100	mA
Maximum signal d.c. anode current	500	500	500	500	mA
Zero signal d.c. screen grid current	0	0	0	0	mA
Maximum signal d.c. screen grid current	80	58	46	36	mA
Effective load resistance (anode to anode)	3 140	3 950	5 970	8 100	Ω
Maximum signal driving power (approx.)	0·15	0·15	0·2	0·2	W
Maximum signal power output (approx.)	215	270	440	630	W

Class B Television Service

Maximum Ratings

	Up to 150 Mc/s	Up to 500 Mc/s	
D.C. anode voltage	2 000	1 250	V
D.C. screen grid voltage	400	400	V
D.C. control grid voltage	−250	−250	V
D.C. anode current (averaged over any one field)	250	250	mA
Anode dissipation	250	250	W
Screen grid dissipation	12	12	W
Control grid dissipation	2	2	W

Typical Operation (5 Mc/s Bandwidth)

D.C. anode voltage	750	1 000	1 250	V
D.C. screen grid voltage	300	300	300	V
D.C. control grid voltage	−60	−65	−70	V
Peak r.f. control grid voltage				
100% level	85	95	100	V
75% level	65	70	75	V
30% level	26	28	30	V
D.C. anode current				
100% level	335	330	305	mA*
75% level	245	240	230	mA
30% level	100	99	91	mA
D.C. screen grid current				
100% level	50	45	45	mA
75% level	20	15	10	mA
30% level	5	3	2	mA
D.C. control grid current				
100% level	15	20	25	mA
75% level	4	4	4	mA
30% level	0	0	0	mA
Driving power (approx.)				
100% level	7	8	9	W
75% level	4·25	4·7	5·5	W
30% level	0	0	0	W
Power output (approx.)				
100% level	135	200	250	W
75% level	75	110	140	W
30% level	10	18	23	W

Note :—

	Negative Modulation (white negative, synchs. positive)	*Positive Modulation* (white positive, synchs. neg.)
100% level	synch. level	peak white level
75% level	black level	—
30% level	—	black level

*Negative modulation only. For positive modulation, currents must be reduced to comply with maximum ratings.

Linear R.F. Power Amplifier—Single-sideband Suppressed—Carrier Service

Maximum Ratings (per valve)

	Up to 150 Mc/s	*Up to 500 Mc/s*	
D.C. anode voltage	2 000	1 250	V
D.C. screen grid voltage	400	400	V
Max. signal d.c. anode current	250	250	mA
Anode dissipation	250	250	W
Screen grid dissipation	12	12	W
Control grid dissipation	2	2	W

Typical Operation—'' Single Tone '' Class AB_1 (Values are for One Valve)

D.C. anode voltage	800	1 000	1 500	2 000	V
D.C. screen grid voltage	300	300	300	300	V
D.C. control grid voltage (approx.)*	−40	−43	−50	−50	V
Zero signal d.c. anode current	52	42	28	21	mA
Effective r.f. load resistance	1 625	2 125	3 285	4 380	Ω
Max. signal d.c. anode current	211	223	228	235	mA
Max. signal d.c. screen grid current	20	13	11	9	mA
Max. signal peak r.f. control grid voltage	40	43	50	50	V
Max. signal power output (approx.)	85	115	200	290	W

*Adjust grid voltage to obtain specified zero signal anode current.

Anode Modulated R.F. Power Amplifier—Class C Telephony

Maximum Ratings

	Up to 150 Mc/s	*Up to 500 Mc/s*	
D.C. anode voltage	1 600	1 000	V
D.C. screen grid voltage	300	300	V
D.C. control grid voltage	−250	−250	V
D.C. anode current	200	200	mA
Anode dissipation	165	165	W
Screen grid dissipation	12	12	W
Control grid dissipation	2	2	W

Typical Operation at Frequencies up to 150 Mc/s (for 100% Modulation)

D.C. anode voltage	1 200	1 600	V
D.C. screen grid voltage (modulated approx. 55%)	250	250	V
D.C. control grid voltage	−118	−118	V
Peak a.f. screen grid voltage	180	200	V
Peak r.f. control grid voltage	136	136	V
D.C. anode current	200	200	mA
D.C. screen grid current	23	23	mA
D.C. control grid current (approx.)	5	5	mA
Driving power (approx.)	2	3	W
Useful power output (approx.)	160	230	W

Typical Operation at 165 Mc/s

D.C. anode voltage	400	600	800	1 000	V
D.C. screen grid voltage (modulated approx. 55%)	250	250	250	250	V
D.C. control grid voltage	−90	−95	−100	−105	V
Peak a.f. screen grid voltage	140	150	160	170	V
Peak r.f. control grid voltage	110	120	120	125	V
D.C. anode current	200	200	200	200	mA
D.C. screen grid current	40	35	25	20	mA
D.C. control grid current (approx.)	7	8	10	15	mA
Driving power (approx.)	1	1	1·5	2	W
Useful power output (approx.)	55	80	100	140	W

R.F. Power Amplifier and Oscillator—Class C Telegraphy
and
R.F. Power Amplifier—Class C F.M. Telephony

Maximum Ratings

	Up to 150 Mc/s	Up to 500 Mc/s	
D.C. anode voltage	2 000	1 250	V
D.C. screen grid voltage	300	300	V
D.C. control grid voltage	−250	−250	V
D.C. anode current	250	250	mA
Anode dissipation	250	250	W
Screen grid dissipation	12	12	W
Control grid dissipation	2	2	W

Typical Operation at Frequencies up to 150 Mc/s

D.C. anode voltage	1 500	2 000	V
D.C. screen grid voltage	250	250	V
D.C. control grid voltage	−88	−88	V
Peak r.f. control grid voltage	110	110	V
D.C. anode current	250	250	mA
D.C. screen grid current	24	24	mA
D.C. signal grid current (approx.)	8	8	mA
Driving power (approx.)	1·5	2·5	W
Useful power output (approx.)	260	370	W

Typical Operation at 165 Mc/s

D.C. anode voltage	600	750	1 000	1 250	V
D.C. screen grid voltage	250	250	250	250	V
D.C. control grid voltage	−75	−80	−80	−90	V
Peak r.f. control grid voltage	91	96	96	106	V
D.C. anode current	200	200	200	200	mA
D.C. screen grid current	37	37	31	20	mA
D.C. control grid current (approx.)	11	11	11	11	mA
Driving power (approx.)	1	1	1	1·2	W
Useful power output (approx.)	85	110	150	195	W

Typical Operation at 500 Mc/s (with Coaxial Cavity)

D.C. anode voltage	600	800	1 000	1 250	V
D.C. screen grid voltage	250	250	250	280	V
D.C. control grid voltage	−110	−110	−110	−115	V
D.C. anode current	170	200	200	200	mA
D.C. screen grid current	6	7	7	5	mA
D.C. control grid current (approx.)	6	10	10	10	mA
Drive power output (approx.)	15	20	25	30	W
Useful power output (approx.)	50	95	120	140	W

3.2 4X250B, 4CX250B

Cathode

Indirectly heated, oxide coated

	4X250B	
Heater voltage	6	V
Nominal current	2·6	A
Minimum cathode heating time	30	s

Characteristics

Mutual conductance (Measured at V_a=500V)	12	mA/V
Screen grid μ (V_{g2}=250V : I_a=200mA)	5	

Direct Interelectrode Capacitances

Input (nominal)	16·5	pF
Output (nominal)	4·5	pF
Anode to grid (max.)	0·06	pF

Air Cooling Requirements

	4X250B	4CX250B	
Maximum temperature of anode seal and anode core	250	250	°C
Maximum temperature of base seals	175	250	°C

Forced air cooling of base seals is required at all times.

For anode dissipation of 250 watts :

volume of air required at 20°C	3·8	ft^3/min
at a water gauge pressure of	0·3	in
	8,0	mm

For other conditions see Fig. 3.

Maximum Circuit Values

Control grid circuit resistance under any condition	25	k Ω

Cathode bias is not recommended.

Peak heater to cathode voltage (positive or negative heater)	150	V

4X250B, 4CX250B

A.F. Amplifier and Modulator—Class AB_1

Maximum Ratings

D.C. anode voltage	2 000	V
D.C. screen grid voltage	400	V
D.C. anode current	250	mA
Anode dissipation	250	W
Screen grid dissipation	12	W
Control grid dissipation	2	W

Typical Operation

Audio amplifier (Values are for two valves)

D.C. anode voltage	1 000	1 500	2 000	V
D.C. screen grid voltage	350	350	350	V
D.C. control grid voltage (approx.)*	−50	−50	−50	V
Zero signal d.c. anode current	200	200	200	mA
Max. signal d.c. anode current	500	500	500	mA
Max. signal d.c. screen grid current	50	40	30	mA
Effective load resistance (anode to anode)	3 260	5 760	8 260	Ω
Peak a.f. signal (grid to grid) voltage	100	100	100	V
Max. signal power output	250	450	650	W
Third harmonic distortion	4·5	4·5	4·5	%

*Adjust grid voltage to obtain specified zero-signal anode current.

4X250B, 4CX250B

A.F. Power Amplifier and Modulator—Class AB_2

Maximum Ratings

D.C. anode voltage	2 000	V
D.C. screen grid voltage	400	V
Maximum signal d.c. anode current	250	mA
Anode dissipation	250	W
Screen grid dissipation	12	W
Control grid dissipation	2	W

Typical Operation (Values are for Two Valves)

D.C. anode voltage	800	1 000	1 500	2 000	V
D.C. screen grid voltage	300	300	300	300	V
D.C. control grid voltage	−40	−45	−50	−50	V
Peak a.f. signal (grid to grid) voltage	90	98	106	106	V
Zero signal d.c. anode current	210	166	100	100	mA
Max. signal d.c. anode current	500	500	500	500	mA
Zero signal d.c. screen grid current	0	0	0	0	mA
Max. signal d.c. screen grid current	80	58	46	36	mA
Effective load resistance (anode to anode)	3 140	3 950	5 970	8 100	Ω
Max. signal driving power (approx.)	0·15	0·15	0·2	0·2	W
Max. signal power output (approx.)	215	270	440	630	W

Class B—Television Service

Maximum Ratings

D.C. anode voltage	2 000	V
D.C. screen grid voltage	400	V
D.C. control grid voltage	—250	V
D.C. anode current (averaged over any one field	250	mA
Anode dissipation	250	W
Screen grid dissipation	12	W
Control grid dissipation	2	W

Typical Operation (5 Mc/s Bandwidth)

D.C. anode voltage	750	1 000	1 250	V
D.C. screen grid voltage	300	300	300	V
D.C. control grid voltage	—60	—65	—70	V
Peak r.f. control grid voltage				
100% level	85	95	100	V
75% level	65	70	75	V
30% level	26	28	30	V
D.C. anode current				
100% level	335	330	305	*mA
75% level	245	240	230	mA
30% level	100	99	91	mA
D.C. screen grid current				
100% level	50	45	45	mA
75% level	20	15	10	mA
30% level	5	3	2	mA
D.C. control grid current				
100% level	15	20	25	mA
75% level	4	4	4	mA
30% level	0	0	0	mA
Driving power (approx.)				
100% level	7	8	9	W
75% level	4·25	4·7	5·5	W
30% level	0	0	0	W
Power output (approx)				
100% level	135	200	250	W
75% level	75	110	140	W
30% level	10	18	23	W

Note :—

	Negative Modulation (white negative, synchs. positive)	*Positive Modulation* (white positive, synchs. neg.)
100% level	Synch. level	Peak white level
75% level	Black level	—
30% level	—	Black level

*Negative modulation only. For positive modulation, currents must be reduced to comply with maximum rating.

4X250B, 4CX250B

Linear R.F. Power Amplifier—Single-sideband Suppressed—Carrier Service

Maximum Ratings (per Valve)

D.C. anode voltage	2 000	V
D.C. screen grid voltage	400	V
Max. signal d.c. anode current	250	mA
Anode dissipation	250	W
Screen grid dissipation	12	W
Control grid dissipation	2	W

Typical Operation—" Single Tone " Class AB₁ (Values for One Valve)

D.C. anode voltage	1 000	1 500	2 000	V
D.C. screen grid voltage	350	350	350	V
D.C. control grid voltage (approx.)*	−50	−50	−50	V
Zero signal d.c. anode current	100	100	100	mA
Max. signal d.c. anode current	250	250	250	mA
Max. signal d.c. screen grid current	25	20	15	mA
Max. signal peak r.f. control grid voltage	50	50	50	V
Max. signal power output (approx.)	125	225	325	W

*Adjust grid voltage to obtain specified zero-signal anode current.

4X250B, 4CX250B

Anode Modulated R.F. Power Amplifier—Class C Telephony

Maximum Ratings for Frequencies up to 500 Mc/s

D.C. anode voltage	1 500	V
D.C. screen grid voltage	300	V
D.C. control grid voltage	−250	V
D.C. anode current	200	mA
Anode dissipation	165	W
Screen grid dissipation	12	W
Control grid dissipation	2	W

Typical Operation (for One Valve only)

D.C. anode voltage	500	1 000	1 500	W
D.C. screen grid voltage	250	250	250	V
D.C. control grid voltage	−100	−100	−100	V
D.C. anode current	200	200	200	mA
D.C. screen grid current	45	35	25	mA
D.C. control grid current	22	19	17	mA
Peak r.f. control grid voltage (approx.)	124	122	121	V
Driving power	2·7	2·3	2·1	W
Useful power output	75	160	250	W

R.F. Power Amplifier and Oscillator—Class C Telegraphy
and
R.F. Power Amplifier—Class C F.M. Telephony

Maximum Ratings for Frequencies up to 500 Mc/s

D.C. anode voltage	2 000	V
D.C. screen grid voltage	300	V
D.C. control grid voltage	−250	V
D.C. anode current	250	mA
Anode dissipation	250	W
Screen grid dissipation	12	W
Control grid dissipation	2	W

Typical Operation at 175 Mc/s (Values are for One Valve)

D.C. anode voltage	500	1 000	1 500	2 000	V
D.C. screen grid voltage	250	250	250	250	V
D.C. control grid voltage	−90	−90	−90	−90	V
D.C. anode current	250	250	250	250	mA
D.C. screen grid current	45	35	30	25	mA
D.C. control grid current	32	28	28	27	mA
Peak r.f. control grid voltage (approx.)	118	116	116	115	V
Driving power	3·6	3·2	3·2	2·8	W
Useful power output	85	195	300	400	W

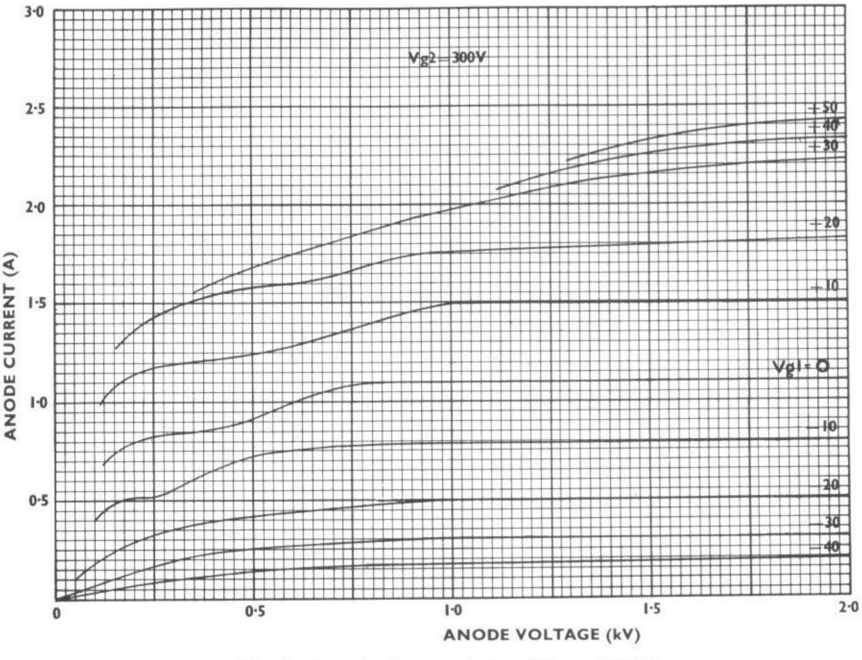

Fig. 4 Anode characteristics ($V_{g2} = 300$ V)

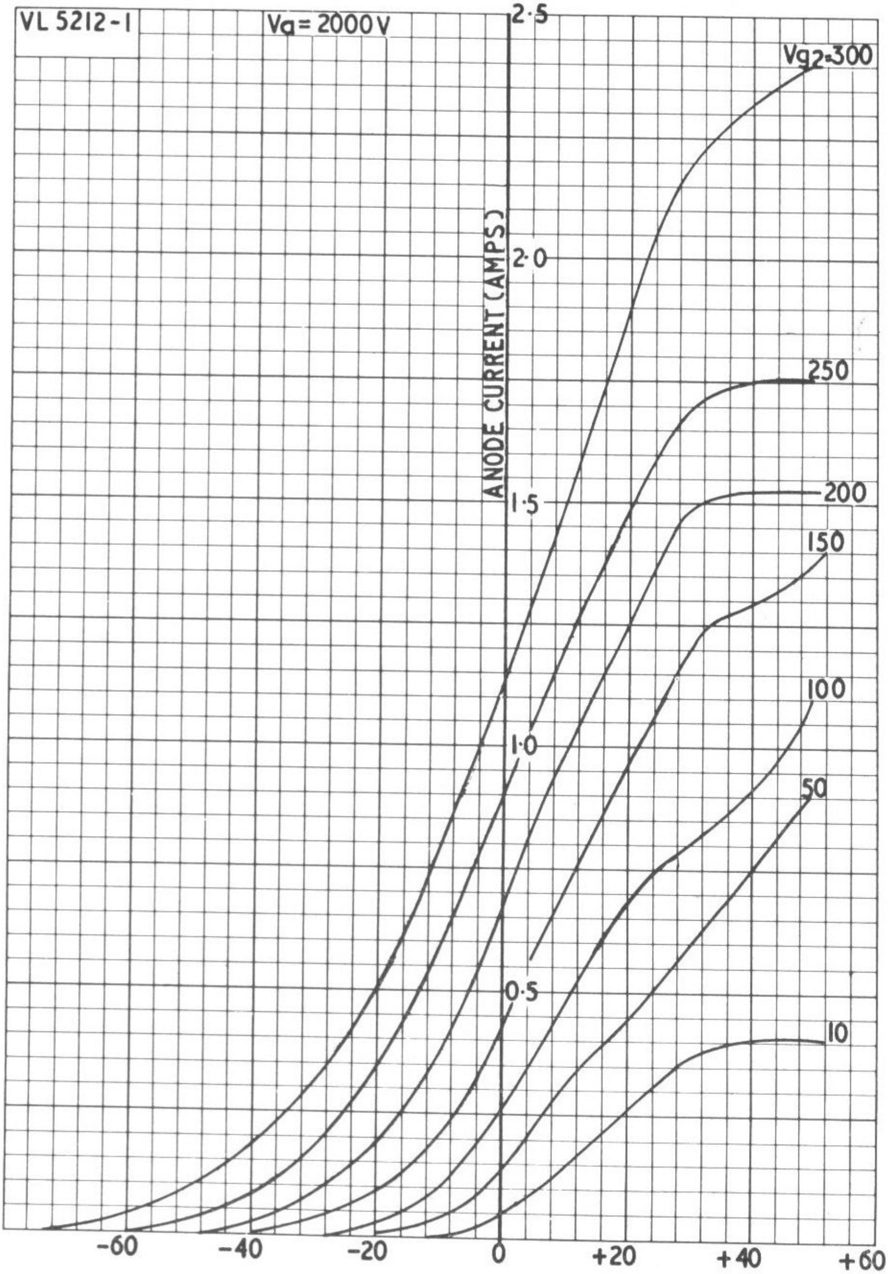

Fig. 5 Mutual characteristics ($V_a = 2000$ V)

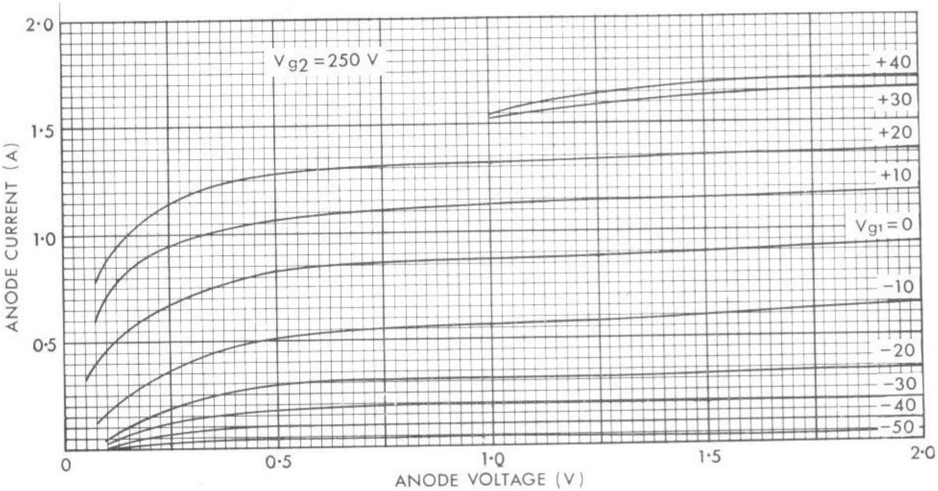

Fig. 6 Anode characteristics ($V_{g2} = 250$ V)

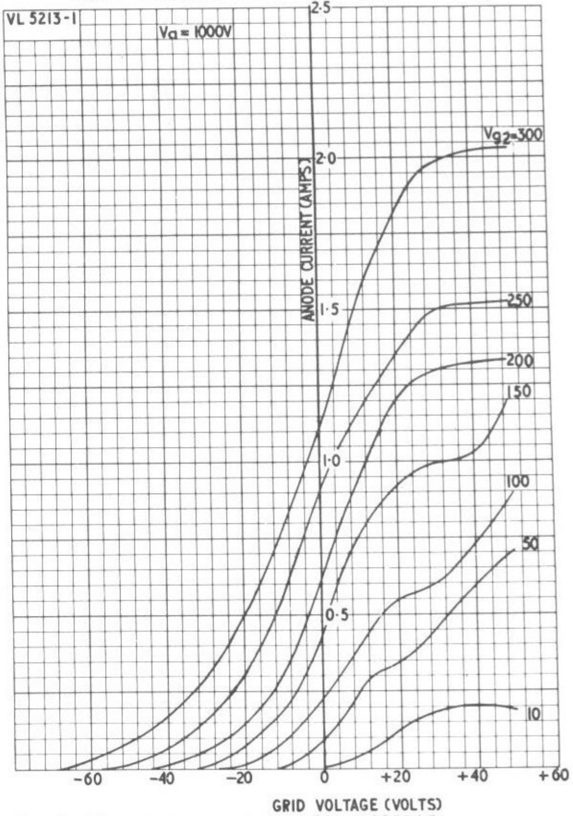

Fig. 7 Mutual characteristics ($V_a = 1000$ V)

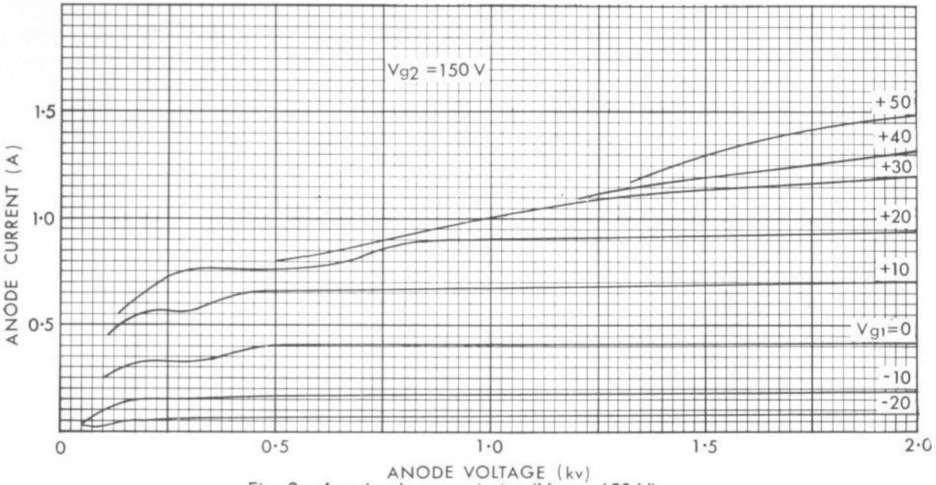

Fig. 8 Anode characteristics (V_{g2} = 150 V)

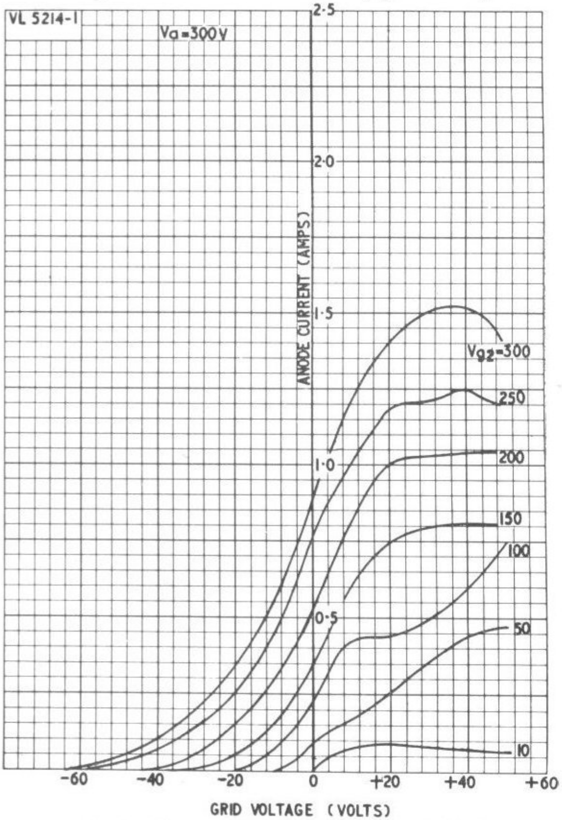

Fig. 9 Mutual characteristics (V_a = 300 V)

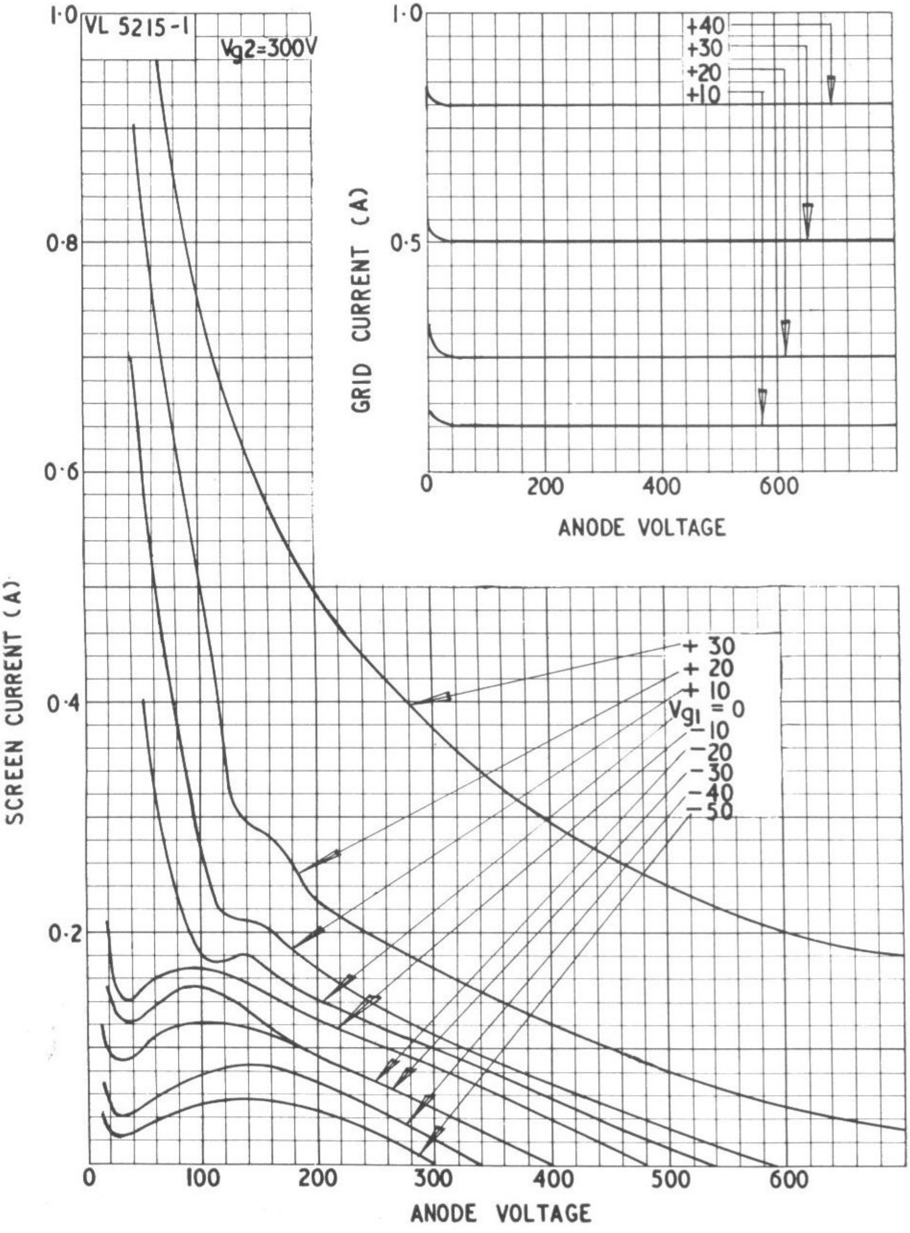

Fig. 10 Screen and Grid Current versus Anode Voltage (V_{g_2}=300V)

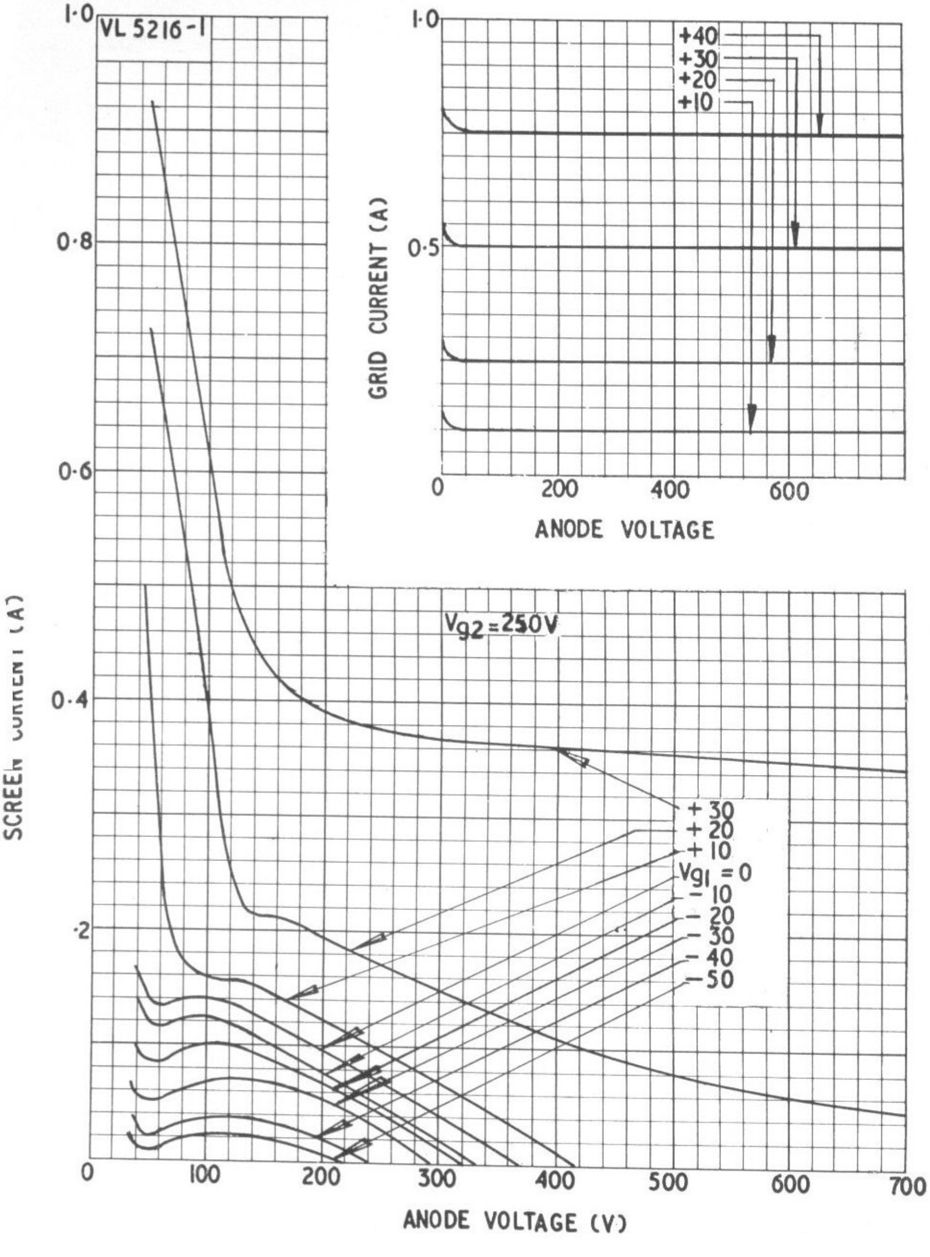

Fig. 11 Screen and Grid Current versus Anode Voltage (V_{g_2}=250V)

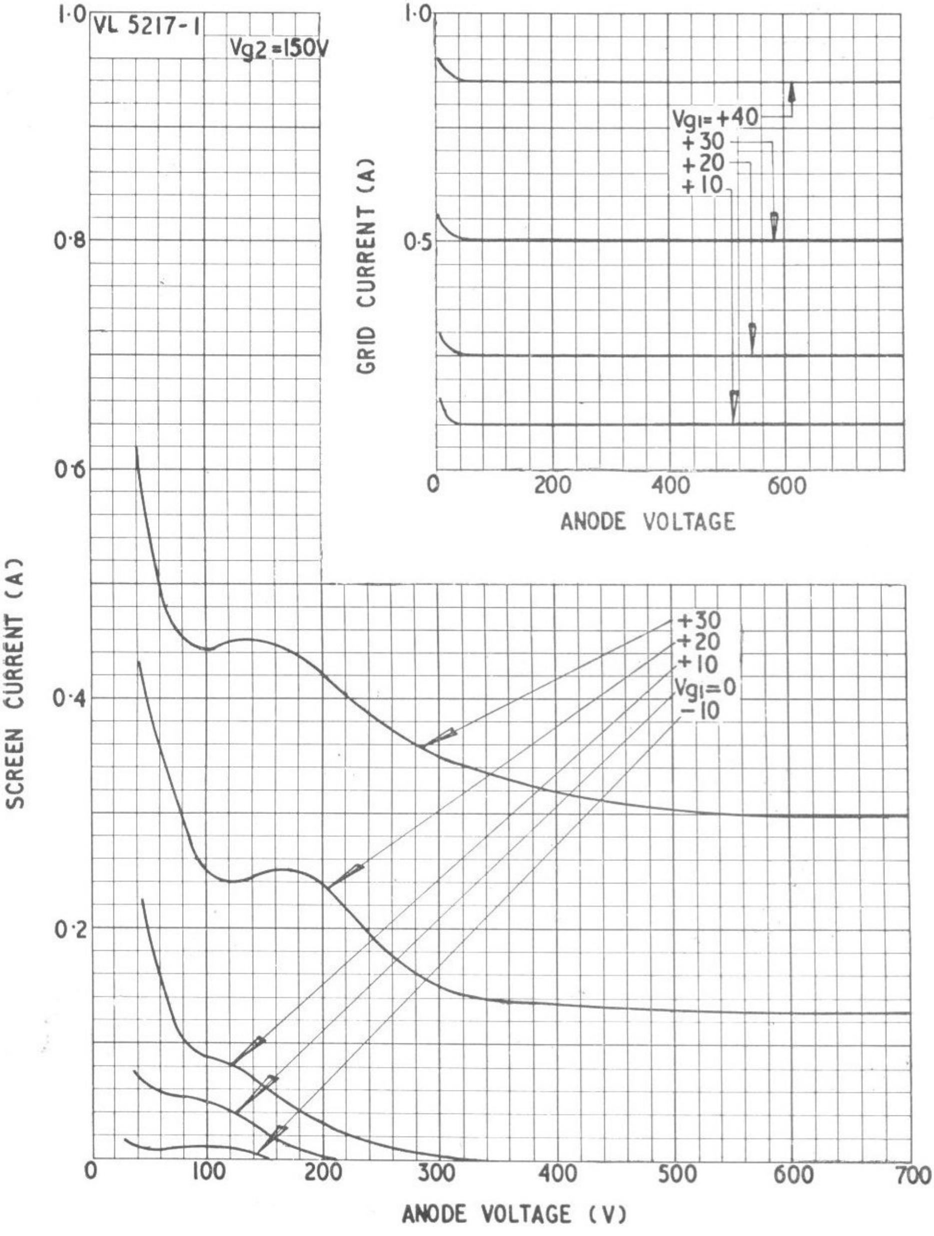

Fig. 12 Screen and Grid Current versus Anode Voltage (V_{g_2}=150V)

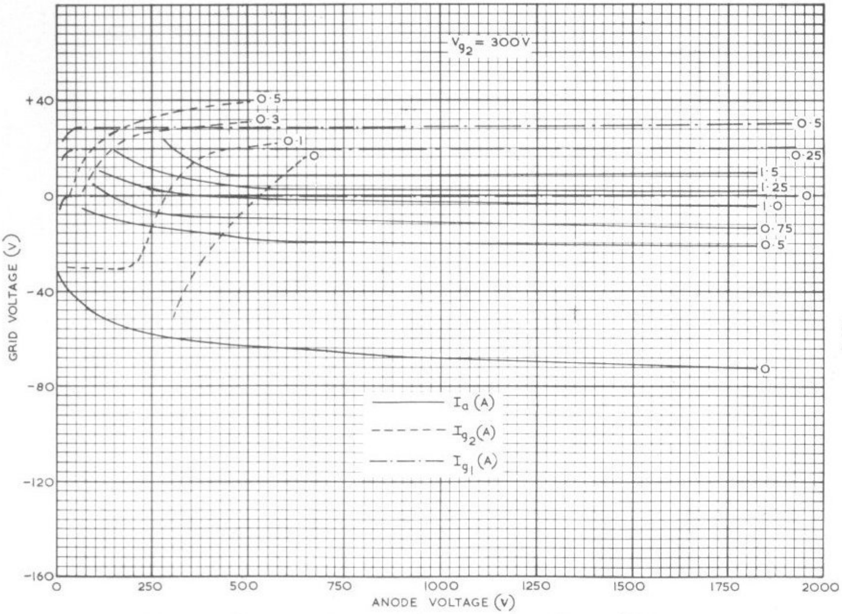

Fig. 13 Constant Current characteristics (V_{g_2}=300V)

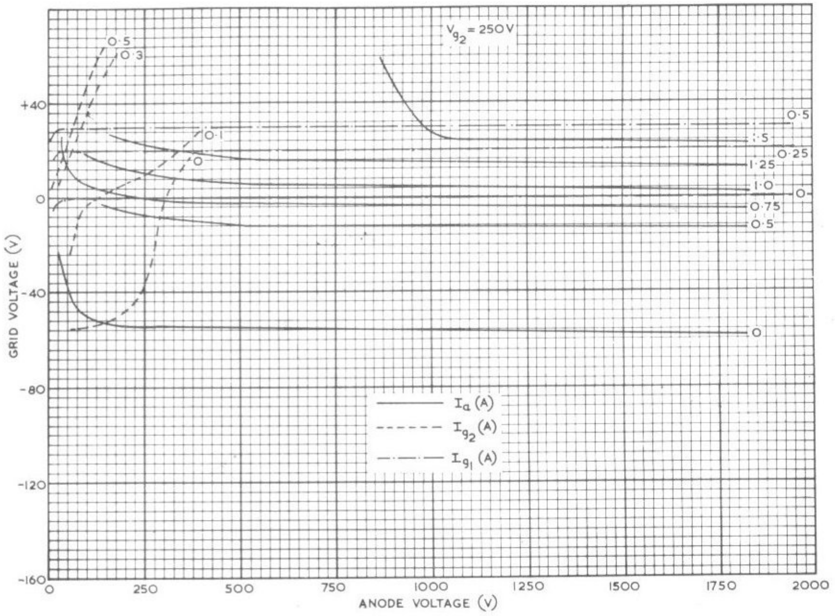

Fig. 14 Constant Current characteristics (V_{g_2}=250V)

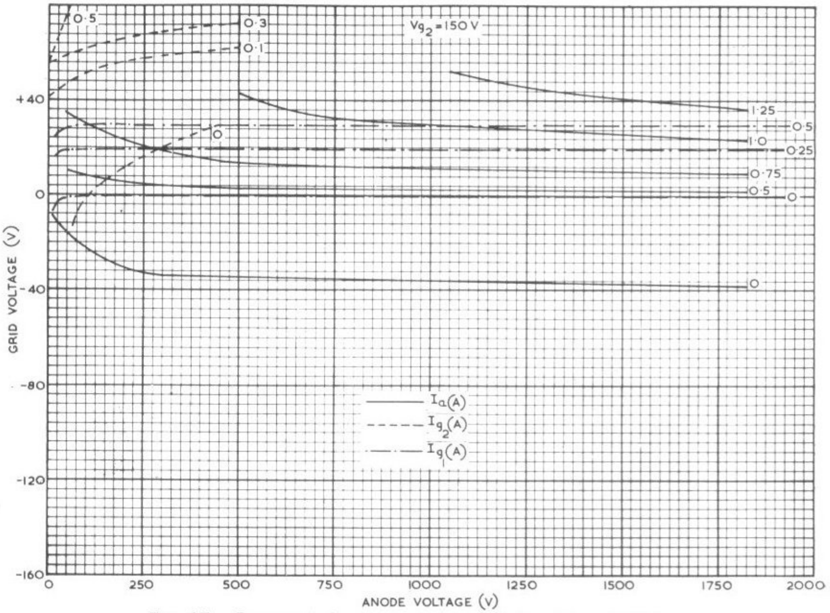

Fig. 15 Constant Current characteristics (V_{g_2}=150V)

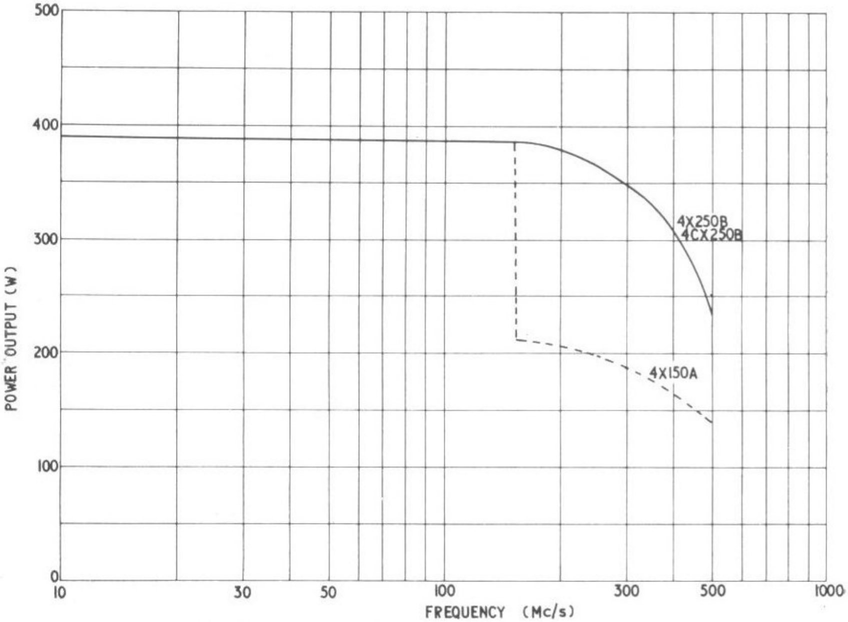

Fig. 16 Frequency Performance (Class C unmodulated)

3.3. PULSE RATINGS (ALL TYPES)

Maximum Ratings (During Pulse)

Direct anode voltage	7	kV
Direct screen grid voltage	1·2	kV
Direct anode current	6·0	A
Pulse length	5·0	μs
Pulse recurrence frequency	1 000	p.p.s.

Note : For maximum direct anode current during pulse at pulse lengths greater than 5μs refer to derating curve (Fig. 17).

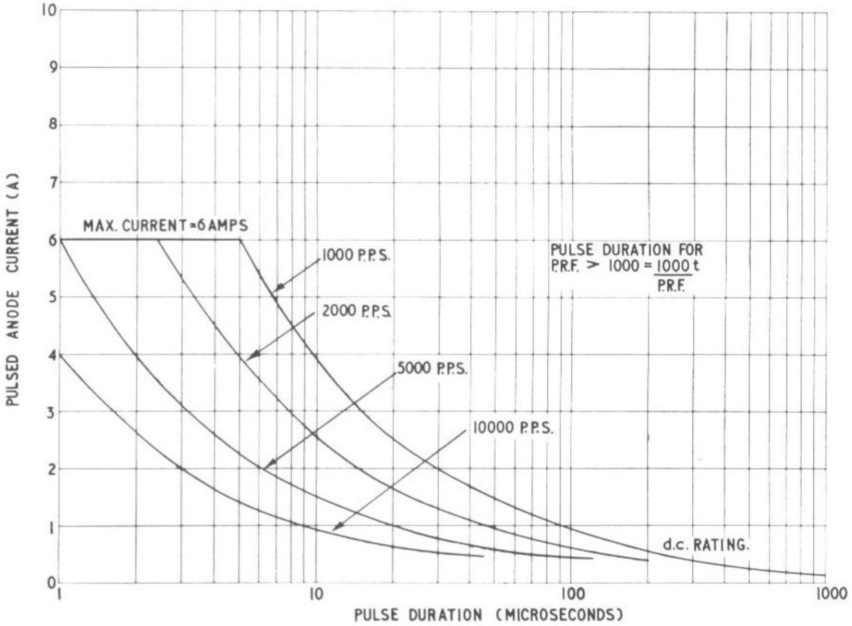

Fig. 17 Maximum Direct Anode Current during Pulse in terms of Pulse Width and Pulse Repetition Frequency

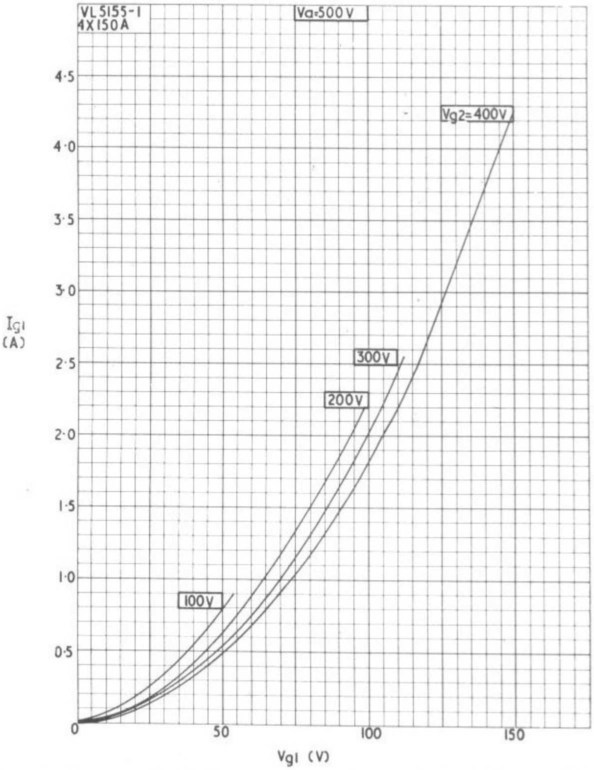

Fig. 18 Control Grid Current versus Control Grid Voltage (V_a=500V)

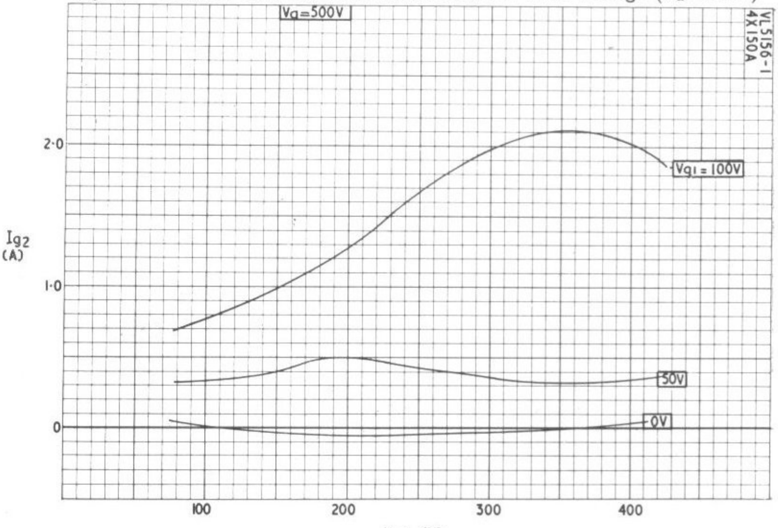

Fig. 19 Screen Grid Current versus Screen Grid Voltage (V_a=500V)

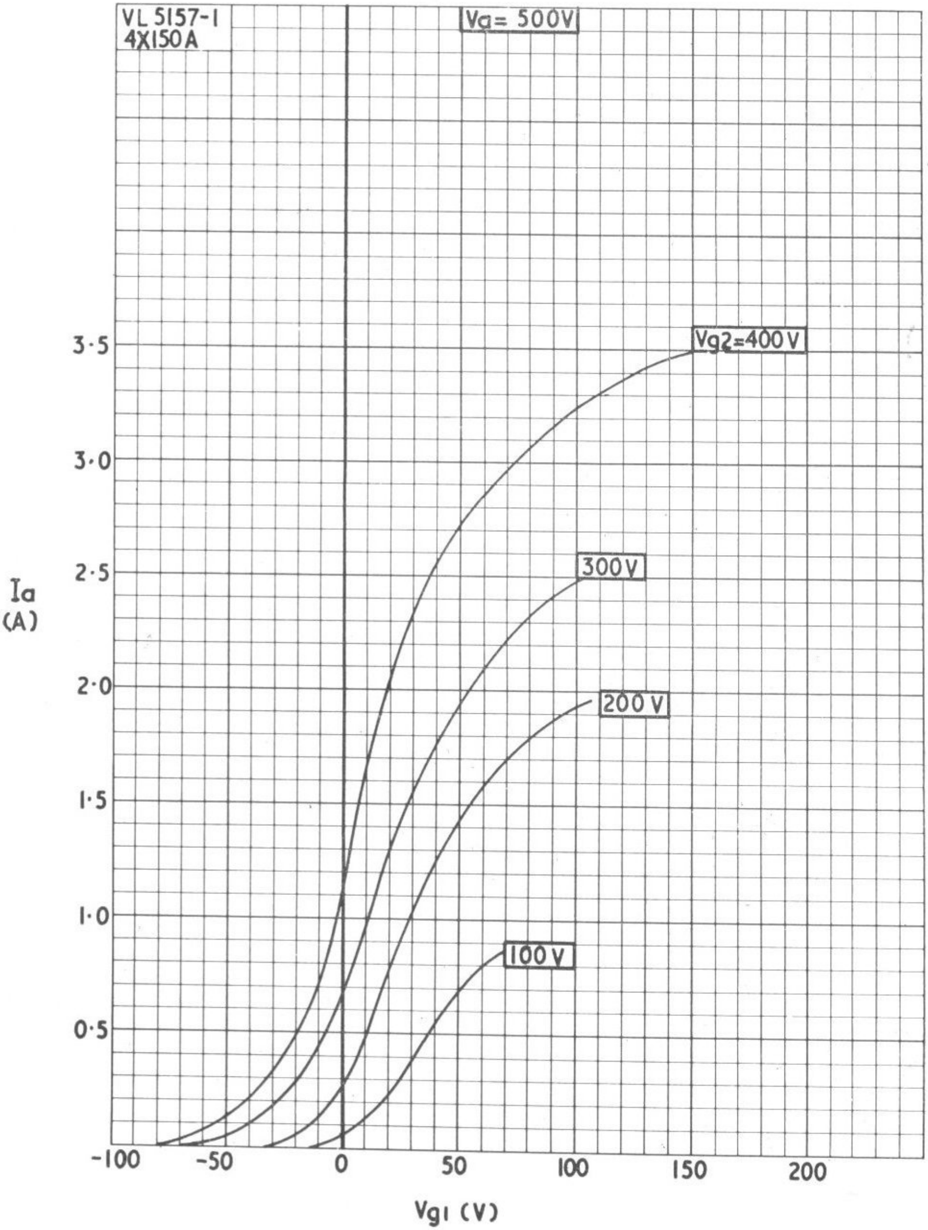

Fig. 20 Anode Current versus Control Grid Voltage ($V_a = 500V$)

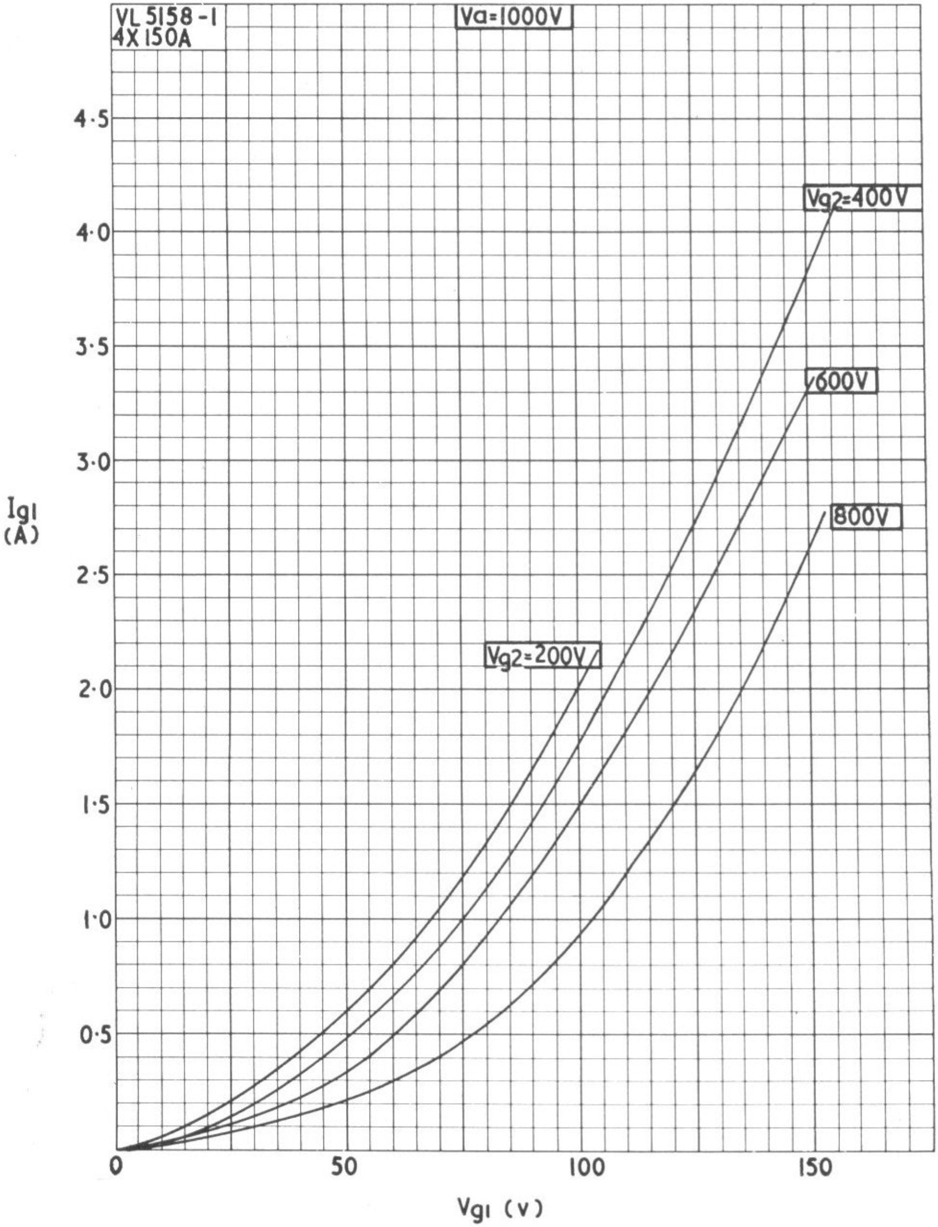

Fig. 21 Control Grid Current versus Control Grid Voltage (V_a = 1 000V)

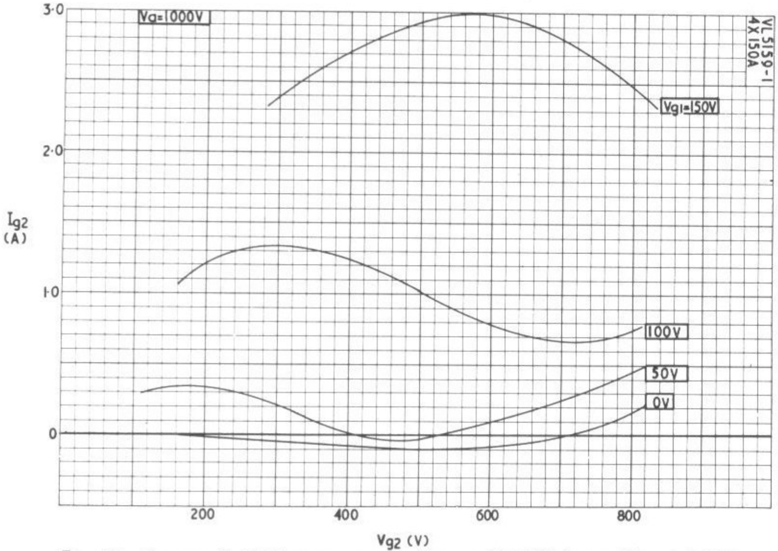

Fig. 22 Screen Grid Current versus Screen Grid Voltage ($V_a = 1\ 000V$)

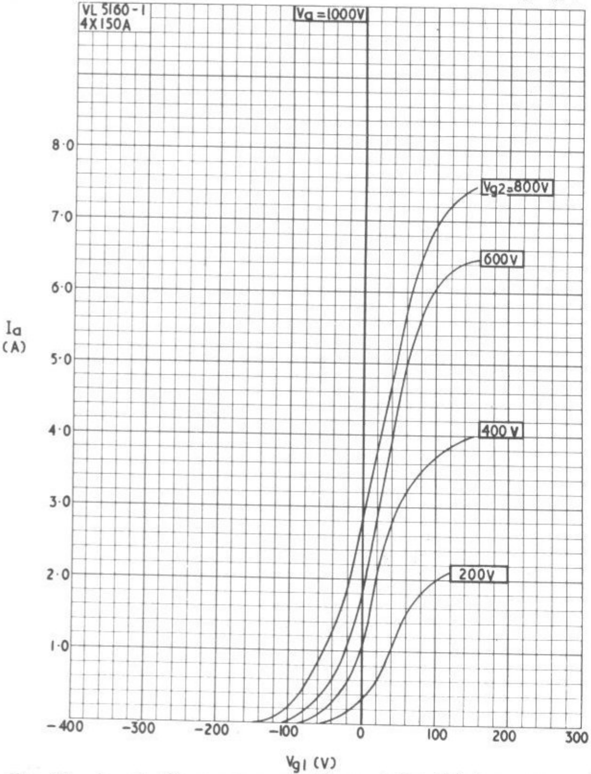

Fig. 23 Anode Current versus Control Grid Voltage ($V_a = 1\ 000V$)

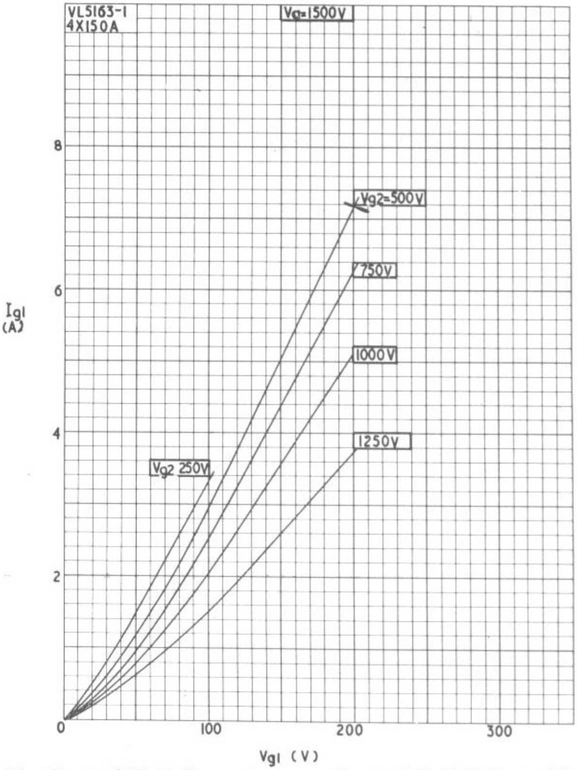

Fig. 24 Control Grid Current versus Control Grid Voltage (V_a=1 500V)

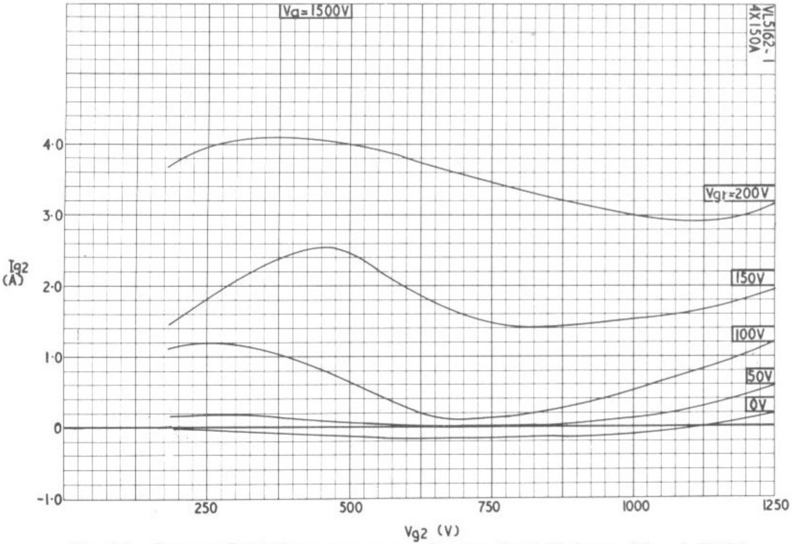

Fig. 25 Screen Grid Current versus Screen Grid Voltage (V_a=1 500V)

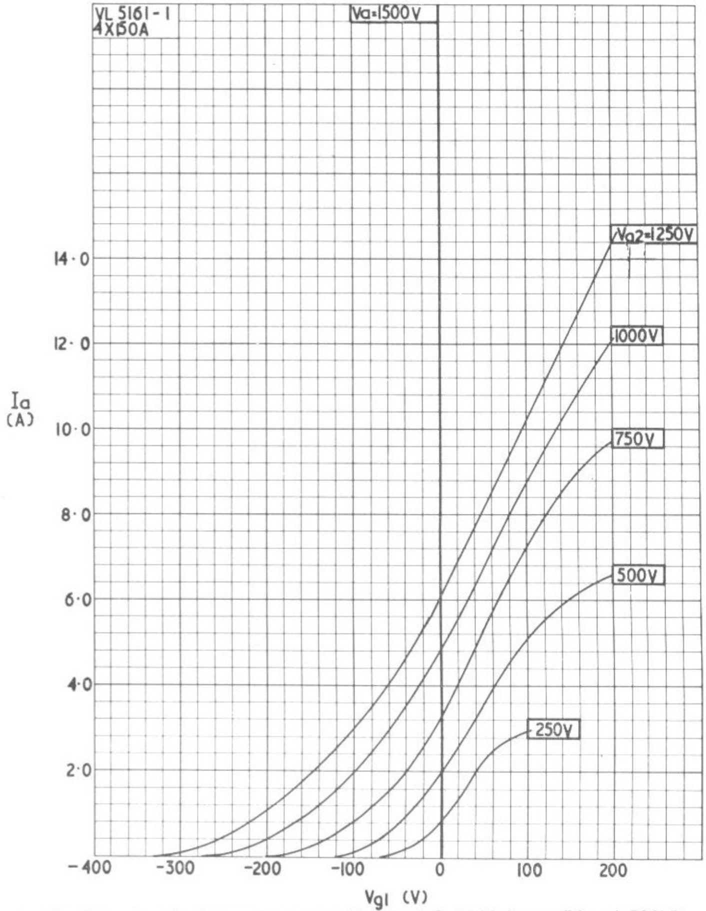

Fig. 26 Anode Current versus Control Grid Voltage (V_a = 1 500V)

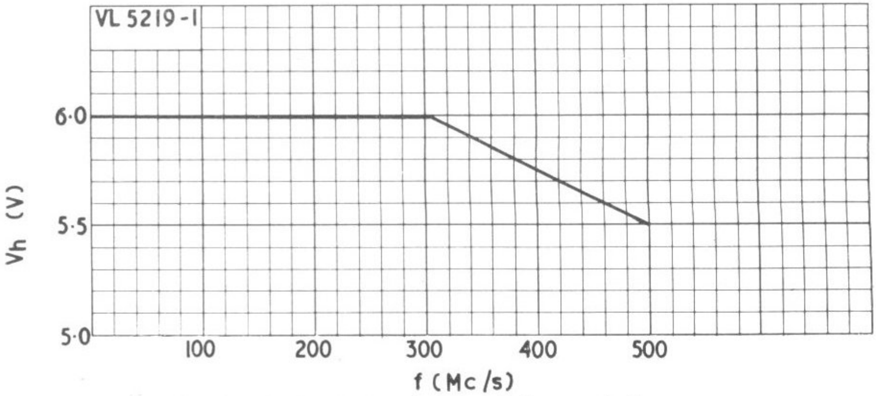

Fig. 27 Required variation of Heater Voltage with Frequency

4. TYPICAL CIRCUITS AND NOTES

4.1 GENERAL

Valves in the 4X150/250 series have a pin arrangement such that they will fit a standard Loctal socket. However, use of this type of socket prevents proper cooling of the base seals and is not recommended. The sockets recommended for these valves are EDISWAN type VH88/802, EIMAC type 4X150A/4000, or any other of similar design.

The use of holders incorporating a screen decoupling capacitor is advised for all applications in which the operating frequency is greater than 30 Mc/s. At lower operating frequencies also, use of this type of holder will assist in preventing instability, although it may be found necessary to provide parallel capacitance in addition.

Heater and Cathode

Up to an operating frequency of 300 Mc/s, the heater voltage should be kept as close to 6·0 volts (26·5 volts for 4X150D) as possible, although variations within ±10% for short periods will not cause damage.

Due to back-heating of the cathode by bombardment, it is necessary, at input frequencies greater than 300 Mc/s, to reduce the heater voltage to a value selected from the graph in Fig. 27. If this is not done, the life of the valve may be impaired.

Variations in output power can be expected if changes in heater voltage occur.

All four cathode terminals should be used when making connections to any of the valves in this series : the leads should be of large cross-section and as direct as possible to minimise inductance.

Grid

The grid circuit driving power requirements increase with frequency because of circuit losses other than grid dissipation. This becomes noticeable at frequencies greater than 100 Mc/s and increases until at 500 Mc/s as much as from 25 to 30 watts of drive may be required. Despite this high driving power, grid dissipation does not increase greatly, and satisfactory operation is indicated in stable circuits by a grid current not greater than about 20 mA.

Screen

Serious damage or severe changes of characteristics may be expected if the screen grid dissipation is allowed to exceed its maximum rating. This can occur readily through failure of bias or anode supplies, or if the anode load is removed.

Use of overload trips and current meters is recommended. Under certain conditions of operation, i.e., during tuning operations, the screen current may become negative : because of this the screen supply impedance must be kept low, or the voltage developed by the negative current may raise the screen potential excessively. Under certain circumstances, this may further increase the negative current and cause a runaway condition.

Similarly, under conditions where the screen is keyed, screen emission (the cause of negative current) may hold the screen to its working voltage even though the key is raised. To alleviate these difficulties, it is necessary to connect a resistor of the lowest practicable value direct from the screen to earth.

Anode

The maximum anode dissipation for all valves is 250 watts.

Under anode modulation conditions the dissipation at zero modulation should be kept to 165 watts which ensures that the dissipation will not rise above the maximum of 250 watts under 100% sinusoidal operation.

The maximum direct anode voltage for all valves operated below 150 Mc/s is 2 000 volts. At frequencies above 150 Mc/s the 4X250B and 4CX250B may be operated at 2 000 volts but the 4X150A and 4X150D rating is reduced to 1 250 volts. Under 100% anode modulation conditions the direct anode voltage rating for the 4X250B and 4CX250B is 1 600 volts and for the 4X150A and 4X150D it is 1 000 volts.

U.H.F. Operation

Transit time and other effects which occur at U.H.F. in these valves may be reduced to minimum values by complying with the following suggested operating conditions :

(a) use of a minimum value of d.c. grid bias voltage

(b) application of only enough grid drive to obtain satisfactory operation

(c) operating the screen at a reasonably high voltage but not exceeding the dissipation rating

(d) use of fairly heavy anode loading. Generally, low voltage high current operation gives better results than high voltage low current. If conditions require a change to lighter load, the drive should be reduced to the minimum suitable for the new output level.

(e) parasitic oscillations are usually associated with excessive grid or screen currents and are liable to damage the valves. Similarly, anode circuits which are able to resonate at harmonic and the fundamental frequencies simultaneously may cause low efficiency and damage to the valve.

4.2 FREQUENCY TREBLER TO 150 Mc/s (Fig. 28)

General Layout

As grid and anode circuits are at different frequencies, good screening is not essential. However, when the frequency trebler stage is followed by a high power amplifier stage, it is recommended in the interests of achieving maximum stability, that screening be used.

Adjustments

The output link (L3) size is chosen to give a 50 ohm output, and its position is adjusted so that it passes between the turns of the anode tank coil (L2).

The degree of overlap of L3 in L2 should be adjusted for maximum output in conjunction with anode tank tuning. Loading should be kept heavy in accordance with the general recommendations at the beginning of this section.

Output versus Input

It will be found that as the drive power is increased, the output will rise to a point at which no further appreciable increase occurs, but instead, the screen grid current rises rapidly. The correct drive conditions are those just before this point is reached, and grid current set to approximately 10 to 20 mA is a useful guide to this requirement being achieved.

Negative screen current indicates a condition of severe underdriving, or the anode loading being incorrect.

Performance

The output power of 50 watts is capable of driving up to four valves type 4X150A or 4X250B in parallel/push-pull in a power amplifier stage capable of delivering over 1 kW at 150 Mc/s. The anode and screen circuits may be modulated and the output of this stage used to energise an aerial if so desired. However, for maximum rejection of sub-harmonics (in this case 50 Mc/s), the trebler should be followed, if amplitude modulated, by a linear r.f. amplifier, or, if frequency modulated or un-modulated, by a Class C amplifier. The latter arrangement would give the better overall efficiency.

The valve may be operated as a frequency trebler at any input frequency up to 500 Mc/s, provided the tuned circuits are modified accordingly, but, owing to the very large drive requirements of the stage above 150 Mc/s input, operation to the full rating may prove to be very inefficient.

4.3 POWER AMPLIFIER AT 150 Mc/s (Fig. 29 and Fig. 30)

Input

For an efficient stage, the drive source impedance must be kept low. To achieve this, it is advisable to drive the stage with a source capable of delivering four or more times the power indicated by the typical operating conditions. The input to the grid should then be taken from a tapping on the grid tank, as shown in Fig. 30. The feed rail inductance should be kept as low as possible (in this circuit a piece of silver plated copper tube 0·225 in. (0,575 mm) diameter, 1·5 in. (38,1 mm) long was used.

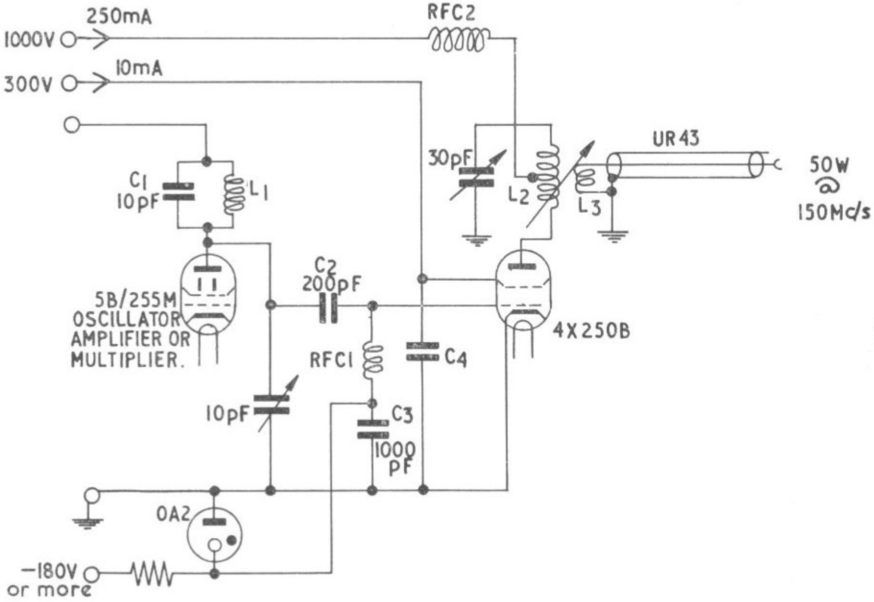

Fig. 28 Frequency Trebler—Circuit Diagram

COMPONENTS

C1, C2	Silvered Mica			
C3	Mica			
C4	Screen decoupling capacitor to be built into the valve holder			
	Holders :	Ediswan VH88/802 C4 = 3 000 to 3 600 pF		
		Eimax 4X140A/4 000 C4 = 2 500 to 3 000 pF		
L1	3 turns	wire dia.	0·225 in.	5,7 mm
		coil length	1·75 in.	44,5 mm
		coil internal dia.	1·125 in.	28,5 mm
L2	3 turns	wire dia.	0·15 in.	3,8 mm
	centre-tapped	coil length	1·75 in.	44,5 mm
		coil internal dia.	0·75 in.	19 mm
L3	1 turn of inner conductor of UR43 coil dia. 0·75 in. (19 mm)			
RFC1	175 turns 0·008 in. (0,2 mm) dia. enamelled wire	on 0·325 in. (8,3 mm) dia. polythene formers		
RFC2	100 turns 0·020 in. (0,51 mm) dia. enamelled wire			

The frequency trebler circuit shown previously is quite adequate to drive this stage. The use of lumped constants for grid and anode tanks is only practicable up to an input frequency of 200 to 250 Mc/s : above this limit it is necessary to resort to coaxial cavity or other special circuitry.

Output versus Input

A convenient drive power control can be achieved by variation of the drive stage screen grid voltage. It will be found that as drive power is increased, the output will follow suit until a point is reached at which no further appreciable increase occurs but instead, the screen grid current rises rapidly.

The correct drive conditions are those just before this point is reached ; grid current set to approximately 10 to 20 mA is a useful guide to this requirement being achieved.

Negative screen current indicates a condition of severe underdriving or incorrect anode loading. The maximum output is 250 to 300 watts at an efficiency of 60 to 70%.

Output Coupling

Output coupling is adjusted by moving the link coil L3 in and out of the tank coil L2, the link capacitor and anode tank circuit being tuned for maximum output.

Neutralisation

Little or no neutralisation is required provided the anode circuit is well screened from the grid circuit.

A need for neutralisation or better screening is indicated by a large rise in grid current when the anode circuit is tuned through resonance.

General Notes on V.H.F. Circuits

Anode capacitance must be kept to an absolute minimum. In V.H.F. circuits this is best achieved by the " pseudo push-pull " arrangement shown in circuit diagrams given in Fig. 28 and Fig. 30.

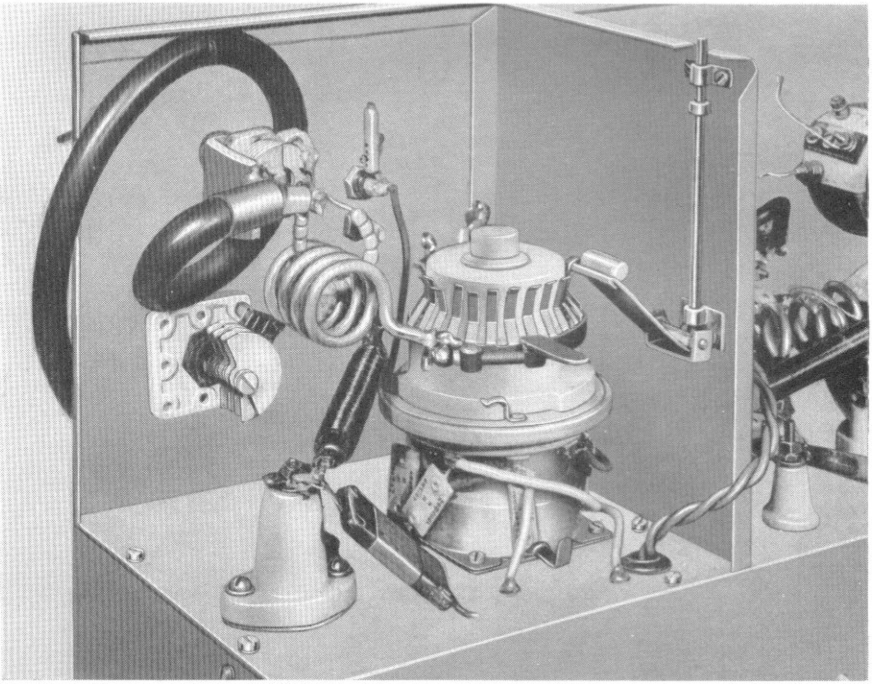

Fig. 29 150 Mc/s Power Amplifier—Illustration

In a genuine push-pull circuit, the anode tank capacitor may be connected between anodes but must be kept to a minimum value and, where wide frequency range is required, it may be necessary to resort to variable inductance tuning.

Owing to the minimum circuit capacitance requirement, P_i tank networks are not very practicable for frequencies above 100 Mc/s.

The screen grid supply should be designed to offer a low impedance to positive or negative grid currents ; therefore the use of a high value voltage dropping resistor to obtain the screen voltage from the anode supply is not recommended.

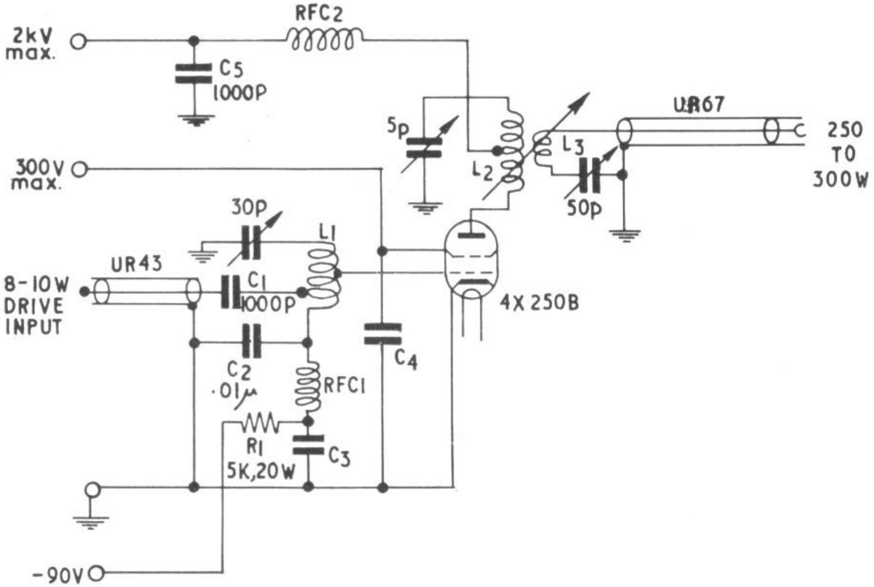

Fig. 30 150 Mc/s Power Amplifier Circuit Diagram

COMPONENTS

C2	0·01 μF	Mica		
C4	Screen decoupling capacitor to be built into valve holder.			
	Holders :	Ediswan VH88/802	C4 = 3 000 to 3 600 pF	
		Eimac 4X150A/4000	C4 = 2 500 to 3 000 pF	
L1	2 turns tapped at ½ turn for drive input and at 1 turn for grid connexion			
		wire dia.	0·225 in.	5,7 mm
		coil length	1·75 in.	44,5 mm
		coil dia.	1·062 in.	27 mm
L2	3¾ turns	centre-tapped		
		wire dia.	0·15 in.	3,8 mm
		coil length	1·5 in.	38 mm
		coil internal dia.	0·75 in.	19 mm
L3	1 turn	insulated with ceramic beads.		
		wire dia.	0·062 in.	1,57 mm
		coil internal dia.	0·75 in.	19 mm
RFC1	130 turns	0·008 in. (0,2 mm) diameter enamelled copper wire on former of 0·325 in. (8,3 mm) diameter polythene		
RFC2	175 turns	0·02 in. (0,5 mm) diameter enamelled copper wire on low loss former 0·375 in. (9,5 mm) diameter (glass or ceramic).		

4.4 POWER AMPLIFIER AT 432 Mc/s

For operation at frequencies exceeding 200—250 Mc/s, circuits using lumped constants cease to be effective, and more specialised circuits like those described below become necessary.

A 432 Mc/s power amplifier (Fig. 31) has been evolved to demonstrate two methods of tank construction in the one amplifier. The input circuit is a " butterfly " type of resonator in which input and grid matching are achieved with the aid of a line. While this form of circuit is very flexible and relatively inexpensive to construct, the efficiency is less than that of a properly designed coaxial cavity circuit.

The anode tank circuit is a coaxial cavity type of simple construction which can be modified easily to suit any frequency in the range 200—500 Mc/s.

The operating frequency of the one described can be raised simply by reducing the size of the anode tuning flag. Complete removal of this flag would result in an operating frequency in the region 470 to 500 Mc/s depending on the particular output capacitance of the valve used.

Grid Bias and Drive

For Class C operation, the value of grid bias should be kept as low as possible consistent with efficient operation. With the grid circuit shown, it is necessary to provide a drive power of the order of 30 to 40 watts, although a lower figure can be realised with a more efficient input circuit. The bulk of this power is dissipated by the circuit losses, and only a small proportion actually reaches the grid.

Other modes of operation will be discussed later.

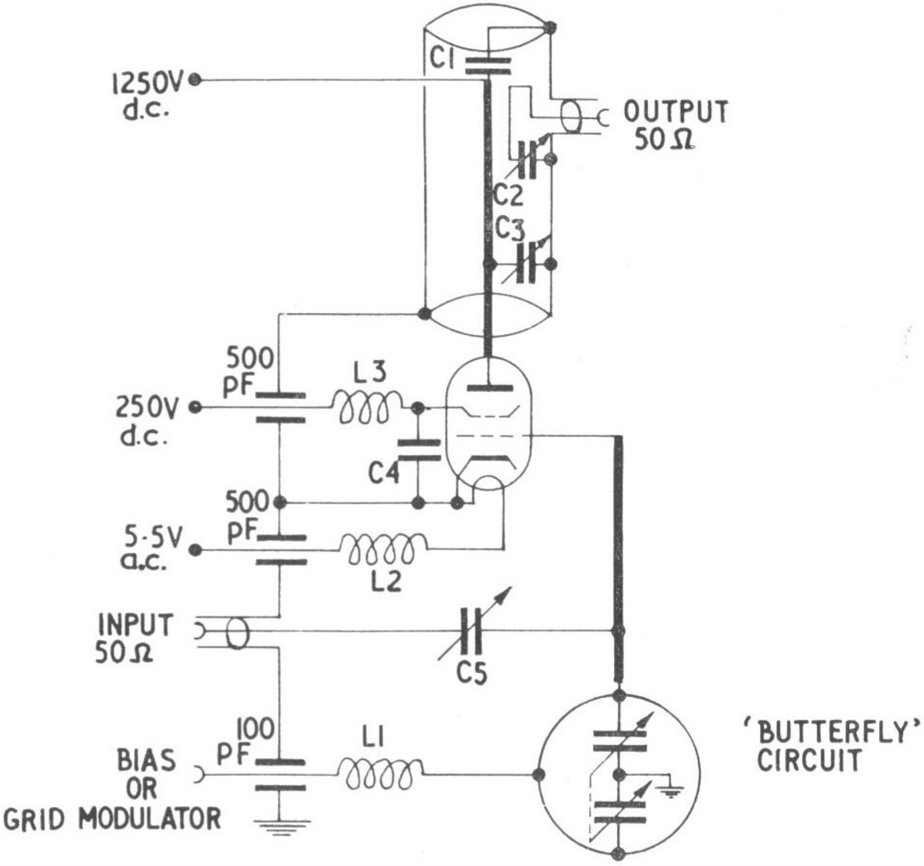

L1 10 TURNS 22 SWG WOUND ON $\frac{1}{4}$ INCH (6,35 mm) DIA. POLYSTYRENE.

L2 18 TURNS 20 SWG WOUND ON $\frac{1}{4}$ INCH (6,35 mm) DIA. POLYSTYRENE.

L3 40 TURNS 30 SWG WOUND ON $\frac{1}{4}$ INCH (6,35 mm) DIA. POLYSTYRENE.

C4 CAPACITOR BUILT INTO VALVE SOCKET.

Fig. 31 432 Mc/s Power Amplifier—Circuit Diagram

Grid Tank Circuit—Detailed Description

An illustration and a dimensional drawing of the circuit are shown in Fig. 32 and Fig. 33 respectively.

The tank consists of two sections. The first part is the resonator formed by the split stator capacitor and the two ¼-in. (6,4 mm) wide copper strips soldered to its terminals. This forms a " butterfly " type of resonator, and, as shown, tunes from about 400 to 440 Mc/s. The resonant frequency may be altered by changing the length of the copper strips.

The second part of the circuit is used for matching purposes. It consists of a line, made from 1¼ in. (31,8 mm) wide 18 S.W.G. copper strips, 4·0 in. (101,6 mm) long, supported 0·6 in. (15,2 mm) from the copper chassis. Power is fed in via a coaxial connector and a capacitor formed by two ¾-in. (19,0 mm) diameter copper discs, to a point 1·1 in. (27,8 mm) from the " butterfly " end of the line. The length of the line has little effect on the resonant frequency, although standing waves occur along its length. The length of the line is chosen so that the maximum possible power is fed to the grid circuit.

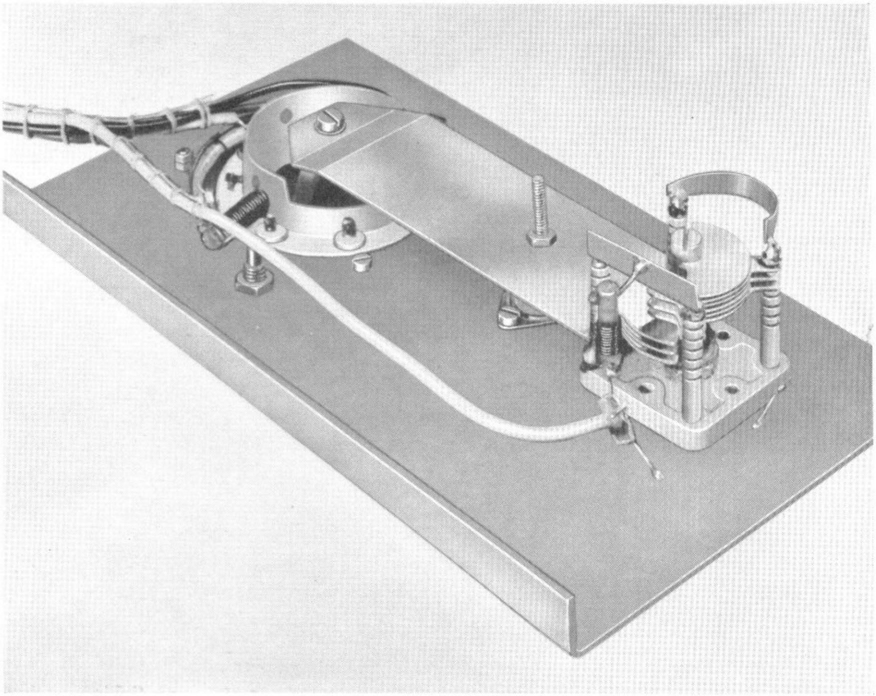

Fig. 32 Grid Tank Circuit—Illustration

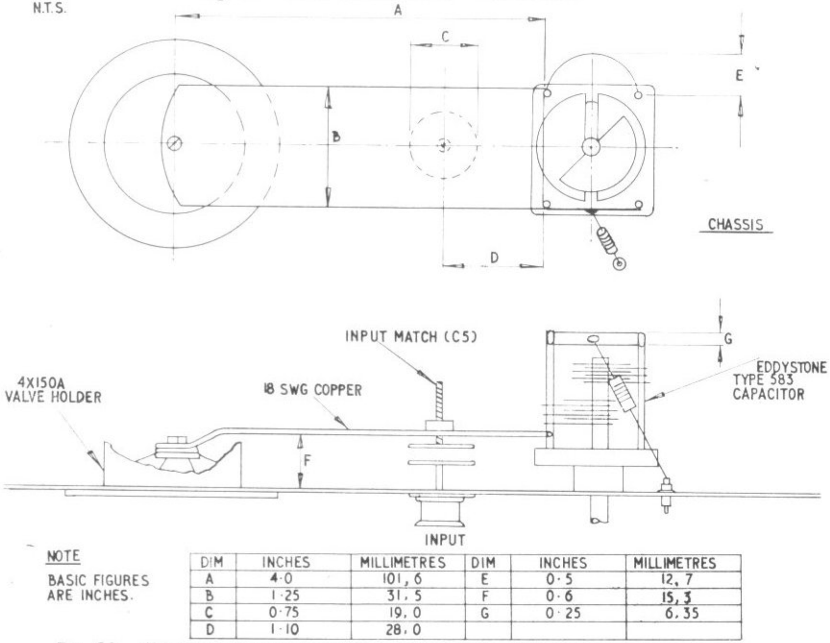

NOTE

BASIC FIGURES ARE INCHES.

DIM	INCHES	MILLIMETRES	DIM	INCHES	MILLIMETRES
A	4·0	101, 6	E	0·5	12, 7
B	1·25	31, 5	F	0·6	15, 3
C	0·75	19, 0	G	0·25	6, 35
D	1·10	28, 0			

Fig. 33 432 Mc/s Power Amplifier Grid Tank—Dimensional Drawing

Anode Tank Circuit—Detailed Description

An illustration and a dimensional drawing of the anode tank circuit are shown in Fig. 34 and Fig. 35 respectively.

The anode tank is electrically a short-circuited coaxial line with the hollow centre conductor, 4·75 in. (120,6 mm) in length, serving the dual purpose of a part of the electrical circuit and of an air duct. The diameters of the coaxial parts are 1·5 in. (38,1 mm) and 3·0 in. (76,2 mm) respectively, whilst the anode tuning capacitor tabs are 0·83in. (21,1 mm) in diameter and have a separation of about 0·25in. (6,4mm).

A trimmer capacitor is fitted to the anode end of the line to effect anode tuning. Power is extracted from the circuit by means of a tuned link near the shorted end. Since the outside of the line must be at earth potential, it is necessary to decouple the end of the centre conductor, rather than to short it directly to the outer. To achieve this, a disc of mica is inserted between the end of the centre conductor and the end plate of the cavity. A hole must be cut in the mica to permit the flow of cooling air, and the screws holding the centre conductor in place must be insulated.

The surfaces of the metal which, with the mica washer, form a capacitor (C1 in Fig. 35) must have smooth edges free from burrs and scratches to avoid the risk of flashover.

Efficiency and Cost

While very high efficiencies can be realised from power amplifiers using these valves, the driving requirements at U.H.F. become very large compared with the output power if special circuitry is not used.

If efficiency of the amplifier can be sacrified, the cost can be greatly reduced by operating the valve as a frequency doubler, and thus driving at half the required frequency. This greatly simplifies the input circuits and saves appreciably on drive requirements. This arrangement is recommended in all cases, above 300 Mc/s output frequency, when cost is of prime importance.

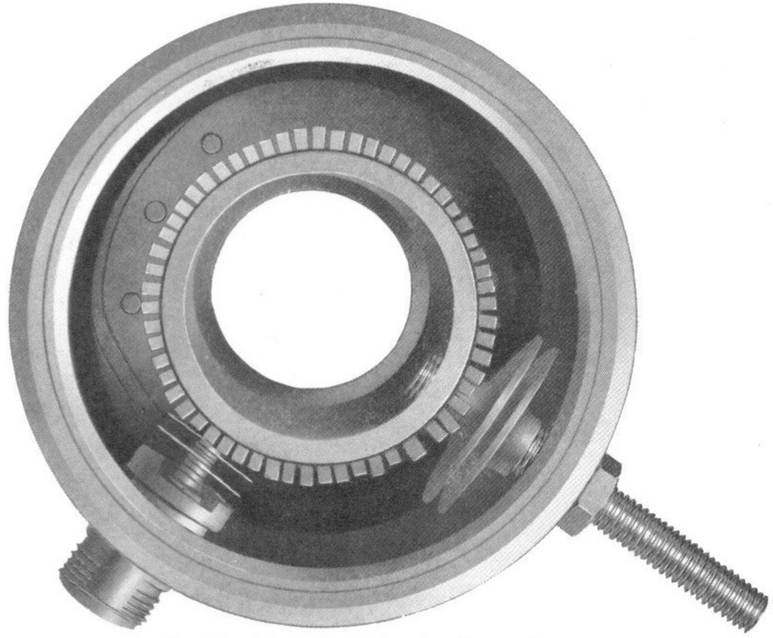

Fig. 34 Anode Tank Circuit—Illustration

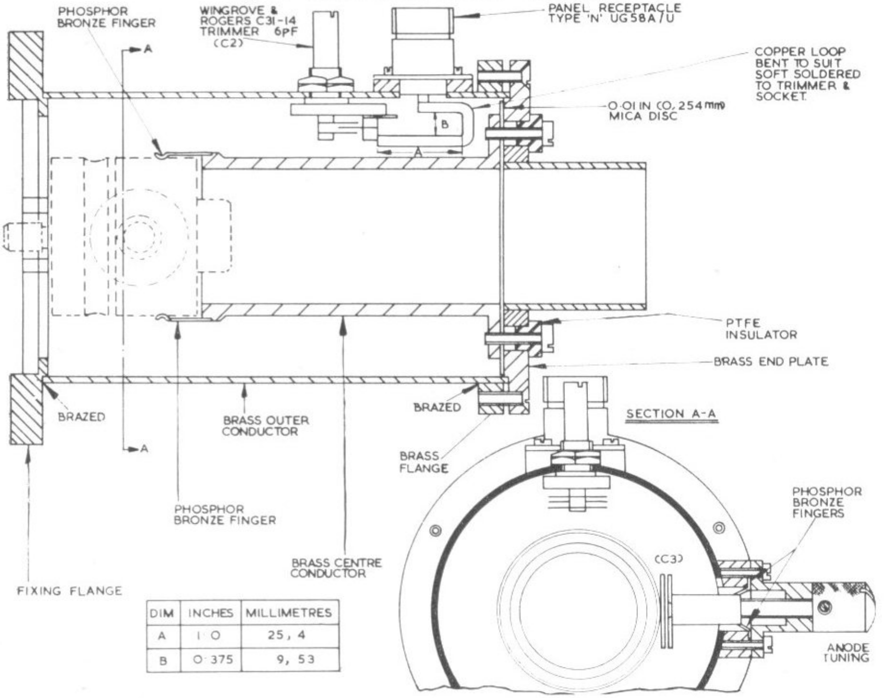

DIM	INCHES	MILLIMETRES
A	1·0	25, 4
B	0·375	9, 53

Fig. 35 432 Mc/s P.A. Anode Tank Circuit—Dimensional Drawing

Calculation of the Dimensions and Resonators for V.H.F. and U.H.F.

For frequencies higher than 150—200 Mc/s, lumped constant tuned circuits of the more usual form become impracticable. To calculate the dimensions of a distributed tuned circuit or resonator it is first necessary to know the characteristic impedance of the desired configuration. Formulae for calculating the characteristic impedance of some of the more common arrangements are shown in Fig. 36. Characteristic impedance formulae for other arrangements may be found by referring to a reference textbook, e.g., " Reference Data for Radio Engineers " (ITT).

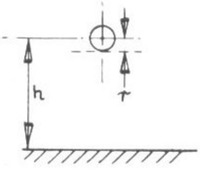

SINGLE CYLINDRICAL CONDUCTOR SUSPENDED ABOVE PLANAR EARTH

$$Z_0 = 138 \text{ LOG } \frac{2h}{r} \text{ OHMS}$$

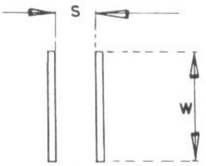

TWO PARALLEL STRIP CONDUCTORS WHERE W >> S

$$Z_0 = 377 \frac{S}{W} \text{ OHMS}$$

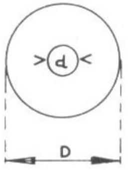

COAXIAL CYLINDERS

$$Z_0 = 138 \text{ LOG } \frac{D}{d} \text{ OHMS}$$

Fig. 36 Formulae for Calculating Characteristic Impedance of Common Line Arrangements

It is now necessary to know the loading capacitance across the end of the line(s). This capacitance comprises, for a $\lambda/4$ line, the anode output capacitance of the valve plus the capacitance of the tuning capacitor. If $\lambda/2$ configuration is required, it is necessary to regard the line(s) as two $\lambda/4$ parts, one loaded with the anode capacitance and the other loaded with the capacitance of the tuning capacitor. It should be noted that the mechanical lengths of the two $\lambda/4$ sections are not necessarily the same.

Once the loading capacitance is known the inductive reactance required from each $\lambda/4$ section can be calculated from :—

$$X_C = X_L \text{ (at resonance)}$$

$$\text{i.e. } X_L = \frac{10^6}{2\pi fC} \qquad \begin{array}{l} \text{where C is in pF} \\ \text{f is in Mc/s} \\ X_L \text{ is in } \Omega \end{array}$$

The required mechanical length can now be computed from the following :—

$$X_L = Z_0 \tan \frac{2\pi l^*}{\lambda} \quad \begin{array}{l} \text{where } Z_0 \text{ is the characteristic impedance in } \Omega \\ l = \text{length of the line} \\ \lambda \text{ is the wavelength} \\ \text{(both } l \text{ and } \lambda \text{ in the same units)} \end{array}$$

*For easy reference, a graph giving tangents of angles (in radians) is given at Fig. **38**.

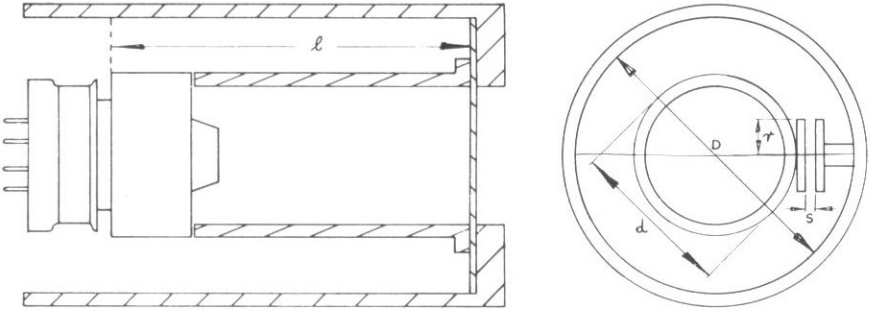

Fig. 37 Basic form of coaxial cavity showing significant dimensions

The wavelength may be calculated from the formula :—

$$\lambda = \frac{30\,000}{f} \text{ cm} \qquad \left(\lambda = \frac{39{\cdot}3 \times 300}{f} \text{ in.}\right)$$

where f is the frequency in Mc/s.

Worked Example

Reproduced below are the calculations involved to determine the dimensions of the λ/4 type anode resonator for the 432 Mc/s power amplifier. (4.4).

Frequency of operation = 432 Mc/s

$$\text{From } \lambda = \frac{39{\cdot}3 \times 300}{f}$$

$$\lambda = \frac{39{\cdot}3 \times 300}{432} = 27{\cdot}25 \text{ in. } (69{,}5 \text{ cm})$$

Assume an inner conductor O/D, $d = 1{\cdot}5$ in. (3,8 cm)
an outer conductor I/D, $D = 3{\cdot}0$ in. (7,6 cm)

Using the characteristic impedance formula for coaxial cylinders

$$Z_0 = 60 \ln D/d \text{ or } Z_0 = 138 \log D/d$$

assuming that there is no supporting insulating media

$$\text{i.e. } Z_0 = 138 \log \frac{3{\cdot}0}{1{\cdot}5} \quad (\text{or } 138 \log \frac{7{,}6}{3{,}8})$$

$$\simeq 40 \text{ ohms}$$

Assume an output capacitance for the valve of 4·2 pF and allow 0·5 pF for the tuning capacitor, then the total loading capacitance (this is a λ/4 resonator) is 4·7 pF

$$\text{as } X_L = \frac{10^6}{2\pi \; fC}$$

$$X_L = \frac{10^6}{2\pi \times 432 \times 4{\cdot}7} = 78 \text{ ohms}$$

$$\text{From } X_L = Z_0 \tan \frac{2\pi \; l}{\lambda}$$

$$l = \frac{\lambda}{2\pi} \tan^{-1} \frac{X_L}{Z_0}$$

$$= \frac{27{\cdot}25}{2\pi} \tan^{-1} \frac{78}{40} \text{ in.} = 4{\cdot}75 \text{ in.}$$

$$\text{or } \frac{69{\cdot}5}{2\pi} \tan^{-1} \frac{78}{40} \text{ cm} = 12{,}07 \text{ cm}$$

The dimensions of the tuning capacitor C_3 can be calculated from the formula :—

$$C = \frac{0{\cdot}226\ \pi\ r^2}{S}\ \text{pF}$$ where r is the radius of the plates and S is their separation in inches

$$C = \frac{0{\cdot}0885\ \pi\ r^2}{S}\ \text{pF}$$ when r and S are in cm

$$C = 0{\cdot}5\ \text{pF}$$

Assume a plate separation of 0·25 in. (0,635 cm)

$$r^2 = \frac{0{\cdot}25 \times 0{\cdot}5}{0{\cdot}226\pi} = 0{\cdot}175 \quad \therefore r = 0{\cdot}418\ \text{in}$$

$$(\text{or}\quad r^2 = \frac{0{\cdot}635 \times 0{\cdot}5}{0{\cdot}0885\pi} = 1{,}14\ \text{cm}^2\ \therefore r = 1{,}06\ \text{cm})$$

diameter of plates therefore is 0·83 in. (2,12 cm).

Summary

Line Dimensions

Outer conductor I/D	= 3	in.	7,6 cm
Inner conductor O/D	= 1·5	in.	3,8 cm
Length	= 4·75	in.	12,07 cm
Loading capacitance	= 4·7	pF	

Capacitor Dimensions

Plate diameter	= 0·83	in.	2,12 cm
Plate spacing	= 0·25	in.	0,635 cm

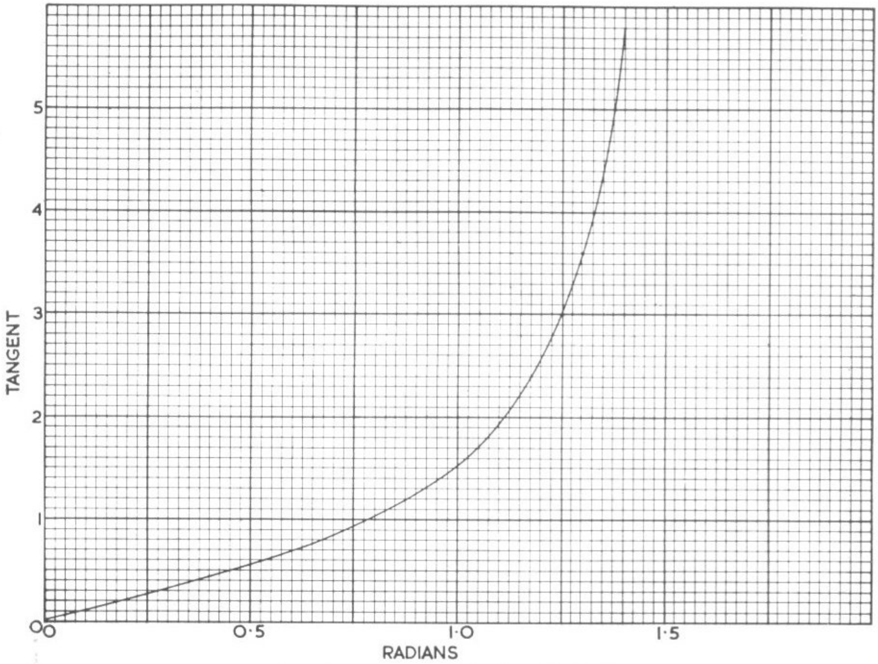

Fig. 38 Tangents of Angles (in Radians)

4.5 MODULATION METHODS AND LINEAR OPERATION

The modulation of any tetrode by exciting its anode only is not practicable because of the characteristics of this type of valve.

Normally, " anode-only " modulation is achieved by connecting a choke in series with the screen supply to the valve ; this enables the screen to follow the anode variations. Unfortunately, the screen characteristic of valves in the 4X150/4X250 series is such that if this method of modulation is attempted, instability may result. The mechanism of this instability is as follows : During a positive peak of modulation, current to the screen is reduced. If the peak is high enough, the screen current may even become negative. If this occurs, the screen presents a negative resistance to the external circuit, and, if inductive reactance is present, oscillation may occur.

To overcome the problem of oscillation caused by the inductance of the screen winding on the modulation transformer, it is necessary to raise the losses in this circuit. The simplest way of achieving this is to connect a resistor of about 2·5 k Ω (20 watt) across the screen winding of the modulation transformer. Audio power will be lost in this component, but compared with the overall power requirements, this is negligible.

For 100% modulation depth it is necessary to modulate fully the anode supply and apply 55% modulation to the screen supply.

Grid Modulation with a Sine Wave (Fig. 39)

This is an efficiency form of modulation. Instead of power being added to a power amplifier of constant efficiency, as in the previous case, the efficiency of an amplifier consuming constant power is varied. Naturally this reduces the available output from the stage, but the audio power requirements are small.

With no modulation, the bias of the stage is set for approximately Class B operation. In the case of the 432 Mc/s power amplifier described previously, the bias voltage should be about 46 volts. R.F. drive should be adjusted so that less than 1 mA of grid current is drawn. The modulating signal is introduced by means of a transformer with its secondary in series with the bias supply. About 40 volts peak-to-peak is required to fully modulate the grid.

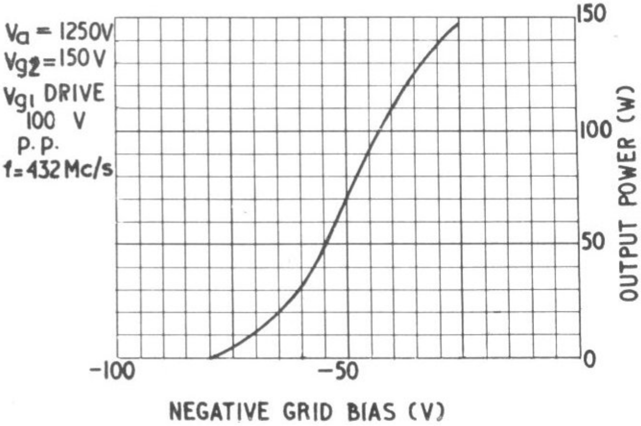

Fig. 39 Grid Modulation Characteristics at 432 Mc/s

Grid Modulation with Composite Video or Other Non-sinusoidal Waveform (Fig. 40)

It is necessary to keep the anode load resistance of the modulator as low as possible because grid current is drawn at peak white (for positive modulation). Anode peaking inductance L1 should be used to assist in compensating for the heavy capacitive loading of the grid decoupling capacitor. The value of the peaking inductance will depend on the exact value of the grid decoupling capacitor, plus stray capacitances, but if a decoupling capacitor of 100pF is used, the value of the peaking inductor will be about 30 μH for 3 Mc/s band-width.

Synch. pulses and peak white signal should be distorted to counteract the non-linearity (cramping) which will occur during modulation. Failure to do this will result in a low R.F. efficiency for linear modulation.

The 250 Ω bias control in the cathode of the CV2127 forms a simple and inexpensive method of controlling the black level setting of the carrier wave. In order for this to be effective, it is essential that synch. pulses should be of constant amplitude.

A preferable clamping arrangement for composite video signals is shown as an alternative : this is known as line-by-line clamping. In this arrangement the clamping diodes are switched by pulses of about 25 volts amplitude, timed to arrive in the front porch of each line of the video signal. Thus it can be seen that the black level of the composite video signal is restored to the reference potential regardless of the amplitude of synch. pulses. The clamping pulses should be absolutely equal and apposite in polarity and it is recommended that their rise and decay times should not be too rapid.

(a) CIRCUIT USING SYNCH. BOTTOM RESTORATION.

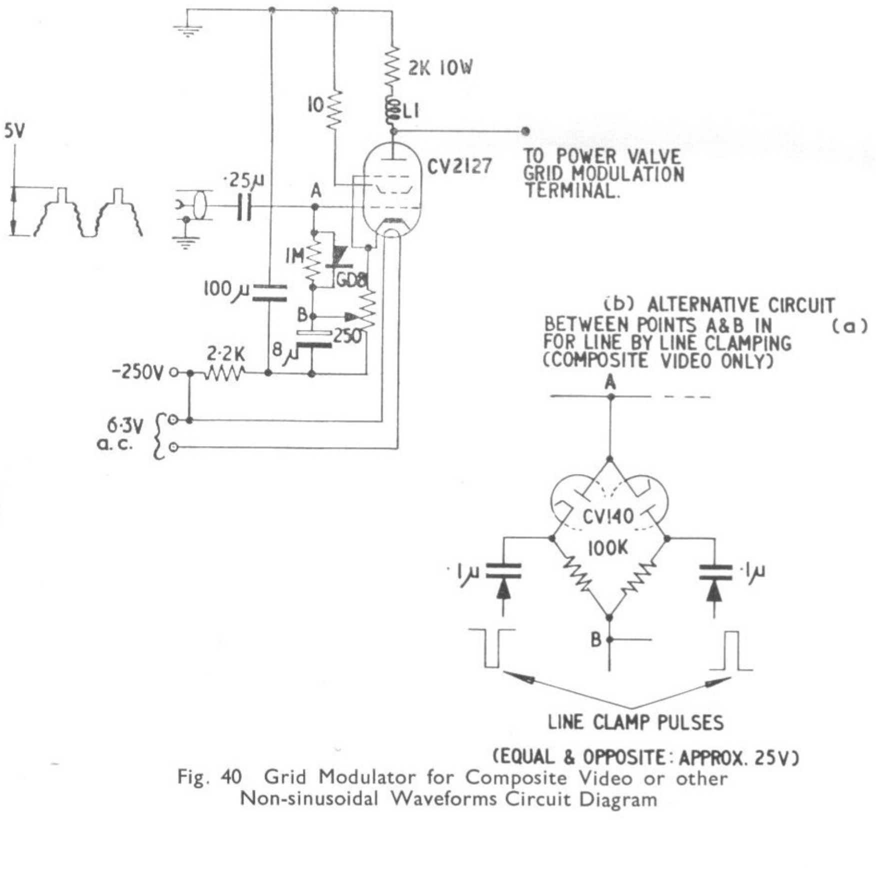

(b) ALTERNATIVE CIRCUIT BETWEEN POINTS A&B IN (a) FOR LINE BY LINE CLAMPING (COMPOSITE VIDEO ONLY)

Fig. 40 Grid Modulator for Composite Video or other Non-sinusoidal Waveforms Circuit Diagram

Class AB_1 Linear R.F. Amplifier

In this case, the drive to the stage is already modulated, so that the output from an existing transmitter may be " boosted " by linear operation. Highest efficiency is achieved by using a low anode voltage, high current, and heavy loading. No grid current should be drawn, even at modulation peaks ; otherwise non-linearity will result.

In the case of the 432 Mc/s power amplifier, previously described, the bias voltage should be about —33 volts with anode voltage reduced to 1 000 volts. Under these conditions, the peak output is 100 watts and the maximum efficiency about 40%.

A curve showing the relation between input power and output power is shown in Fig. 41.

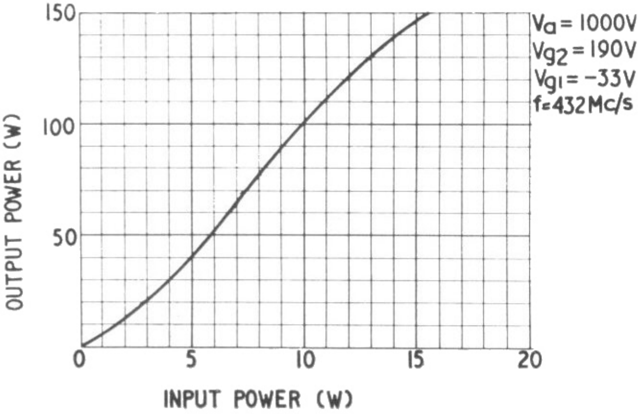

Fig. 41 Power Gain Characteristic in Linear Amplifier Operation at 432 Mc/s

4.6 HIGH CURRENT, SERIES VOLTAGE STABILISER

Operation

The circuit (Fig. 42) can be divided into two main sections.

The first section, comprising V_{2a}, is a shunt regulator, the function of which is to control the screen voltage of the 4X150A regulator valve. The second section, which comprises the remainder of the circuit, is the feedback amplifier.

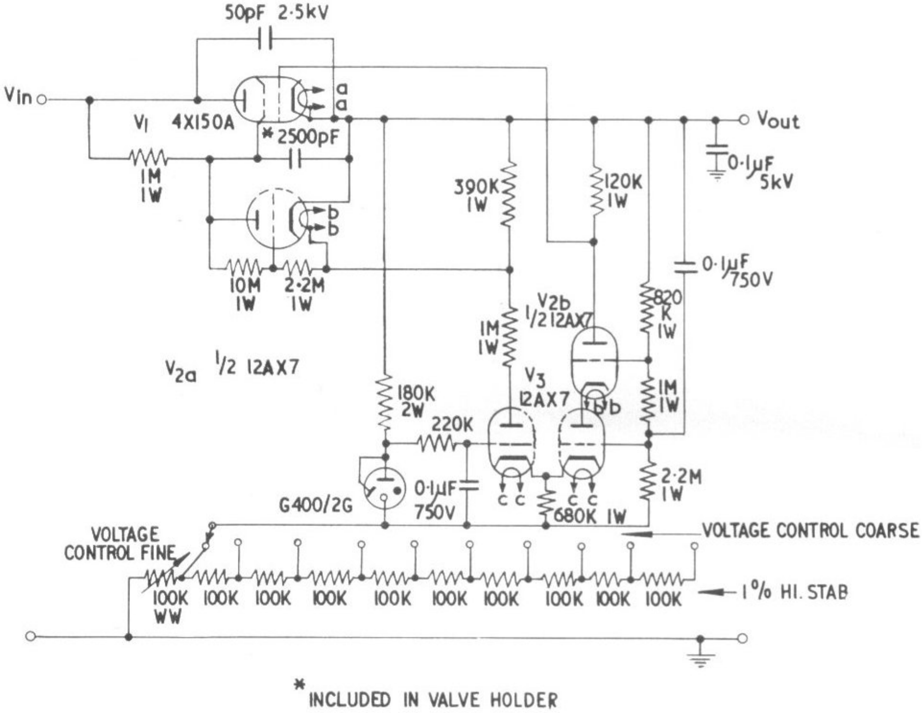

Fig. 42 Series Voltage Stabiliser—Circuit Diagram

The operation of the circuit can be seen more clearly by referring to the simplified diagram (Fig. 43).

By using this circuit, the large anode swing which occurs on the control valve(s) in more conventional circuits, is avoided. Basically the circuit is a cathode coupled, differential amplifier formed by triodes V_{2a} and V_{2b} with a high value fixed cathode resistor R_1 and a variable resistor R_2.

Consider the condition when $R_2 = 0$.

If V_0 tends to rise, the grid voltage of V_{2b} is raised. The anode current of this valve rises but the cathode voltage remains constant, being held near to the stabilised grid voltage of V_{2a} by a fall in anode current of that valve. Thus the anode voltage of V_{2b} falls and the grid of V_1 is driven negative, so compensating for the original change in V_0.

Now consider the effect of increasing R_2 and thus raising the voltage at A.

The voltage across R_1 remains constant, being approximately equal to the stabilised voltage across V_3 : it follows that the current through R_1 must remain constant and the cathodes of V_{2a} and V_{2b} rise in potential by the same amount as point A.

A fall of V_{2b} anode current must occur as long as the potential of its grid remains constant, and therefore its anode voltage must rise.

The cathode of V_1 will follow its grid voltage and thus V_0 will increase.

Stabilisation recurs when the grid-to-cathode voltage of V_{2b} has reached its original value, i.e., when V_0 has risen by the same amount as point A. Accordingly, it will be seen that within quite wide limits the control triodes V_{1a} and V_{1b} always operate under the same conditions, and that the amount by which the output voltage may be raised is limited only by V_{in}.

In the final circuit, arrangements are such that the screen voltage of the series valve rises from 150 volts to 350 volts between no load and full load, and so assists in maintaining constant output voltage.

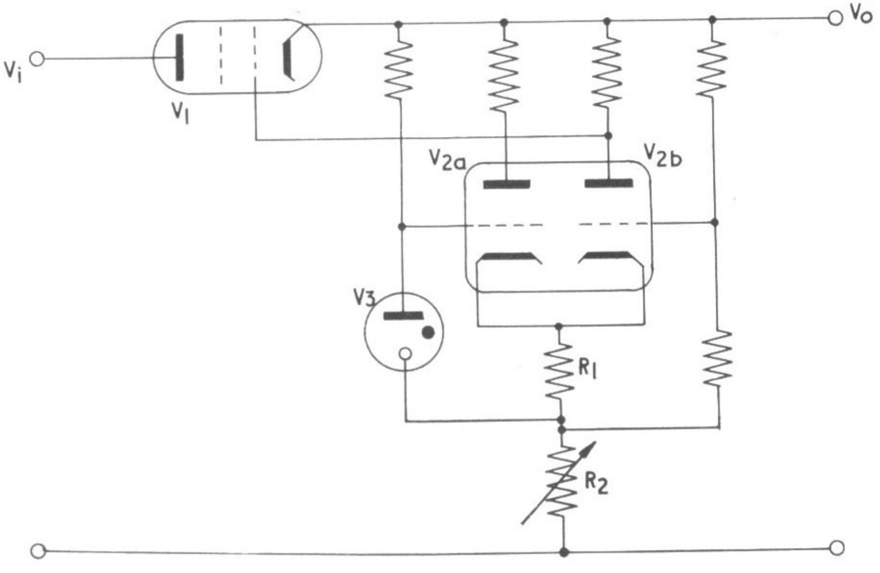

Fig. 43 Series Voltage Stabiliser—Simplified Circuit Diagram

Voltage Range

The range of output voltage from the circuit shown in Fig. 42 is from 600 volts to 2 000 volts. However, by raising the value of the voltage control resistor and the input voltage, the output voltage can be raised to any value. It should be noted that in the event of a fault at the load, the full input voltage will be applied across the series valve.

Hum and Noise

Measured at 1 000 volts, the output hum and noise, off load, was 110 mV peak to peak ; with a 100 mA load, it was 500 mV peak to peak. Under these conditions the peak-to-peak input hum and noise voltages were 12 volts and 100 volts respectively. The hum and noise output did not increase appreciably at loads higher than 100 mA.

Stability against Input Variations

Measured at 1 000 volts no load ±2 volts for input voltage 1·5—3·0 kV

Voltage Stability against Load

Measured at 1 000 volts ±10 volts 0—240 mA

Heating Time

The minimum heating time of 30 seconds should be observed before any high tension voltage is applied.

Input Voltage Range

If a constantly variable output is required, it is necessary to increase the input voltage when the output voltage is increased, so that the drop across the series valve always lies in the range 600 volts to 2 000 volts.

For this circuit it is suggested that the input voltage should be set as follows :—

Output Voltage (Off Load)	*Input Voltage* (Off Load)
600—1 000 V	2 000 V
1 000—1 500 V	2 500 V
1 500—2 000 V	3 000 V

This will allow for a fall of up to 500 volts on the input voltage when the load is applied.

Load Current

A load current of up to 250 mA can be handled whilst the voltage across the series valve is below 1 000 volts. Above this voltage the current is limited in the manner shown in Fig. 44.

> *Note* :—In order to complete the screen decoupling circuit, it is necessary to connect the cathode to the frame of the valve holder. As this point may be at a potential of several thousands of volts, it is clearly necessary to insulate the metalwork of the valve holder from the metalwork of the blower.

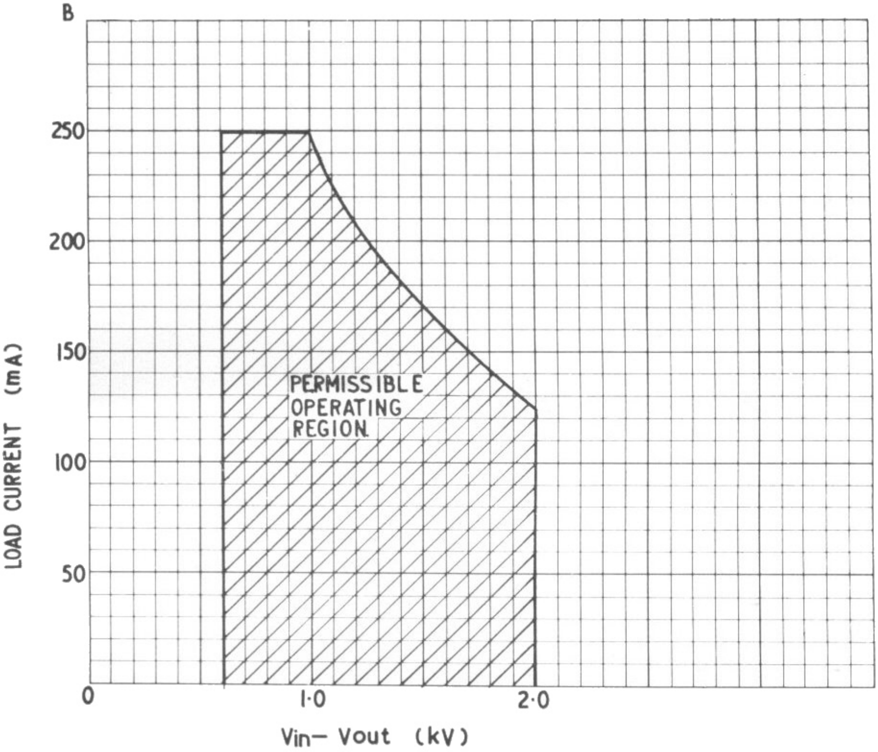

Fig. 44 Series Voltage Stabiliser Boundary Conditions

5. REFERENCES

1. " A Small, High Voltage, Regulated P.S.U. with Variable Output ". J. D. O'Toole. Electronic Engineering, Nov. 1959.

2. " A Coaxial Tank Amplifier for 220 and 420 Mc/s ". Richard D. Brayley. Q.S.T., May 1951.

3. " A Coaxial Grid Circuit for 4X150A Amplifier ". Q.S.T., August 1953.

4. " A 4X250B Linear ". Irwin R. Wolfe and Hugo Romander. Q.S.T., November 1956.

5. " Characteristic Impedances of Transmission Lines ', page 588 et seq. Reference Data for Radio Engineers, ITT, 4th Edition. American Book. Stratford Press Incorporated, New York.

Standard Telephones and Cables Limited

Registered Office :

CONNAUGHT HOUSE, 63 ALDWYCH, LONDON, W.C.2

Telephone : Holborn 8765 *Telegrams : Relay, London, W.C.2*

***LAND LINE SYSTEMS DIVISION**
NORTH WOOLWICH, LONDON, E.16
Telephone: Albert Dock 1401

VALVE DIVISION
PAIGNTON, DEVON
Telephone: Paignton 58685

RADIO DIVISION
NEW SOUTHGATE, LONDON, N.11
Telephone: Enterprise 1234

***MICROWAVE SYSTEMS DIVISION**
NORTH WOOLWICH, LONDON, E.16
Telephone: Albert Dock 1401

CAPACITOR DIVISION
PAIGNTON, DEVON
Telephone: Paignton 58685

TELEPHONE SWITCHING DIVISION
NEW SOUTHGATE, LONDON, N.11
Telephone: Enterprise 1234

***SUBMERGED REPEATER DIVISION**
NORTH WOOLWICH, LONDON, E.16
Telephone: Albert Dock 1401

SEMICONDUCTOR DIVISION
Transistors
FOOTSCRAY, SIDCUP, KENT
Telephone: Footscray 3333
Rectifiers
HARLOW, ESSEX
Telephone: Harlow 26811

TELEPHONE CABLE DIVISION
NORTH WOOLWICH, LONDON, E.16
Telephone: Albert Dock 1401

***TESTING APPARATUS DIVISION**
NORTH WOOLWICH, LONDON, E.16
Telephone: Albert Dock 1401

RUBBER AND PLASTIC CABLE DIVISION
NEWPORT, MON.
Telephone: Newport (Mon.) 72281

**All communications to:*
Marketing Manager,
TRANSMISSION SYSTEMS GROUP
NORTH WOOLWICH, LONDON, E.16
Telephone: Albert Dock 1401

SUBMARINE CABLE DIVISION
SOUTHAMPTON, HANTS
Telephone: Southampton 74751

QUARTZ CRYSTAL DIVISION
HARLOW, ESSEX
Telephone: Harlow 24212

ELECTRO-MECHANICAL DIVISION
HARLOW, ESSEX
Telephone: Harlow 26811

INTEGRATED ELECTRONIC SYSTEMS DIVISION
ENFIELD, MIDDLESEX
Telephone: Enfield 5343

MAGNETIC MATERIALS DIVISION
HARLOW, ESSEX
Telephone: Harlow 21421

CONSUMER PRODUCTS GROUP
FOOTSCRAY, SIDCUP, KENT
Telephone: Footscray 7733

PRIVATE COMMUNICATION EQUIPMENT DIVISION
FOOTSCRAY, SIDCUP, KENT
Telephone: Footscray 7788

COMPONENTS GROUP
Marketing Department
FOOTSCRAY, SIDCUP, KENT
Telephone: Footscray 3333

Home Branch Offices :
BIRMINGHAM, LEEDS, GLASGOW, MANCHESTER

Overseas Branch Offices
CAIRO, DUBLIN AND SALISBURY

Associated Companies in Europe, the U.S.A., Canada, South America, South Africa, the Far East and Australasia

STC

September, 1963

Printed in England by Metcalfe & Cooper Ltd