Rockwell International

Collins instruction book

Collins Government Telecommunications Group

Collins 51S-1/1A/1F/1AF/1B Receiver

523-0097000-00B211
11th Edition, 15 September 1975

Rockwell International

Collins instruction book

Collins 51S-1/1A/1F/1AF/1B Receiver

Collins Government Telecommunications Group
Rockwell International
Cedar Rapids, Iowa 52406

Printed in the United States of America

List of Effective Pages

*The asterisk indicates pages changed, added, or deleted by the current change.

Page No	Issue
Cover	15 Sep 75
Title	15 Sep 75
A thru B	15 Sep 75
C Blank	15 Sep 75
i thru iii	15 Sep 75
iv Blank	15 Sep 75
v	15 Sep 75
1-0 thru 1-10	15 Sep 75
2-1 thru 2-3	15 Sep 75
2-4 Blank	15 Sep 75
3-1 thru 3-5	15 Sep 75
3-6 Blank	15 Sep 75
3-7	15 Sep 75
3-8 Blank	15 Sep 75
4-1 thru 4-14	15 Sep 75
5-1 thru 5-7	15 Sep 75
5-8 Blank	15 Sep 75
6-1 thru 6-43	15 Sep 75
6-44 Blank	15 Sep 75
6-45 thru 6-76	15 Sep 75
7-1 thru 7-3	15 Sep 75
7-4 Blank	15 Sep 75
7-5	15 Sep 75
7-6 Blank	15 Sep 75
7-7	15 Sep 75
7-8 Blank	15 Sep 75
7-9	15 Sep 75
7-10 Blank	15 Sep 75
7-11 thru 7-13	15 Sep 75
7-14 Blank	15 Sep 75
7-15	15 Sep 75
7-16 Blank	15 Sep 75
7-17	15 Sep 75
7-18 Blank	15 Sep 75
7-19	15 Sep 75
7-20 Blank	15 Sep 75
7-21	15 Sep 75
7-22 Blank	15 Sep 75
7-23	15 Sep 75
7-24 Blank	15 Sep 75
7-25 thru 7-26	15 Sep 75

Collins welcomes your comments concerning this instruction book. Although every effort has been made to keep it free of errors, some do occur. When reporting a specific problem, please describe it briefly and include the instruction book part number, the paragraph or figure number, and the page number.

Send your comments to: Publications Department
Collins Government
Telecommunications Group
Rockwell International
Cedar Rapids, Iowa 52406

Record of Revisions

RETAIN THIS RECORD IN THE FRONT OF MANUAL.
ON RECEIPT OF REVISIONS, INSERT REVISED PAGES IN THE MANUAL, AND ENTER DATE INSERTED AND INITIALS.

REV NO	REVISION DATE	INSERTION DATE	BY	REV NO	REVISION DATE	INSERTION DATE	BY
8th Ed	1 Sep 69						
9th Ed	1 Jul 69						
10th Ed	15 Jan 74						
11th Ed	15 Sep 75						

table of contents

	Page
Section 1 Installation	1-1
1.1 Unpacking	1-1
1.2 Mounting and Cabling for 51S-1/1A/1F/1AF	1-1
1.2.1 Power Cable	1-1
1.2.2 Audio Outputs	1-1
1.2.3 Antenna	1-1
1.3 Mounting and Cabling for 51S-1B	1-1
1.4 Supplementary Installation Data for 51S-1/1A/1F/1AF	1-3
1.4.1 IF. Output	1-3
1.4.2 External RF Gain	1-3
1.4.3 Mute	1-3
1.4.4 Sidetone	1-3
1.4.5 Line Output	1-3
1.4.6 External VFO Connection	1-3
1.4.7 Rejection Tuning	1-4
1.5 Supplementary Installation Data for 51S-1B	1-4
1.5.1 IF. Output	1-4
1.5.2 External RF Gain Control Line	1-4
1.5.3 Mute	1-4
1.5.4 Sidetone	1-4
1.5.5 Line Output	1-4
1.5.6 External VFO Connection	1-4
1.5.7 Rejection Tuning	1-4
Section 2 Operation	2-1
2.1 General	2-1
2.2 Frequency Reading	2-1
2.3 Single-Sideband Reception	2-1
2.4 CW Reception	2-2
2.5 AM Reception	2-2
2.6 Calibration	2-3
2.7 Dial Brake	2-3
Section 3 Principles of Operation	3-1
3.1 General	3-1
3.2 Circuit Descriptions	3-1
3.2.1 RF Amplifier	3-1
3.2.2 First Mixer	3-1

table of contents (cont)

		Page
3.2.3	Second Mixer	3-2
3.2.4	Third Mixer	3-2
3.2.5	First IF. Amplifier	3-3
3.2.6	Q-Multiplier	3-3
3.2.7	Second IF. Amplifier	3-3
3.2.8	Third IF. Amplifier	3-3
3.2.9	Product Demodulator	3-3
3.2.10	SSB/CW Preamplifier	3-3
3.2.11	Audio Amplifiers	3-3
3.2.12	Low-Frequency Mixer	3-4
3.2.13	Oscillators	3-4
3.2.14	Special Circuits	3-4
Section 4 Service Instructions		4-1
4.1	Preparation for Servicing	4-1
4.1.1	General	4-1
4.1.2	Chassis Removal From Cabinet	4-1
4.1.3	Chassis Removal From Rack Mount	4-2
4.2	Receiver Signal Tracing	4-2
4.3	Voltage and Resistance Measurements	4-2
4.3.1	Vacuum Tube Measurements	4-2
4.3.2	Transistor Measurements	4-4
4.4	Alignment	4-4
4.4.1	100-kHz Calibrator Adjustment	4-4
4.4.2	RF Meter Zeroing	4-5
4.4.3	IF. Alignment	4-6
4.4.4	3- to 2-MHz Variable IF. Alignment	4-7
4.4.5	14.5- to 15.5-MHz Band Pass Alignment	4-7
4.4.6	RF Alignment	4-7
4.4.7	Megahertz Oscillator Alignment	4-8
4.4.8	17.5-MHz Oscillator Alignment	4-9
4.4.9	LF Oscillator Alignment	4-9
4.4.10	Megahertz Injection Frequency Adjustment	4-9
4.4.11	Receiver Gain Adjustment	4-10
4.4.12	RF Meter Calibration	4-10
4.4.13	Q-Multiplier Alignment	4-10
4.4.14	VFO Alignment	4-11
4.5	Megacycles Drive Chain Replacement	4-11
4.6	Turret Wafer Replacement	4-13
4.7	Lamp Replacement	4-14

table of contents (cont)

		Page
Section 5 Specifications		5-1
5.1	51S-1/1A/1F/1AF/1B Receiver	5-1
5.2	Requirements for Operation	5-1
5.3	Specifications	5-2
5.4	Tube and Semiconductor Complement	5-5
5.5	Available Accessories	5-6
5.6	Difference Data	5-6
5.7	Schematic Change Information	5-6
Section 6 Parts List		6-1
6.1	Introduction	6-1
6.2	Group Assembly Parts List	6-7
6.3	Numerical Index	6-59
6.4	Reference Designation Index	6-69
Section 7 Illustrations		7-1

list of illustrations

Figure		*Page*
1-1	External Connections to 51S-1/1A/1F/1AF	1-0
1-2	600-Ohm Line and Remote RF Gain Control Options for 51S-1/1A/1F/1AF	1-2
1-3	51S-1/1A Receiver, Outline and Mounting Dimensions	1-5
1-4	51S-1/1A Receiver, Outline and Mounting Dimensions with 351E-4 Mount (C712-24-5)	1-6
1-5	51S-1F/1AF Rack Mount and 51S-1/1A Hinged Mount, Outline and Mounting Dimensions	1-7
1-6	51S-1B Receiver, Outline and Mounting Dimensions with 350D-5 Base Shockmount	1-8
1-7	51S-1B Receiver, Installation Details	1-9
2-1	Operating Controls	2-1
3-1	RF Input Circuits, Simplified Schematic Diagram	3-2
3-2	Block Diagram	3-7
4-1	Top Chassis, Alignment and Adjustment Locations (C712-14-P)	4-4

list of illustrations (cont)

Figure		Page
4-2	Bottom Chassis, Alignment and Adjustment Locations (C712-15-P)	4-5
4-3	RF and IF. Transformer Terminal Identification (C712-26-2)	4-6
4-4	Trimmer Capacitor Settings (C712-05-3)	4-8
4-5	Receiver Gain Adjustment Test Setup	4-10
4-6	Band Indicator Bead Chain Stringing (C712-18-P)	4-12
5-1	51S-1F in Rack Mount, Overall View	5-1
5-2	51S-1B with 350D-5 Base Shockmount, Overall View	5-2
6-1	51S-1( ) Receiver and 350D-5 Base Shockmount	6-7
6-2	Interconnecting Box Assembly	6-10
6-3	Receiver Subassembly	6-11
6-4	Power Supply	6-32
6-5	28-VDC Power Supply	6-34
6-6	RF Tuning Unit	6-37
6-7	Gear Train Assembly	6-43
6-8	Capacitor Assembly (A1, A4)	6-46
6-9	Coil Assembly (A2, A5, A6)	6-48
6-10	Coupling Coil Assembly (A3)	6-50
6-11	Capacitor Assembly (A7)	6-51
6-12	Crystal Oscillator Capacitor Assembly (A8)	6-52
6-13	Trimmer Capacitor Assembly (A9)	6-54
6-14	Crystal Assembly (A10)	6-55
6-15	350D-5 Base Shockmount	6-57
7-1	51S-1/1F Receiver, Schematic Diagram	7-1
7-2	51S-1A/1AF Receiver, Schematic Diagram	7-11
7-3	Turret and RF Section, Schematic Diagram	7-21
7-4	51S-1B Junction Box, Schematic Diagram (C712-38-2)	7-25
7-5	51S-1B Output Circuit, Partial Schematic Diagram (C712-42-3)	7-26

list of tables

Table		Page
1-1	Items Supplied with Receiver	1-10
1-2	Power Cable Kits Available for 51S-1/1F	1-10
3-1	51S-1 Crystal Utilization	3-5
4-1	Receiver Signal Levels	4-1
4-2	Voltage and Resistance Measurements	4-2
5-1	Tube and Semiconductor Complement	5-5
5-2	Available Accessories	5-6
5-3	51S-( ) Descriptions	5-7

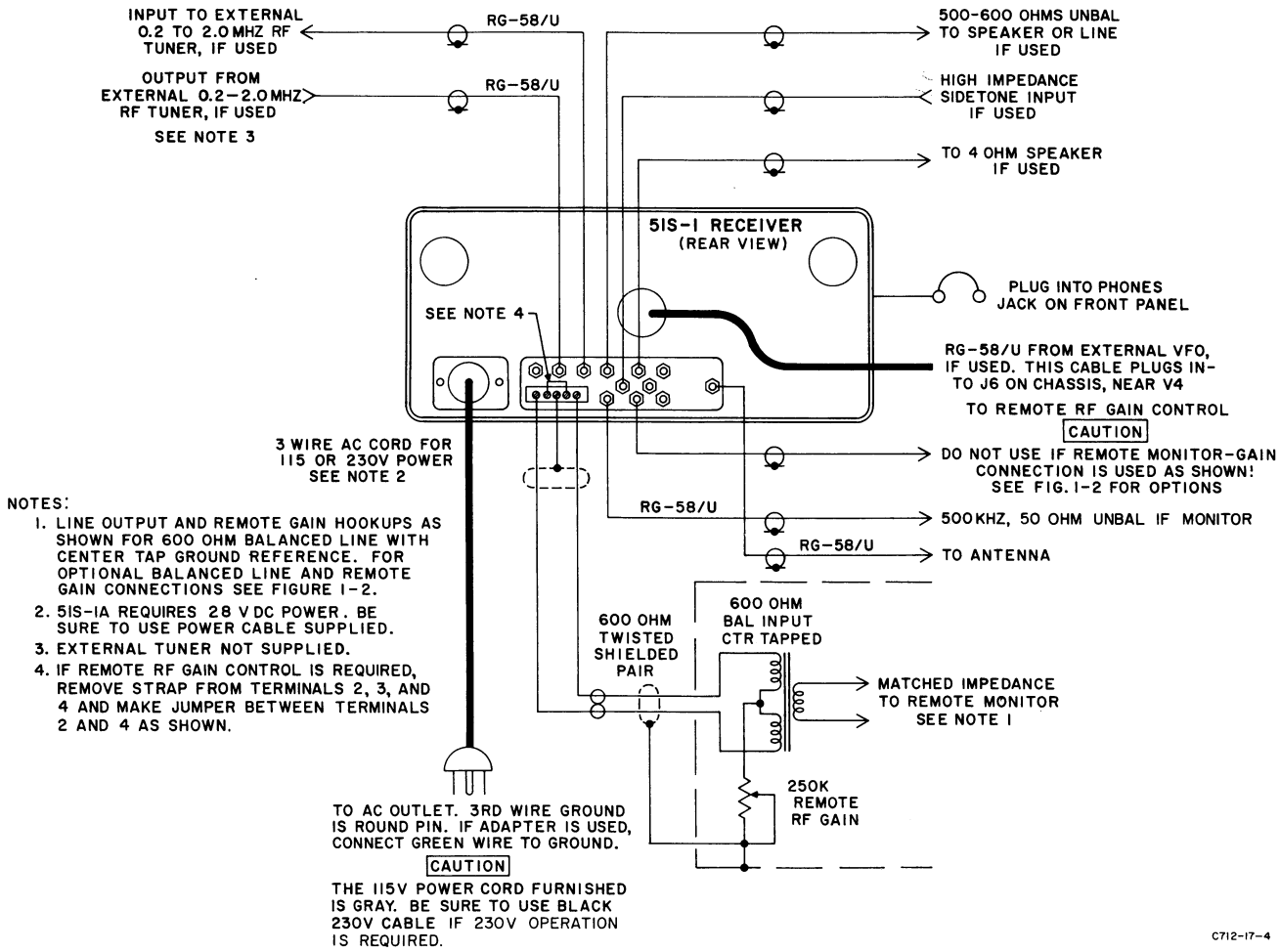

Figure 1-1. External Connections to 51S-1/1A/1F/1AF

section 1
installation

1.1 UNPACKING

Carefully lift the 51S-1 out of the packing material. Examine the unit for visible damage. If the receiver has been damaged in shipment, save the carton and packing material, and notify the transportation company. Fill out and mail the guarantee card. Check that tubes and crystals are seated properly in their sockets. Check all controls and switches for freedom of action. A cloth bag, tied inside the receiver, contains small hardware, tools, and spare items. See tables 1-1 and 1-2.

1.2 MOUNTING AND CABLING FOR 51S-1/1A/1F/1AF

Connect 51S-1/1A/1F/1AF Receiver as shown in figures 1-1 and 1-2. Figures 1-3 and 1-4 show outline and mounting dimensions for 51S-1/1A and 51S-1/1A with 351E-4 Mount. Figure 1-5 shows outline and mounting dimensions for 51S-1F/1AF.

1.2.1 Power Cable

The power cable kits available for the 51S-1/1F are listed in table 1-2. For 115-volt operation, connect the gray ac power cable to the 51S-1/1F. Make sure that the key slot of the 9-pin cable connector is aligned with the key of the chassis connector. Plug the power cable into a 115-volt ac outlet. If the outlet is not equipped with a mating receptacle, use the power cable adapter, and ground the green wire of the adapter. For 230-volt operation, use the black ac cord to connect to a 230-volt ac outlet. For the 51S-1A/1AF, a 28-volt dc cord, with mating plug for the chassis connector, is furnished.

Caution

If both the 115-volt and 230-volt cables are on hand, be sure the correct cord is used for the power source. If the 51S-1 is plugged into 230 volts ac with the gray cord, the receiver may be damaged. Use 1.5-ampere fuse for 115-volt operation, and a 0.75 ampere fuse for 230-volt operation.

1.2.2 Audio Outputs

Connect a 4-ohm speaker, equipped with a phono-type plug, to the jack marked 4Ω on the rear of the 51S-1. If the speaker is equipped with a line-to-voice-coil transformer, connect the phono plug to the jack marked 600Ω UNBAL on the rear of the receiver.

Earphones equipped with PL-55 type connector may be plugged into the jack marked PHONES on the front panel. Plugging in earphones automatically disables the speaker connected to the 4Ω jack. A speaker connected to the 600Ω UNBAL output will not be disabled by plugging earphones into the PHONES jack.

1.2.3 Antenna

The ANT jack on the rear of the 51S-1 is provided to connect a 52-ohm transmission line to the receiver. The transmission line should be equipped with a phono plug.

1.3 MOUNTING AND CABLING FOR 51S-1B

Figure 1-6 shows outline and mounting dimensions for 51S-1B with 350D-5 Base Shockmount. An aluminum mounting plate is fastened to the bottom of the 51S-1B instead of the rubber feet used on other 51S-1 series receivers. The 51S-1B mounts on the shockmount so that the rear flange of the mounting plate fits into a channel in the rear of the shockmount. Thumbnut operated clamps engage tabs on the front of the mounting plate to secure the receiver on the shockmount.

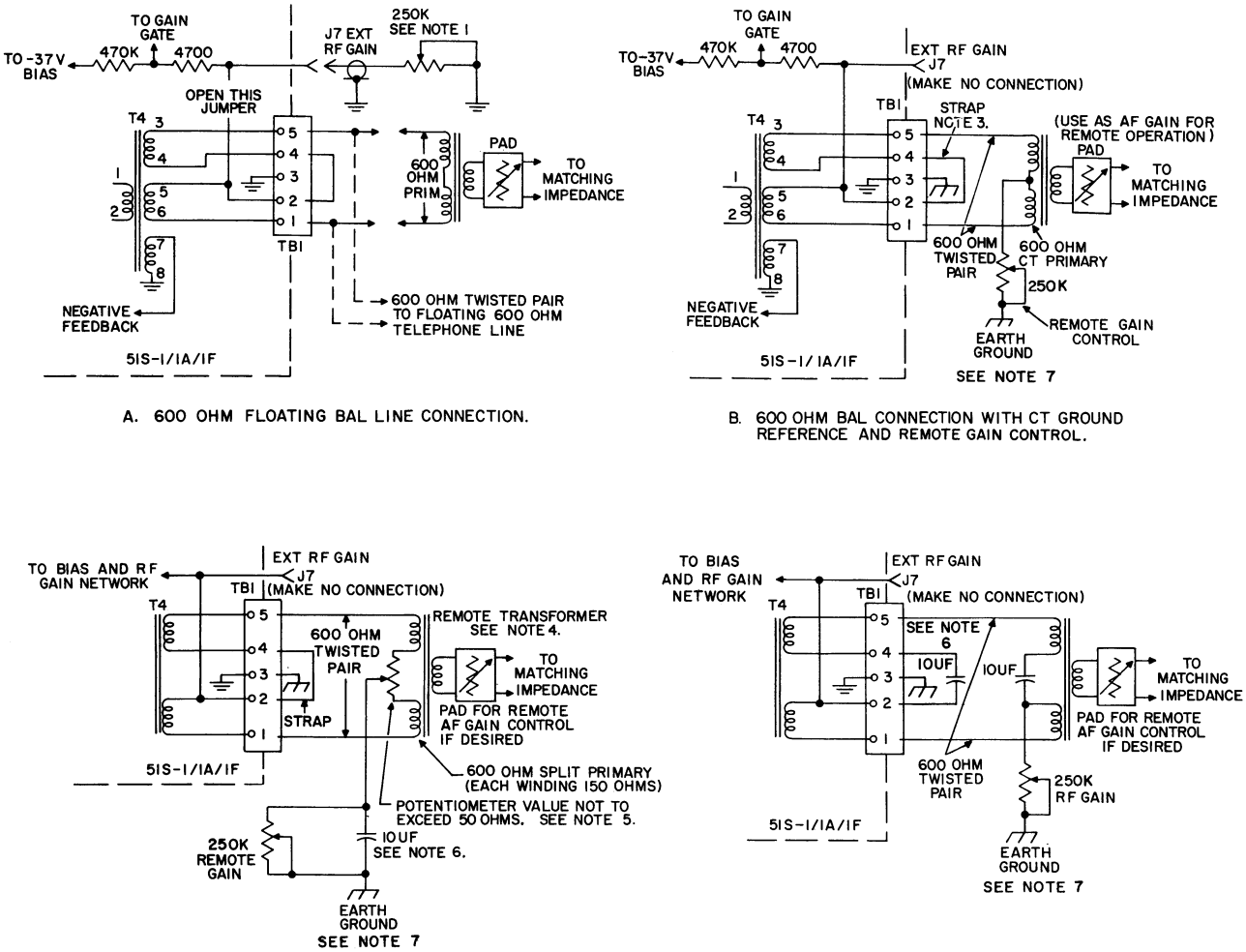

NOTES:

1. KEEP THE REMOTE GAIN CONTROL CONNECTED TO J7 OR FULL BIAS WILL BLOCK THE 51S-1/1A/1F. J7 MUST BE SHORTED TO GROUND IF REMOTE GAIN IS NOT USED.
2. REMOTE GAIN CONTROL, TRANSFORMER, AND SPEAKER OR PHONES MAY BE MOUNTED ON COMMON PANEL OR BOX.
3. WHEN TBI GROUND STRAP IS LIFTED FROM TBI-3, J7 MUST BE RETURNED TO GROUND THRU TRANSFORMER WINDINGS AND EXTERNAL RF GAIN CONTROL. IF J7 GROUND RETURN IS LEFT OPEN, FULL BIAS WILL BLOCK THE RECEIVER.
4. REMOTE TRANSFORMER (AT DISTANCE UP TO SEVERAL MILES) TO MATCH MONITOR OR LINE.
5. ADJUST 50 OHM POT TO BALANCE OUT NOISE OR HUM. IF REMOTE GAIN CONTROL IS NOT REQUIRED, GROUND SLIDER TO EARTH.
6. 10UF CAPACITORS NONPOLARIZED.
7. IF EARTH GROUND IS NOT SATISFACTORY, USE SHIELDED TWISTED PAIR AND MAKE GROUND CONNECTION TO BOTH ENDS OF SHIELD.

C712-20-5

Figure 1-2. 600-Ohm Line and Remote RF Gain Control Options for 51S-1/1A/1F/1AF

Figure 1-7 shows the junction box on the rear of the 51S-1B. The junction box provides military-type connectors for power, control, audio, and antenna. Figure 7-4 is a schematic diagram of the junction box.

1.4 SUPPLEMENTARY INSTALLATION DATA FOR 51S-1/1A/1F/1AF

1.4.1 If. Output

The 51S-1 Receiver is equipped with an IF OUT jack located on the rear of the chassis apron. Intermediate-frequency output from this jack is available for operation of an RTTY converter, oscilloscope, or other device requiring a 500-kHz if. input signal. The IF OUT jack mates with a phono plug.

1.4.2 External RF Gain

The EXT RF GAIN jack on the rear of the receiver provides means of connecting a remote gain control to the 51S-1. A cable connecting the receiver EXT RF GAIN jack with the remote location should be terminated with a 250K potentiometer connected as shown in figures 1-1 and 1-2. The minimum resistance position of the potentiometer will result in maximum receiver gain. When receiver gain is to be controlled in this manner, the RF GAIN on the front panel of the receiver should be left set at maximum (fully clockwise), and one of the options of figure 1-2 must be used. As shipped, J7 is jumpered to ground through T4 secondary. The strap on terminals 2, 3, and 4 of the rear apron terminal board must be removed when external rf gain is used and new jumpers made of wire for the options shown. Jack J7 must not be left open or ungrounded or the receiver will be muted.

1.4.3 Mute

The MUTE jack on the rear of the 51S-1 chassis provides connections for external standby-receive switching. The external switch may be contacts of a transmit-receive relay. For proper muting of the 51S-1, the contacts of a transmit-receive relay should be in closed position during receiving and open position during transmitting. When muting is being used, the OFF-STBY-ON-CAL switch on the front panel of the 51S-1 must be in the STBY position.

1.4.4 Sidetone

The 51S-1 is equipped with a SIDETONE input jack on the rear of the chassis. Audio-frequency monitoring signals may be injected into this jack for all EMISSION switch settings except AM. The jack mates with a phono plug.

1.4.5 Line Output

The 600Ω terminals of the terminal block on the rear of the 51S-1 provide a 600-ohm balanced output to match a telephone line or a remote monitoring arrangement. Refer to figures 1-1 and 1-2. Figure 1-2 shows various options for these connections.

1.4.6 External VFO Connection

An external vfo jack, J6, labeled EXT VFO, is located on the chassis near the vfo subassembly. This jack is a switching type which opens its contacts when a plug is inserted. With no plug in J6, the vfo signal is connected to the last mixer, but when an external signal is plugged in, the internal vfo signal is disconnected and the external signal is substituted. This allows plugging in an external stabilized master oscillator for improved stability, precise calibration, or fixed-channel selection purposes.

Note

When an external signal source is used, such as stabilized master oscillator or crystal-controlled oscillator, the injection frequency must be between 3.5 and 2.5 MHz. In addition, the 51S-1 must be tuned to the desired channel frequency after each change in injection frequency. Disconnect the vfo B+ line to prevent creation of a spurious response and shunt the output of the external signal source with a 220-mh rf choke to provide a low-resistance dc path for the cathode current of mixer V4A.

Jack J6 mates with a miniature phone plug, such as Electrocraft (manufacturer's catalog no.

200-2) or Switchcraft Inc., (manufacturer's catalog no. XA-7956); military-type plugs are MIL-F-3115 and MIL-F-642, respectively; Collins part numbers are 361-0051-00 and 361-0119-00, respectively.

1.4.7 Rejection Tuning

The Q-multiplier may become slightly detuned during shipping. Refer to paragraph 4.4.13 for alignment procedure.

1.5 SUPPLEMENTARY INSTALLATION DATA FOR 51S-1B

1.5.1 If. Output

The 51S-1B Receiver is equipped with an IF OUT jack located on the rear of the chassis apron. Intermediate-frequency output from this jack is available for operation of an RTTY converter, oscilloscope, or other device requiring a 500-kHz if. input signal. The IF OUT jack mates with a phono plug.

1.5.2 External RF Gain Control Line

The external rf gain control line on the 51S-1B is not connected to terminal 2 on TB1 as it is on other 51S-1 series receivers. A 100-ohm resistor terminates the external rf gain control line at J7.

1.5.3 Mute

Connector J101 on the 51S-1B junction box provides connections for external standby-receive switching as shown in figure 7-4. The external switch may be contacts of a transmit-receive relay. For proper muting of the 51S-1B, the contacts of the transmit-receive relay should be in closed position during receiving and open position during transmitting. When muting is used, the OFF-STBY-ON-CAL switch on the front panel of the 51S-1B must be in the STBY position.

1.5.4 Sidetone

The 51S-1B is equipped with a SIDETONE input jack on the rear of the chassis. Audio-frequency monitoring signals may be injected into this jack for all EMISSION switch settings except AM. The jack mates with a phono plug.

1.5.5 Line Output

Connector J101 on the 51S-1B junction box provides connections for a 150-ohm interphone line as shown in figure 7-4.

1.5.6 External VFO Connection

Provisions for connection of an external frequency standard to the 51S-1B are the same as those described in paragraph 1.4.6 for other 51S-1 series receivers.

1.5.7 Rejection Tuning

The Q-multiplier may become slightly detuned during shipping. Refer to paragraph 4.4.13 for alignment procedure.

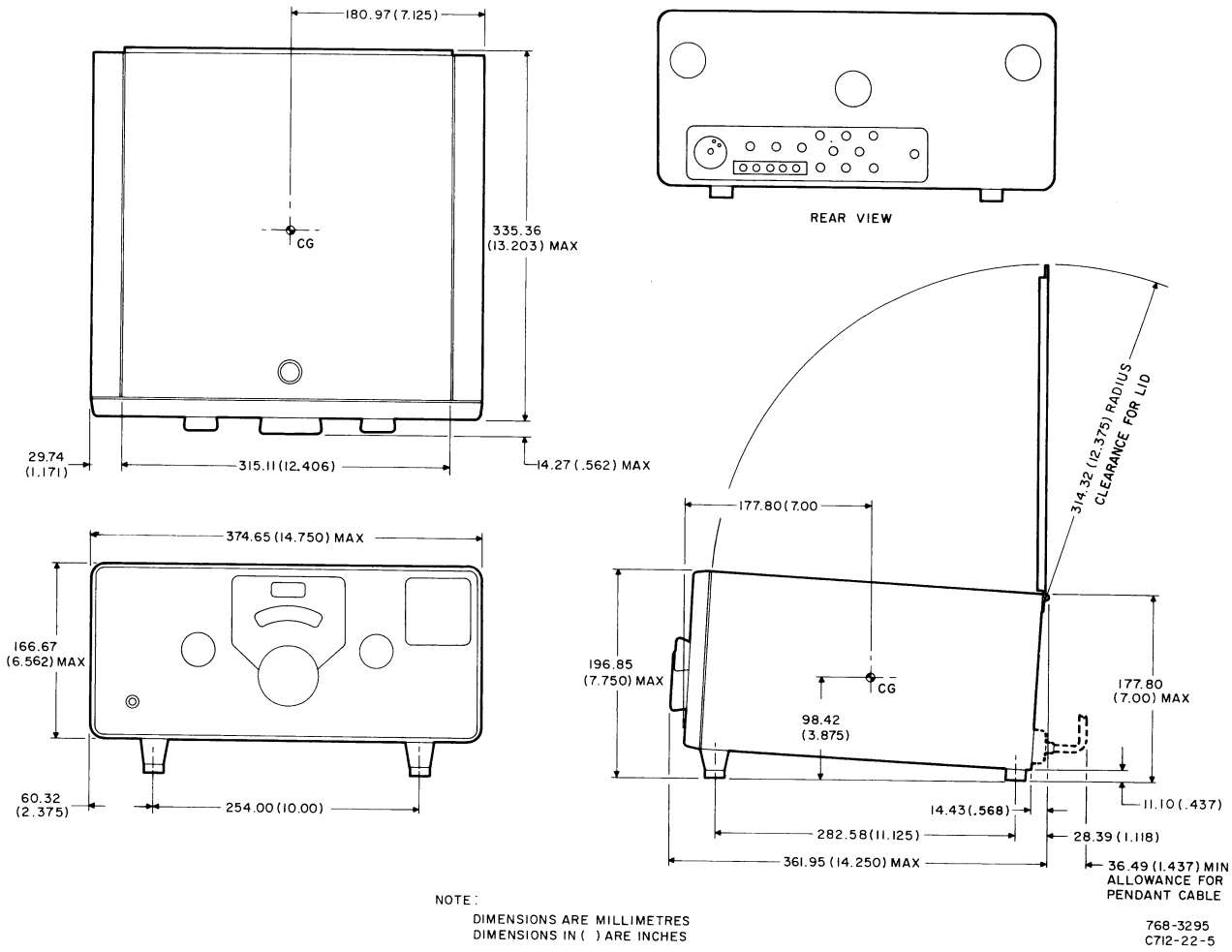

Figure 1-3. 51S-1/1A Receiver, Outline and Mounting Dimensions

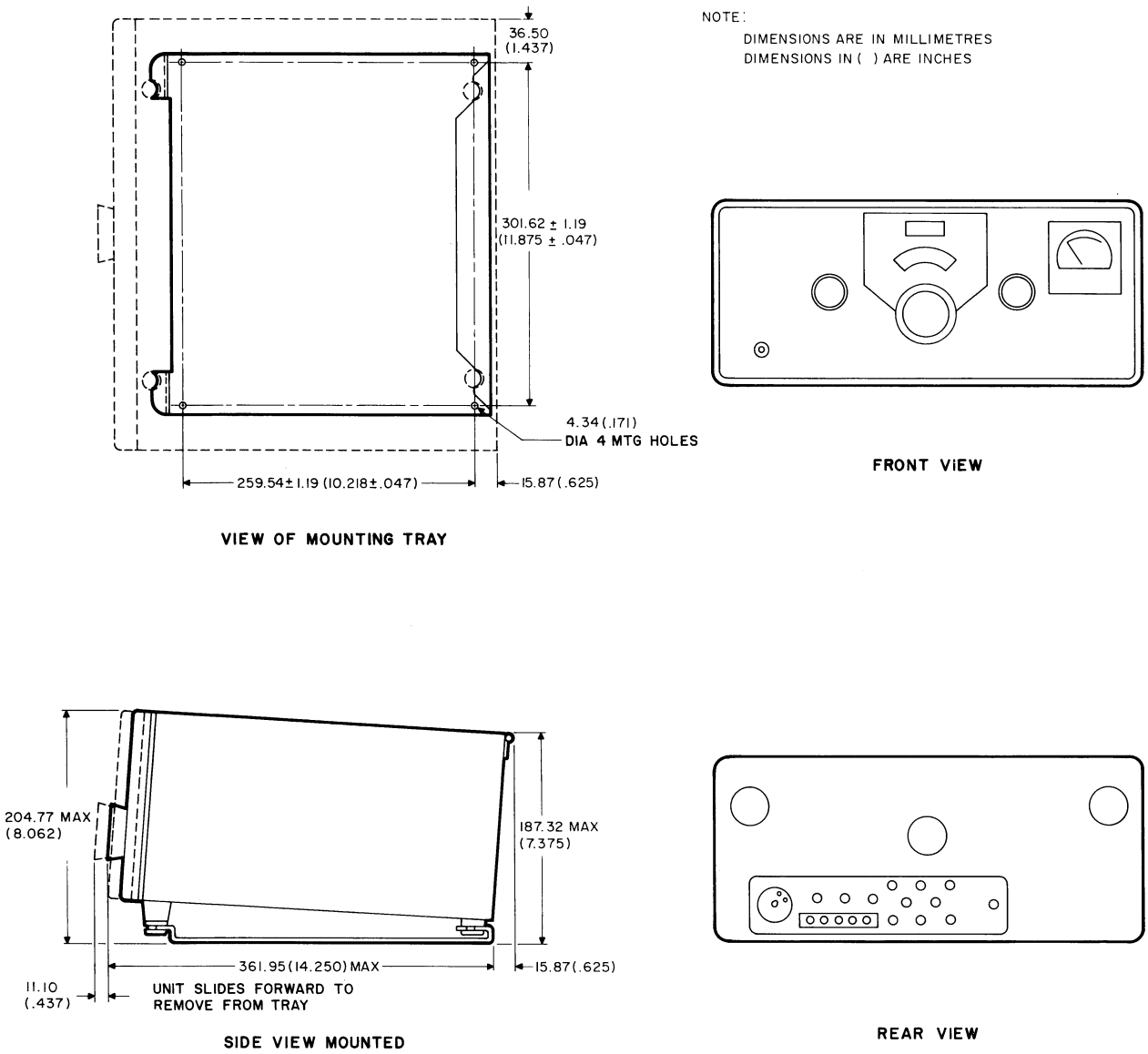

Figure 1-4. 51S-1/1A Receiver, Outline and Mounting Dimensions with 351E-4 Mount

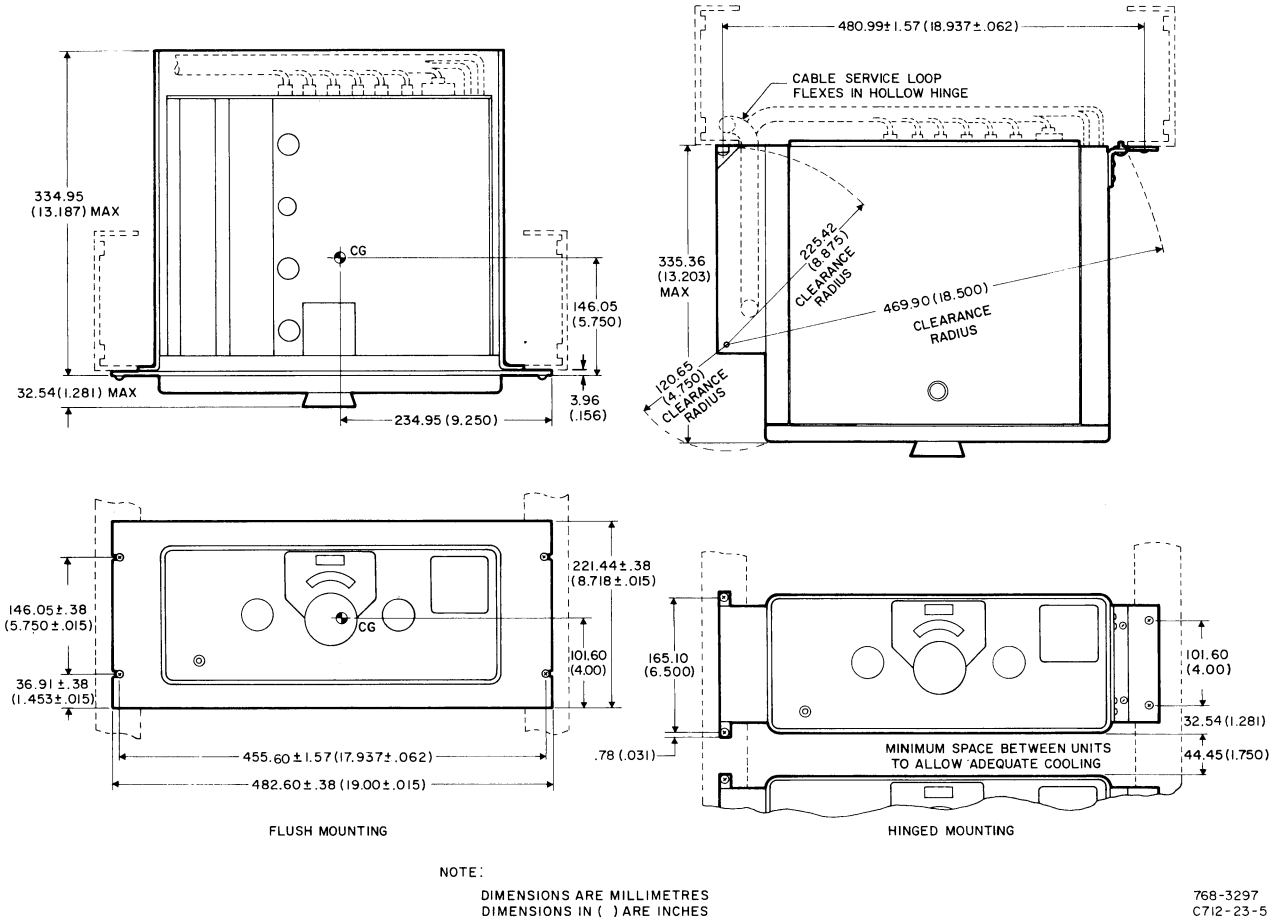

Figure 1-5. 51S-1F/1AF Rack Mount and 51S-1/1A Hinged Mount, Outline and Mounting Dimensions

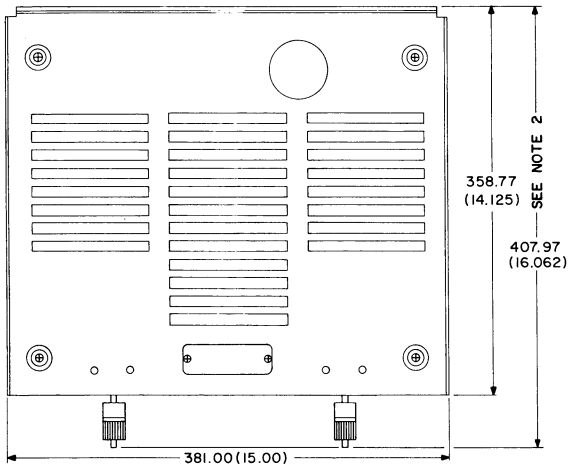

SHOCKMOUNT FEET DIMENSIONS

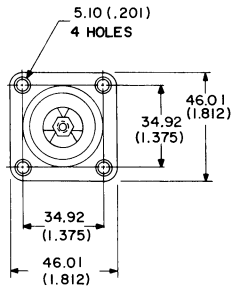

NOTES:
1. MAXIMUM SWAY FOR SHOCKMOUNT TRAY, LOADED, IS 9.52 (.375)
2. THIS DIM. APPLIES ONLY WHEN ADAPTER PLATE IS MOUNTED ON SHOCKMOUNT TRAY.
3. UNIT WT ACT. .77 kg (1.70 LB.)
4. DIMENSIONS ARE IN MILLIMETRES
DIMENSIONS IN ( ) ARE INCHES

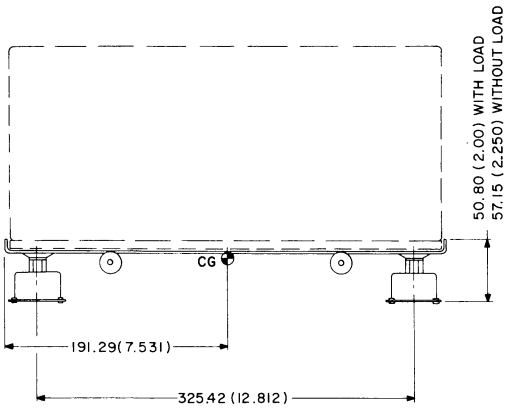

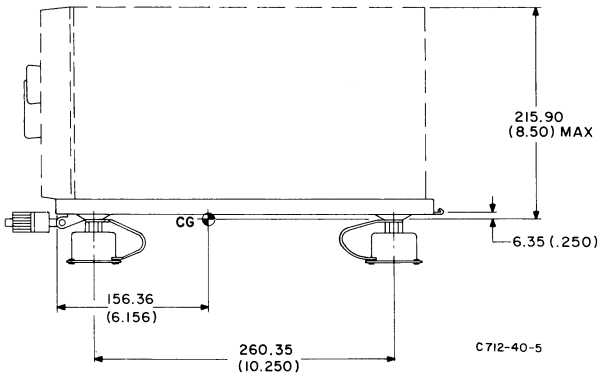

Figure 1-6. 51S-1B Receiver, Outline and Mounting Dimensions with 350D-5 Base Shockmount

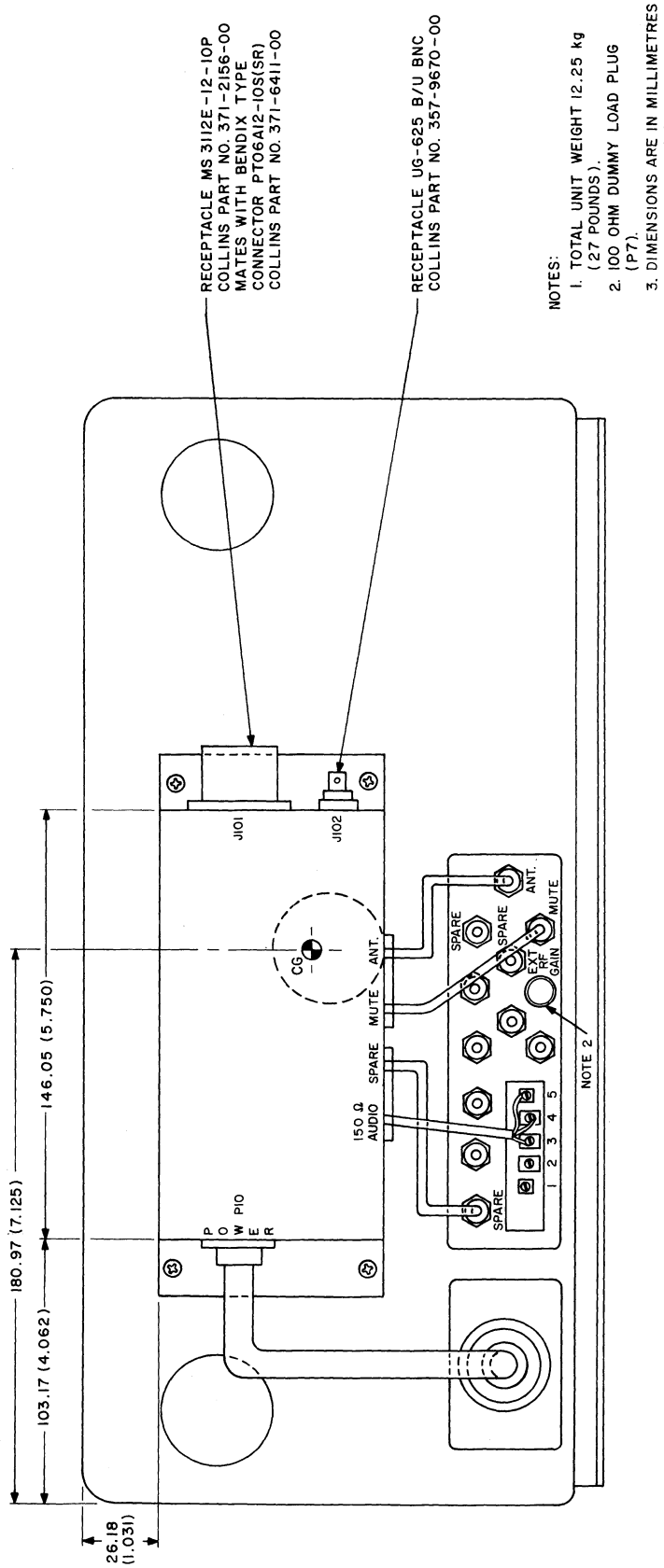

Figure 1-7. 51S-1B Receiver, Installation Details

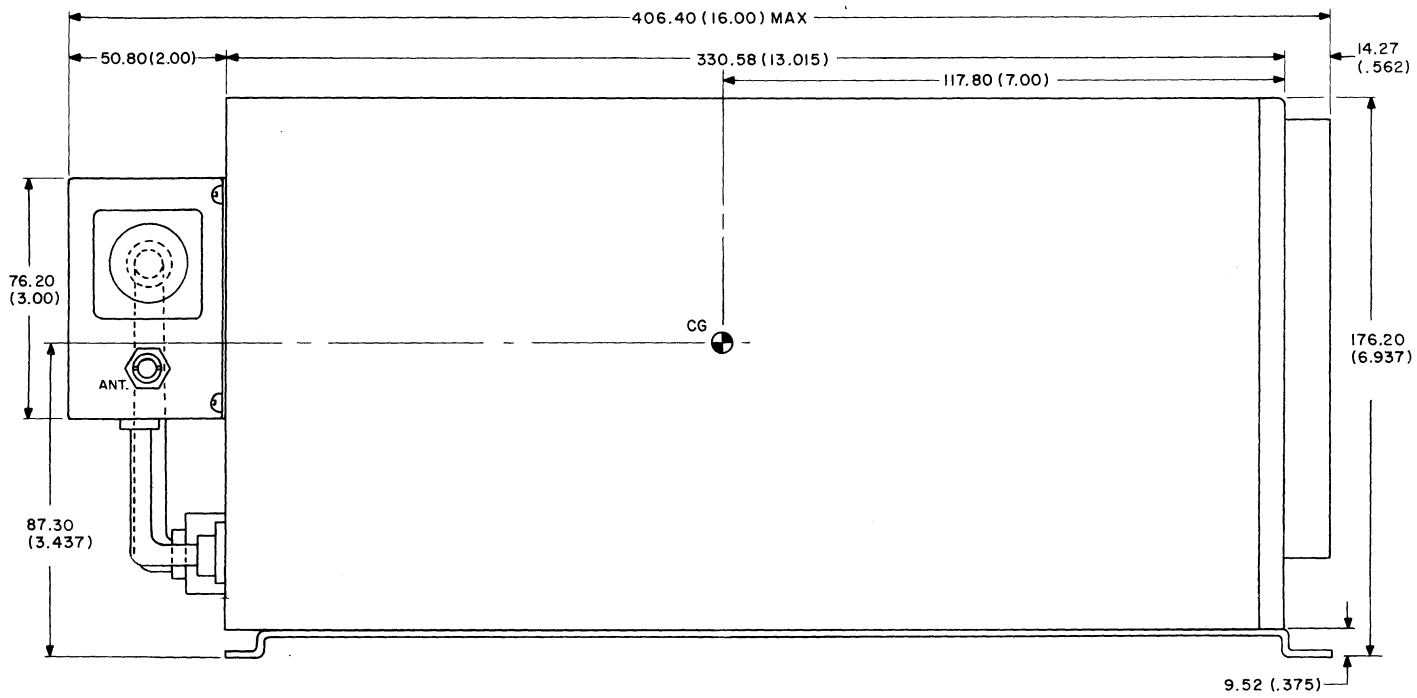
406.40 (16.00) MAX
50.80(2.00)
330.58 (13.015)
117.80 (7.00)
14.27
(.562)
76.20
(3.00)
CG
ANT.
176.20
(6.937)
87.30
(3.437)
9.52 (.375)

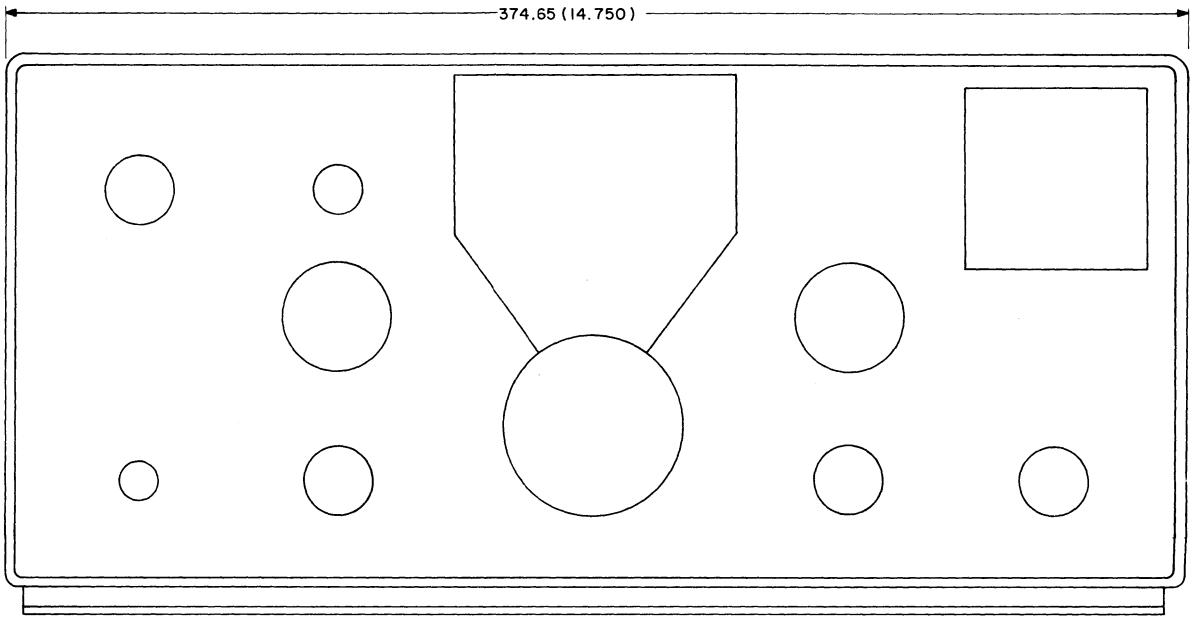
374.65 (14.750)

Table 1-1. Items Supplied with Receiver

QUANTITY	WITH MODEL	ITEM DESCRIPTION	COLLINS PART NUMBER
1	*51S-1/1F/1B	Power cable kits, 115/230 volts ac	See table 1-2
1	51S-1A/1AF	Power cable, 28 volts dc	548-8245-00
1	51S-1A/1AF	Fuse, 6 amperes	264-4100-00
1	51S-1/1A/1F/1AF/1B	Bristol wrench #4	024-2900-00
1	51S-1/1A/1F/1AF/1B	Bristol wrench #6	024-9730-00
1	51S-1/1A/1F/1AF/1B	Bristol wrench #6	024-0167-00
1	51S-1/1A/1F/1AF/1B	Bristol wrench #8	024-0019-00
6	51S-1/1A/1F/1AF/1B	Phono plugs	361-0062-00
1	51S-1/1A/1F/1AF/1B	6-volt pilot lamp bulb #47	262-3240-00
1	51S-1/1A/1F/1AF/1B	6-volt pilot lamp bulb #44	262-3220-00
4	51S-1F/1AF	12 24 x 5/8-inch screws	348-0008-00
4	51S-1F/1AF	10 32 x 1/2-inch screws	319-0165-00
4	51S-1F/1AF	Finishing washers	310-0092-00
4	51S-1F/1AF	Finishing washers	310-0086-00
1	51S-1/1A/1F/1AF/1B	Alignment tool	547-2796-002
1	51S-1/1A/1F/1AF/1B	Instruction book	523-0097-000

*115-volt ac power cable kit, CPN 554-7055-00, is supplied with 51S-1B.

Table 1-2. Power Cable Kits Available for 51S-1/1F

QUANTITY	DESCRIPTION	COLLINS PART NUMBER
	115-VOLT AC POWER CABLE KIT	554-7055-00
1	Power cable	547-2795-00
1	Adapter plug	368-0138-00
2	Fuse, 1.5 amperes	264-0007-00
	230-VOLT AC POWER CABLE KIT	554-7056-00
1	Power cable	547-2674-00
3	Fuse 0.75 ampere	264-4270-00