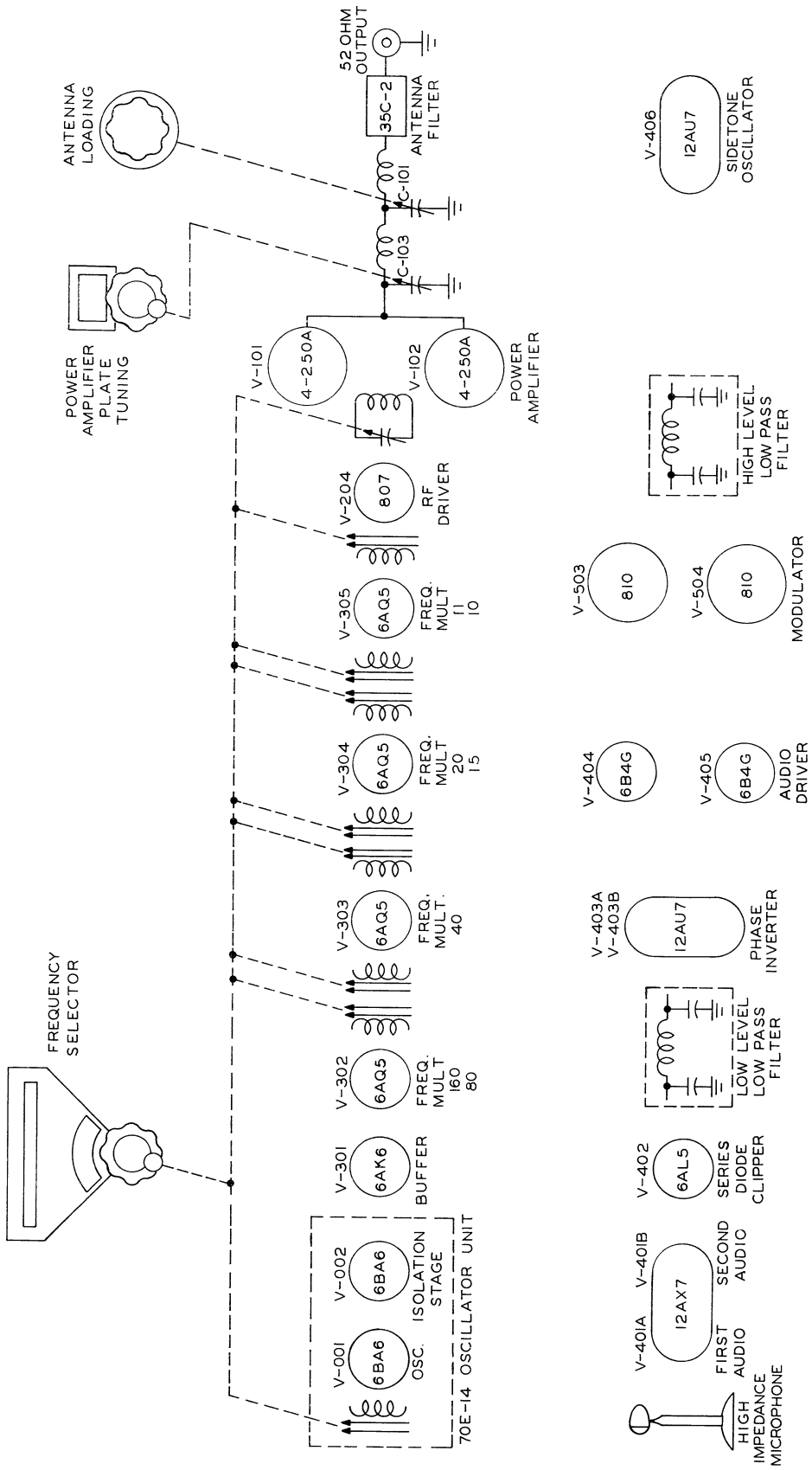

Figure 7-1. KW-1 Block Diagram

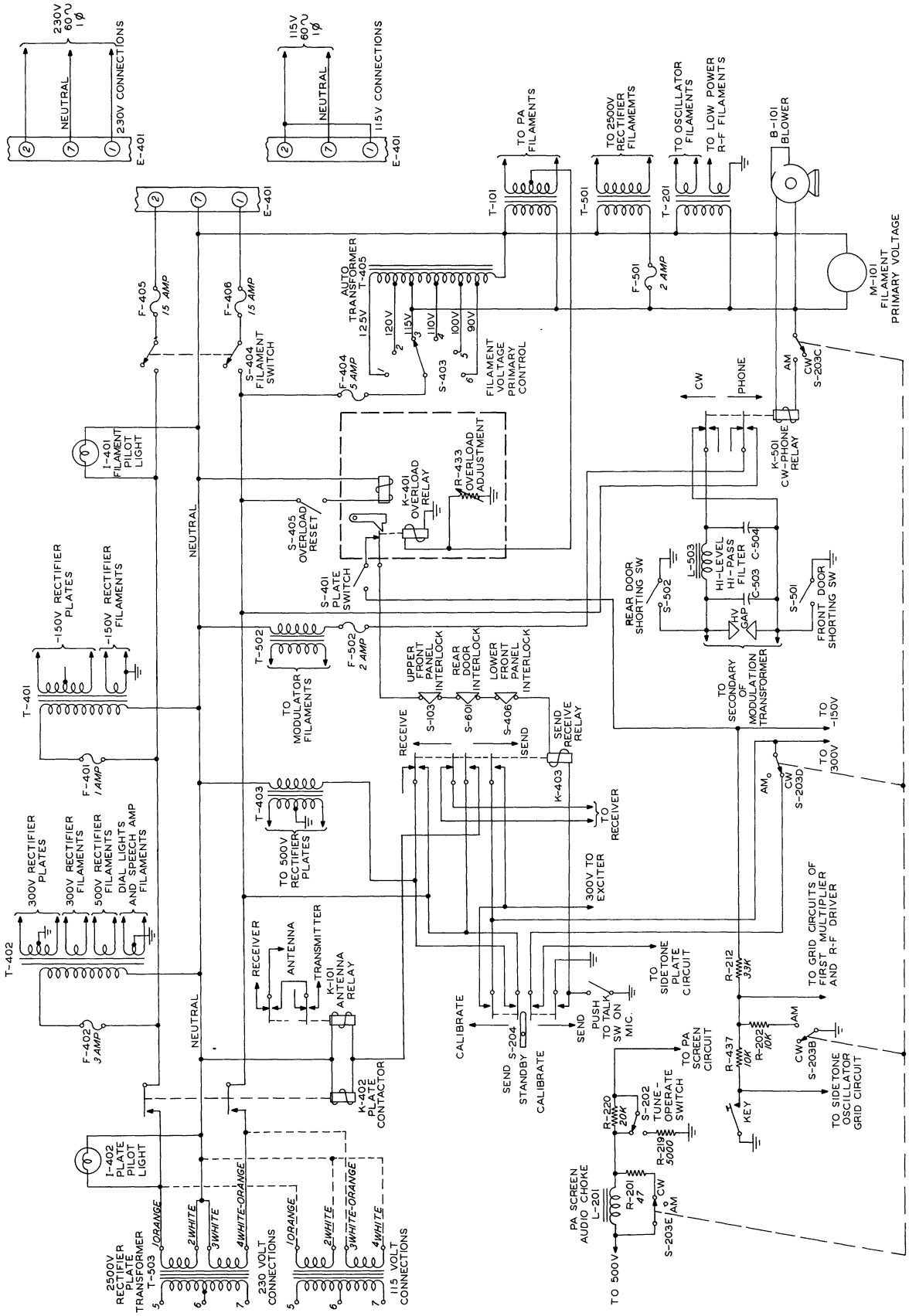

Figure 7-2. KW-1 Control Circuits

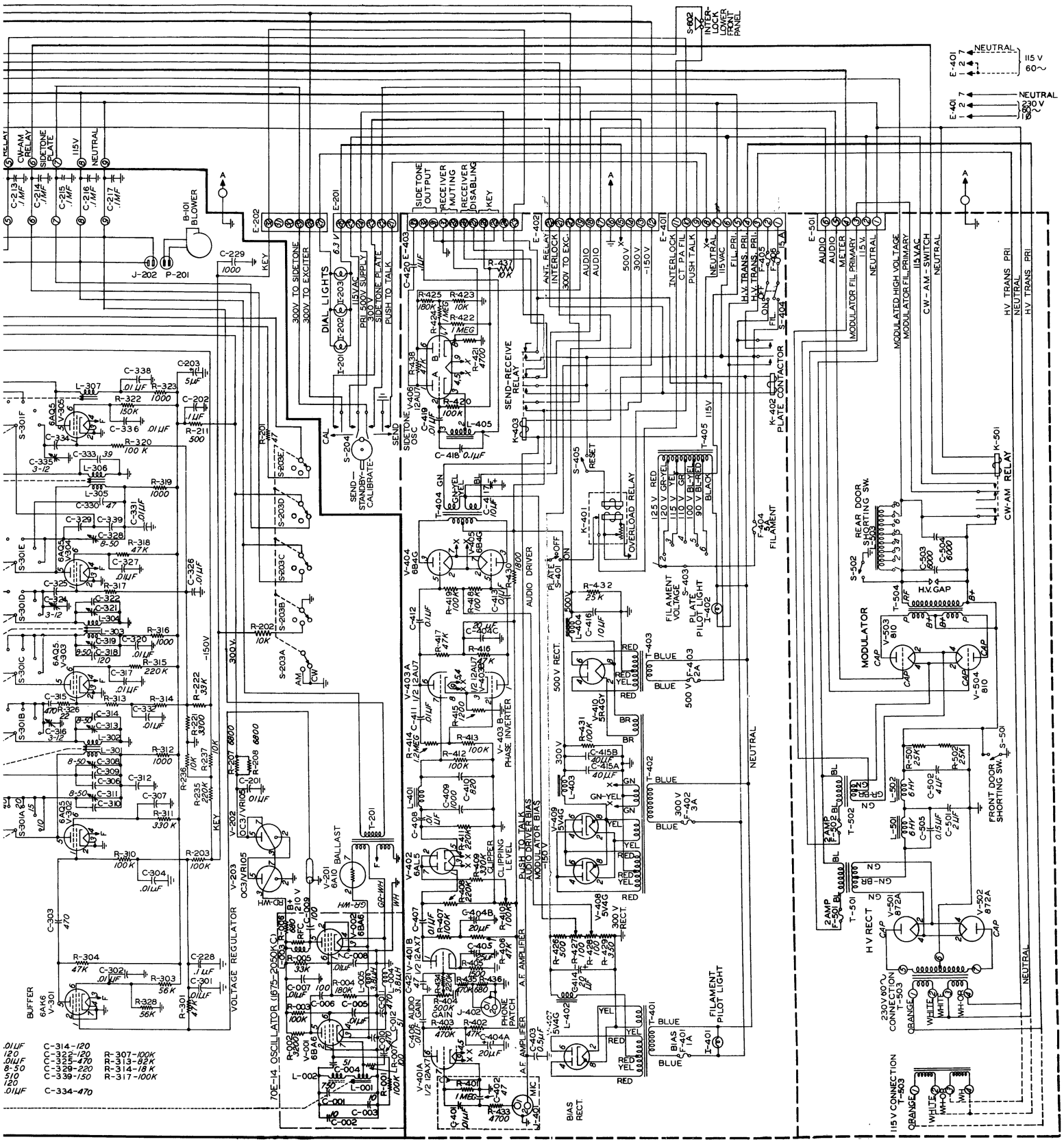

Figure 7-3. KW-1 Cabling Diagram

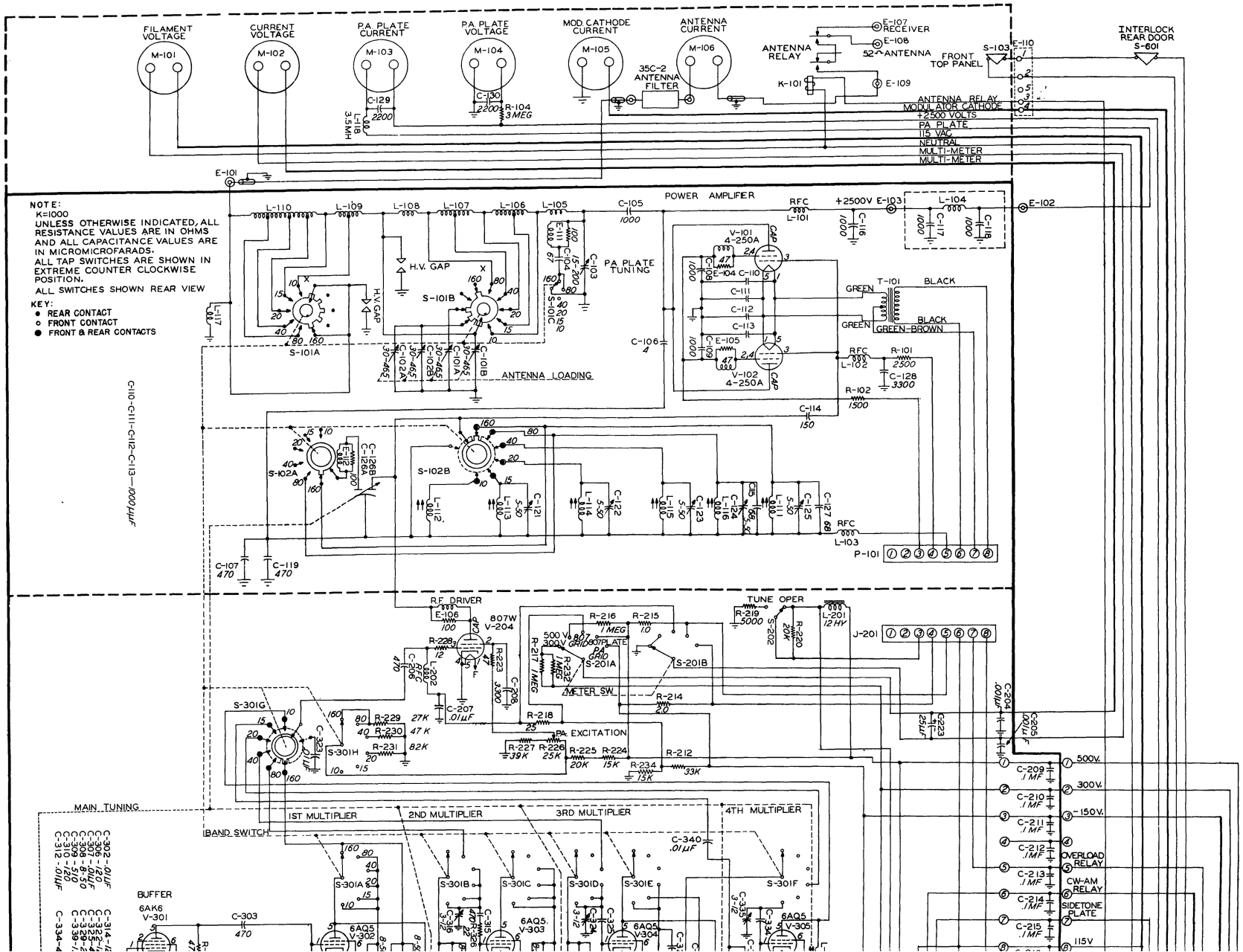
FILAMENT VOLTAGE
M-101
CURRENT VOLTAGE
M-102
P.A. PLATE CURRENT
M-103
P.A. PLATE VOLTAGE
M-104
MOD. CATHODE CURRENT
M-105
ANTENNA CURRENT
M-106
35C-2 ANTENNA FILTER
ANTENNA RELAY
E-107 RECEIVER
E-108
52Ω ANTENNA
E-109
K-101
FRONT TOP PANEL
S-103
E-110
INTERLOCK REAR DOOR S-601
ANTENNA RELAY
MODULATOR CATHODE
+2500 VOLTS
PA PLATE
115 VAC
NEUTRAL
MULTI-METER
MULTI-METER
E-101
NOTE:
K=1000
UNLESS OTHERWISE INDICATED, ALL RESISTANCE VALUES ARE IN OHMS AND ALL CAPACITANCE VALUES ARE IN MICROMICROFARADS.
ALL TAP SWITCHES ARE SHOWN IN EXTREME COUNTER CLOCKWISE POSITION.
ALL SWITCHES SHOWN REAR VIEW
KEY:
● REAR CONTACT
○ FRONT CONTACT
● FRONT & REAR CONTACTS
POWER AMPLIFIER
+2500V E-103
E-102
H.V. GAP
S-101A
S-101B
PA PLATE TUNING
ANTENNA LOADING
V-101 4-250A
V-102 4-250A
T-101
GREEN
BLACK
GREEN-BROWN
S-102A
S-102B
P-101
C-110-C-111-C-112-C-113—1000μμF
RF DRIVER
807W V-204
TUNE OPER
J-201
S-201A
S-201B
METER SW.
PA EXCITATION
S-301G
S-301H
MAIN TUNING
BAND SWITCH
1ST MULTIPLIER
2ND MULTIPLIER
3RD MULTIPLIER
4TH MULTIPLIER
BUFFER
6AK6 V-301
6AQ5 V-302
6AQ5 V-303
6AQ5 V-304
6AQ5 V-305
500V.
300V.
-150V.
OVERLOAD RELAY
CW-AM RELAY
SIDETONE PLATE
115V

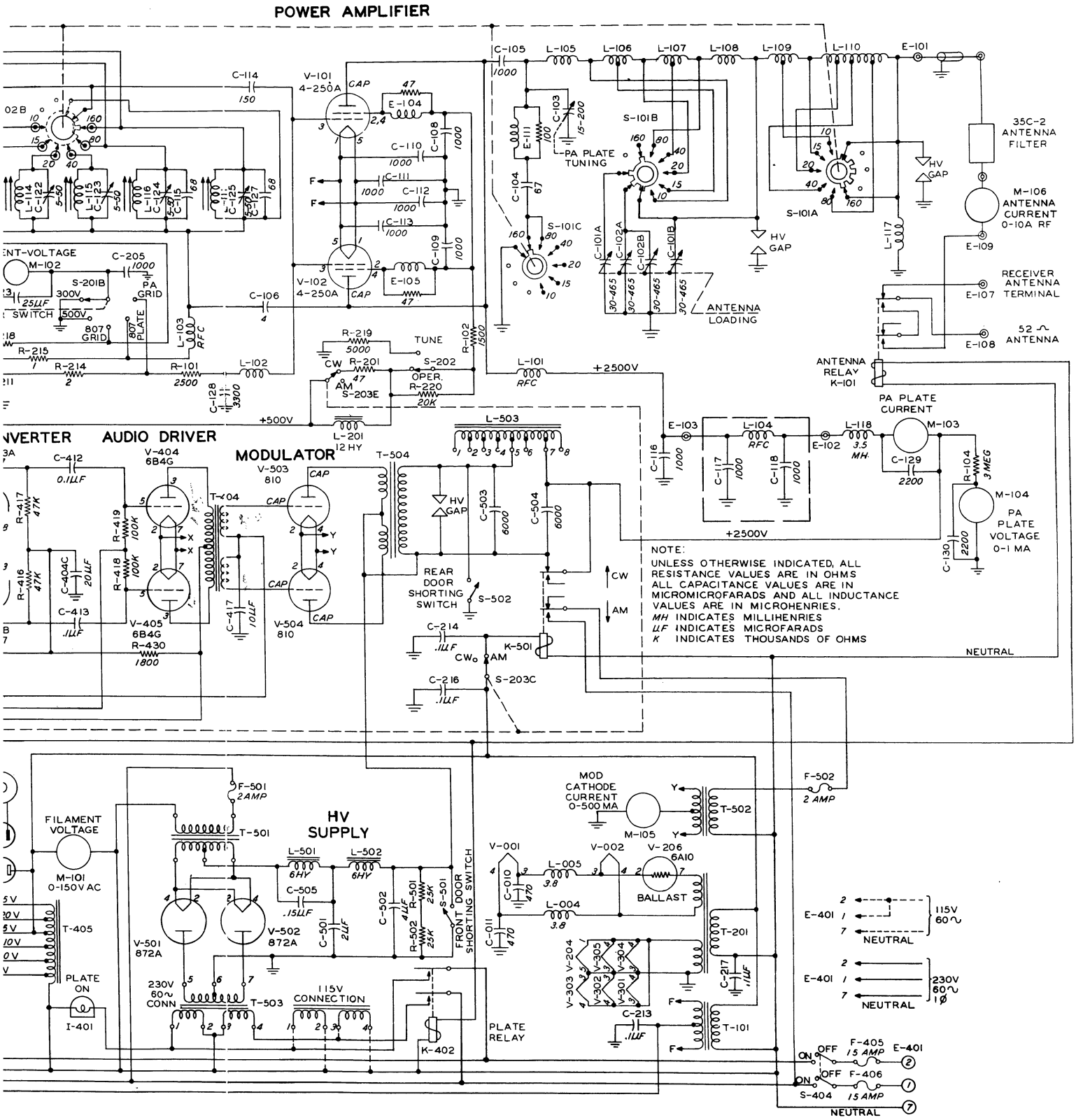

Figure 7-4. KW-1 Main Schematic

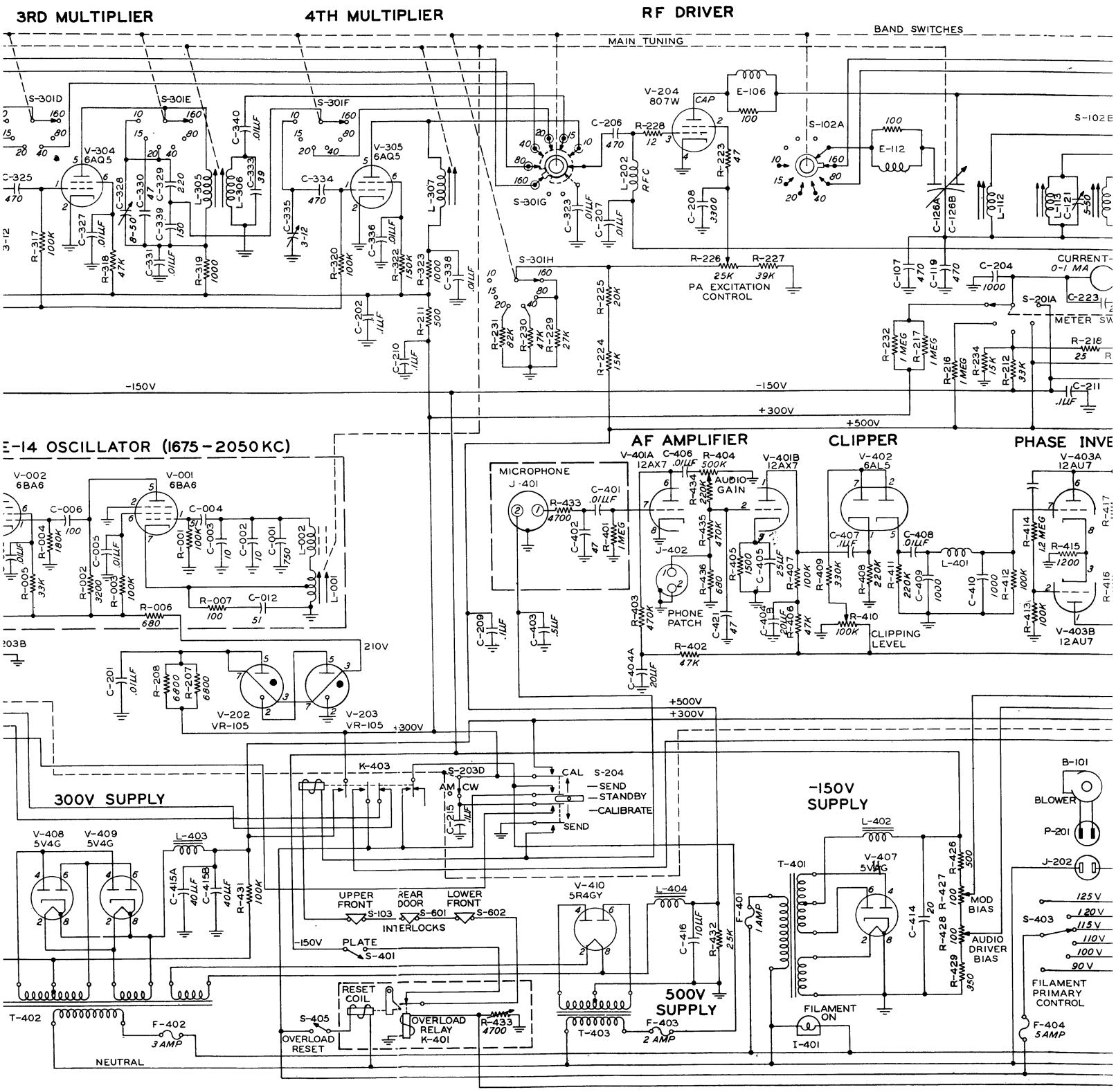
3RD MULTIPLIER
4TH MULTIPLIER
RF DRIVER
BAND SWITCHES
MAIN TUNING
S-301D
S-301E
S-301F
S-301G
S-301H
V-304 6AQ5
V-305 6AQ5
V-204 807W
E-106
S-102A
E-112
S-102B
C-126A
C-126B
L-112
L-113
C-121
C-325
C-327
C-328
C-330
C-329
C-339
C-331
C-340
C-333
C-334
C-335
C-336
C-338
C-202
C-210
C-206
C-207
C-323
C-208
R-228
R-223
L-202
RFC
R-226
R-227
PA EXCITATION CONTROL
R-225
R-224
R-231
R-230
R-229
R-232
R-217
R-216
R-234
R-212
R-218
C-107
C-119
C-204
C-223
CURRENT-0-1 MA
S-201A
METER SW
C-211
-150V
+300V
+500V
E-14 OSCILLATOR (1675-2050 KC)
V-002 6BA6
V-001 6BA6
C-006
C-004
R-004
R-005
R-002
R-003
R-001
C-005
C-003
C-002
C-001
L-002
L-001
R-006
R-007
C-012
210V
V-202 VR-105
V-203 VR-105
C-201
R-208
R-207
AF AMPLIFIER
CLIPPER
PHASE INVE
MICROPHONE J-401
R-433
C-401
C-402
R-401
V-401A 12AX7
C-406
R-404
AUDIO GAIN
V-401B 12AX7
R-434
R-435
J-402
PHONE PATCH
R-436
R-405
C-405
R-407
R-403
C-421
C-404
R-406
R-402
C-404A
C-209
C-403
V-402 6AL5
C-407
C-408
R-409
R-408
R-411
C-409
L-401
C-410
R-412
R-410
CLIPPING LEVEL
V-403A 12AU7
R-414
R-415
R-416
R-413
V-403B 12AU7
K-403
S-203D
AM
CW
C-215
CAL
S-204
SEND
STANDBY
CALIBRATE
SEND
300V SUPPLY
V-408 5V4G
V-409 5V4G
L-403
C-415A
C-415B
R-431
UPPER FRONT
REAR DOOR
LOWER FRONT
S-103
S-601
S-602
INTERLOCKS
PLATE
S-401
-150V SUPPLY
L-402
T-401
V-407 5V4G
R-426
R-427
R-428
R-429
MOD BIAS
AUDIO DRIVER BIAS
C-414
F-401 1 AMP
V-410 5R4GY
L-404
C-416
R-432
500V SUPPLY
T-403
F-403 2 AMP
FILAMENT ON
I-401
RESET COIL
OVERLOAD RELAY K-401
R-433
S-405
OVERLOAD RESET
T-402
F-402 3 AMP
NEUTRAL
B-101
BLOWER
P-201
J-202
S-403
125 V
120 V
115 V
110 V
100 V
90 V
FILAMENT PRIMARY CONTROL
F-404 5 AMP

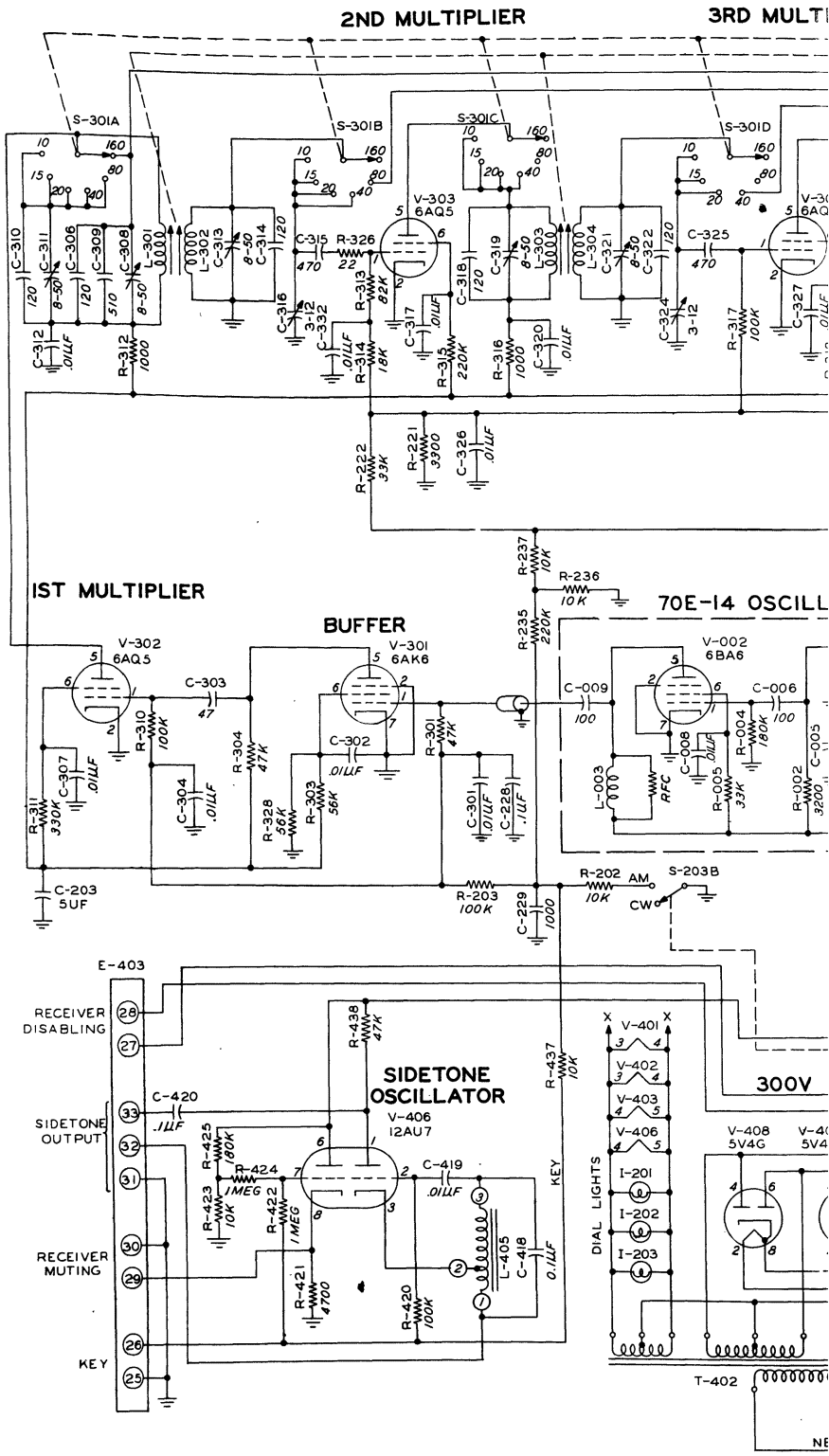
2ND MULTIPLIER
3RD MULT
S-301A
S-301B
S-301C
S-301D
V-303
6AQ5
C-310
C-311
C-306
C-309
C-308
L-301
L-302
C-313
C-314
C-315
R-326
C-316
C-332
R-313
C-317
C-318
C-319
L-303
L-304
C-321
C-322
C-325
C-324
C-327
C-312
R-312
R-314
R-315
R-316
C-320
R-317
R-222
R-221
C-326
IST MULTIPLIER
BUFFER
V-302
6AQ5
V-301
6AK6
C-303
R-310
R-304
C-302
R-301
C-307
R-311
C-304
R-328
R-303
C-301
C-228
C-203
5UF
R-237
R-236
R-235
70E-14 OSCILL
V-002
6BA6
C-009
C-006
C-008
R-004
C-005
L-003
RFC
R-005
R-002
R-203
C-229
R-202
AM
CW
S-203B
E-403
RECEIVER DISABLING
SIDETONE OUTPUT
RECEIVER MUTING
KEY
C-420
SIDETONE OSCILLATOR
V-406
12AU7
R-438
R-437
R-425
R-424
R-423
R-422
R-421
R-420
C-419
L-405
C-418
V-401
V-402
V-403
V-406
I-201
I-202
I-203
DIAL LIGHTS
300V
V-408
5V4G
T-402

ANTENNAS

WITH

52 OHM COAXIAL FEED LINES

Published By

Collins Radio Company

Cedar Rapids, Iowa

520 9722 00

15 March 1952

Second Edition

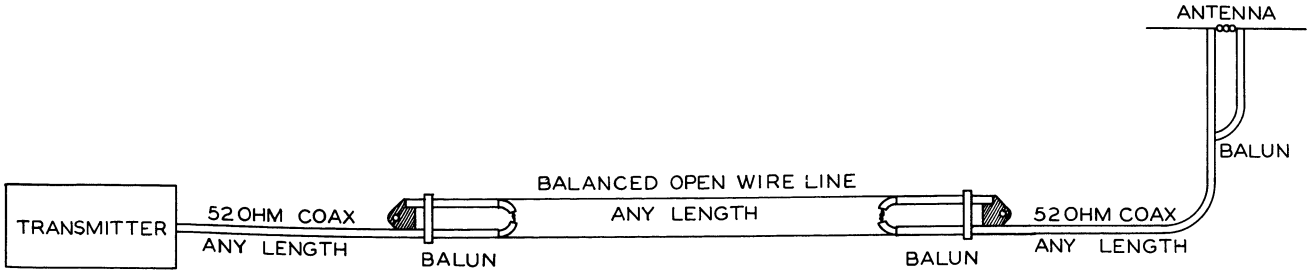

THIS SYSTEM PERMITS USE OF A BALANCED OPEN WIRE LINE TO REDUCE LOSSES ON LONG TRANSMISSION LINES. CONSTRUCTION DETAILS OF THE UNBALANCED TO BALANCED IMPEDANCE MATCHING TRANSFORMER (BALUN) USED BETWEEN THE OPEN WIRE LINE AND THE 52 OHM RG-8/U COAXIAL CABLE ARE SHOWN BELOW.

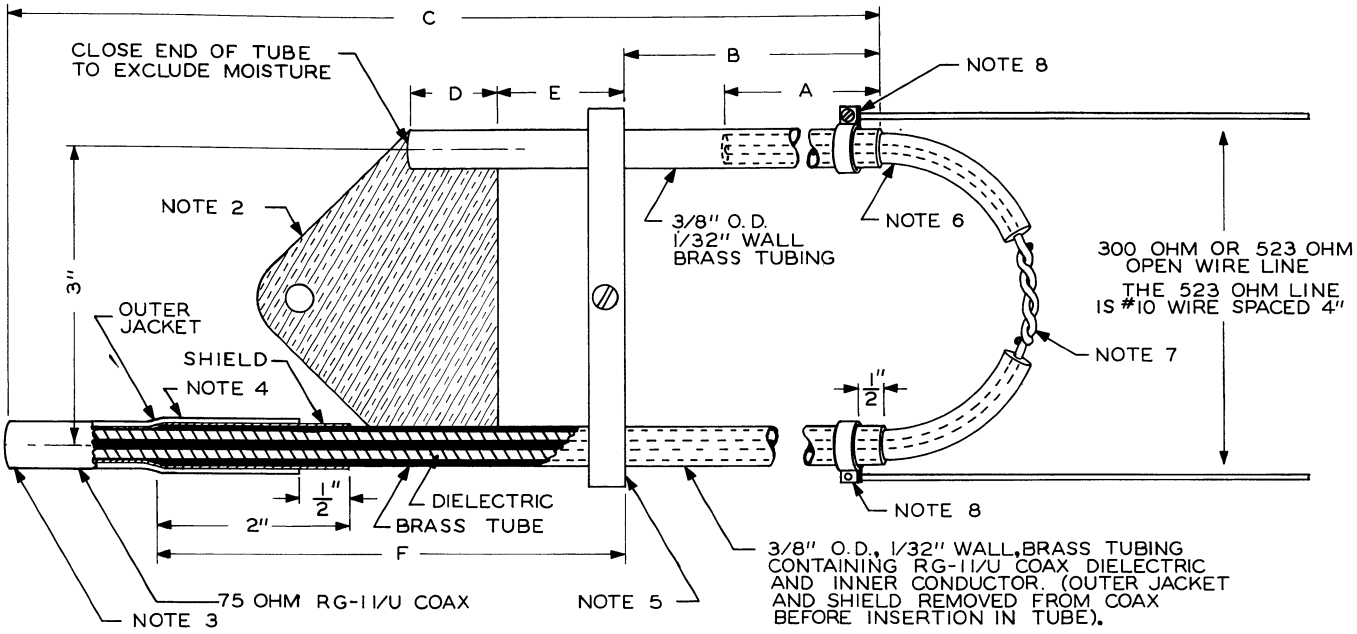

NOTES:

1.

FREQ. MC.	OPEN WIRE LINE IMPEDENCE	LENGTH - INCHES		
		A	B	C
27 TO 29.7	300 OHMS	15 3/8	38 1/4	69 5/8
27 TO 29.7	523 OHMS	10 5/8	44 1/2	69 5/8
14 TO 14.3	523 OHMS	21 1/4	92 1/4	139

DIMENSIONS D, E, AND F ARE NOT CRITICAL AND MAY BE ADAPTED TO THE INDIVIDUAL INSTALLATION. DIMENSION D SHOULD BE LONG ENOUGH TO PERMIT SILVER SOLDERING BRASS PLATE AND TUBES TOGETHER. DIMENSION E SHOULD BE LONG ENOUGH TO PERMIT ADJUSTMENT OF THE SHORTING BAR. DIMENSION F SHOULD BE LONG ENOUGH TO PROVIDE SUFFICIENT OVERHANG FOR CONNECTING THE RG-11/U CABLE.

2. BRASS PLATE OF CONVENIENT SIZE SILVER SOLDERED TO THE TWO BRASS TUBES. PLATE MAY BE GROUNDED OR UNGROUNDED AND IS DESIGNED TO SECURE THE BALUN TO AN END SUPPORT.
3. ATTACH A COAX CONNECTOR HERE TO PERMIT ATTACHING A LENGTH OF 52 OHM RG-8/U COAX.
4. REMOVE OUTER JACKET AND SHIELD FROM A LENGTH OF RG-11/U 75 OHM COAXIAL CABLE. CUT THE OUTER JACKET 1/2 INCH SHORTER THAN THE SHIELD. BEVEL THE OUTER EDGE OF THE 3/8" O.D. BRASS TUBE. SLIDE THE DIELECTRIC INSIDE THE TUBE. FORCE THE BEVELED END OF THE BRASS TUBE BETWEEN THE DIELECTRIC AND THE SHIELD FOR A DISTANCE OF ABOUT 2 INCHES AS SHOWN. SOLDER THE SHIELD TO THE TUBE, USING A MINIMUM AMOUNT OF HEAT TO AVOID DAMAGING THE DIELECTRIC. COVER THE AREA WITH SCOTCH ELECTRICAL TAPE TO EXCLUDE MOISTURE.
5. THIS SHORTING BAR SHOULD BE MOVABLE TO PERMIT ADJUSTING THE BALUN TO REDUCE THE OVERALL STANDING WAVE RATIO OF THE SYSTEM.
6. REMOVE THE OUTER JACKET AND SHIELD FROM A LENGTH OF RG-8/U 52 OHM COAX. INSERT THE PROPER LENGTH OF BARE DIELECTRIC INSIDE THE TUBE.
7. SOLDER INNER CONDUCTORS TOGETHER. COVER THE TUBE ENDS AND ALL OF THE CABLE BETWEEN WITH A CONTINUOUS WRAPPING OF SCOTCH ELECTRICAL TAPE TO EXCLUDE MOISTURE.
8. INSTALL A BRACKET FOR ATTACHING THE OPEN WIRE LINE. IF BRACKET IS SOLDERED, BE VERY CAREFUL TO AVOID OVERHEATING AND DAMAGING THE DIELECTRIC.

BALUN WITH BALANCED OPEN WIRE LINE FOR REDUCTION OF LOSSES ON LONG TRANSMISSION LINES.

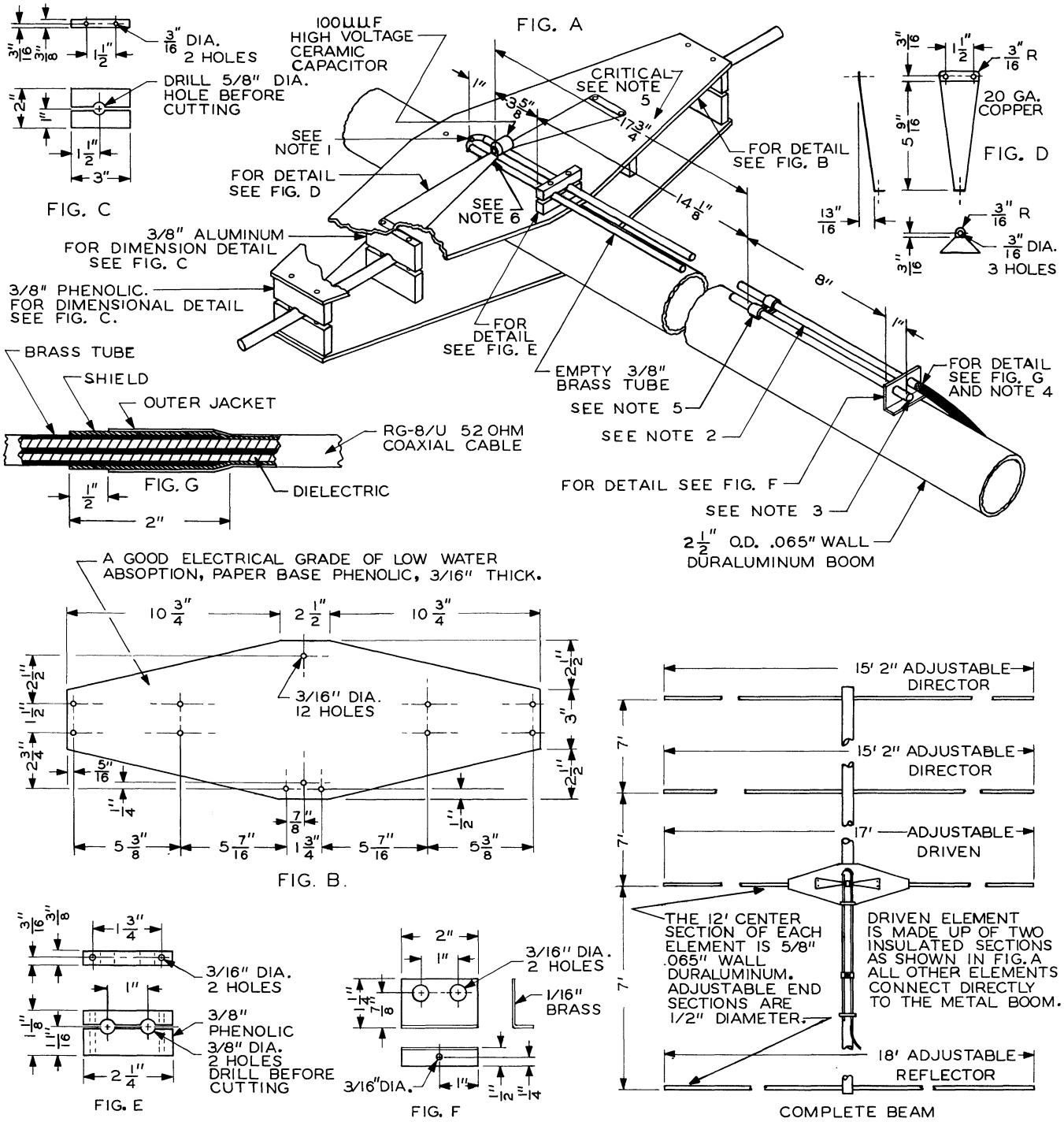

NOTES:

1. ALLOW COAXIAL CABLE DIELECTRIC MATERIAL TO EXTEND FROM TUBE. SOLDER COAX INNER CONDUCTOR TO END OF OTHER TUBE. WRAP COAX DIELECTRIC MATERIAL AND END OF BOTH TUBES WITH SCOTCH ELECTRICAL TAPE TO EXCLUDE MOISTURE. MAKE A CONTINUOUS WRAPPING ALONG THE DIELECTRIC FROM ONE TUBE TO THE OTHER.
2. 3/8" BRASS TUBE CONTAINING COAX CABLE MINUS JACKET AND SHIELD.
3. CLOSE END OF TUBE TO EXCLUDE MOISTURE.
4. REMOVE OUTER JACKET AND SHIELD FROM A LENGTH OF RG-8/U 52 OHM COAXIAL CABLE. CUT THE OUTER JACKET 1/2" SHORTER THAN THE SHIELD. BEVEL THE OUTER EDGE OF THE 3/8" O.D. BRASS TUBE. SLIDE THE DIELECTRIC INSIDE THE THE TUBE. FORCE THE BEVELED END OF THE BRASS TUBE BETWEEN THE DIELECTRIC AND THE SHIELD FOR A DISTANCE OF ABOUT 2 INCHES AS SHOWN. SOLDER THE SHIELD TO THE TUBE, USING A MINIMUM AMOUNT OF HEAT TO AVOID DAMAGING THE DIELECTRIC. HOLD THE CABLE STRAIGHT WHILE SOLDERING. COVER THE AREA WITH A CONTINUOUS WRAPPING OF SCOTCH ELECTRICAL TAPE TO EXCLUDE MOISTURE.
5. THE DISTANCE BETWEEN THE SHORTING BAR AND THE CAPACITOR IS CRITICAL. BEFORE INSERTING THE COAXIAL CABLE, AND BEFORE CONNECTING THE COPPER TRIANGLE TO THE ELEMENT, USE A GRID-DIP OSCILLATOR TO RESONATE THE BALUN TO THE CENTER OF THE BAND. THE 17 3/4" DIMENSION IS APPROXIMATELY CORRECT.
6. SOLDER 100 μμF. HIGH VOLTAGE CERAMIC CAPACITOR TO END OF 20 GA. COPPER TRIANGLE. SOLDER COPPER TRIANGLE TO BRASS TUBE.

10 METER BEAM WITH SHORTENED UNBALANCED TO BALANCED TRANSFORMER (BALUN) FEED SYSTEM

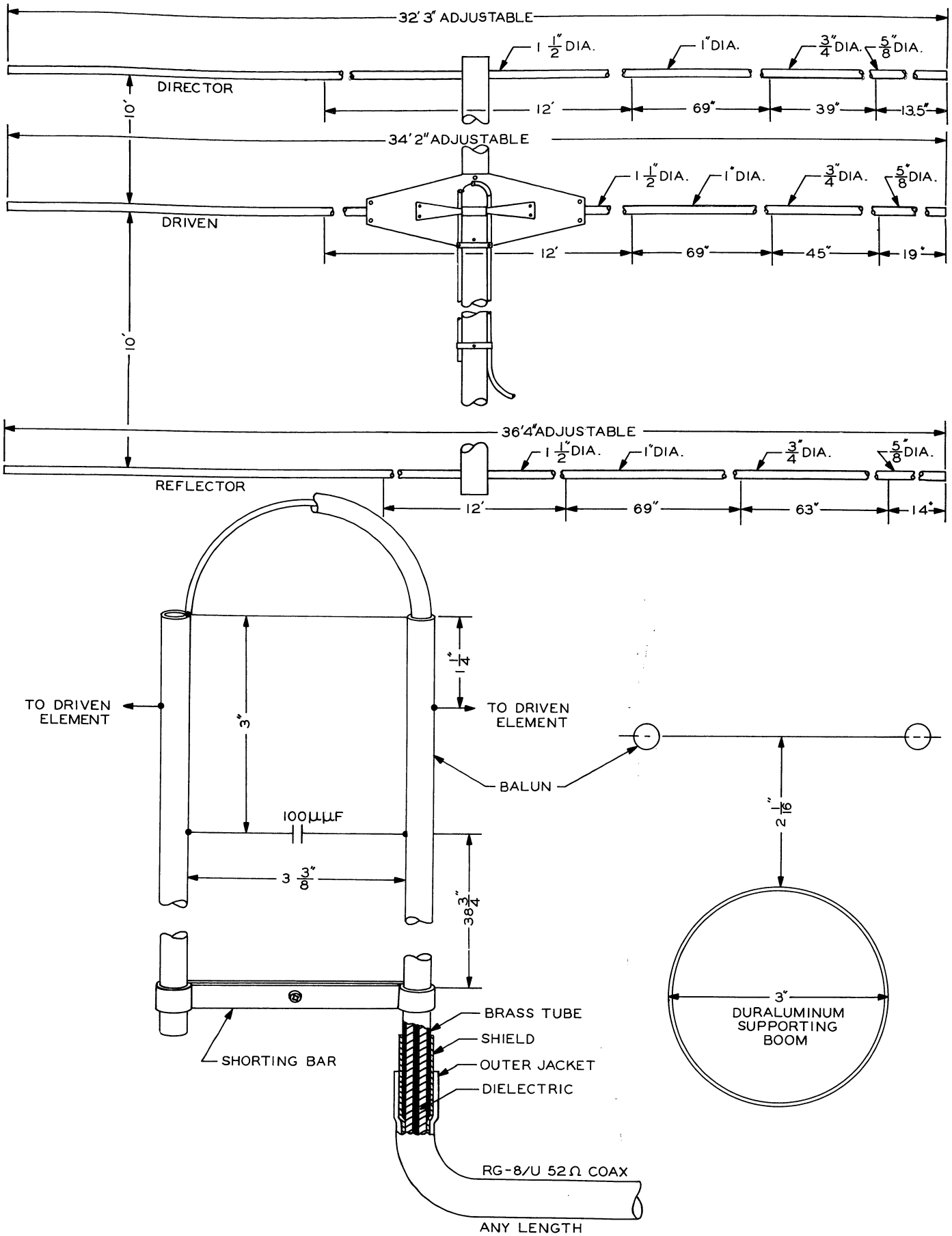

20 METER BEAM WITH SHORTENED UNBALALANCED TO BALANCED TRANSFORMER (BALUN) FEED SYSTEM. GENERAL CONSTRUCTION IS THE SAME AS THE TEN METER BEAM.

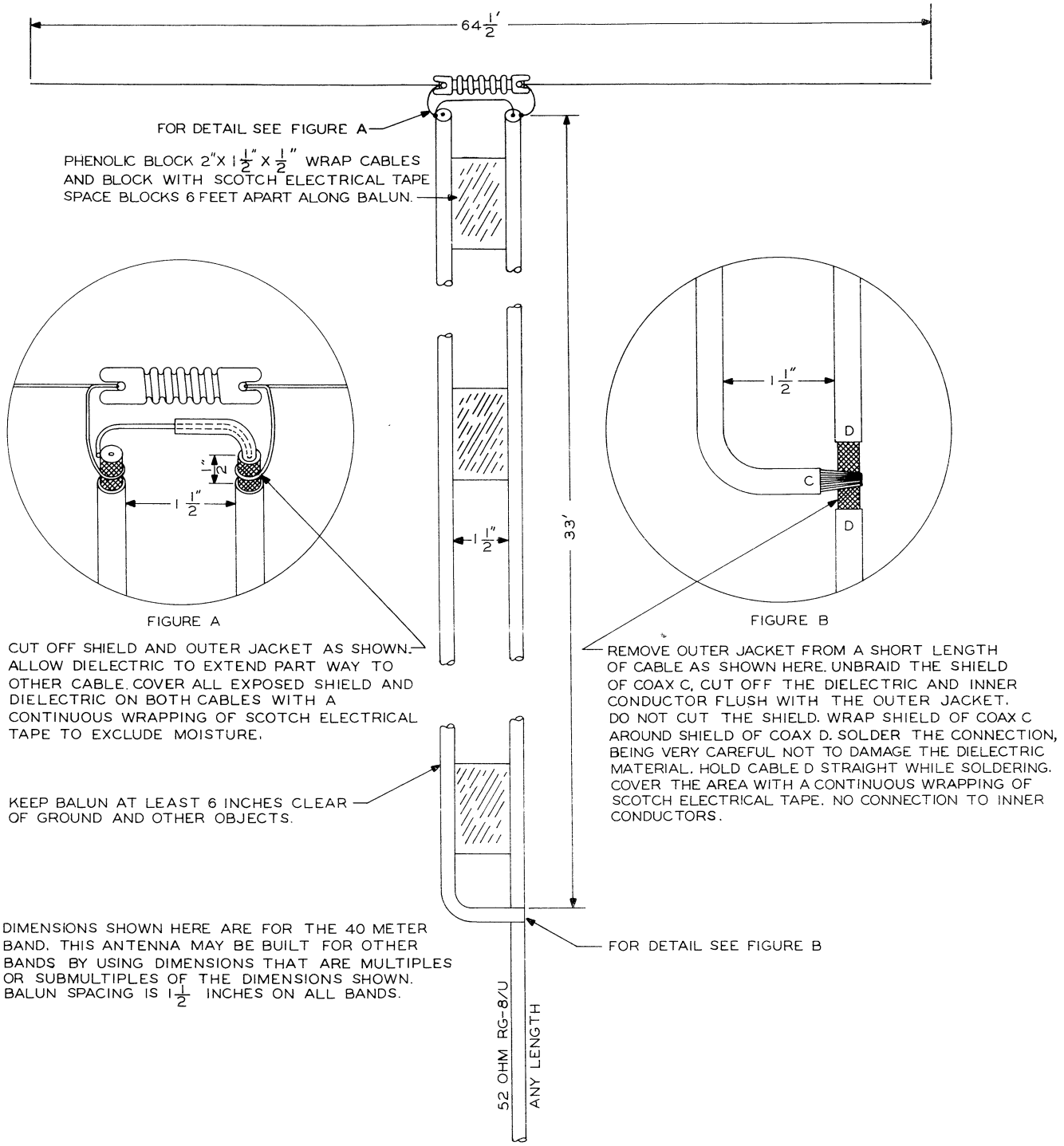

HALF WAVE ANTENNA WITH QUARTER WAVE UNBALANCED TO BALANCED TRANSFORMER (BALUN) FEED SYSTEM

COLLINS RADIO COMPANY

MAIN PLANT:

855 35TH ST. N.E., CEDAR RAPIDS, IOWA

BRANCHES:

1937 IRVING BOULEVARD, DALLAS, TEXAS

11 WEST 42ND STREET, NEW YORK 18, N. Y.

2700 WEST OLIVE AVE., BURBANK, CALIF.

COLLINS