ICOM

SERVICE MANUAL

IC-761

HF ALL BAND TRANSCEIVER
GENERAL COVERAGE RECEIVER

ICOM INCORPORATED

FOREWORD

ICOM's new, multi-function IC-761 all solid state HF transceiver is designed to answer the increasing demand of today's Amateur radio operators for higher precision, sophisticated radio communications. The IC-761 incorporates the latest in ICOM engineering advances in solid state transceiver design such as a higher dynamic range for receiving and greater quality final amplifier circuits.

The IC-761 also incorporates ICOM's advanced automatic antenna tuner which provides comprehensive, uncomplicated antenna tuning operations on the HF bands, and which has been so successful on DX-peditions for Amateur operators.

ASSISTANCE

Four separate versions of the IC-761 have been designed for use in the U.S.A., Australia, Europe, and France. This service manual covers every version. When using the manual each model can be referred to by the following assigned version numbers:

#02 U.S.A. version
#03 Australia version
#05 Europe version
#06 France version

If you require assistance or information regarding the operation and capabilities of the IC-761, please contact your nearest authorized ICOM Dealer or ICOM Service Center.

TABLE OF CONTENTS

SECTION 1 SPECIFICATIONS

GENERAL

• Frequency coverage	: Receive :	0.1 MHz ~30.0 MHz
	Transmit: 160 m band	1.8 MHz ~ 2.0 MHz
	80 m band	3.45 MHz~ 4.1 MHz
	40 m band	6.95 MHz~ 7.5 MHz
	30 m band	9.95 MHz~10.5 MHz
	20 m band	13.95 MHz~14.5 MHz
	17 m band	17.95 MHz~18.5 MHz
	15 m band	20.95 MHz~21.5 MHz
	12 m band	24.45 MHz~25.1 MHz
	10 m band	27.95 MHz~30.0 MHz
• Modes	: SSB (A3J), CW (A1), FM (F3), RTTY (F1), AM (A3)	
• Frequency control	: CPU-based 10 Hz step digital PLL synthesizer	
• Frequency stability	: ±100 Hz in the range of −10℃~+60℃ (+14°F~+140°F)	
• Antenna impedance	: 50Ω (when TUNER SWITCH is OFF) 16.7~150Ω (with TUNER SWITCH ON)	
• Power supply requirement	: U.S.A. version	AC 100~120 V
	Australia, Europe, France versions	AC 200~240 V
• Power consumption	: Max. 650 VA transmitting Max. 80 VA receiving	
• Dimensions	: 424 mm (W) × 150 mm (H) × 390 mm (D) (Projections not included)	
• Weight	: 17.5 kg	

TRANSMITTER

• Output power	: SSB	Max. 100 W PEP
	CW, RTTY, FM	Max. 100 W
	AM	Max. 40 W
• Modulation	: SSB	Balanced modulation
	FM	Reactance modulation
	AM	Low level modulation
• Max. frequency deviation	: ±5 kHz	
• RTTY shift width:	: 170 Hz, 850 Hz	
• Spurious emissions	: Less than −60 dB	
• Carrier suppression	: Less than −40 dB	
• Unwanted sideband	: Less than −55 dB with 1000 Hz modulation	
• Microphone impedance	: 600Ω	

■ RECEIVER

• Receive system	:	SSB, CW, RTTY, AM Quadruple-conversion
		FM Triple-conversion
• Intermediate frequencies	:	1st All modes 70.4515MHz
		2nd SSB 9.0115MHz
		CW, RTTY 9.0106MHz
		FM, AM 9.0100MHz
		3rd All modes 455kHz
		4th SSB 9.0115MHz
		CW, RTTY 9.0106MHz
		AM 9.0100MHz
• Sensitivity (PREAMP SWITCH ON)	:	SSB, CW, RTTY
		0.1~0.5MHz Less than −113dBm for 10dB S+N/N
		0.5~1.6MHz Less than −107dBm for 10dB S+N/N
		1.6~30MHz Less than −123.5dBm for 10dB S+N/N
		AM (NARROW FILTER selected)
		0.1~0.5MHz Less than −97.5dBm for 10dB S+N/N
		0.5~1.6MHz Less than −91.4dBm for 10dB S+N/N
		1.6~30MHz Less than −107dBm for 10dB S+N/N
		FM
		28~30MHz Less than −117.5dBm for 12dB SINAD
• Squelch sensitivity	:	Less than −117.5dBm
• Selectivity	:	SSB (FILTER SWITCH ON) 2.4kHz/−6dB
		3.8kHz/−60dB
		CW, RTTY (FILTER SWITCH ON) 500Hz/−6dB
		1kHz/−60dB
		AM 6kHz/−6dB
		18kHz/−50dB
		FM 15kHz/−6dB
		30kHz/−50dB
• Audio output power	:	More than 2.6W at 10% distortion with 8Ω load
• Notch filter attenuation	:	More than 45dB
• RIT variable range	:	±9.99kHz

■ TUNER

• Output matching range	:	16.7~150Ω unbalanced (when TUNER SWITCH is ON).
• Minimum input power	:	8W
• Band switching time	:	3 seconds or less
• Auto tuning time	:	3 seconds or less
• Auto tuning accuracy	:	VSWR 1.2 : 1 or less
• Insertion loss	:	0.5dB or less (after tuning)

∗All stated specifications are approximate and subject to change without notice or obligation.

SECTION 2 OUTSIDE AND INSIDE VIEWS

2-1 OUTSIDE VIEWS

2-1-1 FRONT PANEL

CONTROL LOCATIONS

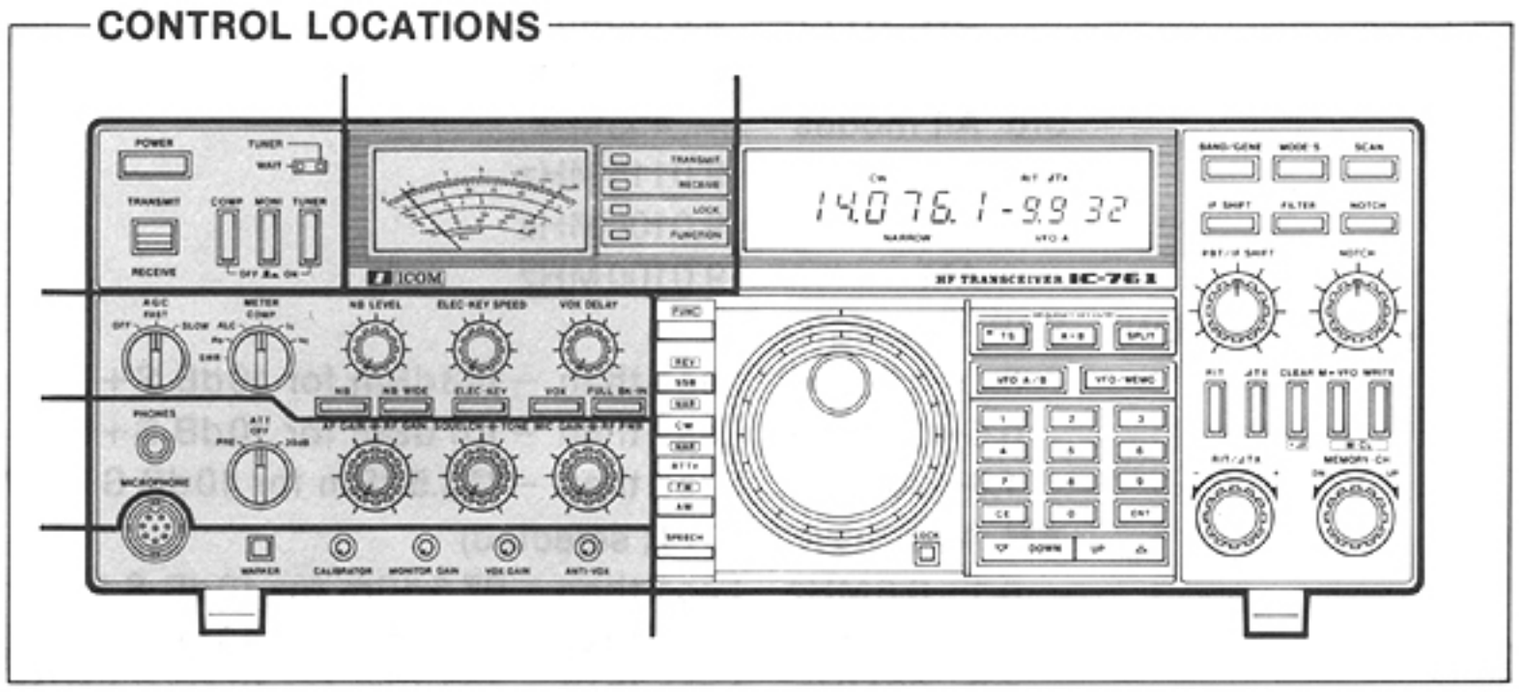

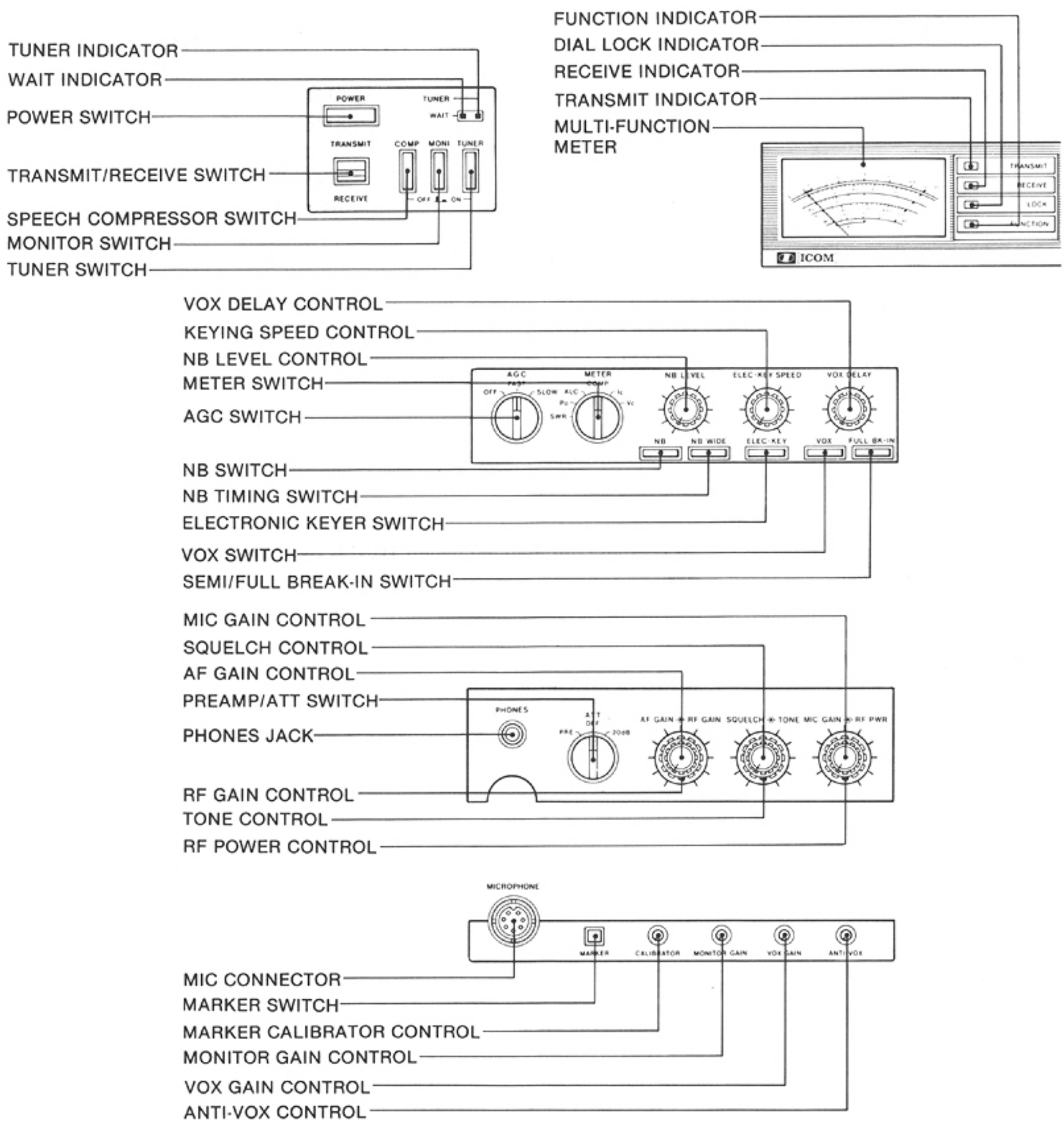

• FRONT PANEL (CONTINUED)

CONTROL LOCATIONS

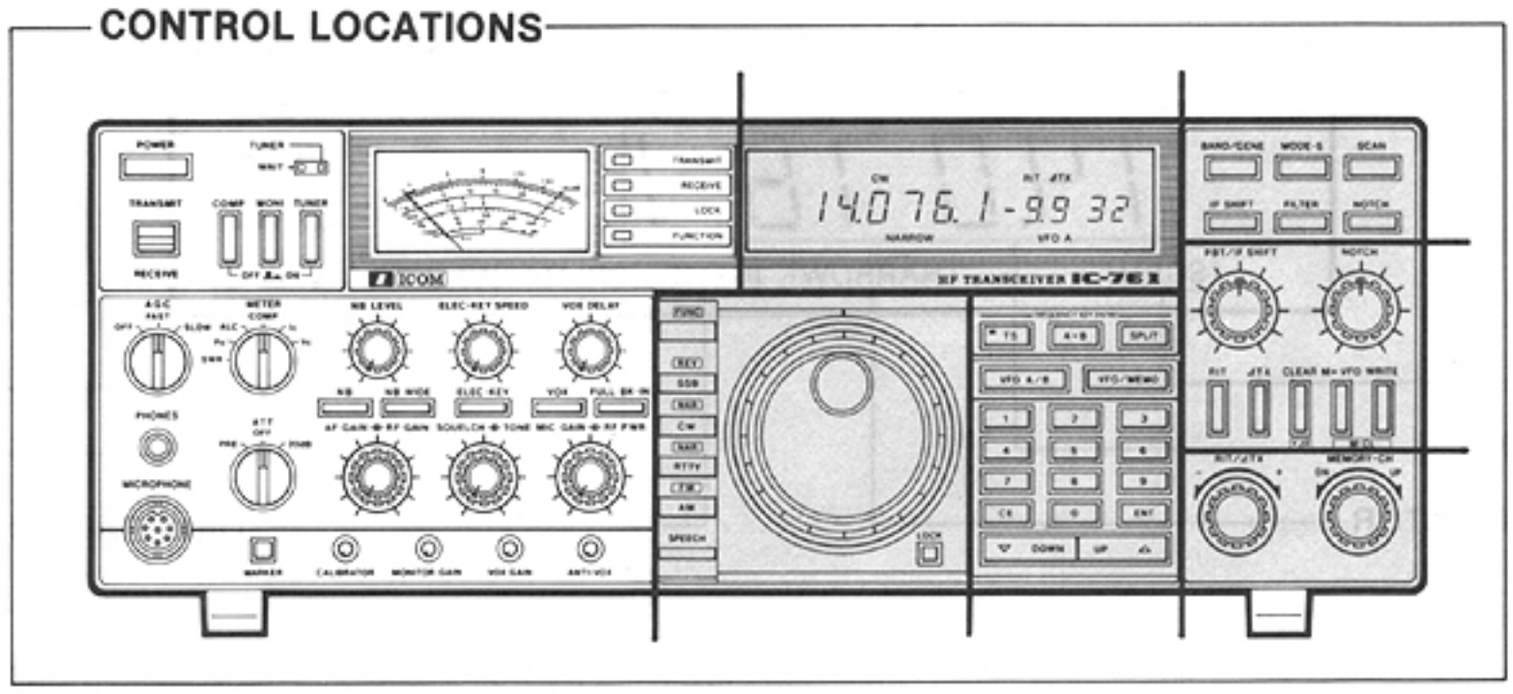

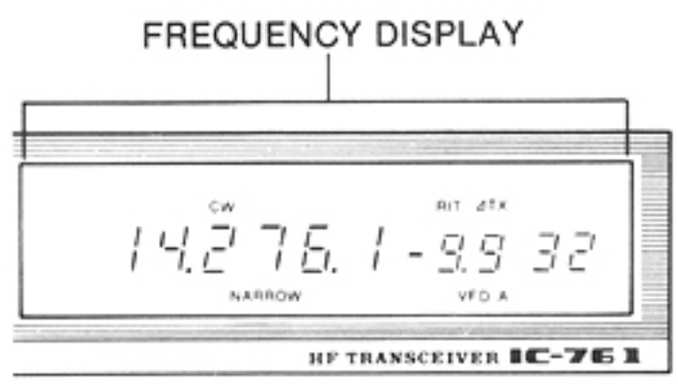

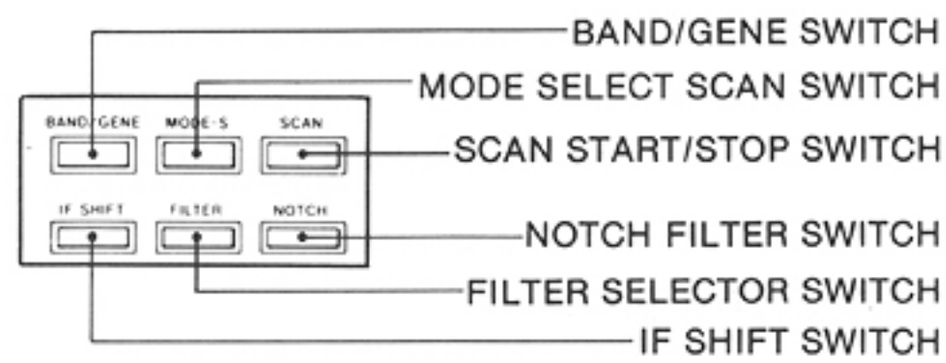

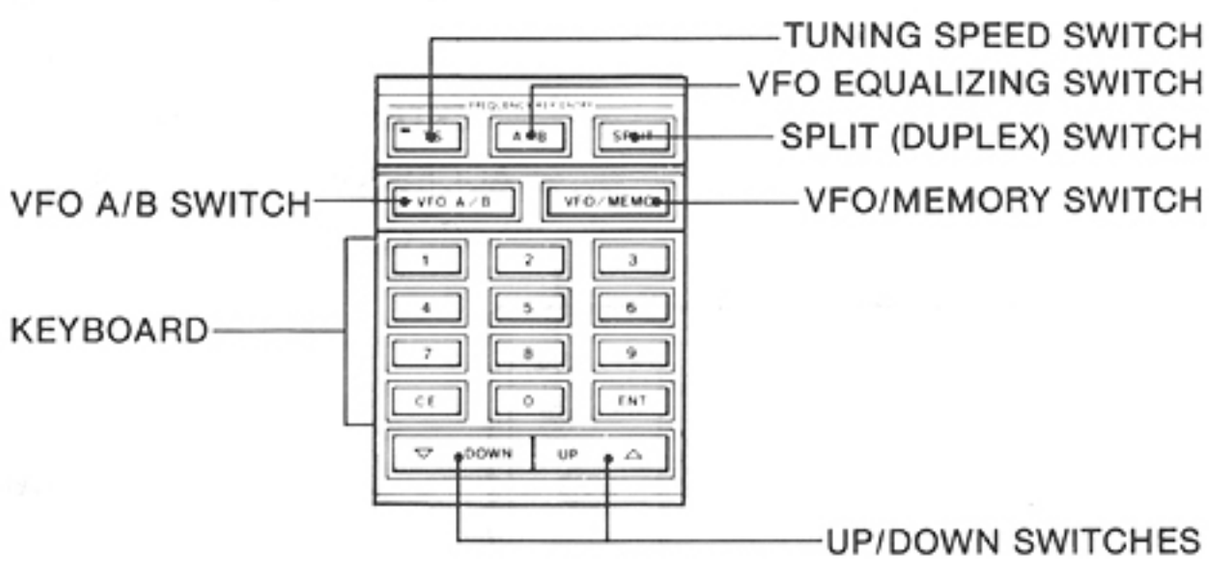

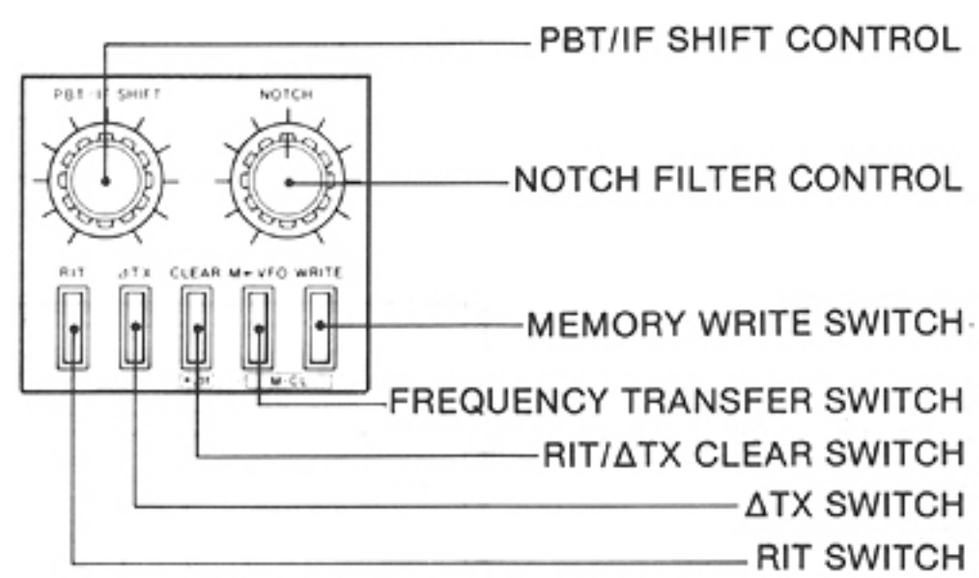

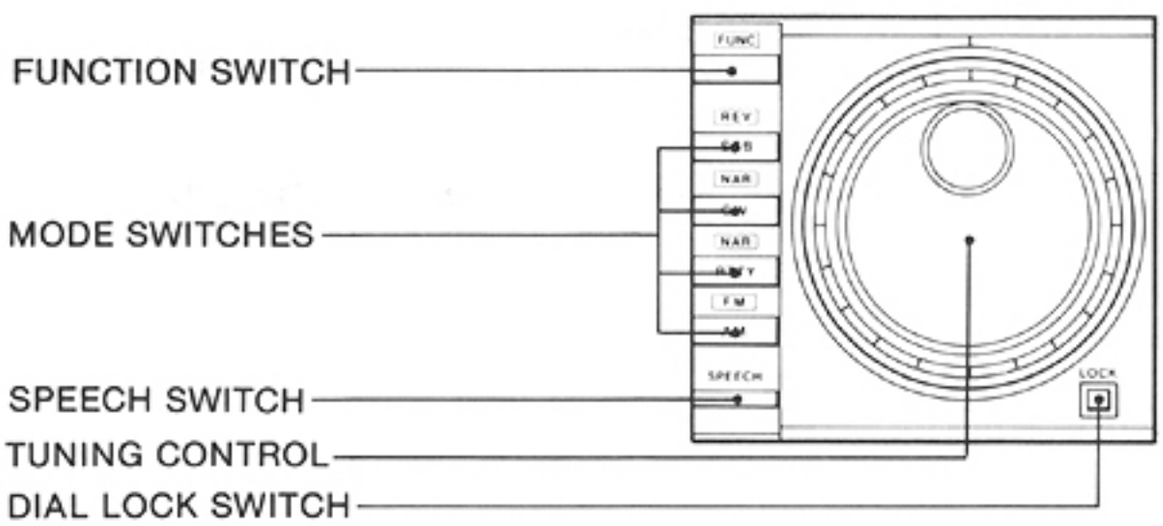

2-1-2 FREQUENCY DISPLAY

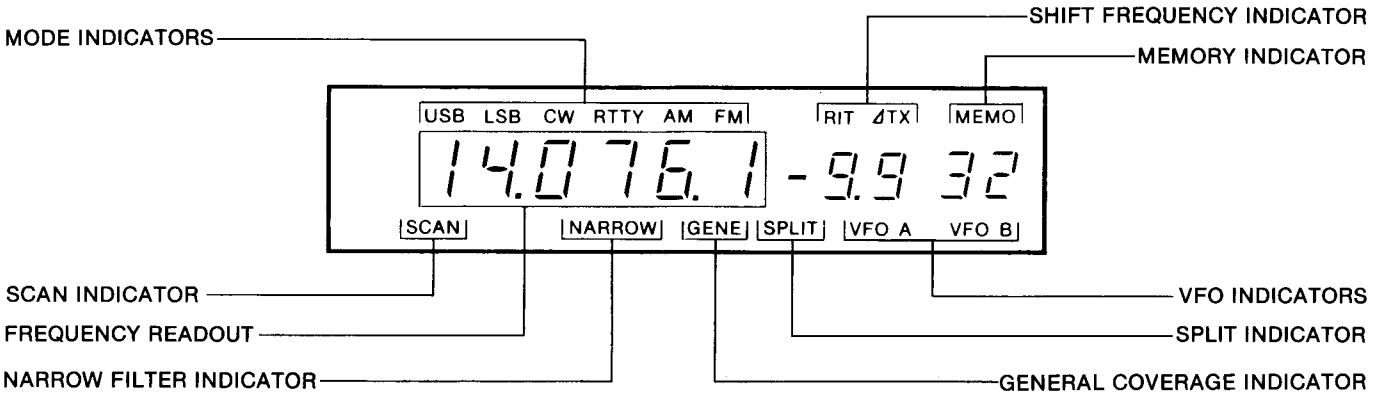

2-1-3 REAR PANEL

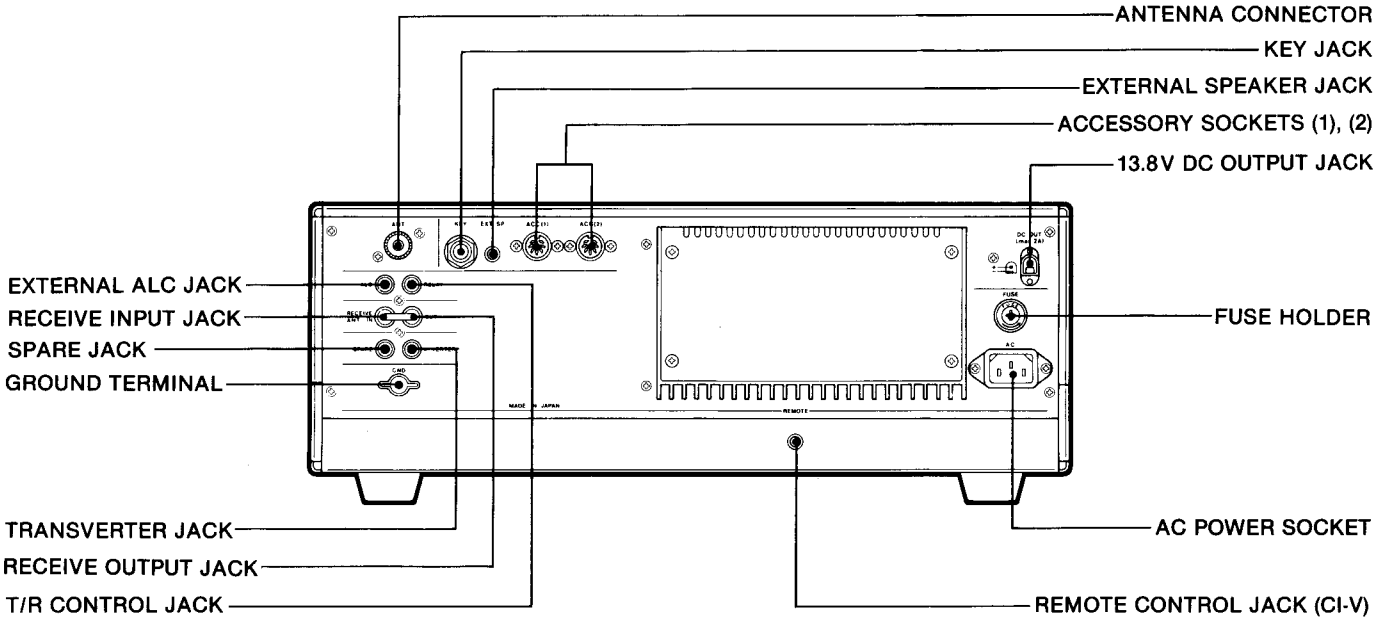

2-2 INSIDE VIEWS

2-2-1 TOP VIEW

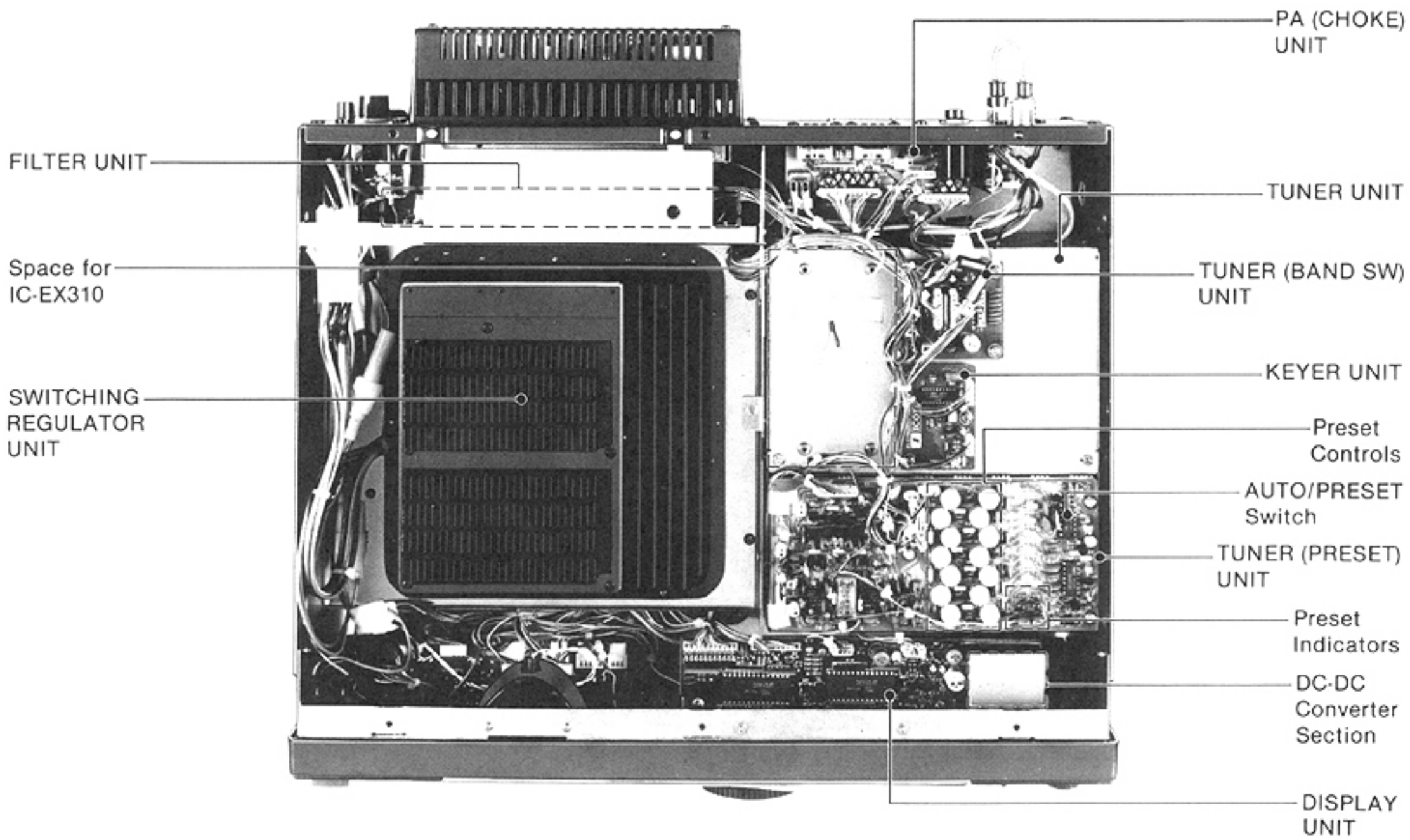

2-2-2 TOP VIEW (SWITCHING REGULATOR UNIT IS REMOVED)

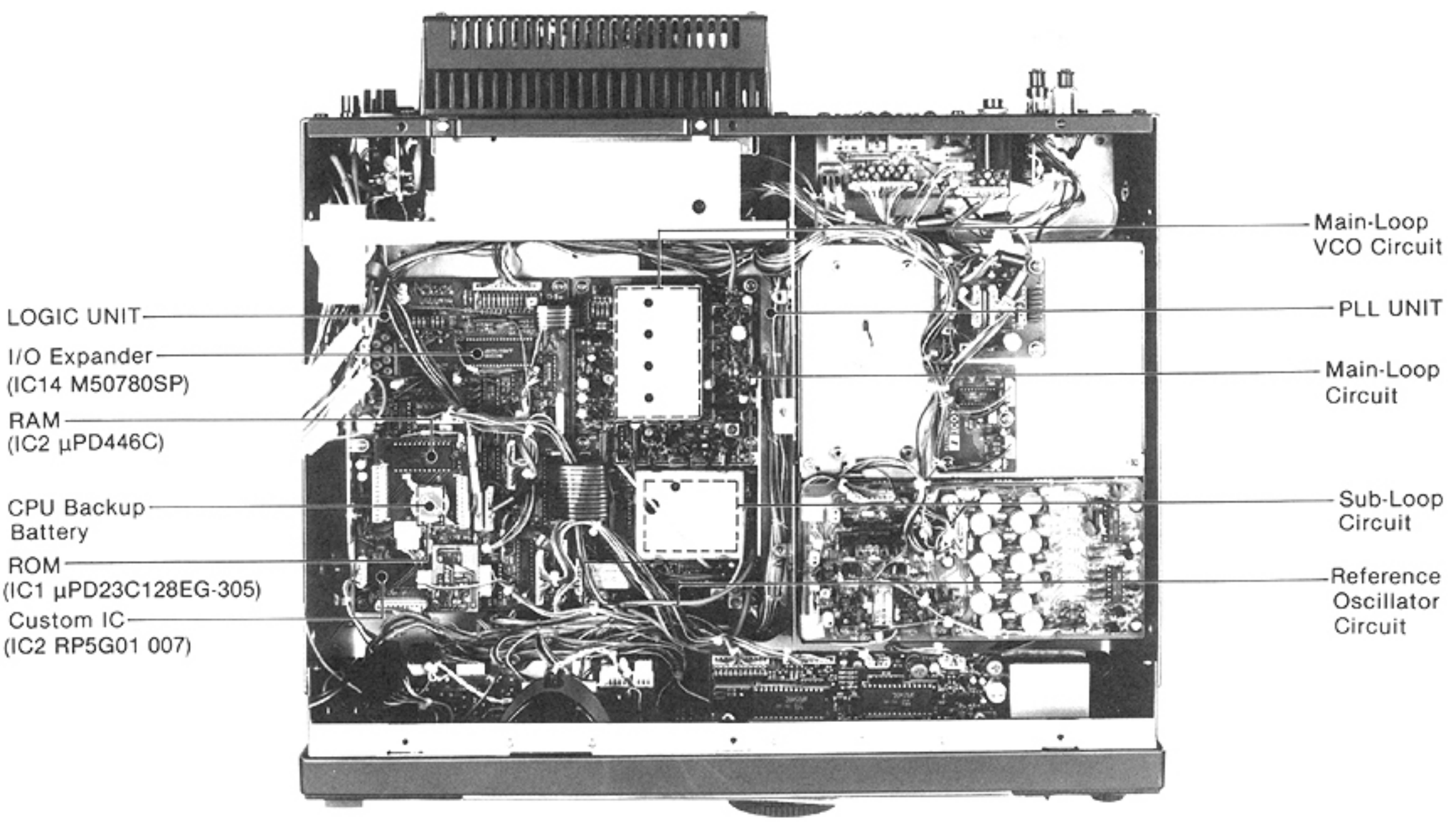

2-2-3 BOTTOM VIEW

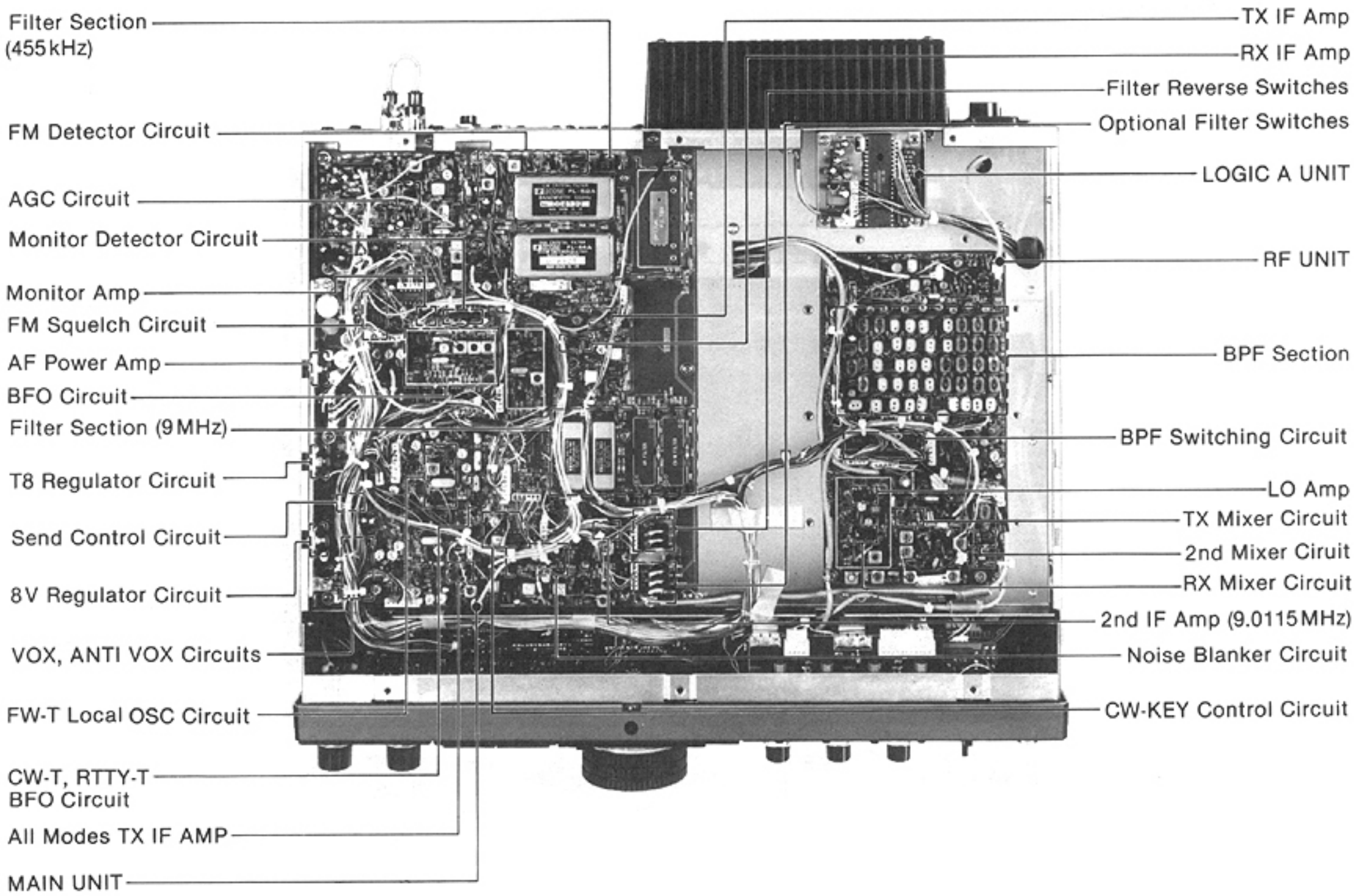

2-2-4 SWITCHING REGULATOR UNIT

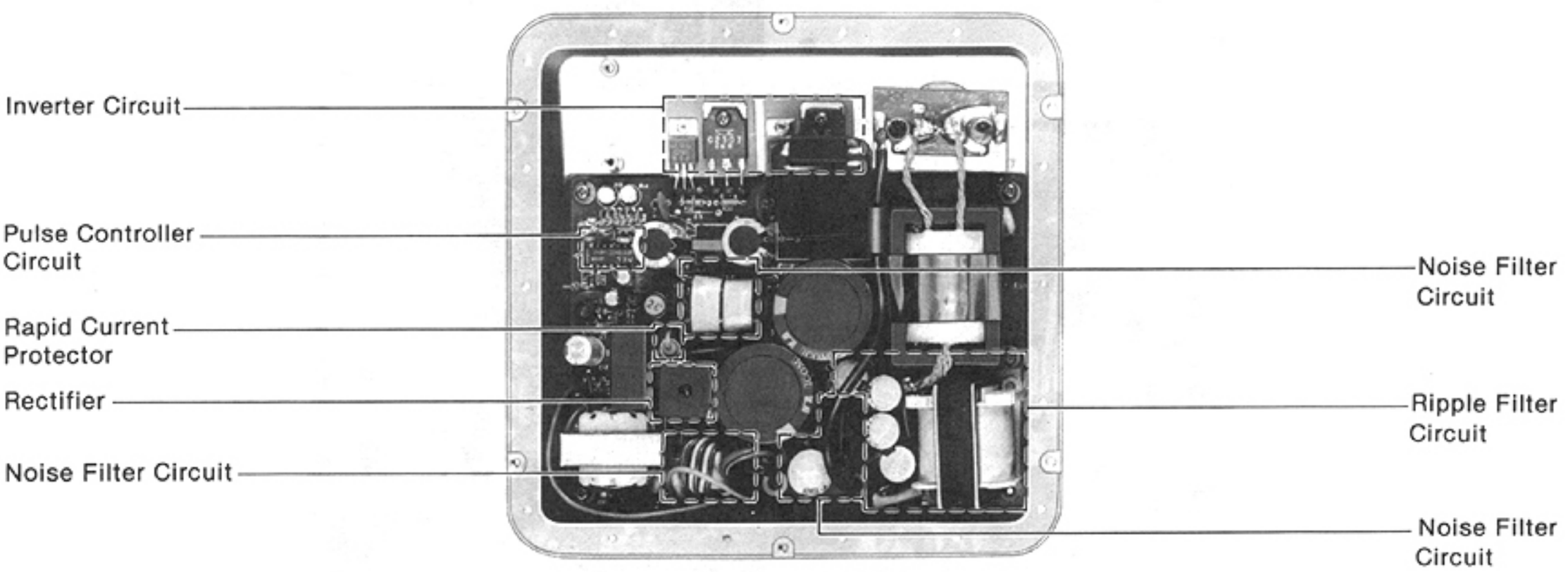

2-2-5 TUNER UNIT

• TOP VIEW

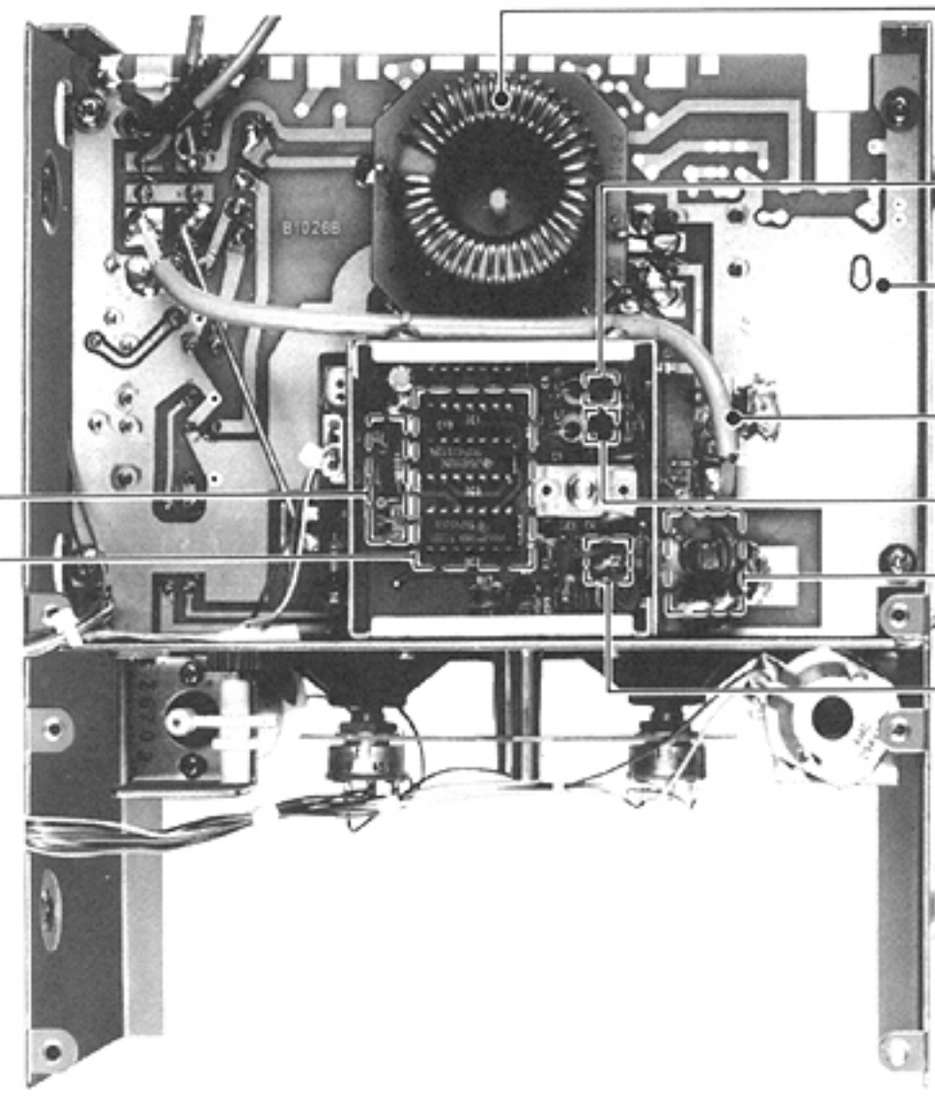

• BOTTOM VIEW

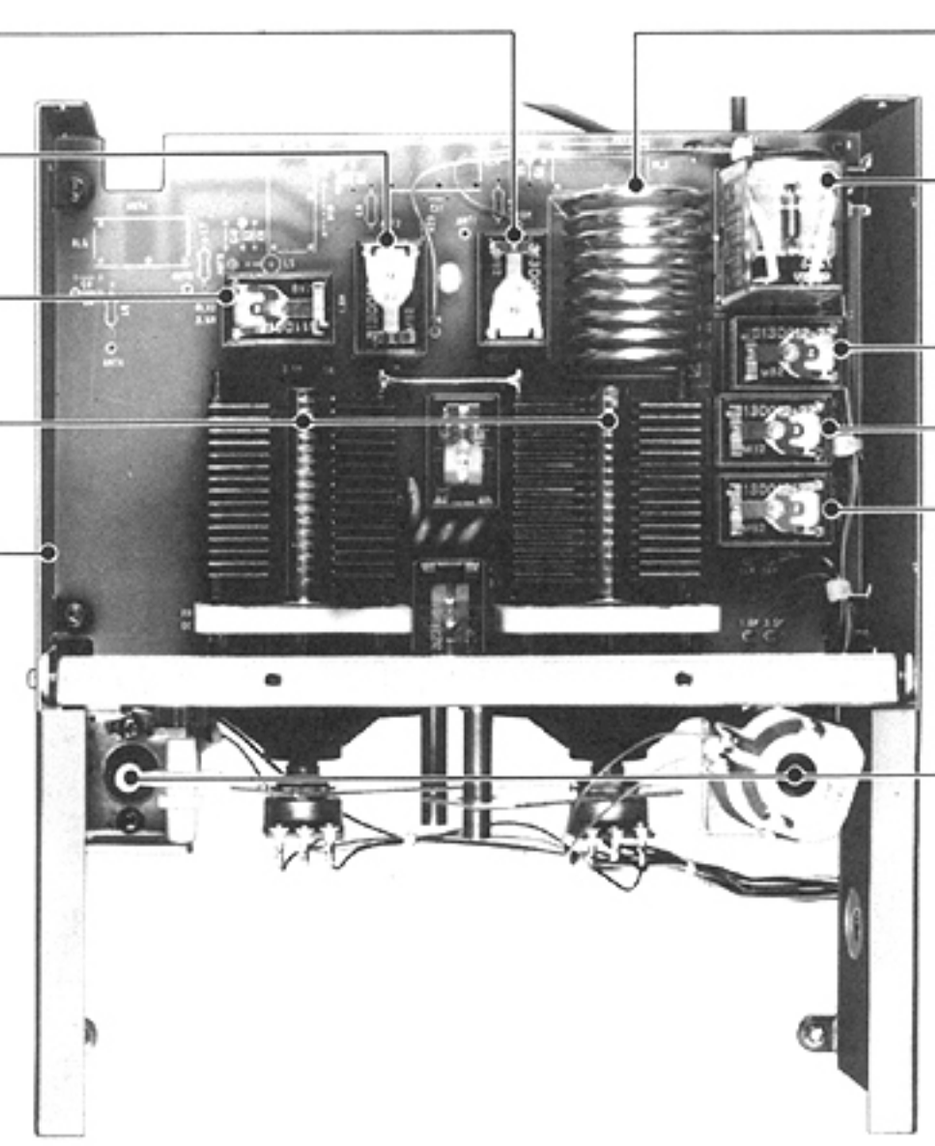

•FRONT VIEW

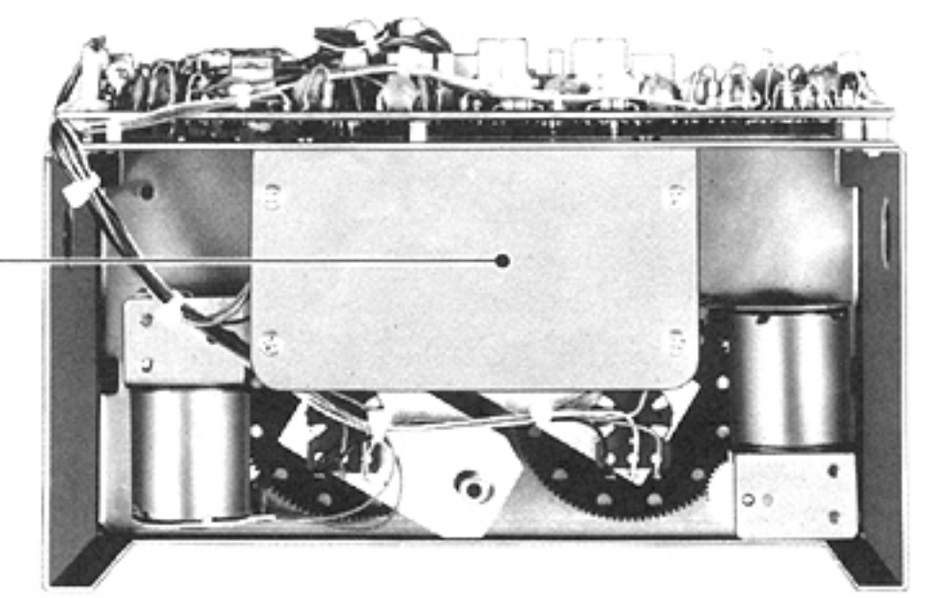

SECTION 3 BLOCK DIAGRAMS

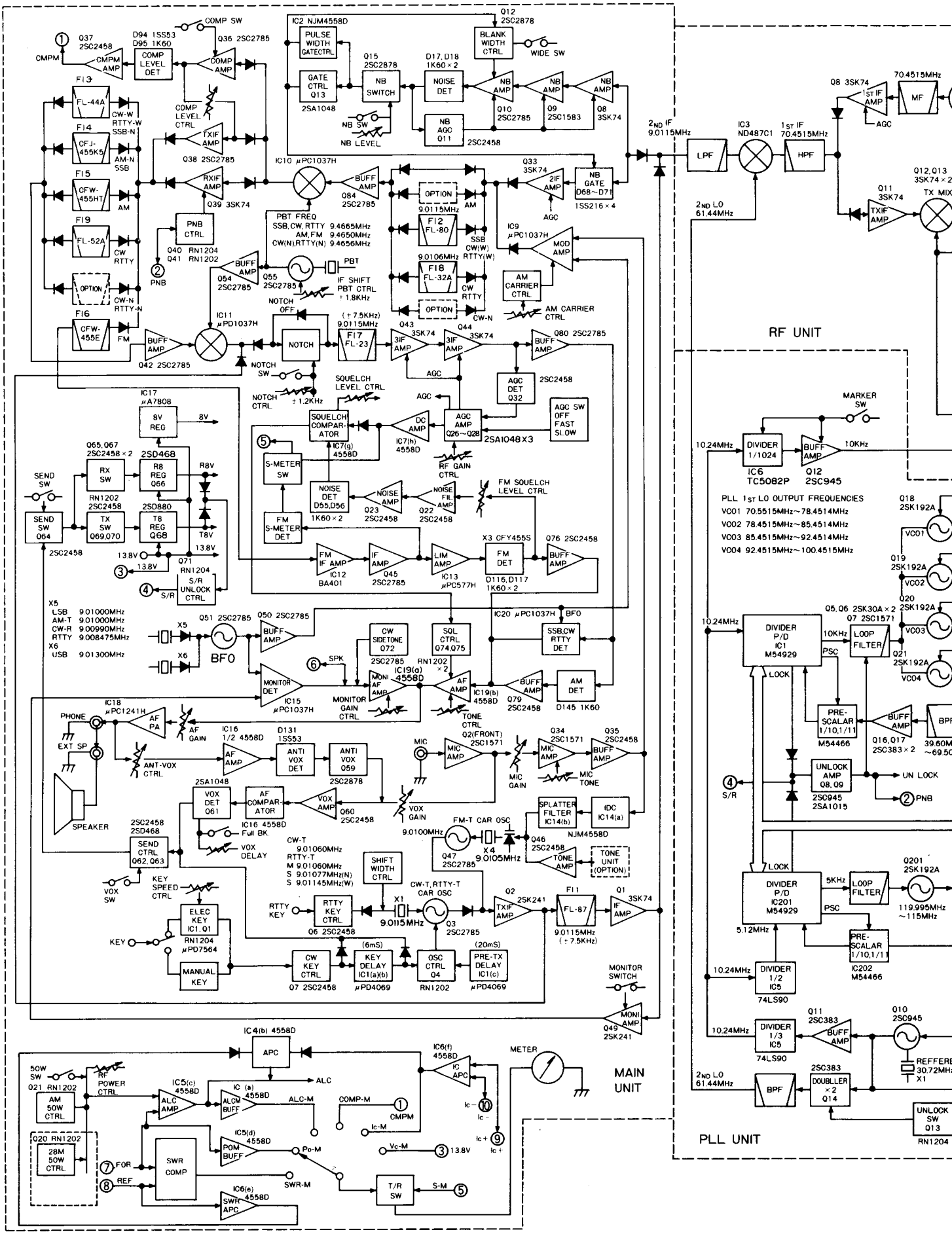

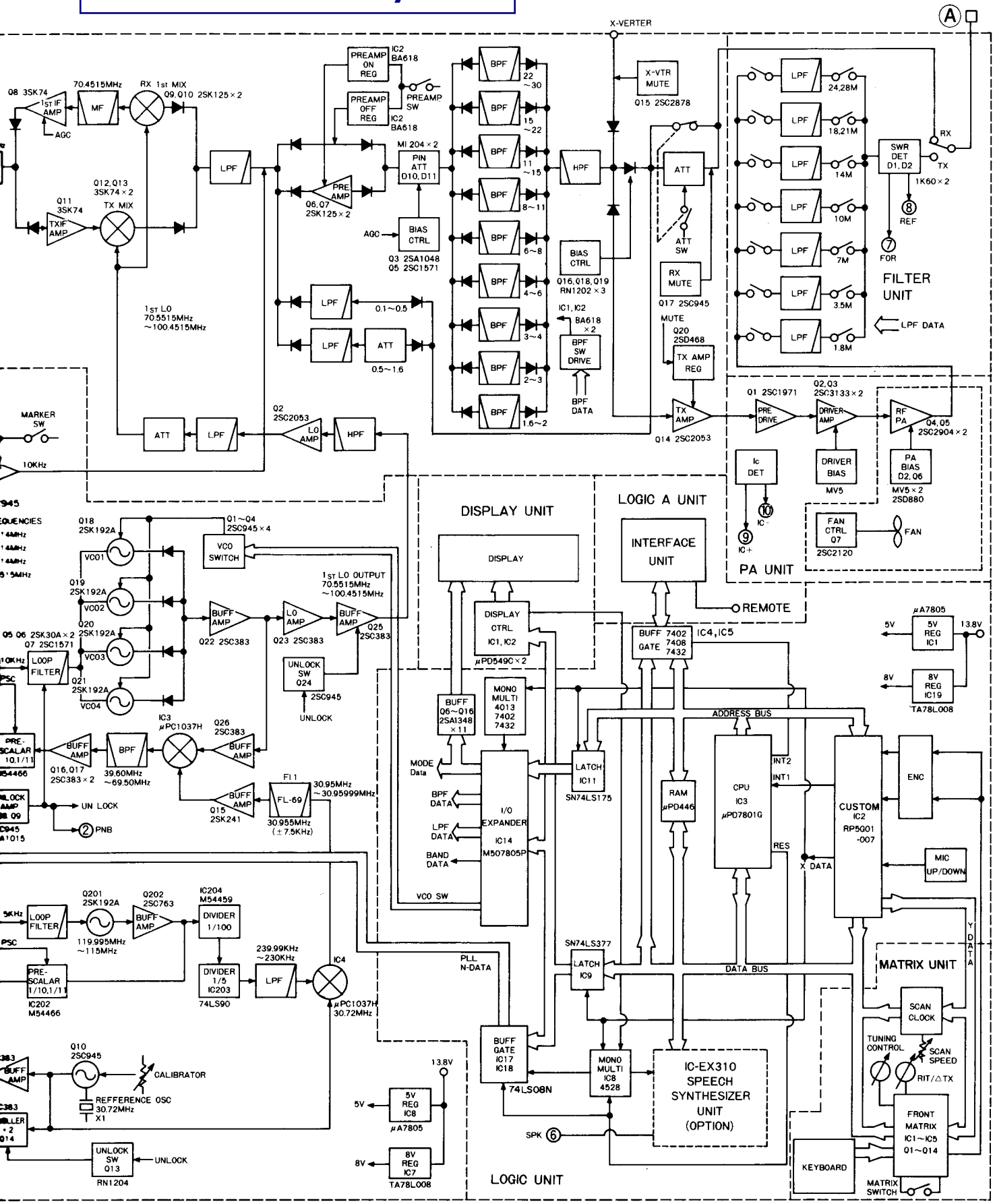

TUNER UNIT

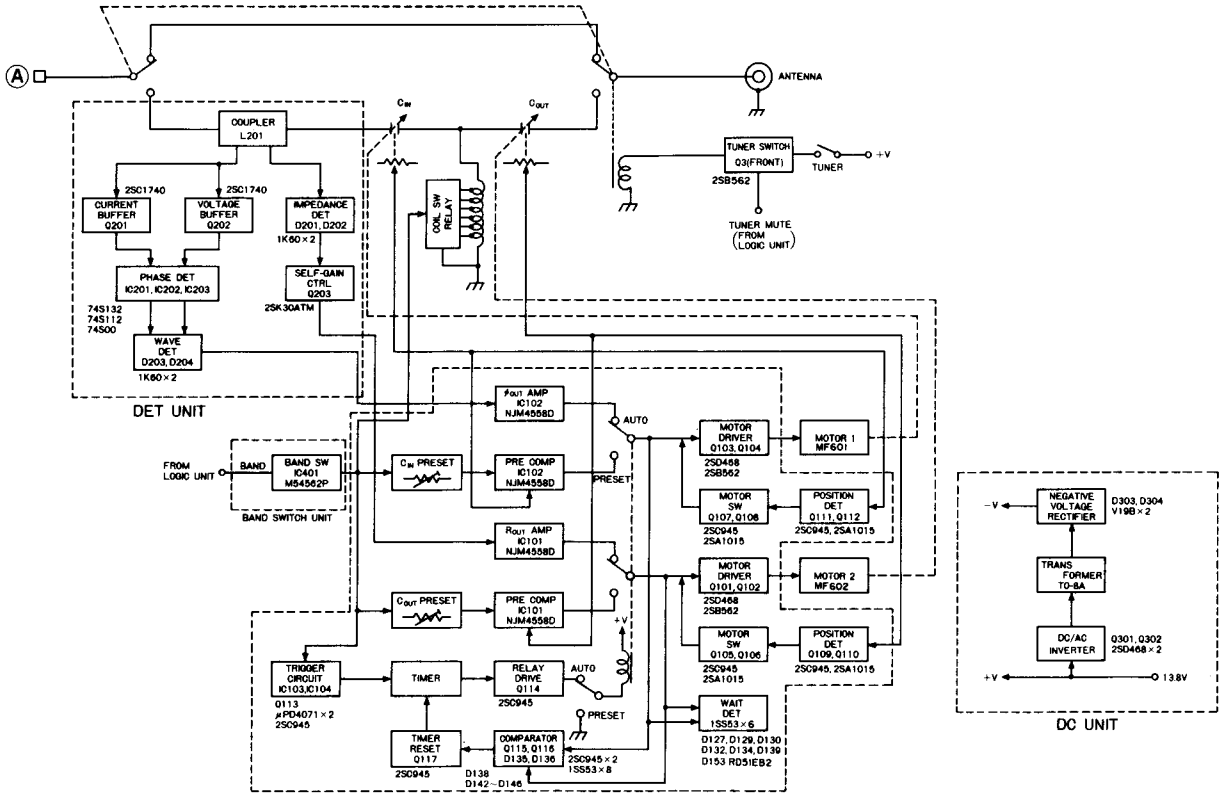

SWITCHING REGULATOR UNIT

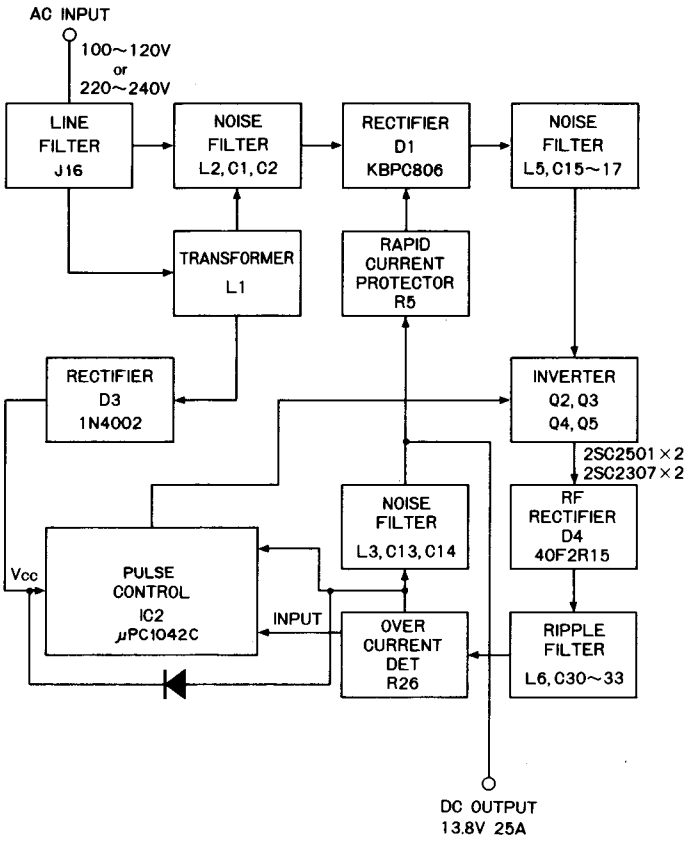

SECTION 4 CIRCUIT DESCRIPTION

4-1 RECEIVER CIRCUITS

4-1-1 RF CIRCUITS (RF UNIT)

Incoming signals to the RF UNIT are switched by RL1 and applied to an L-type 20dB attenuator (R92, R93) or bypass the attenuator. Signals are then fed to one of the bandpass filters or low-pass filters depending on the frequency of the signal that is controlled by IC1 and IC2.

Signals from the bandpass filters are fed to an L-type attenuator which consists of R28 and PIN diodes D10 and D11 which are controlled by AGC voltage.

Signals are then fed to the preamp (Q6, Q7) or bypass the preamp and enter the 1st mixer. Signals from low-pass filters are fed to the 1st mixer directly.

RF CIRCUITS (RF UNIT)

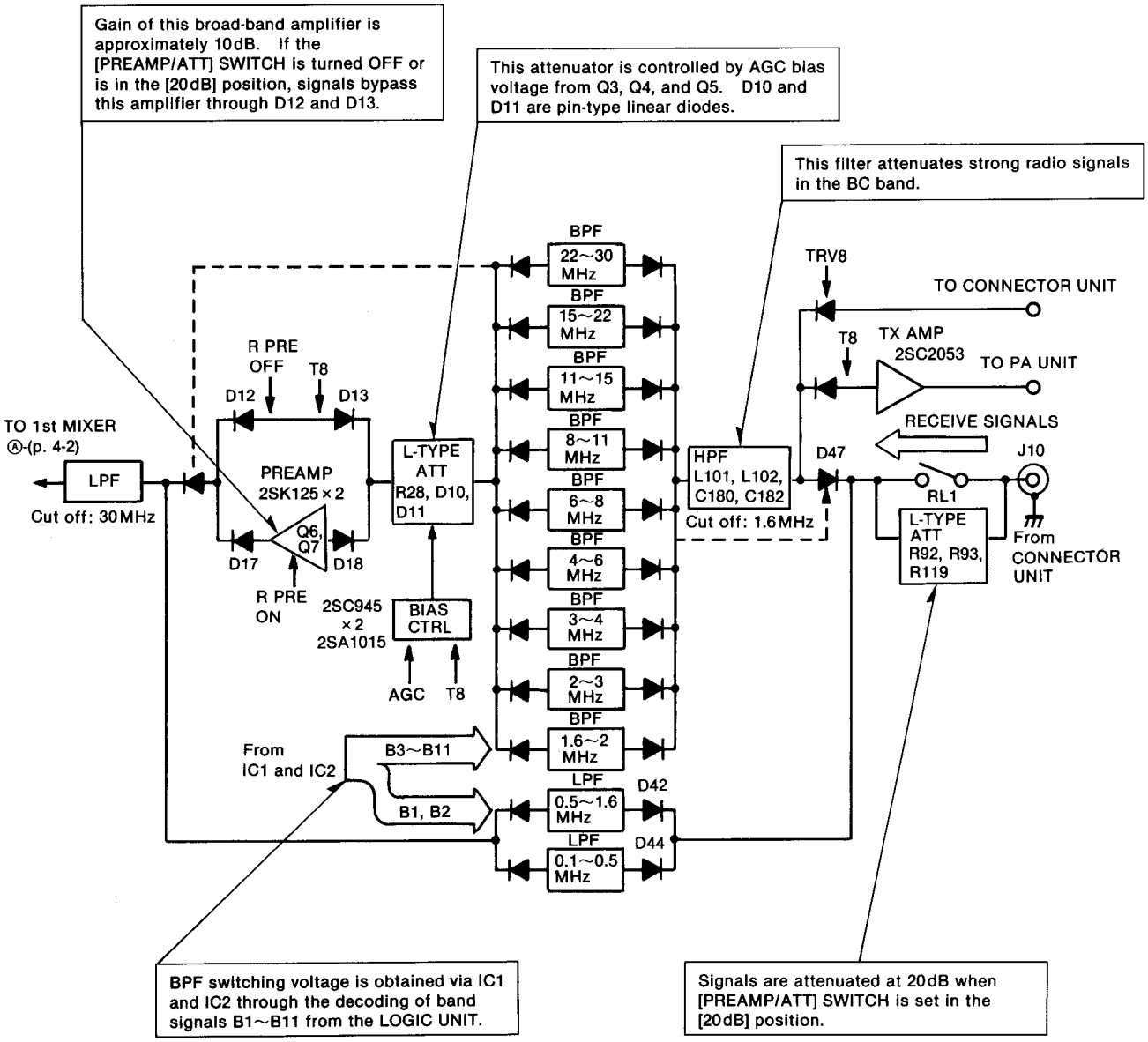

Fig. 1

4-1-2 IF CIRCUITS

1. RF UNIT

Q9 and Q10 create a double-balanced mixer which uses low-noise FETs (2SK125) and is driven by 13.8V to provide an excellent noise figure. Multi-signal receiving characteristics are determined by the 1st mixer circuit. The double-balanced mixer has a high intercept point and reduces spurious characteristics in signals.

The IC-761 has very high dynamic range (100dB in SSB mode and 104~105dB in CW mode) and uses a mixer with a high intercept point figure. The [ATT] SWITCH position is effective for strong receive signals with 20dB attenuation. The [PREAMP] SWITCH position is more effective with weaker signals since PREAMP provides an excellent S/N ratio and amplification, and increases the receive sensitivity by approximately 6dB.

TWO-SIGNALS RECEIVE CHARACTERISTICS

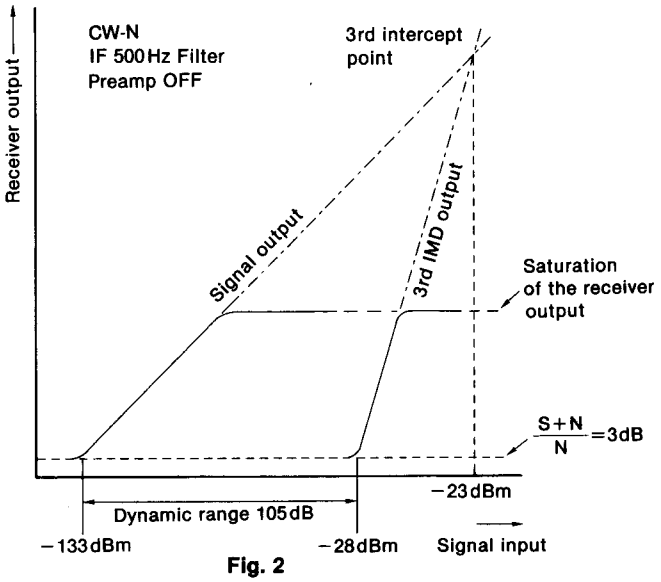

Fig. 2

IF CIRCUITS (RF UNIT)

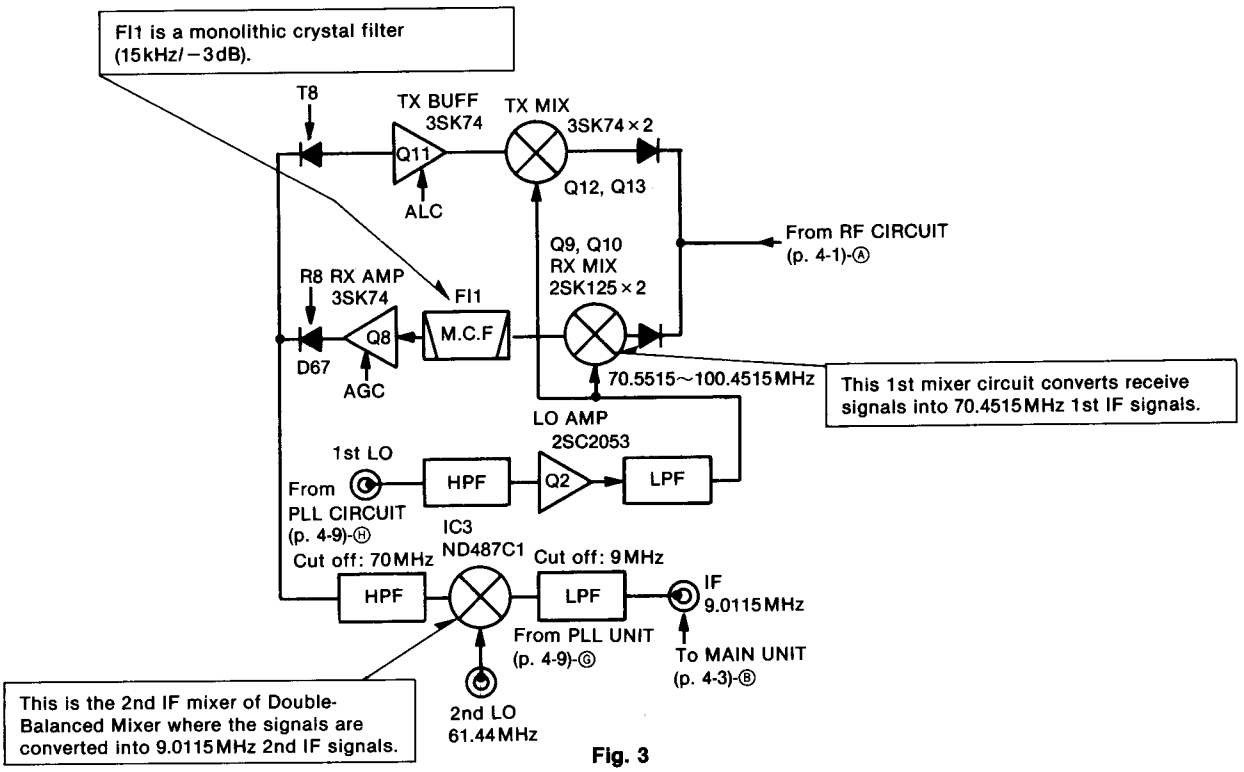

Fig. 3

2. MAIN UNIT

9MHz 2nd IF signals from J4 pass through Q33, a noise-blanker gate and amplifier. After being amplified at Q33, signals are fed through a filter select switch circuit and into a 9MHz IF filter.

Noise blanker gate D68~D71 is a diode balanced-type switch circuit which passes signals through it. Signals are cut this gate when control voltage from the noise blanker circuit is applied to D72.

Mode switches and the [FILTER] SWITCH on the front panel send signals into the circuit which select a 9MHz IF circuit section consisting of FI2 and FI8.

Filtered signals amplified at Q84 are fed into the 3rd mixer, IC10. 9.4665MHz (SHIFT frequency) signals are supplied as local oscillator signals from Q5 to IC10 (pin 7) in order to obtain 455kHz 3rd IF signals. 3rd IF signals are buffer amplified at Q39 and fed into the 455kHz filter section of the circuit. The 455kHz section consists of FI3~FI6, FI9 and an optional narrow filter (in CW and RTTY narrow modes). 3rd IF signals are selected as in the 9MHz section.

Signals from the 455kHz filter are converted to 9MHz again by IC11, the 4th mixer. When the transceiver is in FM mode, output from FI6 (the FM filter) is applied to the FM receive circuit. 9MHz-converted signals pass through the notch filter circuit and are amplified at Q43 and Q44 before being fed into the detector and AGC circuits.

IF CIRCUITS (MAIN UNIT)

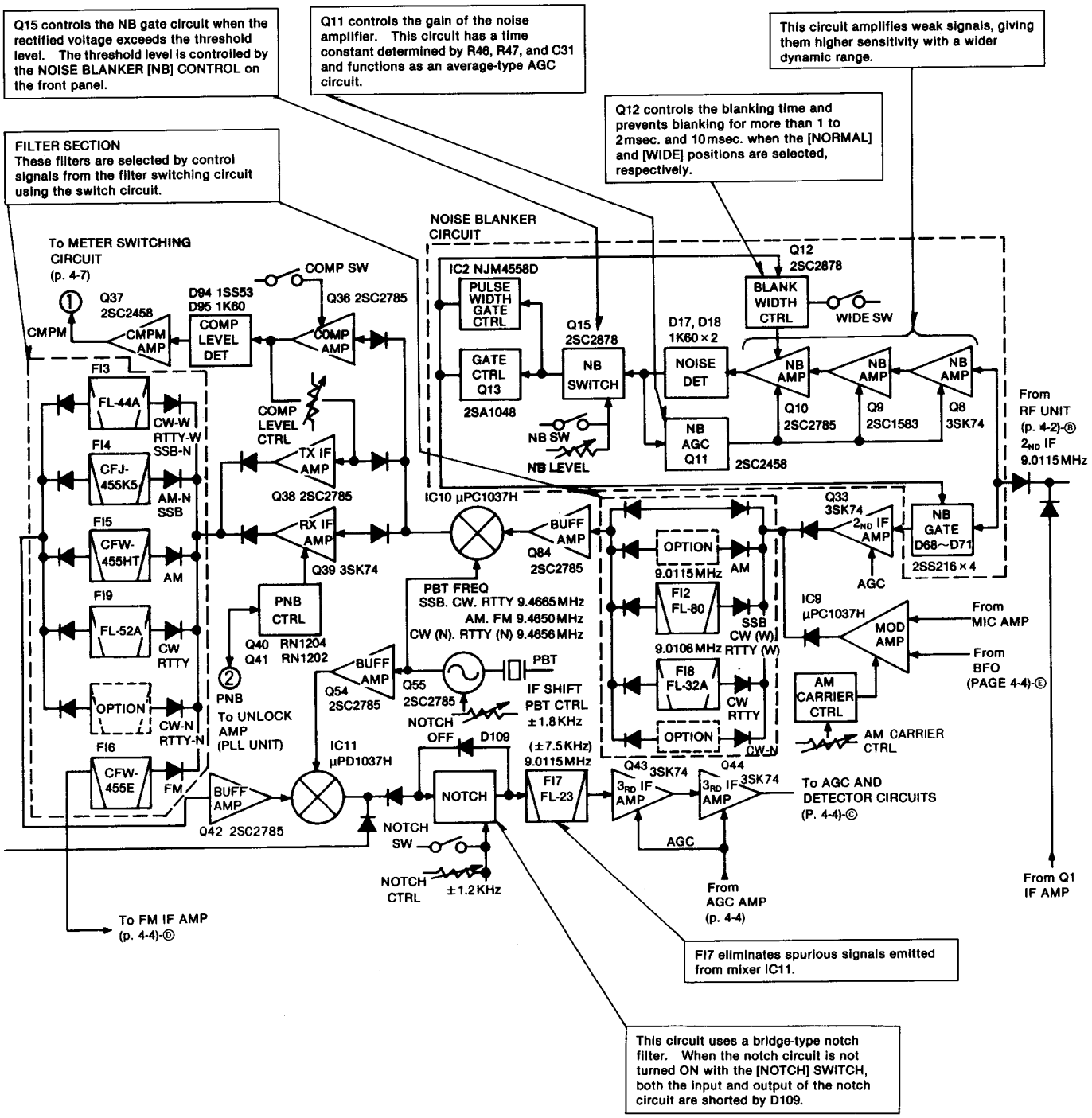

Fig. 4

4-1-3 DETECTOR, AGC AND AF CIRCUITS (MAIN UNIT)

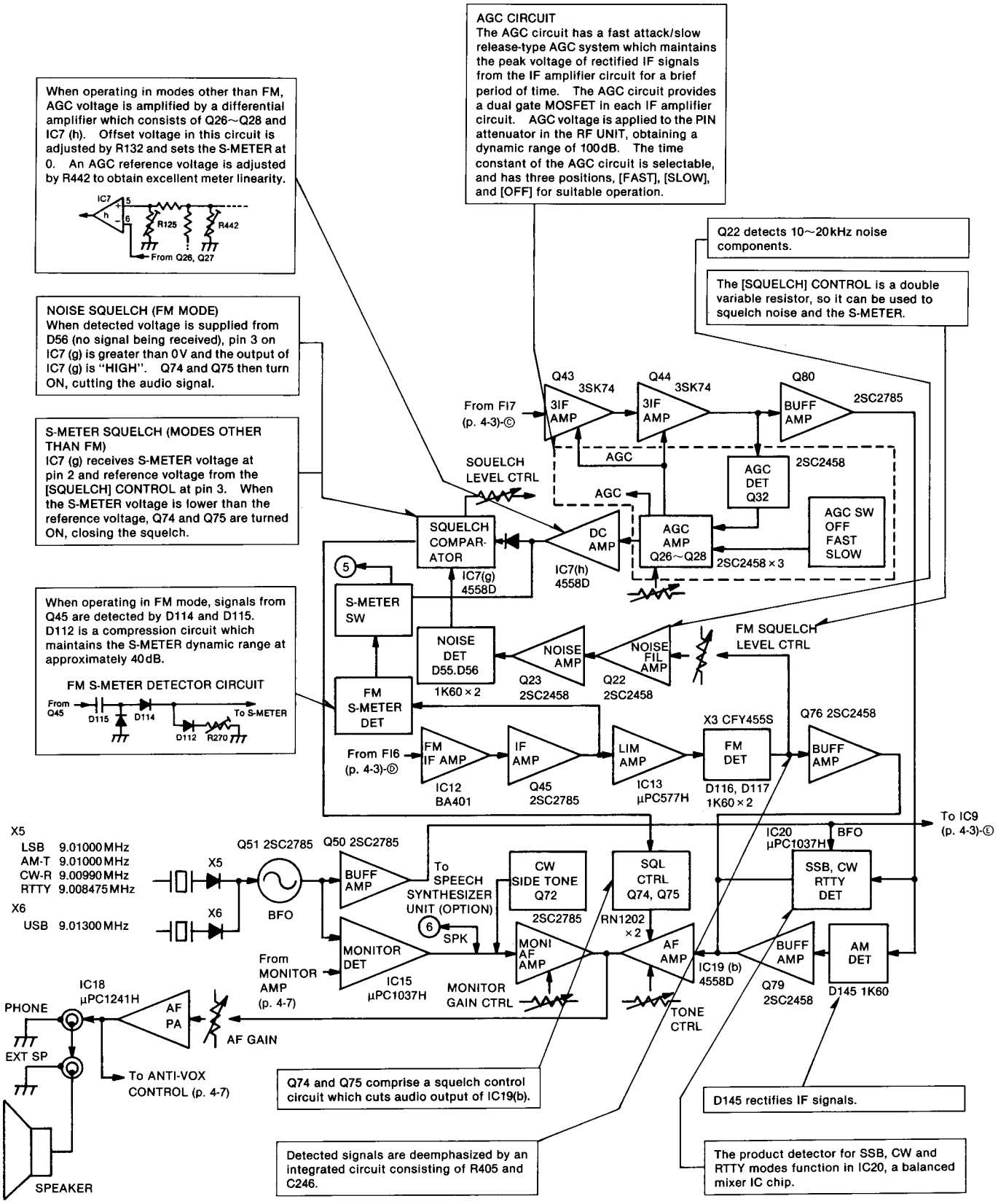

Fig. 5

4-2 TRANSMITTER CIRCUITS

4-2-1 TRANSMITTER CIRCUITS (MAIN UNIT)

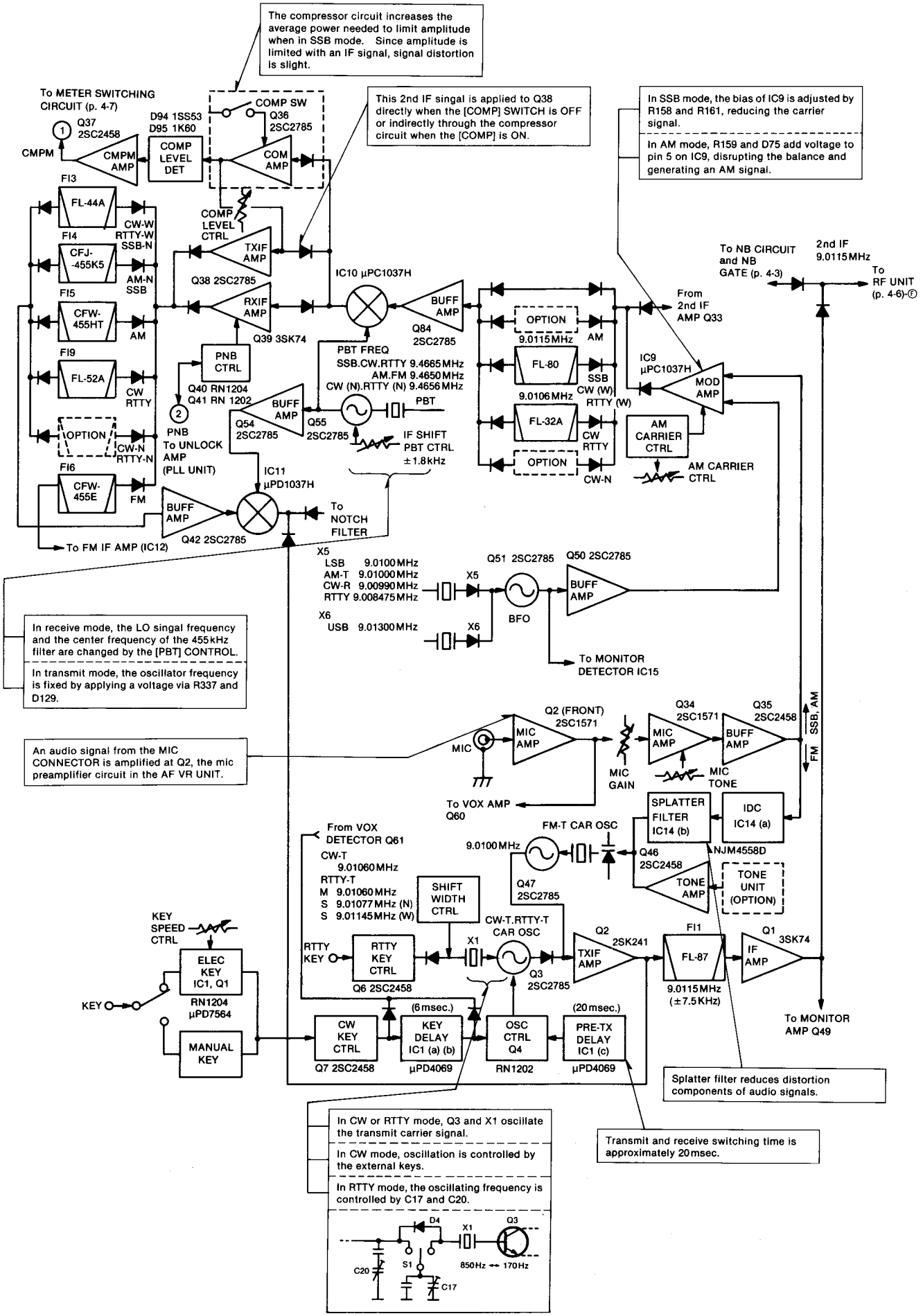

Fig. 6

4-2-2 TRANSMITTER CIRCUITS (RF UNIT)

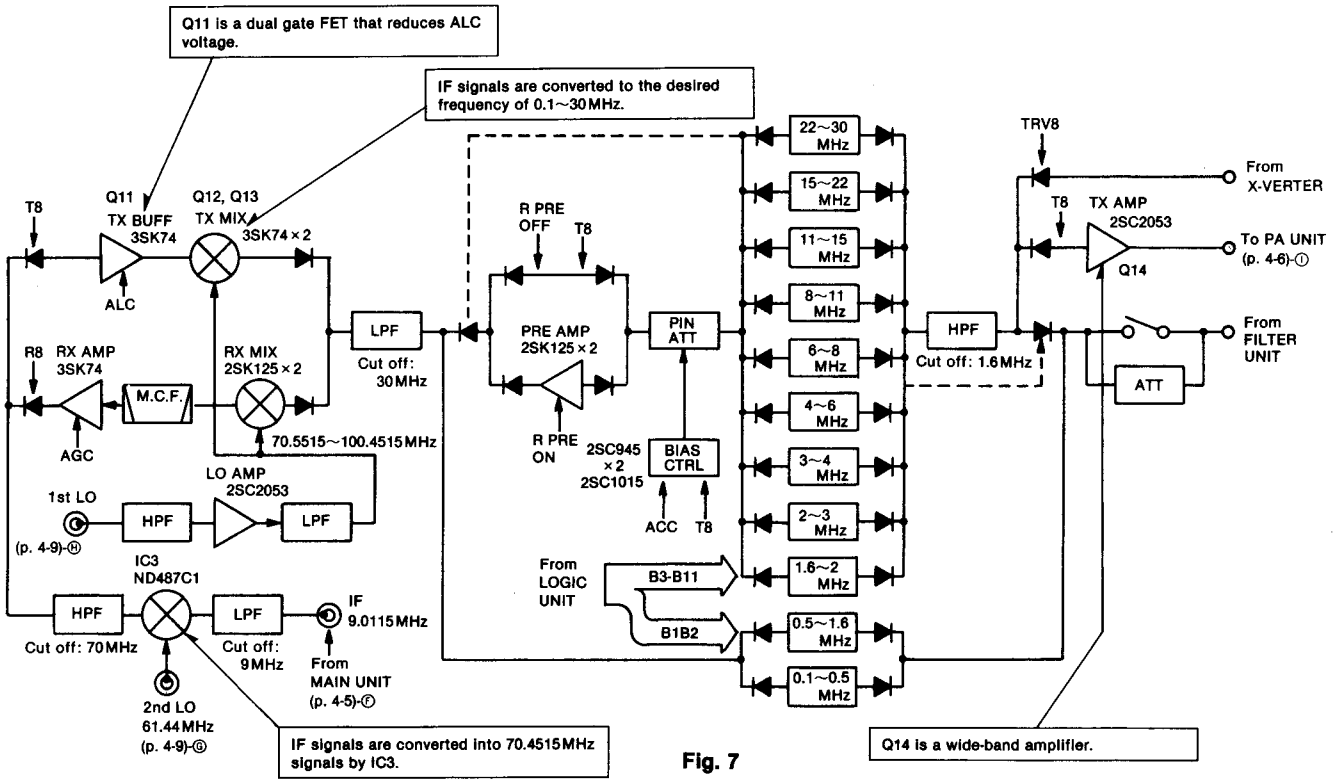

Fig. 7

4-2-3 TRANSMITTER CIRCUITS (PA AND FILTER UNITS)

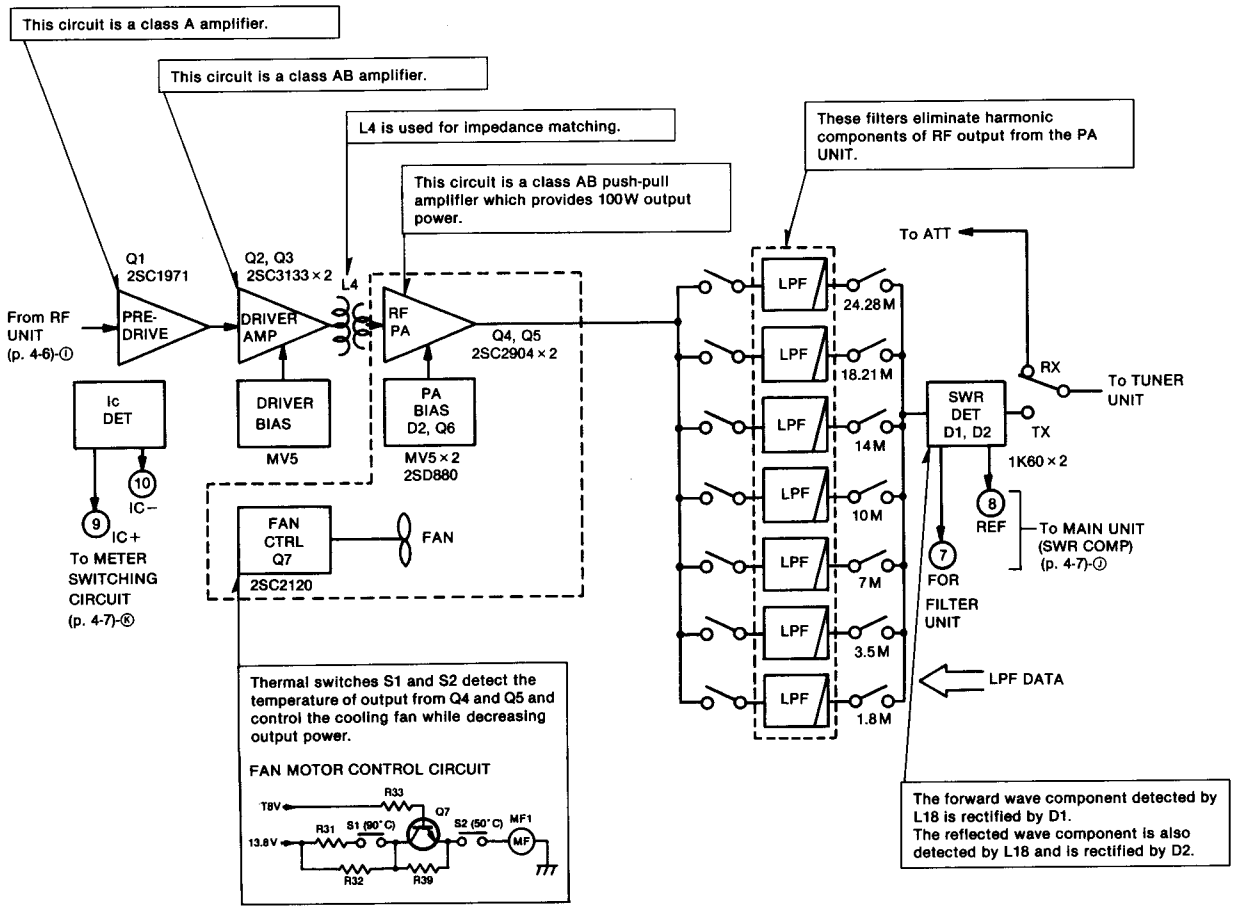

TEMPERATURE (°C)		~50	50~90	90
THERMAL SWITCH	S1	OFF	OFF	ON
	S2	OFF	ON	ON
COLING FAN SPEED	RECEIVE	OFF	SLOW	MED
	TRANSMIT	OFF	MED HIGH	HIGH

Fig. 8

4-2-4 MONITOR, VOX AND CW SIDE TONE CIRCUITS

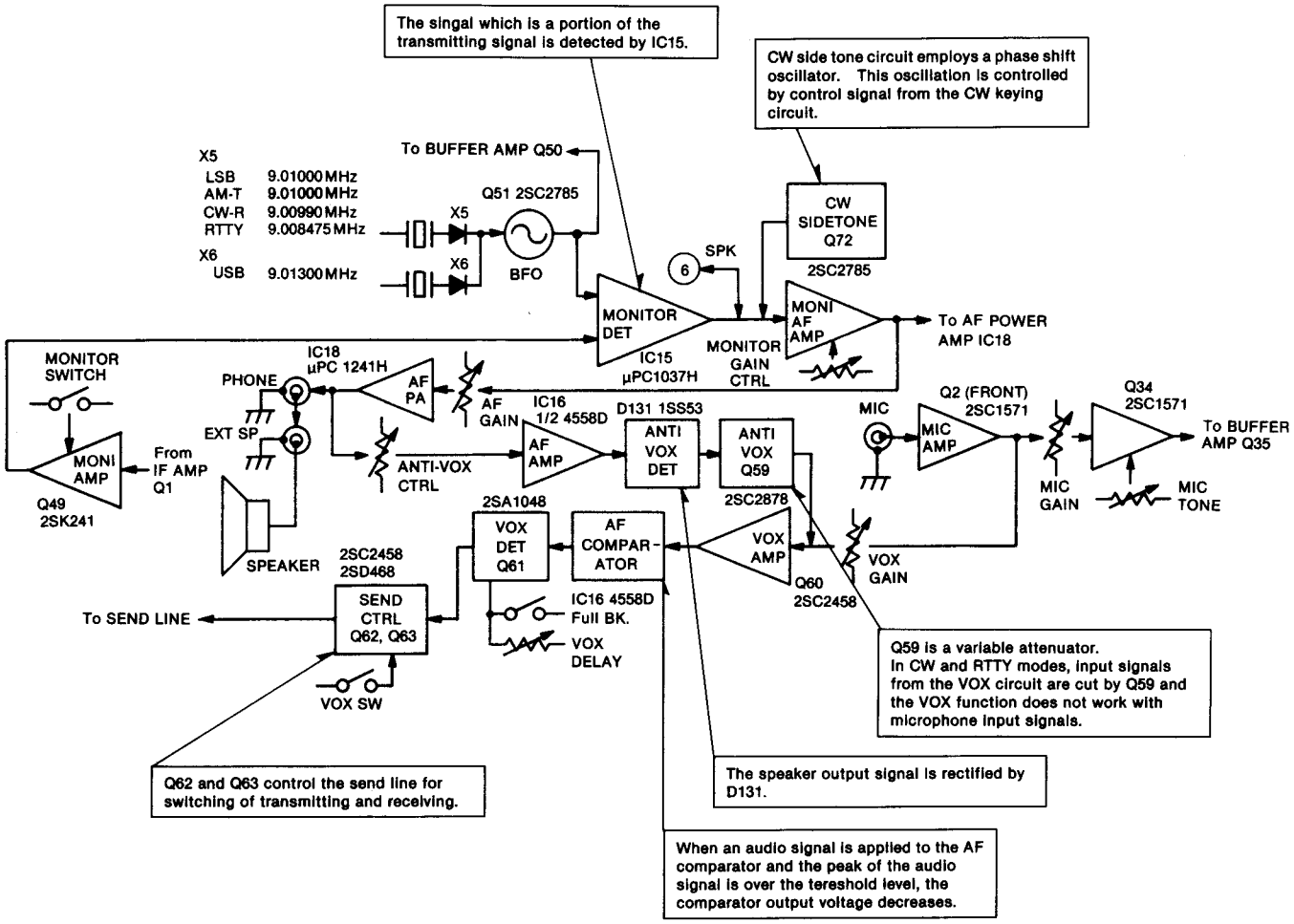

Fig. 9

4-2-5 METER SWITCHING AND TRANSMITTER CIRCUITS

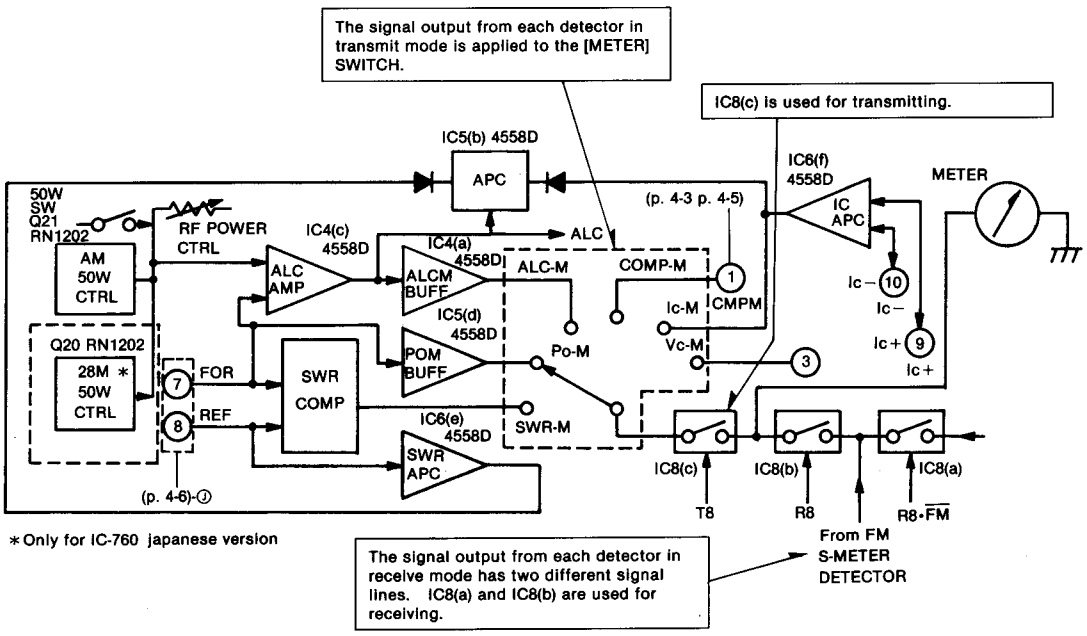

Fig. 10

4-2-6 FILTER SWITCHING CIRCUIT

The filter selector circuit consists of a CMOS multiplexer, IC3.

The signals for each mode and for the [FILTER] SWITCH positions on the front panel are applied to input terminals A~C on IC3. Output terminals 0~7 output a signals which accords with the input signals combinations.

FILTER SWITCHING CIRCUIT

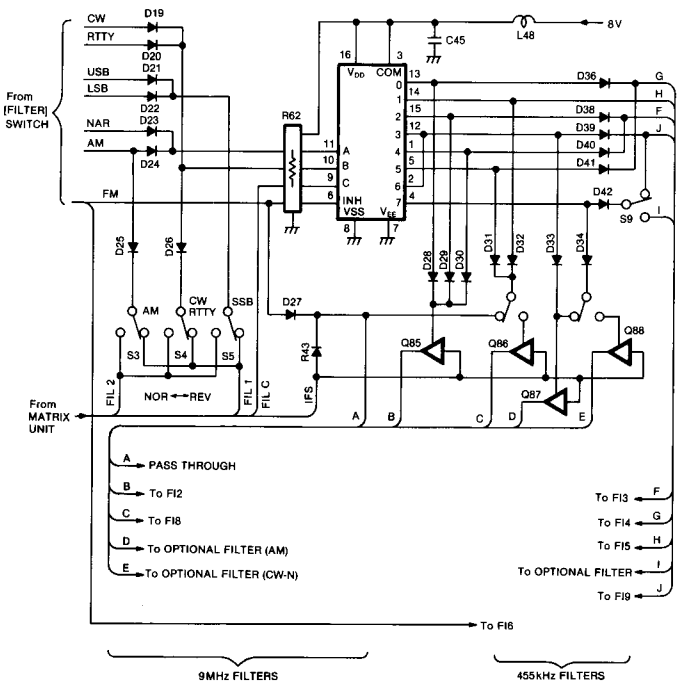

Fig. 11

NO.	MODE	FILTER SWITCH	9MHz FILTER		455kHz FILTER		NOMINAL BAND WIDTH	PBT	IF SHIFT
1	USB, LSB	OUT	FI2	FL-80	FI4	CFJ-455K5	2.6kHz	YES	YES
2		IN	FI2	FL-80	FI3	FL-44A	2.4kHz	YES	YES
3	CW, RTTY	OUT	FI2	FL-80	FI3	FL-44A	2.4kHz	YES	YES
4		IN	FI8	FL-32A	FI9	FL-52A	500Hz	YES	YES
5	CW, RTTY (Narrow)	OUT	FI8	FL-32A	FI9	FL-52A	500Hz	YES	YES
6		IN	OPTION	(FL-101)	OPTION	(FL-53A)	250Hz	YES	YES
7	AM	OUT	OPTION	(FL-102)	FI5	CFW455HT	6kHz	YES	NO
8		IN	OPTION	(FL-102)	FI4	CFJ455K5	3kHz	NO	NO
9	FM	OUT	THROUGH		FI6	CFW435E	15kHz	NO	NO
10		IN	THROUGH		FI6	CFW455E	15kHz	NO	NO

Table 1

4-2-7 POWER SUPPLY CIRCUITS

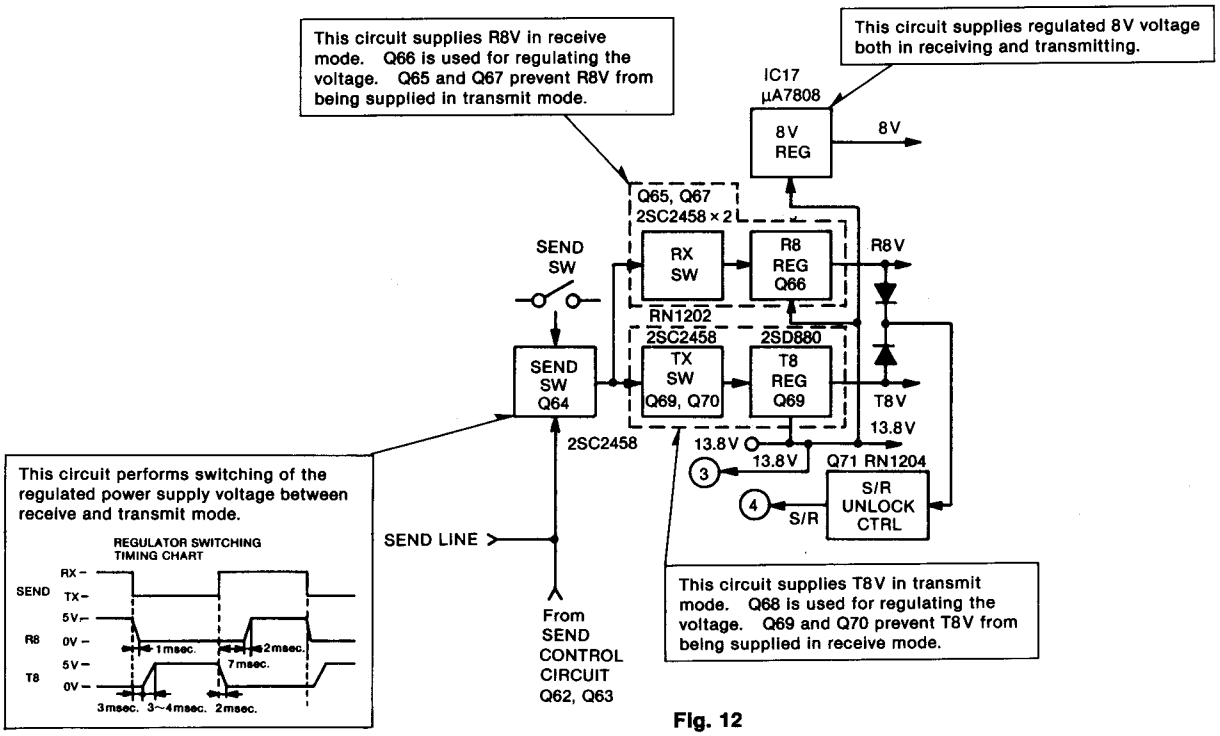

Fig. 12

4-3 PLL CIRCUITS

4-3-1 GENERAL

The PLL UNIT in the IC-761 is equipped with a reversed heterodyne 1st mixer and a normal heterodyne 2nd mixer, so PLL output has very accurate oscillation and good C/N ratio.

The PLL UNIT outputs two oscillator signals for the RF UNIT: a variable 1st local oscillator output (1st LO output) of 70.55~100.453MHz that is necessary for the 1st mixer, and a fixed local oscillator output (2nd LO output) of 61.44MHz that is necessary for the 2nd mixer. A marker signals is also generated in this unit and is sent to the RF UNIT.

All the signals generated in the PLL UNIT are produced from a single oscillator output. Therefore, the frequencies of all signals generated in the PLL UNIT can be calibrated simply by adjusting the reference frequency oscillator.

PLL SUB-LOOP BLOCK DIAGRAM

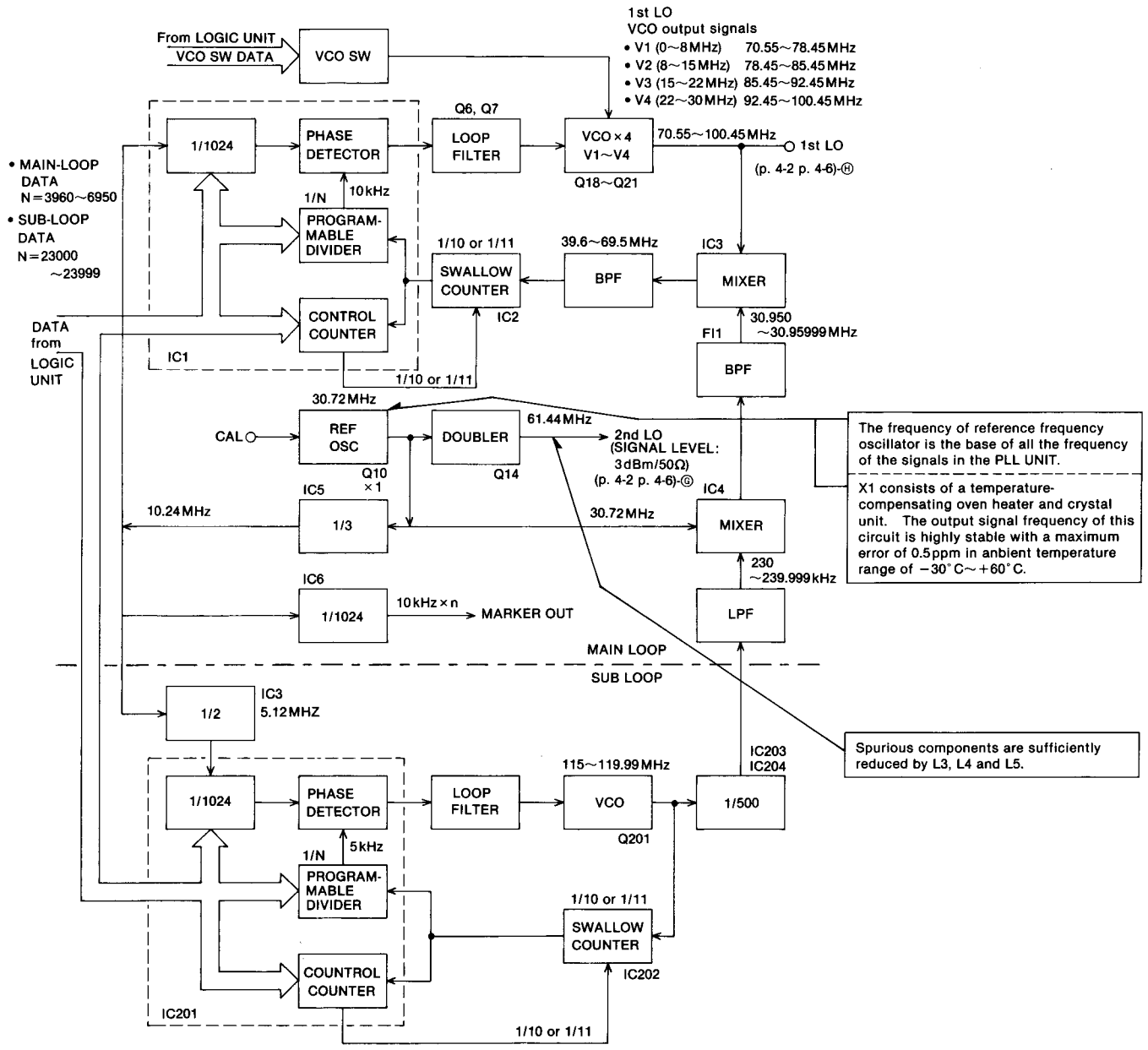

Fig. 13

4-3-2 MAIN-LOOP CIRCUITS

The main-loop forms the PLL loop and supplies the 1st LO output. It consists of a combinations of a mixed down and divided system.
The VCO output frequency Fv is given as:

$$Fv = F_{LO} + N \times Fref$$

Frequency changes are made by changing the F_{LO} and N.

The reference frequency (Fref) is 10kHz, and the VCO is controlled in 10kHz steps by changing the divding ratio N of the programmable divider. A frequency between this step (less than 10kHz) is obtained by F_{LO} which controls the VCO output frequency. Note that F_{LO} can be changed in 10Hz steps over the 9.99kHz range, and in this way the entire 30MHz range of the PLL can be varied in 10Hz steps.

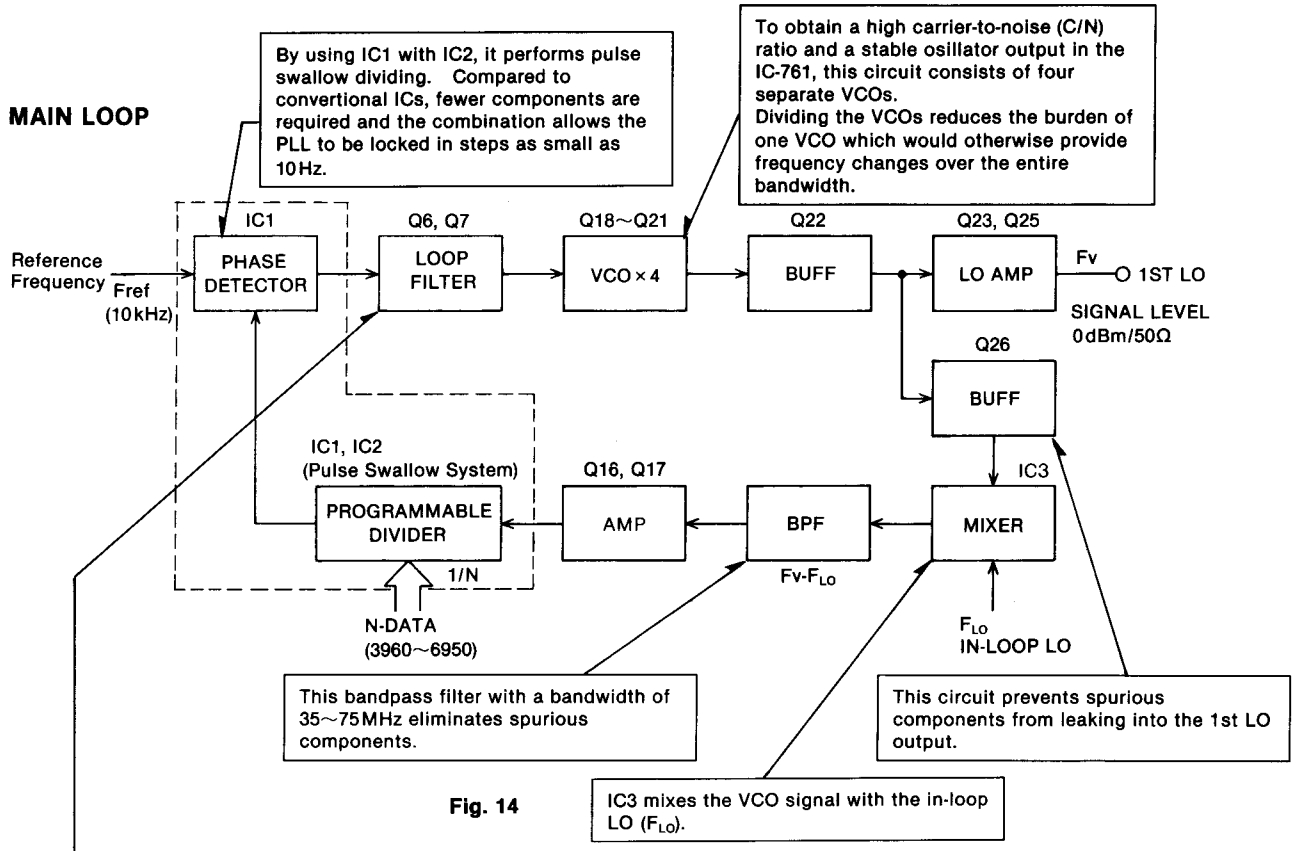

Fig. 14

LOOP FILTER

The loop filter of the main-loop uses an active filter composed of Q6 and Q7. The loop filter and the VCO are important for the performance of the PLL circuits, and determines lockup time and C/N (carrier-to-noise) ratio.

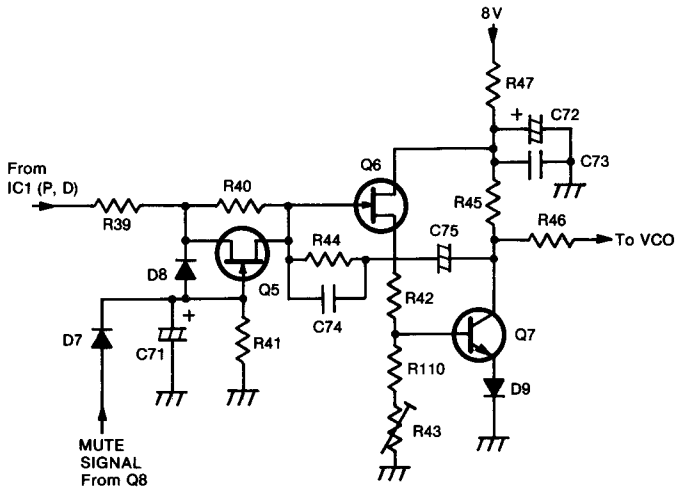

Lockup time and C/N ratio conflict with each other. That is,as the time constant of the loop filter increases lockup time speed, the C/N ratio will decrease. In order to solve this problem a variable resistor composed of an FET is inserted into the loop filter in the PLL circuits. Thus, if the frequency changes, the lockup time increases speed, decreasing the time constant of the loop filter, and making the C/N ratio greater by setting the time constant at a higher level than for normal operations.

The circuit changing the time constant Q5 is driven by a mute signal. If the mute signals is generated by the main-loop or the sub-loop, or if the frequency is changed to more than a certain level at one time, the circuit starts operating.

4-3-3 MARKER GENERATOR CIRCUIT

In order to obtain a reference signal of 10kHz for the main-loop, IC5 divides the reference frequency oscillator signal by three and applies a 10.24MHz signals to IC1. For a sub-loop reference signal of 5kHz, IC203 divides the output signals of IC5 by two and applies a 5.12MHz signals to IC201.

For the marker signal, a 10kHz signals is generated by dividing the IC5 output signals of 10.24MHz by 1024 in IC6. Its harmonics are fed through buffer amplifier Q12 and fed to the RF UNIT through P1. Since the marker signal is derived from reference frequency common to all the frequencies in the PLL UNIT, all the frequencies are adjusted simultaneously when the marker frequency is cablibrated with a standard frequency signal such as WWV or WWVH.

MARKER GENERATOR

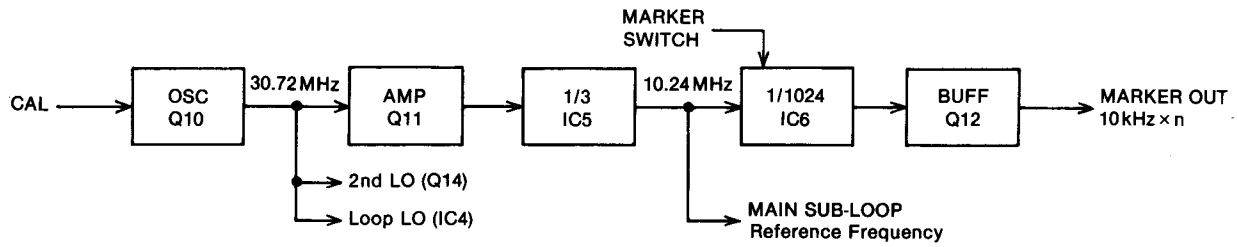

Fig. 15

4-3-4 IN-LOOP LOCAL OSCILLATOR CIRCUIT

The in-loop local oscillator circuit controls the main-loop in 10Hz steps by heterodyning the VCO signal.

IN-LOOP LOCAL OSCILLATOR BLOCK DIAGRAM

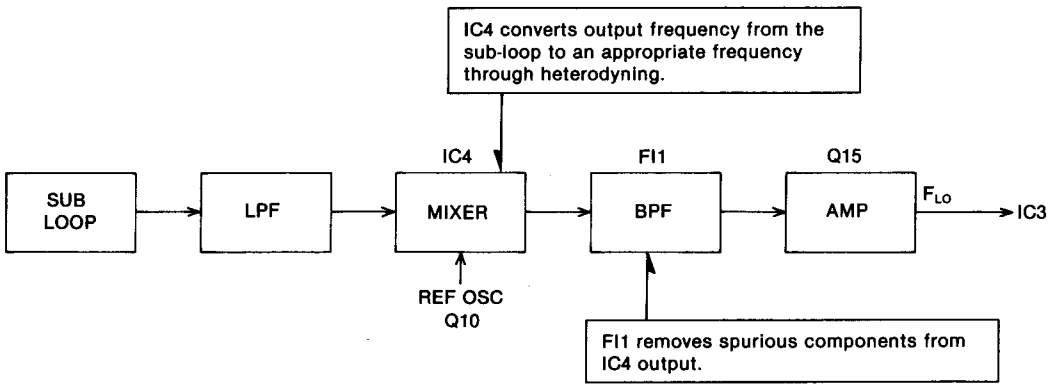

Fig. 16

4-3-5 SUB-LOOP CIRCUIT

This loop forms a locked loop using a divider to provide in-loop LO for the main-loop.

The reference frequency is 5kHz and the VCO can be locked within the frequency range of 115.00~119.995MHz. The output signal of the 4.995MHz bandwidth with a 5kHz resolution is divided in a 1/500 ratio by IC204 and IC203, providing output ranging from 230.00 to 239.99kHz (i.e., 9.99kHz bandwidth) in 10Hz steps. This output is fed to the main-loop. VCO output is input to IC202 as well as to IC204 and passes through a loop filter composed of IC201 to control the VCO and form a PLL circuit. A pulse swallow counter composed of the combination of IC201 and IC202, as in the main-loop, is used in this loop. Therefore the frequency can be changed by changing the dividing ratio. A 10.24MHz reference frequency is divided by 2 in IC203 and then is divided by the built-in divider of IC201 at 5kHz.

SUB-LOOP BLOCK DIAGRAM

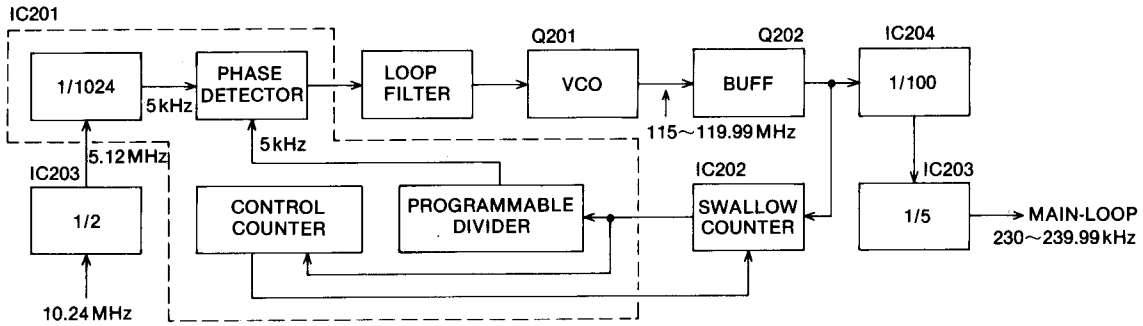

Fig. 17

4-3-6 PLL DATA

Data for setting the dividing ratio N of the programmable divider is sent from the LOGIC UNIT. Control data for switching VCOs is also sent from the LOGIC UNIT. Data to set the dividing ratio (called N-data) is sent dynamically while data for VCO is sent statically.

Since the dividing ratio of the reference frequency divider of IC1 can be canged, the data (1/1024 fixed) is also sent at the same time.

(a) HOW TO DERIVE N-DATA

Since there are two locked loops, two kinds of N-data are necessary. Even if the output frequencies from the PLL circuits in all modes are the same, the display frequencies are different depending on the operating mode. For example, if the same frequency is displayed for LSB, AM and FM modes, the frequency will be 600Hz lower in CW and RTTY modes and 3kHz lower in USB mode.

The method for deriving N-data for LSB, AM, and FM modes is shown below.

example: 14.0750MHz

Main-loop N-data

Ignore the digits equal to or lower than 1kHz of the displayed frequency and let the obtained frequency be F1, then:

$$N = F1 \times 100 + 3950$$

where F1 is 14.07 for the case shown above. Thus, we get:

$$N = 14.07 \times 100 + 3950 = 5357$$

Sub-loop N-data

If the frequency shown in the digits is equal to or lower than 1kHz and you let the displayed frequency be F2, then:

$$N = F2 \times 100 + 23000$$

where F2 is 5.00 in the case shown above. Thus, we get:

$$N = 5.00 \times 100 + 23000 = 23500$$

Note that the digit for 10Hz is not displayed.

To get N for other modes, add 600Hz for CW and RTTY modes and add 3kHz for USB mode to the displayed frequency, then follow the steps shown above.

For the value of N to be derived at in the above way, the dividing ratio of the programmable divider must be 1/N.

4-4 LOGIC CIRCUITS

The functions in the LOGIC circuits include the control of frequency, the processing of BPF and LPF signals and mode signals, and data output for the PLL UNIT and DISPLAY UNIT. The LOGIC circuits are composed of an 8-bit NMOS CPU, a 4-bit 1k word CMOS RAM, CMOS ROM, a multi-purpose custom IC, and I/O expander ICs.

4-4-1 CPU

Functions are assigned to the pins of the CPU as shown below. The interrupt pins are assigned to the TUNING CONTROL with highest priority. Pins where no functions are assigned are left unconnected.

Addresses are assigned not only to ROM and RAM, but to all the other peripheral devices.

CPU PIN CONNECTION AND MEMORY MAP

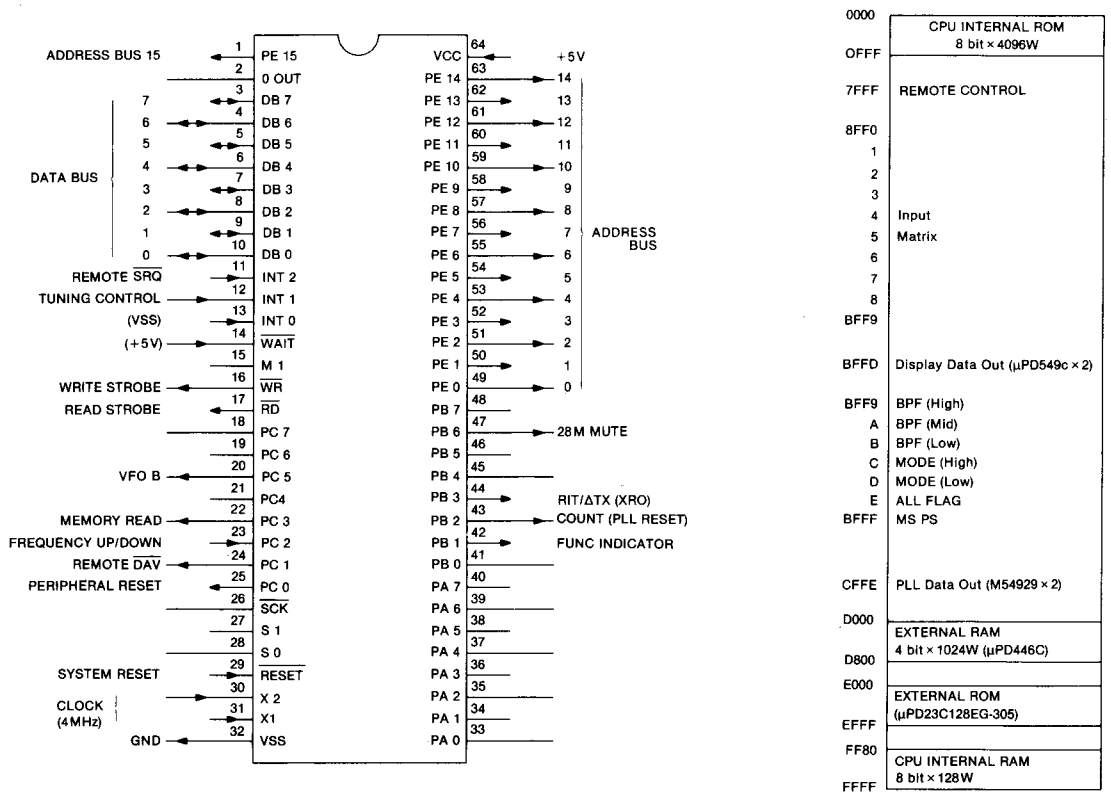

Fig. 18

4-4-2 CPU INPUT CONTROL CIRCUIT

A multi-function custom IC (a 40-pin DIL package CMOS IC) is used. (Refer to Fig. 19)

(a) An external coil and capacitor are connected to pin 18 and 19 to give about a 100kHz clock signal.

(b) The ATS of pin 32 is at a HIGH level if the TUNING CONTROL is rotated at a faster speed than can be set by the values of C6 and R7 connected to TC of pin 21. The HIGH level is used as a strobe signal which switches the dial-pitch (tuning rate) of the matrix input.

(c) M1 and M2 at pin 38 and 37 are used to switch the multiplication factors of the input pulses from the TUNING CONTROL. 500 pulses per one rotation are obtained by 250 pulses ×2 (double-speed mode). For RIT/ΔTX CONTROL, the multiplication factor is fixed at quadruple to give 50 pulses ×4=200 pulses per one rotation.

CUSTOM IC PIN CONNECTION

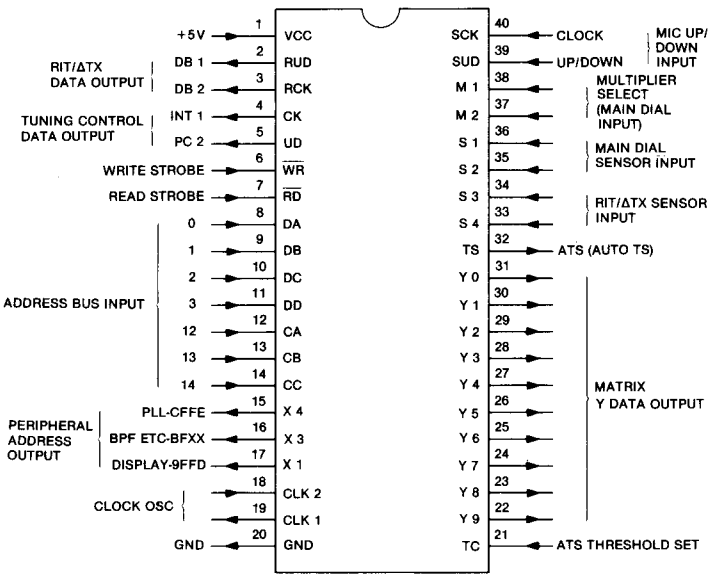

Fig. 19

4-4-3 I/O EXPANDER CIRCUIT

This circuit controls data outputs for PLL circuits, VCOs, bandpass filters, and modes.

I/O EXPANDER CIRCUIT

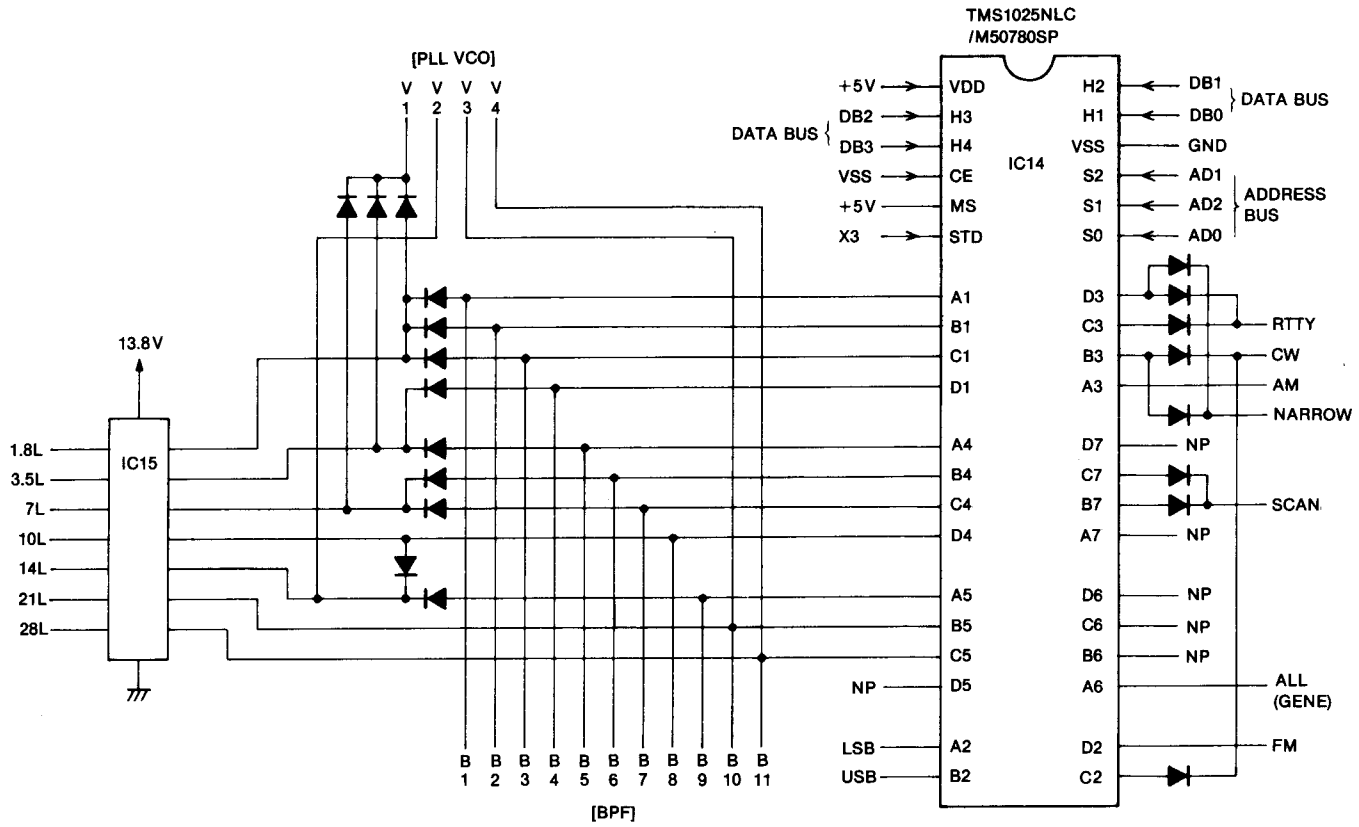

Fig. 20

4-4-4 PLL N-DATA

Since the PLL circuits use a double loop construction, both main-loop and sub-loop N-data are sent from the LOGIC UNIT to the PLL UNIT.

HIGH and LOW N-DATA Table

HIGH N-DATA ×10M, ×1M, ×100k, ×10k		LOW N-DATA ×1k, ×100Hz, ×10Hz	
DISPLAY FREQUENCY	N-DATA	DISPLAY FREQUENCY	N-DATA
0.10MHz	3960	0Hz	23000
0.11MHz	3961	10Hz	23001
0.12MHz	3962	20Hz	23002
0.13MHz	3963	50Hz	23005
0.14MHz	3964	100Hz	23010
0.15MHz	3965	1kHz	23100
1MHz	4060	2kHz	23200
10MHz	4950	3kHz	23300
20MHz	5950	4kHz	23400
30MHz	6950	5kHz	23500
		9.99kHz	23999

Table 2

Data lines HA-HD and LA-LD are switched by the gates of IC17 and IC18. The lines are shared by signals for the PLL circuits, DISPLAY circuits, bandpass filters, etc. Therefore, this switching prevents the VCOs in the PLL UNIT from introducing noise when the lines are not used for PLL data.

N-DATA OUTPUT TIMING DIAGRAM

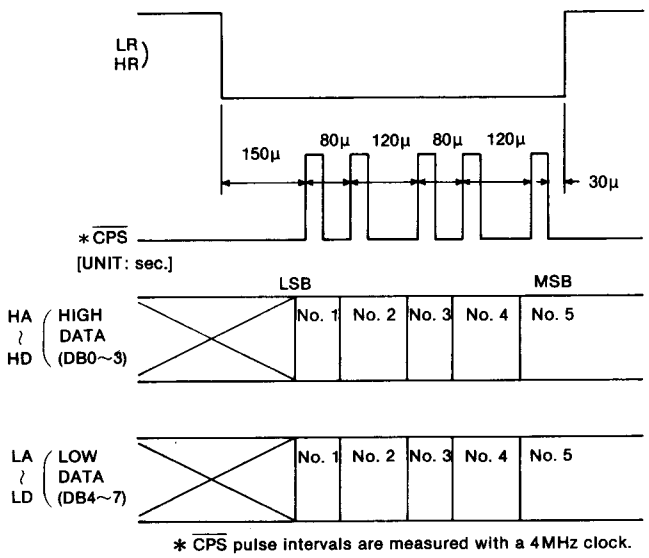

* $\overline{CPS}$ pulse intervals are measured with a 4MHz clock.

Fig. 21

4-5-5 MATRIX CIRCUIT (MATRIX UNIT)

The MATRIX UNIT consists of a martix board, matrix switch board, and mode switch board. It processes the front panel matrix input and transmit and receive data.

MATRIX TABLE

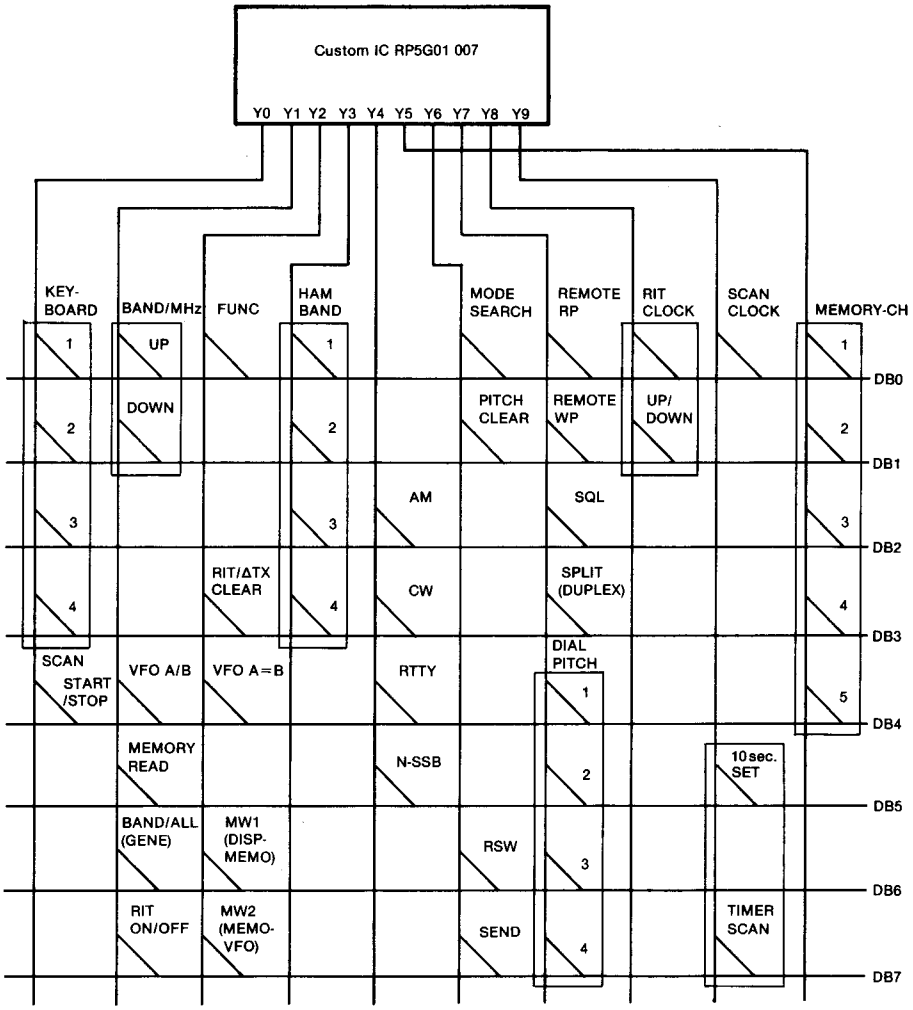

Fig. 22

(1) Y0 → DB-DB3 (KEYBOARD)

Following is a matrix for frequency settings and band changing through the use of a keyboad on the front panel.

Y0 → / KEY	DB0	DB1	DB2	DB3	BAND (MHz)	HEX CODE
1	1	0	0	0	1.9	1
2	0	1	0	0	3.5	2
3	1	1	0	0	7	3
4	0	0	1	0	10	4
5	1	0	1	0	14	5
6	0	1	1	0	18	6
7	1	1	1	0	21	7
8	0	0	0	1	24	8
9	1	0	0	1	28	9
0	0	1	0	1	—	A
CE	1	1	0	1	—	B
ENT	0	0	1	1	—	C

Table 3

(2) Y0 → DB4 (SCAN START/STOP)

This martix starts and stops the scan. It is controlled by the [SCAN] SWITCH and also by the [SQUELCH] CONTROL and the DIAL LOCK SWITCH through IC2 (b) and Q7. When the [SCAN] SWITCH is pushed, one pulse signal is input to this martix to repeatedly start and stop the scan operation.

Three types of scanning operations (MEMORY SCAN, PROGRAMMED SCAN, and SELECTED MODE SCAN) are available. During VFO operation, PROGRAMMED SCAN is automatically selected; during the memory channel operation, MEMORY SCAN is selected. R14 on the LOGIC UNIT adjusts the scanning speed. S25 reactivates the scan if it is interrupted when the squelch is open.

(3) Y1 → DB0-DB1 (BAND/MHz)

This matrix changes the operating frequency bands.

In HAM BAND mode, the VFO frequencies selected on each band are initialization frequencies. In GENERAL COVERAGE mode, only the 10 and 1 MHz digits of the FREQUENCY DISPLAY change.

(4) Y1 → DB4 (VFO A/B)
This matrix selects VFO A or VFO B via the [VFO] SWITCH. When VFO B is selected, pin 20 of the CPU becomes HIGH. Operation mode, frequency, and ham/general selections are stored independently in each mode.

(5) Y1 → DB5 (MEMORY READ)
This matrix selects a VFO mode or memory channel mode when it is switched by the [VFO/M] SWITCH. Pin 22 of the CPU is HIGH when the memory channel mode is selected. There are 32 memory channels available for storage of mode, frequency, and ham/general data.

(6) Y1 → DB6 (BAND/GENERAL)
This matrix selects the ham band mode or general coverage mode via the [BAND/GENE] SWITCH.

(7) Y1 → DB7 (RIT ON/OFF)
This martix turns ON and OFF the receive circuit via the [RIT/ΔTX] SWITCH. The binary counter IC1 (b), IC1 (a) outputs receive signals from pins 13 and 1 respectively when the [RIT/ΔTX] SWITCH is turned ON.

Output signals pass through the OR gate of R8 and D20 and are fed to a one-shot circuit consisting of IC4 (b), R9, and C7. This circuit outputs pulse signal to Q4 which turns ON the RIT matrix (Y1 → DB7). The XRO output from pin 44 then becomes HIGH and turns on the receive circuit. When no receive input signal is applied, XRO outputs no signal to turn ON the reset circuit which consists of IC3 (c), IC4 (c), D18, R6, and C11. Thus the receive circuits is turned OFF by IC1 (b), IC1 (a).

Digital transistors Q10 and Q11 turn ON and OFF the receive and transmit indicators on the DISPLAY UNIT. When both pin 1 (ΔTX) and pin 13 (RIT) of IC1 are OFF and the RIT setting of the CPU is ON, the matrix reset circuit consisting of IC3 (a), IC3 (b), IC5 (c), and IC3 (d) drives IC4 (b) which switches the CPU RIT matrix ON and OFF, matching the condition of the CPU and the front panel display. The RIT matrix is turned ON and OFF by the multi-vibrator of IC3 (a) and IC3 (b).

(8) Y2 → DB0 (FUNCTION)
This matrix selects a function by combining switches as shown in the following table.

COMBINATIONS	FUNCTION
FUNC + AM	Selects FM mode.
FUNC + CW	Selects CW-NARROW mode.
FUNC + RTTY	Selects RTTY-NARROW mode.
FUNC + SSB	Selects reverse sideband. (LSB or USB).
FUNC + A=B	Transfers data from VFO A to B or vice versa. (A → B or B → A)
FUNC + CLEAR	Adds RIT/ΔTX Δf to display frequency.
FUNC + WRITE FUNC + M ▶ VFO	Clears (blanks) the displayed memory channel frequency.

Table 4

(9) Y2 → DB3 (RIT/ΔTX CLEAR)
This matrix clears the receive/transmit shift frequency. When combined with the [FUNCTION] SWITCH, the shift frequency is added to or subtracted from the displayed frequency.

RIT/ΔTX CIRCUIT

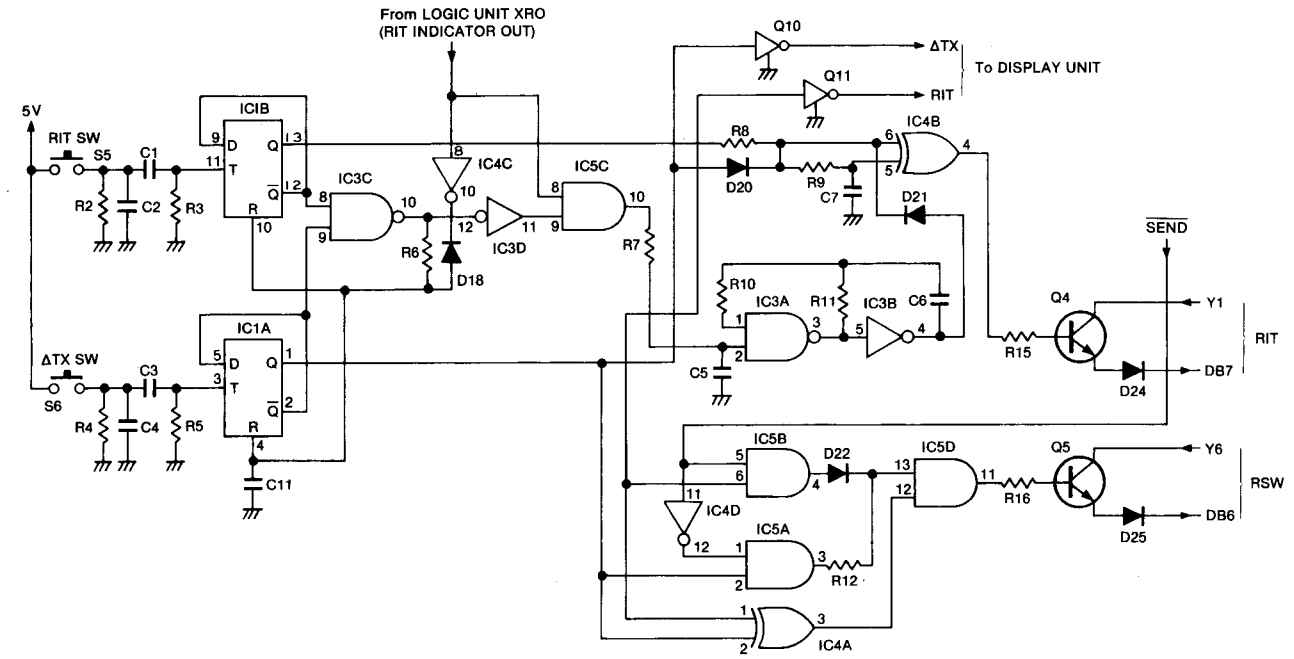

Fig. 23

(10) Y2 → DB4 (VFO A=B)
This matrix transfers the frequency of VFO A to VFO B. When combined with the [FUNCTION] SWITCH the original VFO is reversed.

SWITCH CONDITION	A=B
VFO A is in use.	VFO A → VFO B
VFO B is in use.	VFO B → VFO A

Table 5

(11) Y2 → DB6-DB7
(DISPLAY → MEMORY/MEMORY → VFO)
This matrix is for memory write and the memory data transfer by [WRITE] and [M ▶ VFO] SWITCHES. When combined with the [FUNCTION] SWITCH the data in the displayed memory channel is cleared and the channel is blanked.

SWITCH CONDITION	PUSH	FUNCTION
VFO A or VFO B is in use	[WRITE]	Transfers the VFO frequency to the selected memory channel.
	[M▶VFO]	Transfers the selected memory channel frequency to the VFO.
MEMORY CHANNEL MODE is in use	[WRITE]	Transfers the displayed frequency to the selected memory channel.
	[M▶VFO]	Transfers the displayed frequency to the VFO previously used.

Table 6

(12) Y4 → DB2 (AM)

(13) Y4 → DB3 (CW)

(14) Y4 → DB4 (RTTY)

(15) Y4 → DB5 (SSB)

FREQUENCY DIFFERENCES IN VARIOUS MODES

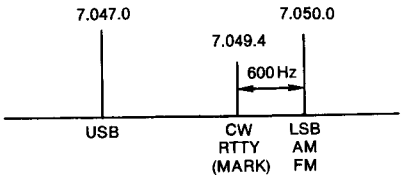

Fig. 24

(16) Y5 → DB0-DB4 (MEMORY-CH)
This matrix is used for selecting memory channels.

(17) Y6 → DB0 (MODE SEARCH)
This matrix is for the SELECTED MODE SCAN and is activated by the [MODE-S] SWITCH. Only the memory channels with the desired operation mode are selected in this scan.

(18) Y6 → DB1 (PITCH CLEAR)
This matrix sets the frequency increment to 1 kHz in all modes by the [TS] (Tuning Step) SWITCH. When the [TS] SWITCH is ON, the matrix at Y7 → DB4 is also is turned ON.

(19) Y6 → DB6 (RSW)
This matrix resets RIT data or outputs N-data. IC4(a), IC4(b), IC5(a), IC5(b), IC5(d), R12 and D22 are for the RSW input circuit.

RIT SW	ΔTX SW	T/R	RSW MATRIX	REMARKS
OFF	OFF	RX	OFF	• When RSW MATRIX is OFF, the operating frequency becomes the displayed frequency plus RIT/ΔTX Δf frequency.
		TX	OFF	
ON	OFF	RX	OFF	
		TX	ON	
OFF	ON	RX	ON	
		TX	OFF	• When RSW MATRIX is ON, the operating frequency is the displayed frequency.
ON	ON	RX	OFF	
		TX	OFF	

Table 7

(20) Y6 → DB7 (SEND)
This matrix is for transmit mode recognition for stopping scanning opeations.

(21) Y7 → DB2 (SQL)
This matrix inputs one pulse when the squelch is closed, and controls scanning operations.

(22) Y7 → DB3 (SPLIT/DUPLEX)
This matrix is for split or duplex operation using the VFO A or VFO B SWITCH and the [SPLIT] SWITCH.

(23) Y7 → DB4-DB7 (DIAL PITCH 1-4)
This matrix sets the frequency step tuning rate. The frequency step and the increments per rotation of the TUNING CONTROL in each setting are as follows:

TS	VFO
OFF	10 Hz steps (2.5 kHz/1 rotation) By faster rotation 50 Hz steps (12.5 kHz/1 rotation)
ON	1 kHz steps (250 kHz/1 rotation) 100 Hz and lower digits will be cleared as "0".

Table 8

Y7 → DATA				STEPS
DB4	DB5	DB6	DB7	
0	0	0	0	10 Hz
0	1	1	1	50 Hz
1	0	0	0	1 kHz

Table 9

(24) Y9 → DB0 (SCAN CLOCK)
This matrix is for the scan control clock formed by the circuit of Q4, IC7 (b), and R14 on the LOGIC UNIT.

(25) Y9 → DB5 and DB7 (10 sec. SET/TIMER SCAN)
This matrix is for setting a 10-second timer which allows the transceiver to resume scanning after stopping. The matrix Y9 → DB7 is ON while the timer scan is operating.

4-5 DISPLAY CIRCUITS

This unit consists of the display tube and its drivers, and a DC-DC converter section.

DISPLAY UNIT CIRCUIT

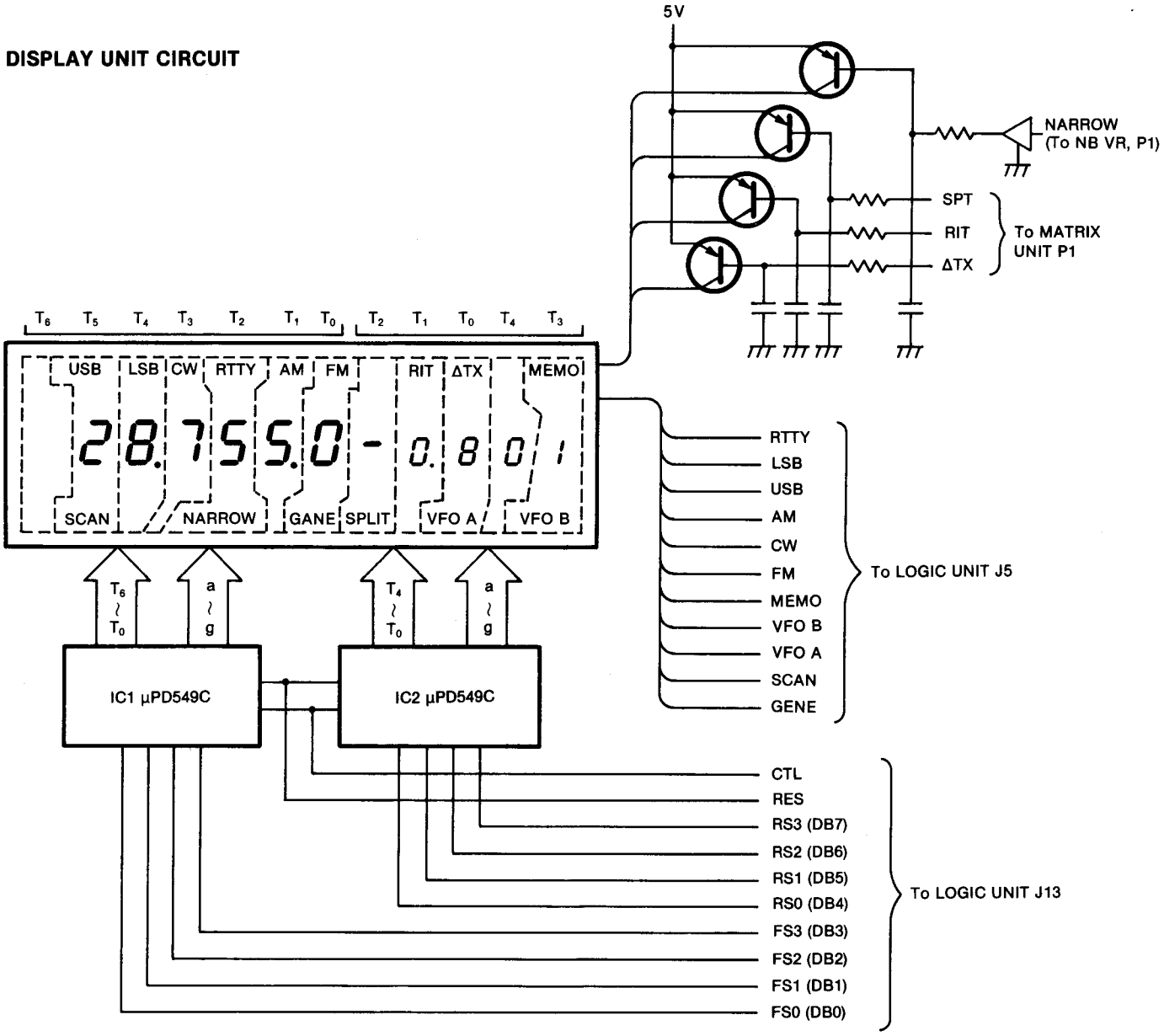

Fig. 25

The display illuminates centralized information of frequency, mode, transmit and receive conditions, memory channel, operating mode (VFO A, VFO B, GENE, SPLIT, SCAN), etc. The operating conditions of the transceiver can be easily understood because of this centralized display. The display lights up in two colors, red and white, using color filters LEDs for the transmit, receive, dial lock and function indicators are also a part of this unit.

(a) DISPLAY SECTION

DS1, the fluorescent display tube, is driven by drivers IC1 and IC2, and lights dynamically. These ICs contain such functions as input data latch, clock oscillator, timing counters, and segment decoders. The clock frequency is set by C2 and C6.

Displays for the receive and transmit shift frequencies, memory channels, SPLIT, VFO A and VFO B, are driven by IC2. Other displays are driven by IC1.

Signals for the display of RTTY through GENE are sent from the LOGIC UNIT to each segment. These are switched by digit signals T0~T5 from IC1 and T0~T3 from IC2. The RIT, ΔTX, SPLIT, and NARROW INDICATORS are connected to the same digit in the tube, so each indicator is selected by T2, T1, and T0 digit signals and light up dynamically.

DISPLAY DATA TIMING CHART

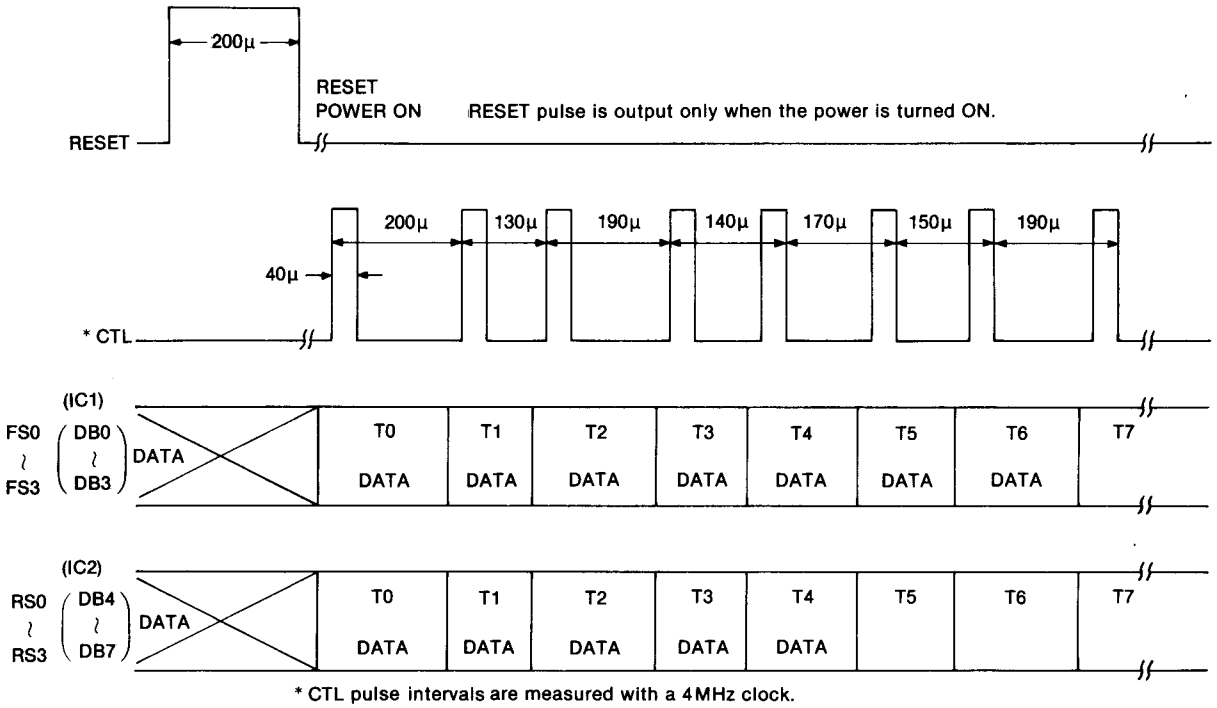

Fig. 26

(b) DC-DC CONVERTER SECTION

The +5V source is produced from 13.8V, a voltage regulator, IC3.

The −5V, −33V and VF voltage sources are produced from 13.8V, a DC-DC converter, IC4.

Q6~Q8 comprise a circuit which keeps the display OFF for about 1 second before the initial reset is completed when the power is turned ON. Immediately after the power is turned ON, Q6~Q8 are OFF and −33V is not output. When data (CTL) is supplied from the LOGIC UNIT as resetting is completed, Q8 is turned ON, and then Q6 and Q7 are turned ON for −33V output for the display.

Q6, Q7 D6 and R40 form a latch circuit, ensuring that once the circuit is turned ON it will keep providing −33V. R42, C21 and C22 are installed to prevent circuit errors.

4-6 OTHER CIRCUITS

4-6-1 RELAY CIRCUIT

The RELAY UNIT is located on the LOGIC UNIT and stops relays on the FILTER UNIT while memory scan is operating. The scan signal appears from pin 29 on IC14 when memory scan is selected. This scan signal turns Q17, Q18 and Q19 OFF. The relays on the FILTER UNIT are controlled by IC15. When Q19 is turned OFF, all the transmit relays are turned OFF and are silent.

RELAY CIRCUIT

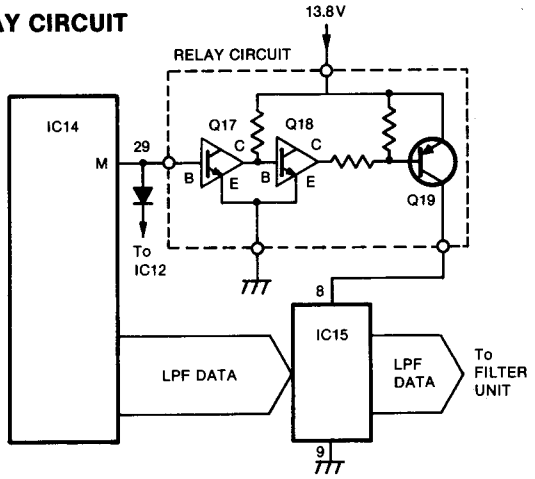

Fig. 27

4-6-2 MUTE CIRCUIT (#03, #06 ONLY)

Mute circuit prevents transmiting in GENERAL COVERAGE mode.

When the transceiver is set to transmit mode in GENERAL COVERAGE mode, Q2 turns ON and IC4 does not output data to RF circuit and display circuit.

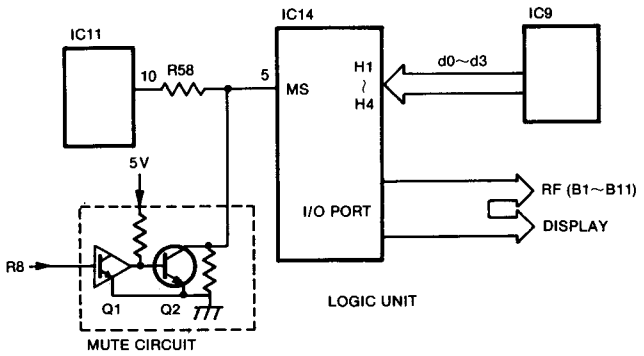

Fig. 28

4-6-3 KEYER UNIT

The KEYER UNIT employs an electronic keyer circuit.

KEYER CIRCUIT

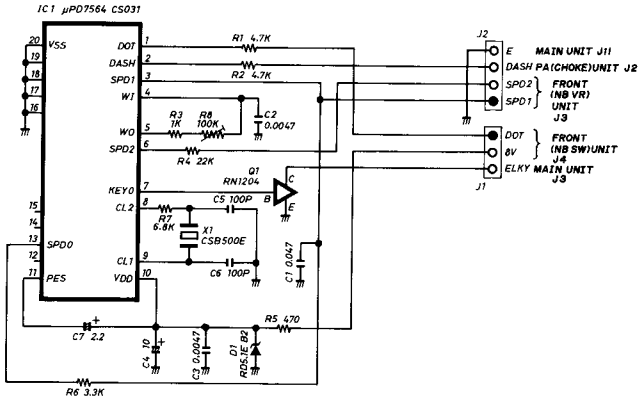

Fig. 29

(a) DOT, DASH INPUTS AND ELECTRONIC KEYER OUTPUT

When IC1 receives a dot signal at pin 1, IC1 outputs a DOT and SPACE (ratio is 1 : 1). If IC1 receives the next dot signal during output of the first DOT and SAPCE, IC1 outputs only the first DOT and SPACE.

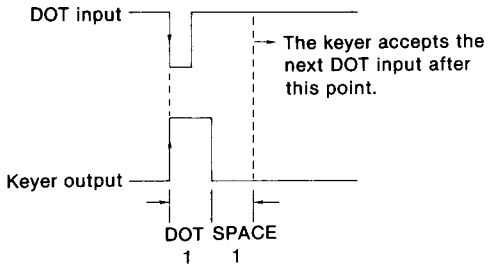

Fig. 30

When IC1 receives a dash signal at pin 2, IC1 outputs a DASH and SPACE (ratio is 1 : 3). If IC1 receives the next dash signal during output of the first DASH and SPACE, IC1 outputs only the first DASH and SPACE.

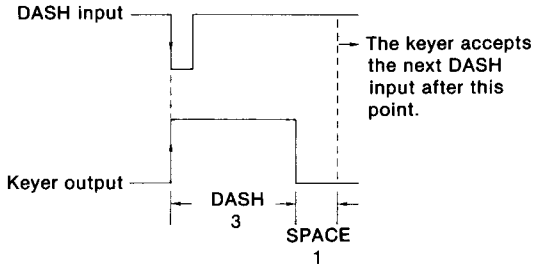

Fig. 31

If IC1 receives a dash signal during a DOT and SPACE output, IC outputs a DASH and SPACE after the DOT and DASH output. This is called the DASH MEMORY.

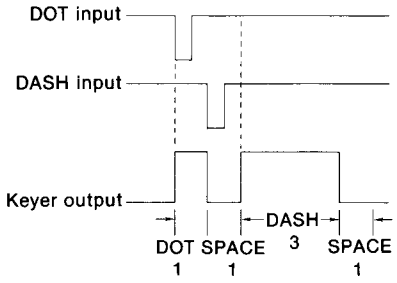

Fig. 32

If IC1 receives a dot signal during a DASH and SPACE output, IC1 outputs a DOT and SPACE after the DASH and SPACE output. This is called the DOT MEMORY.

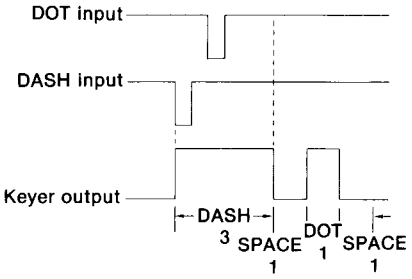

Fig. 33

If IC1 receives the DOT and DASH signal continuously as shown in Fig. 34, IC1 outputs the DOT and DASH alternately. This is called the IAMBIC FUNCTION.

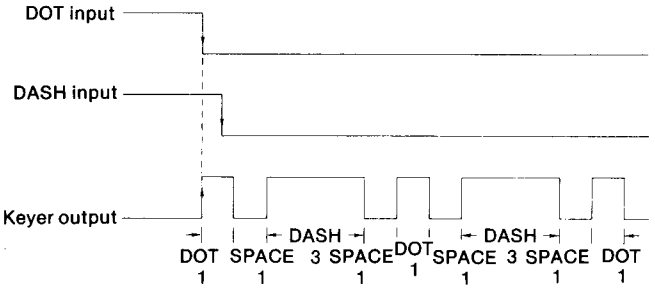

Fig. 34

(b) SPD

These terminals determine the speed of the DOT, SPACE and DASH.

(c) WEIGHT

These terminals determine the ratio of the DOT, SPACE, AND DASH (DOT: SPACE: DASH).

4-7 SWITCHING REGULATOR CIRCUIT (SWITCHING REGULATOR UNIT)

The sequence of the switching regulator circuit operation is shown below.

(1) When the [POWER] SWITCH is turned ON, the output voltage from the secondary coil (L1) is rectified and filtered by D3 and C12, and is supplied to the emitter of Q1.

(2) At the same time, AC voltage is supplied through the AC noise filter (L2, C1, C2) and rectified and filtered by D1, C7, C6 and then ±140V DC is generated.

(3) The +140V DC is supplied to IC1 and then Q1 turns ON, thus DC voltage from D3 is supplied to IC2 via Q1 and L4.

(4) IC2 is activiated.

(5) The +140V DC and the −140V DC are fed through noise filter (L5, C15~C17) to collector of Q2 and Q4, and to the emitter of Q3 and Q5.

(6) The pulse signals from pin 12 and pin 13 of IC2 are fed through pulse transformer L8 to Q2 and Q3 alternately, so that the ±140V DC is output at the primary coil (L7).

(7) The output voltage at the secondary coil (L7) is rectified by D4 and filtered by L6 and C30~C33, and fed through D2 to IC2 for normal Vcc.

(8) The output voltage is filtered again by L3, C13 and C14, then 13.8V DC is output at P1.

SWITCHING REGULATOR CIRCUIT

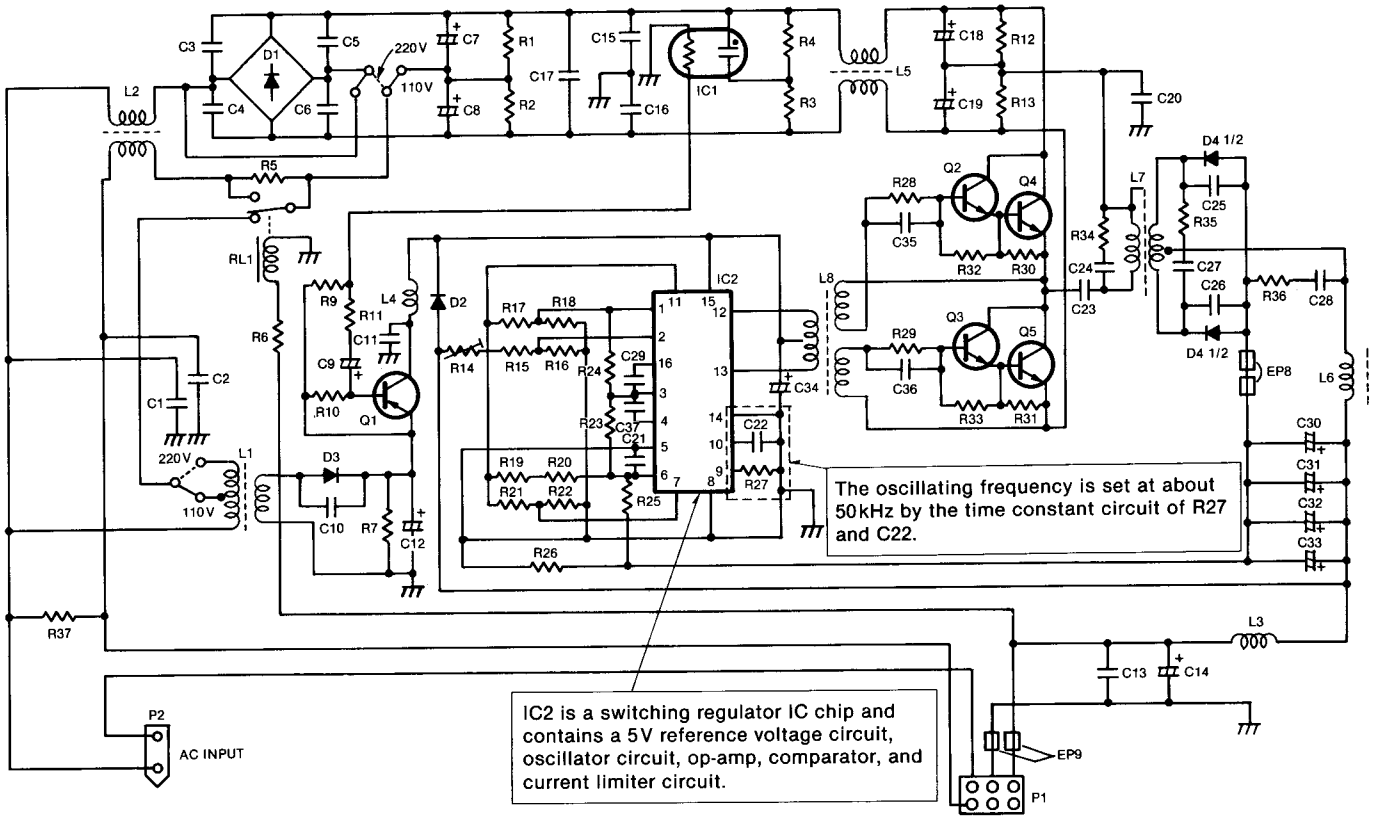

Fig. 35

4-8 ANTENNA TUNER CIRCUITS (TUNER UNIT)

Antenna tuner circuits are consists of following:

Matching circuit	Detector circuit
Control circuit	Preset circuit
Wait circuit	Band switching circuit
Power circuit	

4-8-1 MATCHING CIRCUIT

The variable capacitors, C603 (input side) and C604 (output side), are connected to their respective motors. The control circuit supplies signals which position these capacitors to match the impedance of the transceiver and the antenna system.

The taps of coils L501 and L502 are automatically set to the band designated by relays RL507~RL512.

MATCHING CIRCUIT BLOCK DIAGRAM

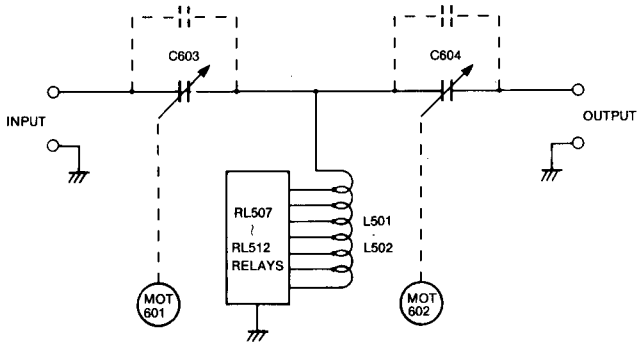

Fig. 36

4-8-2 DETECTOR CIRCUIT

The detector circuit measures the resistive components of the load, and passes these values to the control circuit.

L201, D201 and D202 detect the resistive components. The detection voltage for a 50Ω resistive impedance at the output is 0V, whereas resistive components less than 50Ω produce positive detection voltages and components more than 50Ω produce negative voltages.

The high frequency current detected by L201 and R205, and the high frequency voltage detected by C203~C205 are applied to phase comparators IC201~IC203 via TTL buffers Q1 and Q2, respectively. Thus, the reactive components are detected as positive or negative detection voltages corresponding to the delay or advance of current versus voltage.

DETECTOR CIRCUIT BLOCK DIAGAM

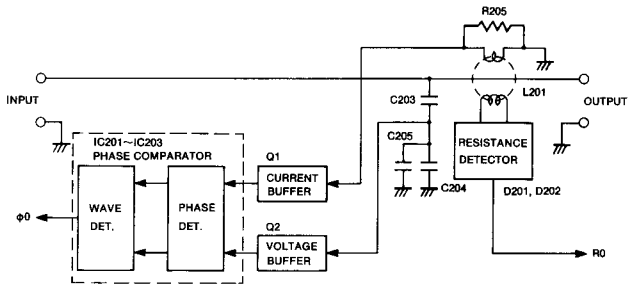

Fig. 37

4-8-3 CONTROL CIRCUIT

The resistive (RO) and reactive (ϕO) detection voltages from the detector circuit are fed to IC101A and IC102B for voltage amplification. After current amplifications by Q101~Q104, ϕO and RO drive motors MOT601 and MOT602.

4-8-4 PRESET CONTROL CIRCUIT

R105~R111 and R112~R118 are variable resistors that may be used to preset the variable tuning capacitors for a particular frequency on each frequency band. These resistors are located under the hatch cover on the top of IC-761.

When the AUTO/PRESET SWITCH is set at the PRESET position and immediately after applying power or changing bands, the voltages divided by R105~R111 and R112~R118, plus the voltages from R119, R120, R131, R132 and variable resistors R601 and R602 couples to the variable tuning capacitors, are all applied to IC101B and IC102A for comparative amplification. The output drives the motors which position the tuning capacitors.

PRESET CONTROL CIRCUIT BLOCK DIAGRAM

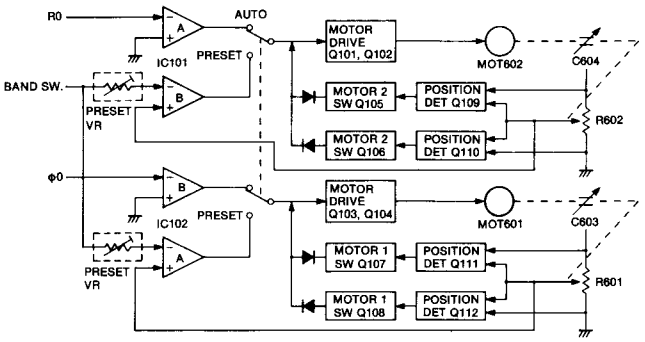

Fig. 38

4-8-5 WAIT CIRCUIT

The wait circuit automatically adjusts the tuning capacitors to the preset positions after a band change and then re-selects the auto-tuning mode.

RL1 switches the output from IC101 and IC102. D127, D129, D130, D134, D132, D139 and D143 detect the voltages output from the common terminals of relay RL1 to drive the WAIT LED on the front panel.

The WAIT LED lights while the tuning capacitors are automatically set to the preset positions, and whenever the VSWR is too high (above 3 : 1) to permit proper tuning.

4-8-6 BAND SWITCHING CIRCUIT

Logic circuit applies LPF data to IC401.

BAND SWITCHING CIRCUIT

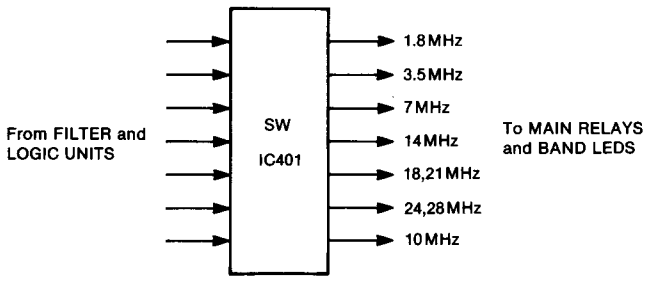

Fig. 39

4-8-7 POWER CIRCUIT

The power circuit generates negative voltages by converting the DC input to an AC voltage (about 16kHz) with multivibrator Q301, Q302 and L302. After fullwave rectifying the AC by D303 and D304, negative voltages equivalent to the input voltages are obtained.

POWER CIRCUIT

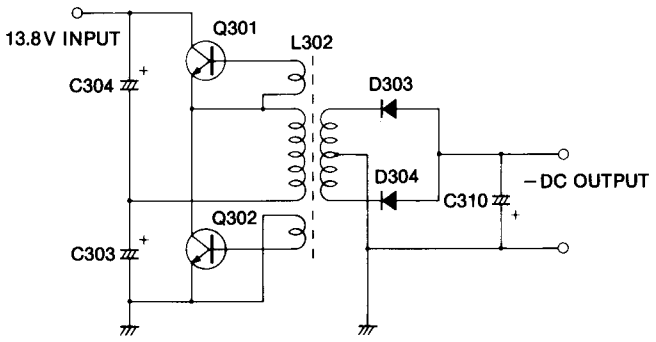

Fig. 40

SECTION 5 MECHANICAL PARTS AND DISASSEMBLY

5-1 FRAME DISASSEMBLY

1. Unscrew and remove the 13 screws labelled ① from the top cover. Remove the top cover.
2. Unscrew and remove the 6 screws labelled ② from the bottom cover. Remove the bottom cover.
3. Remove the hex screws labelled ③ from the controls. Pull out the forward controls from the front panel.
4. Unscrew and remove the 4 screws labelled ④ from the front panel. Remove the front panel.

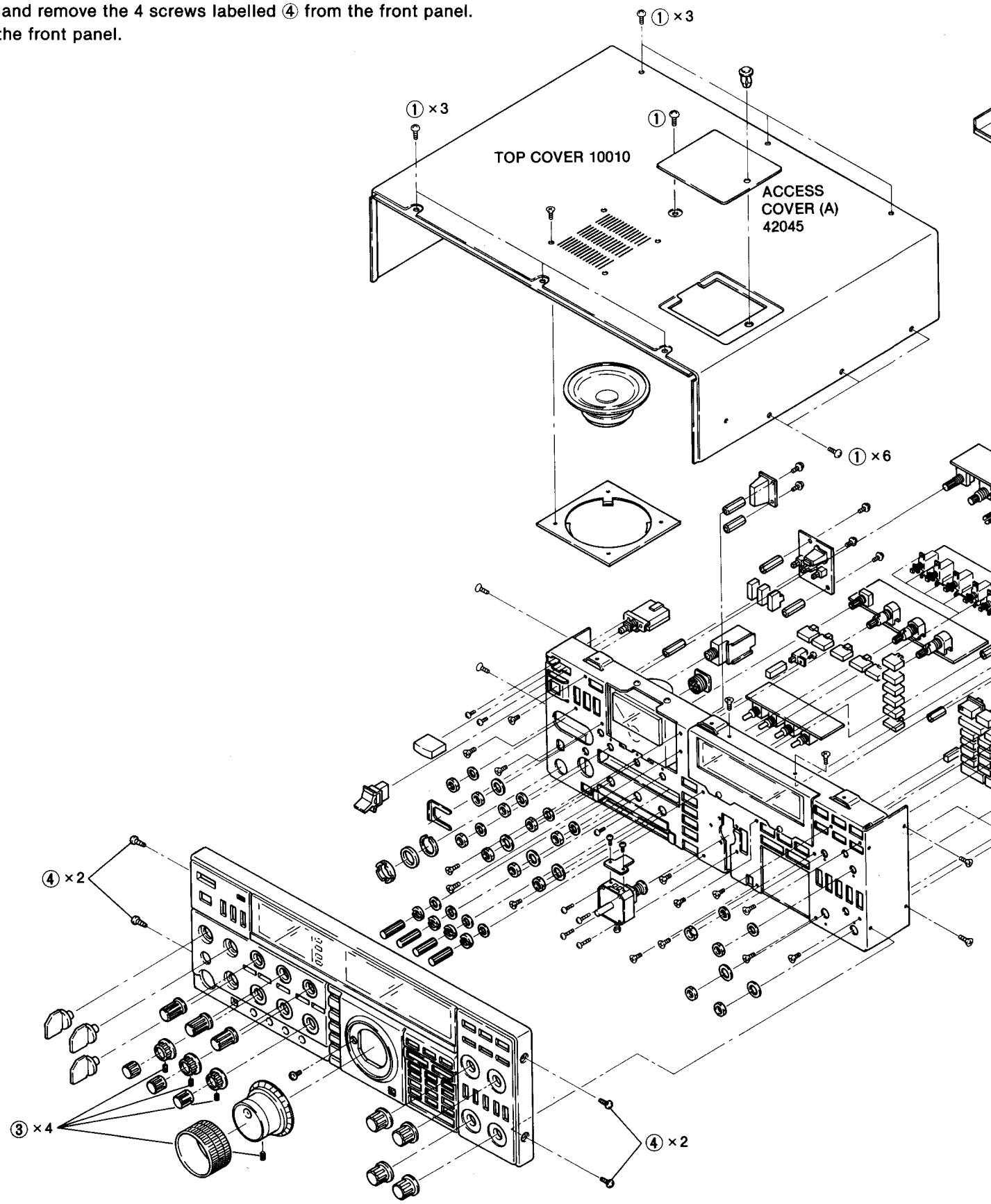

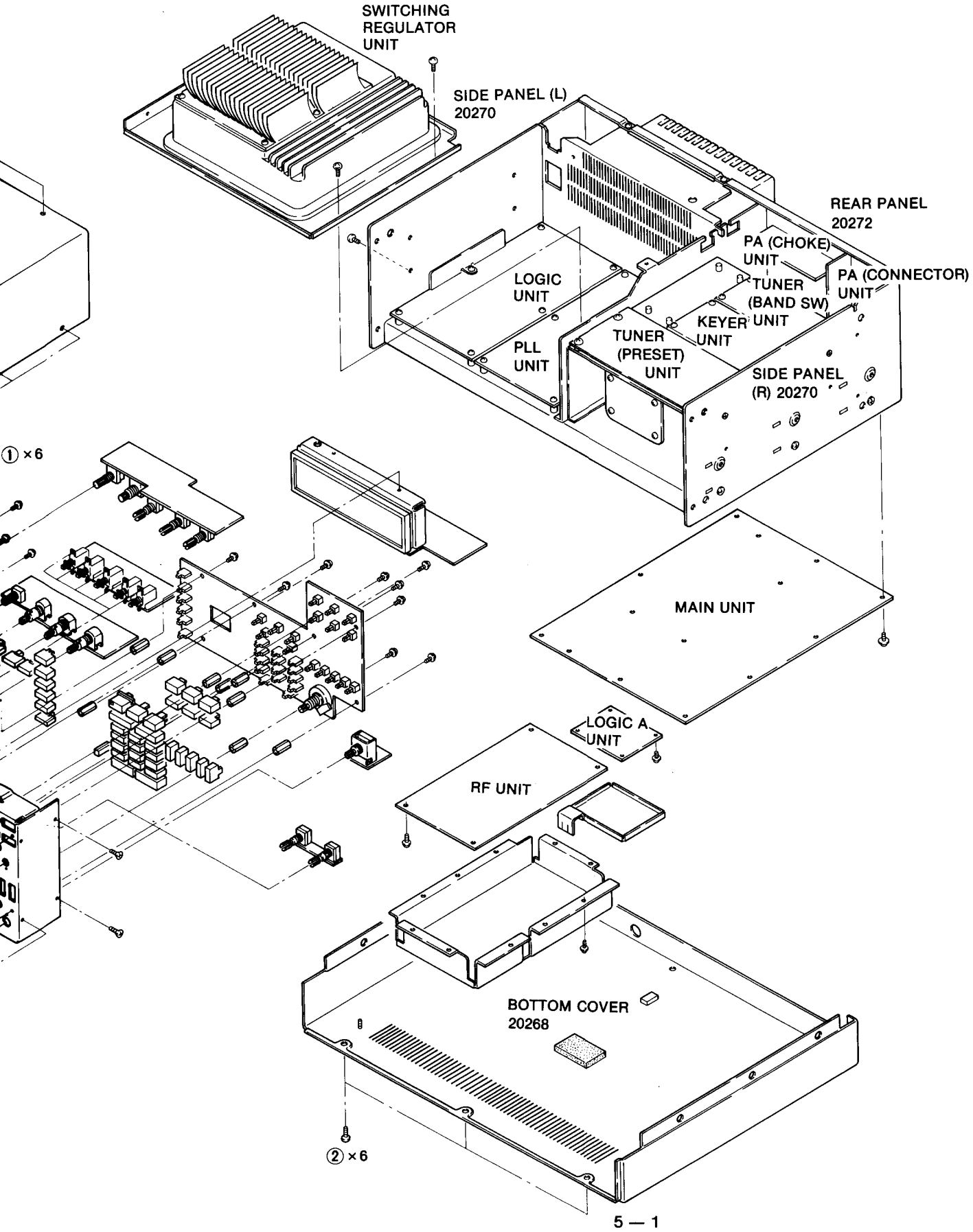
SWITCHING
REGULATOR
UNIT
SIDE PANEL (L)
20270
REAR PANEL
20272
PA (CHOKE)
UNIT
PA (CONNECTOR)
UNIT
LOGIC
UNIT
TUNER
(BAND SW)
UNIT
KEYER
UNIT
TUNER
(PRESET)
UNIT
PLL
UNIT
SIDE PANEL
(R) 20270
① ×6
MAIN UNIT
LOGIC A
UNIT
RF UNIT
BOTTOM COVER
20268
② ×6

5-2 FRONT PANEL DISASSEMBLY (1)

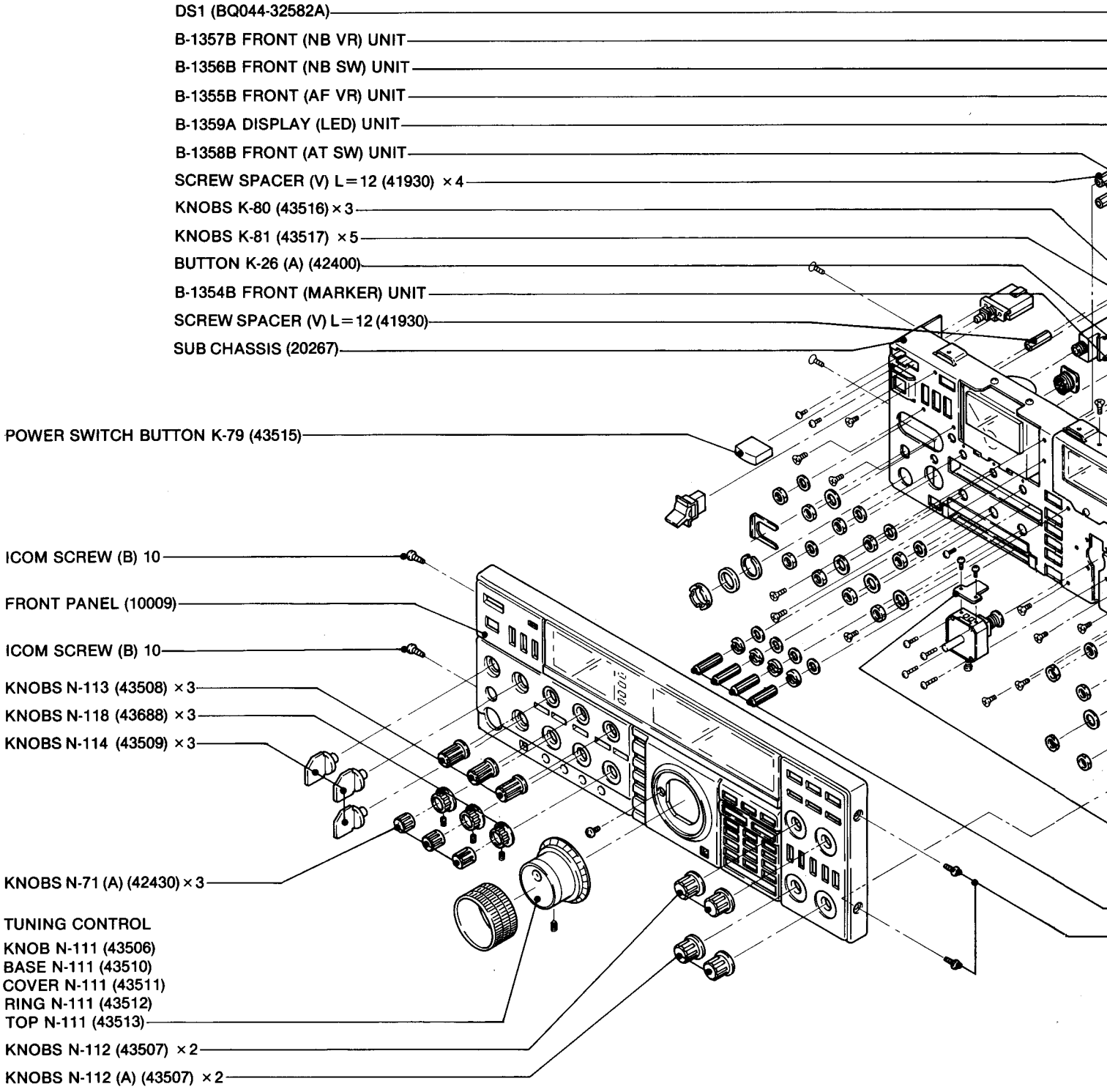

B-1351D DISPLAY UNIT

B-1350D MATRIX UNIT

SCREW SPACER (V)
L=12 (41930) × 8

B-1352A FRONT (M-CH) UNIT

KNOBS K-86 (43522) × 3

KNOBS K-80 (43516) × 3

KNOBS K-80 (43516) × 5

B-1353A FRONT (PBT) UNIT

B1016C SENSOR UNIT

BUTTONS N-102 (A) (43342) × 4

ICOM SCREW (B) 10 × 2

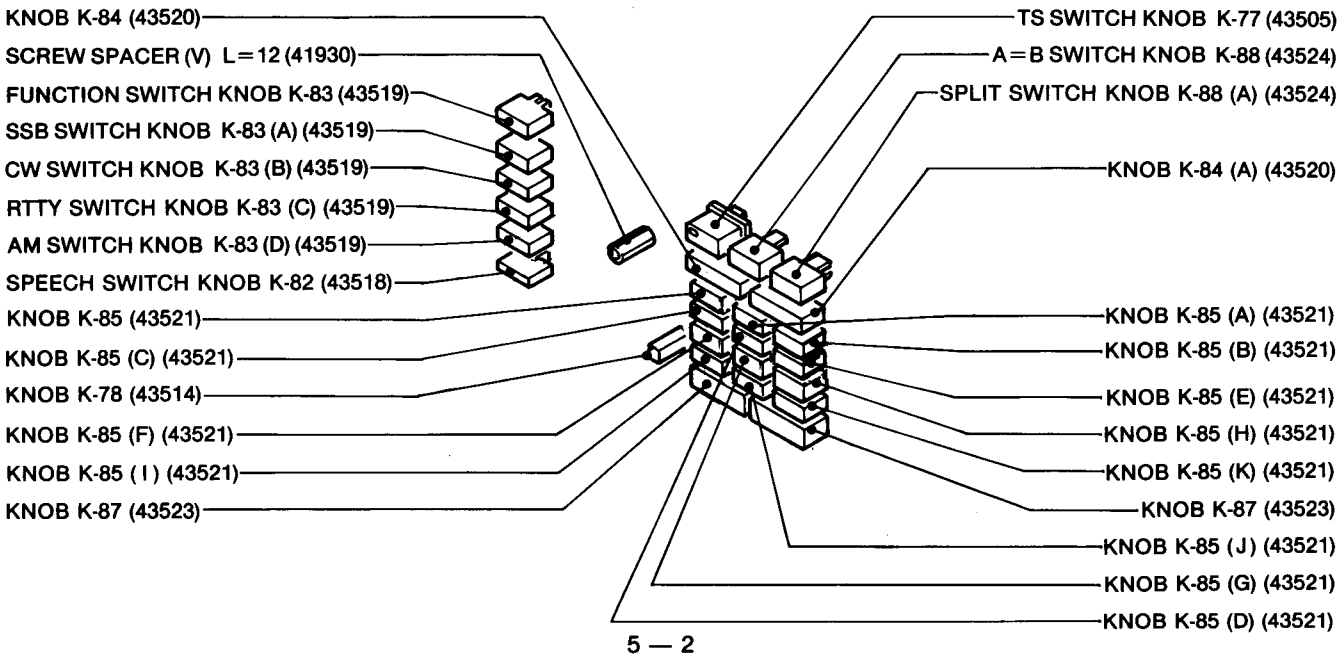

5-3 FRONT PANEL DISASSEMBLY (2)

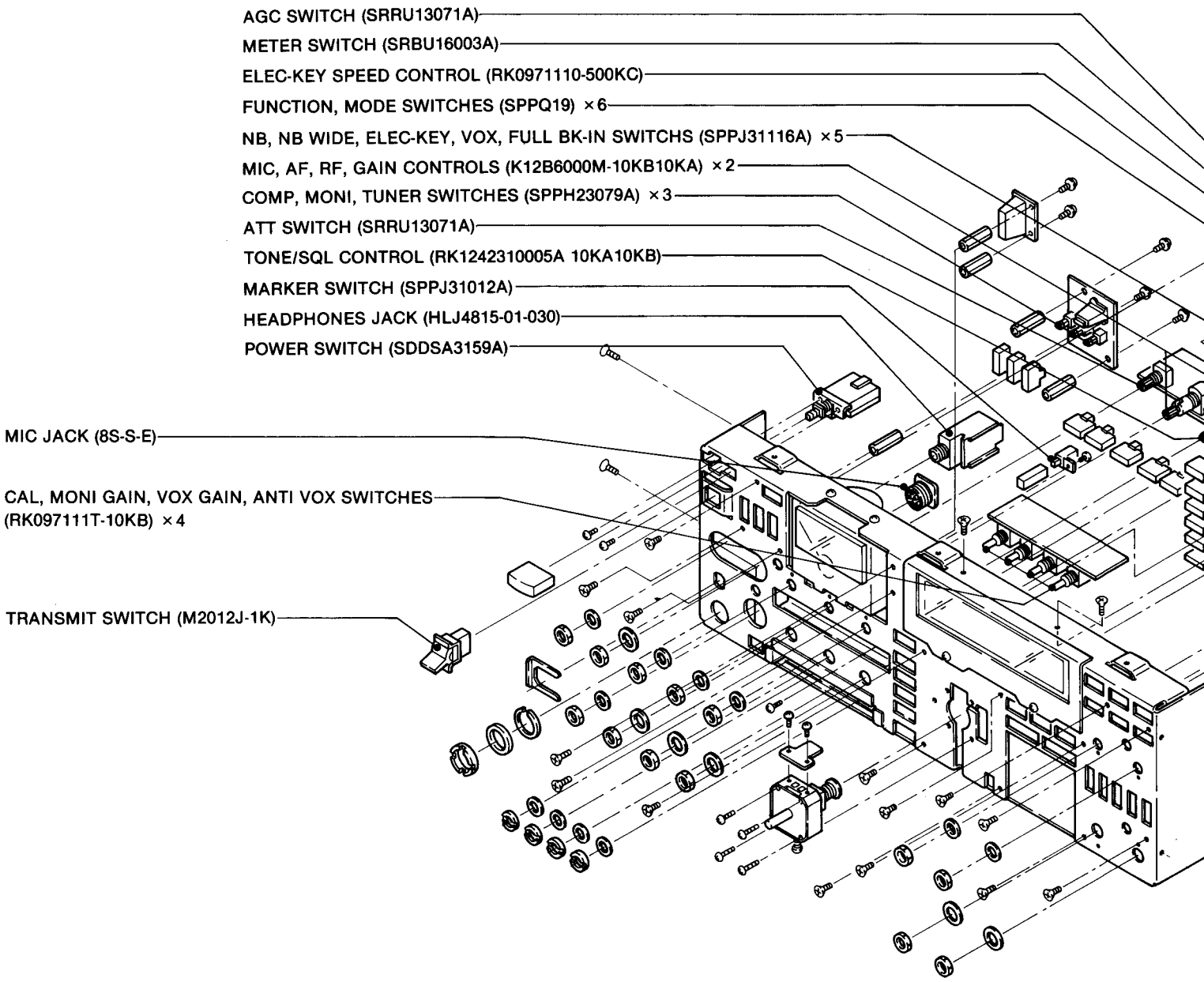

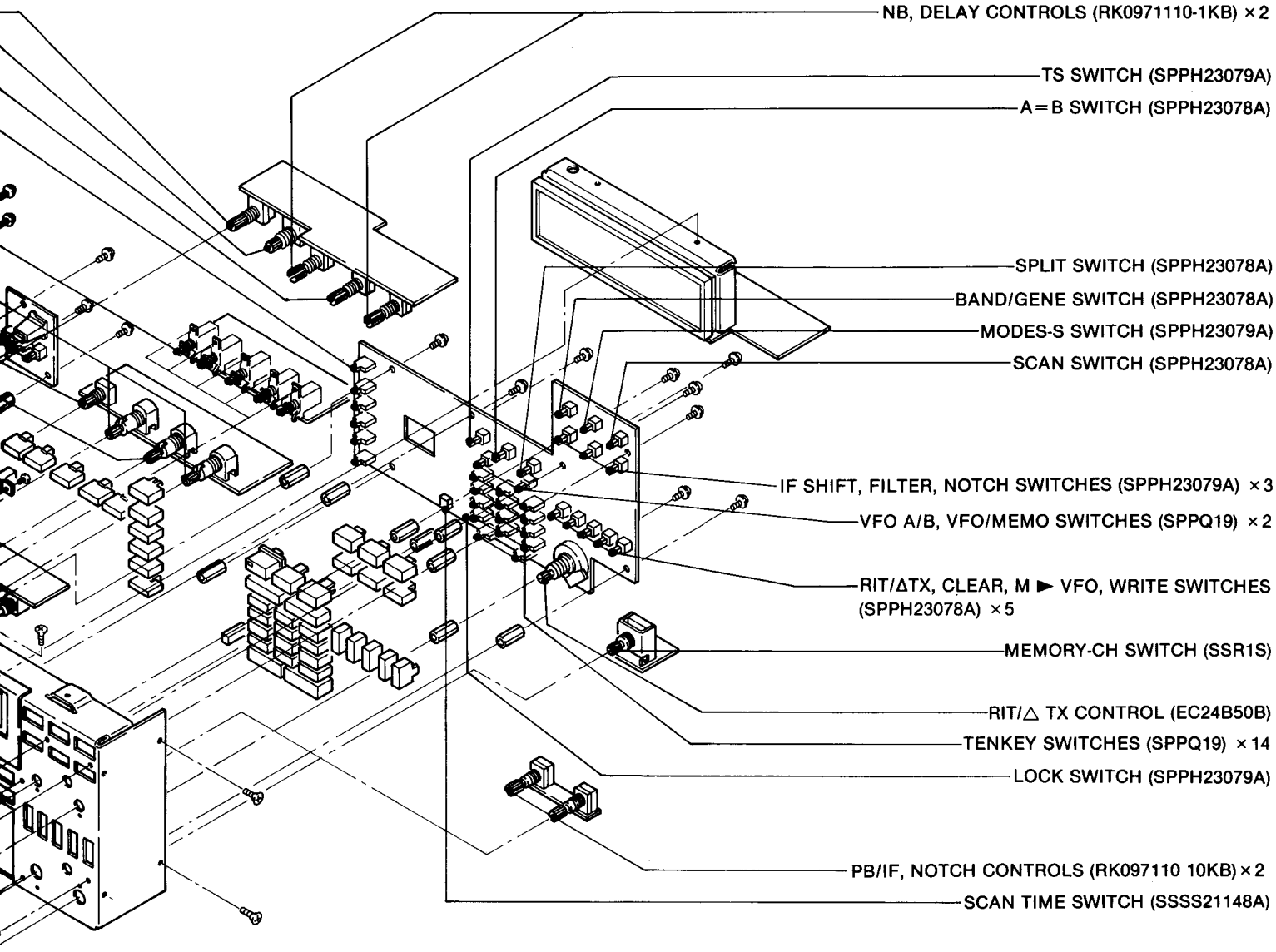
NB, DELAY CONTROLS (RK0971110-1KB) ×2
TS SWITCH (SPPH23079A)
A=B SWITCH (SPPH23078A)
SPLIT SWITCH (SPPH23078A)
BAND/GENE SWITCH (SPPH23078A)
MODES-S SWITCH (SPPH23079A)
SCAN SWITCH (SPPH23078A)
IF SHIFT, FILTER, NOTCH SWITCHES (SPPH23079A) ×3
VFO A/B, VFO/MEMO SWITCHES (SPPQ19) ×2
RIT/ΔTX, CLEAR, M ► VFO, WRITE SWITCHES (SPPH23078A) ×5
MEMORY-CH SWITCH (SSR1S)
RIT/△ TX CONTROL (EC24B50B)
TENKEY SWITCHES (SPPQ19) ×14
LOCK SWITCH (SPPH23079A)
PB/IF, NOTCH CONTROLS (RK097110 10KB) ×2
SCAN TIME SWITCH (SSSS21148A)

5-4 FRONT PANEL DISASSEMBLY (3)

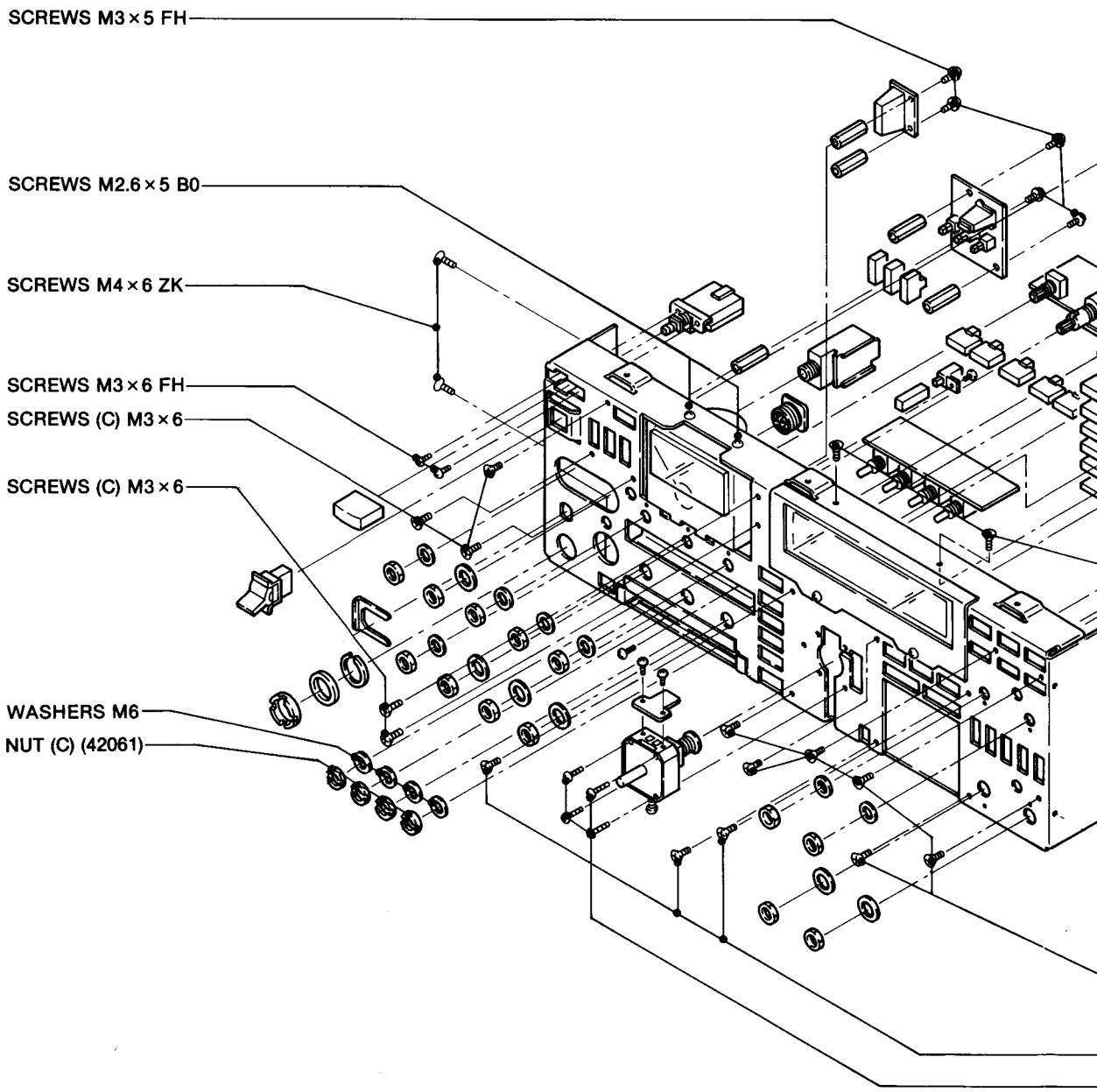

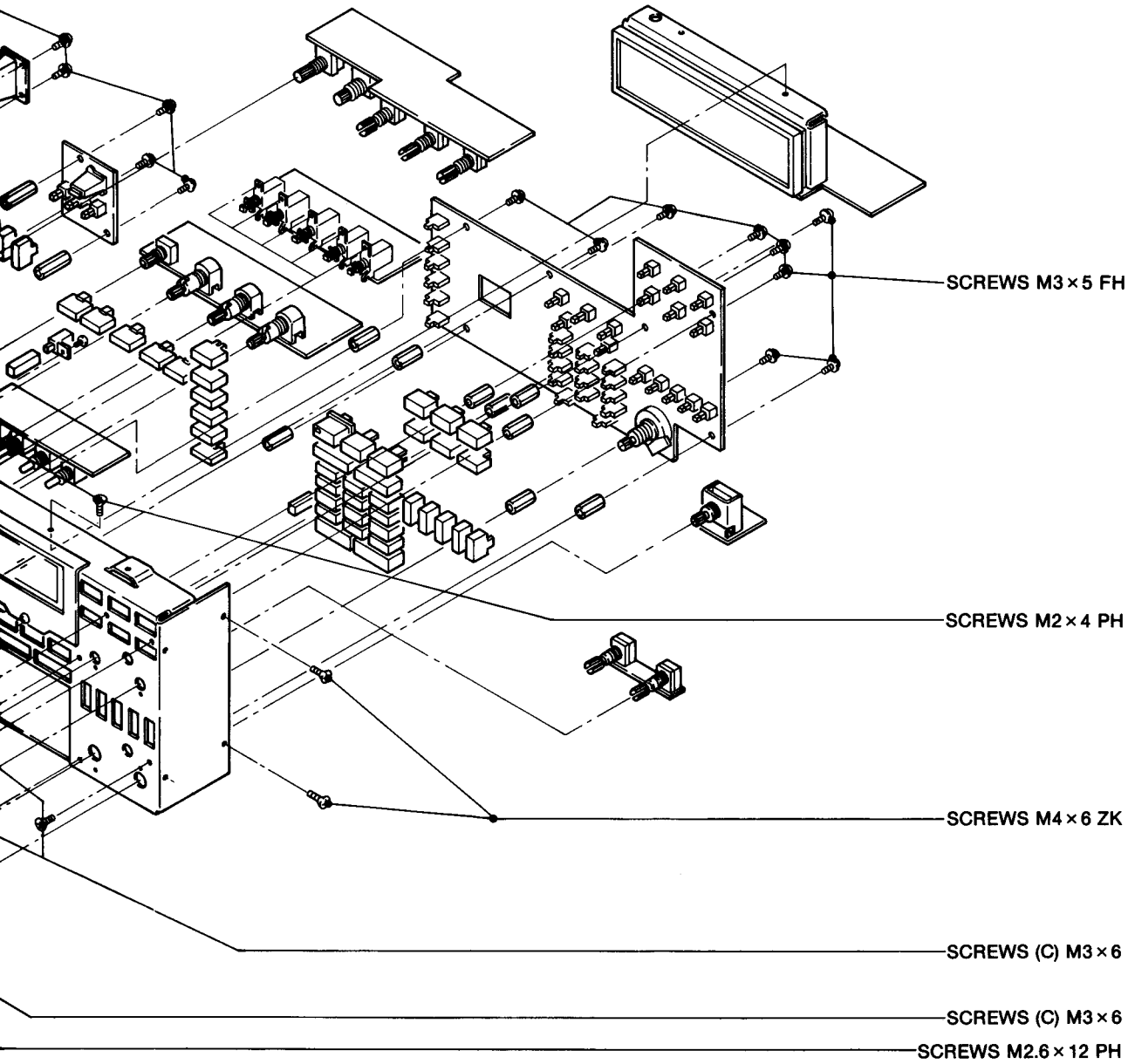
SCREWS M3×5 FH
SCREWS M2×4 PH
SCREWS M4×6 ZK
SCREWS (C) M3×6
SCREWS (C) M3×6
SCREWS M2.6×12 PH

5-5 TUNER UNIT DISASSEMBLY

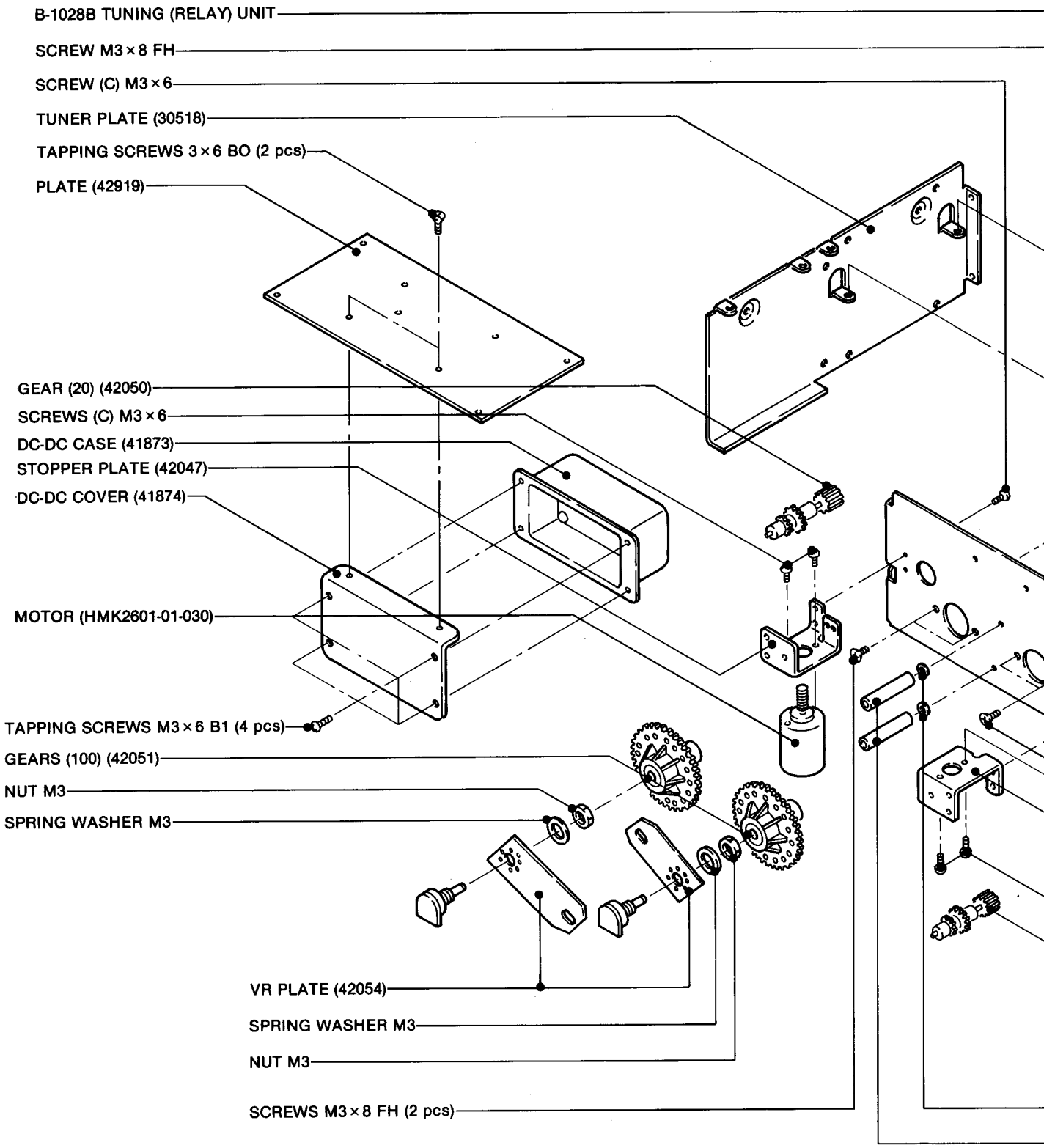

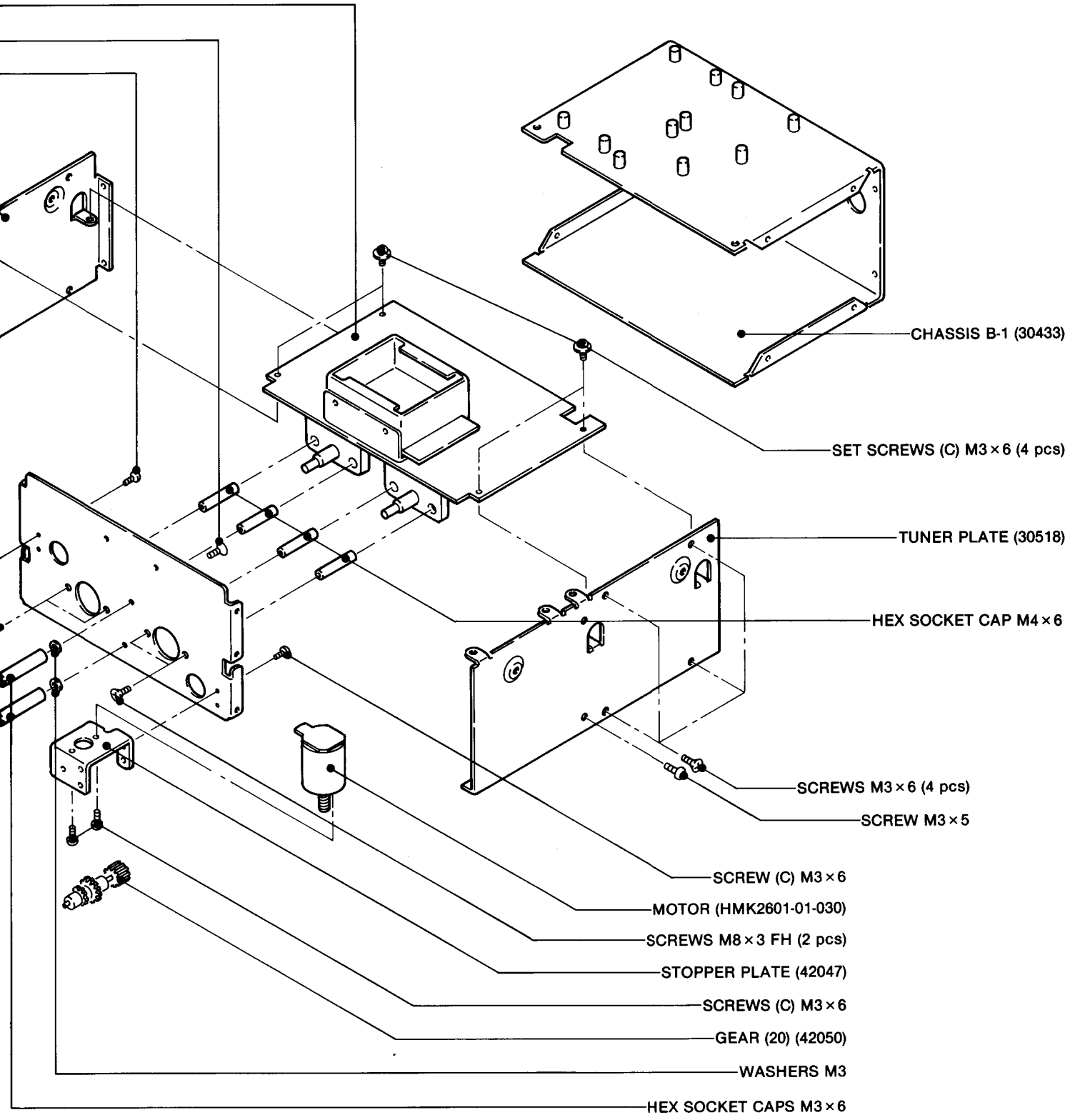
CHASSIS B-1 (30433)
SET SCREWS (C) M3×6 (4 pcs)
TUNER PLATE (30518)
HEX SOCKET CAP M4×6
SCREWS M3×6 (4 pcs)
SCREW M3×5
SCREW (C) M3×6
MOTOR (HMK2601-01-030)
SCREWS M8×3 FH (2 pcs)
STOPPER PLATE (42047)
SCREWS (C) M3×6
GEAR (20) (42050)
WASHERS M3
HEX SOCKET CAPS M3×6

5-6 REAR PANEL DISASSEMBLY

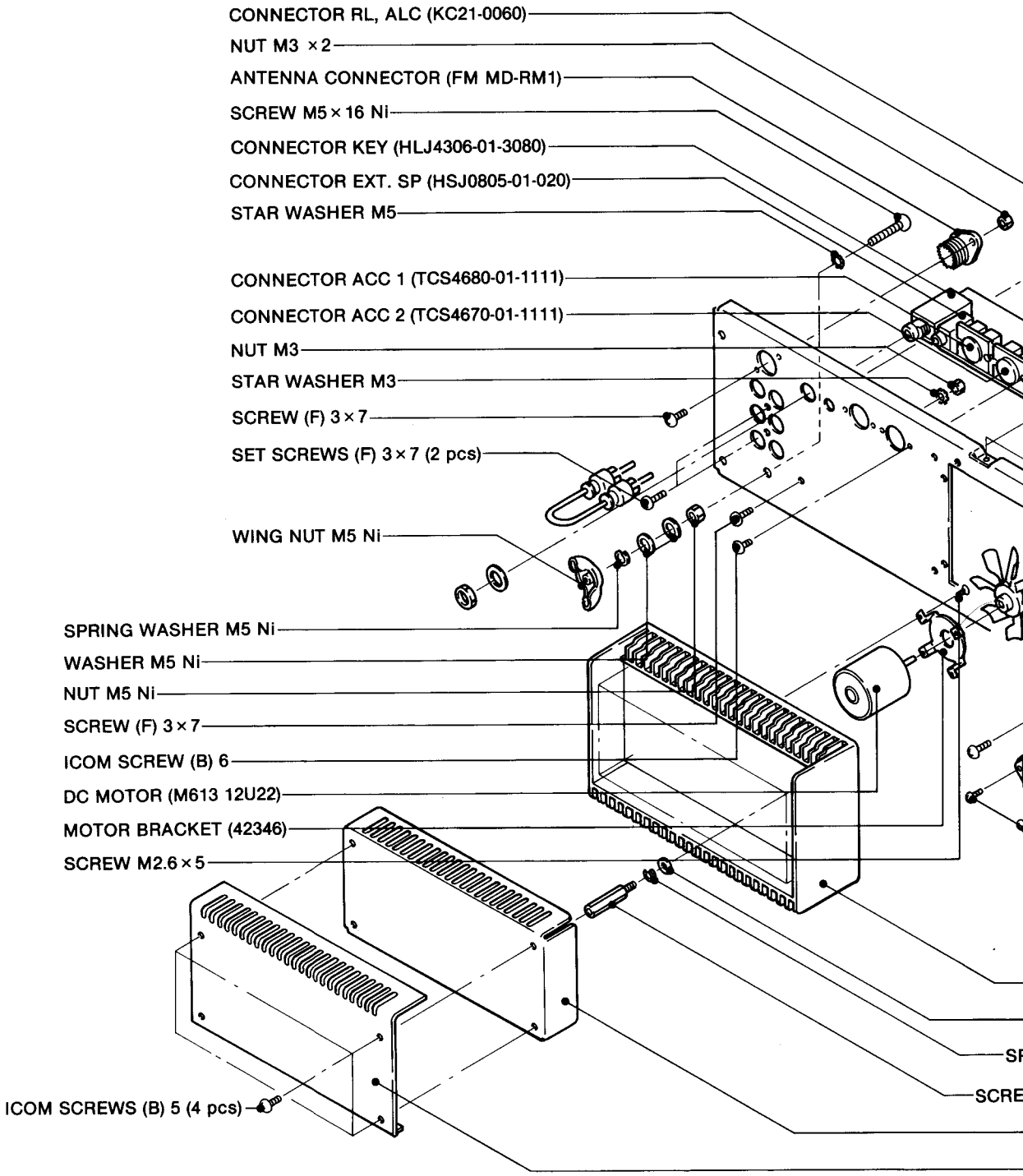

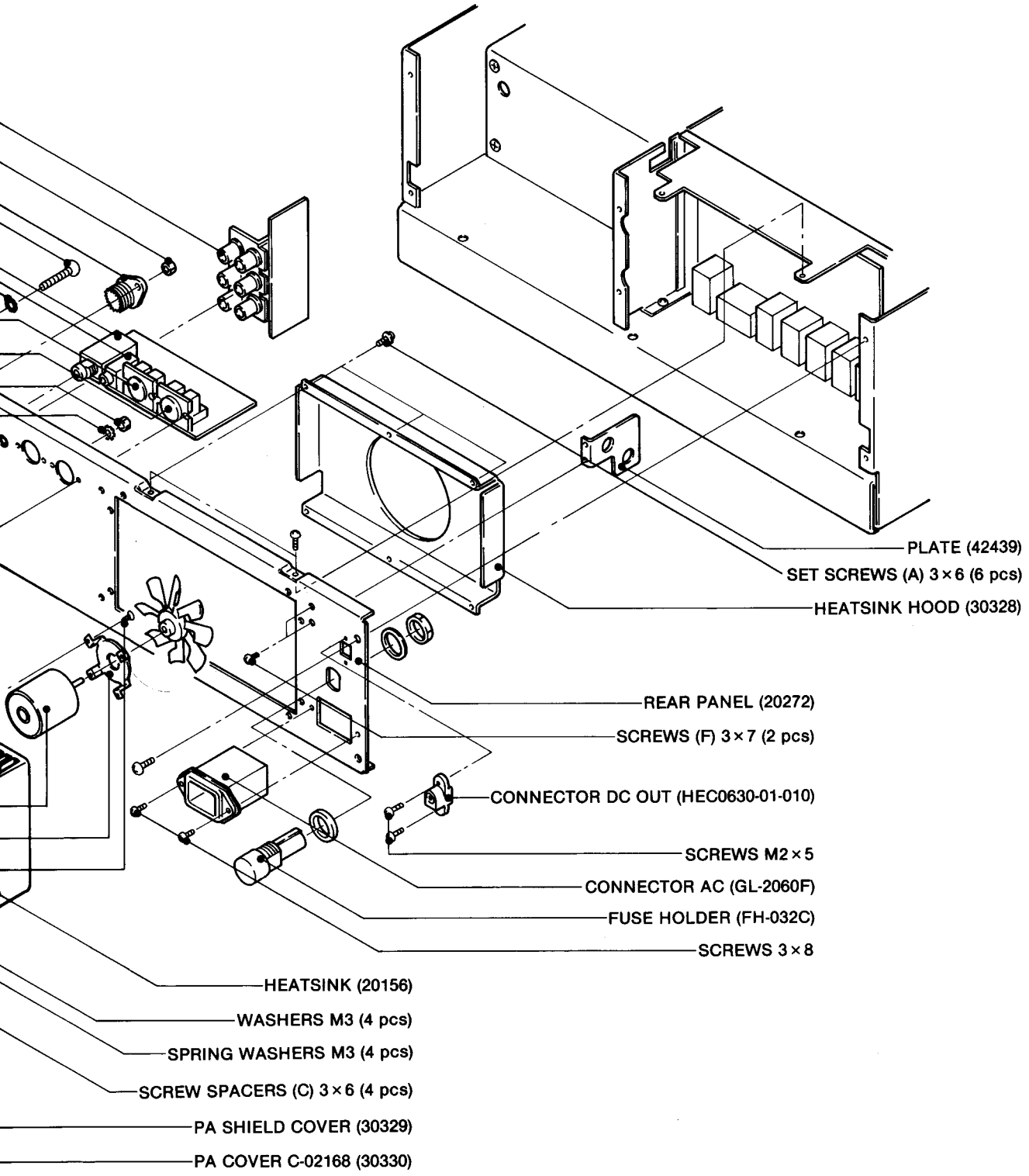
PLATE (42439)
SET SCREWS (A) 3×6 (6 pcs)
HEATSINK HOOD (30328)
REAR PANEL (20272)
SCREWS (F) 3×7 (2 pcs)
CONNECTOR DC OUT (HEC0630-01-010)
SCREWS M2×5
CONNECTOR AC (GL-2060F)
FUSE HOLDER (FH-032C)
SCREWS 3×8
HEATSINK (20156)
WASHERS M3 (4 pcs)
SPRING WASHERS M3 (4 pcs)
SCREW SPACERS (C) 3×6 (4 pcs)
PA SHIELD COVER (30329)
PA COVER C-02168 (30330)

5-7 FRONT UNIT CONNECTOR ASSEMBLY

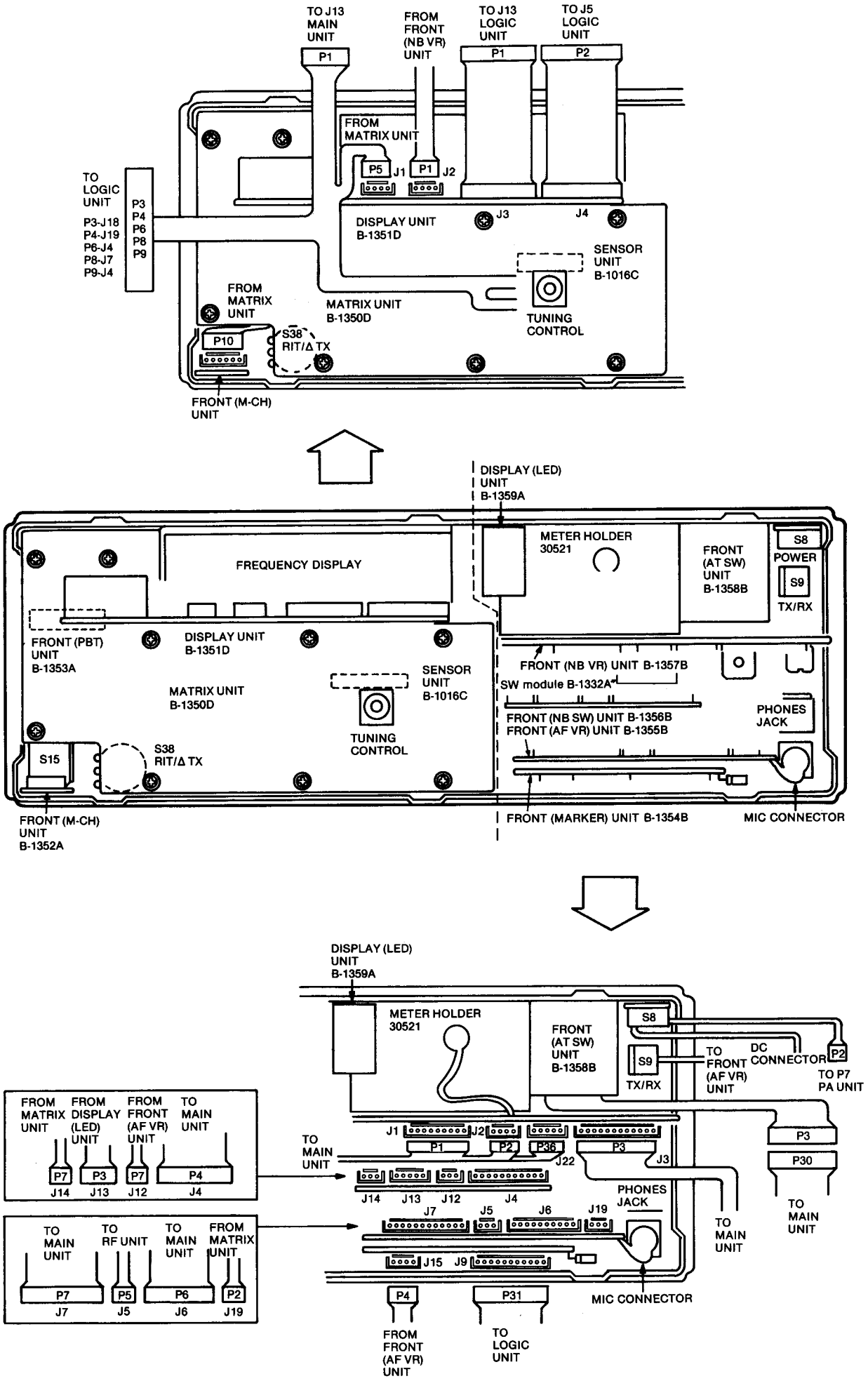

5-8 SWITCHING REGULATOR, LOGIC, AND PLL UNIT CONNECTOR ASSEMBLY

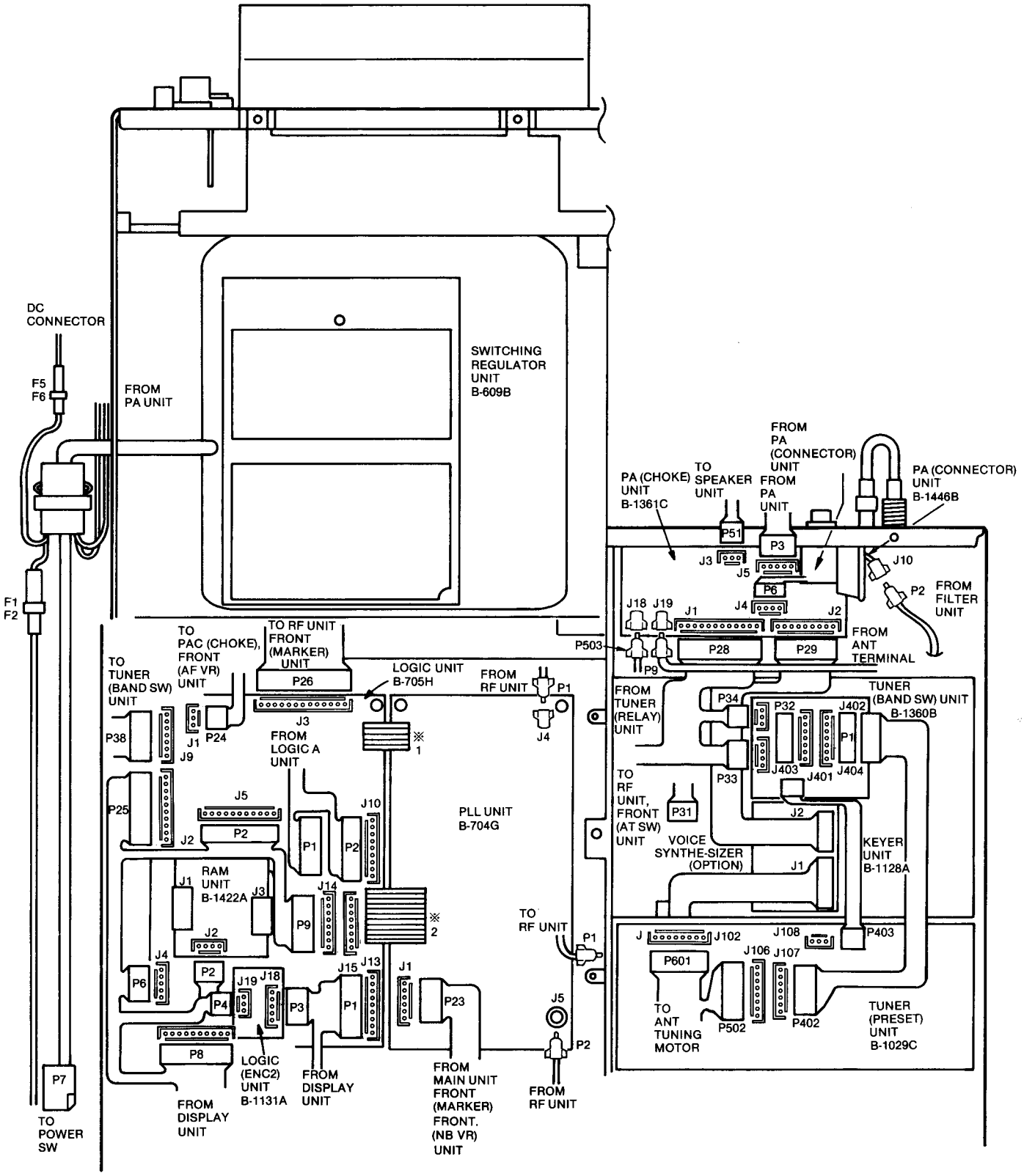

※ FLAT CABLE
1. SMCD-04 × 60AD × 10-G
2. SMCD-11 × 60AD × 10-G

5-9 MAIN AND RF UNIT CONNECTOR ASSEMBLY

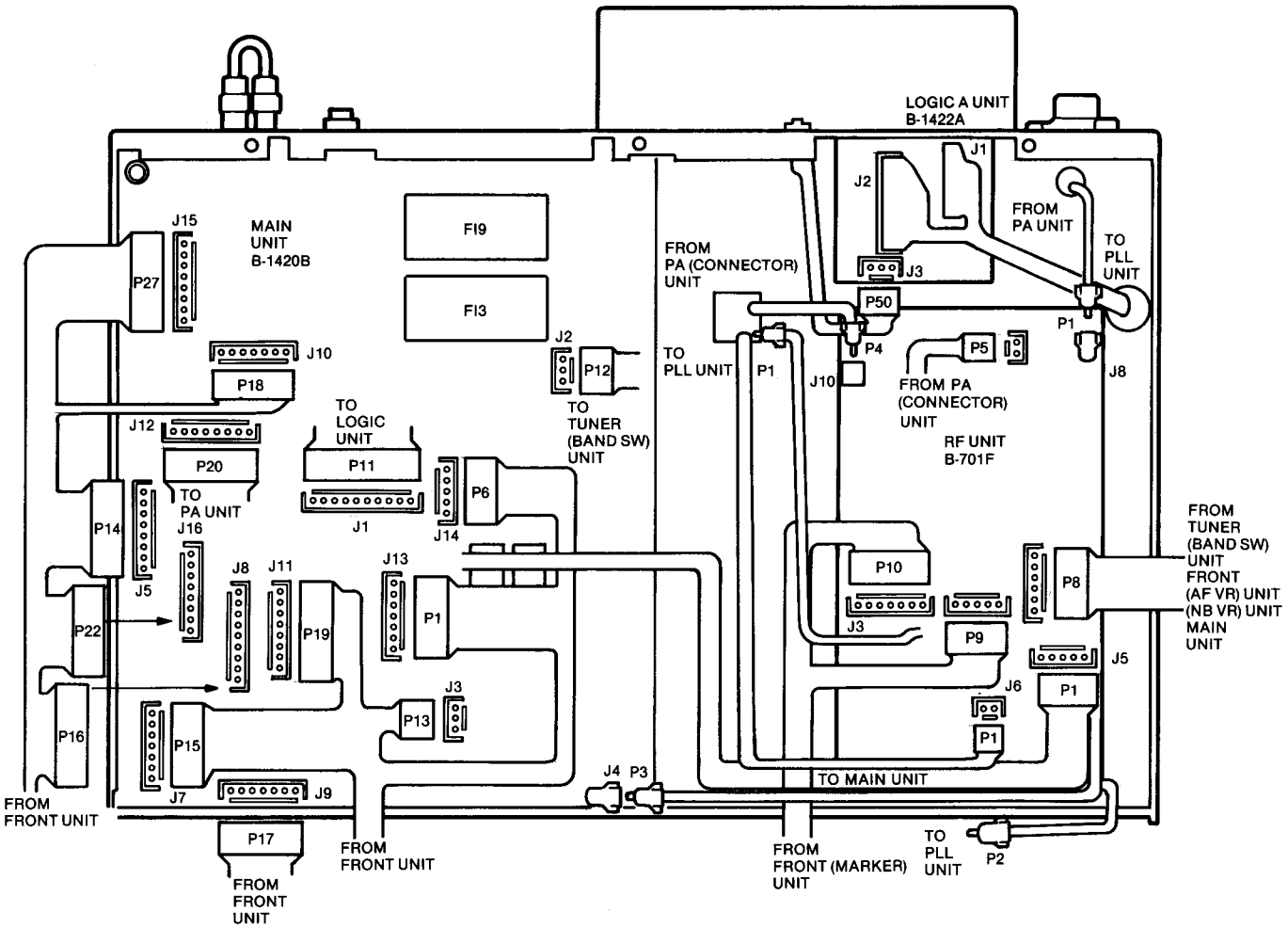

5-10 REAR PANEL CONNECTOR ASSEMBLY

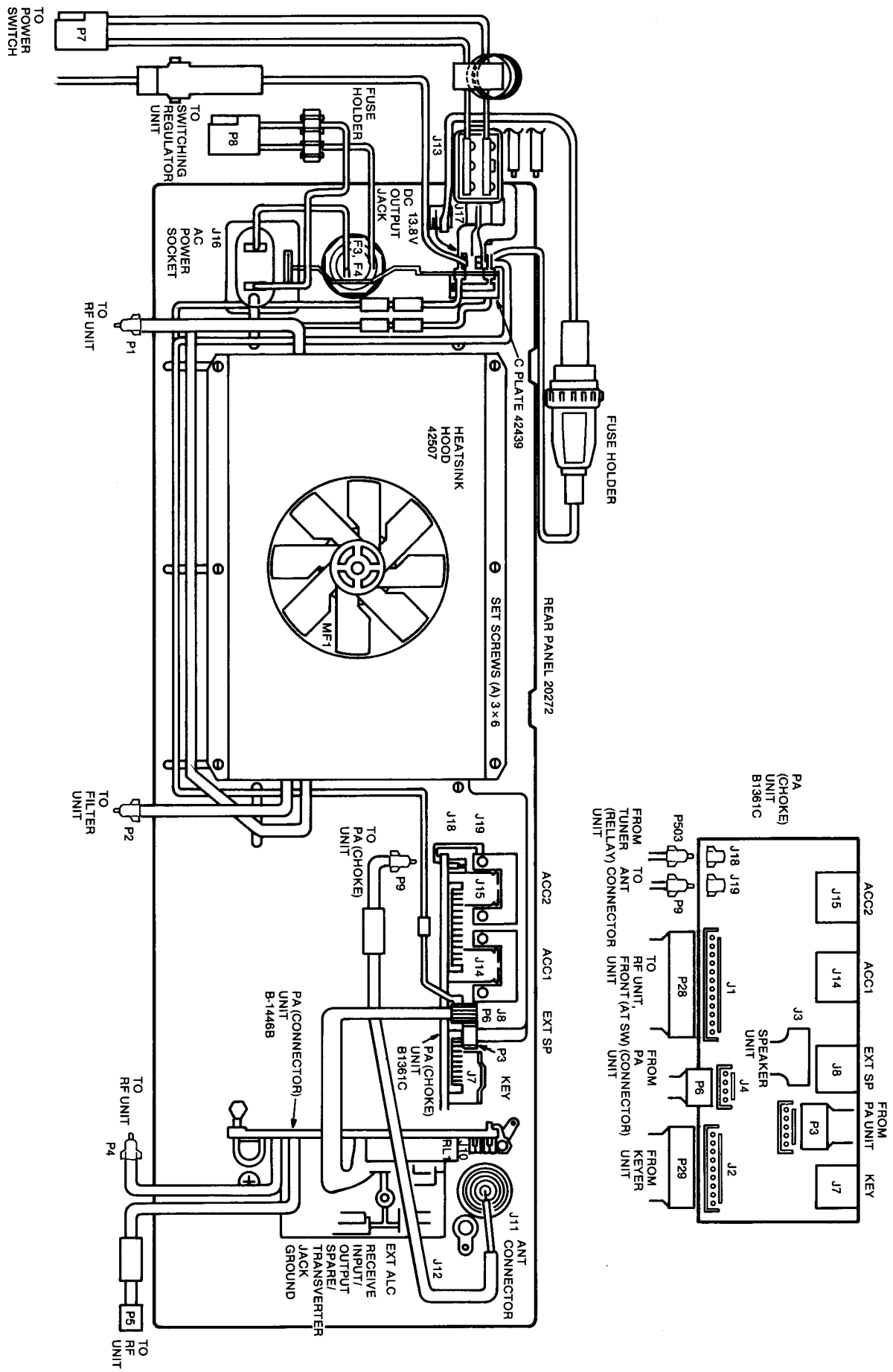

SECTION 6 MAINTENANCE AND ADJUSTMENT

6-1 PREPARATION BEFORE SERVICING

1. Detach the power cord and turn OFF the POWER SWITCH before performing any work on the transceiver.

2. Do not short circuit components while making adjustments.

3. Use an insulated tuning tool for all adjustments.

4. Do not force any of the variable components. Tune them slowly and smoothly.

5. Follow the instructions exactly. If an indicated result is not obtained, repeat the instruction until the correct result is obtained.

6. Check the condition of connectors, solder joints and screws when adjustments are complete. Make sure components do not touch each other.

7. Confirm defective operation of the transceiver first when checking an out-of-service unit. Verify that external sources do not cause the problem.

8. Use the correct tools and test equipment.

9. Remove the transceiver case as shown in SECTION 5-1.

10. For transmission problems, attach a dummy load to the antenna connector. For reception problems, attach an antenna or signal generator to the antenna connector. Do not transmit into the signal generator.

11. Recheck for the suspected malfunction with the POWER SWITCH ON.

12. Check the defective circuit. Measure the DC voltages of the collector, base and emitter of each transistor.

CAUTION: An external AC power supply should be used to connect the transceiver to a power source during testing.

6-2 PLL ADJUSTMENT

TEST INSTRUMENTS REQUIRED	MEASUREMENT CONNECTION LOCATION
(1) AC POWER SUPPLY • Output voltage : 13.8V DC • Current capacity : 25A or more (2) OSCILLOSCOPE • Frequency range : DC~20MHz • Measuring range : 0.01~10V (3) FREQUENCY COUNTER • Frequency range : 0.1MHz~90MHz • Frequency accuracy : ±1ppm or better • Sensitivity : 100mV or better (4) RF VOLTMETER • Frequency range : 0.1~80MHz • Measuring range : 0.01~10V (5) DC VOLTMETER • Input impedance : 50kΩ/DC or better	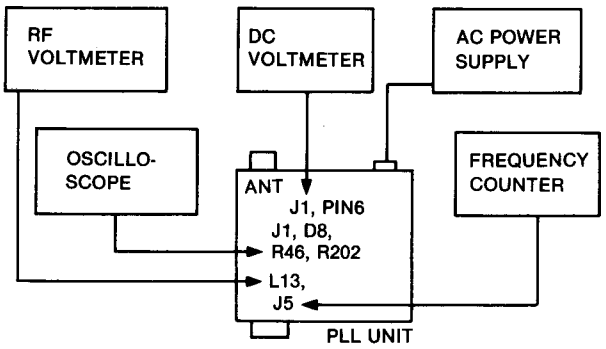

ADJUSTMENT		ADJUSTMENT CONDITIONS	MEASUREMENT		VALUE	ADJUSTMENT POINT	
			UNIT	LOCATION		UNIT	ADJUST
LOCK VOLTAGE	1	• Frequency display: 8.0000MHz • LSB/General mode	PLL	Connect an oscilloscope to R202.	3V	PLL	L201
	2	• Frequency display: 7.9999MHz			1.5~2V		Verify
PLL LO OUTPUT LEVEL	1	• Frequency display: 8.0000MHz • LSB/General mode	PLL	Connect an RF voltmeter to L13.	Adjust to maximum output.	PLL	L8
HPL LOCK VOLTAGE	1	• Frequency display: 7.9999MHz • LSB/General mode	PLL	Connect an oscilloscope to the cathode of D8.	2.5V	PLL	R43
	2	• Frequency display: 7.9999MHz • LSB/General mode		Connect an oscilloscope to R46.	6.5V		C78
	3	• Frequency display: 14.9999MHz • LSB/General mode					C88
	4	• Frequency display: 21.9999MHz					C97
	5	• Frequency display: 29.9999MHz					C107
	6	• Frequency display: 0.1000MHz			2~3V		Verify
	7	• Frequency display: 8.0000MHz					
	8	• Frequency display: 15.0000MHz					
	9	• Frequency display: 22.0000MHz					
REFERENCE FREQUENCY	1	• Frequency display: 8.0000MHz • LSB/General mode	PLL	Connect a DC voltmeter to J1 pin 6.	3V	FRONT PANEL	CALIBRATOR CONTROL
	2	• Frequency display: 8.0000MHz • LSB/General mode		Connect a frequency counter to J5.	61.4400MHz	PLL	L2
(2nd LO OUTPUT LEVEL)	3	• Frequency display: 8.0000MHz • LSB/General mode		Terminate J5 to ground with a 50Ω resistor. Connect an RF voltmeter to J5.	Adjust to maximum output: 0~4dBm.	PLL	L3~L5
	NOTE: After completing the adjustment, return J5 to its original condition.						

PLL UNIT

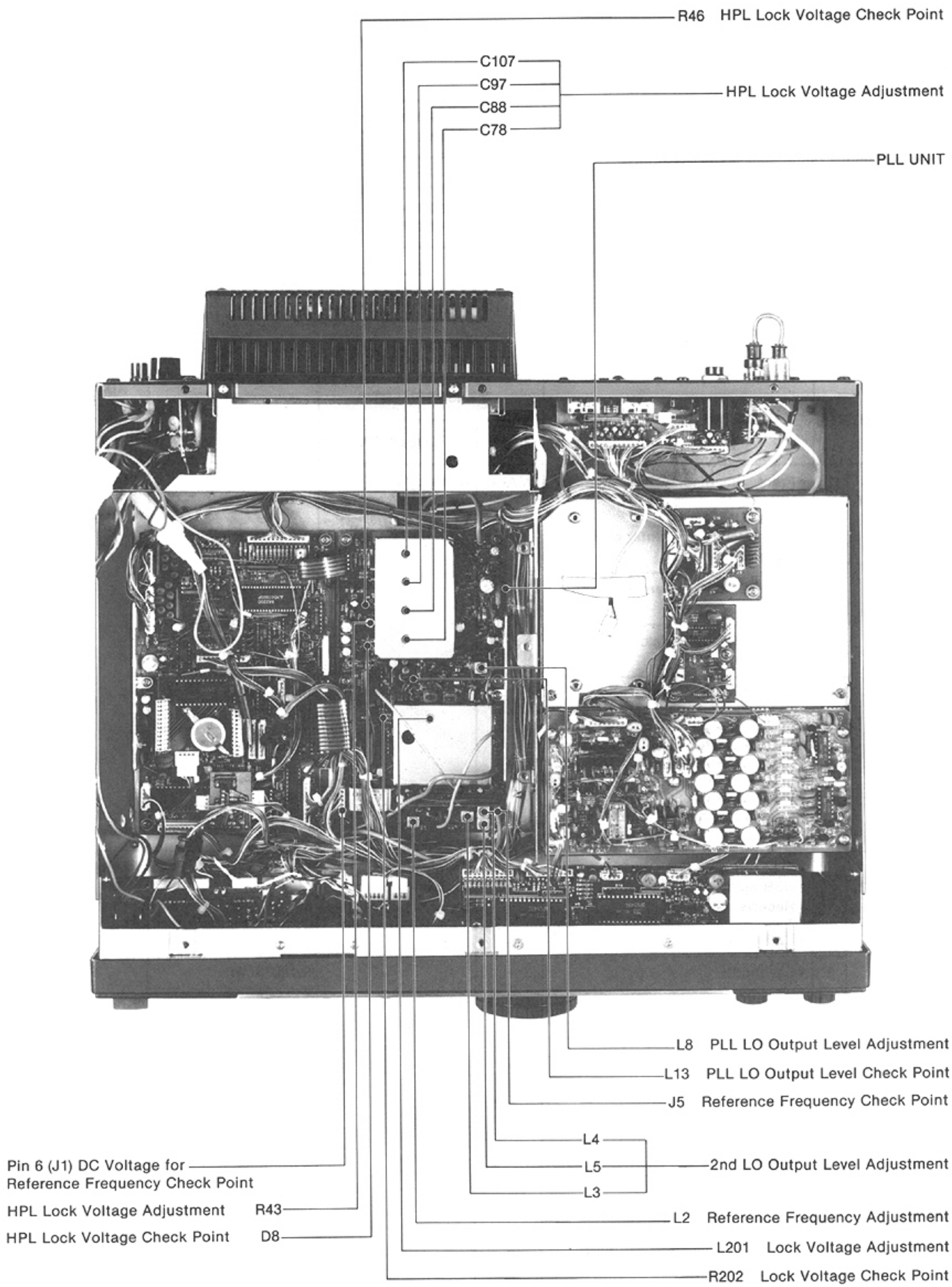
R46 HPL Lock Voltage Check Point
C107
C97
C88
C78
HPL Lock Voltage Adjustment
PLL UNIT
L8 PLL LO Output Level Adjustment
L13 PLL LO Output Level Check Point
J5 Reference Frequency Check Point
L4
L5
L3
2nd LO Output Level Adjustment
L2 Reference Frequency Adjustment
L201 Lock Voltage Adjustment
R202 Lock Voltage Check Point
Pin 6 (J1) DC Voltage for Reference Frequency Check Point
HPL Lock Voltage Adjustment R43
HPL Lock Voltage Check Point D8

6-3 FREQUENCY ADJUSTMENT

TEST INSTRUMENTS REQUIRED	MEASUREMENT CONNECTION LOCATION
(1) AC POWER SUPPLY • Output voltage : 13.8V DC • Current capacity : 25A or more (2) FREQUENCY COUNTER • Frequency range : 0.1MHz~90MHz • Frequency accuracy : ±1ppm or better • Sensitivity : 100mV or better (3) RF POWER METER (TERMINATED TYPE) • Measuring range : 20~200W • Frequency range : 1.8~30MHz • Impedance : 50Ω • SWR : Less than 1:1.2	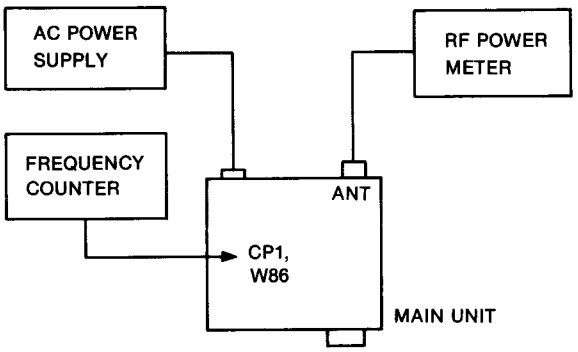

ADJUSTMENT		ADJUSTMENT CONDITIONS	MEASUREMENT		VALUE	ADJUSTMENT POINT	
			UNIT	LOCATION		UNIT	ADJUST
PBT FREQUENCY	1	• Frequency display: 14.1MHz • USB mode • Filter: ON • PBT CONTROL: Center position • Receive mode	MAIN	Connect a frequency counter to W86.	9.46650MHz	MAIN	L36
	2	• PBT CONTROL: Center position • Transmit mode			9.46650MHz		R337
	3	• PBT CONTROL: Max. CW			9.46810MHz or higher		Verify
	4	• PBT CONTROL: Max. CCW			9.46490MHz or lower		
	5	• PBT CONTROL: Center position • AM and FM modes			9.46650MHz ±300Hz		Verify
	6	• PBT CONTROL: Center position • CW-Narrow and RTTY-Narrow modes			9.46560MHz ±100Hz		Verify
BFO FREQUENCY	1	• Frequency display: 14.1MHz • USB mode • Receive mode	MAIN	Connect a frequency counter to CP1.	9.01300MHz	MAIN	C202
	2	• LSB mode			9.01000MHz		L33
	3	• CW mode			9.00990MHz		L34
	4	• RTTY mode			9.008475MHz		L35
	5	• AM mode			No output		Verify
	6	• FM mode					
	7	• USB mode • Transmit mode			9.01300MHz		Verify
	8	• LSB mode			9.01000MHz		
	9	• CW mode			No output		
	10	• RTTY mode			9.008475MHz		
	11	• AM mode			9.01000MHz		
	12	• FM mode			No output		
	NOTE: Repeat adjustments 1 through 12 several times.						

MAIN UNIT

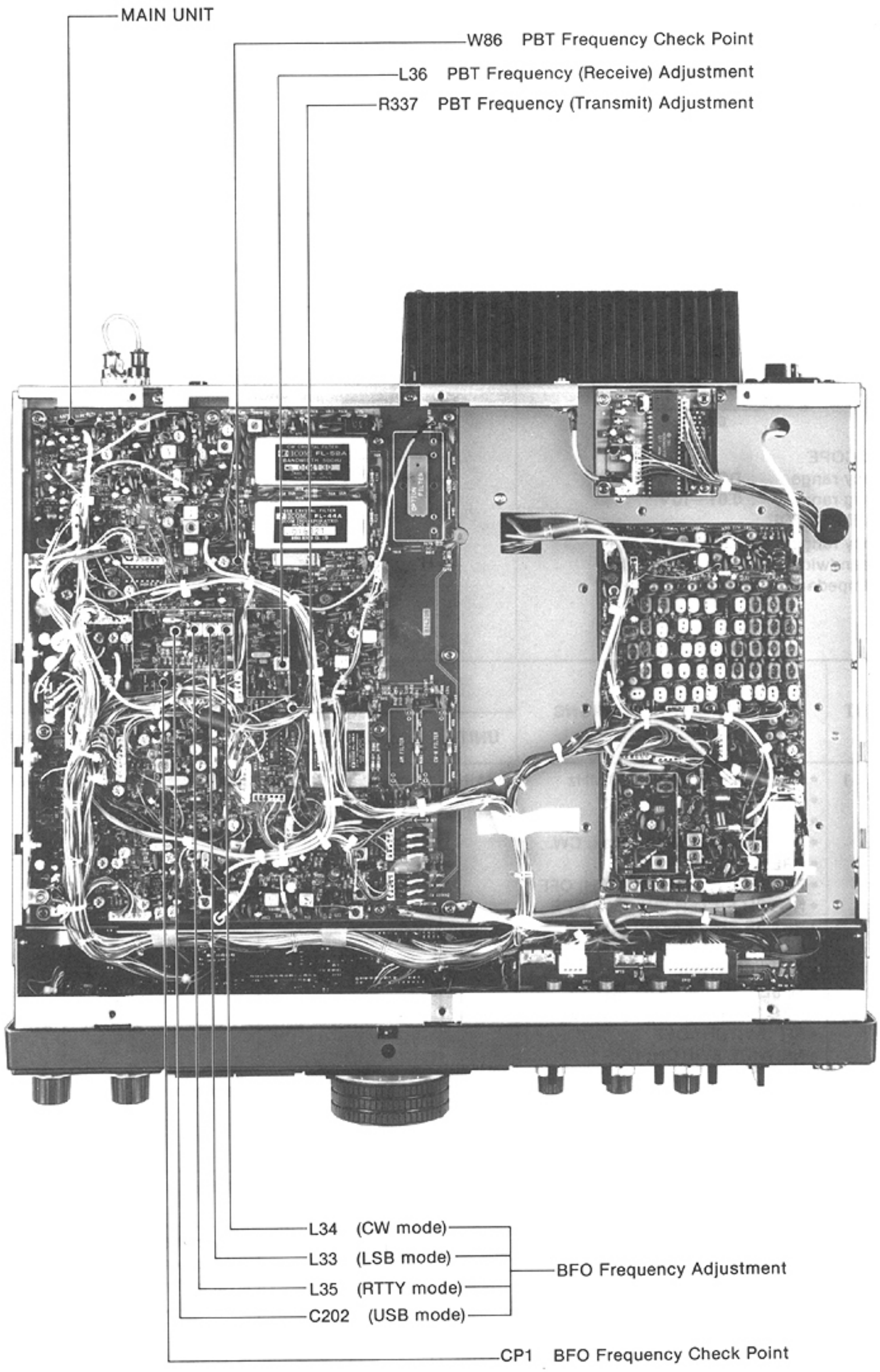
MAIN UNIT
W86 PBT Frequency Check Point
L36 PBT Frequency (Receive) Adjustment
R337 PBT Frequency (Transmit) Adjustment
L34 (CW mode)
L33 (LSB mode)
L35 (RTTY mode)
C202 (USB mode)
BFO Frequency Adjustment
CP1 BFO Frequency Check Point

6-4 RECEIVER ADJUSTMENT

TEST INSTRUMENTS REQUIRED	MEASUREMENT CONNECTION LOCATION
(1) AC POWER SUPPLY • Output voltage : 13.8V DC • Current capacity : 25A or more (2) STANDARD SIGNAL GENERATOR (SSG) • Frequency range : 0.1~40MHz • Output level : −127~−17dBm (0.1μV~32mV) (3) DC VOLTMETER • Input impedance : 50kΩ/DC or better (4) AC MILLI-VOLTMETER • Measuring range : 10mV~3V (5) EXTERNAL SPEAKER • Impedance : 8Ω (6) DETECTOR 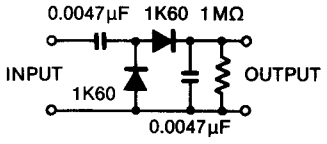 (7) OSCILLOSCOPE • Frequency range : DC~20MHz • Measuring range : 0.01~10V (8) SWEEP GENERATOR • Frequency range : 0.1~40MHz • Sweep bandwidth : At least 30MHz • Output impedance : 50Ω	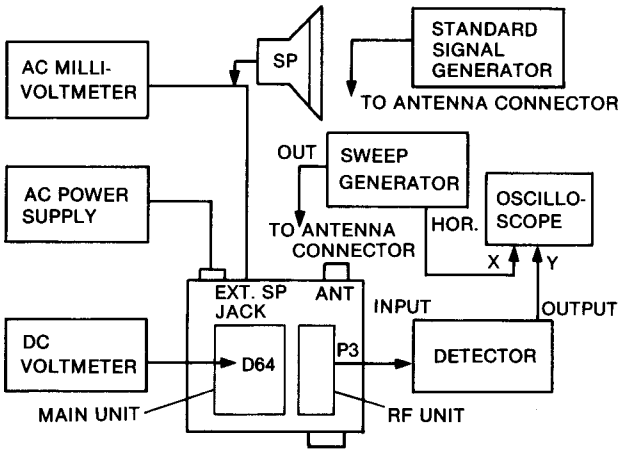

ADJUSTMENT		ADJUSTMENT CONDITIONS	MEASUREMENT		VALUE	ADJUSTMENT POINT	
			UNIT	LOCATION		UNIT	ADJUST
TOTAL GAIN	1	• Frequency display: 14.1MHz • USB mode • Receive mode • RF GAIN CONTROL: Max. CW • PREAMP: OFF • FILTER SELECTOR SWITCH: OFF • NOTCH FILTER SWITCH: OFF • PBT, IF SHIFT CONTROL: Center position • TONE CONTROL: Center position • SQUELCH CONTROL: Max. CCW • AGC SWITCH: FAST position • RIT SWITCH: OFF • NB WIDE SWITCH: OFF	MAIN	Connect a DC voltmeter to cathode of D64.	3.9V	MAIN	R442
	2	• R259: Max. CW • Apply a −73dBm (50μV) RF signal to the ANTENNA CONNECTOR.	FRONT PANEL	METER	Maximum		L10, L11, L12, L18, L22, L25, L26
	3		REAR PANEL	Connect an AC millivoltmeter to the EXT. SP JACK with an 8Ω load.	2.5Vrms	FRONT PANEL	AF GAIN CONTROL
	4	• Apply no signal to the ANTENNA CONNECTOR.			Adjust R259 to a point where the noise level is 30dB down from 2.5V.	MAIN	R259
S-METER	1	• Frequency display: 14.1MHz • Apply no signal to the ANTENNA CONNECTOR.	FRONT PANEL	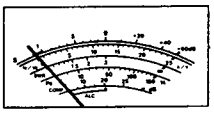 Multifunction meter (S scale)	S0 (S scale)	MAIN	R125

RECEIVER ADJUSTMENT (CONTINUED)

ADJUSTMENT		ADJUSTMENT CONDITIONS	MEASUREMENT		VALUE	ADJUSTMENT POINT	
			UNIT	LOCATION		UNIT	ADJUST
S-METER	2	• Apply a −33dBm (5mV) RF signal to the ANTENNA CONNECTOR.	FRONT PANEL	Multifunction meter (S scale)	S9 +40dB (S scale)	MAIN	R121
	3	• Apply a −73dBm (50μV) RF signal to the ANTENNA CONNECTOR.		Multifunction meter (S scale)	S9 (S scale)		R442

MAIN UNIT

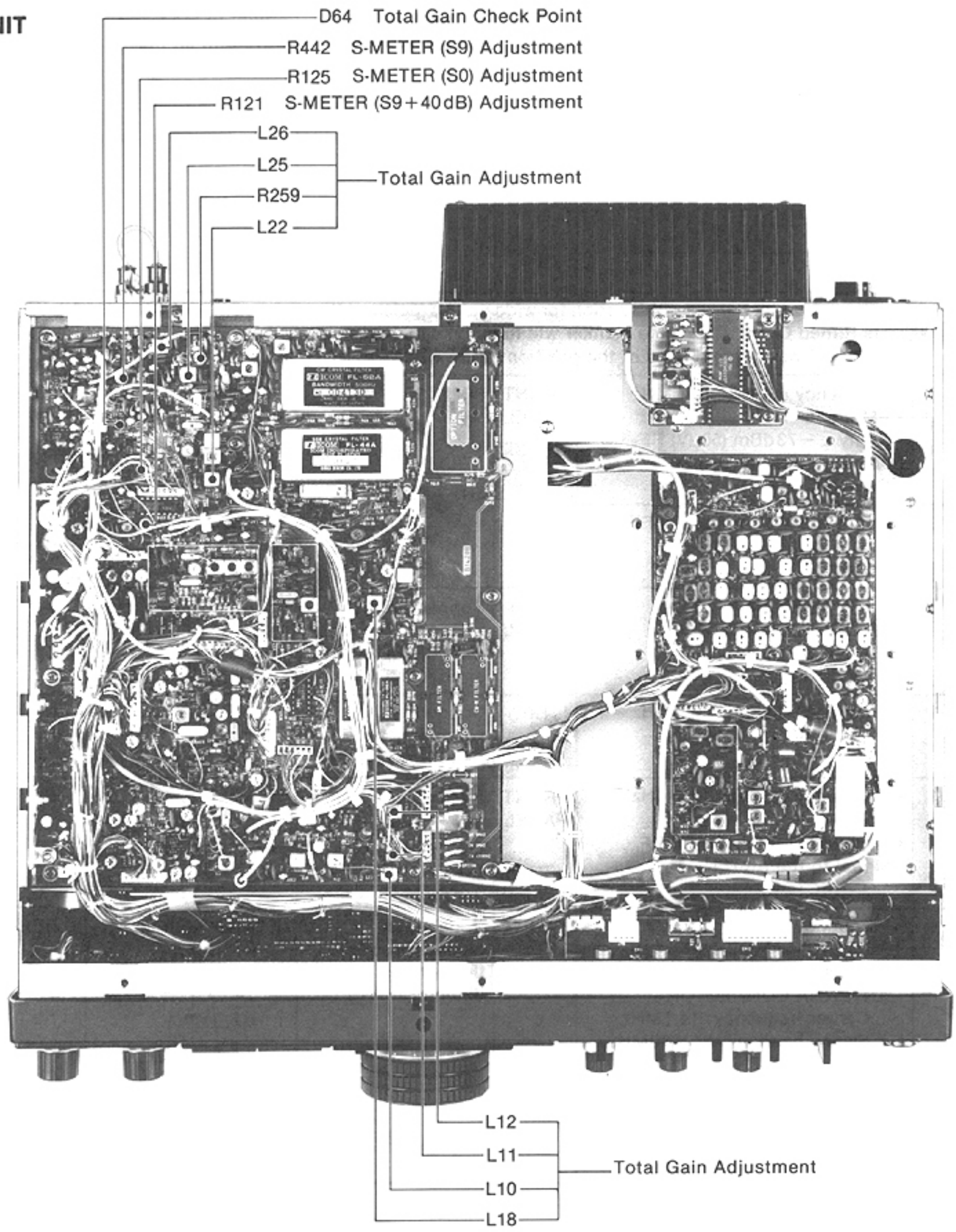

RECEIVER ADJUSTMENT (CONTINUED)

ADJUSTMENT		ADJUSTMENT CONDITIONS	MEASUREMENT		VALUE	ADJUSTMENT POINT	
			UNIT	LOCATION		UNIT	ADJUST
NOTCH	1	• Frequency display: 14.1MHz • USB mode • NOTCH SWITCH: ON • Apply a −73dBm (50μV) RF signal to the ANTENNA CONNECTOR. • Adjust TUNING CONTROL to receive 1.5kHz beat signal. • NOTCH CONTROL: Max. CW or CCW	FRONT PANEL	S-METER	S-Meter remains at the same level when the NOTCH CONTROL is turned fully CW or CCW.	MAIN	L24
	2	• NOTCH CONTROL: Center	REAR PANEL	Connect an AC millivoltmeter to the EXT. SP JACK with an 8Ω load.	MIN. audio output (More than 45dB down)	MAIN	L23, C146
NOISE BLANKER	1	• Frequency display: 14.1MHz • USB mode • PREAMP SWITCH: OFF • NB WIDE SWITCH: ON • NB LEVEL CONTROL: Max. CW • Apply an RF signal included following pulse-type noise to the ANTENNA CONNECTOR. 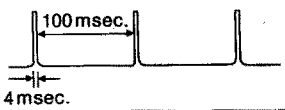	MAIN	Connect an oscilloscope to D17.	Adjust to MAX. waveform on the oscilloscope.	MAIN	L4~L6
	NOTE: The noise blanker will not function for wide noises (pulse width approx. 5msec.) when the NB WIDE SWITCH is turned OFF. The noise blanker will function when receiving narrow noises (pulse width approx. 0.4~0.5msec.) regardless of the position of the NB WIDE SWITCH.						
FM RECEIVER	1	• Frequency display: 14.1MHz • FM mode • Apply a −73dBm (50μV) RF signal to the ANTENNA CONNECTOR.	FRONT PANEL	S-METER	Maximum	MAIN	L27
	2	• Apply a −53dBm (500μV) RF signal to the ANTENNA CONNECTOR.			S9 +60dB		R270
	3	• Apply an RF signal to the ANTENNA CONNECTOR. Dev.: ±3.5kHz Mod.: 1kHz	REAR PANAL	Connect an AC millivoltmeter to the EXT. SP JACK with an 8Ω load.	MAX. audio output	MAIN	L28
AGC VOLTAGE	1	• Frequency display: 14.1MHz • USB mode	RF	Connect a DC voltmeter to the terminal of R105.	2.5V	RF	R24
IF FILTER	1	• Frequency display: 14.1MHz • USB mode • Apply a −73dBm (50μV) RF signal to the ANTENNA CONNECTOR.	FRONT PANEL	S-METER	Maximum	RF	L30, L17, L18, L19, L20, L21
IF BAVD WIDTH	1	• Frequency display: 14.1MHz • AGC SWITCH: OFF • Apply an RF sweep signal to the ANTENNA CONNECTOR. Center frequency: 14.1MHz Sweep band width: ±10MHz	RF	Connect an oscilloscope to P3 through the detector.	IF band width 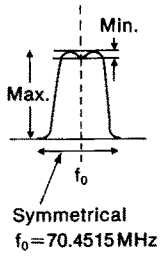	RF	L17, L18, L19, L20

MAIN AND RF UNITS

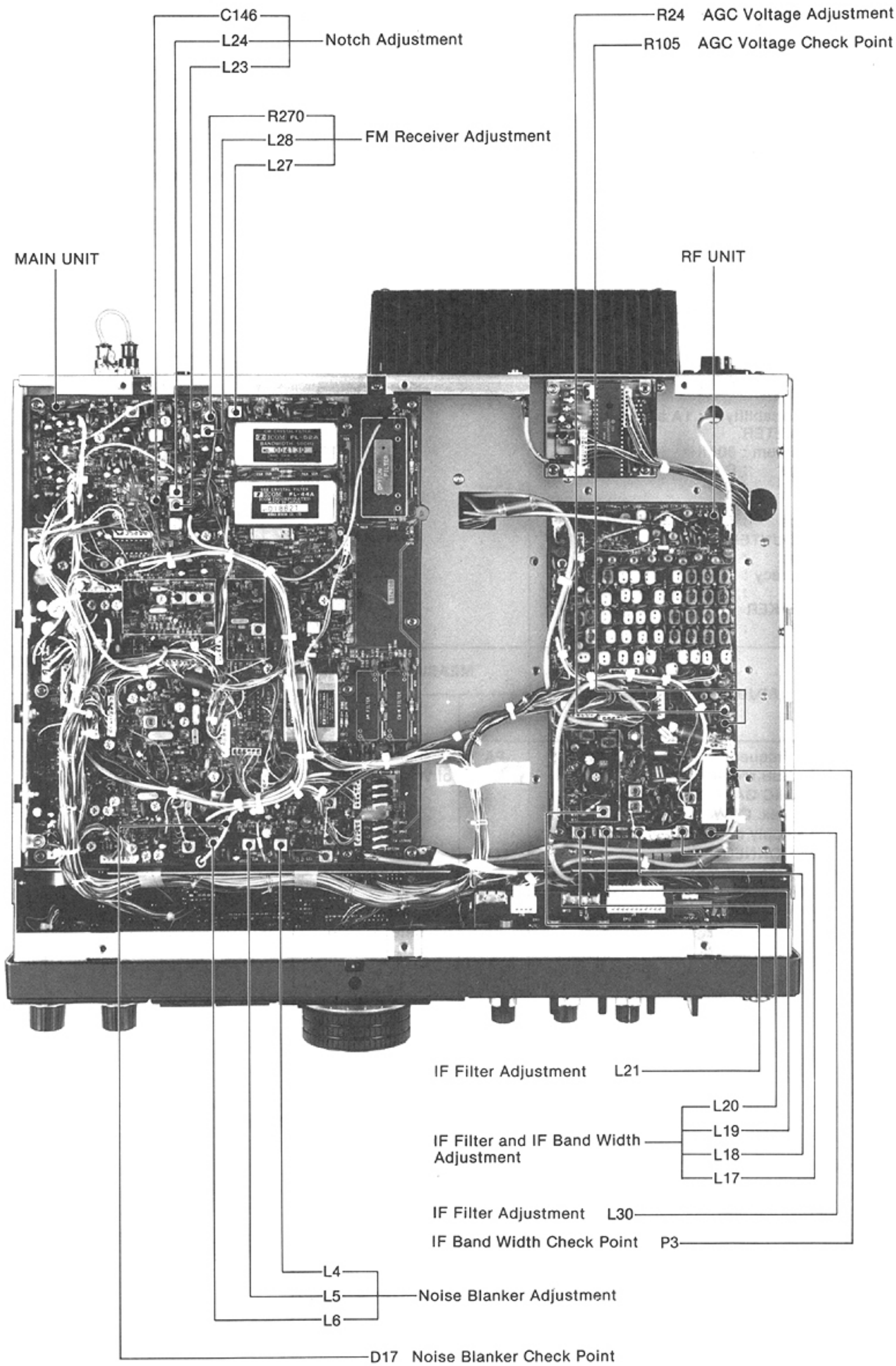

6-5 TRANSMITTER ADJUSTMENT

TEST INSTRUMENTS REQUIRED	MEASUREMENT CONNECTION LOCATION
(1) AC POWER SUPPLY • Output voltage : 13.8V DC • Current capacity : 25A or more (2) RF POWER METER (TERMINATED TYPE) • Measuring range : 20~200W • Frequency range : 1.8~30MHz • Impedance : 50Ω • SWR : Less than 1:1.2 (3) AF GENERATOR (AG) • Frequency range : 200~3000Hz • Output level : 0~300mV (4) AC MILLI-VOLTMETER • Measuring range : 10mV~3V (5) RF VOLTMETER • Frequency range : 0.1~80MHz • Measuring range : 0.01~10V (6) OSCILLOSCOPE • Frequency range : DC~20MHz • Measuring range : 0.01~10V (7) AMMETER • Measurement capability to: 1A and 25A (8) FM DEVIATION METER • Frequency minimum : 30MHz • Measuring range : 0~±5V • De-emphasis : OFF (9) DC VOLTMETER • Input impedance : 50kΩ/DC or better (10) FREQUENCY COUNTER • Frequency range : 0.1~90MHz • Frequency accuracy : ±1ppm or better • Sensitivity : 100mV or better (11) EXTERNAL SPEAKER • Impedance : 8Ω	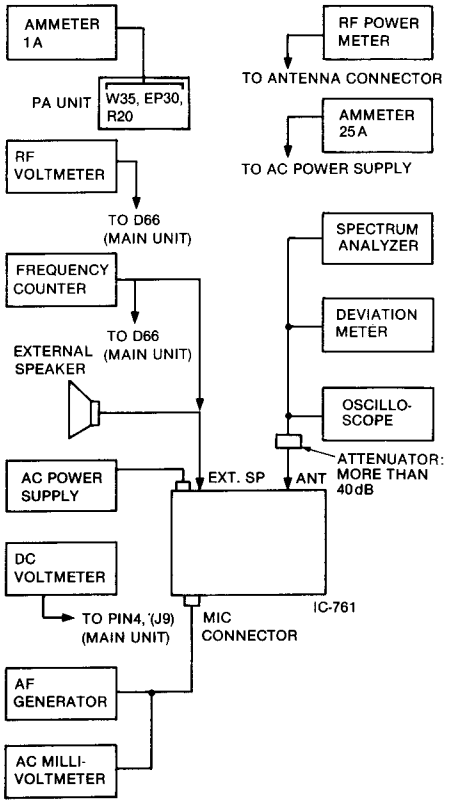

ADJUSTMENT		ADJUSTMENT CONDITIONS	MEASUREMENT		VALUE	ADJUSTMENT POINT	
			UNIT	LOCATION		UNIT	ADJUST
IDLING CURRENT Ⓐ For driver transistors	1	• Frequency display: 14.1MHz • SSB mode • MIC GAIN CONTROL: Max. CCW • Apply no AF signal to the MIC CONNECTOR. • Transmit mode NOTE: Resolder after making adjustments in steps 1 and 2.	PA	Desolder the center of W35. 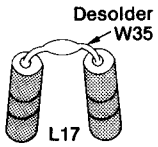 Connect an ammeter at W35. 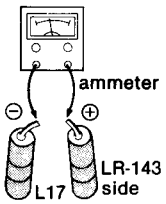	100mA	PA	R27
Ⓑ For final transistors	2			Desolder R20 and connect an ammeter between EP30 and R20. 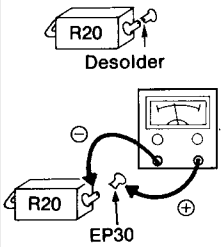	600mA		R23

PA UNIT

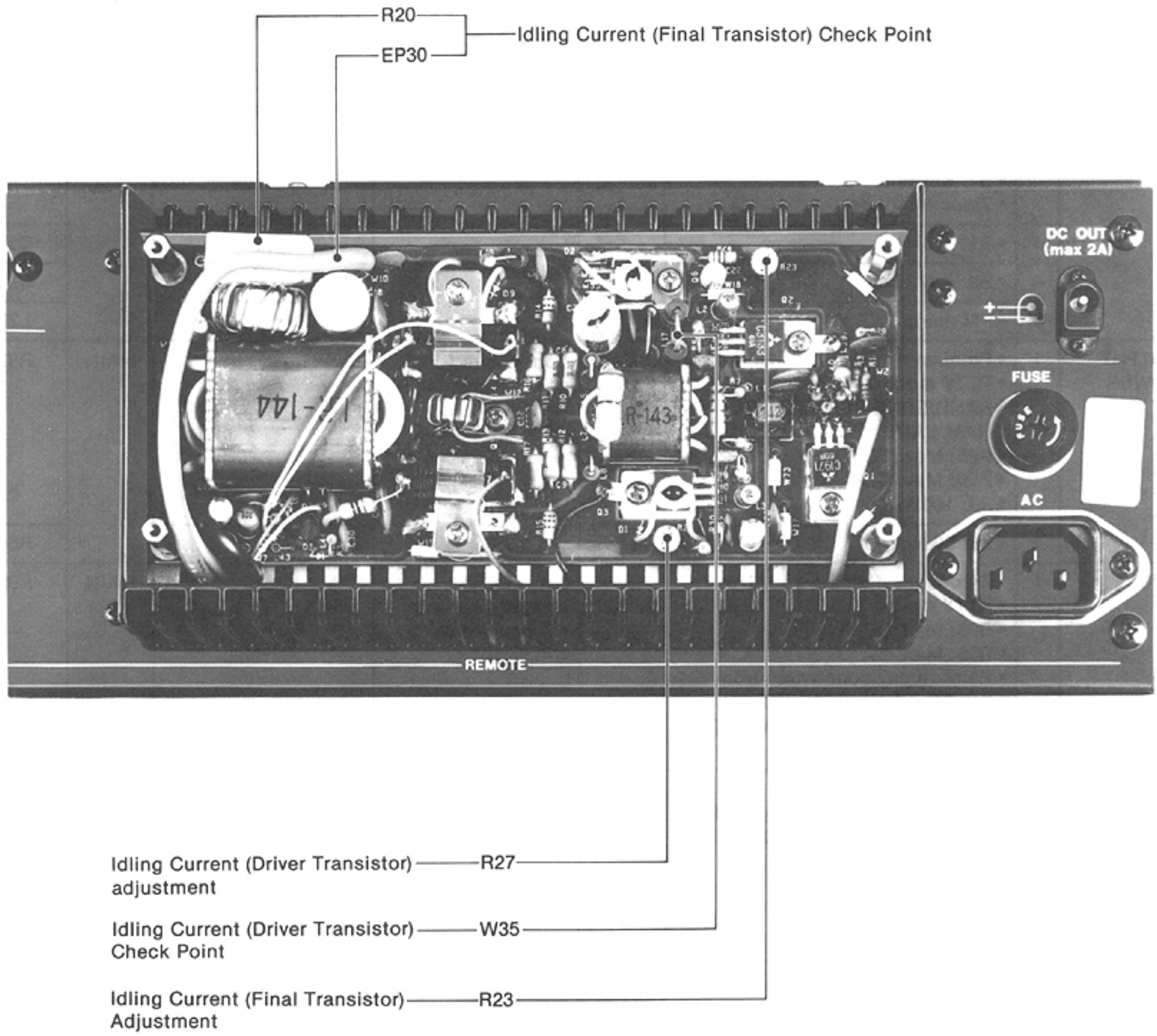
R20
EP30
Idling Current (Final Transistor) Check Point
DC OUT
(max 2A)
FUSE
AC
REMOTE
Idling Current (Driver Transistor) adjustment
R27
Idling Current (Driver Transistor) Check Point
W35
Idling Current (Final Transistor) Adjustment
R23

TRANSMITTER ADJUSTMENT (CONTINUED)

ADJUSTMENT		ADJUSTMENT CONDITIONS	MEASUREMENT		VALUE	ADJUSTMENT POINT	
			UNIT	LOCATION		UNIT	ADJUST
IF AMP GAIN	1	• Frequency display: 14.1 MHz • RTTY/General mode • Transmit mode	MAIN	Connect an RF voltmeter to anode of D66.	Adjust to maximum output: 30~80 mVp-p.	MAIN	L1, L2
OUTPUT FREQUENCY	2	• Frequency display: 14.1 MHz • RTTY/General mode • S1: 850 Hz • S2: Key short • Transmit mode	MAIN	Connect a frequency counter to anode of D66.	9.01145 MHz	MAIN	C15
	3	• S1: 170 Hz			9.01077 MHz		C17
	4	• S2: Key open			9.0106 MHz		C20
	5	• FM mode			9.0100 MHz		L29
OUTPUT POWER	1	• Frequency display: 14.1 MHz • RTTY mode • BAND/GENE SWITCH: HAM BAND • R95: Max. CCW • R99: Max. CCW • S8: 100 W	REAR PANEL	Connect an RF power meter to the ANTENNA CONNECTOR.	100 W	MAIN	R87
	2	• S8: 50 W			50 W		R84
APC	1	• Frequency display: 14.1 MHz • RTTY mode • R95: Max. CCW • R99: Max. CW • Remove any connection from the ANTENNA CONNECTOR. • RF POWER CONTROL: Max. CW • Transmit mode	REAR PANEL	Connect an ammeter between AC power supply and IC-761.	22 A	MAIN	R99
(SWR APC METER)	2	• METER SWITCH: Po • Connect a SWR3 dummy load to the ANTENNA CONNECTOR. (150Ω dummy load)	FRONT PANEL	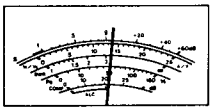 Multifunction meter (Po scale)	50 W (Po scale)		R95
METER ⓐ Po METER	1	• Frequency display: 14.1 MHz • RTTY mode • BAND/GENE SWITCH: HAM BAND • COMP SWITCH: OFF • METER SWITCH: Po • Transmit mode	REAR PANEL	Connect an RF meter to the ANTENNA CONNECTOR.	100 W	FRONT PANEL	RF POWER CONTROL
			FRONT PANEL	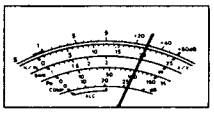 Multifunction meter (Po scale)	100% (Po scale)	MAIN	R91
ⓑ Ic METER	2	• RTTY/General mode • METER SWITCH: Ic • Transmit mode		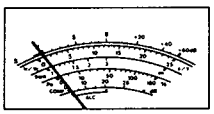 Multifunction meter (Po scale)	1 A (Ic scale)		R103
	3	• RTTY mode • RF POWER CONTROL: Max. CW • BAND/GENE SWITCH: HAM BAND • Transmit mode		Ic METER	Adjust to total current minus 3 A.	MAIN	R98

MAIN UNIT

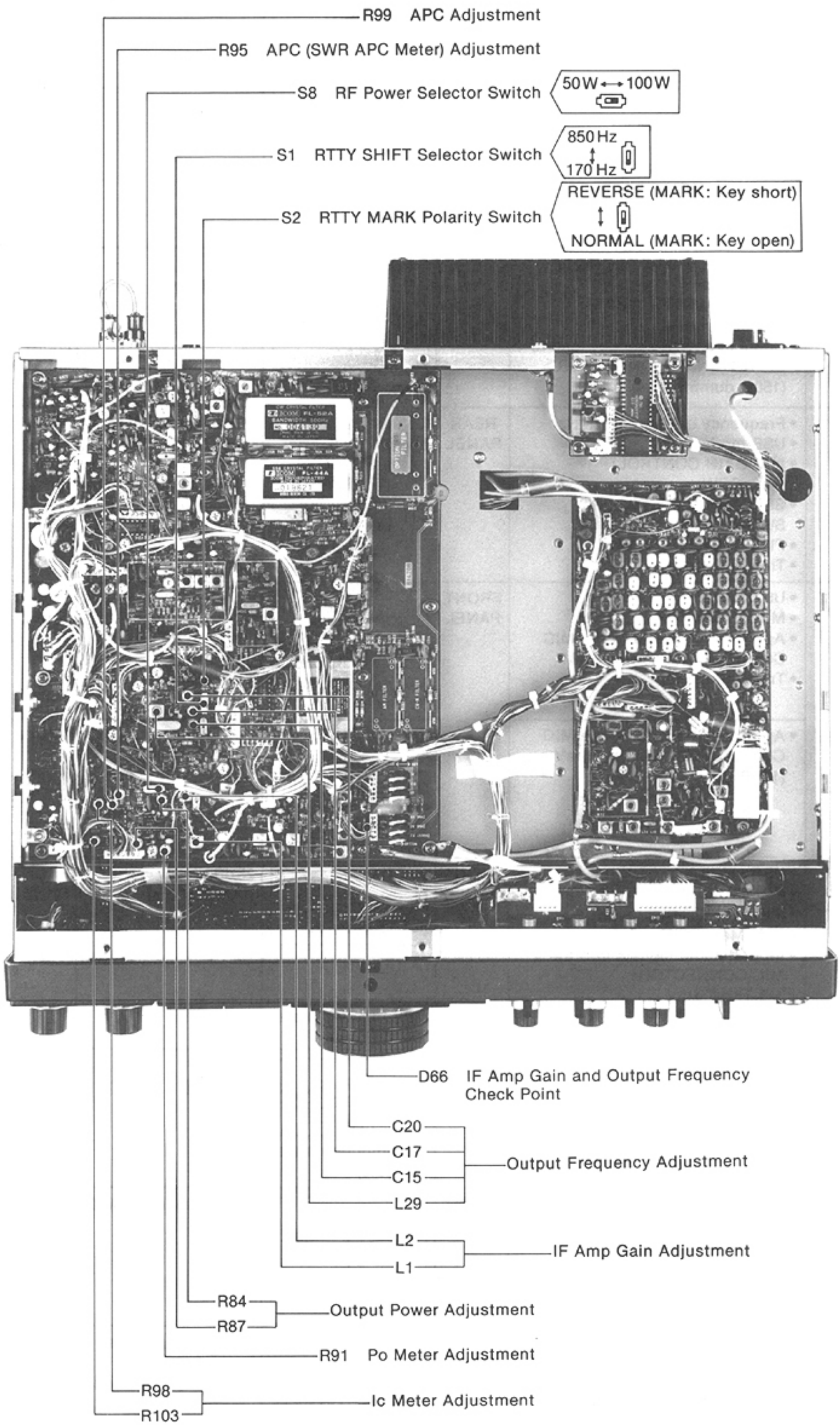
R99 APC Adjustment
R95 APC (SWR APC Meter) Adjustment
S8 RF Power Selector Switch
50W ↔ 100W
S1 RTTY SHIFT Selector Switch
850 Hz
170 Hz
S2 RTTY MARK Polarity Switch
REVERSE (MARK: Key short)
NORMAL (MARK: Key open)
D66 IF Amp Gain and Output Frequency Check Point
C20
C17
C15
L29
Output Frequency Adjustment
L2
L1
IF Amp Gain Adjustment
R84
R87
Output Power Adjustment
R91 Po Meter Adjustment
R98
R103
Ic Meter Adjustment

TRANSMITTER ADJUSTMENT (CONTINUED)

ADJUSTMENT		ADJUSTMENT CONDITIONS	MEASUREMENT		VALUE	ADJUSTMENT POINT	
			UNIT	LOCATION		UNIT	ADJUST
ⓒ Vc METER	4	• SSB mode • MIC GAIN CONTROL: Max. CCW • METER SWITCH: Vc • No MIC input • Transmit mode	FRONT PANEL	Vc METER Multifunction meter (Vc scale)	13.8V (Vc scale)	MAIN	R106
ⓓ SWR METER	5	• Frequency display: 14.1MHz • RTTY mode • METER SWITCH: SWR • Transmit mode • Connect a SWR3 dummy load to the ANTENNA CONNECTOR. (150Ω dummy load)		SWR METER Multifunction meter (SWR scale)	SWR3 (SWR scale)	NB VR (Located rear side of the FRONT PANEL)	R41
CARRIER SUPPRES-SION	1	• Frequency display: 14.1MHz • USB mode • MIC GAIN CONTROL: Max. CCW • SPEECH COMPRESSOR SWITCH: ON • FILTER SWITCH: ON • Transmit mode	REAR PANEL	Connect a spectrum analyser to the ANTENNA CONNECTOR via an attenuator.	Minimum carrier level (Less than −50dB)	MAIN	R158, R161 (Alternately adjust)
ALC METER	1	• USB mode • METER SWITCH: ALC • Apply an AF signal to the MIC CONNECTOR: 1.5kHz, 3mV • Transmit mode	FRONT PANEL	Multifunction meter (Ic scale)	2A (Ic scale)	FRONT PANEL	MIC GAIN CONTROL
		• Apply an AF signal to the MIC CONNECTOR: 1.5kHz, 10mV (10dB up)		Multifunction meter (ALC scale)	Full scale in the ALC zone	MAIN	R68
COMP METER	1	• USB mode • COMP SWITCH: ON • METER SWITCH: COMP • L16: Max. CCW • Input 2 audio signals into the MIC CONNECTOR: 1.1kHz 3mV 1.7kHz 3mV • Transmit mode	FRONT PANEL	Multifunction meter (COMP scale)	25dB (COMP scale)	FRONT PANEL	MIC GAIN CONTROL
		• METER SWITCH: ALC		Multifunction meter (Ic scale)	9A (Ic scale)	MAIN	R196
AM CARRIER LEVEL	1	• Frequency display: 14.1MHz • AM mode • METER SWITCH: ALC • Transmit mode	FRONT PANEL	Multifunction meter (ALC scale)	Full scale in the ALC zone	MAIN	R159
TRANSMIT SPURIOUS LEVEL	1	• Frequency display: 14.1MHz • USB mode • Apply an AF signal to the MIC CONNECTOR: 1.5kHz, 10mV • Transmit mode	REAR PANEL	Connect a spectrum analyzer to the ANTENNA CONNECTOR via an attenuator.	Minimum spurious level of carrier frequency −455kHz.	MAIN	R239

MAIN UNIT

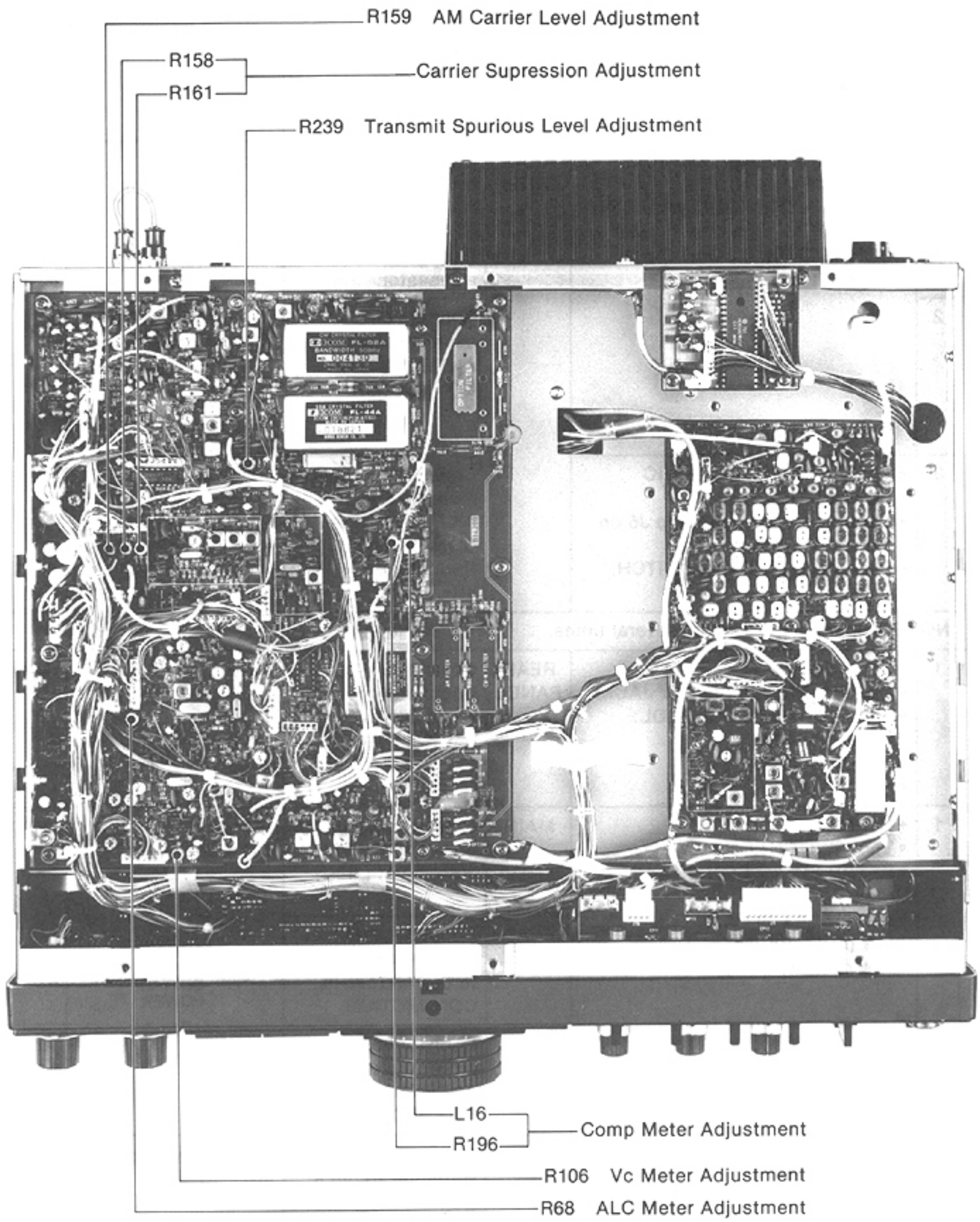

FRONT UNIT

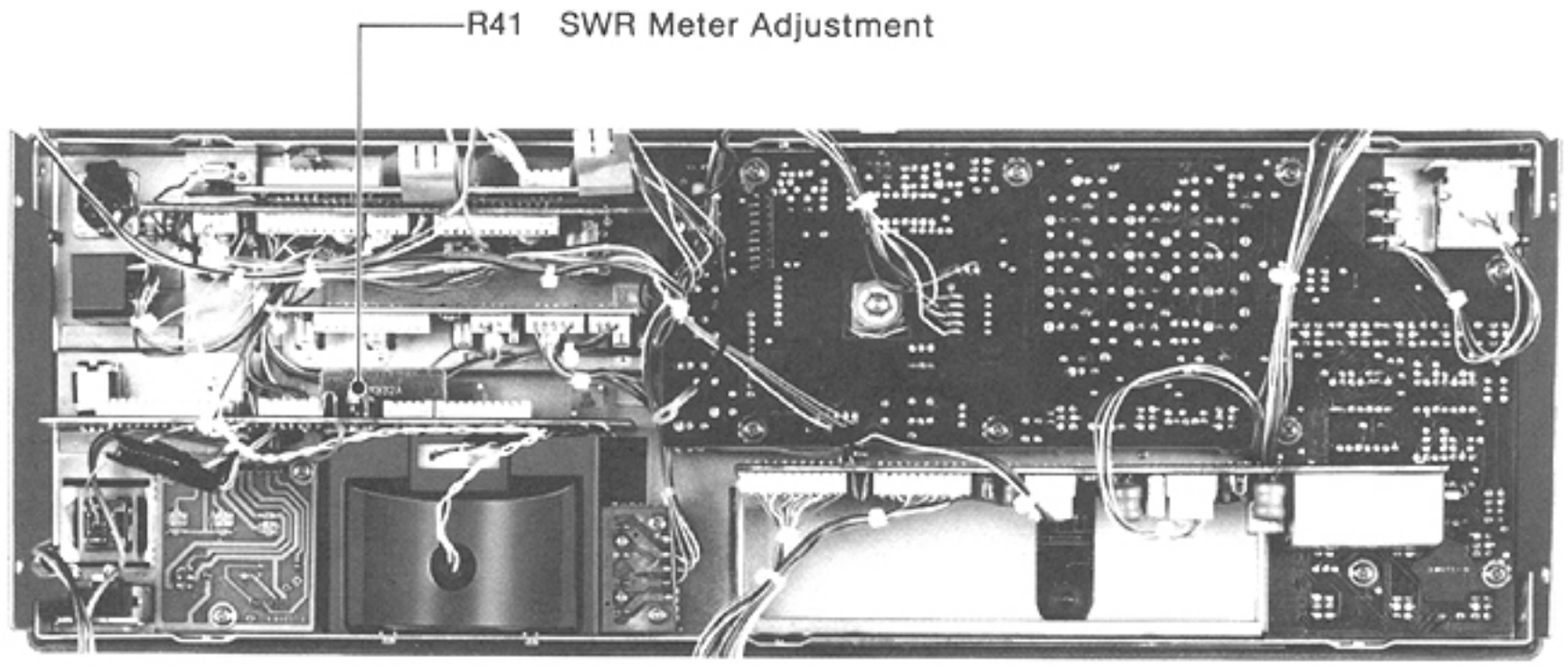

TRANSMITTER ADJUSTMENT (CONTINUED)

ADJUSTMENT		ADJUSTMENT CONDITIONS	MEASUREMENT		VALUE	ADJUSTMENT POINT	
			UNIT	LOCATION		UNIT	ADJUST
FM DEVIATION	1	• Frequency display: 28.1 MHz • FM mode • MIC GAIN CONTROL: Max. CW • Apply an AF signal to the MIC CONNECTOR: 1.0kHz, 10mV. • Transmit mode	REAR PANEL	Connect a deviation meter to the ANTENNA CONNECTOR through an attenuator.	±4.7kHz	MAIN	R292
	2			Connect an oscilloscope to the ANTENNA CONNECTOR.	Minimum vestigial AM component.		L2
	3	• Apply no signal to the MIC CONNECTOR. • Connect UT-30 (option) to J6 on the MAIN UNIT. • Push the FUNCTION SWITCH.		Connect a deviation meter to the ANTENNA CONNECTOR through an attenuator.	±500Hz		R290
	NOTE: Repeat steps 1 and 3 several times.						
CW SIDETONE	1	• CW mode • Connect a key to the KEY JACK. • MONITOR GAIN CONTROL: Center position • Transmit mode • Key down	REAR PANEL	Connect a frequency counter to the EXT. SP JACK.	700Hz	MAIN	R374
TRANSMIT START TIME	1	• CW mode • VOX SWITCH: ON • KEYER SPEED CONTROL: Max. CW • VOX DELAY CONTROL: Max. CW (FULL BK-IN) • Key down to dot position	MAIN	Connect lead of an oscilloscope to the cathode of D13.	19msec. D13 SEND LINE 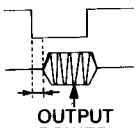 OUTPUT POWER	MAIN	R451
			REAR PANEL	Connect other lead of an oscilloscope to the ANTENNA CONNECTIOR.			
SWR DETECTOR	1	• Ground L41 to the chassis. • Apply an AF signal to the MIC CONNECTOR at 1.5kHz. • Frequencu display: 14.1MHz • SSB mode • Transmit mode	REAR PANEL	Connect an RF power meter to the ANTENNA CONNECTOR.	100W	Applied AF signal level	
			MAIN	Connect a DC voltmeter to pin 4 (J9).	Minimum voltage level.	FILTER	C36
	NOTE: After completing the adjustment, return L41 to its original condition.						

MAIN UNIT

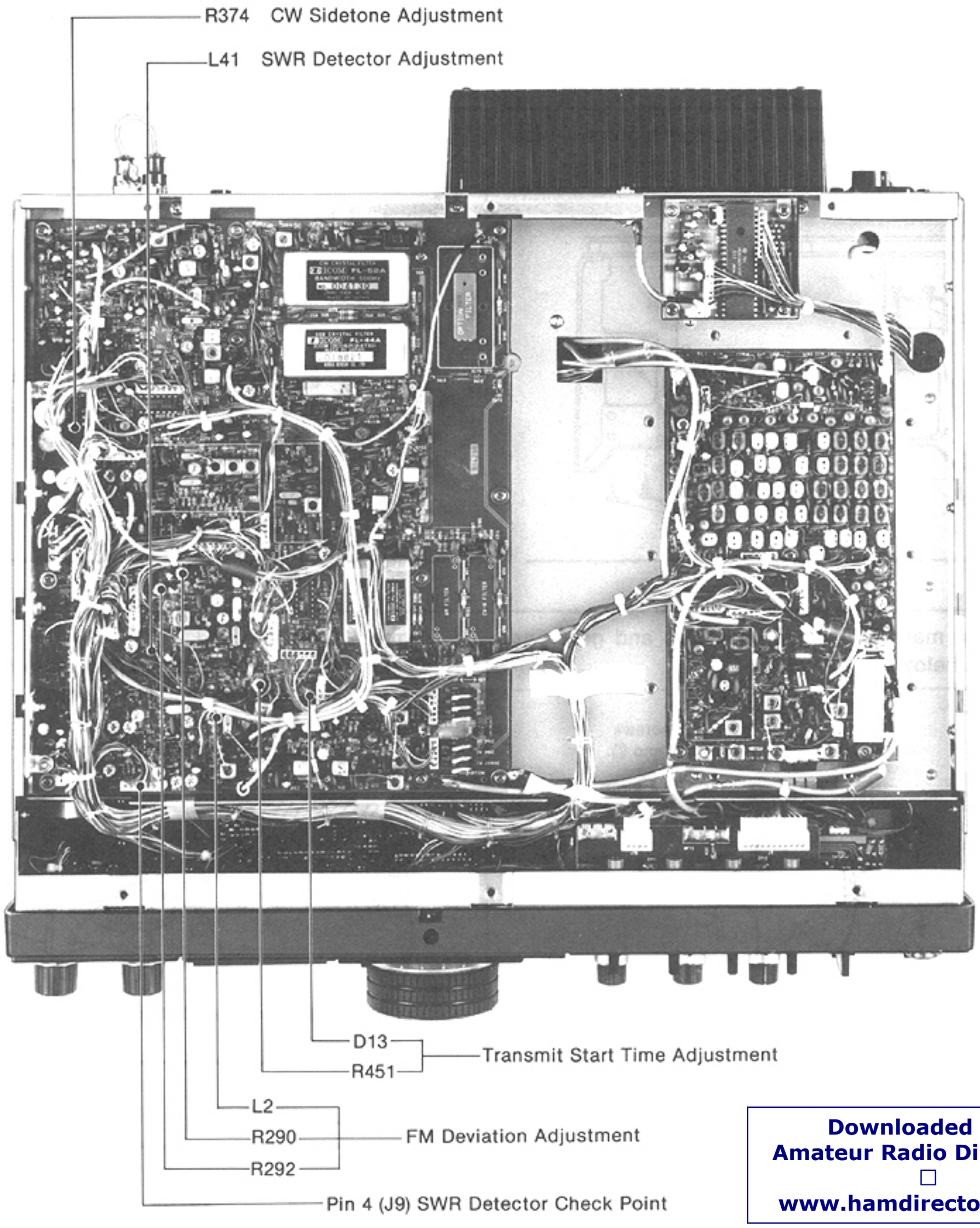

FILTER UNIT

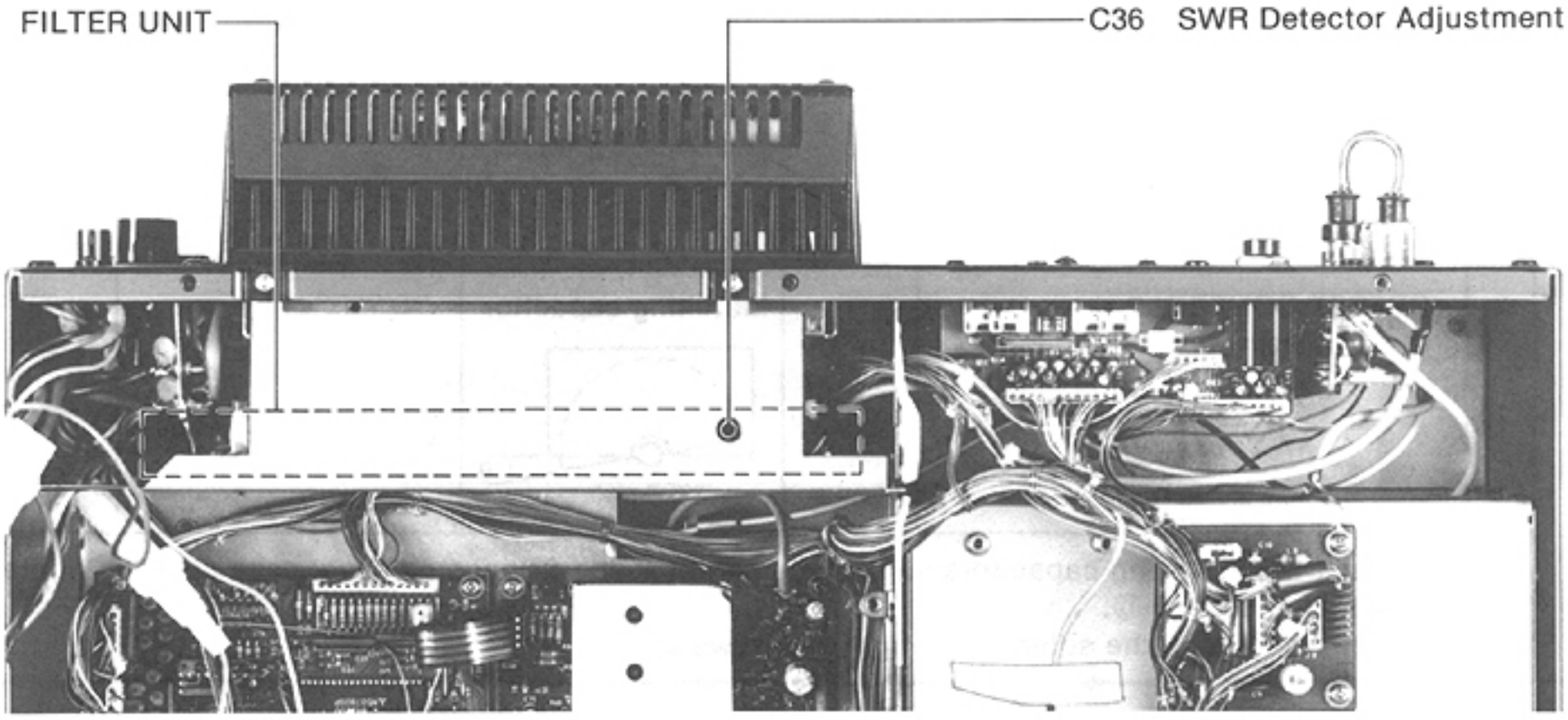

6-6 TUNER UNIT ADJUSTMENT

MATCHING CAPACITOR SECTION

1. COARSE ADJUSTMENT

① Remove the matching capacitor motors Ⓐ by removing screws Ⓑ.

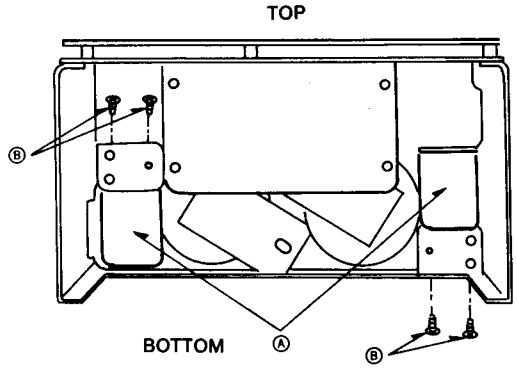

② Loosen screws Ⓒ and Ⓓ.
③ Align each part position, as shown below.

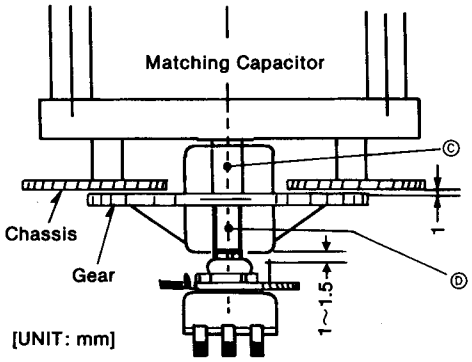

④ Set the matching capacitor rotors and gears as shown below.

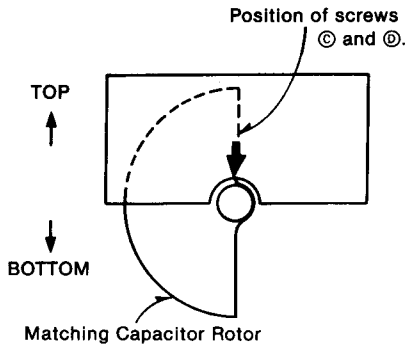

⑤ Tighten screws Ⓒ and Ⓓ.
⑥ Attach the matching capacitor motors Ⓐ, and adjust their positions as shown below.
⑦ Tighten screws Ⓑ.

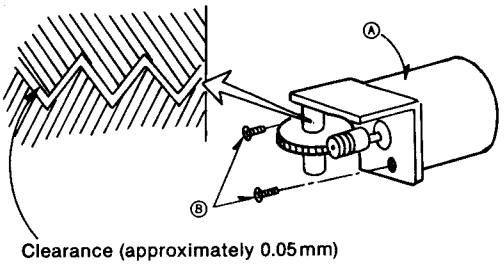

2. FINE ADJUSTMENT

ADJUSTMENT		ADJUSTMENT CONDITIONS	MEASUREMENT		VALUE	ADJUSTMENT POINT	
			UNIT	LOCATION		UNIT	ADJUST
MATCHING CAPACITORS	1	• Frequency display: 14.1MHz • FM mode • PRESET mode • Transmit mode • PRESET CONTROLS (for 14MHz): Max. CCW	ANTENNA TUNER	Matching capacitor 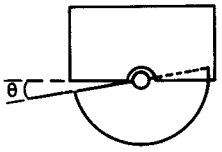	θ=θ′	ANTENNA TUNER	SCREWS Ⓓ
	2	• PRESET CONTROLS (for 14MHz): Max. CCW		Matching capacitor 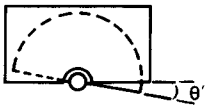			
	NOTE: Adjust the matching capacitors so that the angles θ and θ′ become equal each other by tightening and loosening screws Ⓓ. After completing the adjustment, tighten screws Ⓓ.						

3. DETECTOR SECTION

TEST INSTRUMENTS REQUIRED	MEASUREMENT CONNECTION LOCATION
(1) DC VOLTMETER • Input impedance : 50kΩ/DC or better	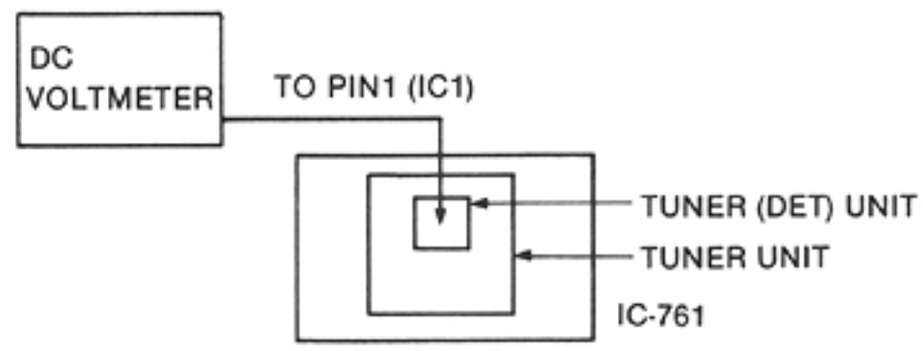

ADJUSTMENT		ADJUSTMENT CONDITIONS	MEASUREMENT		VALUE	ADJUSTMENT POINT	
			UNIT	LOCATION		UNIT	ADJUST
DETECTOR	1	• Remove the jumper connected to output terminal of DETECTOR UNIT. • Connect the coaxial cable with 50Ω dummy load to output terminal of TUNER (DET) UNIT. 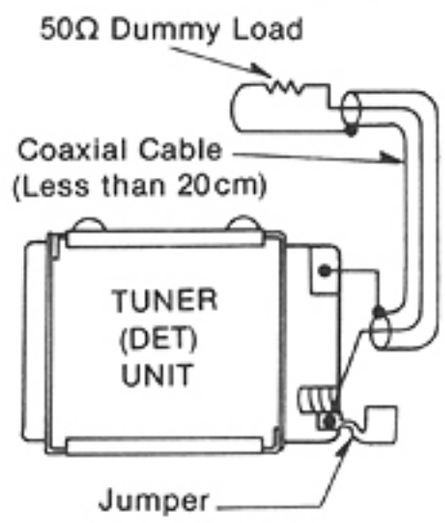 • Frequency display: 7MHz • Output power: 100W • AUTO TUNE mode • Transmit mode	TUNER (DET)	Connect a DC voltmeter to pin 1 on IC1.	0V	TUNER (DET)	C5
	NOTE: After completing the adjustment, return the output terminal of TUNER (DET) UNIT and the jumper to its original condition.						

TUNER UNIT

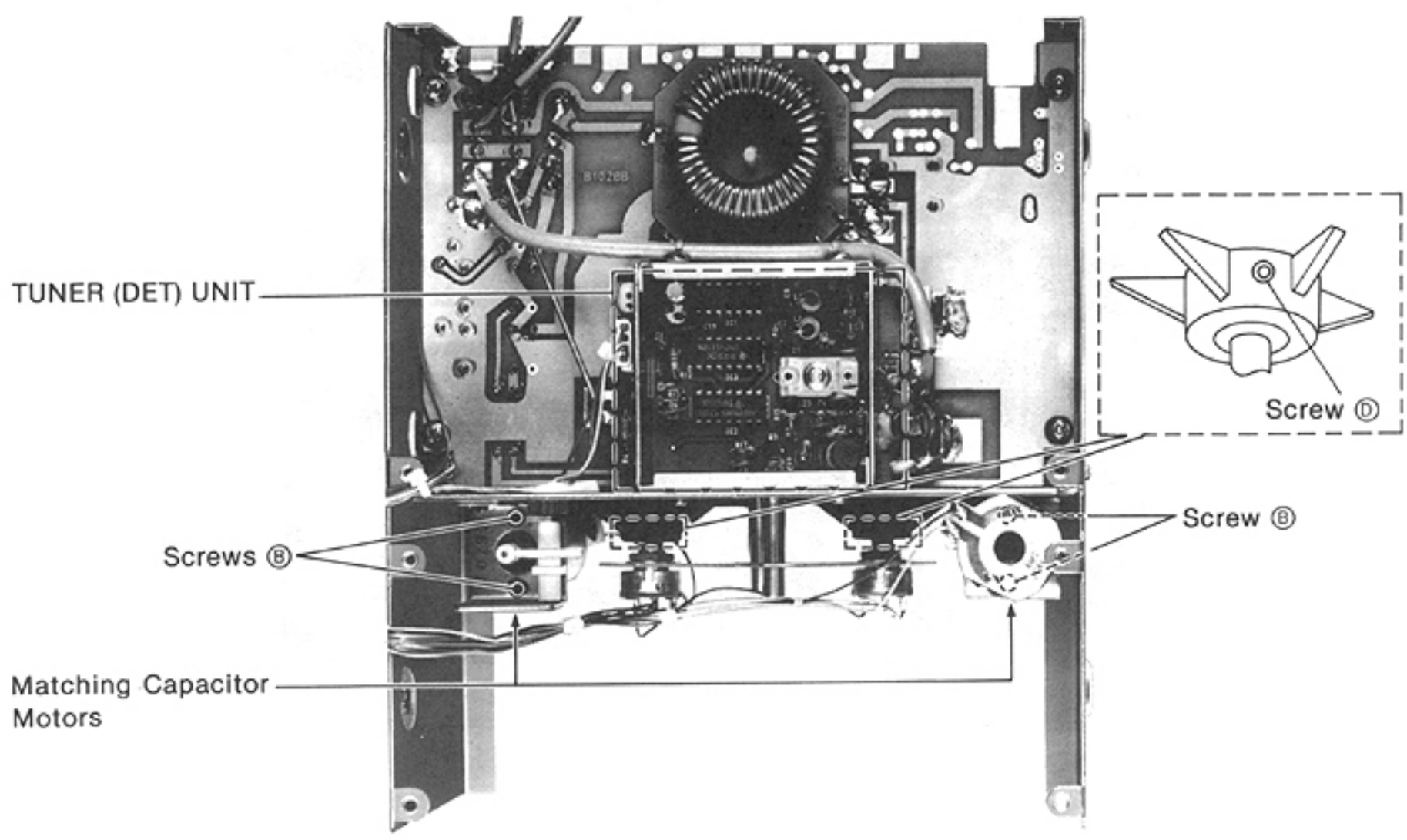

6-7 SWITCHING REGULATOR UNIT ADJUSTMENT

TEST INSTRUMENTS REQUIRED	MEASUREMENT CONNECTION LOCATION
(1) DC VOLTMETER • Input impedance : 50kΩ/DC or better (2) AMMETER • Measurement capacity to : 30A (3) RHEOSTAT • Power capacity : 500W or more	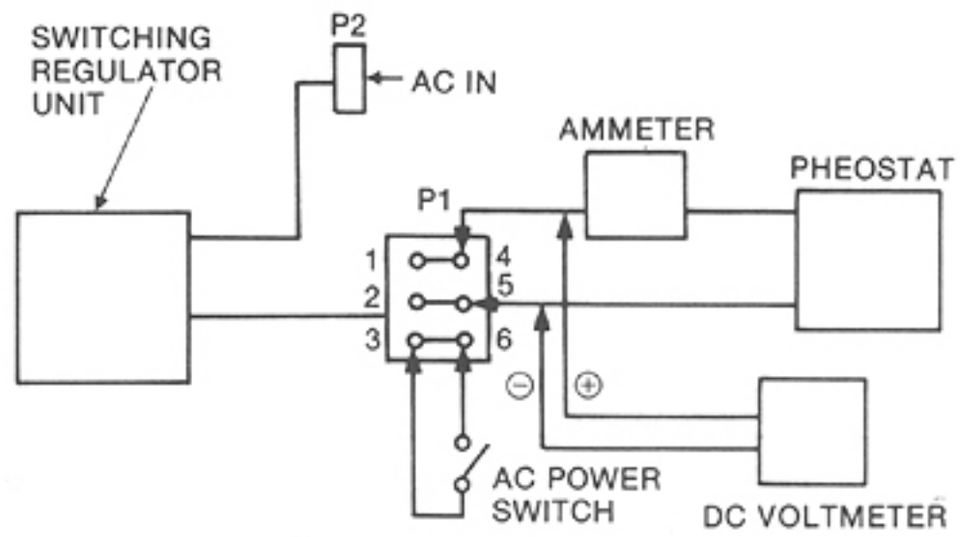

ADJUSTMENT		ADJUSTMENT CONDITIONS	MEASUREMENT		VALUE	ADJUSTMENT POINT	
			UNIT	LOCATION		UNIT	ADJUST
OUTPUT VOLTAGE	1	• Rheostat: 1.38Ω • AC power switch: ON	SWITCHING REGULATOR	Connect a DC voltmeter as shown above.	13.8V	SWITCHING REGULATOR	R14
PROTECTOR OPERATION	2	• Rheostat: 0.55Ω • AC power switch: ON	SWITCHING REGULATOR	Connect a DC voltmeter as shown above.	Turn R19 just before the output voltage drops.	SWITCHING REGULATOR	R19

SWITCHING REGULATOR UNIT

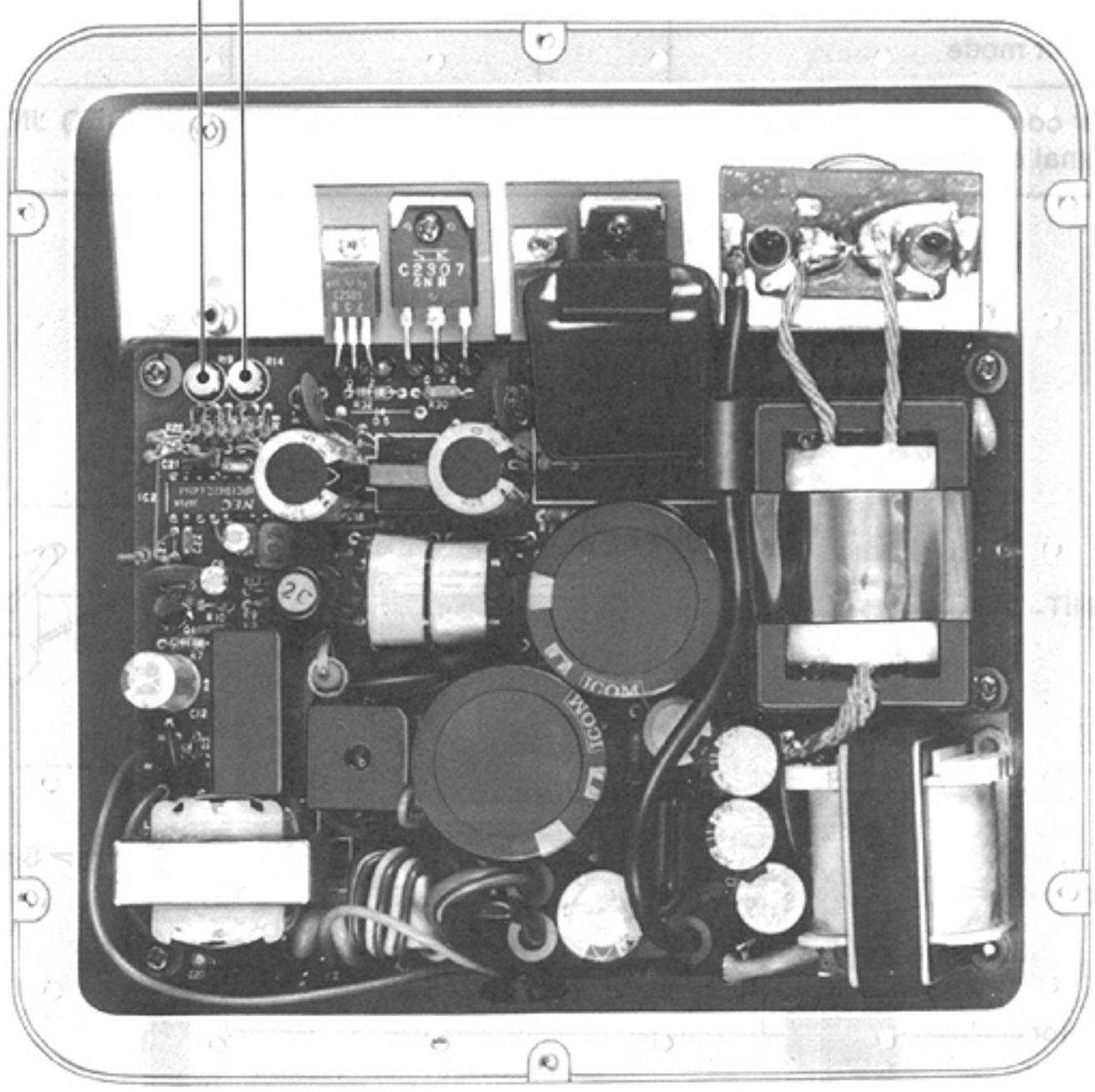

SECTION 7 BOARD LAYOUTS

7-1 INTER CONNECTION

7-1-1 FRONT PANEL SIDE

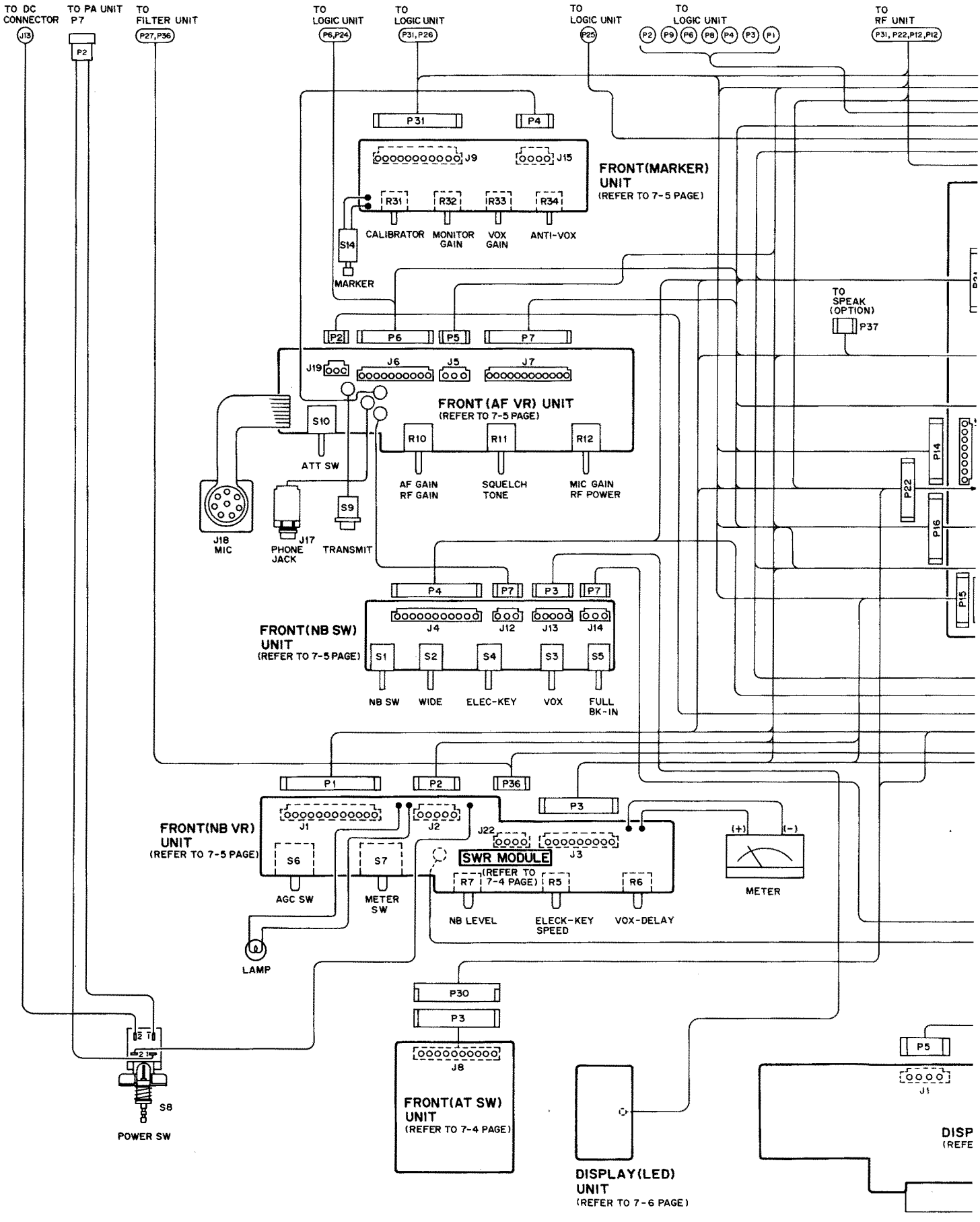

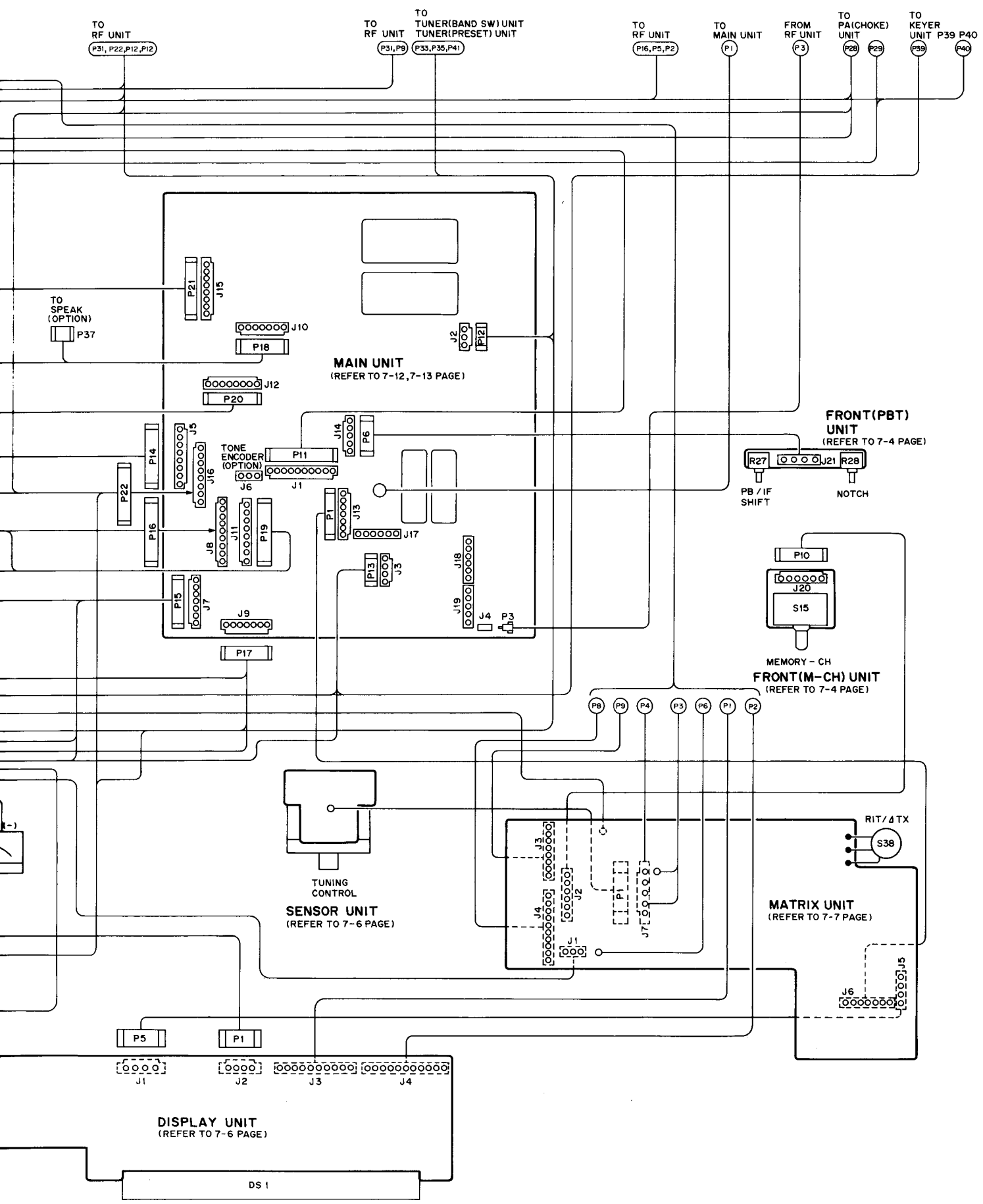
TO RF UNIT
P31, P22, P12, P12
TO RF UNIT
P31, P9
TO TUNER(BAND SW) UNIT TUNER(PRESET) UNIT
P33, P35, P41
TO RF UNIT
P16, P5, P2
TO MAIN UNIT
P1
FROM RF UNIT
P3
TO PA(CHOKE) UNIT
P28
P29
TO KEYER UNIT
P39
P40
TO SPEAK (OPTION)
P37
P21
J15
J10
P18
J12
P20
J2
P12
MAIN UNIT
(REFER TO 7-12, 7-13 PAGE)
J14
P6
TONE ENCODER (OPTION)
P11
J6
J1
P14
J5
J16
P22
P16
J8
J11
P19
P1
J13
J17
P13
J3
J18
J19
J4
P3
P15
J7
J9
P17
FRONT(PBT) UNIT
(REFER TO 7-4 PAGE)
R27
J21
R28
PB / IF SHIFT
NOTCH
P10
J20
S15
MEMORY - CH
FRONT(M-CH) UNIT
(REFER TO 7-4 PAGE)
P8
P9
P4
P3
P6
P1
P2
TUNING CONTROL
SENSOR UNIT
(REFER TO 7-6 PAGE)
RIT/ΔTX
S38
J3
J2
P1
J7
J4
J1
MATRIX UNIT
(REFER TO 7-7 PAGE)
J5
J6
P5
P1
J1
J2
J3
J4
DISPLAY UNIT
(REFER TO 7-6 PAGE)
DS 1

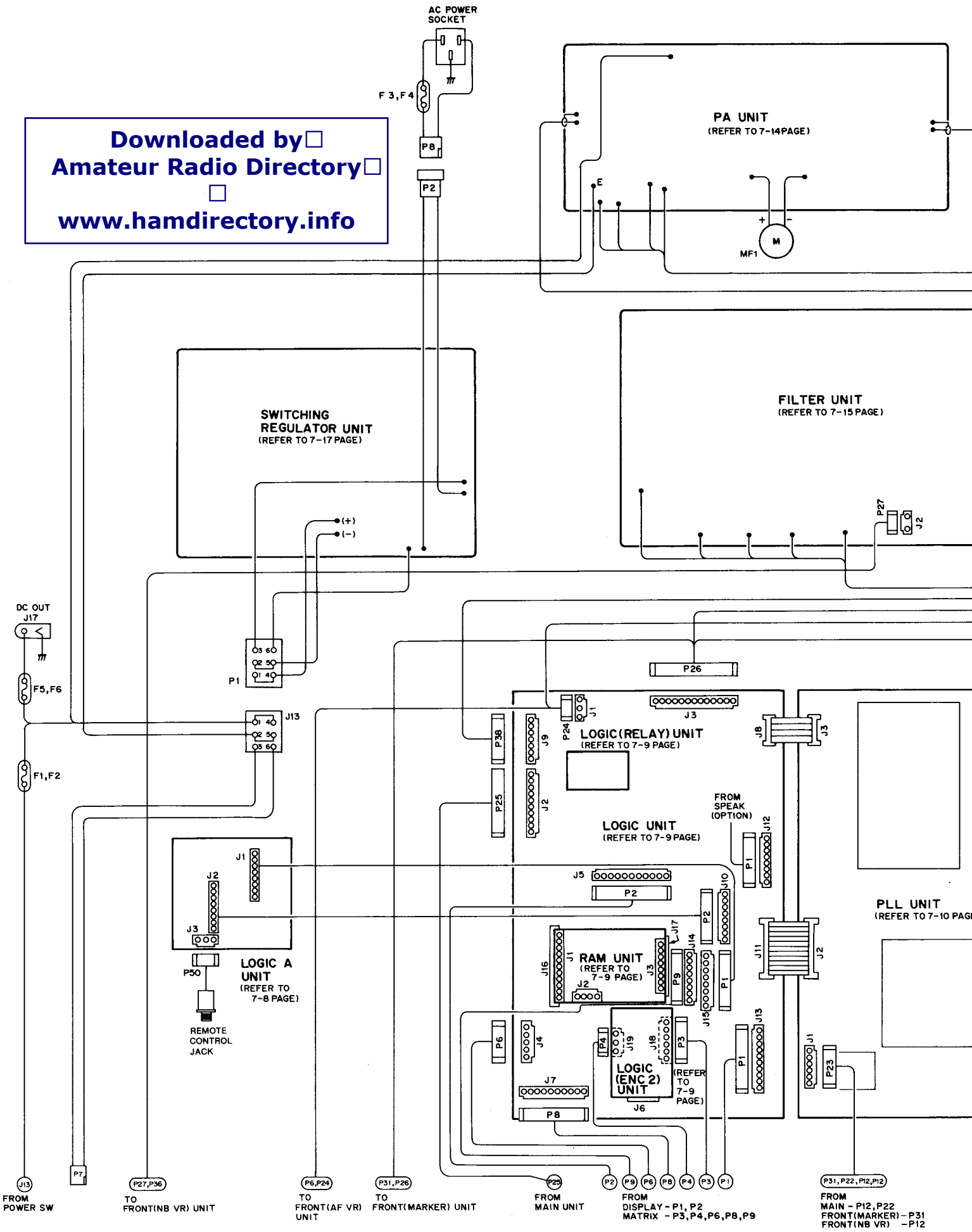

7-1-2 REAR PANEL SIDE

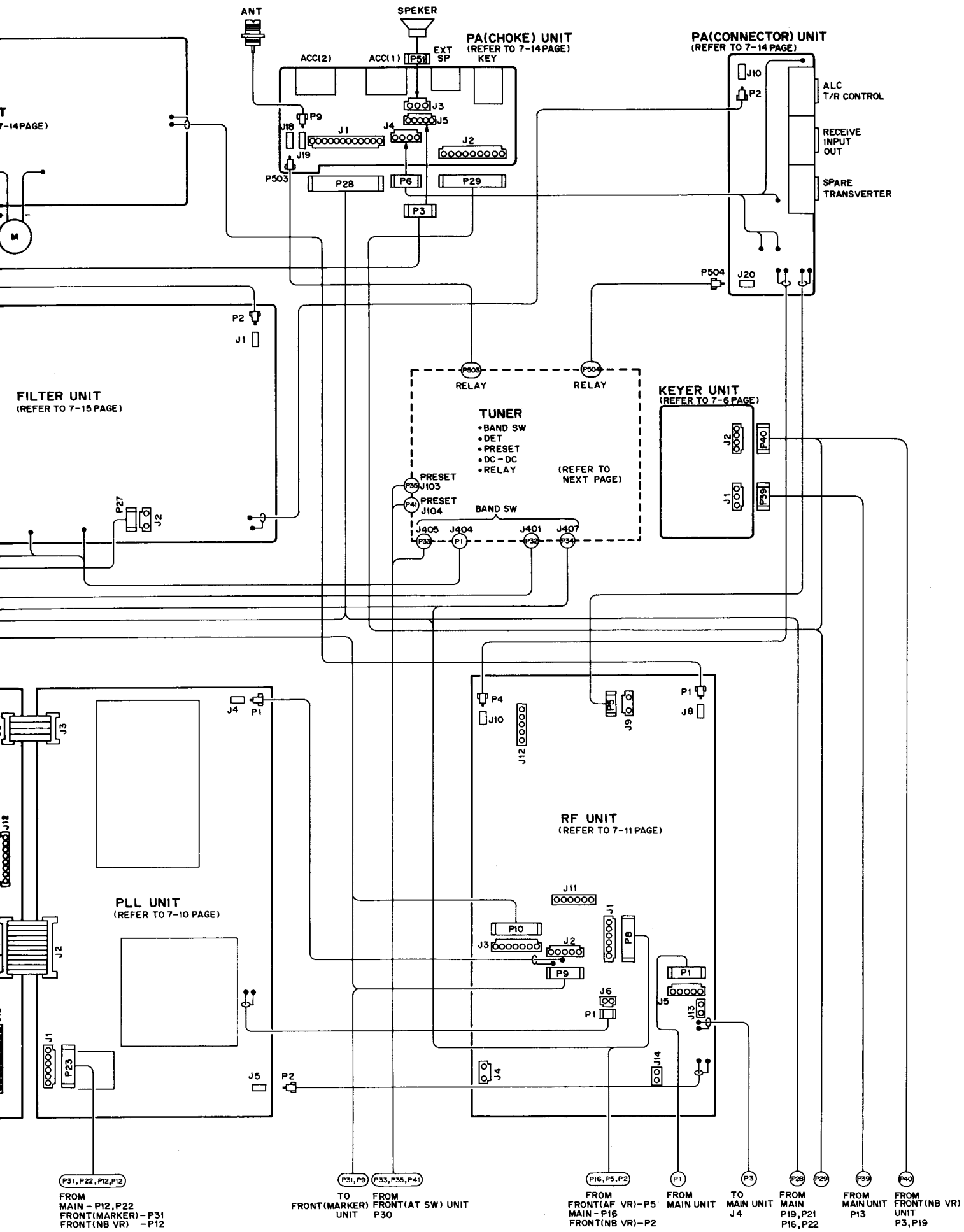

7-1-3 TUNER

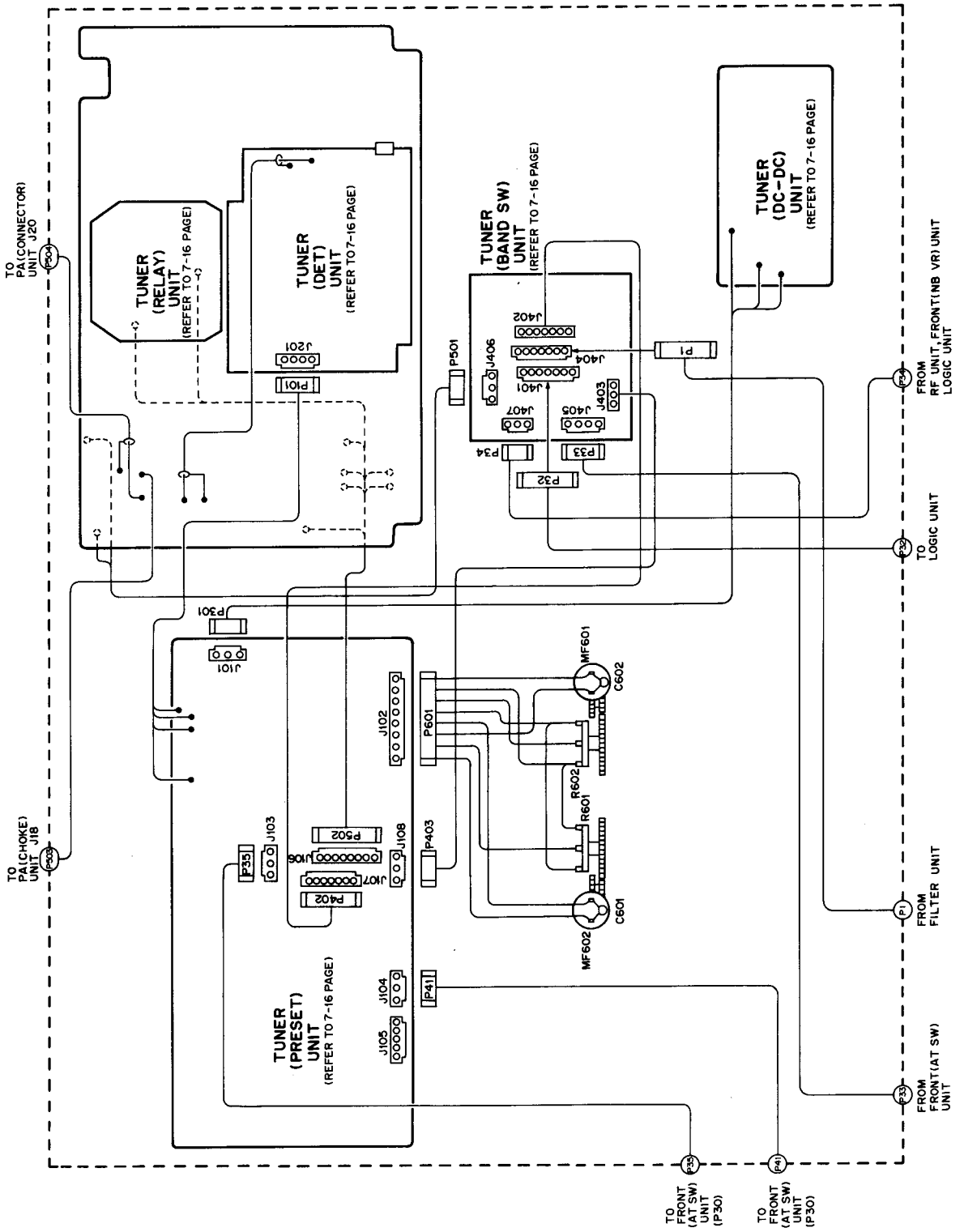
TO PA(CONNECTOR) UNIT J20
TO PA(CHOKE) UNIT J18
TUNER (RELAY) UNIT (REFER TO 7-16 PAGE)
TUNER (DET) UNIT (REFER TO 7-16 PAGE)
TUNER (BAND SW) UNIT (REFER TO 7-16 PAGE)
TUNER (DC-DC) UNIT (REFER TO 7-16 PAGE)
TUNER (PRESET) UNIT (REFER TO 7-16 PAGE)
FROM RF UNIT FRONT(NB VR) UNIT
TO LOGIC UNIT
FROM FILTER UNIT
FROM FRONT(AT SW) UNIT
TO FRONT (AT SW) UNIT (P30)
TO FRONT (AT SW) UNIT (P30)

7-2 FRONT UNIT

• FRONT (AT SW) UNIT

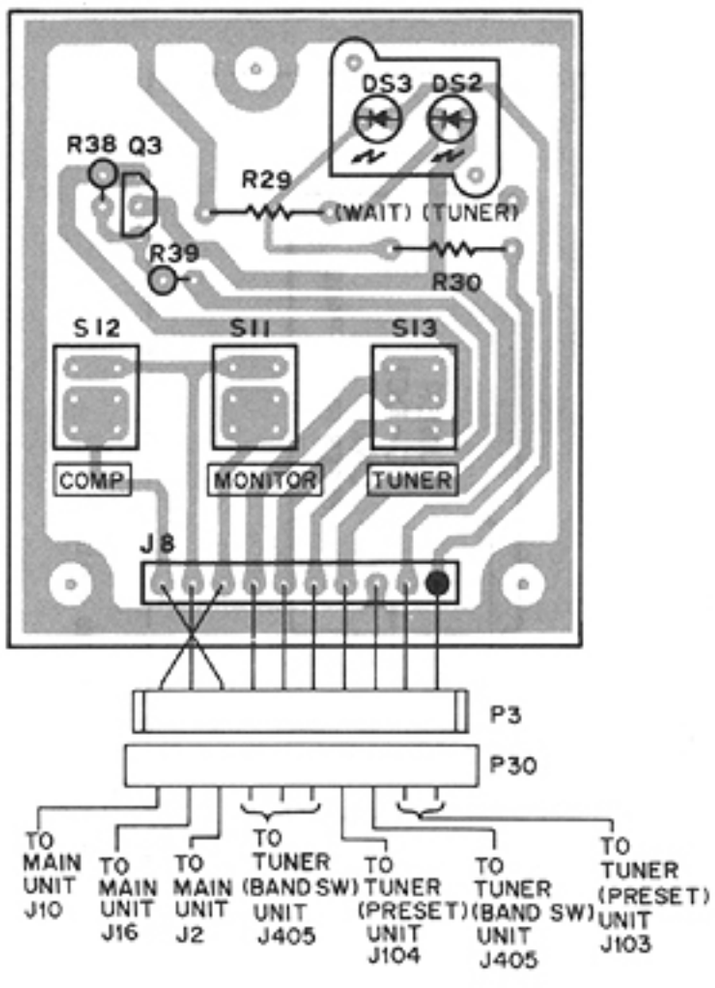

2SB562
Q3

• FRONT (M-CH) UNIT

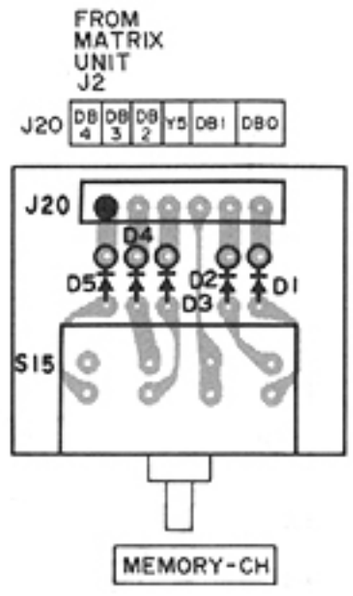

• FRONT SWR module

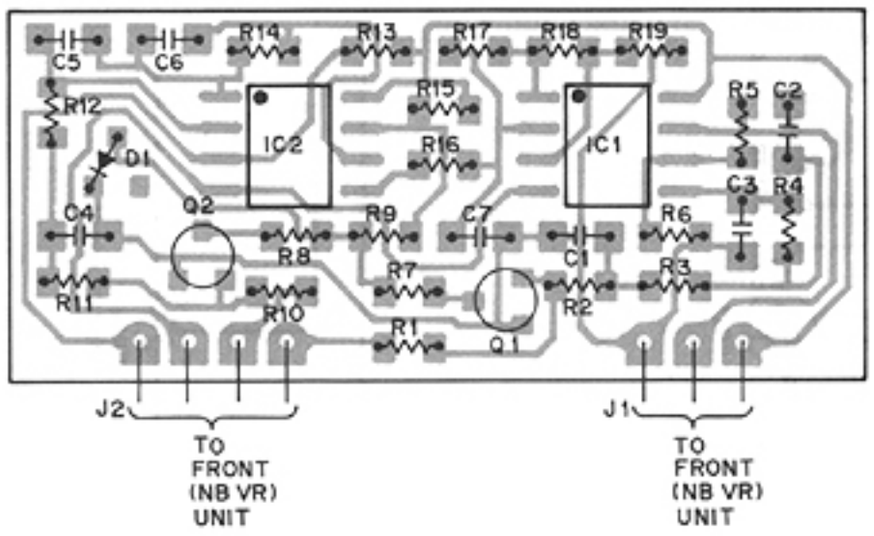

2SK209 rank Y
Q101, Q102

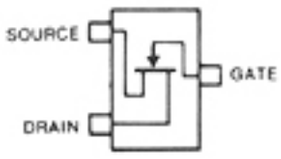

Symbol: XY

• FRONT (PBT) UNIT

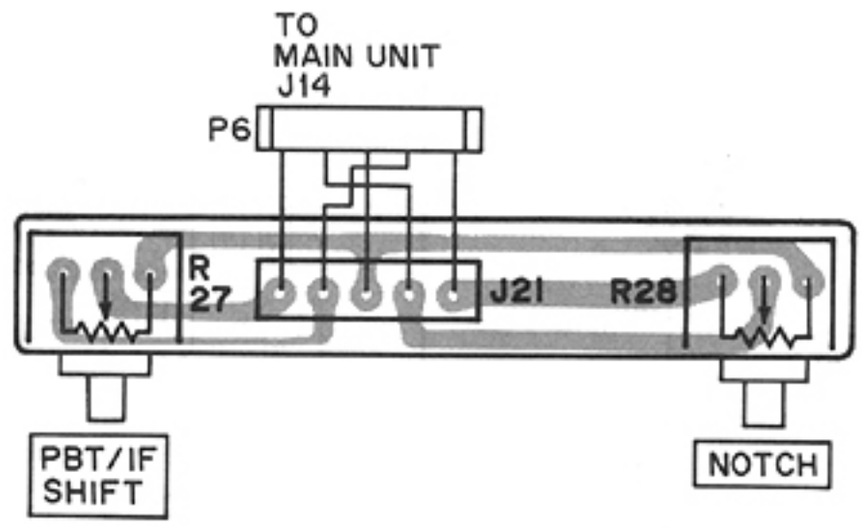

NOTE: Add "100" to the indicated on the unit for actual part number respectively.

• FRONT (NB VR) UNIT

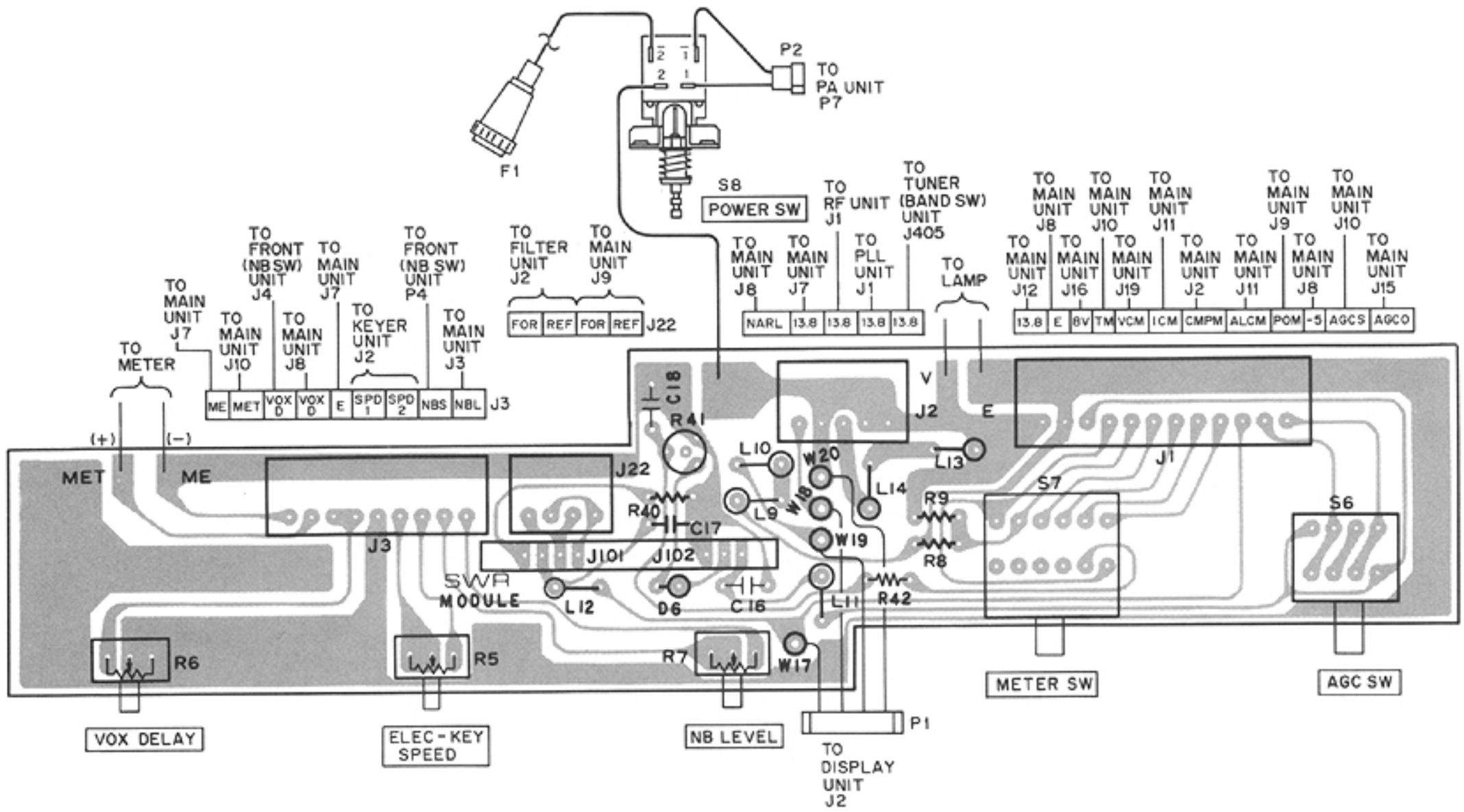

• FRONT (NB SW) UNIT

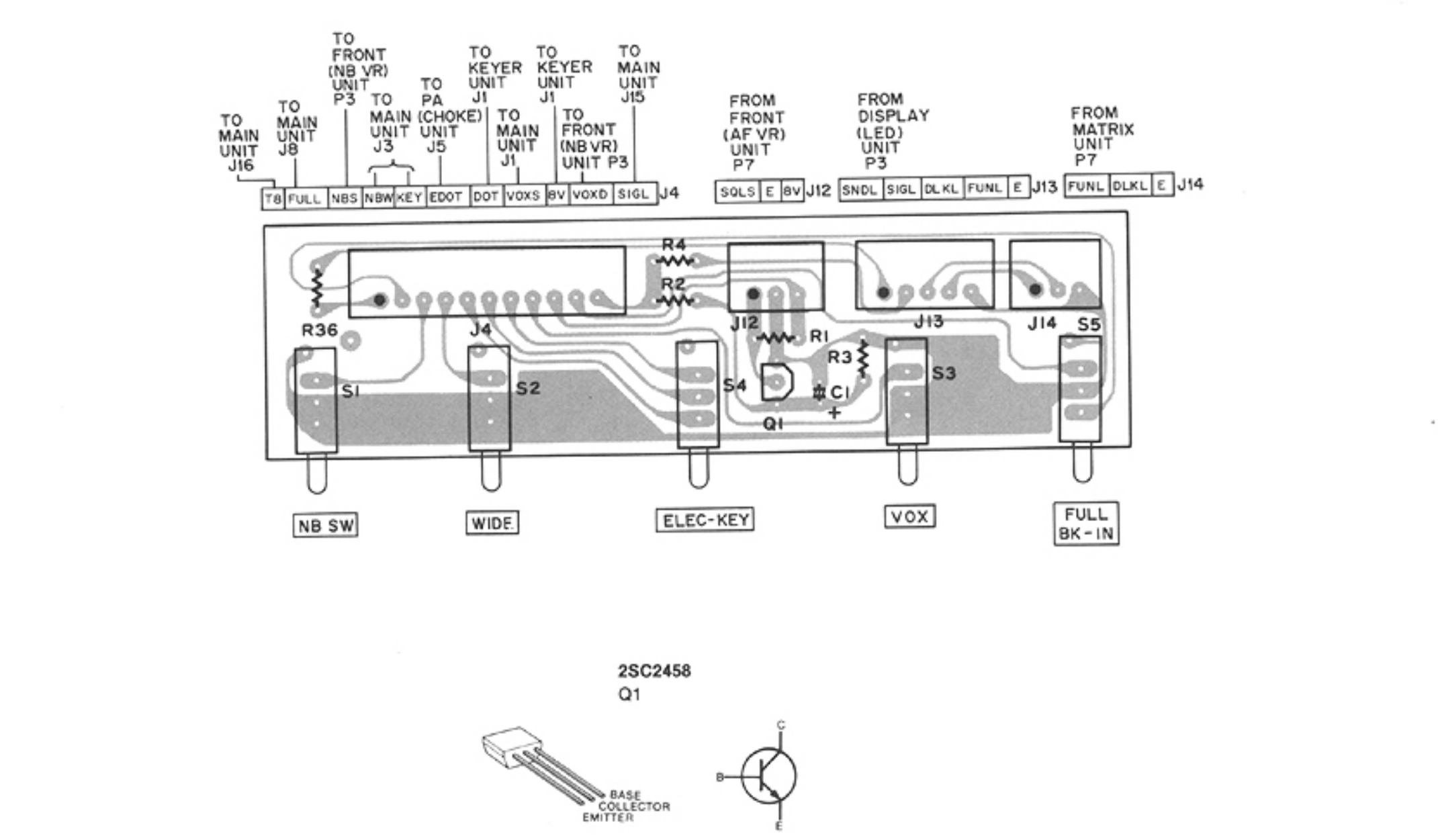

2SC2458
Q1

• FRONT (MARKER) UNIT

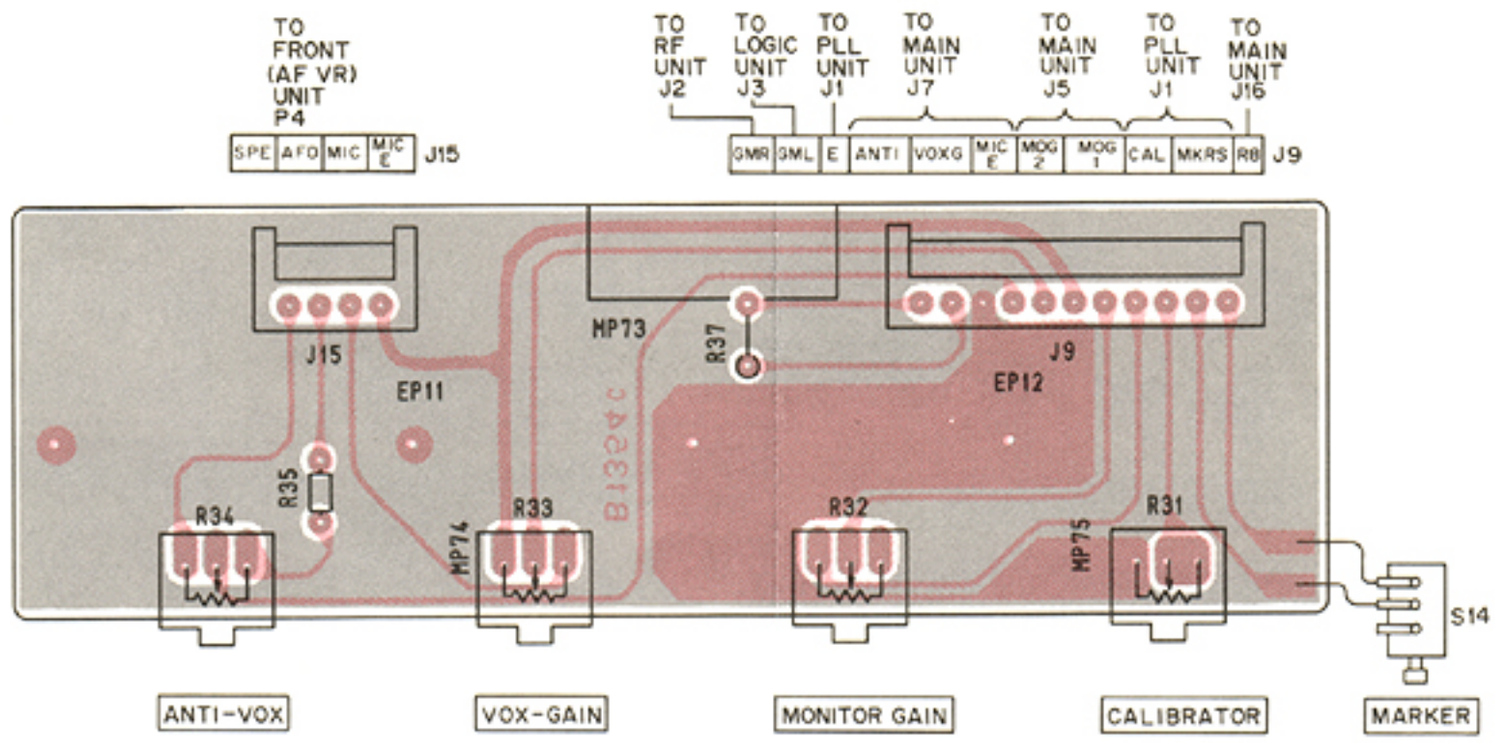

• FRONT (AF VR) UNIT

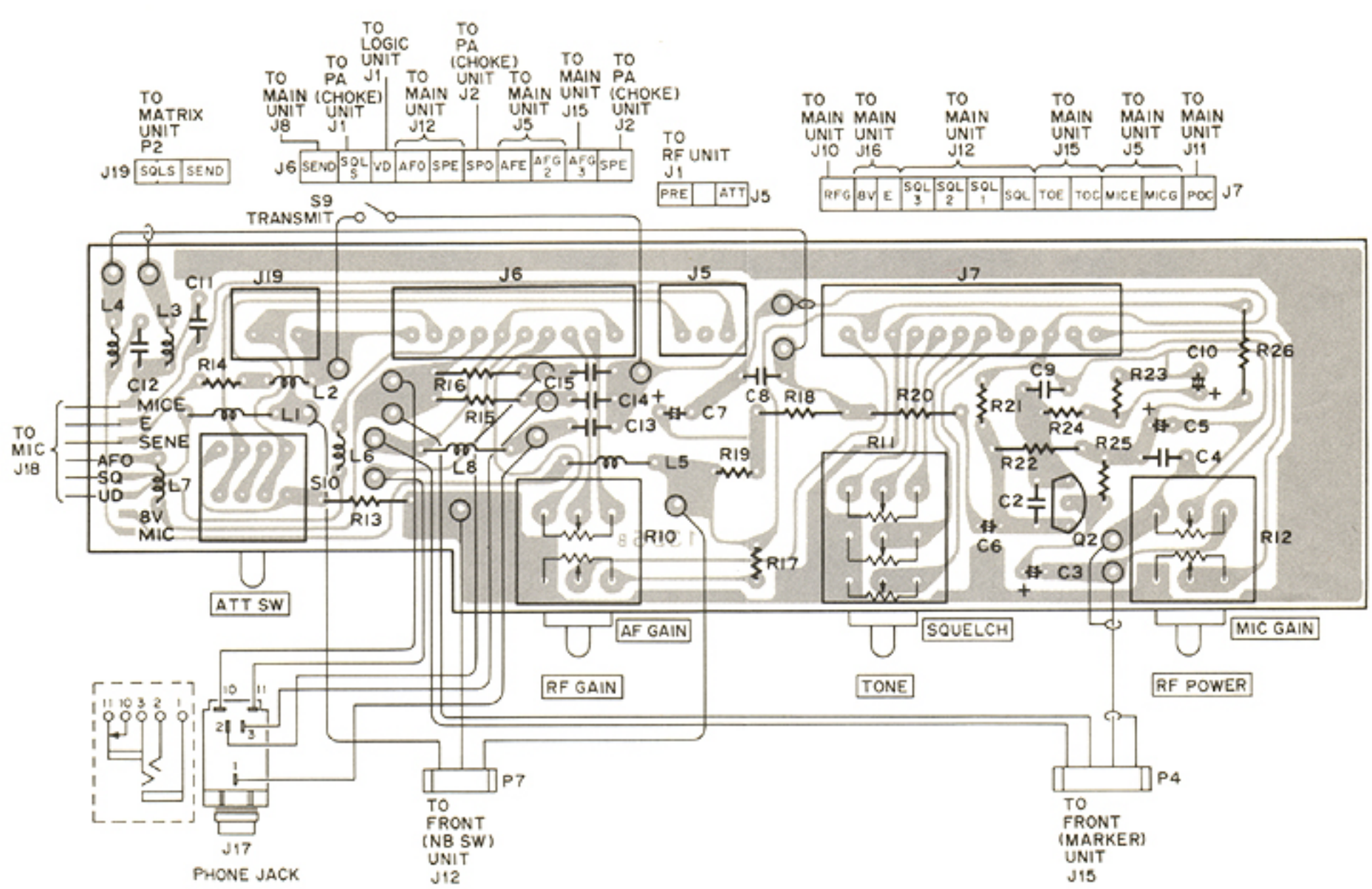

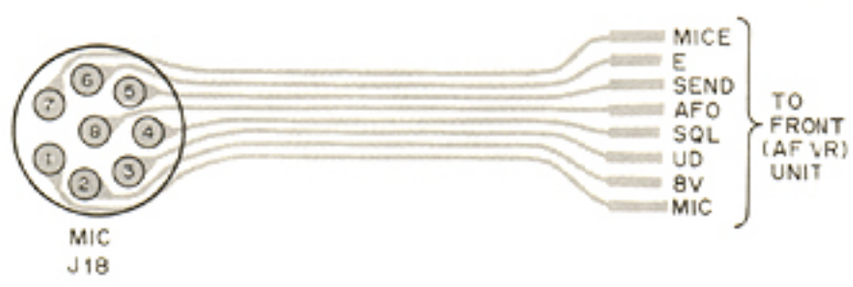

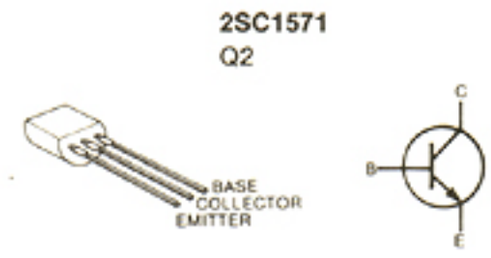

7-3 DISPLAY, KEYER AND SENSOR UNITS

• DISPLAY (LED) UNIT

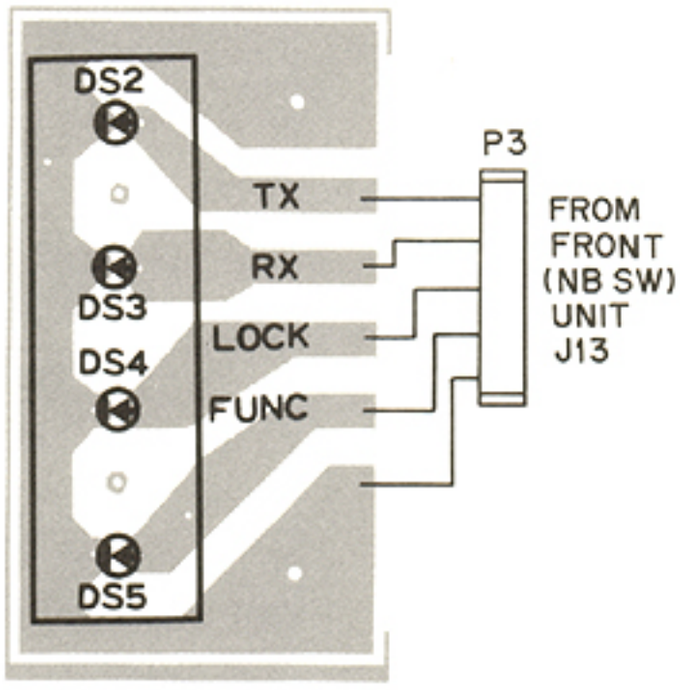

• DISPLAY UNIT

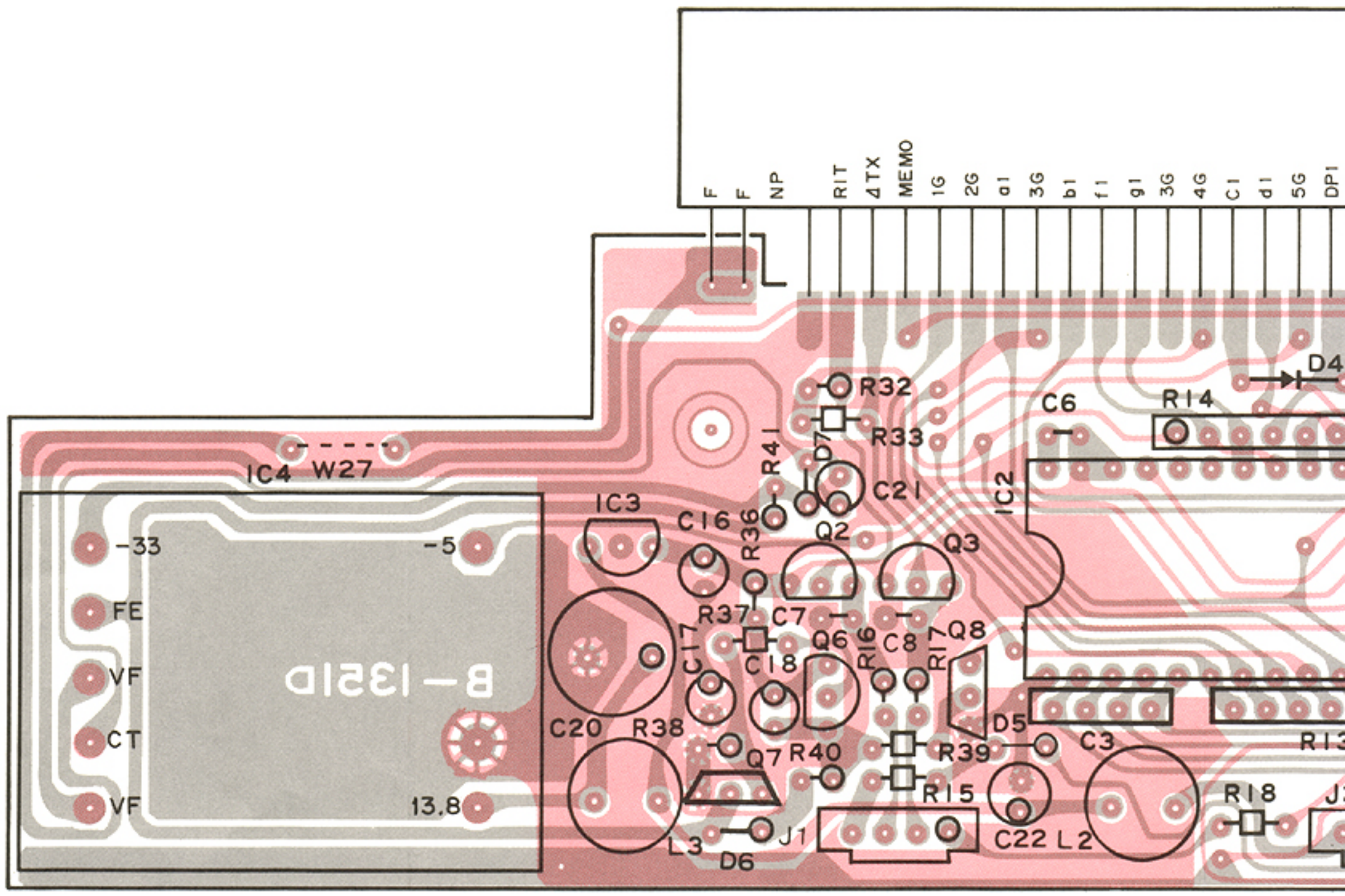

J1 | SCAN | RIT | ΔTX | SPLD |

FROM
MATRIX
UNIT
P5

J2 | 13.

FR
FR
(NE
UN
P1

2SA1015
Q1, Q2, Q3, Q5, Q6

RN1204
Q4

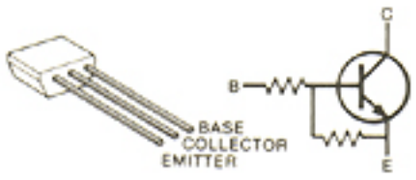

2SC2458
Q7

RN1202
Q8

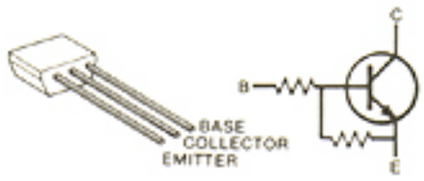

• KEY

• KEYER UNIT

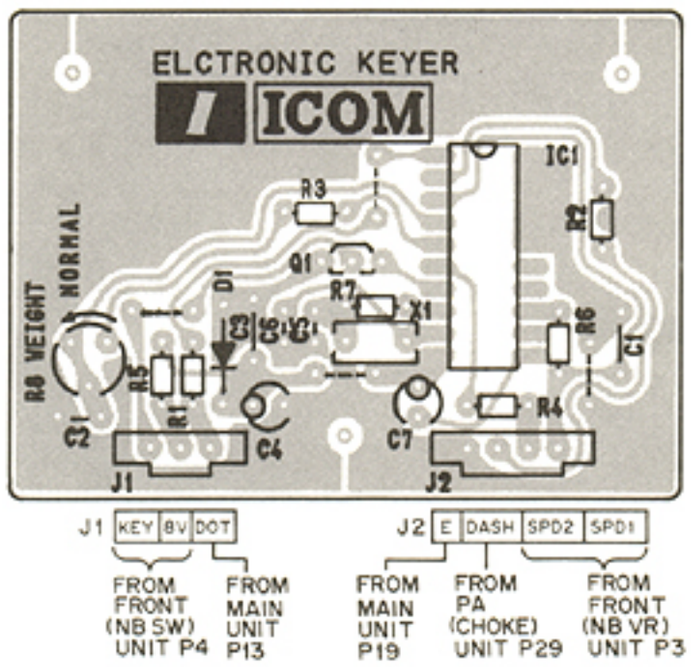

• SENSOR UNIT

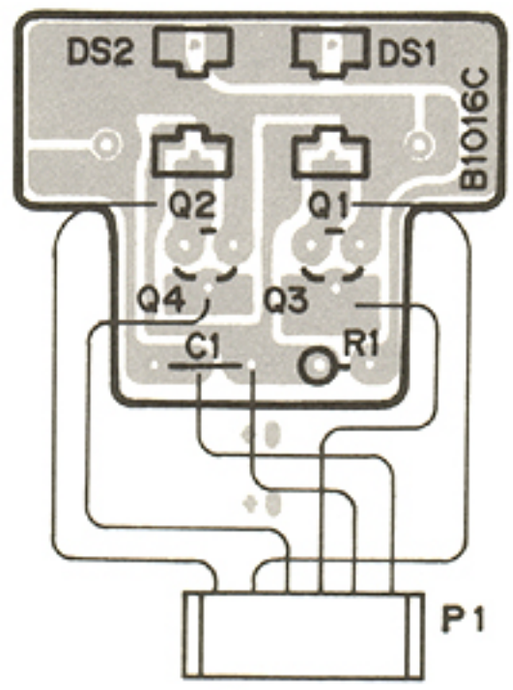

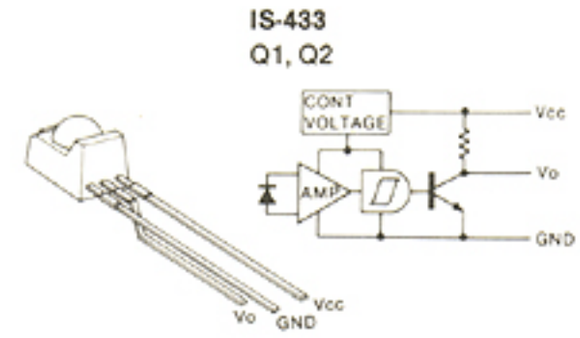

TO
MATRIX UNIT
J7

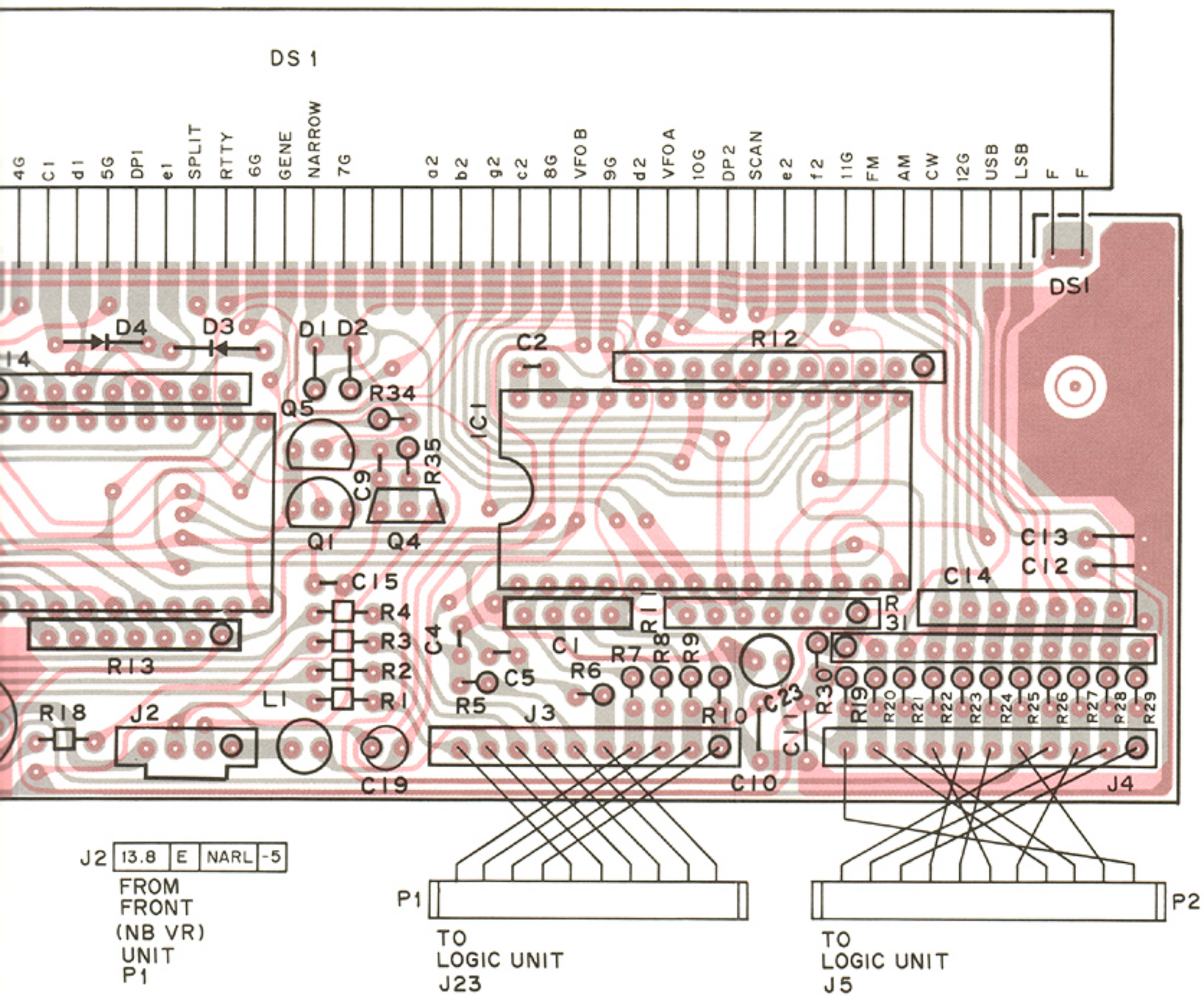

7-4 MATRIX UNIT

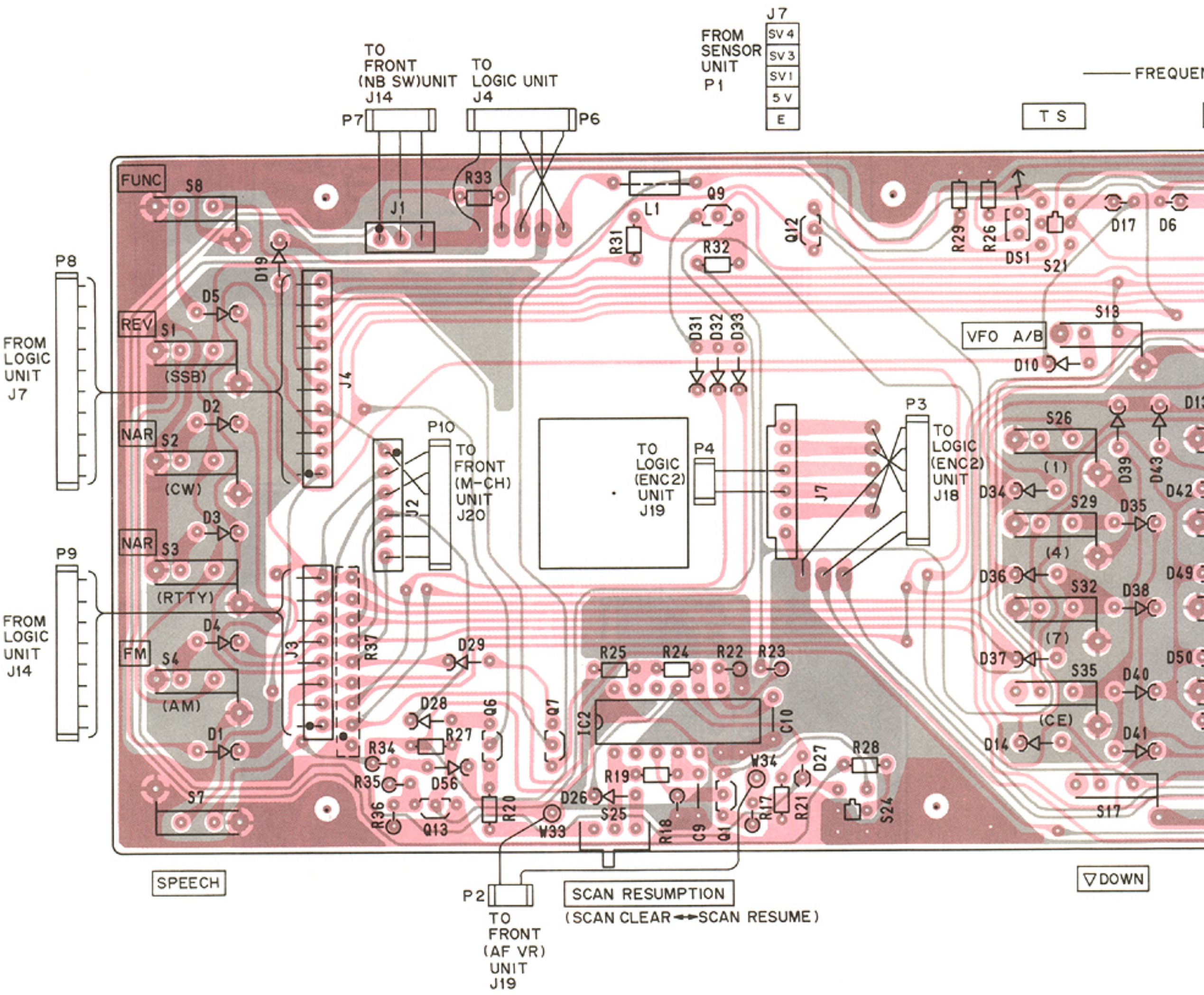

2SA1048
Q1, Q2

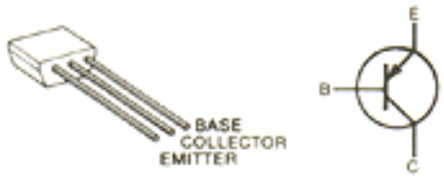

2SC2458
Q3, Q4, Q5, Q6, Q7, Q8, Q9, Q13

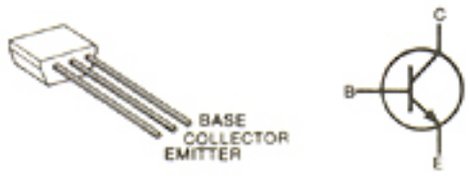

RN1204
Q10, Q11

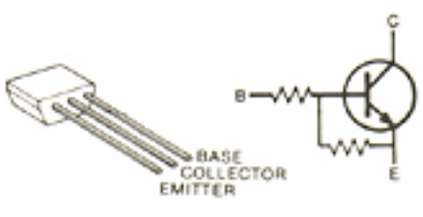

RN2202
Q12, Q14

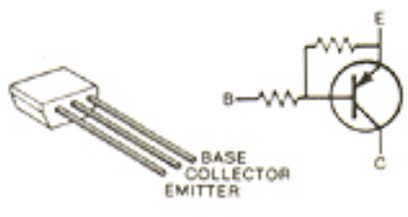

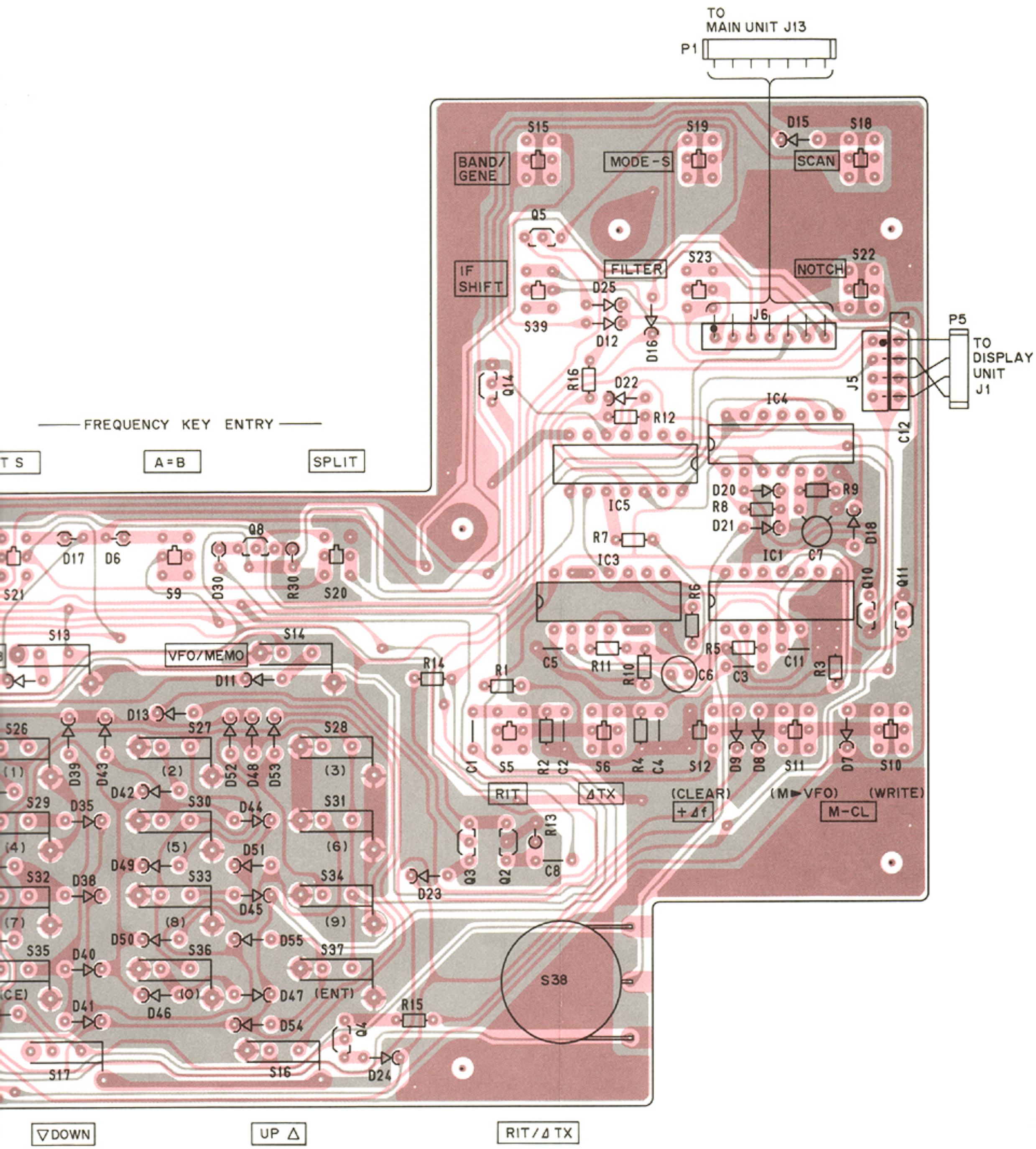
TO
MAIN UNIT J13
P1
S15
S19
D15
S18
BAND/
GENE
MODE-S
SCAN
Q5
IF
SHIFT
FILTER
S23
NOTCH
S22
D25
S39
D12
D16
J6
P5
TO
DISPLAY
UNIT
J1
J5
Q14
R16
D22
R12
IC4
C12
FREQUENCY KEY ENTRY
A=B
SPLIT
IC5
D20
R9
R8
D21
R7
IC3
IC1
C7
D18
Q8
D17
D6
S21
S9
D30
R30
S20
Q10
Q11
R6
S13
VFO/MEMO
S14
D11
R14
R1
C5
R11
R10
C6
R5
C3
C11
R3
D13
S26
S27
S28
D39
D43
D52
D48
D53
(1)
(2)
(3)
C1
S5
R2
C2
S6
R4
C4
S12
D9
D8
S11
D7
S10
D42
S29
D35
S30
D44
S31
RIT
ΔTX
(CLEAR)
+Δf
(M►VFO)
(WRITE)
M-CL
(4)
(5)
(6)
D51
D49
Q3
Q2
R13
C8
S32
D38
S33
S34
D23
D45
(7)
(8)
(9)
D50
D55
S35
D40
S36
S37
S38
(CE)
(0)
D47
(ENT)
D41
D46
R15
D54
Q4
S17
S16
D24
▽DOWN
UP △
RIT/Δ TX

7-5 LOGIC A UNIT

COMPONENTS SIDE

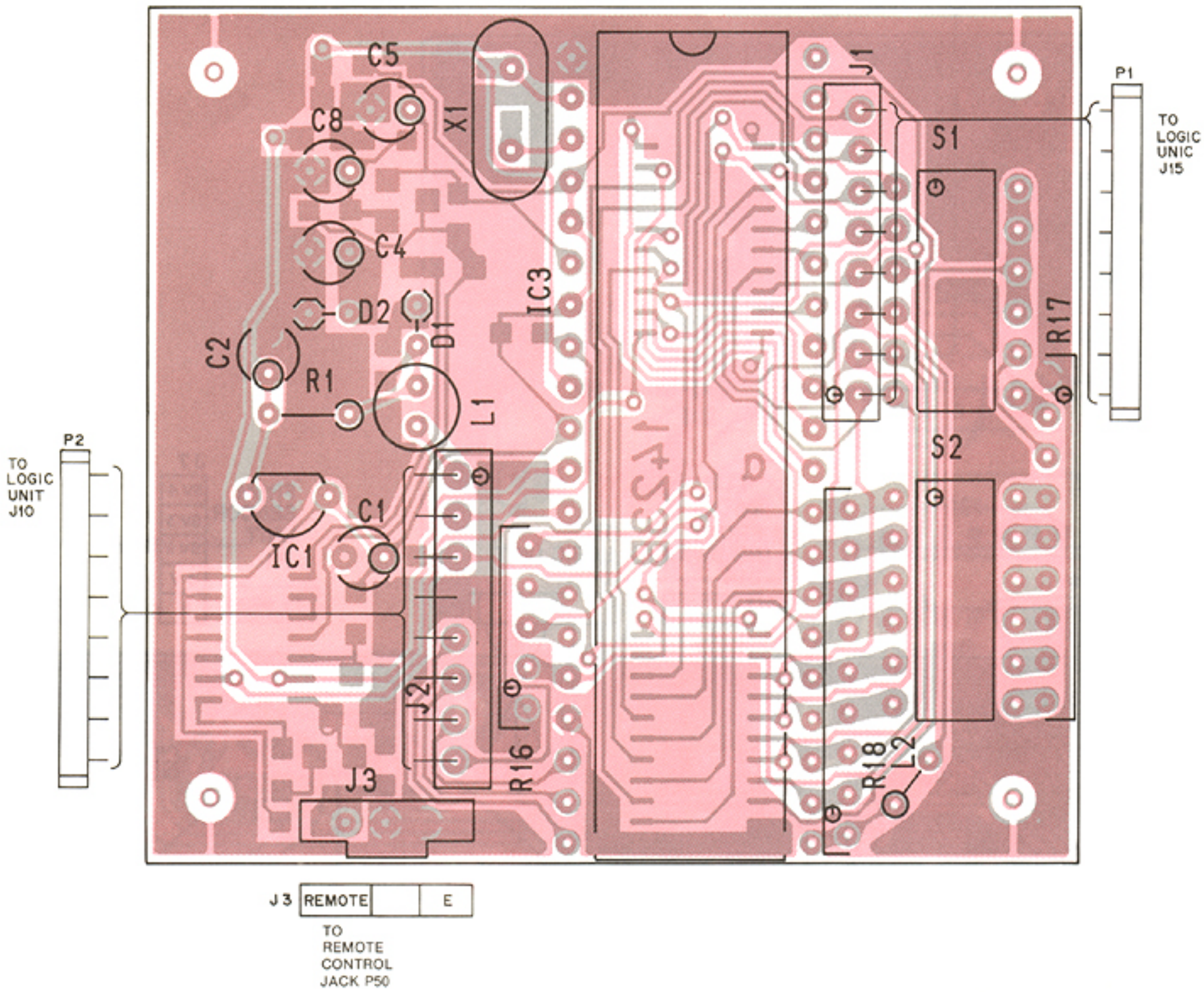

FOIL SIDE

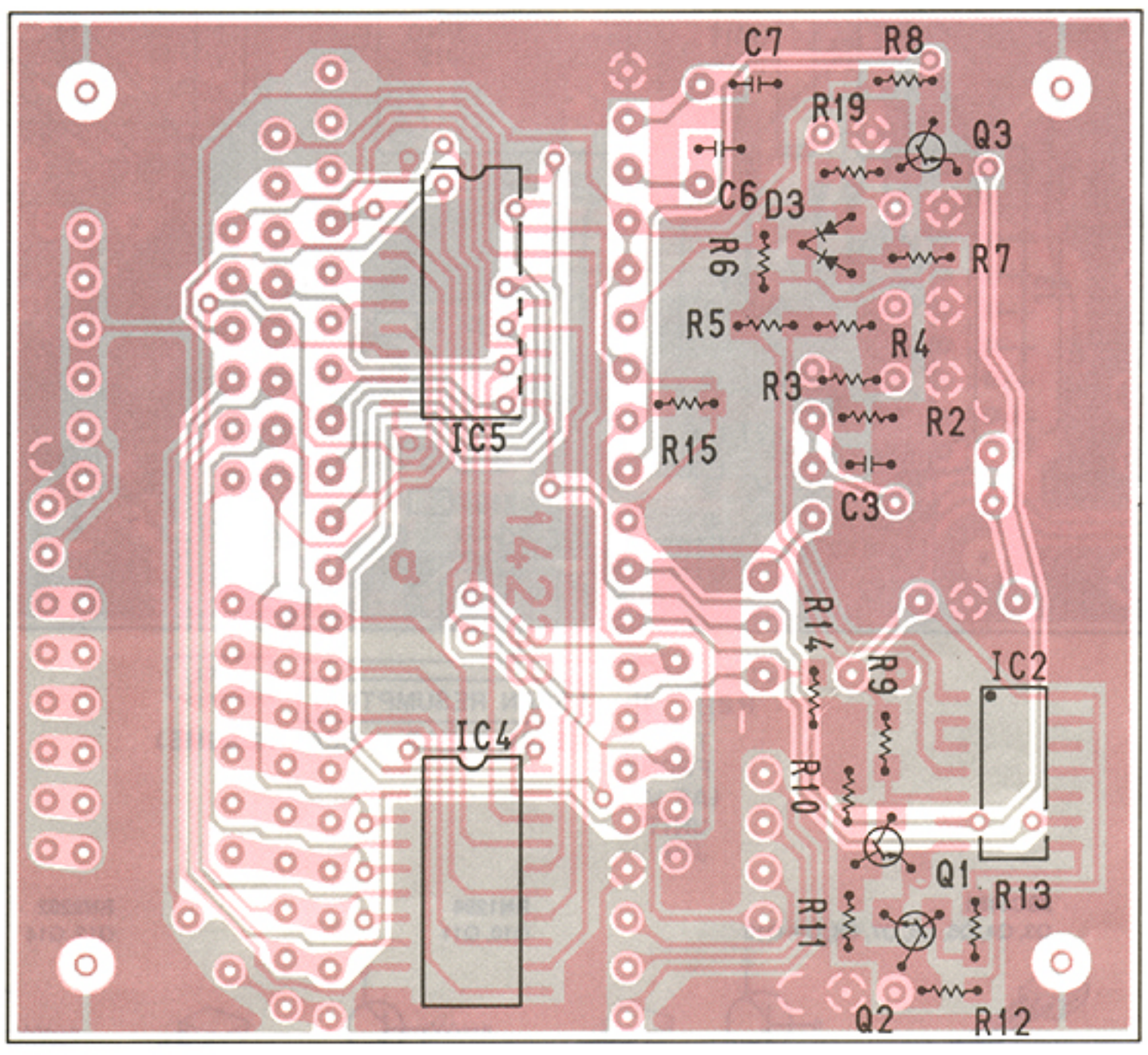

2SC2712
Q1, Q2, Q3

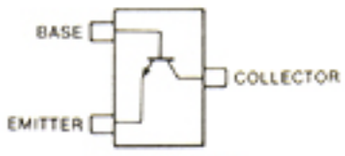

Symbol: LY

1SS184
D3

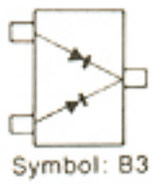

Symbol: B3

7-6 LOGIC UNIT

• LOGIC UNIT

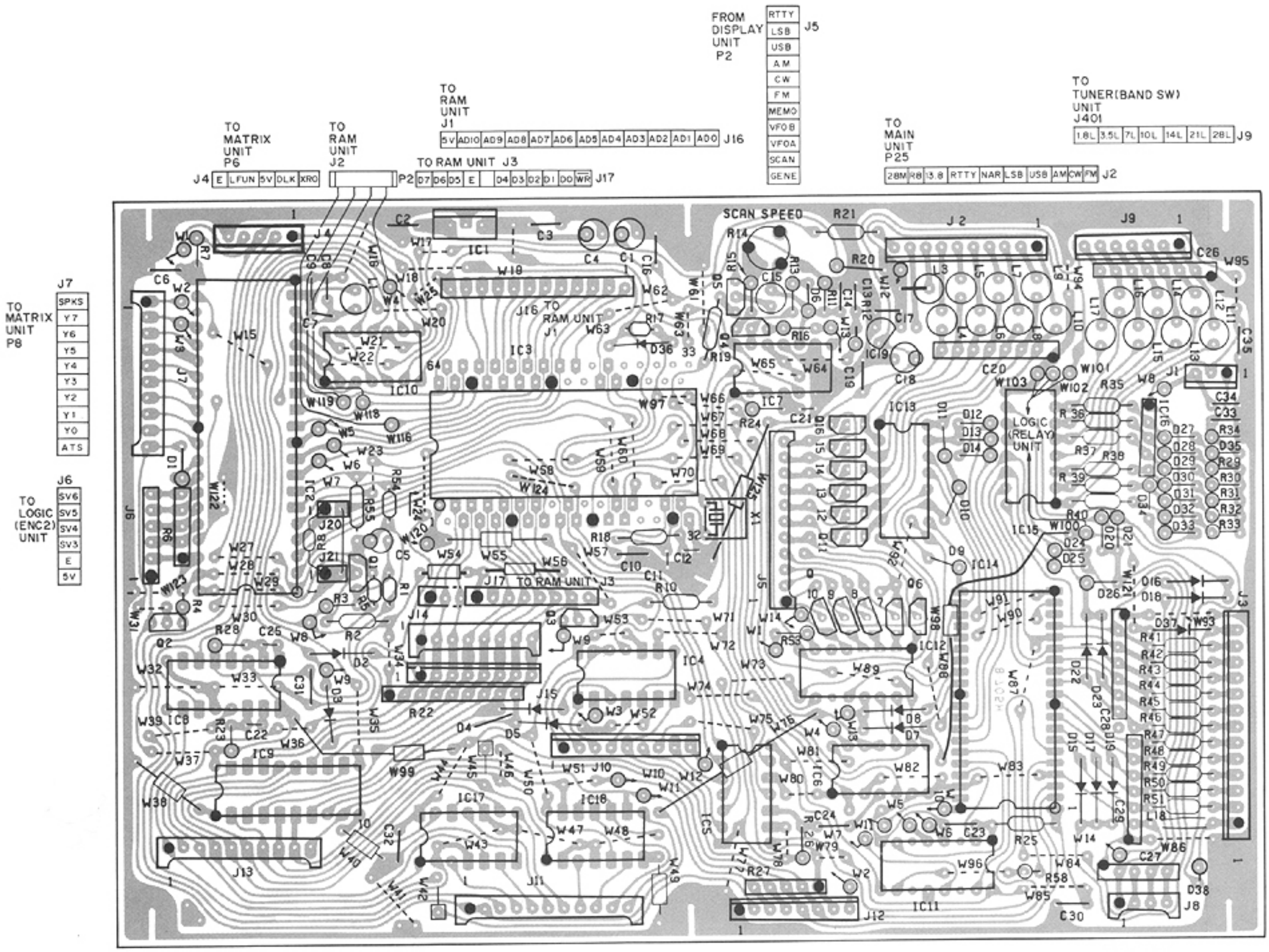

2SA1048
Q1, Q2, Q3

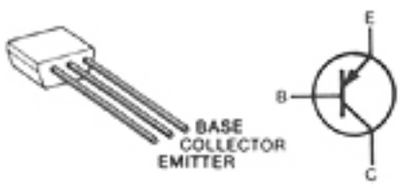

2SC2458
Q4, Q5

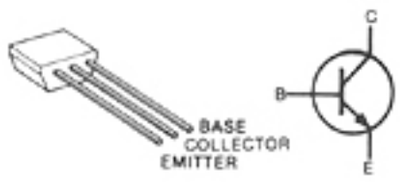

RN2202
Q6, Q7, Q8, Q9, Q10, Q11, Q12, Q13, Q14, Q15, Q16

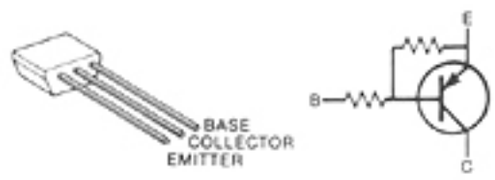

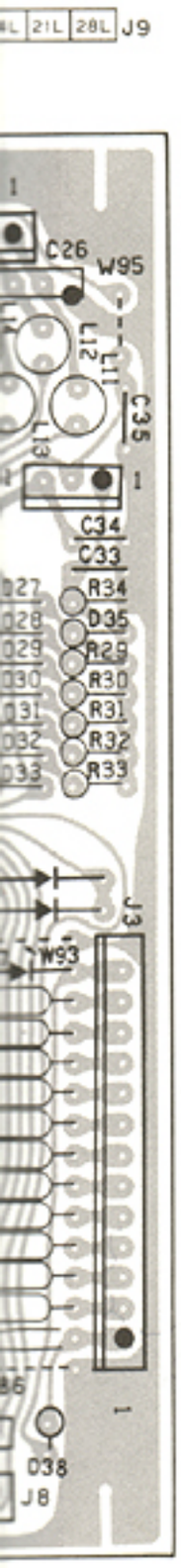

• RAM UNIT

COMPONENTS SIDE

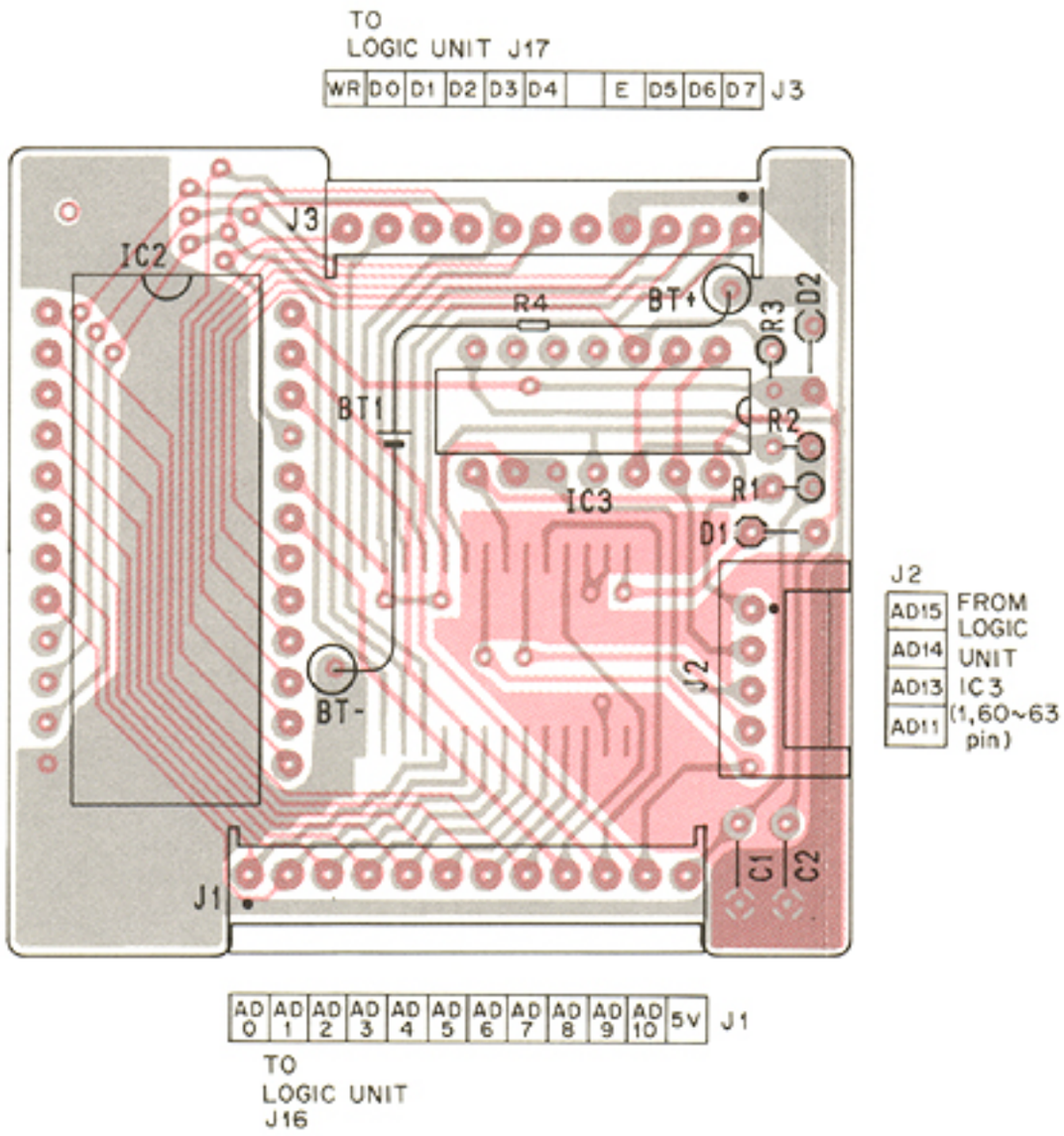

FOIL SIDE

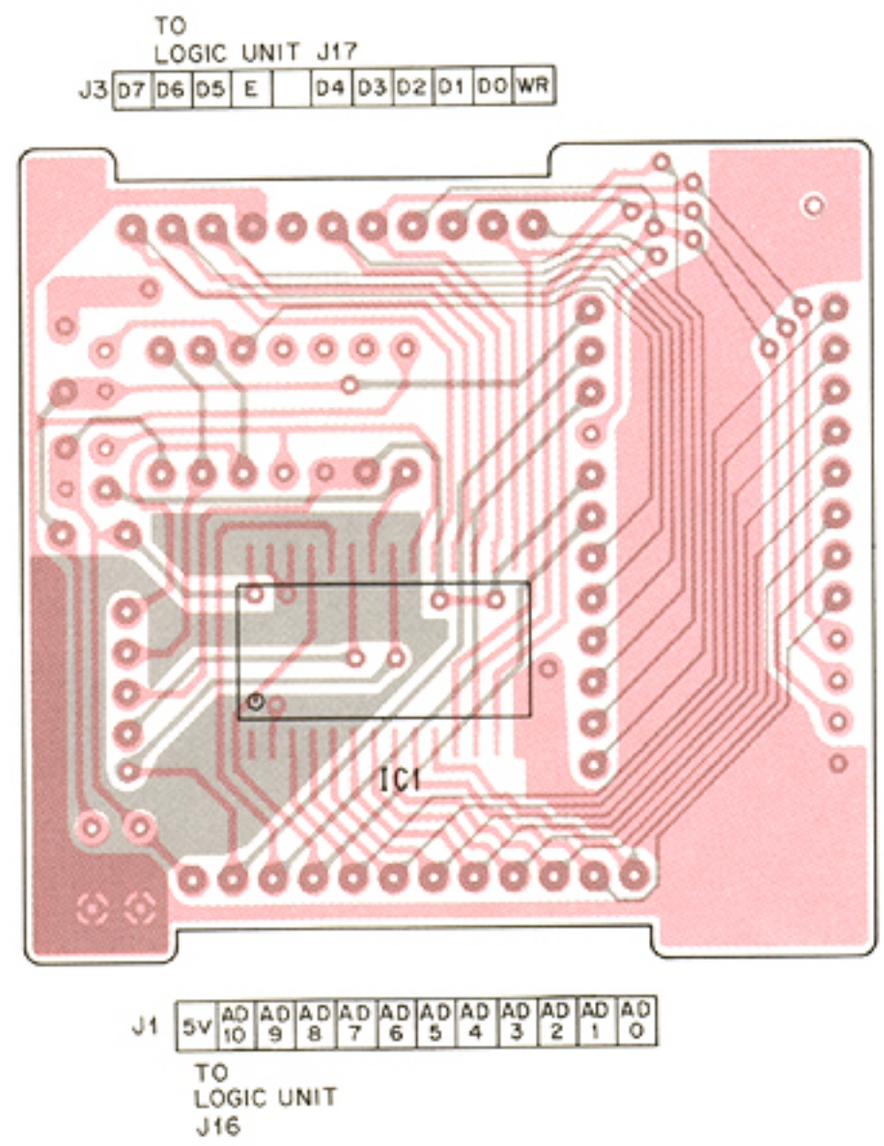

• LOGIC (RELAY) UNIT

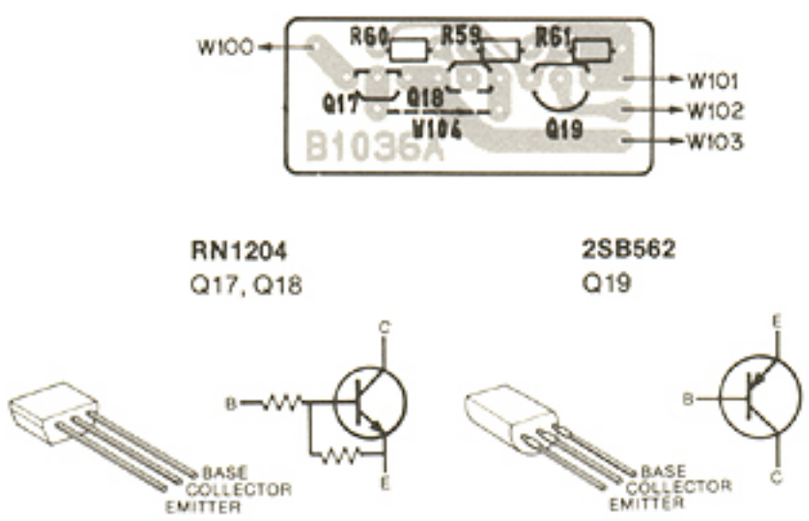

• LOGIC (ENC2) UNIT

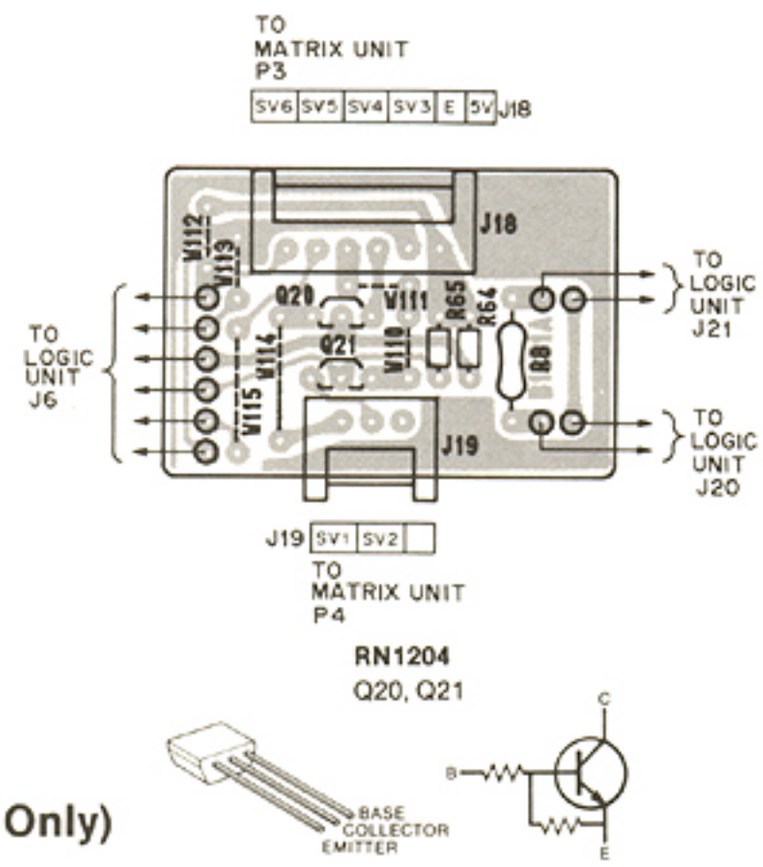

• LOGIC (MUTE) UNIT (#03, #06 Only)

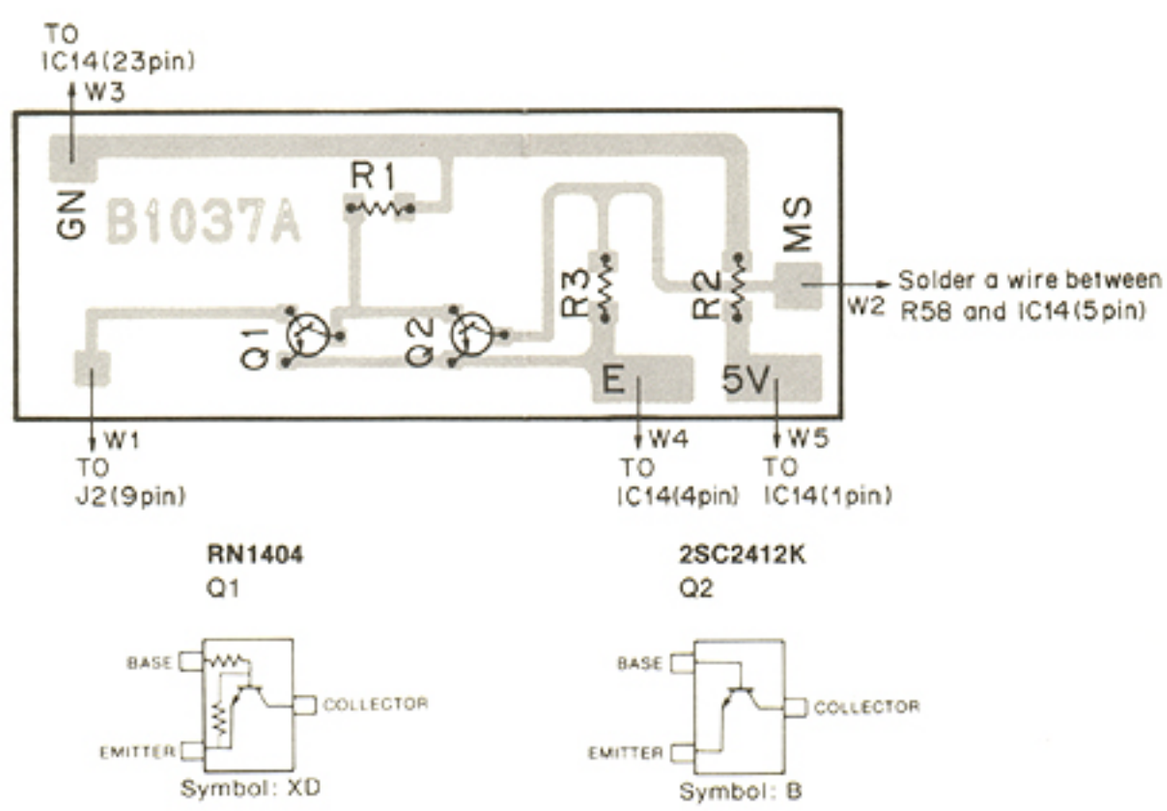

7-7 PLL UNIT

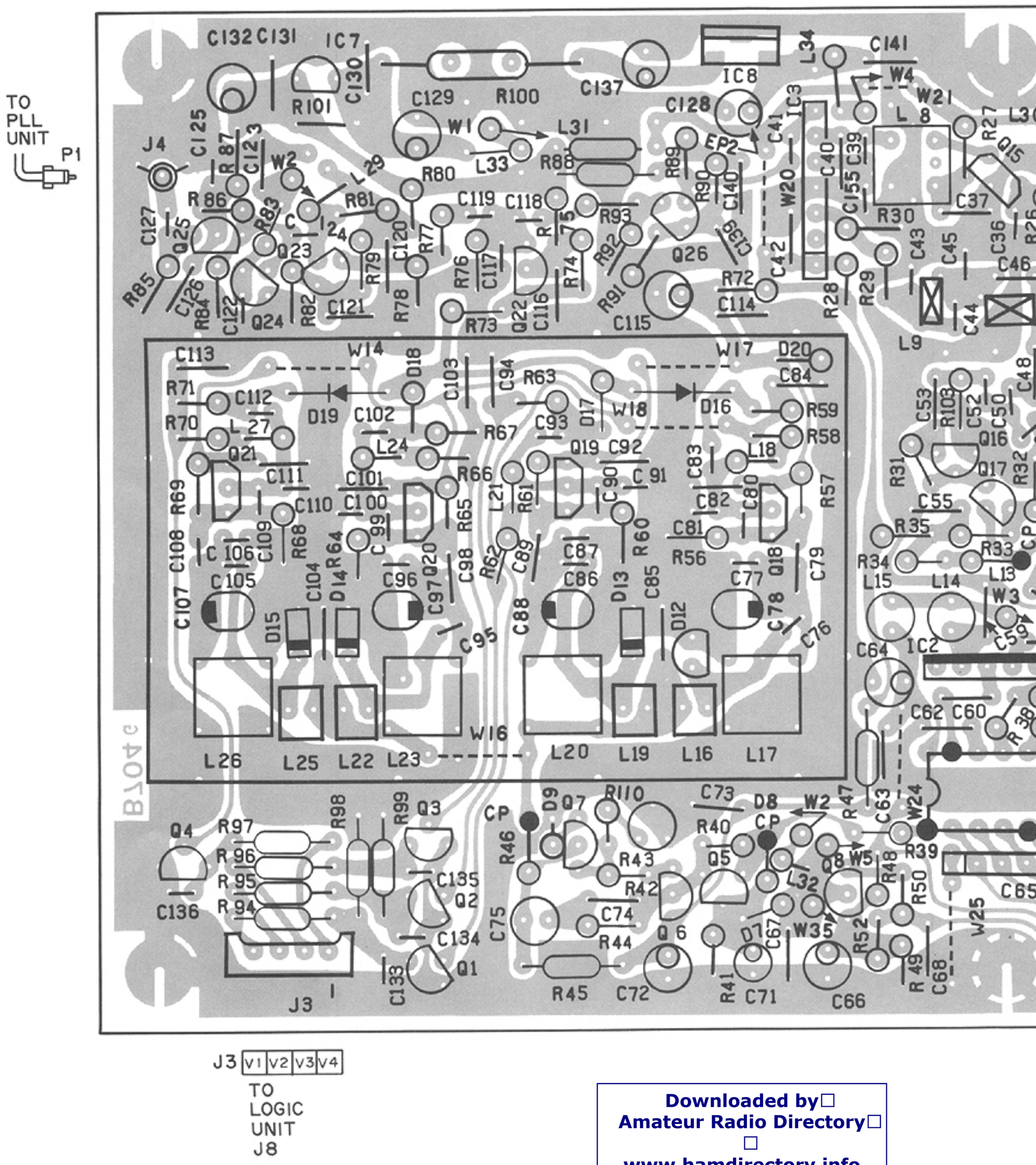

2SC945
Q1, Q2, Q3, Q4, Q9, Q10, Q12, Q24

2SK30
Q5, Q6

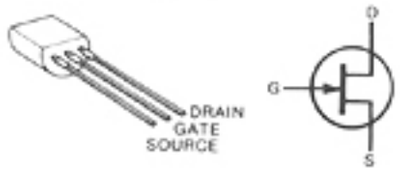

2SC1571
Q7

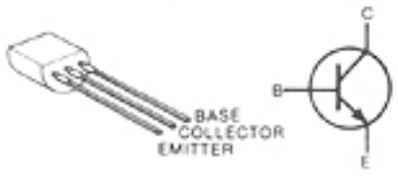

2SA1015
Q8

2SC383
Q11, Q14, Q16, Q17, Q22, Q23, Q25, Q26

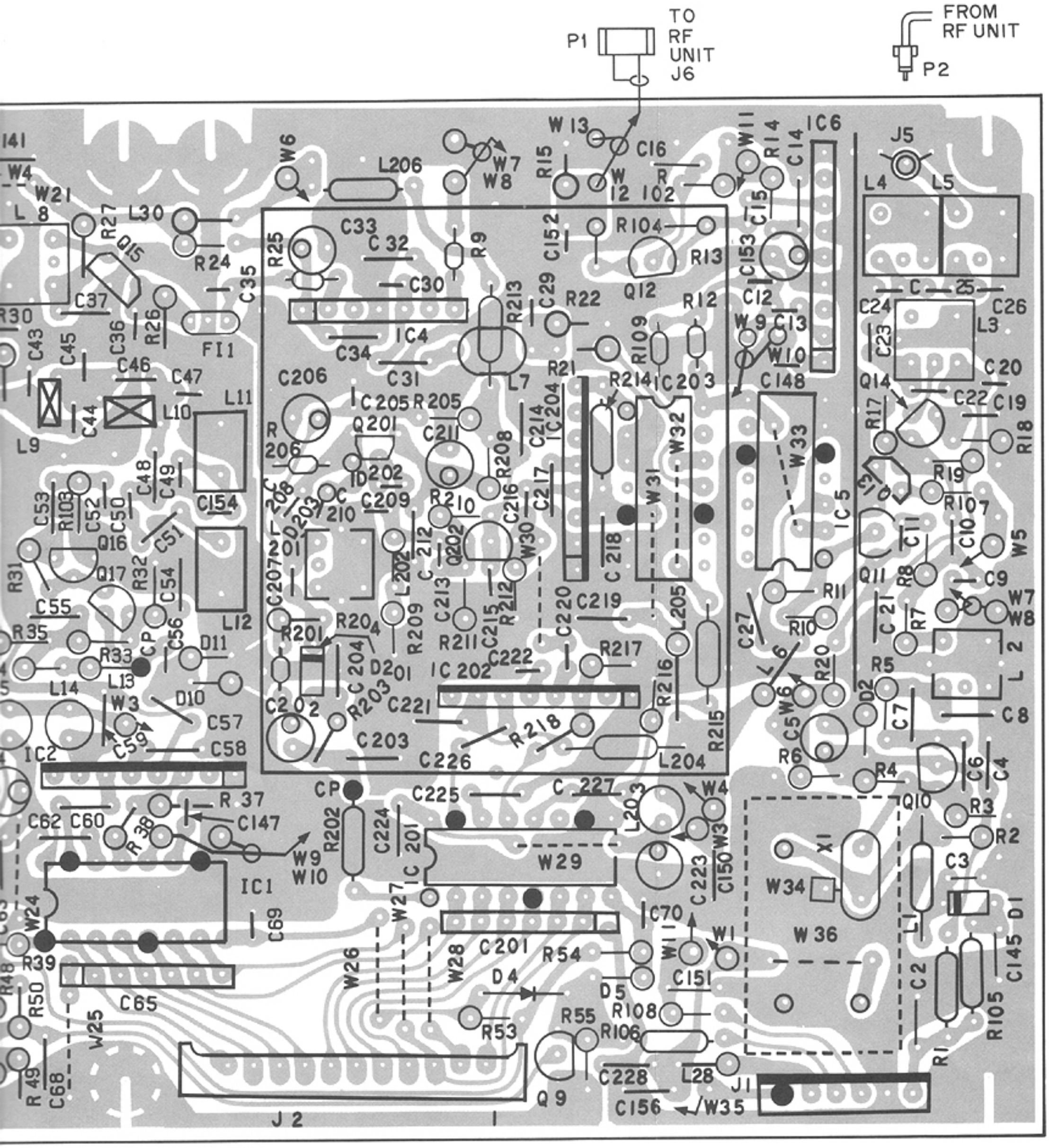
P1
TO RF UNIT J6
FROM RF UNIT
P2
J2
HA HB HC HD LA LB LC LD CPS HR LR
TO LOGIC UNIT J11
J1
PNB 13.8 S/R MKRS E CAL
TO MAIN UNIT P12
TO FRONT (NB VR) UNIT P12
TO MAIN UNIT P22
TO FRONT (MARKER) UNIT P31
RN1204
Q13
2SK241
Q15
2SK192A
Q18, Q19, Q20, Q21, Q201
2SC763
Q202
BASE
COLLECTOR
EMITTER
GATE
SOURCE
DRAIN

7-8 RF UNIT

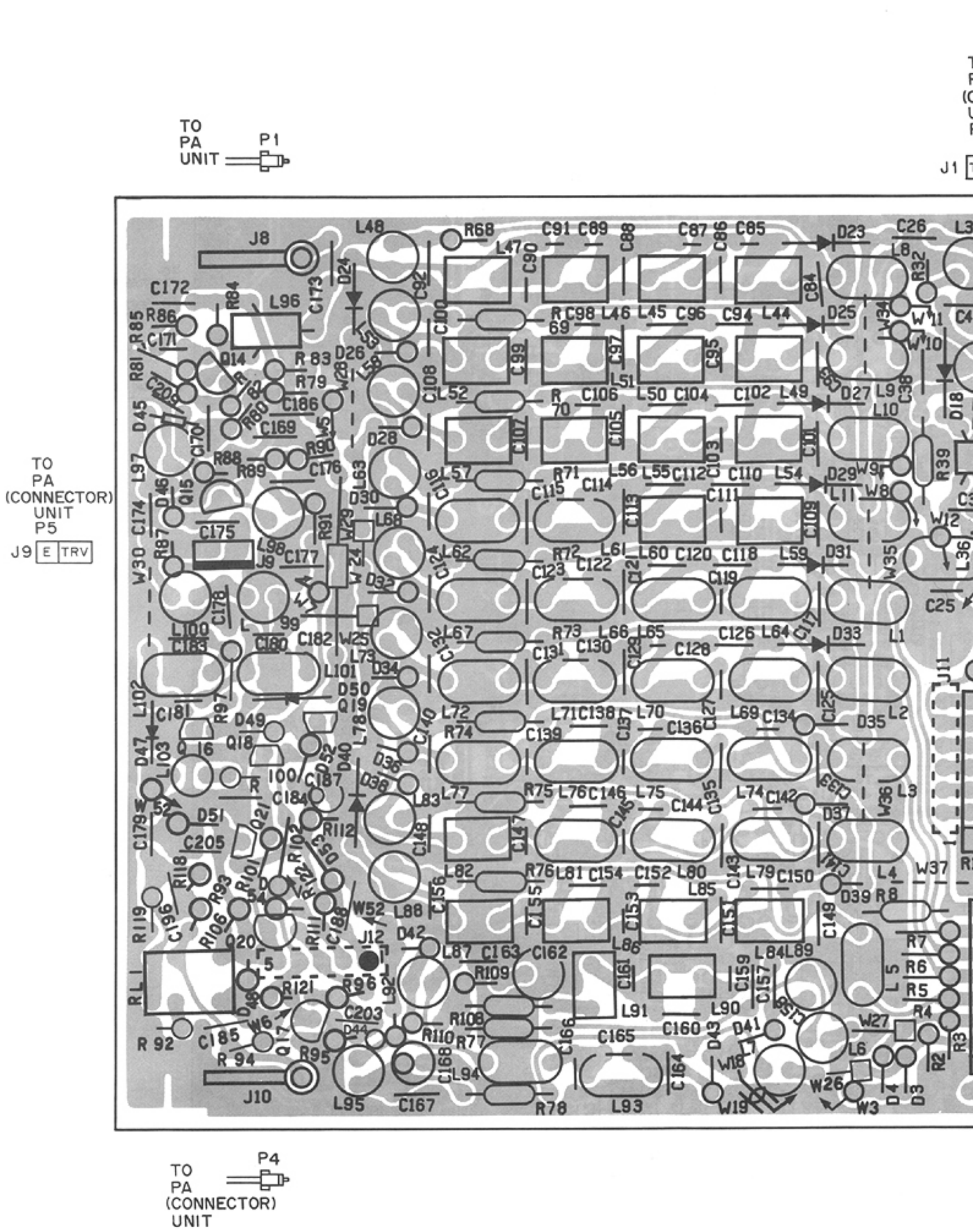

2SC945
Q1, Q17

2SC2053
Q2, Q14

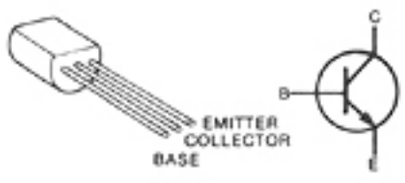

2SA1048
Q3

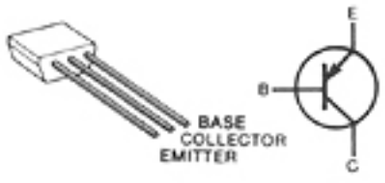

2SC1571
Q5

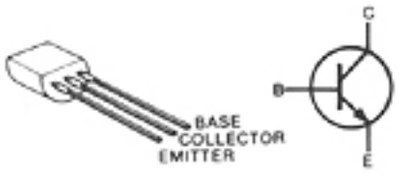

2SK125
Q6, Q7, Q9, Q10

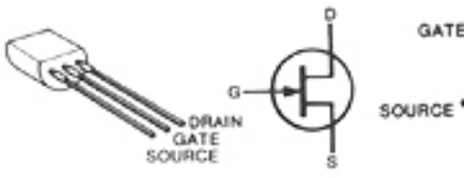

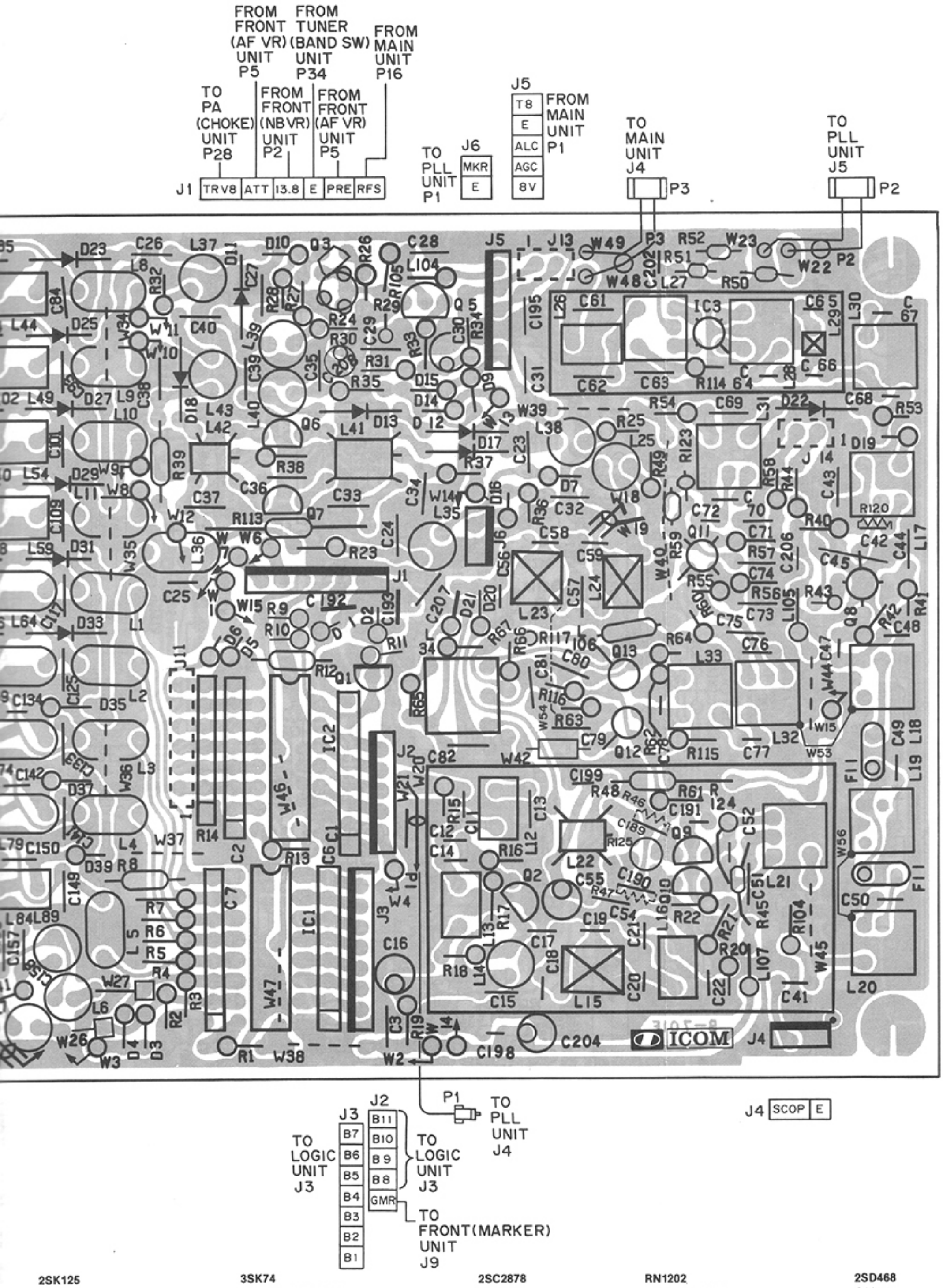

2SK125
Q6, Q7, Q9, Q10

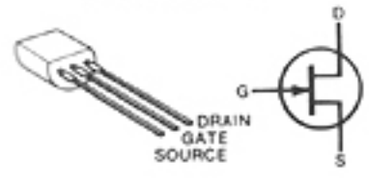

3SK74
Q8, Q11, Q12, Q13

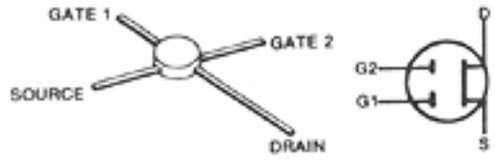

2SC2878
Q15

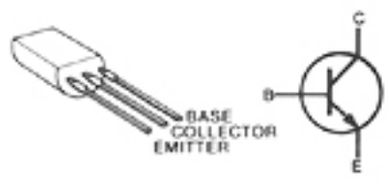

RN1202
Q16, Q18, Q19

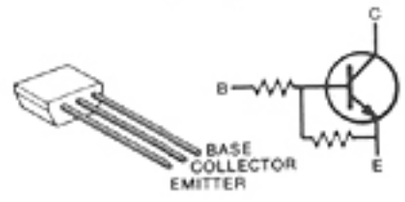

2SD468
Q20

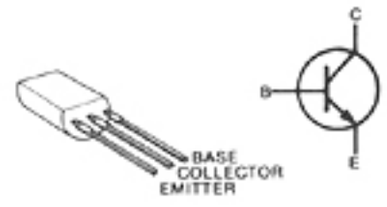

RN1204
Q21

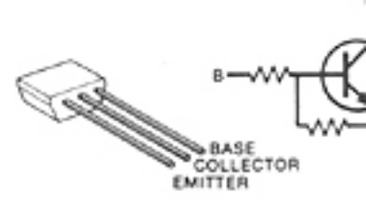

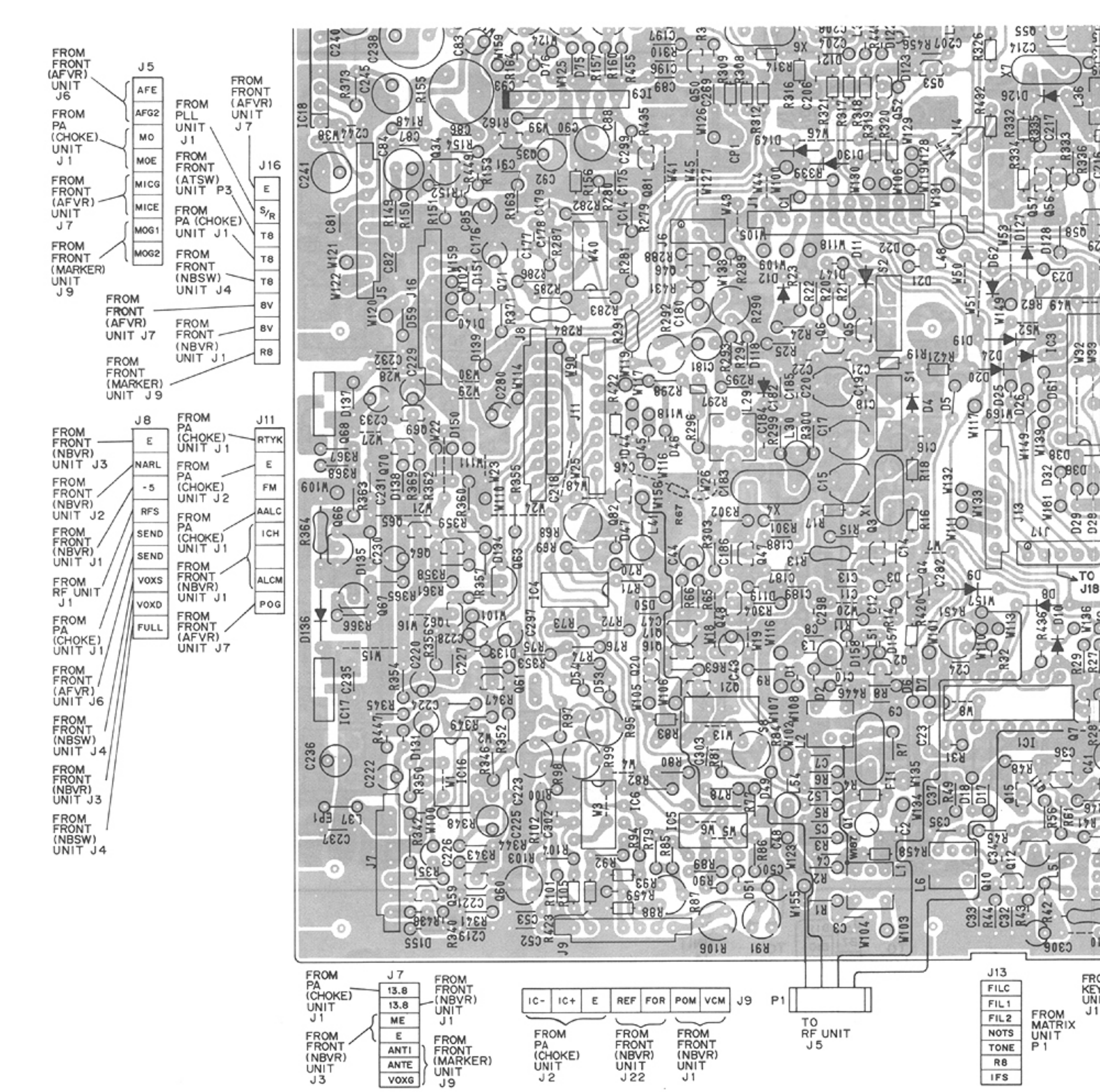
J5
AFE
AFG2
MO
MOE
MICG
MICE
MOG1
MOG2
FROM FRONT (AFVR) UNIT J6
FROM PA (CHOKE) UNIT J1
FROM FRONT (AFVR) UNIT J7
FROM FRONT (MARKER) UNIT J9
J16
E
S/R
T8
T8
T8
8V
8V
R8
FROM PLL UNIT J1
FROM FRONT (ATSW) UNIT P3
FROM PA (CHOKE) UNIT J1
FROM FRONT (NBSW) UNIT J4
FROM FRONT (AFVR) UNIT J7
FROM FRONT (NBVR) UNIT J1
FROM FRONT (MARKER) UNIT J9
FROM FRONT (AFVR) UNIT J7
J8
E
NARL
-5
RFS
SEND
SEND
VOXS
VOXD
FULL
FROM FRONT (NBVR) UNIT J3
FROM FRONT (NBVR) UNIT J2
FROM FRONT (NBVR) UNIT J1
FROM RF UNIT J1
FROM PA (CHOKE) UNIT J1
FROM FRONT (AFVR) UNIT J6
FROM FRONT (NBSW) UNIT J4
FROM FRONT (NBVR) UNIT J3
FROM FRONT (NBSW) UNIT J4
J11
RTYK
E
FM
AALC
ICH
ALCM
POG
FROM PA (CHOKE) UNIT J1
FROM PA (CHOKE) UNIT J2
FROM PA (CHOKE) UNIT J1
FROM FRONT (NBVR) UNIT J1
FROM FRONT (AFVR) UNIT J7
J7
13.8
13.8
ME
E
ANTI
ANTE
VOXG
FROM PA (CHOKE) UNIT J1
FROM FRONT (NBVR) UNIT J3
FROM FRONT (NBVR) UNIT J1
FROM FRONT (MARKER) UNIT J9
IC-
IC+
E
REF
FOR
POM
VCM
J9
FROM PA (CHOKE) UNIT J2
FROM FRONT (NBVR) UNIT J22
FROM FRONT (NBVR) UNIT J1
P1
TO RF UNIT J5
J13
FILC
FIL1
FIL2
NOTS
TONE
R8
IFS
FROM MATRIX UNIT P1
TO J18

7-9 MAIN UNIT

MAIN UNIT (1)

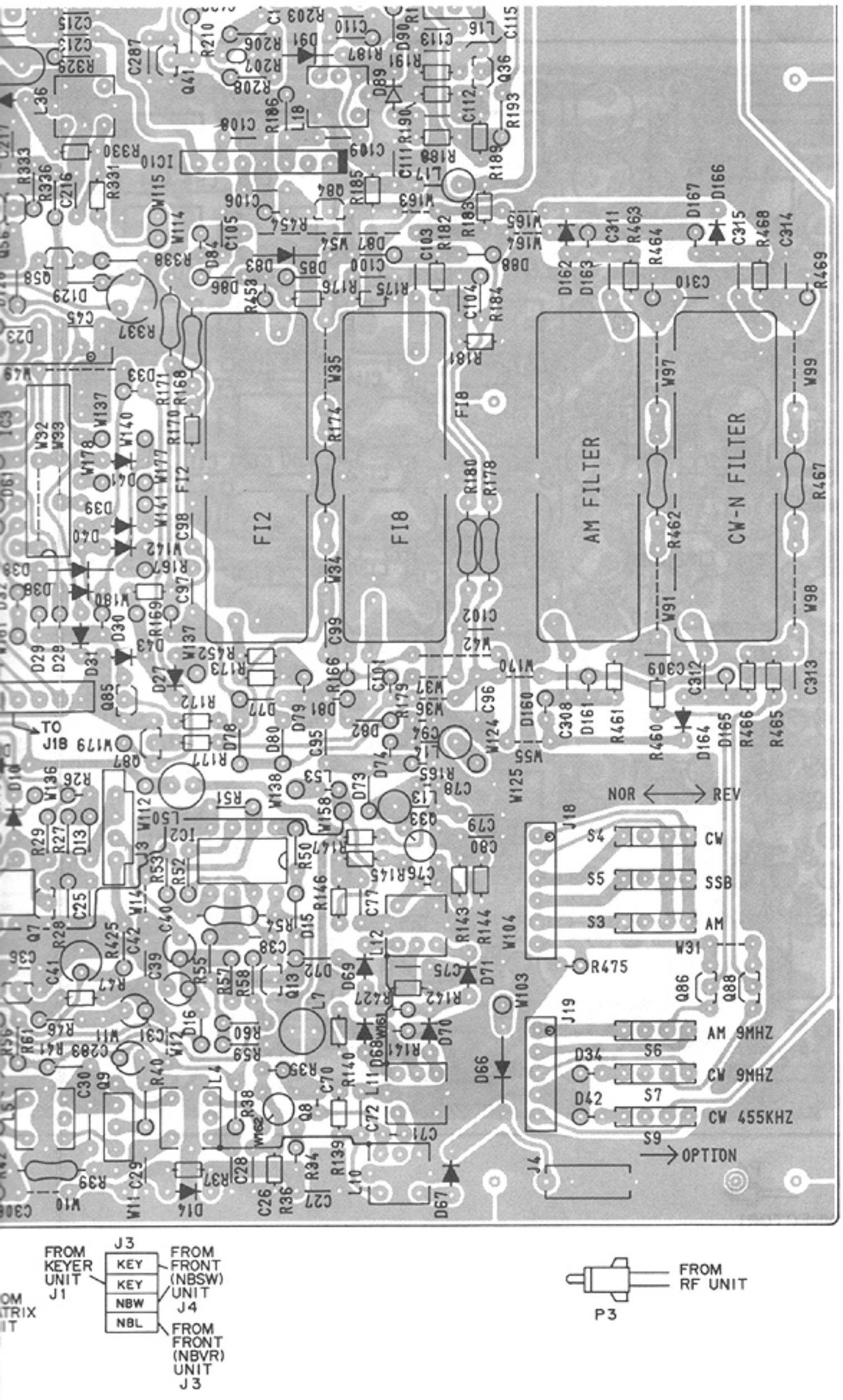

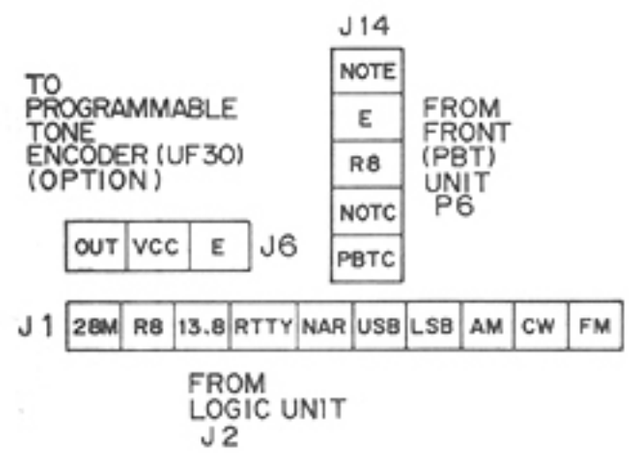

LOCATION

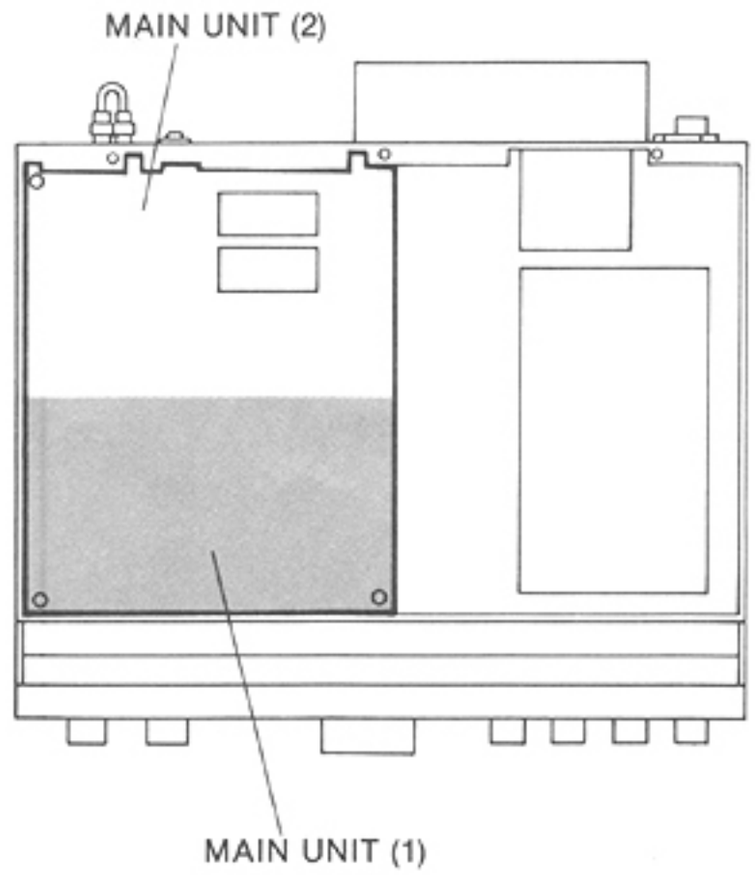

MAIN UNIT (2)

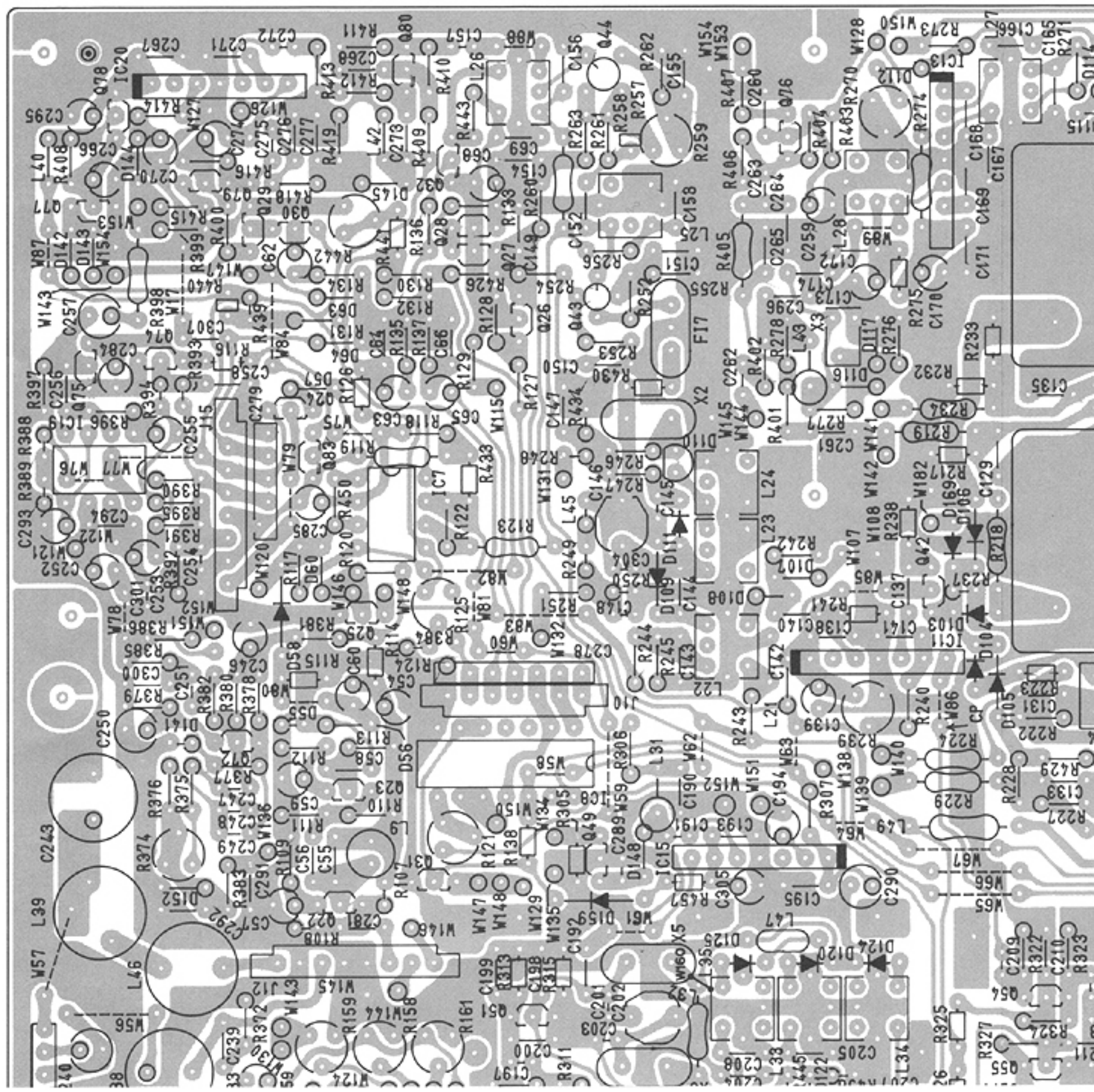

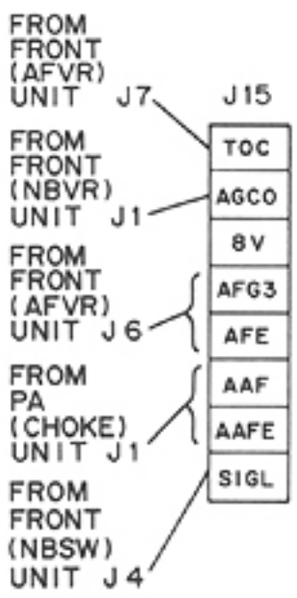

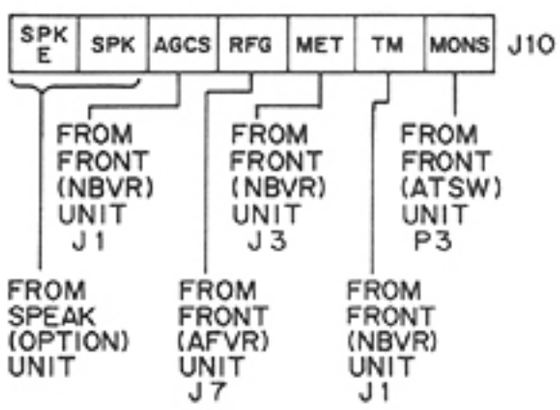

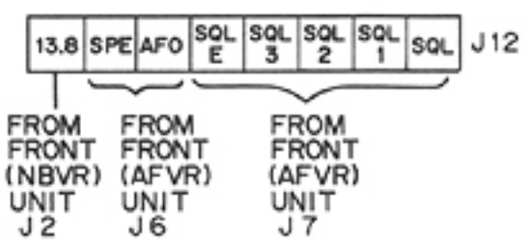

RN2204
Q85, Q86, Q87, Q88

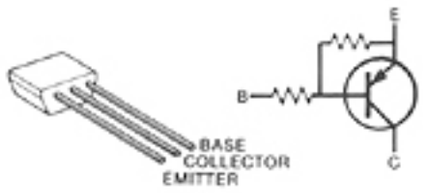

2SD880
Q68

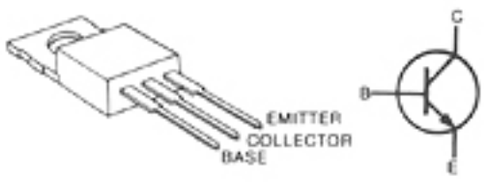

2SD468
Q63, Q66

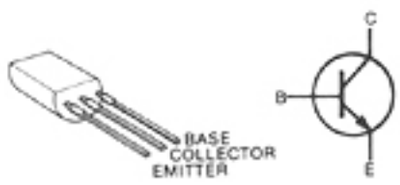

2SC1571
Q34

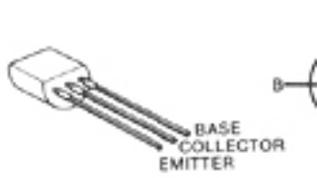

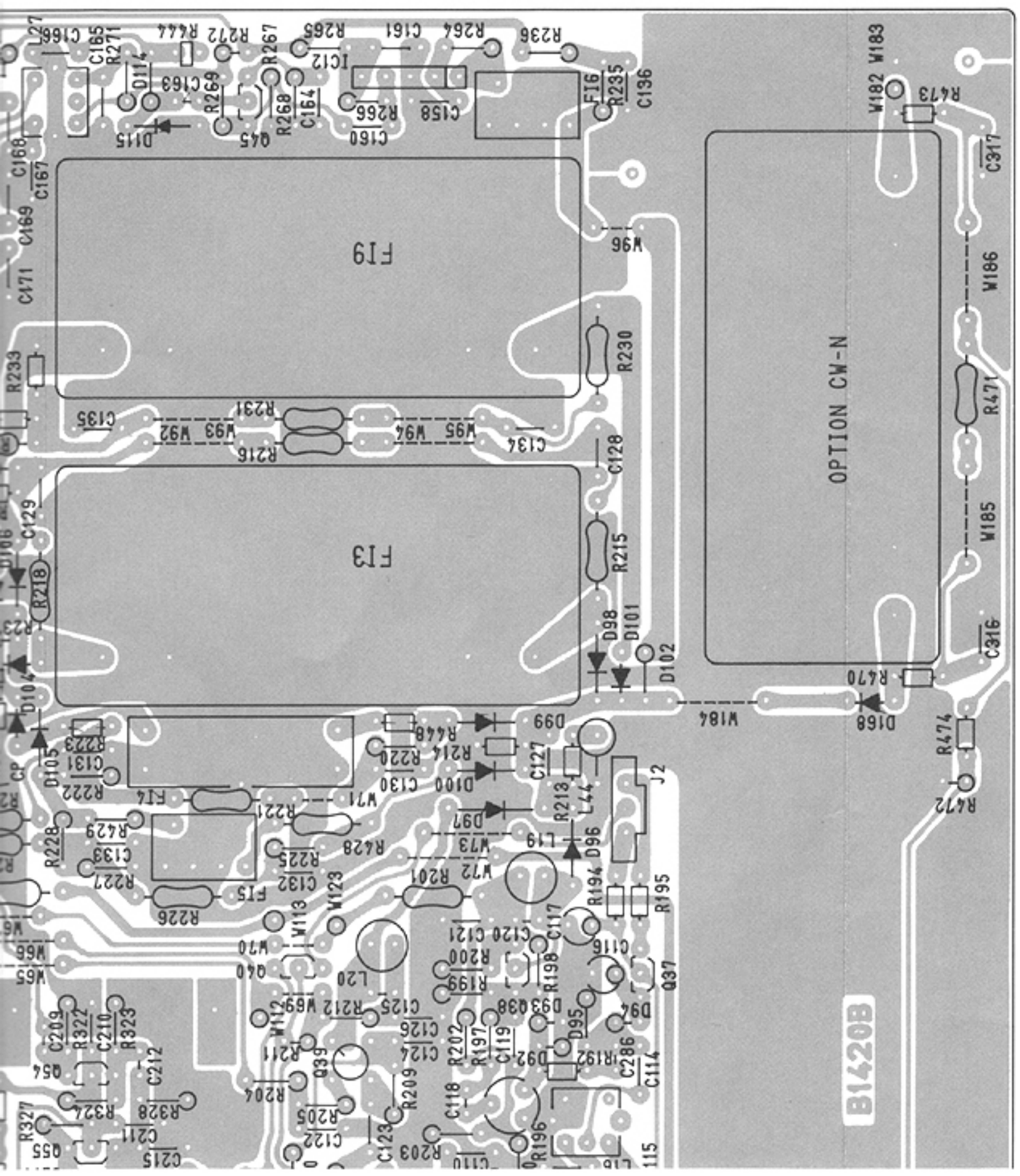

3SK74
Q1, Q8, Q33, Q39, Q43, Q44

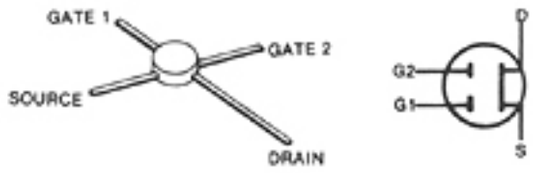

2SK241
Q2, Q49

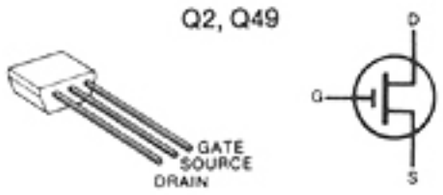

2SC2785
Q3, Q10, Q36, Q38, Q42, Q45, Q47, Q50, Q51, Q54, Q55, Q72, Q80, Q84

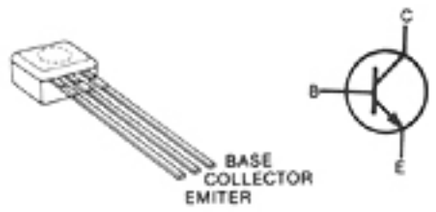

RN1202
Q4, Q5, Q20, Q21, Q25, Q41, Q48, Q52, Q53, Q56, Q57, Q69, Q74, Q75, Q81

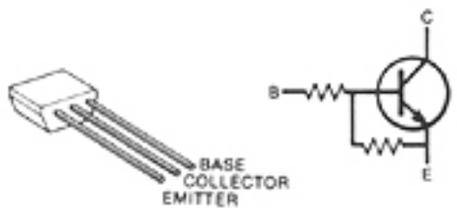

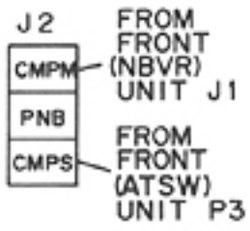

2SC2458
Q6, Q7, Q11, Q22, Q23, Q32, Q35, Q37, Q46, Q60, Q62, Q64, Q65, Q67, Q70, Q76, Q78, Q79

2SC1583
Q9

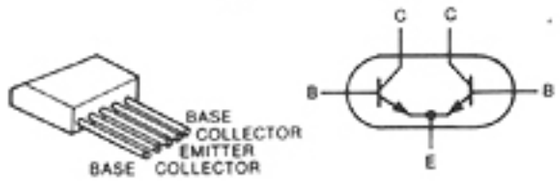

2SC1571
Q34

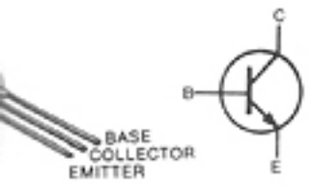

RN1204
Q29, Q31, Q40, Q71, Q77, Q83

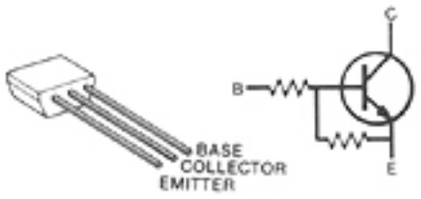

RN2202
Q16, Q24, Q30

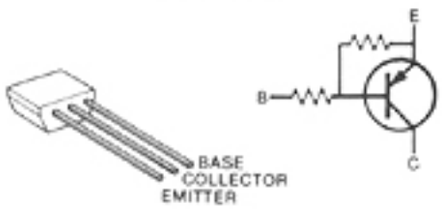

2SA1048
Q13, Q26, Q27, Q28, Q58, Q61, Q82

2SC2878
Q12, Q15, Q17, Q59

7-10 PA UNIT

• PA UNIT

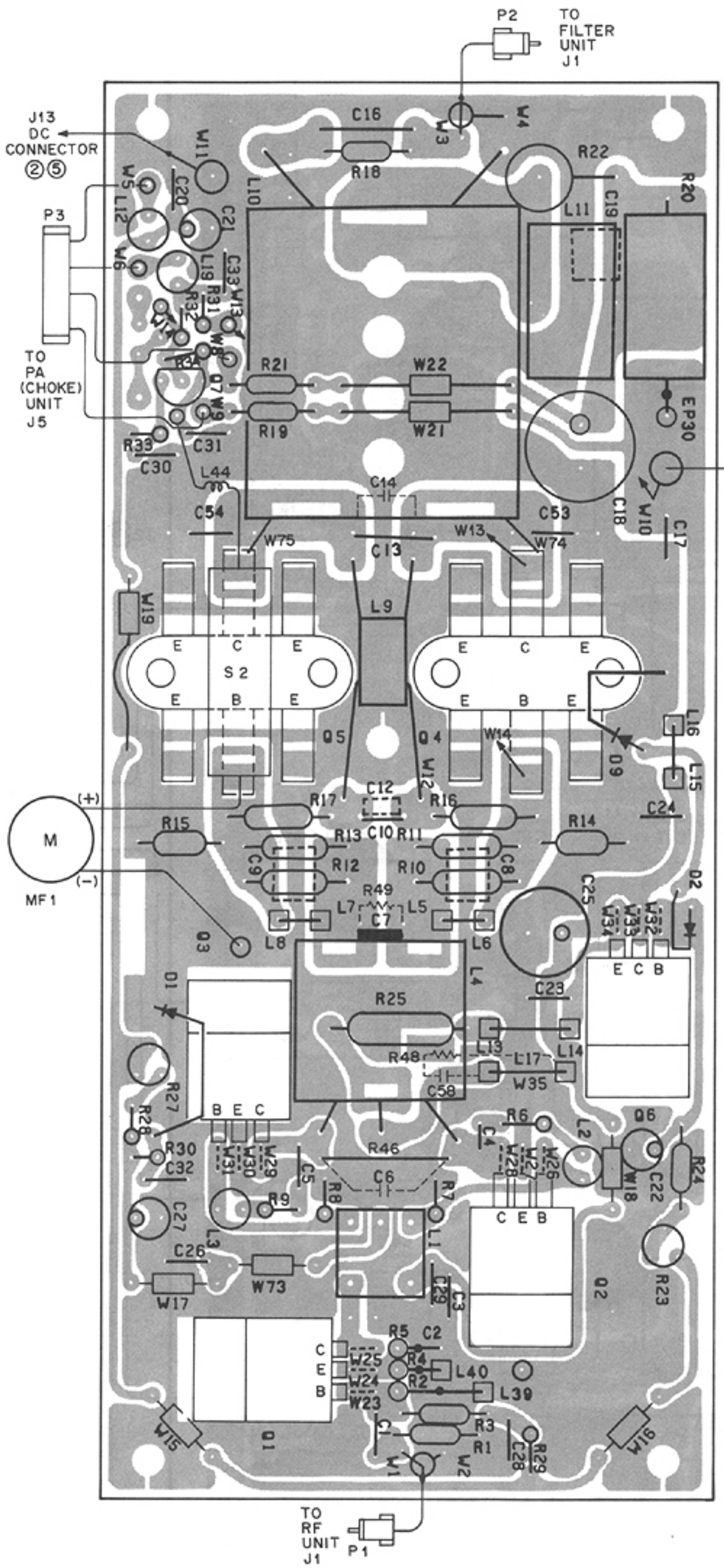

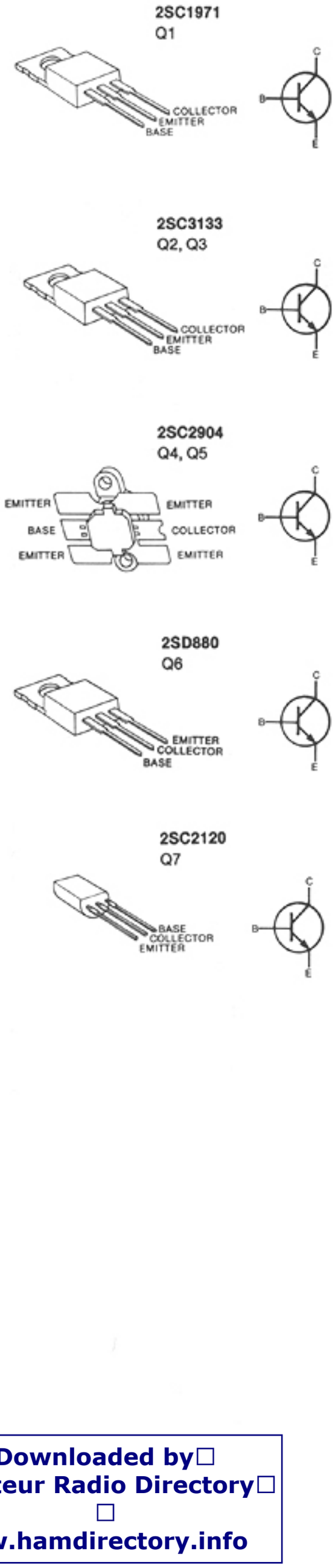

• PA (CHOKE) UNIT

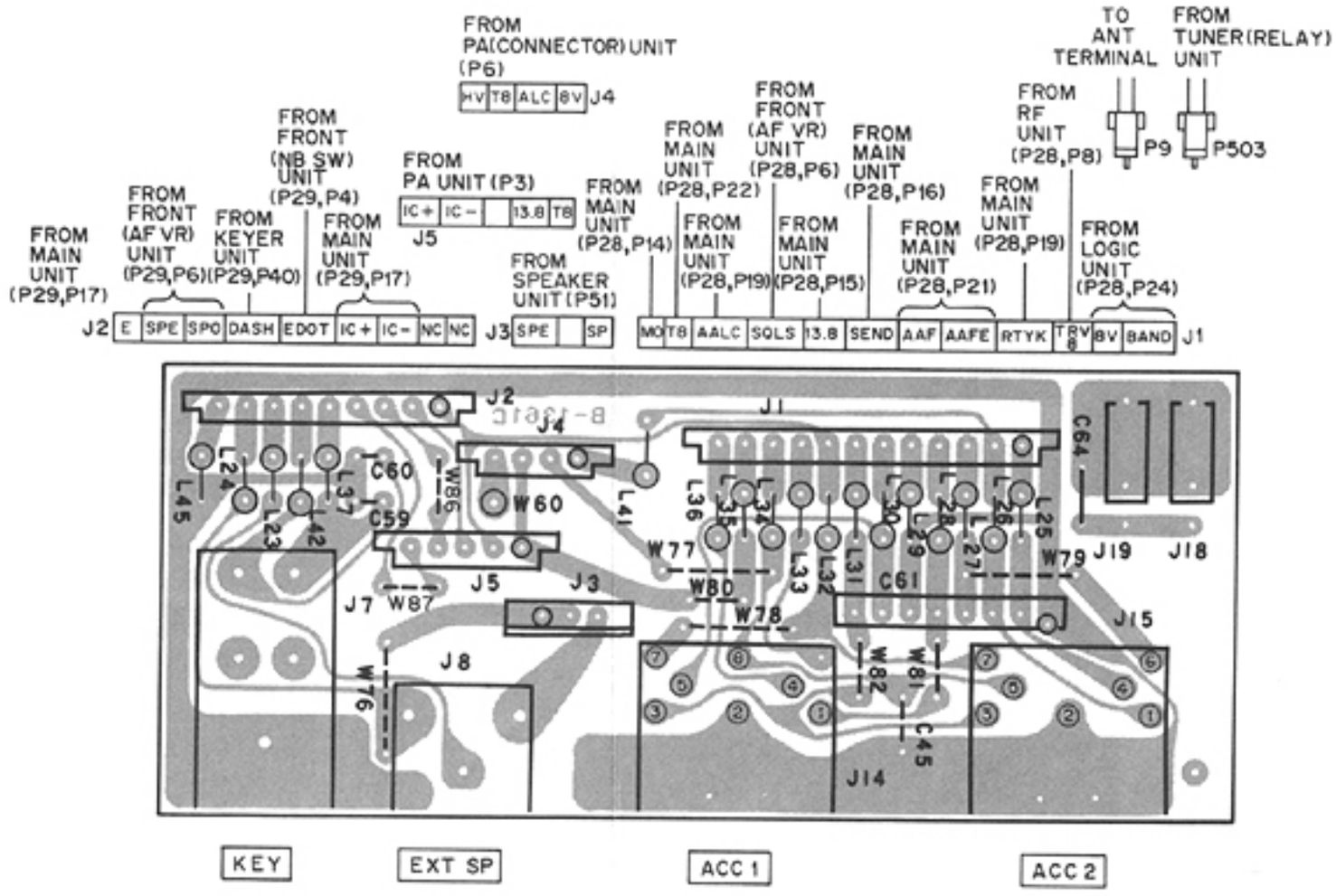

• PA (CONNECTOR) UNIT

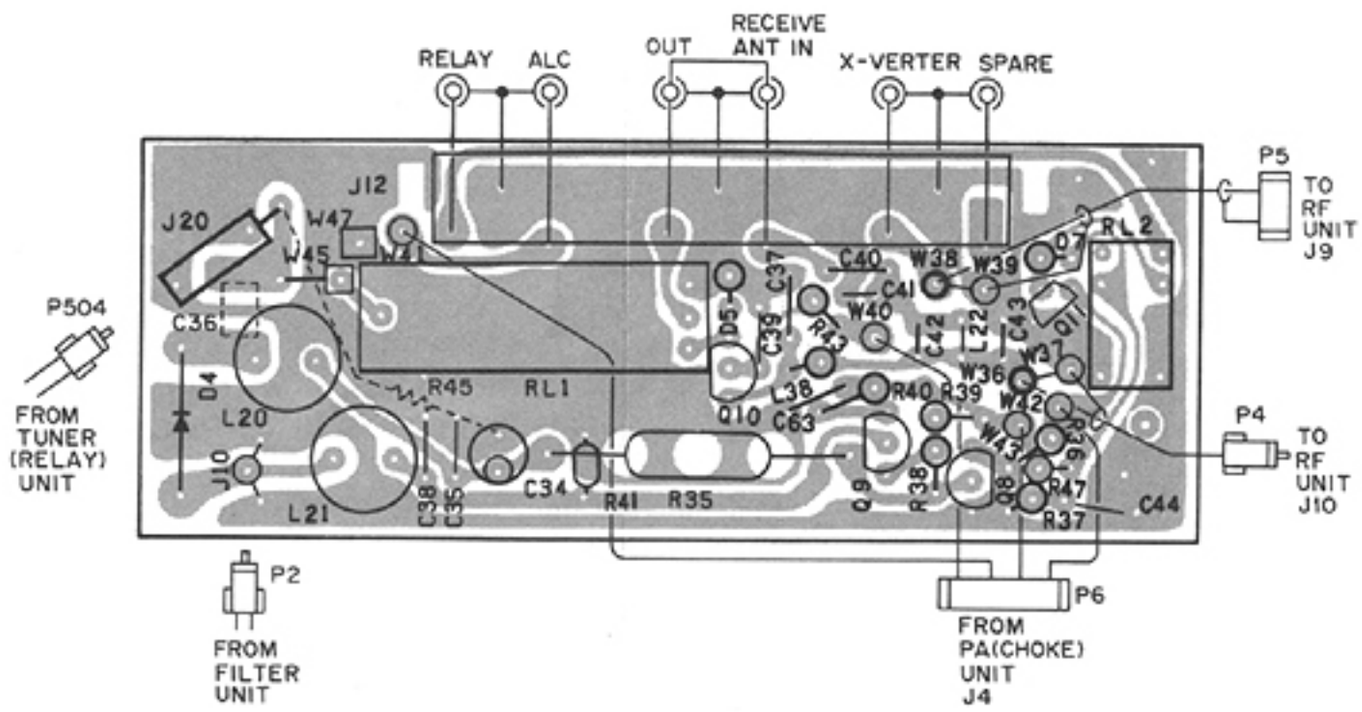

2SD468
Q8

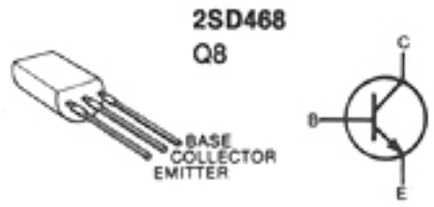

2SB562
Q9

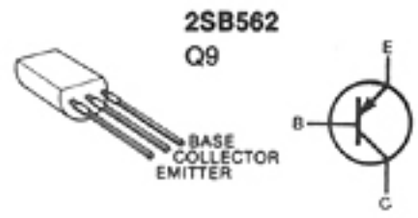

2SC2458
Q10

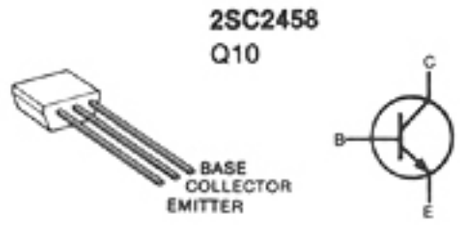

RN1202
Q11

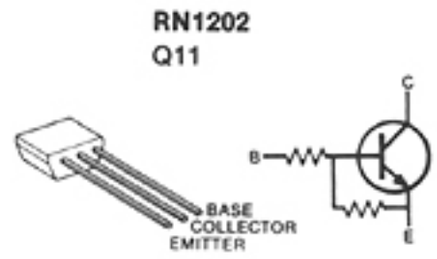

7-11 FILTER UNIT

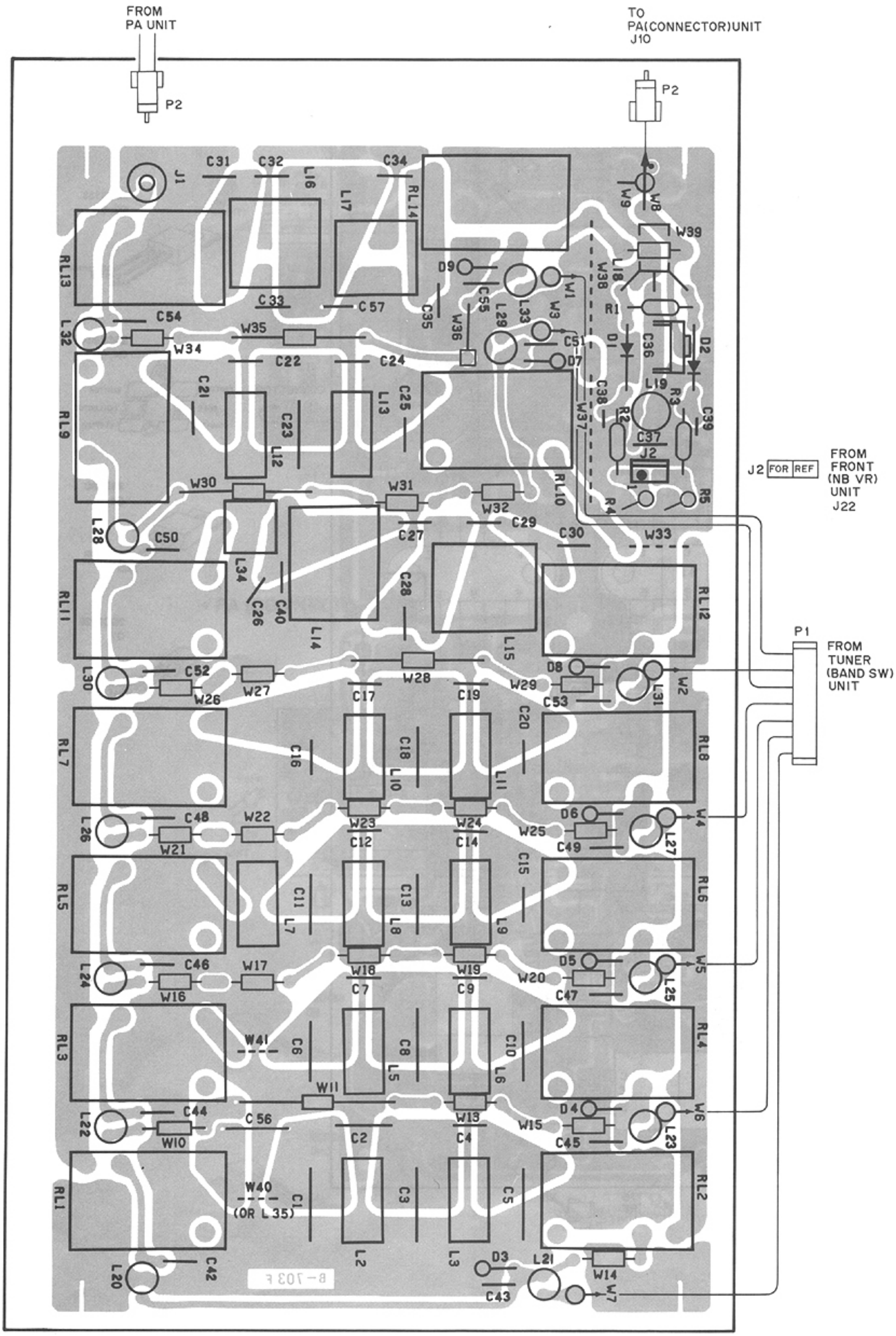

7-12 TUNER UNIT

• TUNER (PRESET) UNIT

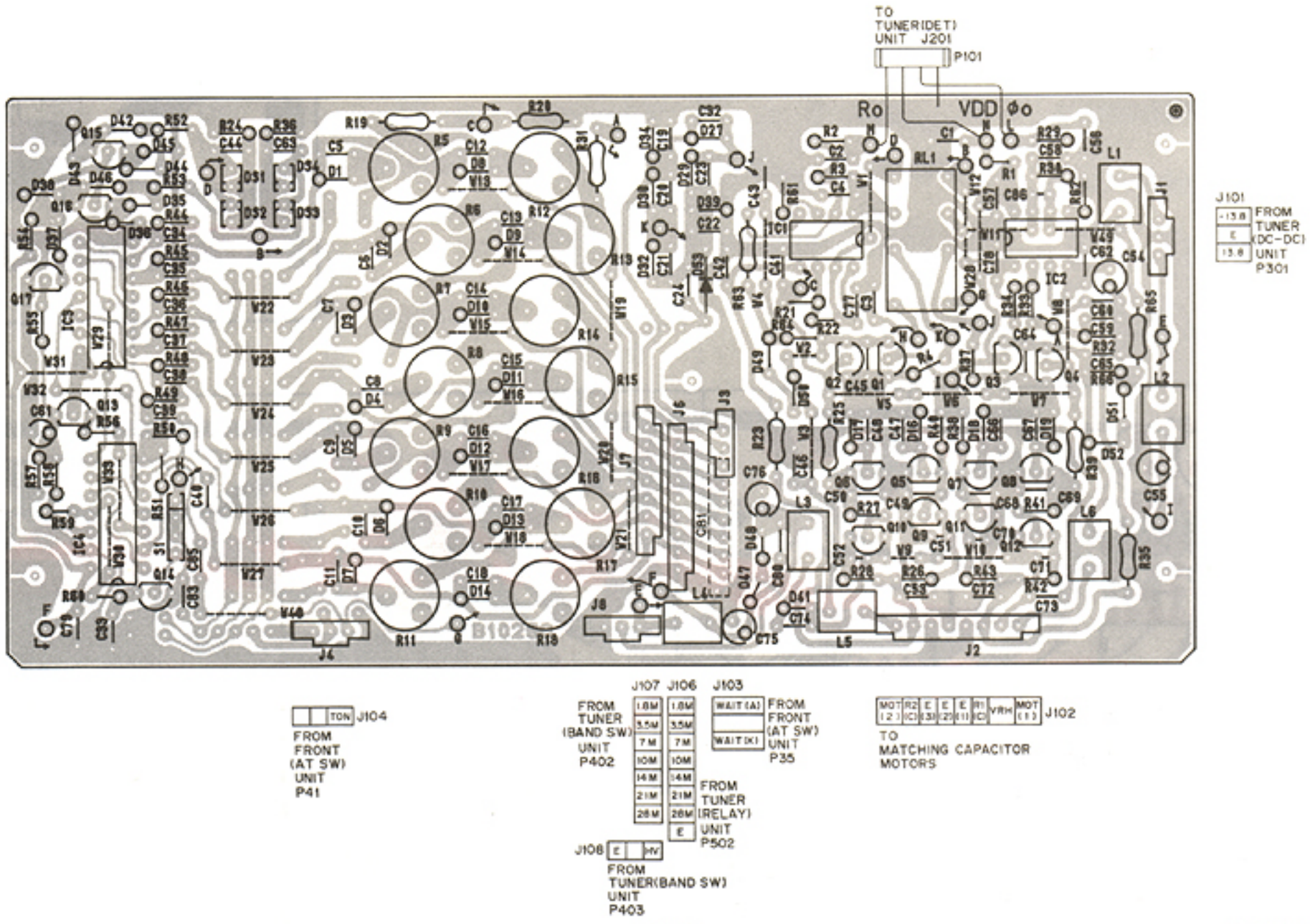

2SD468
Q101, Q103

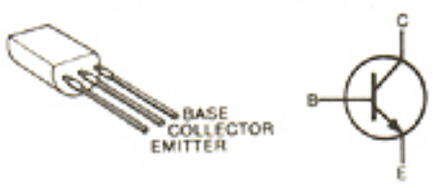

2SB562
Q102, Q104

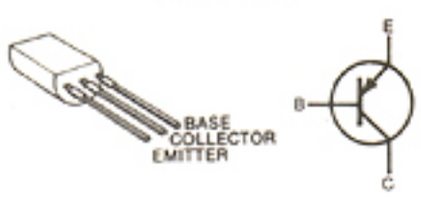

2SC945
Q105, Q107, Q109, Q111, Q113, Q114, Q115, Q116, Q117

2SA1015
Q106, Q108, Q110, Q112

NOTE: Add "100" to the indicated number on the unit for actual part number respectively.

• TUNER (DC-DC) UNIT

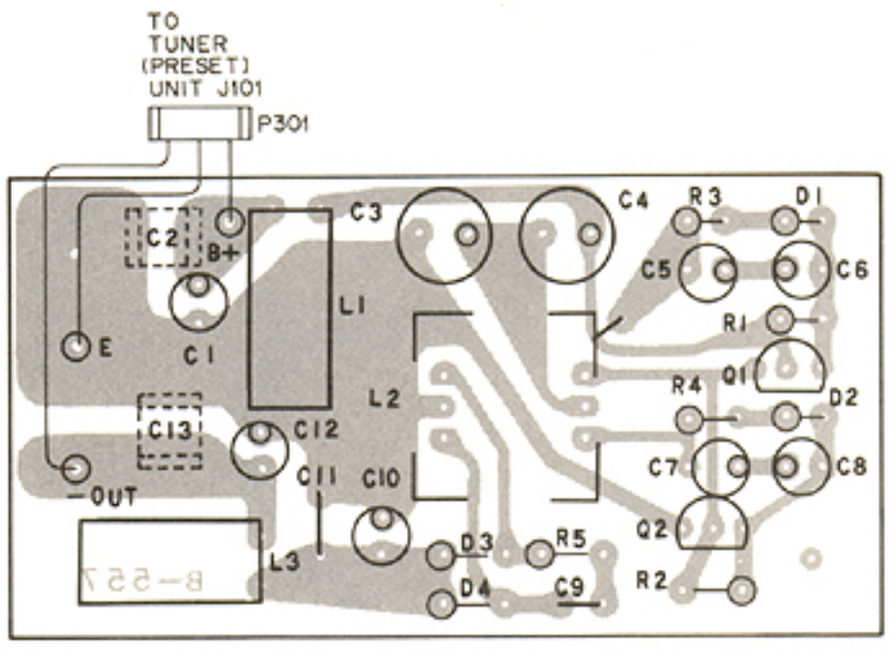

2SD468
Q301, Q302

NOTE: Add "300" to the indicated number on the unit for actual part number respectively.

• TUNER (DET) UNIT

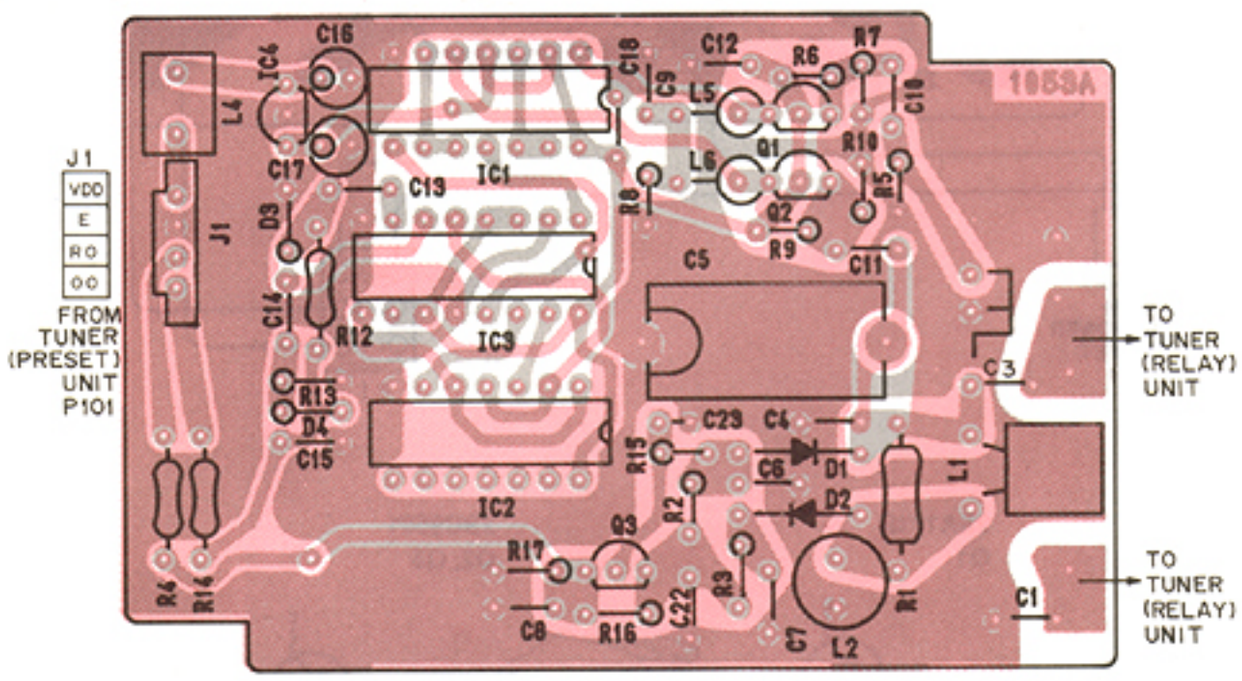

2SC1740
Q201, Q202

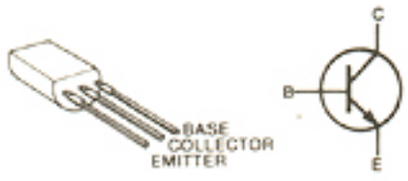

2SK30ATM
Q203

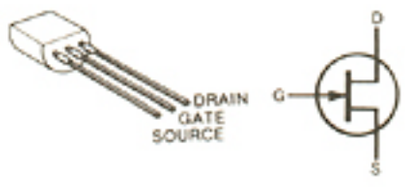

NOTE: Add "200" to the indicated number on the unit for actual part number respectively.

• TUNER (RELAY) UNIT

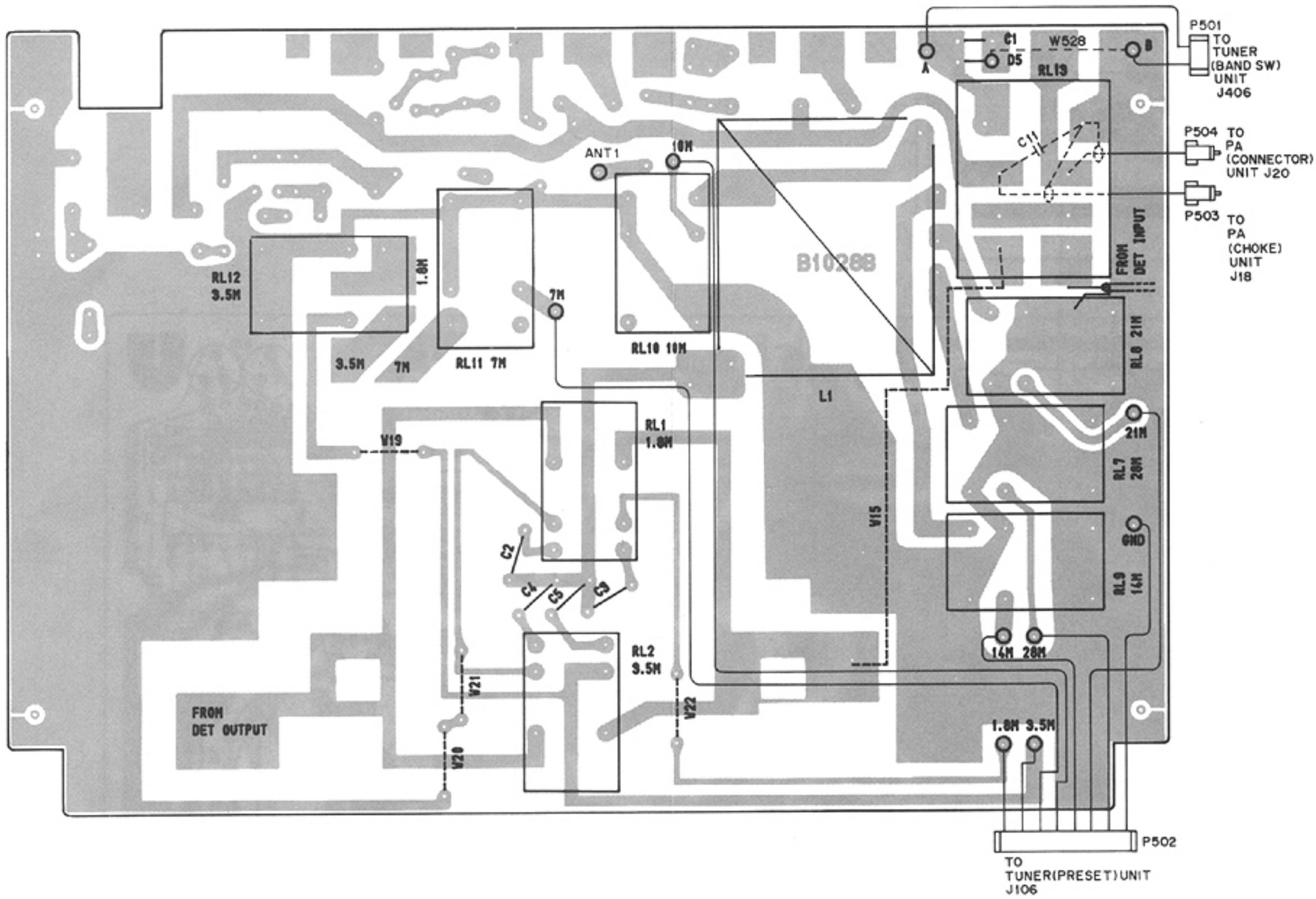

NOTE: Add "500" to the indicated number on the unit for actual part number respectively.

• TUNER (BAND SW) UNIT

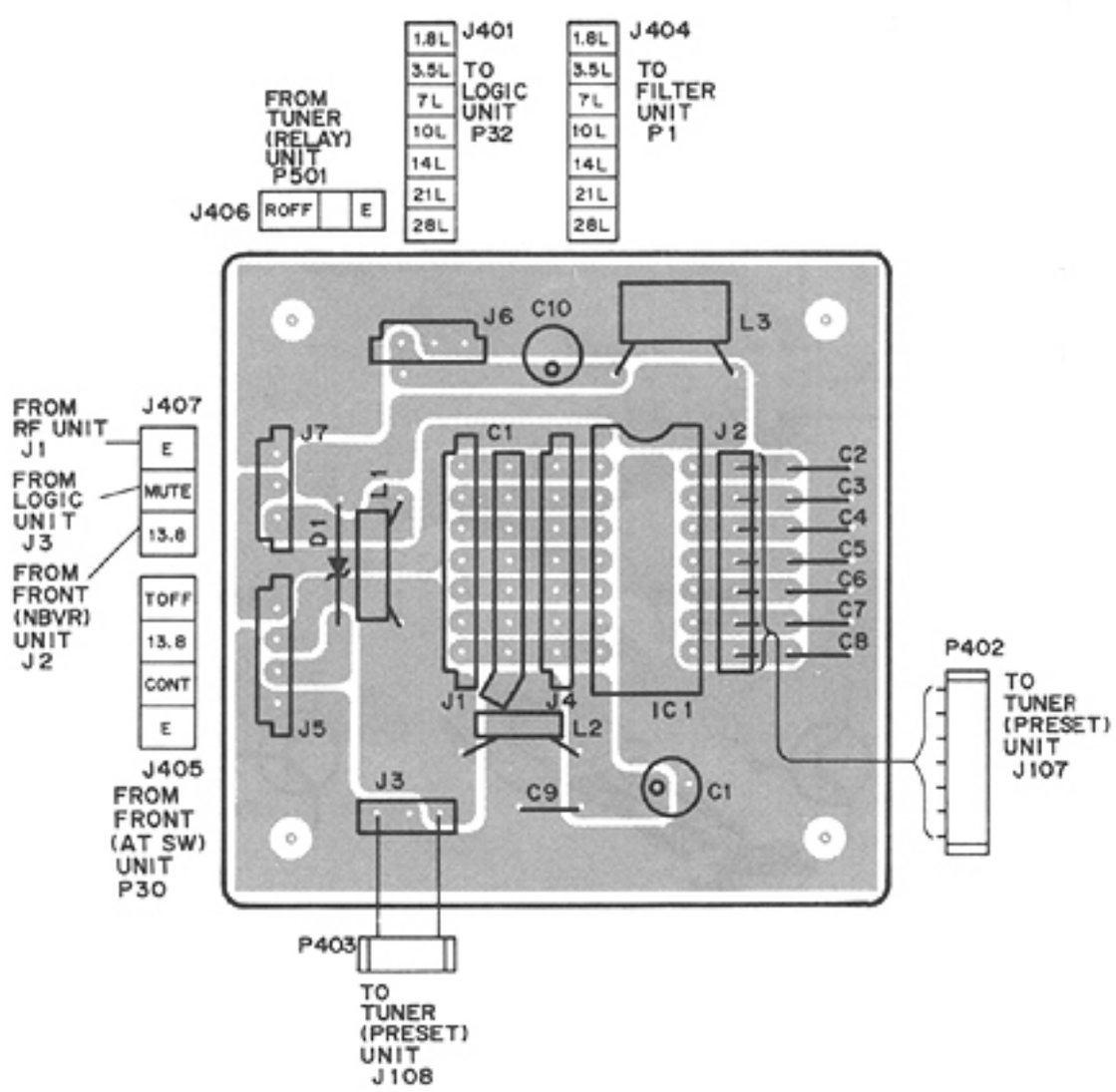

NOTE: Add "400" to the indicated number on the unit for actual part number respectively.

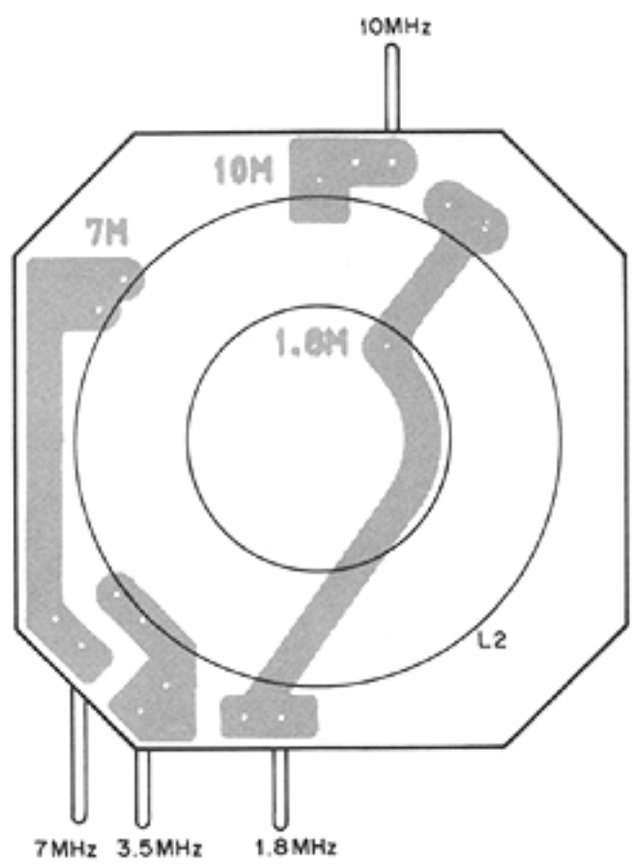

NOTE: Add "500" to the indicated number on the unit for actual part number respectively.

7-13 SWITCHING REGULATOR UNIT

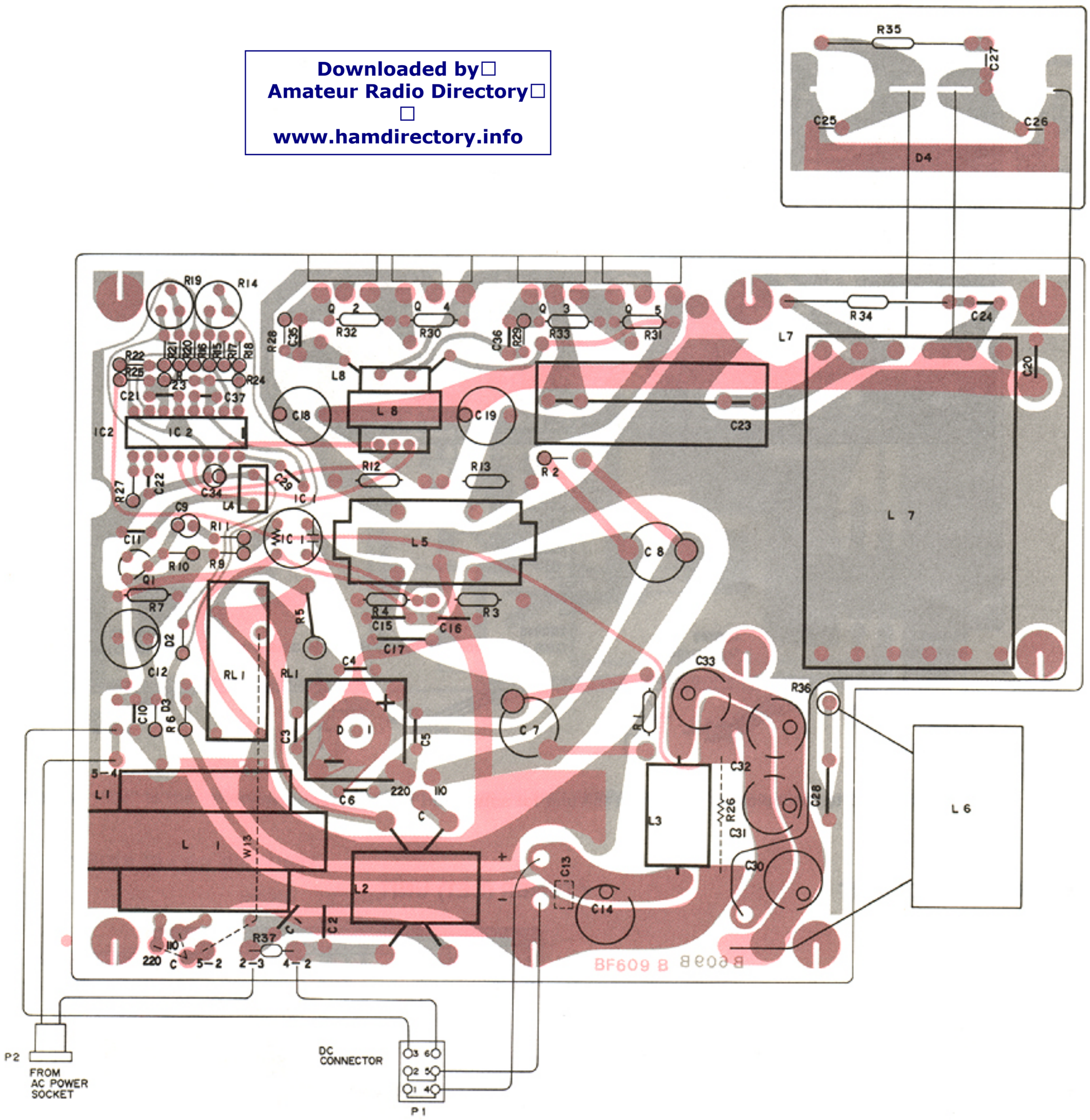

2SA1015
Q1

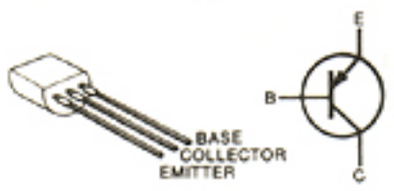

2SC2501
Q2, Q3

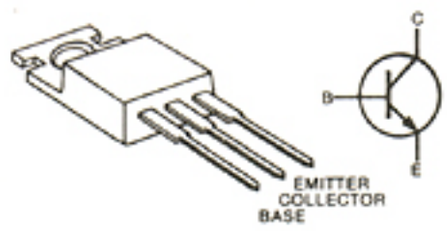

2SC2307
Q4, Q5

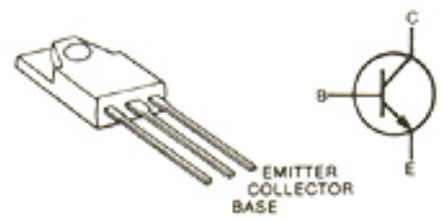

SECTION 8 IC PIN CONNECTIONS

NJM4558M, NJM4558MD
(LOW NOISE DUAL OPERATIONAL AMPLIFIER)

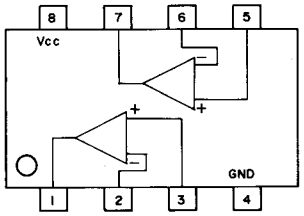

ND487C1-3R
(SCHOTTKY BARRIER DIODE QUAD)

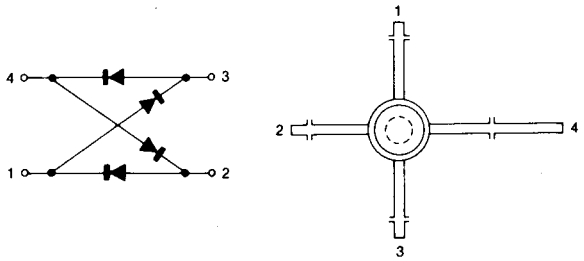

μA7805
(3-TERMINAL 5V REGULATOR)

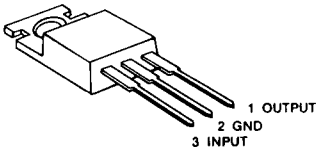

N-110
(PHOTO COUPLER)

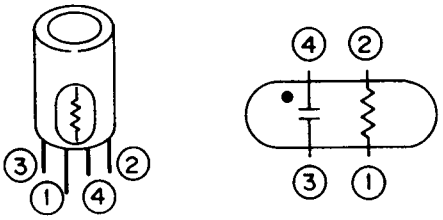

μPD549C
(DISPLAY CONTROLLER)

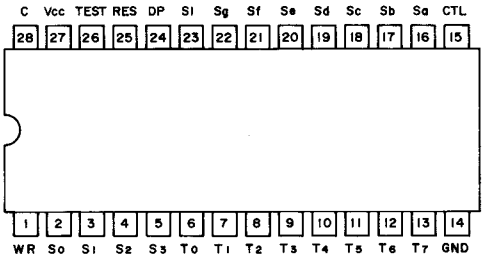

μA78L05
(3-TERMINAL 5V REGULATOR)

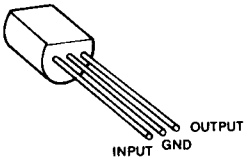

μPD7564 CS031
(CPU)

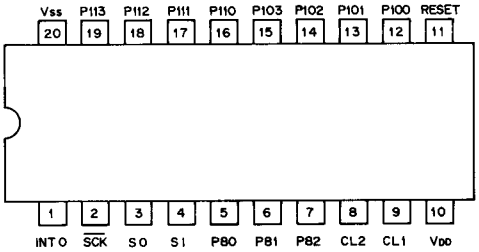

μPD4013BC
(DUAL D-TYPE FLIP FLOP)

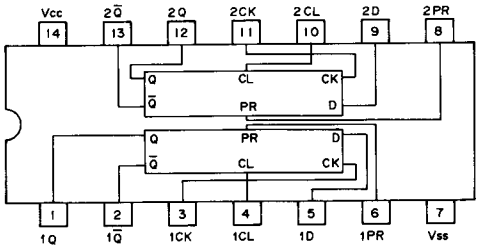

μPD4011BC
(QUAD 2-INPUT POSITIVE NAND GATE)

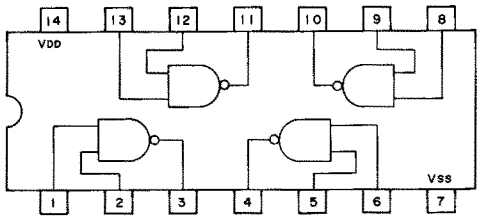

μPD4030BC
(QUAD 2-INPUT EXCLUSIVE OR GATE)

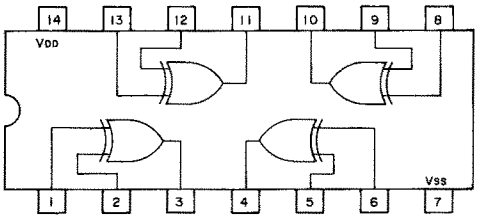

μPD4081BC
(QUAD 2-INPUT POSITIVE AND GATE)

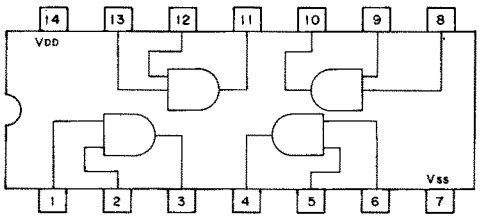

μPD446C
(RAM)

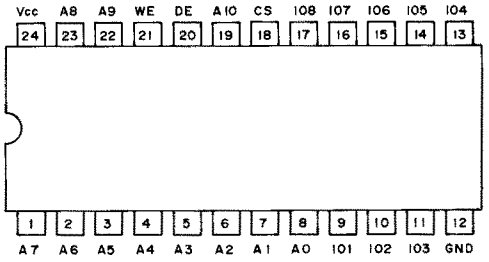

μPD4069UBG
(HEX INVERTER)

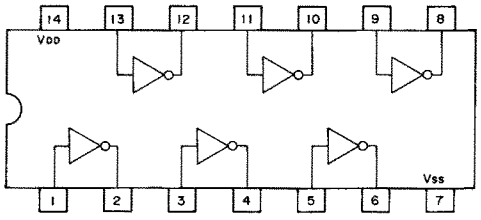

μPC1037H
(DOUBLE BALANCED MIXER)

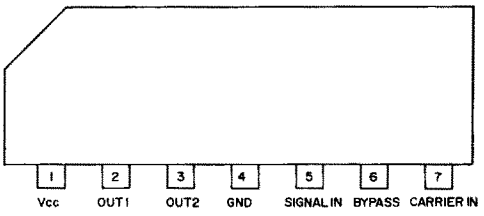

μPD4051BC
(SIGNAL 8-CHANNEL ANALOG MULTIPLEXER)

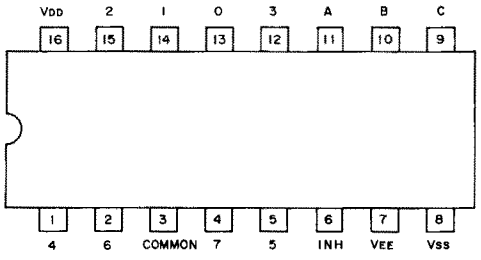

μPD23C128EG-305
(ROM)

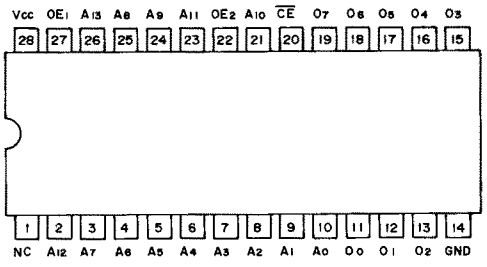

μPC577H
(FM IF AMPLIFIER)

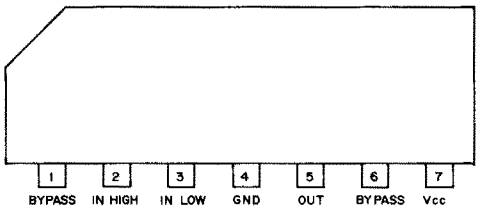

μPD4066BC
(QUAD BILATERAL SWITCHING)

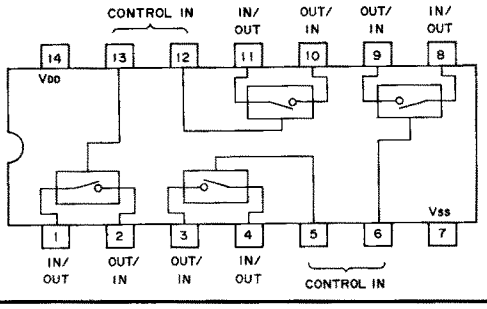

μA7808
(3 TERMINAL 8V REGULATOR)

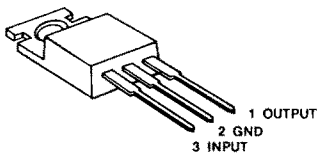

μPC1241H
(AUDIO POWER AMPLIFIER)

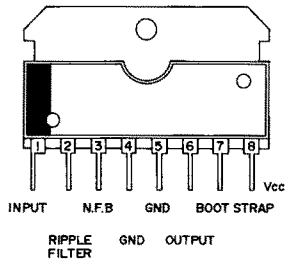

μPD4071BC
(QUAD 2 INPUT POSITIVE OR GATE)

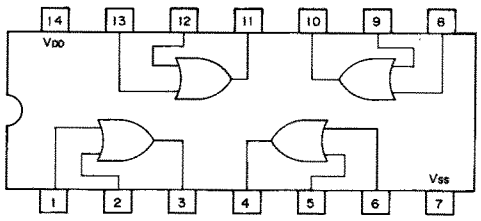

μPC1042C
(PULSE CONTROL)

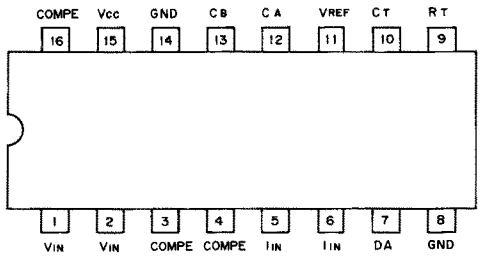

SN74LS08N
(QUAD 2-INPUT POSITIVE AND GATE)

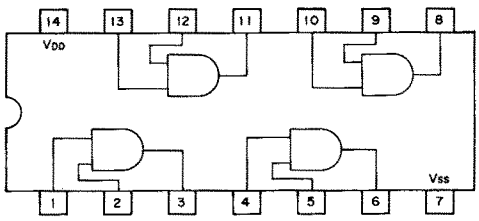

SN74LS32N
(QUAD 2-INPUT POSITIVE OR GATE)

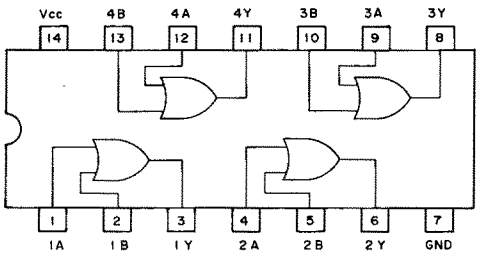

SN74LS02N
(QUAD 2-INPUT POSITIVE NOR GATE)

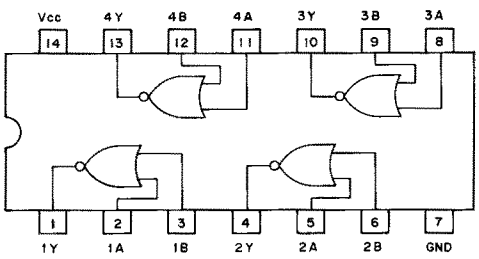

SN74LS377N
(DUAL D-TYPE FLIP FLOP AND ENABLE)

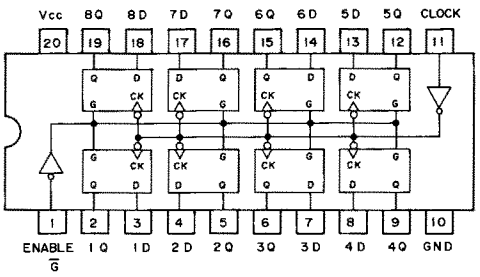

SN74LS11N
(TRIPLE 3-INPUT POSITIVE AND GATE)

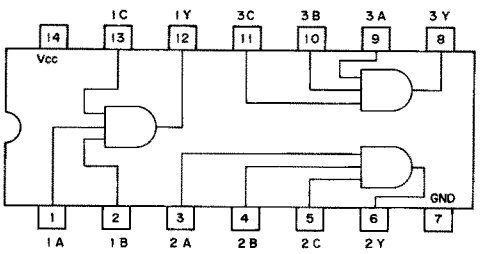

SN74LS175N
(DUAL D-TYPE FLIP FLOW)

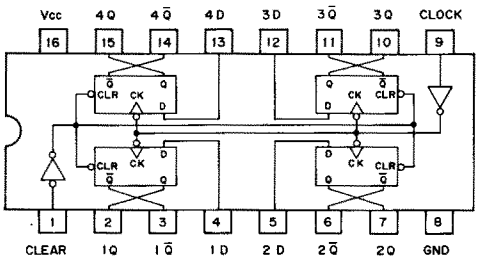

SN74S112N
(DUAL JK FLIP FLOP)

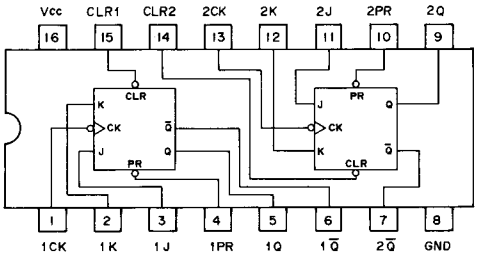

SN74LS38
(QUAD 2-INPUT POSITIVE NAND GATE)

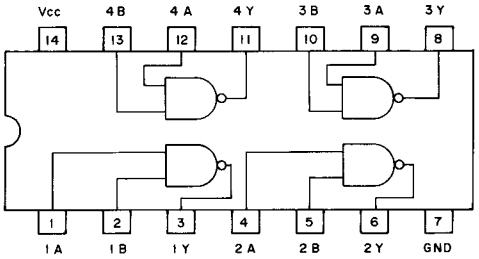

SN74LS90N
(DECADE COUNTERS)

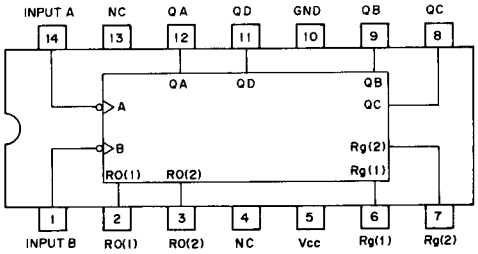

SN74LS132N
(QUAD 2-INPUT NAND SCHMITT TRIGGER)

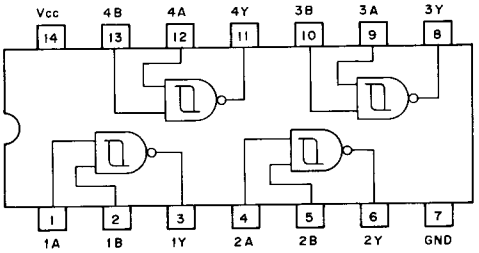

SN74S00N
(QUAD 2-INPUT NAND GATE)

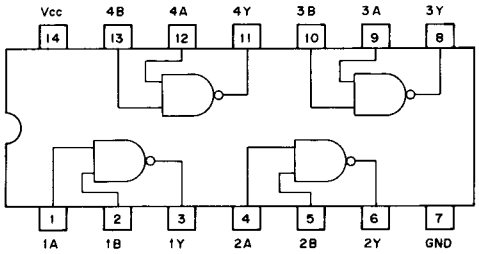

BA618
(DRIVER)

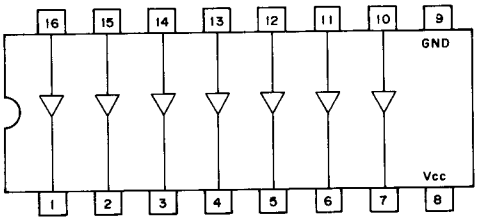

BA401
(LIMITER AMPLIFIER)

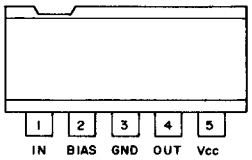

TC5082P-GL
(OSCILLATOR AND 12 STAGE DIVIDER)

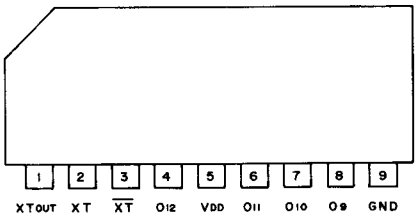

TC4528BP
(DUAL MONOSTABLE MULTIVIBRATOR)

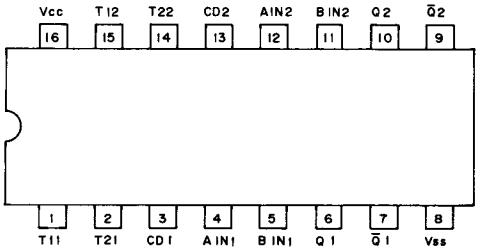

TA78L005AP, TA78L008AP
(3-TERMINAL 5V REGULATOR), (3-TERMINAL 8V REGULATOR)

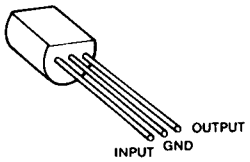

HD63A01V1G11P
(CPU)

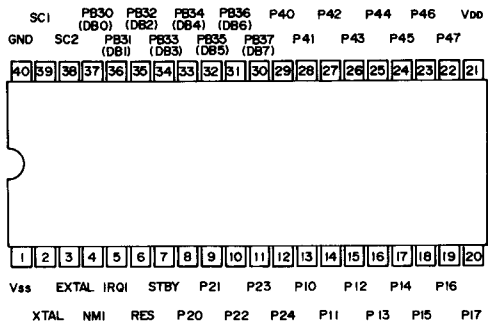

74HCT244F
(NONINVERTED 3-STATE OUTPUT)

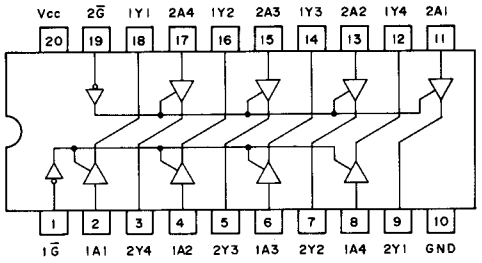

74HCT374F
(DUAL D-TYPE FLIP FLOP)

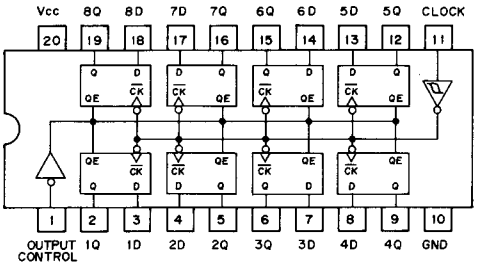

DAN401
(SWITCHING DIODE ARRAY)

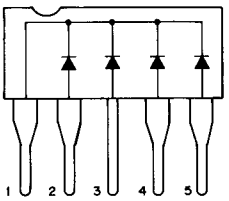

DP-6
(DC-DC CONVERTER)

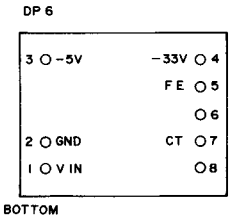

M54562P
(DARLINGTON TRANSISTOR ARRAY)

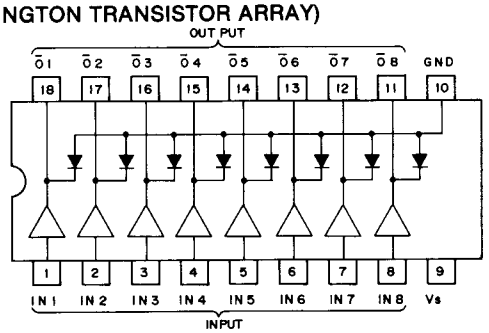

M50780SP
(INPUT/OUTPUT EXPANDER)

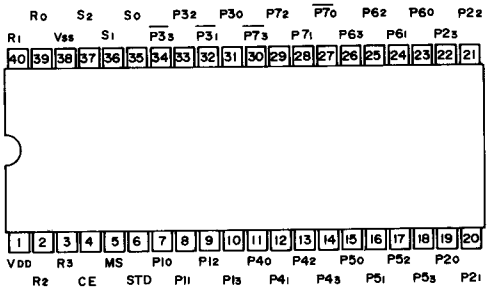

M54929P
(DUAL MODULUS PLL IC)

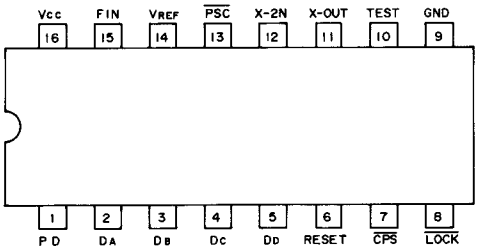

M54466L
(1/10, 1/11 DIVIDER)

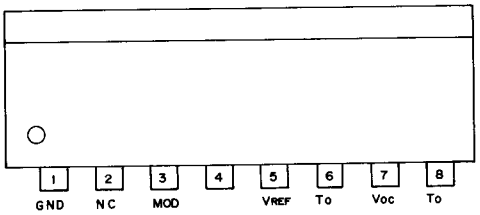

M54459L
(1/20, 1/100 HIGH SPEED DIVIDER)

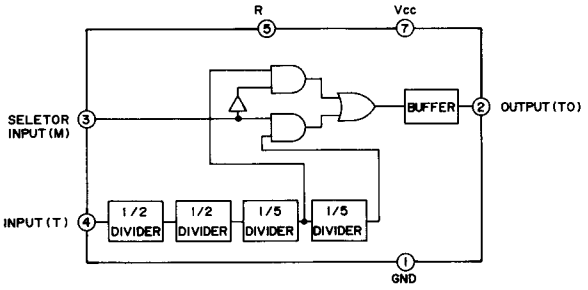

SECTION 9 VOLTAGE DIAGRAMS

9-1 FRONT UNIT

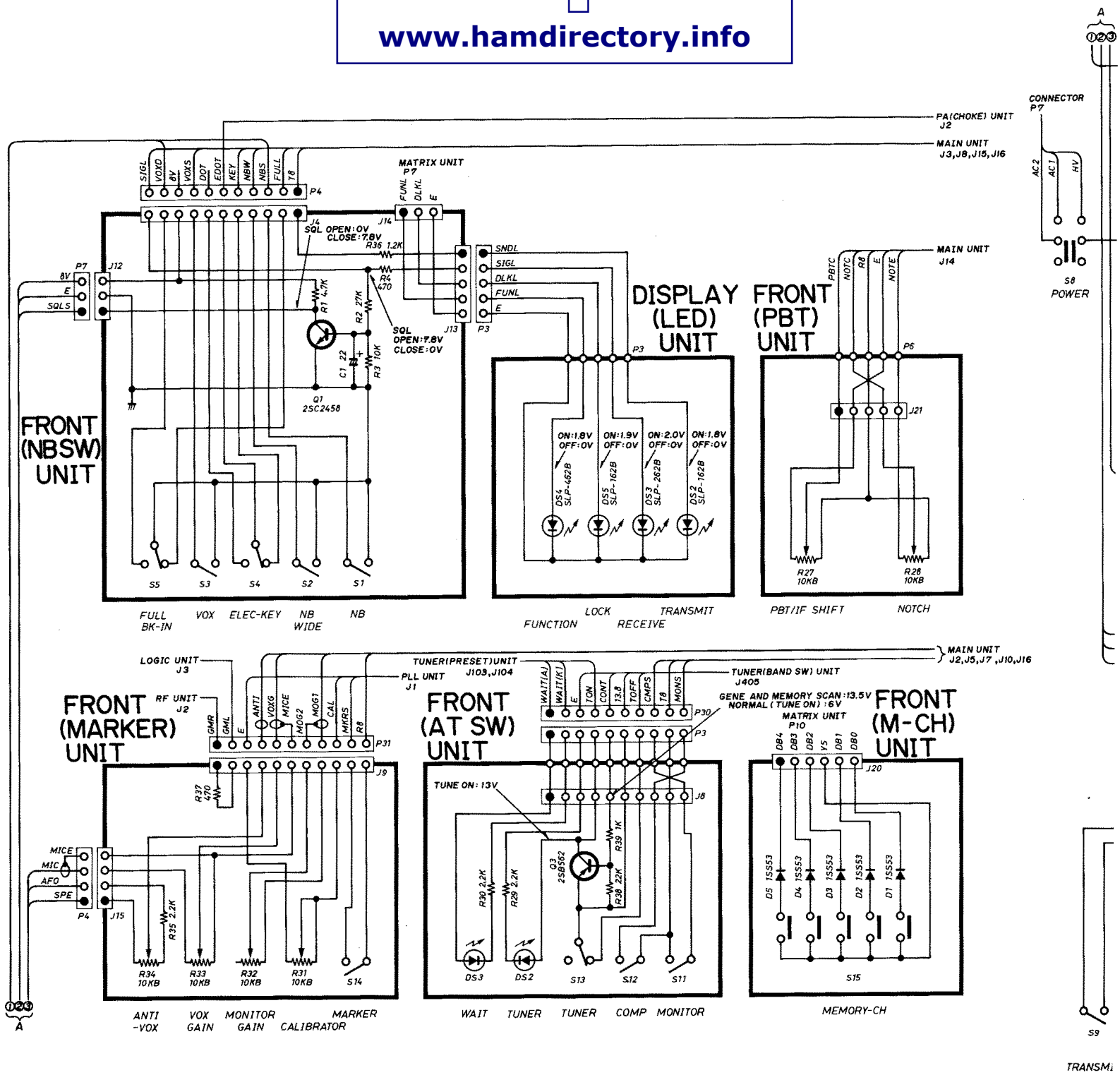

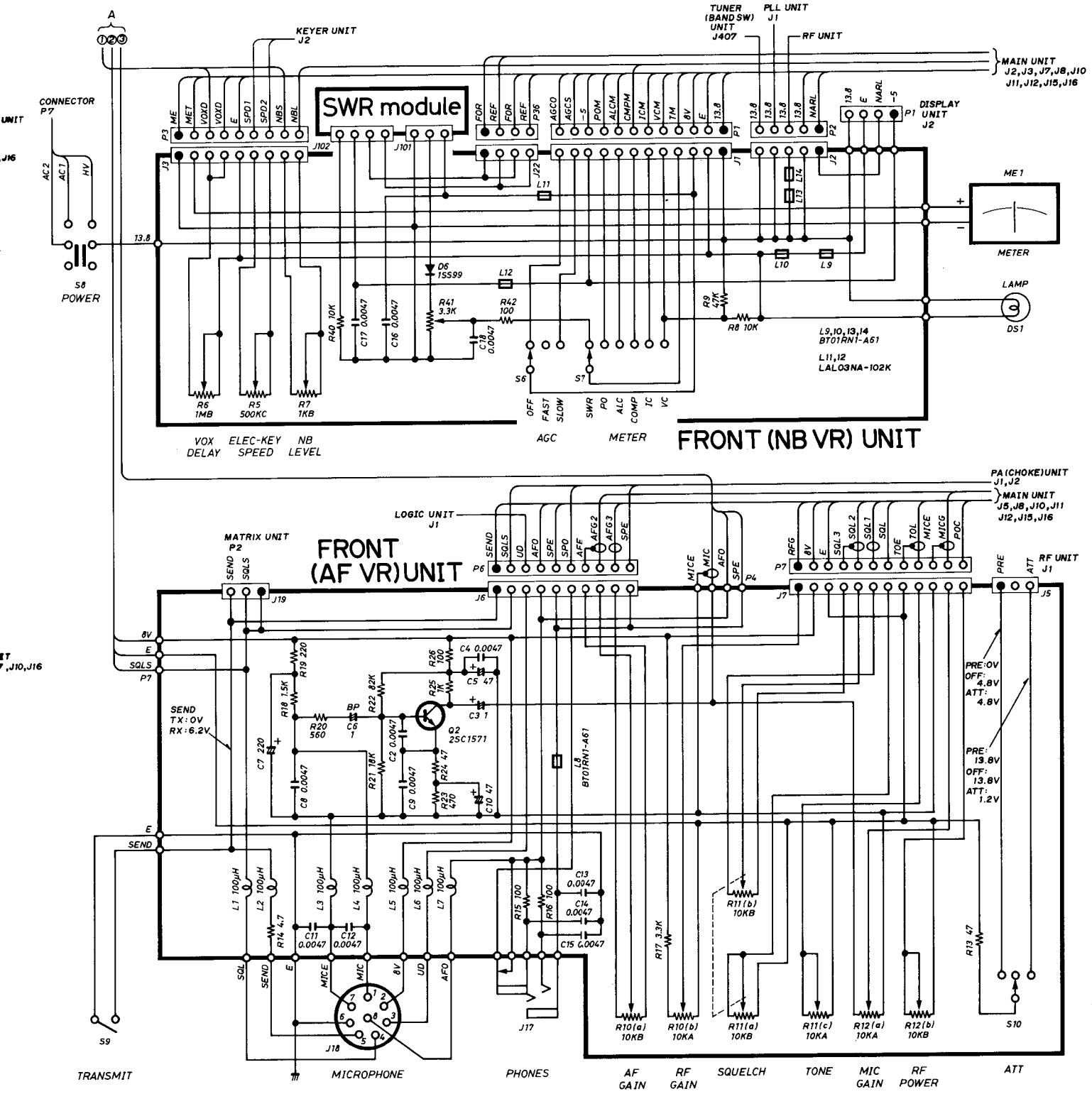
SWR module
FRONT (NB VR) UNIT
FRONT (AF VR) UNIT
KEYER UNIT J2
TUNER (BAND SW) UNIT J407
PLL UNIT J1
RF UNIT
MAIN UNIT J2,J3,J7,J8,J10 J11,J12,J15,J16
DISPLAY UNIT J2
CONNECTOR P7
S8 POWER
ME1
METER
LAMP
DS1
L9,10,13,14 BT01RN1-A61
L11,12 LAL03NA-102K
VOX DELAY
ELEC-KEY SPEED
NB LEVEL
AGC
METER
PA (CHOKE) UNIT J1,J2
LOGIC UNIT J1
MATRIX UNIT P2
SEND TX:0V RX:6.2V
Q2 2SC1571
L8 BT01RN1-A61
PRE:0V OFF: 4.8V ATT: 4.8V
PRE: 13.8V OFF: 13.8V ATT: 1.2V
RF UNIT J1
TRANSMIT
MICROPHONE
PHONES
AF GAIN
RF GAIN
SQUELCH
TONE
MIC GAIN
RF POWER
ATT

9-2 DISPLAY UNIT

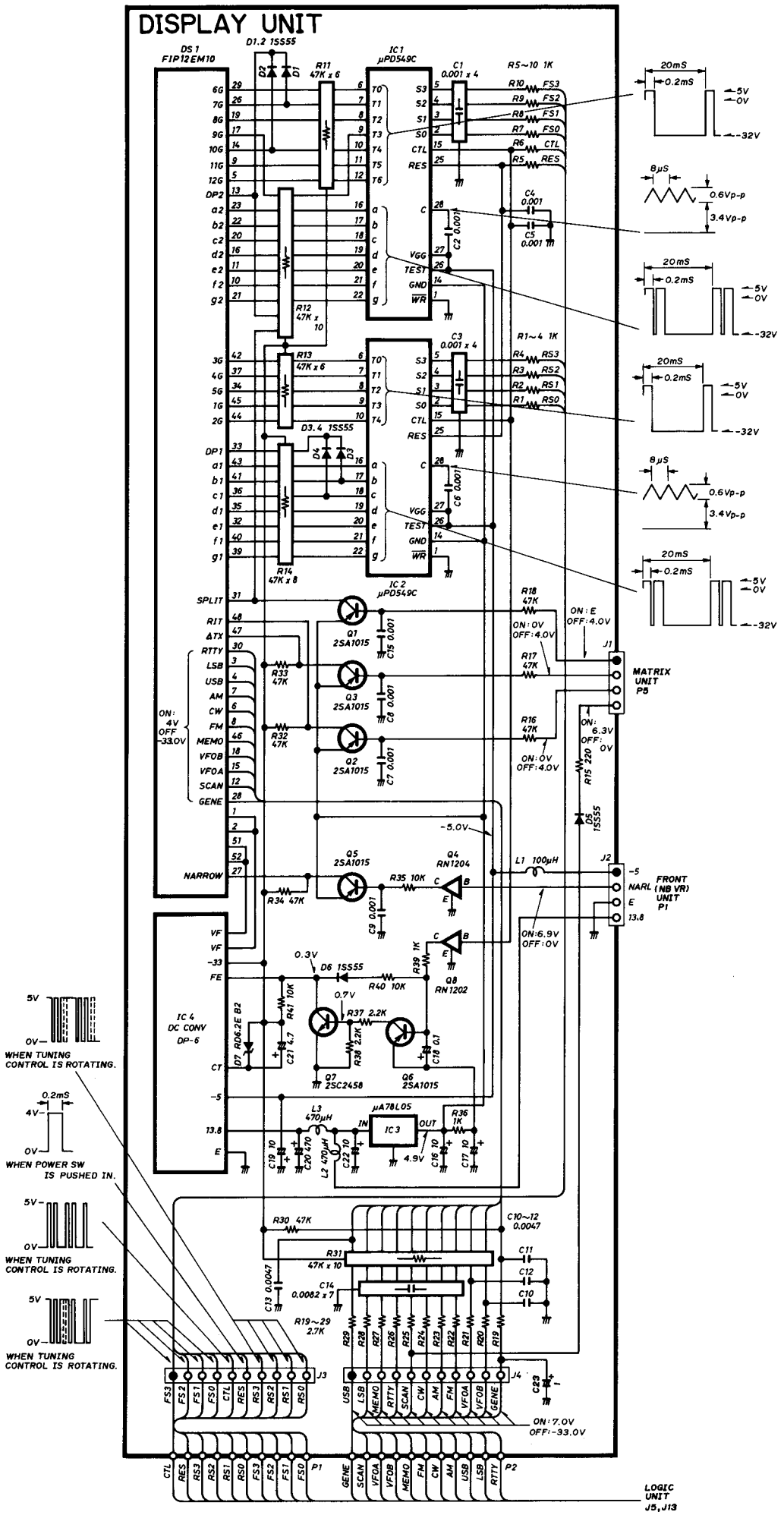

9-3 KEYER UNIT

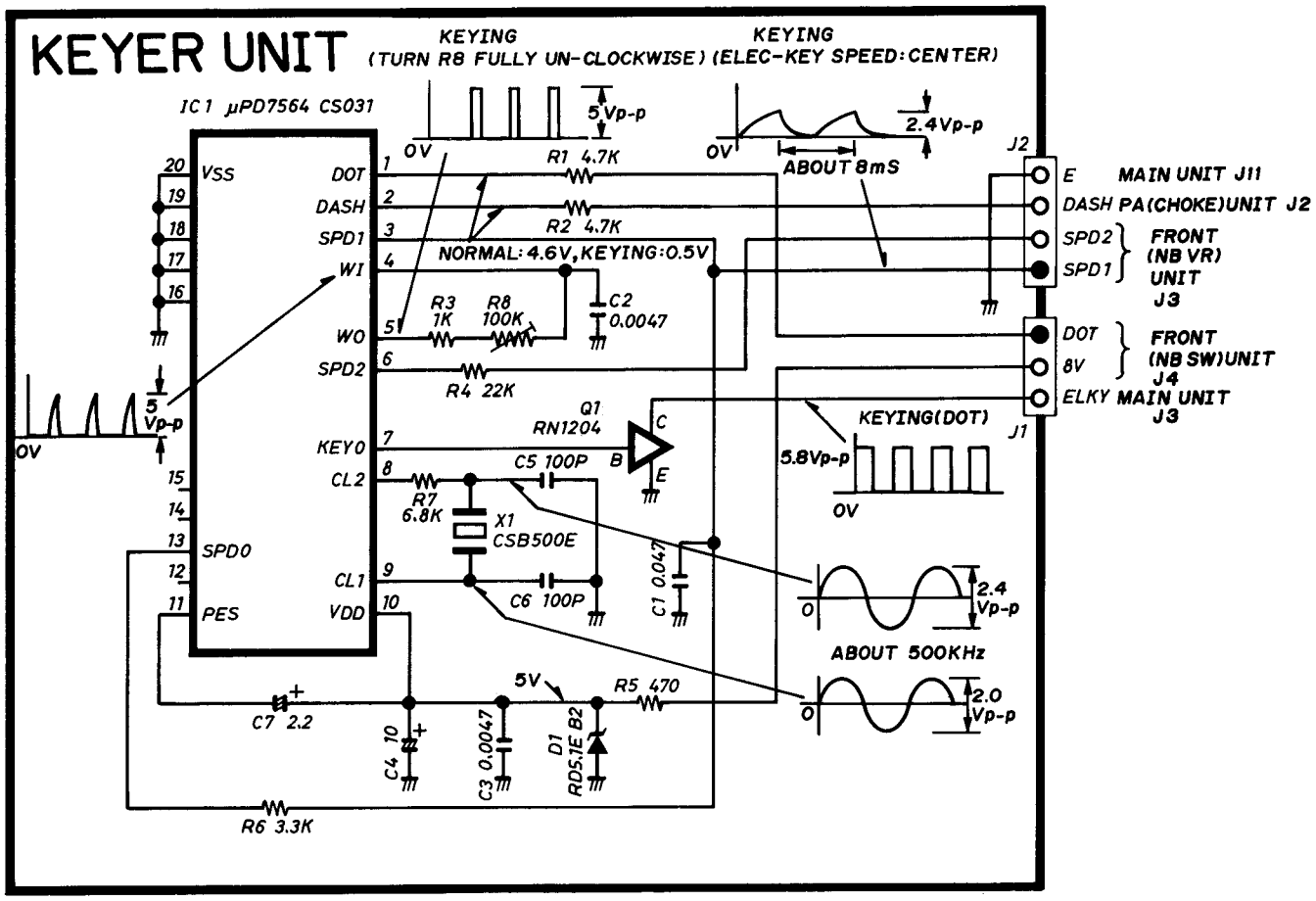

9-4 MATRIX UNIT

MATRIX UNIT

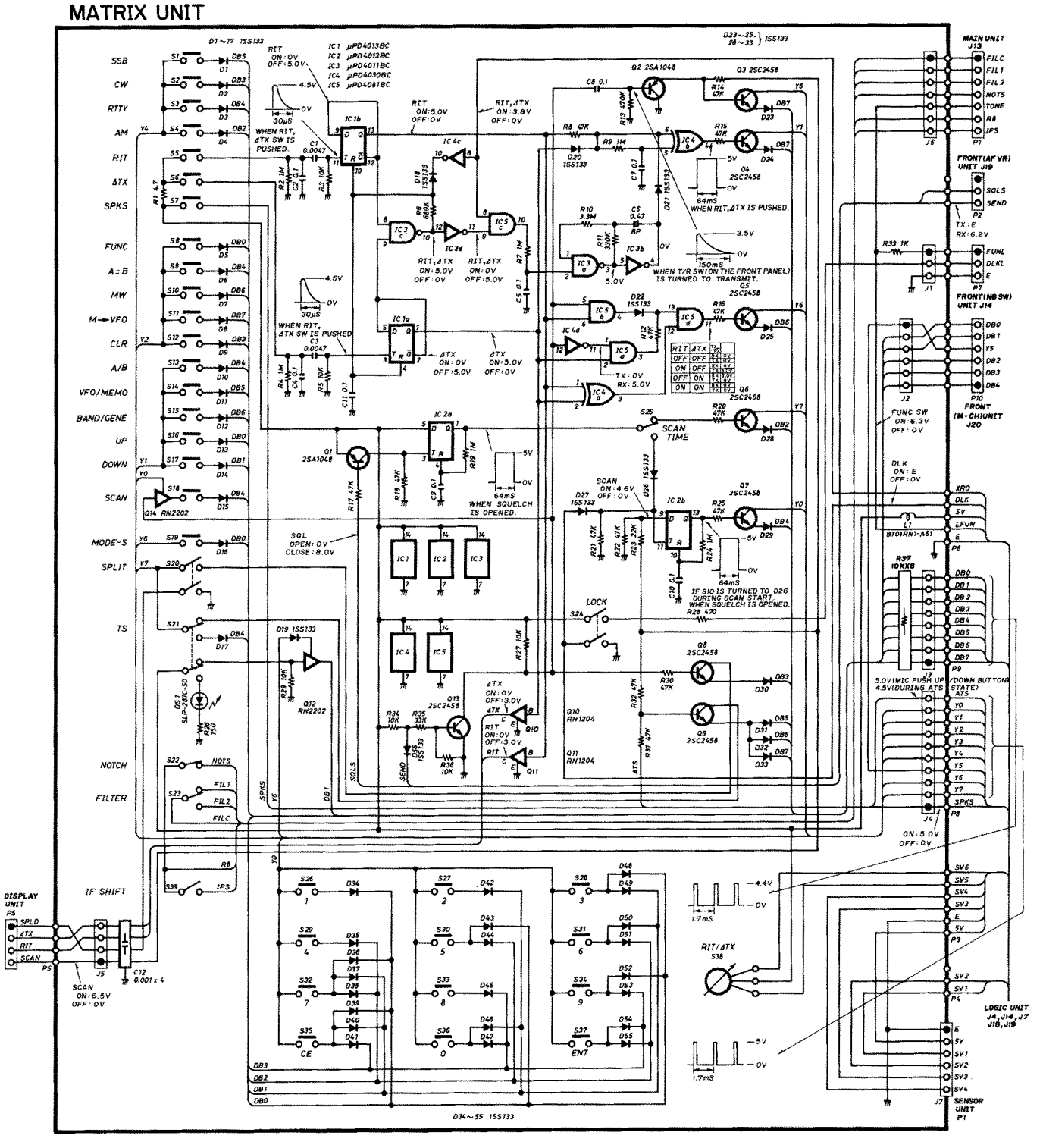

9-5 LOGIC A UNIT

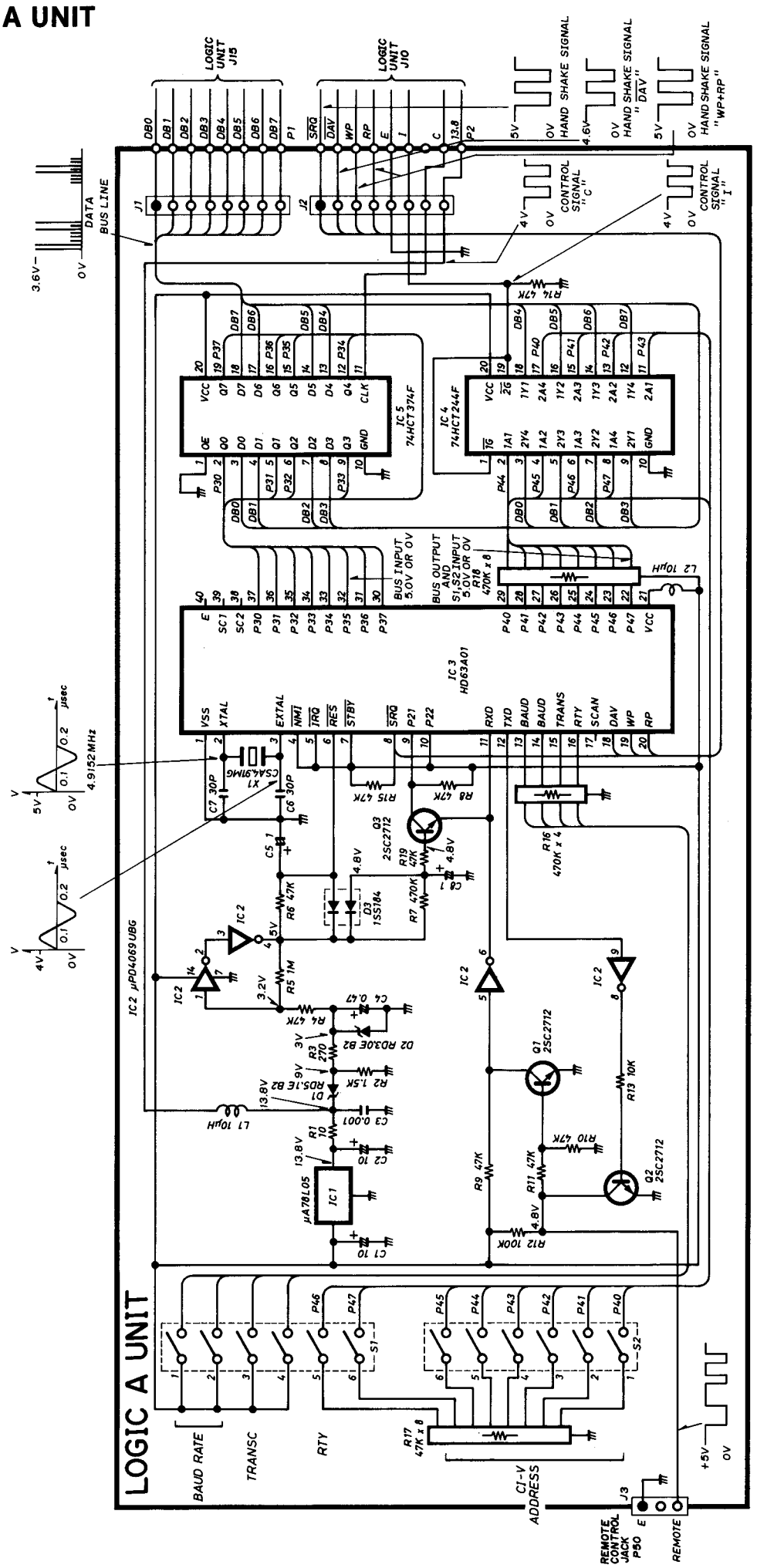

9-6 LOGIC UNIT

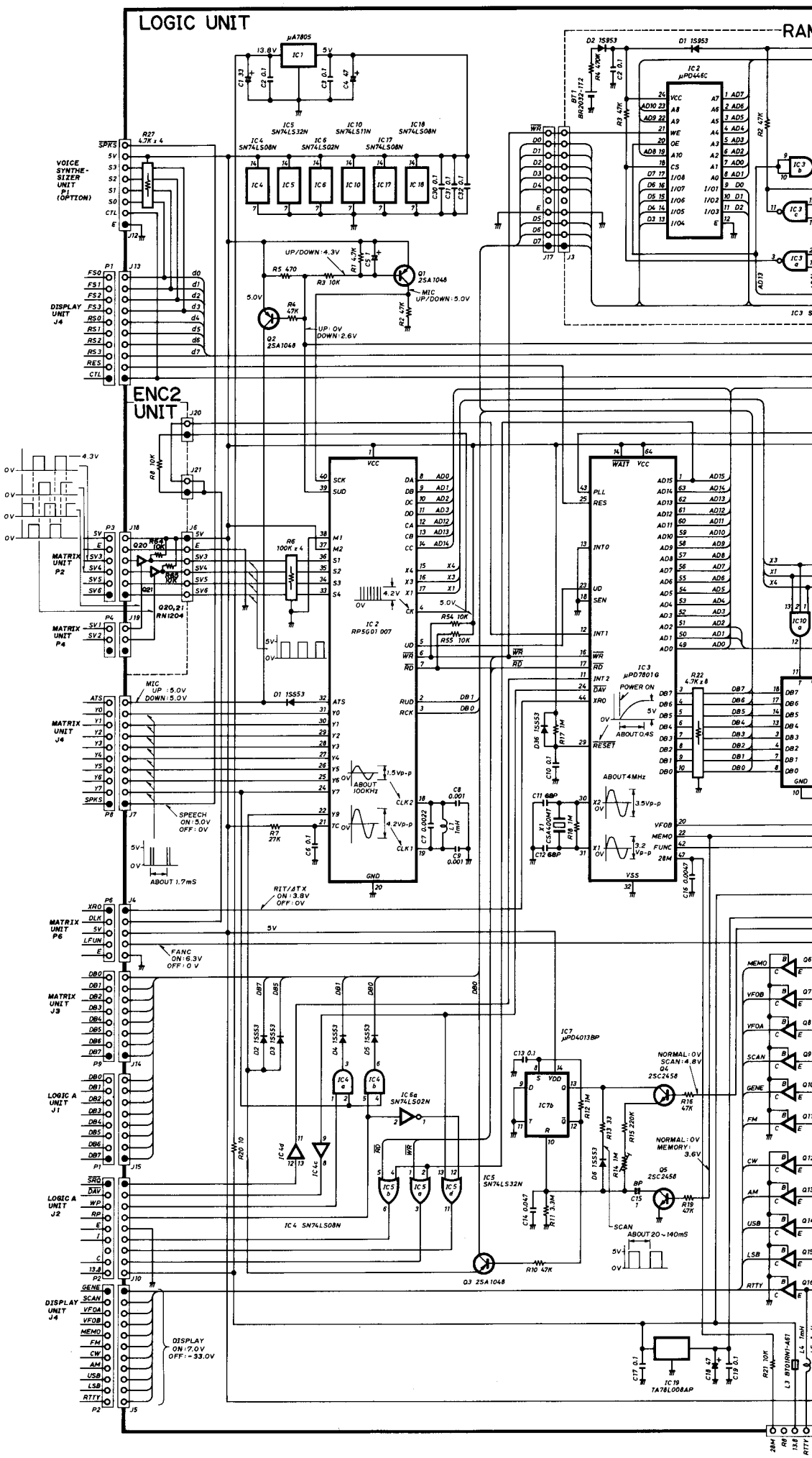

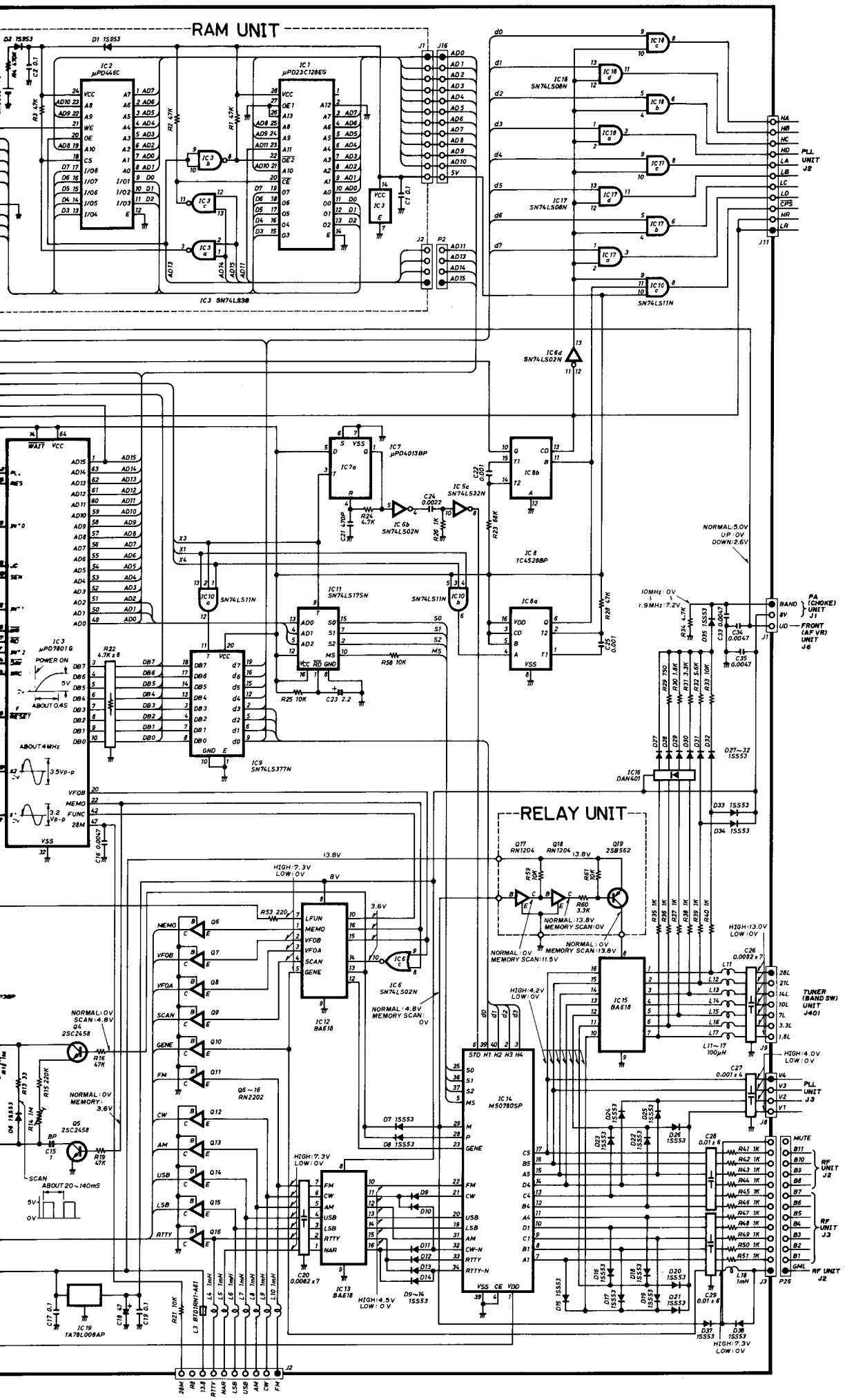
RAM UNIT
RELAY UNIT
IC2 μPD446C
IC1 μPD23C128EG
IC3 SN74LS38
IC18 SN74LS08N
IC17 SN74LS08N
SN74LS11N
IC6d SN74LS02N
IC7 μPD4013BP
IC5c SN74LS32N
IC6b SN74LS02N
IC8 TC4528BP
IC11 SN74LS175N
IC9 SN74LS377N
IC3 μPD7801G
IC16 DAN401
IC15 BA618
IC12 BA618
IC13 BA618
IC6 SN74LS02N
IC14 M50780SP
IC19 TA78L008AP
PLL UNIT J2
PA (CHOKE) UNIT J1
FRONT (AF VR) UNIT J6
TUNER (BAND SW) UNIT J401
PLL UNIT J3
RF UNIT J2
RF UNIT J3
NORMAL:5.0V UP:0V DOWN:2.6V
10MHz:0V 1.9MHz:7.2V
HIGH:7.3V LOW:0V
HIGH:13.0V LOW:0V
HIGH:4.0V LOW:0V
HIGH:4.2V LOW:0V
HIGH:4.5V LOW:0V
NORMAL:0V SCAN:4.8V
NORMAL:0V MEMORY:3.6V
NORMAL:4.8V MEMORY SCAN:0V
NORMAL:0V MEMORY SCAN:11.5V
NORMAL:13.8V MEMORY SCAN:0V
NORMAL:0V MEMORY SCAN:13.8V
ABOUT 20~140mS
ABOUT 0.4S
ABOUT 4MHz
POWER ON
SCAN

9-7 PLL UNIT

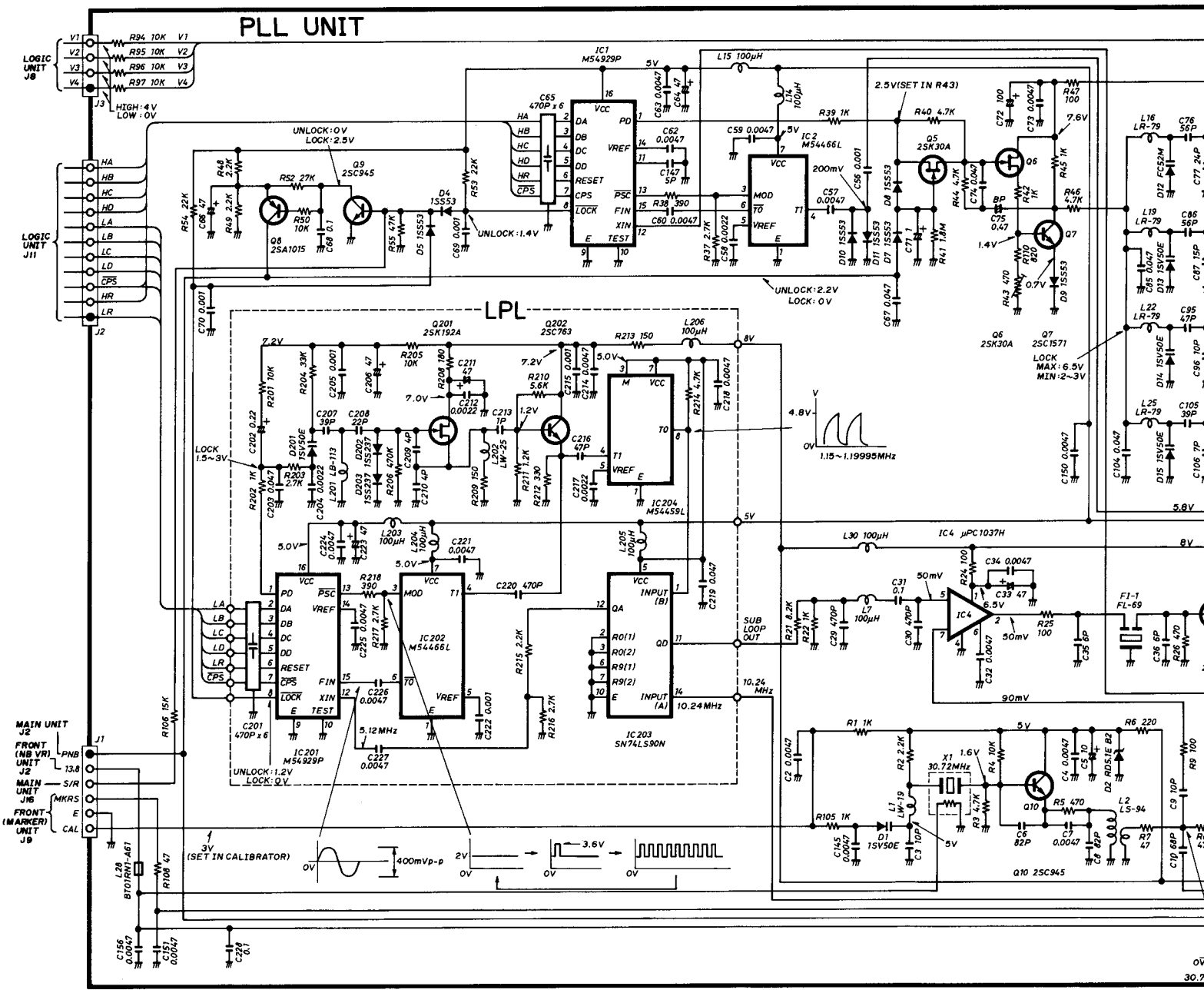

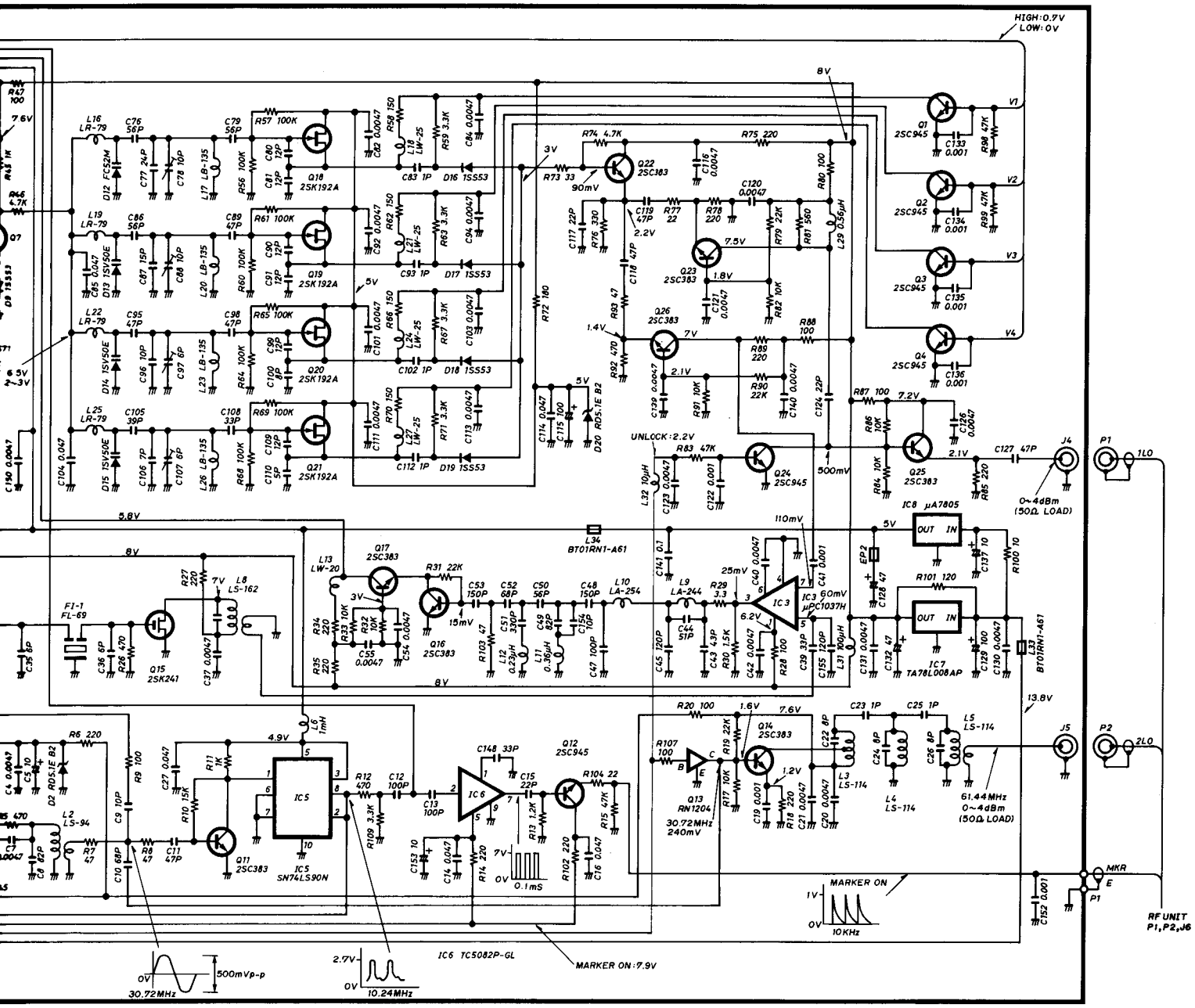
HIGH:0.7V
LOW:0V
IC8 μA7805
IC7 TA78L008AP
IC3 μPC1037H
IC5 SN74LS90N
IC6 TC5082P-GL
Q13 RN1204
30.72MHz 240mV
61.44MHz 0~4dBm (50Ω LOAD)
0~4dBm (50Ω LOAD)
MARKER ON
MARKER ON:7.9V
10KHz
0.1mS
10.24MHz
30.72MHz
500mVp-p
UNLOCK:2.2V
RF UNIT P1,P2,J6

9-8 RF UNIT

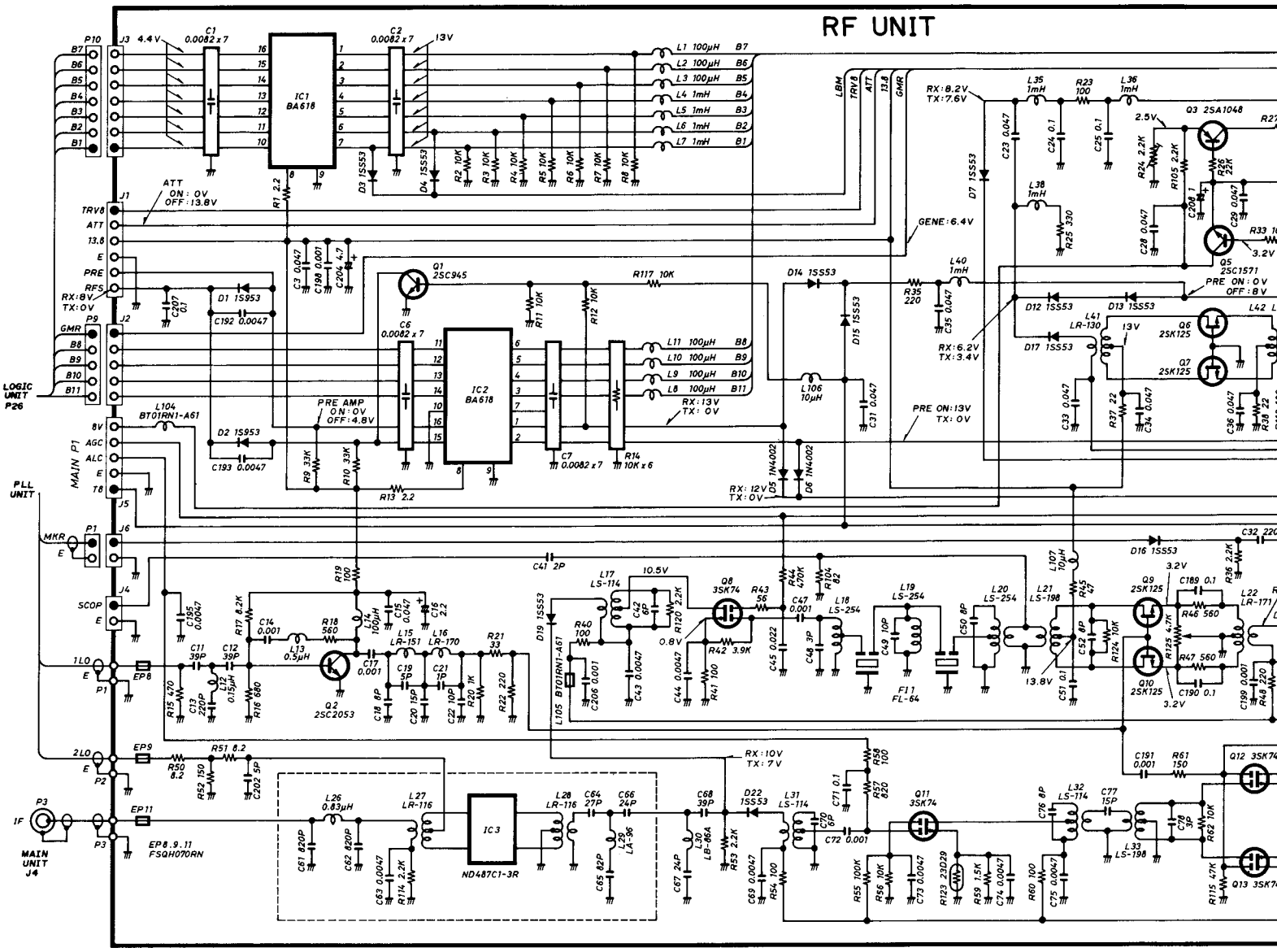

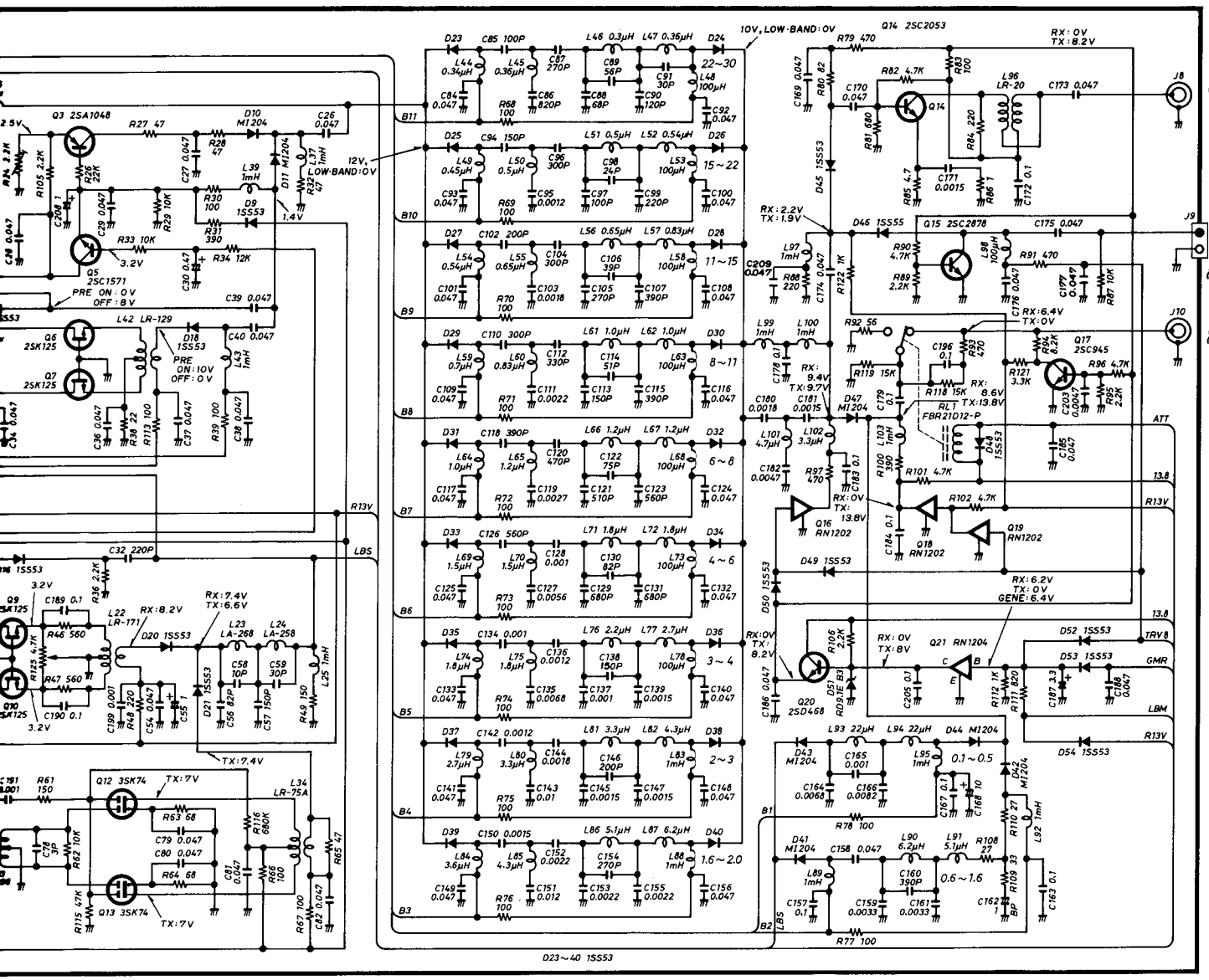
PA UNIT P1
PA (CONNECTOR) UNIT P5
PA (CONNECTOR) UNIT P4
TRV
E
ATT
GMR
LBM
LBS
R13V
10V, LOW-BAND: 0V
12V, LOW-BAND: 0V
PRE ON: 0V OFF: 8V
PRE. ON: 10V OFF: 0V
RX: 0V TX: 8.2V
RX: 2.2V TX: 1.9V
RX: 6.4V TX: 0V
RX: 9.4V TX: 9.7V
RX: 8.6V TX: 13.8V
RX: 0V TX: 13.8V
RX: 7.4V TX: 6.6V
RX: 8.2V
RX: 6.2V TX: 0V GENE: 6.4V
RX: 0V TX: 8V
TX: 7.4V
TX: 7V
D23~40 1SS53

9-9 MAIN UNIT

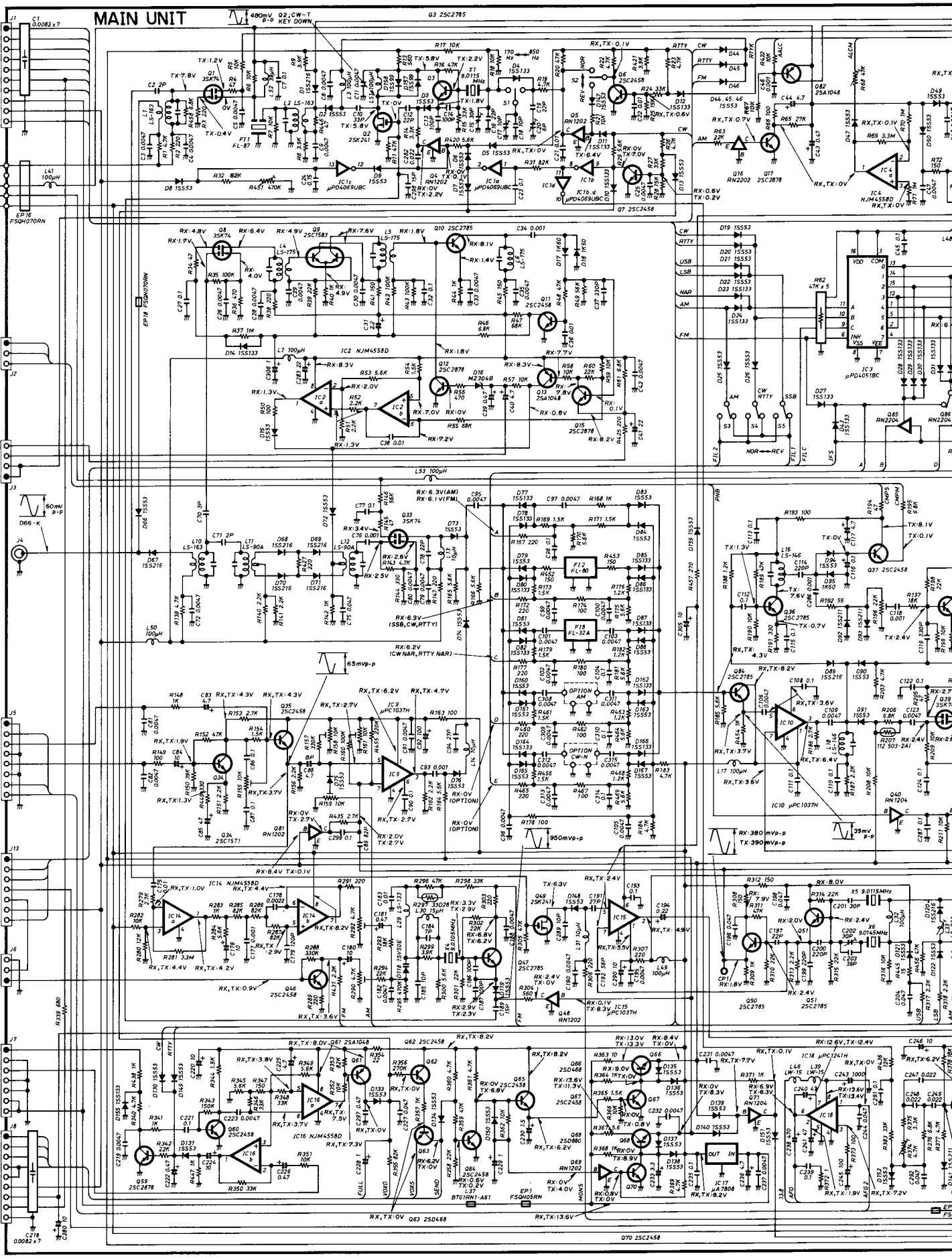

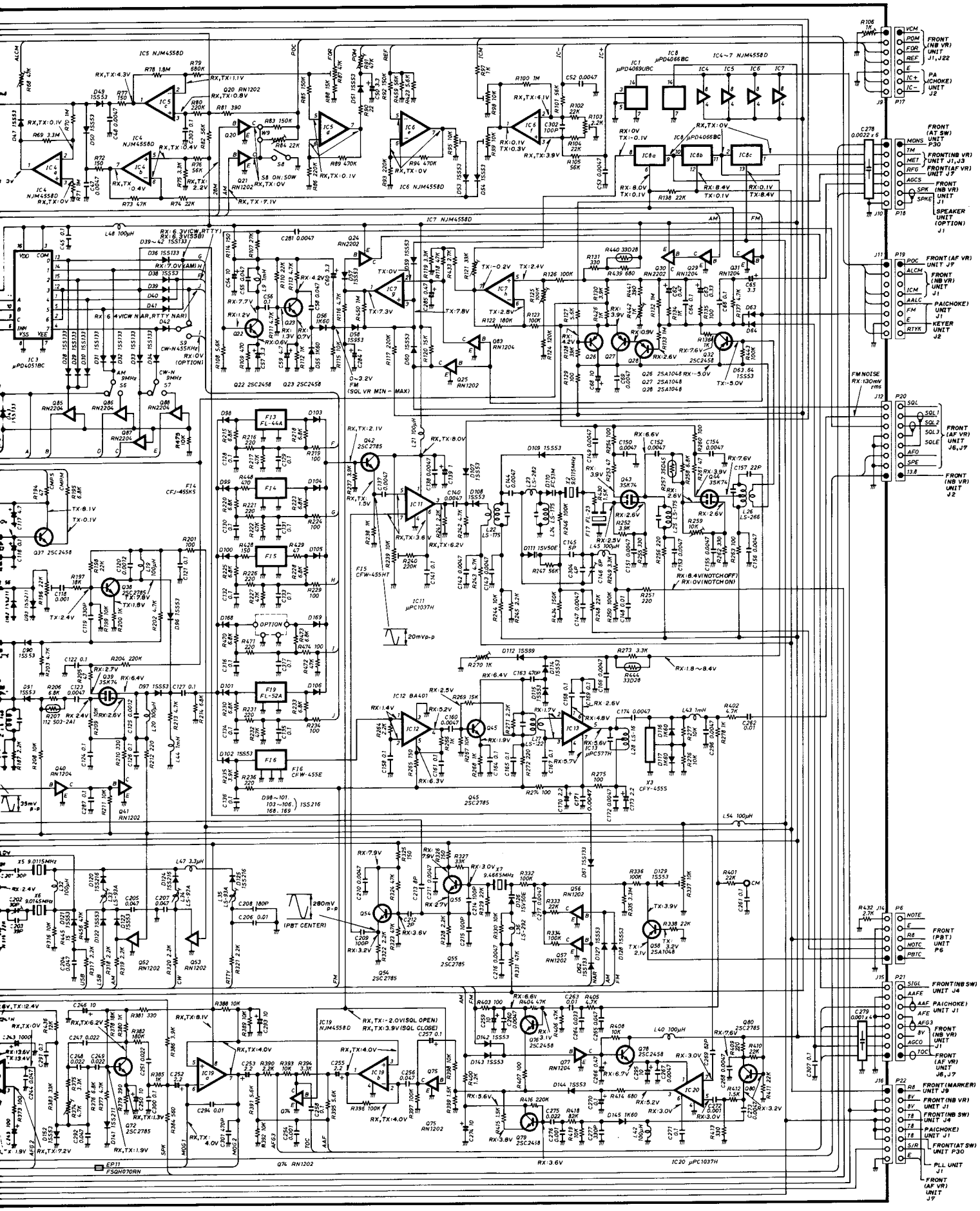
IC5 NJM4558D
IC4 NJM4558D
IC6 NJM4558D
IC7 NJM4558D
IC8 μPD4066BC
IC1 μPD4069UBC
IC4~7 NJM4558D
IC3 μPD4051BC
IC11 μPC1037H
IC12 BA401
IC13 μPC577H
IC19 NJM4558D
IC20 μPC1037H
Q22 2SC2458
Q23 2SC2458
Q26 2SA1048
Q27 2SA1048
Q28 2SA1048
Q37 2SC2458
Q38 2SC2785
Q39 3SK74
Q42 2SC2785
Q43 3SK74
Q44 3SK74
Q45 2SC2785
Q54 2SC2785
Q55 2SC2785
Q58 2SA1048
Q72 2SC2785
Q74 RN1202
Q75 RN1202
Q76 2SC2458
Q78 2SC2458
Q79 2SC2458
Q80 2SC2785
Q83 RN1204
Q85 RN2204
Q86 RN2204
Q87 RN2204
Q88 RN2204
Q25 RN1202
Q21 RN1202
Q20 RN1202
Q40 RN1204
Q41 RN1202
Q52 RN1202
Q53 RN1202
Q56 RN1202
Q57 RN1202
Q77 RN1204
Q31 RN1204
Q30 RN2202
Q24 RN2202
Q29 RN1204
F13 FL-44A
F14 CFJ-455K5
F15 CFW-455HT
F16 CFW-455E
F19 FL-52A
X1 9.0115MHz
X2 9.0145MHz
X3 9.4665MHz
X4 8.0115MHz
X5 9.0145MHz
X6 9.0145MHz
X7 9.4665MHz
X3 CFY-4555
FM NOISE RX:130mV rms
FRONT (NB VR) UNIT J1,J22
PA (CHOKE) UNIT J2
FRONT (AT SW) UNIT P30
FRONT(NB VR) UNIT J1,J3
FRONT(AF VR) UNIT J9
FRONT (NB VR) UNIT J1
SPEAKER UNIT (OPTION) J1
FRONT(AF VR) UNIT J9
FRONT (NB VR) UNIT J1
PA(CHOKE) UNIT J1
KEYER UNIT J2
FRONT (AF VR) UNIT J6,J7
FRONT (NB VR) UNIT J2
FRONT (PBT) UNIT P6
FRONT(NB SW) UNIT J4
PA(CHOKE) UNIT J1
FRONT (NB VR) UNIT J1
FRONT (AF VR) UNIT J6,J7
FRONT(MARKER) UNIT J9
FRONT(NB VR) UNIT J1
FRONT(NB SW) UNIT J4
PA(CHOKE) UNIT J1
FRONT(AT SW) UNIT P30
PLL UNIT J1
FRONT (AF VR) UNIT J7
(PBT CENTER)
(SQL VR MIN - MAX)
(OPTION)
(NOTCH OFF)
(NOTCH ON)
(SQL OPEN)
(SQL CLOSE)

9-10 PA, PA (CONNECTOR), PA (CHOKE), FILTER, AND SWITCHING REGULATOR UNIT

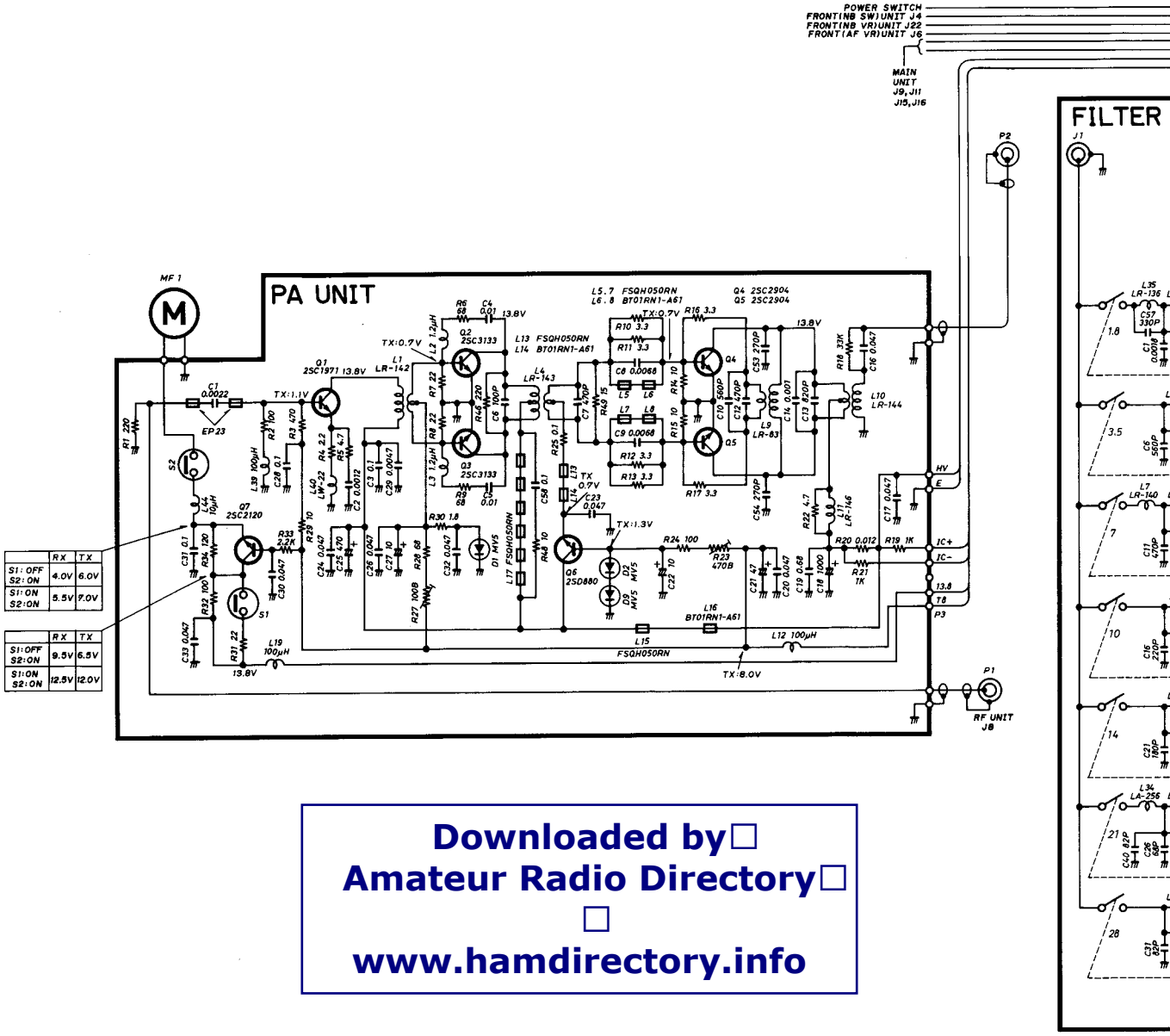

SWITCHING REGULATOR UNIT

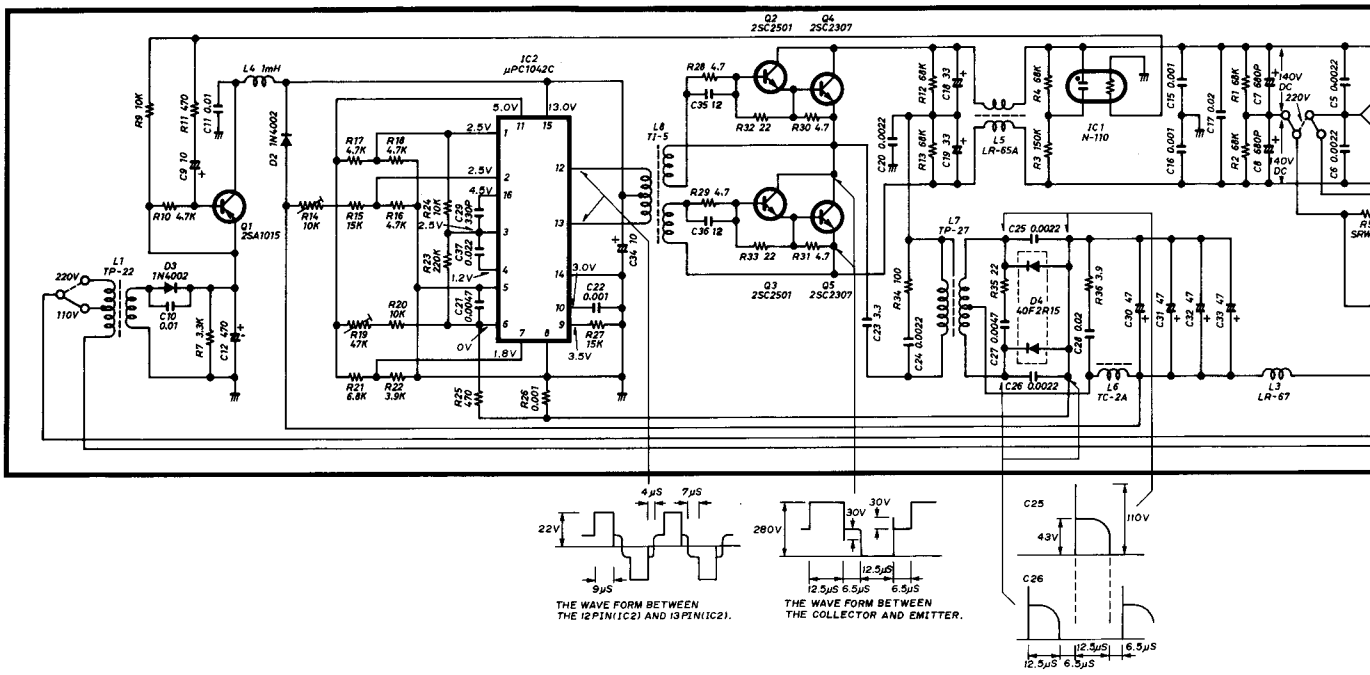

LATOR UNIT

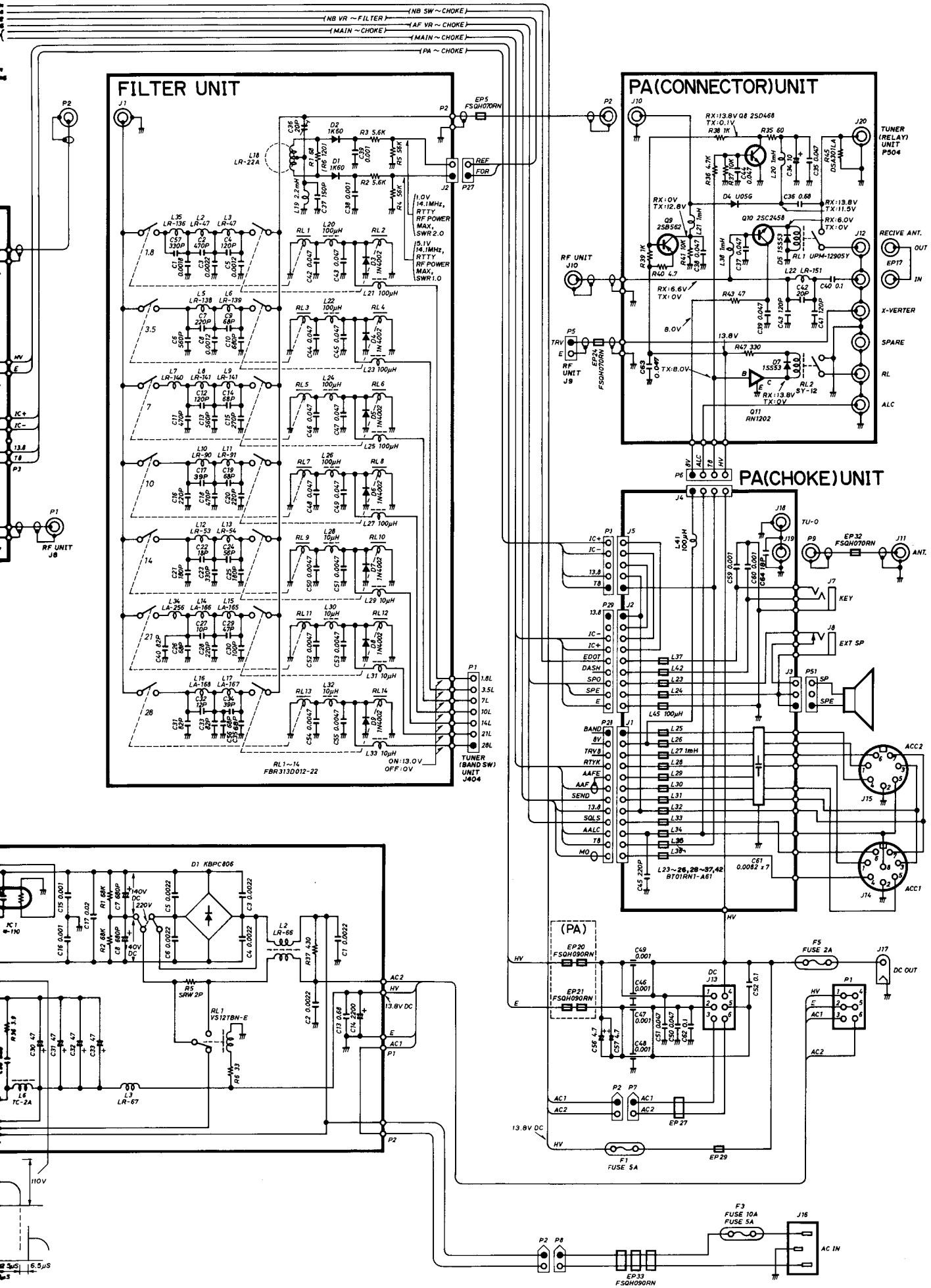
FILTER UNIT
PA(CONNECTOR)UNIT
PA(CHOKE)UNIT
(PA)
(NB SW ~ CHOKE)
(NB VR ~ FILTER)
(AF VR ~ CHOKE)
(MAIN ~ CHOKE)
(PA ~ CHOKE)
TUNER (BAND SW) UNIT J404
TUNER (RELAY) UNIT P504
RF UNIT J8
RF UNIT J10
RF UNIT J9
RECIVE ANT.
X-VERTER
SPARE
RL
ALC
KEY
EXT SP
ANT.
ACC2
ACC1
DC OUT
AC IN
F5 FUSE 2A
F1 FUSE 5A
F3 FUSE 10A FUSE 5A
EP20 FSQH090RN
EP21 FSQH090RN
EP33 FSQH090RN
EP32 FSQH070RN
EP5 FSQH070RN
EP24 FSQH070RN
RL1~14 FBR313D012-22
D1 KBPC806
RL1 VS12TBN-E
13.8V DC
110V

9-11 TUNER UNIT

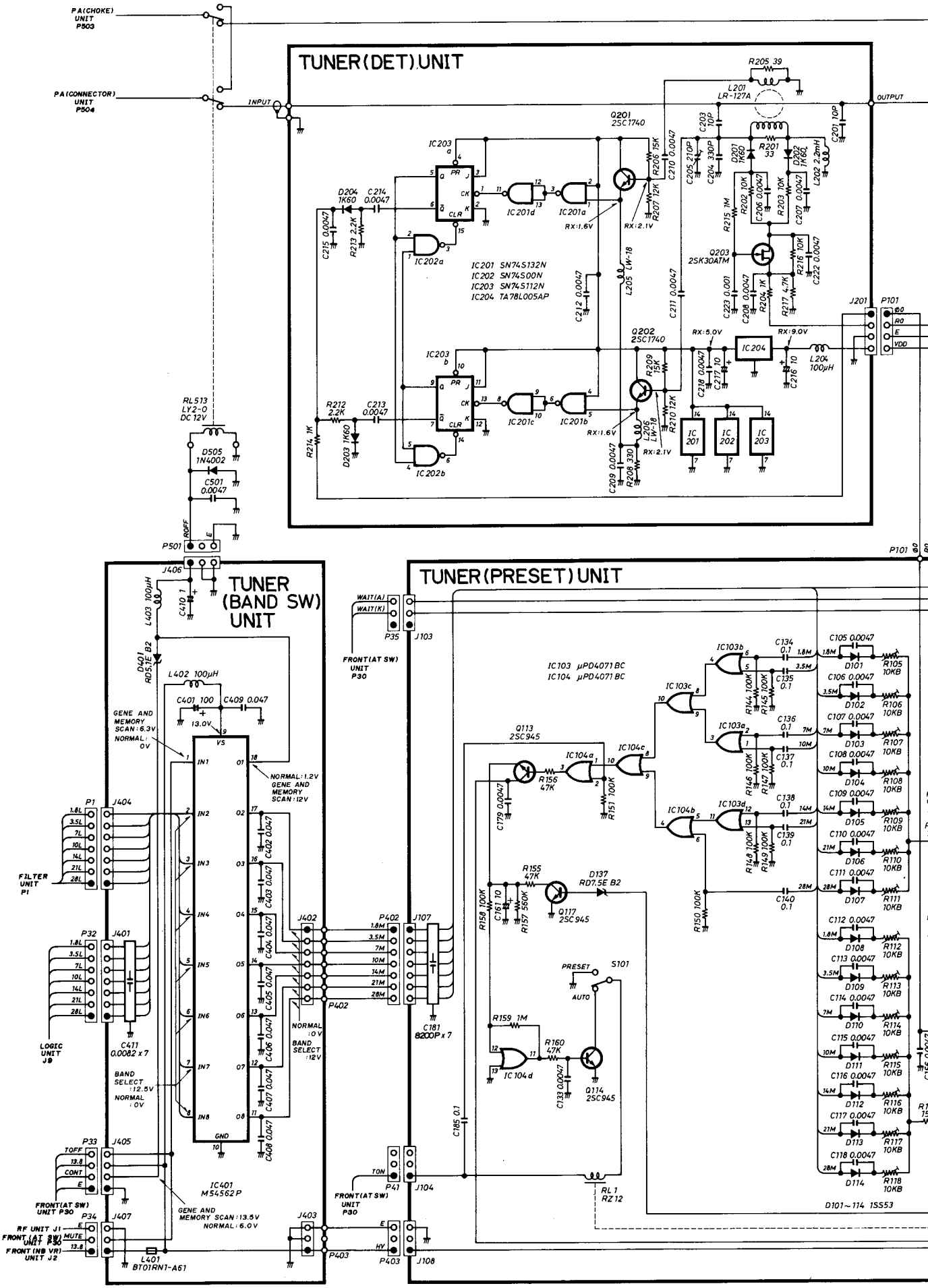

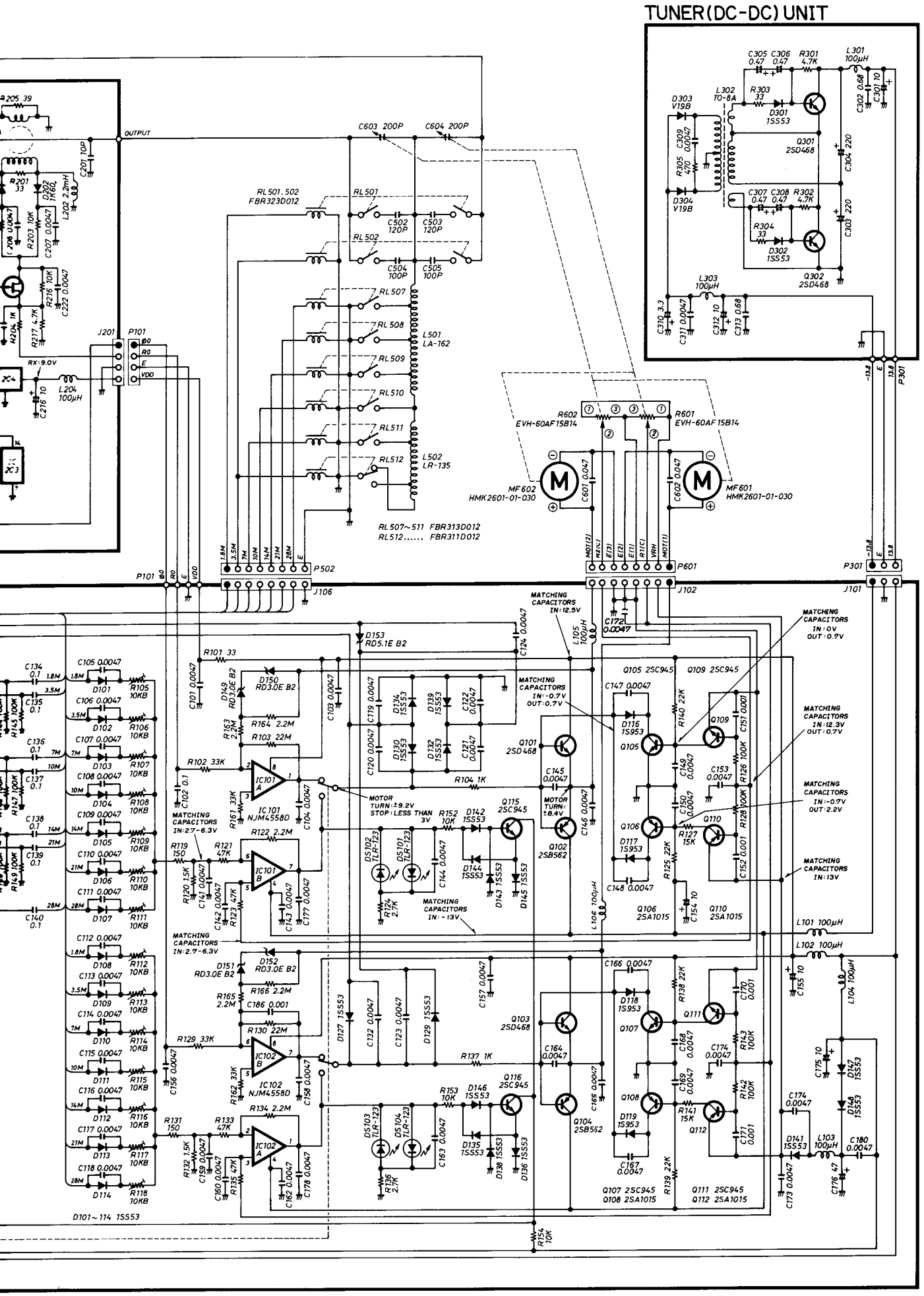
TUNER(DC-DC) UNIT
OUTPUT
RL 501, 502
FBR323D012
RL 507~511 FBR313D012
RL512..... FBR311D012
L501
LA-162
L502
LR-135
MF602
HMK2601-01-030
MF601
HMK2601-01-030
EVH-60AF15B14
MOTOR
TURN:±9.2V
STOP:LESS THAN 3V
MOTOR
TURN:
±8.4V
MATCHING CAPACITORS IN:-0.7V OUT:0.7V
MATCHING CAPACITORS IN:12.5V
MATCHING CAPACITORS IN:0V OUT:0.7V
MATCHING CAPACITORS IN:12.3V OUT:0.7V
MATCHING CAPACITORS IN:-0.7V OUT:2.2V
MATCHING CAPACITORS IN:13V
MATCHING CAPACITORS IN:-13V
MATCHING CAPACITORS IN:2.7-6.3V
IC101 NJM4558D
IC102 NJM4558D
D101~114 1SS53
Q107 2SC945
Q108 2SA1015
Q111 2SC945
Q112 2SA1015
Q106 2SA1015
Q110 2SA1015
Q101 2SD468
Q102 2SB562
Q103 2SD468
Q104 2SB562
Q115 2SC945
Q116 2SC945
Q301 2SD468
Q302 2SD468
L101 100μH
L102 100μH
L103 100μH
L104 100μH
L105 100μH
L106 100μH
L204 100μH
L301 100μH
L303 100μH
P101
P301
P502
P601
J101
J102
J106
J201

SECTION 10 PARTS LIST

[EF UNIT]

REF. NO.	DESCRIPTION	PART NO.
J1	Connector	HSJ0296-01-150
P1	Connector	TL25H-12-B1
P2	Connector	TL25H-05-B1
P3	Connector	TL25H-09-B1
P4	Connector	TL25H-11-B1
P5	Connector	TL25H-03-B1
P6	Connector	TL25H-10-B1
P7	Connector	TL25H-12-B1
P8	Connector	TL25H-06-B1
P9	Connector	TL25H-05-B1
P10	Connector	TL25H-07-B1
P11	Connector	TL25H-10-B1
P12	Connector	TL25H-03-B1
P13	Connector	TL25H-04-B1
P14	Connector	TL25H-08-B1
P15	Connector	TL25H-07-B1
P16	Connector	TL25H-09-B1
P17	Connector	TL25H-07-B1
P18	Connector	TL25H-07-B1
P19	Connector	TL25H-08-B1
P20	Connector	TL25H-08-B1
P21	Connector	TL25H-08-B1
P22	Connector	TL25H-08-B1
P23	Connector	TL25H-06-B1
P24	Connector	TL25H-03-B1
P25	Connector	TL25H-10-B1
P26	Connector	TL25H-13-B1
P27	Connector	TL25H-02-B1
P28	Connector	TL25H-12-B1
P29	Connector	TL25H-09-B1
P30	Connector	SMP-10V-B
P31	Connector	TL25H-11-B1
P32	Connector	TL25H-07-B1
P33	Connector	TL25H-04-B1
P34	Connector	TL25H-03-B1
P35	Connector	TL25H-03-B1
P36	Connector	TL25H-04-B1
P37	Connector	TL25H-02-B1
P38	Connector	TL25H-07-B1
P39	Connector	TL25H-03-B1
P40	Connector	TL25H-04-B1
P41	Connector	TL25H-03-B1
P50	Connector	TL25H-03-B1
P51	Connector	5250-3A
SP1	Speaker	T080S01I0810

[G UNIT]

REF. NO.	DESCRIPTION	PART NO.
EP1	Flat Cable	SMCD-04×60AD×10-G
EP2	Flat Cable	SMCD-11×60AD×10-G

[Y UNIT]

REF. NO.	DESCRIPTION	PART NO.
EP1	Key Plug	AP-330
EP2	SP Plug	AP-313
EP3	Pin Plug	BP-001
EP4	DC Plug	AP-301
EP5	Fuse	5A
EP6	AC Cord	OPC-048A (#05, #06 Only)
EP6	AC Cord	OPC-034 (#02 Only)
EP6	AC Cord	OPC-085 (#03 Only)
EP8	Fuse	10A (#02 Only)
EP9	Fuse	5A (#03, #05, #06 Only)
EP10	Fuse	2A

[FRONT UNIT]

REF. NO.	DESCRIPTION	PART NO.
IC101	IC	NJM4558M
IC102	IC	NJM4558M
Q1	Transistor	2SC2458 Y
Q2	Transistor	2SC1571 G
Q3	Transistor	2SB562 C
Q101	FET	2SK209 Y
Q102	FET	2SK209 Y
D1	Diode	1SS53
D2	Diode	1SS53
D3	Diode	1SS53
D4	Diode	1SS53
D5	Diode	1SS53
D6	Diode	1SS99
D101	Diode	1SS187
L1	Coil	LAL04NA 101K
L2	Coil	LAL04NA 101K
L3	Coil	LAL04NA 101K
L4	Coil	LAL04NA 101K
L5	Coil	LAL04NA 101K
L6	Coil	LAL04NA 101K
L7	Coil	LAL04NA 101K
L8	Coil	BT01RN1-A61
L9	Coil	BT01RN1-A61
L10	Coil	BT01RN1-A61
L11	Coil	LAL03NA-102K
L12	Coil	LAL03NA-102K
L13	Coil	BT01RN1-A61
L14	Coil	BT01RN1-A61
R1	Resistor	4.7kΩ R20
R2	Resistor	27kΩ R20
R3	Resistor	10kΩ R20
R4	Resistor	470Ω R20
R5	Variable Resistor	500kΩC RK0971110-500KC
R6	Variable Resistor	1MΩB RK097111000XA
R7	Variable Resistor	1kΩB RK0971110-1KB
R8	Resistor	10kΩ R20
R9	Resistor	47kΩ R20
R10	Variable Resistor	10kΩB/10kΩA K12B6000M-10KB10KA
R11	Variable Resistor	10kΩA/10kΩB RK1242310005A-10KA10KBX
R12	Variable Resistor	10kΩB/10kΩA K12B6000M-10KB10KA
R13	Resistor	47Ω R25
R14	Resistor	4.7Ω R20
R15	Resistor	100Ω R25
R16	Resistor	100Ω R25
R17	Resistor	3.3kΩ R20
R18	Resistor	1.5kΩ R25
R19	Resistor	220Ω R20
R20	Resistor	560Ω R25
R21	Resistor	18kΩ R20
R22	Resistor	82kΩ R25
R23	Resistor	470Ω R20

[FRONT UNIT]

REF. NO.	DESCRIPTION	PART NO.		
R24	Resistor	47Ω	R20	
R25	Resistor	1kΩ	R20	
R26	Resistor	100Ω	R25	
R27	Variable Resistor	10kΩB		
		RK0971110-10KB		
R28	Variable Resistor	10kΩB		
		RK0971110-10KB		
R29	Resistor	2.2kΩ	R25	
R30	Resistor	2.2kΩ	R25	
R31	Variable Resistor	10kΩB		
		RK097111T-10KB		
R32	Variable Resistor	10kΩB		
		RK097111T-10KB		
R33	Variable Resistor	10kΩB		
		RK097111T 10KB		
R34	Variable Resistor	10kΩB		
		RK097111T-10KB		
R35	Resistor	2.2kΩ	R20	
R36	Resistor	1.2kΩ	R20	
R37	Resistor	470Ω	ELR25	
R38	Resistor	22kΩ	ELR20	
R39	Resistor	1kΩ	ELR20	
R40	Resistor	10kΩ	R20	
R41	Trimmer	3.3kΩ	RH0651CN3J01A	
R42	Resistor	100Ω	R20	
R101	Chip	100kΩ	MCR10	
R102	Chip	10kΩ	MCR10	
R103	Chip	10kΩ	MCR10	
R104	Chip	10kΩ	MCR10	
R105	Chip	68kΩ	MCR10	
R106	Chip	39kΩ	MCR10	
R107	Chip	47kΩ	MCR10	
R108	Chip	47kΩ	MCR10	
R109	Chip	22kΩ	MCR10	
R110	Chip	100kΩ	MCR10	
R111	Chip	10kΩ	MCR10	
R112	Chip	10kΩ	MCR10	
R113	Chip	120kΩ	MCR10	
R114	Chip	10kΩ	MCR10	
R115	Chip	6.8kΩ	MCR10	
R116	Chip	10kΩ	MCR10	
R117	Chip	39kΩ	MCR10	
R118	Chip	1MΩ	MCR10	
R119	Chip	39kΩ	MCR10	
C1	Electrolytic	22μF	16V	MS7
C2	Ceramic	0.0047μF	50V	
C3	Electrolytic	1μF	50V	
C4	Ceramic	0.0047μF	50V	
C5	Electrolytic	47μF	10V	
C6	Electrolytic	1μF	50V	BP
C7	Electrolytic	220μF	10V	
C8	Ceramic	0.0047μF	50V	
C9	Ceramic	0.0047μF	50V	
C10	Electrolytic	47μF	10V	
C11	Ceramic	0.0047μF	50V	
C12	Ceramic	0.0047μF	50V	
C13	Ceramic	0.0047μF	50V	
C14	Ceramic	0.0047μF	50V	
C15	Ceramic	0.0047μF	50V	
C16	Ceramic	0.0047μF	50V	
C17	Ceramic	0.0047μF	50V	
C18	Ceramic	0.0047μF	50V	

[FRONT UNIT]

REF. NO.	DESCRIPTION	PART NO.	
C101	Monolithic	0.047μF	GRM40
C102	Monolithic	0.01μF	GRM40
C103	Monolithic	0.047μF	GRM40
C104	Monolithic	0.047μF	GRM40
C105	Monolithic	0.047μF	GRM40
C106	Monolithic	470pF	GRM40
C107	Monolithic	0.0056μF	GRM40
J1	Connector	TL25P-12-L1	
J2	Connector	TL25P-05-L1	
J3	Connector	TL25P-09-L1	
J4	Connector	TL25P-11-L1	
J5	Connector	TL25P-03-L1	
J6	Connector	TL25P-10-L1	
J7	Connector	TL25P-12-L1	
J8	Connector	TLB-P10H-B1	
J9	Connector	TL25P-11-L1	
J12	Connector	TL25P-03-L1	
J13	Connector	TL25P-05-L1	
J14	Connector	TL25P-03-L1	
J15	Connector	TL25P-04-L1	
J17	Connector	HLJ4815-01-030	
J18	Connector	8S-S-E	
J19	Connector	TL25P-03-L1	
J20	Connector	TL25P-06-V1	
J21	Connector	TLB-P05H-B1	
J22	Connector	TL25P-04-L1	
J101		50002-8103	
J102		50002-8104	
P1	Connector	TL25H-04-B1	
P2	Connector	1545P-1	
P3	Connector	SMR-10V-B	
P4	Connector	TL25H-04-B1	
P6	Connector	TL25H-05-B1	
P7	Connector	TL25H-03-B1	
F1	Holder	TFH-S30 (Cap)	
DS1	Lamp	BQ044-32582A	
DS2	LED	SLP-275B-50	
DS3	LED	SLP-175B-50	
ME1	Meter	M560	
S1	Switch	SPPJ31116A	
S2	Switch	SPPJ31116A	
S3	Switch	SPPJ31116A	
S4	Switch	SPPJ31116A	
S5	Switch	SPPJ31116A	
S6	Switch	SRRU13071A	
S7	Switch	SRBU16003A	
S8	Switch	SDDSA3159A	
S9	Switch	M2012J-1K (Black)	
S10	Switch	SRRU13071A	
S11	Switch	SPPH23079A	
S12	Switch	SPPH23079A	
S13	Switch	SPPH23079A	

[FRONT UNIT]

REF. NO.	DESCRIPTION	PART NO.
S14	Switch	SPPJ31012A
S15	Switch	SRR1S
EP1	P.C. Board	B-1352A
EP2	P.C. Board	B-1353A
EP3	P.C. Board	B-1354B
EP4	P.C. Board	B-1355B
EP5	P.C. Board	B-1356B
EP6	P.C. Board	B-1357B
EP7	P.C. Board	B-1358B
EP8	P.C. Board	B-792
EP11	RT Pin	RT-01T-1.0B
EP12	RT Pin	RT-01T-1.0B
EP101	P.C. Board	B-1332B
W44	Jumper	JPW-02A

[DISPLAY UNIT]

REF. NO.	DESCRIPTION	PART NO.	
IC1	IC	μPD549C	
IC2	IC	μPD549C	
IC3	IC	μA78L05	
IC4	DC-DC Converter	DP-6	
Q1	Transistor	2SA1015 Y	
Q2	Transistor	2SA1015 Y	
Q3	Transistor	2SA1015 Y	
Q4	Transistor	RN1204	
Q5	Transistor	2SA1015 Y	
Q6	Transistor	2SA1015 Y	
Q7	Transistor	2SC2458 GR	
Q8	Transistor	RN1202	
D1	Diode	1SS55	
D2	Diode	1SS55	
D3	Diode	1SS55	
D4	Diode	1SS55	
D5	Diode	1SS55	
D6	Diode	1SS55	
D7	Zener	RD6.2E B2	
L1	Coil	FL5H 101K	
L2	Coil	FL9H 471K	
L3	Coil	FL9H 471K	
R1	Resistor	1kΩ	R20
R2	Resistor	1kΩ	R20
R3	Resistor	1kΩ	R20
R4	Resistor	1kΩ	R20
R5	Resistor	1kΩ	ELR20
R6	Resistor	1kΩ	ELR20
R7	Resistor	1kΩ	ELR20
R8	Resistor	1kΩ	ELR20
R9	Resistor	1kΩ	ELR20
R10	Resistor	1kΩ	ELR20
R11	Array	47kΩ	RMX-6
R12	Array	47kΩ	RMX-10
R13	Array	47kΩ	RMX-6
R14	Array	47kΩ	RMX-8
R15	Resistor	220Ω	R20
R16	Resistor	47kΩ	ELR20
R17	Resistor	47kΩ	ELR20
R18	Resistor	47kΩ	R20
R19	Resistor	2.7kΩ	ELR20
R20	Resistor	2.7kΩ	ELR20
R21	Resistor	2.7kΩ	ELR20
R22	Resistor	2.7kΩ	ELR20
R23	Resistor	2.7kΩ	ELR20
R24	Resistor	2.7kΩ	ELR20
R25	Resistor	2.7kΩ	ELR20
R26	Resistor	2.7kΩ	ELR20
R27	Resistor	2.7kΩ	ELR20
R28	Resistor	2.7kΩ	ELR20
R29	Resistor	2.7kΩ	ELR20
R30	Resistor	47kΩ	ELR20
R31	Array	47kΩ	RMX-10
R32	Resistor	47kΩ	ELR20
R33	Resistor	47kΩ	R20
R34	Resistor	47kΩ	ELR20

[DISPLAY UNIT]

REF. NO.	DESCRIPTION	PART NO.		
R35	Resistor	10kΩ	ELR20	
R36	Resistor	1kΩ	ELR20	
R37	Resistor	2.2kΩ	R20	
R38	Resistor	2.2kΩ	ELR20	
R39	Resistor	1kΩ	R20	
R40	Resistor	10kΩ	ELR20	
R41	Resistor	10kΩ	ELR20	
C1	Array	0.001μF × 4 B5RC0124-32N		
C2	Ceramic	0.001μF	50V	
C3	Array	0.001μF × 4 B5RC0124-32N		
C4	Ceramic	0.001μF	50V	
C5	Ceramic	0.001μF	50V	
C6	Ceramic	0.001μF	50V	
C7	Ceramic	0.001μF	50V	
C8	Ceramic	0.001μF	50V	
C9	Ceramic	0.001μF	50V	
C10	Ceramic	0.0047μF	50V	
C11	Ceramic	0.0047μF	50V	
C12	Ceramic	0.0047μF	50V	
C13	Ceramic	0.0047μF	50V	
C14	Array	0.0082μF × 7 B8ZC0111-32N		
C15	Ceramic	0.001μF	50V	
C16	Electrolytic	10μF	16V	MS7
C17	Electrolytic	10μF	16V	MS7
C18	Electrolytic	0.1μF	50V	MS7
C19	Electrolytic	10μF	16V	MS7
C20	Electrolytic	470μF	16V	
C21	Electrolytic	4.7μF	25V	MS7
C22	Electrolytic	10μF	16V	
C23	Electrolytic	1μF	50V	BP
J1	Connector	TL25P-04-V1		
J2	Connector	TL25P-04-V1		
J3	Connector	TLB-P10H-B1		
J4	Connector	TLB-P11H-B1		
P1	Connector	TL25H-10-B1		
P2	Connector	TL25H-11-B1		
P3	Connector	TL25H-05-B1		
DS1	FLD	FIP12EM10		
DS2	LED	SLP-162B		
DS3	LED	SLP-262B		
DS4	LED	SLP-162B		
DS5	LED	SLP-462B		
EP1	P.C. Board	B-1351D		
EP2	P.C. Board	B-1359A		
W27	Jumper	JPW-02A		

[SENSOR UNIT]

REF. NO.	DESCRIPTION	PART NO.	
Q1	Photo Transistor	IS-433	
Q2	Photo Transistor	IS-433	
Q3	Transistor	RN 1204	
Q4	Transistor	RN 1204	
R1	Resistor	220Ω	ELR20
C1	Barrier Layer	0.01μF 25V UAT06V 103K-L45AC	
P1	Connector	TL25H-06-B1	
DS1	LED	GL-430	
DS2	LED	GL-430	
EP1	P.C. Board	B-1016C	

[KEYER UNIT]

REF. NO.	DESCRIPTION	PART NO.
IC1	IC	μPD7564 CS031
Q1	Transistor	RN1204
D1	Zener	RD5.1E B2
X1	Ceramic Resonator	CSB500E
R1	Resistor	4.7kΩ R20
R2	Resistor	4.7kΩ R20
R3	Resistor	1kΩ R20
R4	Resistor	22kΩ R20
R5	Resistor	470Ω R20
R6	Resistor	3.3kΩ R20
R7	Resistor	6.8kΩ R20
R8	Trimmer	100kΩB RH0651C15J1UA
C1	Mylar	0.047μF 50V
C2	Mylar	0.0047μF 50V
C3	Ceramic	0.0047μF 50V
C4	Electrolytic	10μF 16V MS7
C5	Ceramic	100pF 50V
C6	Ceramic	100pF 50V
C7	Electrolytic	2.2μF 50V MS7
J1	Connector	TL25P-03-V1
J2	Connector	TL25P-04-V1
EP1	P.C. Board	B-1128A

[MATRIX UNIT]

REF. NO.	DESCRIPTION	PART NO.
IC1	IC	μPD4013BC
IC2	IC	μPD4013BC
IC3	IC	μPD4011BC
IC4	IC	μPD4030BC
IC5	IC	μPD4081BC
Q1	Transistor	2SA1048 Y
Q2	Transistor	2SA1048 Y
Q3	Transistor	2SC2458 GR
Q4	Transistor	2SC2458 GR
Q5	Transistor	2SC2458 GR
Q6	Transistor	2SC2458 GR
Q7	Transistor	2SC2458 GR
Q8	Transistor	2SC2458 GR
Q9	Transistor	2SC2458 GR
Q10	Transistor	RN1204
Q11	Transistor	RN1204
Q12	Transistor	RN2202
Q13	Transistor	2SC2458 GR
Q14	Transistor	RN2202
D1	Diode	1SS133
D2	Diode	1SS133
D3	Diode	1SS133
D4	Diode	1SS133
D5	Diode	1SS133
D6	Diode	1SS133
D7	Diode	1SS133
D8	Diode	1SS133
D9	Diode	1SS133
D10	Diode	1SS133
D11	Diode	1SS133
D12	Diode	1SS133
D13	Diode	1SS133
D14	Diode	1SS133
D15	Diode	1SS133
D16	Diode	1SS133
D17	Diode	1SS133
D18	Diode	1SS133
D19	Diode	1SS133
D20	Diode	1SS133
D21	Diode	1SS133
D22	Diode	1SS133
D23	Diode	1SS133
D24	Diode	1SS133
D25	Diode	1SS133
D26	Diode	1SS133
D27	Diode	1SS133
D28	Diode	1SS133
D29	Diode	1SS133
D30	Diode	1SS133
D31	Diode	1SS133
D32	Diode	1SS133
D33	Diode	1SS133
D34	Diode	1SS133
D35	Diode	1SS133
D36	Diode	1SS133
D37	Diode	1SS133
D38	Diode	1SS133
D39	Diode	1SS133
D40	Diode	1SS133
D41	Diode	1SS133

[MATRIX UNIT]

REF. NO.	DESCRIPTION	PART NO.	
D42	Diode	1SS133	
D43	Diode	1SS133	
D44	Diode	1SS133	
D45	Diode	1SS133	
D46	Diode	1SS133	
D47	Diode	1SS133	
D48	Diode	1SS133	
D49	Diode	1SS133	
D50	Diode	1SS133	
D51	Diode	1SS133	
D52	Diode	1SS133	
D53	Diode	1SS133	
D54	Diode	1SS133	
D55	Diode	1SS133	
D56	Diode	1SS133	
L1	Coil	BT01RN1-A61	
R1	Resistor	4.7Ω	R20
R2	Resistor	1MΩ	R20
R3	Resistor	10kΩ	R20
R4	Resistor	1MΩ	R20
R5	Resistor	10kΩ	R20
R6	Resistor	680kΩ	R20
R7	Resistor	1MΩ	R20
R8	Resistor	47kΩ	R20
R9	Resistor	1MΩ	R20
R10	Resistor	3.3MΩ	R20
R11	Resistor	330kΩ	R20
R12	Resistor	47kΩ	R20
R13	Resistor	470kΩ	ELR20
R14	Resistor	47kΩ	R20
R15	Resistor	47kΩ	R20
R16	Resistor	47kΩ	R20
R17	Resistor	47kΩ	ELR20
R18	Resistor	47kΩ	ELR20
R19	Resistor	1MΩ	R20
R20	Resistor	47kΩ	R20
R21	Resistor	47kΩ	R20
R22	Resistor	47kΩ	ELR20
R23	Resistor	22kΩ	ELR20
R24	Resistor	1MΩ	R20
R25	Resistor	47kΩ	R20
R26	Resistor	150Ω	R20
R27	Resistor	10kΩ	R20
R28	Resistor	470Ω	R20
R29	Resistor	10kΩ	R20
R30	Resistor	47kΩ	ELR20
R31	Resistor	47kΩ	R20
R32	Resistor	47kΩ	R20
R33	Resistor	1kΩ	R20
R34	Resistor	10kΩ	ELR20
R35	Resistor	33kΩ	ELR20
R36	Resistor	10kΩ	ELR20
R37	Array	10kΩ	RMX-8
C1	Ceramic	0.0047μF	50V
C2	Barrier Layer	0.1μF	16V
C3	Ceramic	0.0047μF	50V
C4	Barrier Layer	0.1μF	16V
C5	Barrier Layer	0.1μF	16V

[MATRIX UNIT]

REF. NO.	DESCRIPTION	PART NO.		
C6	Electrolytic	0.47μF	50V	BP
C7	Barrier Layer	0.1μF	16V	
C8	Barrier Layer	0.1μF	16V	
C9	Barrier Layer	0.1μF	16V	
C10	Barrier Layer	0.1μF	16V	
C11	Barrier Layer	0.1μF	16V	
C12	Array	0.001μF × 4 B5RC0124-32N		
J1	Connector	TLB-P03H-B1		
J2	Connector	TLB-P06H-B1		
J3	Connector	TLB-P08H-B1		
J4	Connector	TLB-P10H-B1		
J5	Connector	TLB-P04H-B1		
J6	Connector	TLB-P07H-B1		
J7	Connector	TL25P-06-V1		
P1	Connector	TL25H-07-B1		
P2	Connector	TL25H-03-B1		
P3	Connector	TL25H-06-B1		
P4	Connector	TL25H-03-B1		
P5	Connector	TL25H-04-B1		
P6	Connector	TL25H-05-B1		
P7	Connector	TL25H-03-B1		
P8	Connector	TL25H-10-B1		
P9	Connector	TL25H-08-B1		
P10	Connector	TL25H-06-B1		
DS1	LED	SLP-281C-50		
S1	Switch	SPPQ 19 (SSB)		
S2	Switch	SPPQ 19 (CW)		
S3	Switch	SPPQ 19 (RTTY)		
S4	Switch	SPPQ 19 (AM)		
S5	Switch	SPPH23078A (RIT)		
S6	Switch	SPPH23078A (TX)		
S7	Switch	SPPQ 19 (SPEECH)		
S8	Switch	SPPQ 19 (FUNC)		
S9	Switch	SPPH23078A (A=B)		
S10	Switch	SPPH23078A (MW)		
S11	Switch	SPPH23078A (M-VFO)		
S12	Switch	SPPH23078A (CLR)		
S13	Switch	SPPQ 19 (A/B)		
S14	Switch	SPPQ 19 (MEMO)		
S15	Switch	SPPH23078A (BAND/GENE)		
S16	Switch	SPPQ 19 (UP)		
S17	Switch	SPPQ 19 (DOWN)		
S18	Switch	SPPH23078A (SCAN)		
S19	Switch	SPPH23079A (MODE-S)		
S20	Switch	SPPH23079A (SPLIT)		
S21	Switch	SPPH23079A (TS)		
S22	Switch	SPPH23079A (NOTCH)		
S23	Switch	SPPH23079A (FILTER)		
S24	Switch	SPPH23079A (LOCK)		
S25	Switch	SSSS21148A (SCAN RESUMPTION)		
S26	Switch	SPPQ 19 (KEY BOARD 1)		
S27	Switch	SPPQ 19 (KEY BOARD 2)		
S28	Switch	SPPQ 19 (KEY BOARD 3)		

[MATRIX UNIT]

REF. NO.	DESCRIPTION	PART NO.
S29	Switch	SPPQ 19 (KEY BOARD 4)
S30	Switch	SPPQ 19 (KEY BOARD 5)
S31	Switch	SPPQ 19 (KEY BOARD 6)
S32	Switch	SPPQ 19 (KEY BOARD 7)
S33	Switch	SPPQ 19 (KEY BOARD 8)
S34	Switch	SPPQ 19 (KEY BOARD 9)
S35	Switch	SPPQ 19 (KEY BOARD CE)
S36	Switch	SPPQ 19 (KEY BOARD 0)
S37	Switch	SPPQ 19 (ENT)
S38	Encorder	EC24B50B000MB (RIT/ΔTX)
S39	Switch	SPPH23079A (IF SHIFT)
EP1	P.C. Board	B-1350D
W54	Jumper	JPW-02A
W55	Jumper	JPW-02A
W56	Jumper	JPW-02A
W57	Jumper	JPW-02A

[LOGIC A UNIT]

REF. NO.	DESCRIPTION	PART NO.	
IC1	IC	μA78L05	
IC2	IC	μPD4069UBG	
IC3	IC	HD63A01V1G11P	
IC4	IC	74HCT244F	
IC5	IC	74HCT374F	
Q1	Transistor	2SC2712 Y	
Q2	Transistor	2SC2712 Y	
Q3	Transistor	2SC2712 Y	
D1	Zener	RD5.1E B2	
D2	Zener	RD3.0E B2	
D3	Diode	1SS184	
X1	Ceramic Resonator	CSA491MG	
L1	Coil	FL5H 100K	
L2	Coil	LAL03NA 100K	
R1	Resistor	10Ω	R50X
R2	Chip	1.5kΩ	MCR10
R3	Chip	270Ω	MCR10
R4	Chip	47kΩ	MCR10
R5	Chip	1MΩ	MCR10
R6	Chip	47kΩ	MCR10
R7	Chip	470kΩ	MCR10
R8	Chip	47kΩ	MCR10
R9	Chip	47kΩ	MCR10
R10	Chip	47kΩ	MCR10
R11	Chip	47kΩ	MCR10
R12	Chip	100kΩ	MCR10
R13	Chip	10kΩ	MCR10
R14	Chip	47kΩ	MCR10
R15	Chip	47kΩ	MCR10
R16	Array	470kΩ	RMX-4
R17	Array	47kΩ	RMX-8
R18	Array	470kΩ	RMX-8
R19	Chip	47kΩ	MCR10
C1	Electrolytic	10μF	16V MS7
C2	Electrolytic	10μF	16V MS7
C3	Monolithic	0.001μF	GRM40
C4	Electrolytic	0.47μF	50V MS7
C5	Electrolytic	1μF	50V MS7
C6	Monolithic	30pF	GRM40
C7	Monolithic	30pF	GRM40
C8	Electrolytic	1μF	50V MS7
J1	Connector	TLB-P08H-B1	
J2	Connector	TLB-P08H-B1	
J3	Connector	TL25P-03-V1	
P1	Connector	TL25H-08-B1	
P2	Connector	TL25H-09-B1	

[LOGIC A UNIT]

REF. NO.	DESCRIPTION	PART NO.
S1	Switch	SCS-06A
S2	Switch	SCS-06A
EP1	P.C. Board	B-1423B

[LOGIC UNIT]

REF. NO.	DESCRIPTION	PART NO.
IC1	IC	μA7805
IC2	IC	RP5G01 007
IC3	IC	μPD7801G-274-36
IC4	IC	SN74LS08N
IC5	IC	SN74LS32N
IC6	IC	SN74LS02N
IC7	IC	μPD4013BP
IC8	IC	TC4528BP
IC9	IC	SN74LS377N
IC10	IC	SN74LS11N
IC11	IC	SN74LS175N
IC12	IC	BA618
IC13	IC	BA618
IC14	IC	M50780SP
IC15	IC	BA618
IC16	IC	DAN401
IC17	IC	SN74LS08N
IC18	IC	SN74LS08N
IC19	IC	TA78L008AP
Q1	Transistor	2SA1048 Y
Q2	Transistor	2SA1048 Y
Q3	Transistor	2SA1048 Y
Q4	Transistor	2SC2458 GR
Q5	Transistor	2SC2458 GR
Q6	Transistor	RN2202
Q7	Transistor	RN2202
Q8	Transistor	RN2202
Q9	Transistor	RN2202
Q10	Transistor	RN2202
Q11	Transistor	RN2202
Q12	Transistor	RN2202
Q13	Transistor	RN2202
Q14	Transistor	RN2202
Q15	Transistor	RN2202
Q16	Transistor	RN2202
Q17	Transistor	RN1204
Q18	Transistor	RN1204
Q19	Transistor	2SB562 C
Q20	Transistor	RN1204
Q21	Transistor	RN1204
D1	Diode	1SS53
D2	Diode	1SS53
D3	Diode	1SS53
D4	Diode	1SS53
D5	Diode	1SS53
D6	Diode	1SS53
D7	Diode	1SS53
D8	Diode	1SS53
D9	Diode	1SS53
D10	Diode	1SS53
D11	Diode	1SS53
D12	Diode	1SS53
D13	Diode	1SS53
D14	Diode	1SS53
D15	Diode	1SS53
D16	Diode	1SS53
D17	Diode	1SS53
D18	Diode	1SS53
D19	Diode	1SS53
D20	Diode	1SS53

[LOGIC UNIT]

REF. NO.	DESCRIPTION	PART NO.	
D21	Diode	1SS53	
D22	Diode	1SS53	
D23	Diode	1SS53	
D24	Diode	1SS53	
D25	Diode	1SS53	
D26	Diode	1SS53	
D27	Diode	1SS53	
D28	Diode	1SS53	
D29	Diode	1SS53	
D30	Diode	1SS53	
D31	Diode	1SS53	
D32	Diode	1SS53	
D33	Diode	1SS53	
D34	Diode	1SS53	
D35	Diode	1SS53	
D36	Diode	1SS53	
D37	Diode	1SS53	
D38	Diode	1SS53	
X1	Ceramic Resonator	CSA400MT	
L1	Coil	FL5H 102K	
L3	Coil	BT01RN1-A61	
L4	Coil	FL5H 102K	
L5	Coil	FL5H 102K	
L6	Coil	FL5H 102K	
L7	Coil	FL5H 102K	
L8	Coil	FL5H 102K	
L9	Coil	FL5H 102K	
L10	Coil	FL5H 102K	
L11	Coil	FL5H 101K	
L12	Coil	FL5H 101K	
L13	Coil	FL5H 101K	
L14	Coil	FL5H 101K	
L15	Coil	FL5H 101K	
L16	Coil	FL5H 101K	
L17	Coil	FL5H 101K	
L18	Coil	EL0810SKI 102K	
R1	Resistor	4.7kΩ	R20
R2	Resistor	47kΩ	R25
R3	Resistor	10kΩ	R20
R4	Resistor	47kΩ	ELR20
R5	Resistor	470Ω	R20
R6	Array	100kΩ	RMX-4
R7	Resistor	27kΩ	ELR25
R8	Resistor	10kΩ	R25
R10	Resistor	47kΩ	R25
R11	Resistor	3.3MΩ	ELR25
R12	Resistor	1MΩ	ELR20
R13	Resistor	33Ω	ELR25
R14	Trimmer	1MΩB	RH1051D16J0AA
R15	Resistor	220kΩ	ELR25
R16	Resistor	47kΩ	ELR25
R17	Resistor	1MΩ	R20
R18	Resistor	1MΩ	R25
R19	Resistor	47kΩ	R25
R20	Resistor	10Ω	R50X
R21	Resistor	10kΩ	R25
R22	Array	4.7kΩ	RMX-8
R23	Resistor	68kΩ	ELR20

[LOGIC UNIT]

REF. NO.	DESCRIPTION	PART NO.		
R24	Resistor	4.7kΩ	ELR25	
R25	Resistor	10kΩ	R25	
R26	Resistor	1kΩ	ELR25	
R27	Array	4.7kΩ	RMX-4	
R28	Resistor	47kΩ	R20	
R29	Resistor	750Ω	CRB25FX	
R30	Resistor	1.8kΩ	CRB25FX	
R31	Resistor	3.3kΩ	CRB25FX	
R32	Resistor	5.6kΩ	CRB25FX	
R33	Resistor	10kΩ	CRB25FX	
R34	Resistor	4.7kΩ	CRB25FX	
R35	Resistor	1kΩ	R25	
R36	Resistor	1kΩ	R25	
R37	Resistor	1kΩ	R25	
R38	Resistor	1kΩ	R25	
R39	Resistor	1kΩ	R25	
R40	Resistor	1kΩ	R25	
R41	Resistor	1kΩ	R25	
R42	Resistor	1kΩ	R25	
R43	Resistor	1kΩ	R25	
R44	Resistor	1kΩ	R25	
R45	Resistor	1kΩ	R25	
R46	Resistor	1kΩ	R25	
R47	Resistor	1kΩ	R25	
R48	Resistor	1kΩ	R25	
R49	Resistor	1kΩ	R25	
R50	Resistor	1kΩ	R25	
R51	Resistor	1kΩ	R25	
R53	Resistor	220Ω	ELR25	
R54	Resistor	10kΩ	R20	
R55	Resistor	10kΩ	R25	
R58	Resistor	10kΩ	ELR20	
R59	Resistor	10kΩ	R20	
R60	Resistor	3.3kΩ	R20	
R61	Resistor	10kΩ	R20	
R64	Resistor	10kΩ	R20	
R65	Resistor	10kΩ	R20	
C1	Electrolytic	33μF	16V	
C2	Barrier Layer	0.1μF	16V	
C3	Barrier Layer	0.1μF	16V	
C4	Electrolytic	47μF	10V	
C5	Tantalum	1μF	35V	
C6	Barrier Layer	0.1μF	16V	
C7	Mylar	0.0022μF	50V	
C8	Mylar	0.001μF	50V	
C9	Mylar	0.001μF	50V	
C10	Barrier Layer	0.1μF	16V	
C11	Ceramic	68pF	50V	
C12	Ceramic	68pF	50V	
C13	Barrier Layer	0.1μF	16V	
C14	Barrier Layer	0.047μF	25V	
C15	Electrolytic	1μF	50V	BP
C16	Ceramic	0.0047μF	50V	
C17	Barrier Layer	0.1μF	16V	
C18	Electrolytic	47μF	10V	
C19	Barrier Layer	0.1μF	16V	
C20	Array	0.0082μF × 7		
		B8ZC0111-32N		
C21	Ceramic	470pF	50V	
C22	Ceramic	0.001μF	50V	
C23	Electrolytic	2.2μF	50V	MS7
C24	Ceramic	0.0022μF	50V	

[LOGIC UNIT]

REF. NO.	DESCRIPTION	PART NO.
C25	Ceramic	0.001μF 50V
C26	Array	0.0082μF × 7 B8ZC0111-32N
C27	Array	0.001μF × 4 B5RC0124-32N
C28	Array	0.01μF × 6 B7ZC0711-32N
C29	Array	0.01μF × 6 B7ZC0711-32N
C30	Barrier Layer	0.1μF 16V
C31	Barrier Layer	0.1μF 16V
C32	Barrier Layer	0.1μF 16V
C33	Ceramic	0.0047μF 50V
C34	Ceramic	0.0047μF 50V
C35	Ceramic	0.0047μF 50V
J1	Connector	TL25P-03-V1
J2	Connector	TL25P-10-V1
J3	Connector	TL25P-13-V1
J4	Connector	TL25P-05-V1
J5	Connector	TL25P-11-V1
J6	Connector	3022-06B
J7	Connector	TL25P-10-V1
J8	Connector	5138-04CPB
J9	Connector	TL25P-07-V1
J10	Connector	TL25P-09-V1
J11	Connector	5138-11CPB
J12	Connector	TL25P-08-V1
J13	Connector	TL25P-10-V1
J14	Connector	TL25P-08-V1
J15	Connector	TL25P-08-V1
J16	Connector	3022-12B
J17	Connector	3022-11B
J18	Connector	TL25P-06-L1
J19	Connector	TL25P-03-L1
J20	Connector	3022-02B
J21	Connector	3022-02B
P2	Connector	TL25H-04-B1
EP1	P.C. Board	B-705H
EP2	P.C. Board	B-1036A
EP8	P.C. Board	B-1131A
W38	Jumper	JPW-02A
W40	Jumper	JPW-02A
W42	Jumper	JPW-02H
W45	Jumper	JPW-02H
W49	Jumper	JPW-02A
W54	Jumper	JPW-02A
W55	Jumper	JPW-02A
W56	Jumper	JPW-02A
W76	Jumper	JPW-02A
W98	Jumper	JPW-02A
W99	Jumper	JPW-02A
W100	Jumper	JPW-02A
W101	Jumper	JPW-02A
W102	Jumper	JPW-02A

[LOGIC UNIT]

REF. NO.	DESCRIPTION	PART NO.
W103	Jumper	JPW-02A
W125	Jumper	JPW-02A

[RAM UNIT]

REF. NO.	DESCRIPTION	PART NO.	
IC1	IC	μPD23C128EG-305	
IC2	IC	μPD446C	
IC3	IC	SN74LS38	
D1	Diode	1S953	
D2	Diode	1S953	
R1	Resistor	47kΩ	ELR20
R2	Resistor	47kΩ	ELR20
R3	Resistor	47kΩ	ELR20
R4	Resistor	470kΩ	R25
C1	Barrier Layer	0.1μF	16V
C2	Barrier Layer	0.1μF	16V
J1	Connector	5124-12BH	
J2	Connector	TL25P-04-L1	
J3	Connector	5124-11BH	
BT1	Lithium Battery	BR2032-1T2	
EP1	P.C. Board	B-1422A	
W1	Jumper	JPW-02A	

[LOGIC(MUTE) UNIT] (#03, #06 Only)

REF. NO.	DESCRIPTION	PART NO.	
Q1	Transistor	RN1404	
Q2	Transistor	2SC2412K BS	
R1	Chip	47kΩ	MCR10
R2	Chip	10kΩ	MCR10
R3	Chip	100kΩ	MCR10
EP1	P.C. Board	B-1037A	
W1	Jumper	JPW-02A	
W2	Jumper	JPW-02A	

[PLL UNIT]

REF. NO.	DESCRIPTION	PART NO.
IC1	IC	M54929P
IC2	IC	M54466L
IC3	IC	µPC1037H
IC4	IC	µPC1037H
IC5	IC	SN74LS90N
IC6	IC	TC5082P-GL
IC7	IC	TA78L008AP
IC8	IC	µA7805
IC201	IC	M54929P
IC202	IC	M54466L
IC203	IC	SN74LS90N
IC204	IC	M54459L
Q1	Transistor	2SC945 P
Q2	Transistor	2SC945 P
Q3	Transistor	2SC945 P
Q4	Transistor	2SC945 P
Q5	FET	2SK30A Y
Q6	FET	2SK30A Y
Q7	Transistor	2SC1571 G
Q8	Transistor	2SA1015 Y
Q9	Transistor	2SC945 P
Q10	Transistor	2SC945 R
Q11	Transistor	2SC383 TM
Q12	Transistor	2SC945 P
Q13	Transistor	RN1204
Q14	Transistor	2SC383 TM
Q15	FET	2SK241 Y
Q16	Transistor	2SC383 TM
Q17	Transistor	2SC383 TM
Q18	FET	2SK192A GR
Q19	FET	2SK192A GR
Q20	FET	2SK192A GR
Q21	FET	2SK192A GR
Q22	Transistor	2SC383 TM
Q23	Transistor	2SC383 TM
Q24	Transistor	2SC945 P
Q25	Transistor	2SC383 TM
Q26	Transistor	2SC383 TM
Q201	FET	2SK192A GR
Q202	Transistor	2SC763 C
D1	Varicap	1SV50E
D2	Zener	RD5.1E B2
D4	Diode	1SS53
D5	Diode	1SS53
D7	Diode	1SS53
D8	Diode	1SS53
D9	Diode	1SS53
D10	Diode	1SS53
D11	Diode	1SS53
D12	Varicap	FC52M
D13	Varicap	1SV50E
D14	Varicap	1SV50E
D15	Varicap	1SV50E
D16	Diode	1SS53
D17	Diode	1SS53
D18	Diode	1SS53
D19	Diode	1SS53
D20	Zener	RD5.1E B2
D201	Varicap	1SV50E
D202	Diode	1SS237

[PLL UNIT]

REF. NO.	DESCRIPTION	PART NO.
D203	Diode	1SS237
FI1	Monolithic	FL-69
X1	Crystal	CR-64
L1	Coil	LW-19
L2	Coil	LS-94
L3	Coil	LS-114
L4	Coil	LS-114
L5	Coil	LS-114
L6	Coil	LAL04NA 102K
L7	Coil	EL0810SKI 101K
L8	Coil	LS-162
L9	Coil	LA-244
L10	Coil	LA-254
L11	Coil	LB4 R36
L12	Coil	LB4 R23
L13	Coil	LW-20
L14	Coil	FL5H 101K
L15	Coil	FL5H 101K
L16	Coil	LR-79
L17	Coil	LB-135
L18	Coil	LW-25
L19	Coil	LR-79
L20	Coil	LB-135
L21	Coil	LW-25
L22	Coil	LR-79
L23	Coil	LB-135
L24	Coil	LW-25
L25	Coil	LR-79
L26	Coil	LB-135
L27	Coil	LW-25
L28	Coil	BT01RN1-A61
L29	Coil	LAL03NA R56M
L30	Coil	LAL04NA 101K
L31	Coil	LAL04NA 101K
L32	Coil	LAL03NA 100K
L33	Coil	BT01RN1-A61
L34	Coil	BT01RN1-A61
L201	Coil	LB-113
L202	Coil	LW-25
L203	Coil	FL5H 101K
L204	Coil	LAL03NA 101K
L205	Coil	LAL04NA 101K
L206	Coil	LAL04NA 101K
R1	Resistor	1kΩ R25
R2	Resistor	2.2kΩ ELR25
R3	Resistor	4.7kΩ ELR25
R4	Resistor	10kΩ ELR25
R5	Resistor	470Ω ELR25
R6	Resistor	220Ω ELR25
R7	Resistor	47Ω R25
R8	Resistor	47Ω ELR25
R9	Resistor	100Ω R20
R10	Resistor	15kΩ ELR25
R11	Resistor	1kΩ R25
R12	Resistor	470Ω R20
R13	Resistor	1.2kΩ ELR20

[PLL UNIT]

REF. NO.	DESCRIPTION	PART NO.	
R14	Resistor	220Ω	ELR25
R15	Resistor	47kΩ	ELR25
R17	Resistor	10kΩ	ELR25
R18	Resistor	220Ω	ELR25
R19	Resistor	22kΩ	ELR25
R20	Resistor	100Ω	ELR25
R21	Resistor	8.2kΩ	ELR25
R22	Resistor	1kΩ	ELR25
R24	Resistor	100Ω	ELR25
R25	Resistor	100Ω	R20
R26	Resistor	470Ω	ELR25
R27	Resistor	220Ω	ELR25
R28	Resistor	100Ω	ELR25
R29	Resistor	3.3Ω	ELR25
R30	Resistor	1.5kΩ	ELR25
R31	Resistor	22kΩ	ELR25
R32	Resistor	10kΩ	ELR25
R33	Resistor	10kΩ	ELR25
R34	Resistor	220Ω	ELR25
R35	Resistor	220Ω	ELR25
R37	Resistor	2.7kΩ	ELR25
R38	Resistor	390Ω	ELR25
R39	Resistor	1kΩ	ELR25
R40	Resistor	4.7kΩ	ELR25
R41	Resistor	1.8MΩ	ELR25
R42	Resistor	1kΩ	ELR25
R43	Trimmer	470Ω	
		FRH0651CS2J1HA	
R44	Resistor	4.7kΩ	ELR25
R45	Resistor	1kΩ	R25
R46	Resistor	4.7kΩ	R25
R47	Resistor	100Ω	R25
R48	Resistor	2.2kΩ	ELR25
R49	Resistor	2.2kΩ	ELR25
R50	Resistor	10kΩ	ELR25
R52	Resistor	27kΩ	ELR25
R53	Resistor	22kΩ	ELR25
R54	Resistor	22kΩ	ELR25
R55	Resistor	47kΩ	ELR25
R56	Resistor	100kΩ	ELR25
R57	Resistor	100kΩ	ELR25
R58	Resistor	150Ω	ELR25
R59	Resistor	3.3kΩ	ELR25
R60	Resistor	100kΩ	ELR25
R61	Resistor	100kΩ	ELR25
R62	Resistor	150Ω	ELR25
R63	Resistor	3.3kΩ	ELR25
R64	Resistor	100kΩ	ELR25
R65	Resistor	100kΩ	ELR25
R66	Resistor	150Ω	ELR25
R67	Resistor	3.3kΩ	ELR25
R68	Resistor	100kΩ	ELR25
R69	Resistor	100kΩ	ELR25
R70	Resistor	150Ω	ELR25
R71	Resistor	3.3kΩ	ELR25
R72	Resistor	180Ω	ELR25
R73	Resistor	33Ω	ELR25
R74	Resistor	4.7kΩ	ELR25
R75	Resistor	220Ω	ELR25
R76	Resistor	330Ω	ELR25
R77	Resistor	22Ω	ELR25
R78	Resistor	220Ω	ELR25
R79	Resistor	22kΩ	ELR25
R80	Resistor	100Ω	ELR25

[PLL UNIT]

REF. NO.	DESCRIPTION	PART NO.		
R81	Resistor	560Ω	ELR25	
R82	Resistor	10kΩ	ELR25	
R83	Resistor	47kΩ	ELR25	
R84	Resistor	10kΩ	ELR25	
R85	Resistor	220Ω	ELR25	
R86	Resistor	10kΩ	ELR25	
R87	Resistor	100Ω	ELR25	
R88	Resistor	100Ω	R25	
R89	Resistor	220Ω	ELR25	
R90	Resistor	22kΩ	ELR25	
R91	Resistor	10kΩ	ELR25	
R92	Resistor	470Ω	ELR25	
R93	Resistor	47Ω	ELR25	
R94	Resistor	10kΩ	R25	
R95	Resistor	10kΩ	R25	
R96	Resistor	10kΩ	R25	
R97	Resistor	10kΩ	R25	
R98	Resistor	47kΩ	R25	
R99	Resistor	47kΩ	R25	
R100	Resistor	SRW1P10-J		
R101	Resistor	120Ω	R50X	
R102	Resistor	220Ω	ELR25	
R103	Resistor	47Ω	ELR25	
R104	Resistor	22Ω	ELR20	
R105	Resistor	1kΩ	R25	
R106	Resistor	15kΩ	R25	
R107	Resistor	100Ω	ELR25	
R108	Resistor	47Ω	ELR25	
R109	Resistor	3.3kΩ	R20	
R110	Resistor	820Ω	R20	
R201	Resistor	10kΩ	R20	
R202	Resistor	1kΩ	R25	
R203	Resistor	2.7kΩ	ELR20	
R204	Resistor	33kΩ	ELR25	
R205	Resistor	10kΩ	ELR25	
R206	Resistor	470kΩ	R20	
R208	Resistor	180Ω	ELR25	
R209	Resistor	150Ω	ELR25	
R210	Resistor	5.6kΩ	ELR25	
R211	Resistor	1.2kΩ	ELR25	
R212	Resistor	330Ω	ELR25	
R213	Resistor	150Ω	R25	
R214	Resistor	4.7kΩ	R25	
R215	Resistor	2.2kΩ	R25	
R216	Resistor	2.7kΩ	ELR25	
R217	Resistor	2.7kΩ	ELR25	
R218	Resistor	390Ω	ELR25	
C2	Ceramic	0.0047μF	50V	
C3	Ceramic	10pF	50V	CH
C4	Ceramic	0.0047μF	50V	
C5	Electrolytic	10μF	16V	
C6	Ceramic	82pF	50V	TH
C7	Ceramic	0.0047μF	50V	
C8	Ceramic	82pF	50V	TH
C9	Ceramic	10pF	50V	
C10	Ceramic	68pF	50V	
C11	Ceramic	47pF	50V	
C12	Ceramic	100pF	50V	
C13	Ceramic	100pF	50V	
C14	Barrier Layer	0.047μF	25V	
C15	Ceramic	22pF	50V	
C16	Barrier Layer	0.047μF	25V	

[PLL UNIT]

REF. NO.	DESCRIPTION	PART NO.		
C19	Ceramic	0.001μF	50V	
C20	Ceramic	0.0047μF	50V	
C21	Ceramic	0.0047μF	50V	
C22	Ceramic	8pF	50V	
C23	Ceramic	1pF	50V	
C24	Ceramic	8pF	50V	
C25	Ceramic	1pF	50V	
C26	Ceramic	8pF	50V	
C27	Barrier Layer	0.047μF	25V	
C29	Ceramic	470pF	50V	
C30	Ceramic	470pF	50V	
C31	Barrier Layer	0.1μF	16V	
C32	Ceramic	0.0047μF	50V	
C33	Electrolytic	47pF	10V	
C34	Ceramic	0.0047μF	50V	
C35	Ceramic	6pF	50V	
C36	Ceramic	6pF	50V	
C37	Ceramic	0.0047μF	50V	
C39	Ceramic	33pF	50V	
C40	Ceramic	0.0047μF	50V	
C41	Ceramic	0.001μF	50V	
C42	Ceramic	0.0047μF	50V	
C43	Ceramic	43pF	50V	
C44	Ceramic	51pF	50V	
C45	Ceramic	120pF	50V	
C46	Ceramic	22pF	50V	
C47	Ceramic	100pF	50V	
C48	Ceramic	150pF	50V	
C49	Ceramic	82pF	50V	
C50	Ceramic	56pF	50V	
C51	Ceramic	330pF	50V	
C52	Ceramic	68pF	50V	
C53	Ceramic	150pF	50V	
C54	Ceramic	0.0047μF	50V	
C55	Ceramic	0.0047μF	50V	
C56	Ceramic	0.001μF	50V	
C57	Ceramic	0.0047μF	50V	
C58	Ceramic	0.0022μF	50V	
C59	Ceramic	0.0047μF	50V	
C60	Ceramic	0.0047μF	50V	
C62	Ceramic	0.0047μF	50V	
C63	Ceramic	0.0047μF	50V	
C64	Electrolytic	47pF	10V	
C65	Array	470pF×6		
		B7ZC0717-32N		
C66	Electrolytic	47μF	10V	
C67	Barrier Layer	0.047μF	25V	
C68	Barrier Layer	0.1μF	16V	
C69	Ceramic	0.001μF	50V	
C70	Ceramic	0.001μF	50V	
C71	Electrolytic	1μF	50V	
C72	Electrolytic	100μF	10V	
C73	Ceramic	0.0047μF	50V	
C74	Barrier Layer	0.047μF	25V	
C75	Electrolytic	0.47μF	50V	BP
C76	Ceramic	56pF	50V	
C77	Ceramic	24pF	50V	
C78	Trimmer	10pF	VCT51C143A	
C79	Ceramic	56pF	50V	CH
C80	Ceramic	12pF	50V	CH
C81	Ceramic	12pF	50V	CH
C82	Ceramic	0.0047μF	50V	
C83	Ceramic	1pF	50V	
C84	Ceramic	0.0047μF	50V	

[PLL UNIT]

REF. NO.	DESCRIPTION	PART NO.		
C85	Barrier Layer	0.047μF	25V	
C86	Ceramic	56pF	50V	
C87	Ceramic	15pF	50V	
C88	Trimmer	10pF	VCT51C143A	
C89	Ceramic	47pF	50V	CH
C90	Ceramic	12pF	50V	CH
C91	Ceramic	12pF	50V	CH
C92	Ceramic	0.0047μF	50V	
C93	Ceramic	1pF	50V	
C94	Ceramic	0.0047μF	50V	
C95	Ceramic	47pF	50V	
C96	Ceramic	10pF	50V	
C97	Trimmer	6pF	VCT51A123A	
C98	Ceramic	47pF	50V	CH
C99	Ceramic	12pF	50V	CH
C100	Ceramic	8pF	50V	CH
C101	Ceramic	0.0047μF	50V	
C102	Ceramic	1pF	50V	
C103	Ceramic	0.0047μF	50V	
C104	Barrier Layer	0.047μF	25V	
C105	Ceramic	39pF	50V	
C106	Ceramic	7pF	50V	
C107	Trimmer	6pF	VCT51A123A	
C108	Ceramic	33pF	50V	CH
C109	Ceramic	12pF	50V	CH
C110	Ceramic	5pF	50V	CH
C111	Ceramic	0.0047μF	50V	
C112	Ceramic	1pF	50V	
C113	Ceramic	0.0047μF	50V	
C114	Barrier Layer	0.047μF	25V	
C115	Electrolytic	100μF	10V	
C116	Ceramic	0.0047μF	50V	
C117	Ceramic	22pF	50V	
C118	Ceramic	47pF	50V	
C119	Ceramic	47pF	50V	
C120	Ceramic	0.0047μF	50V	
C121	Ceramic	0.0047μF	50V	
C122	Ceramic	0.001μF	50V	
C123	Ceramic	0.0047μF	50V	
C124	Ceramic	22pF	50V	
C126	Ceramic	0.0047μF	50V	
C127	Ceramic	47pF	50V	
C128	Electrolytic	47μF	10V	
C129	Electrolytic	100μF	16V	
C130	Ceramic	0.0047μF	50V	
C131	Ceramic	0.0047μF	50V	
C132	Electrolytic	47μF	10V	
C133	Ceramic	0.001μF	50V	
C134	Ceramic	0.001μF	50V	
C135	Ceramic	0.001μF	50V	
C136	Ceramic	0.001μF	50V	
C137	Electrolytic	10μF	16V	
C139	Ceramic	0.0047μF	50V	
C140	Ceramic	0.0047μF	50V	
C141	Barrier Layer	0.1μF	16V	
C145	Ceramic	0.0047μF	50V	
C147	Ceramic	5pF	50V	
C148	Ceramic	33pF	50V	
C150	Ceramic	0.0047μF	50V	
C151	Ceramic	0.0047μF	50V	
C152	Ceramic	0.001μF	50V	
C153	Electrolytic	10μF	16V	MS7
C154	Ceramic	10pF	50V	
C155	Ceramic	120pF	50V	

[PLL UNIT]

REF. NO.	DESCRIPTION	PART NO.		
C156	Ceramic	0.0047μF	50V	
C201	Array	470pF×6		
		B7ZC0717-32N		
C202	Electrolytic	0.22μF	50V	RC2
C203	Barrier Layer	0.047μF	25V	
C204	Ceramic	0.0022μF	50V	
C205	Ceramic	0.001μF	50V	
C206	Electrolytic	47μF	10V	
C207	Ceramic	39pF	50V	UJ
C208	Ceramic	22pF	50V	
C209	Ceramic	4pF	50V	
C210	Ceramic	4pF	50V	
C211	Electrolytic	47μF	10V	
C212	Ceramic	0.0022μF	50V	
C213	Ceramic	1pF	50V	
C214	Ceramic	0.0047μF	50V	
C215	Ceramic	0.001μF	50V	
C216	Ceramic	47pF	50V	
C217	Ceramic	0.0022μF	50V	
C218	Ceramic	0.0047μF	50V	
C219	Barrier Layer	0.047μF	25V	
C220	Ceramic	470pF	50V	
C221	Ceramic	0.0047μF	50V	
C222	Ceramic	0.001μF	50V	
C223	Electrolytic	47μF	10V	
C224	Ceramic	0.0047μF	50V	
C225	Ceramic	0.0047μF	50V	
C226	Ceramic	0.0047μF	50V	
C227	Ceramic	0.0047μF	50V	
C228	Barrier Layer	0.1μF	16V	
J1	Connector	TL25P-06-V1		
J2	Connector	5138-11CPB		
J3	Connector	5138-04CPB		
J4	Connector	TMP-J01X-V2		
J5	Connector	TMP-J01X-V2		
P1	Connector	TL25H-02-B1		
EP1	P.C.Board	B-704G		
W36	Jumper	JPW-02A		

[RF UNIT]

REF. NO.	DESCRIPTION	PART NO.
IC1	IC	BA618
IC2	IC	BA618
IC3	IC	ND487C1-3R
Q1	Transistor	2SC945 P/Q
Q2	Transistor	2SC2053
Q3	Transistor	2SA1048 Y
Q5	Transistor	2SC1571 G
Q6	FET	2SK125
Q7	FET	2SK125
Q8	FET	3SK74 M
Q9	FET	2SK125
Q10	FET	2SK125
Q11	FET	3SK74 M
Q12	FET	3SK74 K
Q13	FET	3SK74 K
Q14	Transistor	2SC2053
Q15	Transistor	2SC2878
Q16	Transistor	RN1202
Q17	Transistor	2SC945 P/Q
Q18	Transistor	RN1202
Q19	Transistor	RN1202
Q20	Transistor	2SD468 C
Q21	Transistor	RN1204
D1	Diode	1S953
D2	Diode	1S953
D3	Diode	1SS53
D4	Diode	1SS53
D5	Diode	1N4002
D6	Diode	1N4002
D7	Diode	1SS53
D9	Diode	1SS53
D10	Diode	MI204
D11	Diode	MI204
D12	Diode	1SS53
D13	Diode	1SS53
D14	Diode	1SS53
D15	Diode	1SS53
D16	Diode	1SS53
D17	Diode	1SS53
D18	Diode	1SS53
D19	Diode	1SS53
D20	Diode	1SS53
D21	Diode	1SS53
D22	Diode	1SS53
D23	Diode	1SS53
D24	Diode	1SS53
D25	Diode	1SS53
D26	Diode	1SS53
D27	Diode	1SS53
D28	Diode	1SS53
D29	Diode	1SS53
D30	Diode	1SS53
D31	Diode	1SS53
D32	Diode	1SS53
D33	Diode	1SS53
D34	Diode	1SS53
D35	Diode	1SS53
D36	Diode	1SS53
D37	Diode	1SS53
D38	Diode	1SS53

[RF UNIT]

REF. NO.	DESCRIPTION	PART NO.
D39	Diode	1SS53
D40	Diode	1SS53
D41	Diode	MI204
D42	Diode	MI204
D43	Diode	MI204
D44	Diode	MI204
D45	Diode	1SS53
D46	Diode	1SS55
D47	Diode	MI204
D48	Diode	1SS53
D49	Diode	1SS53
D50	Diode	1SS53
D51	Zener	RD9.1E B3
D52	Diode	1SS53
D53	Diode	1SS53
D54	Diode	1SS53
FI1	Monolithic	FL-64
L1	Coil	EL0810SKI 101K
L2	Coil	EL0810SKI 101K
L3	Coil	EL0810SKI 101K
L4	Coil	EL0810SKI 102K
L5	Coil	EL0810SKI 102K
L6	Coil	FL5H 102K
L7	Coil	FL5H 102K
L8	Coil	EL0810SKI 101K
L9	Coil	EL0810SKI 101K
L10	Coil	EL0810SKI 101K
L11	Coil	EL0810SKI 101K
L12	Coil	LB4 R15
L13	Coil	LB4 R50
L14	Coil	FL5H 101K
L15	Coil	LR-151
L16	Coil	LR-170
L17	Coil	LS-114
L18	Coil	LS-254
L19	Coil	LS-254
L20	Coil	LS-254
L21	Coil	LS-198
L22	Coil	LR-171
L23	Coil	LA-268
L24	Coil	LA-258
L25	Coil	S4 102K
L26	Coil	LB4 R83
L27	Coil	LR-116
L28	Coil	LR-116
L29	Coil	LA-96
L30	Coil	LA-86A
L31	Coil	LS-114
L32	Coil	LS-114
L33	Coil	LS-198
L34	Coil	LR-75A
L35	Coil	FL5H 102K
L36	Coil	EL0810SKI 102K
L37	Coil	FL5H 102K
L38	Coil	FL5H 102K
L39	Coil	FL5H 102K
L40	Coil	FL5H 102K
L41	Coil	LR-130
L42	Coil	LR-129
L43	Coil	FL5H 102K

[RF UNIT]

REF. NO.	DESCRIPTION	PART NO.
L44	Coil	LB4 R34
L45	Coil	LB4 R36
L46	Coil	LB4 R30
L47	Coil	LB4 R36
L48	Coil	FL5H 101K
L49	Coil	LB4 R45
L50	Coil	LB4 R50
L51	Coil	LB4 R50
L52	Coil	LB4 R54
L53	Coil	FL5H 101K
L54	Coil	LB4 R54
L55	Coil	LB4 R65
L56	Coil	LB4 R65
L57	Coil	LB4 R83
L58	Coil	FL5H 101K
L59	Coil	LB4 R70
L60	Coil	LB4 R83
L61	Coil	EL0810SKI 1R0K
L62	Coil	EL0810SKI 1R0K
L63	Coil	FL5H 101K
L64	Coil	EL0810SKI 1R0K
L65	Coil	EL0810SKI 1R2K
L66	Coil	EL0810SKI 1R2K
L67	Coil	EL0810SKI 1R2K
L68	Coil	FL5H 101K
L69	Coil	EL0810SKI 1R5K
L70	Coil	EL0810SKI 1R5K
L71	Coil	EL0810SKI 1R8K
L72	Coil	EL0810SKI 1R8K
L73	Coil	FL5H 101K
L74	Coil	EL0810SKI 1R8K
L75	Coil	EL0810SKI 1R8K
L76	Coil	EL0810SKI 2R2K
L77	Coil	EL0810SKI 2R7K
L78	Coil	FL5H 101K
L79	Coil	EL0810SKI 2R7K
L80	Coil	EL0810SKI 3R3K
L81	Coil	EL0810SKI 3R3K
L82	Coil	LB4 4R3
L83	Coil	FL5H 102K
L84	Coil	LB4 3R6
L85	Coil	LB4 4R3
L86	Coil	LB4 5R1
L87	Coil	LB4 6R2
L88	Coil	FL5H 102K
L89	Coil	FL5H 102K
L90	Coil	LB4 6R2
L91	Coil	LB4 5R1
L92	Coil	FL5H 102K
L93	Coil	FL5H 220K
L94	Coil	FL5H 220K
L95	Coil	S4 102K
L96	Coil	LR-20
L97	Coil	FL5H 102K
L98	Coil	FL5H 101K
L99	Coil	FL5H 102K
L100	Coil	FL5H 102K
L101	Coil	EL0810SKI 4R7K
L102	Coil	EL0810SKI 3R3K
L103	Coil	S4 102K
L104	Coil	BT01RN1-A61
L105	Coil	BT01RN1-A61
L106	Coil	LAL03NA 100K
L107	Coil	LAL03NA 100K

[RF UNIT]

REF. NO.	DESCRIPTION	PART NO.	
R1	Resistor	2.2Ω	ELR20
R2	Resistor	10kΩ	R20
R3	Resistor	10kΩ	ELR25
R4	Resistor	10kΩ	ELR25
R5	Resistor	10kΩ	ELR25
R6	Resistor	10kΩ	ELR25
R7	Resistor	10kΩ	ELR25
R8	Resistor	10kΩ	R25
R9	Resistor	33kΩ	ELR25
R10	Resistor	33kΩ	ELR25
R11	Resistor	10kΩ	ELR20
R12	Resistor	10kΩ	R25
R13	Resistor	2.2Ω	ELR20
R14	Array	10kΩ	RMX-6
R15	Resistor	470Ω	ELR25
R16	Resistor	680Ω	ELR25
R17	Resistor	8.2kΩ	ELR25
R18	Resistor	560Ω	ELR25
R19	Resistor	100Ω	ELR25
R20	Resistor	1kΩ	ELR25
R21	Resistor	33Ω	ELR25
R22	Resistor	220Ω	ELR25
R23	Resistor	100Ω	ELR25
R24	Trimmer	2.2kΩ	RH06510J3J0CA
R25	Resistor	330Ω	ELR25
R26	Resistor	22kΩ	ELR25
R27	Resistor	47Ω	ELR25
R28	Resistor	47Ω	ELR25
R29	Resistor	10kΩ	ELR20
R30	Resistor	100kΩ	ELR25
R31	Resistor	390Ω	ELR25
R32	Resistor	47Ω	ELR25
R33	Resistor	10kΩ	ELR25
R34	Resistor	12kΩ	ELR25
R35	Resistor	220Ω	ELR25
R36	Resistor	2.2kΩ	ELR25
R37	Resistor	22Ω	ELR25
R38	Resistor	22Ω	ELR25
R39	Resistor	100Ω	R25
R40	Resistor	100Ω	ELR25
R41	Resistor	100Ω	ELR25
R42	Resistor	3.9kΩ	R20
R43	Resistor	56Ω	ELR20
R44	Resistor	470kΩ	ELR25
R45	Resistor	47Ω	R25
R46	Resistor	560Ω	R20
R47	Resistor	560Ω	R20
R48	Resistor	220Ω	R25
R49	Resistor	150Ω	ELR20
R50	Resistor	8.2Ω	R20
R51	Resistor	8.2Ω	R20
R52	Resistor	150Ω	R20
R53	Resistor	2.2kΩ	ELR25
R54	Resistor	100Ω	ELR20
R55	Resistor	100kΩ	ELR25
R56	Resistor	10kΩ	ELR25
R57	Resistor	820Ω	ELR25
R58	Resistor	100Ω	ELR25
R59	Resistor	1.5kΩ	R20
R60	Resistor	100Ω	ELR25
R61	Resistor	150Ω	ELR25
R62	Resistor	10kΩ	ELR25
R63	Resistor	68Ω	ELR25
R64	Resistor	68Ω	ELR25

[RF UNIT]

REF. NO.	DESCRIPTION	PART NO.	
R65	Resistor	47Ω	ELR25
R66	Resistor	100Ω	ELR25
R67	Resistor	100Ω	ELR20
R68	Resistor	100Ω	R20
R69	Resistor	100Ω	R25
R70	Resistor	100Ω	R25
R71	Resistor	100Ω	R25
R72	Resistor	100Ω	R25
R73	Resistor	100Ω	R25
R74	Resistor	100Ω	R25
R75	Resistor	100Ω	R25
R76	Resistor	100Ω	R25
R77	Resistor	100Ω	R25
R78	Resistor	100Ω	R25
R79	Resistor	470Ω	ELR25
R80	Resistor	82Ω	ELR25
R81	Resistor	680Ω	ELR25
R82	Resistor	4.7kΩ	ELR25
R83	Resistor	100Ω	ELR25
R84	Resistor	220Ω	ELR20
R85	Resistor	4.7Ω	ELR25
R86	Resistor	1Ω	ELR25
R87	Resistor	10kΩ	ELR25
R88	Resistor	220Ω	R25
R89	Resistor	2.2kΩ	ELR25
R90	Resistor	4.7kΩ	ELR25
R91	Resistor	470Ω	ELR25
R92	Resistor	56Ω	ELR25
R93	Resistor	470Ω	ELR20
R94	Resistor	8.2kΩ	ELR20
R95	Resistor	2.2kΩ	ELR25
R96	Resistor	4.7kΩ	ELR20
R97	Resistor	470Ω	R20
R100	Resistor	390Ω	ELR20
R101	Resistor	4.7kΩ	ELR25
R102	Resistor	4.7kΩ	R25
R104	Resistor	82Ω	ELR25
R105	Resistor	2.2kΩ	R25
R106	Resistor	2.2kΩ	ELR25
R108	Resistor	27Ω	R25
R109	Resistor	33Ω	ELR25
R110	Resistor	27Ω	ELR25
R111	Resistor	820Ω	ELR20
R112	Resistor	1kΩ	ELR20
R113	Resistor	100Ω	R25
R114	Resistor	2.2kΩ	ELR25
R115	Resistor	47kΩ	ELR25
R116	Resistor	680kΩ	ELR25
R117	Resistor	10kΩ	R25
R118	Resistor	15kΩ	ELR20
R119	Resistor	15kΩ	ELR25
R120	Resistor	2.2kΩ	R20
R121	Resistor	3.3kΩ	ELR20
R122	Resistor	1kΩ	R25
R123	Thermistor	23D29	
R124	Resistor	10kΩ	ELR25
R125	Trimmer	4.7kΩ	RH0521CS3J04A
C1	Array	0.0082μF × 7 B8ZC0111-32N	
C2	Array	0.0082μF × 7 B8ZC0111-32N	

[RF UNIT]

REF. NO.	DESCRIPTION	PART NO.		
C3	Barrier Layer	0.047μF	25V	
C6	Array	0.0082μF × 7		
		B8ZC0111-32N		
C7	Array	0.0082μF × 7		
		B8ZC0111-32N		
C11	Ceramic	39pF	50V	
C12	Ceramic	39pF	50V	
C13	Ceramic	220pF	50V	
C14	Ceramic	0.001μF	50V	
C15	Ceramic	0.047μF	25V	
C16	Electrolytic	2.2μF	50V	MS7
C17	Ceramic	0.001μF	50V	
C18	Ceramic	8pF	50V	
C19	Ceramic	5pF	50V	
C20	Ceramic	15pF	50V	
C21	Ceramic	1pF	50V	
C22	Ceramic	10pF	50V	
C23	Barrier Layer	0.047μF	25V	
C24	Barrier Layer	0.1μF	16V	
C25	Barrier Layer	0.1μF	16V	
C26	Barrier Layer	0.047μF	25V	
C27	Barrier Layer	0.047μF	25V	
C28	Barrier Layer	0.047μF	25V	
C29	Barrier Layer	0.047μF	25V	
C30	Electrolytic	0.47μF	50V	MS7
C31	Barrier Layer	0.047μF	25V	
C32	Ceramic	220pF	50V	
C33	Barrier Layer	0.047μF	25V	
C34	Barrier Layer	0.047μF	25V	
C35	Barrier Layer	0.047μF	25V	
C36	Barrier Layer	0.047μF	25V	
C37	Barrier Layer	0.047μF	25V	
C38	Barrier Layer	0.047μF	25V	
C39	Barrier Layer	0.047μF	25V	
C40	Barrier Layer	0.047μF	25V	
C41	Ceramic	2pF	50V	
C42	Ceramic	6pF	50V	
C43	Barrier Layer	0.0047μF	50V	
C44	Barrier Layer	0.0047μF	50V	
C45	Mylar	0.022μF	50V	
C47	Ceramic	0.001μF	50V	
C48	Ceramic	3pF	50V	
C49	Ceramic	10pF	50V	
C50	Ceramic	8pF	50V	
C51	Barrier Layer	0.1μF	16V	
C52	Ceramic	8pF	50V	
C54	Barrier Layer	0.047μF	25V	
C55	Electrolytic	1μF	50V	
C56	Ceramic	82pF	50V	
C57	Ceramic	150pF	50V	
C58	Ceramic	10pF	50V	
C59	Ceramic	30pF	50V	
C61	Barrier Layer	820pF	50V	
		RAU08SA	821K-L45AC	
C62	Barrier Layer	820pF	50V	
		RAU08SA	821K-L45AC	
C63	Ceramic	0.0047μF	50V	
C64	Ceramic	27pF	50V	
C65	Ceramic	82pF	50V	
C66	Ceramic	24pF	50V	
C67	Ceramic	24pF	50V	
C68	Ceramic	39pF	50V	
C69	Ceramic	0.0047μF	50V	
C70	Ceramic	6pF	50V	

[RF UNIT]

REF. NO.	DESCRIPTION	PART NO.		
C71	Barrier Layer	0.1μF	16V	
C72	Ceramic	0.001μF	50V	
C73	Ceramic	0.0047μF	50V	
C74	Ceramic	0.0047μF	50V	
C75	Ceramic	0.0047μF	50V	
C76	Ceramic	8pF	50V	UJ
C77	Ceramic	15pF	50V	
C78	Ceramic	3pF	50V	
C79	Barrier Layer	0.047μF	25V	
C80	Barrier Layer	0.047μF	25V	
C81	Barrier Layer	0.047μF	25V	
C82	Barrier Layer	0.047μF	25V	
C84	Barrier Layer	0.047μF	25V	
C85	Ceramic	100pF	50V	
C86	Barrier Layer	820pF	50V	
		RAU08SA	821K-L45AC	
C87	Ceramic	270pF	50V	
C88	Ceramic	68pF	50V	
C89	Ceramic	56pF	50V	
C90	Ceramic	120pF	50V	
C91	Ceramic	30pF	50V	
C92	Barrier Layer	0.047μF	25V	
C93	Barrier Layer	0.047μF	25V	
C94	Ceramic	150pF	50V	
C95	Barrier Layer	0.0012μF	25V	
		UAT04V	122K-L05AC	
C96	Ceramic	300pF	50V	
C97	Ceramic	100pF	50V	
C98	Ceramic	24pF	50V	
C99	Ceramic	220pF	50V	
C100	Barrier Layer	0.047μF	25V	
C101	Barrier Layer	0.047μF	25V	
C102	Ceramic	200pF	50V	
C103	Barrier Layer	0.0018μF	25V	
		UAT04V	182K-L05AC	
C104	Ceramic	300pF	50V	
C105	Ceramic	270pF	50V	
C106	Ceramic	39pF	50V	
C107	Ceramic	390pF	50V	
C108	Barrier Layer	0.047μF	25V	
C109	Barrier Layer	0.047μF	25V	
C110	Ceramic	300pF	50V	
C111	Barrier Layer	0.0022μF	25V	
		UAT04V	222K-L05AC	
C112	Ceramic	330pF	50V	
C113	Ceramic	150pF	50V	
C114	Ceramic	51pF	50V	
C115	Ceramic	390pF	50V	
C116	Barrier Layer	0.047μF	25V	
C117	Barrier Layer	0.047μF	25V	
C118	Ceramic	390pF	50V	
C119	Barrier Layer	0.0027μF	25V	
		UAT05V	272K-L05AC	
C120	Ceramic	470pF	50V	SL
C121	Ceramic	510pF	50V	SL
C122	Ceramic	75pF	50V	
C123	Barrier Layer	560pF	50V	
		RAU06SA	561K-L45AC	
C124	Barrier Layer	0.047μF	25V	
C125	Barrier Layer	0.047μF	25V	
C126	Barrier Layer	560pF	50V	
		RAU06SA	561K-L45AC	
C127	Barrier Layer	0.0056μF	25V	
		UAT06V	562K-L45AC	

[RF UNIT]

REF. NO.	DESCRIPTION	PART NO.
C128	Barrier Layer	0.001μF 25V UAT04V 102K-L05AC
C129	Barrier Layer	680pF 50V RAU08SA 681K-L45AC
C130	Ceramic	82pF 50V
C131	Barrier Layer	680pF 50V RAU08SA 681K-L45AC
C132	Barrier Layer	0.047μF 25V
C133	Barrier Layer	0.047μF 25V
C134	Barrier Layer	0.001μF 25V UAT04V 102K-L05AC
C135	Barrier Layer	0.0068μF 25V UAT06V 682K-L45AC
C136	Barrier Layer	0.0012μF 25V UAT04V 122K-L05AC
C137	Barrier Layer	0.001μF 25V UAT04V 102K-L05AC
C138	Ceramic	150pF 50V
C139	Barrier Layer	0.0015μF 25V UAT04V 152K-L05AC
C140	Barrier Layer	0.047μF 25V
C141	Barrier Layer	0.047μF 25V
C142	Barrier Layer	0.0012μF 25V UAT04V 122K-L05AC
C143	Barrier Layer	0.01μF 25V UAT06V 103K-L45AC
C144	Barrier Layer	0.0018μF 25V UAT04V 182K-L05AC
C145	Barrier Layer	0.0015μF 25V UAT04V 152K-L05AC
C146	Ceramic	200pF 50V
C147	Barrier Layer	0.0015μF 25V UAT04V 152K-L05AC
C148	Barrier Layer	0.047μF 25V
C149	Barrier Layer	0.047μF 25V
C150	Barrier Layer	0.0015μF 25V UAT04V 152K-L05AC
C151	Barrier Layer	0.012μF 25V UAT08V 123K-L45AC
C152	Barrier Layer	0.0022μF 25V UAT04V 222K-L05AC
C153	Barrier Layer	0.0022μF 25V UAT04V 222K-L05AC
C154	Ceramic	270pF 50V
C155	Barrier Layer	0.0022μF 25V UAT04V 222K-L05AC
C156	Barrier Layer	0.047μF 25V
C157	Barrier Layer	0.1μF 16V
C158	Barrier Layer	0.047μF 25V
C159	Barrier Layer	0.0033μF 25V UAT05V 332K-L05AC
C160	Ceramic	390pF 50V
C161	Barrier Layer	0.0033μF 25V UAT05V 332K-L05AC
C162	Electrolytic	1μF 50V BP
C163	Barrier Layer	0.1μF 16V
C164	Barrier Layer	0.0068μF 25V UAT06V 682K-L45AC
C165	Barrier Layer	0.001μF 25V UAT04V 102K-L05AC
C166	Barrier Layer	0.0082μF 25V UAT06V 822K-L45AC
C167	Barrier Layer	0.1μF 16V
C168	Electrolytic	10μF 16V

[RF UNIT]

REF. NO.	DESCRIPTION	PART NO.
C169	Barrier Layer	0.047μF 25V
C170	Barrier Layer	0.047μF 25V
C171	Barrier Layer	0.0015μF 25V UAT04V 152K-L05AC
C172	Barrier Layer	0.1μF 16V
C173	Barrier Layer	0.047μF 25V
C174	Barrier Layer	0.047μF 25V
C175	Barrier Layer	0.047μF 25V
C176	Barrier Layer	0.047μF 25V
C177	Barrier Layer	0.047μF 25V
C178	Barrier Layer	0.1μF 16V
C179	Barrier Layer	0.1μF 16V
C180	Barrier Layer	0.0018μF 25V UAT04V 182K-L05AC
C181	Barrier Layer	0.0015μF 25V UAT04V 152K-L05AC
C182	Barrier Layer	0.0047μF 25V UAT05V 472K-L05AC
C183	Barrier Layer	0.1μF 16V
C184	Barrier Layer	0.1μF 16V
C185	Barrier Layer	0.047μF 25V
C186	Barrier Layer	0.047μF 25V
C187	Tantalum	3.3μF 16V DN
C188	Barrier Layer	0.047μF 25V
C189	Barrier Layer	0.1μF 16V
C190	Barrier Layer	0.1μF 16V
C191	Ceramic	0.001μF 50V
C192	Ceramic	0.0047μF 50V
C193	Ceramic	0.0047μF 50V
C195	Ceramic	0.0047μF 50V
C196	Barrier Layer	0.1μF 16V
C198	Ceramic	0.001μF 50V
C199	Ceramic	0.001μF 50V
C202	Ceramic	5pF 50V
C203	Ceramic	0.0047μF 50V
C204	Tantalum	4.7μF 16V DN
C205	Barrier Layer	0.1μF 16V
C206	Ceramic	0.001μF 50V
C207	Barrier Layer	0.1μF 16V
C208	Electrolytic	1μF 50V MS7
C209	Barrier Layer	0.047μF 25V
RL1	Relay	FBR21D12-P
J1	Connector	TL25P-06-V1
J2	Connector	TL25P-05-V1
J3	Connector	TL25P-07-V1
J4	Connector	TL25P-02-V1
J5	Connector	TL25P-05-V1
J6	Connector	TL25P-02-V1
J8	Connector	TMP-J01X-A2
J9	Connector	TL25P-02-V1
J10	Connector	TMP-J01X-A2
J11	Connector	TLB-P06H-B1
J12	Connector	TLB-P05H-B1
J13	Connector	TLB-P02H-B1
J14	Connector	TLB-P02H-B1
P1	Connector	TMP-P01X-A1
P2	Connector	TMP-P01X-A1
P3	Connector	TMP-P01X-A1

[RF UNIT]

REF. NO.	DESCRIPTION	PART NO.
EP1	P.C. Board	B-701F
W24	Jumper	JPW-02H
W25	Jumper	JPW-02H
W26	Jumper	JPW-02H
W27	Jumper	JPW-02H
W29	Jumper	JPW-02A
W40	Jumper	JPW-02A
W42	Jumper	JPW-02A
W52	Jumper	JPW-02A
W54	Jumper	JPW-02A

[MAIN UNIT]

REF. NO.	DESCRIPTION	PART NO.
IC1	IC	µPD4069UBC
IC2	IC	NJM4558D
IC3	IC	µPD4051BC
IC4	IC	NJM4558D
IC5	IC	NJM4558D
IC6	IC	NJM4558D
IC7	IC	NJM4558D
IC8	IC	µPD4066BC
IC9	IC	µPC1037H
IC10	IC	µPC1037H
IC11	IC	µPC1037H
IC12	IC	BA401
IC13	IC	µPC577H
IC14	IC	NJM4558D
IC15	IC	µPC1037H
IC16	IC	NJM4558D
IC17	IC	µA7808
IC18	IC	µPC1241H
IC19	IC	NJM4558D
IC20	IC	µPC1037H
Q1	FET	3SK74 M
Q2	FET	2SK241 Y
Q3	Transistor	2SC2785 FF
Q4	Transistor	RN1202
Q5	Transistor	RN1202
Q6	Transistor	2SC2458 GR
Q7	Transistor	2SC2458 GR
Q8	FET	3SK74 M
Q9	Transistor	2SC1583 G
Q10	Transistor	2SC2785 FF
Q11	Transistor	2SC2458 GR
Q12	Transistor	2SC2878
Q13	Transistor	2SA1048 GR
Q15	Transistor	2SC2878
Q16	Transistor	RN2202
Q17	Transistor	2SC2878
Q20	Transistor	RN1202
Q21	Transistor	RN1202
Q22	Transistor	2SC2458 GR
Q23	Transistor	2SC2458 GR
Q24	Transistor	RN2202
Q25	Transistor	RN1202
Q26	Transistor	2SA1048 GR
Q27	Transistor	2SA1048 GR
Q28	Transistor	2SA1048 GR
Q29	Transistor	RN1204
Q30	Transistor	RN2202
Q31	Transistor	RN1204
Q32	Transistor	2SC2458 GR
Q33	FET	3SK74 M
Q34	Transistor	2SC1571 G
Q35	Transistor	2SC2458 GR
Q36	Transistor	2SC2785 FF
Q37	Transistor	2SC2458 Y/GR
Q38	Transistor	2SC2785 FF
Q39	FET	3SK74 M
Q40	Transistor	RN1204
Q41	Transistor	RN1202
Q42	Transistor	2SC2785 FF
Q43	FET	3SK74 M
Q44	FET	3SK74 M
Q45	Transistor	2SC2785 FF

[MAIN UNIT]

REF. NO.	DESCRIPTION	PART NO.
Q46	Transistor	2SC2458 Y/GR
Q47	Transistor	2SC2785 FF
Q48	Transistor	RN1202
Q49	FET	2SK241 Y
Q50	Transistor	2SC2785 FF
Q51	Transistor	2SC2785 FF
Q52	Transistor	RN1202
Q53	Transistor	RN1202
Q54	Transistor	2SC2785 FF
Q55	Transistor	2SC2785 FF
Q56	Transistor	RN1202
Q57	Transistor	RN1202
Q58	Transistor	2SA1048 Y/GR
Q59	Transistor	2SC2878
Q60	Transistor	2SC2458 Y
Q61	Transistor	2SA1048 GR
Q62	Transistor	2SC2458 Y/GR
Q63	Transistor	2SD468 C
Q64	Transistor	2SC2458 GR
Q65	Transistor	2SC2458 GR
Q66	Transistor	2SD468 C
Q67	Transistor	2SC2458 GR
Q68	Transistor	2SD880 Y
Q69	Transistor	RN1202
Q70	Transistor	2SC2458 GR
Q71	Transistor	RN1204
Q72	Transistor	2SC2785 FF
Q74	Transistor	RN1202
Q75	Transistor	RN1202
Q76	Transistor	2SC2458 GR
Q77	Transistor	RN1204
Q78	Transistor	2SC2458 GR
Q79	Transistor	2SC2458 GR
Q80	Transistor	2SC2785 FF
Q81	Transistor	RN1202
Q82	Transistor	2SA1048 Y/GR
Q83	Transistor	RN1204
Q84	Transistor	2SC2785 FF
Q85	Transistor	RN2204
Q86	Transistor	RN2204
Q87	Transistor	RN2204
Q88	Transistor	RN2204
D1	Diode	1SS216
D2	Diode	1SS53
D3	Diode	1SS53
D4	Diode	1SS133
D5	Diode	1SS53
D6	Diode	1SS53
D7	Diode	1SS53
D8	Diode	1SS53
D9	Diode	1SS53
D10	Diode	1SS133
D11	Diode	1SS133
D12	Diode	1SS133
D13	Diode	1SS53
D14	Diode	1SS133
D15	Diode	1SS53
D16	Zener	MZ304 B
D17	Diode	1K60
D18	Diode	1K60
D19	Diode	1SS53
D20	Diode	1SS53

[MAIN UNIT]

REF. NO.	DESCRIPTION	PART NO.
D21	Diode	1SS53
D22	Diode	1SS53
D23	Diode	1SS133
D24	Diode	1SS133
D25	Diode	1SS53
D26	Diode	1SS53
D27	Diode	1SS133
D28	Diode	1SS133
D29	Diode	1SS133
D30	Diode	1SS133
D31	Diode	1SS133
D32	Diode	1SS133
D33	Diode	1SS133
D34	Diode	1SS133
D36	Diode	1SS133
D38	Diode	1SS53
D39	Diode	1SS133
D40	Diode	1SS133
D41	Diode	1SS133
D42	Diode	1SS133
D43	Diode	1SS133
D44	Diode	1SS53
D45	Diode	1SS53
D46	Diode	1SS53
D47	Diode	1SS53
D49	Diode	1SS53
D50	Diode	1SS53
D51	Diode	1SS53
D53	Diode	1SS53
D54	Diode	1SS53
D55	Diode	1K60
D56	Diode	1K60
D57	Diode	1SS53
D58	Diode	1S953
D59	Diode	1SS53
D60	Diode	1SS53
D61	Diode	1SS133
D62	Diode	1SS133
D63	Diode	1SS53
D64	Diode	1SS53
D66	Diode	1SS53
D67	Diode	1SS216
D68	Diode	1SS216
D69	Diode	1SS216
D70	Diode	1SS216
D71	Diode	1SS216
D72	Diode	1SS53
D73	Diode	1SS53
D74	Diode	1SS53
D75	Diode	1SS53
D76	Diode	1SS53
D77	Diode	1SS133
D78	Diode	1SS133
D79	Diode	1SS53
D80	Diode	1SS133
D81	Diode	1SS53
D82	Diode	1SS133
D83	Diode	1SS53
D84	Diode	1SS53
D85	Diode	1SS133
D86	Diode	1SS133
D87	Diode	1SS133
D88	Diode	1SS53
D89	Diode	1SS216

[MAIN UNIT]

REF. NO.	DESCRIPTION	PART NO.
D90	Diode	1SS53
D91	Diode	1SS53
D92	Diode	1SS211
D93	Diode	1SS211
D94	Diode	1SS53
D95	Diode	1K60
D96	Diode	1SS53
D97	Diode	1SS53
D98	Diode	1SS216
D99	Diode	1SS216
D100	Diode	1SS216
D101	Diode	1SS216
D102	Diode	1SS53
D103	Diode	1SS216
D104	Diode	1SS216
D105	Diode	1SS216
D106	Diode	1SS216
D107	Diode	1SS53
D108	Diode	1SS53
D109	Diode	1SS53
D110	Varicap	FC51M
D111	Varicap	1SV50E
D112	Diode	1SS99
D114	Diode	1SS53
D115	Diode	1SS53
D116	Diode	1K60
D117	Diode	1K60
D118	Varicap	1SV50E
D119	Diode	1SS53
D120	Diode	1SS216
D121	Diode	1SS53
D122	Diode	1SS53
D123	Diode	1SS53
D124	Diode	1SS216
D125	Diode	1SS216
D126	Varicap	1SV50E
D127	Diode	1SS53
D128	Diode	1SS53
D129	Diode	1SS53
D130	Diode	1SS53
D131	Diode	1SS53
D133	Diode	1SS53
D134	Diode	1SS53
D135	Diode	1SS53
D136	Diode	1SS53
D137	Diode	1SS53
D138	Diode	1SS53
D139	Diode	1SS53
D140	Diode	1SS53
D141	Diode	1SS211
D142	Diode	1SS53
D143	Diode	1SS53
D144	Diode	1SS53
D145	Diode	1K60
D147	Diode	1SS53
D148	Diode	1SS53
D149	Diode	1SS53
D150	Diode	1SS53
D151	Diode	1SS53
D152	Diode	1SS53
D155	Diode	1SS133
D157	Diode	1SS99
D158	Diode	1SS99
D159	Diode	1SS53

[MAIN UNIT]

REF. NO.	DESCRIPTION	PART NO.
D160	Diode	1SS53
D161	Diode	1SS53
D162	Diode	1SS133
D163	Diode	1SS53
D164	Diode	1SS133
D165	Diode	1SS53
D166	Diode	1SS133
D167	Diode	1SS53
D168	Diode	1SS216
D169	Diode	1SS216
FI1	Monolithic	FL-87
FI2	Monolithic	FL-80
FI3	Crystal	FL-44A
FI4	Ceramic	CFJ-455K5
FI5	Ceramic	CFW-455HT
FI6	Ceramic	CFW-455E
FI7	Monolithic	FL-23
FI8	Monolithic	FL-32A
FI9	Monolithic	FL-52A
X1	Crystal	CR-168
X2	Crystal	CR-168
X3	Discriminator	CFY-455S
X4	Crystal	HC12/U 9.0105MHz
X5	Crystal	CR-168
X6	Crystal	CR-169
X7	Crystal	CR-1
L1	Coil	LS-163
L2	Coil	LS-163
L3	Coil	LAL03NA 101K
L4	Coil	LS-175
L5	Coil	LS-175
L6	Coil	LS-175
L7	Coil	FL5H 101K
L9	Coil	FL5H 102K
L10	Coil	LS-163
L11	Coil	LS-90A
L12	Coil	LS-90A
L13	Coil	LAL03NA 100K
L14	Coil	LAL03NA 100K
L16	Coil	LS-146
L17	Coil	LAL04NA 101K
L18	Coil	LS-146
L19	Coil	S4 101K
L20	Coil	S4 101K
L21	Coil	LAL03NA 101K
L22	Coil	LS-175
L23	Coil	LS-282
L24	Coil	LS-175
L25	Coil	LS-175
L26	Coil	LS-266
L27	Coil	LS-122
L28	Coil	LS-16
L29	Coil	LS-133
L30	Coil	LAL03NA 150K
L31	Coil	LAL03NA 100K
L32	Coil	LAL03NA 101K
L33	Coil	LS-93A
L34	Coil	LS-93A

[MAIN UNIT]

REF. NO.	DESCRIPTION	PART NO.	
L35	Coil	LS-93A	
L36	Coil	LS-292	
L37	Coil	BT01RN1-A61	
L39	Coil	LW-15	
L40	Coil	LAL04NA 101K	
L41	Coil	LAL03NA 101K	
L42	Coil	LAL03NA 101K	
L43	Coil	LAL04NA 102K	
L44	Coil	LAL04NA 102K	
L45	Coil	LAL03NA 101K	
L46	Coil	LW-15	
L47	Coil	LAL03NA 3R3K	
L48	Coil	LAL03NA 101K	
L49	Coil	LAL04NA 101K	
L50	Coil	FL5H 101K	
L51	Coil	LAL03NA 101K	
L52	Coil	LAL03NA 390K	
L53	Coil	LAL03NA 101K	
L54	Coil	LAL03NA 101K	
R1	Resistor	4.7kΩ	ELR25
R2	Resistor	220Ω	ELR25
R3	Resistor	220Ω	ELR25
R4	Resistor	47Ω	R20
R5	Resistor	10kΩ	ELR25
R6	Resistor	10kΩ	ELR25
R7	Resistor	10kΩ	ELR25
R8	Resistor	3.9kΩ	ELR25
R9	Resistor	3.9kΩ	ELR25
R11	Resistor	47kΩ	ELR25
R13	Resistor	560Ω	R25
R14	Resistor	3.3kΩ	ELR20
R15	Resistor	33kΩ	ELR25
R16	Resistor	47kΩ	R20
R17	Resistor	10kΩ	R20
R18	Resistor	10kΩ	R20
R19	Resistor	4.7kΩ	R20
R20	Resistor	47kΩ	ELR25
R21	Resistor	10kΩ	ELR25
R22	Resistor	4.7kΩ	ELR25
R23	Resistor	4.7kΩ	ELR25
R24	Resistor	33kΩ	ELR25
R25	Resistor	15kΩ	ELR25
R26	Resistor	4.7kΩ	ELR20
R27	Resistor	33kΩ	ELR25
R28	Resistor	15kΩ	ELR25
R29	Resistor	5.6kΩ	ELR25
R31	Resistor	82kΩ	ELR20
R32	Resistor	82kΩ	ELR20
R34	Resistor	47Ω	ELR20
R35	Resistor	100kΩ	ELR20
R36	Resistor	470Ω	R20
R37	Resistor	1MΩ	R20
R38	Resistor	220Ω	ELR25
R39	Resistor	22kΩ	R25
R40	Resistor	1kΩ	ELR25
R41	Resistor	150Ω	ELR25
R42	Resistor	100kΩ	ELR20
R43	Resistor	100kΩ	ELR20
R44	Resistor	1kΩ	ELR25
R45	Resistor	150Ω	ELR25
R46	Resistor	6.8kΩ	ELR25
R47	Resistor	68kΩ	R20

[MAIN UNIT]

REF. NO.	DESCRIPTION	PART NO.	
R48	Resistor	47kΩ	ELR25
R49	Resistor	56kΩ	ELR25
R50	Resistor	100Ω	ELR25
R51	Resistor	2.2kΩ	ELR25
R52	Resistor	2.2kΩ	ELR25
R53	Resistor	5.6kΩ	ELR25
R54	Resistor	1.5kΩ	R25
R55	Resistor	68kΩ	ELR25
R56	Resistor	470Ω	ELR25
R57	Resistor	10kΩ	ELR25
R58	Resistor	10kΩ	ELR25
R59	Resistor	10kΩ	ELR25
R60	Resistor	22kΩ	ELR25
R61	Resistor	6.8kΩ	ELR25
R62	Array	47kΩ	RMX-5
R63	Resistor	22kΩ	ELR25
R65	Resistor	27kΩ	ELR25
R66	Resistor	100Ω	ELR25
R67	Resistor	10kΩ	R25
R68	Trimmer	47kΩ	RH0651CS4J25A
R69	Resistor	3.3MΩ	ELR25
R70	Resistor	1MΩ	ELR25
R71	Resistor	1MΩ	ELR25
R72	Resistor	150Ω	ELR25
R73	Resistor	47kΩ	ELR25
R74	Resistor	22kΩ	ELR25
R75	Resistor	3.3kΩ	ELR25
R76	Resistor	56kΩ	ELR25
R77	Resistor	150Ω	ELR25
R78	Resistor	1.8MΩ	ELR25
R79	Resistor	680kΩ	ELR25
R80	Resistor	220kΩ	ELR25
R81	Resistor	390Ω	ELR20
R82	Resistor	56kΩ	ELR25
R83	Resistor	150kΩ	R20
R84	Trimmer	22kΩ	RH0651CJ4J01A
R85	Resistor	150kΩ	ELR25
R86	Resistor	220kΩ	ELR25
R87	Trimmer	47kΩ	RH0651CS4J25A
R88	Resistor	15kΩ	R20
R89	Resistor	470kΩ	ELR25
R90	Resistor	22Ω	ELR25
R91	Trimmer	47kΩ	RH0651CS4J25A
R92	Resistor	150kΩ	ELR25
R93	Resistor	220kΩ	R20
R94	Resistor	470kΩ	ELR25
R95	Trimmer	10kΩ	RH0651C14J2WA
R97	Resistor	1kΩ	ELR25
R98	Trimmer	10kΩ	RH0651C14J2WA
R99	Trimmer	10kΩ	RH0651C14J2WA
R100	Resistor	1MΩ	CRB25FX
R101	Resistor	56kΩ	R20
R102	Resistor	22kΩ	ELR25
R103	Trimmer	2.2kΩ	RH0651CJ3J0CA
R104	Resistor	22kΩ	ELR25
R105	Resistor	56kΩ	R20
R106	Trimmer	1kΩ	RH0651C13J1YA
R107	Resistor	27kΩ	ELR20
R108	Resistor	5.6kΩ	ELR20
R109	Resistor	470Ω	ELR25
R110	Resistor	22kΩ	ELR25
R111	Resistor	4.7kΩ	ELR25
R112	Resistor	1kΩ	ELR25
R113	Resistor	4.7kΩ	ELR25

[MAIN UNIT]

REF. NO.	DESCRIPTION	PART NO.	
R114	Resistor	150Ω	R20
R115	Resistor	10kΩ	R20
R116	Resistor	4.7kΩ	ELR25
R117	Resistor	220kΩ	ELR25
R118	Resistor	47kΩ	ELR25
R119	Resistor	3.3kΩ	R25
R120	Resistor	15kΩ	ELR25
R121	Trimmer	33kΩ	RH0651CN4J0TA
R122	Resistor	180kΩ	ELR25
R123	Resistor	100kΩ	R25
R124	Resistor	120kΩ	ELR20
R125	Trimmer	100kΩ	RH0521C15J05A
R126	Resistor	100kΩ	R20
R127	Resistor	5.6kΩ	ELR25
R128	Resistor	39kΩ	ELR25
R129	Resistor	100Ω	ELR25
R130	Resistor	3.9kΩ	ELR25
R131	Resistor	330Ω	ELR25
R132	Resistor	1MΩ	ELR25
R133	Resistor	1MΩ	ELR25
R134	Resistor	1kΩ	ELR25
R135	Resistor	100kΩ	ELR25
R136	Resistor	1kΩ	ELR25
R137	Resistor	4.7kΩ	ELR25
R138	Resistor	22kΩ	R20
R139	Resistor	4.7kΩ	R20
R140	Resistor	2.2kΩ	R20
R141	Resistor	2.2kΩ	ELR20
R142	Resistor	1kΩ	R20
R143	Resistor	4.7kΩ	R20
R144	Resistor	330Ω	R20
R145	Resistor	47Ω	R20
R146	Resistor	56kΩ	R20
R147	Resistor	220Ω	R20
R148	Resistor	1kΩ	ELR25
R149	Resistor	100Ω	ELR25
R150	Resistor	39kΩ	ELR25
R151	Resistor	2.2kΩ	ELR20
R152	Resistor	47kΩ	ELR20
R153	Resistor	2.7kΩ	R20
R154	Resistor	1.5kΩ	ELR25
R155	Trimmer	10kΩ	RH1051D14J0PA
R156	Resistor	2.2kΩ	R20
R157	Resistor	330kΩ	ELR25
R158	Trimmer	10kΩ	RH0651C14J2WA
R159	Trimmer	10kΩ	RH0651C14J2WA
R160	Resistor	100kΩ	ELR25
R161	Trimmer	10kΩ	RH0651C14J2WA
R162	Resistor	2.2kΩ	ELR25
R163	Resistor	100Ω	ELR25
R164	Resistor	5.6kΩ	ELR20
R165	Resistor	5.6kΩ	ELR20
R166	Resistor	5.6kΩ	ELR20
R167	Resistor	220Ω	R20
R168	Resistor	1kΩ	R25
R169	Resistor	1.5kΩ	ELR20
R170	Resistor	5.6kΩ	R20
R171	Resistor	1.5kΩ	R25
R172	Resistor	220Ω	R20
R173	Resistor	1.5kΩ	R20
R174	Resistor	100Ω	R25
R175	Resistor	5.6kΩ	R20
R176	Resistor	1.2kΩ	R20
R177	Resistor	220Ω	R20

[MAIN UNIT]

REF. NO.	DESCRIPTION	PART NO.	
R178	Resistor	100Ω	R25
R179	Resistor	1.5kΩ	ELR20
R180	Resistor	100Ω	R25
R181	Resistor	5.6kΩ	R20
R182	Resistor	1.2kΩ	R20
R183	Resistor	4.7kΩ	R20
R184	Resistor	4.7kΩ	ELR25
R185	Resistor	5.6kΩ	R20
R186	Resistor	2.7kΩ	ELR25
R187	Resistor	2.2kΩ	ELR25
R188	Resistor	1.2kΩ	R20
R189	Resistor	47kΩ	R20
R190	Resistor	10kΩ	R20
R191	Resistor	330Ω	R20
R192	Resistor	56Ω	R20
R193	Resistor	100Ω	ELR25
R194	Resistor	47Ω	R20
R195	Resistor	6.8kΩ	R20
R196	Trimmer	22kΩ	RH0651CJ4J01A
R197	Resistor	18kΩ	ELR25
R198	Resistor	22kΩ	ELR25
R199	Resistor	10kΩ	ELR25
R200	Resistor	1kΩ	ELR25
R201	Resistor	100Ω	R25
R202	Resistor	4.7kΩ	ELR25
R203	Resistor	4.7kΩ	ELR25
R204	Resistor	220kΩ	ELR25
R205	Resistor	47Ω	ELR25
R206	Resistor	6.8kΩ	ELR25
R207	Thermistor	112	503-2AI
R208	Resistor	10kΩ	ELR25
R209	Resistor	10kΩ	ELR25
R210	Resistor	330Ω	ELR25
R211	Resistor	10kΩ	ELR20
R212	Resistor	220Ω	ELR25
R213	Resistor	4.7kΩ	R20
R214	Resistor	6.8kΩ	R20
R215	Resistor	6.8kΩ	R25
R216	Resistor	220Ω	R25
R217	Resistor	47kΩ	R20
R218	Resistor	6.8kΩ	R25
R219	Resistor	100Ω	R25
R220	Resistor	6.8kΩ	ELR25
R221	Resistor	220Ω	R25
R222	Resistor	47kΩ	ELR25
R223	Resistor	6.8kΩ	R20
R224	Resistor	100Ω	R25
R225	Resistor	6.8kΩ	ELR25
R226	Resistor	220Ω	R25
R227	Resistor	47kΩ	ELR25
R228	Resistor	6.8kΩ	ELR25
R229	Resistor	100Ω	R25
R230	Resistor	6.8kΩ	R25
R231	Resistor	220Ω	R25
R232	Resistor	47kΩ	R20
R233	Resistor	6.8kΩ	R20
R234	Resistor	100Ω	R25
R235	Resistor	3.9kΩ	ELR25
R236	Resistor	220Ω	ELR25
R237	Resistor	3.9kΩ	ELR20
R238	Resistor	1kΩ	ELR25
R239	Trimmer	10kΩ	RH0651C14J2WA
R240	Resistor	220kΩ	ELR25
R241	Resistor	2.2kΩ	R20

[MAIN UNIT]

REF. NO.	DESCRIPTION	PART NO.	
R242	Resistor	4.7kΩ	ELR25
R243	Resistor	4.7kΩ	ELR25
R244	Resistor	10kΩ	ELR25
R245	Resistor	2.2kΩ	ELR25
R246	Resistor	100kΩ	ELR25
R247	Resistor	56kΩ	ELR25
R248	Resistor	22kΩ	ELR20
R249	Resistor	3.3kΩ	ELR20
R250	Resistor	100kΩ	ELR20
R251	Resistor	220Ω	ELR25
R252	Resistor	3.9kΩ	ELR25
R253	Resistor	47Ω	ELR25
R254	Resistor	100Ω	ELR25
R255	Resistor	330Ω	ELR25
R256	Resistor	220Ω	ELR25
R257	Thermistor	35D45	
R258	Resistor	6.8kΩ	ELR25
R259	Trimmer	10kΩ	RH0651C14J2WA
R260	Resistor	100Ω	ELR25
R261	Resistor	47Ω	ELR25
R262	Resistor	330Ω	ELR25
R263	Resistor	100Ω	R25
R264	Resistor	2.2kΩ	ELR25
R265	Resistor	150Ω	ELR25
R266	Resistor	1kΩ	ELR25
R267	Resistor	10kΩ	ELR25
R268	Resistor	1kΩ	ELR25
R269	Resistor	15kΩ	ELR25
R270	Trimmer	1kΩ	RH0651C13J1YA
R271	Resistor	2.2kΩ	ELR25
R272	Resistor	220Ω	ELR20
R273	Resistor	3.3kΩ	ELR25
R274	Resistor	100Ω	R20
R275	Resistor	100Ω	R20
R276	Resistor	10kΩ	ELR25
R277	Resistor	10kΩ	ELR25
R278	Resistor	1kΩ	ELR25
R279	Resistor	2.7kΩ	ELR25
R280	Resistor	12kΩ	ELR20
R281	Resistor	3.3MΩ	ELR25
R282	Resistor	10kΩ	ELR25
R283	Resistor	1kΩ	ELR25
R284	Resistor	5.6kΩ	R25
R285	Resistor	82kΩ	ELR25
R286	Resistor	82kΩ	ELR25
R287	Resistor	82kΩ	ELR25
R288	Resistor	330kΩ	ELR20
R289	Resistor	220Ω	ELR20
R290	Trimmer	4.7kΩ	RH0651CS3J2KA
R291	Resistor	220Ω	R25
R292	Trimmer	4.7kΩ	RH0651CS3J2KA
R293	Resistor	18kΩ	ELR25
R294	Resistor	22kΩ	ELR25
R295	Resistor	470kΩ	ELR25
R296	Resistor	47kΩ	ELR25
R297	Thermistor	33D28	
R298	Resistor	33kΩ	ELR25
R299	Resistor	3.9kΩ	ELR25
R300	Resistor	5.6kΩ	ELR25
R301	Resistor	22kΩ	ELR25
R302	Resistor	22kΩ	ELR25
R303	Resistor	220Ω	ELR25
R304	Resistor	560Ω	ELR25
R305	Resistor	47kΩ	R20

[MAIN UNIT]

REF. NO.	DESCRIPTION	PART NO.	
R306	Resistor	220Ω	ELR25
R307	Resistor	220Ω	ELR25
R308	Resistor	150Ω	R20
R309	Resistor	1kΩ	R20
R310	Resistor	22kΩ	ELR25
R311	Resistor	47kΩ	ELR25
R312	Resistor	150Ω	R20
R313	Resistor	2.2kΩ	R20
R314	Resistor	22kΩ	R20
R315	Resistor	22kΩ	R20
R316	Resistor	10kΩ	R20
R317	Resistor	2.2kΩ	R20
R318	Resistor	2.2kΩ	R20
R319	Resistor	2.2kΩ	R20
R320	Resistor	2.2kΩ	R20
R321	Resistor	2.2kΩ	R20
R322	Resistor	2.2kΩ	R20
R323	Resistor	47kΩ	ELR25
R324	Resistor	47kΩ	ELR25
R325	Resistor	150Ω	R20
R326	Resistor	150Ω	R20
R327	Resistor	33kΩ	ELR25
R328	Resistor	2.2kΩ	ELR25
R329	Resistor	22kΩ	ELR25
R330	Resistor	10kΩ	R20
R331	Resistor	47kΩ	R20
R332	Resistor	100kΩ	R20
R333	Resistor	22kΩ	ELR25
R334	Resistor	100kΩ	R20
R335	Resistor	3.3MΩ	ELR25
R336	Resistor	100kΩ	ELR25
R337	Trimmer	10kΩ	RH0651C14J2WA
R338	Resistor	22kΩ	ELR25
R339	Resistor	680Ω	ELR25
R340	Resistor	4.7kΩ	ELR20
R341	Resistor	1kΩ	ELR25
R342	Resistor	22kΩ	ELR25
R343	Resistor	150kΩ	ELR25
R344	Resistor	1.5kΩ	ELR25
R345	Resistor	5.6kΩ	ELR25
R346	Resistor	33kΩ	ELR25
R347	Resistor	150Ω	ELR25
R348	Resistor	33kΩ	ELR25
R349	Resistor	5.6kΩ	ELR25
R350	Resistor	33kΩ	ELR25
R351	Resistor	10kΩ	ELR25
R352	Resistor	10kΩ	ELR25
R353	Resistor	82kΩ	ELR25
R354	Resistor	22Ω	ELR25
R355	Resistor	82kΩ	ELR25
R356	Resistor	270kΩ	ELR25
R357	Resistor	1kΩ	ELR25
R358	Resistor	22kΩ	ELR25
R359	Resistor	47kΩ	ELR25
R360	Resistor	4.7kΩ	ELR25
R361	Resistor	4.7kΩ	ELR25
R362	Resistor	10kΩ	ELR25
R363	Resistor	10Ω	ELR25
R364	Resistor	1kΩ	R25
R365	Resistor	1.5kΩ	ELR25
R366	Resistor	10kΩ	ELR25
R367	Resistor	5.6Ω	ELR25
R368	Resistor	1kΩ	ELR25
R369	Resistor	4.7kΩ	ELR25

[MAIN UNIT]

REF. NO.	DESCRIPTION	PART NO.	
R371	Resistor	1kΩ	ELR25
R372	Resistor	1Ω	ELR25
R373	Resistor	100Ω	ELR25
R374	Trimmer	4.7kΩ	RH0651CS3J2KA
R375	Resistor	3.3kΩ	ELR25
R376	Resistor	6.8kΩ	ELR25
R377	Resistor	4.7kΩ	ELR25
R378	Resistor	18kΩ	ELR25
R379	Resistor	390Ω	ELR25
R380	Resistor	1kΩ	ELR25
R381	Resistor	330Ω	ELR25
R382	Resistor	180kΩ	ELR25
R383	Resistor	33kΩ	ELR25
R384	Resistor	560Ω	R25
R385	Resistor	1kΩ	ELR25
R386	Resistor	3.9kΩ	ELR25
R388	Resistor	10kΩ	ELR20
R389	Resistor	10kΩ	ELR20
R390	Resistor	2.2kΩ	ELR25
R391	Resistor	5.6kΩ	ELR25
R392	Resistor	10kΩ	ELR25
R393	Resistor	10kΩ	ELR20
R394	Resistor	3.3kΩ	ELR20
R395	Resistor	5.6kΩ	ELR25
R396	Resistor	100kΩ	ELR25
R397	Resistor	100kΩ	ELR25
R398	Resistor	10kΩ	R25
R399	Resistor	1.5kΩ	ELR25
R400	Resistor	1.2kΩ	ELR25
R401	Resistor	22kΩ	R25
R402	Resistor	4.7kΩ	ELR25
R403	Resistor	100Ω	ELR25
R404	Resistor	47kΩ	ELR25
R405	Resistor	4.7kΩ	R25
R406	Resistor	47kΩ	ELR25
R407	Resistor	100Ω	ELR25
R408	Resistor	10kΩ	ELR25
R409	Resistor	220Ω	ELR25
R410	Resistor	22kΩ	ELR25
R411	Resistor	22kΩ	ELR25
R412	Resistor	1.5kΩ	ELR25
R413	Resistor	330Ω	ELR25
R414	Resistor	680Ω	ELR25
R415	Resistor	1.5kΩ	ELR25
R416	Resistor	220kΩ	ELR25
R418	Resistor	82kΩ	ELR25
R419	Resistor	10kΩ	ELR25
R420	Resistor	5.6kΩ	R20
R421	Resistor	3.9kΩ	R20
R422	Resistor	10kΩ	R20
R423	Resistor	5.6kΩ	R20
R425	Resistor	220Ω	ELR25
R426	Resistor	1kΩ	ELR25
R427	Resistor	220Ω	ELR20
R428	Resistor	150Ω	R25
R429	Resistor	47Ω	ELR25
R430	Resistor	1.5kΩ	R20
R431	Resistor	2.2kΩ	ELR20
R432	Resistor	2.7kΩ	R20
R433	Resistor	2.7kΩ	R20
R434	Resistor	150kΩ	ELR20
R435	Resistor	2.7kΩ	ELR20
R436	Resistor	12kΩ	ELR20
R438	Resistor	1kΩ	ELR20

[MAIN UNIT]

REF. NO.	DESCRIPTION	PART NO.	
R439	Resistor	680Ω	ELR20
R440	Thermistor	33D28	
R441	Resistor	390Ω	R20
R442	Trimmer	1kΩ	RH0651C13J1YA
R443	Resistor	100kΩ	ELR25
R444	Thermistor	33D28	
R445	Resistor	15Ω	ELR20
R446	Resistor	47Ω	ELR20
R447	Resistor	1kΩ	ELR20
R448	Resistor	470Ω	R20
R449	Resistor	330Ω	ELR20
R450	Resistor	1MΩ	ELR20
R451	Trimmer	470kΩ	RH0651CS5J10A
R452	Resistor	150Ω	R20
R453	Resistor	150Ω	ELR20
R454	Resistor	1kΩ	ELR20
R455	Resistor	220kΩ	ELR25
R456	Resistor	47kΩ	ELR20
R457	Resistor	270Ω	R20
R458	Resistor	6.8kΩ	R20
R459	Resistor	56kΩ	ELR20
R460	Resistor	220Ω	R20
R461	Resistor	1.5kΩ	R20
R462	Resistor	100Ω	R25
R463	Resistor	1.2kΩ	R20
R464	Resistor	5.6kΩ	ELR20
R465	Resistor	220Ω	R20
R466	Resistor	1.5kΩ	R20
R467	Resistor	100Ω	R25
R468	Resistor	1.2kΩ	R20
R469	Resistor	5.6kΩ	ELR20
R470	Resistor	6.8kΩ	R20
R471	Resistor	220Ω	R25
R472	Resistor	47kΩ	ELR20
R473	Resistor	6.8kΩ	R20
R474	Resistor	100Ω	R20
R475	Resistor	10kΩ	ELR20
C1	Array	0.0082μF×7 B8ZC0111-32N	
C2	Ceramic	2pF	50V
C3	Ceramic	0.0047μF	50V
C4	Ceramic	0.0047μF	50V
C5	Ceramic	0.0047μF	50V
C7	Barrier Layer	0.1μF	16V
C8	Ceramic	0.0047μF	50V
C9	Ceramic	0.0047μF	50V
C10	Ceramic	33pF	50V
C11	Ceramic	0.0047μF	50V
C12	Ceramic	22pF	50V CH
C13	Ceramic	100pF	50V CH
C14	Ceramic	100pF	50V CH
C15	Trimmer	30pF	VCT51F126A
C16	Ceramic	22pF	50V CH
C17	Trimmer	10pF	VCT51C143A
C18	Ceramic	10pF	50V CH
C19	Ceramic	22pF	50V CH
C20	Trimmer	6pF	VCT51A123A
C21	Barrier Layer	0.01μF	25V
C22	Barrier Layer	0.01μF	25V
C23	Mylar	0.1μF	50V
C24	Mylar	0.15μF	50V
C25	Ceramic	0.0047μF	50V

[MAIN UNIT]

REF. NO.	DESCRIPTION	PART NO.		
C26	Ceramic	0.0047μF	50V	
C27	Barrier Layer	0.1μF	16V	
C28	Ceramic	0.0047μF	50V	
C29	Ceramic	0.0047μF	50V	
C30	Ceramic	0.0047μF	50V	
C31	Electrolytic	2.2μF	50V	MS7
C32	Barrier Layer	0.1μF	16V	
C33	Ceramic	0.0047μF	50V	
C34	Ceramic	0.001μF	50V	
C35	Ceramic	0.0047μF	50V	
C36	Mylar	0.01μF	50V	
C37	Ceramic	330pF	50V	
C38	Mylar	0.01μF	50V	
C39	Tantalum	0.47μF	35V	
C40	Electrolytic	4.7μF	25V	MS7
C41	Electrolytic	22μF	16V	
C42	Ceramic	0.0047μF	50V	
C43	Electrolytic	0.47μF	50V	MS7
C44	Electrolytic	4.7μF	25V	MS7
C45	Barrier Layer	0.1μF	16V	
C46	Ceramic	0.001μF	50V	
C47	Ceramic	0.0047μF	50V	
C48	Ceramic	0.0047μF	50V	
C50	Electrolytic	3.3μF	50V	MS7
C52	Ceramic	0.0047μF	50V	
C53	Ceramic	0.0047μF	50V	
C54	Electrolytic	10μF	16V	MS7
C55	Barrier Layer	0.047μF	25V	
C56	Barrier Layer	0.1μF	16V	
C57	Electrolytic	3.3μF	50V	MS7
C58	Barrier Layer	0.047μF	25V	
C59	Electrolytic	4.7μF	25V	MS7
C60	Electrolytic	3.3μF	50V	MS7
C62	Electrolytic	0.47μF	50V	MS7
C63	Electrolytic	0.33μF	50V	MS7
C64	Barrier Layer	0.1μF	16V	
C65	Electrolytic	3.3μF	50V	MS7
C66	Barrier Layer	0.1μF	16V	
C68	Electrolytic	10μF	16V	MS7
C69	Ceramic	0.0047μF	50V	
C70	Ceramic	3pF	50V	
C71	Ceramic	2pF	50V	
C72	Ceramic	0.0047μF	50V	
C75	Barrier Layer	0.047μF	25V	
C76	Ceramic	0.001μF	50V	
C77	Barrier Layer	0.1μF	16V	
C78	Ceramic	22pF	50V	
C79	Ceramic	0.0047μF	50V	
C80	Ceramic	0.0047μF	50V	
C81	Ceramic	0.0047μF	50V	
C82	Ceramic	0.0047μF	50V	
C83	Electrolytic	4.7μF	25V	MS7
C84	Electrolytic	10μF	16V	MS7
C85	Electrolytic	47μF	16V	
C86	Barrier Layer	0.1μF	16V	
C87	Barrier Layer	0.1μF	16V	
C88	Electrolytic	4.7μF	25V	BP
C89	Ceramic	82pF	50V	
C90	Barrier Layer	0.1μF	16V	
C91	Ceramic	0.0047μF	50V	
C92	Electrolytic	100μF	10V	
C93	Ceramic	0.001μF	50V	
C94	Ceramic	27pF	50V	
C95	Ceramic	0.0047μF	50V	

[MAIN UNIT]

REF. NO.	DESCRIPTION	PART NO.		
C96	Ceramic	0.0047μF	50V	
C97	Ceramic	0.0047μF	50V	
C98	Barrier Layer	0.1μF	16V	
C99	Ceramic	0.0047μF	50V	
C100	Ceramic	0.0047μF	50V	
C101	Ceramic	0.0047μF	50V	
C102	Ceramic	0.0047μF	50V	
C103	Ceramic	0.0047μF	50V	
C104	Barrier Layer	0.1μF	16V	
C105	Ceramic	0.0047μF	50V	
C106	Ceramic	0.0047μF	50V	
C108	Barrier Layer	0.1μF	16V	
C109	Ceramic	0.0047μF	50V	
C110	Barrier Layer	0.1μF	16V	
C111	Barrier Layer	0.1μF	16V	
C112	Barrier Layer	0.1μF	16V	
C113	Barrier Layer	0.1μF	16V	
C114	Ceramic	220pF	50V	
C115	Barrier Layer	0.1μF	16V	
C116	Electrolytic	0.1μF	50V	MS7
C117	Electrolytic	4.7μF	25V	MS7
C118	Ceramic	0.001μF	50V	
C119	Ceramic	330pF	50V	
C120	Barrier Layer	0.0012μF	25V	
C121	Barrier Layer	0.1μF	16V	
C122	Barrier Layer	0.1μF	16V	
C123	Ceramic	0.0047μF	50V	
C124	Barrier Layer	0.1μF	16V	
C125	Barrier Layer	0.0012μF	25V	
C126	Barrier Layer	0.1μF	16V	
C127	Barrier Layer	0.1μF	16V	
C128	Barrier Layer	0.1μF	16V	
C129	Barrier Layer	0.1μF	16V	
C130	Barrier Layer	0.1μF	16V	
C131	Barrier Layer	0.1μF	16V	
C132	Barrier Layer	0.1μF	16V	
C133	Barrier Layer	0.1μF	16V	
C134	Barrier Layer	0.1μF	16V	
C135	Barrier Layer	0.1μF	16V	
C136	Barrier Layer	0.1μF	16V	
C137	Ceramic	0.0047μF	50V	
C138	Ceramic	0.0047μF	50V	
C139	Electrolytic	1μF	50V	MS7
C140	Ceramic	0.0047μF	50V	
C141	Barrier Layer	0.1μF	16V	
C142	Ceramic	0.0047μF	50V	
C143	Ceramic	0.0047μF	50V	
C144	Ceramic	0.0047μF	50V	
C145	Ceramic	5pF	50V	CH
C146	Trimmer	6pF VCT51A123A		
C147	Ceramic	0.0047μF	50V	
C148	Barrier Layer	0.01μF	25V	
C149	Ceramic	0.0047μF	50V	
C150	Ceramic	0.0047μF	50V	
C151	Ceramic	0.0047μF	50V	
C152	Ceramic	0.0047μF	50V	
C153	Ceramic	0.0047μF	50V	
C154	Ceramic	0.0047μF	50V	
C155	Ceramic	0.0047μF	50V	
C156	Ceramic	0.0047μF	50V	
C157	Ceramic	22pF	50V	
C158	Barrier Layer	0.1μF	16V	
C160	Ceramic	0.0047μF	50V	
C161	Barrier Layer	0.1μF	16V	

[MAIN UNIT]

REF. NO.	DESCRIPTION	PART NO.		
C163	Ceramic	470pF	50V	
C164	Barrier Layer	0.1μF	16V	
C165	Barrier Layer	0.1μF	16V	
C166	Ceramic	0.0047μF	50V	
C167	Barrier Layer	0.1μF	16V	
C168	Barrier Layer	0.1μF	16V	
C169	Barrier Layer	0.1μF	16V	
C170	Electrolytic	2.2μF	50V	MS7
C171	Ceramic	0.0047μF	50V	
C172	Ceramic	0.0047μF	50V	
C173	Electrolytic	2.2μF	50V	MS7
C174	Ceramic	0.0047μF	50V	
C175	Mylar	0.01μF	50V	
C176	Electrolytic	10μF	16V	MS7
C177	Mylar	0.001μF	50V	
C178	Mylar	0.0022μF	50V	
C179	Ceramic	120pF	50V	
C180	Electrolytic	10μF	16V	MS7
C181	Electrolytic	0.47μF	50V	MS7
C182	Ceramic	0.0047μF	50V	
C183	Barrier Layer	0.01μF	25V	
C184	Ceramic	7pF	50V	CH
C185	Ceramic	10pF	50V	CH
C186	Ceramic	100pF	50V	CH
C187	Ceramic	100pF	50V	CH
C188	Ceramic	0.0047μF	50V	
C189	Ceramic	15pF	50V	CH
C190	Ceramic	0.0047μF	50V	
C191	Ceramic	27pF	50V	
C192	Ceramic	56pF	50V	
C193	Barrier Layer	0.1μF	16V	
C194	Electrolytic	0.22μF	50V	MS7
C195	Ceramic	0.0047μF	50V	
C196	Barrier Layer	0.047μF	25V	
C197	Ceramic	22pF	50V	
C198	Barrier Layer	0.047μF	25V	
C199	Ceramic	220pF	50V	CH
C200	Ceramic	220pF	50V	CH
C201	Ceramic	30pF	50V	CH
C202	Trimmer	30pF VCT51F126A		
C203	Ceramic	39pF	50V	CH
C204	Barrier Layer	0.047μF	25V	
C205	Barrier Layer	0.047μF	25V	
C206	Cylinder	TP125X 103M		
C207	Barrier Layer	0.047μF	25V	
C208	Ceramic	180pF	50V	
C209	Ceramic	100pF	50V	
C210	Ceramic	0.0047μF	50V	
C211	Ceramic	0.0047μF	50V	
C212	Ceramic	2pF	50V	
C213	Ceramic	8pF	50V	
C214	Ceramic	100pF	50V	CH
C215	Ceramic	100pF	50V	CH
C216	Ceramic	0.0047μF	50V	
C217	Ceramic	0.0047μF	50V	
C218	Array	0.0082μF × 7		
		B8ZC0111-32N		
C219	Ceramic	0.0047μF	50V	
C220	Electrolytic	10μF	16V	MS7
C221	Barrier Layer	0.1μF	16V	
C222	Electrolytic	0.47μF	50V	MS7
C223	Ceramic	0.0047μF	50V	
C224	Electrolytic	10μF	16V	MS7
C225	Electrolytic	4.7μF	25V	MS7

[MAIN UNIT]

REF. NO.	DESCRIPTION	PART NO.		
C226	Electrolytic	0.47μF	50V	MS7
C227	Mylar	0.047μF	50V	
C228	Electrolytic	1μF	50V	MS7
C229	Tantalum	1μF	35V	
C230	Tantalum	1.5μF	35V	
C231	Ceramic	0.0047μF	50V	
C232	Ceramic	0.0047μF	50V	
C233	Tantalum	3.3μF	35V	
C235	Barrier Layer	0.1μF	16V	
C236	Electrolytic	4.7μF	25V	
C237	Ceramic	0.0047μF	50V	
C238	Electrolytic	470μF	16V	
C239	Barrier Layer	0.1μF	16V	
C240	Electrolytic	47μF	16V	
C241	Electrolytic	47μF	16V	
C243	Electrolytic	1000μF	16V	MS16
C244	Barrier Layer	0.047μF	25V	
C245	Electrolytic	100μF	16V	
C246	Electrolytic	10μF	16V	MS7
C247	Mylar	0.022μF	50V	
C248	Mylar	0.022μF	50V	
C249	Mylar	0.022μF	50V	
C250	Tantalum	10μF	10V	
C251	Mylar	0.022μF	50V	
C252	Electrolytic	2.2μF	50V	MS7
C253	Electrolytic	2.2μF	50V	MS7
C254	Ceramic	0.001μF	50V	
C255	Electrolytic	2.2μF	50V	MS7
C256	Barrier Layer	0.047μF	25V	
C257	Electrolytic	0.1μF	50V	MS7
C258	Barrier Layer	0.1μF	16V	
C259	Electrolytic	10μF	16V	MS7
C260	Ceramic	0.0047μF	50V	
C261	Barrier Layer	0.1μF	16V	
C262	Mylar	0.01μF	50V	
C263	Mylar	0.01μF	50V	
C264	Mylar	0.033μF	50V	
C265	Barrier Layer	0.047μF	25V	
C266	Electrolytic	0.47μF	50V	MS7
C267	Ceramic	0.0047μF	50V	
C268	Ceramic	0.0047μF	50V	
C269	Ceramic	82pF	50V	
C270	Electrolytic	0.1μF	50V	MS7
C271	Barrier Layer	0.1μF	16V	
C272	Ceramic	0.001μF	50V	
C273	Ceramic	0.0047μF	50V	
C274	Electrolytic	10μF	16V	MS7
C275	Mylar	0.022μF	50V	
C276	Mylar	0.001μF	50V	
C277	Ceramic	330pF	50V	
C278	Array	0.0022μF × 6		
		B7ZC0715-32N		
C279	Array	0.001μF × 4		
		B5RC0124-32N		
C280	Electrolytic	10μF	16V	MS7
C281	Ceramic	0.0047μF	50V	
C282	Mylar	0.022μF	50V	
C283	Electrolytic	22μF	16V	
C284	Electrolytic	1μF	50V	MS7
C285	Electrolytic	0.47μF	50V	MS7
C286	Ceramic	0.001μF	50V	
C287	Barrier Layer	0.1μF	16V	
C289	Ceramic	10pF	50V	
C290	Electrolytic	10μF	16V	MS7

[MAIN UNIT]

REF. NO.	DESCRIPTION	PART NO.		
C291	Barrier Layer	0.1μF	16V	
C292	Barrier Layer	0.047μF	25V	
C293	Electrolytic	10μF	16V	MS7
C294	Mylar	0.01μF	50V	
C295	Electrolytic	10μF	16V	MS7
C296	Ceramic	0.0047μF	50V	
C297	Electrolytic	0.47μF	50V	MS7
C298	Ceramic	15pF	50V	UJ
C299	Barrier Layer	0.1μF	16V	
C300	Barrier Layer	0.1μF	16V	
C301	Ceramic	470pF	50V	
C302	Ceramic	100pF	50V	
C303	Barrier Layer	0.1μF	16V	
C304	Ceramic	4pF	50V	CH
C305	Electrolytic	10μF	16V	MS7
C306	Electrolytic	1μF	50V	MS7
C307	Barrier Layer	0.1μF	16V	
C308	Ceramic	0.0047μF	50V	
C309	Ceramic	0.0047μF	50V	
C310	Barrier Layer	0.1μF	16V	
C311	Ceramic	0.0047μF	50V	
C312	Ceramic	0.0047μF	50V	
C313	Ceramic	0.0047μF	50V	
C314	Barrier Layer	0.1μF	16V	
C315	Ceramic	0.0047μF	50V	
C316	Barrier Layer	0.1μF	16V	
C317	Barrier Layer	0.1μF	16V	
CP1	Check Point	IPS-1136		
J1	Connector	TL25P-10-V1		
J2	Connector	TL25P-03-V1		
J3	Connector	TL25P-04-V1		
J4	Connector	TMP-J01X-A2		
J5	Connector	TL25P-08-V1		
J6	Connector	TSL-P03P-B1		
J7	Connector	TL25P-07-V1		
J8	Connector	TL25P-09-V1		
J9	Connector	TL25P-07-V1		
J10	Connector	TL25P-07-V1		
J11	Connector	TL25P-08-V1		
J12	Connector	TL25P-08-V1		
J13	Connector	TL25P-07-V1		
J14	Connector	TL25P-05-V1		
J15	Connector	TL25P-08-V1		
J16	Connector	TL25P-08-V1		
J17	Connector	TLB-P06H-B1		
J18	Connector	TLB-P06H-B1		
J19	Connector	TLB-P05H-B1		
P1	Connector	TL25H-05-B1		
S1	Switch	SSSS31124A		
S2	Switch	SSSS31124A		
S3	Switch	EVQ-RBA		
S4	Switch	EVQ-RBA		
S5	Switch	EVQ-RBA		
S6	Switch	EVQ-RBA		

[MAIN UNIT]

REF. NO.	DESCRIPTION	PART NO.
S7	Switch	EVQ-RBA
S8	Switch	SSSS31124A
S9	Switch	EVQ-RBA
SO1	Socket	380598-2
SO2	Socket	380598-2
SO3	Socket	380598-2
SO4	Socket	380598-2
SO5	Socket	50864-1
SO6	Socket	50864-1
SO7	Socket	50864-1
SO8	Socket	50864-1
SO9	Socket	50864-1
SO10	Socket	50864-1
SO11	Socket	50864-1
SO12	Socket	50864-1
EP2	P.C. Board	B-1420B
EP3	P.C. Board	B-1169
W11	Jumper	JPW-02A
W17	Jumper	JPW-02A
W54	Jumper	JPW-02A
W86	Jumper	JPW-02H
W188	Jumper	JPW-02A

[PA UNIT]

REF. NO.	DESCRIPTION	PART NO.
Q1	Transistor	2SC1971
Q2	Transistor	2SC3133
Q3	Transistor	2SC3133
Q4	Transistor	2SC2904
Q5	Transistor	2SC2904
Q6	Transistor	2SD880 Y
Q7	Transistor	2SC2120
Q8	Transistor	2SD468 C
Q9	Transistor	2SB562 C
Q10	Transistor	2SC2458 GR
Q11	Transistor	RN1202
D1	Diode	MV5
D2	Diode	MV5
D4	Diode	U05G
D5	Diode	1SS53
D7	Diode	1SS53
D9	Diode	MV5
L1	Coil	LR-142
L2	Coil	FL4H 1R2M
L3	Coil	FL4H 1R2M
L4	Coil	LR-143
L5	Coil	FSQH050RN
L6	Coil	BT01RN1-A61
L7	Coil	FSQH050RN
L8	Coil	BT01RN1-A61
L9	Coil	LR-83
L10	Coil	LR-144
L11	Coil	LR-146
L12	Coil	FL5H 101K
L13	Coil	FSQH050RN
L14	Coil	BT01RN1-A61
L15	Coil	FSQH050RN
L16	Coil	BT01RN1-A61
L17	Coil	FSQH050RN
L19	Coil	FL5H 101K
L20	Coil	FL7H 102J
L21	Coil	FL7H 102J
L22	Coil	LR-151
L23	Coil	BT01RN1-A61
L24	Coil	BT01RN1-A61
L25	Coil	BT01RN1-A61
L26	Coil	BT01RN1-A61
L27	Coil	LAL03NA-102K
L28	Coil	BT01RN1-A61
L29	Coil	BT01RN1-A61
L30	Coil	BT01RN1-A61
L31	Coil	BT01RN1-A61
L32	Coil	BT01RN1-A61
L33	Coil	BT01RN1-A61
L34	Coil	BT01RN1-A61
L35	Coil	BT01RN1-A61
L36	Coil	BT01RN1-A61
L37	Coil	BT01RN1-A61
L38	Coil	LAL04NA 102K
L39	Coil	LAL04NA 101K
L40	Coil	LW-22
L41	Coil	LAL04NA 101K
L42	Coil	BT01RN1-A61
L44	Coil	LAL04NA 100K
L45	Coil	LAL03NA 101K

[PA UNIT]

REF. NO.	DESCRIPTION	PART NO.
R1	Resistor	220Ω R25
R2	Resistor	100Ω R25
R3	Resistor	470Ω R25
R4	Resistor	2.2Ω R25
R5	Resistor	4.7Ω R25
R6	Resistor	68Ω ELR25
R7	Resistor	22Ω ELR25
R8	Resistor	22Ω ELR25
R9	Resistor	68Ω ELR25
R10	Resistor	3.3Ω 1W RSS1P3.3-J
R11	Resistor	3.3Ω 1W RSS1P3.3-J
R12	Resistor	3.3Ω 1W RSS1P3.3-J
R13	Resistor	3.3Ω 1W RSS1P3.3-J
R14	Resistor	10Ω R50X
R15	Resistor	10Ω R50X
R16	Resistor	3.3Ω 1W RSS1P3.3-J
R17	Resistor	3.3Ω 1W RSS1P3.3-J
R18	Resistor	33kΩ R25
R19	Resistor	1kΩ R25
R20	Resistor	0.012Ω 5W SQ5L0.012-J
R21	Resistor	1kΩ R25
R22	Resistor	4.7Ω 2W CRH200R-02J4R7
R23	Trimmer	470Ω RH0651CS2J1HA
R24	Resistor	100Ω R50X
R25	Resistor	0.1Ω 1W SRW1P0.1-J
R27	Trimmer	100Ω RH0651C12J04A
R28	Resistor	68Ω R50X
R29	Resistor	10Ω ELR25
R30	Resistor	1.8Ω ELR25
R31	Resistor	22Ω ELR25
R32	Resistor	100Ω R50X
R33	Resistor	2.2kΩ ELR25
R34	Resistor	120Ω R50X
R35	Resistor	60Ω 3W SRW3P60-J
R36	Resistor	4.7kΩ ELR25
R37	Resistor	10kΩ ELR20
R38	Resistor	1kΩ ELR25
R39	Resistor	1kΩ ELR25
R40	Resistor	4.7Ω ELR25
R41	Resistor	10kΩ R20
R43	Resistor	47Ω ELR25
R45	Absorber	DSA301LA
R46	Resistor	220Ω 1W RSF1B220-J
R47	Resistor	330Ω ELR20
R48	Resistor	10Ω R50X
R49	Resistor	15Ω 2W RSF2B15-J
C1	Ceramic	0.0022μF 50V
C2	Barrier Layer	0.0012μF 25V UAT04V 122K-L05AC
C3	Barrier Layer	0.1μF 16V
C4	Mylar	0.01μF 50V
C5	Mylar	0.01μF 50V
C6	Cylinder	100pF UP125SL101J-NA
C7	Monolithic	470pF GR43CH471K
C8	Monolithic	0.0068μF GR44CH682K
C9	Monolithic	0.0068μF GR44CH682K
C10	Barrier Layer	560pF 50V
C12	Monolithic	470pF GR43CH471K
C13	Dip Mica	820pF DM19C821J51CR
C14	Monolithic	0.001μF GR44CH102K

[PA UNIT]

REF. NO.	DESCRIPTION	PART NO.
C16	Ceramic	0.047μF DD110 F 473Z 50V02
C17	Barrier Layer	0.047μF 25V
C18	Electrolytic	1000μF 16V MS16
C19	Monolithic	0.68μF GR44Y5V684Z
C20	Barrier Layer	0.047μF 25V
C21	Electrolytic	47μF 10V
C22	Electrolytic	10μF 16V
C23	Barrier Layer	0.047μF 25V
C24	Barrier Layer	0.047μF 25V
C25	Electrolytic	470μF 16V
C26	Barrier Layer	0.047μF 25V
C27	Electrolytic	10μF 16V
C28	Barrier Layer	0.1μF 16V
C29	Ceramic	0.0047μF 50V
C30	Barrier Layer	0.047μF 25V
C31	Barrier Layer	0.1μF 16V
C32	Barrier Layer	0.047μF 25V
C33	Barrier Layer	0.047μF 25V
C34	Electrolytic	10μF 16V
C35	Barrier Layer	0.047μF 25V
C36	Monolithic	0.68μF GR44Y5V684Z
C37	Barrier Layer	0.047μF 25V
C38	Barrier Layer	0.047μF 25V
C39	Barrier Layer	0.047μF 25V
C40	Barrier Layer	0.1μF 16V
C41	Ceramic	120pF 50V
C42	Ceramic	20pF 50V
C43	Ceramic	120pF 50V
C44	Barrier Layer	0.047μF 25V
C45	Ceramic	220pF 50V
C46	Feed Through	TF318-452E102GMV 50V
C47	Feed Through	TF318-452E102GMV 50V
C48	Feed Through	TF318-452E102GMV 50V
C49	Feed Through	TF318-452E102GMV 50V
C50	Barrier Layer	0.047μF 25V
C51	Barrier Layer	0.047μF 25V
C52	Barrier Layer	0.1μF 16V
C53	Ceramic	270pF 500V
C54	Ceramic	270pF 500V
C56	Tantalum	4.7μF 16V
C57	Tantalum	4.7μF 16V
C58	Barrier Layer	0.1μF 16V
C59	Ceramic	0.001μF 50V
C60	Ceramic	0.001μF 50V
C61	Array	0.0082μF×7 B8ZC0111-32N
C62	Barrier Layer	0.1μF 16V
C63	Barrier Layer	0.047μF 25V
C64	Ceramic	18pF DE0705SL 180J1KV
RL1	Relay	UPM-12905Y
RL2	Relay	SY-12
J1	Connector	TL25P-12-V1
J2	Connector	TL25P-09-V1
J3	Connector	5045-3A
J4	Connector	TL25P-04-V1
J5	Connector	TL25P-05-V1
J7	Connector	HLJ4306-01-3080
J8	Connector	HSJ0805-01-020

[PA UNIT]

REF. NO.	DESCRIPTION	PART NO.
J10	Connector	TMP-J01X-V2
J11	Connector	FMMD-RM1
J12	Connector	KC21-0060
J13	Connector	LLR-6
J14	Connector	TCS4680-01-1111
J15	Connector	TCS4670-01-1111
J16	Connector	GL-2060F
J17	Connector	HEC0630-01-010
J18	Connector	TMP-J01X-A2
J19	Connector	TMP-J01X-A2
J20	Connector	TMP-J01X-A2
P1	Connector	TMP-P01X-A1
P2	Connector	TMP-P01X-A1
P3	Connector	TL25H-05-B1
P4	Connector	TMP-P01X-A1
P5	Connector	TL25H-02-B1
P6	Connector	TL25H-04-B1
P7	Connector	1545R-1
P8	Connector	1545R-1
P9	Connector	TMP-P01X-A1
F1	Fuse	5A
F2	Holder	TFH-S30
F3	Fuse	10A
F3	Fuse	5A
F4	Holder	FH-032C
F5	Fuse	2A
F6	Holder	TFH-S30
S1	Thermal	OHD-90M
S2	Thermal	OHD-50M
MF1	Motor	M6B 12U22
EP1	P.C. Board	B-702D
EP2	P.C. Board	B-1361C
EP3	P.C. Board	B-1446B
W15	Jumper	JPW-02A
W16	Jumper	JPW-02A
W17	Jumper	JPW-02A
W18	Jumper	JPW-02A
W19	Jumper	JPW-02A
W21	Jumper	JPW-02A
W22	Jumper	JPW-02A
W45	Jumper	JPW-02H
W47	Jumper	JPW-02A
W73	Jumper	JPW-02A

[FILTER UNIT]

REF. NO.	DESCRIPTION	PART NO.
D1	Diode	1K60
D2	Diode	1K60
D3	Diode	1N4002
D4	Diode	1N4002
D5	Diode	1N4002
D6	Diode	1N4002
D7	Diode	1N4002
D8	Diode	1N4002
D9	Diode	1N4002
L2	Coil	LR-47
L3	Coil	LR-47
L5	Coil	LR-138
L6	Coil	LR-139
L7	Coil	LR-140
L8	Coil	LR-141
L9	Coil	LR-141
L10	Coil	LR-90
L11	Coil	LR-91
L12	Coil	LR-53
L13	Coil	LR-54
L14	Coil	LA-166
L15	Coil	LA-165
L16	Coil	LA-168
L17	Coil	LA-167
L18	Coil	LR-22A
L19	Coil	L6 222
L20	Coil	FL5H 101K
L21	Coil	FL5H 101K
L22	Coil	FL5H 101K
L23	Coil	FL5H 101K
L24	Coil	FL5H 101K
L25	Coil	FL5H 101K
L26	Coil	FL5H 101K
L27	Coil	FL5H 101K
L28	Coil	FL4H 100K
L29	Coil	FL4H 100K
L30	Coil	FL4H 100K
L31	Coil	FL4H 100K
L32	Coil	FL4H 100K
L33	Coil	FL4H 100K
L34	Coil	LA-256
L35	Coil	LR-136
R1	Resistor	68Ω R50X
R2	Resistor	5.6kΩ R25
R3	Resistor	5.6kΩ R25
R4	Resistor	56kΩ ELR25
R5	Resistor	56kΩ ELR25
C1	Dip Mica	0.0018μF DM20C182J51CR
C2	Dip Mica	470pF DM19C471J51CR
C3	Dip Mica	0.0022μF DM20C222J51CR
C4	Ceramic	120pF 500V
C5	Dip Mica	0.0012μF DM20C122J51CR
C6	Dip Mica	560pF DM19C561J51CR

[FILTER UNIT]

REF. NO.	DESCRIPTION	PART NO.
C7	Ceramic	220pF 500V
C8	Dip Mica	0.0012μF DM20C122J51CR
C9	Ceramic	68pF 500V
C10	Dip Mica	680pF DM19C681J51CR
C11	Dip Mica	470pF DM19C471J51CR
C12	Ceramic	120pF 500V
C13	Dip Mica	560pF DM19C561J51CR
C14	Ceramic	68pF 500V
C15	Ceramic	270pF 500V
C16	Ceramic	220pF 500V
C17	Ceramic	39pF 500V
C18	Dip Mica	470pF DM19C471J51CR
C19	Ceramic	68pF 500V
C20	Ceramic	220pF 500V
C21	Ceramic	180pF 500V
C22	Ceramic	18pF 500V
C23	Ceramic	330pF 500V
C24	Ceramic	56pF 500V
C25	Ceramic	180pF 500V
C26	Ceramic	68pF 500V
C27	Ceramic	10pF 500V
C28	Ceramic	220pF 500V
C29	Ceramic	47pF 500V
C30	Ceramic	100pF 500V
C31	Ceramic	82pF 500V
C32	Ceramic	12pF 500V
C33	Ceramic	82pF 500V
C34	Ceramic	39pF 500V
C35	Ceramic	68pF 500V
C36	Trimmer	ECV-1ZW20×40
C37	Ceramic	150pF 50V
C38	Ceramic	0.001μF 50V
C39	Ceramic	0.001μF 50V
C40	Ceramic	82pF 500V
C42	Barrier Layer	0.047μF 25V
C43	Barrier Layer	0.047μF 25V
C44	Barrier Layer	0.047μF 25V
C45	Barrier Layer	0.047μF 25V
C46	Barrier Layer	0.047μF 25V
C47	Barrier Layer	0.047μF 25V
C48	Barrier Layer	0.047μF 25V
C49	Barrier Layer	0.047μF 25V
C50	Ceramic	0.0047μF 50V
C51	Ceramic	0.0047μF 50V
C52	Ceramic	0.0047μF 50V
C53	Ceramic	0.0047μF 50V
C54	Ceramic	0.0047μF 50V
C55	Ceramic	0.0047μF 50V
C56	Ceramic	68pF 500V
C57	Ceramic	330pF 500V
RL1	Relay	FBR313D012-22
RL2	Relay	FBR313D012-22
RL3	Relay	FBR313D012-22
RL4	Relay	FBR313D012-22
RL5	Relay	FBR313D012-22
RL6	Relay	FBR313D012-22
RL7	Relay	FBR313D012-22

[FILTER UNIT]

REF. NO.	DESCRIPTION	PART NO.
RL8	Relay	FBR313D012-22
RL9	Relay	FBR313D012-22
RL10	Relay	FBR313D012-22
RL11	Relay	FBR313D012-22
RL12	Relay	FBR313D012-22
RL13	Relay	FBR313D012-22
RL14	Relay	FBR313D012-22
J1	Connector	TMP-J01X-V2
J2	Connector	TL25P-02-V1
P1	Connector	TL25H-07-B1
P2	Connector	TMP-P01X-A1
EP1	P.C. Board	B-703F
W10	Jumper	JPW-02A
W11	Jumper	JPW-02A
W13	Jumper	JPW-02A
W14	Jumper	JPW-02A
W15	Jumper	JPW-02A
W16	Jumper	JPW-02A
W17	Jumper	JPW-02A
W18	Jumper	JPW-02A
W19	Jumper	JPW-02A
W20	Jumper	JPW-02A
W21	Jumper	JPW-02A
W22	Jumper	JPW-02A
W23	Jumper	JPW-02A
W24	Jumper	JPW-02A
W25	Jumper	JPW-02A
W26	Jumper	JPW-02A
W27	Jumper	JPW-02A
W28	Jumper	JPW-02A
W29	Jumper	JPW-02A
W30	Jumper	JPW-02A
W31	Jumper	JPW-02A
W32	Jumper	JPW-02A
W34	Jumper	JPW-02A
W35	Jumper	JPW-02A
W36	Jumper	JPW-02H
W39	Jumper	JPW-02A

[TUNER UNIT]

REF. NO.	DESCRIPTION	PART NO.
IC101	IC	NJM4558D
IC102	IC	NJM4558D
IC103	IC	µPD4071BC
IC104	IC	µPD4071BC
IC201	IC	SN74S132N
IC202	IC	SN74S00N
IC203	IC	SN74S112N
IC204	IC	TA78L005AP
IC401	IC	M54562P
Q101	Transistor	2SD468
Q102	Transistor	2SB562
Q103	Transistor	2SD468
Q104	Transistor	2SB562
Q105	Transistor	2SC945
Q106	Transistor	2SA1015 Y
Q107	Transistor	2SC945
Q108	Transistor	2SA1015 Y
Q109	Transistor	2SC945
Q110	Transistor	2SA1015 Y
Q111	Transistor	2SC945
Q112	Transistor	2SA1015 Y
Q113	Transistor	2SC945
Q114	Transistor	2SC945
Q115	Transistor	2SC945
Q116	Transistor	2SC945
Q117	Transistor	2SC945
Q201	Transistor	2SC1740 S
Q202	Transistor	2SC1740 S
Q203	FET	2SK30ATM Y
Q301	Transistor	2SD468
Q302	Transistor	2SD468
D101	Diode	1SS53
D102	Diode	1SS53
D103	Diode	1SS53
D104	Diode	1SS53
D105	Diode	1SS53
D106	Diode	1SS53
D107	Diode	1SS53
D108	Diode	1SS53
D109	Diode	1SS53
D110	Diode	1SS53
D111	Diode	1SS53
D112	Diode	1SS53
D113	Diode	1SS53
D114	Diode	1SS53
D116	Diode	1S953
D117	Diode	1S953
D118	Diode	1S953
D119	Diode	1S953
D127	Diode	1SS53
D129	Diode	1SS53
D130	Diode	1SS53
D132	Diode	1SS53
D134	Diode	1SS53
D135	Diode	1SS53
D136	Diode	1SS53
D137	Zener	RD7.5E B2
D138	Diode	1SS53
D139	Diode	1SS53
D141	Diode	1SS53

[TUNER UNIT]

REF. NO.	DESCRIPTION	PART NO.
D142	Diode	1SS53
D143	Diode	1SS53
D144	Diode	1SS53
D145	Diode	1SS53
D146	Diode	1SS53
D147	Diode	1SS53
D148	Diode	1SS53
D149	Zener	RD3.0E B2
D150	Zener	RD3.0E B2
D151	Zener	RD3.0E B2
D152	Zener	RD3.0E B2
D153	Zener	RD5.1E B2
D201	Diode	1K60
D202	Diode	1K60
D203	Diode	1K60
D204	Diode	1K60
D301	Diode	1SS53
D302	Diode	1SS53
D303	Diode	V19B
D304	Diode	V19B
D401	Diode	RD5.1E B2
D505	Diode	1N4002
L101	Coil	EL0810SKI 101
L102	Coil	EL0810SKI 101
L103	Coil	EL0810SKI 101
L104	Coil	EL0810SKI 101
L105	Coil	EL0810SKI 101
L106	Coil	EL0810SKI 101
L201	Coil	LR-127A
L202	Coil	L6 222
L204	Coil	EL0810SKI 101
L205	Coil	LW-18
L206	Coil	LW-18
L301	Coil	EL0810SKI 101
L302	Coil	TO-8A
L303	Coil	EL0810SKI 101
L401	Coil	BT01RN1-A61
L402	Coil	LAL03NA 101K
L403	Coil	LAL04NA 101K
L501	Coil	LA-162
L502	Coil	LR-135
R101	Resistor	33Ω R50X
R102	Resistor	33kΩ ELR25
R103	Resistor	ERC14GJ226
R104	Resistor	1kΩ ELR25
R105	Trimmer	10kΩB RH1051D14J0PA-10kB
R106	Trimmer	10kΩB RH1051D14J0PA-10kB
R107	Trimmer	10kΩB RH1051D14J0PA-10kB
R108	Trimmer	10kΩB RH1051D14J0PA-10kB
R109	Trimmer	10kΩB RH1051D14J0PA-10kB
R110	Trimmer	10kΩB RH1051D14J0PA-10kB
R111	Trimmer	10kΩB RH1051D14J0PA-10kB

[TUNER UNIT]

REF. NO.	DESCRIPTION	PART NO.
R112	Trimmer	10kΩB RH1051D14J0PA-10kB
R113	Trimmer	10kΩB RH1051D14J0PA-10kB
R114	Trimmer	10kΩB RH1051D14J0PA-10kB
R115	Trimmer	10kΩB RH1051D14J0PA-10kB
R116	Trimmer	10kΩB RH1051D14J0PA-10kB
R117	Trimmer	10kΩB RH1051D14J0PA-10kB
R118	Trimmer	10kΩB RH1051D14J0PA-10kB
R119	Resistor	150Ω R25
R120	Resistor	1.5kΩ R25
R121	Resistor	47kΩ ELR25
R122	Resistor	2.2MΩ ELR20
R123	Resistor	47kΩ R25
R124	Resistor	2.7kΩ ELR25
R125	Resistor	22kΩ R25
R126	Resistor	100kΩ ELR25
R127	Resistor	15kΩ ELR25
R128	Resistor	100kΩ ELR25
R129	Resistor	33kΩ ELR25
R130	Resistor	ERC14GJ226
R131	Resistor	150Ω R25
R132	Resistor	1.5kΩ ELR25
R133	Resistor	47kΩ ELR25
R134	Resistor	2.2MΩ ELR20
R135	Resistor	47kΩ R25
R136	Resistor	2.7kΩ ELR25
R137	Resistor	1kΩ ELR25
R138	Resistor	22kΩ ELR25
R139	Resistor	22kΩ R25
R140	Resistor	22kΩ ELR25
R141	Resistor	15kΩ ELR25
R142	Resistor	100kΩ ELR25
R143	Resistor	100kΩ ELR25
R144	Resistor	100kΩ ELR20
R145	Resistor	100kΩ ELR20
R146	Resistor	100kΩ ELR20
R147	Resistor	100kΩ ELR20
R148	Resistor	100kΩ ELR20
R149	Resistor	100kΩ ELR20
R150	Resistor	100kΩ ELR20
R151	Resistor	100kΩ ELR20
R152	Resistor	10kΩ ELR25
R153	Resistor	10kΩ ELR20
R154	Resistor	10kΩ ELR25
R155	Resistor	47kΩ ELR25
R156	Resistor	47kΩ ELR25
R157	Resistor	560kΩ ELR25
R158	Resistor	100kΩ ELR25
R159	Resistor	1MΩ ELR25
R160	Resistor	47kΩ ELR25
R161	Resistor	33kΩ ELR25
R162	Resistor	33kΩ ELR25
R163	Resistor	ERC14GJ225
R164	Resistor	ERC14GJ225
R165	Resistor	ERC14GJ225
R166	Resistor	ERC14GJ225
R201	Resistor	33Ω R50XJ
R202	Resistor	10kΩ ELR25

[TUNER UNIT]

REF. NO.	DESCRIPTION	PART NO.	
R203	Resistor	10kΩ	ELR25
R204	Resistor	1kΩ	R25
R205	Resistor	39Ω	ELR25
R206	Resistor	15kΩ	ELR25
R207	Resistor	12kΩ	ELR25
R208	Resistor	330Ω	ELR25
R209	Resistor	15kΩ	ELR25
R210	Resistor	12kΩ	ELR25
R212	Resistor	2.2kΩ	ELR25
R213	Resistor	2.2kΩ	ELR25
R214	Resistor	1kΩ	R25
R215	Resistor	1MΩ	ELR25
R216	Resistor	10kΩ	ELR25
R217	Resistor	4.7kΩ	ELR25
R301	Resistor	4.7kΩ	ELR25
R302	Resistor	4.7kΩ	ELR25
R303	Resistor	33Ω	ELR25
R304	Resistor	33Ω	ELR25
R305	Resistor	470Ω	ELR25
R601	Variable Resistor	EVH-60AF15B14	
R602	Variable Resistor	EVH-60AF15B14	
C101	Ceramic	0.0047μF	50V
C102	Barrier Layer	0.1μF	16V
C103	Ceramic	0.0047μF	50V
C104	Ceramic	0.0047μF	50V
C105	Ceramic	0.0047μF	50V
C106	Ceramic	0.0047μF	50V
C107	Ceramic	0.0047μF	50V
C108	Ceramic	0.0047μF	50V
C109	Ceramic	0.0047μF	50V
C110	Ceramic	0.0047μF	50V
C111	Ceramic	0.0047μF	50V
C112	Ceramic	0.0047μF	50V
C113	Ceramic	0.0047μF	50V
C114	Ceramic	0.0047μF	50V
C115	Ceramic	0.0047μF	50V
C116	Ceramic	0.0047μF	50V
C117	Ceramic	0.0047μF	50V
C118	Ceramic	0.0047μF	50V
C119	Ceramic	0.0047μF	50V
C120	Ceramic	0.0047μF	50V
C121	Ceramic	0.0047μF	50V
C122	Ceramic	0.0047μF	50V
C123	Ceramic	0.0047μF	50V
C124	Ceramic	0.0047μF	50V
C132	Ceramic	0.0047μF	50V
C133	Ceramic	0.0047μF	50V
C134	Barrier Layer	0.1μF	16V
C135	Barrier Layer	0.1μF	16V
C136	Barrier Layer	0.1μF	16V
C137	Barrier Layer	0.1μF	16V
C138	Barrier Layer	0.1μF	16V
C139	Barrier Layer	0.1μF	16V
C140	Barrier Layer	0.1μF	16V
C141	Ceramic	0.0047μF	50V
C142	Ceramic	0.0047μF	50V
C143	Ceramic	0.0047μF	50V
C144	Ceramic	0.0047μF	50V
C145	Ceramic	0.0047μF	50V
C146	Ceramic	0.0047μF	50V
C147	Ceramic	0.0047μF	50V
C148	Ceramic	0.0047μF	50V

[TUNER UNIT]

REF. NO.	DESCRIPTION	PART NO.		
C149	Ceramic	0.0047μF	50V	
C150	Ceramic	0.0047μF	50V	
C151	Ceramic	0.001μF	50V	
C152	Ceramic	0.001μF	50V	
C153	Ceramic	0.0047μF	50V	
C154	Electrolytic	10μF	25V	
C155	Electrolytic	10μF	25V	
C156	Ceramic	0.0047μF	50V	
C157	Ceramic	0.0047μF	50V	
C158	Ceramic	0.0047μF	50V	
C159	Ceramic	0.0047μF	50V	
C160	Ceramic	0.0047μF	50V	
C161	Electrolytic	10μF	25V	
C162	Ceramic	0.0047μF	50V	
C163	Ceramic	0.0047μF	50V	
C164	Ceramic	0.0047μF	50V	
C165	Ceramic	0.0047μF	50V	
C166	Ceramic	0.0047μF	50V	
C167	Ceramic	0.0047μF	50V	
C168	Ceramic	0.0047μF	50V	
C169	Ceramic	0.0047μF	50V	
C170	Ceramic	0.001μF	50V	
C171	Ceramic	0.001μF	50V	
C172	Ceramic	0.0047μF	50V	
C173	Ceramic	0.0047μF	50V	
C174	Ceramic	0.0047μF	50V	
C175	Ceramic	10μF	25V	
C176	Electrolytic	47μF	16V	
C177	Ceramic	0.0047μF	50V	
C178	Ceramic	0.0047μF	50V	
C179	Ceramic	0.0047μF	50V	
C180	Ceramic	0.0047μF	50V	
C181	Array	8200pF × 7		
		B8ZC0111-32N		
C185	Barrier Layer	0.1μF	16V	
C186	Ceramic	0.001μF	50V	
C201	Ceramic	10pF		
		DE0705 SL 100D 1KV		
C203	Ceramic	10pF	500V	
C204	Ceramic	330pF	50V	
C205	Trimmer	210pF BW3P		
C206	Ceramic	0.0047μF	50V	
C207	Ceramic	0.0047μF	50V	
C208	Ceramic	0.0047μF	50V	
C209	Ceramic	0.0047μF	50V	
C210	Ceramic	0.0047μF	50V	
C211	Ceramic	0.0047μF	50V	
C212	Ceramic	0.0047μF	50V	
C213	Ceramic	0.0047μF	50V	
C214	Ceramic	0.0047μF	50V	
C215	Ceramic	0.0047μF	50V	
C216	Electrolytic	10μF	16V	
C217	Electrolytic	10μF	16V	
C218	Ceramic	0.0047μF	50V	
C222	Ceramic	0.0047μF	50V	
C223	Ceramic	0.001μF	50V	
C301	Electrolytic	10μF	16V	
C302	Monolithic	C76AF1H684Z		
C303	Electrolytic	220μF	10V	
C304	Electrolytic	220μF	10V	
C305	Tantalum	0.47μF	35V	DN
C306	Tantalum	0.47μF	35V	DN
C307	Tantalum	0.47μF	35V	DN
C308	Tantalum	0.47μF	35V	DN

[TUNER UNIT]

REF. NO.	DESCRIPTION	PART NO.
C309	Mylar	0.0047μF 50V
C310	Electrolytic	3.3μF 50V
C311	Ceramic	0.0047μF 50V
C312	Electrolytic	10μF 25V
C313	Monolithic	C76AF1H684Z
C401	Electrolytic	100μF 16V
C402	Barrier Layer	0.047μF 25V
C403	Barrier Layer	0.047μF 25V
C404	Barrier Layer	0.047μF 25V
C405	Barrier Layer	0.047μF 25V
C406	Barrier Layer	0.047μF 25V
C407	Barrier Layer	0.047μF 25V
C408	Barrier Layer	0.047μF 25V
C409	Barrier Layer	0.047μF 25V
C410	Electrolytic	1μF 50V
C411	Array	8.2kΩ×7 B8ZC0111-32N
C501	Ceramic	0.0047μF 50V
C502	Ceramic	120pF DE1007 SL 121J 3KV
C503	Ceramic	120pF DE1007 SL 121J 3KV
C504	Ceramic	100pF DE1007 SL 121J 3KV
C505	Ceramic	100pF DE1007 SL 121J 3KV
C601	Barrier Layer	0.047μF 25V
C602	Barrier Layer	0.047μF 25V
C603	Variable	200pF UV44
C604	Variable	200pF UV44
RL101	Relay	RZ12
RL501	Relay	FBR323D012
RL502	Relay	FBR323D012
RL507	Relay	FBR313D012
RL508	Relay	FBR313D012
RL509	Relay	FBR313D012
RL510	Relay	FBR313D012
RL511	Relay	FBR313D012
RL512	Relay	FBR311D012
RL513	Relay	LY2-0 DC12V
J101	Connector	TL25P-03-V1
J102	Connector	TL25P-08-V1
J103	Connector	TL25P-03-V1
J104	Connector	TL25P-03-V1
J106	Connector	TL25P-08-V1
J107	Connector	TL25P-07-V1
J108	Connector	TL25P-03-V1
J201	Connector	TL25P-04-V1
J401	Connector	TL25P-07-V1
J402	Connector	TLB-P07-B1
J403	Connector	TLB-P03-B1
J404	Connector	TL25P-07-V1
J405	Connector	TL25P-04-V1
J406	Connector	TL25P-03-V1
J407	Connector	TL25P-03-V1
P101	Connector	TL25H-04-B1
P301	Connector	TL25H-03-B1
P402	Connector	TL25H-07-B1

[TUNER UNIT]

REF. NO.	DESCRIPTION	PART NO.
P403	Connector	TL25H-03-B1
P501	Connector	TL25H-03-B1
P502	Connector	TL25H-08-B1
P503	Connector	TMP-P01X-A1
P504	Connector	TMP-P01X-A1
P601	Connector	TL25H-08-B1
DS101	LED	TLR-123
DS102	LED	TLR-123
DS103	LED	TLR-123
DS104	LED	TLR-123
S101	Switch	EVQ-RBA
MF601	Motor	HMK2601-01-030
MF602	Motor	HMK2601-01-030
EP101	P.C. Board	B-1029C
EP201	P.C. Board	B-1053A
EP301	P.C. Board	B-557
EP401	P.C. Board	B-1360B
EP501	P.C. Board	B-1028B
EP502	P.C. Board	B-1082
W101	Jumper	JPW-02A
W102	Jumper	JPW-02H
W103	Jumper	JPW-02A
W104	Jumper	JPW-02A
W105	Jumper	JPW-02A
W106	Jumper	JPW-02A
W107	Jumper	JPW-02A
W108	Jumper	JPW-02A
W109	Jumper	JPW-02H
W110	Jumper	JPW-02A
W112	Jumper	JPW-02A
W113	Jumper	JPW-02A
W114	Jumper	JPW-02A
W115	Jumper	JPW-02A
W116	Jumper	JPW-02A
W117	Jumper	JPW-02A
W118	Jumper	JPW-02A
W119	Jumper	JPW-02A
W120	Jumper	JPW-02A
W121	Jumper	JPW-02A
W122	Jumper	JPW-02A
W123	Jumper	JPW-02A
W124	Jumper	JPW-02A
W125	Jumper	JPW-02A
W126	Jumper	JPW-02A
W127	Jumper	JPW-02A
W128	Jumper	JPW-02A
W505	Jumper	JPW-02A
W528	Jumper	JPW-02A

[SWITCHING REGULATOR UNIT]

REF. NO.	DESCRIPTION	PART NO.	
IC1	Photo Coupler	N-110	
IC2	IC	μPC1042C	
Q1	Transistor	2SA1015	
Q2	Transistor	2SC2501	
Q3	Transistor	2SC2501	
Q4	Transistor	2SC2307	
Q5	Transistor	2SC2307	
D1	Diode	KBPC806	
D2	Diode	1N4002	
D3	Diode	1N4002	
D4	Diode	40F2R15	
L1	Transformer	TP-22	
L2	Choke	LR-66	
L3	Choke	LR-67	
L4	Choke	102 LB4	
L5	Choke	LR-65A	
L6	Choke	TC-2A	
L7	Choke	TP-27	
L8	Transformer	TI-5	
R1	Resistor	68kΩ	R50
R2	Resistor	68kΩ	R50
R3	Resistor	150kΩ	R50
R4	Resistor	68kΩ	R25
R5	Resistor	3Ω	SRW2P
R6	Resistor	33Ω	ELR25
R7	Resistor	3.3kΩ	R25
R9	Resistor	10kΩ	ELR25
R10	Resistor	4.7kΩ	ELR25
R11	Resistor	470Ω	ELR25
R12	Resistor	68kΩ	R50
R13	Resistor	68kΩ	R50
R14	Trimmer	10kΩ	EVN5AC
R15	Resistor	15kΩ	ELR25
R16	Resistor	4.7kΩ	ELR25
R17	Resistor	4.7kΩ	ELR25
R18	Resistor	4.7kΩ	ELR25
R19	Trimmer	47kΩ	EVN5AC
R20	Resistor	10kΩ	ELR25
R21	Resistor	6.8kΩ	ELR25
R22	Resistor	3.9kΩ	ELR25
R23	Resistor	220kΩ	ELR25
R24	Resistor	10kΩ	ELR25
R25	Resistor	470Ω	ELR25
R26	Resistor	0.001Ω	5W
R27	Resistor	15kΩ	ELR25
R28	Resistor	4.7Ω	ELR25
R29	Resistor	4.7Ω	ELR25
R30	Resistor	4.7Ω	R25
R31	Resistor	4.7Ω	R25
R32	Resistor	22Ω	R25
R33	Resistor	22Ω	R25
R34	Resistor	100Ω	RSF3B
R35	Resistor	CRH200	R-02J220
R36	Resistor	CRH100X	R-02J3R9
R37	Absorber	ERZC07DK431	

[SWITCHING REGULATOR UNIT]

REF. NO.	DESCRIPTION	PART NO.	
C1	Ceramic	DE7100F222MAC400	
C2	Ceramic	DE7100F222MAC400	
C3	Ceramic	0.0022μF	500V
C4	Ceramic	0.0022μF	500V
C5	Ceramic	0.0022μF	500V
C6	Ceramic	0.0022μF	500V
C7	Electrolytic	CS042DRT681	
C8	Electrolytic	CS042DRT681	
C9	Electrolytic	10μF	16V
C10	Ceramic	0.01μF	50V
C11	Ceramic	0.01μF	50V
C12	Electrolytic	470μF	25V
C13	Monolithic	0.68μF	50V
		C76AF1H684Z	
C14	Electrolytic	2200μF	16V
C15	Ceramic	0.001μF	
		DE7090B102KAC400	
C16	Ceramic	0.001μF	
		DE7090B102KAC400	
C17	Ceramic	0.02μF	500V
C18	Electrolytic	33μF	250V
		250RJ33	
C19	Electrolytic	33μF	250V
		250RJ33	
C20	Ceramic	0.0022μF	
		DE7100F222MAC400	
C21	Ceramic	0.0047μF	50V
C22	Mylar	F2Z0.001	50V
C23	Metallized	3.3μF	400V
C24	Ceramic	0.0022μF	500V
C25	Ceramic	0.0022μF	500V
C26	Ceramic	0.0022μF	500V
C27	Ceramic	0.0047μF	500V
C28	Ceramic	0.02μF	500V
C29	Ceramic	330pF	50V
C30	Electrolytic	47μF	16V
		ECEA16Z470	
C31	Electrolytic	47μF	16V
		ECEA16Z470	
C32	Electrolytic	47μF	16V
		ECEA16Z470	
C33	Electrolytic	47μF	16V
		ECEA16Z470	
C34	Electrolytic	10μF	25V
C35	Barrier Layer	12μF DD410 SR 224M	
C36	Barrier Layer	12μF DD410 SR 224M	
C37	Mylar	F2Z0.022	50V
EP1	P.C. Board	B-609B	
RL1	Relay	VS12TBN-E	
P1	Connector	LLP-6	
P2	Connector	1545P1	

IC-761 SCHEMATIC DIAGRAM

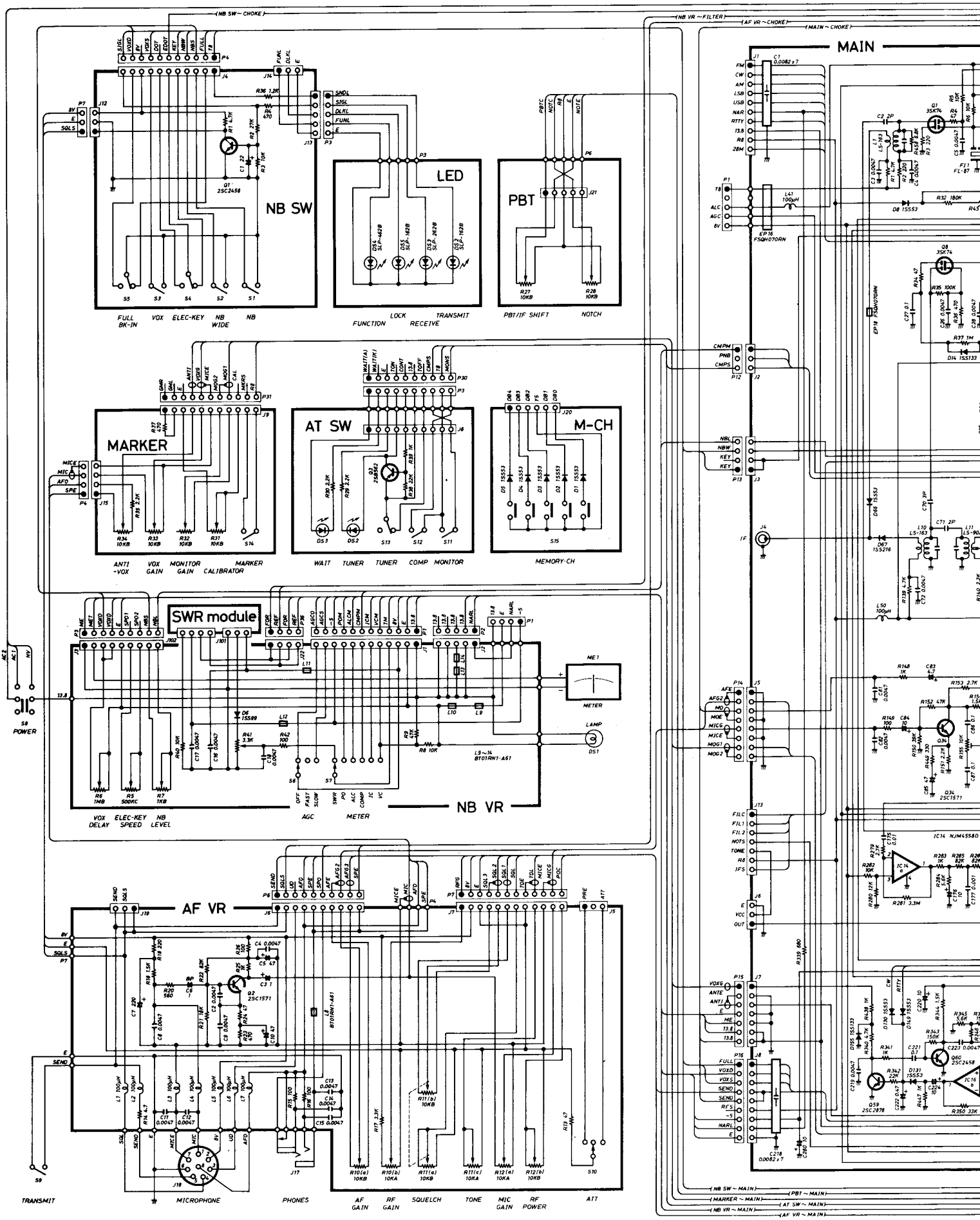

GRAM

MAIN

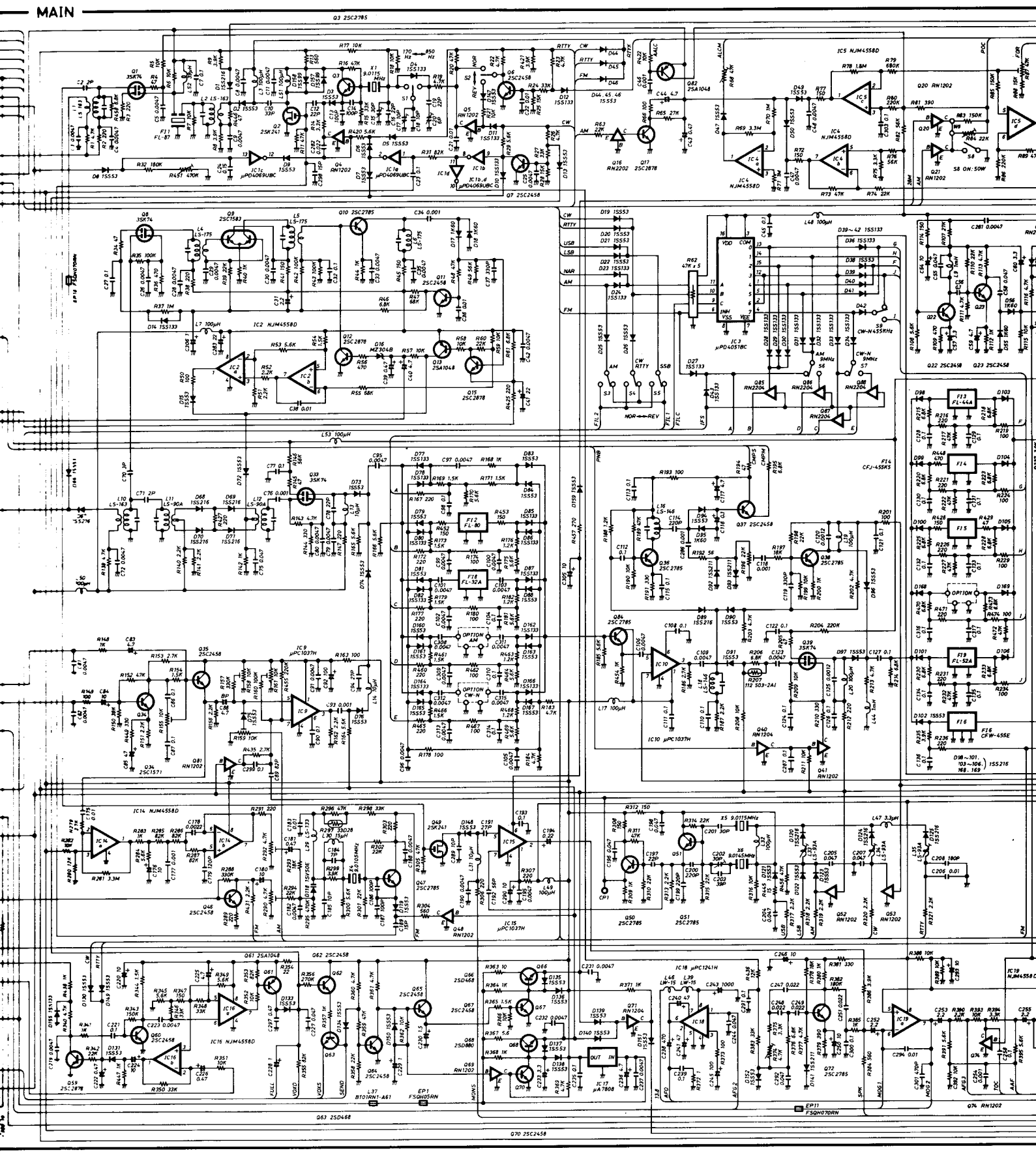

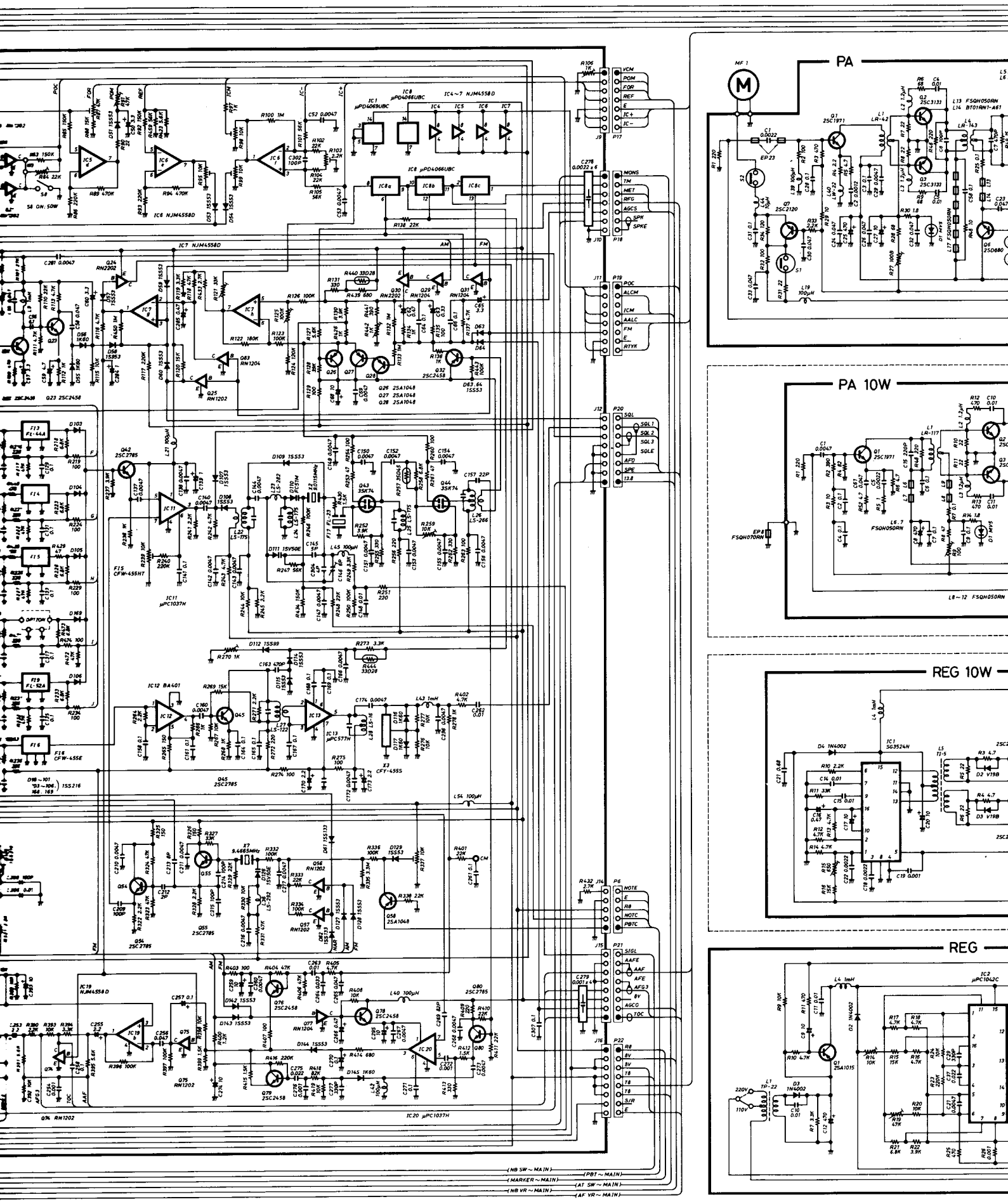
PA
PA 10W
REG 10W
REG
IC11 μPC1037H
IC12 BA401
IC13 μPC577H
IC19 NJM4558D
IC20 μPC1037H
IC1 μPD4069UBC
IC8 μPD4066UBC
IC4~7 NJM4558D
IC6 NJM4558D
IC7 NJM4558D
IC1 SG3524N
IC2 μPC1042C
(NB SW ~ MAIN)
(PBT ~ MAIN)
(MARKER ~ MAIN)
(AT SW ~ MAIN)
(NB VR ~ MAIN)
(AF VR ~ MAIN)

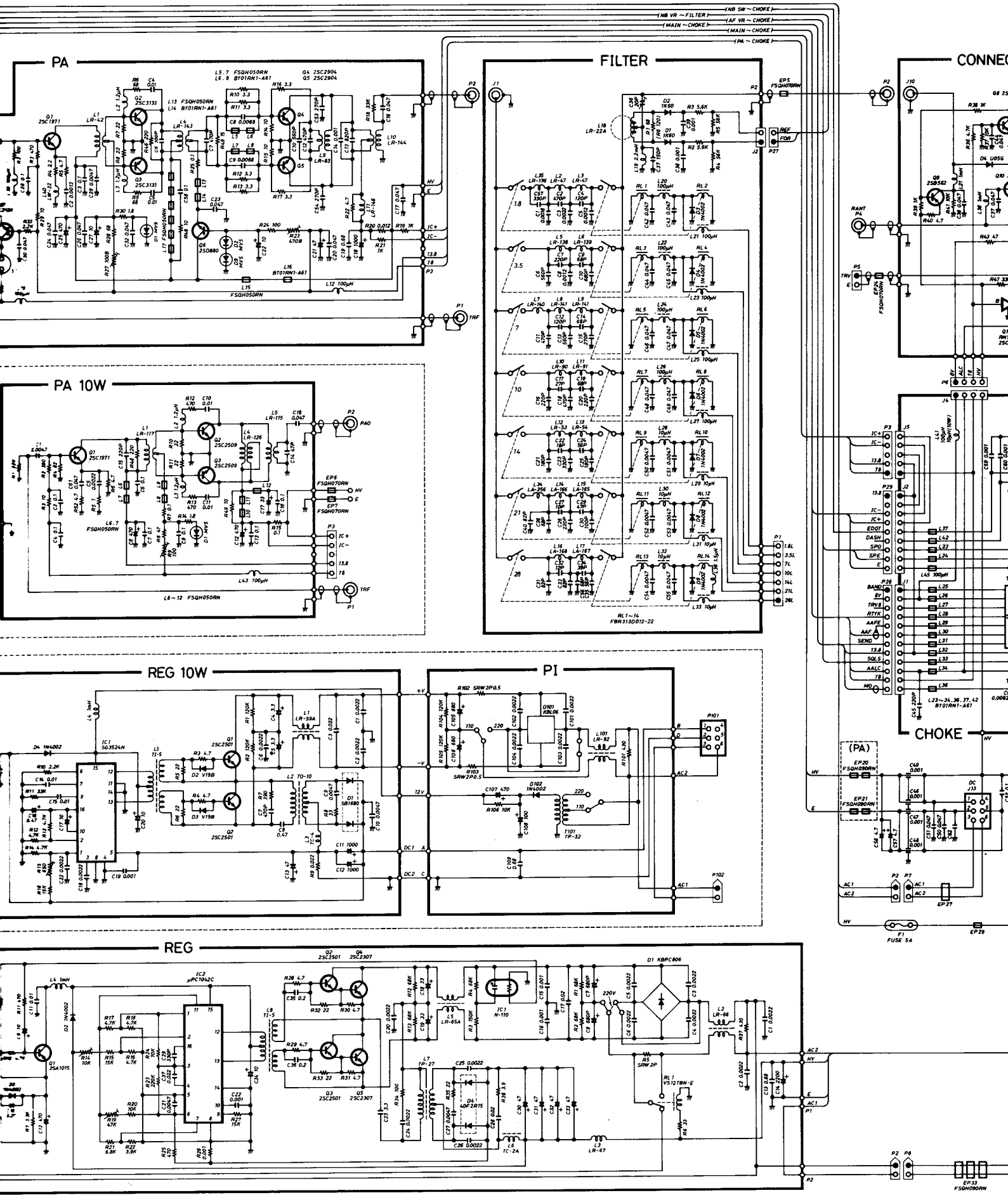

ICOM ICOM INCORPORATED

To upgrade quality, some components may be subject to change without notice.

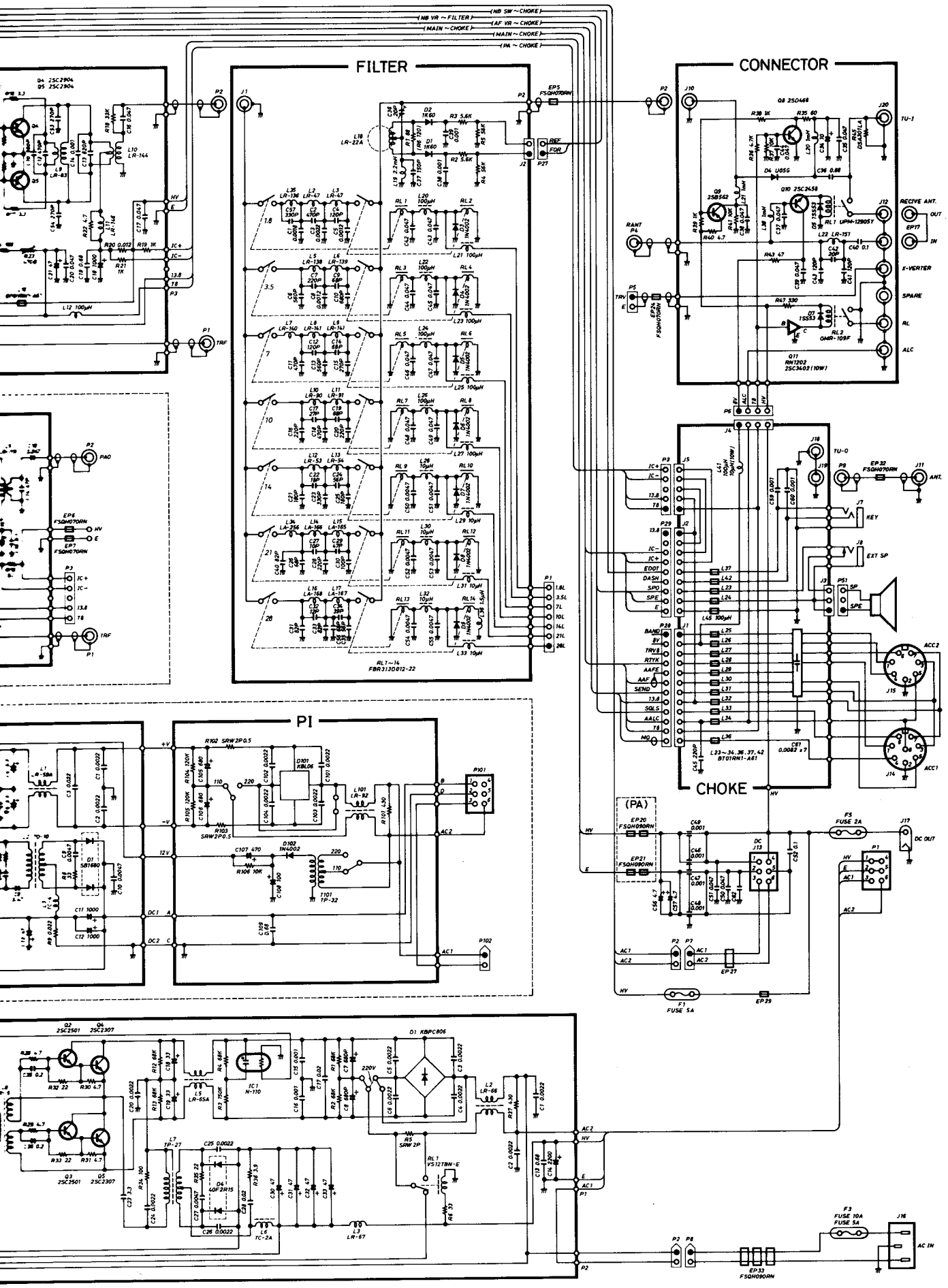

COM ICOM INCORPORATED

To upgrade quality, some components may be subject to change without notice.

A-0897①

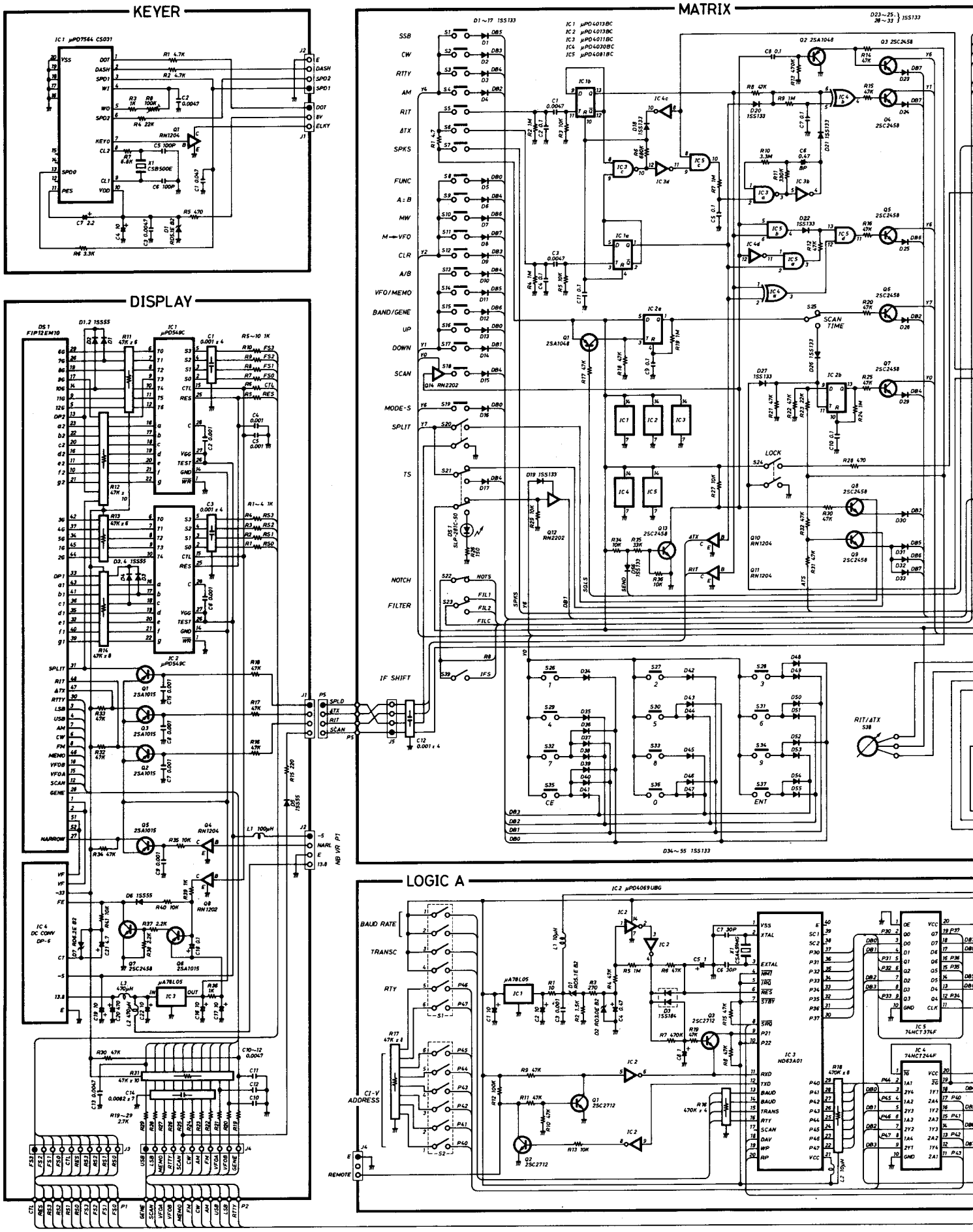
KEYER
MATRIX
DISPLAY
LOGIC A
SSB
CW
RTTY
AM
RIT
ΔTX
SPKS
FUNC
A:B
MW
M→VFO
CLR
A/B
VFO/MEMO
BAND/GENE
UP
DOWN
SCAN
MODE-S
SPLIT
TS
NOTCH
FILTER
IF SHIFT
SCAN TIME
LOCK
RIT/ΔTX
CE
ENT
BAUD RATE
TRANSC
RTY
CI-V ADDRESS
REMOTE

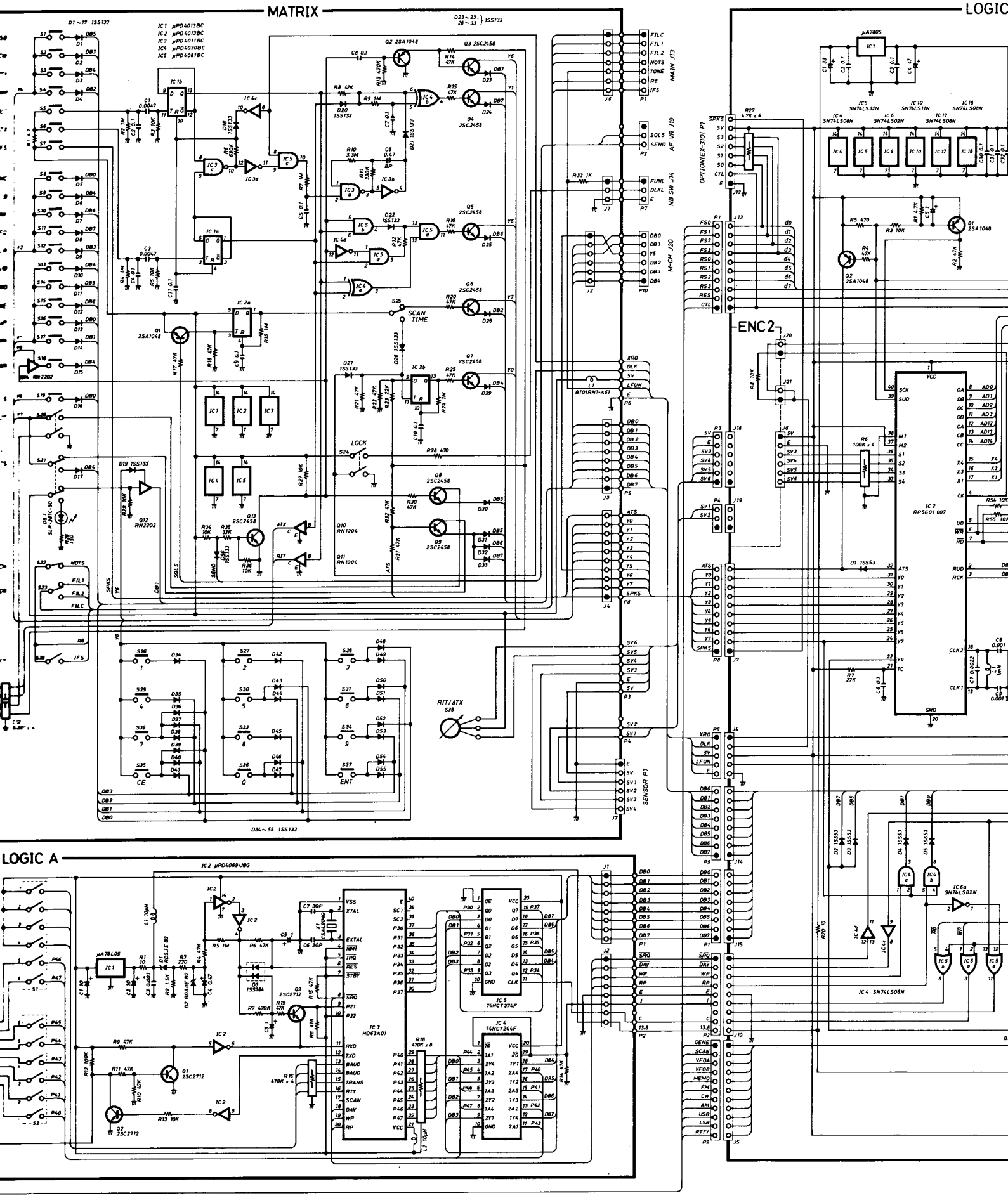
MATRIX
LOGIC
LOGIC A
ENC2
MAIN J13
AF VR J19
NB SW J14
M-CH J20
SENSOR P7
OPTION(EX-310) P1
SCAN TIME
LOCK
RIT/ΔTX
IC 2 RP5G01 007
IC 3 HD63A01
IC 5 74HCT374F
IC 4 74HCT244F
IC 1 μA78L05
IC 1 μA7805

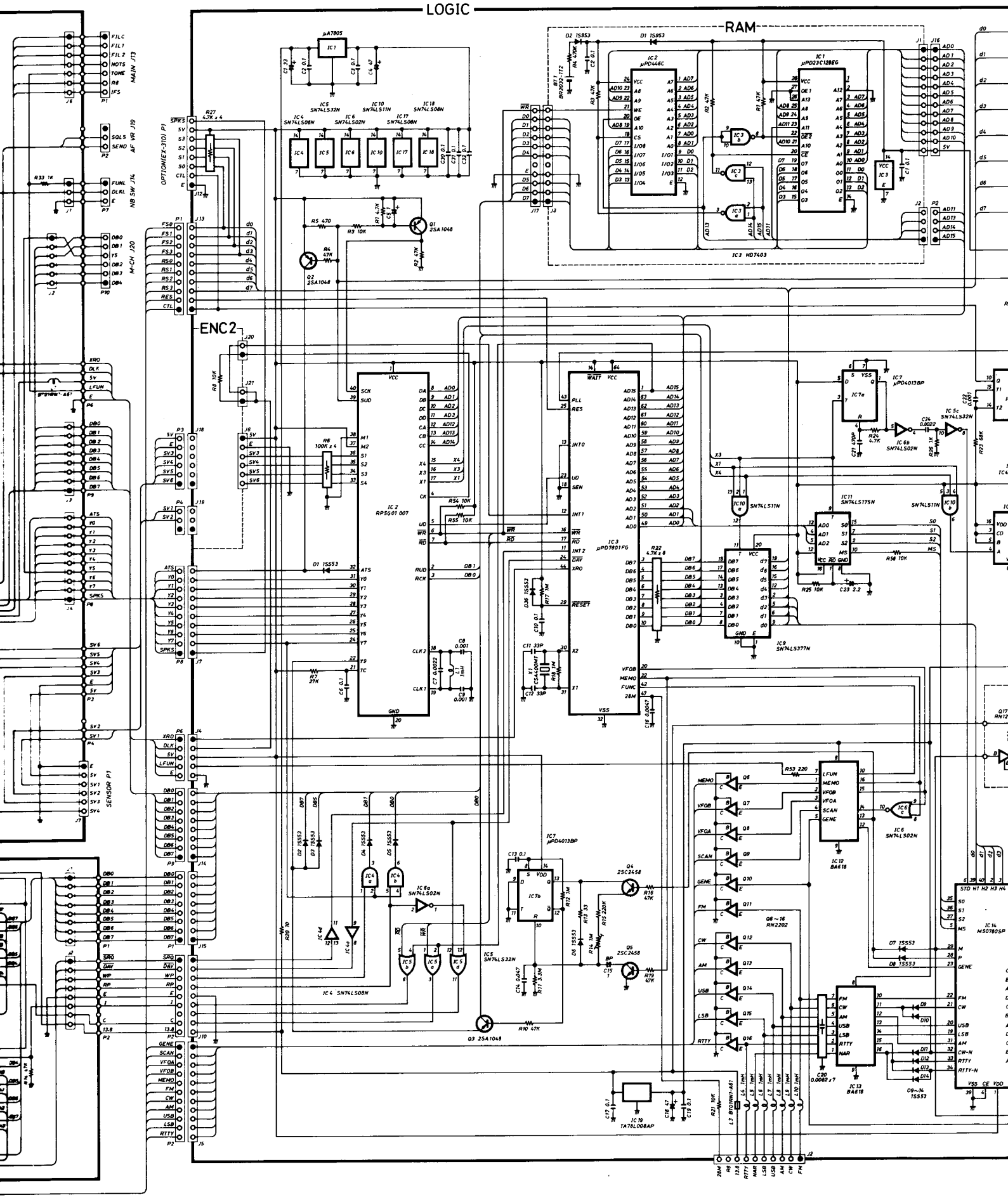
LOGIC
RAM
ENC2
MAIN J13
AF WR J19
NB SW J14
M-CH J20
SENSOR P7
OPTION(EX-310) P1
IC 1 μA7805
IC 2 μPD446C
IC 1 μPD23C128EG
IC 3 HD7403
IC 2 RP5G01 007
IC 3 μPD7801FG
IC 7 μPD4013BP
IC 11 SN74LS175N
IC 9 SN74LS377N
IC 12 BA618
IC 13 BA618
IC 14 M50780SP
IC 19 TA78L008AP
IC 4 SN74LS08N
IC 5 SN74LS32N
IC 6 SN74LS02N
IC 10 SN74LS11N
IC 17 SN74LS08N
IC 18 SN74LS08N
Q1 2SA1048
Q2 2SA1048
Q3 2SA1048
Q4 2SC2458
Q5 2SC2458
Q6~16 RN2202
STD N1 N2 N3 N4
VSS CE VDD

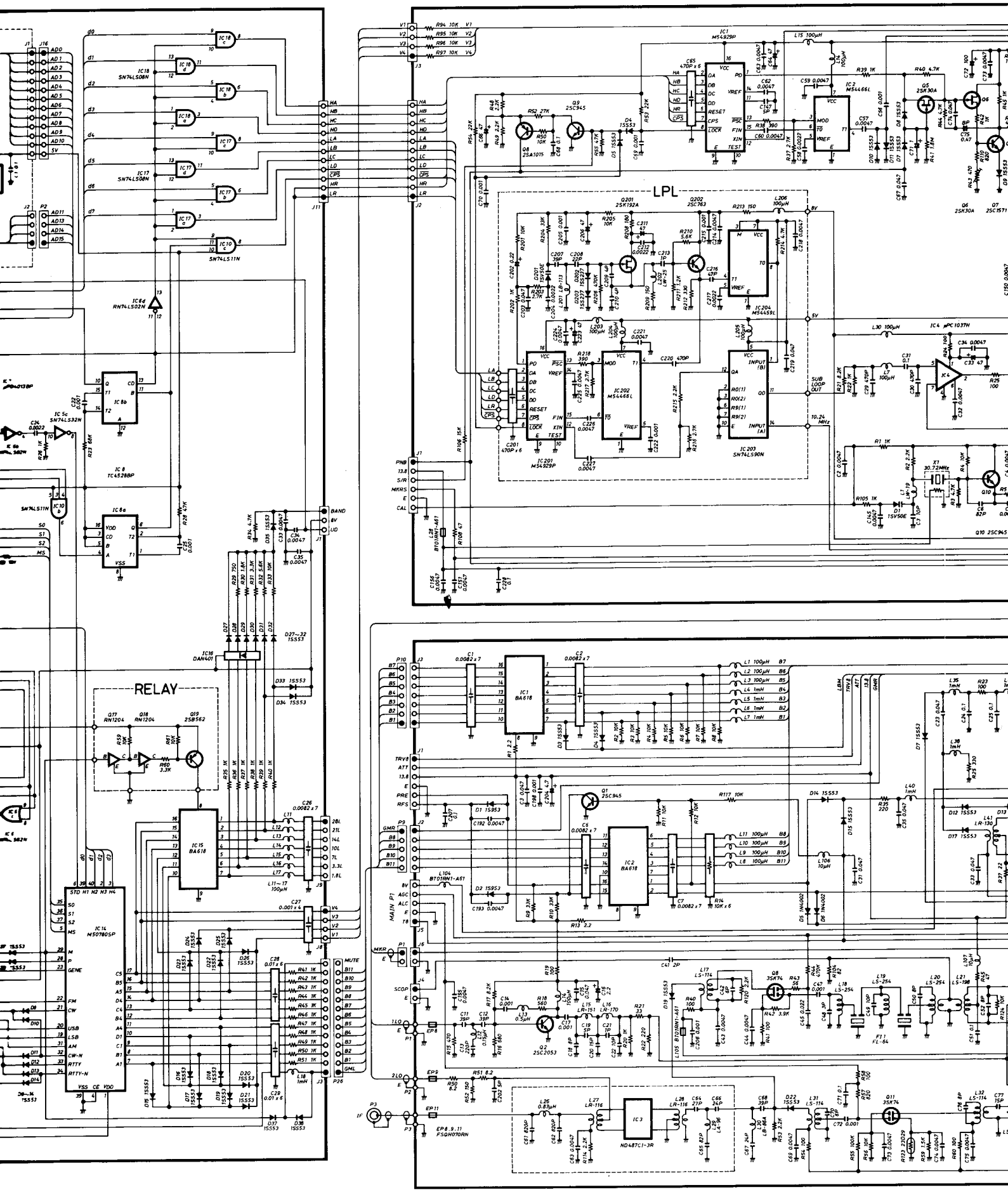

ICOM ICOM

PLL

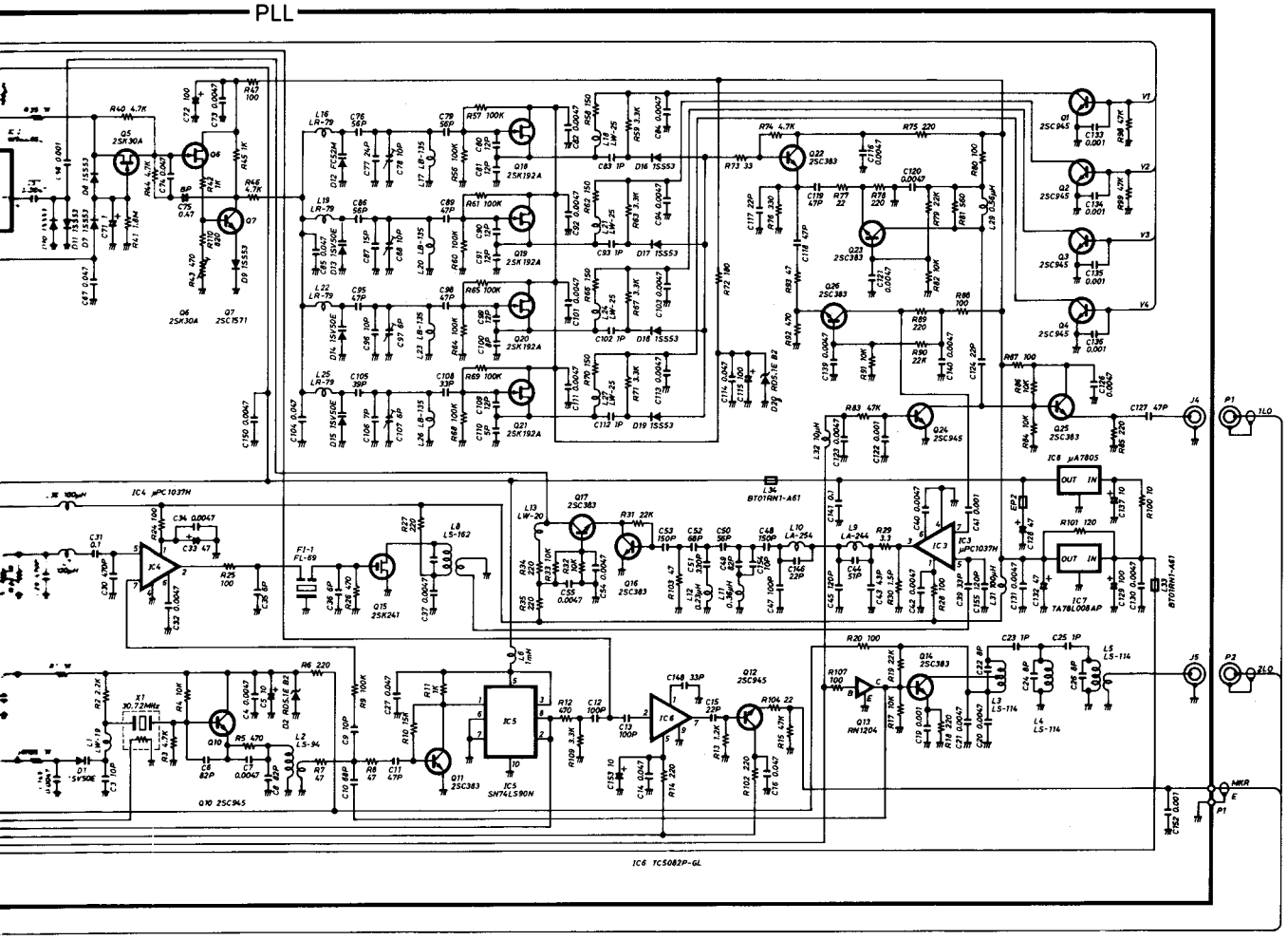

RF

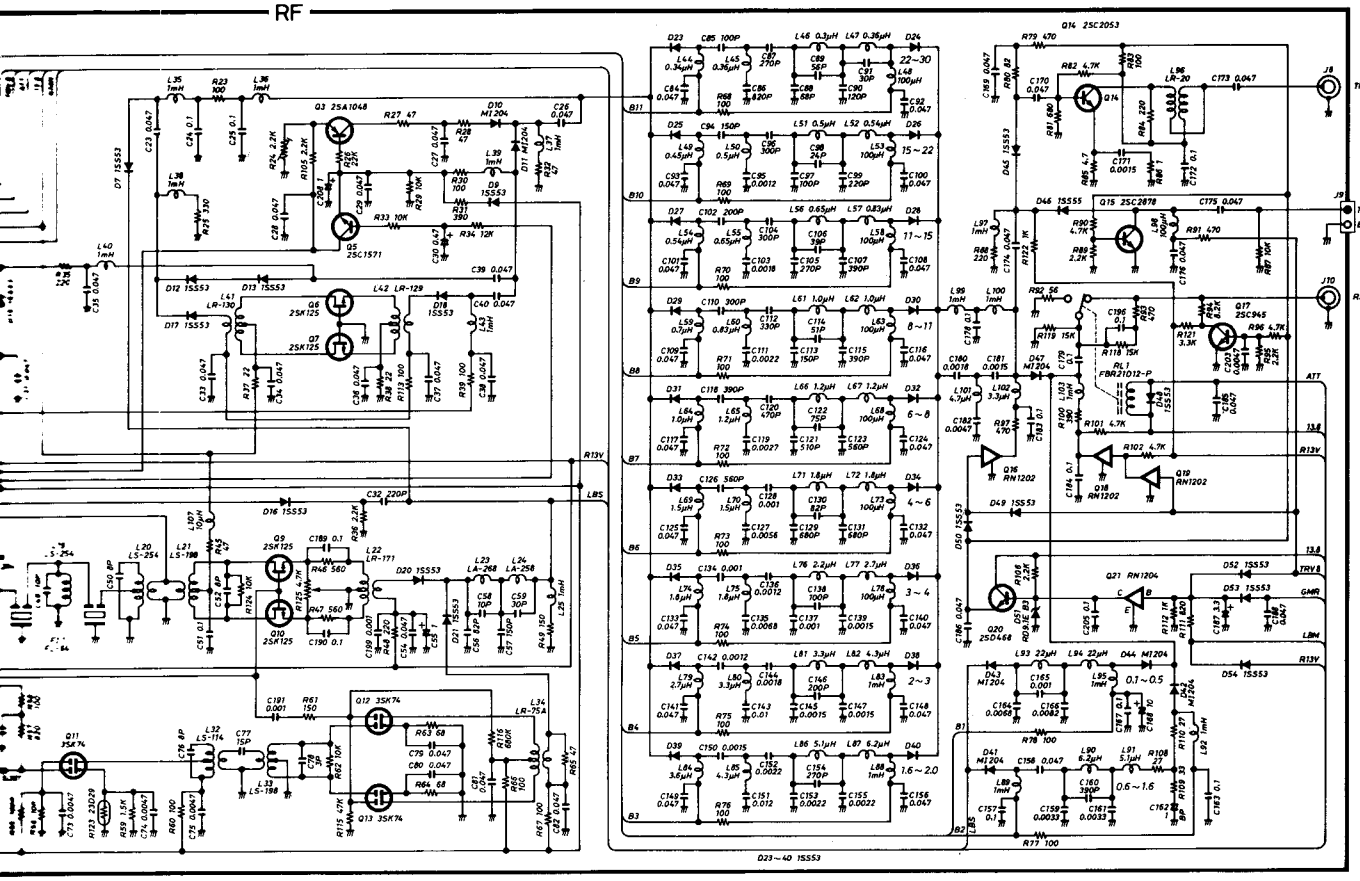

To upgrade quality, some components may be subject to change without notice.

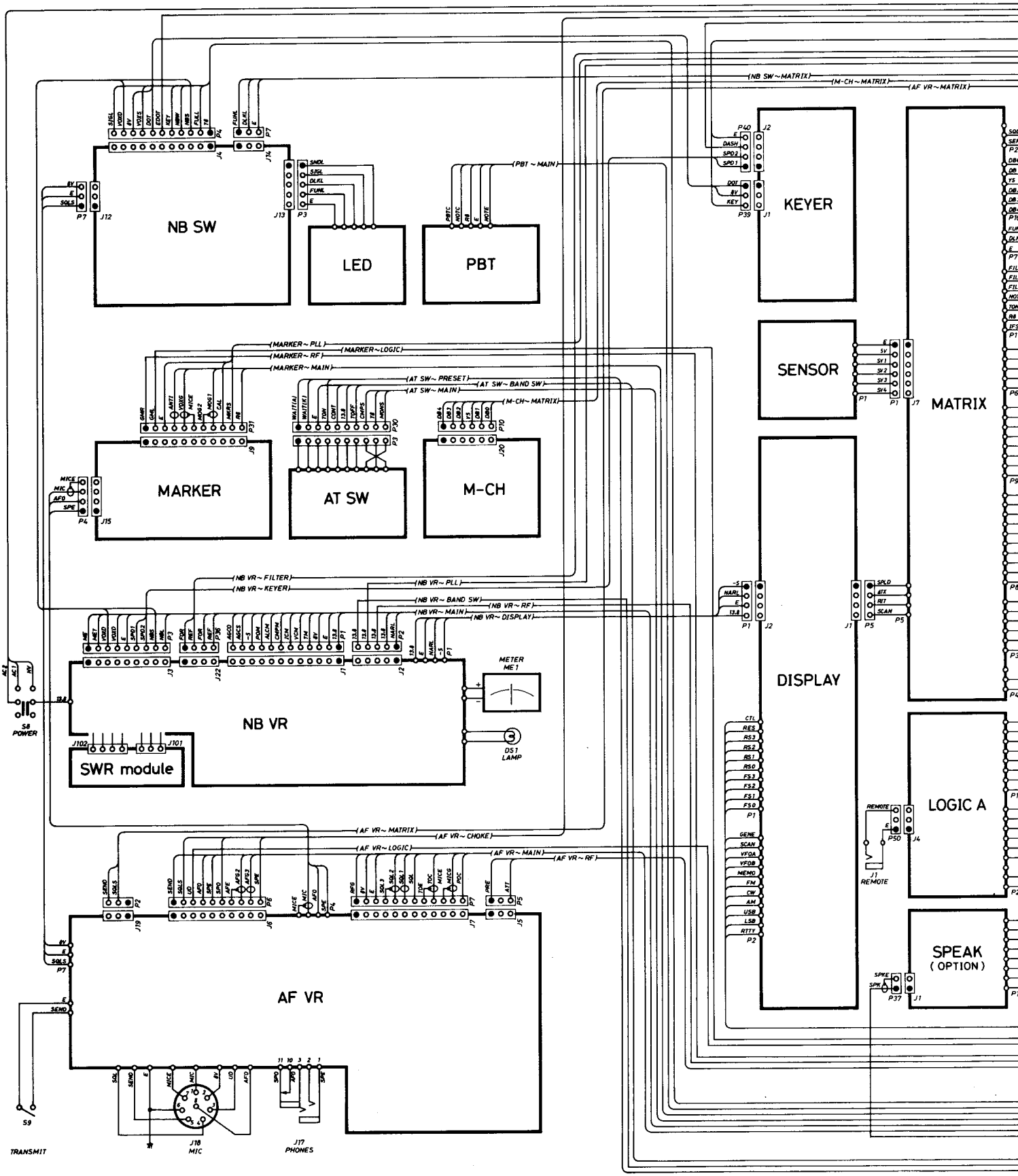

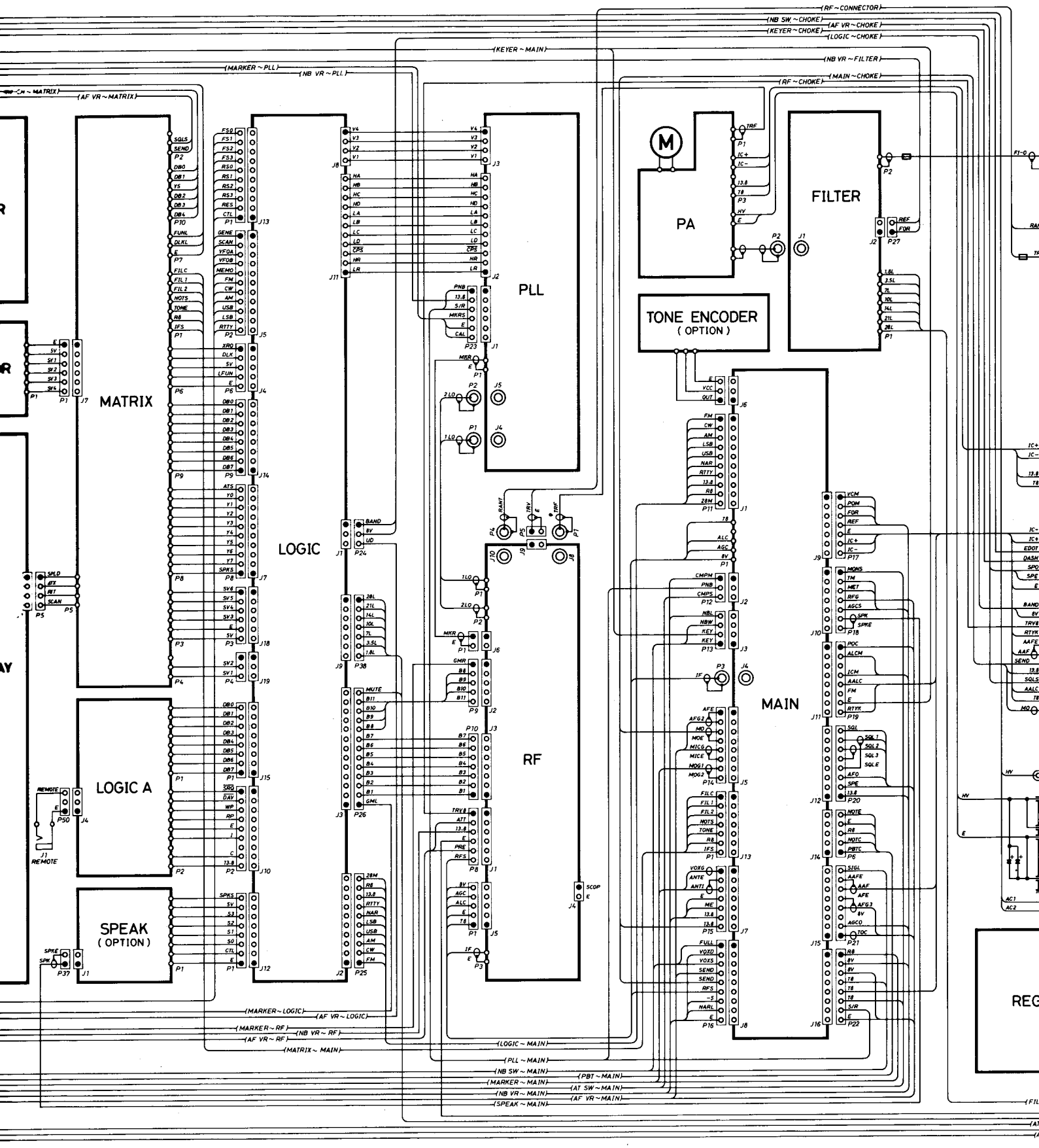
MATRIX
LOGIC
LOGIC A
SPEAK
(OPTION)
PLL
RF
PA
FILTER
TONE ENCODER
(OPTION)
MAIN
REGULATOR
(RF ~ CONNECTOR)
(NB SW ~ CHOKE)
(AF VR ~ CHOKE)
(KEYER ~ CHOKE)
(LOGIC ~ CHOKE)
(KEYER ~ MAIN)
(NB VR ~ FILTER)
(MAIN ~ CHOKE)
(RF ~ CHOKE)
(MARKER ~ PLL)
(NB VR ~ PLL)
(AF VR ~ MATRIX)
(MARKER ~ LOGIC)
(AF VR ~ LOGIC)
(MARKER ~ RF)
(NB VR ~ RF)
(AF VR ~ RF)
(MATRIX ~ MAIN)
(LOGIC ~ MAIN)
(PLL ~ MAIN)
(NB SW ~ MAIN)
(PBT ~ MAIN)
(MARKER ~ MAIN)
(AF SW ~ MAIN)
(NB VR ~ MAIN)
(AF VR ~ MAIN)
(SPEAK ~ MAIN)

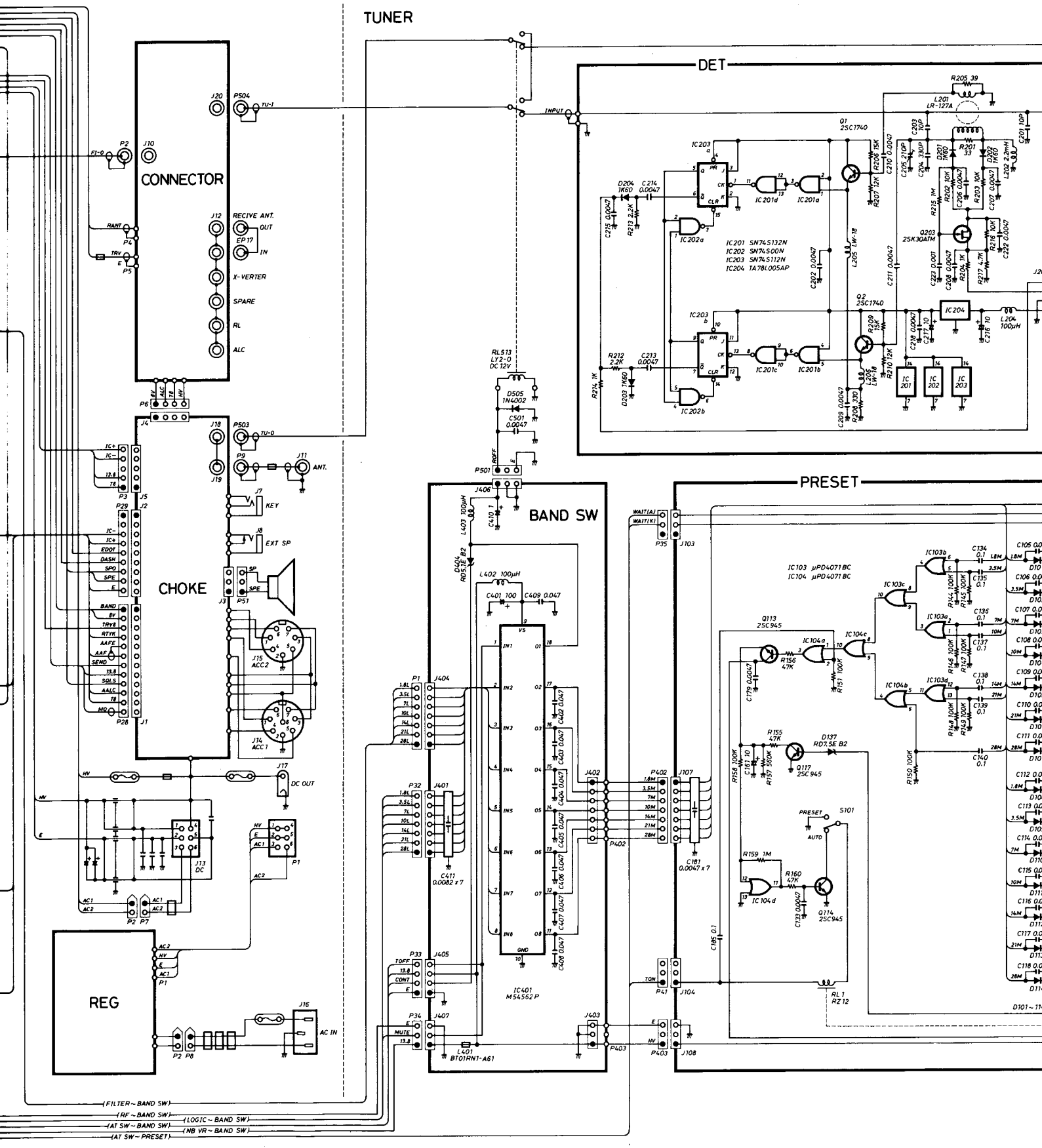
TUNER
DET
CONNECTOR
CHOKE
BAND SW
PRESET
REG
IC201 SN74S132N
IC202 SN74S00N
IC203 SN74S112N
IC204 TA78L005AP
IC401 M54562P
IC103 μPD4071BC
IC104 μPD4071BC
(FILTER ~ BAND SW)
(RF ~ BAND SW)
(AT SW ~ BAND SW)
(LOGIC ~ BAND SW)
(NB VR ~ BAND SW)
(AT SW ~ PRESET)

ICOM ICOM

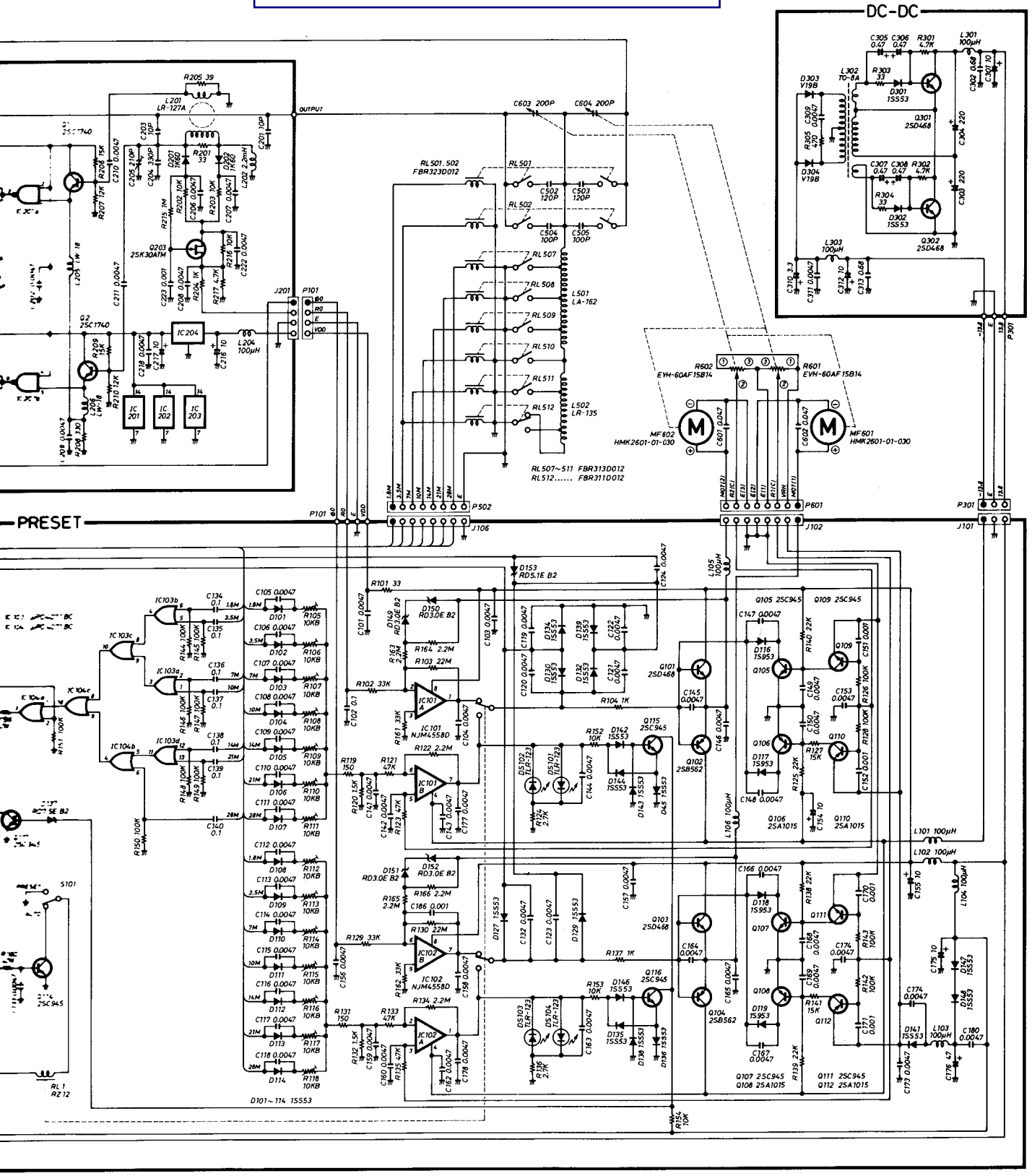

ICOM ICOM INCORPORATED

To upgrade quality, some components may be subject to change without notice.

A-0897③

ICOM

ICOM INCORPORATED

1-6-19, Kamikuratsukuri, Hirano-ku, Osaka 547, Japan
Phone: (06) 793-5301
Telex : 05277822 ICOMTR J
Fax : (06) 793-0013

ICOM AMERICA, INC.,
2380 116th Avenue N.E.,
Bellevue, WA 98004
Phone: (206) 454-8155
Telex : 230-152210 ICOM AMER BVUE
Fax : (206) 454-1509

3150 Premier Drive, Suite 126,
Irving, TX 75063
Phone: (214) 550-7525
Fax : (214) 550-7423

1777 Phoenix Parkway, Suite 201,
Atlanta, GA 30349
Phone: (404) 991-6166

ICOM CANADA, LTD.,
3071-#5 Road, Unit 9,
Richmond, B.C.,
Canada V6X 2T4
Phone: (604) 273-7400
Fax : (604) 273-1900

ICOM (EUROPE) GmbH,
Himmelgeister Strasse 100,
4000 Düsseldorf 1,
West Germany
Phone: 0211-346047
Telex : 41-8588082 ICOM D
Fax : 0211-333639

ICOM AUSTRALIA, PTY., LTD.,
7 Duke Street, Windsor 3181,
Victoria, Australia
Phone: (03) 529-7582
Telex : 71-35521 ICOMAS
Fax : (03) 529-8485