ICOM

SERVICE MANUAL

HF RECEIVER

IC-R72

Icom Inc.

INTRODUCTION

This service manual describes the latest service information at the time of publication for the **IC-R72** HF RECEIVER and covers the following versions:

VERSION NO.	VERSION	SYMBOL
#2, #12*	U.S.A.	USA
#3, #13*	Europe	EUR
#4, #14*	Australia	AUS
#5, #15*	Germany	FRG

* These versions can operate with AC power, DC power, or a back-up battery.

To upgrade quality, all electrical or mechanical parts and internal circuits are subject to change without notice or obligation.

DANGER

Use **ONLY** the specified AC voltage described on the AC power socket. Other voltages may cause receiver damage or personal injury.

NEVER connect the receiver to a DC power supply that uses more than 16 V. This will ruin the receiver.

DO NOT reverse the polarities of the DC power supply when connecting the receiver.

DO NOT expose the receiver to rain, snow or any liquids.

DO NOT apply an RF signal of more than 20 dBm (100 mW) to the antenna connector. This could damage the receiver's front end.

ORDERING PARTS

Be sure to include the following four points when ordering replacement parts:

1. 10-digit order numbers
2. Component part number and name
3. Equipment model name and unit name
4. Quantity required

<SAMPLE ORDER>

1110001310	IC	µPC577HA	IC-R72 MAIN UNIT	5 pieces
8810003110	Screw	FH M3 × 11 ZK BS	IC-R72 Top cover	10 pieces

Addresses are provided on the inside back cover for your convenience.

REPAIR NOTE

1. Make sure a problem is internal before disassembling the receiver.
2. **DO NOT** open the receiver until the receiver is disconnected from the power source.
3. **DO NOT** force any of the variable components. Turn them slowly and smoothly.
4. **DO NOT** short any circuits or electronic parts. An insulated tuning tool **MUST** be used for all adjustments.
5. **DO NOT** keep power ON for a long time when the receiver is defective.
6. **READ** the instructions of test equipment thoroughly before connecting equipment to the receiver.

TABLE OF CONTENTS

SECTION 1 SPECIFICATIONS

- Frequency coverage :

VERSION	FREQUENCY COVERAGE
U.S.A., Europe Australia	30 kHz~30 MHz*
Germany	150 kHz~26.1 MHz

*Specifications guaranteed for 100 kHz~30 MHz

- Mode : SSB (A3J), AM (A3), FM (F3), CW (A1)
  (Optional UI-8 is required for FM mode.)
- Receive system : SSB, AM, CW Double-conversion superheterodyne
  FM Triple-conversion superheterodyne
- Intermediate frequencies :

	SSB	CW	AM	FM
1st	70.4515	70.4506	70.4500	70.4500
2nd	9.0115	9.0106	9.0100	9.0100
3rd	—	—	—	0.4550

Unit: MHz

- Sensitivity : 0.1~1.8 MHz
  SSB, CW Less than 2.0 μV for 10 dB S/N
  AM Less than 12.6 μV for 10 dB S/N
  1.8~30 MHz (preamp on)
  SSB, CW Less than 0.16 μV for 10 dB S/N
  AM Less than 2.0 μV for 10 dB S/N
  28~30 MHz (preamp on)
  FM Less than 0.5 μV for 12 dB SINAD
- Selectivity : SSB, CW, AM narrow More than 2.3 kHz/−6 dB
  Less than 4 kHz/−60 dB
  AM More than 6 kHz/−6 dB
  Less than 20 kHz/−50 dB
  FM More than 15 kHz/−6 dB
  Less than 30 kHz/−50 dB
- Audio output power : More than 2.5 W at 10 % distortion with an 8 Ω load
- Audio output impedance : 8 Ω
- Power supply requirement : 117, 220, 240 V AC or 13.8 V DC ±15 % (U.S.A., Europe, and Australia versions)
  220 V AC (Germany version)
- Antenna impedance : 50 Ω or 500 Ω (unbalanced)
- Squelch sensitivity (threshold) : SSB Less than 10 μV
  FM Less than 0.4 μV
- Current drain (13.8 V DC) : Squelched 1.0 A
  Max. audio output 1.2 A
- Spurious and image rejection : More than 70 dB
- Usable temperature range : −10 °C~+60 °C (+14 °F~+140 °F)
- Frequency stability : Less than ±200 Hz (+25 °C; +77 °F, 1 min.~1 hour after power is ON)
  Less than ±30 Hz (+25 °C; +77 °F, after 1 hour)
  Less than ±350 Hz (0 °C~+50 °C; +32 °F~+122 °F)
- Dimensions : 241 (W)×94 (H)×229 (D) mm 9.5 (W)×3.7 (H)×9.0 (D) in
  (projections not included)
- Weight : 4.8 kg (10.6 lb) (back-up battery not included)

All stated specifications are subject to change without notice or obligation.

SECTION 2 INSIDE VIEWS

• MAIN UNIT

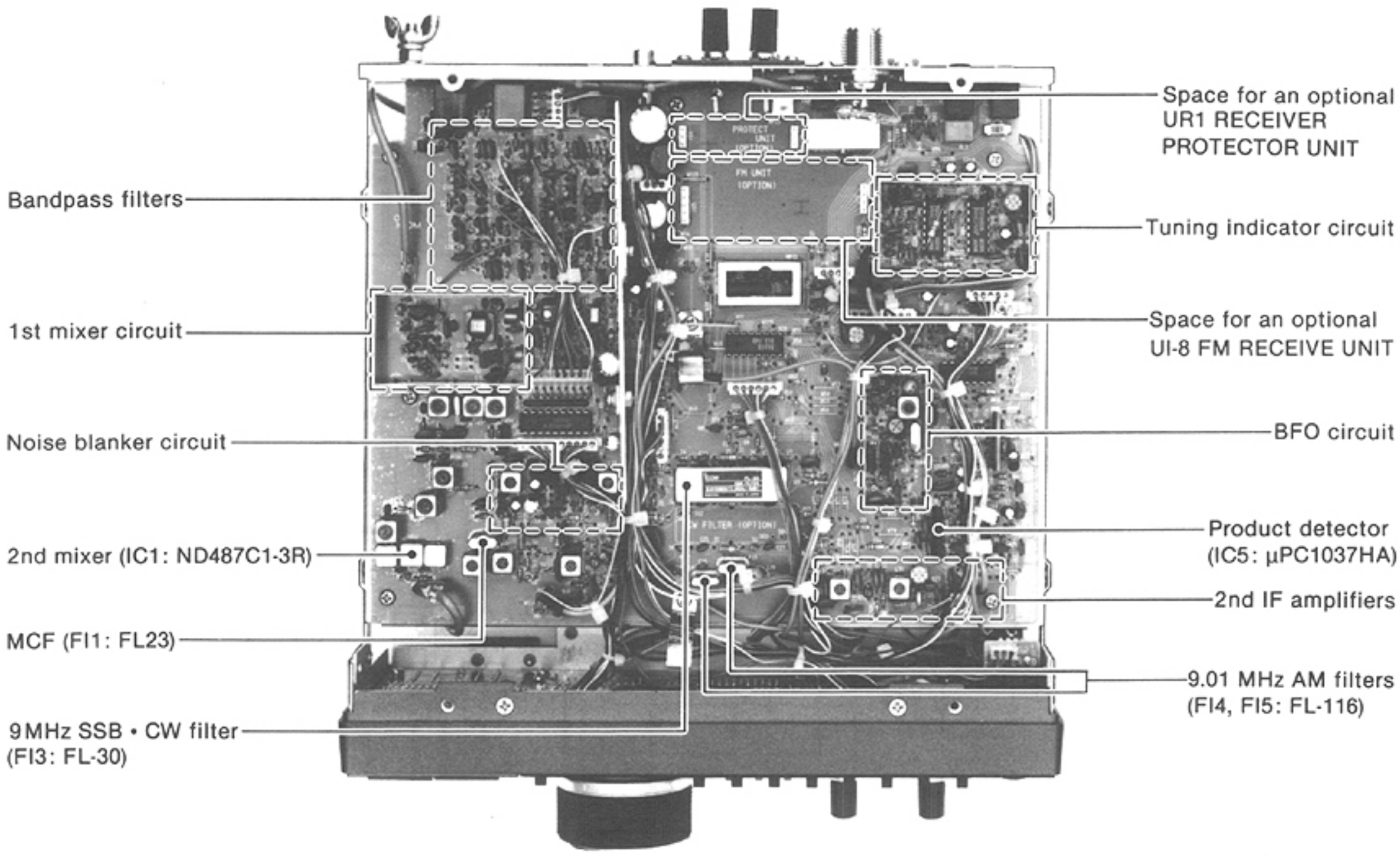

• PLL UNIT

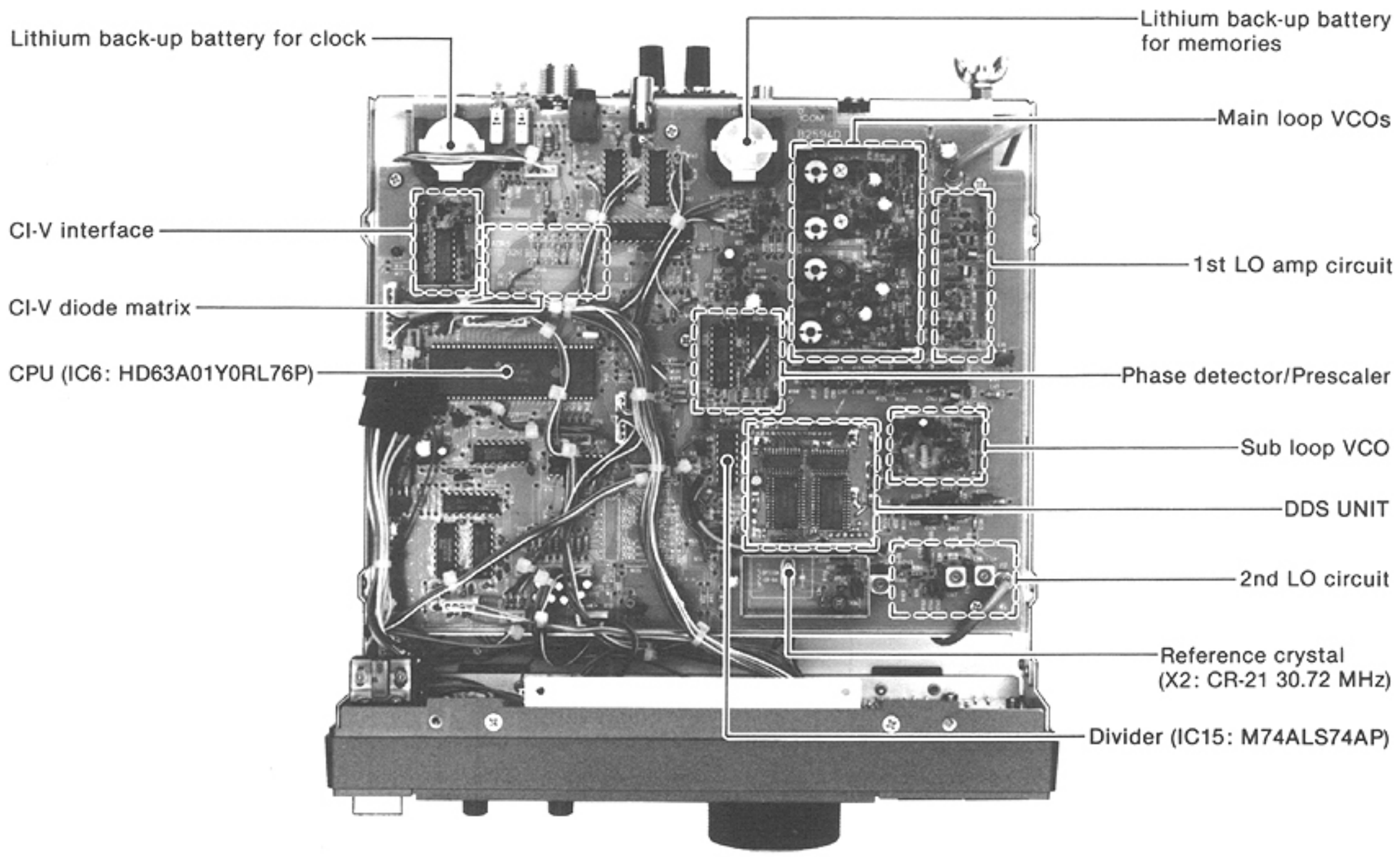

SECTION 3 BLOCK DIAGRAM

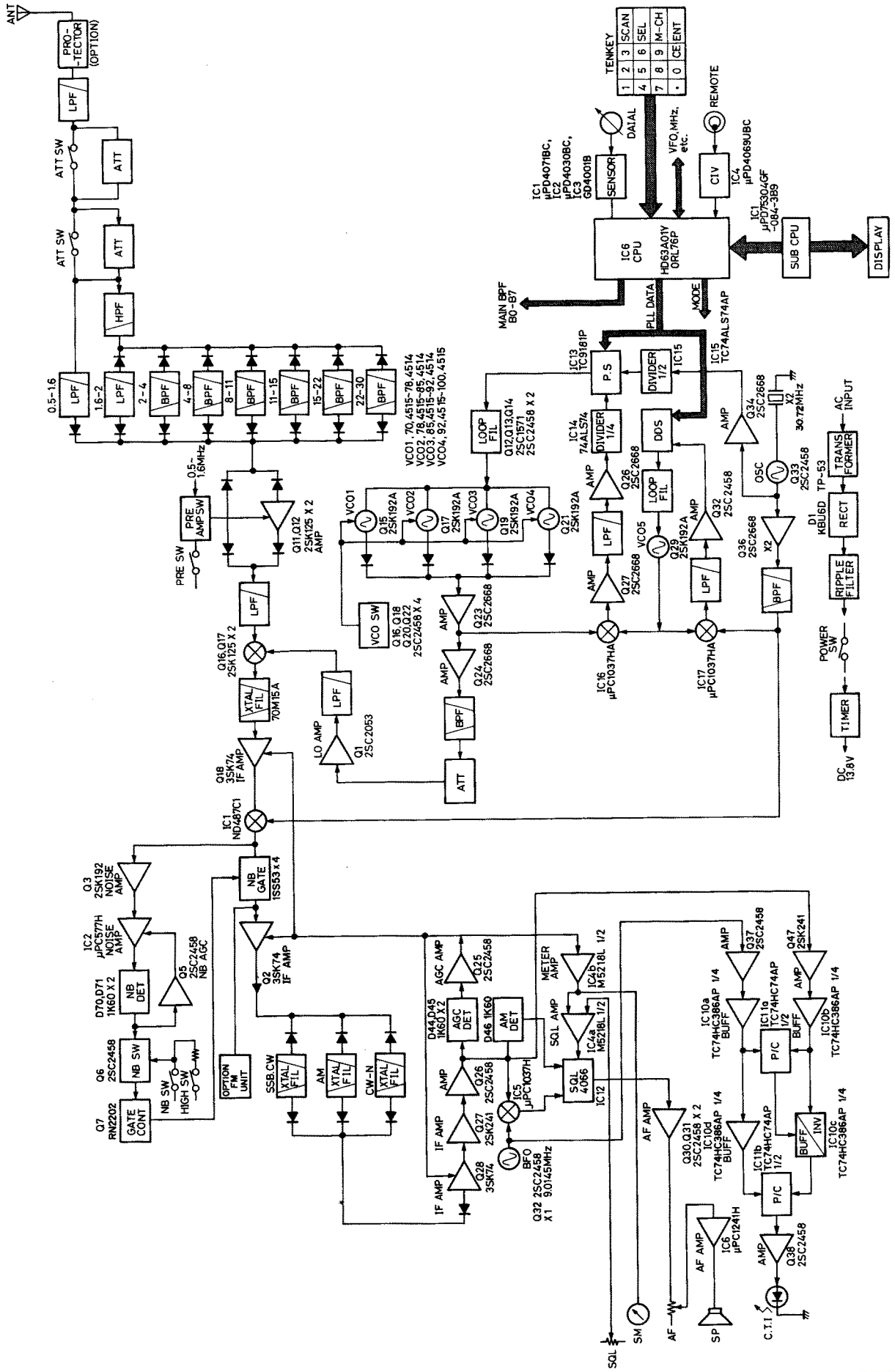

SECTION 4 CIRCUIT DESCRIPTION

4-1 RECEIVER CIRCUITS

4-1-1 RF SWITCHING CIRCUIT (MAIN UNIT)

The IC-R72 has two antenna connectors. RF signals enter either the [50 Ω ANT] or [500 Ω ANT] connector.

RF signals from the [50 Ω ANT] connector pass through a low-pass filter (C49, C50, L79, L80) and then are applied to J13.

RF signals from the [500 Ω ANT] connector pass through L19 to obtain clear reception and then are applied to the low-pass filter via J13.

4-1-2 RF BANDPASS FILTER CIRCUIT (MAIN UNIT)

Either the signals bypass or pass through attenuator circuits. The attenuator circuits consist of 10 dB and 20 dB attenuators. The signals are attenuated at 30 dB when passing through the attenuators. This system excludes non-linear components between an antenna connector and an attenuator to prevent strong signals from causing distortion. The signals are then applied to the RF filters. The MAIN UNIT has 6 RF bandpass filters for signals above 2.0 MHz and 2 low-pass filters for signals below 2.0 MHz.

(1) 0.5~1.6 MHz

The signals are applied to a low-pass filter consisting of C54~C57, L21, L22. A diode is removed at the entrance of the low-pass filter. This device prevents the diode from causing distortion when receiving very strong signals. A switching diode (D22) is turned on when the "B0" line is "HIGH". The filtered signals bypass a preamplifier circuit (Q11, Q12) and then are applied to a 1st mixer circuit (Q16, Q17) via D37, D39.

(2) 1.6~30MHz

The signals are applied to a high-pass filter consisting of C59~C63, L24, L25. This filter suppresses strong signals below 1.6 MHz such as broadcasting stations.

The filtered signals below 2.0 MHz are applied to a low-pass filter via a switching diode (D23). The switching diodes (D23, D24) are turned ON when the "B1" line is "HIGH."

The filtered signals above 2.0 MHz are applied to one of 6 bandpass filters depending on the receive frequencies.

After passing through a bandpass or low-pass filter, the signals are applied to the preamplifier circuit (Q11, Q12).

(3) FILTER SWITCHING CIRCUIT

The RF bandpass filter corresponds to the BPF switching voltage (B0~B7) based on the CPU via a current amplifier (IC3). The switching voltage of the BPF entrance is higher than the BPF exit to improve multi-signal and strong signal characteristics.

4-1-3 PREAMPLIFIER CIRCUIT (MAIN UNIT)

The preamplifier circuit uses low-noise junction FETs (Q8, Q9 2SK125×2) to provide 10 dB gain over a wide frequency range.

When the [PREAMP] switch is turned ON, the signals from the RF filter are amplified by the preamplifier circuit (Q11, Q12). When the [PREAMP] switch is turned OFF, the signals bypass the preamplifier through D37 and D39. When the operating frequency is below 1.6 MHz, a bypass switch (Q15) is turned ON. The signals bypass the preamplifier regardless of the [PREAMP] switch.

The amplified or bypassed signals are applied to the 1st mixer circuit (Q16, Q17) via a low-pass filter. The low-pass filter attenuates at 35 MHz to suppress image frequency.

• RF BANDPASS AND PREAMP CIRCUITS

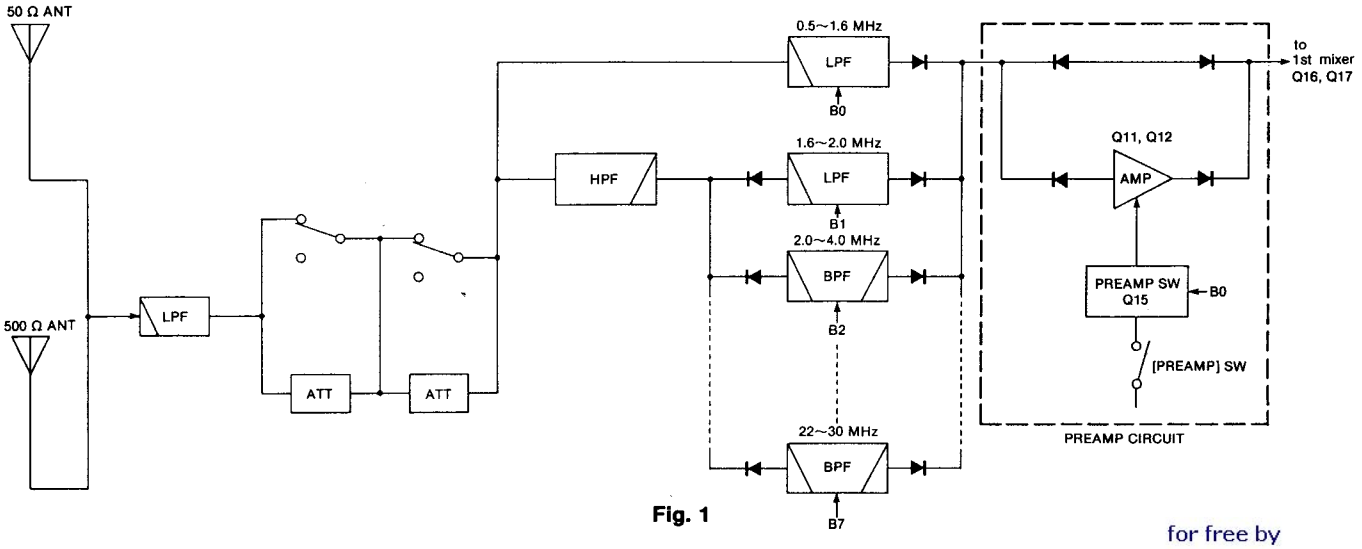

Fig. 1

4-1-4 1ST MIXER CIRCUIT (MAIN UNIT)

The filtered signals are mixed with a 70.9515~100.4515 MHz 1st LO signal to produce a 70.45 MHz 1st IF signal at the 1st mixer circuit (Q16, Q17.)

1ST IF FREQUENCY

MODE	FREQUENCY (MHz)
SSB	70.4515
CW	70.4506
AM, FM	70.4500

The 1st mixer circuit employs a balanced mixer using low-noise junction FETs (Q16, Q17 2SK125×2) to expand the dynamic range.

The 70.9515~100.4515 MHz 1st LO signal is applied to an LO amplifier (Q1) from the PLL UNIT via J1. The amplifier outputs approx. 25 dBm. The signal is applied to a low-pass filter. The low-pass filter employs a ring core inductor to prevent leakage from the 1st LO signal. The filtered signal is applied to the 1st mixer circuit.

The 1st IF signal is applied to a MCF (Monolithic Crystal Filter; FI2) to suppress out-of-band signals. The filtered signal is amplified at a 1st IF amplifier (Q18) and then applied to a 2nd mixer circuit (IC1).

4-1-5 IF CIRCUITS (MAIN UNIT)

The 1st IF signal is mixed with a 61.44 MHz 2nd LO signal to produce a 9 MHz 2nd IF signal at the 2nd mixer (IC1). IC1 is a DBM (Double Balanced Mixer). The 61.44 MHz 2nd LO signal is applied to the 2nd mixer from the PLL UNIT via J2.

2ND IF FREQUENCY(MHz)

MODE	FREQUENCY (MHz)
SSB	9.0115
CW	9.0106
AM, FM	9.0100

The 9 MHz 2nd IF signal is applied to the MCF (FI1) to suppress unwanted signals.

The filtered signal enters the noise blanker gate (D1~D4). The signal is applied to L12 to obtain clear reception and is then amplified at the 2nd IF amplifier (Q2). The amplifier outputs approx. 22 dBm. The signal passes through a loose resonator circuit (C22, L13) and then is applied either to one of the four 9 MHz filters (FI3, FI4, FI5, or an optional CW narrow filter) or to an optional FM RECEIVE UNIT. FI3 is an SSB mode filter covering the 2.3 kHz bandwidth. FI4 and FI5 are AM mode filters covering the 6 kHz band width. The filters are selected with mode-selecting signals (SSB, CW, AM, CW-N).

The filtered signal is amplified at the 2nd IF amplifiers (Q26~Q28) and applied to the demodulator circuits.

Dual-gate FETs are used on the 1st and 2nd IF amplifiers (Q2, Q18, Q28). The 2nd gate of Q2, Q18, and Q28 are controlled by AGC bias voltage. A rapid time constant is used for Q28 to prevent an increase in the edge distortion of the receive signal.

A thermistor (R125) is connected to the gate of Q27 to improve the temperature characteristics of the receiver gain. R123 adjusts the receiver gain.

4-1-6 NOISE BLANKER CIRCUITS (MAIN UNIT)

The IC-R72 uses a noise trigger noise blanker circuit which removes pulse-type noise signals at the noise blanker gate (D1~D4).

The 2nd IF signal passes through the MCF (FI1) to suppress unwanted signals. A portion of the output signal is applied to a noise amplifier circuit (Q3, IC2) and detected at a noise detector circuit (D70, D71). The detected voltage is applied to a noise blanker switch (Q6).

• **IF CIRCUIT**

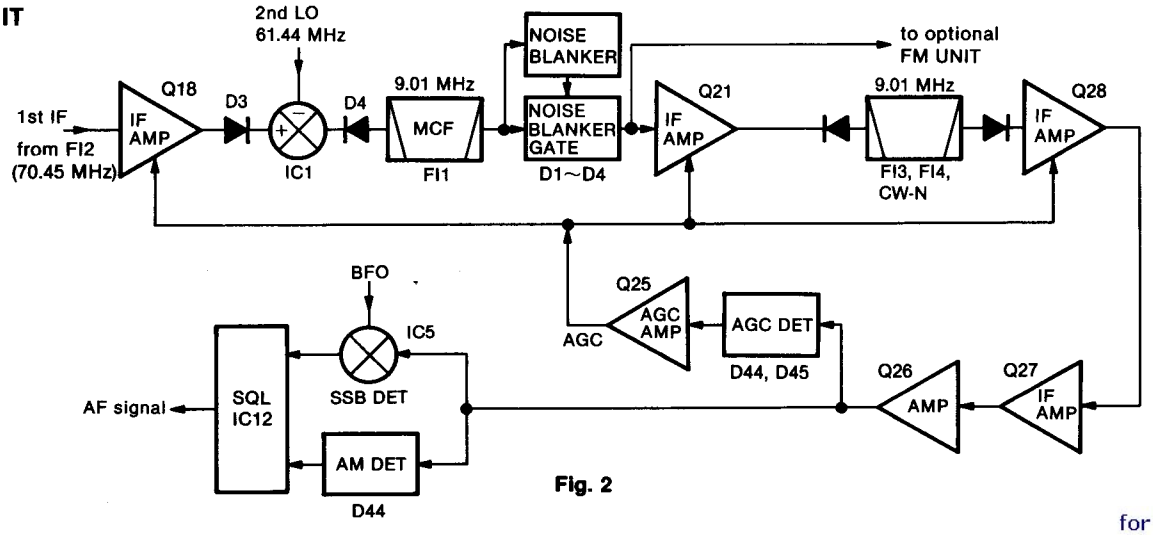

Fig. 2

The threshold level of the noise blanker switch (Q6) is set at 0.6 V. When the detected voltage exceeds the threshold level, Q7 outputs a blanking signal to activate the noise blanker gate (D1~D4).

A portion of the detected voltage is applied to the noise blanker AGC circuit (Q5). The noise components are fed back to the noise amplifier (IC2). The time constant of the noise blanker AGC circuit is determined by R43, R47 and C45. This AGC circuit does not operate to detect pulse-type noise.

When the operating frequency or mode is changed, the "DNB" signal line becomes "LOW", turning Q7 ON. The noise blanker gate prevents PLL click noise.

4-1-7 BFO CIRCUIT (MAIN UNIT)

A 9 MHz signal is oscillated at the BFO circuit (Q32, X1). The signal is buffer-amplified at Q33 and applied to a product detector (IC5). The BFO frequency is shifted with a mode signal using D53~D55.

In USB mode, the "USB" signal line becomes "HIGH", turning D55 ON. The frequency is then adjusted with C191 to set the USB carrier point.

In LSB and AM mode, the "LSB, AM" signal line becomes "HIGH", turning D54 ON. The frequency is then adjusted with L75 to set the LSB, AM carrier point.

In CW mode, the "CW" signal line becomes "HIGH", turning D54 ON. The frequency is then adjusted with C186 to set the CW carrier point.

BFO FREQUENCY IN EACH MODE

MODE	FREQUENCY (MHz)
USB	9.0130
AM−N	9.0115
LSB, AM	9.0100
CW	9.0098

4-1-8 DEMODULATOR CIRCUITS (MAIN UNIT)

The demodulator circuit consists of 2 detector circuits.

A product detector (IC5) demodulates the SSB and CW signals into an AF signal. The 2nd IF signal from the IF amplifier (Q26) is mixed with the BFO signal at the product detector (IC5) to be demodulated into an AF signal. The AF signal passes through the AF input mode selector switch (IC12).

A diode detector (D46) demodulates the AM signal into an AF signal. The 2nd IF signal from the IF amplifier (Q26) is applied to C151 and detected at the diode detector (D46) to be demodulated into an AF signal. The AF signal passes through the AF input mode selector switch (IC12).

4-1-9 AF INPUT MODE SELECTOR SWITCH (MAIN UNIT)

The AF input mode selector switch (IC12) consists of 4 analog switches and they are selected with a mode signal from IC9 and the squelch control signal. The AF signal is output from IC12 (pin 4).

IC12 AF INPUT MODE SELECTOR SWITCH

MODE	ACTIVATING PIN NUMBERS	CONTROL PIN NUMBER
USB, CW	2 → 1	13
AM	3 → 4	5
FM	10 → 11	12
ALL MODE	9 → 8	6

4-1-10 AF AMPLIFIER CIRCUIT (MAIN AND FRONT UNITS)

The AF signal output is applied to the AF preamplifier circuit (Q30, Q31).

The amplified signal is applied to the [AF] control (R1) on the FRONT UNIT and passes through the 2.8 kHz cut-off active low-pass filter (Q29). The AF signal is power-amplified at IC6 to drive the speaker.

4-1-11 AGC AND S-METER CIRCUITS (MAIN UNIT)

The receiver gain is determined by voltage on the AGC line (Q25, collector). When strong signals are received, the AGC circuit decreases the voltage on this line.

The 2nd IF signal is amplified at the IF amplifier (Q26). A portion of the IF signal is applied to C146 and detected at D44 and D45. The detected voltage enters the base of Q25 to control the voltage on the AGC line.

The AGC voltage is determined by R103, R104, and D43 when receiving no signal on the AGC line. R103 decreases the AGC voltage.

The fast AGC is normally used when receiving a signal in CW or AM mode, or when searching for a signal with the [MAIN DIAL]. When the [AGC] switch is pushed IN, a time constant (C142, R102) is connected to the AGC line to obtain a rapid AGC release time.

The slow AGC is normally used when receiving a signal in SSB mode. When the [AGC] switch is pushed OUT, a time constant (C141, R101) is connected in parallel with the AGC line to obtain a slow AGC release time.

The AGC function is not activated when receiving a signal in FM mode.

The AGC bias voltage is applied to the differential amplifier (IC4, pin 6) which compares the bias with the reference voltage. The resulting S-meter signal passes through the meter switching circuit (IC12) and then is applied to the [S.meter] on the front panel. The reference voltage is adjusted with R99. The inside pins 8 and 9 of IC12 are connected while receiving a signal.

The FM S-meter signal from the optional FM UNIT is applied to the squelch circuit (IC4, pin 2).

4-1-12 SQUELCH CIRCUIT (MAIN UNIT)

The squelch circuit mutes the audio output when the S-meter signal is lower than the [SQUELCH] control setting level. The S-meter squelch circuit functions in any mode.

The S-meter signal from IC4 (pin 7) is applied to the comparator (IC4, pin 2) to compare with the threshold level controlled by the [SQUELCH] control. The [SQUELCH] control signal is applied to control terminals of the AF input mode selector switch (IC12). When the S-meter signal is lower than the threshold level, the comparator becomes "HIGH." The squelch gate (Q21) turns OFF to deactivate the AF input mode selector switch (IC12). This signal is applied to Q44, turning OFF the [BUSY] indicator; the signal is also applied to the [REC REMOTE] jack.

4-1-13 TUNING INDICATOR CIRCUIT (MAIN UNIT)

The tuning indicator circuit lights up the front panel in red when receiving the center of a signal in AM or FM mode.

The BFO circuit oscillates a 9.0100 MHz reference frequency to compare with the 2nd IF signal when receiving a signal in AM mode. This indicator goes on and off according to modulation. Both the BFO reference and 2nd IF signals pass through the amplifiers (Q37, Q47) and then enter the amplifiers (IC10a, IC10b) to convert the phase of a signal. IC11a is a comparator circuit which compares the phase of the BFO and 2nd IF output. IC10d is a buffer inverter circuit which stabilizes the input level of IC11b. IC11b is also a comparator which detects the phase of the BFO and 2nd IF output. The signal is applied to D66. The detected signal controls Q38. The amplifiers (Q39, Q41) drive the TUNE LED.

The tuning signal from the optional FM UNIT controls Q38 to drive the TUNE LED.

• AGC, S-METER AND SQUELCH CIRCUITS

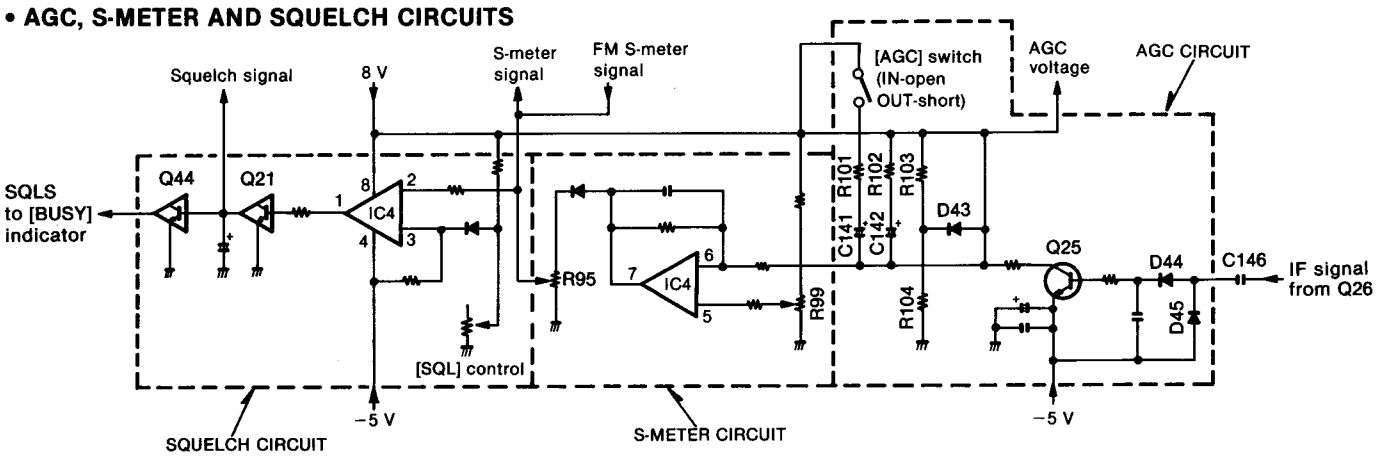

Fig. 3

4-2 PLL CIRCUITS

4-2-1 GENERAL DESCRIPTION

The PLL UNIT generates a 1st LO signal (70.5500~100.4530 MHz variable) and 2nd LO signal (61.44 MHz fixed) used in the MAIN UNIT. The IC-R72 uses a dual loop PLL system. A main loop PLL uses 4 VCO circuits for all HF band coverage in 512 kHz steps. A sub loop PLL uses a DDS (Direct Digital Synthesizer) system for 512 kHz coverage in 10 Hz steps. The DDS system provides rapid lockup time and high quality frequency oscillation.

4-2-2 REFERENCE OSCILLATOR CIRCUIT (PLL CIRCUIT)

The reference oscillator circuit consists of Q33 and X2. A 30.72 MHz reference frequency is oscillated to produce a 2nd LO signal and PLL reference frequency.

The reference frequency is buffer-amplified at Q34 and divided by 2 at IC15 to obtain the PLL reference frequency for the PLL IC (IC13).

The 30.72 MHz reference frequency is multiplied by 2 at Q36 to obtain the 2nd LO signal. The resulting 61.44 MHz signal is applied to the bandpass filter. The filtered signal is applied to the 2nd mixer on the MAIN UNIT via P4.

4-2-3 MAIN LOOP (MAIN UNIT)

The main loop uses a PLL IC (IC13) which contains a programmable divider, phase detector, data shift register and data latch circuit. The VCO circuit (Q15, Q17, Q19, Q21) generates a 70.5515~100.4515 MHz signal in 512 kHz steps for the 1st LO signal. Because the sub loop produces 10 Hz steps, the PLL produces a 30 MHz frequency range in 10 Hz steps.

The 70.5515~100.4515 MHz signal is buffer-amplified at Q23. The signal is mixed with the sub loop output (fLO: 62.05~62.56199 MHz) at IC16 to produce a 8.5015~37.88951 MHz signal. An isolator (Q23) is installed to ensure that the mixer input does not affect VCO output.

The resulting signal is amplified at Q27 and then applied to the low-pass filter (L23~L25, C92, C93, C99~C103). The filtered signal is amplified at Q26 and then divided by 4 at IC14. The output signal is applied to the PLL IC (IC13).

A 512 kHz reference frequency (fREF) is applied to the PLL IC (IC13) to detect the phase of the divided signal at IC14. The phase detected signal is then output from IC13 (pin 17). The 512 kHz frequency is obtained from the reference oscillator (Q33). A 30.72 MHz reference frequency is oscillated at Q33 and then divided by 2 at IC15. The resulting signal is divided by 30 at the programmable divider section of IC13.

The phase detected signal is applied to the loop filter (Q12~Q14) to obtain PLL lock voltage. The PLL lock voltage is applied to the VCO. Thus, the VCO output (PLL output) is locked to produce stable oscillation.

The PLL oscillation frequency is obtained by the following calculation:

$$fV = fLO + NT \times fREF$$

fV : Main loop output
fLO : Sub loop output
NT : Dividing ratio from the CPU
fREF: Reference frequency (512 kHz)

4-2-4 VCO CIRCUIT (PLL UNIT)

The receiver's C/N ratio is determined by the VCO and the loop filter. 4 VCO circuits keep the noise low and reduce spurious emissions. The VCO switches (Q16, Q18, Q20 and Q22) select the operating VCO with "VCO1~VCO4" lines.

4-2-5 SUB LOOP (PLL UNIT)

The sub loop uses the DDS system that generates a 62.05~62.56119 MHz signal in 10 Hz steps.

The 62.05~62.56119 MHz signal is oscillated at VCO 5 (Q29). The signal is buffer-amplified at Q30 and then mixed with the 61.44 MHz 2nd LO signal at IC17 to produce a 0.61~1.12199 MHz signal. The resulting signal is applied to the low-pass filter and then amplified at Q32. The amplified signal is then applied to the DDS unit.

The DDS UNIT outputs pulse-type signals. The signal is applied to the loop filter (R133, R134, C114, C115, L42) to obtain a DC signal (lock voltage). The lock voltage is applied to the VCO to lock the oscillating frequency.

• PLL CIRCUIT BLOCK DIAGRAM

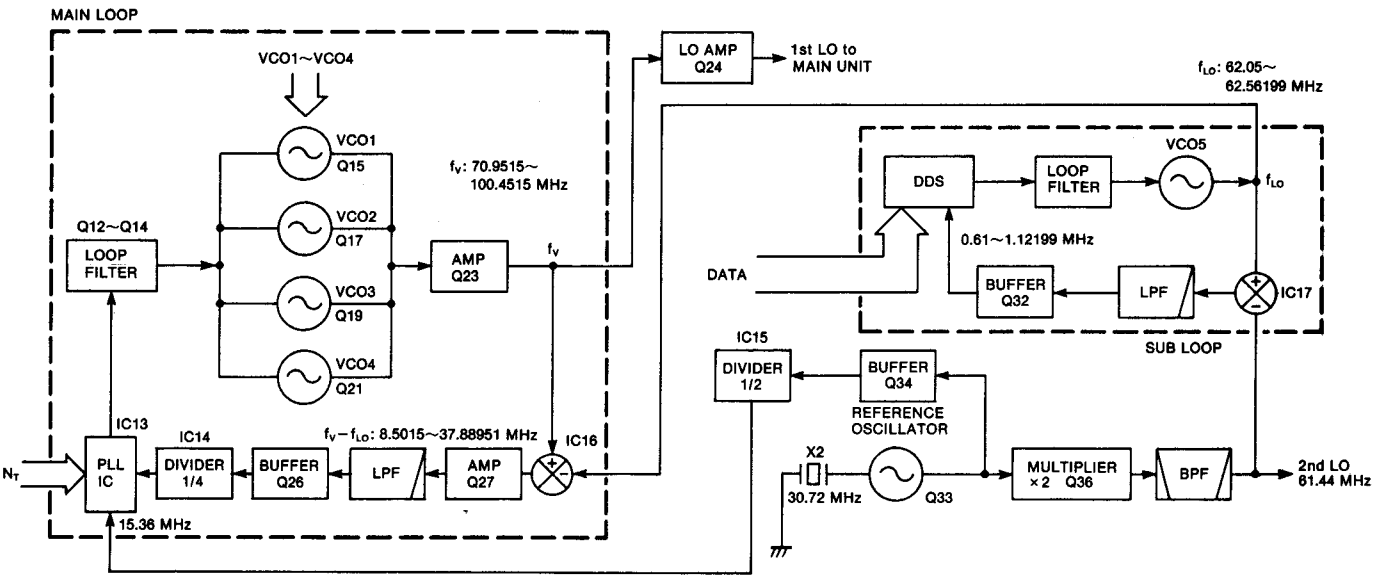

Fig. 4

4-3 LOGIC CIRCUITS

4-3-1 BAND SELECTION DATA (PLL UNIT)

To select the correct bandpass filter, the low-pass filter and VCOs on the MAIN and PLL UNITS, the CPU outputs the following data.

FREQUENCY (MHz)	BPF	LPF	VCO
0.5~1.599	B0	L1	VCO1
1.6~1.999	B1		
2.0~3.999	B2	L2	
4.0~7.999	B3	L3	
8.0~10.999	B4	L4	VCO2
11.0~14.999	B5		
15.0~21.999	B6	L5	VCO3
22.0~30.0	B7	L6	VCO4

4-3-2 CPU (PLL UNIT)

The CPU (IC6) contains an 8-bit CMOS CPU, 16k-byte ROM and 256-byte RAM. The CPU controls the operating frequency, mode, function display etc. The memory contents are stored in the CPU using a lithium backup battery which lasts more than 5 years.

4-3-3 KEY MATRIX

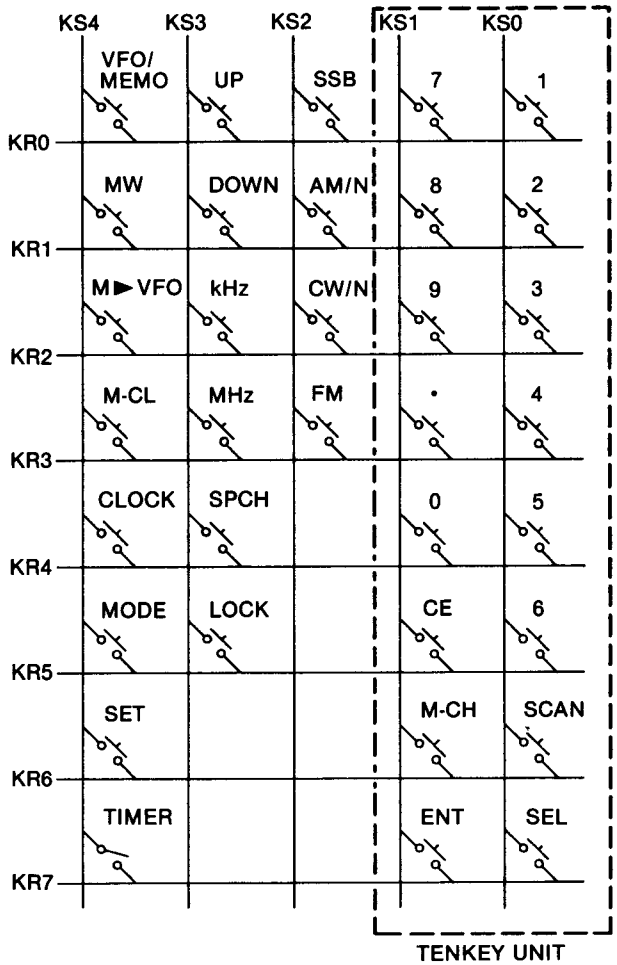

Fig. 5

4-4 REGULATOR CIRCUITS

Either 8, 5 or −5 V DC is supplied from the corresponding regulator circuit. 8, 5 and −5 V DC are regulated at the following circuits using 13.8 V DC.

(1) 5 V REGULATOR (PLL UNIT)

5 V DC are regulated by the three-terminal voltage regulator (IC10).

(2) 8 V REGULATOR (MAIN UNIT)

8 V DC are regulated by three-terminal voltage regulator (IC8).

(3) −5 V REGULATOR (MAIN UNIT)

IC7 generates a negative pulse-type voltage by converting the DC input to AC voltages (approx. 6.7 kHz) as a multi-vibrator. The voltage is rectified at D57 and D58, regulated by a Zener diode (D56) and C196, and is then applied to the MAIN UNIT.

4-5 CPU PORT ALLOCATIONS (LOGIC UNIT)

• IC-1 μPD75304-084-3B9 (LOGIC UNIT)

PIN No.	TERMINAL NAME	DESCRIPTION
1~16 21~23 69~80	S12~S27 COM0~COM2 S0~S11	Outputs the LCD driving signal.
17~20 57		NC
25~28	BIAS, VLC0 VLC1, VLC2	Input bias voltage.
33	Vss	Ground
38	INT4	Inputs an interrupt signal.
39	SCK	Inputs a clock signal.
40	S0	Outputs a data read signal.
41	S5	Inputs a data write signal.
42	INT0	Inputs a strobe signal from sub CPU.
43~53	P11~P33	Inputs an initial matrix data.
54	Vdd	Power source (5V)
56, 57, 58, 59	XT1, XT2, X1, X2	Input and output ports for CPU clock oscillator.
60	P60	Inputs timing serial data.
68	RESET	Inputs a reset timing signal.

• **IC-6 HD63A01Y0RL76P (LOGIC UNIT)**

PIN No.	TERMINAL NAME	DESCRIPTION
1	Vss	Ground
2,3	X'TAL, EXTAL	Input and output ports for the sub CPU clock
6	RES	Inputs a reset timing signal.
9	DATA R	Inputs sub CPU data.
10	BEEP	Outputs a beep tone.
11	ONE UP	Outputs timing serial data.
12	P23	Inputs CI-V data.
13	P24	Outputs CI-V data.
14	SQLS	Inputs a detected squelch signal.
15	BUSY	Inputs a BUSY signal.
16	Q	Inputs a sensor clock signal.
17	CLK	Inputs a clock signal.
18~22	Q1~Q5	Inputs main dial count data.
23	ATS	Inputs auto tuning steps.
24	Q	Inputs a sensor clock signal.
25	RESET	Outputs a reset signal.
26	LSB	Outputs an LSB mode signal.
27	USB	Outputs a USB mode signal.
28	AM	Outputs an AM signal.
29	CW	Outputs a CW signal.
31	FM	Outputs an FM signal.
32	NAR	Outputs an NAR signal.
33	Vcc	Power source (5V)
34	CK	Outputs a serial clock signal.
35	P/S	Outputs a serial/parallel control signal.
36	P45	Outputs a pulse select signal.
37	P44	Outputs a key select signal.
38	WE	Outputs a RAM write signal.
39	CE	Outputs a RAM chip signal.
40, 41 43~50	A0-A9	Outputs address bus and key strobe signals.
42	Vss	Ground
51~58	DB7~DB0	Input and output ports for bus data. Inputs matrix data.
59	RESET	Inputs a sub CPU timing signal.
60	TIME OUT	Outputs a timer out signal.
61~63	P72~P70	Outputs a band signal.

SECTION 5 MECHANICAL PARTS AND DISASSEMBLY

5-1 FRONT PANEL AND CHASSIS PARTS

LABEL NUMBER	ORDER NO.	DESCRIPTION	QTY.
①	8610004760	Dial N104 (A) [MAIN DIAL]	1
②	8610006550	Button K155 [NB], [HIGH]	2
③	8610006570	Button K121(A) [SSB], [AM/N], [CW/N], [FM]	4
④	8610004150	Knob N120 [AF GAIN], [SQUELCH]	2
⑤	8610006560	Button K153 [SPCH], [MHz], [kHz]	3
⑥	8930013940	610 Brake sheet	1
⑦	8810000220	PH M3 × 5	1
⑧	8610006540	Button K154 [MEMO ▶ VFO]	1
⑨	8610006610	Button K154(B) [M-CL]	1
⑩	8610006600	Button K154(A) [VFO/MEMO]	1
⑪	8610006620	Button K154(C) [MW]	1
⑫	8610006630	Button K154(D) [DOWN]	1
⑬	8610006640	Button K154(E) [UP]	1
⑭	8930018010	843 VFO sponge	6
⑮	8810005470	PH M2.6 × 14 ZK	1
⑯	8810002160	FH M3 × 5	4
⑰	8210005760	843 Front panel (incl.window panel)	1
⑱	8310020070	843 Window panel	1
⑲	8930017960	Release spring	2
⑳	8930018001	843 SSB sponge-1	1
㉑	8930018410	Strainer plate	1
㉒	8930018020	843 SPCH sponge	1
㉓	8810002160	FH M3 × 5	2
㉔	8810002160	FH M3 × 5	5
㉕	8810000220	PH M3 × 5	1
㉖	8930014030	610 Brake pad	1
㉗	8930013990	610 Brake plate	1
㉘	8610001560	Button K42 [POWER]	1
㉙	8010009930	843 Sub chassis	1
㉚	8610003850	Button K98 [TIMER]	1
㉛	8930000720	Screw spacer(V)	5
㉜	8610002540	Button K66(A) [AGC], [PREAMP], [10dB], [20dB], etc.	9
㉝	2230000550	Switch SPPH23079A [DIMMER], [PREAMP], [AGC], etc.	6
㉞	2230000800	Switch SW-112 [NB], [HIGH]	2
㉟	2230000530	Switch SPPH23078A [CLOCK], [MODE], [SET], [LOCK]	4
㊱	2260000060	Switch SKHHAJ025A [UP], [DOWN], [kHz], [MHz], [SPCH]	5
㊲	2260000060	Switch SKHHAJ025A [SSB], [AM/N], [CW/N], [FM]	4
㊳	8930018490	Blind plate	1
㊴	5040001460	LED SLB-25MG 3F [BUSY]	1
㊵	5040001430	LED SLB-25VR 3F [TUNE]	1
㊶	2260000070	Switch SKHHAK013A [VFO/MEMO], [MW], [MEMO ▶ VFO], [M-CL]	4
㊷	8810003160	Setscrew A M3 × 6	11
㊸	5030000520	LCD HLC9780-01-3310 [MULTI-FUNCTION DISPLAY]	1
㊹	8010005530	504 Reflector plate	1
㊺	8810001320	PH B1 M2.6 × 6 NI	4
㊻	2230000120	Switch SDDSA3159A [POWER]	1
㊼	6510009880	Connector PD054-03M [PHONES]	1
㊽	7210001820	Variable resistor RV-169 (RK0971110) 10KA [AF GAIN]	1
㊾	7210001780	Variable resistor RV-166 (RK097111) 10KB [SQUELCH]	1
㊿	7600000100	Encoder EC24B50B0013A [MAIN DIAL]	1
51	5510000360	Meter KL-218U-44	1
52	8310020270	Keyboard seal	1
53	8010009810	Keyboard (C)	1
54	8810001710	PH B0 NO.0-3 M1.4 × 3.5 ZK	6
55	8110003970	843 Top cover	1
56	8930006320	Speaker plate (B)	1
57	2510000040	Speaker C065K12I0810	1
58	8930006880	Speaker spacer (incl.net 41313)	1
59	8810005510	FH M3 × 6 ZK BS	12
60	8810003110	FH M3 × 11 ZK BS	3
61	8010001520	Stand (C)	1
62	8930005800	Collar foot (B)	1
63	8930005790	Collar foot (A)	1
64	8810005520	PH B1 M3 × 8 ZK	4
65	8110002210	Bottom cover	1
66	8810005540	PH B1 M4 × 10	2
67	8930002900	Rubber foot (A)	2
68	8810005630	FH M3 × 4	4
69	8010009760	REG chassis	1
70	8810003160	Setscrew A M3 × 6	1
71	8860000130	Grounding lag B5 (M3) AG BS	1
72	8810003360	Setscrew C M3 × 6	4
73	8410001490	REG heatsink	1
74	8810003160	Setscrew A M3 × 6	2
75	8810003160	Setscrew A M3 × 6	3
76	8830000100	Nut M3	3
77	8810005060	Setscrew C M3 × 12	1
78	8810003170	Setscrew A M3 × 8	2
79	6910000310	B312D Bush	2
80	5220000020	Fuse holder S-N5051	2
81	5210000040	Fuse FGB 2A	1
82	5910000640	Transformer TP-53 (USA,EUR,AUS)	1
	5910000660	Transformer TP-54 (FRG)	1

Screw abbreviations PH: Pan head FH: Flat head ZK: Black BS: Brass
B0, B1: Self-tapping screw NI: Nickel

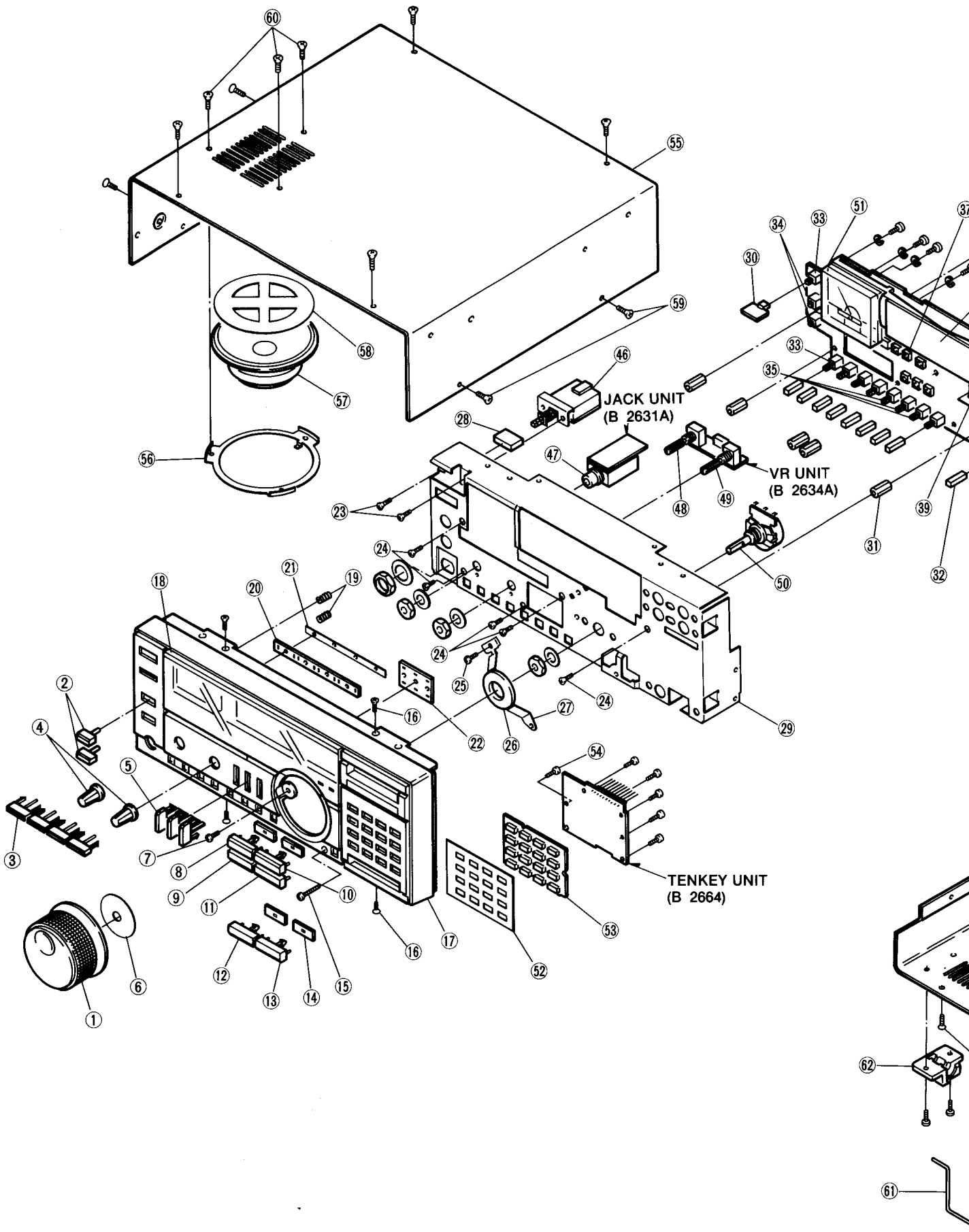

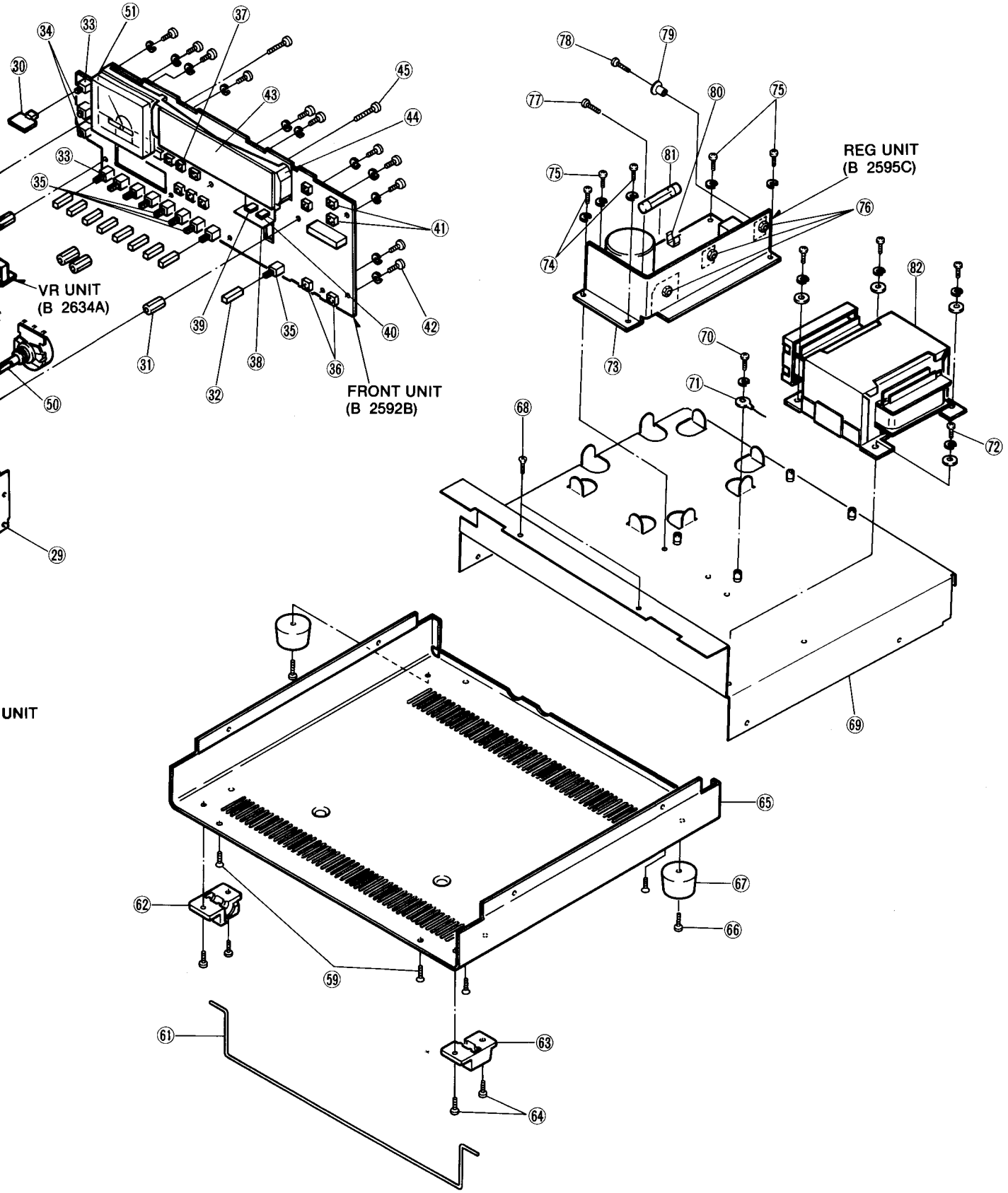

5-2 REAR PANEL AND ACCESSORIES

LABEL NUMBER	ORDER NO.	DESCRIPTION	QTY.
①	8810002410	FH M3 × 8 NI BS	2
②	8810001900	PH M3 × 5 NI BS	2
③	8810001900	PH M3 × 5 NI BS	3
④	8010009770	843 Rear panel	1
⑤	8810001350	PH B1 M3 × 6	8
⑥	8510001080	Shield case (A)	1
⑦	8510001101	Shield case (A) cover (A)-1	1
⑧	6450000570	Connector AP300-3-A-1-NI-BLACK [AC]	1
⑨	5220000040	Fuse holder FH-033 [FUSE] (FRG)	1
	5220000050	Fuse holder FH-032C [FUSE] (USA, EUR, AUS)	1
⑩	6450000140	Connector HSJ0807-01-010 [EXT SP]	1
⑪	6450000150	Connector JPJ2545-01-510 [MUTE]	1
⑫	6510003250	Connector TMP-J01X-A2 [50Ω ANT]	1
⑬	6450000140	Connector HSJ0807-01-010 [REC]	1
⑭	6450000140	Connector HSJ0807-01-010 [REC REMOTE]	1
⑮	8830000360	Wing nut M5 NI	1
⑯	8850000150	Flat washer M5 NI BS	2
⑰	8830000210	Nut M5 NI BS	1
⑱	8850000440	Spring washer M5 NI	1
⑲	8850000590	Star washer M5	1
⑳	8810001980	PH M5 × 16 NI BS	1
㉑	8810001900	PH M3 × 5 NI BS	2

LABEL NUMBER	ORDER NO.	DESCRIPTION	QTY.
㉒	8810001900	PH M3 × 5 NI BS	2
㉓	8010009780	843 Chassis	1
㉔	8810001350	PH B1 M3 × 6	8
㉕	8510000230	220 Shield case	1
㉖	8510002690	PA shield case (B)	1
㉗	8510004360	PA shield case (B) cover (A)	1
㉘	8510001330	79 Shield case	1
㉙	8510001340	79 Shield case cover	1
㉚	8510001060	Shield case	1
㉛	8510001740	Shield case top cover	1
㉜	8510000881	194 VCO case-1	1
㉝	8510003460	194 VCO case cover (A)	1
㉞	8510000881	194 VCO case-1	1
㉟	8510003460	194 VCO case cover (A)	1
㊱	8930014140	Grounding spring (D)	1
㊲	8510005310	DDS shield case	1
㊳	8510005320	DDS shield case top cover	1
㊴	6910004420	Terminal T-5810 [500Ω ANT/GND]	1
㊵	6510008370	Socket BBH-1	2
㊶	3020000110	Lithium battery CR2032	2
㊷	6450000150	Connector JPJ2545-01-510 [SPARE]	1
㊸	6450000140	Connector HSJ0807-01-010 [REMOTE]	1
㊹	2230000700	Switch SPPJ31309A [RESUME]	1
㊺	2230000700	Switch SPPJ31309A [SPEED]	1

Screw abbreviations PH: Pan head FH: Flat head BS: Brass B1: Self-tapping screw NI: Nickel

• ACCESSORIES

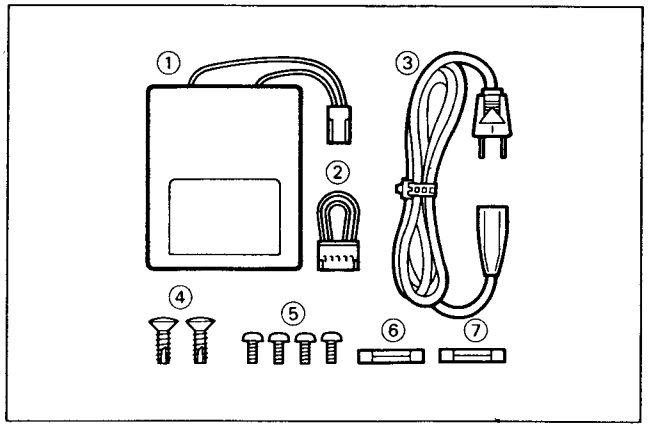

LABEL NUMBER	ORDER NO.	DESCRIPTION	QTY.
①	3030000310	Back-up battery UPM12V 1.8IC (Incl.battery-type)	1
②	8600022490	Jumper cable RX843 P01 AC	1
③	8900000330	AC power cable OPC-034 (USA)	1
	8900000710	AC power cable OPC-048 A (EUR), (FRG)	1
	8900000870	AC power cable OPC-085 (AUS)	1
④	8810005500	FH B1 M4 × 12 CR	2
⑤	8810001650	PH FT M3 × 6	4
⑥	5210000040	Fuse FGB 2A	1
⑦	5210000030	Fuse FGB 1A (USA)	1
	5210000020	Fuse FGB 0.5A (EUR), (AUS)	1
	5210000170	Fuse FGMT4 0.5A (FRG)	1

Screw abbreviations PH: Pan head FH: Flat head B1: Self-tapping screw

• **REAR PANEL**

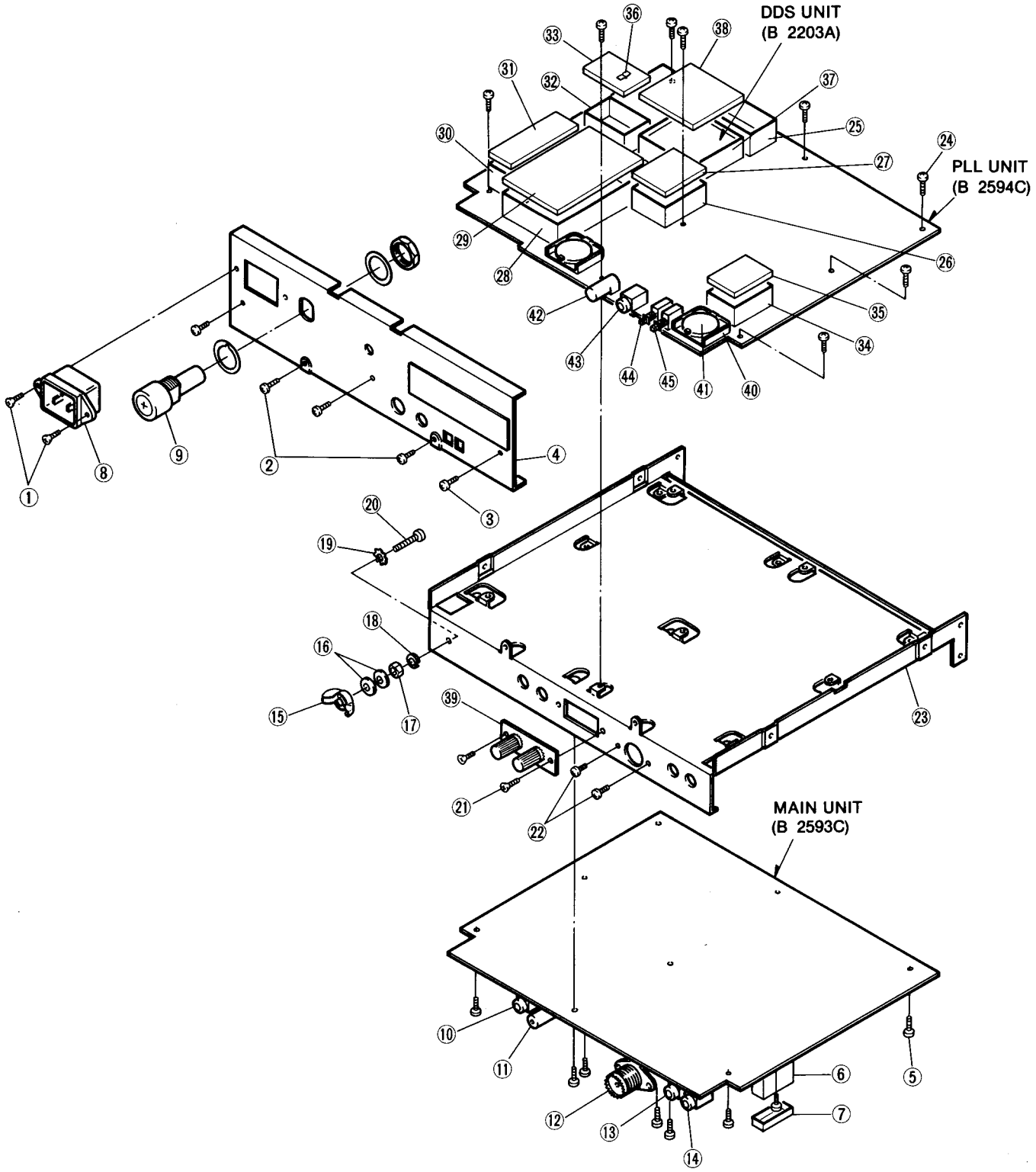

SECTION 6 PARTS LIST

[TENKEY UNIT]

REF. NO.	ORDER NO.	DESCRIPTION	
EP1	0910026323	P.C. Board	B 2664C (TENKEY)

[VR UNIT]

REF. NO.	ORDER NO.	DESCRIPTION	
R1	7210001820	Variable Resistor	RV-169 (RK0971110) 10KA [AF GAIN]
R2	7210001780	Variable Resistor	RV-166 (RK097111) 10KB [SQUELCH]
EP1	0910026081	P.C. Board	B 2634A (VR)

[JACK UNIT]

REF. NO.	ORDER NO.	DESCRIPTION	
L1	6180000900	Coil	LAL 03NA 101K
R1	7010003280	Resistor	ELR20J 100 Ω
R2	7010003280	Resistor	ELR20J 100 Ω
C1	4020000250	Cylinder	UP125 X 472M
EP1	0910026071	P.C. Board	B 2631A (JACK)

[FRONT UNIT]

REF. NO.	ORDER NO.	DESCRIPTION	
IC1	1140001260	IC	μPD75304GF-084-3B 9
Q1	1520000230	Transistor	2SB909M Q
Q2	1530000110	Transistor	2SC2458-GR
Q4	1530000110	Transistor	2SC2458-GR
Q5	1530000110	Transistor	2SC2458-GR
Q6	1530000110	Transistor	2SC2458-GR
Q7	1530000110	Transistor	2SC2458-GR
Q8	1530000110	Transistor	2SC2458-GR
Q9	1530000110	Transistor	2SC2458-GR

[FRONT UNIT]

REF. NO.	ORDER NO.	DESCRIPTION	
D1	1730000060	Zener	RD3.6E B1
D3	1710000160	Diode	1SS133
D5	1710000160	Diode	1SS133
D6	1710000160	Diode	1SS133
D7	1710000160	Diode	1SS133
D8	1710000160	Diode	1SS133
D9	1710000160	Diode	1SS133
D10	1710000160	Diode	1SS133
D11	1710000160	Diode	1SS133
D12	1710000160	Diode	1SS133
D13	1710000160	Diode	1SS133
D14	1710000160	Diode	1SS133
D15	1710000160	Diode	1SS133
D16	1710000160	Diode	1SS133
D17	1710000160	Diode	1SS133
D18	1710000160	Diode	1SS133
D19	1710000160	Diode	1SS133
D20	1710000160	Diode	1SS133
D21	1710000160	Diode	1SS133
D22	1710000160	Diode	1SS133
D23	1710000160	Diode	1SS133
D24	1710000160	Diode	1SS133
D25	1710000160	Diode	1SS133
D26	1710000160	Diode	1SS133
D27	1710000160	Diode	1SS133
D28	1710000160	Diode	1SS133
D29	1710000160	Diode	1SS133
D30	1710000160	Diode	1SS133
X1	6050005800	Crystal	DT-26S 32.768KHZ
X2	6050005090	Crystal	CR-245
L1	6180000900	Coil	LAL 03NA 101K
R1	7010004720	Resistor	R50XJ 100 Ω
R2	7010004720	Resistor	R50XJ 100 Ω
R6	7010003340	Resistor	ELR20J 330 Ω
R7	7010003340	Resistor	ELR20J 330 Ω
R8	7010003480	Resistor	ELR20J 4.7 kΩ
R9	7010003430	Resistor	ELR20J 1.8 kΩ
R11	7010003530	Resistor	ELR20J 10 kΩ
R12	7010003530	Resistor	ELR20J 10 kΩ
R13	7010003530	Resistor	ELR20J 10 kΩ
R14	7010004320	Resistor	R20J 10 kΩ
R15	7010003620	Resistor	ELR20J 47 kΩ
R16	7010003620	Resistor	ELR20J 47 kΩ
R17	7010003620	Resistor	ELR20J 47 kΩ
R18	7010004320	Resistor	R20J 10 kΩ
R19	7010003420	Resistor	ELR20J 1.5 kΩ
R20	7010004320	Resistor	R20J 10 kΩ
R21	7010004170	Resistor	R20J 680 Ω
R22	7410000050	Resistor Array	RMX- 4 103K
R24	7010003480	Resistor	ELR20J 4.7 kΩ
R27	7010003530	Resistor	ELR20J 10 kΩ
R28	7010003530	Resistor	ELR20J 10 kΩ
R29	7010004320	Resistor	R20J 10 kΩ
R30	7010003530	Resistor	ELR20J 10 kΩ
R31	7010004320	Resistor	R20J 10 kΩ
R32	7010004320	Resistor	R20J 10 kΩ
R33	7010004320	Resistor	R20J 10 kΩ
R34	7010003530	Resistor	ELR20J 10 kΩ
R35	7010001280	Resistor	R25XJ 10 kΩ
R36	7010003530	Resistor	ELR20J 10 kΩ

[FRONT UNIT]

REF. NO.	ORDER NO.	DESCRIPTION	
C1	4010000740	Ceramic	DD104 CH 150J 50V
C2	4010000740	Ceramic	DD104 CH 150J 50V
C3	4010000770	Ceramic	DD104 CH 200J 50V
C4	4010000770	Ceramic	DD104 CH 200J 50V
C5	4040000260	Barrier Layer	UZE 08X 104M
C6	4040000250	Barrier Layer	UAT 08X 473M
DS1	5030000520	LCD	HLC9780-01-3310
DS2	5080000170	LED	HRS7219A-Y2-30
DS3	5080000170	LED	HRS7219A-Y2-30
DS4	5080000170	LED	HRS7219A-Y2-30
DS5	5080000170	LED	HRS7219A-Y2-30
DS6	5040001460	LED	SLB-25MG 3F [BUSY]
DS7	5040001430	LED	SLB-25VR 3F [TUNE]
ME1	5510000360	Meter	KL-218U-44 (ME-28)
S1	7600000100	Switch	EC24B50B0013A [MAIN DIAL]
S2	2230000550	Switch	SPPH23079A [DIMMER]
S3	2230000800	Switch	SW-112 (SPPH2) [NB]
S4	2230000800	Switch	SW-112 (SPPH2) [HIGH]
S5	2230000550	Switch	SPPH23079A [PREAMP]
S6	2230000550	Switch	SPPH23079A [AGC]
S7	2230000550	Switch	SPPH23079A [ATT-20dB]
S8	2230000550	Switch	SPPH23079A [ATT-10dB]
S9	2230000120	Switch	SDDSA3159A [POWER]
S10	2260000070	Switch	SKHHAK013A [VFO/MEMO]
S11	2260000070	Switch	SKHHAK013A [MW]
S12	2260000070	Switch	SKHHAK013A [MEMO▶VFO]
S13	2260000070	Switch	SKHHAK013A [M-CL]
S14	2230000530	Switch	SPPH23078A [CLOCK]
S15	2230000530	Switch	SPPH23078A [MODE]
S16	2230000530	Switch	SPPH23078A [SET]
S17	2230000550	Switch	SPPH23079A [TIMER]
S18	2260000060	Switch	SKHHAJ025A [MEMORY-CH/UP]
S19	2260000060	Switch	SKHHAJ025A [MEMORY-CH/DOWN]
S20	2260000060	Switch	SKHHAJ025A [kHz]
S21	2260000060	Switch	SKHHAJ025A [MHz]
S22	2260000060	Switch	SKHHAJ025A [SPCH]
S23	2230000530	Switch	SPPH23078A [LOCK]
S24	2260000060	Switch	SKHHAJ025A [SSB]
S25	2260000060	Switch	SKHHAJ025A [AM/N]
S26	2260000060	Switch	SKHHAJ025A [CW/N]
S27	2260000060	Switch	SKHHAJ025A [FM]
EP1	0910025972	P.C. Board	B 2592B (FRONT)
EP2	0910027011	P.C. Board	B 1868A
EP6	6910000630	Bead core	FSOH070RN

[MAIN UNIT]

REF. NO.	ORDER NO.	DESCRIPTION	
IC1	1790000050	IC	ND487C1-3R
IC2	1110001310	IC	µPC577HA

[MAIN UNIT]

REF. NO.	ORDER NO.	DESCRIPTION	
IC3	1120000970	IC	M54562P
IC4	1110000330	IC	M5218L
IC5	1110001320	IC	µPC1037HA
IC6	1110000890	IC	µPC1241H
IC7	1110000240	IC	BA222-V
IC8	1180000470	IC	NJM7808A
IC9	1110000290	IC	BA618
IC10	1130004720	IC	TC74HC386AP
IC11	1130004480	IC	TC74HC74AP
IC12	1130003900	IC	GD4066B
Q1	1530000810	Transistor	2SC2053
Q2	1580000110	FET	3SK74 M
Q3	1560000080	FET	2SK192A-Y
Q4	1510000080	Transistor	2SA1048-GR
Q5	1530000110	Transistor	2SC2458-GR
Q6	1530000110	Transistor	2SC2458-GR
Q7	1590000360	Transistor	RN2202
Q8	1510000080	Transistor	2SA1048-GR
Q9	1590000360	Transistor	RN2202
Q10	1590000360	Transistor	RN2202
Q11	1560000130	FET	2SK125
Q12	1560000130	FET	2SK125
Q13	1590000360	Transistor	RN2202
Q14	1530000110	Transistor	2SC2458-GR
Q15	1590000340	Transistor	RN1202
Q16	1560000130	FET	2SK125
Q17	1560000130	FET	2SK125
Q18	1580000110	Transistor	3SK74 M
Q19	1520000230	Transistor	2SB909M Q
Q20	1590000340	Transistor	RN1202
Q21	1590000340	Transistor	RN1202
Q22	1510000080	Transistor	2SA1048-GR
Q23	1590000360	Transistor	RN2202
Q24	1590000340	Transistor	RN1202
Q25	1530000110	Transistor	2SC2458-GR
Q26	1530000110	Transistor	2SC2458-GR
Q27	1560000100	FET	2SK241-Y
Q28	1580000110	FET	3SK74 M
Q29	1530000110	Transistor	2SC2458-GR
Q30	1530000110	Transistor	2SC2458-GR
Q31	1530000110	Transistor	2SC2458-GR
Q32	1530000110	Transistor	2SC2458-GR
Q33	1530000110	Transistor	2SC2458-GR
Q34	1540000070	Transistor	2SD468C
Q35	1590000340	Transistor	RN1202
Q36	1530000110	Transistor	2SC2458-GR
Q37	1530000110	Transistor	2SC2458-GR
Q38	1530000110	Transistor	2SC2458-GR
Q39	1590000350	Transistor	RN1204
Q40	1590000360	Transistor	RN2202
Q41	1590000360	Transistor	RN2202
Q42	1590000340	Transistor	RN1202
Q43	1590000340	Transistor	RN1202
Q44	1590000340	Transistor	RN1202
Q45	1590000350	Transistor	RN1204
Q46	1560000100	FET	2SK241-Y
Q47	1560000100	FET	2SK241-Y
Q48	1590000360	Transistor	RN2202
D1	1710000050	Diode	1SS53
D2	1710000050	Diode	1SS53
D3	1710000050	Diode	1SS53
D4	1710000050	Diode	1SS53
D5	1710000050	Diode	1SS53
D6	1710000050	Diode	1SS53
D7	1710000160	Diode	1SS133
D8	1710000050	Diode	1SS53
D9	1710000050	Diode	1SS53

[MAIN UNIT]

REF. NO.	ORDER NO.	DESCRIPTION	
D10	1710000050	Diode	1SS53
D11	1710000050	Diode	1SS53
D12	1710000050	Diode	1SS53
D13	1710000050	Diode	1SS53
D15	1710000050	Diode	1SS53
D16	1710000050	Diode	1SS53
D17	1710000160	Diode	1SS133
D18	1710000050	Diode	1SS53
D19	1710000050	Diode	1SS53
D20	1710000160	Diode	1SS133
D21	1710000160	Diode	1SS133
D22	1710000050	Diode	1SS53
D23	1710000050	Diode	1SS53
D24	1710000050	Diode	1SS53
D25	1710000050	Diode	1SS53
D26	1710000050	Diode	1SS53
D27	1710000050	Diode	1SS53
D28	1710000050	Diode	1SS53
D29	1710000050	Diode	1SS53
D30	1710000050	Diode	1SS53
D31	1710000050	Diode	1SS53
D32	1710000050	Diode	1SS53
D33	1710000050	Diode	1SS53
D34	1710000050	Diode	1SS53
D35	1710000050	Diode	1SS53
D36	1710000050	Diode	1SS53
D37	1710000050	Diode	1SS53
D38	1710000050	Diode	1SS53
D39	1710000050	Diode	1SS53
D40	1710000050	Diode	1SS53
D41	1710000160	Diode	1SS133
D42	1710000160	Diode	1SS133
D43	1710000160	Diode	1SS133
D44	1710000330	Diode	1K60
D45	1710000330	Diode	1K60
D46	1710000330	Diode	1K60
D47	1710000160	Diode	1SS133
D48	1710000160	Diode	1SS133
D49	1710000050	Diode	1SS53
D50	1710000160	Diode	1SS133
D51	1710000160	Diode	1SS133
D52	1710000160	Diode	1SS133
D53	1710000050	Diode	1SS53
D54	1710000050	Diode	1SS53
D55	1710000050	Diode	1SS53
D56	1730000100	Zener	RD5.1E B2
D57	1710000160	Diode	1SS133
D58	1710000160	Diode	1SS133
D59	1710000160	Diode	1SS133
D60	1710000160	Diode	1SS133
D61	1710000030	Diode	1S1555
D62	1710000160	Diode	1SS133
D63	1710000160	Diode	1SS133
D64	1710000160	Diode	1SS133
D65	1710000160	Diode	1SS133
D66	1710000030	Diode	1S1555
D67	1710000160	Diode	1SS133
D68	1710000160	Diode	1SS133
D69	1710000160	Diode	1SS133
D70	1710000330	Diode	1K60
D71	1710000330	Diode	1K60
D72	1710000050	Diode	1SS53
D73	1710000050	Diode	1SS53
D74	1710000160	Diode	1SS133
D75	1730000100	Zener	RD5.1E B2
D76	1710000160	Diode	1SS133
D77	1710000160	Diode	1SS133
D78	1710000160	Diode	1SS133
D79	1710000160	Diode	1SS133
D80	1710000050	Diode	1SS53
D81	1710000050	Diode	1SS53

[MAIN UNIT]

REF. NO.	ORDER NO.	DESCRIPTION	
D82	1710000050	Diode	1SS53
D83	1710000160	Diode	1SS133
D84	1710000040	Diode	1S953
D85	1710000160	Diode	1SS133
D86	1730000330	Zener	MZ303B
FI1	2010000270	Filter	9M15A (FL-23)
FI2	2010000240	Filter	70M15A (FL-71)
FI3	2010000320	Filter	9M22D2 (FL-30)
FI4	2010000950	Filter	9M 6A1 (FL-116)
FI5	2010000950	Filter	9M 6A1 (FL-116)
X1	6050001800	Crystal	CR-49
L1	6180000690	Coil	LAL 03NA R22M
L2	6180000740	Coil	LAL 03NA R56M
L3	6140001260	Coil	LR-151
L4	6140001460	Coil	LR-170
L5	6110001620	Coil	LA-245
L6	6150001770	Coil	LS-198
L7	6150001770	Coil	LS-198
L8	6140002060	Coil	LR-225
L9	6140002060	Coil	LR-225
L10	6150001640	Coil	LS-180B
L11	6150000700	Coil	LS-90A
L12	6150000700	Coil	LS-90A
L13	6180000950	Coil	LAL 03NA 150K
L14	6180002640	Coil	EL0606SKI-150J
L15	6180002640	Coil	EL0606SKI-150J
L16	6180000900	Coil	LAL 03NA 101K
L17	6150001590	Coil	LS-175
L18	6150001590	Coil	LS-175
L19	6140002070	Coil	LR-233
L21	6180002290	Coil	LAL 03NA 330K
L22	6180000930	Coil	LAL 03NA 220K
L23	6180000900	Coil	LAL 03NA 101K
L24	6180000850	Coil	LAL 03NA 4R7K
L25	6180000840	Coil	LAL 03NA 3R9K
L26	6180000900	Coil	LAL 03NA 101K
L27	6180000870	Coil	LAL 03NA 6R8K
L28	6180000850	Coil	LAL 03NA 4R7K
L29	6180000900	Coil	LAL 03NA 101K
L30	6180000820	Coil	LAL 03NA 2R7M
L31	6180000810	Coil	LAL 03NA 2R2M
L32	6180000820	Coil	LAL 03NA 2R7M
L33	6180000840	Coil	LAL 03NA 3R9K
L34	6180000900	Coil	LAL 03NA 101K
L35	6180000800	Coil	LAL 03NA 1R8M
L36	6180000780	Coil	LAL 03NA 1R2M
L37	6180000790	Coil	LAL 03NA 1R5M
L38	6180000810	Coil	LAL 03NA 2R2M
L39	6180000900	Coil	LAL 03NA 101K
L40	6180000780	Coil	LAL 03NA 1R2M
L41	6180000770	Coil	LAL 03NA 1R0M
L42	6180000760	Coil	LAL 03NA R82M
L43	6180000790	Coil	LAL 03NA 1R5M
L44	6180000900	Coil	LAL 03NA 101K
L45	6180000760	Coil	LAL 03NA R82M
L46	6180000750	Coil	LAL 03NA R68M
L47	6180000750	Coil	LAL 03NA R68M
L48	6180000760	Coil	LAL 03NA R82M
L49	6180000900	Coil	LAL 03NA 101K
L50	6180000730	Coil	LAL 03NA R47M
L51	6180000730	Coil	LAL 03NA R47M
L52	6180000730	Coil	LAL 03NA R47M
L53	6180000730	Coil	LAL 03NA R47M
L54	6180000900	Coil	LAL 03NA 101K
L55	6180000700	Coil	LAL 03NA R27M

[MAIN UNIT]

REF. NO.	ORDER NO.	DESCRIPTION	
L56	6180000700	Coil	LAL 03NA R27M
L57	6180000710	Coil	LAL 03NA R33M
L58	6180000710	Coil	LAL 03NA R33M
L59	6140000640	Coil	LR-86
L60	6140001540	Coil	LR-169
L61	6110001650	Coil	LA-248
L62	6180000700	Coil	LAL 03NA R27M
L63	6140001500	Coil	LR-171
L64	6150001770	Coil	LS-198
L65	6180000880	Coil	LAL 03NA 100K
L66	6180000900	Coil	LAL 03NA 101K
L67	6150002430	Coil	LS-254
L68	6150002430	Coil	LS-254
L69	6150000990	Coil	LS-114
L70	6150001590	Coil	LS-175
L71	6150001470	Coil	LS-163
L72	6150001590	Coil	LS-175
L73	6170000140	Coil	LW-15
L74	6180002630	Coil	EL0606SKI-R22J
L75	6150001210	Coil	LS-133A
L76	6180000900	Coil	LAL 03NA 101K
L77	6910000670	Coil	BT01RN1-A61-001
L78	6180000900	Coil	LAL 03NA 101K
L79	6140001260	Coil	LR-151
L80	6140001460	Coil	LR-170
L81	6180000900	Coil	LAL 03NA 101K
L82	6180000900	Coil	LAL 03NA 101K
L83	6180000960	Coil	LAL 03NA 102K
L84	6180000700	Coil	LAL 03NA R27M
L85	6180000900	Coil	LAL 03NA 101K
L86	6180000900	Coil	LAL 03NA 101K
L87	6180000960	Coil	LAL 03NA 102K
L88	6180000900	Coil	LAL 03NA 101K
L89	6180000900	Coil	LAL 03NA 101K
R1	7010003260	Resistor	ELR20J 68 Ω
R2	7010004170	Resistor	R20J 680 Ω
R3	7010003490	Resistor	ELR20J 5.6 kΩ
R4	7010003200	Resistor	ELR20J 22 Ω
R5	7010003240	Resistor	ELR20J 47 Ω
R6	7010003320	Resistor	ELR20J 220 Ω
R7	7010003330	Resistor	ELR20J 270 Ω
R8	7010003980	Resistor	R20J 18 Ω
R9	7010003330	Resistor	ELR20J 270 Ω
R10	7010004230	Resistor	R20J 2.2 kΩ
R11	7010001190	Resistor	R25XJ 2.2 kΩ
R12	7010004110	Resistor	R20J 220 Ω
R13	7010000990	Resistor	R25XJ 47 Ω
R14	7010003740	Resistor	ELR20J 470 kΩ
R15	7010003580	Resistor	ELR20J 22 kΩ
R16	7510000110	Thermistor	ERT-D2FGL251S
R17	7010004130	Resistor	R20J 330 Ω
R18	7010003280	Resistor	ELR20J 100 Ω
R19	7010003440	Resistor	ELR20J 2.2 kΩ
R20	7010004320	Resistor	R20J 10 kΩ
R23	7010003620	Resistor	ELR20J 47 kΩ
R24	7010004230	Resistor	R20J 2.2 kΩ
R25	7010001030	Resistor	R25XJ 100 Ω
R26	7010003440	Resistor	ELR20J 2.2 kΩ
R27	7010004230	Resistor	R20J 2.2 kΩ
R28	7010004320	Resistor	R20J 10 kΩ
R29	7010001280	Resistor	R25XJ 10 kΩ
R30	7010004230	Resistor	R20J 2.2 kΩ
R31	7010001030	Resistor	R25XJ 100 Ω
R32	7010003440	Resistor	ELR20J 2.2 kΩ
R33	7010004230	Resistor	R20J 2.2 kΩ
R34	7010004230	Resistor	R20J 2.2 kΩ
R35	7010001030	Resistor	R25XJ 100 Ω
R36	7010003440	Resistor	ELR20J 2.2 kΩ
R37	7010001190	Resistor	R25XJ 2.2 kΩ

[MAIN UNIT]

REF. NO.	ORDER NO.	DESCRIPTION	
R38	7010004450	Resistor	R20J 100 kΩ
R39	7010004090	Resistor	R20J 150 Ω
R40	7010003950	Resistor	R20J 10 Ω
R41	7010004070	Resistor	R20J 100 Ω
R42	7010003620	Resistor	ELR20J 47 kΩ
R43	7010003660	Resistor	ELR20J 100 kΩ
R44	7010001030	Resistor	R25XJ 100 Ω
R45	7010003620	Resistor	ELR20J 47 kΩ
R46	7010003660	Resistor	ELR20J 100 kΩ
R47	7010003530	Resistor	ELR20J 10 kΩ
R48	7010003510	Resistor	ELR20J 6.8 kΩ
R49	7010003580	Resistor	ELR20J 22 kΩ
R50	7010003400	Resistor	ELR20J 1 kΩ
R51	7010003420	Resistor	ELR20J 1.5 kΩ
R52	7010003360	Resistor	ELR20J 470 Ω
R54	7010004410	Resistor	R20J 47 kΩ
R55	7010004060	Resistor	R20J 82 Ω
R56	7010003250	Resistor	ELR20J 56 Ω
R57	7010004390	Resistor	R20J 33 kΩ
R58	7010004140	Resistor	R20J 390 Ω
R59	7010004040	Resistor	R20J 56 Ω
R60	7010004070	Resistor	R20J 100 Ω
R61	7010004070	Resistor	R20J 100 Ω
R62	7010003950	Resistor	R20J 10 Ω
R63	7010003340	Resistor	ELR20J 330 Ω
R64	7010001110	Resistor	R25XJ 470 Ω
R65	7010003620	Resistor	ELR20J 47 kΩ
R66	7010004150	Resistor	R20J 470 Ω
R67	7010004070	Resistor	R20J 100 Ω
R68	7410000180	Resistor Array	RMX- 8 103K
R69	7010001110	Resistor	R25XJ 470 Ω
R70	7010004110	Resistor	R20J 220 Ω
R71	7010003990	Resistor	R20J 22 Ω
R72	7010003320	Resistor	ELR20J 220 Ω
R73	7010000870	Resistor	R25XJ 4.7 Ω
R74	7010000870	Resistor	R25XJ 4.7 Ω
R75	7010003440	Resistor	ELR20J 2.2 kΩ
R76	7010003400	Resistor	ELR20J 1 kΩ
R77	7010003400	Resistor	ELR20J 1 kΩ
R78	7010003360	Resistor	ELR20J 470 Ω
R79	7010003360	Resistor	ELR20J 470 Ω
R80	7010003530	Resistor	ELR20J 10 kΩ
R81	7010004030	Resistor	R20J 47 Ω
R82	7010004090	Resistor	R20J 150 Ω
R83	7010003990	Resistor	R20J 22 Ω
R84	7010001530	Resistor	R25XJ 1 M Ω
R85	7010004090	Resistor	R20J 150 Ω
R86	7010000990	Resistor	R25XJ 47 Ω
R87	7010003440	Resistor	ELR20J 2.2 kΩ
R88	7010000790	Resistor	R25XJ 1 Ω
R89	7010004300	Resistor	R20J 6.8 kΩ
R90	7010004230	Resistor	R20J 2.2 kΩ
R91	7010001230	Resistor	R25XJ 4.7 kΩ
R92	7010003740	Resistor	ELR20J 470 kΩ
R93	7010004370	Resistor	R20J 22 kΩ
R94	7010004420	Resistor	R20J 56 kΩ
R95	7310000750	Trimmer	RH0651C14J2WA (103)
R96	7010003820	Resistor	ELR20J 3.3 M Ω
R97	7010004570	Resistor	R20J 1 M Ω
R98	7010004370	Resistor	R20J 22 kΩ
R99	7310000750	Trimmer	RH0651C14J2WA (103)
R100	7010003580	Resistor	ELR20J 22 kΩ
R101	7010000500	Resistor	ELR25J 10 kΩ
R102	7010004070	Resistor	R20J 100 Ω
R103	7010004320	Resistor	R20J 10 kΩ
R104	7010004250	Resistor	R20J 3.3 kΩ
R105	7010004610	Resistor	R20J 3.3 M Ω
R106	7010003360	Resistor	ELR20J 470 Ω
R107	7010003480	Resistor	ELR20J 4.7 kΩ
R108	7010003420	Resistor	ELR20J 1.5 kΩ
R109	7010003510	Resistor	ELR20J 6.8 kΩ

[MAIN UNIT]

REF. NO.	ORDER NO.	DESCRIPTION	
R110	7010003630	Resistor	ELR20J 56 kΩ
R111	7010003660	Resistor	ELR20J 100 kΩ
R112	7010003400	Resistor	ELR20J 1 kΩ
R113	7010004150	Resistor	R20J 470 Ω
R114	7010003700	Resistor	ELR20J 220 kΩ
R115	7010003400	Resistor	ELR20J 1 kΩ
R116	7010004190	Resistor	R20J 1 kΩ
R117	7010004300	Resistor	R20J 6.8 kΩ
R118	7010004250	Resistor	R20J 3.3 kΩ
R119	7010003240	Resistor	ELR20J 47 Ω
R120	7010004030	Resistor	R20J 47 Ω
R121	7010004150	Resistor	R20J 470 Ω
R122	7010004070	Resistor	R20J 100 Ω
R123	7310000740	Trimmer	RH0651CS3J2KA (472)
R124	7010004320	Resistor	R20J 10 kΩ
R125	7510000120	Thermistor	ERT-D2FGL332S
R126	7010004070	Resistor	R20J 100 Ω
R127	7010003300	Resistor	ELR20J 150 Ω
R128	7010004150	Resistor	R20J 470 Ω
R129	7010004410	Resistor	R20J 47 kΩ
R130	7010004070	Resistor	R20J 100 Ω
R131	7010003530	Resistor	ELR20J 10 kΩ
R132	7010003830	Resistor	R20J 1 Ω
R133	7010003280	Resistor	ELR20J 100 Ω
R134	7010003400	Resistor	ELR20J 1 kΩ
R135	7010003530	Resistor	ELR20J 10 kΩ
R136	7010004320	Resistor	R20J 10 kΩ
R137	7010004190	Resistor	R20J 1 kΩ
R138	7010003530	Resistor	ELR20J 10 kΩ
R139	7010004320	Resistor	R20J 10 kΩ
R140	7010004270	Resistor	R20J 4.7 kΩ
R141	7010003400	Resistor	ELR20J 1 kΩ
R142	7010004190	Resistor	R20J 1 kΩ
R143	7010003400	Resistor	ELR20J 1 kΩ
R144	7010001340	Resistor	R25XJ 33 kΩ
R145	7010003460	Resistor	ELR20J 3.3 kΩ
R146	7010004070	Resistor	R20J 100 Ω
R147	7010003400	Resistor	ELR20J 1 kΩ
R148	7010003990	Resistor	R20J 22 Ω
R149	7010003660	Resistor	ELR20J 100 kΩ
R150	7010004450	Resistor	R20J 100 kΩ
R151	7010001400	Resistor	R25XJ 100 kΩ
R152	7010004230	Resistor	R20J 2.2 kΩ
R153	7010003440	Resistor	ELR20J 2.2 kΩ
R154	7010004230	Resistor	R20J 2.2 kΩ
R155	7010003440	Resistor	ELR20J 2.2 kΩ
R156	7010004230	Resistor	R20J 2.2 kΩ
R157	7010004320	Resistor	R20J 10 kΩ
R158	7010003480	Resistor	ELR20J 4.7 kΩ
R159	7010004260	Resistor	R20J 3.9 kΩ
R160	7010003420	Resistor	ELR20J 1.5 kΩ
R161	7010003580	Resistor	ELR20J 22 kΩ
R162	7010001150	Resistor	R25XJ 1 kΩ
R163	7010003530	Resistor	ELR20J 10 kΩ
R164	7010003440	Resistor	ELR20J 2.2 kΩ
R165	7010003440	Resistor	ELR20J 2.2 kΩ
R166	7010004030	Resistor	R20J 47 Ω
R167	7010003240	Resistor	ELR20J 47 Ω
R168	7010003660	Resistor	ELR20J 100 kΩ
R169	7010003530	Resistor	ELR20J 10 kΩ
R170	7010000090	Resistor	ELR25J 4.7 Ω
R171	7010000370	Resistor	ELR25J 1 kΩ
R172	7010004320	Resistor	R20J 10 kΩ
R173	7010003400	Resistor	ELR20J 1 kΩ
R174	7010003440	Resistor	ELR20J 2.2 kΩ
R175	7010003440	Resistor	ELR20J 2.2 kΩ
R177	7010003580	Resistor	ELR20J 22 kΩ
R178	7010003650	Resistor	ELR20J 82 kΩ
R179	7010003360	Resistor	ELR20J 470 Ω
R180	7010003420	Resistor	ELR20J 1.5 kΩ
R181	7010005220	Resistor	ELR20J 10 M Ω

[MAIN UNIT]

REF. NO.	ORDER NO.	DESCRIPTION	
R182	7010005220	Resistor	ELR20J 10 M Ω
R183	7010003300	Resistor	ELR20J 150 Ω
R184	7010003440	Resistor	ELR20J 2.2 kΩ
R185	7310000750	Trimmer	RH0651C14J2WA (103)
R186	7010004070	Resistor	R20J 100 Ω
R187	7010004070	Resistor	R20J 100 Ω
R188	7010004070	Resistor	R20J 100 Ω
R189	7010004070	Resistor	R20J 100 Ω
R190	7010004070	Resistor	R20J 100 Ω
R191	7010003660	Resistor	ELR20J 100 kΩ
R192	7010003660	Resistor	ELR20J 100 kΩ
R193	7310000740	Trimmer	RH0651CS3J2KA (472)
R194	7310000750	Trimmer	RH0651C14J2WA (103)
R195	7010003440	Resistor	ELR20J 2.2 kΩ
R196	7010003620	Resistor	ELR20J 47 kΩ
R197	7010003240	Resistor	ELR20J 47 Ω
R198	7010003440	Resistor	ELR20J 2.2 kΩ
R199	7010004320	Resistor	R20J 10 kΩ
R200	7010003480	Resistor	ELR20J 4.7 kΩ
R201	7010004270	Resistor	R20J 4.7 kΩ
R202	7010004270	Resistor	R20J 4.7 kΩ
R203	7010004270	Resistor	R20J 4.7 kΩ
R204	7010003480	Resistor	ELR20J 4.7 kΩ
R205	7010003480	Resistor	ELR20J 4.7 kΩ
R206	7010004250	Resistor	R20J 3.3 kΩ
R207	7010003460	Resistor	ELR20J 3.3 kΩ
R208	7010004370	Resistor	R20J 22 kΩ
R209	7010004270	Resistor	R20J 4.7 kΩ
R210	7010001170	Resistor	R25XJ 1.5 kΩ
R211	7010003620	Resistor	ELR20J 47 kΩ
R212	7010003240	Resistor	ELR20J 47 Ω
R213	7010003530	Resistor	ELR20J 10 kΩ
R214	7010003620	Resistor	ELR20J 47 kΩ
R215	7010004410	Resistor	R20J 47 kΩ
R216	7010003700	Resistor	ELR20J 220 kΩ
R217	7010003620	Resistor	ELR20J 47 kΩ
R218	7010003400	Resistor	ELR20J 1 kΩ
R219	7010003280	Resistor	ELR20J 100 Ω
R220	7010003280	Resistor	ELR20J 100 Ω
R221	7010004070	Resistor	R20J 100 Ω
R222	7010004070	Resistor	R20J 100 Ω
R223	7010003530	Resistor	ELR20J 10 kΩ
R224	7010001280	Resistor	R25XJ 10 kΩ
R225	7010001400	Resistor	R25XJ 100 kΩ
R226	7010001400	Resistor	R25XJ 100 kΩ
R227	7010004030	Resistor	R20J 47 Ω
R228	7010003210	Resistor	ELR20J 27 Ω
R229	7010003240	Resistor	ELR20J 47 Ω
R230	7010003240	Resistor	ELR20J 47 Ω
R231	7010003240	Resistor	ELR20J 47 Ω
R232	7010003240	Resistor	ELR20J 47 Ω
R233	7010003240	Resistor	ELR20J 47 Ω
R234	7010003240	Resistor	ELR20J 47 Ω
R235	7010003240	Resistor	ELR20J 47 Ω
R236	7010003240	Resistor	ELR20J 47 Ω
R237	7010004270	Resistor	R20J 4.7 kΩ
C1	4010000220	Ceramic	DD104 SL 330J 50V
C2	4010000330	Ceramic	DD105 SL 101J 50V
C3	4010000500	Ceramic	DD104 B 102K 50V
C4	4010000020	Ceramic	DD104 SL 010C 50V
C5	4010000100	Ceramic	DD104 SL 080D 50V
C6	4010000120	Ceramic	DD104 SL 100D 50V
C7	4010000020	Ceramic	DD104 SL 010C 50V
C8	4010000520	Ceramic	DD108 B 472K 50V
C9	4010000340	Ceramic	DD105 SL 121J 50V
C10	4010000520	Ceramic	DD108 B 472K 50V
C11	4010000070	Ceramic	DD104 SL 050C 50V
C12	4020000550	Cylinder	UP050 SL 010M
C13	4010000070	Ceramic	DD104 SL 050C 50V

[MAIN UNIT]

REF. NO.	ORDER NO.	DESCRIPTION	
C14	4010000070	Ceramic	DD104 SL 050C 50V
C15	4010000300	Ceramic	DD104 SL 680J 50V
C16	4010000340	Ceramic	DD105 SL 121J 50V
C17	4040000260	Barrier Layer	UZE 08X 104M
C18	4010000520	Ceramic	DD108 B 472K 50V
C19	4040000260	Barrier Layer	UZE 08X 104M
C20	4010000520	Ceramic	DD108 B 472K 50V
C21	4010000520	Ceramic	DD108 B 472K 50V
C22	4010000200	Ceramic	DD104 SL 270J 50V
C23	4040000150	Barrier Layer	UAT 05X 472K
C24	4040000150	Barrier Layer	UAT 05X 472K
C25	4040000150	Barrier Layer	UAT 05X 472K
C26	4010000150	Ceramic	DD104 SL 150J 50V
C27	4040000150	Barrier Layer	UAT 05X 472K
C28	4010000100	Ceramic	DD104 SL 080D 50V
C29	4010000150	Ceramic	DD104 SL 150J 50V
C30	4040000260	Barrier Layer	UZE 08X 104M
C31	4040000150	Barrier Layer	UAT 05X 472K
C32	4040000150	Barrier Layer	UAT 05X 472K
C33	4040000260	Barrier Layer	UZE 08X 104M
C34	4020000030	Cylinder	UP125 SL 2R2K
C35	4010000520	Ceramic	DD108 B 472K 50V
C36	4040000150	Barrier Layer	UAT 05X 472K
C37	4510001100	Electrolytic	16 MS7 10 µF
C38	4040000150	Barrier Layer	UAT 05X 472K
C39	4040000150	Barrier Layer	UAT 05X 472K
C40	4010000520	Ceramic	DD108 B 472K 50V
C41	4040000150	Barrier Layer	UAT 05X 472K
C42	4010000520	Ceramic	DD108 B 472K 50V
C43	4010000340	Ceramic	DD105 SL 121J 50V
C44	4010000180	Ceramic	DD104 SL 220J 50V
C45	4510001100	Electrolytic	16 MS7 10 µF
C46	4510002640	Electrolytic	25 SS 47 µF
C47	4040000260	Barrier Layer	UZE 08X 104M
C48	4040000260	Barrier Layer	UZE 08X 104M
C49	4010000350	Ceramic	DD106 SL 151J 50V
C50	4010000330	Ceramic	DD105 SL 101J 50V
C52	4010000520	Ceramic	DD108 B 472K 50V
C53	4010000520	Ceramic	DD108 B 472K 50V
C54	4040000070	Barrier Layer	UAT 04X 102K
C55	4020000630	Cylinder	UP050 B 101K
C56	4040000070	Barrier Layer	UAT 04X 102K
C57	4040000260	Barrier Layer	UZE 08X 104M
C58	4040000260	Barrier Layer	UZE 08X 104M
C59	4040000080	Barrier Layer	UAT 04X 122K
C60	4040000170	Barrier Layer	UAT 05X 682K
C61	4040000460	Barrier Layer	RAU 08SA 821K
C62	4040000210	Barrier Layer	UAT 06X 153K
C63	4040000090	Barrier Layer	UAT 04X 152K
C64	4040000260	Barrier Layer	UZE 08X 104M
C65	4010000520	Ceramic	DD108 B 472K 50V
C66	4040000090	Barrier Layer	UAT 04X 152K
C67	4040000110	Barrier Layer	UAT 04X 222K
C68	4010000410	Ceramic	DD107 SL 331J 50V
C69	4010000520	Ceramic	DD108 B 472K 50V
C70	4040000080	Barrier Layer	UAT 04X 122K
C71	4010000360	Ceramic	DD106 SL 181J 50V
C72	4040000080	Barrier Layer	UAT 04X 122K
C73	4040000110	Barrier Layer	UAT 04X 222K
C74	4040000210	Barrier Layer	UAT 06X 153K
C75	4040000080	Barrier Layer	UAT 04X 122K
C76	4040000250	Barrier Layer	UAT 08X 473M
C77	4010000520	Ceramic	DD108 B 472K 50V
C78	4010000440	Ceramic	DD109 SL 511J 50V
C79	4010000330	Ceramic	DD105 SL 101J 50V
C80	4010000430	Ceramic	DD109 SL 471J 50V
C81	4040000090	Barrier Layer	UAT 04X 152K
C82	4040000160	Barrier Layer	UAT 05X 562K
C83	4040000460	Barrier Layer	RAU 08SA 821K
C84	4040000250	Barrier Layer	UAT 08X 473M
C85	4010000520	Ceramic	DD108 B 472K 50V

[MAIN UNIT]

REF. NO.	ORDER NO.	DESCRIPTION	
C86	4010000410	Ceramic	DD107 SL 331J 50V
C87	4010000270	Ceramic	DD104 SL 510J 50V
C88	4010000410	Ceramic	DD107 SL 331J 50V
C89	4010000420	Ceramic	DD108 SL 391J 50V
C90	4040000120	Barrier Layer	UAT 05X 272K
C91	4010000410	Ceramic	DD107 SL 331J 50V
C92	4040000250	Barrier Layer	UAT 08X 473M
C93	4010000260	Ceramic	DD104 SL 470J 50V
C94	4010000380	Ceramic	DD107 SL 221J 50V
C95	4010000380	Ceramic	DD107 SL 221J 50V
C96	4040000100	Barrier Layer	UAT 04X 182K
C97	4010000370	Ceramic	DD106 SL 201J 50V
C98	4040000250	Barrier Layer	UAT 08X 473M
C99	4010000520	Ceramic	DD108 B 472K 50V
C100	4010000380	Ceramic	DD107 SL 221J 50V
C101	4010000160	Ceramic	DD104 SL 180J 50V
C102	4010000330	Ceramic	DD105 SL 101J 50V
C103	4010000380	Ceramic	DD107 SL 221J 50V
C104	4040000080	Barrier Layer	UAT 04X 122K
C105	4010000350	Ceramic	DD106 SL 151J 50V
C106	4040000250	Barrier Layer	UAT 08X 473M
C107	4010000520	Ceramic	DD108 B 472K 50V
C108	4010000340	Ceramic	DD105 SL 121J 50V
C109	4010000240	Ceramic	DD104 SL 390J 50V
C110	4010000300	Ceramic	DD104 SL 680J 50V
C111	4010000340	Ceramic	DD105 SL 121J 50V
C112	4040000460	Barrier Layer	RAU 08SA 821K
C113	4010000330	Ceramic	DD105 SL 101J 50V
C114	4040000250	Barrier Layer	UAT 08X 473M
C117	4040000250	Barrier Layer	UAT 08X 473M
C118	4010000330	Ceramic	DD105 SL 101J 50V
C119	4040000250	Barrier Layer	UAT 08X 473M
C120	4040000250	Barrier Layer	UAT 08X 473M
C121	4040000250	Barrier Layer	UAT 08X 473M
C122	4040000250	Barrier Layer	UAT 08X 473M
C123	4040000260	Barrier Layer	UZE 08X 104M
C125	4010000350	Ceramic	DD106 SL 151J 50V
C126	4010000120	Ceramic	DD104 SL 100D 50V
C127	4010000320	Ceramic	DD104 SL 820J 50V
C128	4010000120	Ceramic	DD104 SL 100D 50V
C129	4010004840	Ceramic	DD305 F 104Z 12V
C130	4010004840	Ceramic	DD305 F 104Z 12V
C131	4010000500	Ceramic	DD104 B 102K 50V
C132	4010000070	Ceramic	DD104 SL 050C 50V
C133	4040000260	Barrier Layer	UZE 08X 104M
C134	4010000100	Ceramic	DD104 SL 080D 50V
C135	4010000100	Ceramic	DD104 SL 080D 50V
C136	4040000260	Barrier Layer	UZE 08X 104M
C137	4010000520	Ceramic	DD108 B 472K 50V
C138	4010000080	Ceramic	DD104 SL 060D 50V
C139	4010000520	Ceramic	DD108 B 472K 50V
C140	4040000190	Barrier Layer	UAT 05X 103K
C141	4510001100	Electrolytic	16 MS7 10 µF
C142	4510001160	Electrolytic	50 MS7 1 µF
C143	4010000520	Ceramic	DD108 B 472K 50V
C144	4510002640	Electrolytic	25 SS 47 µF
C145	4010000330	Ceramic	DD105 SL 101J 50V
C146	4010000350	Ceramic	DD106 SL 151J 50V
C147	4510001970	Electrolytic	50 MS7 0R1 µF
C148	4010000520	Ceramic	DD108 B 472K 50V
C149	4010000520	Ceramic	DD108 B 472K 50V
C150	4040000260	Barrier Layer	UZE 08X 104M
C151	4010000520	Ceramic	DD108 B 472K 50V
C152	4010000520	Ceramic	DD108 B 472K 50V
C153	4010000380	Ceramic	DD107 SL 221J 50V
C154	4510001970	Electrolytic	50 MS7 0R1 µF
C156	4010000520	Ceramic	DD108 B 472K 50V
C157	4010000520	Ceramic	DD108 B 472K 50V
C158	4010000350	Ceramic	DD106 SL 151J 50V
C159	4010000180	Ceramic	DD104 SL 220J 50V
C160	4010000520	Ceramic	DD108 B 472K 50V

[MAIN UNIT]

REF. NO.	ORDER NO.	DESCRIPTION	
C161	4010000520	Ceramic	DD108 B 472K 50V
C162	4010000520	Ceramic	DD108 B 472K 50V
C163	4010000520	Ceramic	DD108 B 472K 50V
C164	4010000520	Ceramic	DD108 B 472K 50V
C165	4010000520	Ceramic	DD108 B 472K 50V
C166	4010000180	Ceramic	DD104 SL 220J 50V
C167	4510001100	Electrolytic	16 MS7 10 µF
C168	4510002380	Electrolytic	16 SS 470 µF (10X12.5)
C169	4510003040	Electrolytic	16 SS 100 µF
C170	4040000260	Barrier Layer	UZE 08X 104M
C171	4510000310	Electrolytic	16 MS16 1000 µF (12.5X16)
C172	4510002640	Electrolytic	25 SS 47 µF
C173	4510002730	Electrolytic	10 SS 100 µF
C174	4040000250	Barrier Layer	UAT 08X 473M
C175	4510001140	Electrolytic	50 MS7 R22 µF
C176	4040000070	Barrier Layer	UAT 04X 102K
C177	4310000020	Mylar	F2D 50V 103K
C178	4510001140	Electrolytic	50 MS7 R22 µF
C179	4510001150	Electrolytic	50 MS7 R47 µF
C180	4510002640	Electrolytic	25 SS 47 µF
C181	4040000150	Barrier Layer	UAT 05X 472K
C182	4040000250	Barrier Layer	UAT 08X 473M
C183	4040000250	Barrier Layer	UAT 08X 473M
C184	4510001140	Electrolytic	50 MS7 R22 µF
C185	4010000320	Ceramic	DD104 SL 820J 50V
C186	4610001120	Trimmer	CVSSC2001
C187	4040000150	Barrier Layer	UAT 05X 472K
C188	4040000150	Barrier Layer	UAT 05X 472K
C189	4040000150	Barrier Layer	UAT 05X 472K
C190	4010000840	Ceramic	DD105 CH 390J 50V
C191	4610001200	Trimmer	CVSSE3001
C192	4010001020	Ceramic	DD111 CH 221J 50V
C193	4010001020	Ceramic	DD111 CH 221J 50V
C194	4040000250	Barrier Layer	UAT 08X 473M
C195	4010000520	Ceramic	DD108 B 472K 50V
C196	4550000400	Tantalum	DN 1C 2R2M
C197	4550000350	Tantalum	DN 1V 010M
C198	4550000340	Tantalum	DN 1C 100M
C199	4550000340	Tantalum	DN 1C 100M
C200	4510002440	Electrolytic	16 SS 220 µF (8X11)
C201	4040000260	Barrier Layer	UZE 08X 104M
C202	4510002810	Electrolytic	16 SS 47 µF
C204	4010000520	Ceramic	DD108 B 472K 50V
C205	4020000670	Cylinder	UP050 SL 470J
C206	4040000150	Barrier Layer	UAT 05X 472K
C207	4010000520	Ceramic	DD108 B 472K 50V
C208	4040000150	Barrier Layer	UAT 05X 472K
C209	4010000520	Ceramic	DD108 B 472K 50V
C210	4010000520	Ceramic	DD108 B 472K 50V
C211	4010000520	Ceramic	DD108 B 472K 50V
C212	4010000520	Ceramic	DD108 B 472K 50V
C213	4010000410	Ceramic	DD107 SL 331J 50V
C214	4510002730	Electrolytic	10 SS 100 µF
C215	4310000010	Mylar	F2D 50V 102K
C216	4010000220	Ceramic	DD104 SL 330J 50V
C217	4040000260	Barrier Layer	UZE 08X 104M
C218	4010000260	Ceramic	DD104 SL 470J 50V
C219	4510001100	Electrolytic	16 MS7 10 µF
C220	4040000150	Barrier Layer	UAT 05X 472K
C221	4510001170	Electrolytic	50 MS7 2R2 µF
C222	4010000520	Ceramic	DD108 B 472K 50V
C225	4040000260	Barrier Layer	UZE 08X 104M
C226	4010000520	Ceramic	DD108 B 472K 50V
C227	4010000520	Ceramic	DD108 B 472K 50V
C228	4310000090	Mylar	F2D 50V 333K
C229	4040000150	Barrier Layer	UAT 05X 472K
C230	4040000250	Barrier Layer	UAT 08X 473M
C231	4010000520	Ceramic	DD108 B 472K 50V
C232	4040000150	Barrier Layer	UAT 05X 472K
C233	4550000340	Tantalum	DN 1C 100M
C234	4040000260	Barrier Layer	UZE 08X 104M

[MAIN UNIT]

REF. NO.	ORDER NO.	DESCRIPTION	
C235	4510001100	Electrolytic	16 MS7 10 µF
C237	4010000520	Ceramic	DD108 B 472K 50V
C238	4010000520	Ceramic	DD108 B 472K 50V
C239	4040000250	Barrier Layer	UAT 08X 473M
C240	4510001100	Electrolytic	16 MS7 10 µF
C241	4040000260	Barrier Layer	UZE 08X 104M
C242	4010000520	Ceramic	DD108 B 472K 50V
C245	4020000250	Cylinder	UP125 X 472M
C246	4010000520	Ceramic	DD108 B 472K 50V
RL1	6330000180	Relay	MZ-12HG
RL2	6330000180	Relay	MZ-12HG
RL3	6330000560	Relay	OUC-SH-114D
S1	2220000360	Switch	ESD-1111212
SO1	6510006640	Socket	50864-1
SO2	6510006640	Socket	50864-1
SO3	6510006640	Socket	50864-1
SO4	6510006640	Socket	50864-1
EP1	0910025983	P.C. Board	B 2593C (MAIN)
EP4	6910000630	Bead core	FSOH070RN

[PLL UNIT]

REF. NO.	ORDER NO.	DESCRIPTION	
IC1	1130000670	IC	µPD4071BC
IC2	1130000970	IC	µPD4030BC
IC3	1130003870	IC	GD4001B
IC4	1130001270	IC	µPD4069UBC
IC5	1130003890	IC	GD4024B
IC6	1140001350	IC	HD63A01Y0RL76P
IC7	1110001680	IC	S-8054ALB
IC9	1130000770	IC	µPD4028BC
IC10	1110002020	IC	TA7805S
IC11	1130001360	IC	TC4021BP
IC12	1130004640	IC	LC3517BS-15
IC13	1130002960	IC	TC9181P
IC14	1120001620	IC	M74ALS74AP
IC15	1120001620	IC	M74ALS74AP
IC16	1110001320	IC	µPC1037HA
IC17	1110001320	IC	µPC1037HA
IC18	1130000720	IC	µPD4081BC
IC19	1130000720	IC	µPD4081BC
Q2	1530000110	Transistor	2SC2458-GR
Q3	1530000110	Transistor	2SC2458-GR
Q4	1510000080	Transistor	2SA1048-GR
Q5	1590000340	Transistor	RN1202
Q9	1530000110	Transistor	2SC2458-GR
Q10	1530000110	Transistor	2SC2458-GR
Q11	1530000110	Transistor	2SC2458-GR
Q12	1530000940	Transistor	2SC1571G
Q13	1530000110	Transistor	2SC2458-GR
Q14	1530000110	Transistor	2SC2458-GR
Q15	1560000090	FET	2SK192A-GR
Q16	1530000110	Transistor	2SC2458-GR
Q17	1560000090	FET	2SK192A-GR

[PLL UNIT]

REF. NO.	ORDER NO.	DESCRIPTION	
Q18	1530000110	Transistor	2SC2458-GR
Q19	1560000090	FET	2SK192A-GR
Q20	1530000110	Transistor	2SC2458-GR
Q21	1560000090	FET	2SK192A-GR
Q22	1530000110	Transistor	2SC2458-GR
Q23	1530000150	Transistor	2SC2668-O
Q24	1530000150	Transistor	2SC2668-O
Q25	1590000340	Transistor	RN1202
Q26	1530000150	Transistor	2SC2668-O
Q27	1530000150	Transistor	2SC2668-O
Q29	1560000090	FET	2SK192A-GR
Q30	1530000150	Transistor	2SC2668-O
Q31	1590000360	Transistor	RN2202
Q32	1530000100	Transistor	2SC2458-Y
Q33	1530000110	Transistor	2SC2458-GR
Q34	1530000150	Transistor	2SC2668-O
Q35	1590000340	Transistor	RN1202
Q36	1530000150	Transistor	2SC2668-O
Q37	1510000080	Transistor	2SA1048-GR
Q38	1510000080	Transistor	2SA1048-GR
Q39	1530000110	Transistor	2SC2458-GR
D1	1710000160	Diode	1SS133
D3	1710000160	Diode	1SS133 (FRG)
D6	1710000160	Diode	1SS133
D13	1710000160	Diode	1SS133
D15	1710000050	Diode	1SS53
D16	1710000050	Diode	1SS53
D20	1710000160	Diode	1SS133
D21	1710000160	Diode	1SS133
D22	1710000160	Diode	1SS133
D38	1710000160	Diode	1SS133
D39	1710000160	Diode	1SS133
D40	1710000160	Diode	1SS133
D41	1710000160	Diode	1SS133
D42	1710000160	Diode	1SS133
D43	1710000040	Diode	1S953
D44	1710000160	Diode	1SS133
D45	1710000160	Diode	1SS133
D46	1710000160	Diode	1SS133
D47	1710000050	Diode	1SS53
D48	1720000050	Varicap	1SV50E
D49	1710000050	Diode	1SS53
D50	1720000050	Varicap	1SV50E
D51	1710000050	Diode	1SS53
D52	1720000050	Varicap	1SV50E
D53	1710000050	Diode	1SS53
D54	1720000050	Varicap	1SV50E
D55	1710000050	Diode	1SS53
D56	1720000050	Varicap	1SV50E
D58	1710000160	Diode	1SS133
D61	1710000160	Diode	1SS133
D62	1710000160	Diode	1SS133
D64	1710000160	Diode	1SS133
D66	1710000160	Diode	1SS133
X1	6060000120	Crystal	CSA4.91MG
X2	6050001520	Crystal	CR-21
L1	6180000880	Coil	LAL 03NA 100K
L2	6140000580	Coil	LR-79
L3	6130000990	Coil	LB-135
L4	6170000180	Coil	LW-19
L5	6140000580	Coil	LR-79
L6	6130000990	Coil	LB-135
L7	6170000180	Coil	LW-19
L8	6140000580	Coil	LR-79
L9	6130000990	Coil	LB-135

[PLL UNIT]

REF. NO.	ORDER NO.	DESCRIPTION	
L10	6170000180	Coil	LW-19
L11	6140000580	Coil	LR-79
L12	6130000990	Coil	LB-135
L13	6170000180	Coil	LW-19
L14	6180000900	Coil	LAL 03NA 101K
L15	6180000900	Coil	LAL 03NA 101K
L16	6180000740	Coil	LAL 03NA R56M
L17	6110001560	Coil	LA-236
L18	6110001560	Coil	LA-236
L19	6110001550	Coil	LA-235
L20	6180000900	Coil	LAL 03NA 101K
L23	6180000720	Coil	LAL 03NA R39M
L24	6180000700	Coil	LAL 03NA R27M
L25	6180000690	Coil	LAL 03NA R22M
L26	6180000960	Coil	LAL 03NA 102K
L27	6180000900	Coil	LAL 03NA 101K
L28	6180000900	Coil	LAL 03NA 101K
L29	6180000900	Coil	LAL 03NA 101K
L30	6110001650	Coil	LA-248
L31	6170000180	Coil	LW-19
L32	6180000850	Coil	LAL 03NA 4R7K
L33	6910000670	Coil	BT01RN1-A61-001
L34	6170000180	Coil	LW-19
L35	6150000760	Coil	LS-94
L36	6180000900	Coil	LAL 03NA 101K
L37	6180000900	Coil	LAL 03NA 101K
L38	6150000990	Coil	LS-114
L39	6150000990	Coil	LS-114
L40	6180000900	Coil	LAL 03NA 101K
L41	6180000690	Coil	LAL 03NA R22M
L42	6180000880	Coil	LAL 03NA 100K
L43	6180000900	Coil	LAL 03NA 101K
L44	6180000900	Coil	LAL 03NA 101K
L45	6180000900	Coil	LAL 03NA 101K
L46	6180000900	Coil	LAL 03NA 101K
L47	6180000900	Coil	LAL 03NA 101K
L48	6180000960	Coil	LAL 03NA 102K
L49	6110001560	Coil	LA-236
L50	6180001220	Coil	LAL 04NA 100K
R1	7010003780	Resistor	ELR20J 1 M Ω
R2	7010003550	Resistor	ELR20J 15 kΩ
R3	7010004320	Resistor	R20J 10 kΩ
R4	7010003810	Resistor	ELR20J 2.2 M Ω
R5	7010003780	Resistor	ELR20J 1 M Ω
R6	7010003550	Resistor	ELR20J 15 kΩ
R7	7010001400	Resistor	R25XJ 100 kΩ
R8	7010003700	Resistor	ELR20J 220 kΩ
R9	7010003660	Resistor	ELR20J 100 kΩ
R10	7010003700	Resistor	ELR20J 220 kΩ
R11	7010003660	Resistor	ELR20J 100 kΩ
R12	7010003660	Resistor	ELR20J 100 kΩ
R13	7010004320	Resistor	R20J 10 kΩ
R15	7010003420	Resistor	ELR20J 1.5 kΩ
R16	7010003530	Resistor	ELR20J 10 kΩ
R17	7010003620	Resistor	ELR20J 47 kΩ
R18	7010004450	Resistor	R20J 100 kΩ
R19	7010003620	Resistor	ELR20J 47 kΩ
R20	7010003620	Resistor	ELR20J 47 kΩ
R21	7010003530	Resistor	ELR20J 10 kΩ
R22	7010003620	Resistor	ELR20J 47 kΩ
R23	7010003400	Resistor	ELR20J 1 kΩ
R24	7010003400	Resistor	ELR20J 1 kΩ
R25	7010003400	Resistor	ELR20J 1 kΩ
R26	7010003400	Resistor	ELR20J 1 kΩ
R27	7010003400	Resistor	ELR20J 1 kΩ
R28	7010003400	Resistor	ELR20J 1 kΩ
R41	7010004190	Resistor	R20J 1 kΩ
R42	7010004190	Resistor	R20J 1 kΩ
R43	7010001150	Resistor	R25XJ 1 kΩ

[PLL UNIT]

REF. NO.	ORDER NO.	DESCRIPTION	
R44	7010001150	Resistor	R25XJ 1 kΩ
R45	7010001150	Resistor	R25XJ 1 kΩ
R46	7010001150	Resistor	R25XJ 1 kΩ
R47	7010001150	Resistor	R25XJ 1 kΩ
R48	7010001150	Resistor	R25XJ 1 kΩ
R49	7010000920	Resistor	R25XJ 12 Ω
R50	7010003530	Resistor	ELR20J 10 kΩ
R51	7010003530	Resistor	ELR20J 10 kΩ
R52	7010004320	Resistor	R20J 10 kΩ
R53	7010003400	Resistor	ELR20J 1 kΩ
R55	7010003400	Resistor	ELR20J 1 kΩ
R56	7010003400	Resistor	ELR20J 1 kΩ
R57	7010003530	Resistor	ELR20J 10 kΩ
R58	7010003530	Resistor	ELR20J 10 kΩ
R59	7010001360	Resistor	R25XJ 47 kΩ
R60	7010001280	Resistor	R25XJ 10 kΩ
R61	7010004230	Resistor	R20J 2.2 kΩ
R62	7010004320	Resistor	R20J 10 kΩ
R63	7010004410	Resistor	R20J 47 kΩ
R64	7010004320	Resistor	R20J 10 kΩ
R66	7410000180	Resistor Array	RMX- 8 103K
R67	7010003530	Resistor	ELR20J 10 kΩ
R71	7010003460	Resistor	ELR20J 3.3 kΩ
R72	7010004070	Resistor	R20J 100 Ω
R73	7010000920	Resistor	R25XJ 12 Ω
R74	7010003400	Resistor	ELR20J 1 kΩ
R75	7010003700	Resistor	ELR20J 220 kΩ
R76	7010003440	Resistor	ELR20J 2.2 kΩ
R77	7010001150	Resistor	R25XJ 1 kΩ
R78	7010003660	Resistor	ELR20J 100 kΩ
R79	7010003660	Resistor	ELR20J 100 kΩ
R80	7010001060	Resistor	R25XJ 180 Ω
R82	7010003660	Resistor	ELR20J 100 kΩ
R83	7010003660	Resistor	ELR20J 100 kΩ
R84	7010003310	Resistor	ELR20J 180 Ω
R85	7010003660	Resistor	ELR20J 100 kΩ
R86	7010004450	Resistor	R20J 100 kΩ
R87	7010003310	Resistor	ELR20J 180 Ω
R88	7010003660	Resistor	ELR20J 100 kΩ
R89	7010003660	Resistor	ELR20J 100 kΩ
R90	7010003310	Resistor	ELR20J 180 Ω
R91	7010004090	Resistor	R20J 150 Ω
R92	7010004250	Resistor	R20J 3.3 kΩ
R93	7010004090	Resistor	R20J 150 Ω
R94	7010004250	Resistor	R20J 3.3 kΩ
R95	7010003300	Resistor	ELR20J 150 Ω
R96	7010004250	Resistor	R20J 3.3 kΩ
R97	7010003300	Resistor	ELR20J 150 Ω
R98	7010003460	Resistor	ELR20J 3.3 kΩ
R99	7010003780	Resistor	ELR20J 1 M Ω
R101	7010003360	Resistor	ELR20J 470 Ω
R103	7010000990	Resistor	R25XJ 47 Ω
R104	7010003480	Resistor	ELR20J 4.7 kΩ
R105	7010004110	Resistor	R20J 220 Ω
R106	7010003340	Resistor	ELR20J 330 Ω
R107	7010003990	Resistor	R20J 22 Ω
R108	7010003530	Resistor	ELR20J 10 kΩ
R109	7010003580	Resistor	ELR20J 22 kΩ
R110	7010004070	Resistor	R20J 100 Ω
R111	7010003200	Resistor	ELR20J 22 Ω
R112	7010003320	Resistor	ELR20J 220 Ω
R113	7010003330	Resistor	ELR20J 270 Ω
R114	7010003980	Resistor	R20J 18 Ω
R115	7010003330	Resistor	ELR20J 270 Ω
R116	7010001150	Resistor	R25XJ 1 kΩ
R117	7010001150	Resistor	R25XJ 1 kΩ
R118	7010004190	Resistor	R20J 1 kΩ
R119	7010001070	Resistor	R25XJ 220 Ω
R121	7010003480	Resistor	ELR20J 4.7 kΩ
R123	7010003280	Resistor	ELR20J 100 Ω
R124	7010004150	Resistor	R20J 470 Ω

[PLL UNIT]

REF. NO.	ORDER NO.	DESCRIPTION	
R125	7010003620	Resistor	ELR20J 47 kΩ
R126	7010003420	Resistor	ELR20J 1.5 kΩ
R127	7010003990	Resistor	R20J 22 Ω
R128	7010003360	Resistor	ELR20J 470 Ω
R129	7010004110	Resistor	R20J 220 Ω
R130	7010001150	Resistor	R25XJ 1 kΩ
R131	7010004190	Resistor	R20J 1 kΩ
R132	7010004190	Resistor	R20J 1 kΩ
R133	7010001230	Resistor	R25XJ 4.7 kΩ
R134	7010003160	Resistor	ELR20J 10 Ω
R136	7010003580	Resistor	ELR20J 22 kΩ
R137	7010003660	Resistor	ELR20J 100 kΩ
R138	7010003300	Resistor	ELR20J 150 Ω
R139	7010003440	Resistor	ELR20J 2.2 kΩ
R140	7010003530	Resistor	ELR20J 10 kΩ
R141	7010003480	Resistor	ELR20J 4.7 kΩ
R142	7010003340	Resistor	ELR20J 330 Ω
R143	7010004110	Resistor	R20J 220 Ω
R144	7010003280	Resistor	ELR20J 100 Ω
R145	7010003240	Resistor	ELR20J 47 Ω
R146	7010003280	Resistor	ELR20J 100 Ω
R149	7010004070	Resistor	R20J 100 Ω
R150	7010004190	Resistor	R20J 1 kΩ
R151	7010003600	Resistor	ELR20J 33 kΩ
R152	7010003440	Resistor	ELR20J 2.2 kΩ
R153	7010003280	Resistor	ELR20J 100 Ω
R154	7010004690	Resistor	R50XJ 47 Ω
R155	7010004190	Resistor	R20J 1 kΩ
R156	7010003480	Resistor	ELR20J 4.7 kΩ
R157	7010003550	Resistor	ELR20J 15 kΩ
R158	7010003360	Resistor	ELR20J 470 Ω
R159	7010003240	Resistor	ELR20J 47 Ω
R160	7010003320	Resistor	ELR20J 220 Ω
R161	7010003530	Resistor	ELR20J 10 kΩ
R162	7010003410	Resistor	ELR20J 1.2 kΩ
R163	7010003530	Resistor	ELR20J 10 kΩ
R164	7010004370	Resistor	R20J 22 kΩ
R165	7010003300	Resistor	ELR20J 150 Ω
R166	7010001030	Resistor	R25XJ 100 Ω
R167	7010004320	Resistor	R20J 10 kΩ
R168	7010004320	Resistor	R20J 10 kΩ
R169	7010004320	Resistor	R20J 10 kΩ
R170	7010004320	Resistor	R20J 10 kΩ
R171	7010003620	Resistor	ELR20J 47 kΩ
R172	7010003620	Resistor	ELR20J 47 kΩ
R173	7010004150	Resistor	R20J 470 Ω
R175	7010004190	Resistor	R20J 1 kΩ
R176	7010003360	Resistor	ELR20J 470 Ω
R177	7010003360	Resistor	ELR20J 470 Ω
R178	7010003360	Resistor	ELR20J 470 Ω
R181	7010003760	Resistor	ELR20J 680 kΩ
R182	7010003530	Resistor	ELR20J 10 kΩ
R183	7010004600	Resistor	R20J 2.2 M Ω
R184	7010003490	Resistor	ELR20J 5.6 kΩ
R185	7010003530	Resistor	ELR20J 10 kΩ
R186	7010003610	Resistor	ELR20J 39 kΩ
C1	4010000500	Ceramic	DD104 B 102K 50V
C2	4010000500	Ceramic	DD104 B 102K 50V
C3	4510001150	Electrolytic	50 MS7 R47 µF
C4	4040000260	Barrier Layer	UZE 08X 104M
C5	4010000500	Ceramic	DD104 B 102K 50V
C6	4010000500	Ceramic	DD104 B 102K 50V
C8	4020000400	Cylinder	UP050 B 102K
C11	4040000250	Barrier Layer	UAT 08X 473M
C12	4040000250	Barrier Layer	UAT 08X 473M
C13	4040000250	Barrier Layer	UAT 08X 473M
C14	4040000260	Barrier Layer	UZE 08X 104M
C15	4010000810	Ceramic	DD105 CH 300J 50V
C16	4010000810	Ceramic	DD105 CH 300J 50V

[PLL UNIT]

REF. NO.	ORDER NO.	DESCRIPTION	
C17	4040000260	Barrier Layer	UZE 08X 104M
C18	4510002640	Electrolytic	25 SS 47 µF
C19	4040000260	Barrier Layer	UZE 08X 104M
C20	4510003040	Electrolytic	16 SS 100 µF
C24	4040000250	Barrier Layer	UAT 08X 473M
C25	4040000260	Barrier Layer	UZE 08X 104M
C26	4010000520	Ceramic	DD108 B 472K 50V
C27	4510003040	Electrolytic	16 SS 100 µF
C28	4010000500	Ceramic	DD104 B 102K 50V
C29	4510001750	Electrolytic	50 RBP 2.2 µF
C31	4010003460	Ceramic	DD104 UJ 330J 50V
C32	4040000250	Barrier Layer	UAT 08X 473M
C33	4010000940	Ceramic	DD107 CH 101J 50V
C34	4010000770	Ceramic	DD104 CH 200J 50V
C35	4610001130	Trimmer	CVSSA1001
C36	4010000900	Ceramic	DD107 CH 680J 50V
C37	4510002640	Electrolytic	25 SS 47 µF
C38	4010000720	Ceramic	DD104 CH 120J 50V
C39	4010000720	Ceramic	DD104 CH 120J 50V
C40	4010000520	Ceramic	DD108 B 472K 50V
C41	4010000520	Ceramic	DD108 B 472K 50V
C42	4010000040	Ceramic	DD104 SL 020C 50V
C43	4010000500	Ceramic	DD104 B 102K 50V
C44	4010000900	Ceramic	DD107 CH 680J 50V
C45	4010000740	Ceramic	DD104 CH 150J 50V
C46	4610001130	Trimmer	CVSSA1001
C47	4010000860	Ceramic	DD106 CH 470J 50V
C48	4510002640	Electrolytic	25 SS 47 µF
C49	4010000720	Ceramic	DD104 CH 120J 50V
C50	4010000720	Ceramic	DD104 CH 120J 50V
C51	4010000520	Ceramic	DD108 B 472K 50V
C52	4010000520	Ceramic	DD108 B 472K 50V
C53	4010000040	Ceramic	DD104 SL 020C 50V
C54	4010000220	Ceramic	DD104 SL 330J 50V
C55	4010000240	Ceramic	DD104 SL 390J 50V
C56	4010000500	Ceramic	DD104 B 102K 50V
C57	4010000870	Ceramic	DD106 CH 510J 50V
C58	4010000700	Ceramic	DD104 CH 100D 50V
C59	4610001000	Trimmer	CVSSA0701
C60	4010000860	Ceramic	DD106 CH 470J 50V
C61	4510002640	Electrolytic	25 SS 47 µF
C62	4010000720	Ceramic	DD104 CH 120J 50V
C63	4010000720	Ceramic	DD104 CH 120J 50V
C64	4010000520	Ceramic	DD108 B 472K 50V
C65	4010000520	Ceramic	DD108 B 472K 50V
C66	4010000040	Ceramic	DD104 SL 020C 50V
C67	4010000500	Ceramic	DD104 B 102K 50V
C68	4010000860	Ceramic	DD106 CH 470J 50V
C69	4010000630	Ceramic	DD104 CJ 030C 50V
C70	4610001000	Trimmer	CVSSA0701
C71	4010000820	Ceramic	DD105 CH 330J 50V
C72	4510002640	Electrolytic	25 SS 47 µF
C73	4010000660	Ceramic	DD104 CH 060D 50V
C74	4010000720	Ceramic	DD104 CH 120J 50V
C75	4010000520	Ceramic	DD108 B 472K 50V
C76	4040000260	Barrier Layer	UZE 08X 104M
C77	4510003040	Electrolytic	16 SS 100 µF
C78	4010000520	Ceramic	DD108 B 472K 50V
C79	4010000040	Ceramic	DD104 SL 020C 50V
C80	4010000500	Ceramic	DD104 B 102K 50V
C81	4010000260	Ceramic	DD104 SL 470J 50V
C82	4040000150	Barrier Layer	UAT 05X 472K
C83	4010000460	Ceramic	DD104 B 471K 50V
C84	4040000250	Barrier Layer	UAT 08X 473M
C85	4010000380	Ceramic	DD107 SL 221J 50V
C86	4010000500	Ceramic	DD104 B 102K 50V
C87	4010000240	Ceramic	DD104 SL 390J 50V
C88	4010000150	Ceramic	DD104 SL 150J 50V
C89	4010000240	Ceramic	DD104 SL 390J 50V
C90	4010000160	Ceramic	DD104 SL 180J 50V
C91	4010000180	Ceramic	DD104 SL 220J 50V

[PLL UNIT]

REF. NO.	ORDER NO.	DESCRIPTION	
C92	4010000230	Ceramic	DD104 SL 360J 50V
C93	4010000180	Ceramic	DD104 SL 220J 50V
C94	4010000120	Ceramic	DD104 SL 100D 50V
C95	4040000150	Barrier Layer	UAT 05X 472K
C96	4010000520	Ceramic	DD108 B 472K 50V
C97	4040000150	Barrier Layer	UAT 05X 472K
C98	4010000520	Ceramic	DD108 B 472K 50V
C99	4010000300	Ceramic	DD104 SL 680J 50V
C100	4010000080	Ceramic	DD104 SL 060D 50V
C101	4010000320	Ceramic	DD104 SL 820J 50V
C102	4010000160	Ceramic	DD104 SL 180J 50V
C103	4010000310	Ceramic	DD104 SL 750J 50V
C104	4010000520	Ceramic	DD108 B 472K 50V
C105	4040000260	Barrier Layer	UZE 08X 104M
C106	4010000520	Ceramic	DD108 B 472K 50V
C107	4040000250	Barrier Layer	UAT 08X 473M
C108	4010000520	Ceramic	DD108 B 472K 50V
C109	4010000460	Ceramic	DD104 B 471K 50V
C110	4010000210	Ceramic	DD104 SL 300J 50V
C111	4010000410	Ceramic	DD107 SL 331J 50V
C112	4010000520	Ceramic	DD108 B 472K 50V
C113	4040000260	Barrier Layer	UZE 08X 104M
C114	4550000400	Tantalum	DN 1C 2R2M
C115	4010000520	Ceramic	DD108 B 472K 50V
C116	4010000740	Ceramic	DD104 CH 150J 50V
C117	4010000810	Ceramic	DD105 CH 300J 50V
C118	4010000900	Ceramic	DD107 CH 680J 50V
C119	4010000720	Ceramic	DD104 CH 120J 50V
C120	4010000720	Ceramic	DD104 CH 120J 50V
C121	4040000150	Barrier Layer	UAT 05X 472K
C122	4510001100	Electrolytic	16 MS7 10 µF
C123	4010000500	Ceramic	DD104 B 102K 50V
C124	4010000520	Ceramic	DD108 B 472K 50V
C125	4010000520	Ceramic	DD108 B 472K 50V
C126	4010000380	Ceramic	DD107 SL 221J 50V
C127	4040000260	Barrier Layer	UZE 08X 104M
C128	4040000260	Barrier Layer	UZE 08X 104M
C129	4010000520	Ceramic	DD108 B 472K 50V
C130	4020000400	Cylinder	UP050 B 102K
C131	4040000260	Barrier Layer	UZE 08X 104M
C132	4510002640	Electrolytic	25 SS 47 µF
C133	4010000220	Ceramic	DD104 SL 330J 50V
C134	4610001120	Trimmer	CVSSC2001
C135	4010003100	Ceramic	DD106 TH 820J 50V
C136	4010000520	Ceramic	DD108 B 472K 50V
C137	4010000520	Ceramic	DD108 B 472K 50V
C138	4010003100	Ceramic	DD106 TH 820J 50V
C139	4010000010	Ceramic	DD104 SL 0R5C 50V
C140	4040000150	Barrier Layer	UAT 05X 472K
C141	4010000500	Ceramic	DD104 B 102K 50V
C142	4010000500	Ceramic	DD104 B 102K 50V
C143	4010000500	Ceramic	DD104 B 102K 50V
C144	4010000380	Ceramic	DD107 SL 221J 50V
C145	4040000260	Barrier Layer	UZE 08X 104M
C146	4010000100	Ceramic	DD104 SL 080D 50V
C147	4010000520	Ceramic	DD108 B 472K 50V
C148	4010000010	Ceramic	DD104 SL 0R5C 50V
C149	4010000100	Ceramic	DD104 SL 080D 50V
C151	4040000260	Barrier Layer	UZE 08X 104M
C152	4040000260	Barrier Layer	UZE 08X 104M
C154	4040000190	Barrier Layer	UAT 05X 103K
C155	4010000520	Ceramic	DD108 B 472K 50V
C157	4010000520	Ceramic	DD108 B 472K 50V
C158	4010000520	Ceramic	DD108 B 472K 50V
C159	4010000520	Ceramic	DD108 B 472K 50V
C162	4010000210	Ceramic	DD104 SL 300J 50V
C163	4010000180	Ceramic	DD104 SL 220J 50V
C164	4010000210	Ceramic	DD104 SL 300J 50V
C165	4020000260	Cylinder	TP125 X 103M
C166	4510001100	Electrolytic	16 MS7 10 µF
C167	4510001100	Electrolytic	16 MS7 10 µF

[PLL UNIT]

REF. NO.	ORDER NO.	DESCRIPTION	
C168	4510001100	Electrolytic	16 MS7 10 µF
C169	4510001100	Electrolytic	16 MS7 10 µF
C170	4510001100	Electrolytic	16 MS7 10 µF
C171	4510001100	Electrolytic	16 MS7 10 µF
C172	4510001100	Electrolytic	16 MS7 10 µF
C173	4510001100	Electrolytic	16 MS7 10 µF
C174	4550000340	Tantalum	DN 1C 100M
C175	4020000250	Cylinder	UP125 X 472M
C176	4530000170	Capacitor Array	B7ZC0714-32N
S1	2230000700	Switch	SPPJ31309A [RESUME]
S2	2230000700	Switch	SPPJ31309A [SPEED]
SO1	6510008370	Socket	BBH-1
SO2	6510008370	Socket	BBH-1
BT1	3020000110	Lithium Battery	CR2032
BT2	3020000110	Lithium Battery	CR2032
EP1	6910000600	Bead core	FSOH050RN
EP2	0910025943	P.C. Board	B 2594C (PLL)
EP4	6910000630	Bead core	FSOH070RN

[DDS UNIT]

REF. NO.	ORDER NO.	DESCRIPTION	
IC1	1140000500	IC	SC1051
IC2	1130002600	IC	SC1052
IC3	1130002610	IC	SC1053
IC4	1130002461	IC	TC74HCT374AF
IC5	1130002461	IC	TC74HCT374AF
X1	6050003230	Crystal	CR-180
L1	6200000040	Coil	LQN 5N 331K
L2	6200000040	Coil	LQN 5N 331K
L3	6200000040	Coil	LQN 5N 331K
R1	7030000740	Resistor	MCR10EZHJ 1 M Ω (105)
R2	7030000360	Resistor	MCR10EZHJ 680 Ω (681)
R3	7030000420	Resistor	MCR10EZHJ 2.2 kΩ (222)
R4	7410000320	Resistor Array	GF 5096
R5	7030000500	Resistor	MCR10EZHJ 10 kΩ (103)
R6	7030000500	Resistor	MCR10EZHJ 10 kΩ (103)
R7	7030000500	Resistor	MCR10EZHJ 10 kΩ (103)
C1	4610000520	Trimmer	TZB04N100BA006
C2	4030000950	Ceramic	GRM40 CH 330J 50P T
C3	4030001150	Ceramic	GRM40 F 104Z 25PT
C7	4030000720	Ceramic	GRM40 SL 680J 50P T
C8	4030000560	Ceramic	GRM40 SL 020C 50P T
C9	4030000750	Ceramic	GRM40 SL 121J 50P T
C10	4030000610	Ceramic	GRM40 SL 070D 50P T
C11	4030000750	Ceramic	GRM40 SL 121J 50P T
C12	4030000640	Ceramic	GRM40 SL 120J 50P T

[DDS UNIT]

REF. NO.	ORDER NO.	DESCRIPTION	
C13	4030000720	Ceramic	GRM40 SL 680J 50P T
C14	4030001150	Ceramic	GRM40 F 104Z 25PT
C15	4030001150	Ceramic	GRM40 F 104Z 25PT
C16	4030001150	Ceramic	GRM40 F 104Z 25PT
C17	4030001150	Ceramic	GRM40 F 104Z 25PT
C18	4030002430	Ceramic	GRM40 TH 220J 50P T
C19	4030001100	Ceramic	GRM40 B 102K 50PT
C20	4030001100	Ceramic	GRM40 B 102K 50PT
EP1	0910022511	P.C. Board	B 2203A (DDS)

[REG UNIT]

REF. NO.	ORDER NO.	DESCRIPTION	
Q1	1540000060	Transistor	2SD880-Y
Q2	1510000080	Transistor	2SA1048-GR
Q3	1530000110	Transistor	2SC2458-GR
Q4	1520000320	Transistor	2SB834-Y
Q5	1510000080	Transistor	2SA1048-GR
Q6	1590000340	Transistor	RN1202
Q7	1510000080	Transistor	2SA1048-GR (Except FRG)
D1	1790000350	Diode	KBU 6D
D2	1730000100	Zener	RD5.1E B2
D3	1730000100	Zener	RD5.1E B2
D4	1710000130	Diode	U05B
D5	1710000030	Diode	1S1555 (Except FRG)
D6	1710000130	Diode	U05B (Except FRG)
L1	6170000150	Coil	LW-16
R1	7010003910	Resistor	R20J 4.7 Ω
R2	7010003530	Resistor	ELR20J 10 kΩ
R3	7010004190	Resistor	R20J 1 kΩ
R4	7010003280	Resistor	ELR20J 100 Ω
R5	7010004240	Resistor	R20J 2.7 kΩ
R6	7310000690	Trimmer	RH0651CN2J02A (331)
R7	7010003410	Resistor	ELR20J 1.2 kΩ
R8	7010004780	Resistor	R50XJ 470 Ω
R9	7010003440	Resistor	ELR20J 2.2 kΩ
R10	7010003480	Resistor	ELR20J 4.7 kΩ (Except FRG)
R11	7010000130	Resistor	ELR25J 10 Ω (Except FRG)
R12	7010003480	Resistor	ELR20J 4.7 kΩ
R13	7010004320	Resistor	R20J 10 kΩ
C1	4010000530	Ceramic	DD112 B 103K 50V
C2	4010000530	Ceramic	DD112 B 103K 50V
C3	4010000530	Ceramic	DD112 B 103K 50V
C4	4010000530	Ceramic	DD112 B 103K 50V
C5	4510002370	Electrolytic	35 LPS 4700 µF (30X30)
C6	4510002870	Electrolytic	25 SS 100 µF
C7	4040000260	Barrier Layer	UZE 08X 104M
C8	4040000260	Barrier Layer	UZE 08X 104M
C9	4510002380	Electrolytic	16 SS 470 µF (10X12.5)
C10	4010000520	Ceramic	DD108 B 472K 50V
C11	4510002380	Electrolytic	16 SS 470 µF (10X12.5)

[REG UNIT]

REF. NO.	ORDER NO.	DESCRIPTION	
C12	4040000260	Barrier Layer	UZE 08X 104M
C13	4010004440	Ceramic	DE7090 B 102K VA1 -KC
C14	4010004440	Ceramic	DE7090 B 102K VA1 -KC
C15	4010000520	Ceramic	DD108 B 472K 50V (Except FRG)
C16	4510001100	Electrolytic	16 MS7 10 µF (Except FRG)
RL1	6330000180	Relay	MZ-12HG (Except FRG)
F1	5220000020	Holder	S-N5051
F2	5220000020	Holder	S-N5051
F3	5210000040	Fuse	FGB 2A
F4	5220000050	Holder	FH-032C (All other)
	5220000040	Holder	FH-033 (FRG)
F5	5210000030	Fuse	FGB 1.0A (USA)
	5210000020	Fuse	FGB 0.5A (All other)
	5210000170	Fuse	FGMT 4 0.5A (FRG)
T1	5910000640	Transformer	TP-53 (All other)
	5910000660	Transformer	TP-54 (FRG)
EP1	0910026063	P.C. Board	B 2595C (REG)

[CHASSIS UNIT]

REF. NO.	ORDER NO.	DESCRIPTION	
R1	7540000010	Absorber	DSA-301LA
SP1	2510000040	Speaker	C065K12I0810
EP1	6910004420	Terminal	T-5810

SECTION 7 ADJUSTMENT PROCEDURES

7-1 PREPARATION BEFORE SERVICING

■ REQUIRED TEST EQUIPMENT

EQUIPMENT	GRADE AND RANGE	EQUIPMENT	GRADE AND RANGE
DC power supply	Output voltage : 13.8 V DC Current capacity : 10 A or more	AC milli-voltmeter	Measuring range : 10 mV~10 V
		External speaker	Impedance : 8 Ω
Frequency counter	Frequency range : 0.1 MHz~50 MHz Frequency accuracy : ±1 ppm or better Sensitivity : 100 mV or better	Standard signal generator (SSG)	Frequency range : 0.1 MHz~30 MHz Output level : −127~−17 dBm (0.1 μV~32 mV)
RF voltmeter	Frequency range : 0.1~50 MHz Measuring range : 0.01~10 V		
Oscilloscope	Frequency range : DC~20 MHz Measuring range : 0.01~10 V		

CW: Clockwise
CCW: Counterclockwise

■ CONNECTION

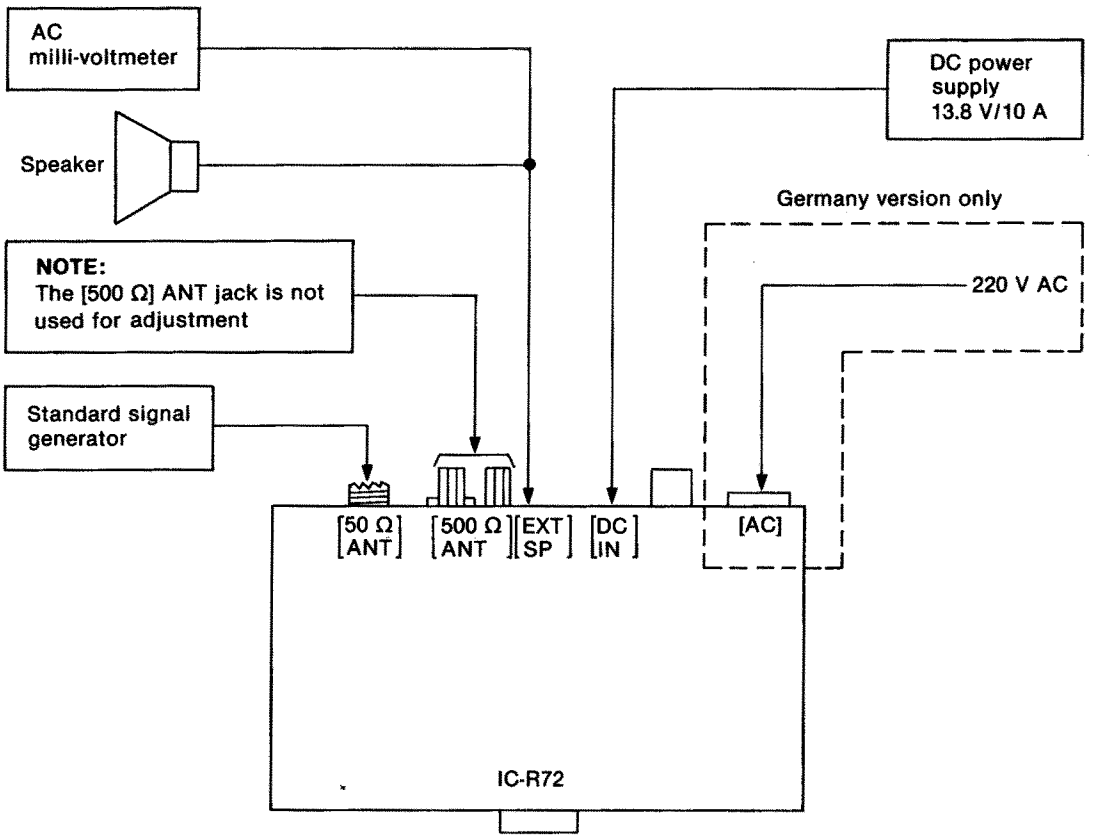

7-2 PLL ADJUSTMENT

ADJUSTMENT		ADJUSTMENT CONDITIONS	MEASUREMENT		VALUE	ADJUSTMENT POINT	
			UNIT	LOCATION		UNIT	ADJUST
DDS CLOCK	1	• Displayed frequency: 14.10000 MHz • Mode : USB	DDS	Connect the frequency counter to IC4, pin 11 or IC5, pin 11.	5.24288 MHz	DDS	C1
REFERENCE FREQUENCY	1	• Displayed frequency: 14.10000 MHz • Mode : USB	PLL	Ground P4 with a 50 Ω resistor. Connect the RF voltmeter to P4.	Preset to the center as shown below.	PLL	C134
	2				Maximum level (More than +3 dBm)		L38, L39
	3			Connect the frequency counter to P4.	61.4400 MHz		L35
	4	After adjustment, remove the resistor from P4 and re-plug P4.					
DDS LOOP	1	• Displayed frequency: 14.12650 MHz • Mode : USB	PLL	Connect the oscilloscope to L42.	1.0 V DC	PLL	L30
	2	• Displayed frequency: 14.12649 MHz			Approx. 2.0 V DC		Verify
	3	After adjustment, fix the L30 in place with paraffin.					
1st LO LOCK VOLTAGE	1	• Displayed frequency: 7.99900 MHz • Mode : USB	PLL	Connect the oscilloscope to R77. (shielding case side)	6.5 V DC	PLL	C35
	2	• Displayed frequency: 14.99900 MHz			6.5 V DC		C46
	3	• Displayed frequency: 21.99900 MHz			6.5 V DC		C59
	4	• Displayed frequency: 30.00000 MHz			6.5 V DC		C70
	5	• Displayed frequency: 0.50000 MHz, 8.00000 MHz, 15.00000 MHz and 22.00000 MHz			More than 1.7 V DC		Verify
1st LO OUTPUT LEVEL	1	• Displayed frequency: 14.10000 MHz • Mode : USB	PLL	Ground P5 with a 50 Ω resistor. Connect the RF voltmeter to P5.	More than −2 dBm	PLL	Verify
	2	After confirmation, remove the resistor from P5 and re-plug P5.					
2nd LO OUTPUT LEVEL	1	• Displayed frequency: 14.10000 MHz • Mode : USB	PLL	Ground P4 with a 50 Ω resistor. Connect the RF voltmeter to P4.	More than +3 dBm	PLL	Verify
	2	After confirmation, remove the resistor from P4 and re-plug P4.					

• PLL AND DDS UNITS

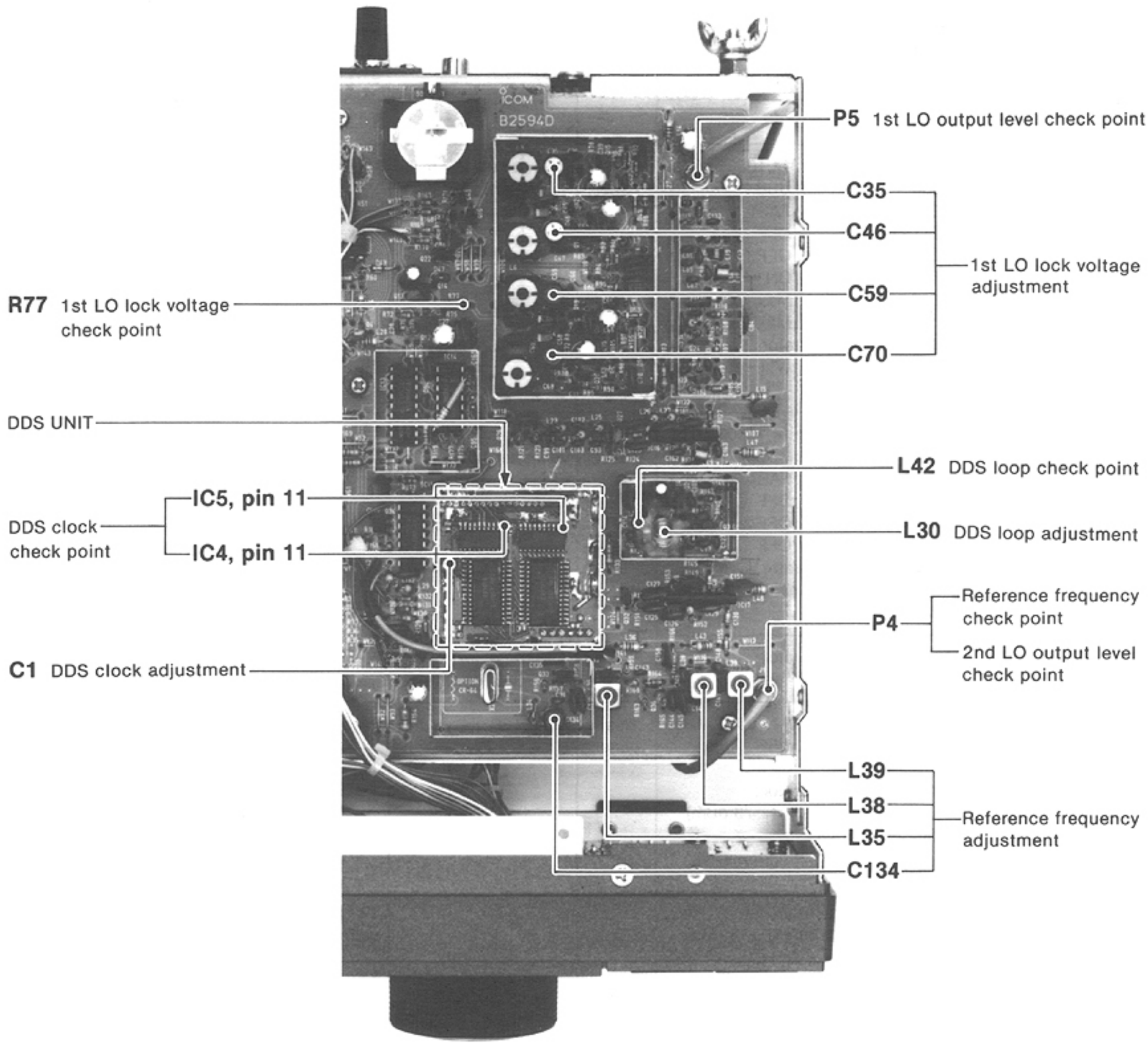

7-3 RECEIVER ADJUSTMENT

ADJUSTMENT		ADJUSTMENT CONDITIONS	MEASUREMENT		VALUE	ADJUSTMENT POINT	
			UNIT	LOCATION		UNIT	ADJUST
BFO FREQUENCY	1	• Displayed frequency: 14.10000 MHz • Mode : USB	MAIN	Connect the frequency counter to R162.	9.01300 MHz	MAIN	C191
	2	• Mode : LSB			9.01000 MHz		L75
	3	• Mode : AM			9.01000 MHz (±100 Hz)		Verify
	4	• Mode : AM/N			9.01150 MHz		C186
	5	• Mode : CW			9.00980 MHz (±150 Hz)		Verify
SENSITIVITY	1	• Displayed frequency: 14.10000 MHz • Mode : USB • [AGC] switch : FAST • [ATT] switch : OFF • [NB] swtich : OFF • [PRE] switch : ON • [SQL] control : Max. CCW • R123 (MAIN) : Max. CCW • Set the signal generator; Level : 0.16 μV* (−123 dBm) Modulation: OFF	Rear panel	Connect the AC milli-voltmeter to the [EXT SP] jack with an 8 Ω load.	Preset to max. CCW.	MAIN	R123
					Maximum audio output level		Adjust in sequence L64, L67, L68, L69, L6, L7, L10, L11, L12, L72, L71, L70
TOTAL GAIN	1	• Displayed frequency: 14.10000 MHz • Mode : USB • [AGC] switch : FAST • [ATT] switch : OFF • [NB] switch : OFF • [PRE] switch : OFF • Set the signal generator; Level : 1.0 mV* (−47 dBm) Modulation: OFF	Rear panel	Connect the AC milli-voltmeter to the [EXT SP] jack with an 8 Ω load.	1.0 V (0 dB)	Front panel	[AF GAIN] control
	2	• Set the signal generator; Level : OFF			30 mV (−30 dB)	MAIN	R123
S-METER	1	• Displayed frequency: 14.10000 MHz • Mode : USB • [PRE] switch : OFF • Set the signal generator; Level : 50 μV* (−73 dBm) Modulation: OFF	Rear panel	S. METER	S9	MAIN	R99
	2	• Set the signal generator; Level : 50 mV* (−13 dBm)			S9+60 dB		R95
	3	Repeat steps 1 and 2 several times.					
TUNING INDICATOR	1	• Displayed frequency: 14.10000 MHz • Mode : AM • [AGC] switch : Fast • [ATT] switch : OFF • [NB] switch : OFF • [PRE] switch : ON • Set the signal generator; Level : 50 μV* (−73 dBm) Modulation: OFF	MAIN	Displayed frequency changes to 14.10070 MHz.	[TUNE] LED goes out.	MAIN	R185

*This output level of the standard signal generator (SSG) is indicated as SSG's open circuit.

• **MAIN UNIT**

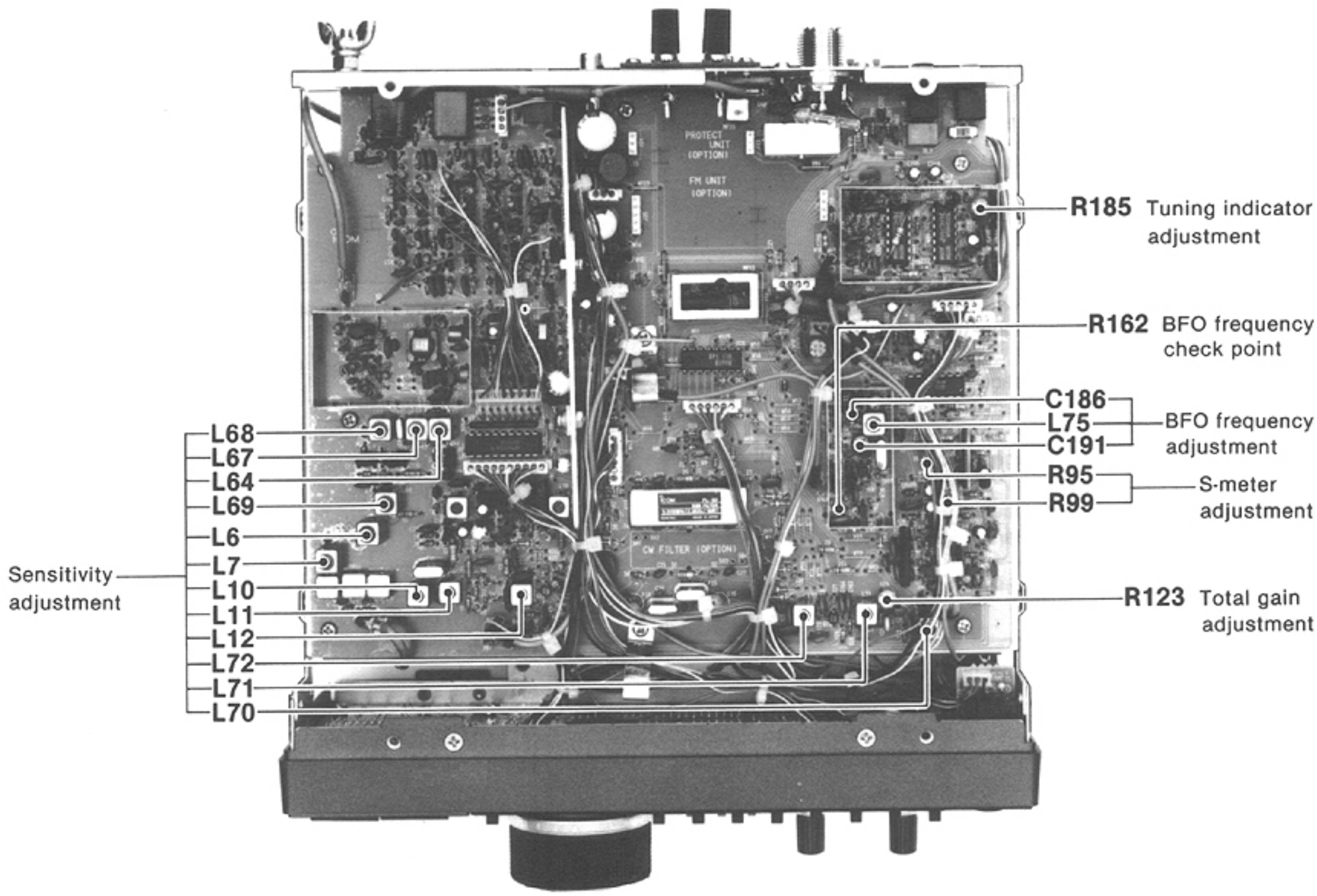

RECEIVER ADJUSTMENT (CONTINUED)

ADJUSTMENT		ADJUSTMENT CONDITIONS	MEASUREMENT		VALUE	ADJUSTMENT POINT	
			UNIT	LOCATION		UNIT	ADJUST
NOISE BLANKER	1	• Displayed frequency: 14.10000 MHz • Mode : USB • [AGC] switch : FAST • [ATT] switch : OFF • [PRE] switch : OFF • [NB] switch : OFF • [HIGH] switch : OFF • Set the signal generator; Level : 10μV* (−87 dBm) Modulation: OFF • Add the following signal into the signal generator output. 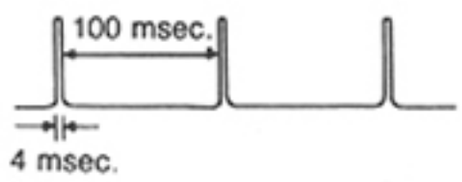 	MAIN	Connect the oscilloscope to the cathode of D71.	Adjust the maximum noise waveform on the oscilloscope.	MAIN	L17, L18
	2	• [NB] switch : ON • Set the signal generator; Level : 0.1 mV* (−67 dBm) Modulation: OFF • Add the same signal above.			The noise must be blanked.		Verify
	3	• Set the signal generator; Level : 10μV* (−87 dBm) Modulation: OFF • Add the same signal above.			The noise must be heard.		Verify
	4	• [HIGH] switch: ON			The noise must be blanked.		Verify

*This output level of the standard signal generator (SSG) is indicated as SSG's open circuit.

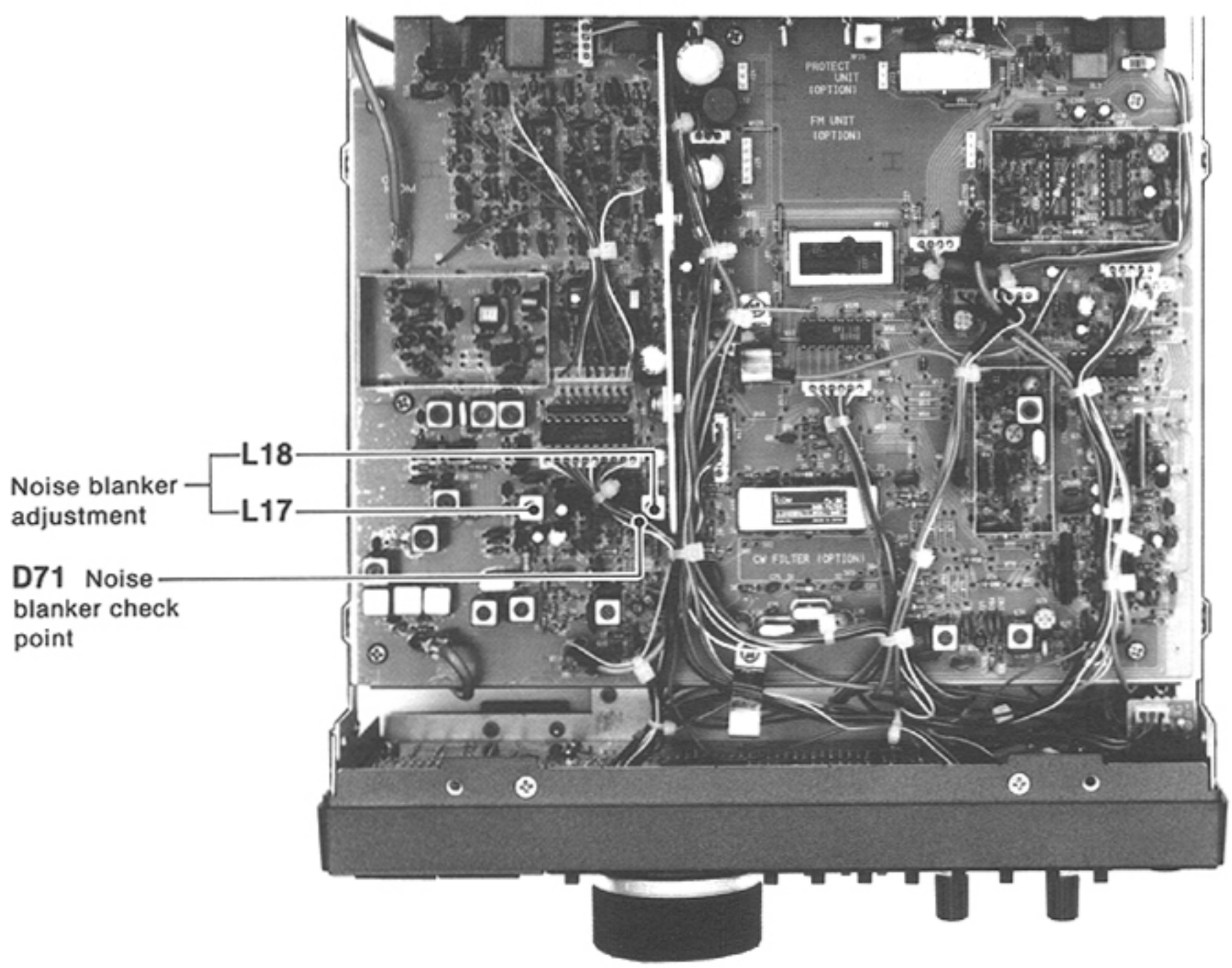

SECTION 8 BOARD LAYOUTS

8-1 SUBORDINATE FRONT UNITS

• TENKEY UNIT

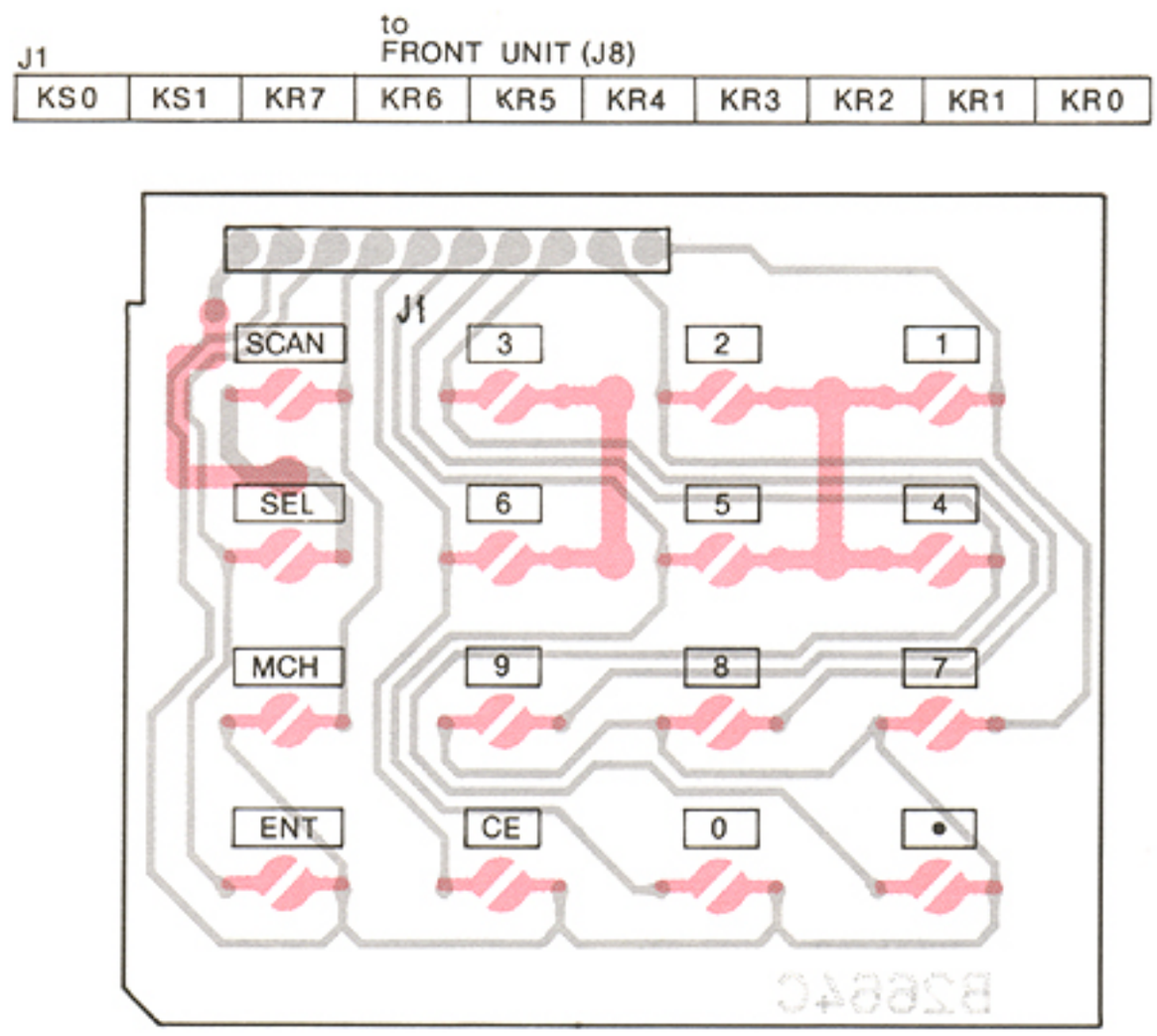

• VR UNIT

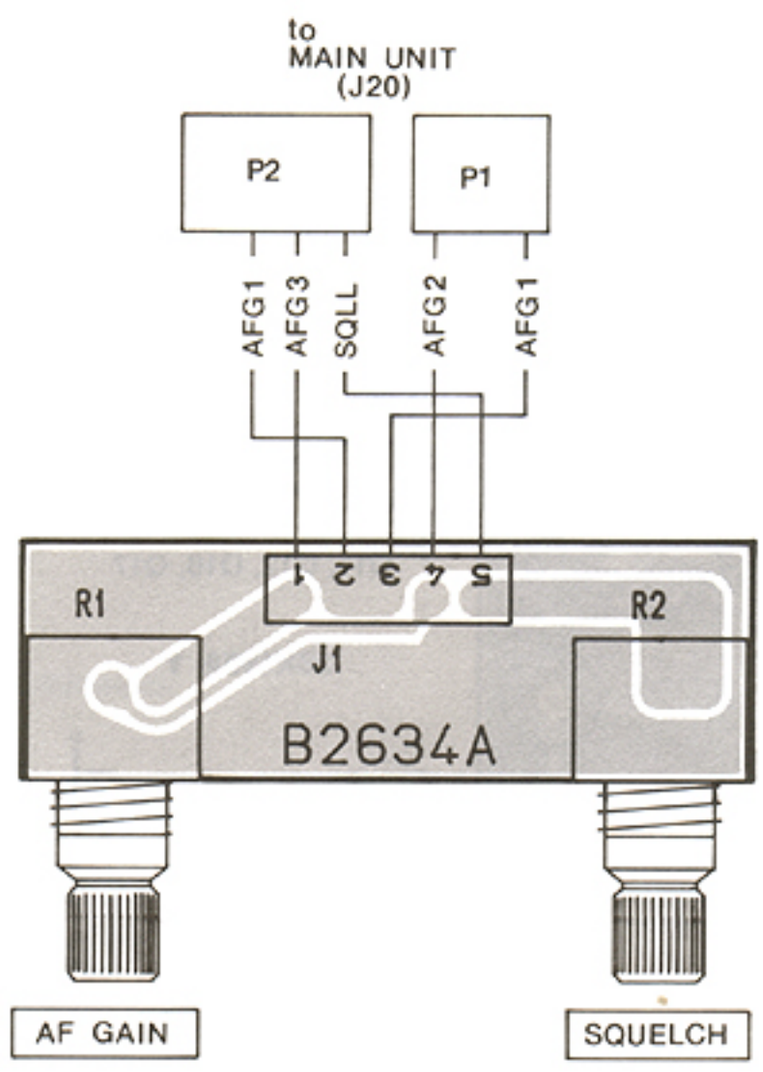

• JACK UNIT

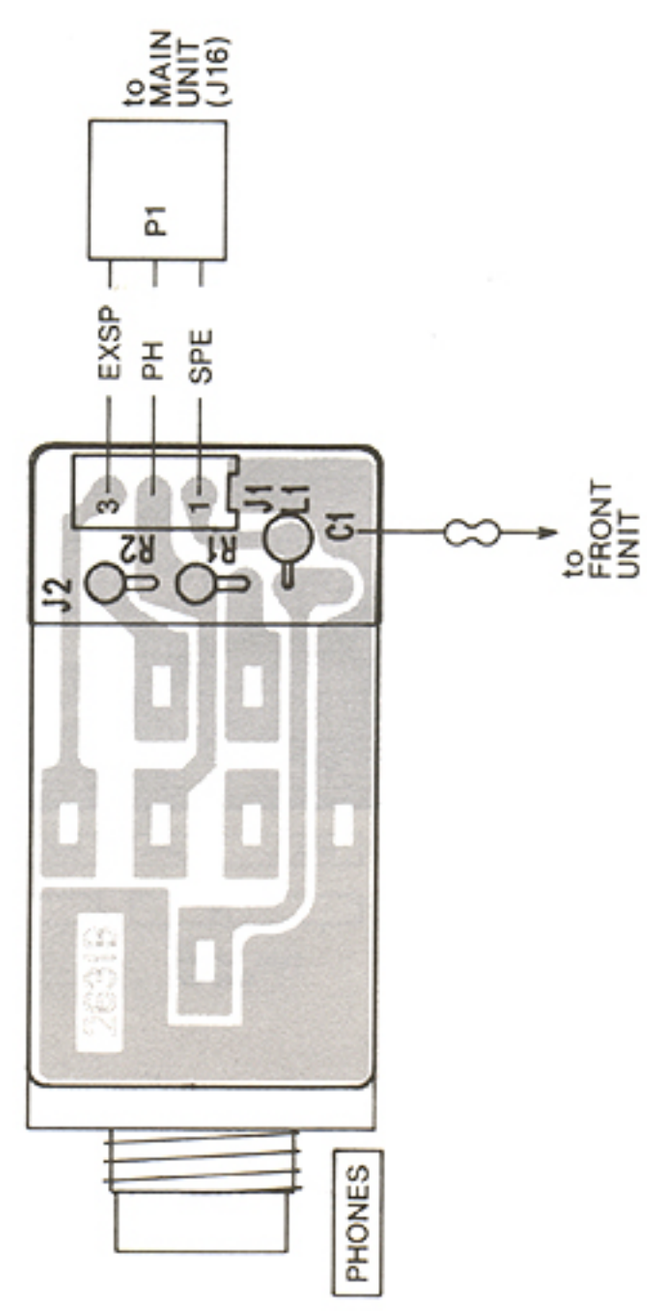

• FRONT UNIT

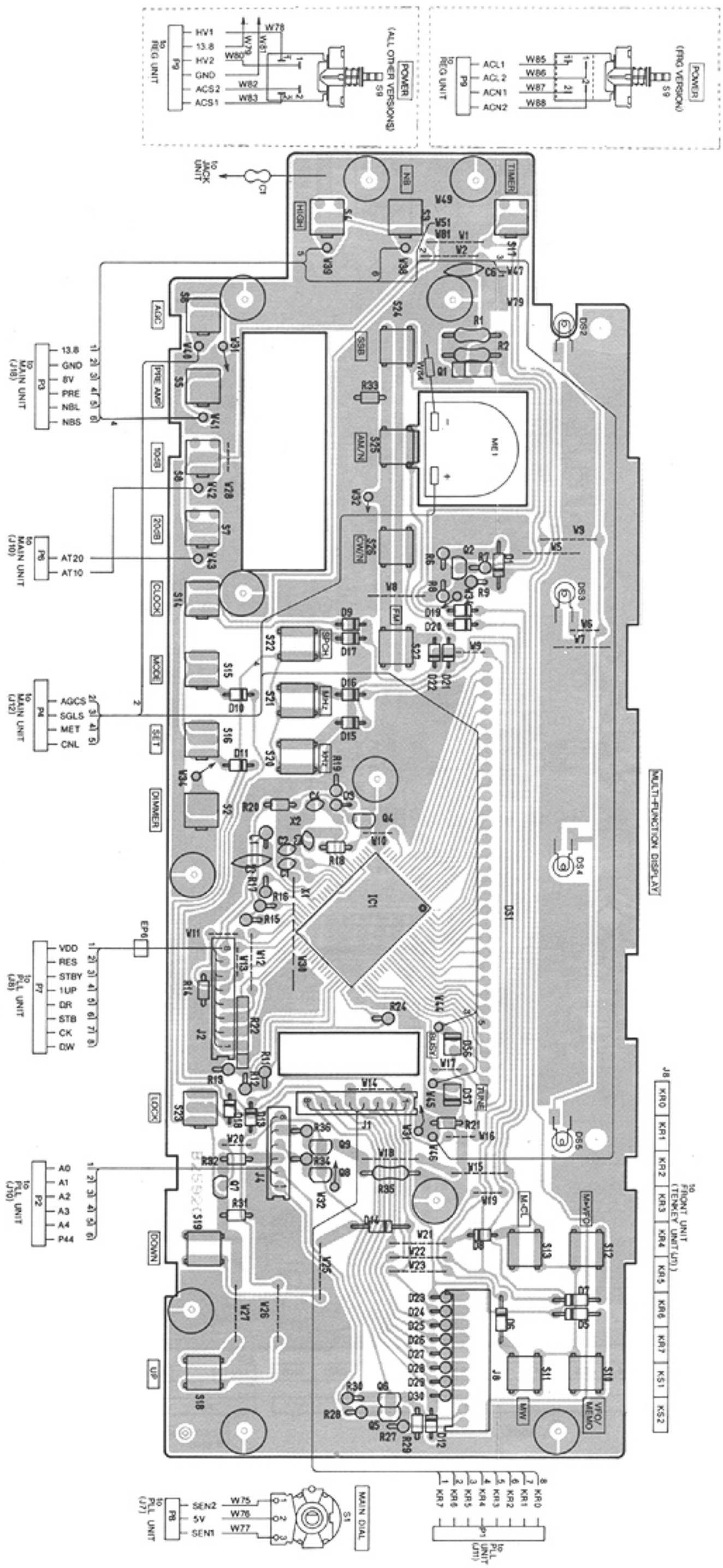

2SB909M Q

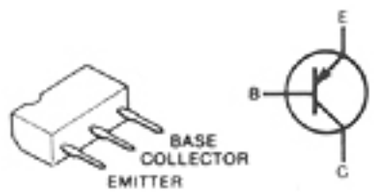

Q1

2SC2458-GR

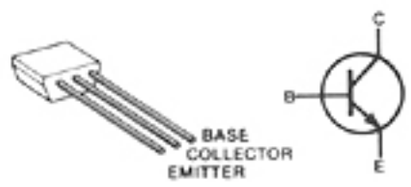

Q2, Q4, Q5, Q6, Q7, Q8, Q9

8-2 MAIN UNIT

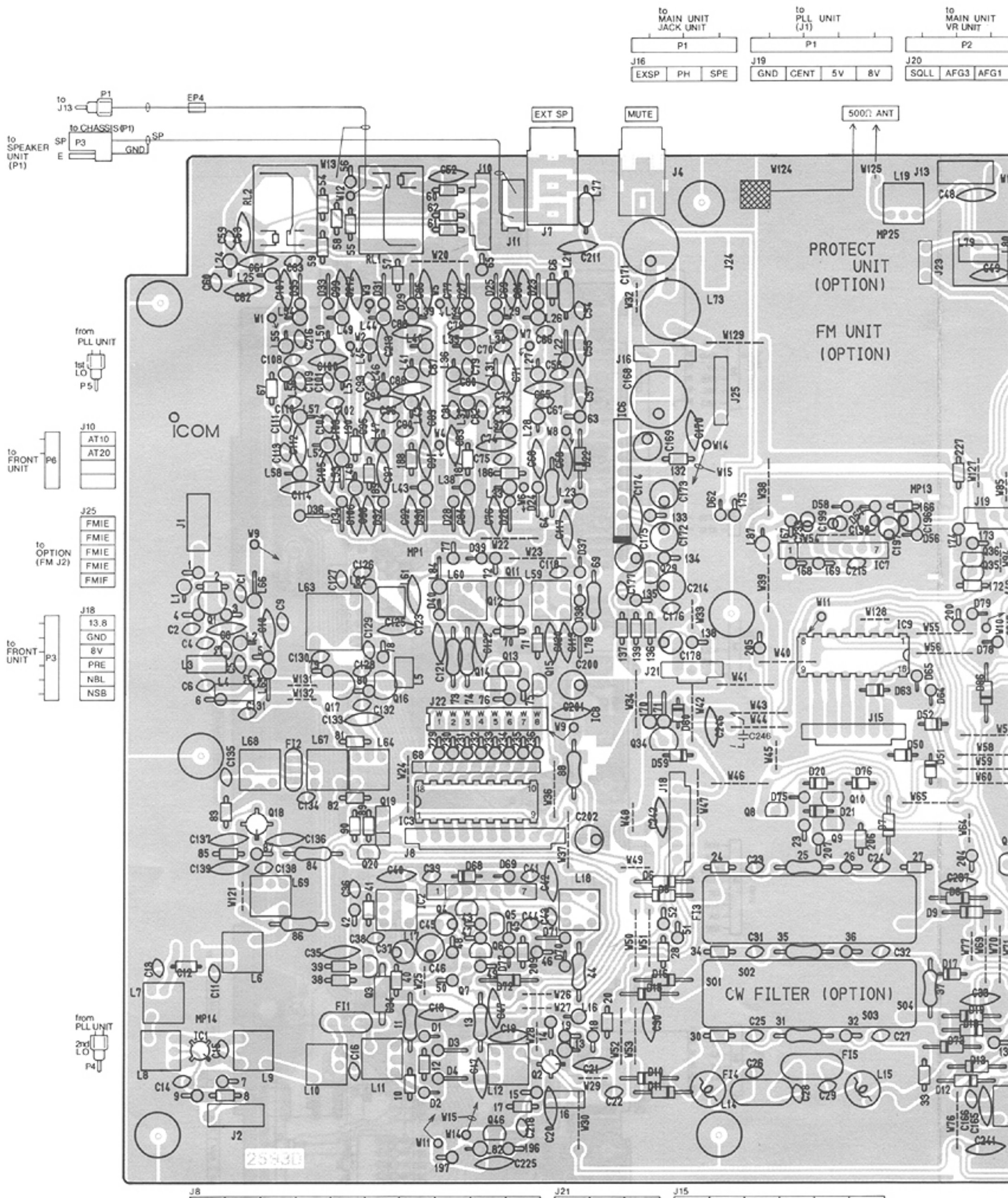

RN2202

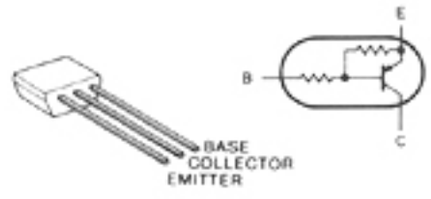

Q7, Q9, Q10, Q13,
Q23, Q40, Q41, Q48

RN1204

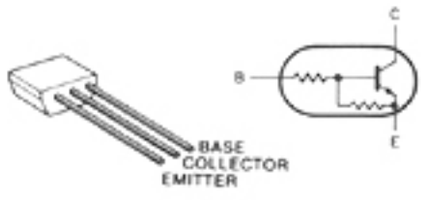

Q39, Q45

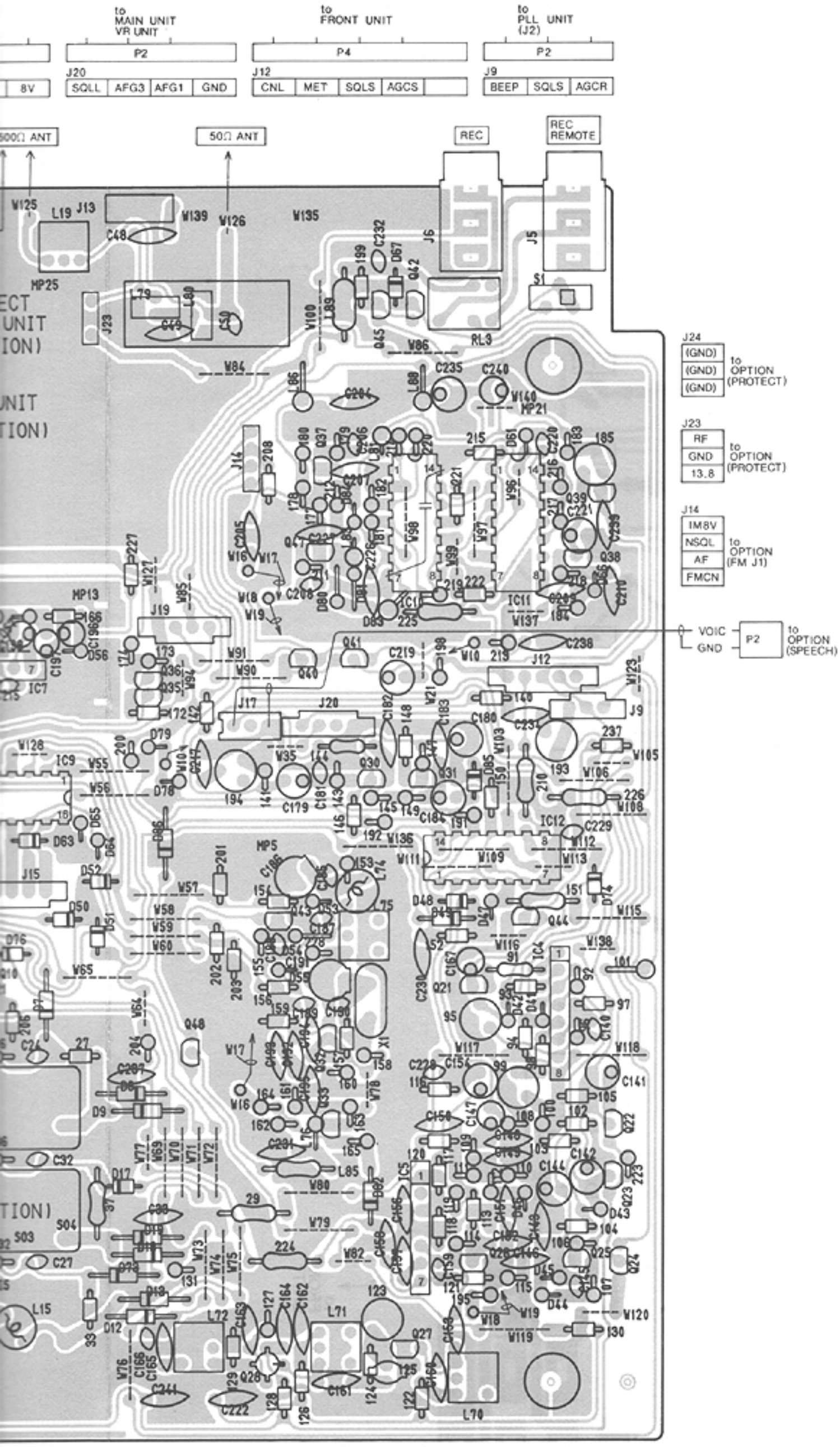

2SA1048 GR

Q4, Q8, Q22

2SB909M Q

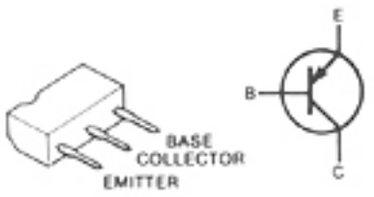

Q19

2SC2053

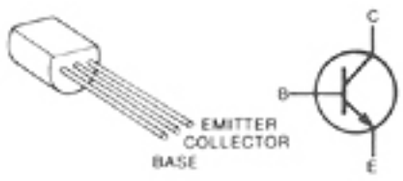

Q1

2SC2458-GR

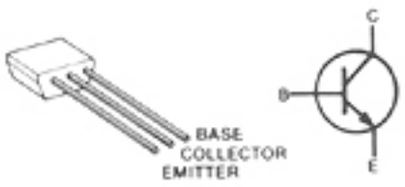

Q5, Q6, Q14, Q25, Q26, Q29, Q30, Q31, Q32, Q33, Q36, Q37, Q38

2SD468C

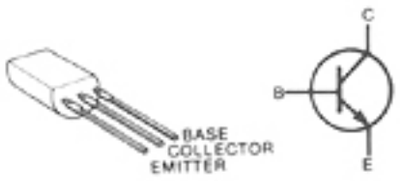

Q34

2SK125

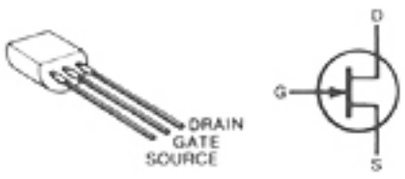

Q11, Q12, Q16, Q17

2SK192A Y

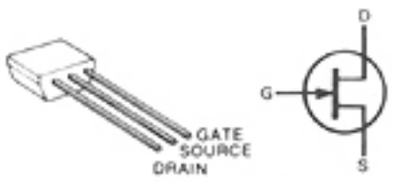

Q3

RN1202

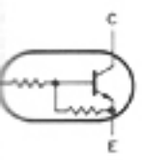

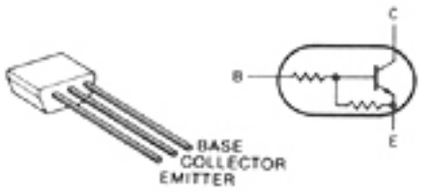

Q15, Q20, Q21, Q24, Q35, Q42, Q43, Q44

3SK74 M

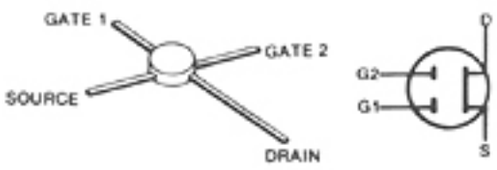

Q2, Q18, Q28

2SK241 Y

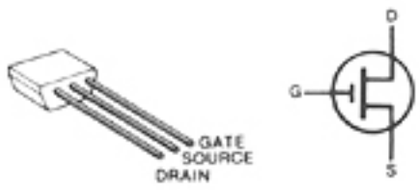

Q27, Q46, Q47

8-3 PLL UNIT

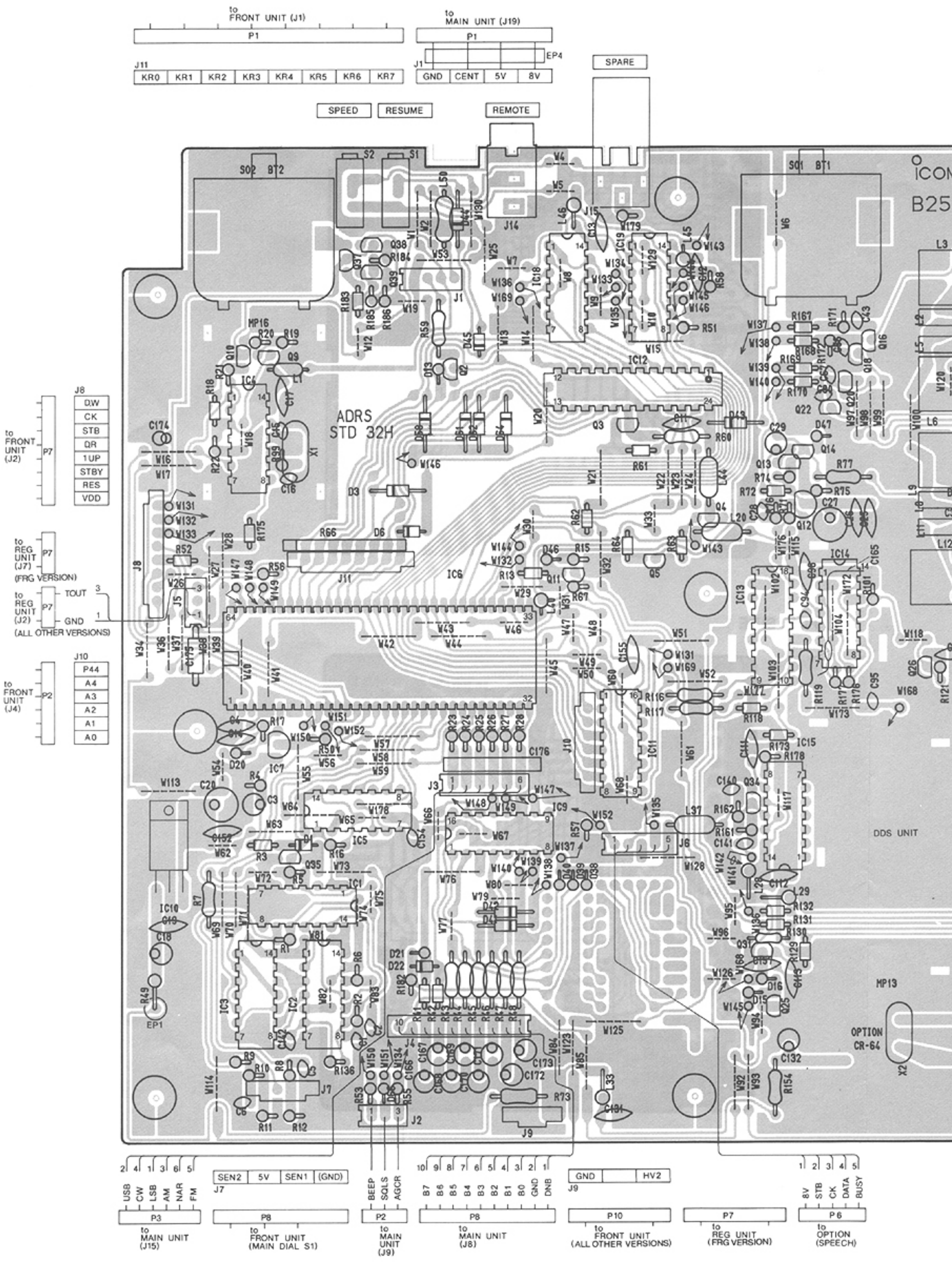

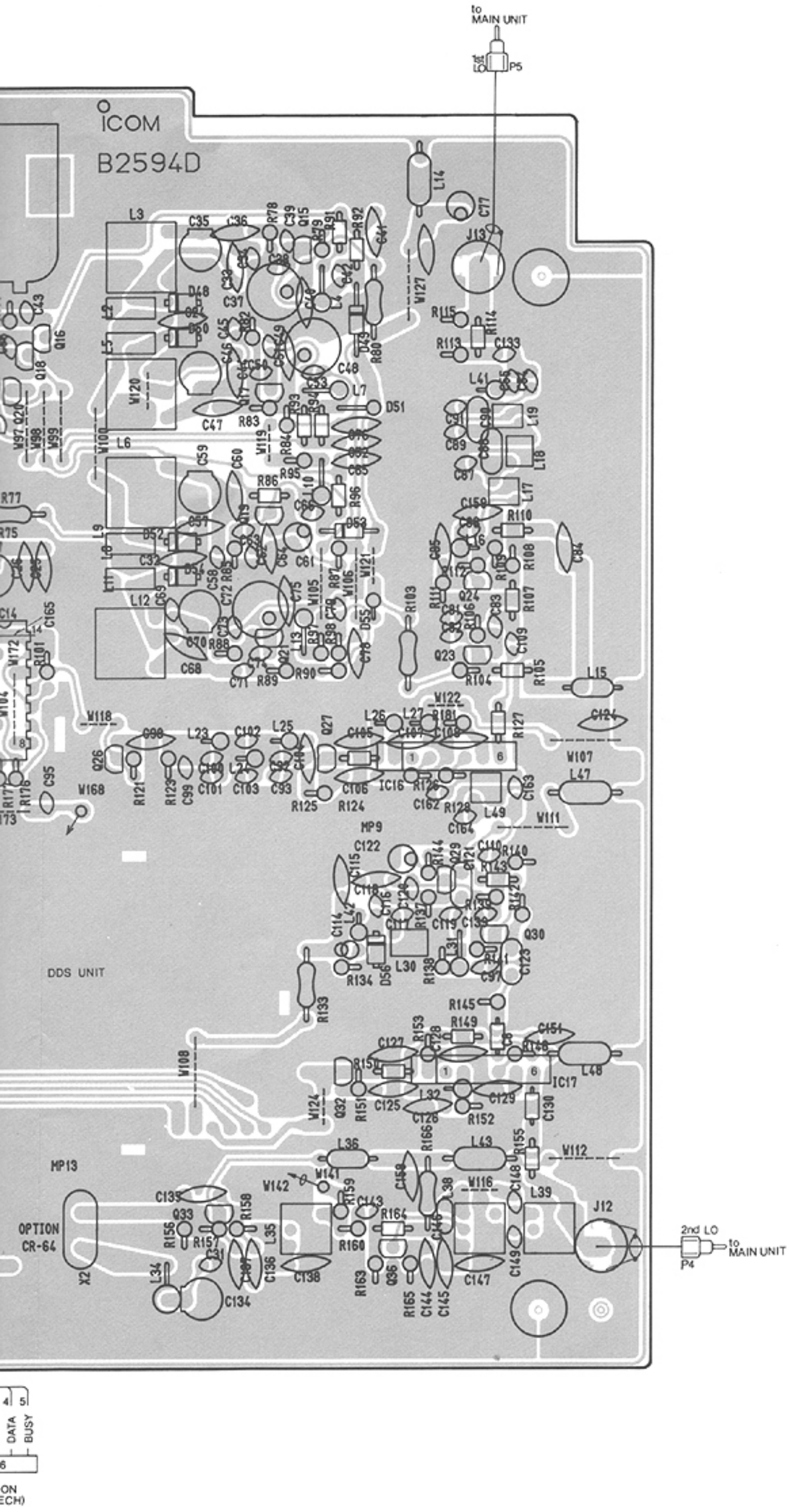

2SA1048 GR

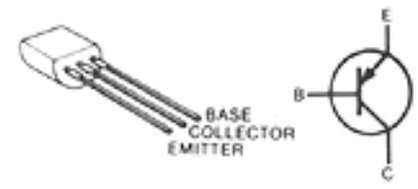

Q4, Q37, Q38

2SC1571G

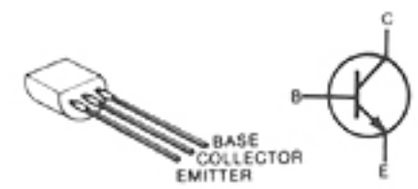

Q12

2SC2458-GR/Y

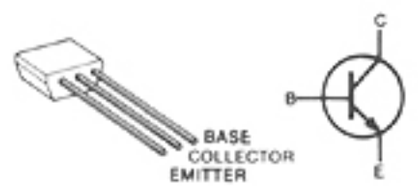

Q2, Q3, Q9, Q10, Q11, Q13, Q14, Q16, Q18, Q20, Q22, Q33, Q39, Q32

2SC2668 O

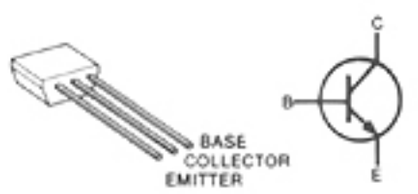

Q23, Q24, Q26, Q27, Q30, Q34, Q36

2SK192A GR

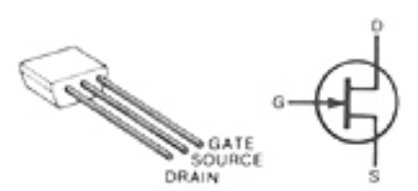

Q15, Q17, Q19, Q21, Q29

RN1202

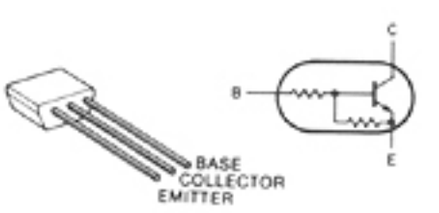

Q5, Q25, Q35

RN2202

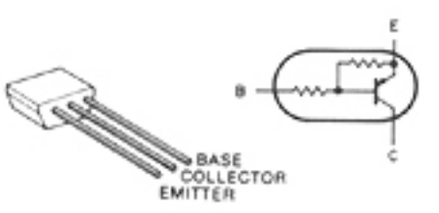

Q31

8-4 DDS UNIT

• DDS UNIT

COMPONENT SIDE

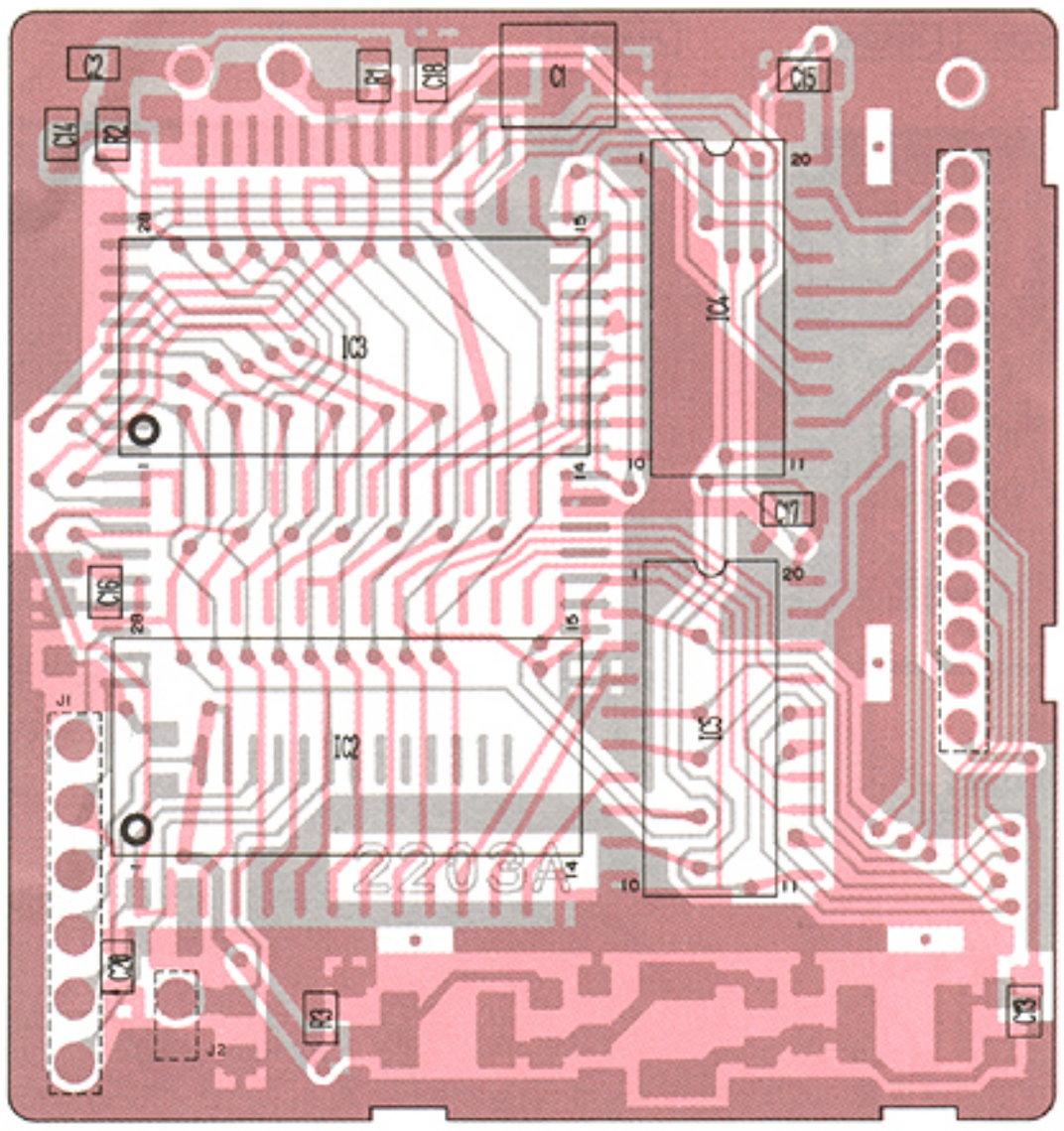

FOIL SIDE

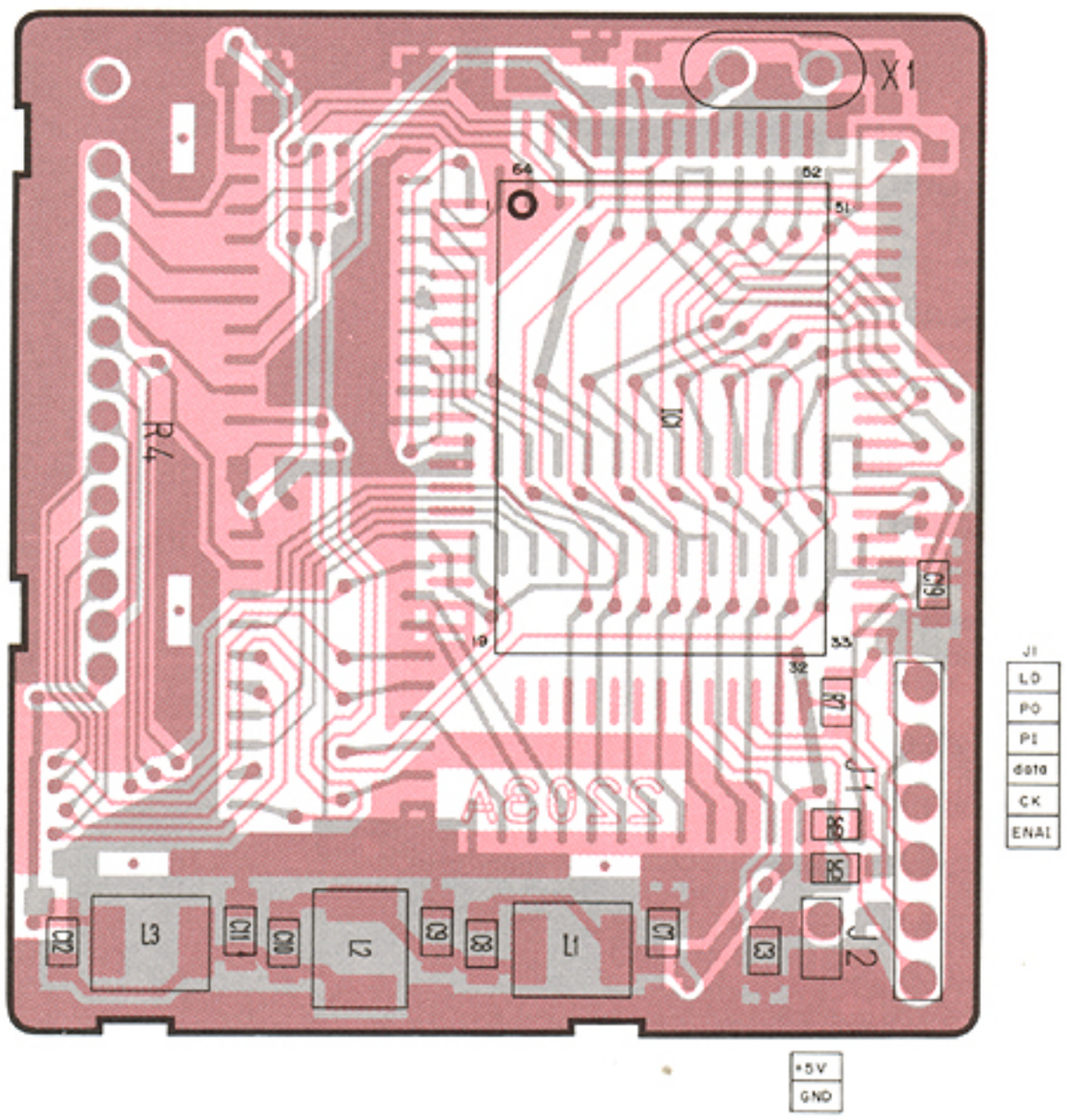

8-5 REG UNIT (FRG)

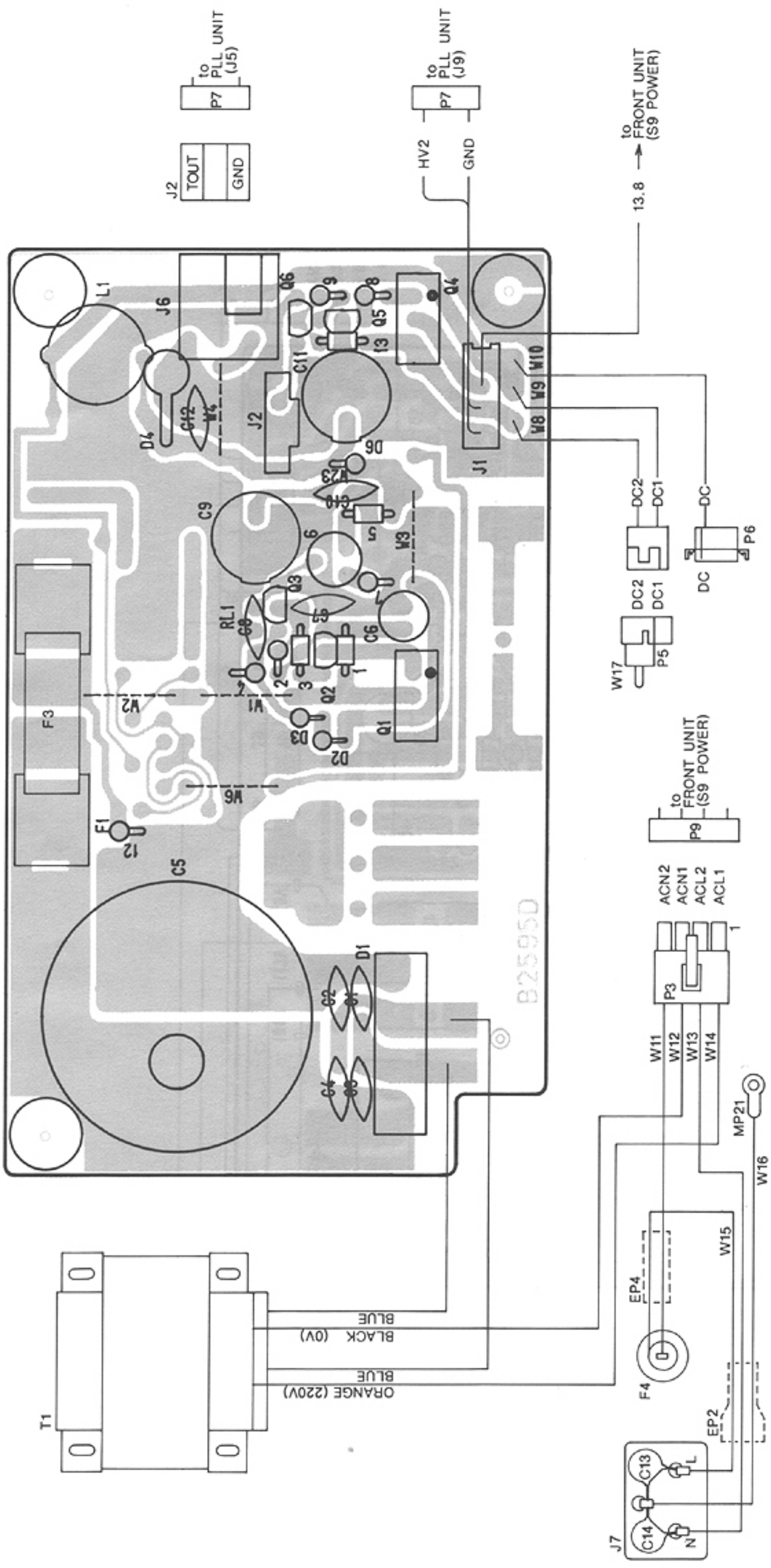

2SA1048 GR

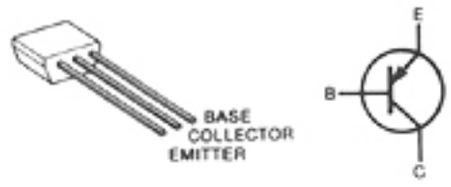

Q2, Q5, Q7 (except FRG)

2SB834-Y

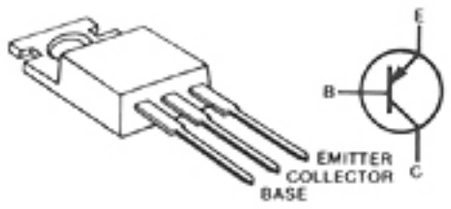

Q4

2SC2458-GR

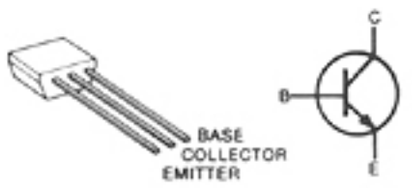

Q3

2SD880 Y

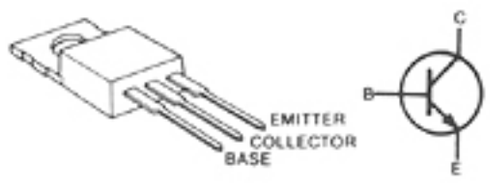

Q1

RN1202

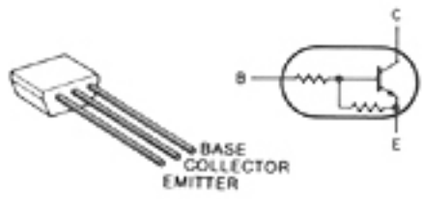

Q6

8-6 REG UNIT (OTHER)

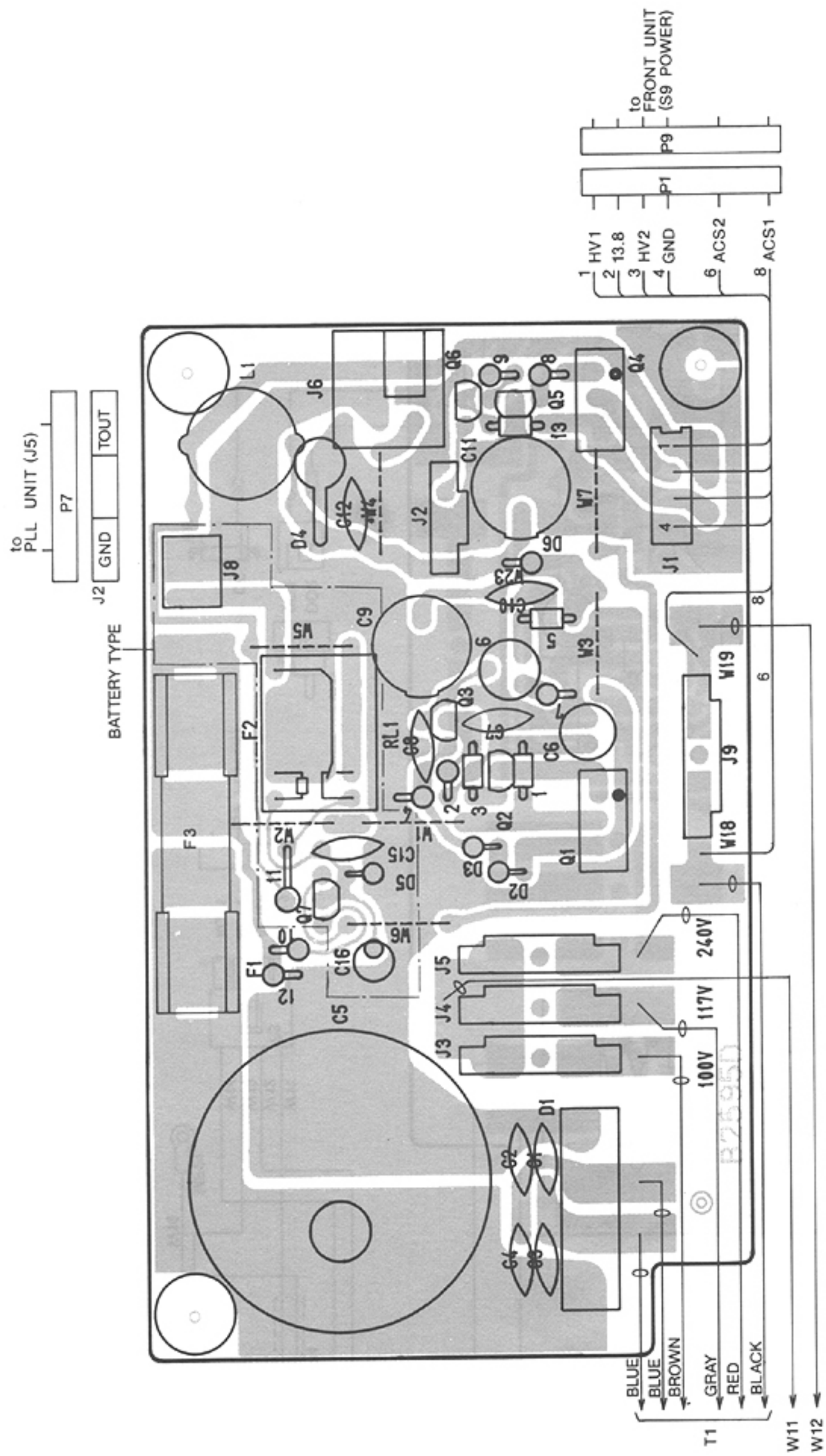

SECTION 9 VOLTAGE DIAGRAM

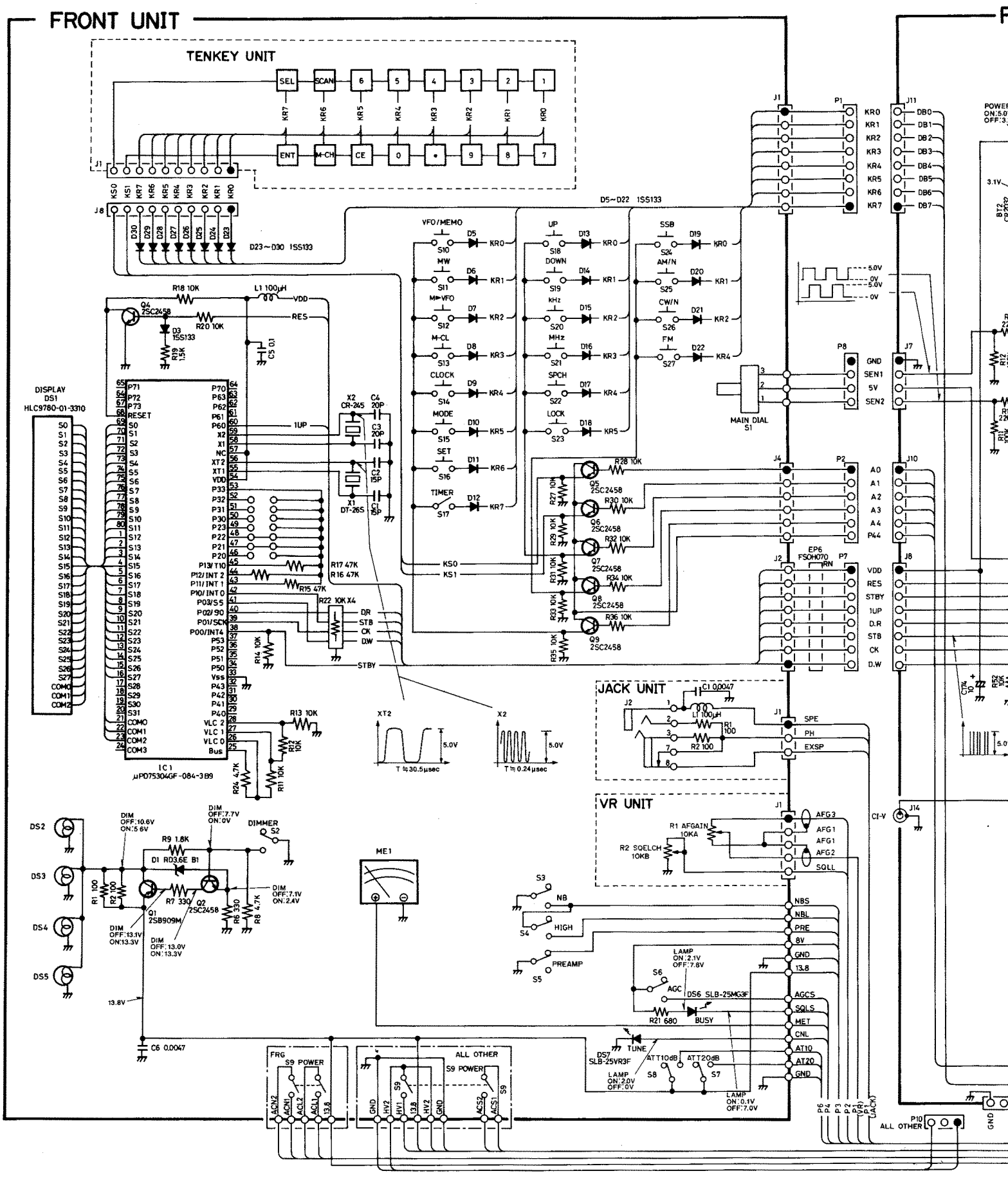

PLL UNIT

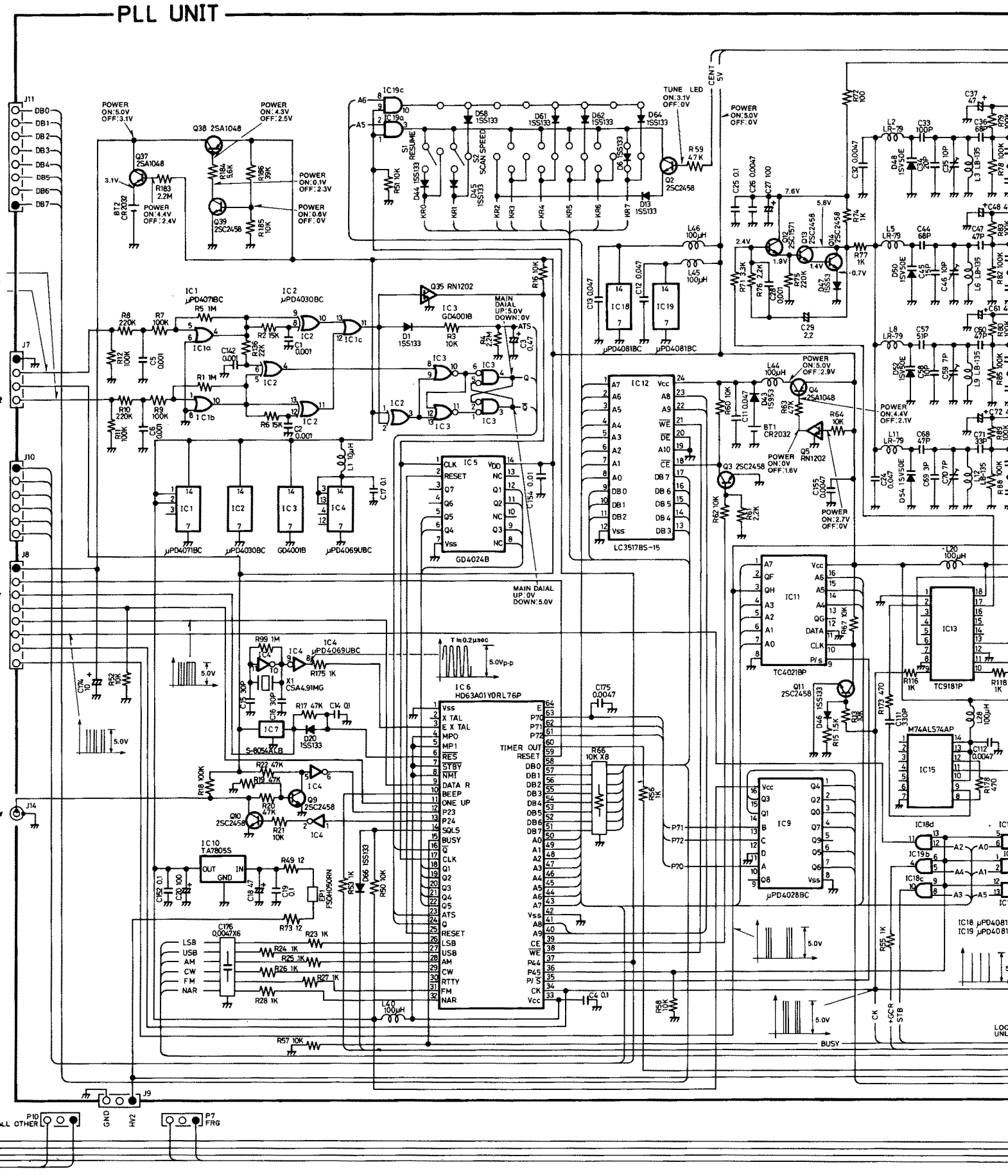

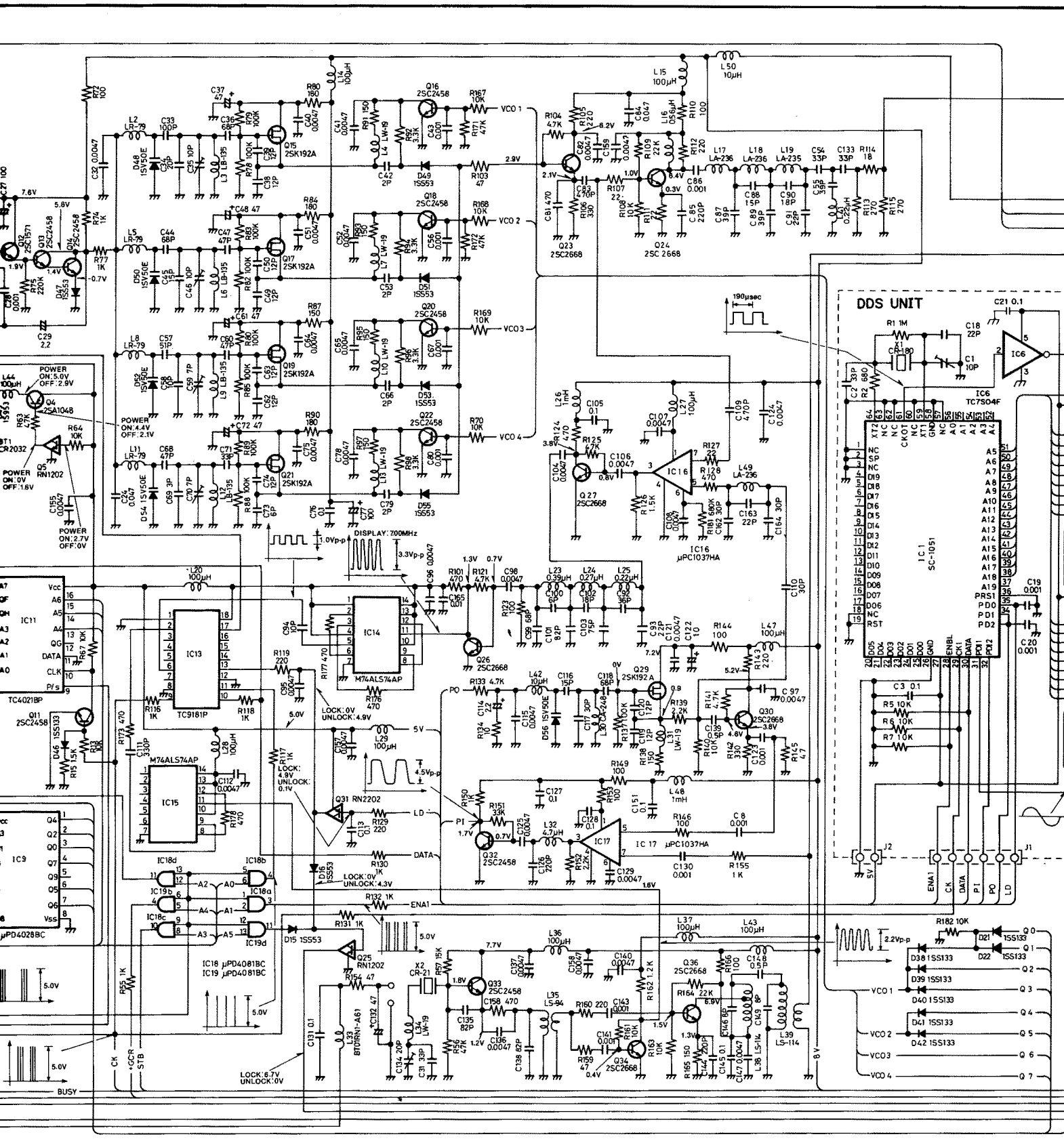

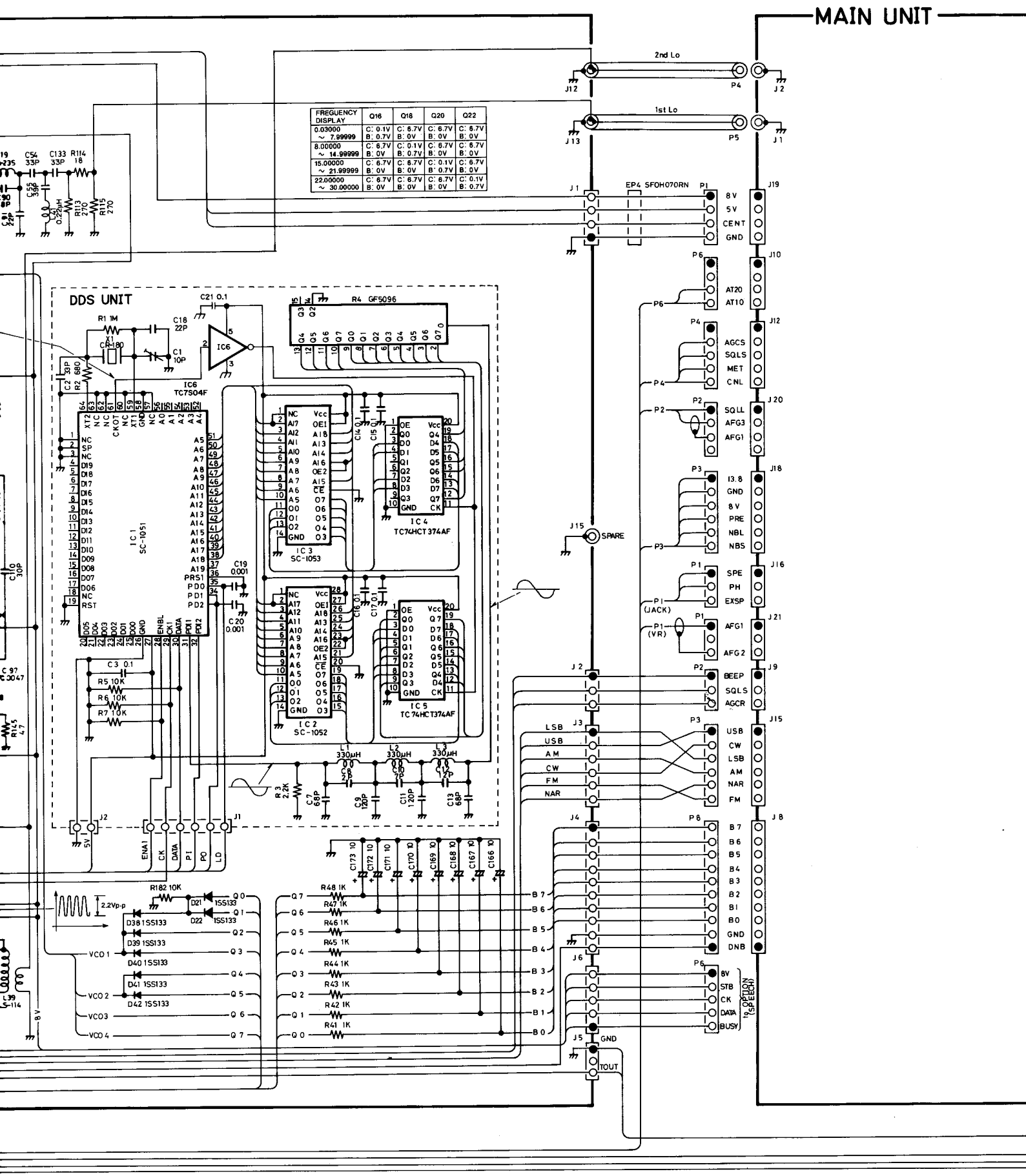

FREQUENCY DISPLAY	Q16	Q18	Q20	Q22
0.03000 ~ 7.99999	C: 0.1V B: 0.7V	C: 6.7V B: 0V	C: 6.7V B: 0V	C: 6.7V B: 0V
8.00000 ~ 14.99999	C: 6.7V B: 0V	C: 0.1V B: 0.7V	C: 6.7V B: 0V	C: 6.7V B: 0V
15.00000 ~ 21.99999	C: 6.7V B: 0V	C: 6.7V B: 0V	C: 0.1V B: 0.7V	C: 6.7V B: 0V
22.00000 ~ 30.00000	C: 6.7V B: 0V	C: 6.7V B: 0V	C: 6.7V B: 0V	C: 0.1V B: 0.7V

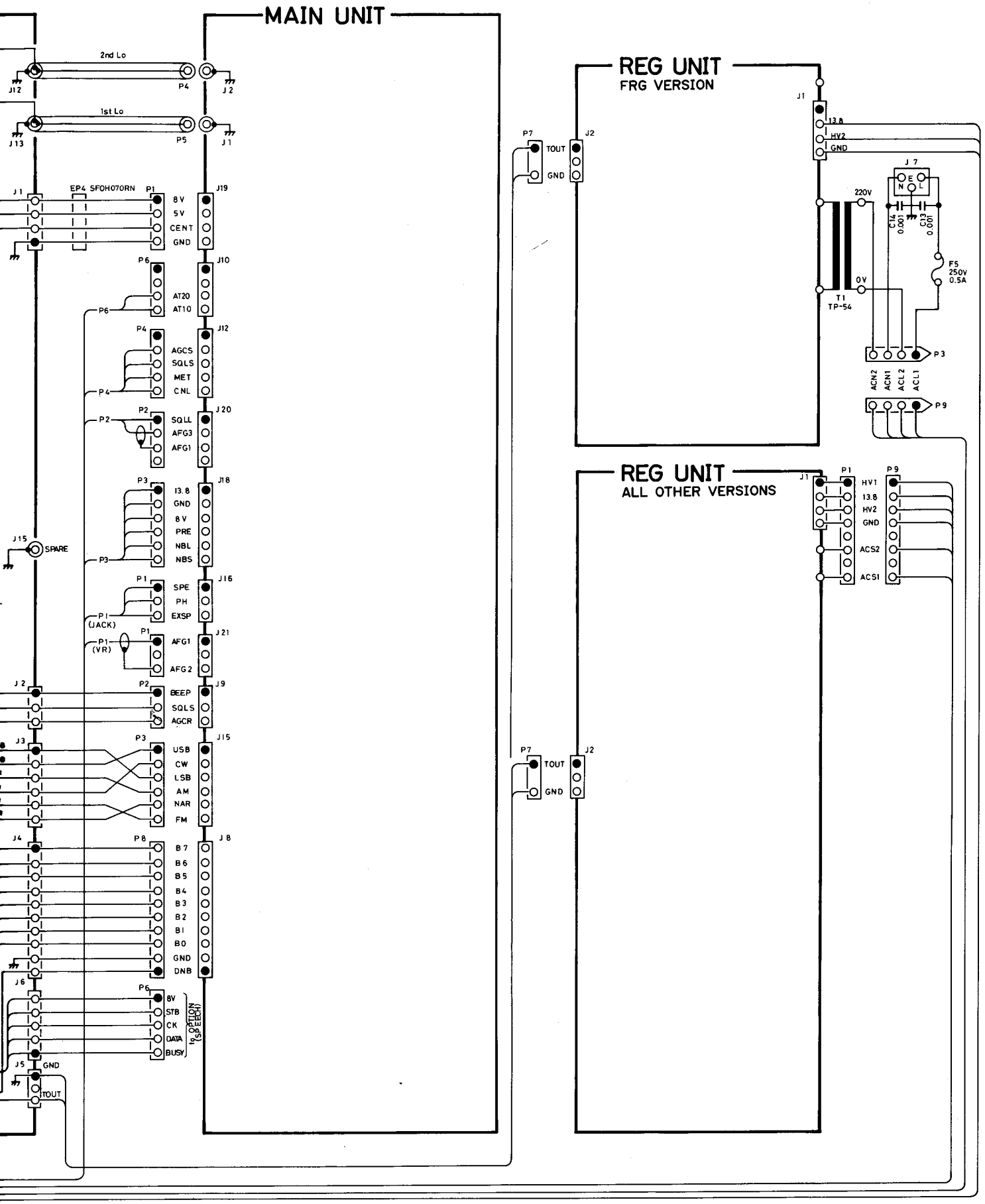

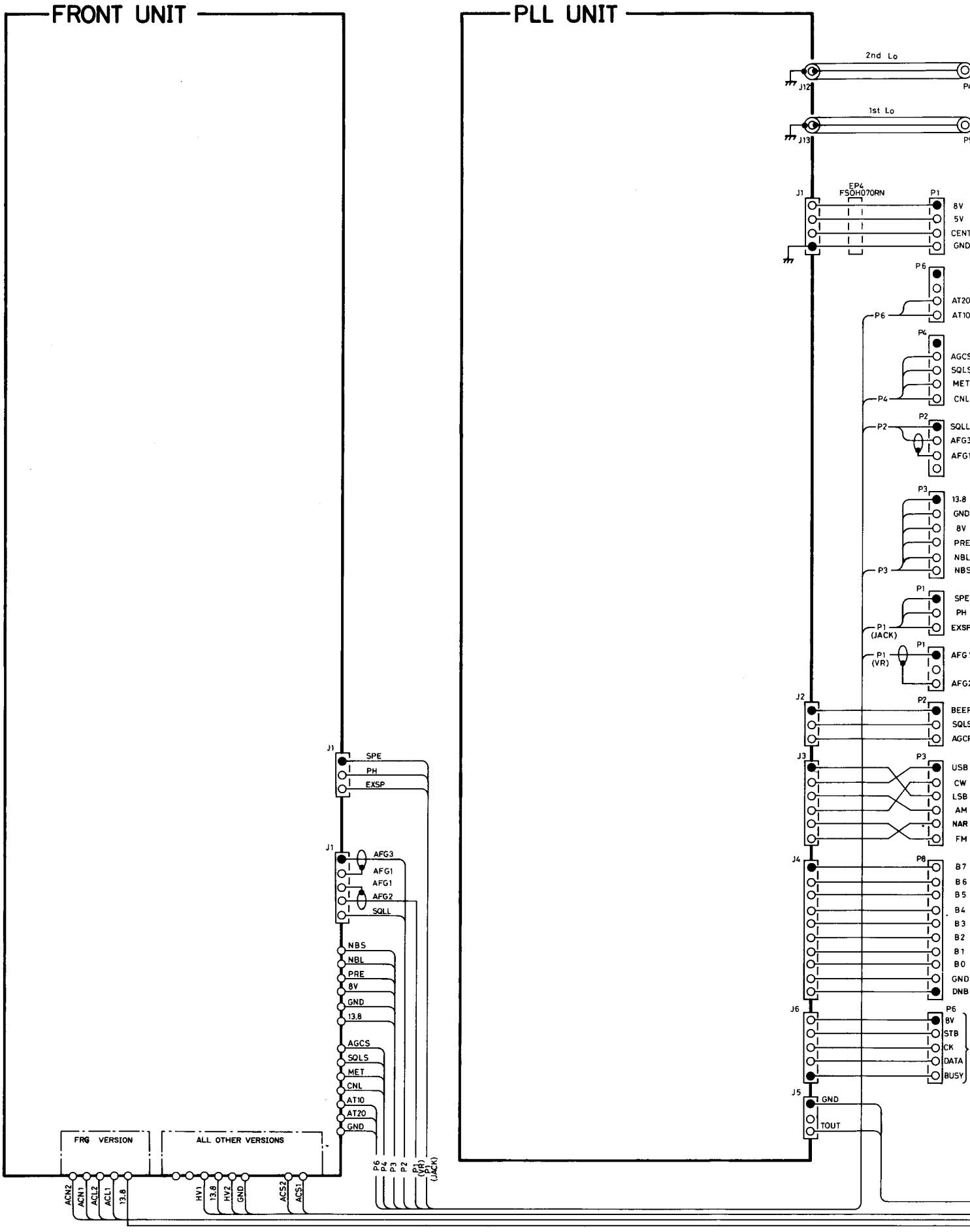

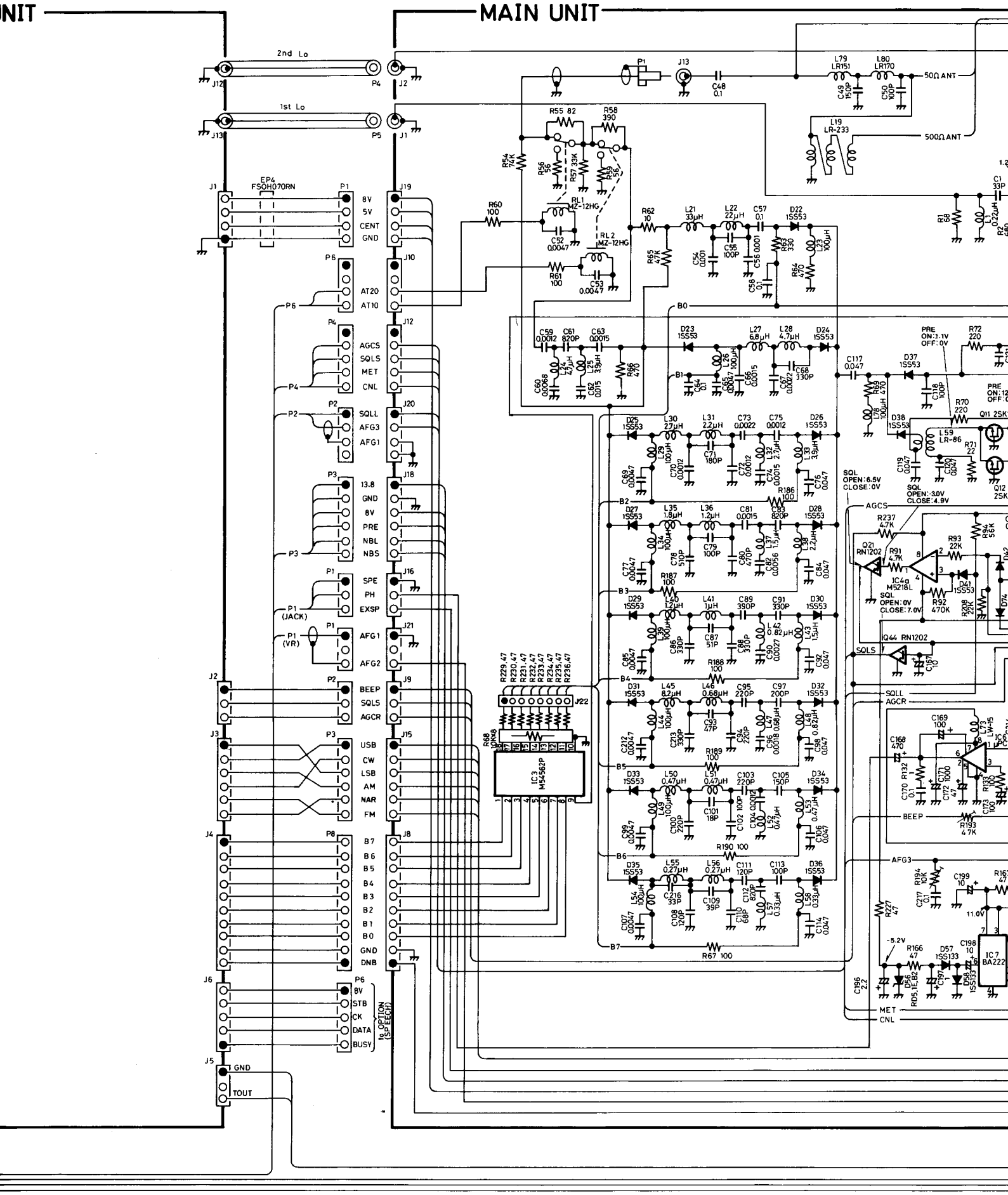

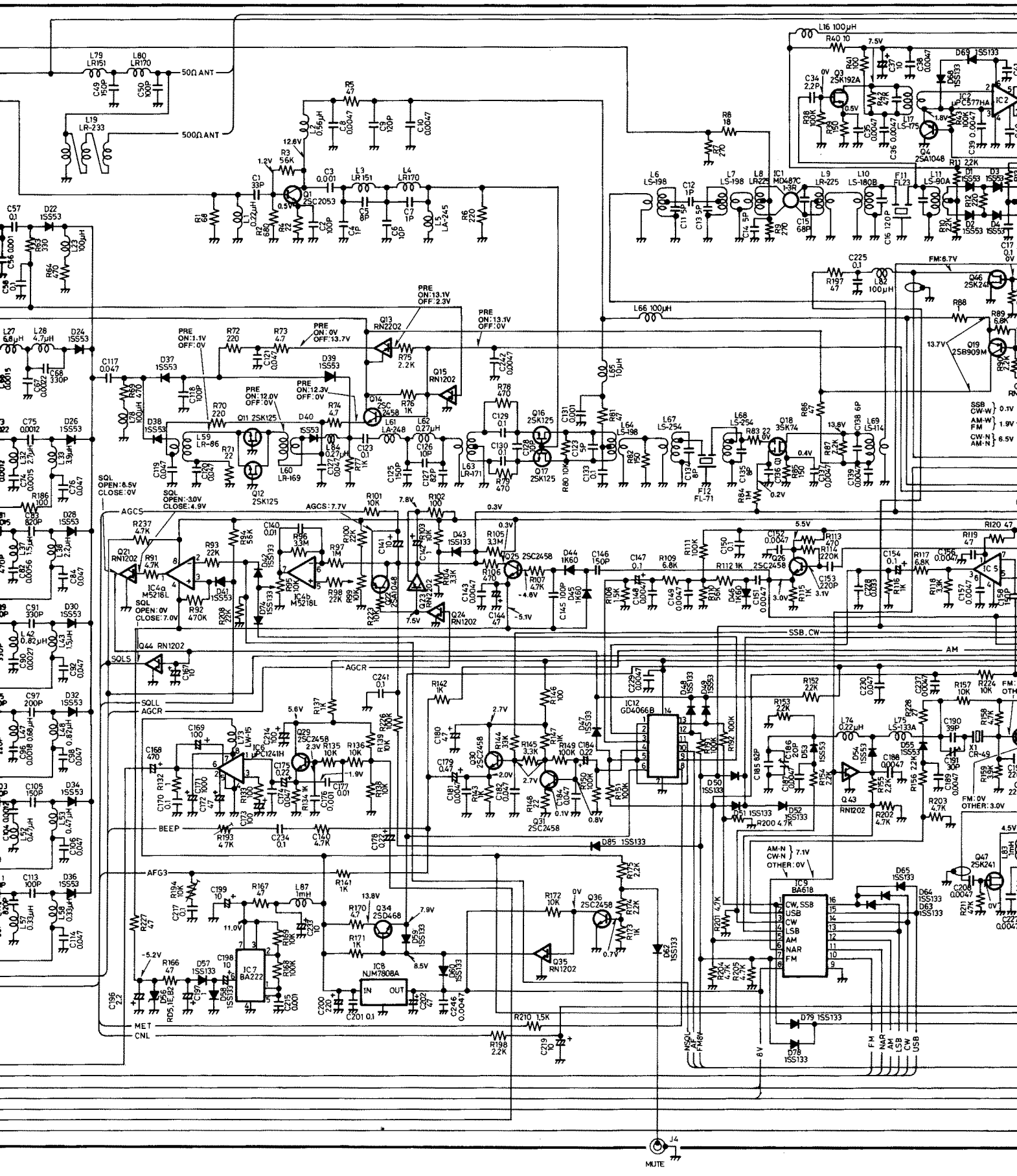

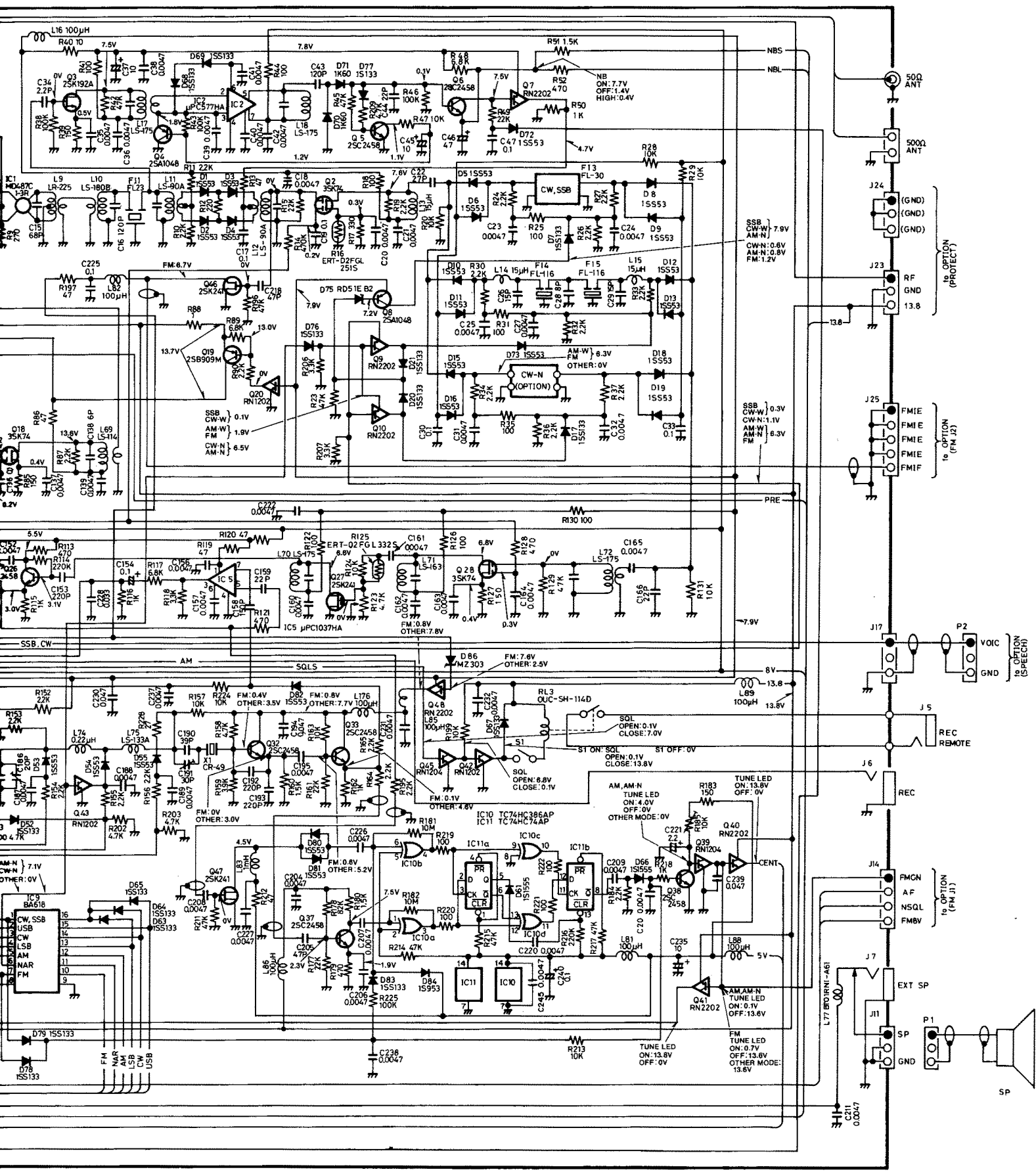

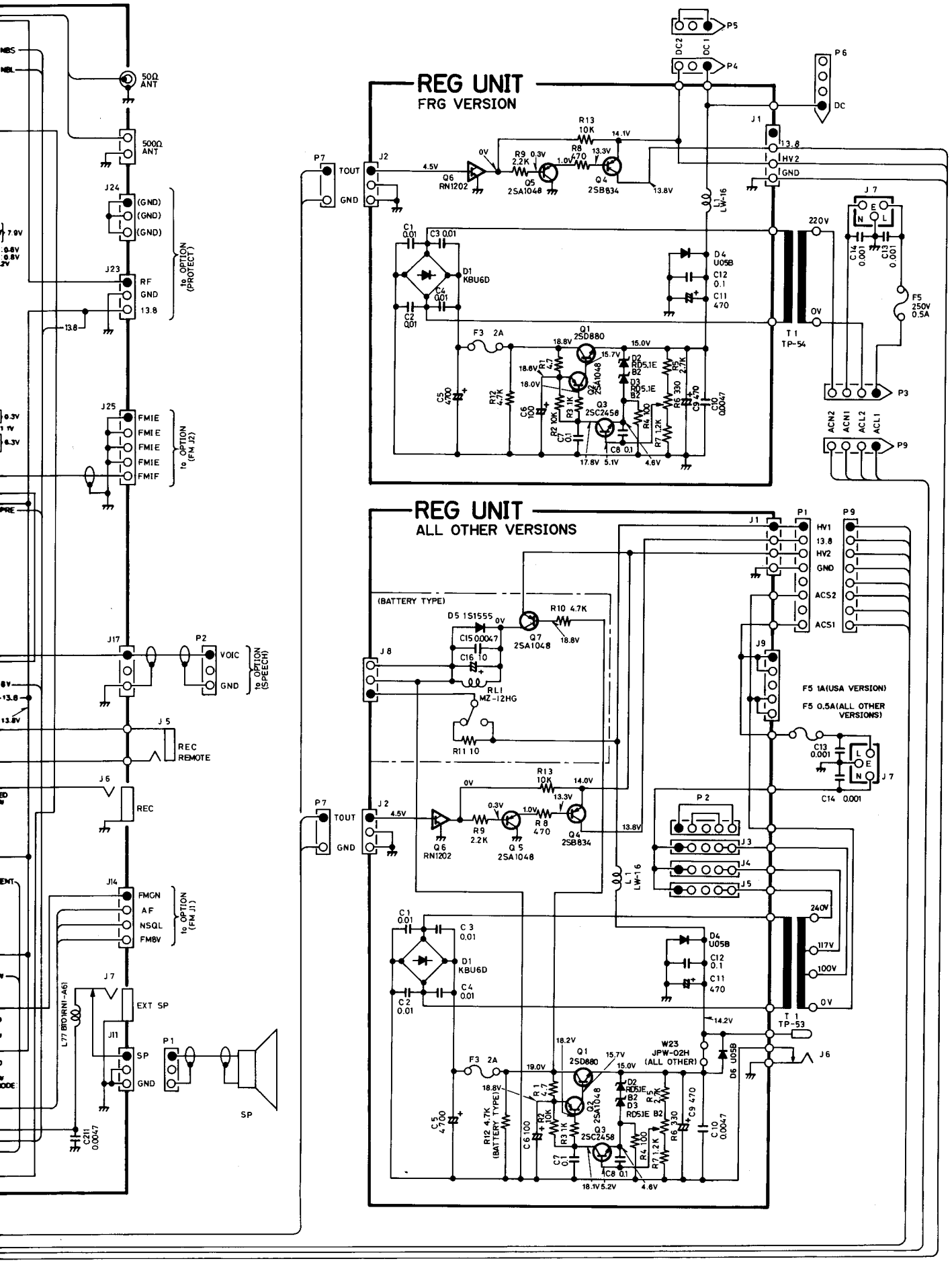

Icom Inc.

6-9-16, Kamihigashi, Hirano-ku, Osaka 547, Japan
Phone: 06 793 5301
Fax : 06 793 0013
Telex : 05277822 ICOMTR J

Icom America Inc.

<Corporate Headquarters>
2380 116th Avenue N.E., Bellevue, WA 98004, U.S.A.
Phone : (206) 454-8155
Fax : (206) 454-1509
Telex : 152210 ICOM AMER BVUE

<Customer Service>
Phone : (206) 454-7619

<Regional Customer Service Centers>
3150 Premier Drive, Suite 126, Irving, TX 75063, U.S.A.
Phone : (214) 550-7525
Fax : (214) 550-7423

1777 Phoenix Parkway, Suite 201, Atlanta, GA 30349, U.S.A.
Phone : (404) 991-6166
Fax : (404) 991-6327

Icom Canada

A Division of Icom America Inc.
3071 #5 Road, Unit 9, Richmond, B.C., V6X 2T4, Canada
Phone : (604) 273-7400
Fax : (604) 273-1900

Icom (Europe) GmbH

Communication Equipment
Himmelgeister Str. 100, 4000 Düsseldorf 1, W. Germany
Phone : 0211 346047
Fax : 0211 333639
Telex : 8588082 ICOM D

Icom (Australia) Pty. Ltd.

Incorporated In Victoria
7 Duke Street, Windsor, Victoria, 3181, Australia
Phone : 03 529 7582
Fax : 03 529 8485
Telex : AA 35521 ICOM AS

Icom (UK) Ltd.

Unit 9, Sea St., Herne Bay, Kent, CT6 8LD, U.K.
Phone : 0227 741741
Fax : 0227 360155
Telex : 965179 ICOM G

Icom France S.a

120 Route de Revel, BP4063, 31029 Toulouse Cedex, France
Phone : 61. 20. 31. 49
Fax : 61. 34. 05. 91
Telex : 521515 ICOM FRA

Count on us!

Icom Inc.
6-9-16, Kamihigashi, Hirano-ku, Osaka 547, Japan

A-5114H-S
Printed in Japan