ICOM

SERVICE MANUAL

SUPER MULTI-BANDER SYSTEM

IC-900A
IC-900E

Icom Inc.

SCOPE OF THE SERVICE MANUAL

This service manual covers all service information related to the theoretical, physical, mechanical and electrical characteristics of the **IC-900A/E** FM SUPER MULTI-BANDER SYSTEM transceiver.

ASSISTANCE

If you require assistance or further information regarding the operation, capability and servicing of the **IC-900A/E**, contact your nearest authorized Icom Dealer or Icom Service Center. Addresses are provided on the inside back cover for your convenience.

Five separate versions of the **IC-900A/E** have been designed. This service manual covers every version. When using the manual each model can be referred to by the following assigned version numbers:

MODEL	VERSION NUMBER	AREA
IC-900E	#02	Europe
	#03	Italy
IC-900A	#05	U.S.A.
	#07	Australia
	#08	Asia

ORDERING REPLACEMENT PARTS

For faster, more efficient service include the following points when ordering parts or requesting information from your Icom Service Center.

1. Equipment model and serial number
2. Schematic part identifier or service manual page number
3. Unit name and printed circuit board number (e.g., LOGIC A UNIT/B-1314D)
4. Component part number and name (e.g., 2SA1162 Transistor)
5. Order number for mechanical parts
6. Quantity required (e.g., 10pcs.)

UNIT CONNECTIONS

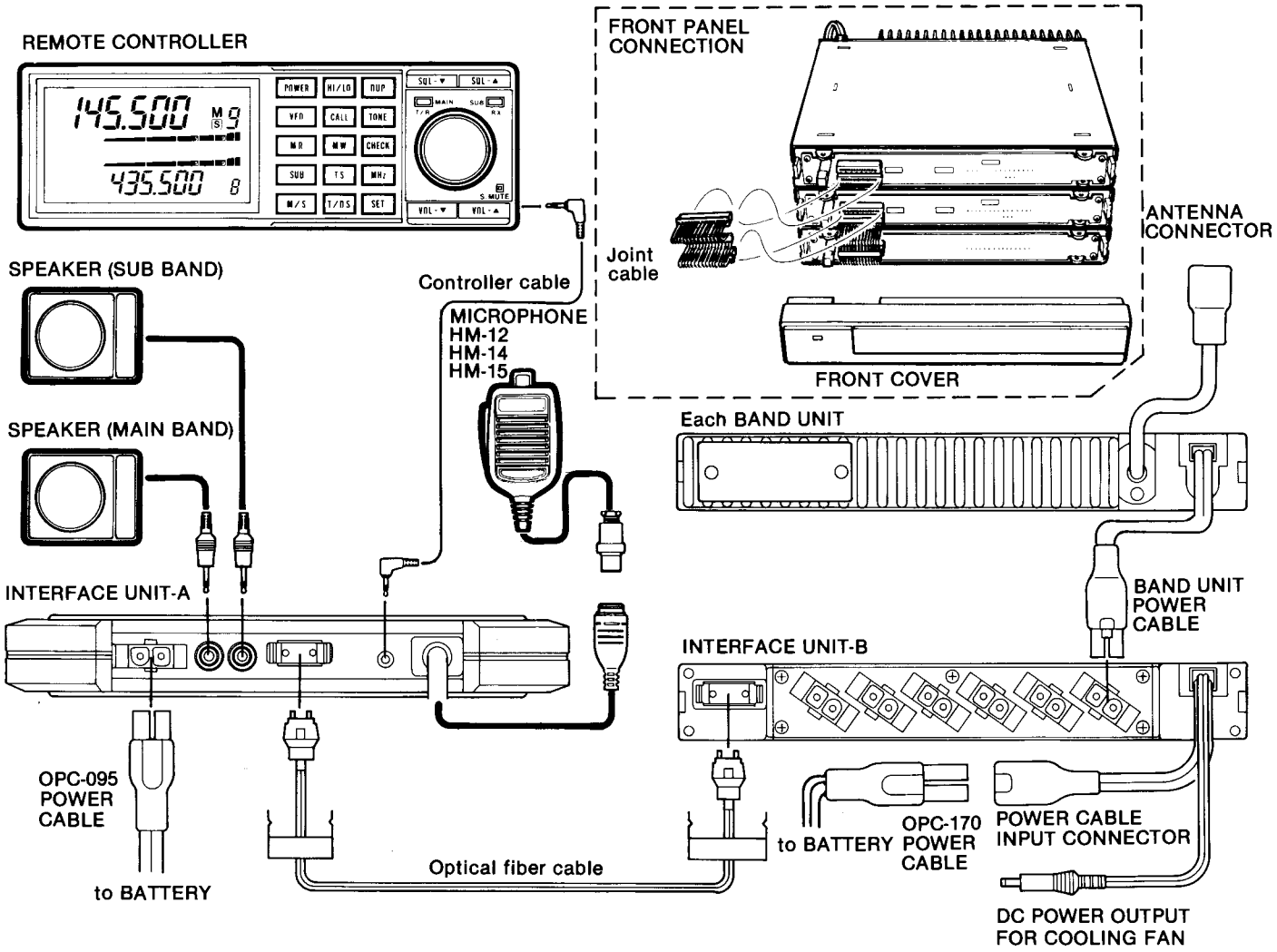

When one speaker is used, the speaker should be connected to the [SPJ-1] JACK. If the speaker is connected to the [SPJ-2] JACK only the sub band audio is emitted. When two speakers are connected to each jack, the audio signal in each band is emitted from each speaker.

TABLE OF CONTENTS

SERVICE MANUAL

IC-900A
IC-900E

REMOTE CONTROLLER
INTERFACE UNIT-A
INTERFACE UNIT-B

TABLE OF CONTENTS

SECTION 1 SPECIFICATIONS

■ GENERAL

• Expanded band	:	6 bands maximum
• Memory channel	:	10 channels on each band
• Frequency stability	:	±10ppm (−10°C～+60°C) (+14°F～+140°F)
• Power supply requirement	:	13.8V DC ±15% (negative ground)
• Microphone impedance	:	600Ω
• Audio output power	:	More than 2.4W at 10% distortion with an 8Ω load
• Audio output impedance	:	4～8Ω
• Current drain (at 13.8V DC) (except BAND UNITS)	:	600mA (MAIN and SUB bands both standby) 1.2A (MAIN band transmitting and SUB band max. audio) 1.7A (MAIN and SUB bands both max. audio) Refer to BAND UNIT specifications for transmit current drain.

• Dimensions

REMOTE CONTROLLER	:	150(W)×50(H)×25(D) mm	5.9(W)×2.0(H)×1.0(D) inches
INTERFACE UNIT-A	:	177(W)×25(H)×177(D) mm	7.0(W)×1.0(H)×7.0(D) inches
INTERFACE UNIT-B	:	177(W)×25(H)×192(D) mm	7.0(W)×1.0(H)×7.6(D) inches
		(Projections not included)	

• Weight

REMOTE CONTROLLER	:	200g (0.4 lbs.)
INTERFACE UNIT-A	:	500g (1.1 lbs.)
INTERFACE UNIT-B	:	900g (2.0 lbs.)

• Usable temperature range	:	−10°C～+60°C (+14°F～+140°F)

※ All stated specifications are subject to change without notice or obligation.

SECTION 2 OUTSIDE AND INSIDE VIEWS

2-1 OUTSIDE VIEWS

2-1-1 REMOTE CONTROLLER

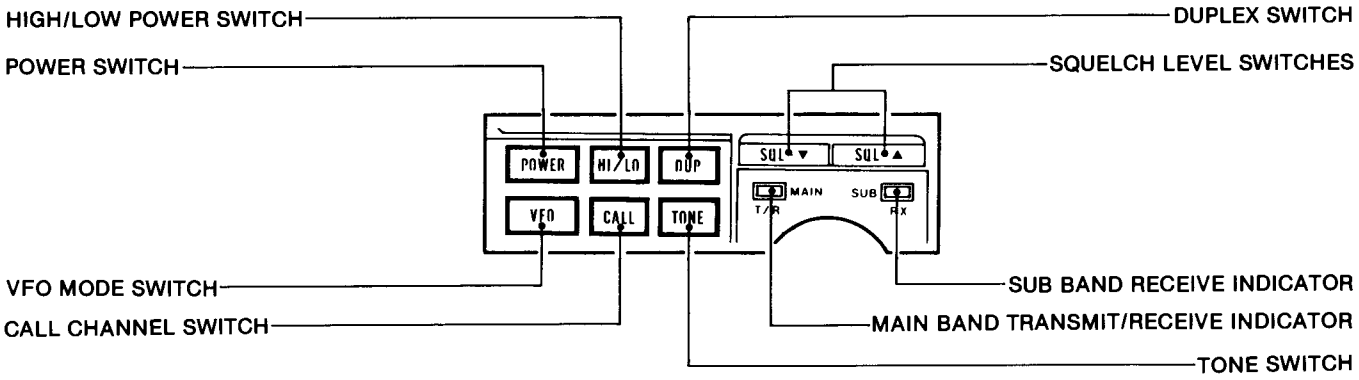

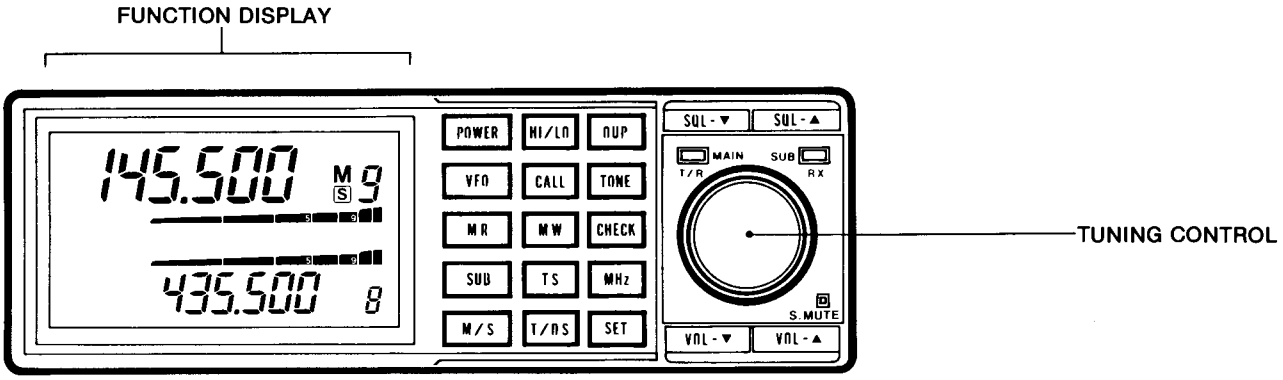

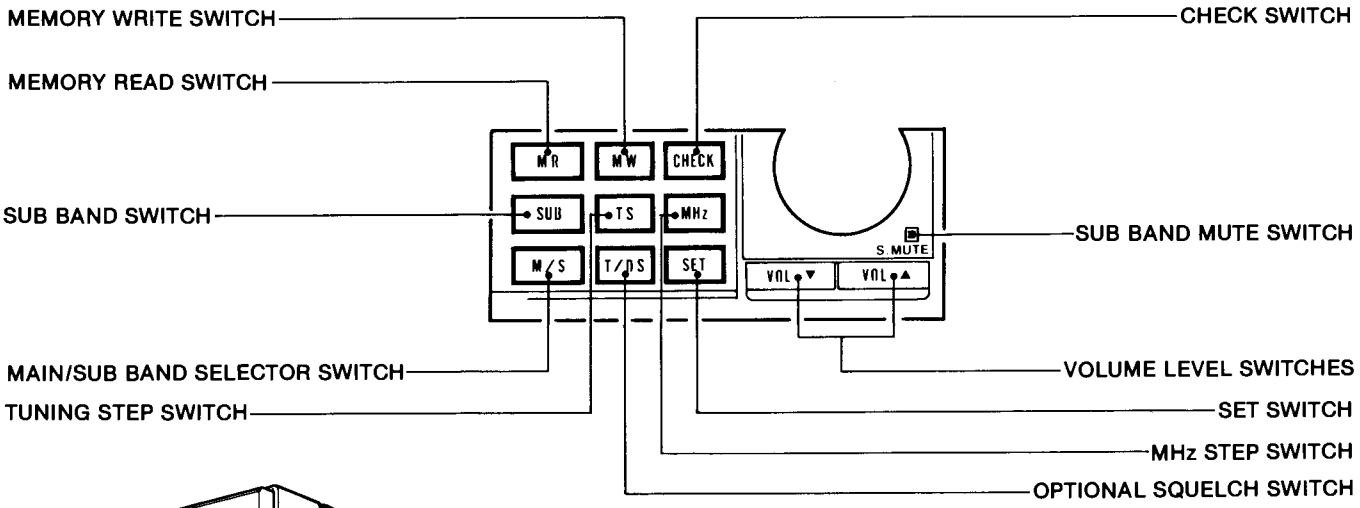

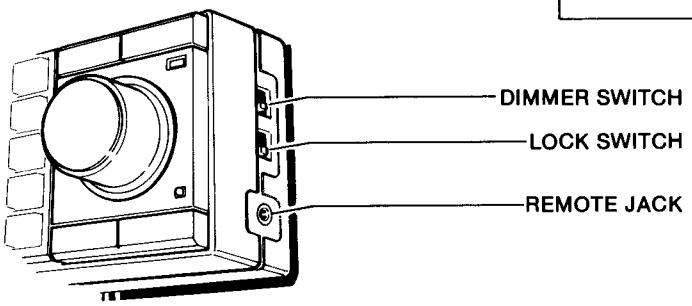

2-1-2 FUNCTION DISPLAY

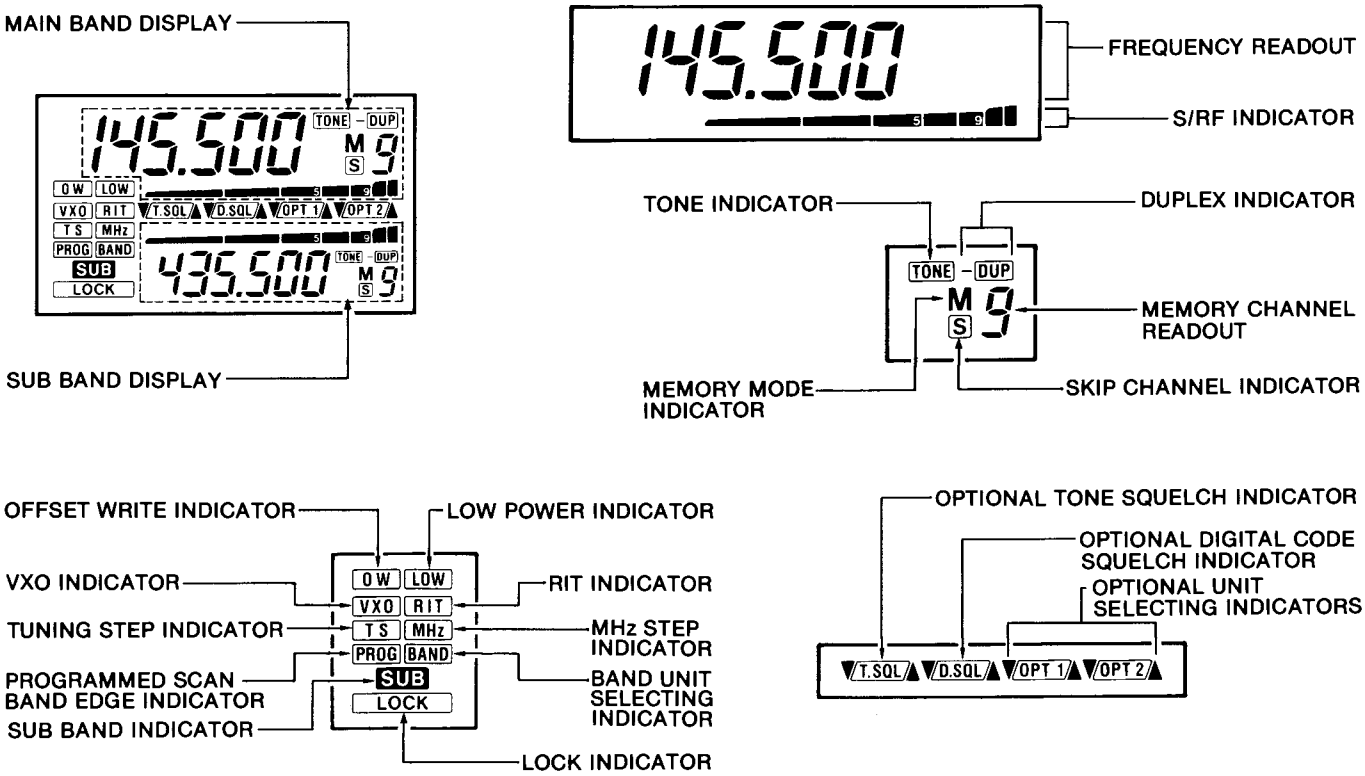

2-1-3 INTERFACE UNIT-A

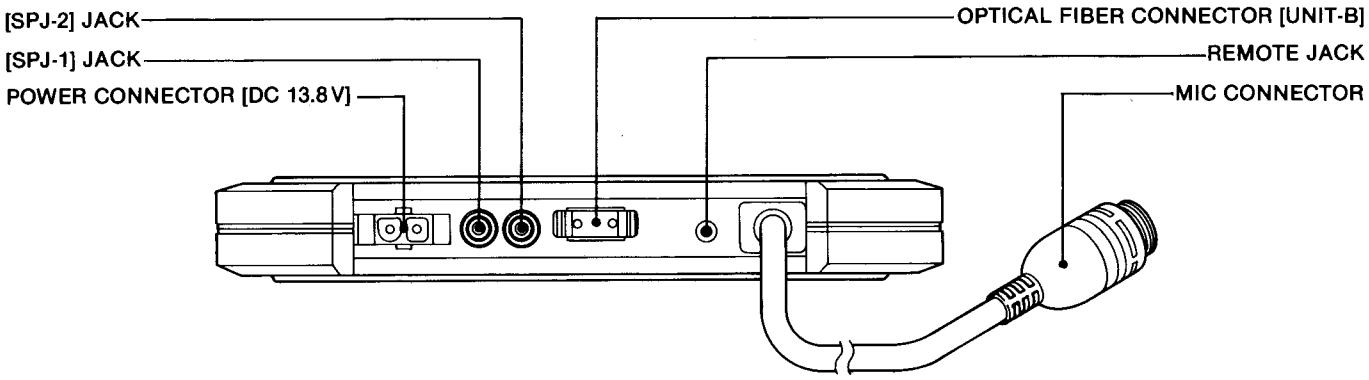

2-1-4 INTERFACE UNIT-B

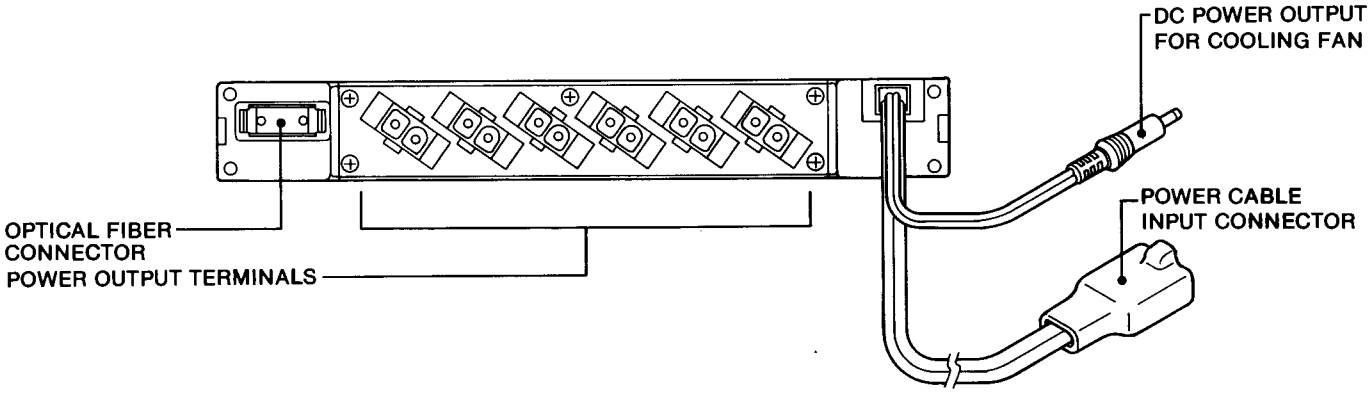

2-2 INSIDE VIEWS

2-2-1 DISPLAY A UNIT

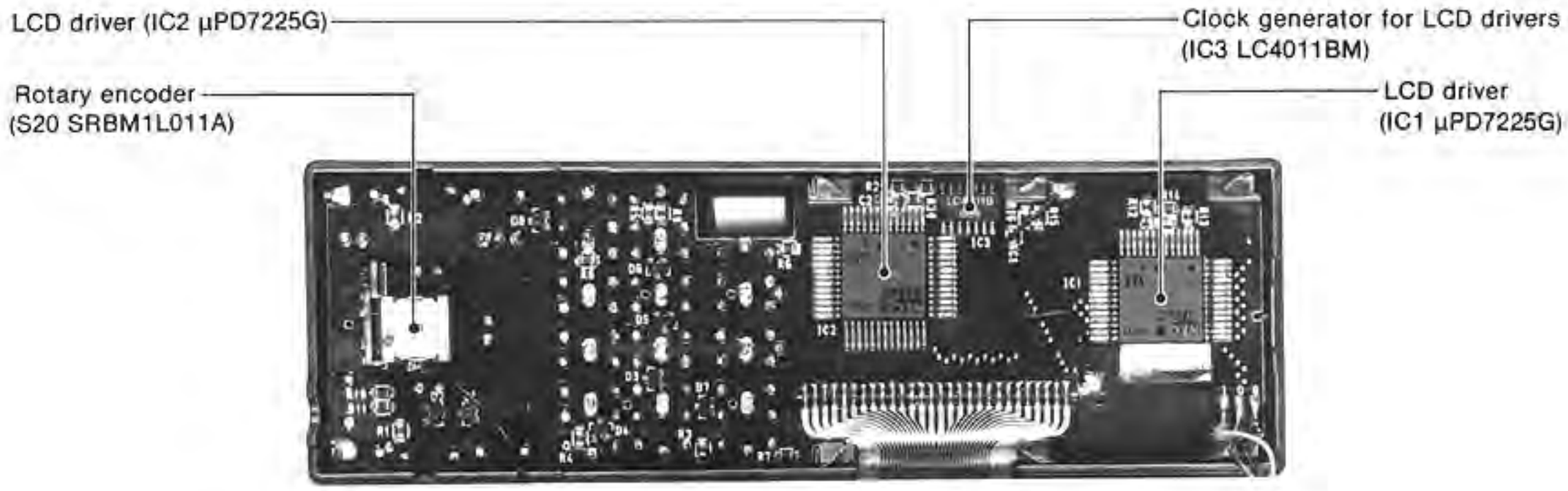

2-2-2 DISPLAY B UNIT

• COMPONENT SIDE

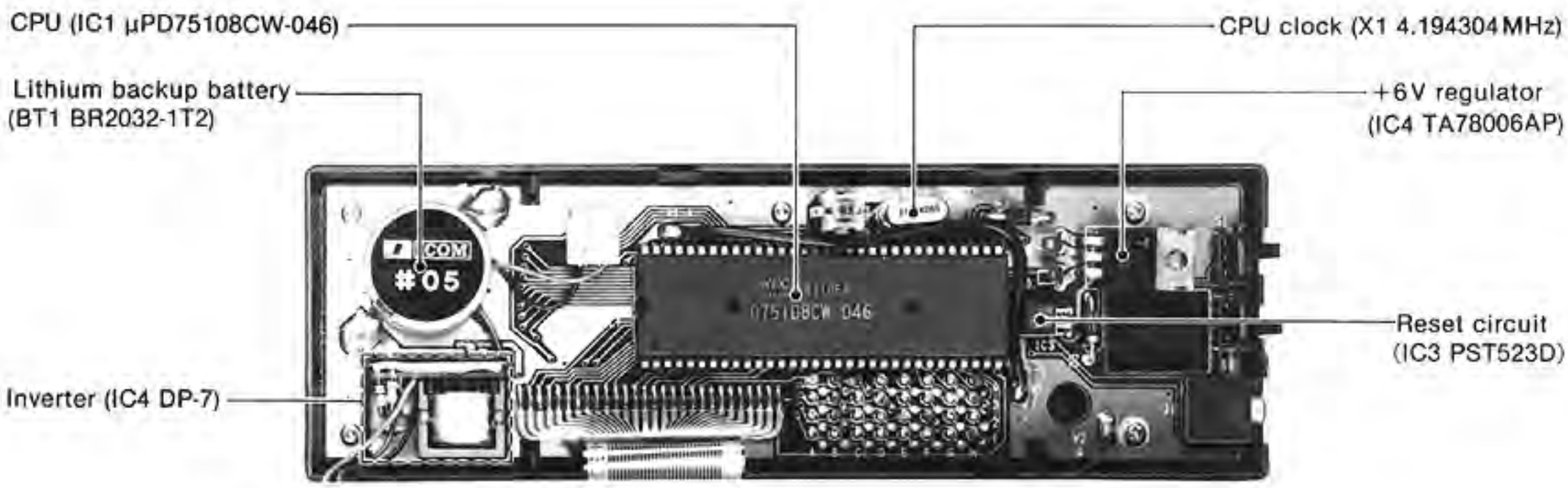

• FOIL SIDE

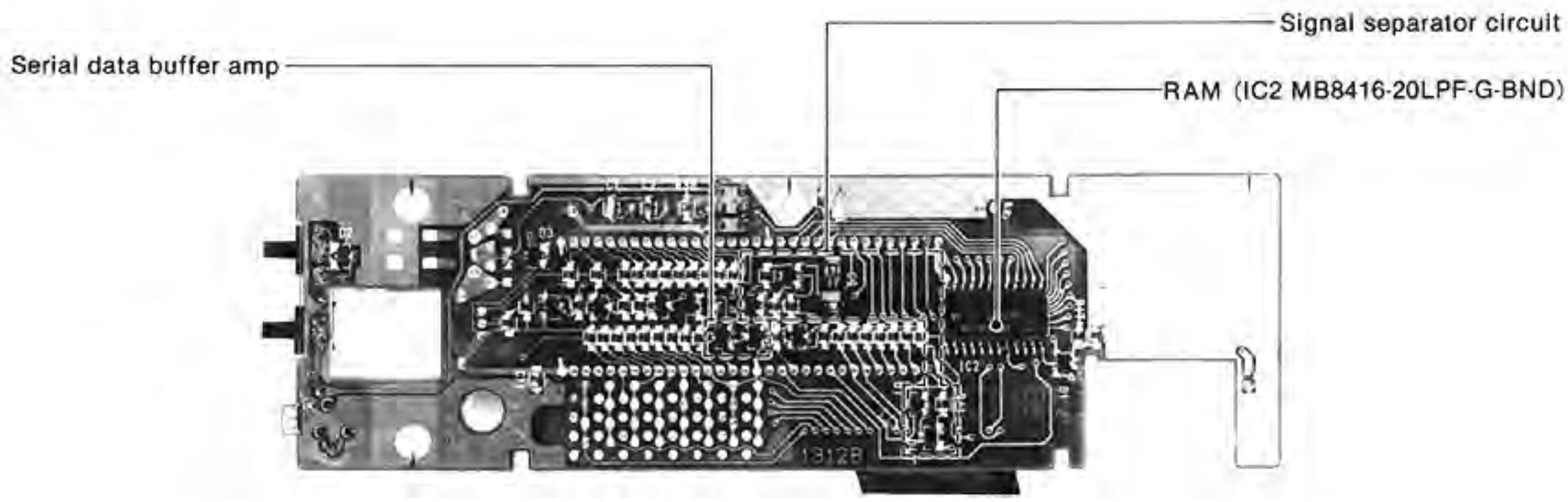

2-2-3 LOGIC A UNIT

• COMPONENT SIDE

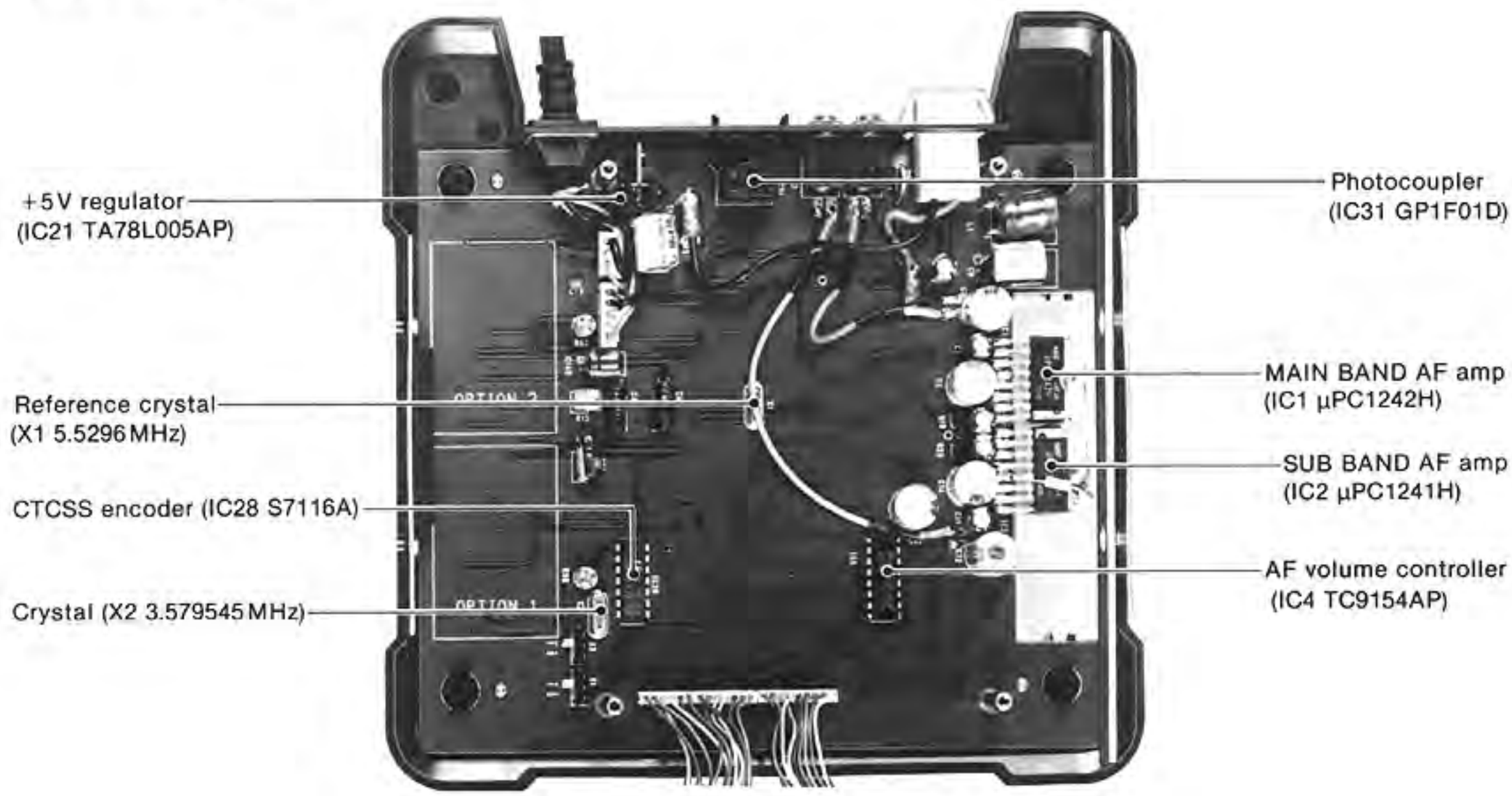

• FOIL SIDE

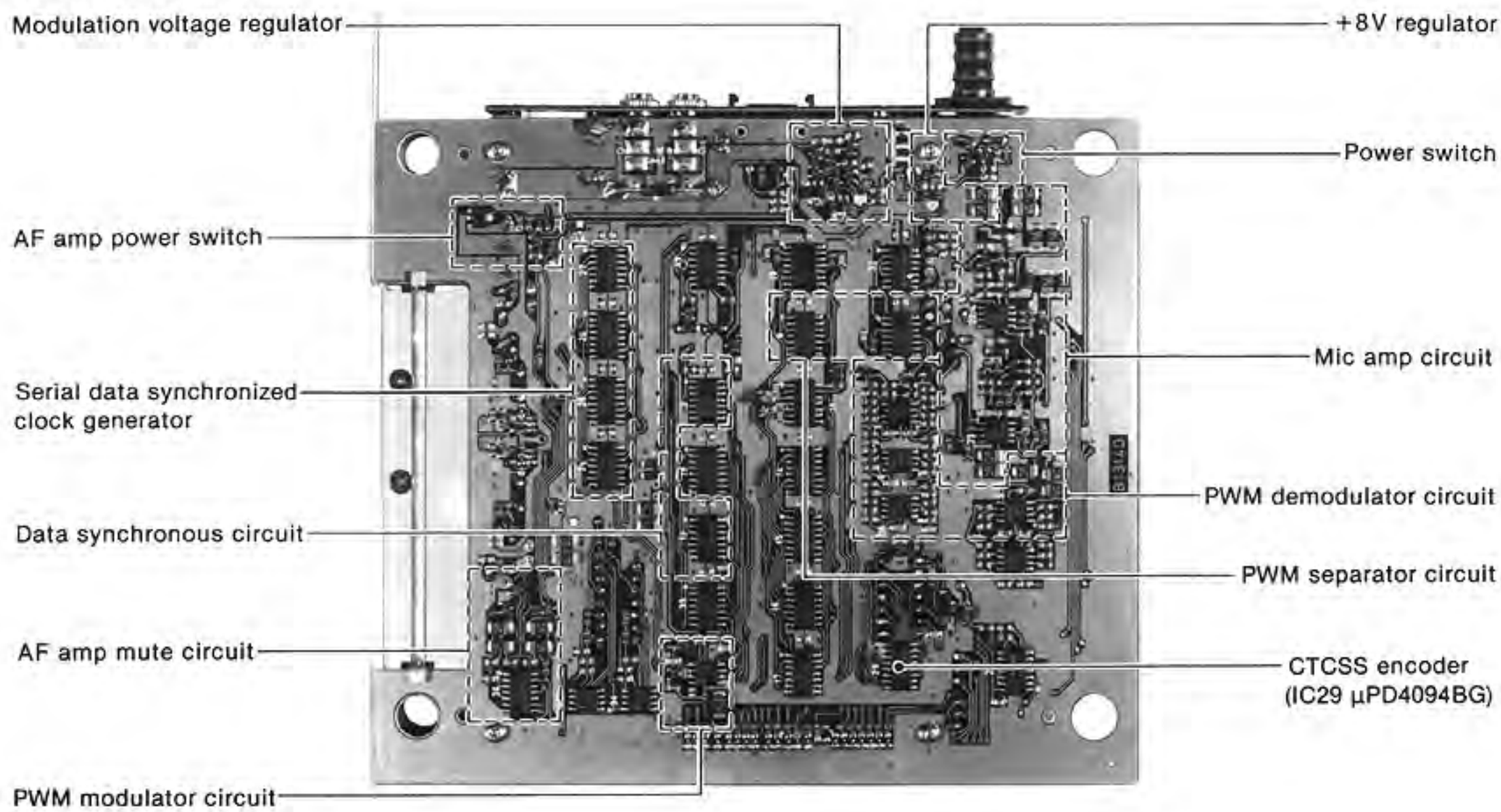

2-2-4 LOGIC B UNIT

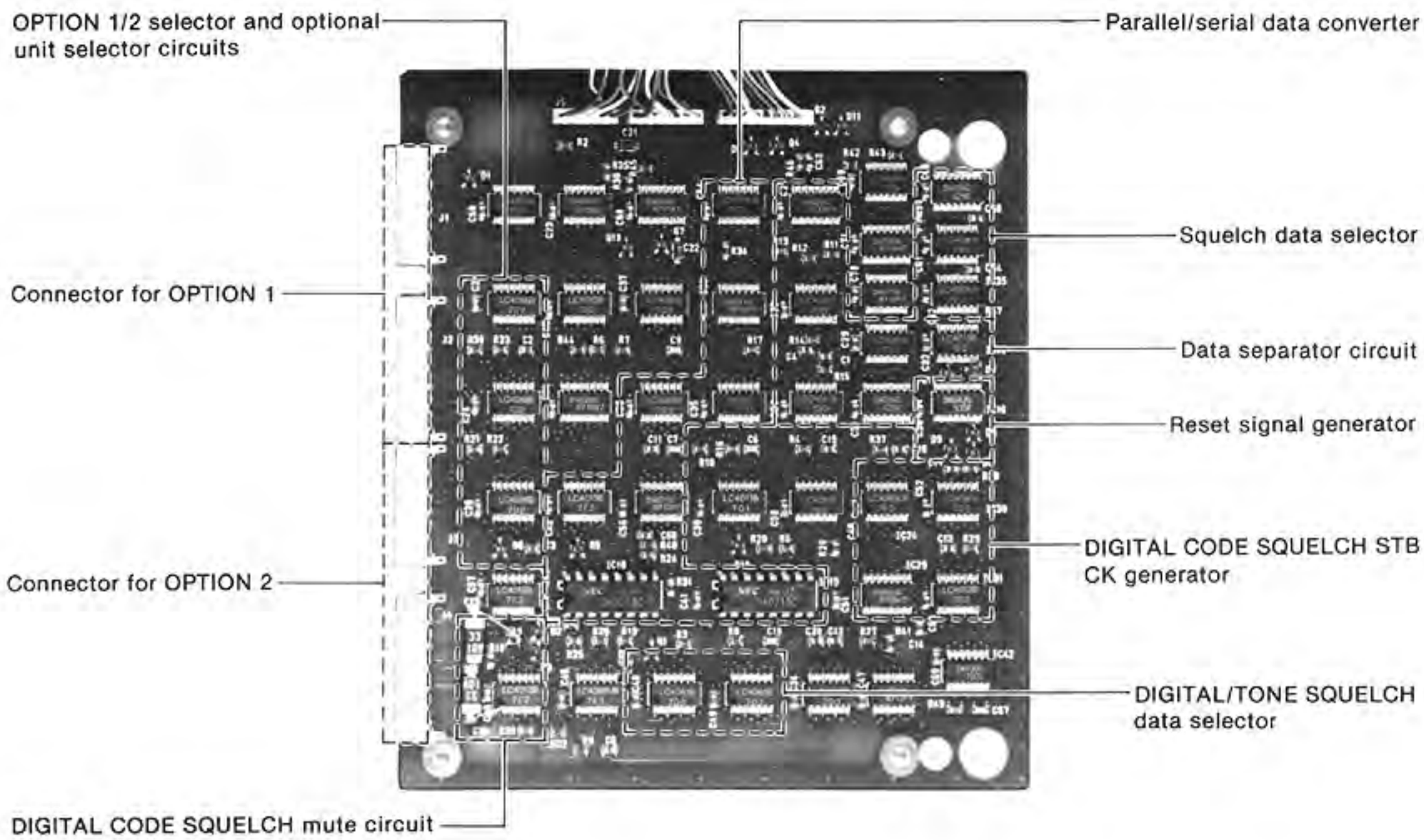

2-2-5 LOGIC C UNIT

• COMPONENT SIDE

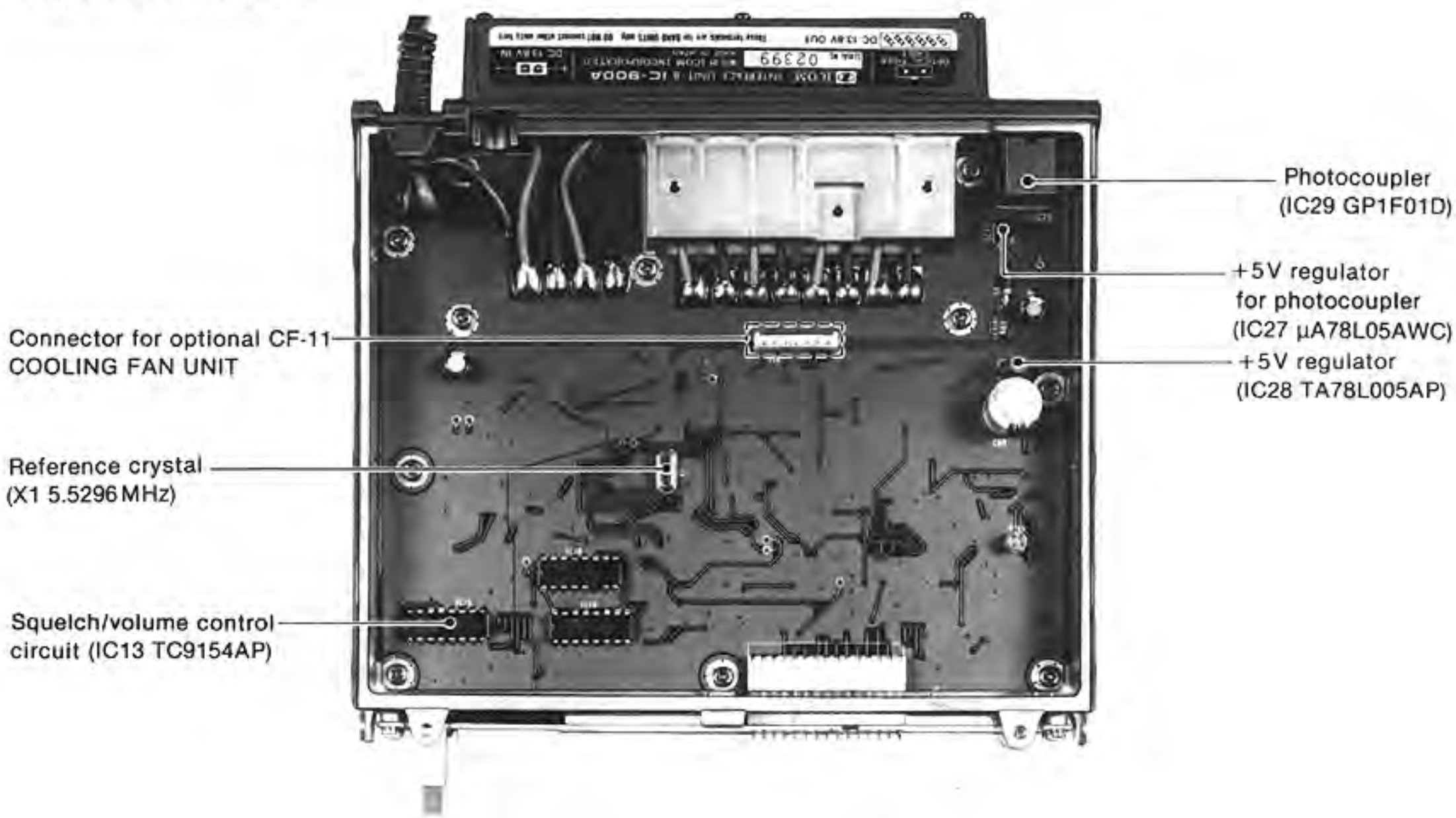

• **FOIL SIDE**

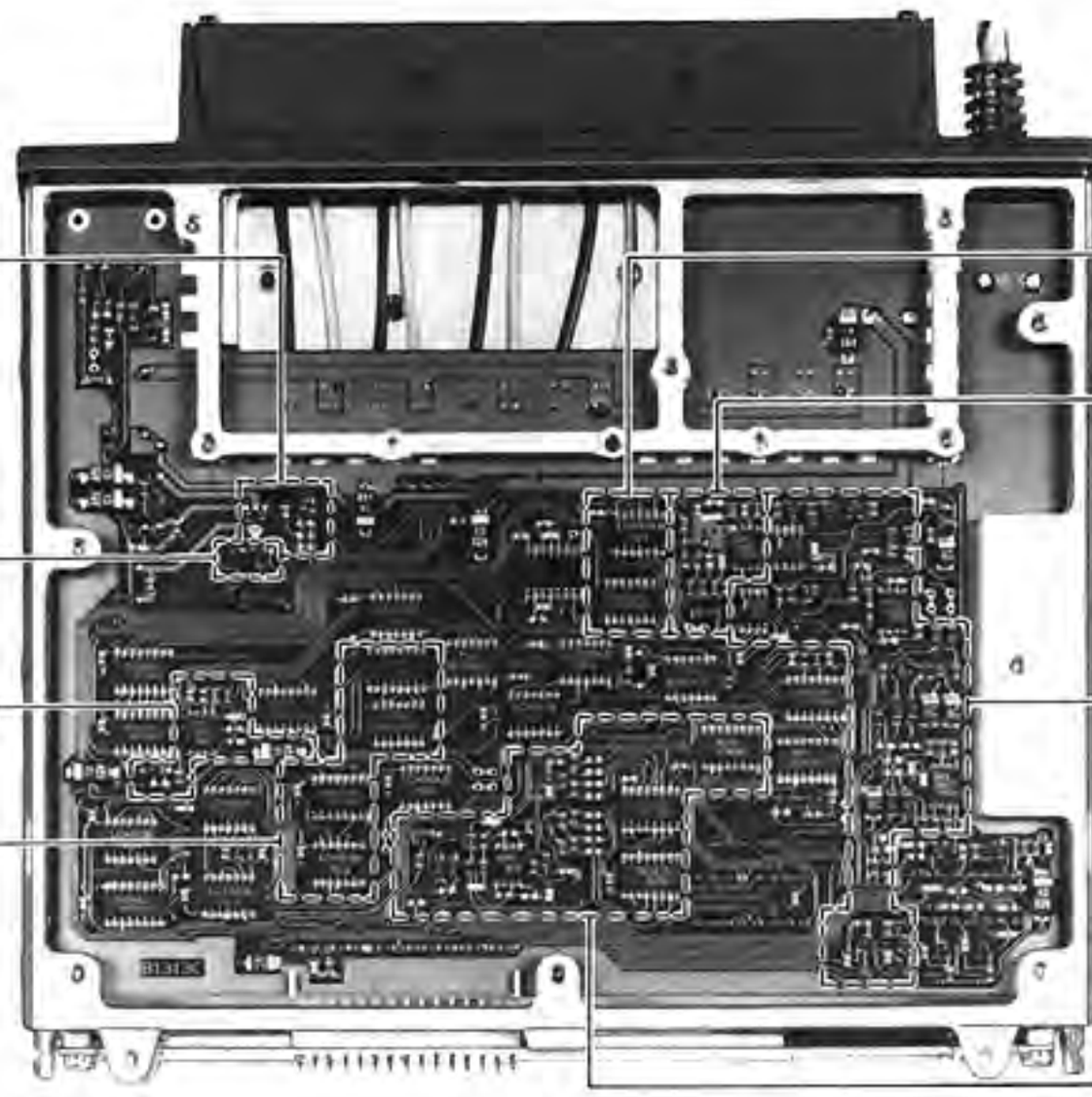
+8V regulator circuit
LED control circuit
PWM demodulator circuit
Power switch
Modulation signal amp circuit
PWM modulator circuit
Serial data synchronized clock generator
S/RF A/D converter circuit

SECTION 3 BLOCK DIAGRAM

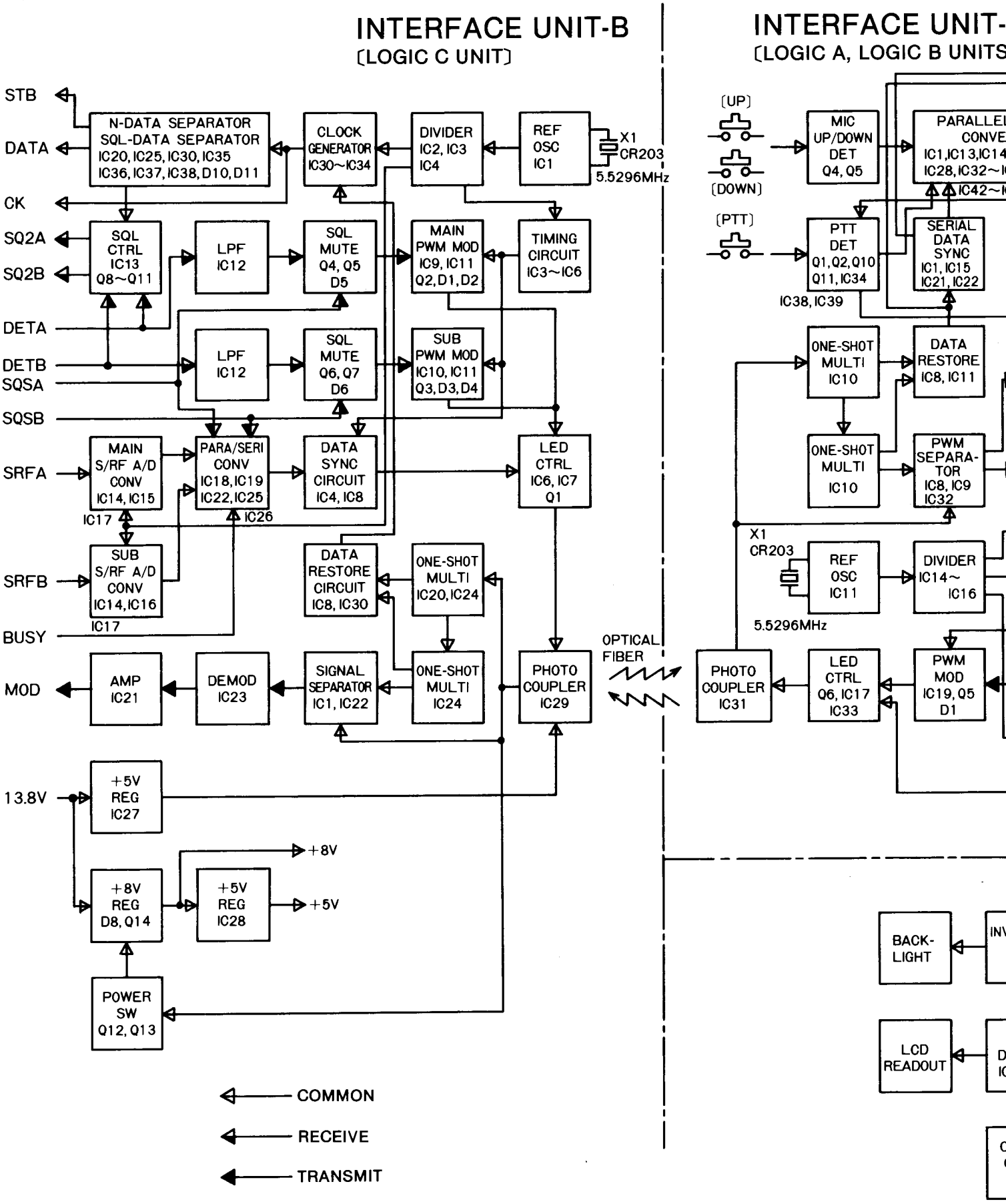

CE UNIT-A

GIC B UNITS]

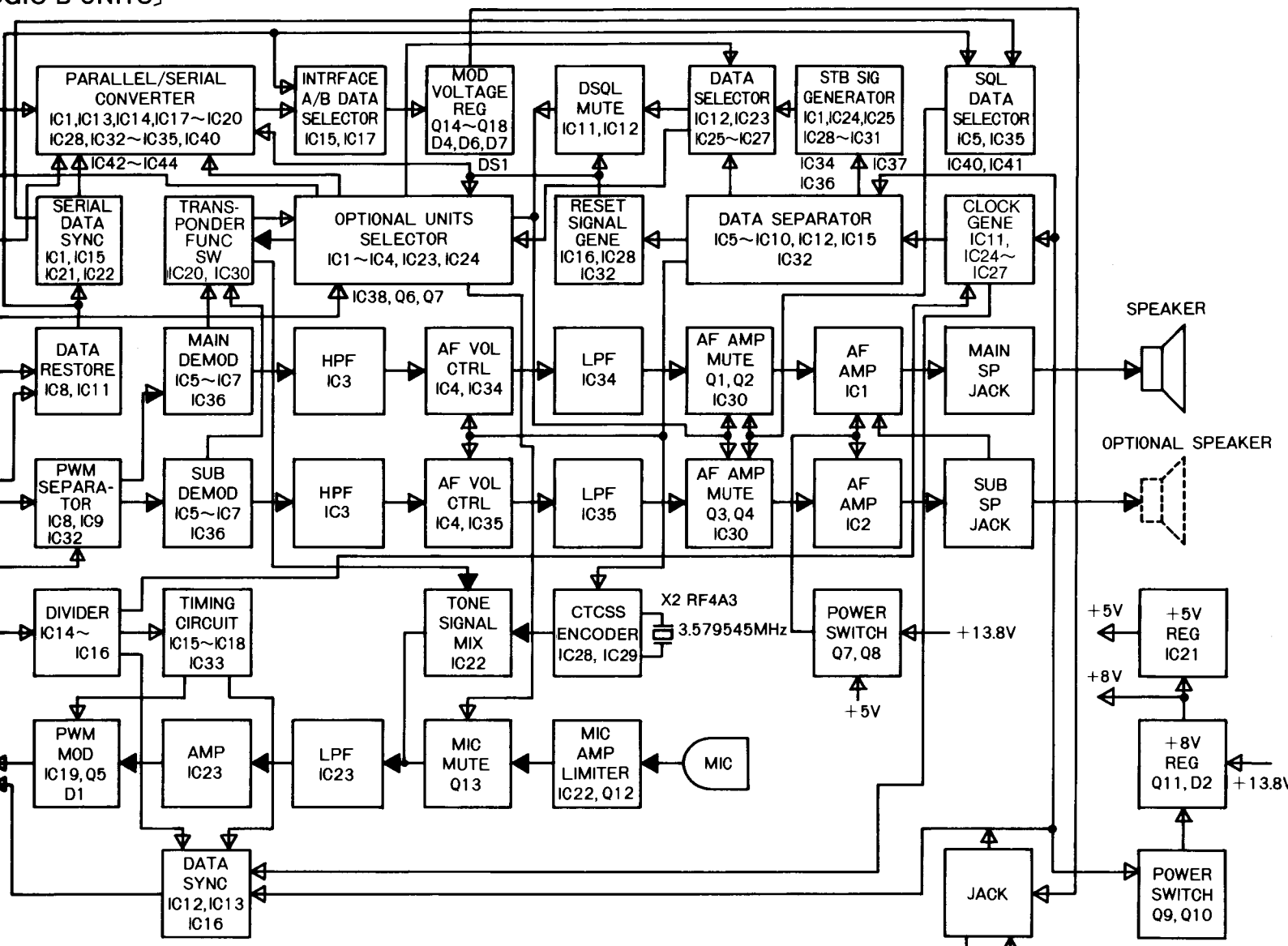

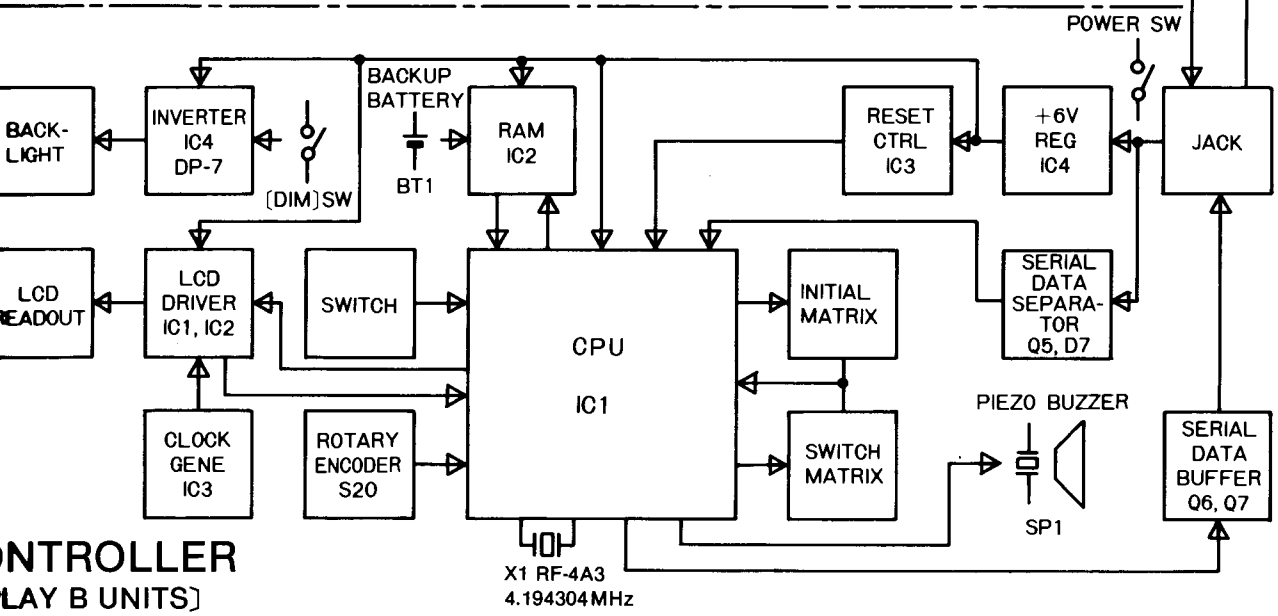

NTROLLER

LAY B UNITS]

SECTION 4 CIRCUIT DESCRIPTION

4-1 CONSTRUCTION

Fig. 1 shows the construction of IC-900's remote controller section.

IC-900's REMOTE CONTROLLER SECTION

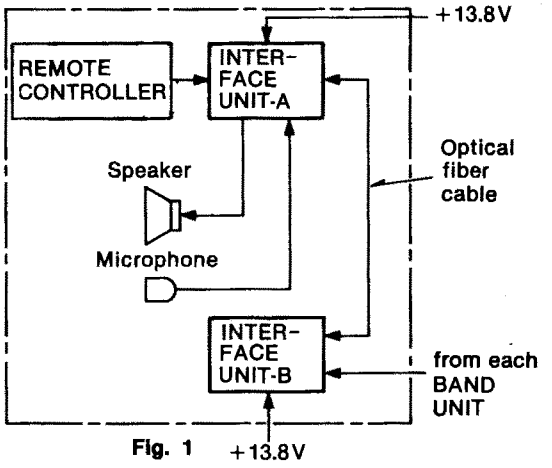

Fig. 1

4-2 REMOTE CONTROLLER

4-2-1 CPU

The CPU (IC1) performs remote control operations.

CPU PORT ALLOCATIONS

PIN	PORT	I/O	PORT DESCRIPTION
1	P13	I	BUSY signal input from the LCD driver.
2, 10	P12, TI1	I	Serial data input.
3, 4	P10, P11	I	TUNING CONTROL input.
11, 12	P22, P23	O	Key matrix output.
13	P21	O	Sub band RECEIVE LED control. When "LOW," the LED is lighted.
16	P02/SO	O	Serial data output.
19~22 23~26	P120~P123 P130~P133	I	Matrix input.
27~30	P140~P143	O	Initial matrix output.
33	P33	O	Main band TRANSMIT/RECEIVE LED control. When "LOW," the LED is lighted in green.
34	P32	O	Main band TRANSMIT/RECEIVE LED control. When "LOW," the LED is lighted in red.
35	P31	I	RAM WE (Write enable).
36 37~40	P30 P40~P43	O	RAM CS (Chip select).
41~44	P50~P53	I/O	RAM data input/output.
45	RESET	I	RESET terminal.
48~51 52~55 56, 57	P60~P63 P70~P73 P82, P83	O	RAM address lines.
58	P81	O	LCD CS (Chip select) output for the LCD driver. (Sub band display)
59	P80	O	LCD CS (Chip select) output for the LCD driver. (Main band display)
60	P93	O	Reset output for the LCD driver.
61	P92	O	C/$\overline{D}$ output (when serial data is output to the LCD driver).
62	P91	O	DATA output for the LCD driver.
63	P90	O	CLOCK output for the LCD driver.

4-2-2 INITIAL MATRIX

The initial matrix determines the frequency range, tuning steps, etc. of each BAND UNIT when the CPU is initialized.

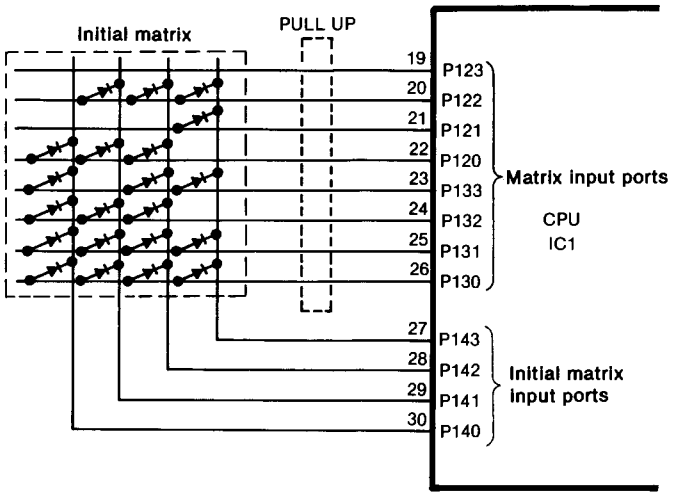

Fig. 2

The CPU outputs "LOW" strobe signals in sequence to the initial matrix from P140 to P143.

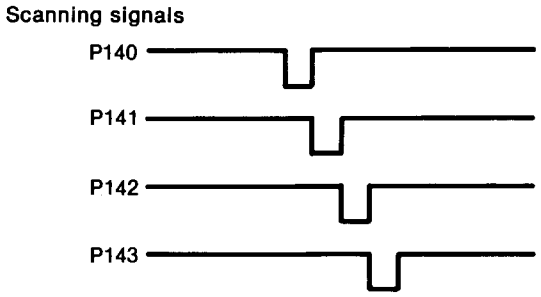

Fig. 3

4-2-3 KEY MATRIX

The key-matrix checks some unlocked-type switches.

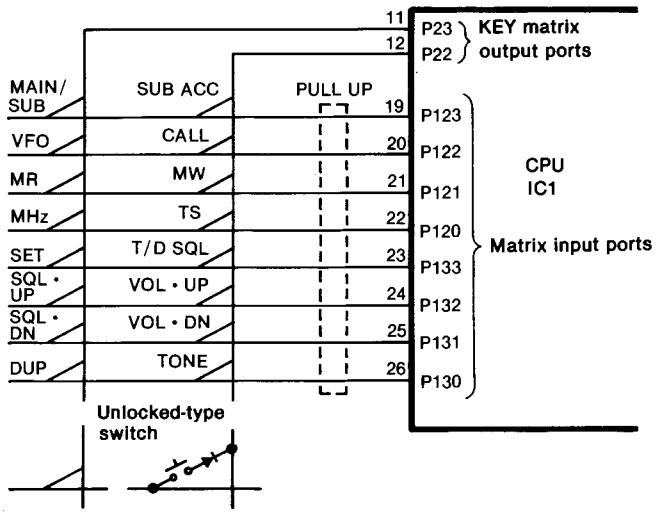

Fig. 4

P22 and P23 output scan signals for strobe scanning as shown in Fig. 5.

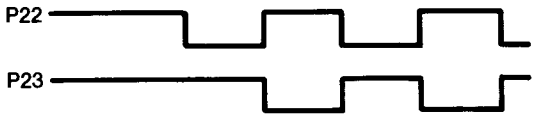

Fig. 5

4-2-4 SERIAL INPUT AND SERIAL OUTPUT

These ports are used for communication between the REMOTE CONTROLLER and each INTERFACE UNIT.

When the operation interrupt START BIT is applied to TI1, the CPU takes serial data from P12 according to its baud rate.

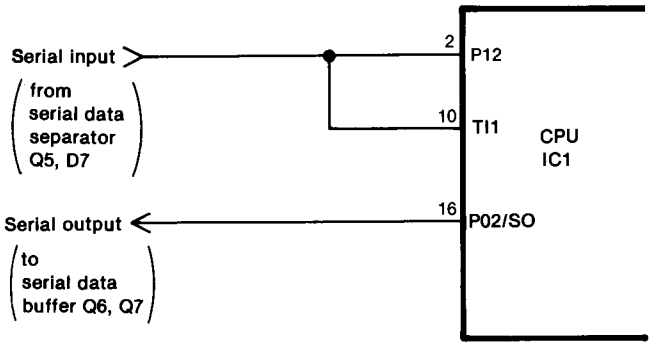

Fig. 6

4-2-5 SERIAL DATA FORMAT

CPU SERIAL OUTPUT DATA

Baud rate : 4800 bps
Configuration : START BIT (1 bit)
ADDRESS BIT (3 bits)
CONTROL BIT (7 bits)
DATA BIT (20 bits)
STOP BIT (2 bits)
Total bits : 33

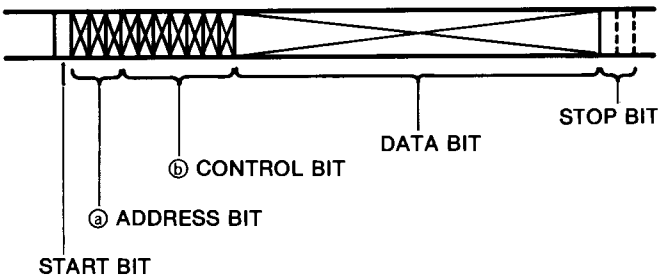

Fig. 7

ⓐ ADDRESS BIT

The ADDRESS BIT accesses 8 addresses as shown below.

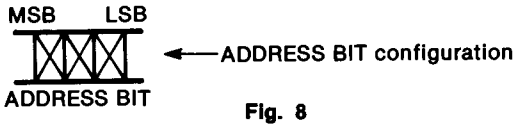

Fig. 8

0H	Resets optional units (UT-28 and UT-29).
1H	Accesses 28MHz BAND UNIT
2H	Accesses 50MHz BAND UNIT
3H	Accesses 144MHz BAND UNIT
4H	Accesses 220MHz BAND UNIT
5H	Accesses 430/440MHz BAND UNIT
6H	Accesses 1200MHz BAND UNIT
7H	Controls volume, squelch, and tone squelch.

ⓑ CONTROL BIT

The performance of each bit composing the CONTROL BIT is determined by the accessing address.

i) When the accessing address is 0H:

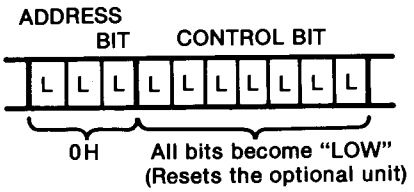

Fig. 9

ii) When the accessing address is 1H~5H or 6H:

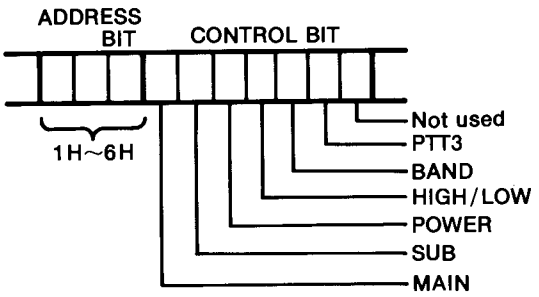

Fig. 10

CONTROL BIT CONFIGURATION

MAIN

When the MAIN BIT is "HIGH," the BAND UNIT accessed by the ADDRESS BIT operates as the main band transceiver.

SUB

When the SUB BIT is "HIGH," the BAND UNIT accessed by the ADDRESS BIT operates as the sub band receiver.

POWER

When the POWER BIT is "HIGH," the BAND UNIT accessed by the ADDRESS BIT turns the main power ON.

HI/LOW

When the HI/LOW BIT is "HIGH," the RF output of the BAND UNIT accessed by the ADDRESS BIT is "LOW."

BAND

When the displayed frequency is outside of the amateur band, the BAND BIT is "HIGH."

PTT3

When the PTT3 BIT is "HIGH," the BAND UNIT accessed by the ADDRESS BIT transmits.

iii) When the accessing address is 7H:

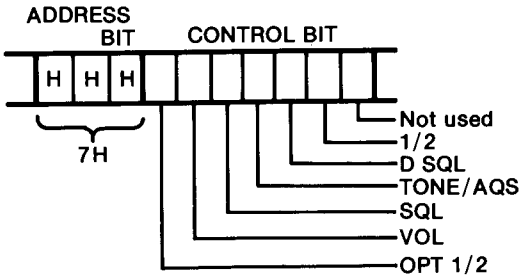

Fig. 11

CONTROL BIT CONFIGURATION

OPT1/2

The OPT1/2 BIT determines the connection between the BAND UNIT and each optional unit (UT-28, UT-29).

When the OPT1/2 BIT is "HIGH," the main band transceiver is connected to the optional unit via connector OPT1. The sub band is connected to the optional unit via connector OPT2.

When the OPT1/2 BIT is "LOW," the main band transceiver is connected to the optional unit via connector OPT2. The sub band is connected to the optional unit via connector OPT1.

VOL

When the SQL and TONE/AQS BITS are "LOW" and the VOL BIT is "HIGH," the data of the DATA BIT is transferred to the AF level control circuit of INTERFACE UNIT-A.

SQL

When the VOL and SQL BITS are "LOW" and the SQL BIT is "HIGH," the data of the DATA BIT is transferred to the squelch control circuit of INTERFACE UNIT-B.

TONE/AQS

When the VOL and SQL BITS are "LOW" and the TONE/AQS BIT is "HIGH," the data of the DATA BIT is transferred to the optional unit (UT-28, UT-29) as tone squelch data or digital code squelch data via connector OPT1 or OPT2. (The connector selection is determined by the 1/2 BIT.)

1/2

When the TONE/AQS BIT is "LOW" and the 1/2 BIT is "HIGH," connector OPT1 is accessed for data transfer to the optional unit (UT-28, UT-29).

When the TONE/AQS BIT is "LOW" and the 1/2 BIT is also "LOW," connector OPT2 is accessed for data transfer to the optional unit (UT-28, UT-29).

D/SQL

When the DSQL BIT is "HIGH," AF signals from the BAND UNIT are muted at the digital code squelch mute circuit (INTERFACE UNIT-A).

The BAND UNIT to be connected to the optional unit is determined by the 1/2 BIT.

ⓒ DATA BIT

The performance of the DATA BIT is determined by the accessing address and the CONTROL BIT.

i) When the accessing address is 0H, the DATA BIT has no function.

ii) When the accessing address is 1H~6H, PLL N-data is transferred.

iii) When the accessing address is 7H, the CONTROL BIT selects the data to be transferred from the DATA BIT.

CONTROL BIT		Transferring data from DATA BIT
VOL BIT:	"HIGH"	Lower 18 bits
SQL BIT:	"HIGH"	Lower 18 bits
TONE/AQS BIT:	"HIGH"	Lower 8 bits
VOL BIT:	"LOW"	Data are not selected.
SQL BIT:	"LOW"	
TONE/AQS BIT:	"LOW"	

CPU SERIAL INPUT DATA

Baud rate : 4800 bps
Configuration : START BIT (1 bit)
ADDRESS BIT (1 bit)
DATA BIT (14 bits)
STOP BIT (16 bits)
Total bits : 32

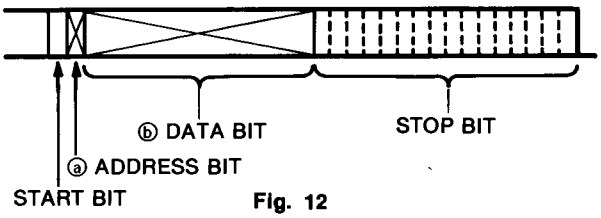

Fig. 12

ⓐ ADDRESS BIT

The ADDRESS BIT indicates the origin of CPU SERIAL INPUT DATA for data transfer.

When the ADDRESS BIT is "HIGH," the data originates at INTERFACE UNIT-A.

When the ADDRESS BIT is "LOW," the data originates at INTERFACE UNIT-B.

ⓑ DATA BIT

The performance of each bit composing the CONTROL BIT is determined by the accessing address.

i) When the ADDRESS BIT is "LOW," CPU serial data is transferred from INTERFACE UNIT-B.

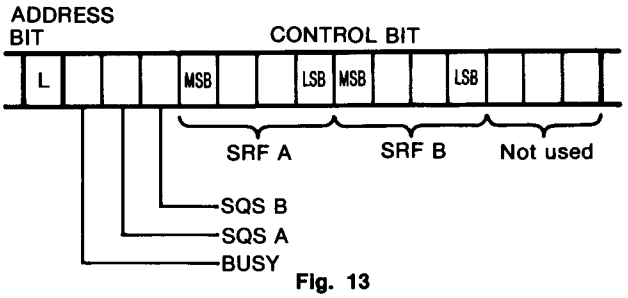

Fig. 13

BUSY

When the BAND UNIT accessed by CPU SERIAL OUTPUT DATA is connected to INTERFACE UNIT-B, the BUSY BIT is "LOW."

SQSA

When the main band transceiver squelch is open, the SQSA BIT is "HIGH."

SQSB

When the sub band receiver squelch is open, the SQSB BIT is "HIGH."

SRFA

SRFA is data for the main band transceiver S/RF INDICATOR.

SRFB

SRFB is data for the sub band receiver S INDICATOR.

ii) When the ADDRESS BIT is "HIGH," CPU SERIAL DATA is transferred from INTERFACE UNIT-A.

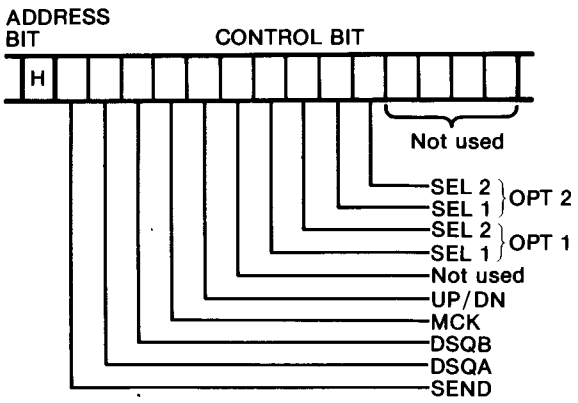

Fig. 14

* Any signal change causes data to be sent from INTERFACE UNIT-A. The absence of signal changes results in the following data generation times:

DATA ORIGIN	DATA GENERATION TIMES
INTERFACE UNIT-A	1
INTERFACE UNIT-B	16

SEND

When the PTT SWITCH is pushed, the SEND BIT is "HIGH."

DSQA

When the main band transceiver's optional tone squelch or digital code squelch is open, the DSQA BIT is "HIGH."

DSQB

When the sub band receiver's optional tone squelch or digital code squelch is open, the DSQB BIT is "HIGH."

MCK

When the MIC UP or MIC DN switch is pushed, the MCK BIT is "HIGH."

UP/DN

When the MIC UP switch is pushed, the UP/DN BIT is "HIGH."

OPT1 (SEL1, SEL2)

SEL1 and SEL2 BITS indicate the connections between connector OPT1 and an optional unit (UT-28 or UT-29).

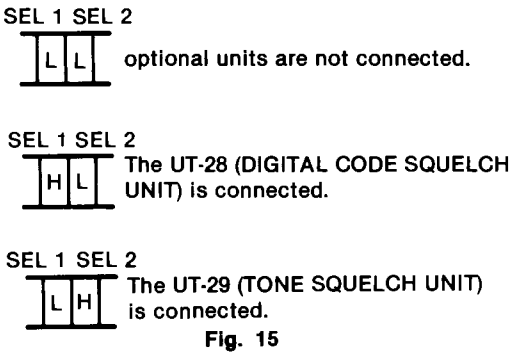

Fig. 15

OPT2 (SEL1, SEL2)

These bits (SEL1, SEL2) indicate the conditions of connection between connector (OPT2) and optional unit (UT-28 or UT-29).

The variation of SEL1 and SEL2 is the same as the OPT1 BIT.

4-2-6 PORTS FOR INPUT SWITCHES

PTH00~PTH03, P10 and P11 are connected as shown in Fig. 16.

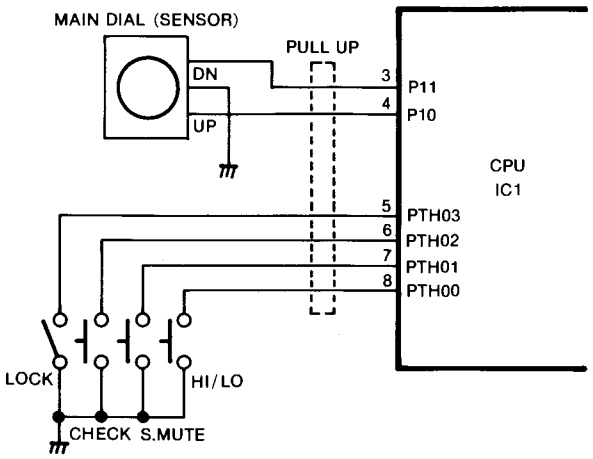

Fig. 16

About 40μsec. after the key matrix strobe signals change, the CPU receives signals from each switch.

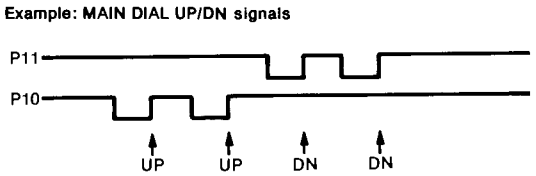

Fig. 17

4-2-7 LCD DRIVER CONTROL CIRCUIT

The CPU controls two LCD drivers for the LCD information display.

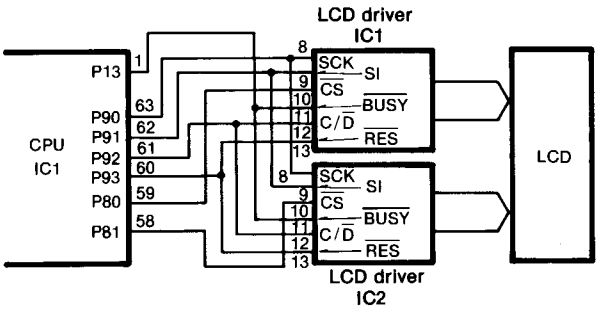

Fig. 18

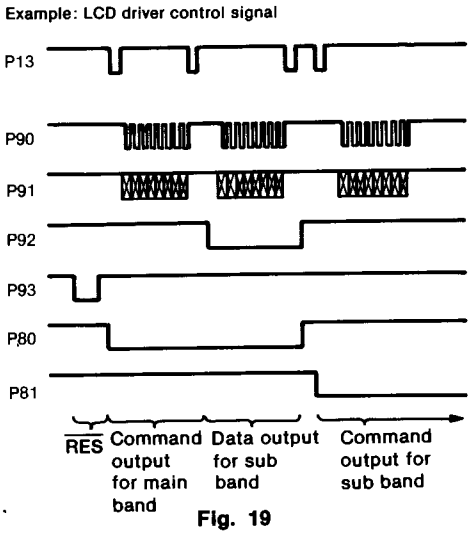

Fig. 19

4-2-8 LED CONTROL CIRCUIT

The CPU controls the MAIN BAND TRANSMIT/ RECEIVE INDICATOR and the SUB BAND RECEIVE INDICATOR.

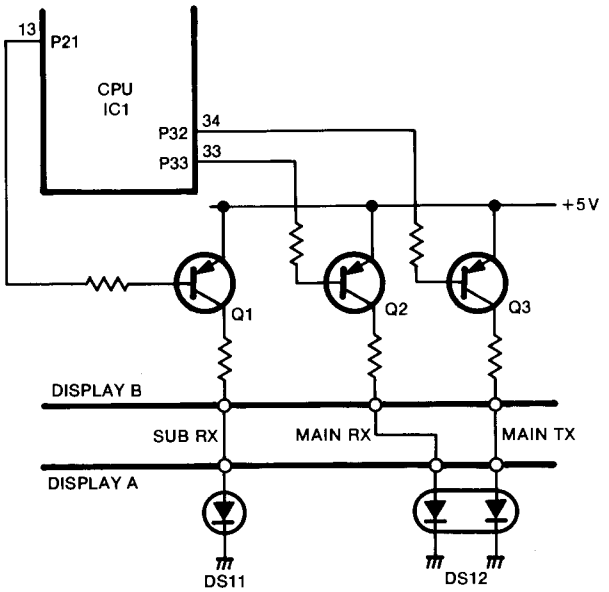

Fig. 20

When the port signal is "LOW," the indicator becomes lighted.

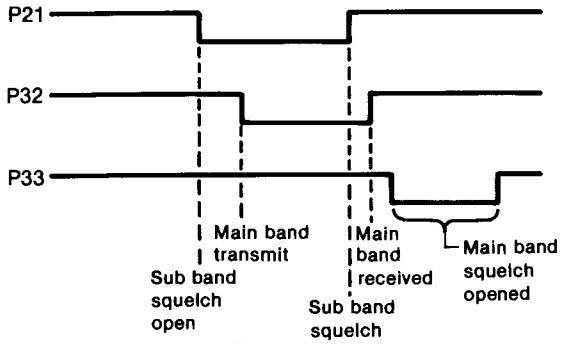

Fig. 21

4-2-9 BEEP CONTROL CIRCUIT

CPU pin 14 (P20) outputs a 1.8kHz square wave to emit a beep over the speaker.

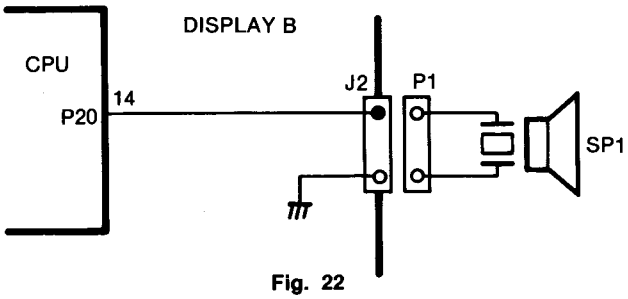

Fig. 22

P20 Output waveform

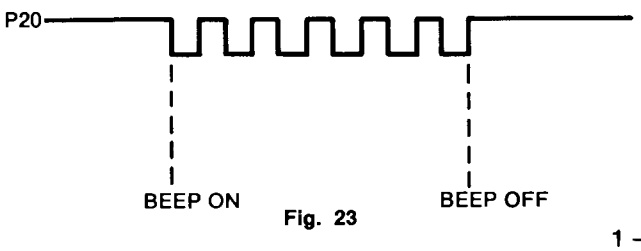

Fig. 23

4-2-10 RESET CIRCUIT

When the POWER SWITCH is turned ON, IC3 resets the CPU.

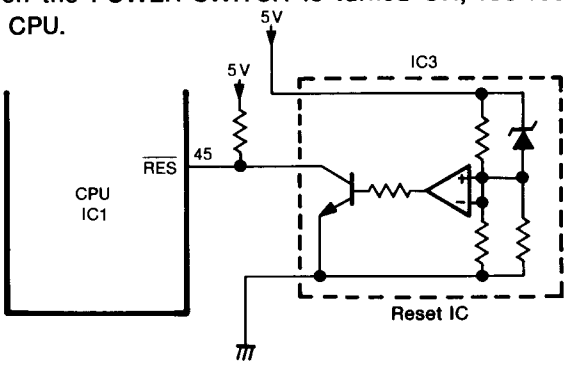

Fig. 24

Reset timing

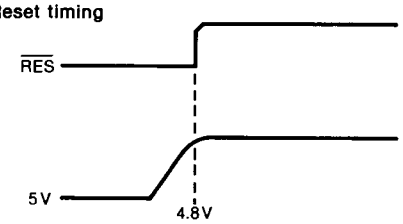

Fig. 25

4-2-11 SIGNAL SEPARATOR CIRCUIT

(Shown as "DATA SEPARATOR" in the block diagram.)

The signal line from INTERFACE UNIT-A is overlapped with the power source line.

The signal separator circuit consists of Q5, D4, D7 and D41. This circuit takes CPU serial input data from the signal line.

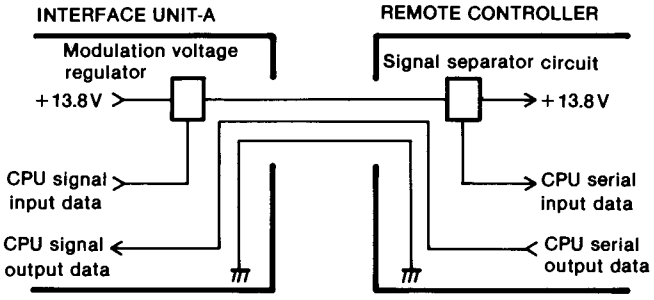

Fig. 26

SIGNAL SEPARATOR CIRCUIT

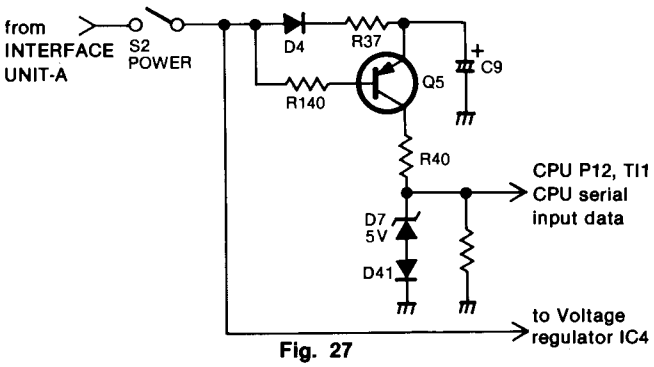

Fig. 27

Example: Signal timing chart

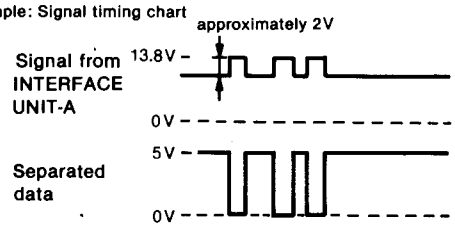

Fig. 28

4-3 INTERFACE UNIT-A

4-3-1 SERIAL DATA SYNC. CLOCK GENERATOR

(Shown as "CLOCK GENE" in Fig. 29.)

Generates a clock signal of 30 pulses. The clock signal is synchronized with the CPU serial output data.

4-3-2 DATA SEPARATOR CIRCUIT

(Shown as "DATA SEPARATOR" in Fig. 29.)

Based on CPU serial output data, this circuit transfers CK signals to the AF volume control circuit, the CTCSS encoder or terminals OPT1 and OPT2.

4-3-3 DIGITAL CODE SQL STB CK GENERATOR

(Shown as "STB SIG GENERATOR" in Fig. 29.)

Generates clock signals for the optional unit (UT-28 or UT-29) or the CTCSS encoder circuit.

Also generates an AQS signal corresponding to the "D/SQL" BIT. "D/SQL" turns UT-28 ON and OFF.

4-3-4 OPTIONAL UNIT DATA SELECTOR CIRCUIT

(Shown as "DATA SEPARATOR" in Fig. 29.)

Selects the correct strobe signal for the optional unit (UT-28 or UT-29) that is connected.

Based on CPU serial output data, this circuit sends the strobe signal to terminal OPT1 or OPT2.

4-3-5 DIGITAL CODE SQUELCH MUTE CIRCUIT

(Shown as "DSQL MUTE" in Fig. 29.)

When the digital code squelch is selected, this circuit becomes a "HIGH" control line for the DIGITAL/TONE squelch mute circuit.

When the digital code squelch is activated and the preset tone code matches the desired tone code, this circuit becomes a "LOW" control line for the DIGITAL/TONE squelch mute circuit.

4-3-6 OPT1/2 SELECTOR AND OPTIONAL UNIT SELECTOR CIRCUITS

(Shown as "OPTIONAL UNITS SELECTOR" in Fig. 29.)

Based on the CPU serial output data CONTROL BIT, these circuits determine the connections between the BAND UNITS (main band transceiver and sub band receiver) and the optional unit terminals (OPT1 and OPT2).

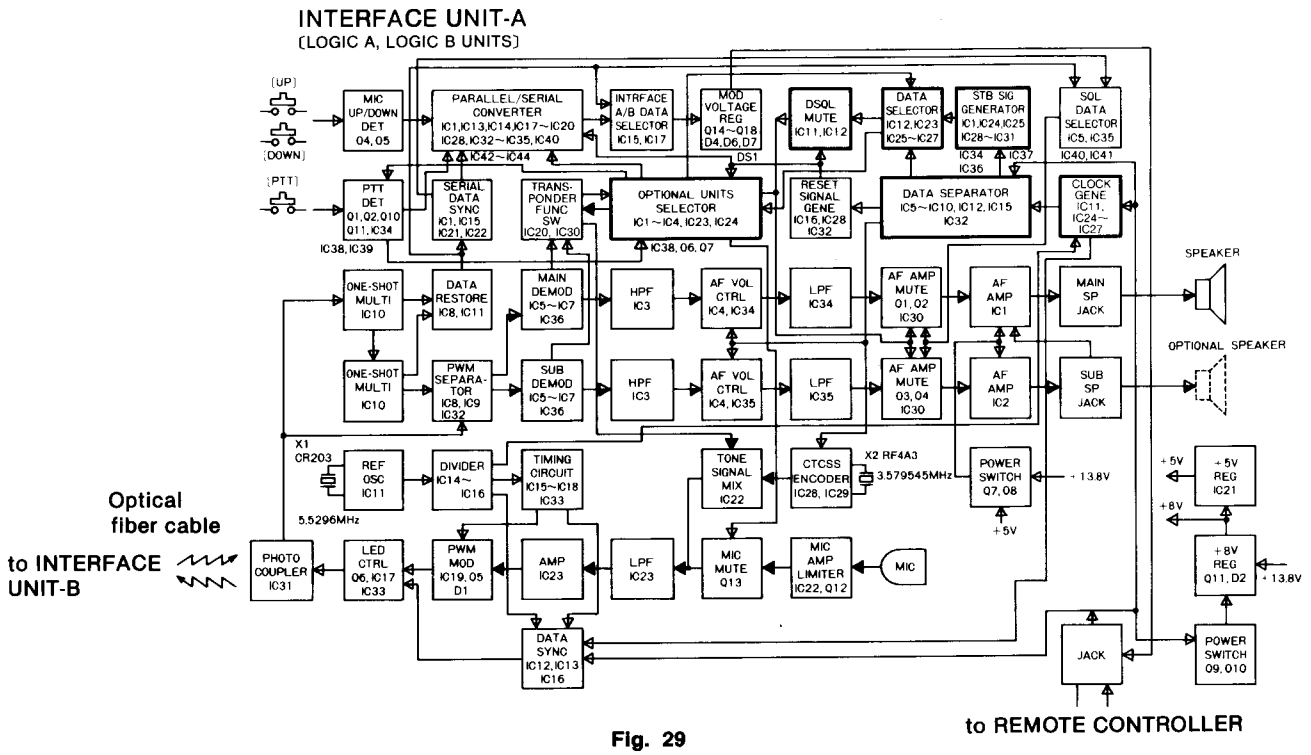

Fig. 29

4-3-7 RESET SIGNAL GENERATOR

(Shown as "RESET SIG GENERATOR" in Fig. 30.)

Outputs a RESET signal for about 50μsec. when the CPU serial output data ADDRESS BIT is 0H. The RESET signal resets the DIGITAL CODE SQUELCH UNIT and checks the connections of each optional unit.

4-3-8 CTCSS ENCODER CIRCUIT

(Shown as "CTCSS ENCODER" in Fig. 30.)

Outputs a TONE signal when transmitting and when the TONE or the TONE SQUELCH is ON.

4-3-9 TONE SIGNAL MIXER

(Shown as "TONE SIGNAL MIX" in Fig. 30.)

Mixes MODEM signal output from the DIGITAL CODE SQUELCH UNIT with CTCSS output signals. The resulting signal is applied to the microphone amplifier (IC23).

4-3-10 REFERENCE OSCILLATOR CIRCUIT

(Shown as "REF OSC" in Fig. 30.)

Oscillates at 5.5296MHz. The signal is used for reference at INTERFACE UNIT-A.

4-3-11 DIVIDER

(Shown as "DIVIDER" in Fig. 30.)

Divides the 5.5296MHz signal and applies the resulting signals to each circuit.

4-3-12 TIMING CIRCUIT

(Shown as "TIMING CIRCUIT" in Fig. 30.)

Creates a timing signal which is applied to the PWM modulator and the DATA SYNC circuits.

4-3-13 MIC AMP, LIMITER, MIC MUTE, LPF AND AMP CIRCUITS

(Shown as "MIC AMP, LIMITER," "MIC MUTE," "LPF" and "AMP" in Fig. 30.)

The microphone amplifier and limiter circuit amplifies AF signals from the microphone to a level sufficient to create PWM modulation. These circuits also function as a preemphasizer.

When the DIGITAL SQUELCH UNIT outputs MODEM signals, the microphone mute circuit mutes microphone signals.

4-3-14 PWM MODULATOR CIRCUIT

(Shown as "PWM MOD" in Fig. 30.)

AF signals from the microphone amplifier are PWM modulated at this circuit.

4-3-15 DATA SYNCRHONOUS CIRCUIT

(Shown as "DATA SYNC" in Fig. 30.)

Synchronizes CPU serial output data with the LED control circuit clock signal, and time divides it with a timing signal.

4-3-16 LED CONTROL CIRCUIT

(Shown as "LED CTRL" in Fig. 30.)

Mixes signals from the DATA SYNC circuit with signals from the PWM MOD circuit. The resulting signal is applied to the photocoupler.

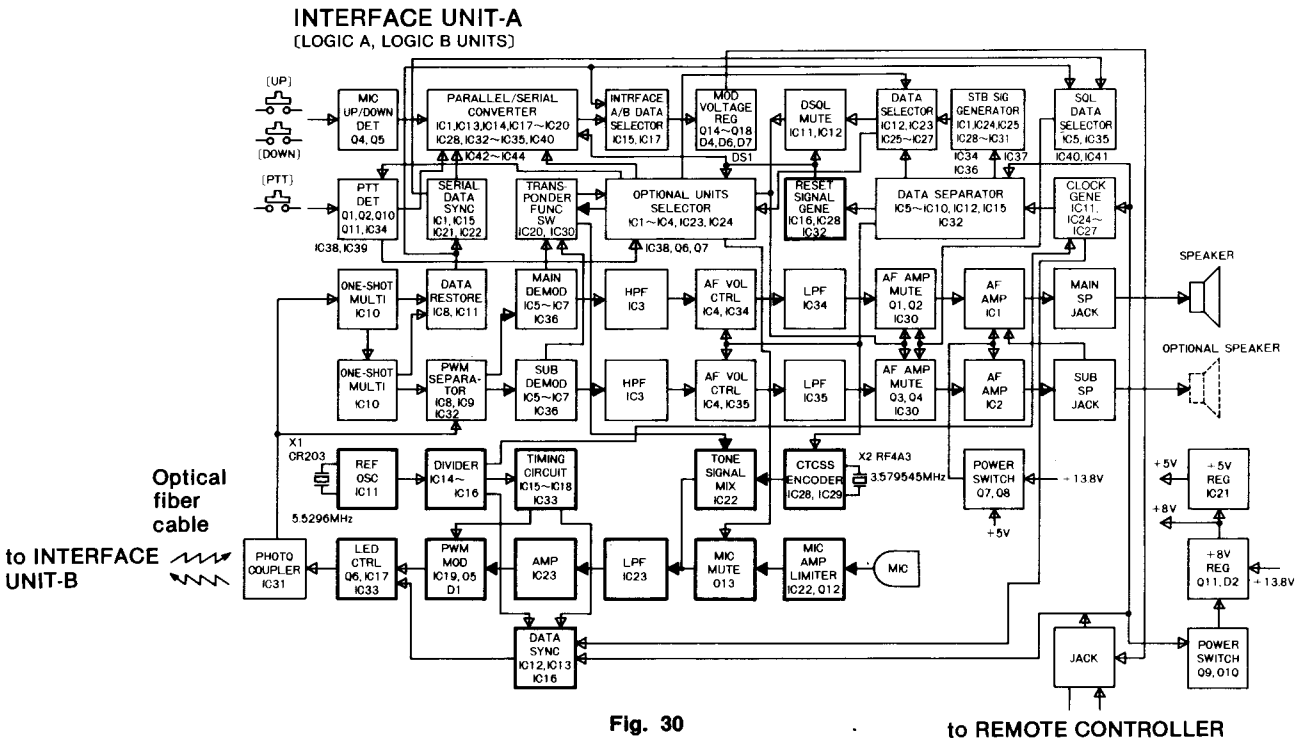

Fig. 30

4-3-17 PHOTOCOUPLER

(Shown as "PHOTOCOUPLER" in Fig. 31.)

Converts electrical signals from the LED control circuit to optical signals. The optical signals are applied to INTERFACE UNIT-B via the optical fiber cable.

INTERFACE UNIT-B → INTERFACE UNIT-A:

Optical signals from INTERFACE UNIT-B are converted to electrical signals at the photocoupler.

4-3-18 ONE-SHOT MULTIVIBRATOR

(Shown as "ONE SHOT MULTI" in Fig. 31.)

Outputs timing signals which are applied to the PWM separator and the DATA RESTORE circuit.

4-3-19 DATA RESTORE CIRCUIT

(Shown as "DATA RESTORE" in Fig. 31.)

Using timing signals from the one-shot multivibrator, this circuit takes CPU serial input data from the photocoupler output.

4-3-20 PWM SEPARATOR CIRCUIT

(Shown as "PWM SEPARATOR" in Fig. 31.)

Using timing signals from the one-shot multivibrator, this circuit takes main band and sub band PWM modulated components from the photocoupler outputs.

4-3-21 PWM DEMODULATOR CIRCUIT

(Shown as "MAIN DEMOD" and "SUB DEMOD" in Fig. 31.)

Demodulates PWM modulated signals into AF signals.

4-3-22 HIGH-PASS FILTER

(Shown as "HPF" in Fig. 31.)

The AF output from the PWM demodulator circuit passes through the high-pass filter where less than 300 Hz are attenuated.

4-3-23 AF VOLUME CONTROL CIRCUIT

(Shown as "AF VOL CTRL" in Fig. 31.)

Based on the CPU serial output data DATA BIT, this circuit controls the AF volume.

4-3-24 LOW-PASS FILTER

(Shown as "LPF" in Fig. 31.)

Serves as low-pass filter and deemphasizer.

4-3-25 AF AMPLIFIER MUTE CIRCUIT

(Shown as "AF AMP MUTE" in Fig. 31.)

Mutes the AF amplifier (IC1, IC2) input when the squelch is closed or the MUTE signal from the optional unit (UT-28, UT-29) is "HIGH."

4-3-26 AF AMPLIFIER

(Shown as "AF AMP" in Fig. 31.)

4-3-27 AF AMP POWER SWITCH

(Shown as "POWER SWITCH" in Fig. 31.)

When the REMOTE CONTROLLER POWER SWITCH is turned ON, +5V turns on Q7 and Q8. Q7 applies +13.8V to the AF amplifiers (IC1, IC2).

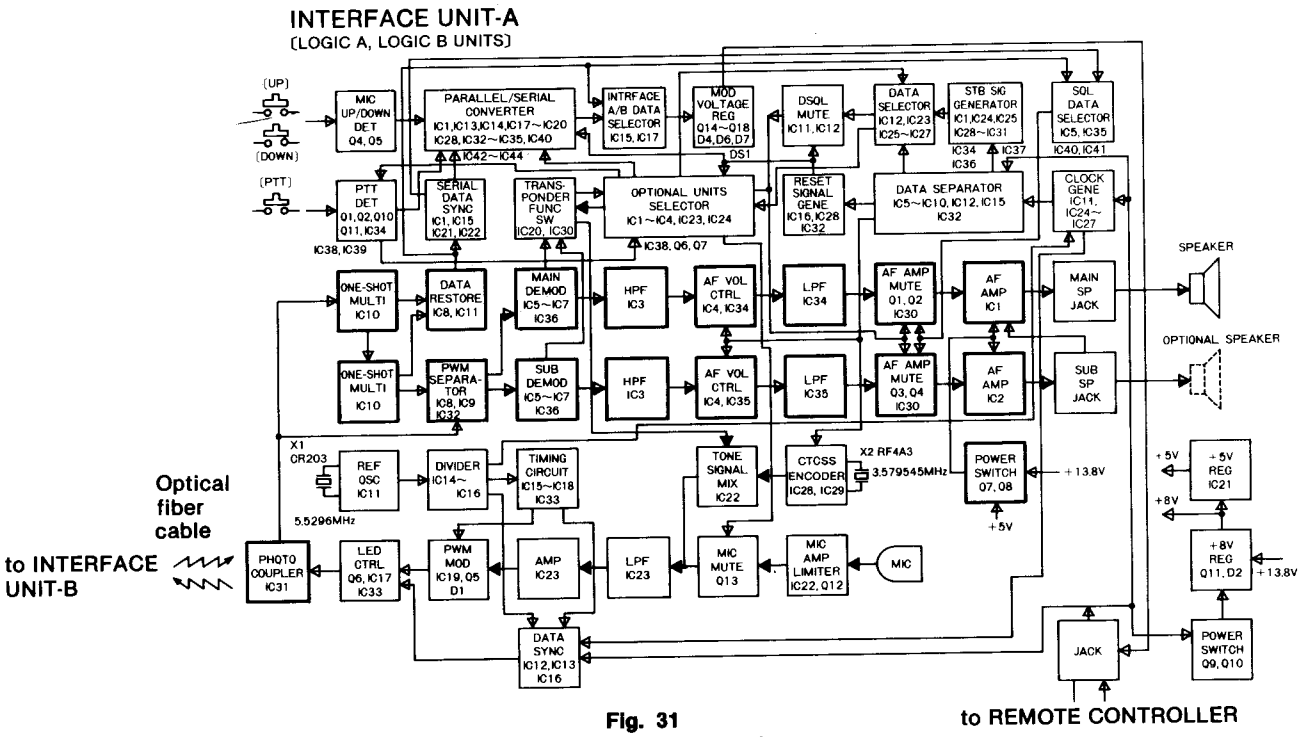

Fig. 31

4-3-28 MAIN SPEAKER JACK

(Shown as "MAIN SP JACK" in Fig. 32.)

Outputs AF signals received by the main band transceiver. When the external speaker is not connected to the sub speaker jack, AF signals from the sub band receiver are mixed at the main speaker jack with AF signals received by the main band transceiver. The resulting signal is then output from the main speaker jack.

4-3-29 SUB SPEAKER JACK

(Shown as SUB SP JACK in Fig. 32.)

Outputs AF signals received by the sub band receiver.

4-3-30 MIC UP/DOWN SWITCH DETECTOR

(Shown as "UP/DOWN DET" in Fig. 32.)

Detects the position of the MIC UP and MIC DOWN switches.

4-3-31 PTT SWITCH DETECTOR

(Shown as "PTT DET" in Fig. 32.)

Detects the PTT switch position and outputs a SEND signal. Also outputs a PTT2 signal for the optional DIGITAL CODE SQUELCH UNIT (UT-28).

4-3-32 SERIAL DATA SYNC. CLOCK GENERATOR

(Shown as "SERIAL DATA SYNC" in Fig. 32.)

Generates a clock signal of 18 pulses which is synchronized with CPU serial input data from INTERFACE UNIT-B.

4-3-33 PARALLEL/SERIAL DATA CONVERTER

(Shown as "PARALLEL/SERIAL CONVERTER" in Fig. 32.)

When PTT, MIC UP, or MIC DOWN data, etc., in INTERFACE UNIT-A is changed, this circuit outputs CPU serial input data. The ADDRESS BIT is 1 and the DATA BIT indicates what type of change has taken place.

When no switch is pushed, the rate of CPU serial input data generation times is as follows:

ADDRESS BIT of the serial data	Data generation times
1	1
*0	16

*Data from INTERFACE UNIT-B.

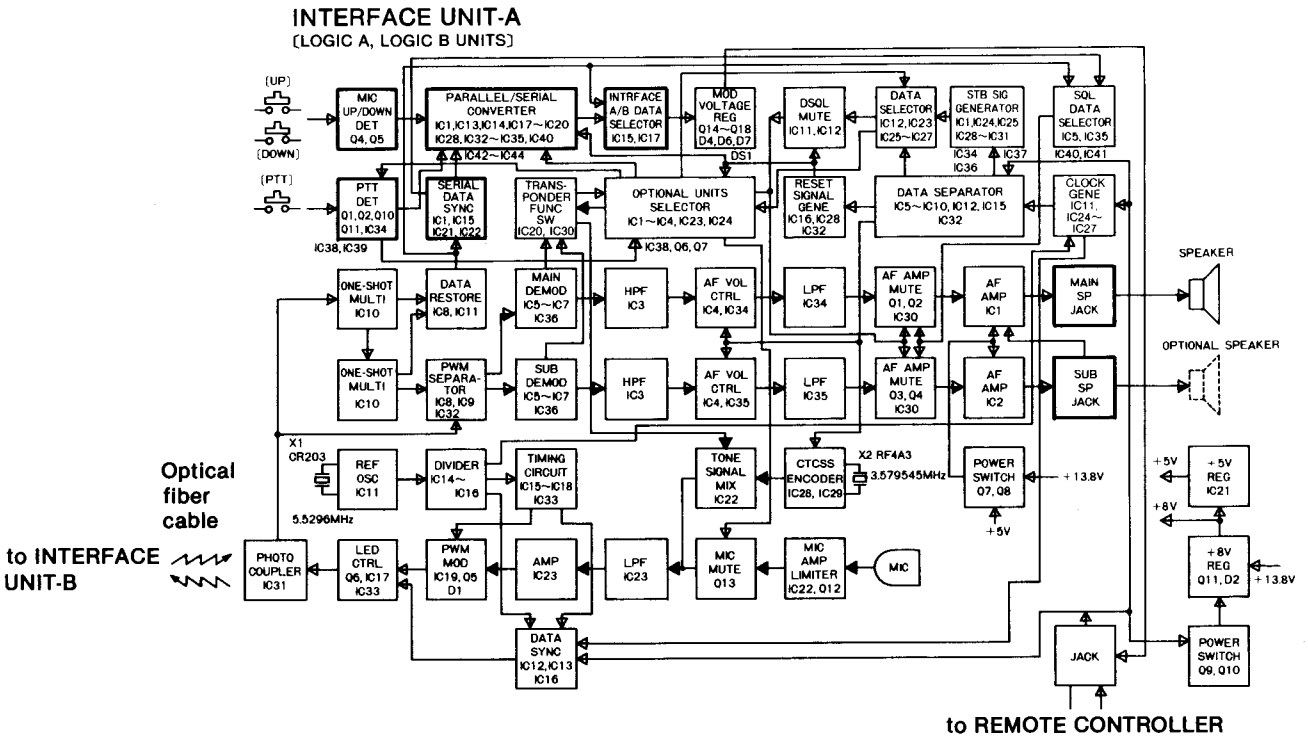

Fig. 32

4-3-34 INTERFACE A/B DATA SELECTOR

(Shown as "INTERFACE A/B DATA SELECTOR" in Fig. 33.)

When data is output from the parallel/serial data converter, this circuit inhibits the passage of CPU serial input data with an address of 0. CPU serial input data with an address of 1 is output.

4-3-35 MODULATION VOLTAGE REGULATOR

(Shown as "MOD VOLTAGE REG" in Fig. 33.)

Gathers CPU serial input signals onto +13.8V for use with the REMOTE CONTROLLER. The signals are applied to the REMOTE CONTROLLER.

4-3-36 SQUELCH DATA SELECTOR

(Shown as "SQL DATA SELECTOR" in Fig. 33.)

Using the CPU serial input data output by INTERFACE UNIT-B, this circuit detects the status of the squelch circuit and controls the digital squelch mute circuit.

4-3-37 +8V POWER SWITCH CIRCUIT

(Shown as "+8V REG" and "POWER SWITCH" in Fig. 33.)

When the POWER SWITCH on the REMOTE CONTROLLER is turned ON, this circuit turns ON the +8V regulator.

4-3-38 +5V REGULATOR CIRCUIT

(Shown as "+5V REG" in Fig. 33.)

Produces +5V from +8V.

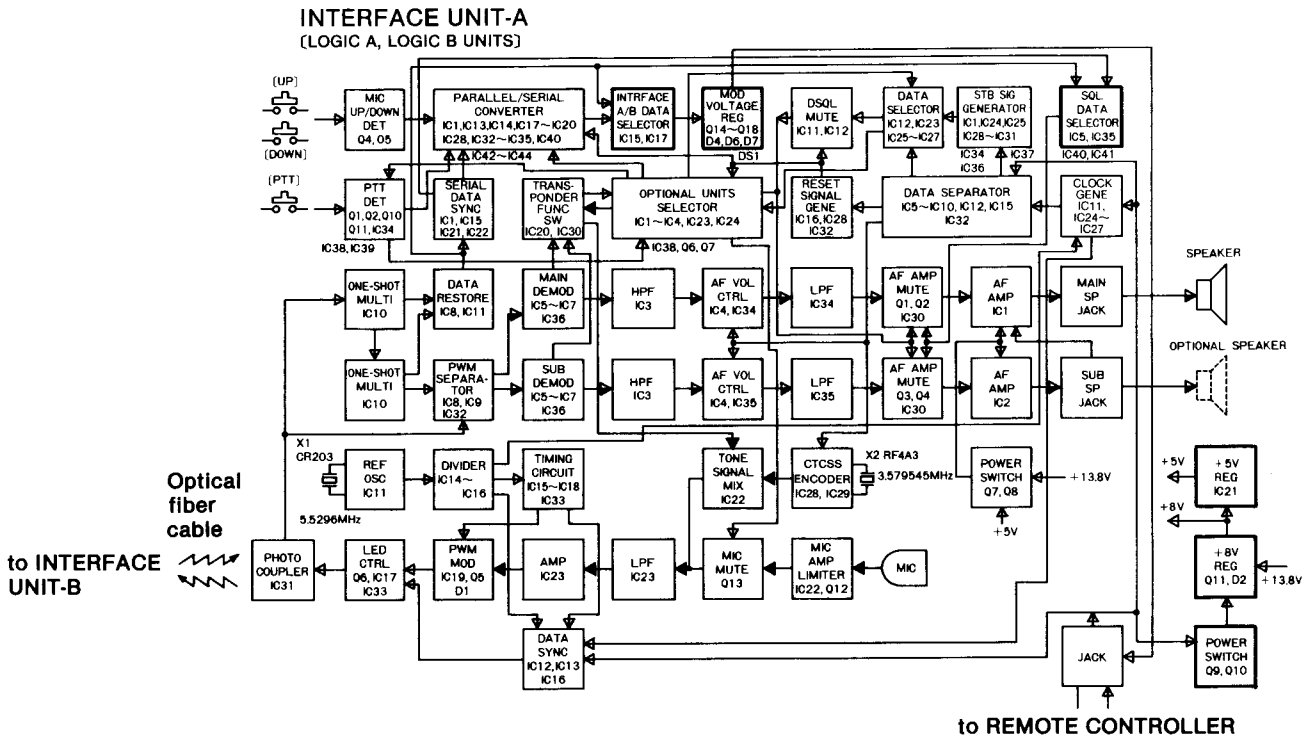

Fig. 33

4-4 INTERFACE UNIT-B

4-4-1 PHOTOCOUPLER

(Shown as "PHOTOCOUPLER" in Fig. 34.)

INTERFACE UNIT-B → INTERFACE UNIT-A:
The photocoupler converts electrical signals from the LED control circuit into optical signals. The optical signals are applied to INTERFACE UNIT-A via the optical fiber cable.

INTERFACE UNIT-A → INTERFACE UNIT-B:
Optical signals from INTERFACE UNIT-A are converted to electrical signals at the photocoupler.

4-4-2 ONE-SHOT MULTIVIBRATOR

(Shown as "ONE SHOT MULTI" in Fig. 34.)

Outputs timing signals which are applied to the PWM separator and the DATA RESTORE circuit.

4-4-3 DATA RESTORE CIRCUIT

(Shown as "DATA RESTORE" in Fig. 34.)

Using timing signals from the one-shot multivibrator, this circuit takes CPU serial input data from the photocoupler output.

4-4-4 PWM SEPARATOR CIRCUIT

(Shown as "PWM SEPARATOR" in Fig. 34.)

Using timing signals from the one-shot multivibrator, this circuit takes main band and sub band PWM modulated components from the photocoupler outputs.

4-4-5 PWM DEMODULATOR CIRCUIT

(Shown as "DEMOD" in Fig. 34.)

Demodulates PWM modulated signals into AF signals.

4-4-6 MODULATION SIGNAL AMPLIFIER

(Shown as "AMP" in Fig. 34.)

Amplifies AF signals from the PWM demodulator circuit to a level sufficient for FM modulation. The signals are applied to each BAND UNIT as modulated signals (MOD).

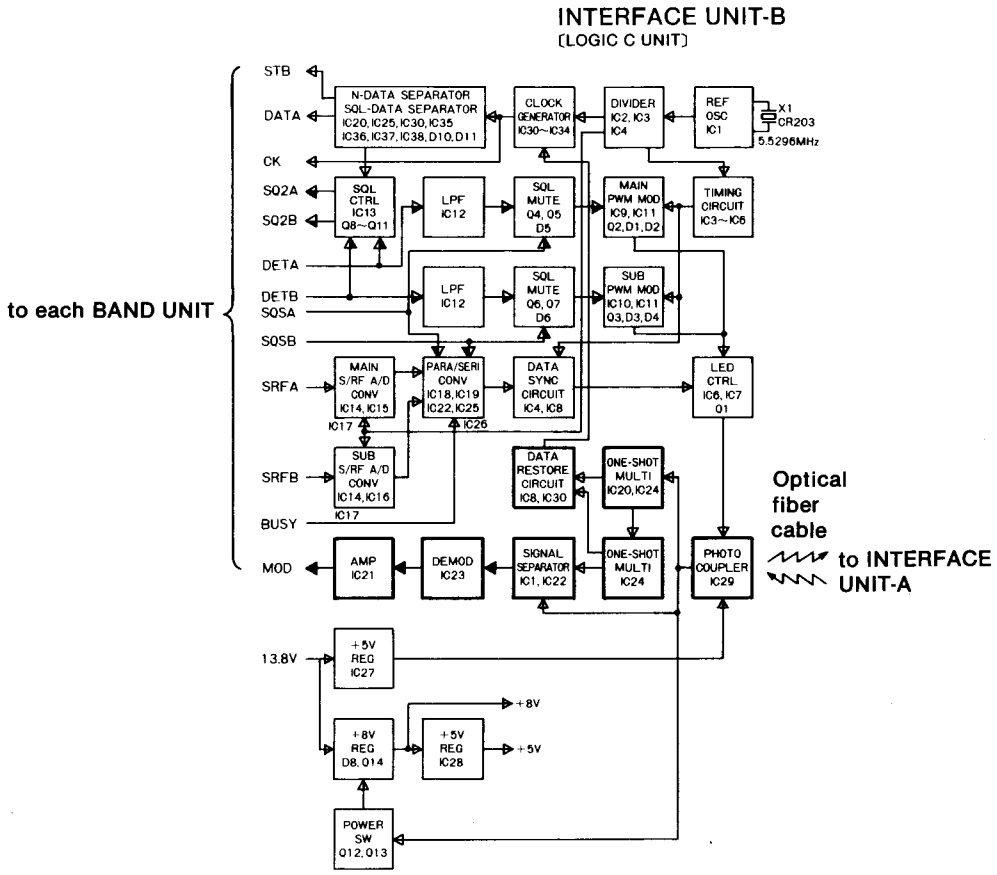

Fig. 34

4-4-7 SERIAL DATA SYNC. CLOCK GENERATOR

(Shown as "CLOCK GENERATOR" in Fig. 35.)

Generates a clock signal (CK) of 30 pulses which is synchronized with CPU serial output data.

4-4-8 N-DATA SEPARATOR AND SQUELCH VOLUME DATA SEPARATOR

(Shown as "N-DATA SEPARATOR" and "SQL DATA SEPARATOR" in Fig. 35.)

Takes and separates STB, DATA, CK and squelch control signals from the CPU serial output DATA BIT. STB, DATA and CK signals are applied to each BAND UNIT. The squelch control signal is applied to the squelch volume control circuit.

4-4-9 REFERENCE OSCILLATOR CIRCUIT

(Shown as "REF OSC" in Fig. 35.)

Oscillates at 5.5296MHz. The signal is used for reference at INTERFACE UNIT-B.

4-4-10 DIVIDER

(Shown as "DIVIDE" in Fig. 35.)

Divides the 5.5296MHz signal and applies the resulting signals to each circuit.

4-4-11 TIMING CIRCUIT

(Shown as "TIMING CIRCUIT" in Fig. 35.)

Creates a timing signal which is applied to the PWM modulator and the DATA SYNC circuits.

4-4-12 SQUELCH VOLUME CONTROL CIRCUIT

(Shown as "SQL CTRL" in Fig. 35.)

Based on data from the squelch column data separator, this circuit outputs squelch volume control signals (SQA and SQB) to each BAND UNIT.

4-4-13 LOW-PASS FILTER

(Shown as "LPF" in Fig. 35.)

Demodulated FM signals (DETA and DETB) from each BAND UNIT pass through the low-pass filter where more than 3kHz is attenuated.

4-4-14 MAIN BAND PWM MODULATOR AND SUB BAND PWM MODULATOR

(Shown as "MAIN PWM MOD" and "SUB PWM MOD" in Fig. 35.)

PWM modulates the AF signals that have passed through the low-pass filter.

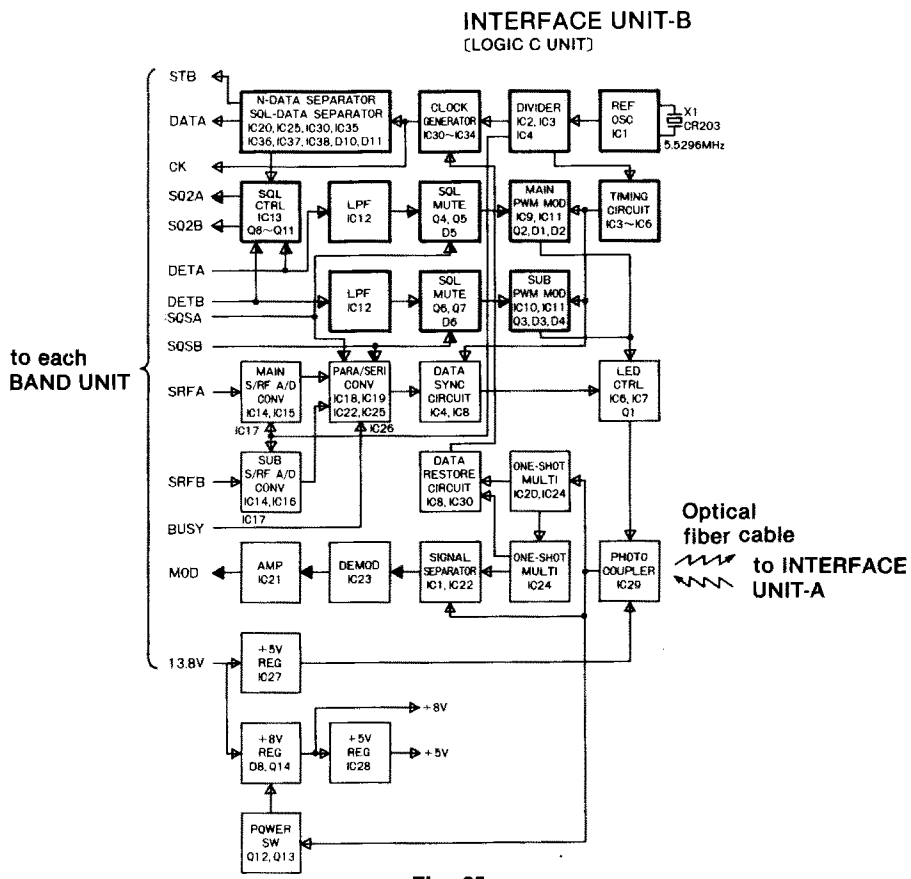

Fig. 35

4-4-15 MAIN BAND S/RF A/D CONVERTER AND SUB BAND S/RF A/D CONVERTER

(Shown as "MAIN S/RF A/D CONV" and "SUB R/F A/D CONV" in Fig. 36.)

Converts S/RF meter signals (SRFA and SRFB) from each BAND UNIT to 4-bit binary data (meter data: SRFA, SRFB).

4-4-16 PARALLEL/SERIAL DATA CONVERTER

(Shown as "PARALLEL/SERIAL CONVERTER" in Fig. 36.)

Creates CPU serial input data from SQSA, SQSB and meter data and outputs it repeatedly.

4-4-17 DATA SYNCHRONOUS CIRCUIT

(Shown as "DATA SYNC CIRCUIT" in Fig. 36.)

Time divides serial data of address 0H CPU input with a timing signal from the TIMING CIRCUIT. Outputs serial data as a pulse signal.

4-4-18 LED CONTROL CIRCUIT

(Shown as "LED CTRL" in Fig. 36.)

Mixes signals from the DATA SYNC circuit with PWM modulated signals from each PWM modulator. The resulting signals are applied to the photocoupler.

4-4-19 POWER SWITCH CIRCUIT AND +8V REGULATOR

(Shown as "POWER SW" and "+8V REG" in Fig. 36.)

When INTERFACE UNIT-A is turned ON and optical signals are applied to the photocoupler of INTERFACE UNIT-B via the optical fiber cable, the power switch circuit detects the pulse signal from the photocoupler. The +8V regulator consisting of Q14 and D8 is then activated.

4-4-20 +5V REGULATOR CIRCUIT

(Shown as "+5V REG" in Fig. 36.)

Creates +5V from +8V.

4-4-21 FOR PHOTOCOUPLER REGULATOR

(Shown as "+5V REG" in Fig. 36.)

Creates +5V from +13.8V. This circuit functions when the POWER switch is ON or OFF.

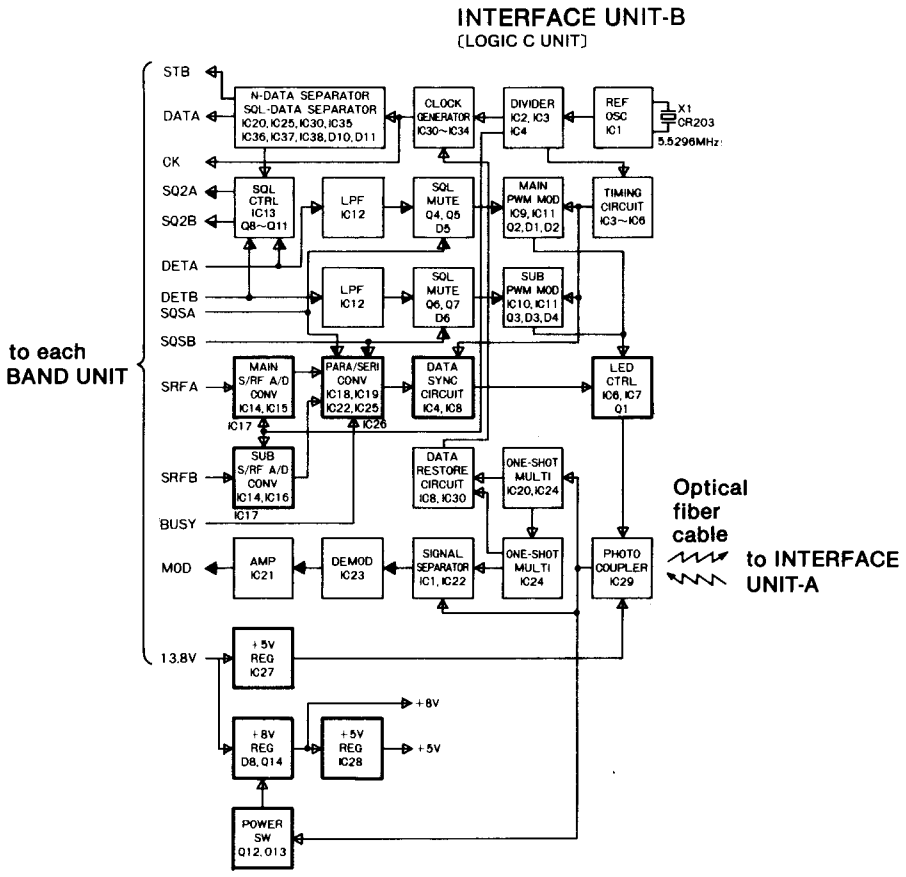

Fig. 36

SECTION 5 MECHANICAL PARTS AND DISASSEMBLY

5-1 REMOTE CONTROLLER DISASSEMBLY

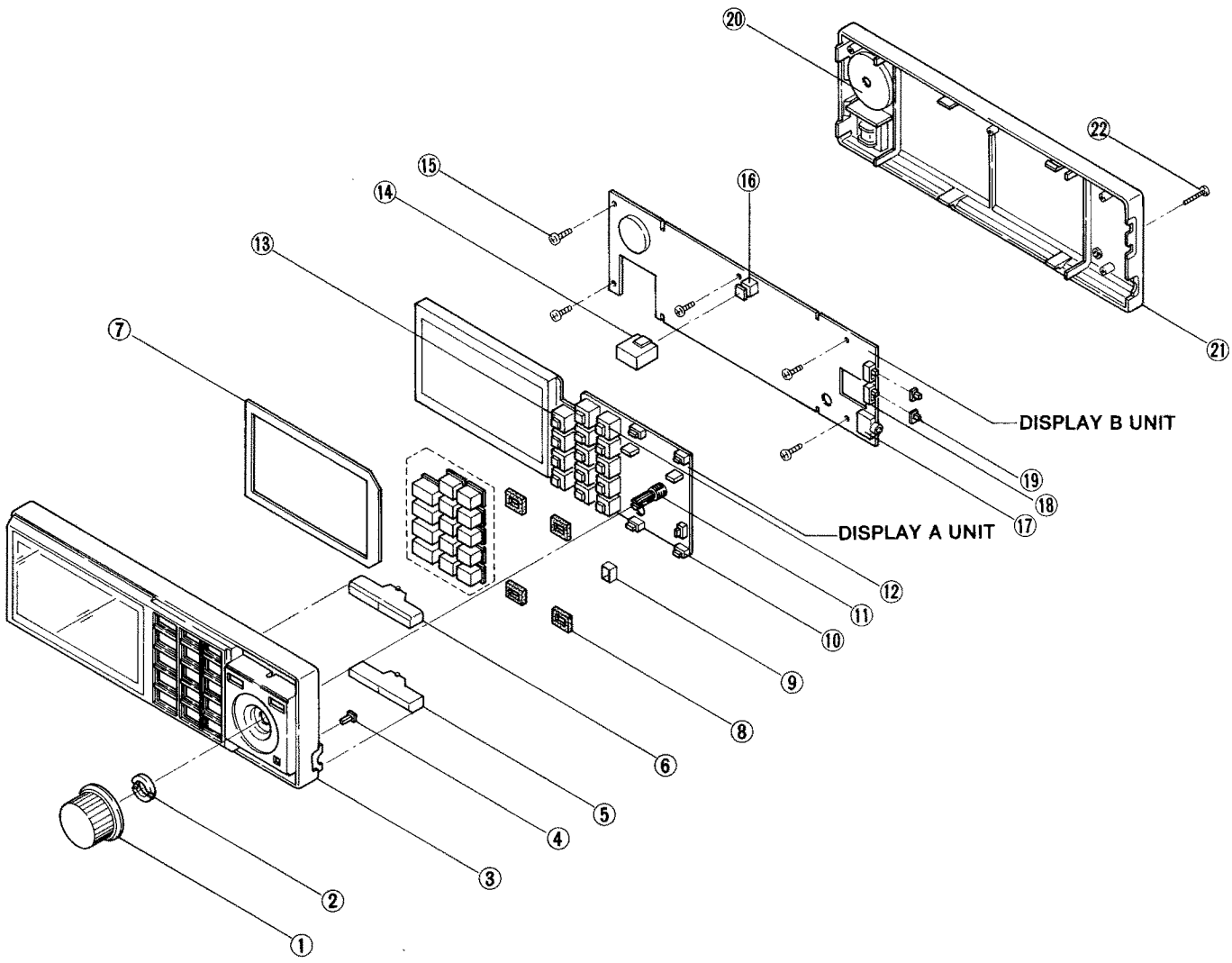

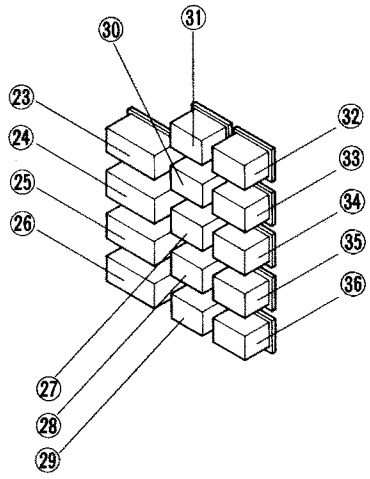

NUMBER IN DIAGRAM	DESCRIPTION	ORDERING NUMBER	QTY.
①	Knob (TUNING CONTROL) N-117	8610003380	1
②	VR nut (A)	8830000040	1
③	Remote controller case (top)-1	8010006120	1
④	Button (S. MUTE) K-95	8610003560	1
⑤	Button (VOL) K-91 (A)	8610003400	1
⑥	Button (SQL) K-91	8610003390	1
⑦	LCD rubber-1	8930010650	1
⑧	Switch sponge	8930010660	4
⑨	Switch rubber	8930010670	1
⑩	Switch (SKHLAB064A)	2260000390	5
⑪	Switch (SRBM1L011A)	2260000400	1
⑫	Switch (SKHJFH004A)	2260000640	10
⑬	Switch (SKHJFC014A)	2260000650	4
⑭	Button (POWER) K-94	8610003550	1
⑮	PH B0 2×4*	8810000980	5
⑯	Switch (POWER) (SPPH25)	2230000620	1
⑰	Connector (REMOTE) (HSJ1102-01-540)	6450000130	1
⑱	Switch (SSSS21148A)	2220000050	2
⑲	Knob K-96-1	8610003571	2
⑳	Piezo buzzer (EFB-R49C02Y)	2520000030	1
㉑	Remote controller case (bottom)	8010006130	1
㉒	PH B0 2×10 ZK*	8810004370	1
㉓	Button (VFO) K-92	8610003410	1
㉔	Button (MR) K-92 (A)	8610003420	1
㉕	Button (SUB) K-92 (B)	8610003430	1
㉖	Button (M/S) K-92 (C)	8610003440	1
㉗	Button (MW) K-93 (D)	8610003490	1
㉘	Button (TS) K-93 (F)	8610003510	1
㉙	Button (T/DS) K-93 (H)	8610003530	1
㉚	Button (CALL) K-93 (B)	8610003470	1
㉛	Button (HI/LO) K-93	8610003450	1
㉜	Button (DUP) K-93 (A)	8610003460	1
㉝	Button (TONE) K-93 (C)	8610003480	1
㉞	Button (CHECK) K-93 (E)	8610003500	1
㉟	Button (MHz) K-93 (G)	8610003520	1
㊱	Button (SET) K-93 (I)	8610003540	1

*PH B0: Pan head self-tapping screw

5-2 INTERFACE UNIT-A DISASSEMBLY

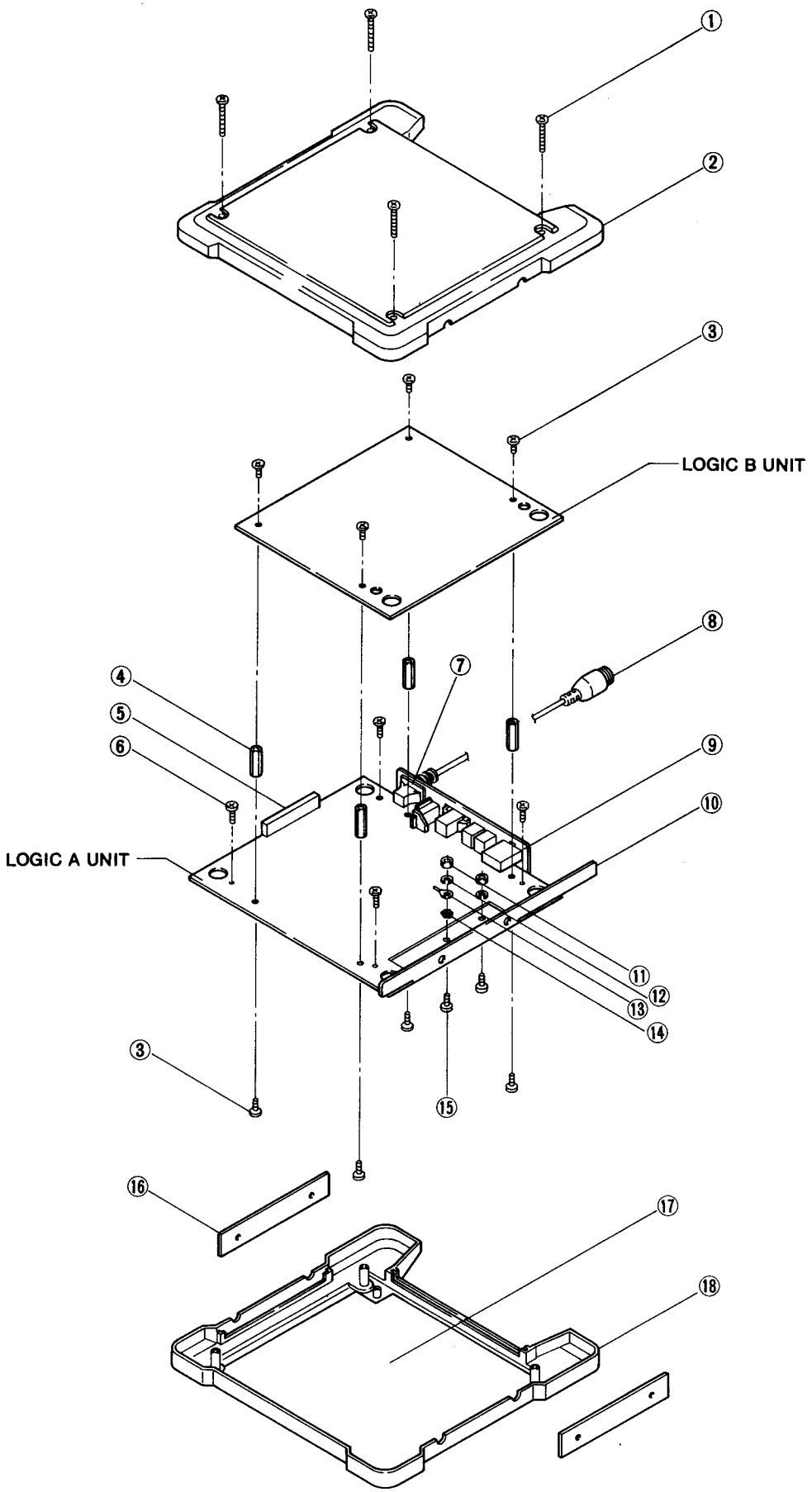

NUMBER IN DIAGRAM	DESCRIPTION	ORDERING NUMBER	QTY.
①	PH A0 4×20 ZK*	8810001160	4
②	Top case (A)	8010006140	1
③	PH M2.6×4*	8810000130	8
④	Thread spacer (W)	8930010800	4
⑤	Sponge (AY)	8930010680	1
⑥	PH B0 2×4*	8810000980	4
⑦	Caulking plate	8930010690	1
⑧	Mic connector cable OPC-173	8900001710	1
⑨	585 panel	8210002460	1
⑩	AF amp heatsink-1	8410001090	1
⑪	Nut	8830000180	2
⑫	Spring washer M2.6	8850000410	2
⑬	Grounding lug B-2	8860000100	1
⑭	Star washer M2.6	8850000550	1
⑮	FH M2.6×10*	8810002140	2
⑯	Side panel	8010006060	2
⑰	585 shielding plate	8310010550	2
⑱	Bottom case (B)	8010006150	1

*** Screw type** Screw: M2.6×4, etc. Self-tapping screw: A0 4×20, B0 2.6×4, etc.
Screw head style PH: Pan head FH: Flat head

5-3 INTERFACE UNIT-B DISASSEMBLY

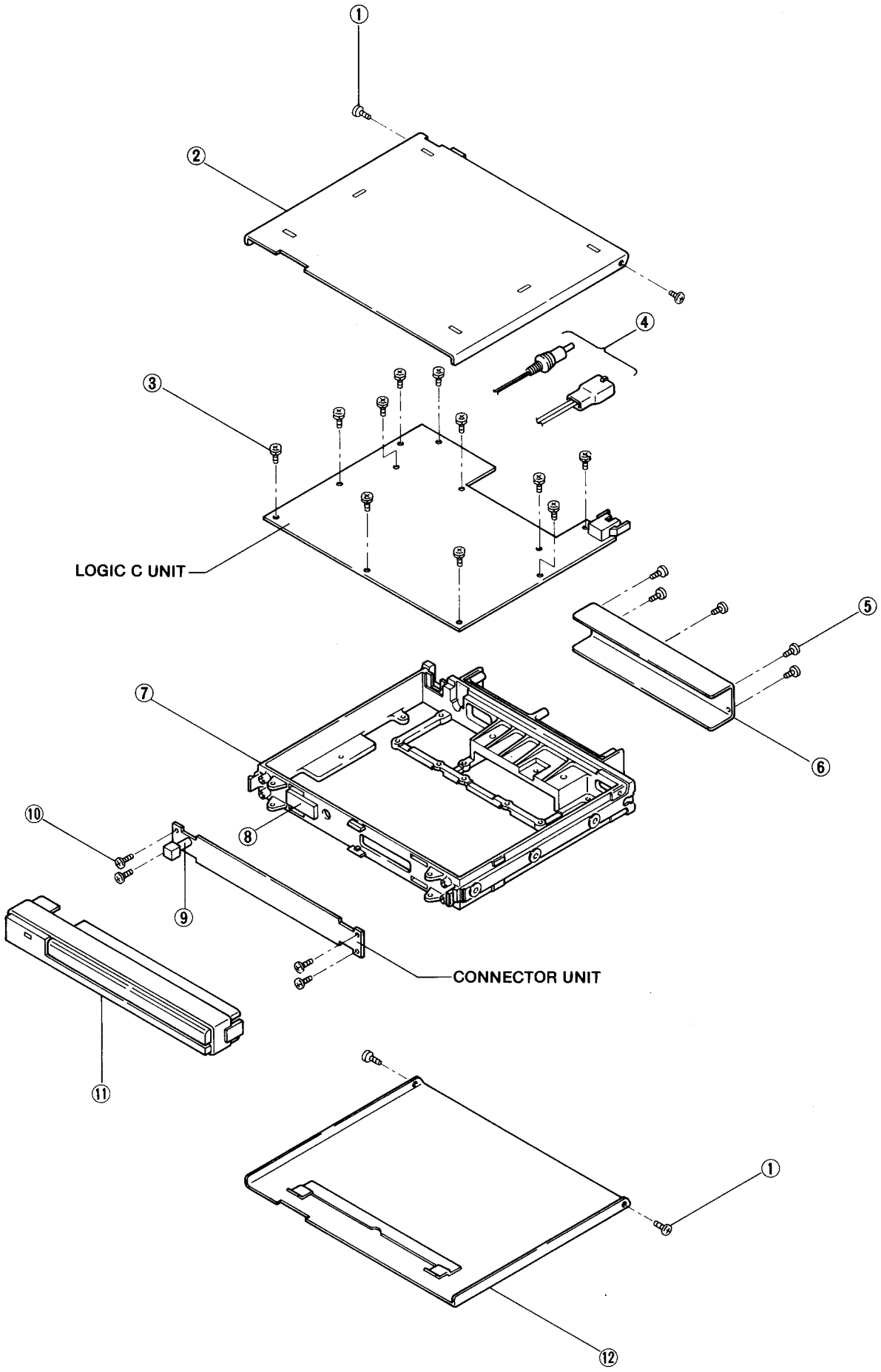

NUMBER IN DIAGRAM	DESCRIPTION	ORDERING NUMBER	QTY.
①	BH M2.6×4 BS*	8810002600	4
②	Top cover (C)-1	8110001850	1
③	Set screw (A) 3×6*	8810003160	11
④	DC power cable OPC-182	8900001860	1
⑤	PH B1 2.6×5 ZK*	8810004380	5
⑥	586 panel	8210002470	1
⑦	586 chassis	8010006030	1
⑧	Sponge (AO)	8930008060	1
⑨	Insulating pipe (A)	8930010950	1
⑩	Set screw (A) 2.6×5*	8810003960	4
⑪	Front panel (A) (IC-900E) (B) (IC-900A)	8210002540 8210002550	1 1
⑫	Bottom cover (B)	8110001840	1

∗ **Screw type** Screw: M2.6×4 Self-tapping screw: B1 2.6×5
Screw head style PH: Pan head BH: Button head
Set screw (A) Pan head screw with spring washer

SECTION 6 MAINTENANCE AND ADJUSTMENT

6-1 PREPARATION BEFORE SERVICING

1. Detach the power cord and turn OFF the POWER SWITCH before performing any work on the transceiver.

2. DO NOT short circuit components while making adjustments.

3. Use an insulated tuning tool for all adjustments.

4. DO NOT force any of the variable components. Tune them slowly and smoothly.

5. Follow the instructions exactly. If an indicated result is not obtained, repeat the instruction until the correct result is obtained.

6. Check the condition of connectors, solder joints and screws when adjustments are complete. Make sure components DO NOT touch each other.

7. Confirm defective operation of the transceiver first when checking an out-of-service unit. Verify that external sources DO NOT cause the problem.

8. Use the correct tools and test equipment.

9. Remove each INTERFACE UNIT case as shown in SECTION 5.

10. For transmission problems, attach a dummy load to the ANTENNA CONNECTOR. For reception problems, attach an antenna or signal generator to the ANTENNA CONNECTOR. DO NOT transmit into the signal generator.

11. Recheck for the suspected malfunction with the POWER SWITCH ON.

12. Check the defective circuit. Measure the DC voltages of the collector, base and emitter of each transistor.

13. There are different versions of this transceiver. Adjustment procedures and results may differ for each version. Be sure to follow the correct procedure for the transceiver you adjust.

6-2 IC-900A/E SYSTEM ADJUSTMENT

TEST INSTRUMENTS REQUIRED	MEASUREMENT CONNECTION LOCATION
(1) AC POWER SUPPLY • Output voltage : 13.8V DC • Current capacity : 20A or more (2) AF GENERATOR (AG) • Frequency range : 200~3000Hz • Output level : 0~100mV (3) AC MILLI-VOLTMETER • Measuring range : 2~500mV	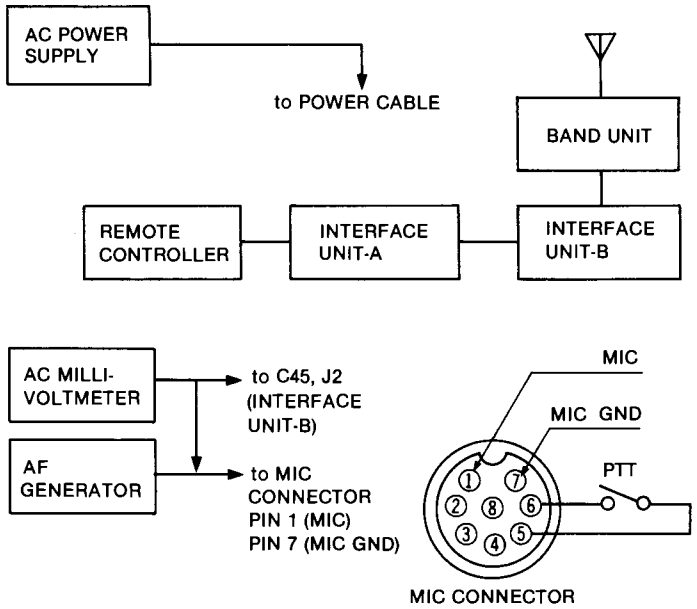

ADJUSTMENT		ADJUSTMENT CONDITIONS	MEASUREMENT		VALUE	ADJUSTMENT POINT	
			UNIT	LOCATION		UNIT	ADJUST
MIC GAIN	1	• Apply an AF signal to the MIC CONNECTOR pin 1 (pin 7 is ground). Level: 20mV/1kHz (IC-900A U.S.A. 65mV/1kHz) • R62 (LOGIC A): Max. CCW* • Transmitting	LOGIC C (INTER-FACE-B UNIT)	Connect the AC milli-voltmeter to C45 (minus side).	200mV	LOGIC A	R13
	2	• Apply an AF signal to the MIC CONNECTOR. Level: 2mV/1kHz (IC-900A U.S.A. 6.5mV/1kHz)			140mV		R62
		NOTE: Repeat above adjustment several times.					
CTCSS TONE	1	• Apply no AF signal to the MIC CONNECTOR. • TONE SWITCH: ON • TONE FREQUENCY: 88.5Hz • Transmitting	LOGIC C (INTER-FACE-B UNIT)	Connect the AC milli-voltmeter to C45 (minus side).	24mV	LOGIC A	R99
MODULA-TION OUTPUT LEVEL	1	• Apply an AF signal to the MIC CONNECTOR pin 1 (pin 7 is ground). Level: 20mV/1kHz (IC-900A U.S.A. 65mV/1kHz) • Transmitting	CONNEC-TOR (INTER-FACE-B UNIT)	Connect the AC milli-voltmeter to J2 pin 13.	125mV	LOGIC C	R105
	2	• Apply an AF signal to the MIC CONNECTOR. Level: 2mV/1kHz (IC-900A U.S.A. 6.5mV/1kHz)			88mV (±1mV)		Verify

*CCW: Counterclockwise

LOGIC A UNIT

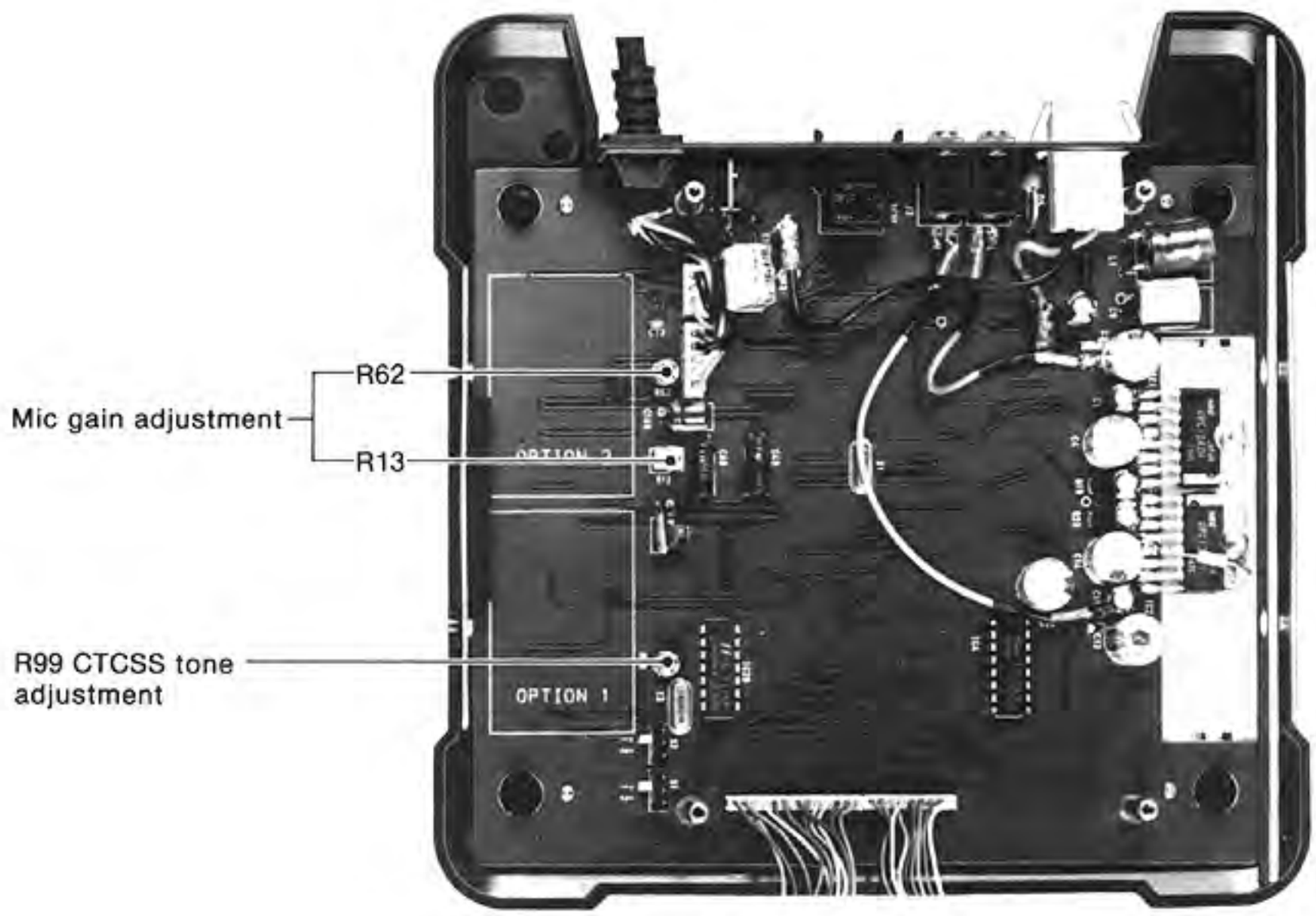

LOGIC C AND CONNECTOR UNITS

COMPONENT SIDE

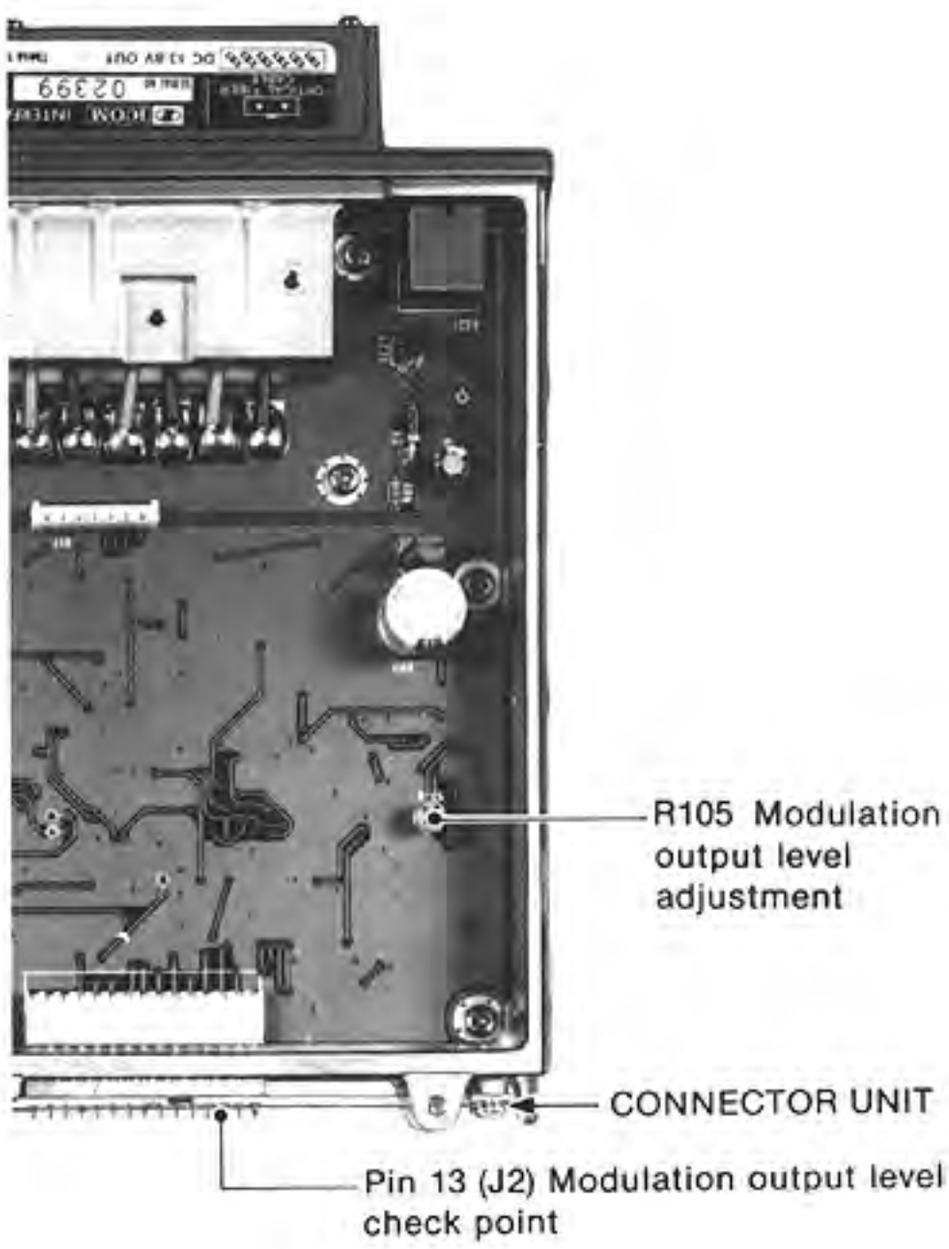

FOIL SIDE

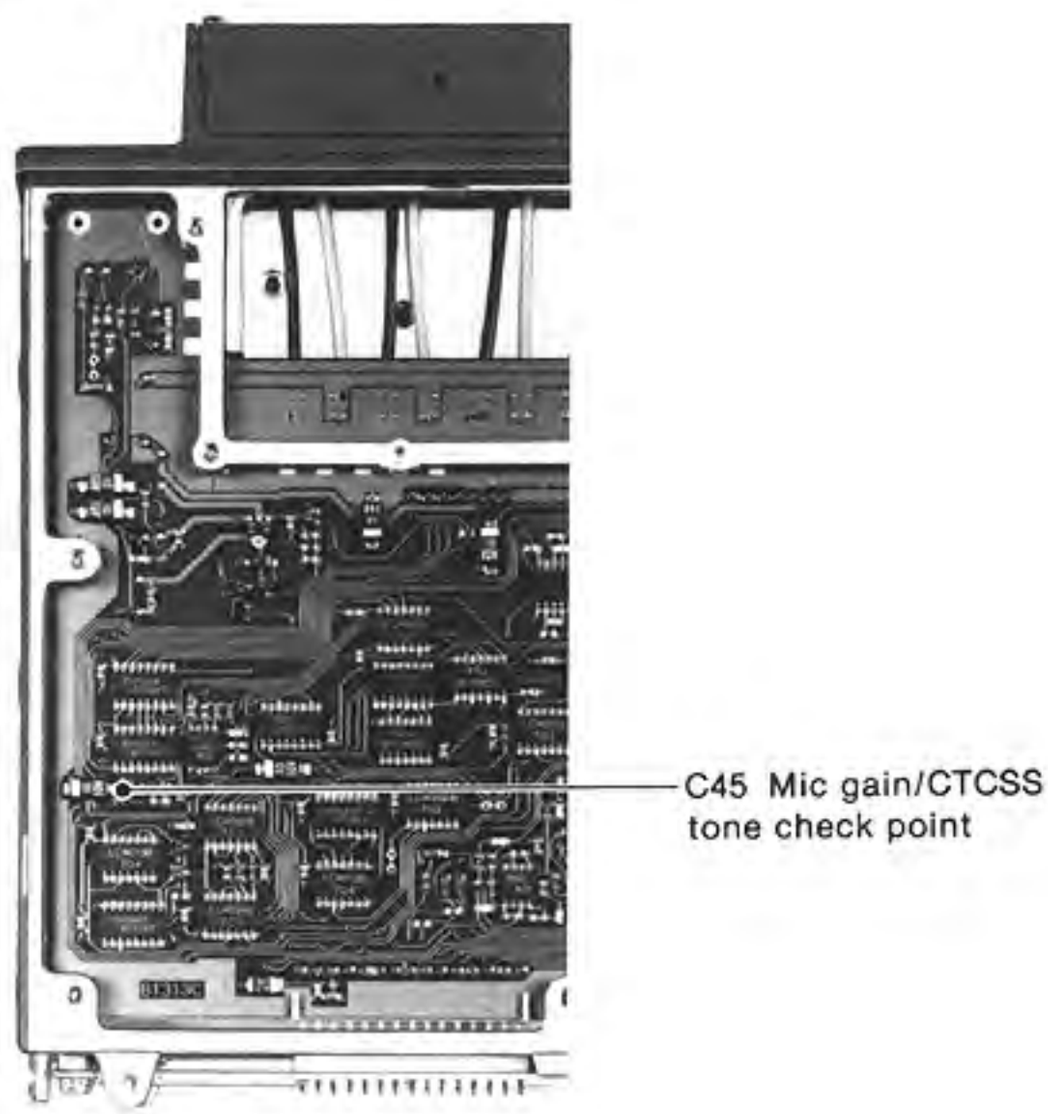

SECTION 7 BOARD LAYOUTS

7-1 INTERCONNECTIONS

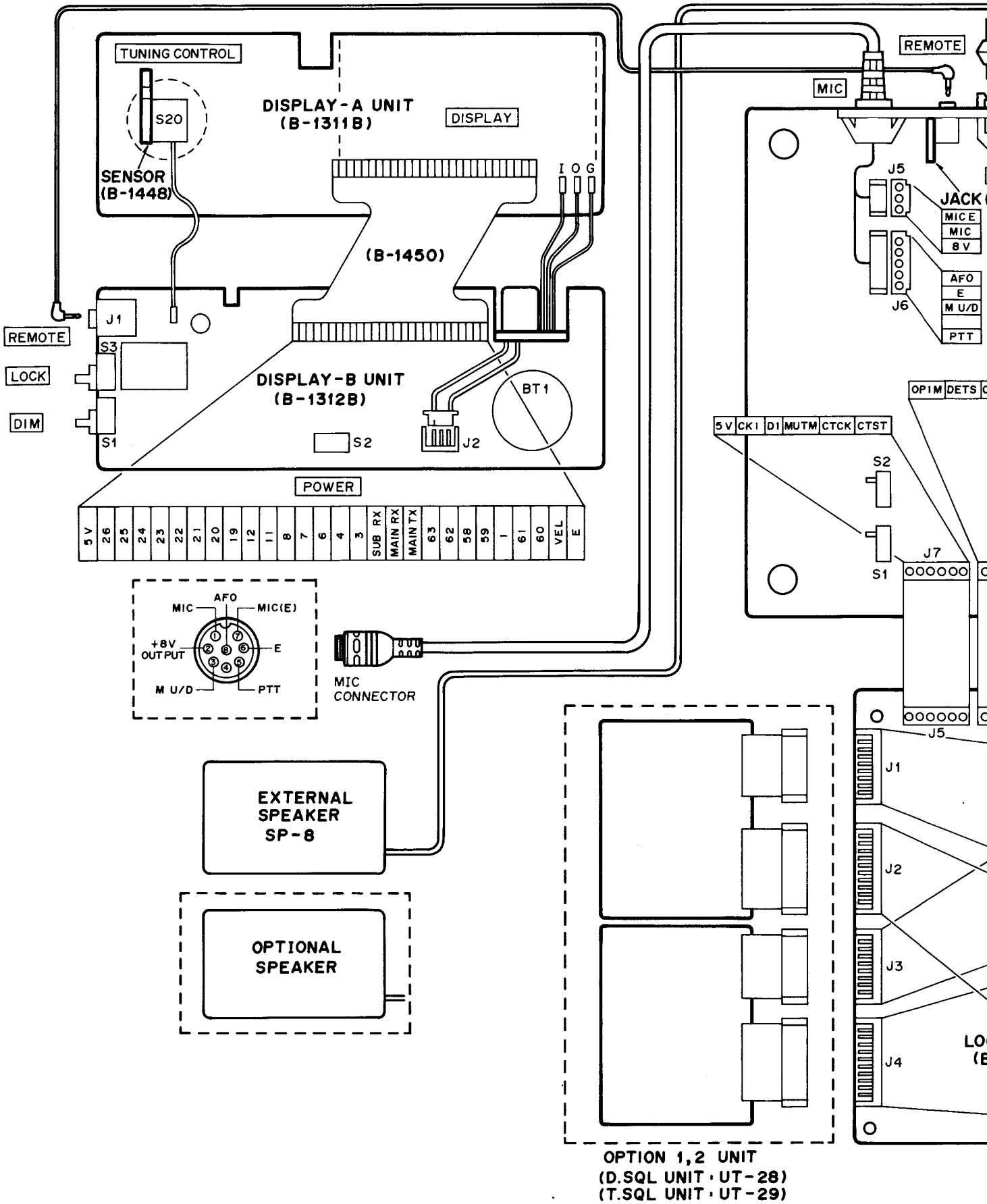

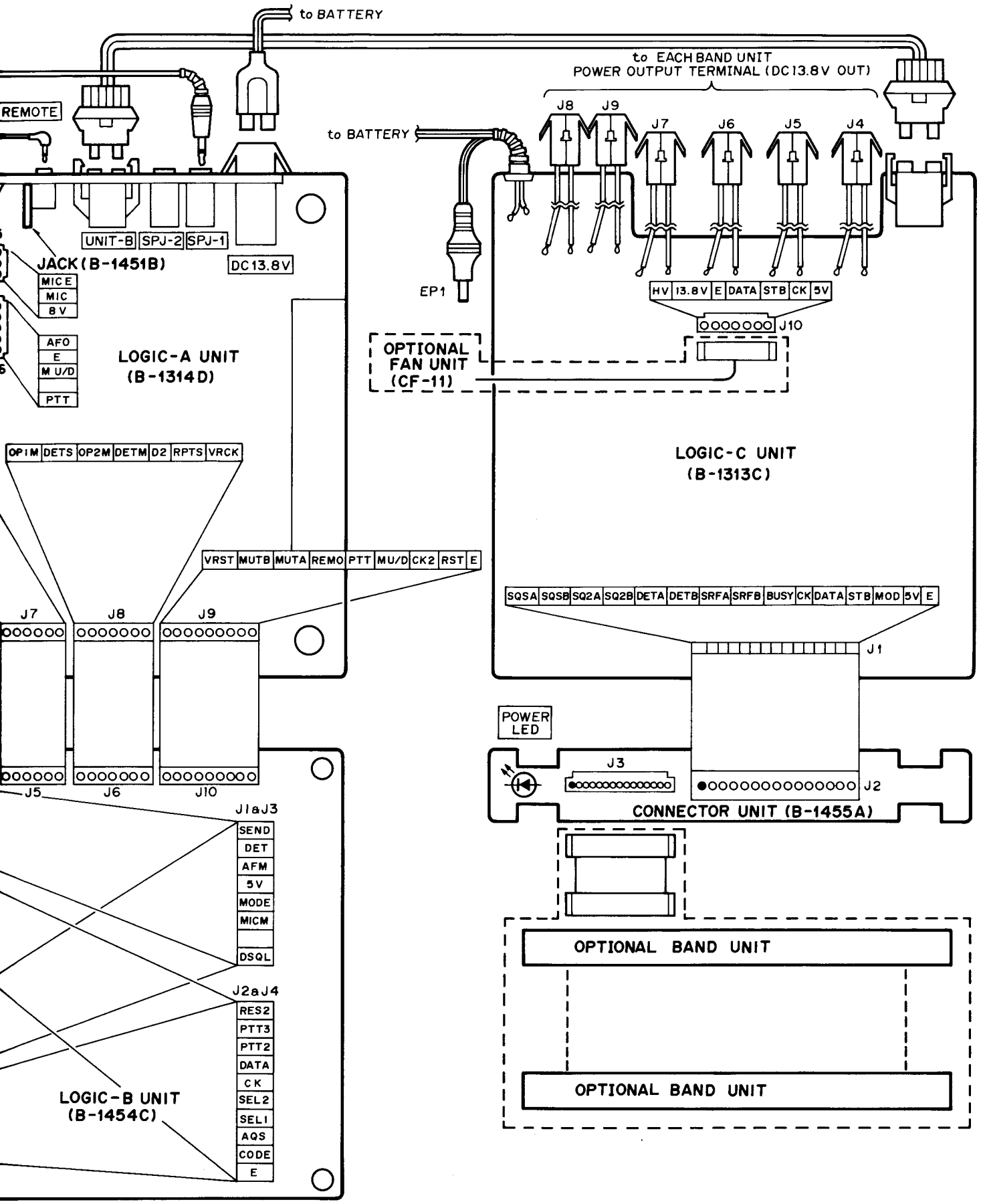
to BATTERY
to EACH BAND UNIT
POWER OUTPUT TERMINAL (DC13.8V OUT)
REMOTE
to BATTERY
J8
J9
J7
J6
J5
J4
UNIT-B
SPJ-2
SPJ-1
DC13.8V
JACK (B-1451B)
MIC E
MIC
8V
AFO
E
M U/D
PTT
EP1
HV
13.8V
E
DATA
STB
CK
5V
J10
OPTIONAL FAN UNIT (CF-11)
LOGIC-A UNIT (B-1314D)
LOGIC-C UNIT (B-1313C)
OP1M
DETS
OP2M
DETM
D2
RPTS
VRCK
VRST
MUTB
MUTA
REMO
PTT
MU/D
CK2
RST
E
SQSA
SQSB
SQ2A
SQ2B
DETA
DETB
SRFA
SRFB
BUSY
CK
DATA
STB
MOD
5V
E
J1
J7
J8
J9
J5
J6
J10
POWER LED
J3
J2
CONNECTOR UNIT (B-1455A)
J1aJ3
SEND
DET
AFM
5V
MODE
MICM
DSQL
J2aJ4
RES2
PTT3
PTT2
DATA
CK
SEL2
SEL1
AQS
CODE
E
LOGIC-B UNIT (B-1454C)
OPTIONAL BAND UNIT
OPTIONAL BAND UNIT

7-2 REMOTE CONTROLLER

• DISPLAY A UNIT

COMPONENT SIDE

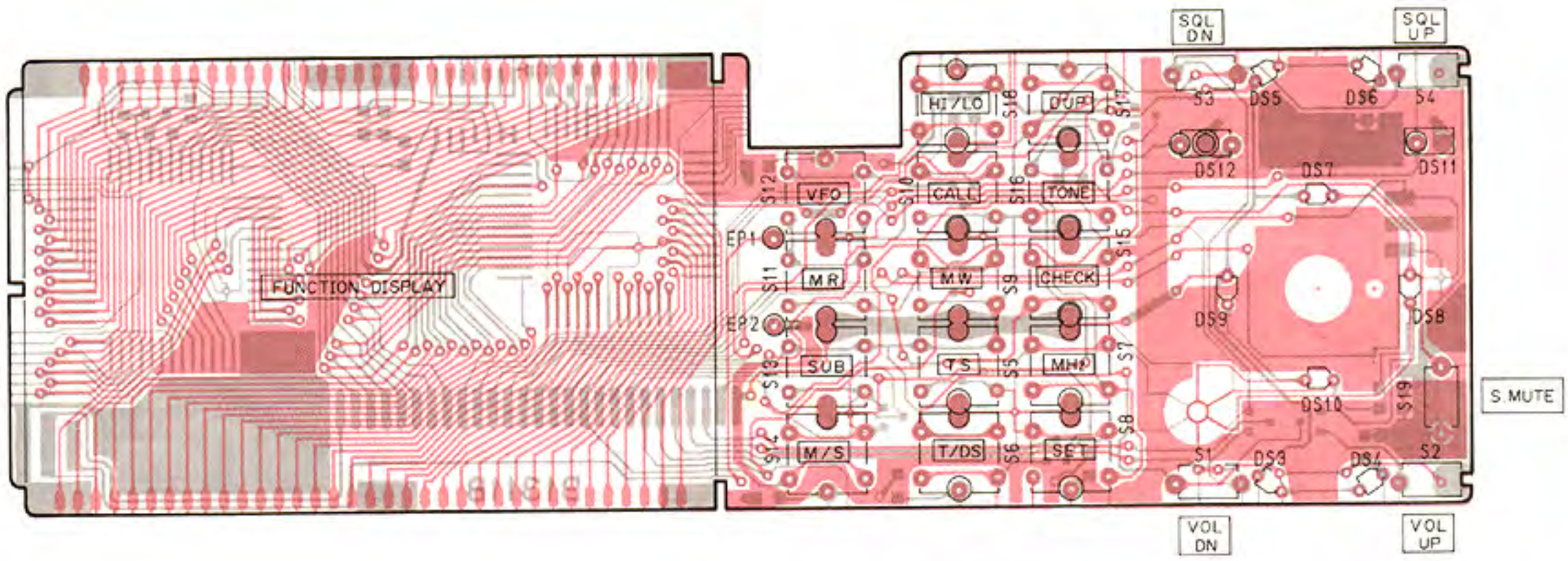

FOIL SIDE

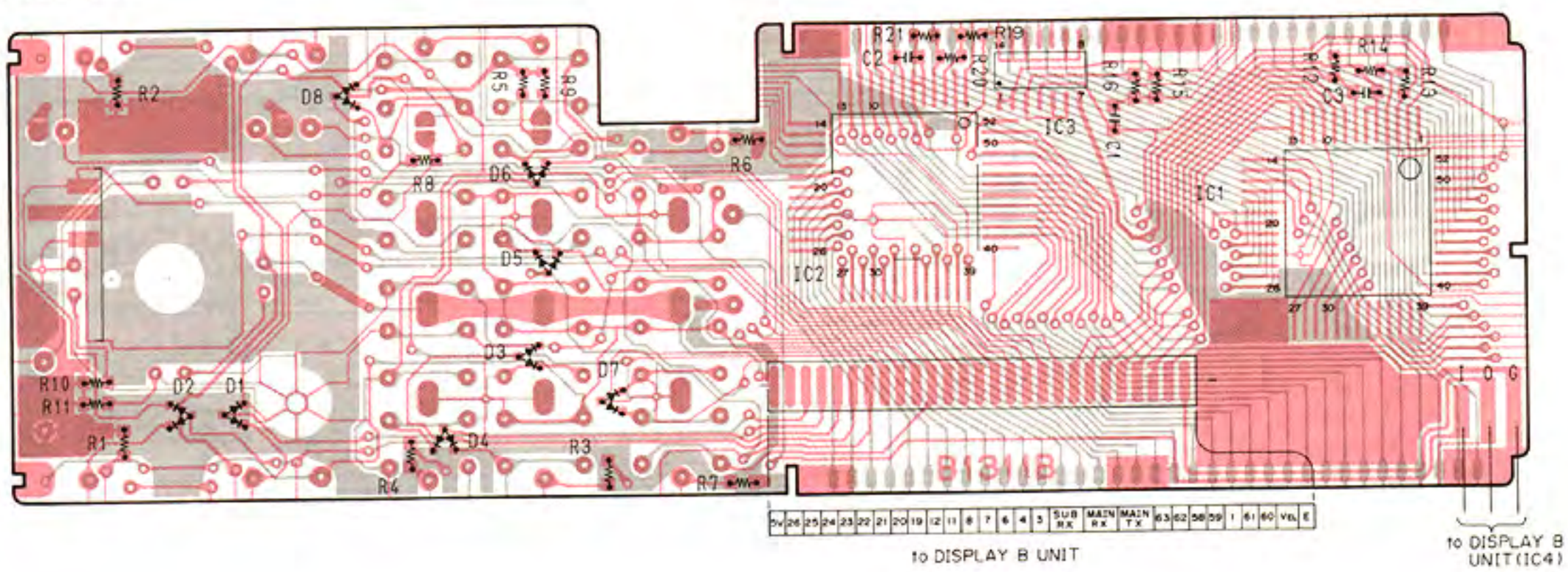

1SS181
D1, D2, D3, D4
D5, D6, D7, D8

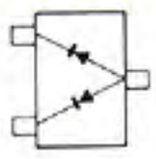

Symbol : A3

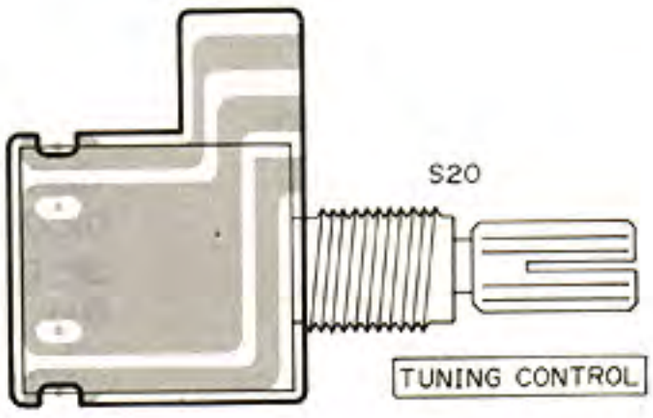

• DISPLAY B UNIT

COMPONENT SIDE

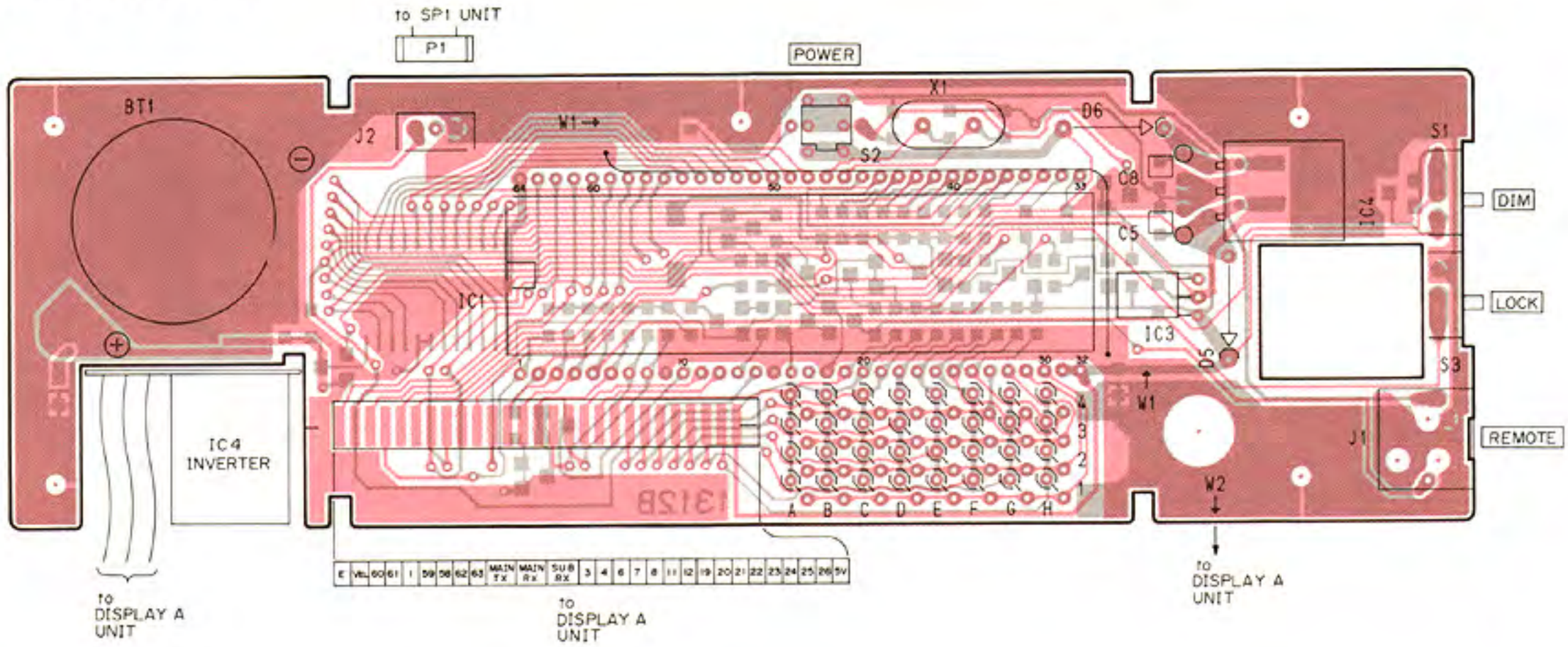

FOIL SIDE

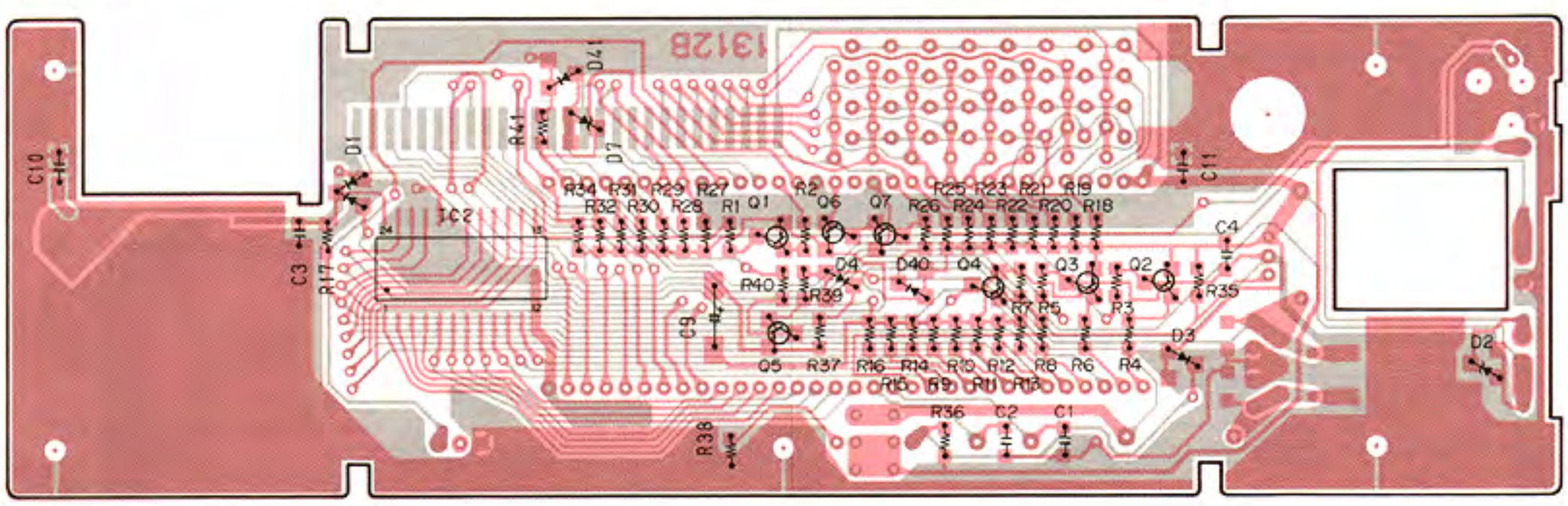

2SA1162 Y
Q1, Q2, Q3
Q5

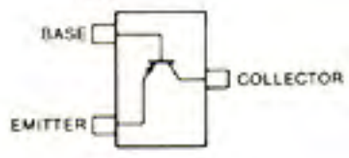

Symbol : SY

2SC2712 Y
Q4

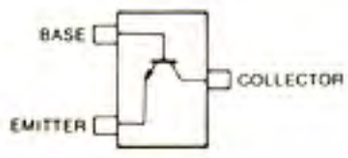

Symbol : LY

RN2404
Q6

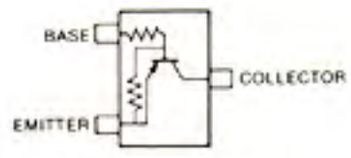

Symbol : YD

RN1409
Q7

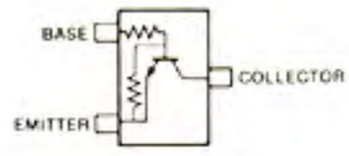

Symbol : XJ

1SS184
D1

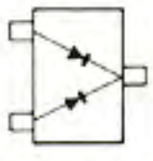

Symbol : B3

RD2.4MB
D2

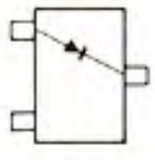

Symbol : 241

1SS193
D3, D4, D40

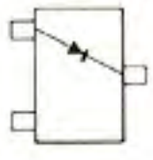

Symbol : F3

RD5.1MB2
D7

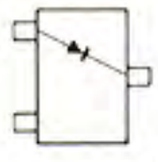

Symbol: 512

1SS190
D41

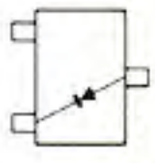

Symbol : E3

7-3 INTERFACE UNIT-A

• LOGIC B UNIT

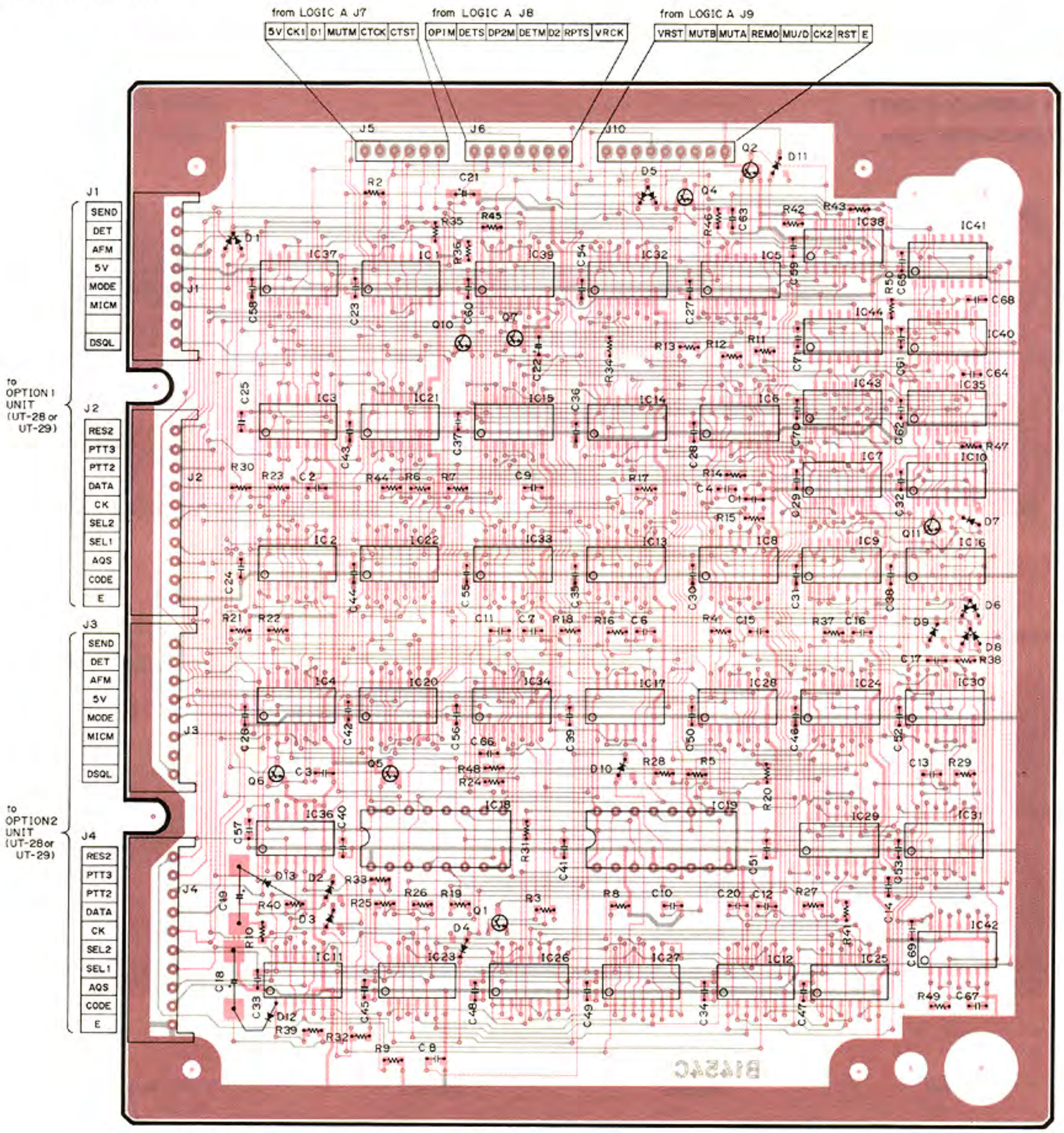

2SC2712 Y
Q1, Q2, Q5

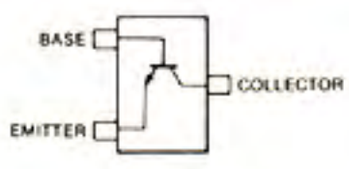

Symbol : LY

RN2404
Q4

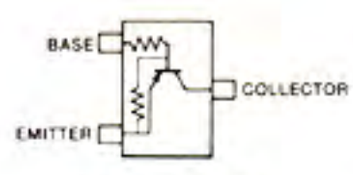

Symbol : YD

RN1404
Q6, Q7, Q10
Q11

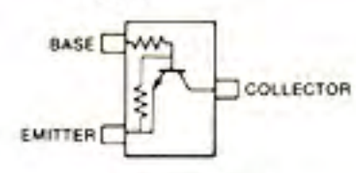

Symbol : XD

1SS184
D1, D8

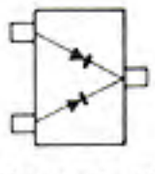

Symbol : B3

1SS193
D2, D3, D4
D7, D9, D10,
D11

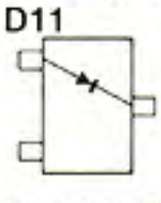

Symbol : F3

1SS181
D5, D6

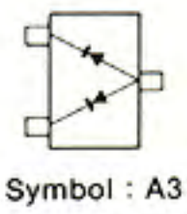

Symbol : A3

• LOGIC A UNIT

COMPONENT SIDE

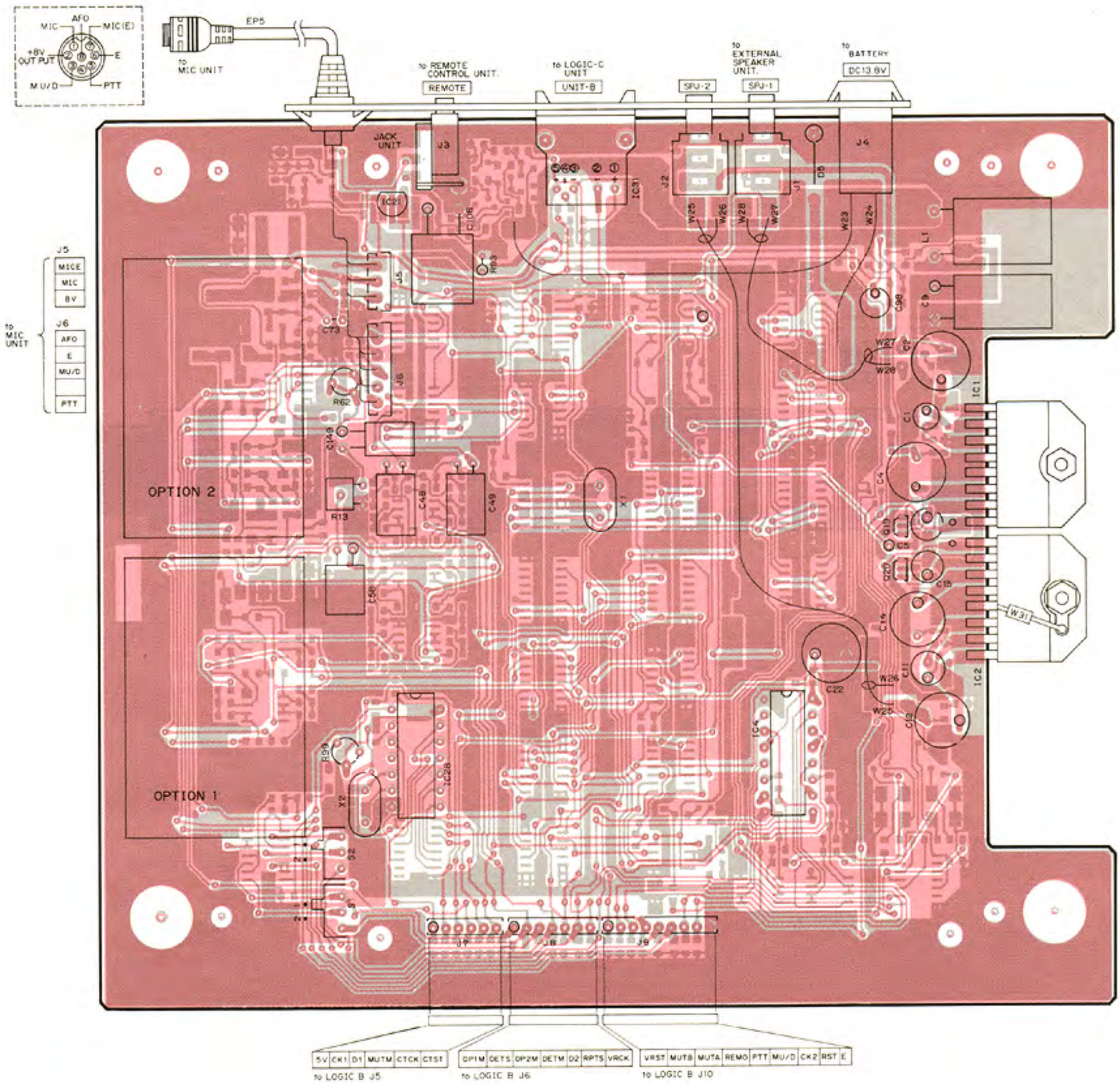

2SJ106 GR
Q1, Q2, Q3
Q4, Q13

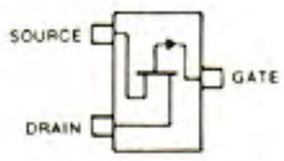

Symbol : VG

2SA1162 Y
Q5, Q15

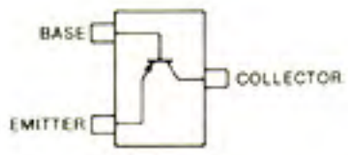

Symbol : SY

2SC2712 Y
Q6, Q8, Q12
Q16, Q17

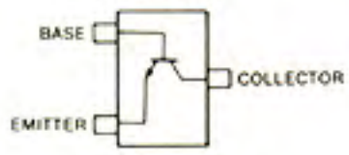

Symbol : LY

2SB798 DK
Q7, Q18

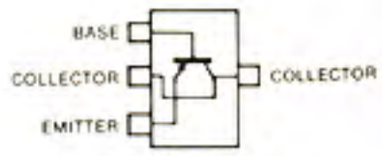

Symbol : DK

RN1402
Q9

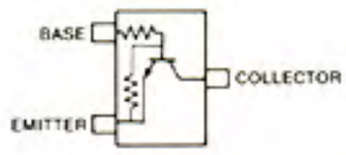

Symbol : XB

BASE
EMITTER
S

FOIL SIDE

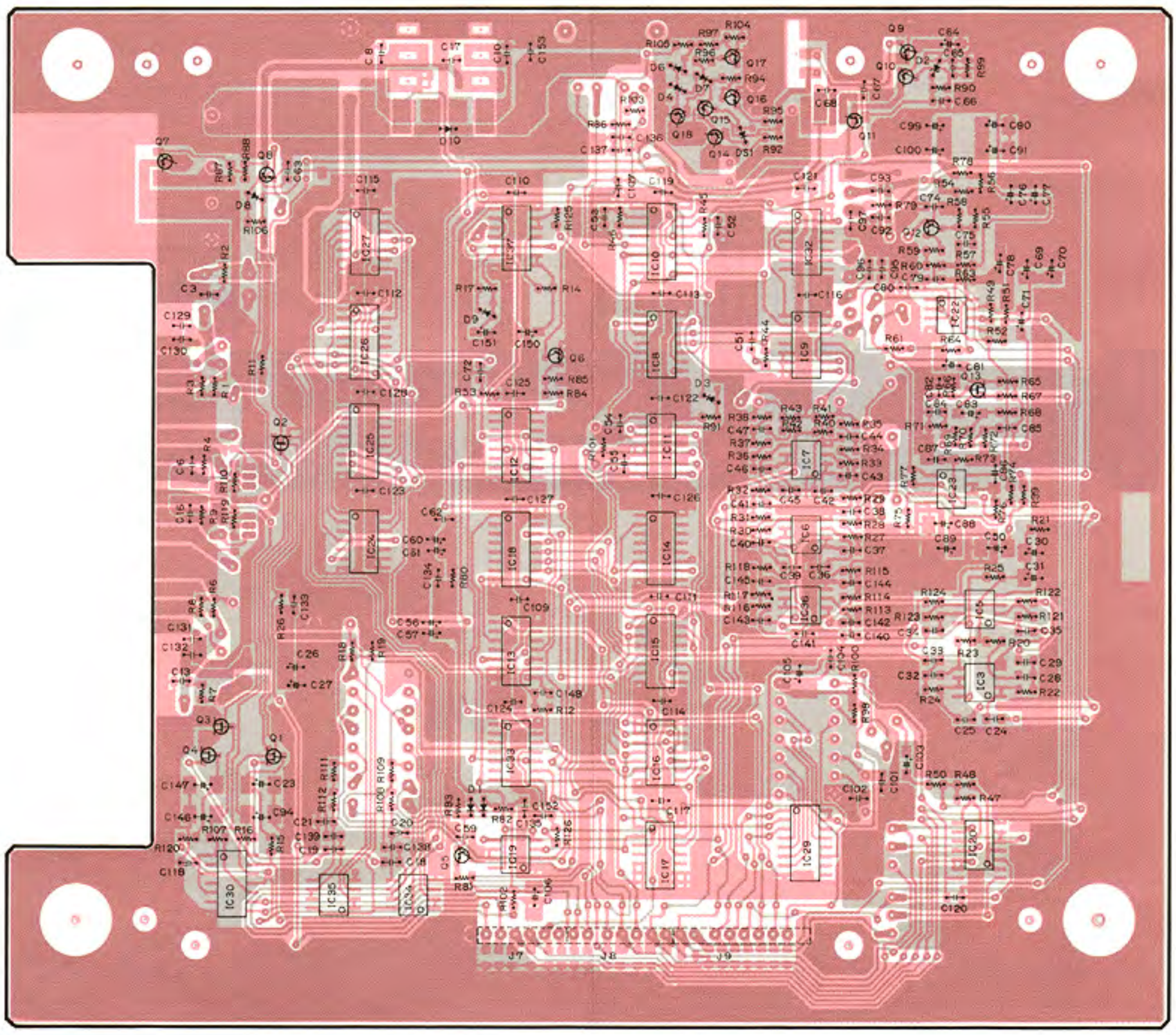

RN2404
Q10

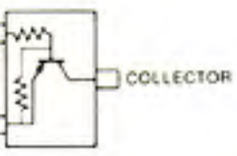

Symbol : YD

2SD999 CK
Q11, Q14

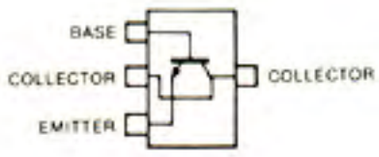

Symbol : CK

2SJ107 BL
Q19, Q20

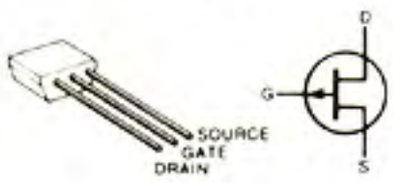

MA159
D1

Symbol : M1A

RD9.1M B2
D2

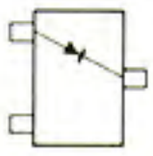

Symbol: 912

1SS193
D3, D4, D6
D7, D8, D9

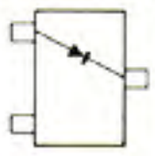

Symbol : F3

7-4 INTERFACE UNIT-B

• CONNECTOR UNIT

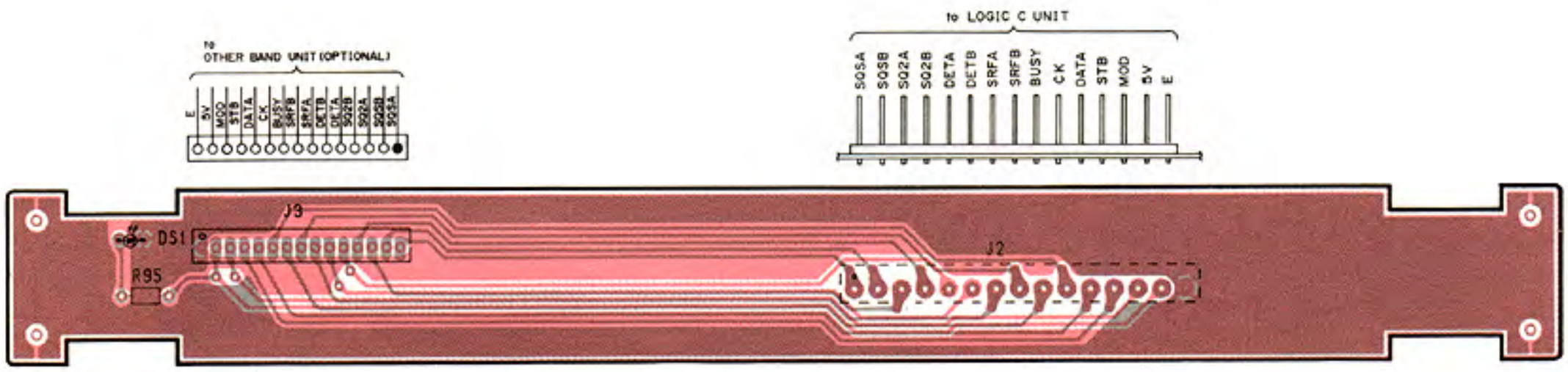

• LOGIC C UNIT

COMPONENT SIDE

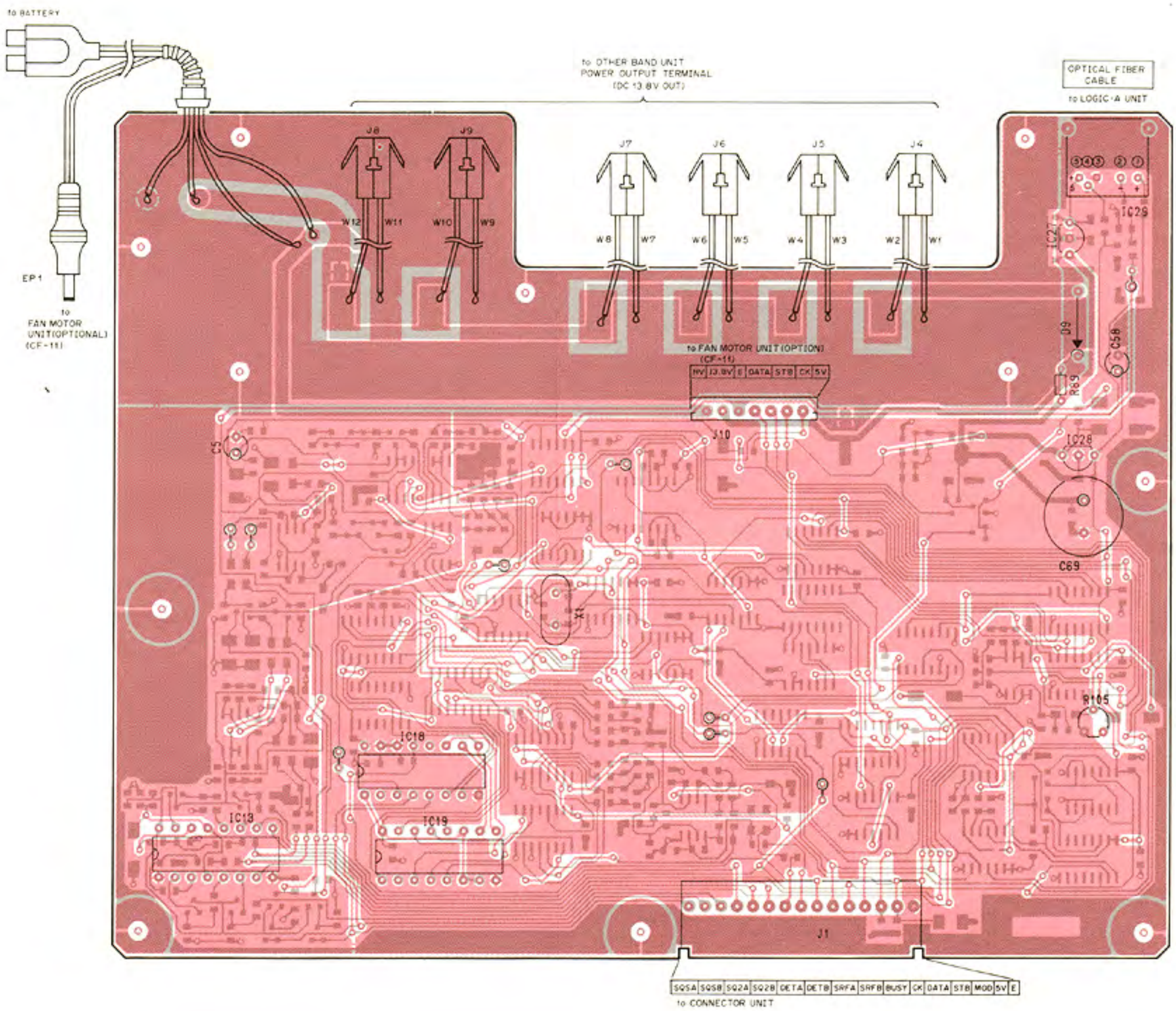

2SC2712 Y
Q1, Q8, Q9
Q10, Q11

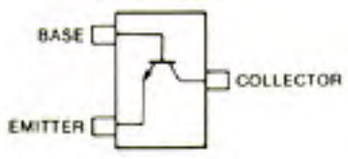

Symbol : LY

2SA1162 Y
Q2, Q3

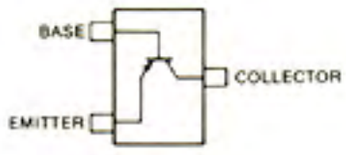

Symbol : SY

2SJ106 GR
Q4, Q7

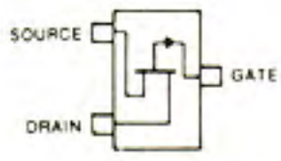

Symbol : VG

RN2404
Q5, Q6, Q13

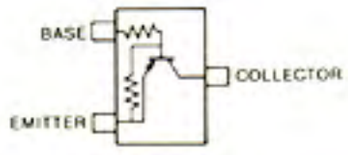

Symbol : YD

RN1404
Q12

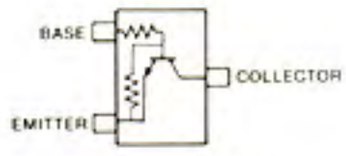

Symbol : XD

2
Q

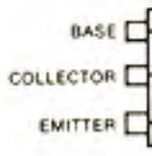

Sym

FOIL SIDE

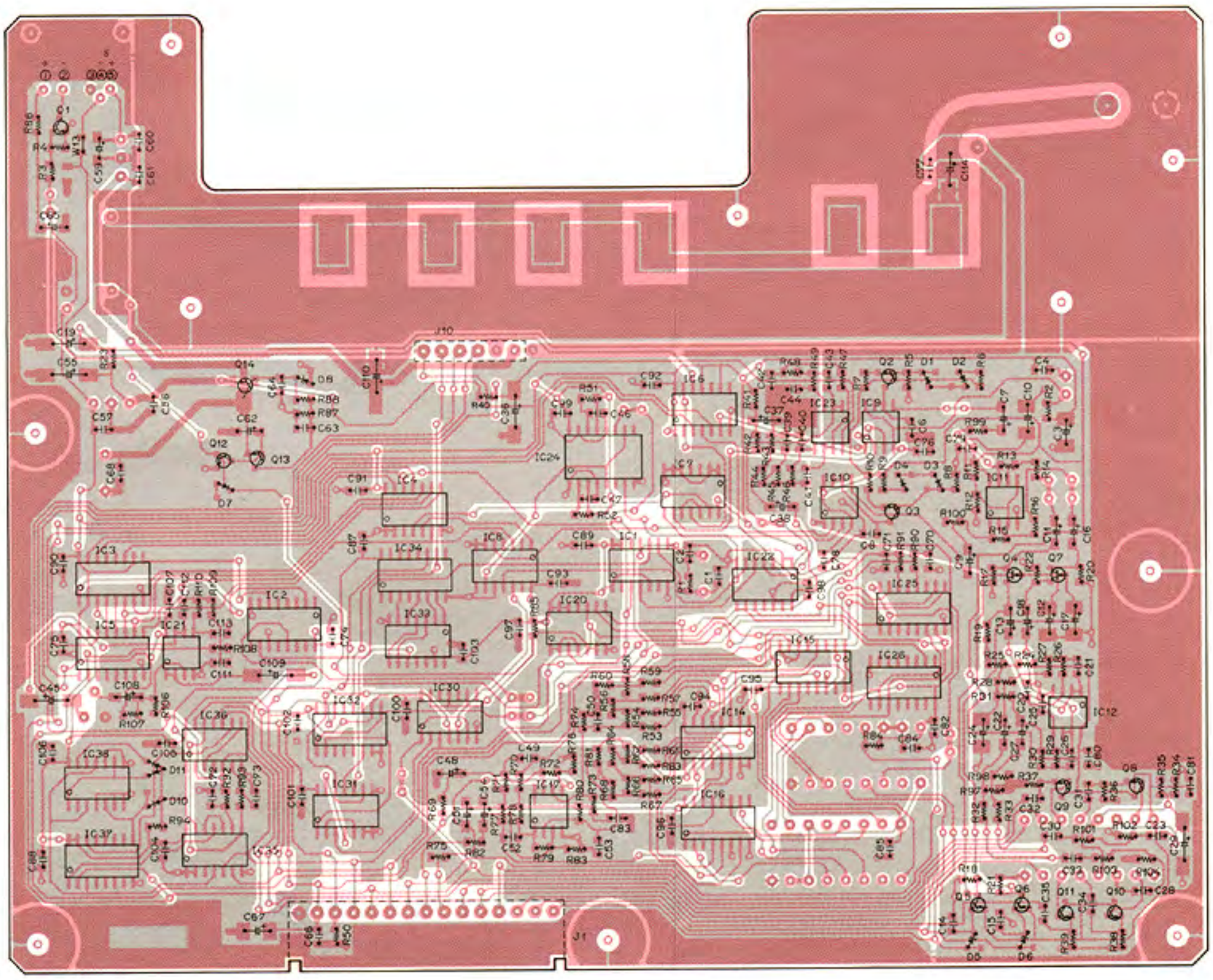

SD999 CK
14

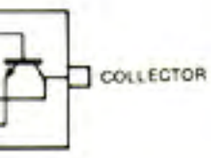

bol : CK

1SS190
D1, D2, D3
D4, D10

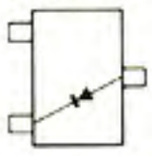

Symbol : E3

RD5.6M B2
D5, D6

Symbol : 562

1SS153
D7

Symbol : A9

RD9.1M B2
D8

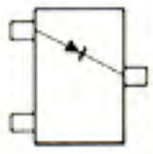

Symbol: 912

1SS181
D11

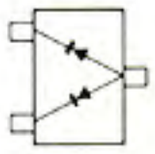

Symbol : A3

SECTION 8 IC PIN CONNECTIONS

μPD7225G
(PROGRAMMABLE LCD DRIVER)

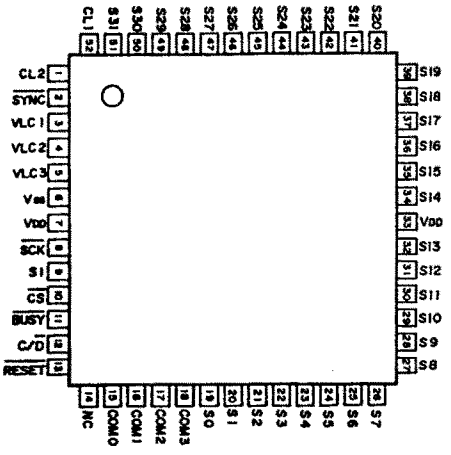

LC4011BM
(QUAD 2-INPUT POSITIVE NAND GATE)

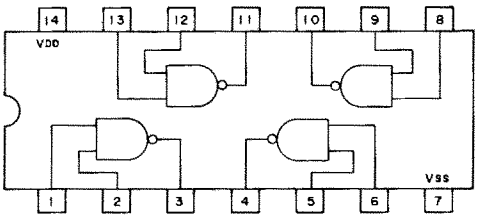

DP-7
(INVERTER)

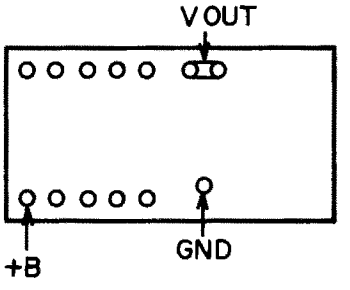

μPD75108CW-046
(CPU)

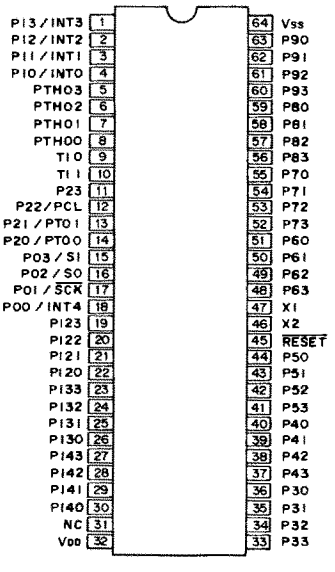

MB8416-20LPF-G-BND
(RAM)

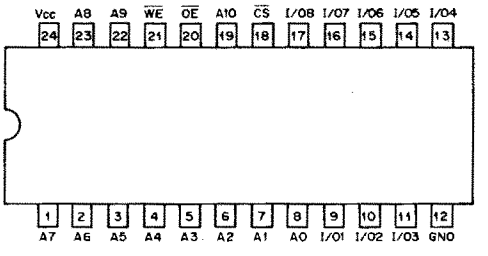

PST523D
(RESET)

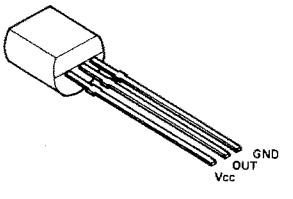

TA78006AP
(3-TERMINAL 6V REGULATOR)

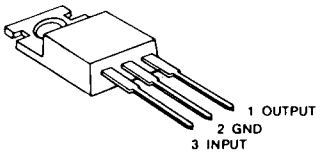

μPD4584BG
(HEX SCHMITT TRIGGER)

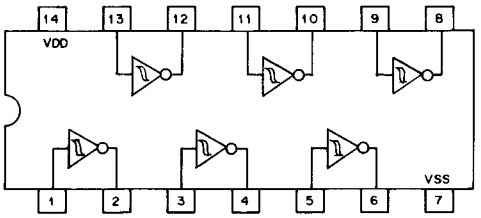

LC4066BM
(QUAD BILATERAL SWITCHING)

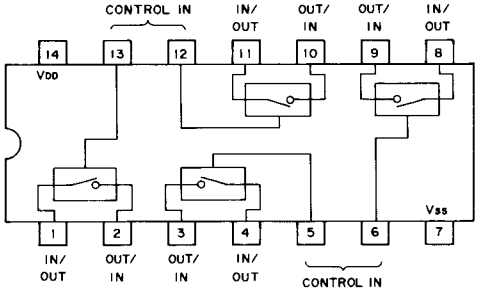

μPD4520BG
(DUAL BINARY UP COUNTER)

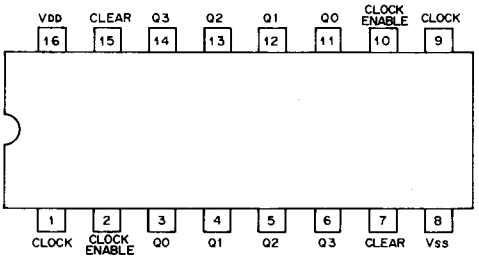

LC4081BM
(QUAD 2-INPUT POSITIVE AND GATE)

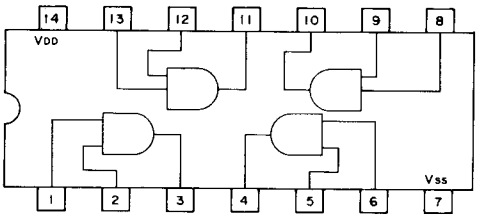

μPD4094BG
(8-STAGE SHIFT AND STORE BUS REGISTER)

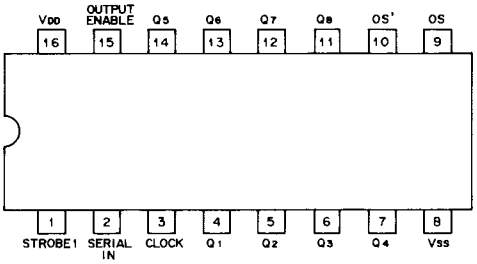

LC4013BM
(DUAL D-TYPE FLIP FLOP)

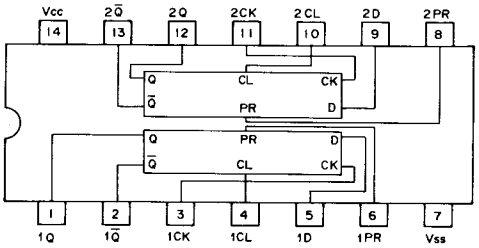

μPD4030BG
(QUAD 2-INPUT EXCLUSIVE OR GATE)

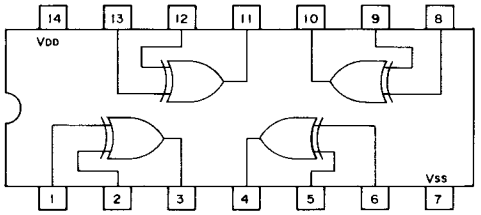

μPD4071BG
(QUAD 2-INPUT POSITIVE OR GATE)

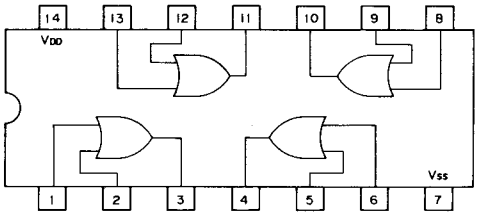

μPD4042BG
(QUAD D LATCH)

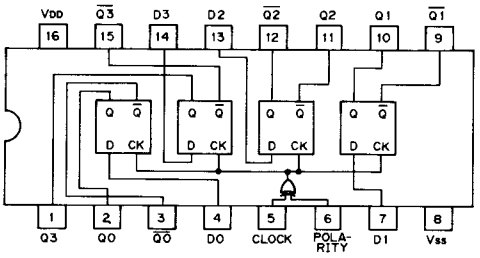

μPD4021BC
(8-BIT PARALLEL IN/SERIAL OUT SHIFT REGISTER)

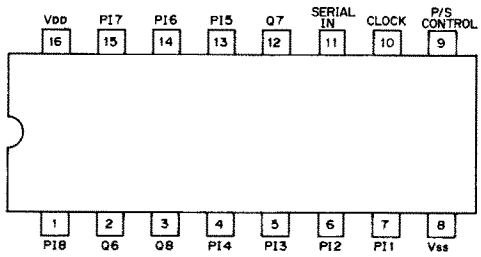

LC4069UBM
(HEX INVERTER)

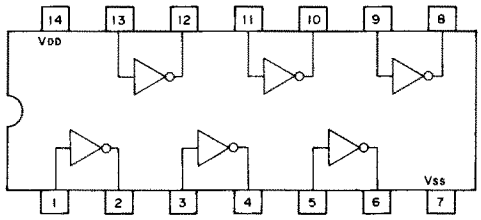

μPD4538BG
(DUAL PRECISION RETRIGGERABLE)

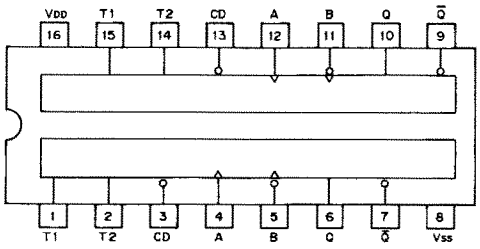

μPC1242H
(AUDIO POWER AMPLIFIER)

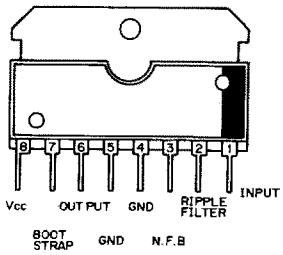

μPC1241H
(AUDIO POWER AMPLIFIER)

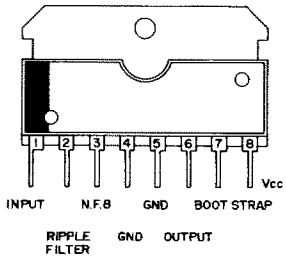

NJM4558M
(LOW NOISE DUAL OPERATIONAL AMPLIFIER)

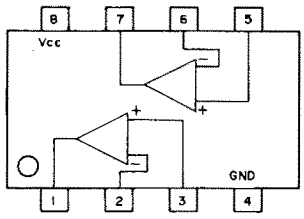

TC9154AP
(VOLUME)

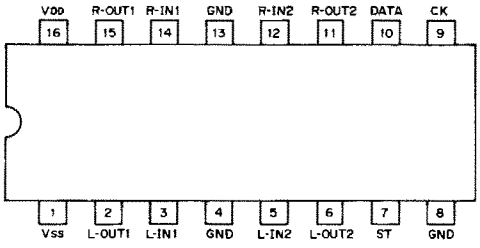

TC74HC4538F
(F DUAL RETRIGGERABLE MONOSTABLE MULTIVIBRATOR)

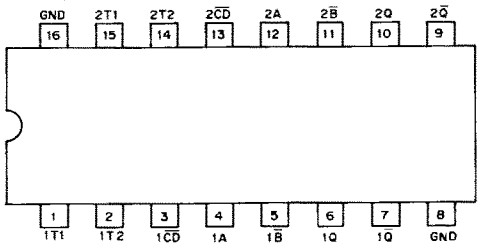

μPD4040BG, μPD74HC4040G
(12 STAGE BINARY COUNTER)

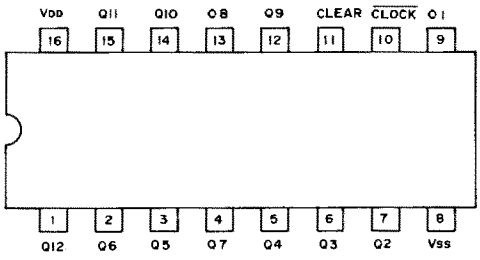

μPD4028BG
(BCD TO DECIMAL DECODER)

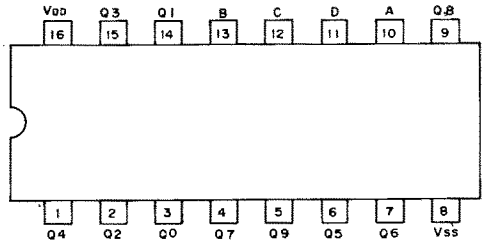

μPC1555G
(TIMER)

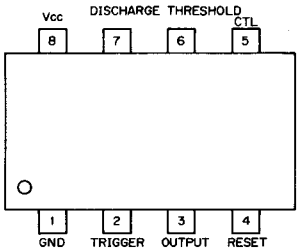

S7116A
(PROGRAMMABLE TONE GENERATOR)

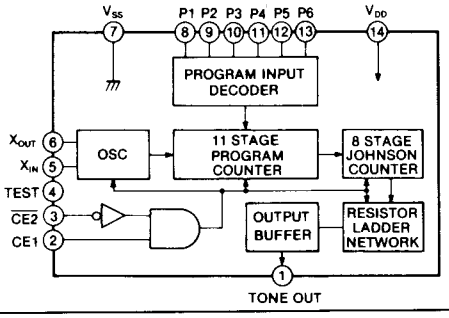

TA78L005AP, μA78L05AWC
(3-TERMINAL 5V REGULATOR)

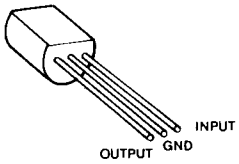

GP1F01D
(PHOTO COUPLER)

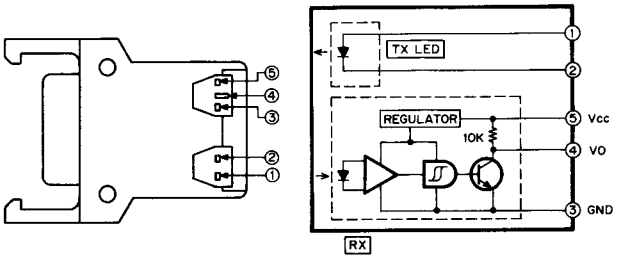

μPC358G
(DUAL DRIVER)

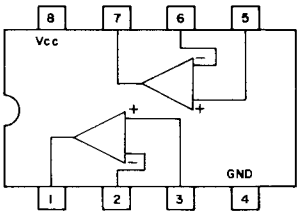

LA6393M
(DUAL DRIVER)

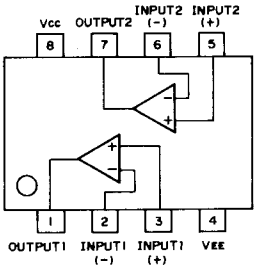

SECTION 9 VOLTAGE DIAGRAMS

9-1 REMOTE CONTROLLER

• DISPLAY A UNIT

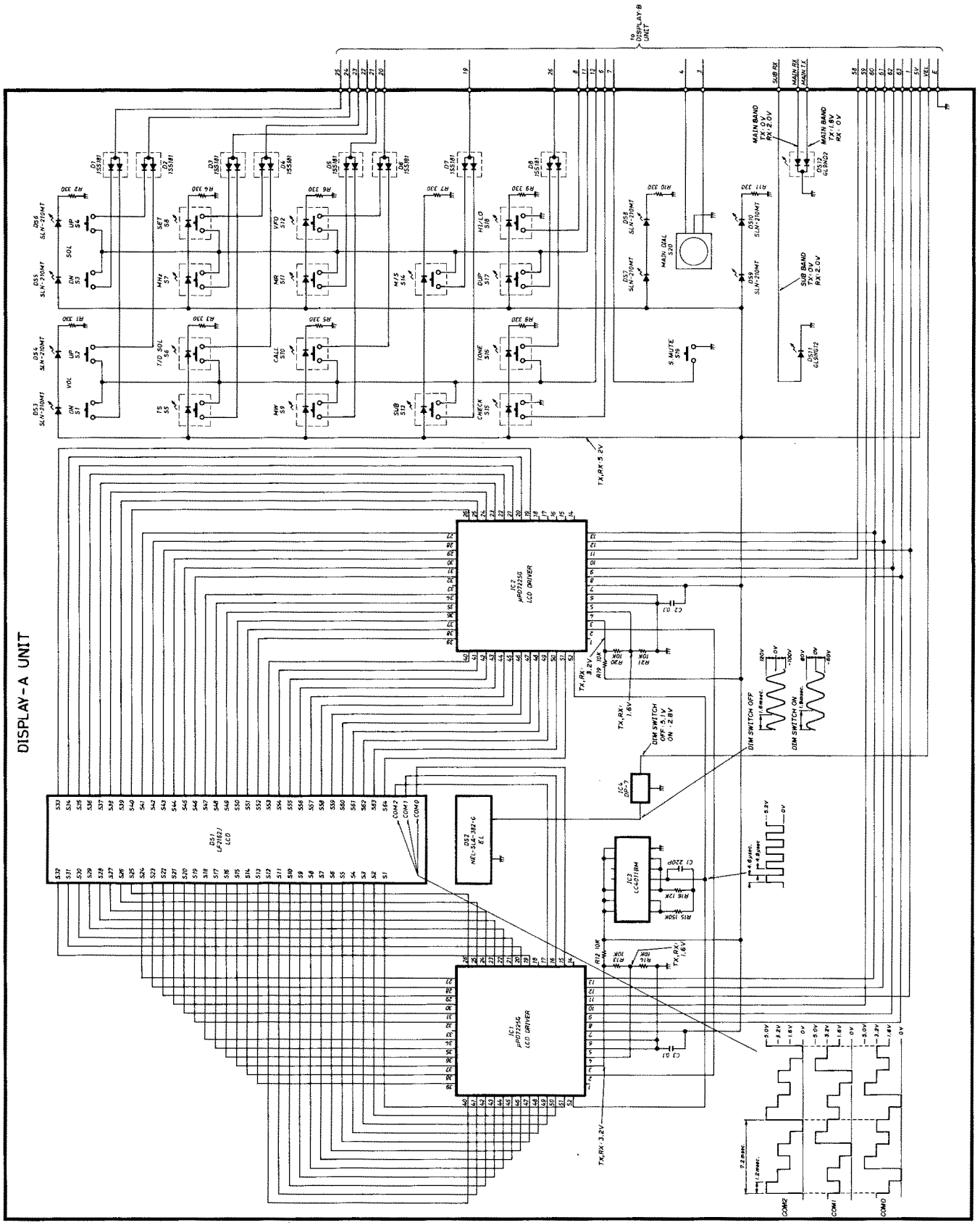

• DISPLAY B UNIT

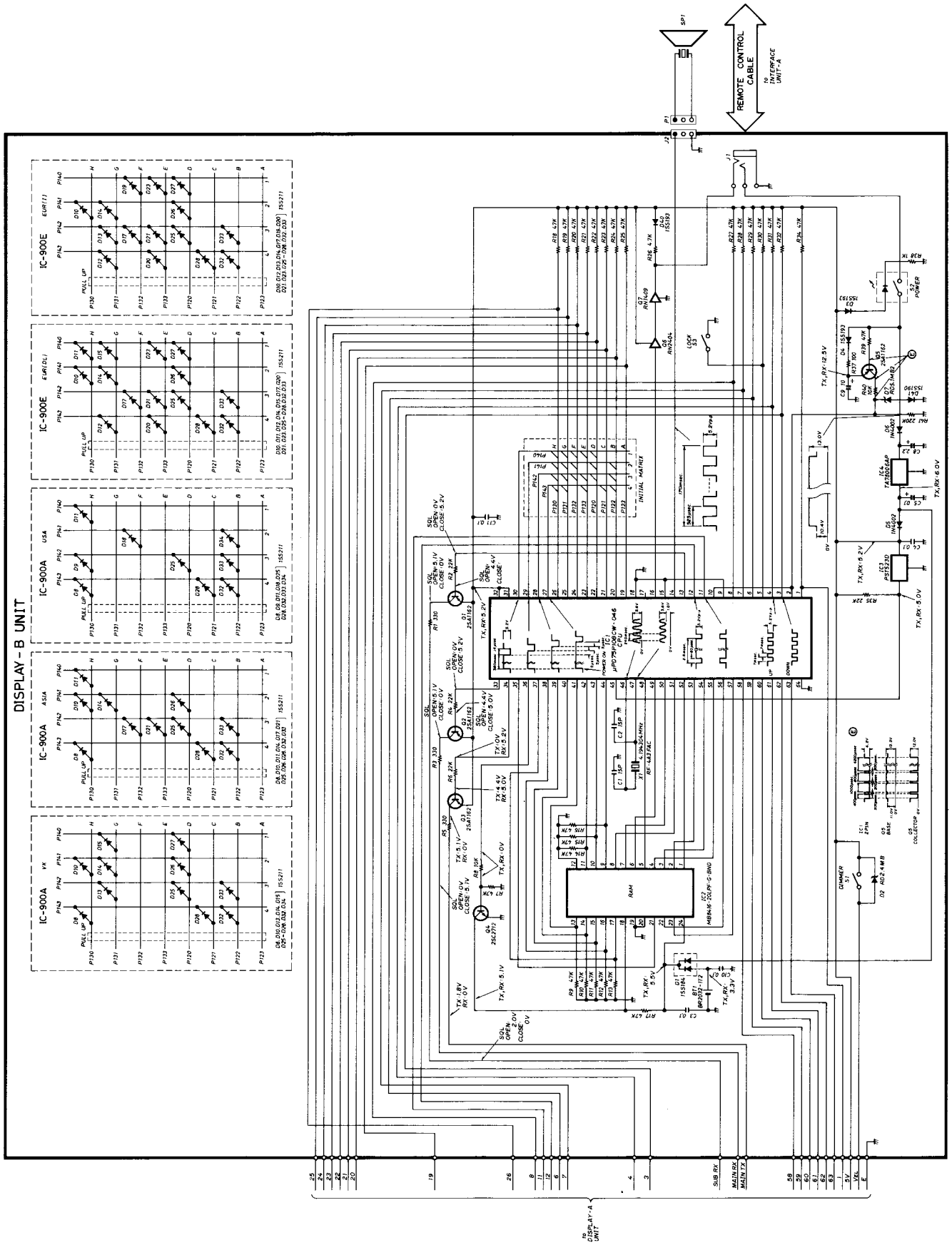

9-2 INTERFACE UNIT-A

• LOGIC B UNIT

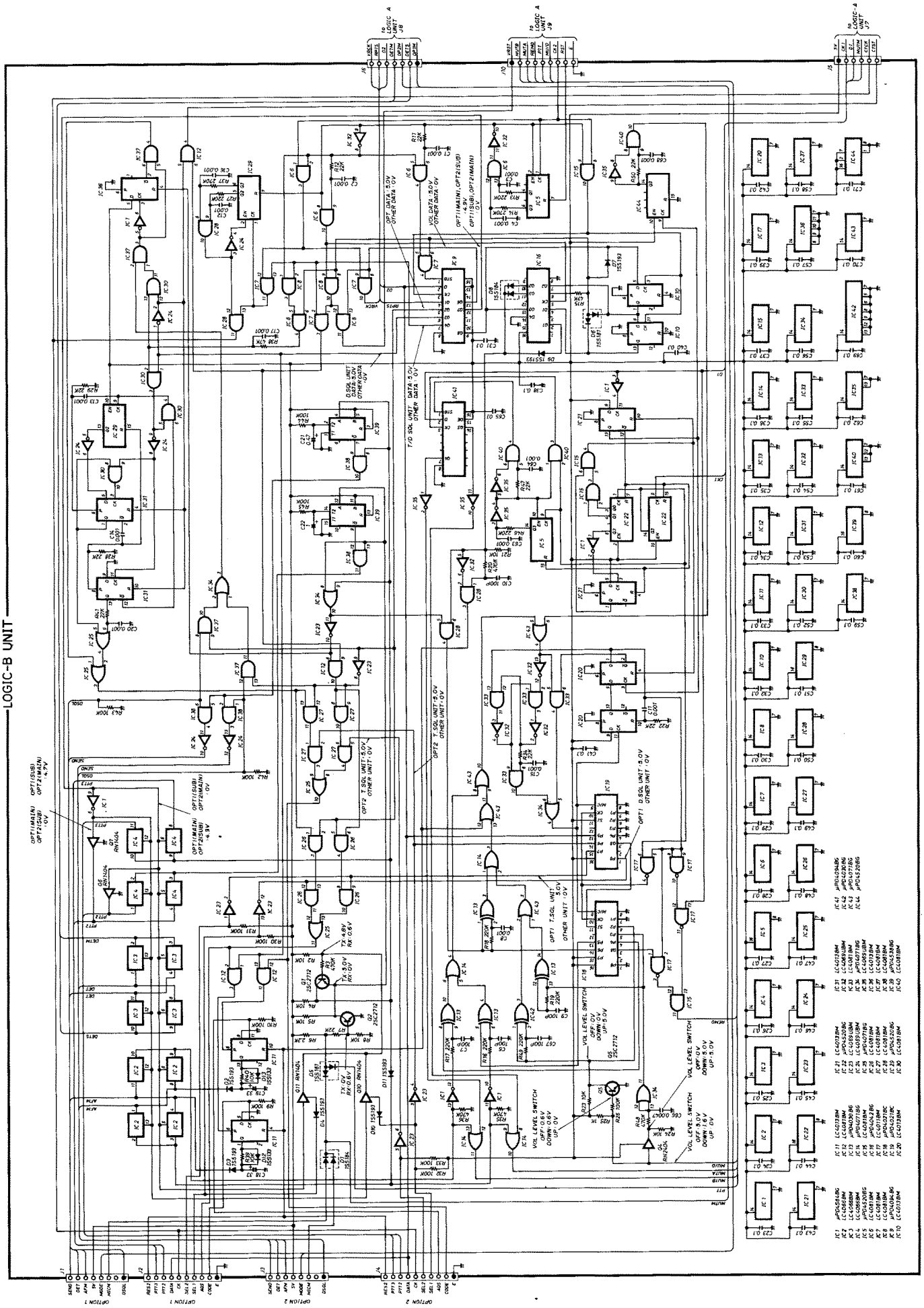

• LOGIC A UNIT

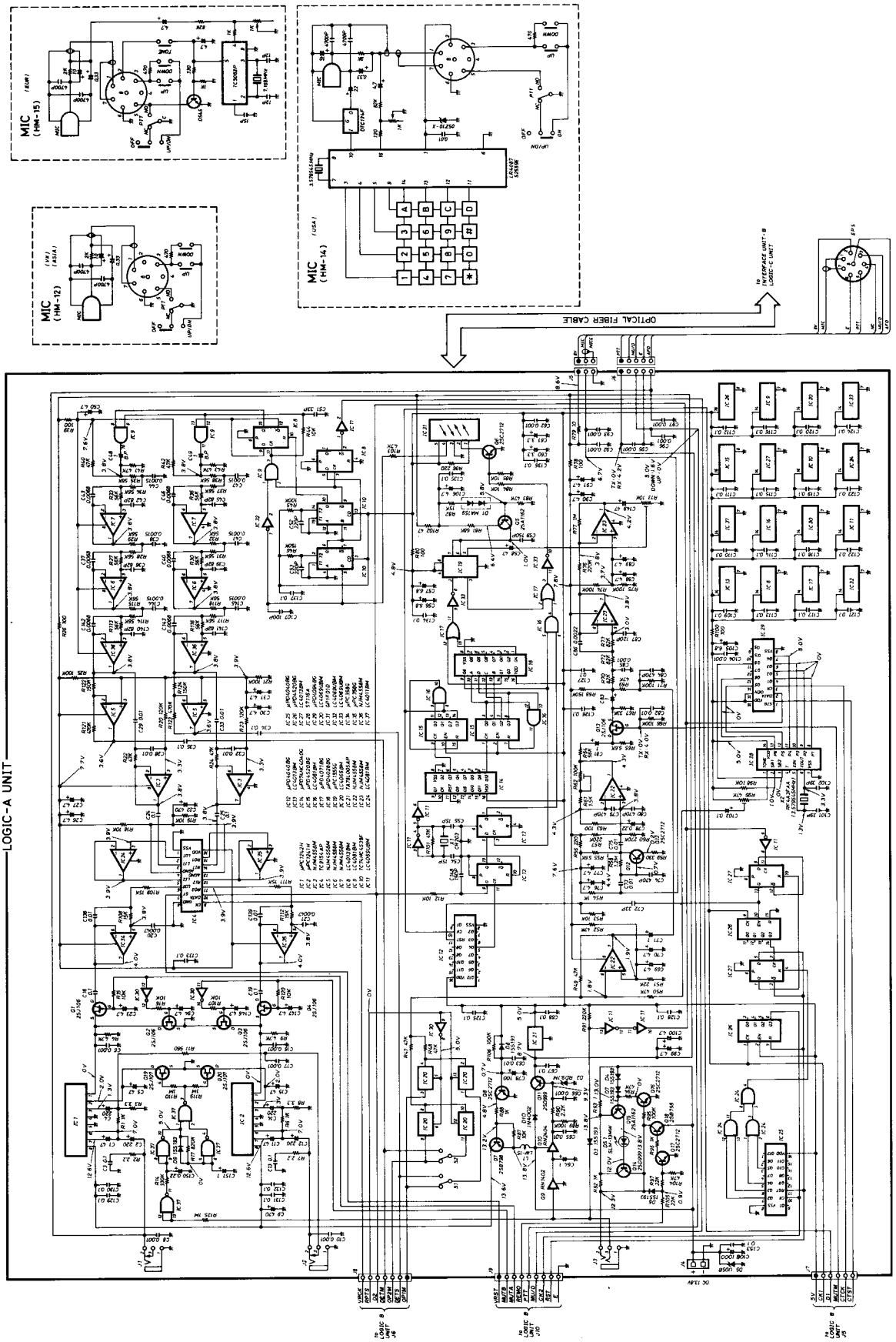

9-3 INTERFACE UNIT-B

• LOGIC C UNIT

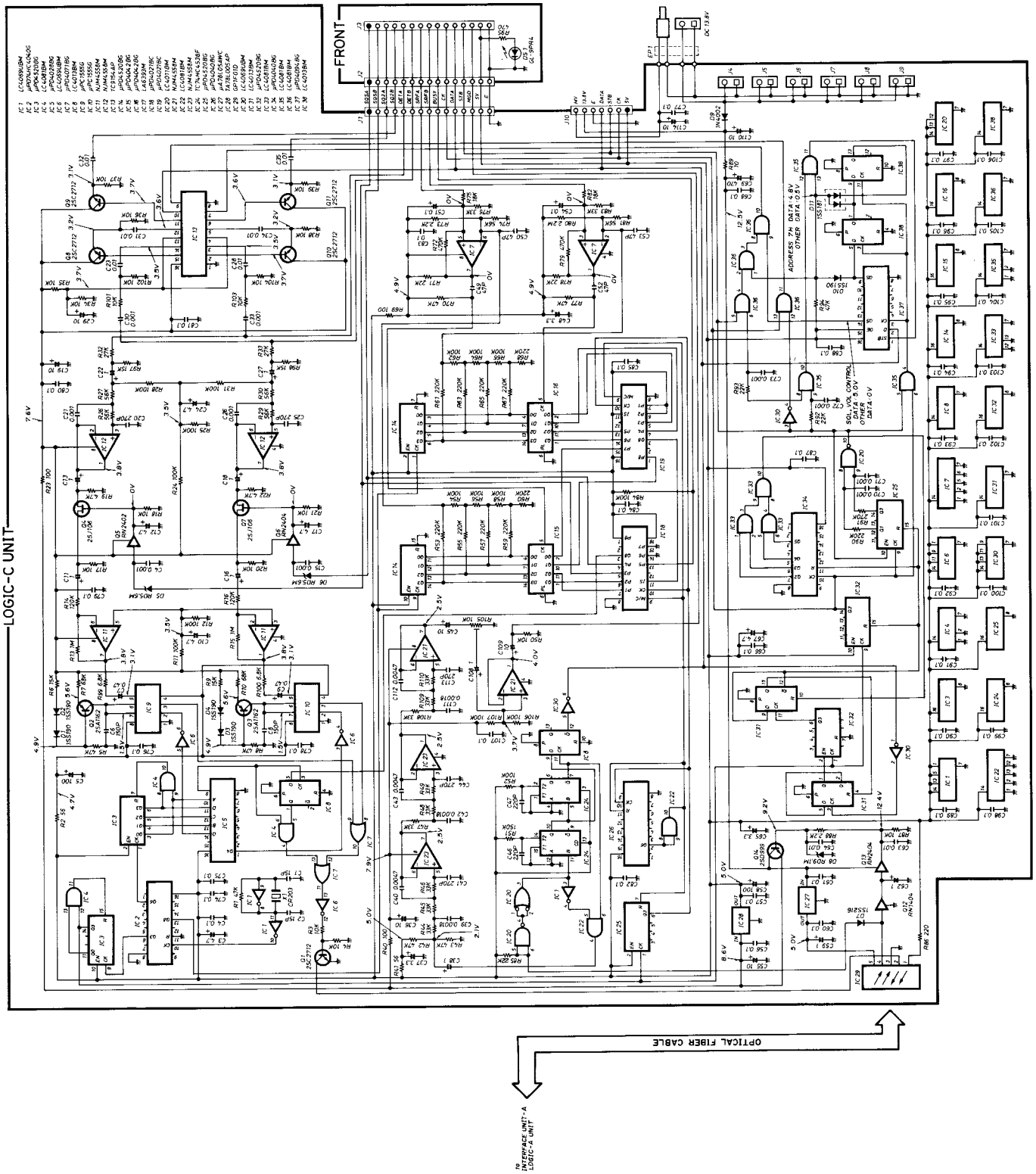

SECTION 10 PARTS LIST

[DISPLAY A UNIT]

REF. NO.	DESCRIPTION	PART NO.	
IC1	IC	µPD7225G	
IC2	IC	µPD7225G	
IC3	IC	LC4011BM	
IC4	Inverter	DP-7	
D1	Diode	1SS181	
D2	Diode	1SS181	
D3	Diode	1SS181	
D4	Diode	1SS181	
D5	Diode	1SS181	
D6	Diode	1SS181	
D7	Diode	1SS181	
D8	Diode	1SS181	
R1	Chip	330Ω	MCR10
R2	Chip	330Ω	MCR10
R3	Chip	330Ω	MCR10
R4	Chip	330Ω	MCR10
R5	Chip	330Ω	MCR10
R6	Chip	330Ω	MCR10
R7	Chip	330Ω	MCR10
R8	Chip	330Ω	MCR10
R9	Chip	330Ω	MCR10
R10	Chip	330Ω	MCR10
R11	Chip	330Ω	MCR10
R12	Chip	10kΩ	MCR10
R13	Chip	10kΩ	MCR10
R14	Chip	10kΩ	MCR10
R15	Chip	150kΩ	MCR10
R16	Chip	12kΩ	MCR10
R19	Chip	10kΩ	MCR10
R20	Chip	10kΩ	MCR10
R21	Chip	10kΩ	MCR10
C1	Monolithic	220pF	GRM40
C2	Monolithic	0.1pF	GRM40 F
C3	Monolithic	0.1pF	GRM40 F
DS1	LCD	LF2162J	
DS2	EL	NEL-5LA-382-G	
DS3	LED	SLN-210MT	
DS4	LED	SLN-210MT	
DS5	LED	SLN-210MT	
DS6	LED	SLN-210MT	
DS7	LED	SLN-210MT	
DS8	LED	SLN-210MT	
DS9	LED	SLN-210MT	
DS10	LED	SLN-210MT	
DS11	LED	GL9NG12	
DS12	LED	GL9ND2	
S1	Switch	SKHLAB064A (VOL DN)	
S2	Switch	SKHLAB064A (VOL UP)	
S3	Switch	SKHLAB064A (SQL DN)	
S4	Switch	SKHLAB064A (SQL UP)	
S5	Switch	SKHJFH (TS)	
S6	Switch	SKHJFH (T/D SQL)	
S7	Switch	SKHJFH (MHz)	
S8	Switch	SKHJFH (SET)	
S9	Switch	SKHJFH (MW)	
S10	Switch	SKHJFH (CALL)	
S11	Switch	SKHJFC (MR)	
S12	Switch	SKHJFC (VFO)	
S13	Switch	SKHJFC (SUB)	
S14	Switch	SKHJFC (M/S)	

[DISPLAY A UNIT]

REF. NO.	DESCRIPTION	PART NO.
S15	Switch	SKHJFH (CHECK)
S16	Switch	SKHJFH (TONE)
S17	Switch	SKHJFH (DUP)
S18	Switch	SKHJFH (HI/LO)
S19	Switch	SKHLAB064A (S. MUTE)
S20	Rotary	SRBM1L011A (MAIN DIAL)
EP2	P.C. Board	B-1311B
EP3	P.C. Board	B-1448
EP5	P.C. Board	B-1450

[DISPLAY B UNIT]

REF. NO.	DESCRIPTION	PART NO.
IC1	IC	µPD75108CW-046
IC2	IC	MB8416-20LPF-G-BND
IC3	IC	PST523D
IC4	IC	TA78006AP
Q1	Transistor	2SA1162 Y
Q2	Transistor	2SA1162 Y
Q3	Transistor	2SA1162 Y
Q4	Transistor	2SC2712 Y
Q5	Transistor	2SA1162 Y
Q6	Transistor	RN2404
Q7	Transistor	RN1409
D1	Diode	1SS184
D2	Zener	RD2.4M B
D3	Diode	1SS193
D4	Diode	1SS193
D5	Diode	1N4002
D6	Diode	1N4002
D7	Zener	RD5.1M B2
D8	Diode (#05, #07, #08)	1SS211
D9	Diode (#05)	1SS211
D10	Diode (#02, #03, #07, #08)	1SS211
D11	Diode (#02, #05, #08)	1SS211
D12	Diode (#02, #03)	1SS211
D13	Diode (#03, #07, #08)	1SS211
D14	Diode (#02, #03, #07, #08)	1SS211
D15	Diode (#02, #07)	1SS211
D17	Diode (#02, #07)	1SS211
D18	Diode (#05)	1SS211
D19	Diode (#03)	1SS211
D20	Diode (#02, #03)	1SS211
D21	Diode (#02, #03)	1SS211

[DISPLAY B UNIT]

REF. NO.	DESCRIPTION	PART NO.	
D23	Diode (#02, #03)	1SS211	
D25	Diode	1SS211	
D26	Diode (#02, #03, #07, #08)	1SS211	
D27	Diode (#02, #03, #07)	1SS211	
D28	Diode	1SS211	
D32	Diode	1SS211	
D33	Diode	1SS211	
D34	Diode (#05)	1SS211	
D40	Diode	1SS193	
D41	Diode	1SS190	
X1	Crystal	RF-4A3 FAC (4.194304MHz)	
R1	Chip	330Ω	MCR10
R2	Chip	22kΩ	MCR10
R3	Chip	330Ω	MCR10
R4	Chip	22kΩ	MCR10
R5	Chip	330Ω	MCR10
R6	Chip	22kΩ	MCR10
R7	Chip	4.7kΩ	MCR10
R8	Chip	10kΩ	MCR10
R9	Chip	47kΩ	MCR10
R10	Chip	47kΩ	MCR10
R11	Chip	47kΩ	MCR10
R12	Chip	47kΩ	MCR10
R13	Chip	47kΩ	MCR10
R14	Chip	47kΩ	MCR10
R15	Chip	47kΩ	MCR10
R16	Chip	47kΩ	MCR10
R17	Chip	47kΩ	MCR10
R18	Chip	47kΩ	MCR10
R19	Chip	47kΩ	MCR10
R20	Chip	47kΩ	MCR10
R21	Chip	47kΩ	MCR10
R22	Chip	47kΩ	MCR10
R23	Chip	47kΩ	MCR10
R24	Chip	47kΩ	MCR10
R25	Chip	47kΩ	MCR10
R26	Chip	4.7kΩ	MCR10
R27	Chip	47kΩ	MCR10
R28	Chip	47kΩ	MCR10
R29	Chip	47kΩ	MCR10
R30	Chip	47kΩ	MCR10
R31	Chip	47kΩ	MCR10
R32	Chip	47kΩ	MCR10
R34	Chip	47kΩ	MCR10
R35	Chip	22kΩ	MCR10
R37	Chip	100Ω	MCR10
R38	Chip	1kΩ	MCR10
R39	Chip	47kΩ	MCR10
R40	Chip	10kΩ	MCR10
R41	Chip	220kΩ	MCR10
C1	Monolithic	15pF	GRM40
C2	Monolithic	15pF	GRM40
C3	Monolithic	0.1μF	GRM40 F
C4	Monolithic	0.1μF	GRM40 F
C5	Tantalum	0.1μF	35V DN
C8	Tantalum	2.2μF	16V DN
C9	Tantalum	10μF	16V SV
C10	Monolithic	0.1μF	GRM40 F
C11	Monolithic	0.1μF	GRM40 F
J1	Connector	HSJ1102-01-040	
J2	Connector	TXL-P03P-N1	

[DISPLAY B UNIT]

REF. NO.	DESCRIPTION	PART NO.
S1	Switch	SSSS21148A (DIM)
S2	Switch	SPPH25 (POWER)
S3	Switch	SSSS21148A (LOCK)
BT1	Lithium Battery	BR2032-1T2
EP1	P.C. Board	B-1312B

[LOGIC B UNIT]

REF. NO.	DESCRIPTION	PART NO.
IC1	IC	μPD4584BG
IC2	IC	LC4066BM
IC3	IC	LC4066BM
IC4	IC	LC4066BM
IC5	IC	μPD4520BG
IC6	IC	LC4081BM
IC7	IC	LC4081BM
IC8	IC	LC4081BM
IC9	IC	μPD4094BG
IC10	IC	LC4013BM
IC11	IC	LC4013BM
IC12	IC	LC4081BM
IC13	IC	μPD4030BG
IC14	IC	μPD4071BG
IC15	IC	LC4081BM
IC16	IC	μPD4042BG
IC17	IC	LC4011BM
IC18	IC	μPD4021BC
IC19	IC	μPD4021BC
IC20	IC	LC4013BM
IC21	IC	LC4013BM
IC22	IC	μPD4520BG
IC23	IC	LC4069UBM
IC24	IC	LC4069UBM
IC25	IC	μPD4071BG
IC26	IC	LC4081BM
IC27	IC	LC4081BM
IC28	IC	LC4081BM
IC29	IC	μPD4520BG
IC30	IC	LC4081BM
IC31	IC	LC4013BM
IC32	IC	LC4069UBM
IC33	IC	LC4081BM
IC34	IC	μPD4071BG
IC35	IC	LC4069UBM
IC36	IC	LC4013BM
IC37	IC	LC4081BM
IC38	IC	LC4081BM
IC39	IC	μPD4538BG
IC40	IC	LC4081BM
IC41	IC	μPD4094BG
IC42	IC	μPD4030BG
IC43	IC	μPD4071BG
IC44	IC	μPD4520BG
Q1	Transistor	2SC2712 Y
Q2	Transistor	2SC2712 Y
Q4	Transistor	RN2404
Q5	Transistor	2SC2712 Y
Q6	Transistor	RN1404
Q7	Transistor	RN1404
Q10	Transistor	RN1404
Q11	Transistor	RN1404

[LOGIC B UNIT]

REF. NO.	DESCRIPTION	PART NO.	
D1	Diode	1SS184	
D2	Diode	1SS193	
D3	Diode	1SS193	
D4	Diode	1SS193	
D5	Diode	1SS181	
D6	Diode	1SS181	
D7	Diode	1SS193	
D8	Diode	1SS184	
D9	Diode	1SS193	
D10	Diode	1SS193	
D11	Diode	1SS193	
D12	Diode	1SS133	
D13	Diode	1SS133	
R2	Chip	10kΩ	MCR10
R3	Chip	470kΩ	MCR10
R4	Chip	10kΩ	MCR10
R5	Chip	10kΩ	MCR10
R6	Chip	2.2kΩ	MCR10
R7	Chip	22kΩ	MCR10
R8	Chip	10kΩ	MCR10
R9	Chip	100kΩ	MCR10
R10	Chip	100kΩ	MCR10
R11	Chip	22kΩ	MCR10
R12	Chip	22kΩ	MCR10
R13	Chip	220kΩ	MCR10
R14	Chip	270kΩ	MCR10
R15	Chip	47kΩ	MCR10
R16	Chip	220kΩ	MCR10
R17	Chip	220kΩ	MCR10
R18	Chip	22kΩ	MCR10
R19	Chip	220kΩ	MCR10
R20	Chip	470kΩ	MCR10
R21	Chip	10kΩ	MCR10
R22	Chip	22kΩ	MCR10
R23	Chip	10kΩ	MCR10
R24	Chip	10kΩ	MCR10
R25	Chip	1kΩ	MCR10
R26	Chip	100kΩ	MCR10
R27	Chip	220kΩ	MCR10
R28	Chip	22kΩ	MCR10
R29	Chip	22kΩ	MCR10
R30	Chip	100kΩ	MCR10
R31	Chip	100kΩ	MCR10
R32	Chip	100kΩ	MCR10
R33	Chip	100kΩ	MCR10
R34	Chip	22kΩ	MCR10
R35	Chip	470kΩ	MCR10
R36	Chip	470kΩ	MCR10
R37	Chip	270kΩ	MCR10
R38	Chip	47kΩ	MCR10
R39	Chip	10kΩ	MCR10
R40	Chip	10kΩ	MCR10
R41	Chip	22kΩ	MCR10
R42	Chip	100kΩ	MCR10
R43	Chip	100kΩ	MCR10
R44	Chip	100kΩ	MCR10
R45	Chip	100kΩ	MCR10
R46	Chip	220kΩ	MCR10
R47	Chip	22kΩ	MCR10
R48	Chip	470kΩ	MCR10
R49	Chip	220kΩ	MCR10
R50	Chip	22kΩ	MCR10
C1	Monolithic	0.001μF	GRM40
C2	Monolithic	0.001μF	GRM40
C3	Monolithic	0.001μF	GRM40
C4	Monolithic	0.001μF	GRM40
C6	Monolithic	100pF	GRM40
C7	Monolithic	100pF	GRM40
C8	Monolithic	0.001μF	GRM40
C9	Monolithic	100pF	GRM40
C10	Monolithic	100pF	GRM40

[LOGIC B UNIT]

REF. NO.	DESCRIPTION	PART NO.	
C11	Monolithic	0.001μF	GRM40
C12	Monolithic	0.001μF	GRM40
C13	Monolithic	0.001μF	GRM40
C14	Monolithic	0.001μF	GRM40
C15	Monolithic	0.001μF	GRM40
C16	Monolithic	0.001μF	GRM40
C17	Monolithic	0.001μF	GRM40
C18	Tantalum	TESVD1A336M12L	
C19	Tantalum	TESVD1A336M12L	
C20	Monolithic	0.001μF	GRM40
C21	Tantalum	0.47μF	25V SV
C22	Tantalum	1μF	16V SV
C23	Monolithic	0.1μF	GRM40 F
C24	Monolithic	0.1μF	GRM40 F
C25	Monolithic	0.1μF	GRM40 F
C26	Monolithic	0.1μF	GRM40 F
C27	Monolithic	0.1μF	GRM40 F
C28	Monolithic	0.1μF	GRM40 F
C29	Monolithic	0.1μF	GRM40 F
C30	Monolithic	0.1μF	GRM40 F
C31	Monolithic	0.1μF	GRM40 F
C32	Monolithic	0.1μF	GRM40 F
C33	Monolithic	0.1μF	GRM40 F
C34	Monolithic	0.1μF	GRM40 F
C35	Monolithic	0.1μF	GRM40 F
C36	Monolithic	0.1μF	GRM40 F
C37	Monolithic	0.1μF	GRM40 F
C38	Monolithic	0.1μF	GRM40 F
C39	Monolithic	0.1μF	GRM40 F
C40	Monolithic	0.1μF	GRM40 F
C41	Monolithic	0.1μF	GRM40 F
C42	Monolithic	0.1μF	GRM40 F
C43	Monolithic	0.1μF	GRM40 F
C44	Monolithic	0.1μF	GRM40 F
C45	Monolithic	0.1μF	GRM40 F
C46	Monolithic	0.1μF	GRM40 F
C47	Monolithic	0.1μF	GRM40 F
C48	Monolithic	0.1μF	GRM40 F
C49	Monolithic	0.1μF	GRM40 F
C50	Monolithic	0.1μF	GRM40 F
C51	Monolithic	0.1μF	GRM40 F
C52	Monolithic	0.1μF	GRM40 F
C53	Monolithic	0.1μF	GRM40 F
C54	Monolithic	0.1μF	GRM40 F
C55	Monolithic	0.1μF	GRM40 F
C56	Monolithic	0.1μF	GRM40 F
C57	Monolithic	0.1μF	GRM40 F
C58	Monolithic	0.1μF	GRM40 F
C59	Monolithic	0.1μF	GRM40 F
C60	Monolithic	0.1μF	GRM40 F
C61	Monolithic	0.1μF	GRM40 F
C62	Monolithic	0.1μF	GRM40 F
C63	Monolithic	0.001μF	GRM40
C64	Monolithic	0.001μF	GRM40
C65	Monolithic	0.1μF	GRM40 F
C66	Monolithic	0.0047μF	GRM40
C67	Monolithic	100pF	GRM40
C68	Monolithic	0.001μF	GRM40
C69	Monolithic	0.1μF	GRM40 F
C70	Monolithic	0.1μF	GRM40 F
C71	Monolithic	0.1μF	GRM40 F
J1	Connector	S08B-EH	
J2	Connector	S10B-EH	
J3	Connector	S08B-EH	
J4	Connector	S10B-EH	
J5	Connector	PD09A06M	
J6	Connector	PD09A07M	
J10	Connector	PD09A09M	
EP1	P.C. Board	B-1454C	

[LOGIC A UNIT]

REF. NO.	DESCRIPTION	PART NO.
IC1	IC	μPC1242H
IC2	IC	μPC1241H
IC3	IC	NJM4558M
IC4	IC	TC9154AP
IC5	IC	NJM4558M
IC6	IC	NJM4558M
IC7	IC	NJM4558M
IC8	IC	LC4013BM
IC9	IC	LC4081BM
IC10	IC	TC74HC4538F
IC11	IC	LC4069UBM
IC12	IC	μPD4040BG
IC13	IC	LC4013BM
IC14	IC	μPD74HC4040G
IC15	IC	μPD4520BG
IC16	IC	LC4081BM
IC17	IC	μPD4071BG
IC18	IC	μPD4028BG
IC19	IC	μPC1555G
IC20	IC	LC4066BM
IC21	IC	TA78L005AP
IC22	IC	NJM4558M
IC23	IC	NJM4558M
IC24	IC	LC4081BM
IC25	IC	μPD4040BG
IC26	IC	μPD4520BG
IC27	IC	LC4013BM
IC28	IC	S7116A
IC29	IC	μPD4094BG
IC30	IC	LC4069UBM
IC31	IC	GP1F01D
IC32	IC	LC4069UBM
IC33	IC	LC4069UBM
IC34	IC	μPC358G
IC35	IC	μPC358G
IC36	IC	NJM4558M
IC37	IC	LC4011BM
Q1	FET	2SJ106 GR
Q2	FET	2SJ106 GR
Q3	FET	2SJ106 GR
Q4	FET	2SJ106 GR
Q5	Transistor	2SA1162 Y
Q6	Transistor	2SC2712 Y
Q7	Transistor	2SB798 DK
Q8	Transistor	2SC2712 Y
Q9	Transistor	RN1402
Q10	Transistor	RN2404
Q11	Transistor	2SD999 CK
Q12	Transistor	2SC2712 Y
Q13	Transistor	2SJ106 GR
Q14	Transistor	2SD999 CK
Q15	Transistor	2SA1162 Y
Q16	Transistor	2SC2712 Y
Q17	Transistor	2SC2712 Y
Q18	Transistor	2SB798 DK
Q19	FET	2SJ107 BL
Q20	FET	2SJ107 BL
D1	Diode	MA159
D2	Zener	RD9.1M B2
D3	Diode	1SS193
D4	Diode	1SS193
D5	Diode	U05B
D6	Diode	1SS193
D7	Diode	1SS193
D8	Diode	1SS193
D9	Diode	1SS193
D10	Diode	1N4002
X1	Crystal	CR203
X2	Crystal	RF4A3 FAA (3.579545MHz)

[LOGIC A UNIT]

REF. NO.	DESCRIPTION	PART NO.	
L1	Coil	LW-15	
R1	Chip	1kΩ	MCR10
R2	Chip	2.2Ω	MCR10
R3	Chip	3.3Ω	MCR10
R4	Chip	4.7kΩ	MCR10
R6	Chip	1kΩ	MCR10
R7	Chip	2.2Ω	MCR10
R8	Chip	3.3Ω	MCR10
R9	Chip	4.7kΩ	MCR10
R11	Chip	560Ω	MCR10
R12	Chip	10kΩ	MCR10
R13	Trimmer	10kΩ	RH0522C14J
R14	Chip	330kΩ	MCR10
R15	Chip	10kΩ	MCR10
R16	Chip	10kΩ	MCR10
R17	Chip	820kΩ	MCR10
R18	Chip	10kΩ	MCR10
R19	Chip	10kΩ	MCR10
R20	Chip	120kΩ	MCR10
R21	Chip	100kΩ	MCR10
R22	Chip	47kΩ	MCR10
R23	Chip	120kΩ	MCR10
R24	Chip	47kΩ	MCR10
R25	Chip	100kΩ	MCR10
R26	Chip	100Ω	MCR10
R27	Chip	56kΩ	MCR10
R28	Chip	56kΩ	MCR10
R29	Chip	56kΩ	MCR10
R30	Chip	56kΩ	MCR10
R31	Chip	56kΩ	MCR10
R32	Chip	56kΩ	MCR10
R33	Chip	56kΩ	MCR10
R34	Chip	56kΩ	MCR10
R35	Chip	56kΩ	MCR10
R36	Chip	56kΩ	MCR10
R37	Chip	56kΩ	MCR10
R38	Chip	56kΩ	MCR10
R39	Chip	100Ω	MCR10
R40	Chip	47kΩ	MCR10
R41	Chip	47kΩ	MCR10
R42	Chip	47kΩ	MCR10
R43	Chip	47kΩ	MCR10
R44	Chip	10kΩ	MCR10
R45	Chip	100kΩ	MCR10
R46	Chip	150kΩ	MCR10
R47	Chip	47kΩ	MCR10
R48	Chip	47kΩ	MCR10
R49	Chip	47kΩ	MCR10
R50	Chip	47kΩ	MCR10
R51	Chip	22kΩ	MCR10
R52	Chip	47kΩ	MCR10
R53	Chip	10kΩ	MCR10
R54	Chip	1kΩ	MCR10
R55	Chip	5.6kΩ	MCR10
R56	Chip	220Ω	MCR10
R57	Chip	220kΩ	MCR10
R58	Chip	1.2MΩ	MCR10
R59	Chip	330Ω	MCR10
R60	Chip	270kΩ	MCR10
R61	Chip	1.5kΩ	MCR10
R62	Trimmer	RH0521C15J05A	
R63	Chip	100Ω	MCR10
R64	Chip	56kΩ	MCR10
R65	Chip	5.6kΩ	MCR10
R66	Chip	100kΩ	MCR10
R67	Chip	33kΩ	MCR10
R68	Chip	150kΩ	MCR10
R69	Chip	47kΩ	MCR10
R70	Chip	82kΩ	MCR10
R71	Chip	100kΩ	MCR10
R72	Chip	82kΩ	MCR10
R73	Chip	82kΩ	MCR10
R74	Chip	100kΩ	MCR10

[LOGIC A UNIT]

REF. NO.	DESCRIPTION	PART NO.		
R75	Chip	100kΩ	MCR10	
R76	Chip	220kΩ	MCR10	
R77	Chip	1MΩ	MCR10	
R78	Chip	100Ω	MCR10	
R79	Chip	10Ω	MCR10	
R80	Chip	100Ω	MCR10	
R81	Chip	68kΩ	MCR10	
R82	Chip	15kΩ	MCR10	
R83	Chip	47kΩ	MCR10	
R84	Chip	10kΩ	MCR10	
R85	Chip	10kΩ	MCR10	
R86	Chip	220Ω	MCR10	
R87	Chip	10kΩ	MCR10	
R88	Chip	1kΩ	MCR10	
R89	Chip	100kΩ	MCR10	
R90	Chip	2.2kΩ	MCR10	
R91	Chip	220kΩ	MCR10	
R92	Chip	1kΩ	MCR10	
R93	Resistor	1Ω	ELR20	
R94	Chip	47kΩ	MCR10	
R95	Chip	100kΩ	MCR10	
R96	Chip	1kΩ	MCR10	
R97	Chip	22kΩ	MCR10	
R98	Chip	10kΩ	MCR10	
R99	Trimmer	RH0521CS4J0DA		
R100	Chip	100Ω	MCR10	
R101	Chip	47kΩ	MCR10	
R102	Chip	47Ω	MCR10	
R103	Chip	4.7kΩ	MCR10	
R104	Chip	47kΩ	MCR10	
R105	Chip	22kΩ	MCR10	
R106	Chip	100kΩ	MCR10	
R107	Chip	10kΩ	MCR10	
R108	Chip	15kΩ	MCR10	
R109	Chip	15kΩ	MCR10	
R110	Chip	1MΩ	MCR10	
R111	Chip	15kΩ	MCR10	
R112	Chip	15kΩ	MCR10	
R113	Chip	56kΩ	MCR10	
R114	Chip	56kΩ	MCR10	
R115	Chip	56kΩ	MCR10	
R116	Chip	56kΩ	MCR10	
R117	Chip	56kΩ	MCR10	
R118	Chip	56kΩ	MCR10	
R119	Chip	1MΩ	MCR10	
R120	Chip	10kΩ	MCR10	
R121	Chip	470kΩ	MCR10	
R122	Chip	150kΩ	MCR10	
R123	Chip	470kΩ	MCR10	
R124	Chip	150kΩ	MCR10	
R125	Chip	1MΩ	MCR10	
R126	Chip	4.7kΩ	MCR10	
C1	Electrolytic	47μF	16V	MS7
C2	Electrolytic	220μF	16V	MS9
C3	Monolithic	0.1μF	GRM40	F
C4	Electrolytic	220μF	16V	MS9
C5	Electrolytic	47μF	16V	MS7
C6	Monolithic	0.001μF	GRM40	
C8	Monolithic	0.001μF	GRM40	
C9	Electrolytic	470μF	16V	TWSS
C10	Monolithic	0.001μF	GRM40	
C11	Electrolytic	47μF	16V	MS7
C12	Electrolytic	220μF	16V	MS9
C13	Monolithic	0.1μF	GRM40	F
C14	Electrolytic	220μF	16V	MS9
C15	Electrolytic	47μF	16V	MS7
C16	Monolithic	0.001μF	GRM40	
C17	Monolithic	0.001μF	GRM40	
C18	Monolithic	0.1μF	GRM40	F
C19	Monolithic	0.1μF	GRM40	F
C20	Monolithic	0.0047μF	GRM40	
C21	Monolithic	0.0047μF	GRM40	
C22	Electrolytic	470μF	10V	MS9

[LOGIC A UNIT]

REF. NO.	DESCRIPTION	PART NO.		
C23	Tantalum	4.7μF	10V	SV
C24	Monolithic	0.1μF	GRM40	F
C25	Monolithic	0.1μF	GRM40	F
C26	Tantalum	4.7μF	10V	SV
C27	Tantalum	4.7μF	10V	SV
C28	Monolithic	0.01μF	GRM40	F
C29	Monolithic	0.01μF	GRM40	F
C30	Tantalum	4.7μF	10V	SV
C31	Tantalum	4.7μF	10V	SV
C32	Monolithic	0.01μF	GRM40	F
C33	Monolithic	0.01μF	GRM40	F
C34	Monolithic	0.1μF	GRM40	F
C35	Monolithic	0.1μF	GRM40	F
C36	Monolithic	82pF	GRM40	
C37	Monolithic	GRM40 B 682K 50PT		
C38	Monolithic	GRM40 B 152K 50PT		
C39	Monolithic	82pF	GRM40	
C40	Monolithic	GRM40 B 682K 50PT		
C41	Monolithic	GRM40 B 152K 50PT		
C42	Monolithic	82pF	GRM40	
C43	Monolithic	GRM40 B 682K 50PT		
C44	Monolithic	GRM40 B 152K 50PT		
C45	Monolithic	82pF	GRM40	
C46	Monolithic	GRM40 B 682K 50PT		
C47	Monolithic	GRM40 B 152K 50PT		
C48	Electrolytic	1μF	50V	BP
C49	Electrolytic	1μF	50V	BP
C50	Tantalum	4.7μF	10V	SV
C51	Monolithic	33pF	GRM40	
C52	Monolithic	220pF	GRM40CH	
C53	Monolithic	220pF	GRM40CH	
C54	Monolithic	15pF	GRM40	
C55	Monolithic	15pF	GRM40	
C56	Tantalum	6.8μF	6.3V	SV
C57	Tantalum	6.8μF	6.3V	SV
C58	Electrolytic	47μF	10V	MS7
C59	Monolithic	150pF	GRM40CH	
C60	Tantalum	3.3μF	6.3V	SV
C61	Tantalum	3.3μF	6.3V	SV
C62	Monolithic	0.001μF	GRM40	
C63	Monolithic	0.01μF	GRM40	F
C64	Tantalum	1μF	16V	SV
C65	Monolithic	0.01μF	GRM40	F
C66	Monolithic	0.001μF	GRM40	
C67	Monolithic	0.1μF	GRM40	F
C68	Monolithic	0.1μF	GRM40	F
C69	Tantalum	4.7μF	10V	SV
C70	Tantalum	4.7μF	10V	SV
C71	Tantalum	1μF	16V	SV
C72	Monolithic	33pF	GRM40	
C73	Monolithic	D33Y5V1H103Z21		
C74	Monolithic	470pF	GRM40	
C75	Monolithic	0.01μF	GRM40	F
C76	Tantalum	4.7μF	10V	SV
C77	Tantalum	4.7μF	10V	SV
C78	Tantalum	0.22μF	35V	SV
C79	Monolithic	470pF	GRM40	
C80	Monolithic	470pF	GRM40	
C81	Tantalum	1μF	16V	SV
C82	Monolithic	0.01μF	GRM40	F
C83	Tantalum	1μF	16V	SV
C84	Monolithic	470pF	GRM40	
C85	Monolithic	0.001μF	GRM40	
C86	Monolithic	GRM42-6 SL 222J 50PT		
C87	Monolithic	120pF	GRM40	
C88	Tantalum	4.7μF	10V	SV
C89	Tantalum	4.7μF	10V	SV
C90	Tantalum	4.7μF	10V	SV
C91	Tantalum	4.7μF	10V	SV
C92	Monolithic	0.001μF	GRM40	
C93	Monolithic	0.001μF	GRM40	
C94	Tantalum	4.7μF	10V	SV
C95	Monolithic	0.001μF	GRM40	
C96	Monolithic	0.001μF	GRM40	
C97	Monolithic	0.001μF	GRM40	

[LOGIC A UNIT]

REF. NO.	DESCRIPTION	PART NO.
C98	Electrolytic	100μF 10V MS7
C99	Tantalum	4.7μF 10V SV
C100	Tantalum	4.7μF 10V SV
C101	Monolithic	39pF GRM40
C102	Monolithic	39pF GRM40
C103	Tantalum	0.1μF 35V SV
C104	Monolithic	0.001μF GRM40
C105	Tantalum	6.8μF 6.3V SV
C106	Tantalum	4.7μF 10V SV
C107	Monolithic	100pF GRM40
C108	Electrolytic	1000μF 16V SS
C109	Monolithic	0.1μF GRM40 F
C110	Monolithic	0.1μF GRM40 F
C111	Monolithic	0.1μF GRM40 F
C112	Monolithic	0.1μF GRM40 F
C113	Monolithic	0.1μF GRM40 F
C114	Monolithic	0.1μF GRM40 F
C115	Monolithic	0.1μF GRM40 F
C116	Monolithic	0.1μF GRM40 F
C117	Monolithic	0.1μF GRM40 F
C118	Monolithic	0.1μF GRM40 F
C119	Monolithic	0.1μF GRM40 F
C120	Monolithic	0.1μF GRM40 F
C121	Monolithic	0.1μF GRM40 F
C122	Monolithic	0.1μF GRM40 F
C123	Monolithic	0.1μF GRM40 F
C124	Monolithic	0.1μF GRM40 F
C125	Monolithic	0.1μF GRM40 F
C126	Monolithic	0.1μF GRM40 F
C127	Monolithic	0.1μF GRM40 F
C128	Monolithic	0.1μF GRM40 F
C129	Monolithic	0.1μF GRM40 F
C130	Monolithic	0.1μF GRM40 F
C131	Monolithic	0.1μF GRM40 F
C132	Monolithic	0.1μF GRM40 F
C133	Monolithic	0.1μF GRM40 F
C134	Monolithic	0.1μF GRM40 F
C135	Monolithic	0.1μF GRM40 F
C136	Monolithic	0.1μF GRM40 F
C137	Monolithic	0.1μF GRM40 F
C138	Monolithic	0.01μF GRM40 F
C139	Monolithic	0.01μF GRM40 F
C140	Monolithic	82pF GRM40
C141	Monolithic	82pF GRM40
C142	Monolithic	GRM40 B 682K 50PT
C143	Monolithic	GRM40 B 682K 50PT
C144	Monolithic	GRM40 B 152K 50PT
C145	Monolithic	GRM40 B 152K 50PT
C146	Tantalum	4.7μF 10V SV
C147	Tantalum	4.7μF 10V SV
C148	Monolithic	150pF GRM40
C149	Electrolytic	47μF 10V MS7
C150	Tantalum	0.22μF 35V SV
C151	Tantalum	1μF 16V SV
C152	Monolithic	100pF GRM40
C153	Monolithic	0.1μF GRM40 F
J1	Connector	HSJ0857-01-220
J2	Connector	HSJ0857-01-220
J3	Connector	HSJ1102-01-040
J4	Connector	LR-02-2V
J5	Connector	B03B-EH-S
J6	Connector	B05B-EH-S
J7	Connector	PD09A06M
J8	Connector	PD09A07M
J9	Connector	PD09A09M
DS1	LED	SLM-13MW
S1	Switch	SSSS21148A
S2	Switch	SSSS21148A

[LOGIC A UNIT]

REF. NO.	DESCRIPTION	PART NO.
EP1	P.C. Board	B-1314D
EP2	P.C. Board	B-1451B
W31	Jumper	JPW-02A

[LOGIC C UNIT]

REF. NO.	DESCRIPTION	PART NO.
IC1	IC	LC4069UBM
IC2	IC	μPD74HC4040G
IC3	IC	μPD4520BG
IC4	IC	LC4081BM
IC5	IC	μPD4028BG
IC6	IC	LC4069UBM
IC7	IC	μPD4071BG
IC8	IC	LC4013BM
IC9	IC	μPC1555G
IC10	IC	μPC1555G
IC11	IC	NJM4558M
IC12	IC	NJM4558M
IC13	IC	TC9154AP
IC14	IC	μPD4520BG
IC15	IC	μPD4042BG
IC16	IC	μPD4042BG
IC17	IC	LA6393M
IC18	IC	μPD4021BC
IC19	IC	μPD4021BC
IC20	IC	LC4011BM
IC21	IC	NJM4558M
IC22	IC	LC4081BM
IC23	IC	NJM4558M
IC24	IC	TC74HC4538F
IC25	IC	μPD4520BG
IC26	IC	μPD4040BG
IC27	IC	μA78L05AWC
IC28	IC	TA78L005AP
IC29	IC	GP1F01D
IC30	IC	LC4069UBM
IC31	IC	LC4013BM
IC32	IC	μPD4520BG
IC33	IC	LC4081BM
IC34	IC	μPD4040BG
IC35	IC	LC4081BM
IC36	IC	LC4081BM
IC37	IC	μPD4094BG
IC38	IC	LC4013BM
Q1	Transistor	2SC2712 Y
Q2	Transistor	2SA1162 Y
Q3	Transistor	2SA1162 Y
Q4	FET	2SJ106 GR
Q5	Transistor	RN2404
Q6	Transistor	RN2404
Q7	FET	2SJ106 GR
Q8	Transistor	2SC2712 Y
Q9	Transistor	2SC2712 Y
Q10	Transistor	2SC2712 Y
Q11	Transistor	2SC2712 Y
Q12	Transistor	RN1404
Q13	Transistor	RN2404
Q14	Transistor	2SD999 CK
D1	Diode	1SS190
D2	Diode	1SS190
D3	Diode	1SS190

[LOGIC C UNIT]

REF. NO.	DESCRIPTION	PART NO.	
D4	Diode	1SS190	
D5	Zener	RD5.6M B2	
D6	Zener	RD5.6M B2	
D7	Diode	1SS153	
D8	Zener	RD9.1M B2	
D9	Diode	1N4002	
D10	Diode	1SS190	
D11	Diode	1SS181	
X1	Crystal	CR203	
R1	Chip	47kΩ	MCR10
R2	Chip	56Ω	MCR10
R3	Chip	10kΩ	MCR10
R4	Chip	10kΩ	MCR10
R5	Chip	47kΩ	MCR10
R6	Chip	15kΩ	MCR10
R7	Chip	68kΩ	MCR10
R8	Chip	47kΩ	MCR10
R9	Chip	15kΩ	MCR10
R10	Chip	68kΩ	MCR10
R11	Chip	100kΩ	MCR10
R12	Chip	100kΩ	MCR10
R13	Chip	1MΩ	MCR10
R14	Chip	120kΩ	MCR10
R15	Chip	1MΩ	MCR10
R16	Chip	120kΩ	MCR10
R17	Chip	10kΩ	MCR10
R18	Chip	10kΩ	MCR10
R19	Chip	4.7kΩ	MCR10
R20	Chip	10kΩ	MCR10
R21	Chip	10kΩ	MCR10
R22	Chip	4.7kΩ	MCR10
R23	Chip	100Ω	MCR10
R24	Chip	100kΩ	MCR10
R25	Chip	100kΩ	MCR10
R26	Chip	56kΩ	MCR10
R27	Chip	56kΩ	MCR10
R28	Chip	100kΩ	MCR10
R29	Chip	56kΩ	MCR10
R30	Chip	56kΩ	MCR10
R31	Chip	100kΩ	MCR10
R32	Chip	27kΩ	MCR10
R33	Chip	27kΩ	MCR10
R34	Chip	10kΩ	MCR10
R35	Chip	10kΩ	MCR10
R36	Chip	10kΩ	MCR10
R37	Chip	10kΩ	MCR10
R38	Chip	10kΩ	MCR10
R39	Chip	10kΩ	MCR10
R40	Chip	100Ω	MCR10
R41	Chip	56Ω	MCR10
R42	Chip	47kΩ	MCR10
R43	Chip	47kΩ	MCR10
R44	Chip	33kΩ	MCR10
R45	Chip	33kΩ	MCR10
R46	Chip	33kΩ	MCR10
R47	Chip	33kΩ	MCR10
R48	Chip	33kΩ	MCR10
R49	Chip	33kΩ	MCR10
R50	Chip	10kΩ	MCR10
R51	Chip	150kΩ	MCR10
R52	Chip	100kΩ	MCR10
R53	Chip	220kΩ	MCR10
R54	Chip	100kΩ	MCR10
R55	Chip	220kΩ	MCR10
R56	Chip	100kΩ	MCR10
R57	Chip	220kΩ	MCR10
R58	Chip	100kΩ	MCR10
R59	Chip	220kΩ	MCR10
R60	Chip	220kΩ	MCR10
R61	Chip	220kΩ	MCR10
R62	Chip	100kΩ	MCR10

[LOGIC C UNIT]

REF. NO.	DESCRIPTION	PART NO.	
R63	Chip	220kΩ	MCR10
R64	Chip	100kΩ	MCR10
R65	Chip	220kΩ	MCR10
R66	Chip	100kΩ	MCR10
R67	Chip	220kΩ	MCR10
R68	Chip	220kΩ	MCR10
R69	Chip	100Ω	MCR10
R70	Chip	47kΩ	MCR10
R71	Chip	22kΩ	MCR10
R72	Chip	470kΩ	MCR10
R73	Chip	2.2MΩ	MCR10
R74	Chip	56kΩ	MCR10
R75	Chip	18kΩ	MCR10
R76	Chip	33kΩ	MCR10
R77	Chip	47kΩ	MCR10
R78	Chip	22kΩ	MCR10
R79	Chip	470kΩ	MCR10
R80	Chip	2.2MΩ	MCR10
R81	Chip	56kΩ	MCR10
R82	Chip	18kΩ	MCR10
R83	Chip	33kΩ	MCR10
R84	Chip	100kΩ	MCR10
R85	Chip	22kΩ	MCR10
R86	Chip	220Ω	MCR10
R87	Chip	10kΩ	MCR10
R88	Chip	2.2kΩ	MCR10
R89	Resistor	10Ω	R20
R90	Chip	220kΩ	MCR10
R91	Chip	270kΩ	MCR10
R92	Chip	22kΩ	MCR10
R93	Chip	22kΩ	MCR10
R94	Chip	47kΩ	MCR10
R95	Resistor	470kΩ	R20
R97	Chip	15kΩ	MCR10
R98	Chip	15kΩ	MCR10
R99	Chip	6.8kΩ	MCR10
R100	Chip	6.8kΩ	MCR10
R101	Chip	10kΩ	MCR10
R102	Chip	10kΩ	MCR10
R103	Chip	10kΩ	MCR10
R104	Chip	10kΩ	MCR10
R105	Trimmer	10kΩ	RH0521C14J08A
R106	Chip	100kΩ	MCR10
R107	Chip	100kΩ	MCR10
R108	Chip	33kΩ	MCR10
R109	Chip	33kΩ	MCR10
R110	Chip	33kΩ	MCR10
C1	Monolithic	15pF	GRM40
C2	Monolithic	15pF	GRM40
C3	Tantalum	4.7μF	10V SV
C4	Monolithic	0.1μF	GRM40 F
C5	Electrolytic	100μF	6.3V MS5
C6	Monolithic	150pF	GRM40CH
C7	Tantalum	0.47μF	25V SV
C8	Monolithic	150pF	GRM40CH
C9	Tantalum	0.47μF	25V SV
C10	Tantalum	4.7μF	10V SV
C11	Tantalum	1μF	16V SV
C12	Tantalum	4.7μF	10V SV
C13	Tantalum	1μF	16V SV
C14	Monolithic	0.001μF	GRM40
C15	Monolithic	0.001μF	GRM40
C16	Tantalum	1μF	16V SV
C17	Tantalum	4.7μF	10V SV
C18	Tantalum	1μF	16V SV
C19	Tantalum	10μF	16V SV
C20	Monolithic	270pF	GRM40
C21	Monolithic	0.001μF	GRM40
C22	Tantalum	1μF	16V SV
C23	Monolithic	0.01μF	GRM40 F
C24	Tantalum	4.7μF	10V SV
C25	Monolithic	270pF	GRM40
C26	Monolithic	0.001μF	GRM40

[LOGIC C UNIT]

REF. NO.	DESCRIPTION	PART NO.
C27	Tantalum	1μF 16V SV
C28	Monolithic	0.01μF GRM40 F
C29	Tantalum	10μF 16V SV
C30	Monolithic	0.001μF GRM40
C31	Monolithic	0.01μF GRM40 F
C32	Monolithic	0.01μF GRM40 F
C33	Monolithic	0.001μF GRM40
C34	Monolithic	0.01μF GRM40 F
C35	Monolithic	0.01μF GRM40 F
C36	Tantalum	10μF 16V SV
C37	Tantalum	3.3μF 6.3V SV
C38	Tantalum	1μF 16V SV
C39	Monolithic	GRM40 B 182K 50PT
C40	Monolithic	0.0047μF GRM40
C41	Monolithic	270pF GRM40
C42	Monolithic	GRM40 B 182K 50PT
C43	Monolithic	0.0047μF GRM40
C44	Monolithic	270pF GRM40
C45	Tantalum	10μF 16V SV
C46	Monolithic	220pF GRM40CH
C47	Monolithic	220pF GRM40CH
C48	Tantalum	3.3μF 6.3V SV
C49	Monolithic	47pF GRM40
C50	Monolithic	47pF GRM40
C51	Tantalum	0.1μF 35V SV
C52	Monolithic	47pF GRM40
C53	Monolithic	47pF GRM40
C54	Tantalum	0.1μF 35V SV
C55	Tantalum	10μF 16V SV
C56	Monolithic	0.1μF GRM40 F
C57	Monolithic	0.1μF GRM40 F
C58	Electrolytic	100μF 6.3V MS5
C59	Tantalum	1μF 16V SV
C60	Monolithic	0.1μF GRM40 F
C61	Monolithic	0.1μF GRM40 F
C62	Tantalum	1μF 16V SV
C63	Monolithic	0.01μF GRM40F
C64	Monolithic	0.01μF GRM40F
C65	Tantalum	3.3μF 6.3V SV
C66	Monolithic	0.1μF GRM40 F
C67	Tantalum	4.7μF 10V SV
C68	Monolithic	0.1μF GRM40 F
C69	Electrolytic	470μF 16V MS16
C70	Monolithic	0.001μF GRM40
C71	Monolithic	0.001μF GRM40
C72	Monolithic	0.001μF GRM40
C73	Monolithic	0.001μF GRM40
C74	Monolithic	0.1μF GRM40 F
C75	Monolithic	0.1μF GRM40 F
C76	Monolithic	0.1μF GRM40 F
C77	Monolithic	0.1μF GRM40 F
C78	Monolithic	0.1μF GRM40 F
C79	Monolithic	0.1μF GRM40 F
C80	Monolithic	0.1μF GRM40 F
C81	Monolithic	0.1μF GRM40 F
C82	Monolithic	0.1μF GRM40 F
C83	Monolithic	0.1μF GRM40 F
C84	Monolithic	0.1μF GRM40 F
C85	Monolithic	0.1μF GRM40 F
C87	Monolithic	0.1μF GRM40 F
C88	Monolithic	0.1μF GRM40 F
C89	Monolithic	0.1μF GRM40 F
C90	Monolithic	0.1μF GRM40 F
C91	Monolithic	0.1μF GRM40 F
C92	Monolithic	0.1μF GRM40 F
C93	Monolithic	0.1μF GRM40 F
C94	Monolithic	0.1μF GRM40 F
C95	Monolithic	0.1μF GRM40 F
C96	Monolithic	0.1μF GRM40 F
C97	Monolithic	0.1μF GRM40 F
C98	Monolithic	0.1μF GRM40 F
C99	Monolithic	0.1μF GRM40 F
C100	Monolithic	0.1μF GRM40 F
C101	Monolithic	0.1μF GRM40 F
C102	Monolithic	0.1μF GRM40 F

[LOGIC C UNIT]

REF. NO.	DESCRIPTION	PART NO.
C103	Monolithic	0.1μF GRM40 F
C104	Monolithic	0.1μF GRM40 F
C105	Monolithic	0.1μF GRM40 F
C106	Monolithic	0.1μF GRM40 F
C107	Monolithic	0.1μF GRM40 F
C108	Tantalum	1μF 16V SV
C109	Tantalum	10μF 16V SV
C110	Tantalum	10μF 16V SV
C111	Monolithic	GRM40 B 182K 50PT
C112	Monolithic	0.0047μF GRM40
C113	Monolithic	270pF GRM40
C114	Tantalum	10μF 16V SV
J1	Connector	3024-15AH
J2	Connector	SB15P-HVQ-24
J3	Connector	PI28A15M
J4	Connector	LR-02-2V
J5	Connector	LR-02-2V
J6	Connector	LR-02-2V
J7	Connector	LR-02-2V
J8	Connector	LR-02-2V
J9	Connector	LR-02-2V
J10	Connector	B07B-EH-S
DS1	LED	GL-9PR4
EP1	DC Wire	OPC-182
EP2	P.C. Board	B-1313C
EP3	P.C. Board	B-1455A
W13	Chip	MCR10-JPW

SERVICE MANUAL

COMMON

This part of the service manual covers information common to all band units.
For information specific to a band unit, refer to its service manual.

TABLE OF CONTENTS

SECTION 1 REPAIR NOTE

CAUTION: The following BAND UNITS should be cooled during transmissions of long duration.

UX-29H, UX-49A/E, UX-129A/E

1. Each BAND UNIT must be serviced after completing the adjustment of IC-900A/E SYSTEM. (See page 1-6-1~3.)

2. Detach the power cord and turn OFF the POWER SWITCH before performing any work on the transceiver.

3. DO NOT short circuit components while making adjustments.

4. Use an insulated tuning tool for all adjustments.

5. DO NOT force any of the variable components. Turn them slowly and smoothly.

6. Follow the instructions exactly. If an indicated result is not obtained, repeat the instruction until the correct result is obtained.

7. Check the condition of connectors, solder joints and screws when adjustments are complete. Make sure components DO NOT touch each other.

8. Confirm defective operation of the transceiver first when checking an out-of-service unit. Verify that external sources DO NOT cause the problem.

9. Use the correct tools and test equipment.

10. Remove the transceiver case as shown in SECTION 2.

11. For transmission problems, attach a dummy load to the ANTENNA CONNECTOR. For reception problems, attach an antenna or signal generator to the ANTENNA CONNECTOR. DO NOT transmit into the signal generator.

12. Recheck for the suspected malfunction with the POWER SWITCH ON.

13. Check the defective circuit. Measure the DC voltages of the collector, base and emitter of each transistor.

14. There are different versions of this transceiver. Adjustment procedures and results may differ for each version. Be sure to follow the correct procedure for the transceiver you adjust.

SECTION 2 MECHANICAL PARTS AND DISASSEMBLY

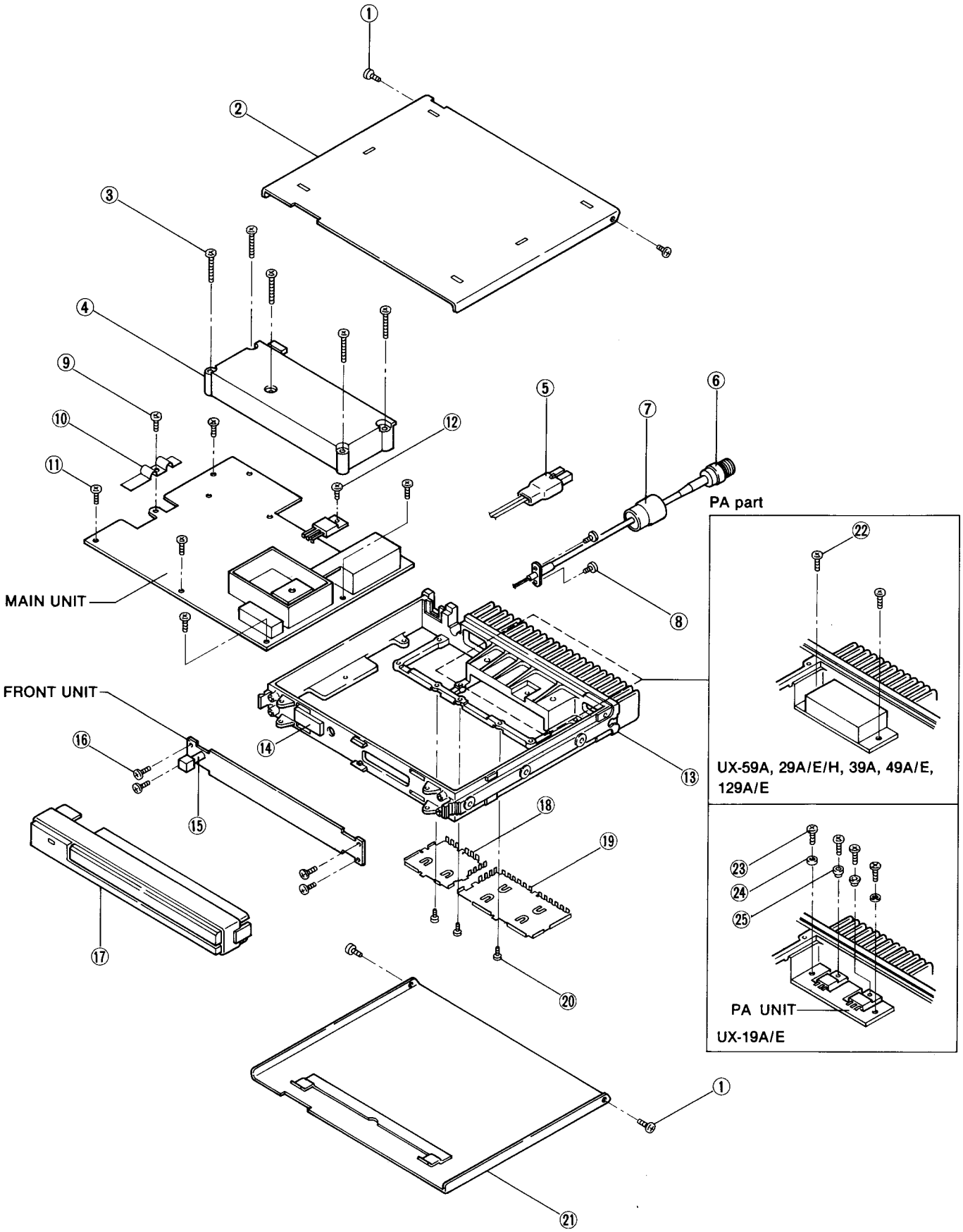

These diagrams show the UX-59A model.

NUMBER IN DIAGRAM	DESCRIPTION	ORDERING NUMBER	QTY.
①	BH M2.6×4 ZK*	8810001860	4
②	Top cover (A)	8110001830	1
③	Set screw (A) 3×20*	8810003240	5 <6>
④	PA shield-1 (UX-19A/E, 59A, 29A/E/H, 39A, 49A/E) PA shield (A) (UX-129A/E)	8010006180 8010006730	1
⑤	DC power cable OPC-169	8900001830	1
⑥	Antenna connector cable OPC-186 (UX-19A/E, 59A, 29A/E/H, 39A) (UX-49A/E) (UX-129A/E)	8900001890 8900001900 8900001980	1
⑦	M-type cap (UX-19A/E, 59A, 29A/E/H, 39A) N-type cap-1 (UX-49A/E, 129A/E)	6950000040 6950000030	1
⑧	ICOM screw (A) 6 (UX-19A/E, 59A, 29A/E/H, 39A, 49A/E)* PH M3×6 BSBM Ni (UX-129A/E)*	8810003670 8810001910	2
⑨	Set screw (A) 3×8	8810003170	1 <2>
⑩	Transistor holding plate (UX-19A/E, 59A, 29A/E/H, 39A, 49A/E) (UX-129A/E)	8930010720 8930011490	1
⑪	Set screw (A) 3×6*	8810003160	5 <2>
⑫	ICOM screw (A) 6*	8810003660	1
⑬	175 chassis-1	8010006170	1
⑭	Sponge (AO)	8930008060	1
⑮	Insulating pipe (A)	8930010950	1
⑯	Set screw (A) 2.6×5*	8810003960	4
⑰	Front panel (D) (UX-19E) (E) (UX-19A) (G) (UX-59A) (I) (UX-29E) (J) (UX-29A) (K) (UX-29H) (L) (UX-39A) (O) (UX-49A U.S.A.) (P) (UX-49E) (T) (UX-49A Australia, Asia) (R) (UX-129A) (S) (UX-129E)	8210002670 8210002660 8210002750 8210002560 8210002570 8210002600 8210002790 8210002590 8210002580 8210002630 8210002690 8210002700	1
⑱	Filter shielding plate	8510004440	1
⑲	PA shielding plate-2	8510004452	1
⑳	PH M2.6×8 (UX-19A/E, 59A, 29A/E/H, 39A, 49A/E)* PH M2.6×8 Ni (UX-129A/E)*	8810000160 8810001850	3 <5>
㉑	Bottom cover (B)	8110001840	1
㉒	Set screw (A) 3×8 (UX-59A, 29A/E/H, 39A, 49A/E)* PH M3×8 Ni (UX-129A/E)*	8810003170 8810001920	2
㉓	Set screw (A) 3×8 (UX-19A/E)*	8810003170	4
㉔	Spacer (Q) (UX-19A/E)	8930000450	2
㉕	Insulating bush B-312 (UX-19A/E)	6910000310	2

∗**Screw head style** BH: Button head PH: Pan head
Set screw (A) Pan head screw with spring washer

NOTE: Angle bracketed values indicate a quantity of the UX-129A/E BAND UNIT.

SECTION 3 FRONT UNIT

3-1 INSIDE VIEWS

• COMPONENT SIDE

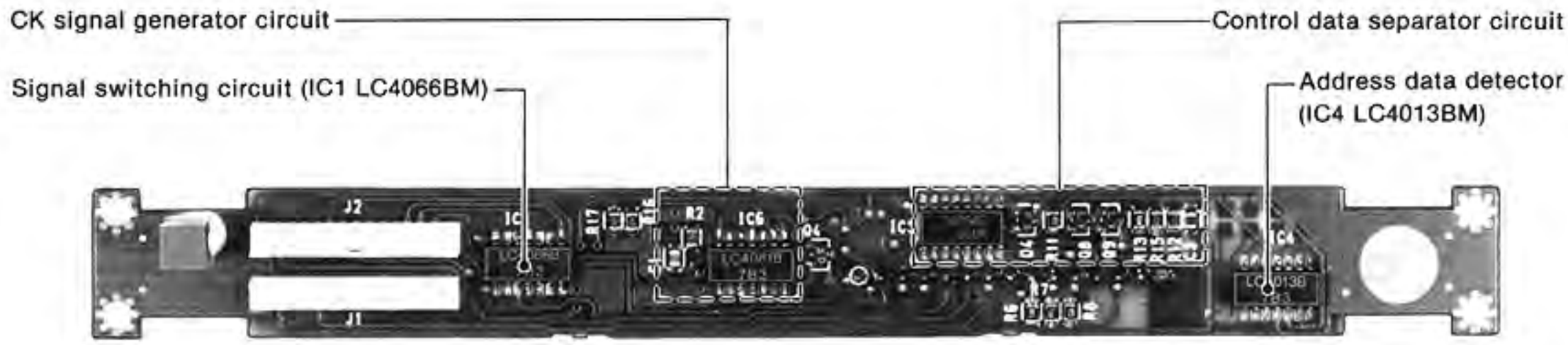

• FOIL SIDE

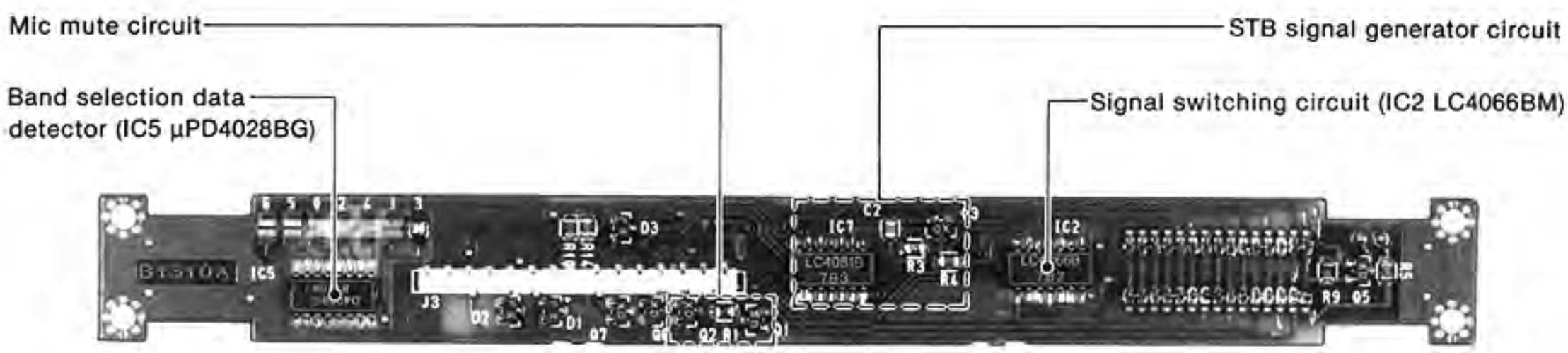

These pictures show the UX-29A/E/H model.

3-2 BOARD LAYOUTS

LC4066BM IC1, IC2
(QUAD BILATERAL SWITCHING)

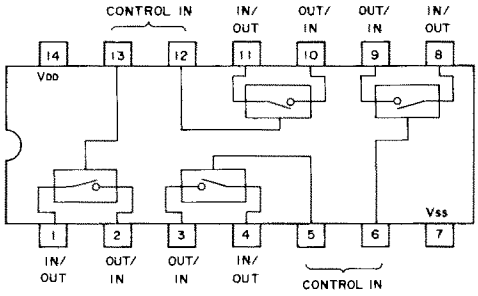

μPD4094BG IC3
(8-STAGE SHIFT AND STORE BUS REGISTER)

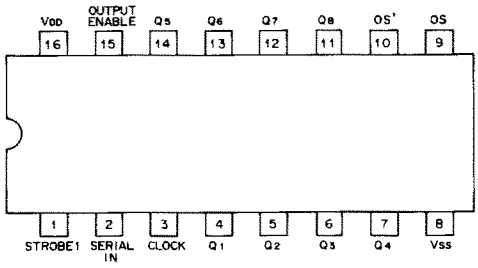

LC4013BM IC4
(DUAL D-TYPE FLIP FLOP)

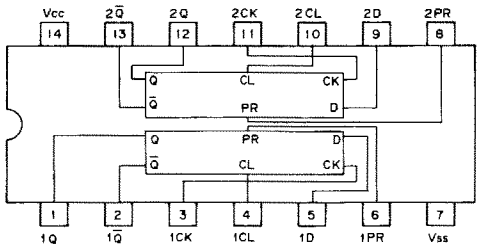

μPD4028BG IC5
(BCD TO DECIMAL DECODER)

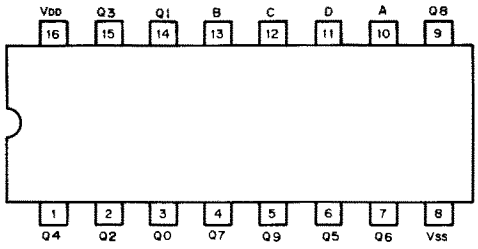

LC4081BM IC6, IC7
(QUAD 2-INPUT POSITIVE AND GATE)

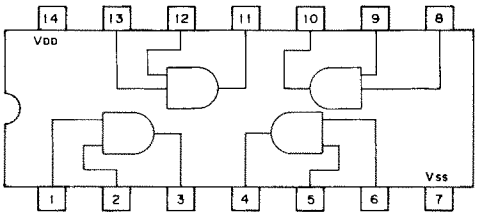

• FRONT UNIT

COMPONENT SIDE

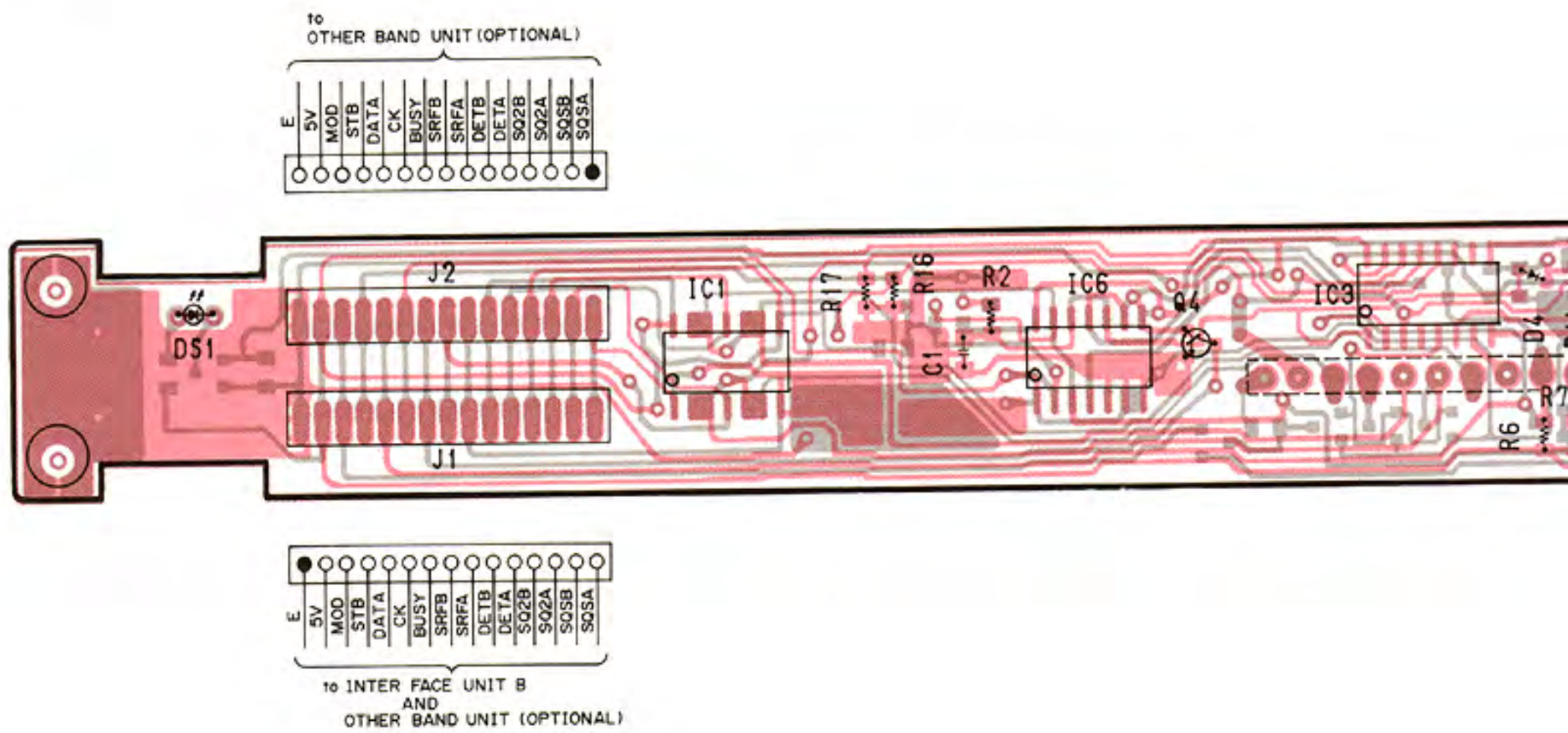

FOIL SIDE

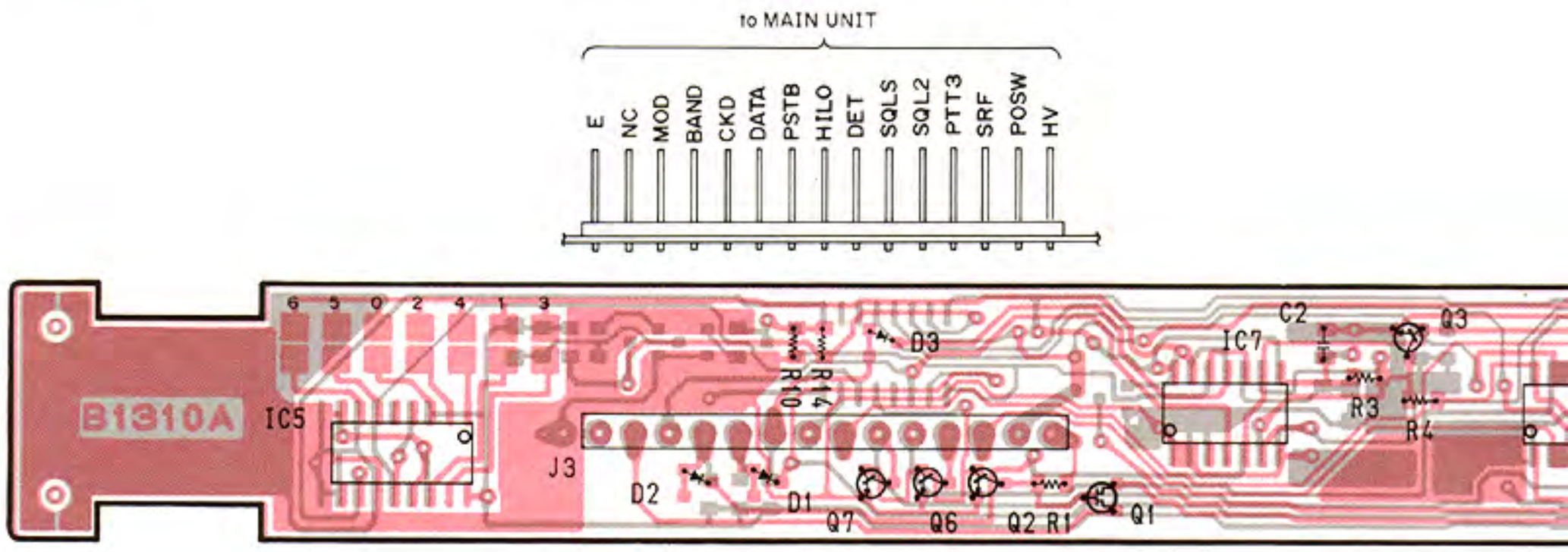

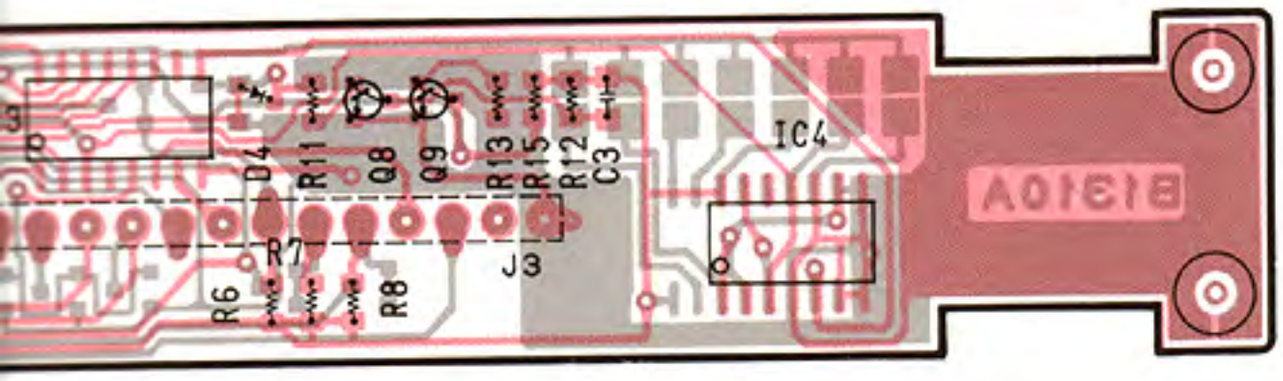

2SJ106 GR
Q1

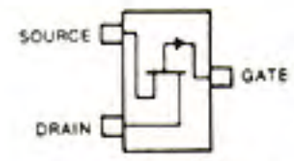

Symbol : VG

RN1404
Q2, Q3, Q4
Q5, Q6, Q7

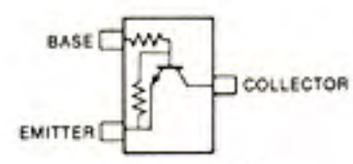

Symbol : XD

2SC2712 Y
Q8, Q9

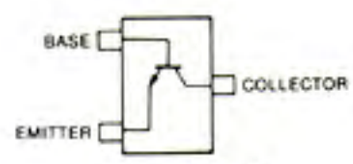

Symbol : LY

1SS193
D1, D2, D3
D4

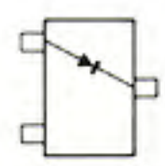

Symbol : F3

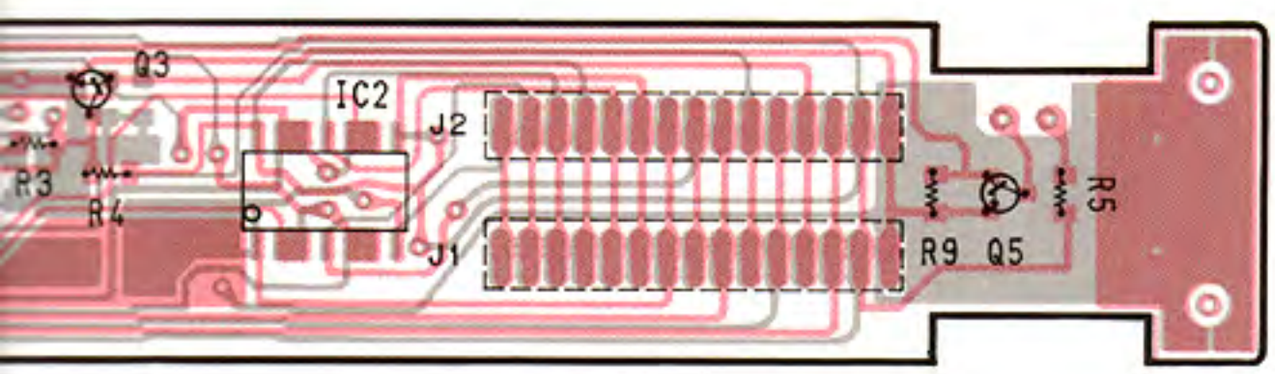

3-3 VOLTAGE DIAGRAM

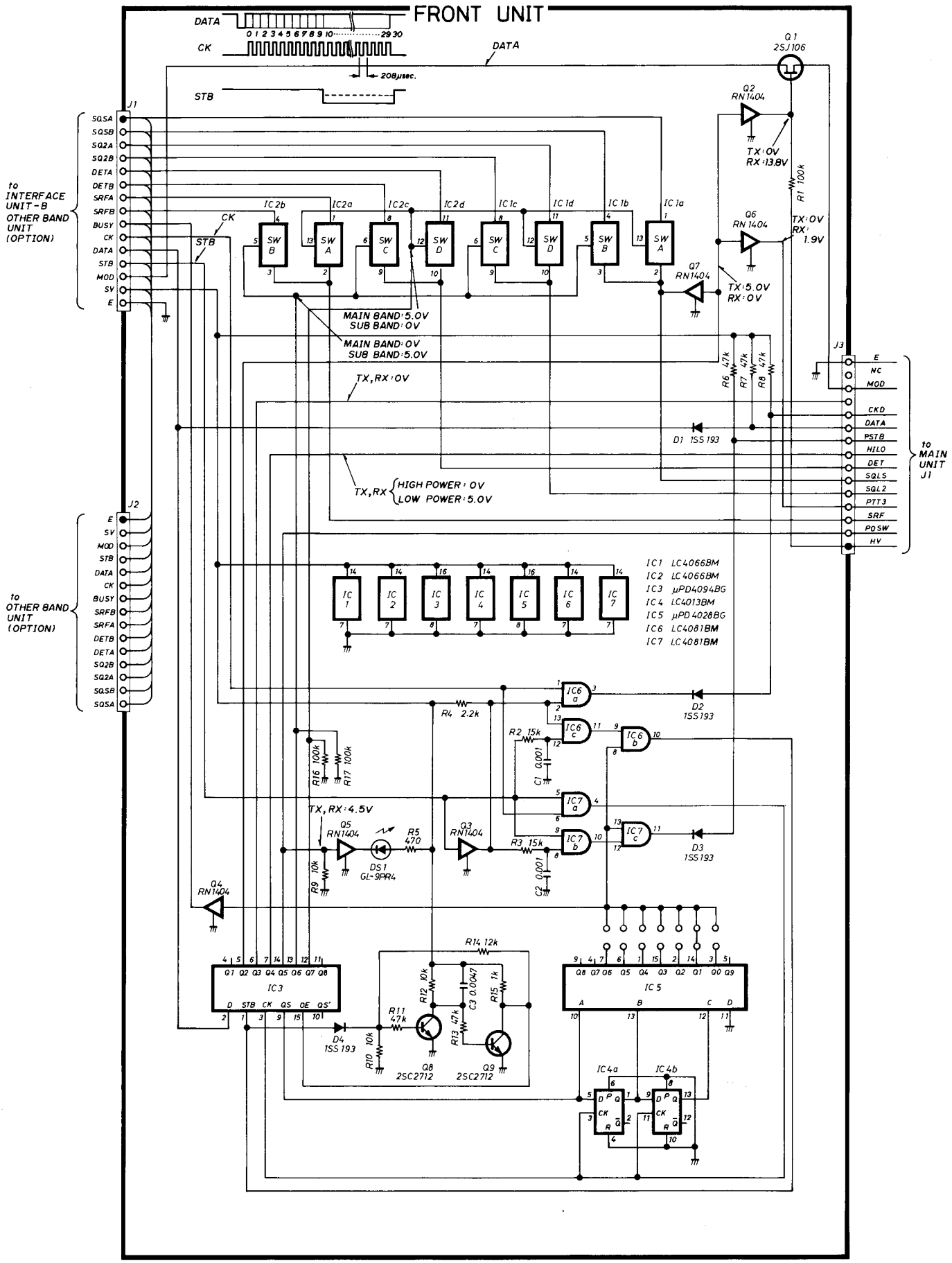

3-4 PARTS LIST

[FRONT UNIT]

REF. NO.	DESCRIPTION	PART NO.	
IC1	IC	LC4066BM	
IC2	IC	LC4066BM	
IC3	IC	μPD4094BG	
IC4	IC	LC4013BM	
IC5	IC	μPD4028BG	
IC6	IC	LC4081BM	
IC7	IC	LC4081BM	
Q1	FET	2SJ106 GR	
Q2	Transistor	RN1404	
Q3	Transistor	RN1404	
Q4	Transistor	RN1404	
Q5	Transistor	RN1404	
Q6	Transistor	RN1404	
Q7	Transistor	RN1404	
Q8	Transistor	2SC2712 Y	
Q9	Transistor	2SC2712 Y	
D1	Diode	1SS193	
D2	Diode	1SS193	
D3	Diode	1SS193	
D4	Diode	1SS193	
R1	Chip	100kΩ	MCR10
R2	Chip	15kΩ	MCR10
R3	Chip	15kΩ	MCR10
R4	Chip	2.2kΩ	MCR10
R5	Chip	470Ω	MCR10
R6	Chip	47kΩ	MCR10
R7	Chip	47kΩ	MCR10
R8	Chip	47kΩ	MCR10
R9	Chip	10kΩ	MCR10
R10	Chip	10kΩ	MCR10
R11	Chip	47kΩ	MCR10
R12	Chip	10kΩ	MCR10
R13	Chip	47kΩ	MCR10
R14	Chip	12kΩ	MCR10
R15	Chip	1kΩ	MCR10
R16	Chip	100kΩ	MCR10
R17	Chip	100kΩ	MCR10
C1	Monolithic	0.001μF	GRM40
C2	Monolithic	0.001μF	GRM40
C3	Monolithic	0.0047μF	GRM40
J1	Connector	PI28A15M	
J2	Connector	PI28A15M	
J3	Connector	SB15P-HVQ-24	
DS1	LED	GL-9PR4	
EP1	P.C. Board	B-1310A	

SERVICE MANUAL

UX-19A
UX-19E

This part of the service manual covers all service information of the **UX-19A/E** 28MHz BAND UNIT except for information common to all band units.
Refer to COMMON for information related to repair, mechanical parts, disassembly and FRONT UNIT.

TABLE OF CONTENTS

SECTION 1 SPECIFICATIONS

GENERAL

• Frequency coverage	:	28.00MHz~30.00MHz
• Antenna impedance	:	50Ω unbalanced
• Frequency stability	:	±10ppm (−10°C~+60°C) (+14°F~+140°F)
• Power supply requirement	:	13.8V DC±15% (Negative ground)
• Current drain (at 13.8V DC)	:	Transmit (HIGH) 2.8A (LOW) 1.5A Receive 250mA
• Dimensions	:	177(W)×25(H)×191(D) mm 7.0(W)×1.0(H)×7.5(D) inches (Projections not included)
• Weight	:	1.1kg (2.4 lbs.)
• Usable temperature range	:	−10°C~+60°C (+14°F~+140°F)

TRANSMITTER

• RF output power	:	HIGH 10W LOW 1W
• Emission mode	:	F3 F2 (During "digital code squelch" operation with UT-28)
• Modulation system	:	Variable reactance frequency modulation
• Max. frequency deviation	:	±5.0kHz
• Spurious emission	:	More than 60dB below carrier output power

RECEIVER

• Receiver system	:	Double-conversion superheterodyne
• Modulation acceptance	:	F3
• Intermediate frequencies	:	1st 10.695MHz 2nd 455kHz
• Sensitivity	:	Less than 0.18μV for 12dB SINAD
• Squelch sensitivity	:	Less than 0.13μV
• Selectivity	:	12.5kHz/−6dB 25.0kHz/−60dB
• Spurious and image rejection	:	More than 60dB

※ All stated specifications are subject to change without notice or obligation.

SECTION 2 INSIDE VIEWS

• MAIN UNIT

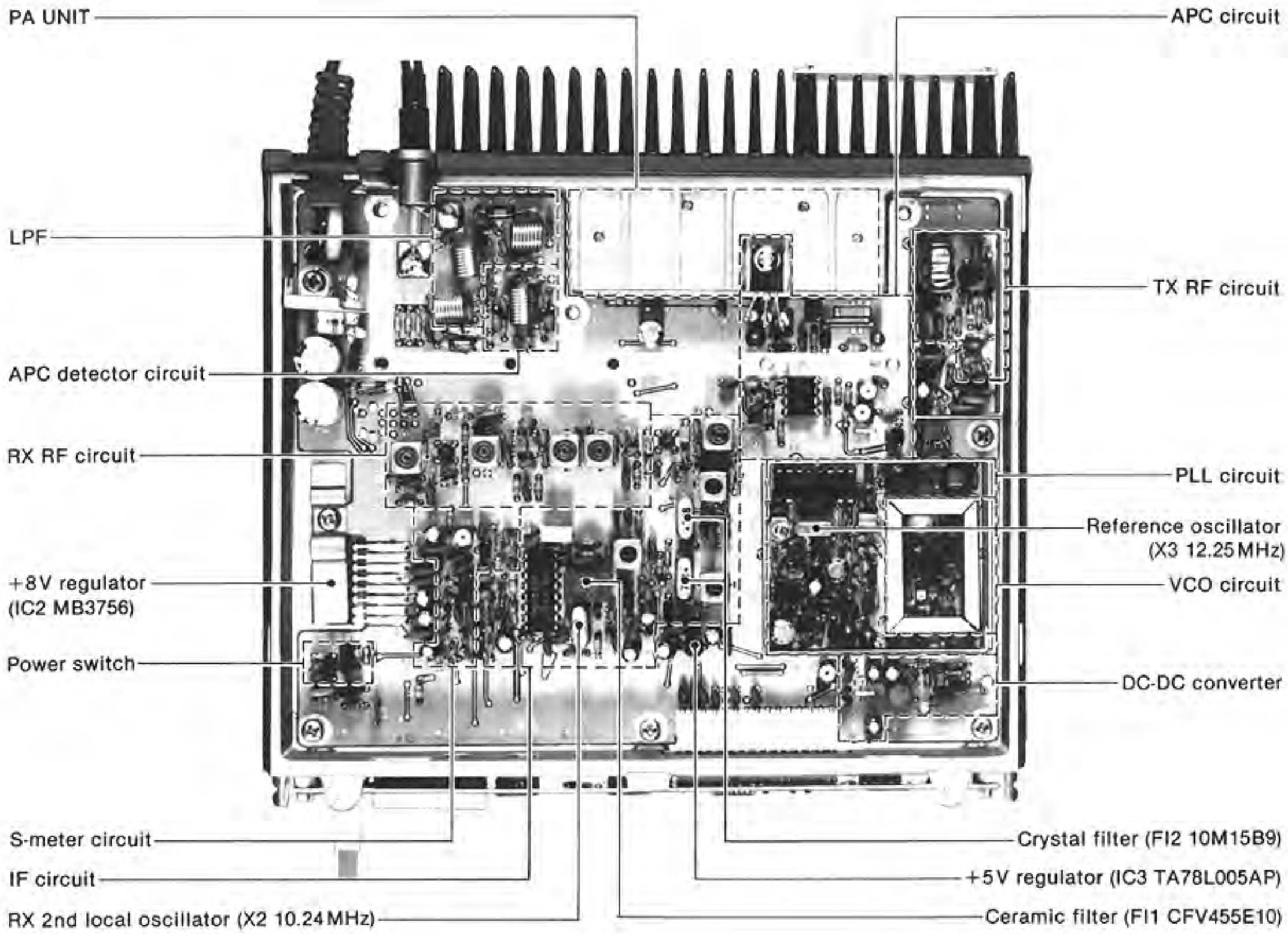

• PA UNIT

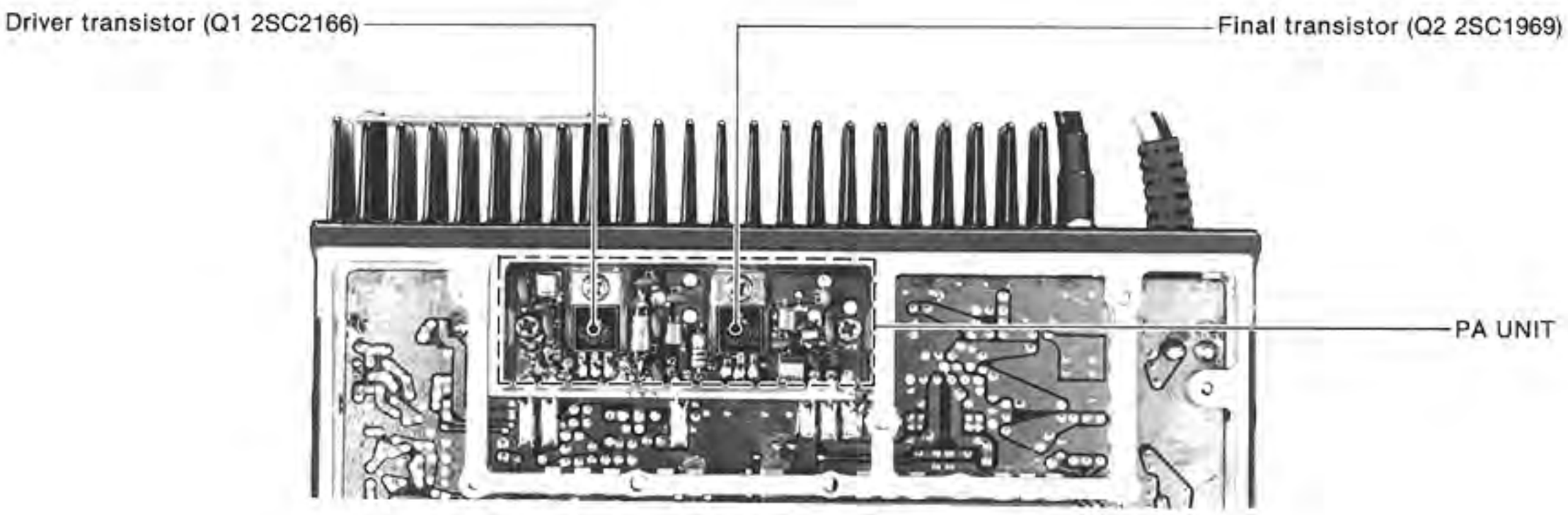

SECTION 3 BLOCK DIAGRAM

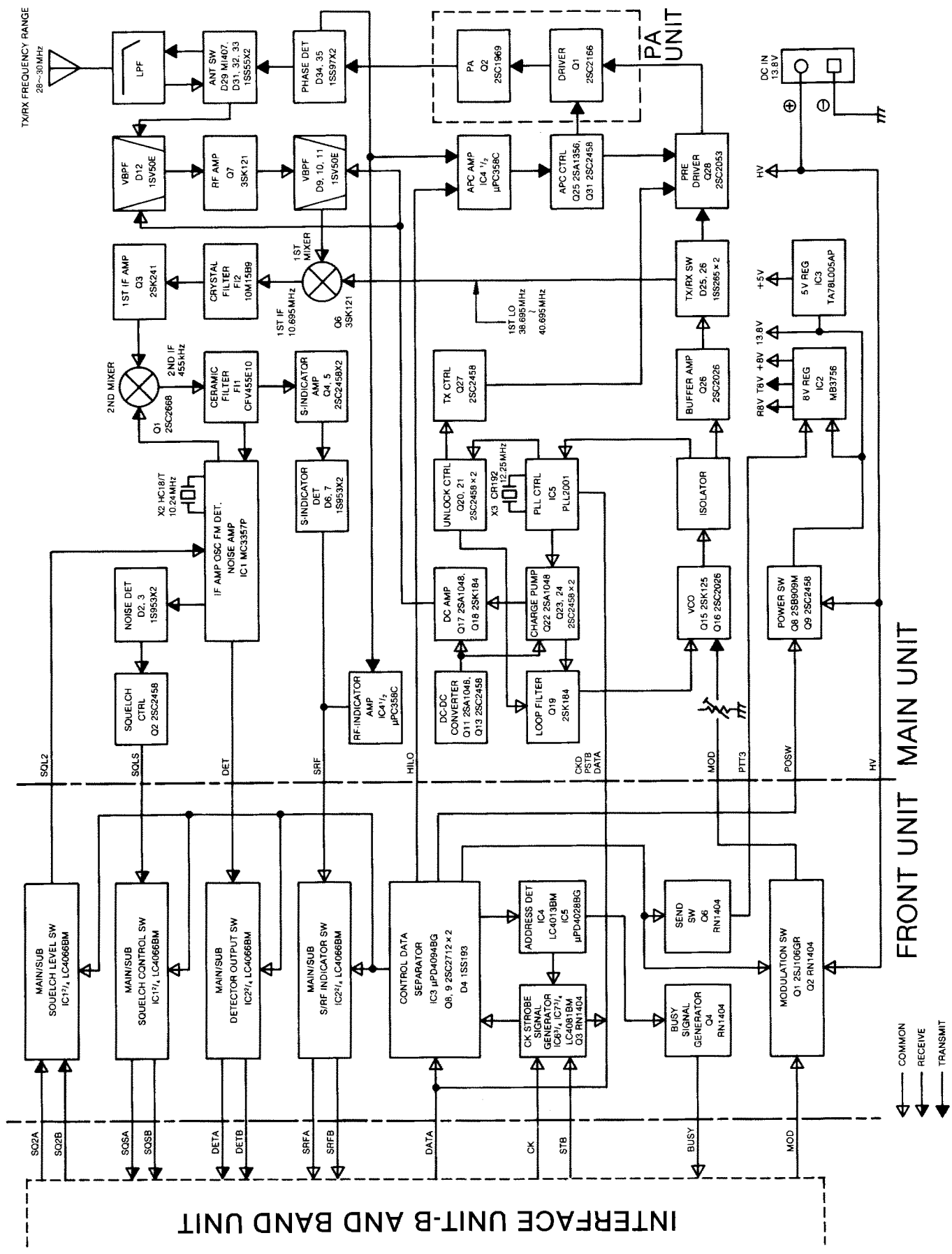

SECTION 4 CIRCUIT DESCRIPTION

4-1 CONSTRUCTION

UX-19A/E consists of the MAIN UNIT and the FRONT UNIT.

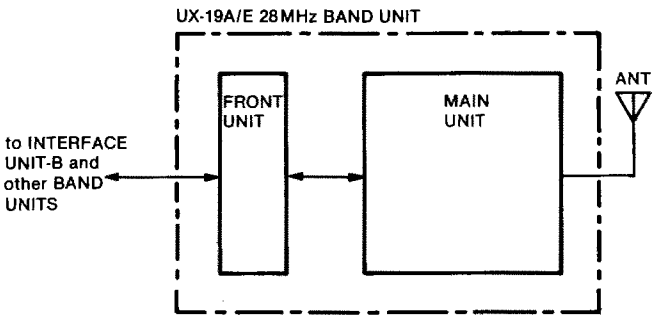

Fig. 1

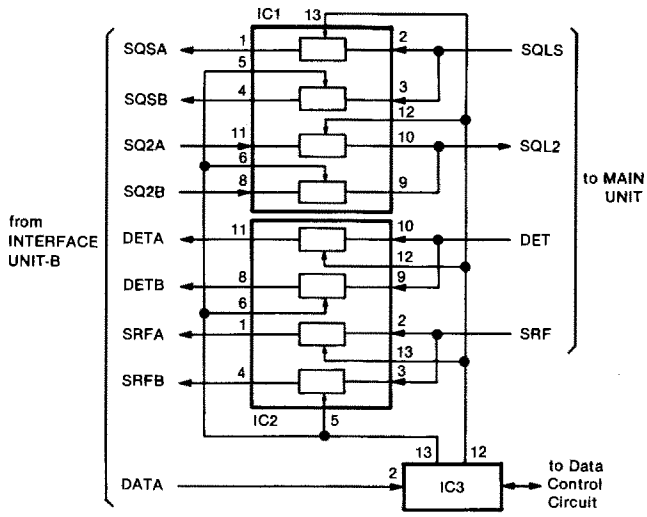

Fig. 2

4-2 FRONT UNIT

4-2-1 SIGNAL SWITCHING CIRCUIT

The serial data signals from INTERFACE UNIT-B are fed to IC3. UX-19A/E operation as a main band transceiver or a sub band receiver is determined by the commands of the serial data signals.

When pin 12 of IC3 outputs "HIGH," the analog switches (IC1, IC2) are controlled so that UX-19A/E operates as a main band transceiver.

When pin 13 of IC3 outputs "HIGH," the analog switches are controlled so that UX-19A/E operates as a sub band receiver.

4-2-2 DATA CONTROL CIRCUIT

To get the address control bits from the serial data signals, IC6 and IC7 create CK and STB signals. IC4 applies the band selection data to IC5. Then pin 14 of IC5 outputs data for 28MHz band selection.

For error-free operation, Q8 and Q9 operate as follows. When the power switch is turned ON, Q8 and Q9 keep the output impedance of IC3 pin 15 high until the FRONT UNIT receives the first STB signal.

4-2-3 MIC MUTE CIRCUIT

While receiving, Q1 and Q2 mute the microphone signals (MOD signal).

4-3 POWER SUPPLY CIRCUIT (MAIN UNIT)

The power supply circuit consists of Q8, Q9, IC2 and IC3. When UX-19A/E is selected with the REMOTE CONTROLLER, the power switch signal (POSW signal) is applied from the FRONT UNIT and 13.8V is applied to IC2 and IC3 via Q8.

IC2 is an 8V voltage regulator which outputs +8V and either R8V or T8V. IC2 is controlled by the PTT3 line input. IC3 outputs +5V to the PLL circuits.

POWER SUPPLY CIRCUIT

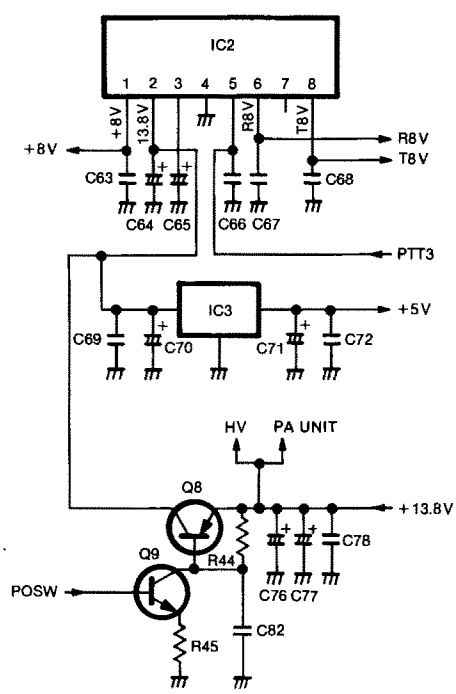

Fig. 3

4-4 RECEIVER CIRCUITS

4-4-1 RF CIRCUIT (MAIN UNIT)

Receive signals enter the MAIN UNIT from the ANTENNA CONNECTOR and pass through a low-pass filter consisting of L29~L31 and other parts, the antenna switching circuit consisting of D31~D33, and the single resonator circuit consisting of L9, C33~C35, and D12. The signals are amplified at RF amplifier Q7 and are fed to the bandpass filter. This bandpass filter employs a 3-stage variable resonator circuit consisting of L8~L6, D9, D10, and D11, and suppresses out-of-band signals.

Diodes D8~D11 are varactor diodes. A voltage from the charge pump passes through the DC amplifier (Q17, Q18), and is applied to varactor diodes (D8~D11) in the bandpass filter. The voltage varies the capacitance of the diodes, thus varying the center frequency of the bandpass filter.

4-4-2 IF CIRCUIT (MAIN UNIT)

After passing through the bandpass filter, signals are fed to the mixer circuit Q6, and are mixed with 1st LO signals from the PLL circuit to produce the 10.695MHz 1st IF signals. 1st IF signals from Q6 pass through the matching coil L4 and a pair of crystal filters (FI2) to suppress out-of-band signals. Then the 1st IF signals pass through the matching coil L3 and are amplified at IF amplifier Q3.

1st IF signals from Q3 are fed to the 2nd mixer circuit, Q1, and are mixed with 2nd LO signals for converting the 1st IF signals to 455kHz 2nd IF signals. IC1 contains the local oscillator, limiter amplifier, and active filter circuits. The 2nd LO circuit and X2 generate 10.24MHz 2nd LO signals.

The 2nd IF signals from Q1 pass through the ceramic filter, FI1, to suppress unwanted signals. They are then amplified at the limiter amplifier section (pin 5 of IC1) and applied to the quadrature detector section (pin 8 of IC1 and ceramic discriminator X1) to demodulate 2nd IF signals to AF signals.

AF signals output from pin 9 on IC1 are applied to the FRONT UNIT as the DET signal.

Signals output from pin 11 on IC1 are rectified by D2 and D3 for conversion to DC voltage and then applied to the FRONT UNIT as the SQLS signal via the squelch control circuit Q2.

A portion of the signals from FI1 is amplified at S-meter amplifier Q4 and Q5, and is detected at the rectifiers D6 and D7. These signals are then applied to the FRONT UNIT as the SRF signal. R32 adjusts the SRF signal level.

2ND IF CIRCUIT

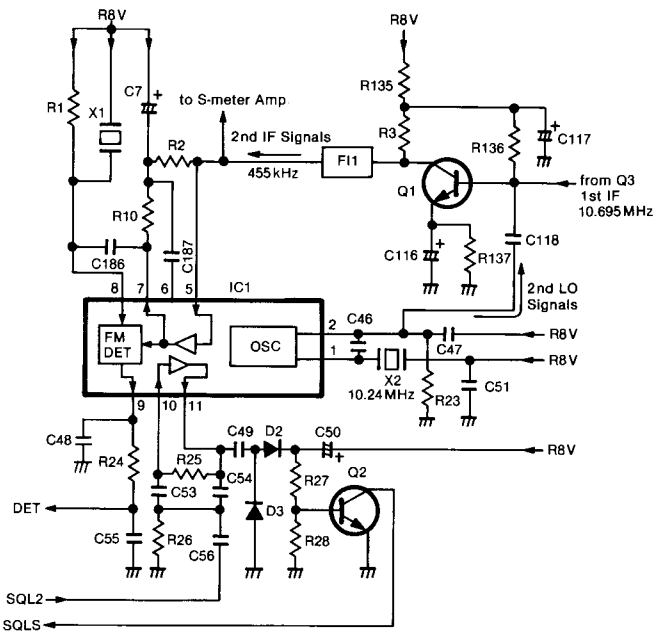

Fig. 4

4-5 PLL CIRCUITS

4-5-1 GENERAL

The PLL circuit is designed in a way that allows the desired frequency to be generated directly from the VCO circuit. The PLL consists of a PLL IC (IC5) and some other circuits. These circuits receive N-data from the CPU (REMOTE CONTROLLER) in order to determine the operating frequency.

N-data is determined by dividing the desired frequency by the reference frequency. The desired frequency is the transmit frequency in transmit mode and the 1st LO frequency in receive mode.

$$\text{N-data} = \frac{\text{Desired frequency}}{\text{Reference frequency}}$$

A reference frequency of 5kHz is produced by X3, IC5 and the divider inside IC5. A signal from the VCO circuit is fed into IC5, and divided N times at IC5.

The divided signal is applied to the phase detector in IC5. Phase detection results in lock voltages being output from pin 5.

Output from pin 5 is fed into a charge pump circuit consisting of Q22 and Q23 and is then applied to the loop filter consisting of R89, R93 and C153. The signal passing through the loop filter is fed to varactor diodes D21 and D22 to control the VCO output frequency.

The DC-DC converter consisting of Q11 and Q13 creates approximately 30V DC from 8V DC to obtain wide range lock voltages for the PLL circuit.

When the PLL circuit is unlocked, IC5 pin 7 is "LOW." Q21 is turned OFF, and Q27 is turned ON. The bias voltage to Q28, the transmit predriver, is cut off, deactivating it—thus preventing the transmission of unwanted signals.

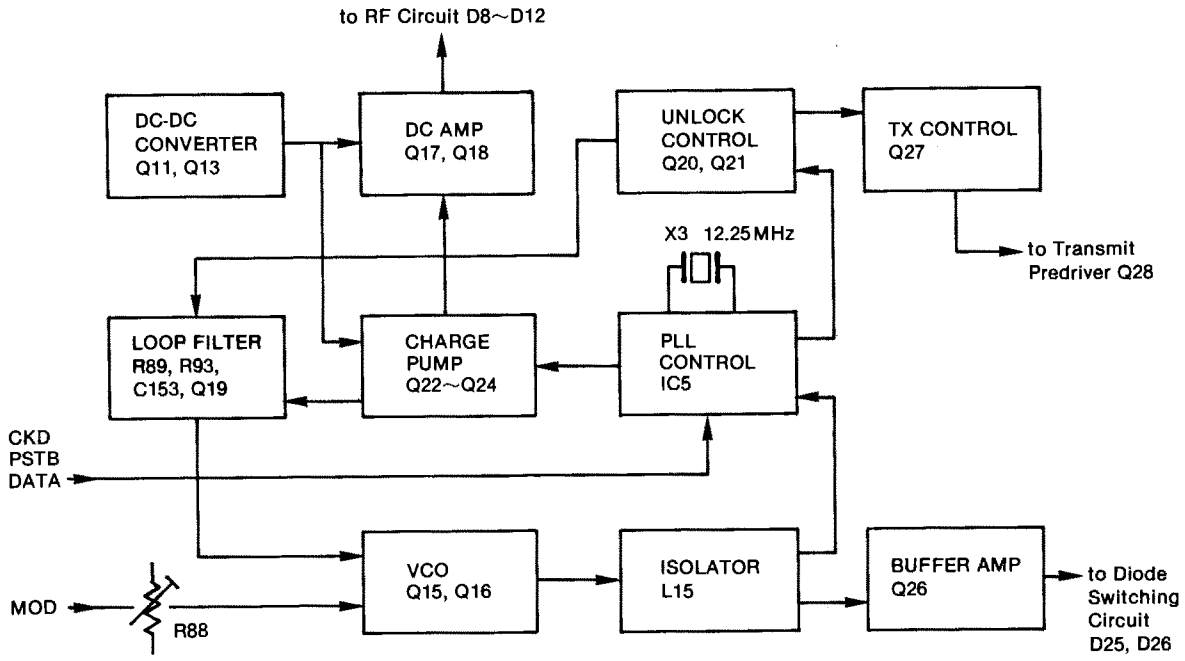

Fig. 5

4-5-2 VCO CIRCUIT (MAIN UNIT)

The VCO, Q15, employs a Hartley oscillator circuit. VCO oscillating signals are controlled by varactor diodes (D21, D22) with PLL lock voltage from the loop filter (R89, R93, C153).

In receive mode, the T8V voltage is "LOW." This turns Q12 and D19 OFF, D21, C99 and C103 for oscillation. In transmit mode, the T8V voltage is "HIGH." This turns Q12 and D19 ON. Thus D22, C85 and C95 shift the free-run frequency lower than the receive frequency.

Modulation signals then change the capacitance of D20 to produce an FM modulation.

The output signal from the VCO circuit is buffer amplified at Q26, and passes through the low-pass filter consisting of C122~C124, L24 and L25.

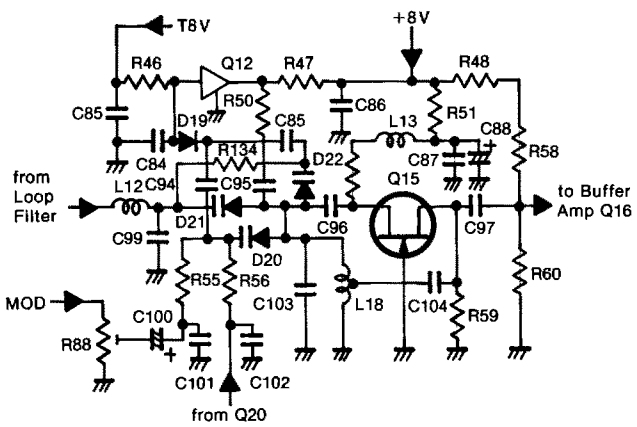

Fig. 6

4-5-3 DIODE SWITCHING CIRCUIT (MAIN UNIT)

The diode switching circuit consists of D25 and D26. While receiving, D25 is turned ON and VCO signals are applied to the 1st mixer circuit Q6. While transmitting, D26 is turned ON and VCO signals are applied to the transmit predriver Q28.

4-6 TRANSMITTER CIRCUITS

4-6-1 TRANSMIT PREDRIVER (MAIN UNIT)

The VCO output is amplified at Q28 and obtains more than 23dBm, 200mW. After passing through L21 and C129, the amplified signals are applied to the PA circuit.

PA CIRCUIT

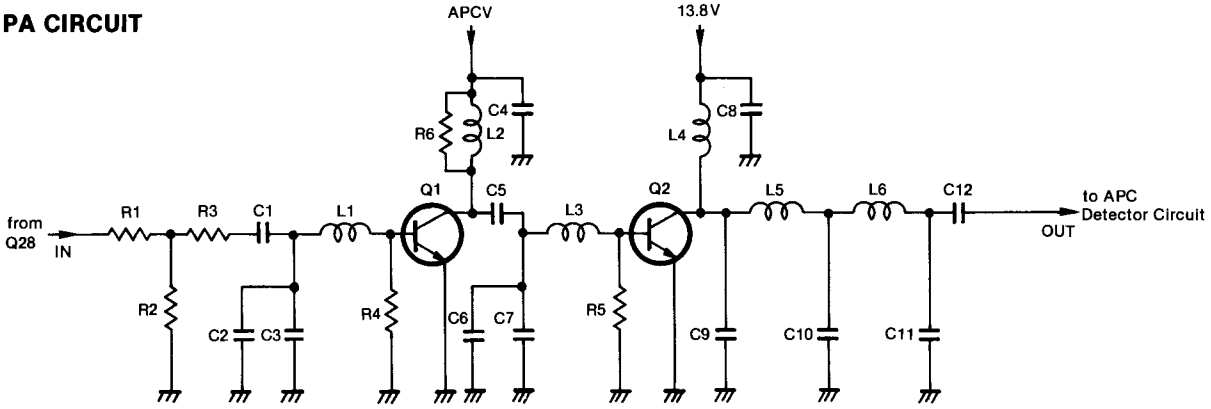

Fig. 7

4-6-2 PA CIRCUIT (PA UNIT)

RF signals from Q28 are applied to The PA circuit consisting of Q1 and Q2. The PA circuit consists of a class C amplifier for the driver and final stages. This circuit provides an output of 10W. Amplified signals at the PA circuit are applied to the APC detector circuit.

4-6-3 APC DETECTOR CIRCUIT (MAIN UNIT)

The APC detector circuit consists of L33, C149, C150, C189, C190, D34, and D35.

When antenna impedance is matched at 50Ω, voltage detected at D34 and D35 is at a minimum. When antenna impedance is mismatched, the detected voltage is greater than when matched.

The voltage detected at D34 and D35 is fed to pin 2 of IC4A. IC4A is a differential amplifier. The APC reference voltage is fed to pin 3.

When the antenna impedance is mismatched, the voltage of IC4A pin 2 is greater than the reference voltage. The output voltage of IC4A pin 1 decreases, decreasing Q25 and Q31 collector current.

The change in collector current decreases the output power of the PA circuit until the voltage of IC4A pin 2 equals the voltage of pin 3. Thus, stable RF output power is obtained.

The output power from the PA circuit passes through the APC detector circuit, the antenna switching circuit (D29), the low-pass filter (C139~C142, C144~C146, L29~L31), and is then applied to the antenna connector.

APC DETECTOR CIRCUIT

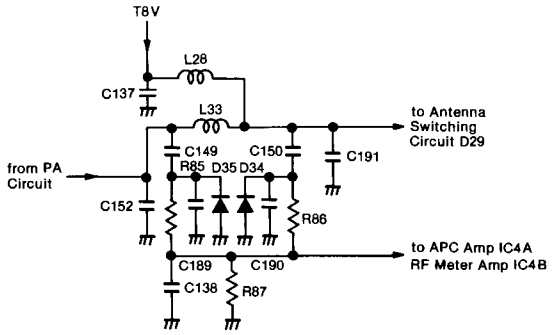

Fig. 8

4-6-4 OUTPUT POWER SELECTION CIRCUIT (MAIN UNIT)

The output power selection circuit consists of R114 ~R118, and Q14. This circuit shifts the RF output power by shifting the APC reference voltage.

When HIGH output power is selected, Q14 is turned OFF. RF output power is adjusted with R118.

When LOW output power is selected, Q14 is turned ON. Series resistors R115 and R116 are connected in parallel with series resistors R117 and R118. RF output power is adjusted with R115.

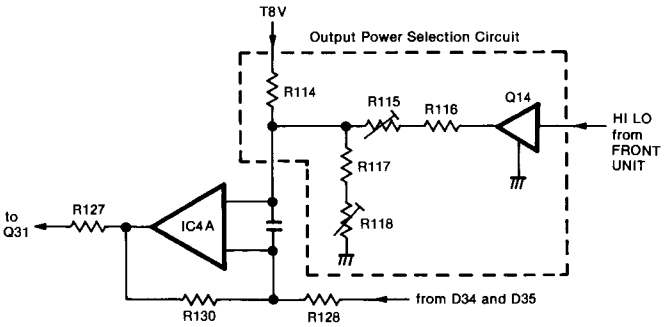

Fig. 9

4-6-5 RF METER AMP (MAIN UNIT)

The voltage detected at D34 and D35 is amplified at IC4B and then applied to the FRONT UNIT as the SRF signal.

SECTION 5 ADJUSTMENT PROCEDURES

5-1 PLL ADJUSTMENT

TEST INSTRUMENTS REQUIRED	MEASUREMENT CONNECTION LOCATION
(1) AC POWER SUPPLY • Output voltage : 13.8V DC • Current capacity : 10A or more (2) FREQUENCY COUNTER • Frequency range : 0.1~50MHz • Frequency accuracy : ±1ppm or better • Sensitivity : 100mV or better (3) DC VOLTMETER • Input impedance : 50kΩ/DC or better	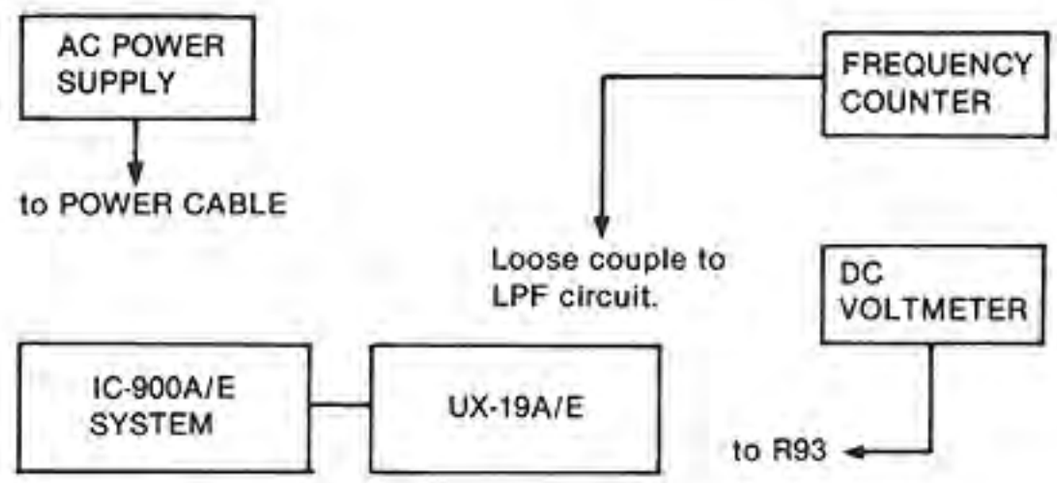

ADJUSTMENT		ADJUSTMENT CONDITIONS	MEASUREMENT		VALUE	ADJUSTMENT POINT	
			UNIT	LOCATION		UNIT	ADJUST
REFERENCE FREQUENCY	1	• Frequency display: 29.000MHz • Transmitting	MAIN	Loose couple the frequency counter to the LPF circuit.	29.000MHz	MAIN	C169
LOCK VOLTAGE	1	• Frequency display: 28.000MHz • Receiving	MAIN	Connect the DC voltmeter to R93.	3.0V	MAIN	L18

MAIN UNIT

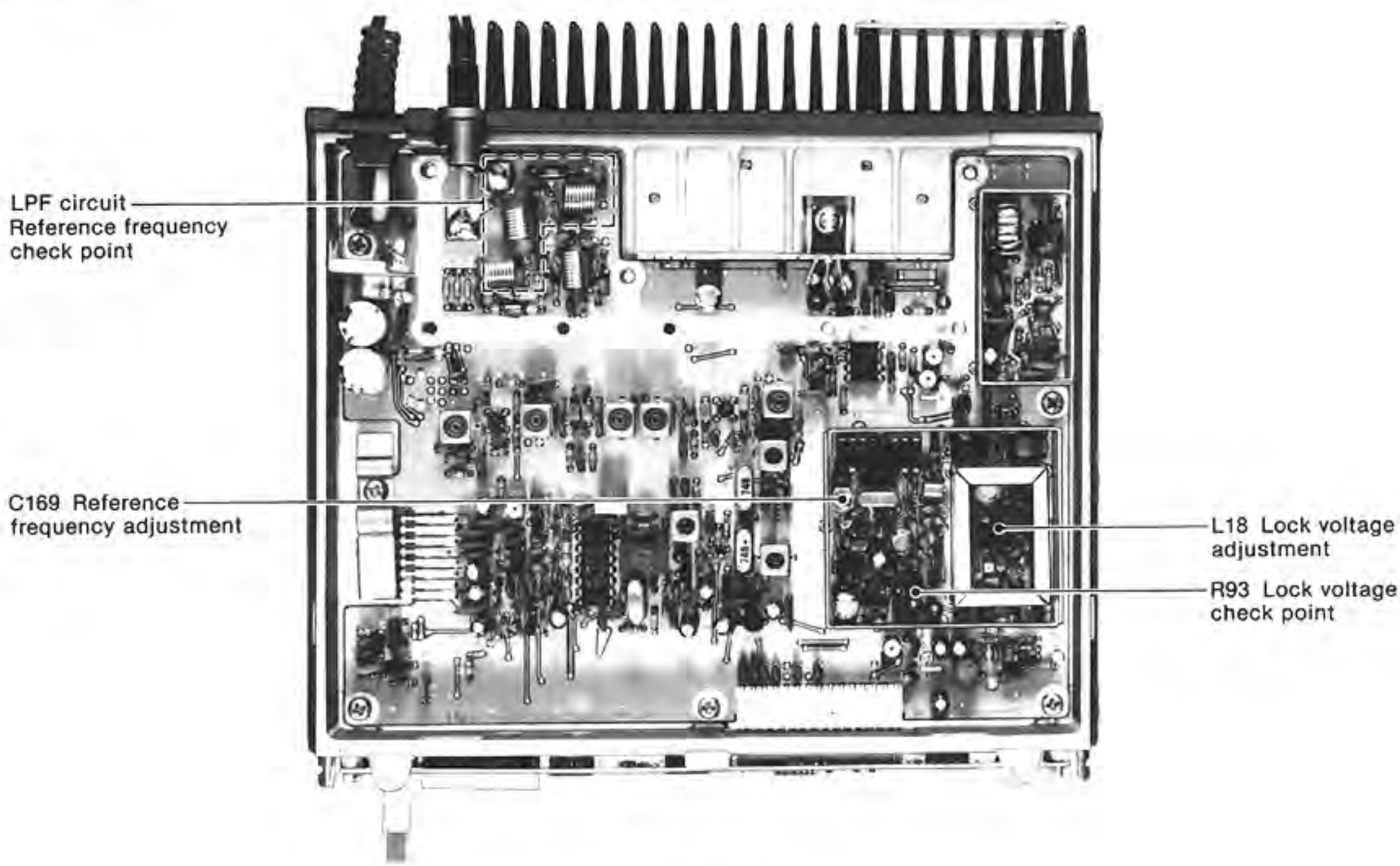

5-2 RECEIVER ADJUSTMENT

TEST INSTRUMENTS REQUIRED	MEASUREMENT CONNECTION LOCATION
(1) AC POWER SUPPLY • Output voltage : 13.8V DC • Current capacity : 10A or more (2) STANDARD SIGNAL GENERATOR (SSG) • Frequency range : 0.1~50MHz • Output level : −127~−17dBm (0.1μV~32mV) (3) DC VOLTMETER • Input impedance : 50kΩ/DC or better	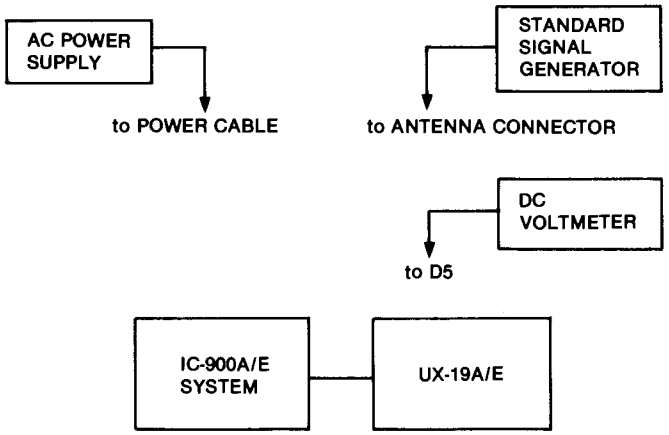

ADJUSTMENT		ADJUSTMENT CONDITIONS	MEASUREMENT		VALUE	ADJUSTMENT POINT	
			UNIT	LOCATION		UNIT	ADJUST
SENSI-TIVITY	1	• Frequency display: 29.000MHz • Receiving • Apply an RF signal to the ANTENNA CONNECTOR. Level: −107dBm (1μV) (Approx.) Dev. : ±3.5kHz Mod. : 1kHz • R32: Max. CCW.*	MAIN	Connect the DC voltmeter to D5 cathode.	Maximum	MAIN	L9, L8 L7, L6 L5, L4 L3, L1
		NOTE: Adjust the signal generator output level for each time showing the DC voltmeter at 30% of the lowest range full scale.					
S-METER	1	• Frequency display: 29.000MHz • Receiving • Apply an RF signal to the ANTENNA CONNECTOR. Level: −97dBm (3.2μV) Dev. : ±3.5kHz Mod. : 1kHz	FUNC-TION DISPLAY	S/RF INDICATOR	S5 (3 dots)	MAIN	R32

*CCW: Counterclockwise

MAIN UNIT

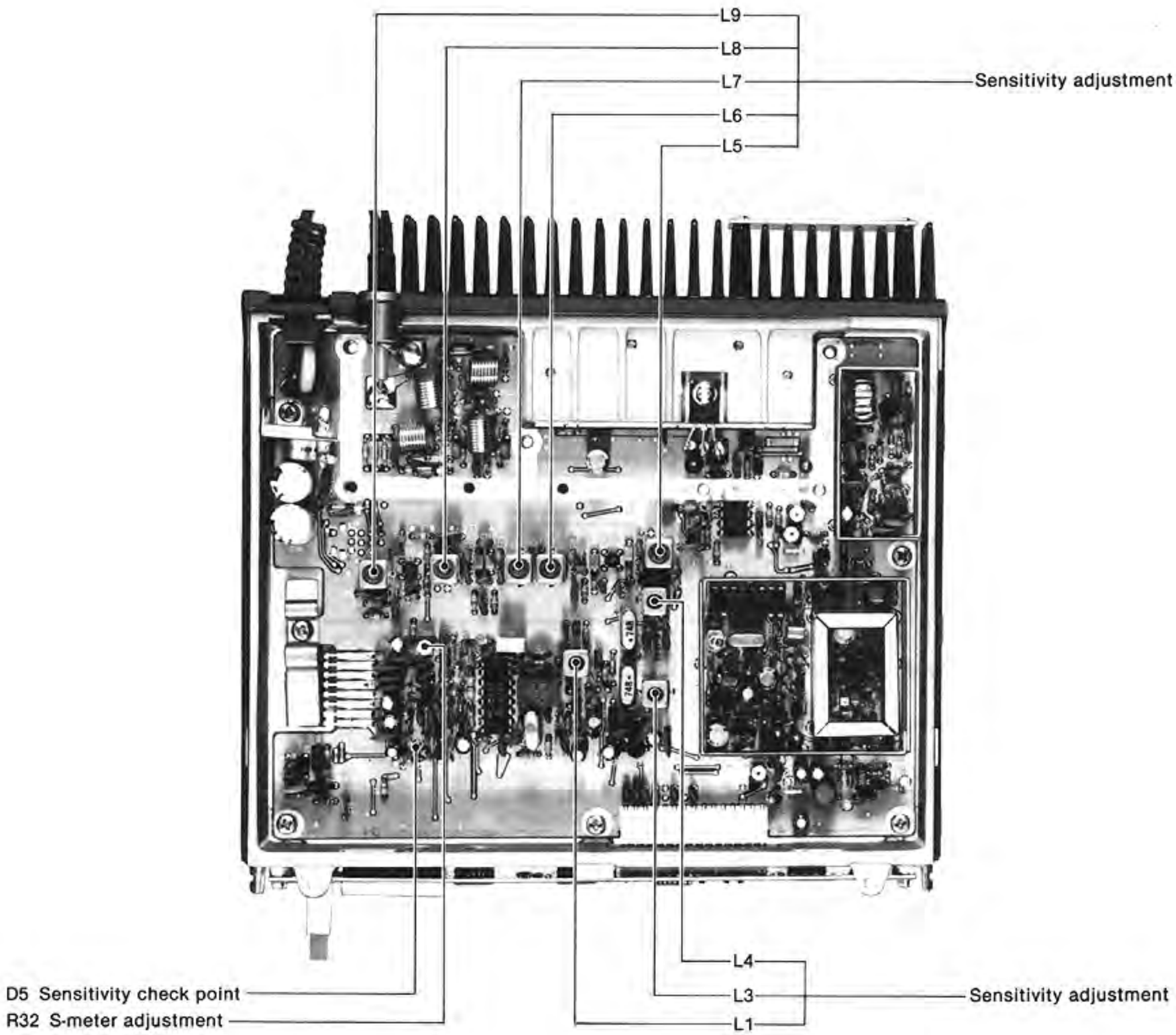
L9
L8
L7
L6
L5
Sensitivity adjustment
L4
L3
L1
Sensitivity adjustment
D5 Sensitivity check point
R32 S-meter adjustment

5-3 TRANSMITTER ADJUSTMENT

TEST INSTRUMENTS REQUIRED	MEASUREMENT CONNECTION LOCATION
(1) AC POWER SUPPLY • Output voltage : 13.8V DC • Current capacity : 10A or more (2) RF POWER METER (TERMINATED TYPE) • Measuring range : 1~20W • Frequency range : 20~50MHz • Impedance : 50Ω • SWR : Less than 1.2: 1 (3) AF GENERATOR (AG) • Frequency range : 200~2000Hz • Output level : 0~100mV (4) AC MILLI-VOLTMETER • Measuring range : 2~100mV (5) FM DEVIATION METER • Frequency minimum : 50MHz • Measuring range : 0~±5kHz	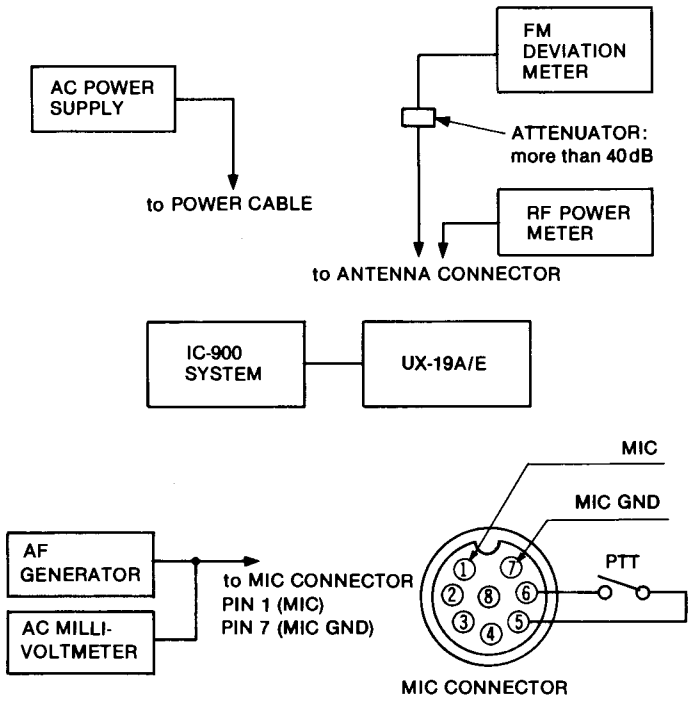

ADJUSTMENT		ADJUSTMENT CONDITIONS	MEASUREMENT		VALUE	ADJUSTMENT POINT	
			UNIT	LOCATION		UNIT	ADJUST
OUTPUT POWER	1	• Frequency display: 29.000MHz • Transmitting • HIGH/LOW POWER SWITCH: HIGH	Rear panel	Connect the RF power meter to the ANTENNA CONNECTOR.	10W	MAIN	R118
	2	• HIGH/LOW POWER SWITCH: LOW			1W		R115
DEVIATION	1	• Frequency display: 29.000MHz • Transmitting • Apply an AF signal to the MIC CONNECTOR pin 1 (pin 7 is ground). Level: 20mV/1kHz (UX-19A U.S.A. 65mV/1kHz) • Set the FM deviation meter. HPF: 50Hz LPF : 20kHz • TONE SWITCH: OFF	Rear panel	Connect the FM deviation meter to the ANTENNA CONNECTOR via the attenuator.	±4.8kHz	MAIN	R88

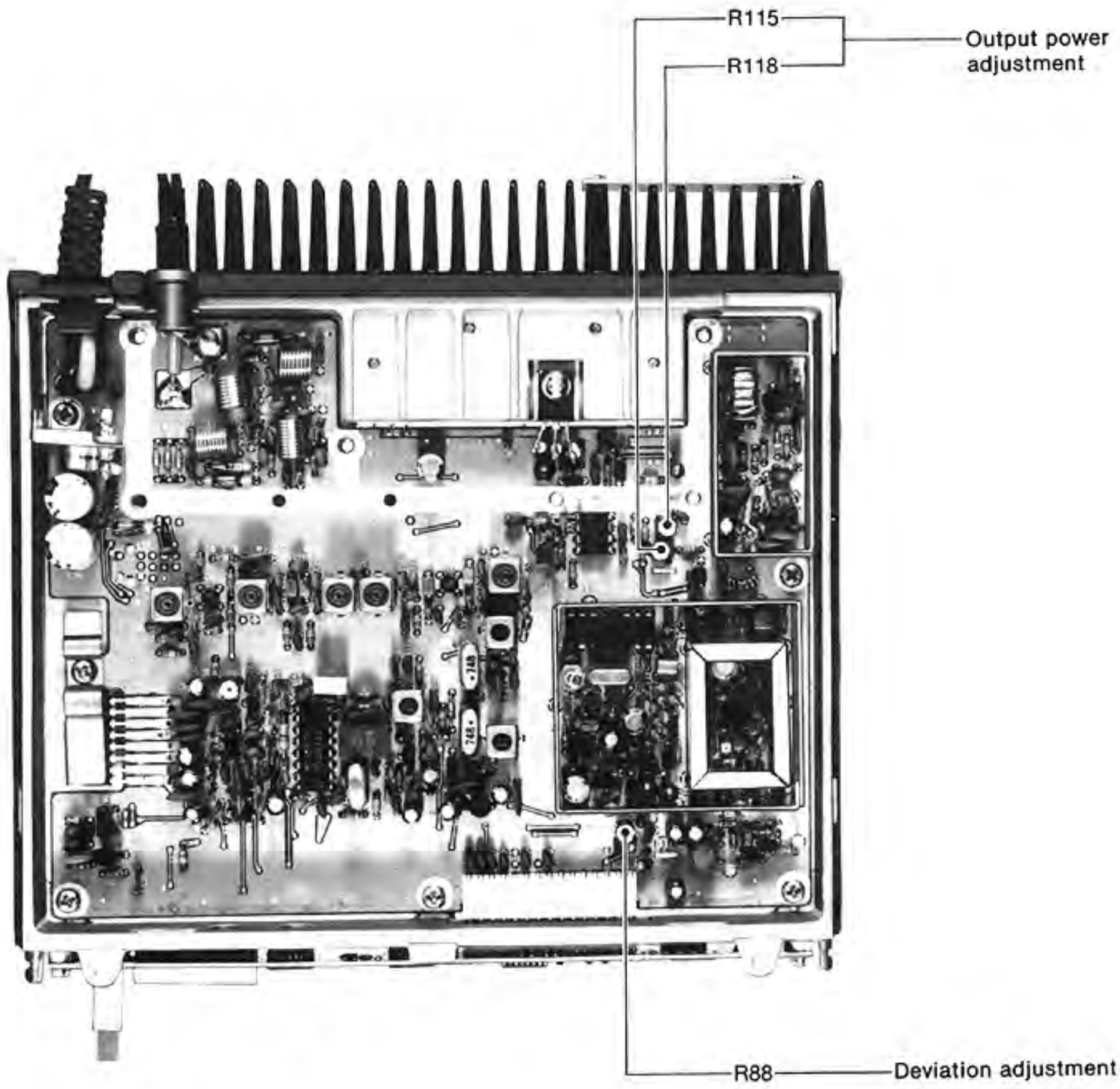
R115
R118
Output power adjustment
R88
Deviation adjustment

SECTION 6 BOARD LAYOUTS

MC3357P IC1
(LOW POWER FM IF)

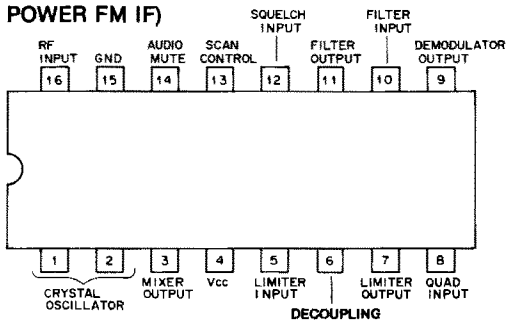

MB3756 IC2
(VOLTAGE REGULATOR)

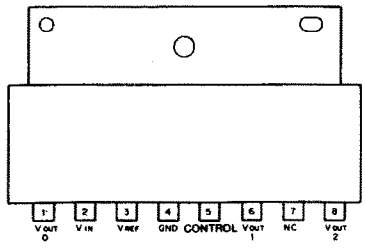

TA78L005AP IC3
(3-TERMINAL 5V REGULATOR)

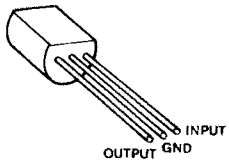

μPC358C IC4
(DUAL DRIVER)

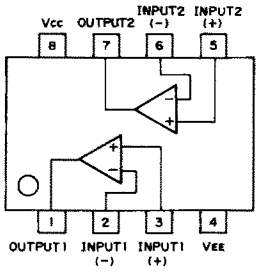

PLL 2001 IC5
(PLL SYNTHESIZER IC)

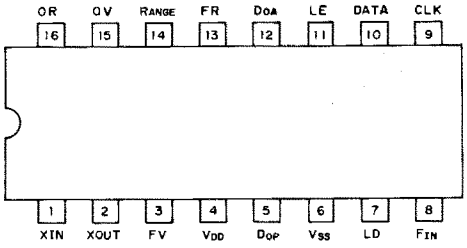

• PA UNIT

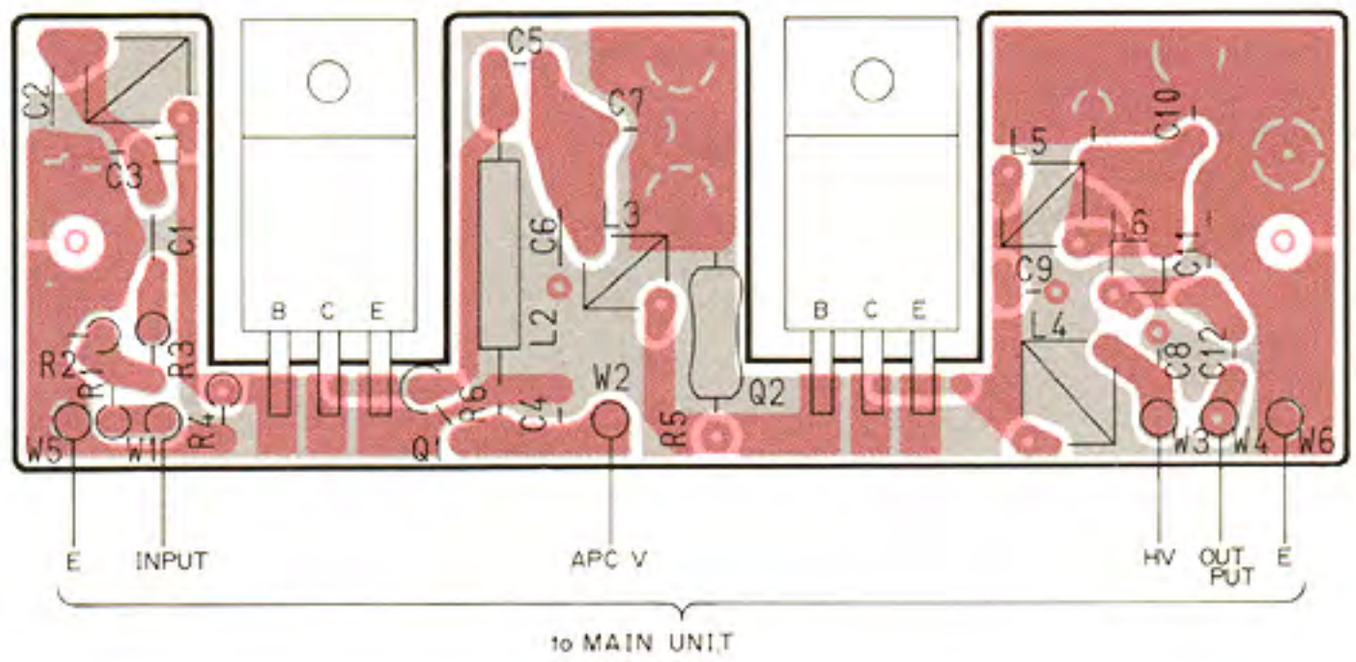

2SC2166
Q1

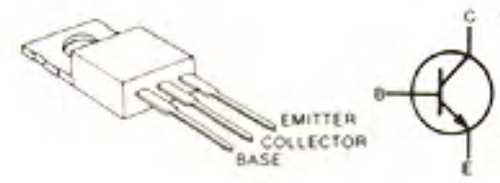

MAIN UNIT

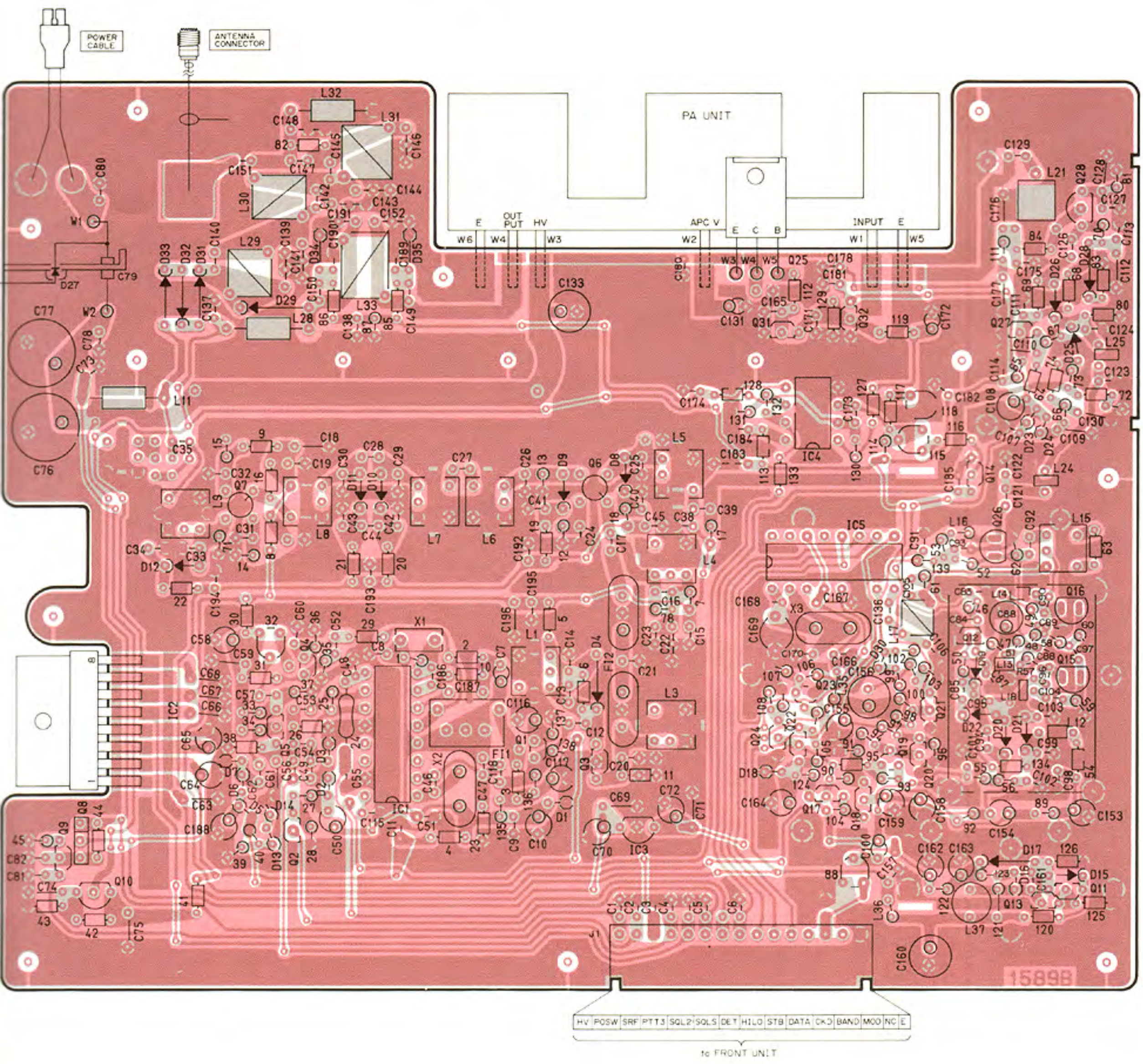

2SC1969 C
Q2

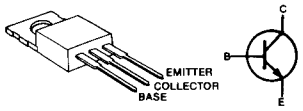

2SC2668 O
Q1

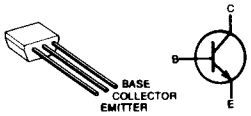

2SC2458 GR
Q2, Q4, Q5,
Q9, Q13,
Q20, Q21,
Q23, Q24,
Q27, Q31

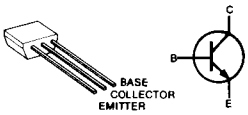

2SK241 Y
Q3

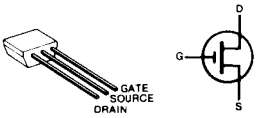

3SK121 Y
Q6, Q7

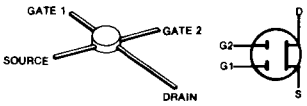

2SB909M R
Q8

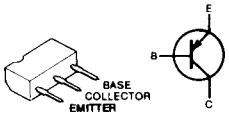

2SA639 (S) Q
Q10

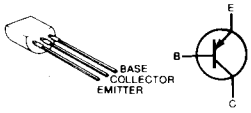

2SA1048 GR
Q11, Q17, Q22

RN1204
Q12, Q14, Q32

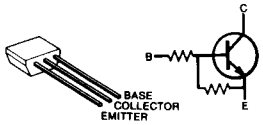

2SK125
Q15

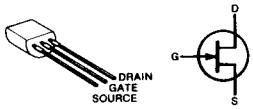

2SC2026
Q16, Q26

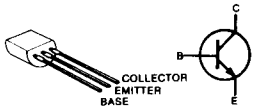

2SK184 Y
Q18, Q19

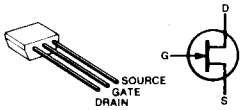

2SA1356 Y
Q25,

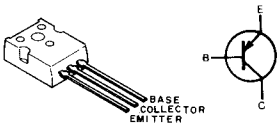

2SC2053
Q28

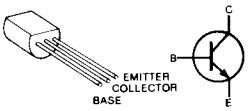

SECTION 7 VOLTAGE DIAGRAM

• **UX-19A/E**

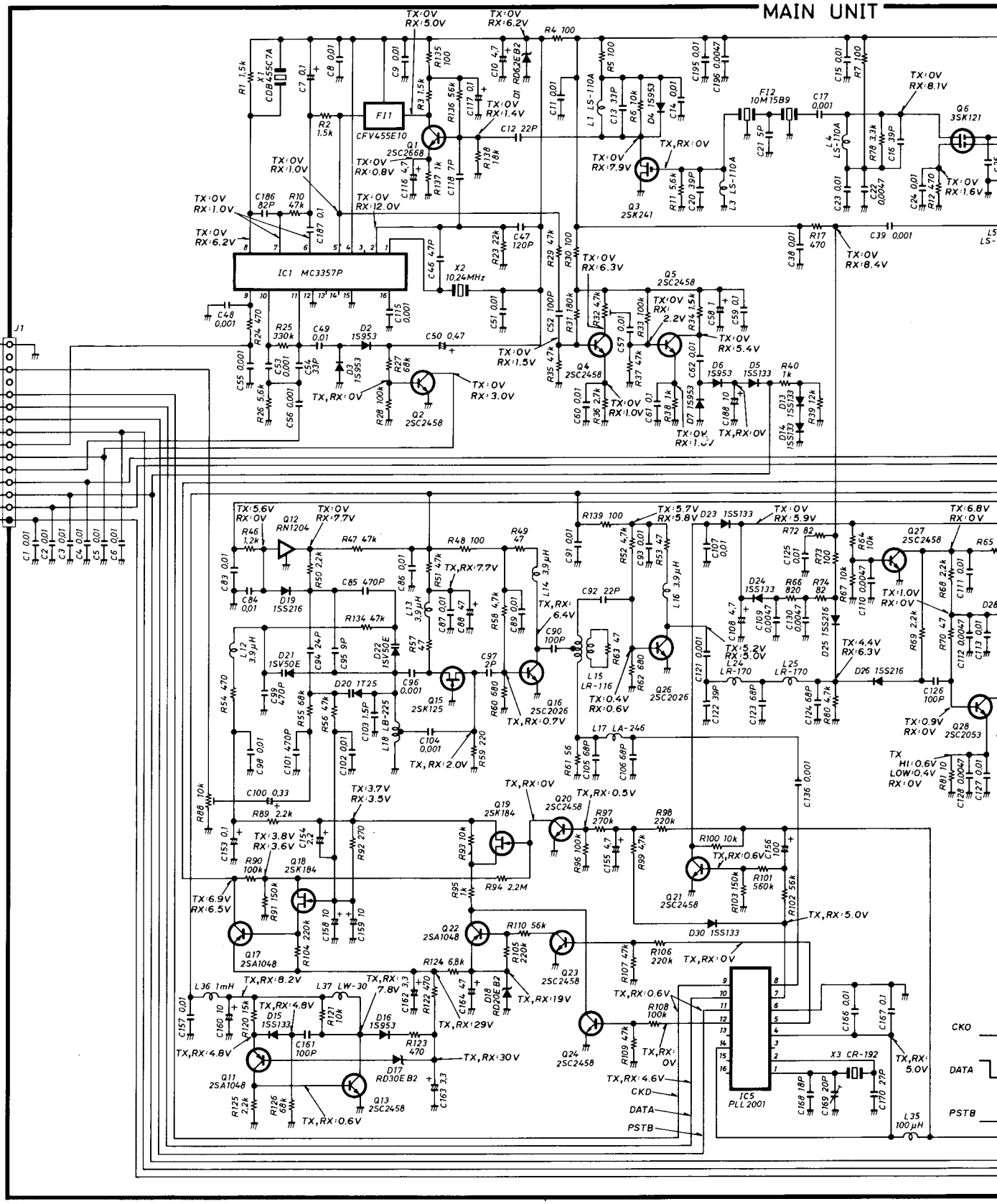

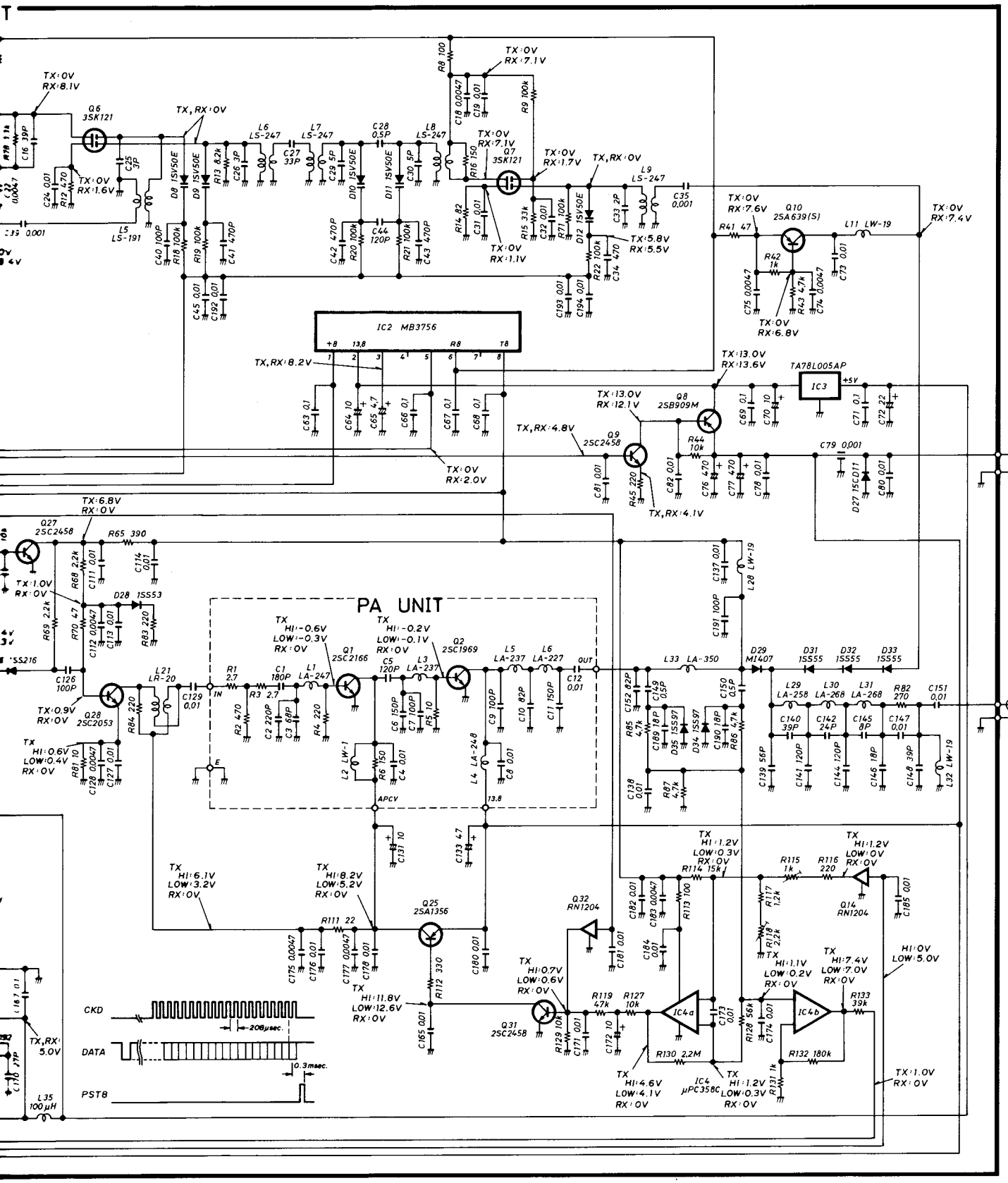
PA UNIT
IC2 MB3756
IC3 TA78L005AP
IC4a
IC4b
IC4 μPC358C
EP1 OPC-169
HV
E
to INTERFACE UNIT B
EP2 OPC-186
ANT
CKD
DATA
PST8
0.3msec.
L35 100μH

SECTION 8 PARTS LIST

[MAIN UNIT]

REF. NO.	DESCRIPTION	PART NO.
IC1	IC	MC3357P
IC2	IC	MB3756
IC3	IC	TA78L005AP
IC4	IC	µPC358C
IC5	IC	PLL2001
Q1	Transistor	2SC2668 O
Q2	Transistor	2SC2458 GR
Q3	FET	2SK241 Y
Q4	Transistor	2SC2458 GR
Q5	Transistor	2SC2458 GR
Q6	FET	3SK121 Y
Q7	FET	3SK121 Y
Q8	Transistor	2SB909M R
Q9	Transistor	2SC2458 GR
Q10	Transistor	2SA639(S) Q
Q11	Transistor	2SA1048 GR
Q12	Transistor	RN1204
Q13	Transistor	2SC2458 GR
Q14	Transistor	RN1204
Q15	FET	2SK125
Q16	Transistor	2SC2026
Q17	Transistor	2SA1048 GR
Q18	FET	2SK184 Y
Q19	FET	2SK184 Y
Q20	Transistor	2SC2458 GR
Q21	Transistor	2SC2458 GR
Q22	Transistor	2SA1048 GR
Q23	Transistor	2SC2458 GR
Q24	Transistor	2SC2458 GR
Q25	Transistor	2SA1356 Y
Q26	Transistor	2SC2026
Q27	Transistor	2SC2458 GR
Q28	Transistor	2SC2053
Q31	Transistor	2SC2458 GR
Q32	Transistor	RN1204
D1	Zener	RD6.2E B2
D2	Diode	1S953
D3	Diode	1S953
D4	Diode	1S953
D5	Diode	1SS133
D6	Diode	1S953
D7	Diode	1S953
D8	Varicap	1SV50E
D9	Varicap	1SV50E
D10	Varicap	1SV50E
D11	Varicap	1SV50E
D12	Varicap	1SV50E
D13	Diode	1SS133
D14	Diode	1SS133
D15	Diode	1SS133
D16	Diode	1S953
D17	Zener	RD30E B2
D18	Zener	RD20E B2
D19	Diode	1SS265
D20	Varicap	1T25
D21	Varicap	1SV50E
D22	Varicap	1SV50E
D23	Diode	1SS133
D24	Diode	1SS133
D25	Diode	1SS265
D26	Diode	1SS265
D27	Diode	15CD11
D28	Diode	1SS53
D29	Diode	MI407
D30	Diode	1SS133
D31	Diode	1SS55

[MAIN UNIT]

REF. NO.	DESCRIPTION	PART NO.	
D32	Diode	1SS55	
D33	Diode	1SS55	
D34	Diode	1SS97	
D35	Diode	1SS97	
FI1	Ceramic	CFV455E10	
FI2	Crystal	10M15B9	
X1	Discriminator	CDB455C7A	
X2	Crystal	10.24MHz HC18/T	
X3	Crystal	CR-192	
L1	Coil	LS-110A	
L3	Coil	LS-110A	
L4	Coil	LS-110A	
L5	Coil	LS-191	
L6	Coil	LS-247	
L7	Coil	LS-247	
L8	Coil	LS-247	
L9	Coil	LS-247	
L11	Coil	LW-19	
L12	Coil	LAL02KR 3R9	
L13	Coil	LAL02KR 3R9	
L14	Coil	LAL02KR 3R9	
L15	Coil	LR-116	
L16	Coil	LAL03NA 3R9	
L17	Coil	LA-248	
L18	Coil	LB-225	
L21	Coil	LR-20	
L24	Coil	LR-170	
L25	Coil	LR-170	
L28	Coil	LW-19	
L29	Coil	LA-258	
L30	Coil	LA-268	
L31	Coil	LA-268	
L32	Coil	LW-19	
L33	Coil	LA-350	
L35	Coil	LAL03NA 101	
L36	Coil	LAL03NA 102	
L37	Coil	LW-30	
R1	Resistor	1.5kΩ	ELR20
R2	Resistor	1.5kΩ	R20
R3	Resistor	1.5kΩ	R20
R4	Resistor	100Ω	R20
R5	Resistor	100Ω	R20
R6	Resistor	10kΩ	R20
R7	Resistor	100Ω	ELR20
R8	Resistor	100Ω	R20
R9	Resistor	100kΩ	R20
R10	Resistor	47kΩ	R20
R11	Resistor	5.6kΩ	R20
R12	Resistor	470Ω	ELR20
R13	Resistor	8.2kΩ	ELR20
R14	Resistor	82Ω	ELR20
R15	Resistor	33kΩ	ELR20
R16	Resistor	150Ω	R20
R17	Resistor	470Ω	ELR20
R18	Resistor	100kΩ	ELR20
R19	Resistor	100kΩ	R20
R20	Resistor	100kΩ	R20
R21	Resistor	100kΩ	R20
R22	Resistor	100kΩ	R20
R23	Resistor	22kΩ	R20
R24	Resistor	470Ω	R25
R25	Resistor	330kΩ	ELR20

[MAIN UNIT]

REF. NO.	DESCRIPTION	PART NO.	
R26	Resistor	5.6kΩ	R20
R27	Resistor	68kΩ	ELR20
R28	Resistor	100kΩ	ELR20
R29	Resistor	68kΩ	R20
R30	Resistor	100Ω	R20
R31	Resistor	180kΩ	R20
R32	Trimmer	4.7kΩ	RH0421CS3J08A
R33	Resistor	100kΩ	ELR20
R34	Resistor	1.5kΩ	ELR20
R35	Resistor	47kΩ	ELR20
R36	Resistor	2.7kΩ	ELR20
R37	Resistor	47kΩ	ELR20
R38	Resistor	1kΩ	R20
R39	Resistor	12kΩ	ELR20
R40	Resistor	1kΩ	ELR20
R41	Resistor	47Ω	R20
R42	Resistor	1kΩ	R20
R43	Resistor	4.7kΩ	R20
R44	Resistor	10kΩ	R20
R45	Resistor	220Ω	ELR20
R46	Resistor	1.2kΩ	ELR20
R47	Resistor	47kΩ	ELR20
R48	Resistor	100Ω	ELR20
R49	Resistor	47Ω	ELR20
R50	Resistor	2.2kΩ	ELR20
R51	Resistor	47Ω	ELR20
R52	Resistor	4.7kΩ	ELR20
R53	Resistor	47Ω	ELR20
R54	Resistor	470Ω	R20
R55	Resistor	68kΩ	ELR20
R56	Resistor	47kΩ	ELR20
R57	Resistor	47Ω	ELR20
R58	Resistor	4.7kΩ	ELR20
R59	Resistor	220Ω	ELR20
R60	Resistor	680Ω	ELR20
R61	Resistor	56Ω	ELR20
R62	Resistor	680Ω	ELR20
R63	Resistor	47Ω	R20
R64	Resistor	10kΩ	R20
R65	Resistor	390Ω	ELR20
R66	Resistor	820Ω	ELR20
R67	Resistor	10kΩ	ELR20
R68	Resistor	2.2kΩ	R20
R69	Resistor	2.2kΩ	R20
R70	Resistor	47Ω	ELR20
R71	Resistor	100kΩ	ELR20
R72	Resistor	82Ω	R20
R73	Resistor	100Ω	ELR20
R74	Resistor	82Ω	R20
R78	Resistor	3.3kΩ	ELR20
R80	Resistor	4.7kΩ	R20
R81	Resistor	10Ω	ELR20
R82	Resistor	270Ω	R20
R83	Resistor	220Ω	R20
R84	Resistor	220Ω	R20
R85	Resistor	4.7kΩ	R20
R86	Resistor	4.7kΩ	R20
R87	Resistor	4.7kΩ	ELR20
R88	Trimmer	10kΩ	RH0421C14J0KA
R89	Resistor	2.2kΩ	ELR20
R90	Resistor	100kΩ	R20
R91	Resistor	150kΩ	ELR20
R92	Resistor	270Ω	ELR20
R93	Resistor	10kΩ	R20
R94	Resistor	2.2MΩ	ELR20
R95	Resistor	1kΩ	R20
R96	Resistor	100kΩ	ELR20
R97	Resistor	270kΩ	ELR20
R98	Resistor	220kΩ	ELR20
R99	Resistor	4.7kΩ	ELR20
R100	Resistor	10kΩ	ELR20
R101	Resistor	560kΩ	ELR20
R102	Resistor	56kΩ	ELR20
R103	Resistor	150kΩ	ELR20
R104	Resistor	220kΩ	ELR20

[MAIN UNIT]

REF. NO.	DESCRIPTION	PART NO.		
R105	Resistor	220kΩ	ELR20	
R106	Resistor	220kΩ	ELR20	
R107	Resistor	47kΩ	ELR20	
R108	Resistor	100kΩ	ELR20	
R109	Resistor	47kΩ	ELR20	
R110	Resistor	56kΩ	ELR20	
R111	Resistor	47Ω	ELR20	
R112	Resistor	330Ω	R20	
R113	Resistor	100Ω	R20	
R114	Resistor	15kΩ	ELR20	
R115	Trimmer	1kΩ	RH0421C13J09A	
R116	Resistor	220Ω	R20	
R117	Resistor	1.2kΩ	R20	
R118	Trimmer	2.2kΩ	RH0421CJ3J09A	
R119	Resistor	47kΩ	R20	
R120	Resistor	15kΩ	R20	
R121	Resistor	10kΩ	ELR20	
R122	Resistor	470Ω	ELR20	
R123	Resistor	470Ω	ELR20	
R124	Resistor	6.8kΩ	ELR20	
R125	Resistor	2.2kΩ	R20	
R126	Resistor	68kΩ	R20	
R127	Resistor	10kΩ	R20	
R128	Resistor	56kΩ	R20	
R129	Resistor	10kΩ	R20	
R130	Resistor	2.2MΩ	ELR20	
R131	Resistor	1kΩ	ELR20	
R132	Resistor	180kΩ	ELR20	
R133	Resistor	39kΩ	R20	
R134	Resistor	47kΩ	R20	
R135	Resistor	100Ω	ELR20	
R136	Resistor	56kΩ	ELR20	
R137	Resistor	1kΩ	ELR20	
R138	Resistor	18kΩ	ELR20	
R139	Resistor	100Ω	ELR20	
C1	Barrier Layer	0.01μF	25V	
C2	Barrier Layer	0.01μF	25V	
C3	Barrier Layer	0.01μF	25V	
C4	Barrier Layer	0.01μF	25V	
C5	Barrier Layer	0.01μF	25V	
C6	Barrier Layer	0.01μF	25V	
C7	Tantalum	0.1μF	35V	DN
C8	Barrier Layer	0.01μF	25V	
C9	Barrier Layer	0.01μF	25V	
C10	Electrolytic	4.7μF	25V	MS7
C11	Barrier Layer	0.01μF	25V	
C12	Ceramic	15pF	50V	
C13	Ceramic	33pF	50V	
C14	Barrier Layer	0.01μF	25V	
C15	Barrier Layer	0.01μF	25V	
C16	Ceramic	39pF	50V	
C17	Ceramic	0.001μF	50V	
C18	Ceramic	0.0047μF	50V	
C19	Barrier Layer	0.01μF	25V	
C20	Ceramic	39pF	50V	
C21	Ceramic	5pF	50V	
C22	Ceramic	0.0047μF	50V	
C23	Barrier Layer	0.01μF	25V	
C24	Barrier Layer	0.01μF	25V	
C25	Ceramic	8pF	50V	
C26	Ceramic	3pF	50V	
C27	Ceramic	33pF	50V	
C28	Ceramic	0.5pF	50V	
C29	Ceramic	5pF	50V	
C30	Ceramic	5pF	50V	
C31	Barrier Layer	0.01μF	25V	
C32	Barrier Layer	0.01μF	25V	
C33	Ceramic	2pF	50V	
C34	Ceramic	470pF	50V	
C35	Ceramic	0.001μF	50V	
C38	Barrier Layer	0.01μF	25V	
C39	Ceramic	0.001μF	50V	
C40	Ceramic	0.001μF	50V	

[MAIN UNIT]

REF. NO.	DESCRIPTION	PART NO.		
C41	Ceramic	470pF	50V	
C42	Ceramic	470pF	50V	
C43	Ceramic	470pF	50V	
C44	Ceramic	120pF	50V	
C45	Barrier Layer	0.01μF	25V	
C46	Ceramic	47pF	50V	
C47	Ceramic	120pF	50V	
C48	Ceramic	0.001μF	50V	
C49	Barrier Layer	0.01μF	25V	
C50	Electrolytic	0.47μF	50V	MS7
C51	Barrier Layer	0.01μF	25V	
C52	Ceramic	100pF	50V	
C53	Ceramic	0.001μF	50V	
C54	Ceramic	33pF	50V	
C55	Ceramic	0.001μF	50V	
C56	Ceramic	0.001μF	50V	
C57	Barrier Layer	0.01μF	25V	
C58	Electrolytic	1μF	50V	MS7
C59	Barrier Layer	0.1μF	16V	
C60	Barrier Layer	0.01μF	25V	
C61	Barrier Layer	0.1μF	16V	
C62	Barrier Layer	0.01μF	25V	
C63	Barrier Layer	0.1μF	16V	
C64	Electrolytic	10μF	16V	MS7
C65	Electrolytic	4.7μF	25V	MS7
C66	Barrier Layer	0.1μF	16V	
C67	Barrier Layer	0.1μF	16V	
C68	Barrier Layer	0.1μF	16V	
C69	Barrier Layer	0.1μF	16V	
C70	Electrolytic	10μF	16V	MS7
C71	Barrier Layer	0.1μF	16V	
C72	Electrolytic	22μF	6.3V	MS7
C73	Barrier Layer	0.01μF	25V	
C74	Ceramic	0.0047μF	50V	
C75	Ceramic	0.0047μF	50V	
C76	Electrolytic	470μF	16V	SS
C77	Electrolytic	470μF	16V	SS
C78	Barrier Layer	0.01μF	25V	
C79	Feed Through	TF318-450E 102GMV 50V		
C80	Barrier Layer	0.01μF	25V	
C81	Barrier Layer	0.01μF	25V	
C82	Barrier Layer	0.01μF	25V	
C83	Barrier Layer	0.01μF	25V	
C84	Barrier Layer	0.01μF	25V	
C85	Ceramic	470pF	50V	
C86	Barrier Layer	0.01μF	25V	
C87	Barrier Layer	0.01μF	25V	
C88	Electrolytic	47μF	25V	MS9
C89	Barrier Layer	0.01μF	25V	
C90	Ceramic	100pF	50V	
C91	Barrier Layer	0.01μF	25V	
C92	Ceramic	22pF	50V	
C93	Barrier Layer	0.01μF	25V	
C94	Ceramic	24pF	50V	
C95	Ceramic	18pF	50V	
C96	Ceramic	0.001μF	50V	
C97	Ceramic	2pF	50V	
C98	Barrier Layer	0.01μF	25V	
C99	Ceramic	470pF	50V	
C100	Tantalum	0.33μF	35V	DN
C101	Ceramic	470pF	50V	
C102	Barrier Layer	0.01μF	25V	
C103	Ceramic	1.5pF	50V	
C104	Ceramic	0.001μF	50V	
C105	Ceramic	68pF	50V	
C106	Ceramic	68pF	50V	
C107	Barrier Layer	0.01μF	25V	
C108	Electrolytic	4.7μF	25V	MS7
C109	Ceramic	0.0047μF	50V	
C110	Ceramic	0.0047μF	50V	
C111	Barrier Layer	0.01μF	25V	
C112	Ceramic	0.0047μF	50V	
C113	Barrier Layer	0.01μF	25V	
C114	Barrier Layer	0.01μF	25V	
C115	Ceramic	0.001μF	50V	

[MAIN UNIT]

REF. NO.	DESCRIPTION	PART NO.		
C116	Tantalum	4.7μF	16V	DN
C117	Electrolytic	0.1μF	50V	MS7
C118	Ceramic	7pF	50V	
C121	Ceramic	0.001μF	50V	
C122	Ceramic	39pF	50V	
C123	Ceramic	68pF	50V	
C124	Ceramic	68pF	50V	
C125	Barrier Layer	0.01μF	25V	
C126	Ceramic	100pF	50V	
C127	Barrier Layer	0.01μF	25V	
C128	Ceramic	0.0047μF	50V	
C129	Barrier Layer	0.01μF	25V	
C130	Ceramic	0.0047μF	50V	
C131	Tantalum	10μF	35V	DN
C133	Electrolytic	47μF	25V	MS9
C136	Ceramic	0.001μF	50V	
C137	Barrier Layer	0.01μF	25V	
C138	Barrier Layer	0.01μF	25V	
C139	Ceramic	56pF	50V	
C140	Ceramic	39pF	50V	
C141	Ceramic	120pF	50V	
C142	Ceramic	24pF	50V	
C144	Ceramic	120pF	50V	
C145	Ceramic	8pF	50V	
C146	Ceramic	18pF	50V	
C147	Monolithic	D33Y5V1E104Z21		
C148	Ceramic	39pF	50V	
C149	Ceramic	0.5pF	50V	
C150	Ceramic	0.5pF	50V	
C151	Monolithic	D33Y5V1E104Z21		
C152	Ceramic	82pF	50V	
C153	Tantalum	0.1μF	35V	DN
C154	Tantalum	2.2μF	35V	DN
C155	Electrolytic	4.7μF	25V	MS7
C156	Electrolytic	100μF	10V	MS7
C157	Barrier Layer	0.01μF	25V	
C158	Tantalum	10μF	35V	DN
C159	Tantalum	10μF	35V	DN
C160	Electrolytic	10μF	16V	SS
C161	Ceramic	100pF	50V	
C162	Electrolytic	3.3μF	50V	MS7
C163	Electrolytic	3.3μF	50V	MS7
C164	Electrolytic	47μF	25V	MS9
C165	Barrier Layer	0.01μF	25V	
C166	Barrier Layer	0.01μF	25V	
C167	Barrier Layer	0.1μF	16V	
C168	Ceramic	18pF	50V	
C169	Trimmer	20pF	CV05D2001	
C170	Ceramic	27pF	50V	
C171	Barrier Layer	0.01μF	25V	
C172	Tantalum	10μF	16V	DN
C173	Barrier Layer	0.01μF	25V	
C174	Barrier Layer	0.01μF	25V	
C175	Barrier Layer	0.01μF	25V	
C176	Ceramic	0.0047μF	50V	
C177	Ceramic	0.0047μF	50V	
C178	Barrier Layer	0.01μF	25V	
C180	Barrier Layer	0.01μF	25V	
C181	Barrier Layer	0.01μF	25V	
C182	Barrier Layer	0.01μF	25V	
C183	Ceramic	0.0047μF	50V	
C184	Barrier Layer	0.01μF	25V	
C185	Barrier Layer	0.01μF	25V	
C186	Ceramic	82pF	50V	
C187	Barrier Layer	0.1μF	16V	
C188	Electrolytic	10μF	16V	MS7
C189	Ceramic	18pF	50V	
C190	Ceramic	18pF	50V	
C191	Ceramic	100pF	50V	
C192	Barrier Layer	0.01μF	25V	
C193	Barrier Layer	0.01μF	25V	
C194	Barrier Layer	0.01μF	25V	
C195	Barrier Layer	0.01μF	25V	
C196	Ceramic	0.0047μF	50V	

[MAIN UNIT]

REF. NO.	DESCRIPTION	PART NO.
J1	Connector	3024-15AH
EP3	P.C. Board	B-1589B
W1	Jumper	JPW-02A
W2	Jumper	JPW-02A
W3	Jumper	JPW-02A
W4	Jumper	JPW-02A
W5	Jumper	JPW-02A

[PA UNIT]

REF. NO.	DESCRIPTION	PART NO.	
Q1	Transistor	2SC2166	
Q2	Transistor	2SC1969 C	
L1	Coil	LA-247	
L2	Coil	LW-1	
L3	Coil	LA-237	
L4	Coil	LA-248	
L5	Coil	LA-237	
L6	Coil	LA-227	
R1	Resistor	2.7Ω	ELR20
R2	Resistor	470Ω	ELR20
R3	Resistor	2.7Ω	ELR20
R4	Resistor	220Ω	ELR20
R5	Resistor	10Ω	R50J
R6	Resistor	150Ω	ELR20
C1	Ceramic	180pF	50V
C2	Ceramic	220pF	50V
C3	Ceramic	68pF	50V
C4	Barrier Layer	0.01μF	25V
C5	Ceramic	120pF	50V
C6	Ceramic	150pF	50V
C7	Ceramic	100pF	50V
C8	Barrier Layer	0.01μF	25V
C9	Ceramic	100pF	50V
C10	Ceramic	82pF	50V
C11	Ceramic	150pF	50V
C12	Monolithic	D33Y5V1E104Z21	
EP1	P.C. Board	B-1574B	
W1	Jumper	JPW-01 R-01	
W2	Jumper	JPW-01 R-01	
W3	Jumper	JPW-01 R-01	
W4	Jumper	JPW-01 R-01	
W5	Jumper	JPW-01 R-01	
W6	Jumper	JPW-01 R-01	

SERVICE MANUAL

UX-59A

This part of the service manual covers all service information of the **UX-59A** 50MHz BAND UNIT except for information common to all band units.
Refer to COMMON for information related to repair, mechanical parts, disassembly and FRONT UNIT.

TABLE OF CONTENTS

SECTION 1 SPECIFICATIONS

■ GENERAL

• Frequency coverage	:	50.00MHz~54.00MHz
• Antenna impedance	:	50Ω unbalanced
• Frequency stability	:	±10ppm (−10°C~+60°C) (+14°F~+140°F)
• Power supply requirement	:	13.8V DC±15% (Negative ground)
• Current drain (at 13.8V DC)	:	Transmit (HIGH) 3.5A (LOW) 1.7A Receive 250mA
• Dimensions	:	177(W)×25(H)×191(D) mm 7.0(W)×1.0(H)×7.5(D) inches (Projections not included)
• Weight	:	1.2kg (2.6 lbs.)
• Usable temperature range	:	−10°C~+60°C (+14°F~+140°F)

■ TRANSMITTER

• RF output power	:	HIGH 10W LOW 1W
• Emission mode	:	F3 F2 (During "digital code squelch" operation with UT-28)
• Modulation system	:	Variable reactance frequency modulation
• Max. frequency deviation	:	±5.0kHz
• Spurious emission	:	More than 60dB below carrier output power

■ RECEIVER

• Receiver system	:	Double-conversion superheterodyne
• Modulation acceptance	:	F3
• Intermediate frequencies	:	1st 13.99MHz 2nd 455kHz
• Sensitivity	:	Less than 0.18μV for 12dB SINAD
• Squelch sensitivity	:	Less than 0.13μV
• Selectivity	:	12.5kHz/−6dB 25.0kHz/−60dB
• Spurious and image rejection	:	More than 60dB

※ All stated specifications are subject to change without notice or obligation.

SECTION 2 INSIDE VIEW

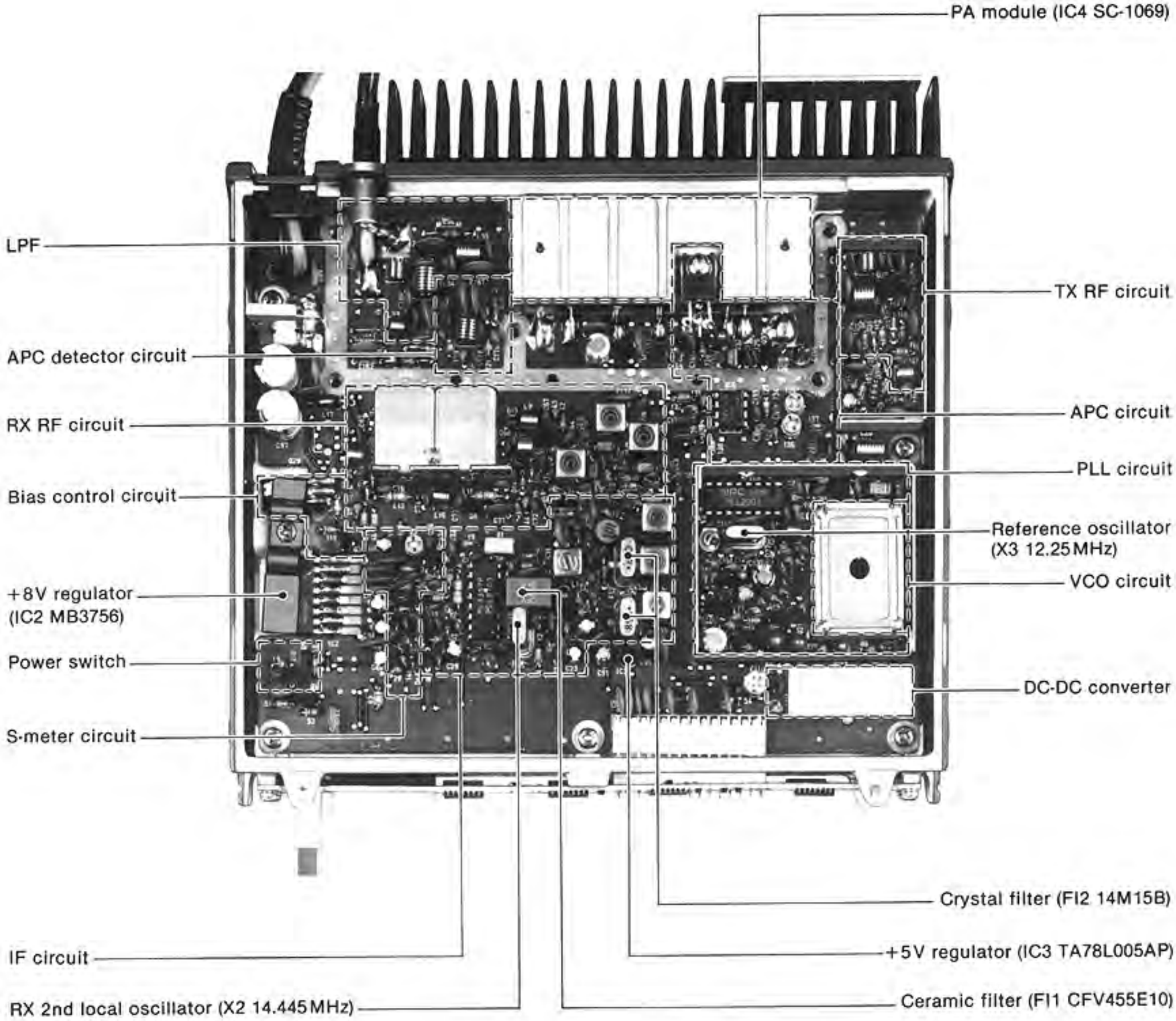

SECTION 3 BLOCK DIAGRAM

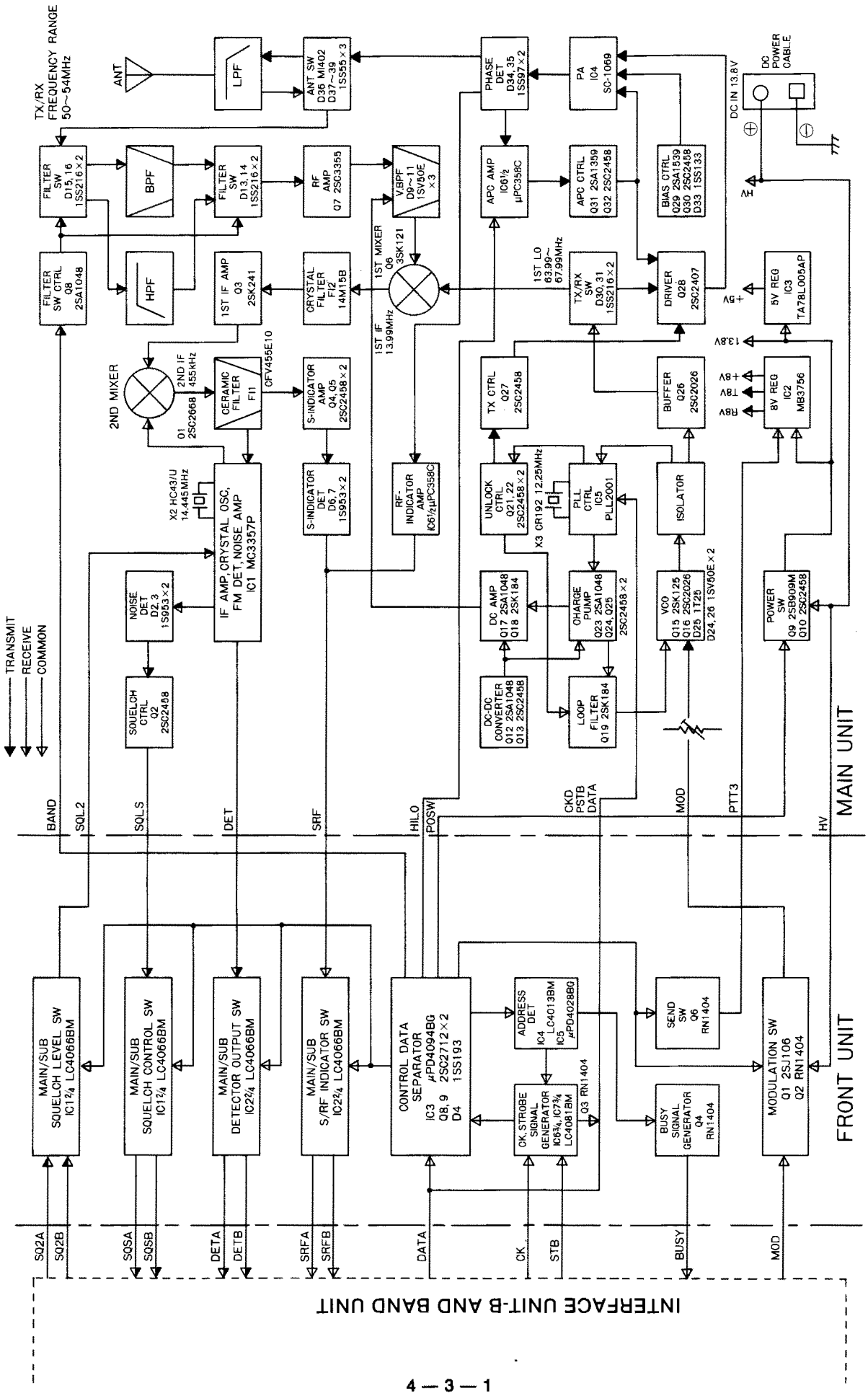

SECTION 4 CIRCUIT DESCRIPTION

4-1 CONSTRUCTION

UX-59A consists of the MAIN UNIT and the FRONT UNIT.

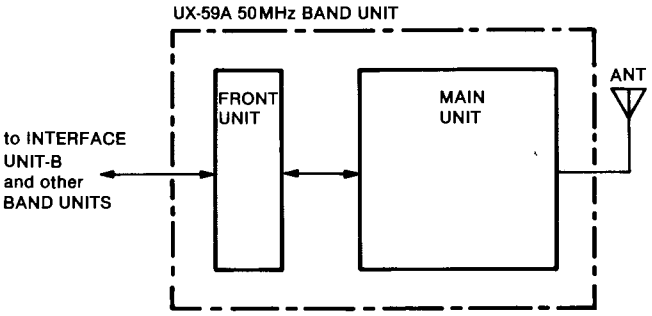

Fig. 1

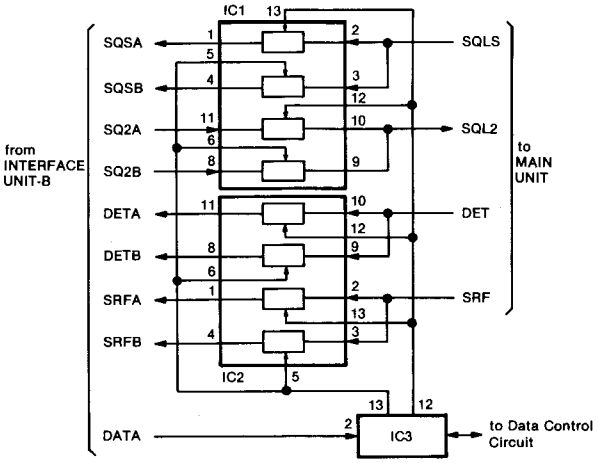

Fig. 2

4-2 FRONT UNIT

4-2-1 SIGNAL SWITCHING CIRCUIT

The serial data signals from INTERFACE UNIT-B are fed to IC3. UX-59A operation as a main band transceiver or a sub band receiver is determined by the commands of the serial data signals.

When pin 12 of IC3 outputs "HIGH," the analog switches (IC1, IC2) are controlled so that UX-59A operates as a main band transceiver.

When pin 13 of IC3 outputs "HIGH," the analog switches are controlled so that UX-59A operates as a sub band receiver.

4-2-2 DATA CONTROL CIRCUIT

To get the address control bits from the serial data signals, IC6 and IC7 create CK and STB signals. IC4 applies the band selection data to IC5. Then pin 2 of IC5 outputs data for 50MHz band selection.

For error-free operation, Q8 and Q9 operate as follows. When the power switch is turned ON, Q8 and Q9 keep the output impedance of IC3 pin 15 high until the FRONT UNIT receives the first STB signal.

4-2-3 MIC MUTE CIRCUIT

While receiving, Q1 and Q2 mute the microphone signals (MOD signal).

4-3 POWER SUPPLY CIRCUIT (MAIN UNIT)

The power supply circuit consists of Q9, Q10, IC2 and IC3. When UX-59A is selected with the REMOTE CONTROLLER, the power switch signal (POSW signal) is applied from the FRONT UNIT and 13.8V is applied to IC2 and IC3 via Q9.

IC2 is an 8V voltage regulator which outputs +8V and either R8V or T8V. IC2 is controlled by the PTT3 line input. IC3 outputs +5V to the PLL circuits.

POWER SUPPLY CIRCUIT

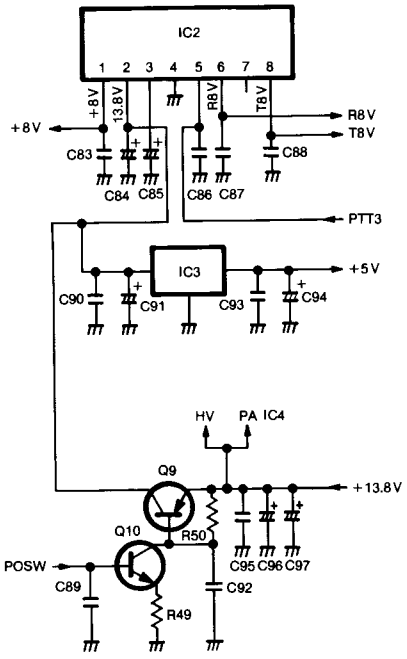

Fig. 3

4-4 RECEIVER CIRCUITS

4-4-1 RF CIRCUIT (MAIN UNIT)

Receive signals enter the MAIN UNIT from the ANTENNA CONNECTOR and pass through a low-pass filter consisting of L33~L37 and other parts, the antenna switching circuit consisting of D36~D38 and D39, and a bandpass filter as shown in Fig. 4. The signals are amplified at RF amplifier Q7 and are fed to the bandpass filter. This bandpass filter employs a 3-stage variable resonator circuit consisting of L6~L8, D8~D11 and C54~C62 and suppresses out-of-band signals. Diodes D8~D11 are varactor diodes. A voltage from the charge pump passes through the DC amplifier (Q17, Q18), and is applied to varactor diodes (D8~D11) in the band-pass filter. The voltage varies the capacitance of the diodes, thus varying the center frequency of the bandpass filter.

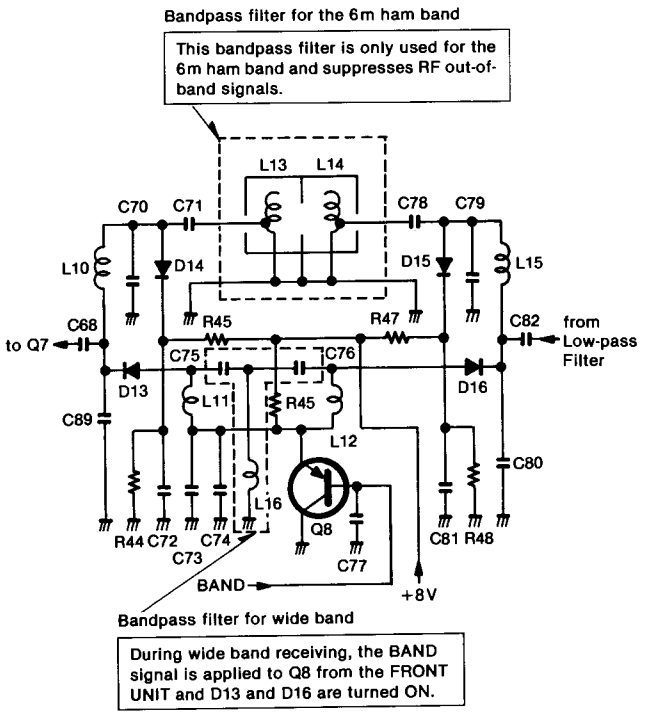

Fig. 4

4-4-2 IF CIRCUIT (MAIN UNIT)

After passing through the bandpass filter, signals are fed to the mixer circuit Q6, and are mixed with 1st LO signals from the PLL circuit to produce the 13.99MHz 1st IF signals. 1st IF signals from Q6 pass through the matching coil L3 and a pair of crystal filters (FI2) to suppress out-of-band signals. Then the 1st IF signals pass through the matching coil L2 and are amplified at IF amplifier Q3.

1st IF signals from Q3 are fed to the 2nd mixer circuit, Q1, and are mixed with 2nd LO signals for converting the 1st IF signals to 455kHz 2nd IF signals. IC1 contains the local oscillator, limiter amplifier, and active filter circuits. The 2nd LO circuit and X2 generate 14.475MHz 2nd LO signals.

The 2nd IF signals from Q1 pass through the ceramic filter, FI1, to suppress unwanted signals. They are then amplified at the limiter amplifier section (pin 5 of IC1) and applied to the quadrature detector section (pin 8 of IC1 and ceramic discriminator X1) to demodulate 2nd IF signals to AF signals.

AF signals output from pin 9 on IC1 are applied to the FRONT UNIT as the DET signal.

Signals output from pin 10 on IC1 are rectified by D2 and D3 for conversion to DC voltage and then applied to the FRONT UNIT as the SQLS signal via the squelch control circuit Q2.

A portion of the signals from FI1 is amplified at S-meter amplifier Q4 and Q5, and is detected at the rectifiers D6 and D7. These signals are then applied to the FRONT UNIT as the SRF signal. R23 adjusts the SRF signal level.

2ND IF CIRCUIT

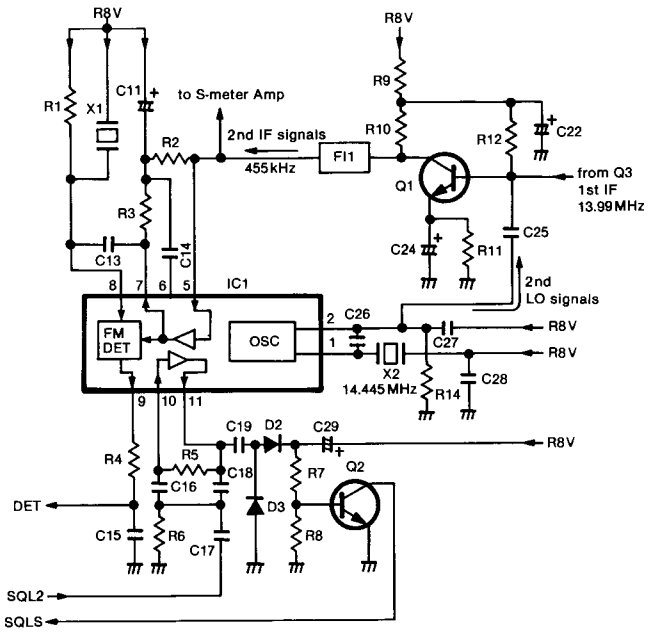

Fig. 5

4-5 PLL CIRCUITS

4-5-1 GENERAL

The PLL circuit is designed in a way that allows the desired frequency to be generated directly from the VCO circuit. The PLL consists of a PLL IC (IC5) and some other parts. These circuits receive N-data from the CPU (REMOTE CONTROLLER) in order to determine the operating frequency.

N-data is determined by dividing the desired frequency by the reference frequency. The desired frequency is the transmit frequency in transmit mode and the 1st LO frequency in receive mode.

$$\text{N-data} = \frac{\text{Desired frequency}}{\text{Reference frequency}}$$

A reference frequency of 5kHz is produced by X3, IC5 and the divider inside IC5. A signal from the VCO circuit is fed into IC5, and divided N times at IC5.

The divided signal is applied to the phase detector in IC5. Phase detection results in lock voltages being output from pin 12.

Output from pin 12 is fed into a charge pump circuit consisting of Q23, Q24 and Q25 and is then applied to the loop filter consisting of R80, R82 and C127. The signal passing through the loop filter is fed to varactor diodes D24 and D26 to control the VCO output frequency.

The DC-DC converter consisting of Q12 and Q13 creates approximately 30V DC from 8V DC to obtain wide range lock voltages for the PLL circuit and a power source for the DC amplifier consisting of Q17 and Q18. This DC amplifier amplifies the control voltage for the varactor diodes D8~D11 of the band-pass filter located in the RF circuit.

When the PLL circuit is unlocked, IC5 pin 7 is "LOW." Q22 is turned OFF, and Q27 turned ON. The bias voltage to Q28, the driver, is cut off, deactivating it—thus preventing the transmission of the unwanted signals.

PLL CIRCUIT

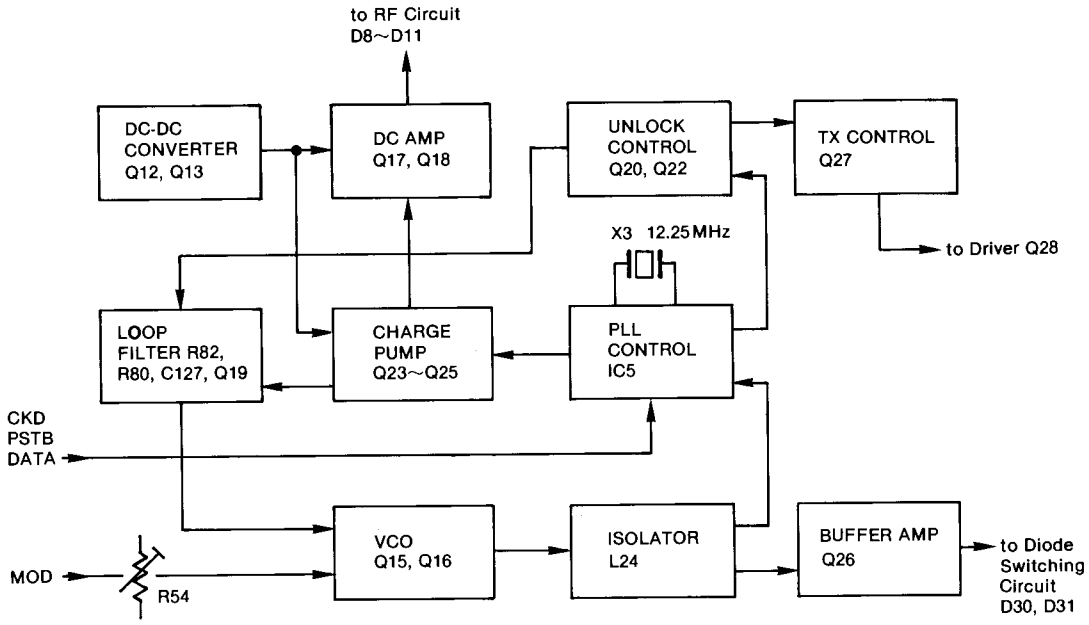

Fig. 6

4-5-2 VCO CIRCUIT (MAIN UNIT)

The VCO, Q15, employs a Hartley oscillator circuit. VCO oscillating signals are controlled by varactor diodes (D24, D26) with PLL lock voltage from the loop filter (R80, R82, C127).

In receive mode, the T8V voltage is "LOW." This turns Q14 and D23 OFF, D24, C202 and C119 for oscillation. In transmit mode, the T8V voltage is "HIGH." This turns Q14 and D23 ON. Thus D26, C111 and C117 shift the free-run frequency lower than the receive frequency.

Modulation signals then change the capacitance of D25 to produce FM modulation.

The output from the VCO circuit is buffer amplified at Q26, and passes through the low-pass filter consisting of C138~C140, L26 and L27.

VCO CIRCUIT

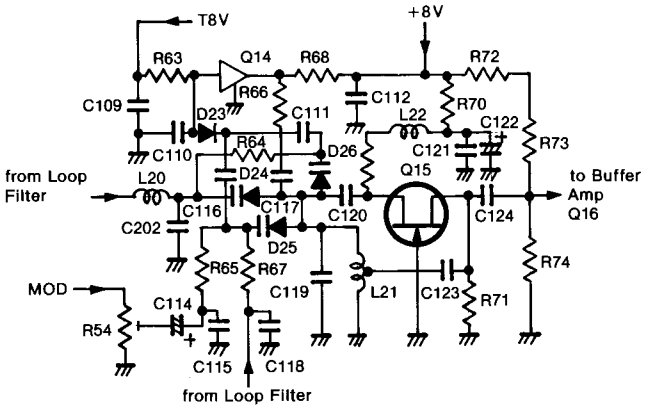

Fig. 7

4-5-3 DIODE SWITCHING CIRCUIT (MAIN UNIT)

The diode switching circuit consists of D30 and D31. While receiving, D30 is turned ON and VCO signals are applied to the 1st mixer circuit Q6. While transmitting, D31 is turned ON and VCO signals are applied to the driver Q28.

4-6 TRANSMITTER CIRCUITS

4-6-1 DRIVER CIRCUIT (MAIN UNIT)

The VCO output is amplified at Q28 and obtains more than 23dBm, 200mW. After passing through the low-pass filter consisting of C161, C162 and L29, the amplified signals are applied to the PA circuit (IC4).

4-6-2 PA CIRCUIT (MAIN UNIT)

RF signals from Q28 pass through the low-pass filter and then are applied to pin 1 of IC4. The PA circuit IC4 is a power amplifier which provides 10W output. Amplified signals at IC4 are applied to the APC detector circuit.

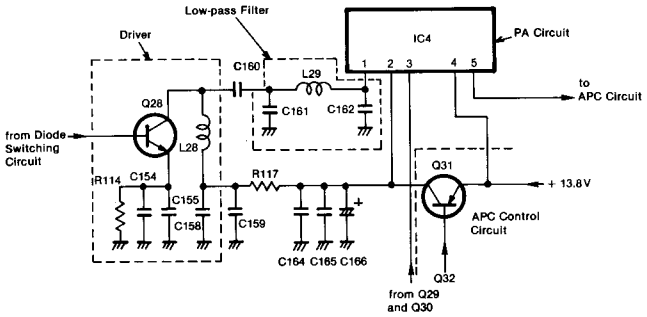

Fig. 8

4-6-3 APC DETECTOR CIRCUIT (MAIN UNIT)

The APC detector circuit consists of C175~C181, R121~R123, D34, D35 and L31.

When antenna impedance is matched at 50Ω, voltage detected at D34 and D35 is at a minimum. When antenna impedance is mismatched, the detected voltage is greater than when matched.

The voltage detected at D34 and D35 is fed to pin 2 of IC6A. IC6A is a differential amplifier. The APC reference voltage is fed to pin 3.

When the antenna impedance is mismatched, the voltage of IC6A pin 2 is greater than the reference voltage. The output voltage of IC6A pin 1 decreases, decreasing Q32 and Q31 collector current.

The change in collector current decreases the output power of IC4 until the voltage of IC6A pin 2 equals the voltage of pin 3. Thus, stable RF output power is obtained.

The output power from IC4 passes through the APC detector circuit, the antenna switching circuit (D36), the low-pass filter (C183~C192, L33~L37), and is then applied to the antenna connector.

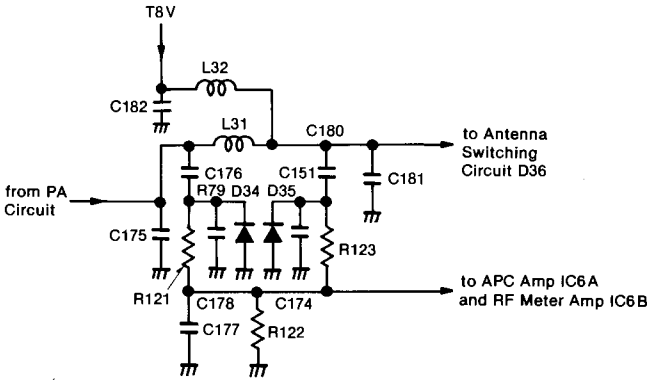

Fig. 9

4-6-4 OUTPUT POWER SELECTION CIRCUIT (MAIN UNIT)

The output power selection circuit consists of R129, R134~R137, and Q34. This circuit shifts the RF output power by shifting the APC reference voltage.

When HIGH output power is selected, Q34 is turned OFF. RF output power is adjusted with R135.

When LOW output power is selected, Q34 is turned ON. Series resistors R137 and R136 are connected in parallel with series resistors R134 and R135. RF output power is adjusted with R136.

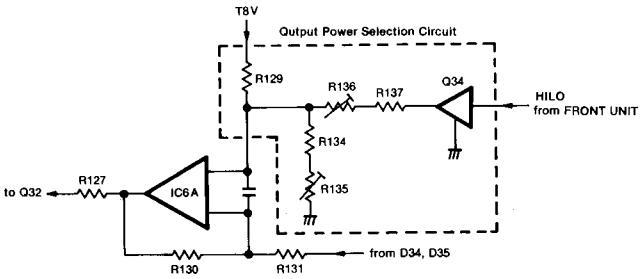

Fig. 10

4-6-5 RF METER AMP (MAIN UNIT)

The voltage detected at D34 and D35 is amplified at IC6B and then applied to the FRONT UNIT as the SRF signal.

SECTION 5 ADJUSTMENT PROCEDURES

5-1 PLL ADJUSTMENT

TEST INSTRUMENTS REQUIRED	MEASUREMENT CONNECTION LOCATION
(1) AC POWER SUPPLY • Output voltage : 13.8V DC • Current capacity : 10A or more (2) FREQUENCY COUNTER • Frequency range : 0.1~60MHz • Frequency accuracy : ±1ppm or better • Sensitivity : 100mV or better (3) DC VOLTMETER • Input impedance : 50kΩ/DC or better	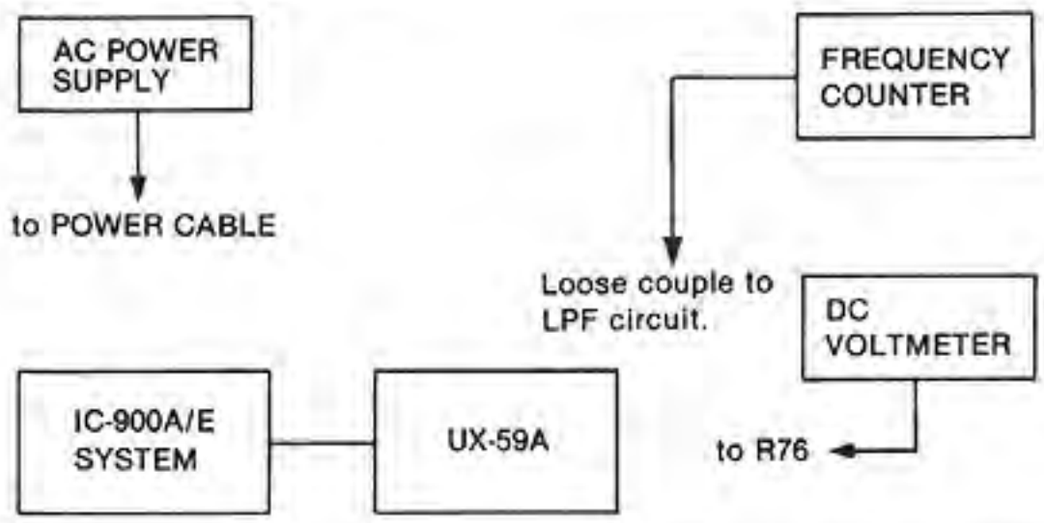

ADJUSTMENT		ADJUSTMENT CONDITIONS	MEASUREMENT		VALUE	ADJUSTMENT POINT	
			UNIT	LOCATION		UNIT	ADJUST
REFERENCE FREQUENCY	1	• Frequency display: 52.000MHz • Transmitting	MAIN	Loose couple the frequency counter to the LPF circuit.	52.000MHz	MAIN	C150
LOCK VOLTAGE	1	• Frequency display: 52.000MHz • Receiving	MAIN	Connect the DC voltmeter to R76.	17.0V	MAIN	L21

MAIN UNIT

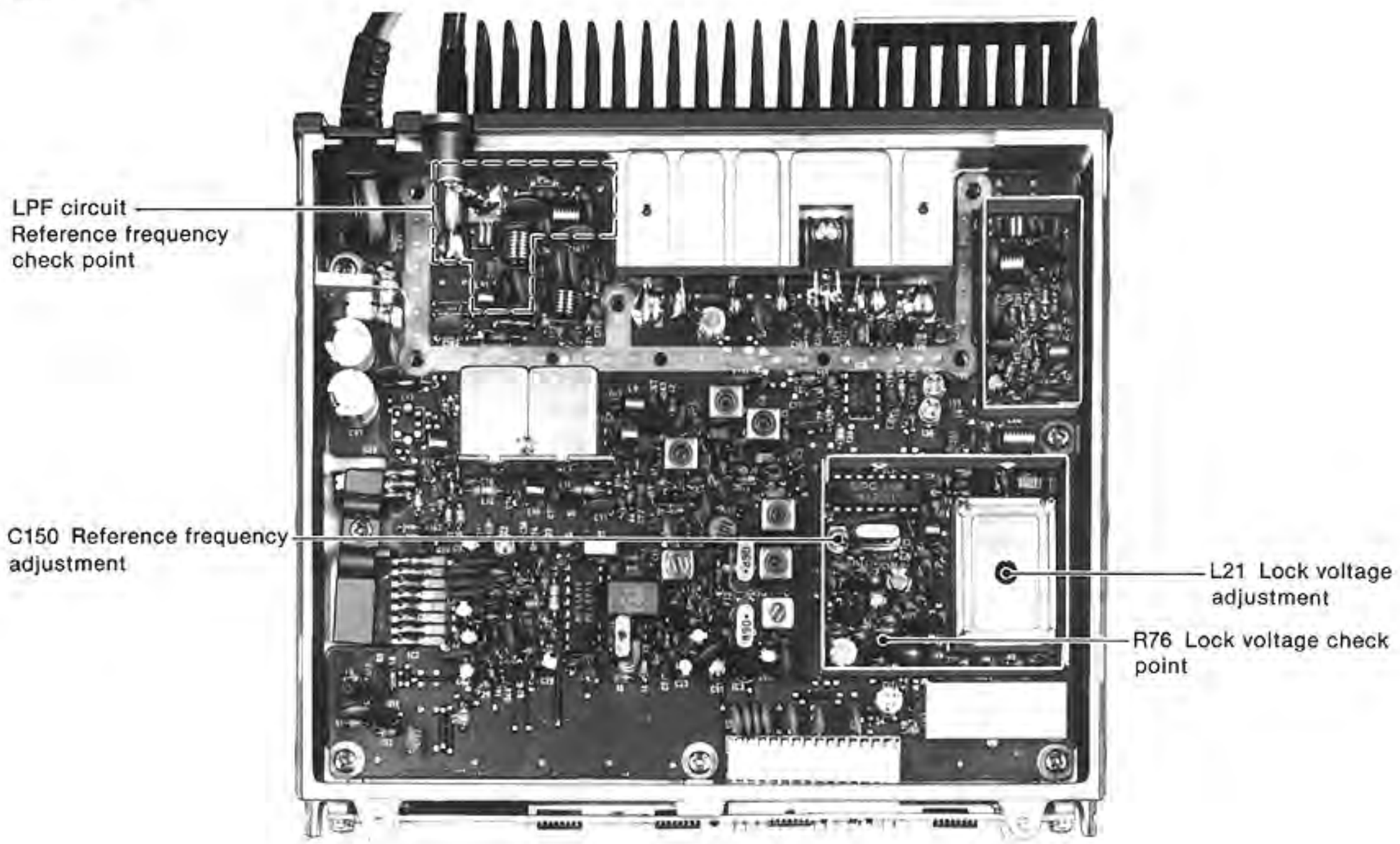

5-2 RECEIVER ADJUSTMENT

TEST INSTRUMENTS REQUIRED	MEASUREMENT CONNECTION LOCATION
(1) AC POWER SUPPLY • Output voltage : 13.8V DC • Current capacity : 10A or more (2) STANDARD SIGNAL GENERATOR (SSG) • Frequency range : 0.1~60MHz • Output level : −127~−17dBm (0.1μV~32mV) (3) DC VOLTMETER • Input impedance : 50kΩ/DC or better (4) OSCILLOSCOPE • Frequency range : DC~20MHz • Measuring range : 0.01~10V (5) SWEEP GENERATOR • Frequency range : 0.1~60MHz • Sweep bandwidth : At least 30MHz • Output impedance : 50Ω (6) DETECTOR 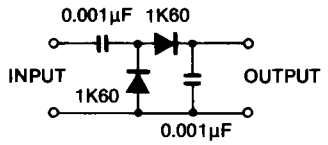	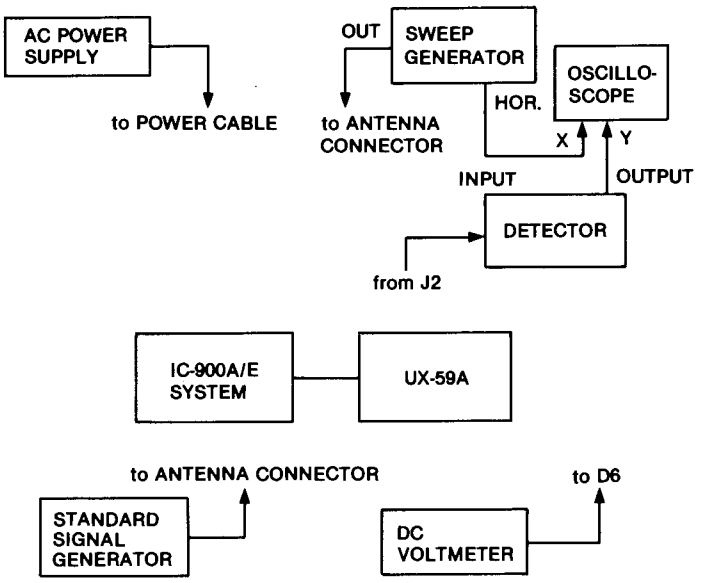

ADJUSTMENT		ADJUSTMENT CONDITIONS	MEASUREMENT		VALUE	ADJUSTMENT POINT	
			UNIT	LOCATION		UNIT	ADJUST
BANDPASS FILTER	1	• Frequency display: 52.000MHz • Apply an RF sweep signal to the ANTENNA CONNECTOR. Sweep level: −20dBm (22mV) Center frequency: 52MHz Sweep band width: 10MHz	MAIN	Connect the oscilloscope to J2 pin 2 via the detector.	Adjust as follows: 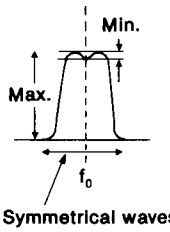 Symmetrical waves f_0=52MHz	BPF	L14 L13
SENSI-TIVITY	1	• Frequency display: 52.000MHz • Receiving • Apply an RF signal to the ANTENNA CONNECTOR. Level: −107dBm (1μV) (Approx.) Dev. : ±3.5kHz Mod. : 1kHz • R23: Max. CCW.*	MAIN	Connect the DC voltmeter to D6 cathode.	Maximum	MAIN	L8, L7 L6, L5 L3, L2 L1
		NOTE: Adjust the signal generator output level for each time showing the DC voltmeter at 30% of the lowest range full scale.					

*CCW: Counterclockwise

RECEIVER ADJUSTMENT (CONTINUED)

ADJUSTMENT		ADJUSTMENT CONDITIONS	MEASUREMENT		VALUE	ADJUSTMENT POINT	
			UNIT	LOCATION		UNIT	ADJUST
S-METER	1	• Frequency display: 52.000 MHz • Receiving • Apply an RF signal to the ANTENNA CONNECTOR. Level: −99 dBm (2.5μV) Dev. : ±3.5 kHz Mod. : 1 kHz	FUNC-TION DISPLAY	S/RF INDICATOR	S5 (3 dots)	MAIN	R23

MAIN AND BPF UNITS

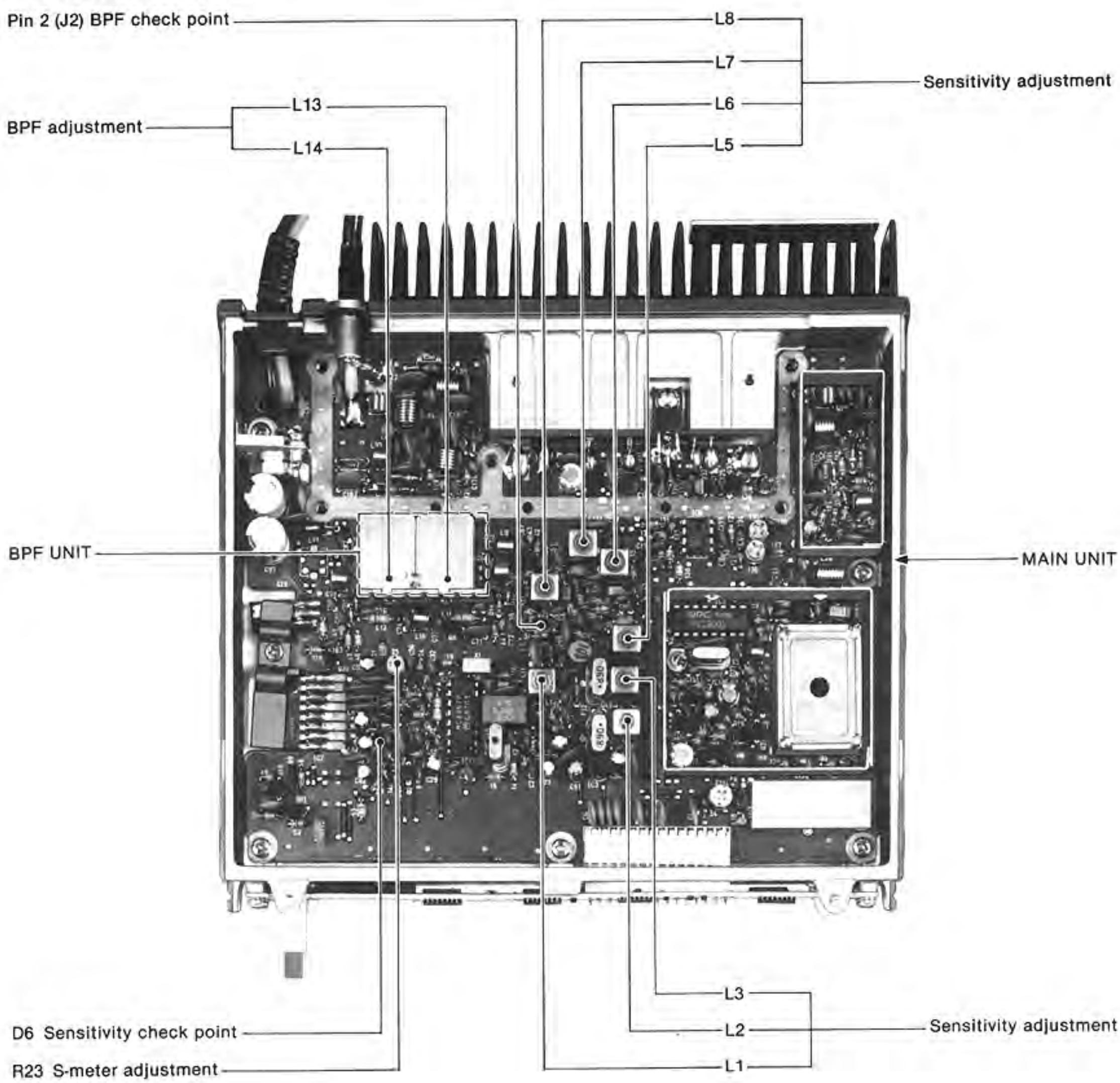

5-3 TRANSMITTER ADJUSTMENT

TEST INSTRUMENTS REQUIRED	MEASUREMENT CONNECTION LOCATION
(1) AC POWER SUPPLY • Output voltage : 13.8V DC • Current capacity : 10A or more (2) RF POWER METER (TERMINATED TYPE) • Measuring range : 1~20W • Frequency range : 40~60MHz • Impedance : 50Ω • SWR : Less than 1.2: 1 (3) AF GENERATOR (AG) • Frequency range : 200~2000Hz • Output level : 0~100mV (4) AC MILLI-VOLTMETER • Measuring range : 2~100mV (5) FM DEVIATION METER • Frequency minimum : 60MHz • Measuring range : 0~±5kHz	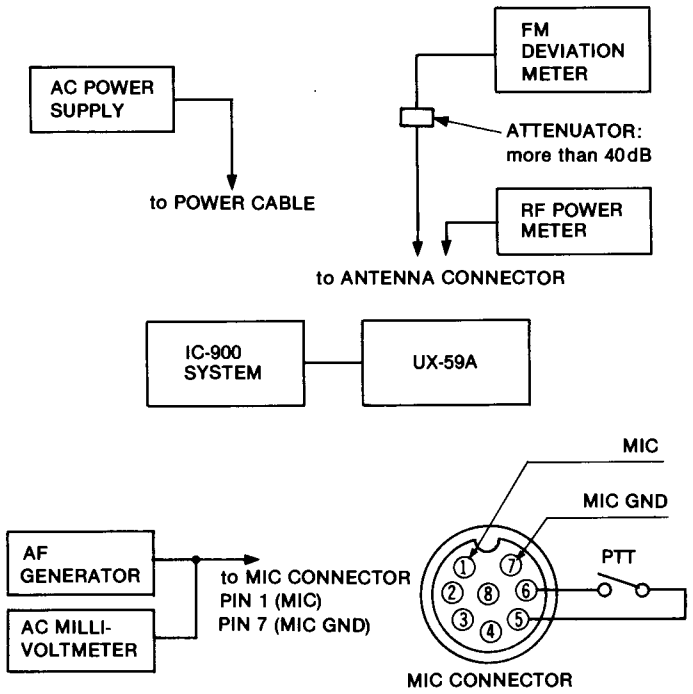

ADJUSTMENT		ADJUSTMENT CONDITIONS	MEASUREMENT		VALUE	ADJUSTMENT POINT	
			UNIT	LOCATION		UNIT	ADJUST
OUTPUT POWER	1	• Frequency display: 52.000MHz • Transmitting • HIGH/LOW POWER SWITCH: HIGH	Rear panel	Connect the RF power meter to the ANTENNA CONNECTOR.	10W	MAIN	R135
	2	• HIGH/LOW POWER SWITCH: LOW			1W		R136
DEVIATION	1	• Frequency display: 52.000MHz • Transmitting • Apply an AF signal to the MIC CONNECTOR pin 1 (pin 7 is ground). Level: 20mV/1kHz (UX-59A U.S.A. 65mV/1kHz) • Set the FM deviation meter. HPF: 50Hz LPF : 20kHz • TONE SWITCH: OFF	Rear panel	Connect the FM deviation meter to the ANTENNA CONNECTOR via the attenuator.	±4.8kHz	MAIN	R54

MAIN UNIT

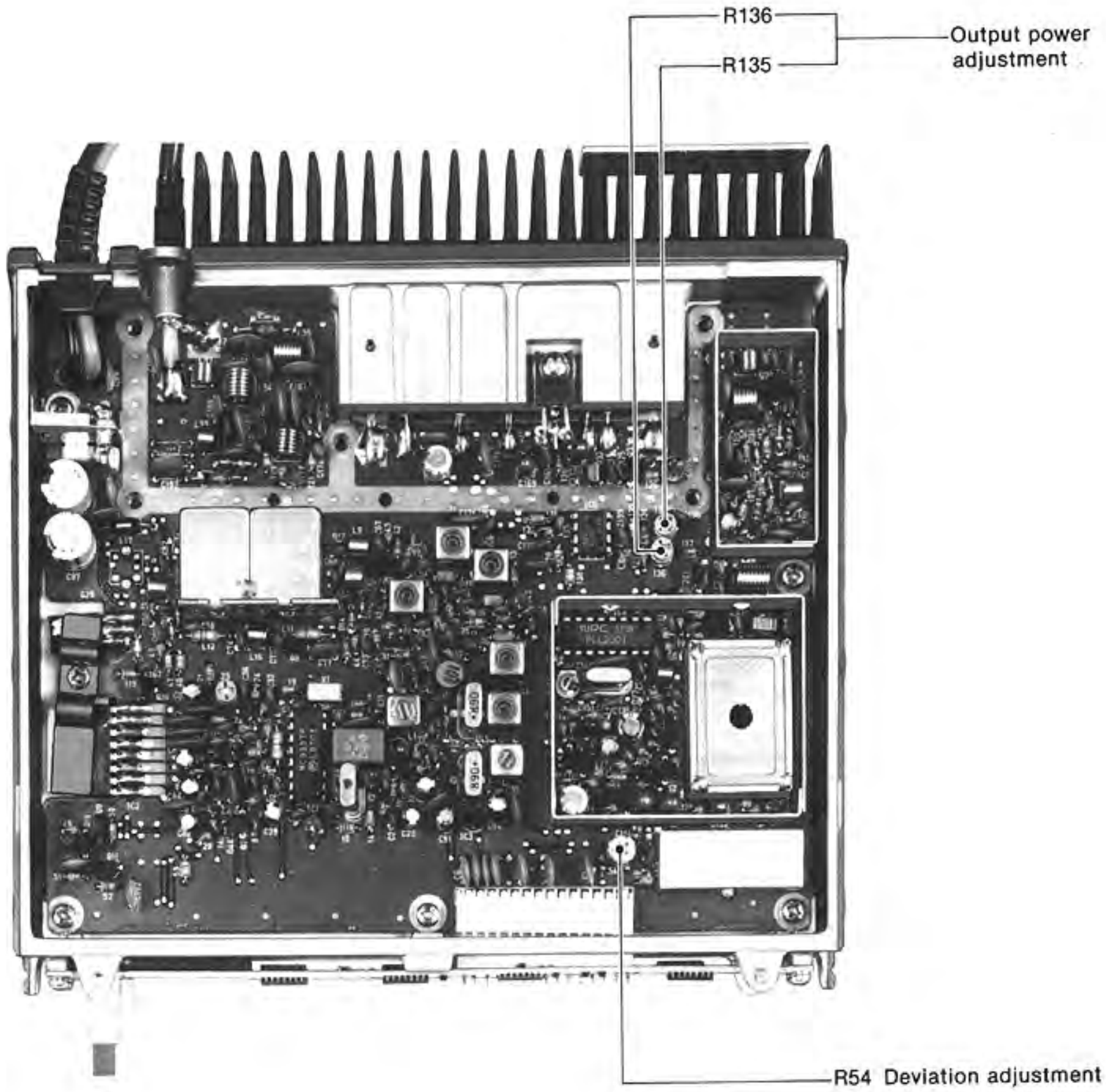
R136
R135
Output power adjustment
R54 Deviation adjustment

SECTION 6 BOARD LAYOUTS

MC3357P IC1
(LOW POWER FM IF)

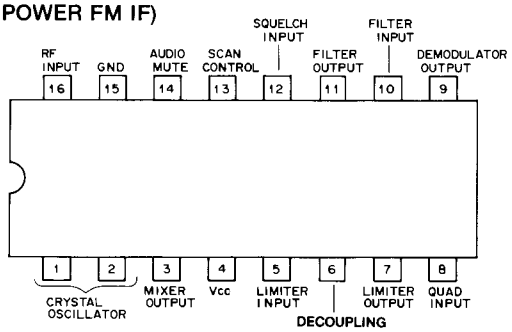

MB3756 IC2
(VOLTAGE REGULATOR)

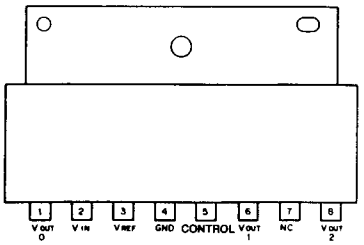

TA78L005AP IC3
(3-TERMINAL 5V REGULATOR)

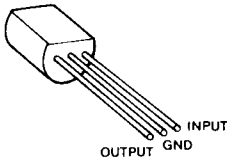

SC-1069 IC4
(POWER MODULE)

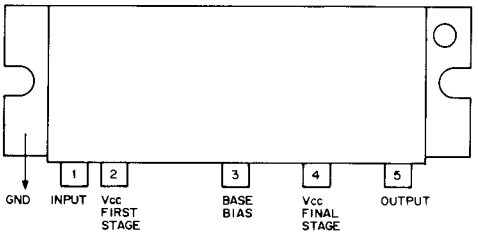

PLL2001 IC5
(PLL SYNTHESIZER IC)

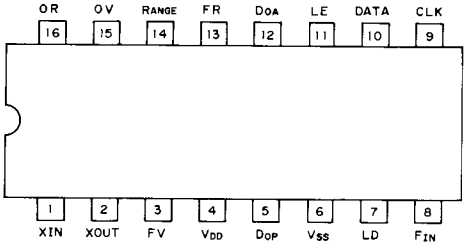

μPC358C IC6
(DUAL DRIVER)

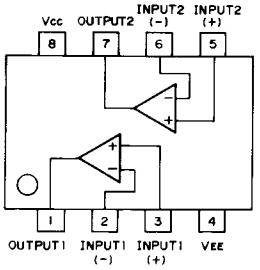

• MAIN UNIT

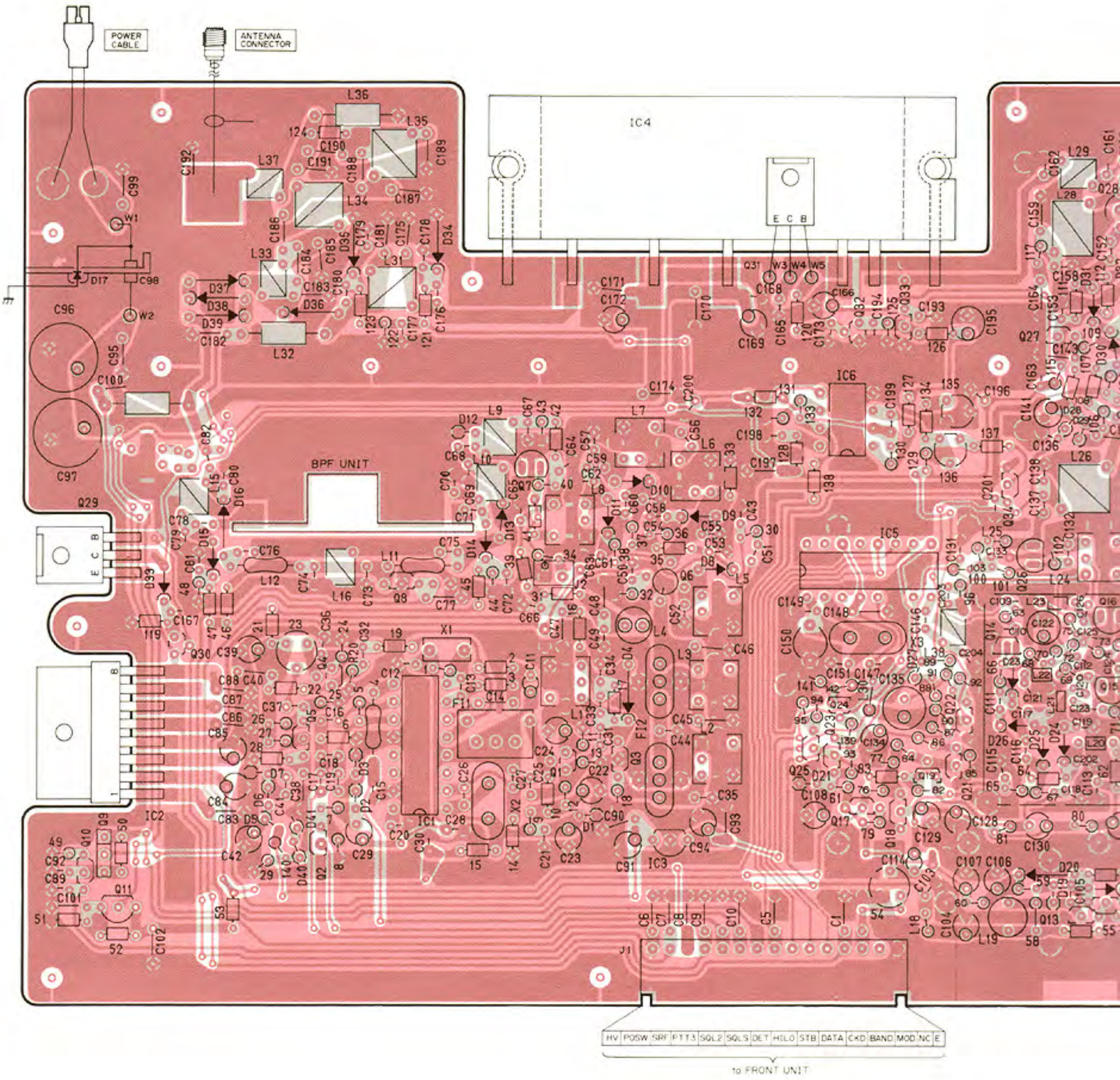

• BPF UNIT

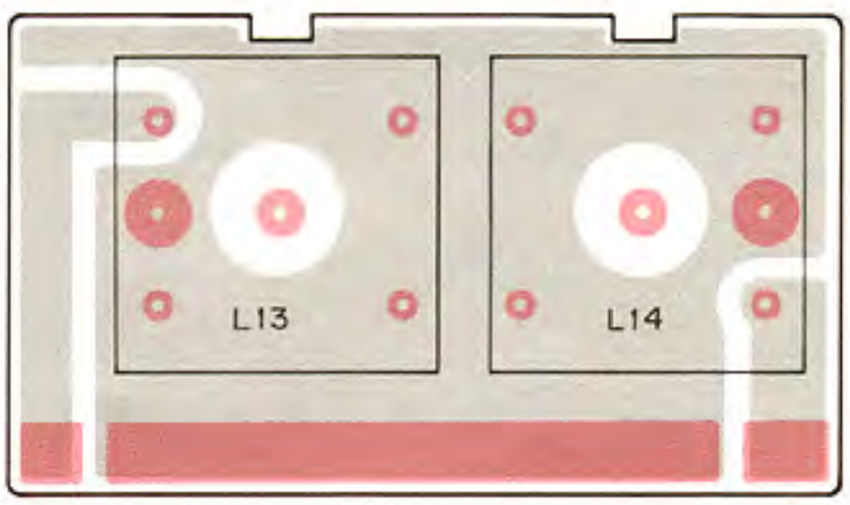

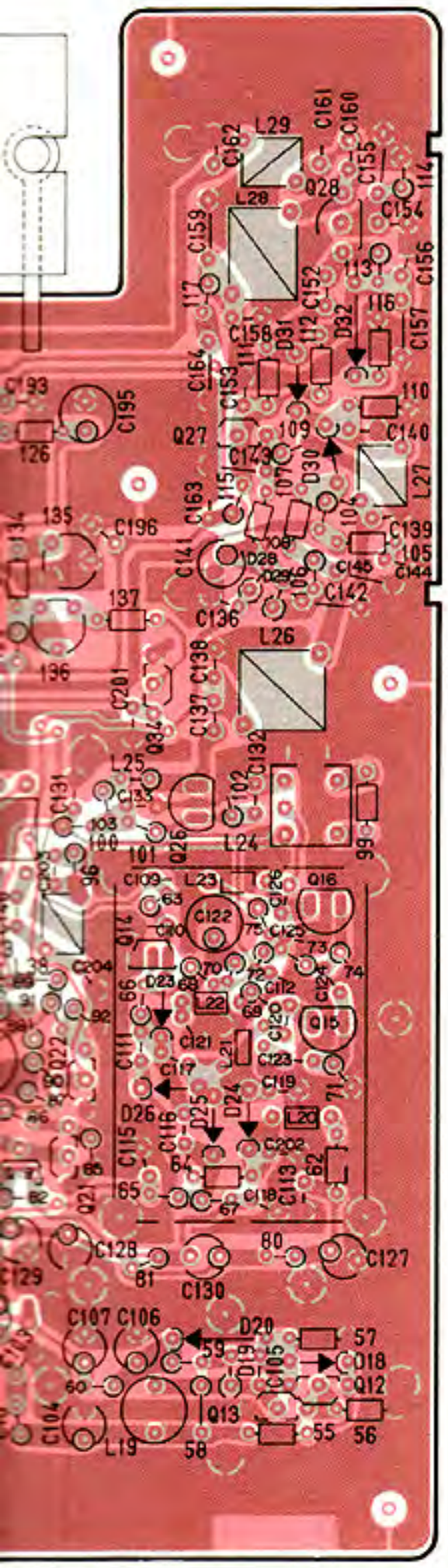

2SC2668 O
Q1

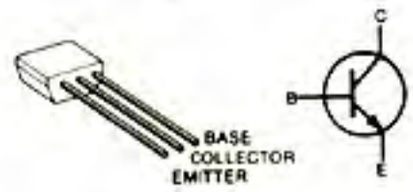

2SC2458 GR
Q2, Q4, Q5,
Q10, Q13,
Q21, Q22,
Q24, Q25,
Q27, Q30,
Q32

2SK241 Y
Q3

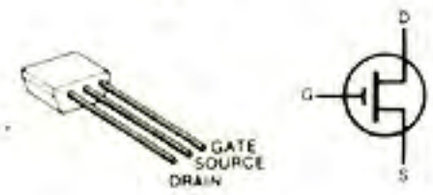

3SK121 Y
Q6

2SC3355
Q7

2SA1048 GR
Q8, Q12, Q17,
Q23

2SB909M R
Q9

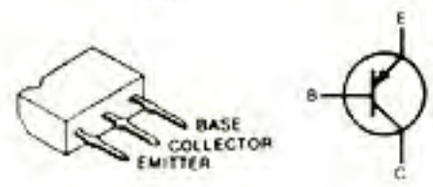

2SA639 (S) Q
Q11

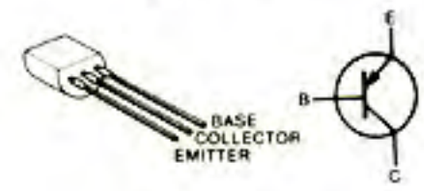

RN1204
Q14, Q33, Q34

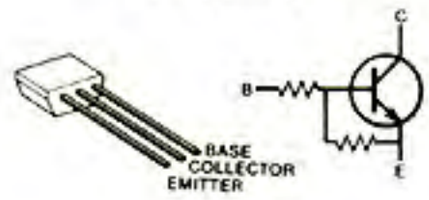

2SK125
Q15

2SC2026
Q16, Q26

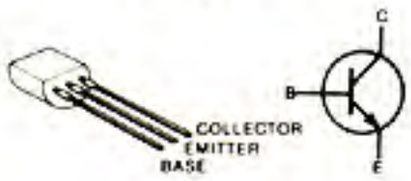

2SK184 Y
Q18, Q19

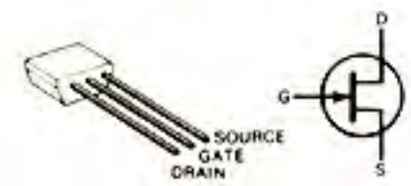

2SC2407 A
Q28

2SA1359 Y
Q29, Q31

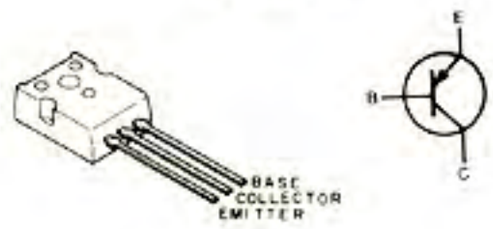

SECTION 7 VOLTAGE DIAGRAM

• **UX-59A**

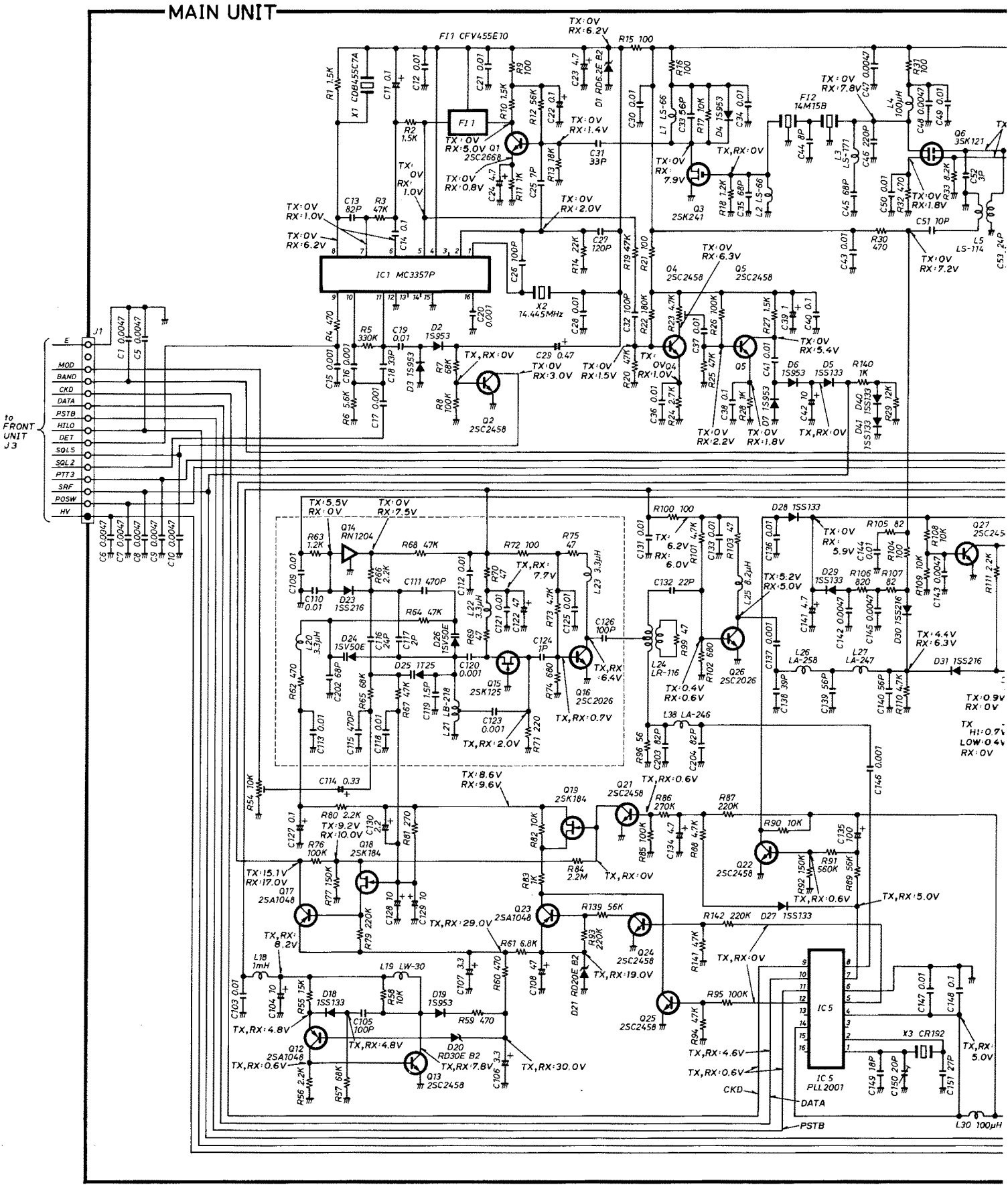

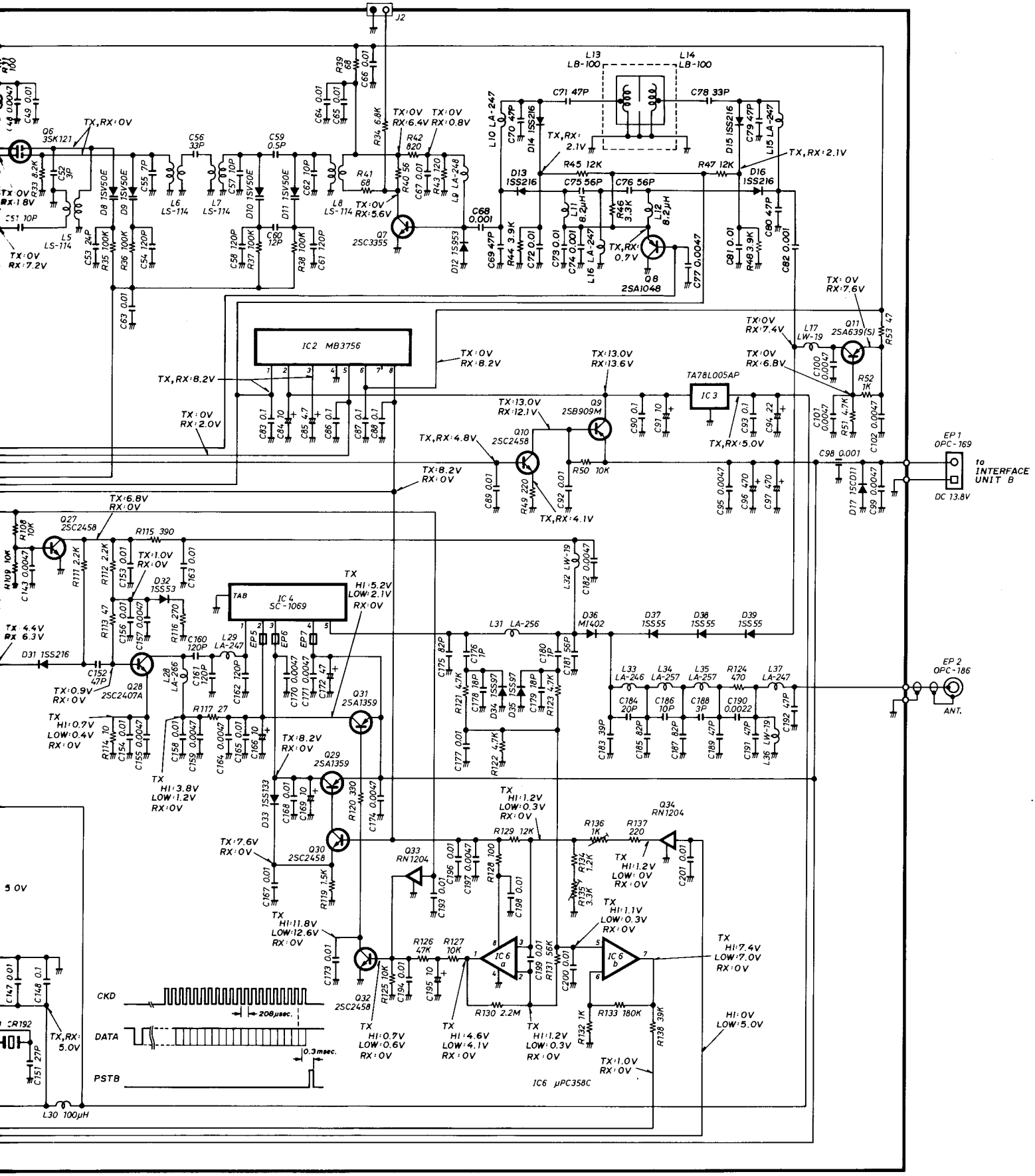
J2
L13 LB-100
L14 LB-100
C71 47P
C78 33P
Q6 3SK121
TX,RX:0V
TX:0V RX:6.4V
TX:0V RX:0.8V
TX,RX: 2.1V
TX,RX:2.1V
R45 12K
R47 12K
C75 56P
C76 56P
D13 1SS216
D16 1SS216
Q7 2SC3355
TX:0V RX:5.6V
TX:0V RX:1.8V
TX:0V RX:7.2V
C68 0.001
TX,RX: 0.7V
Q8 2SA1048
TX:0V RX:7.6V
TX:0V RX:7.4V
Q11 2SA639(S)
L17 LW-19
TX:0V RX:6.8V
IC2 MB3756
TX:0V RX:8.2V
TX,RX:8.2V
TX:13.0V RX:13.6V
TA78L005AP
IC 3
TX:0V RX:2.0V
TX:13.0V RX:12.1V
Q9 2SB909M
Q10 2SC2458
TX,RX:4.8V
TX,RX:5.0V
TX:8.2V RX:0V
TX,RX:4.1V
EP 1 OPC-169
to INTERFACE UNIT B
DC 13.8V
TX:6.8V RX:0V
Q27 2SC2458
R115 390
TX:1.0V RX:0V
D32 1SS53
IC 4 SC-1069
TAB
TX HI:5.2V LOW:2.1V RX:0V
TX 4.4V RX 6.3V
D31 1SS216
TX:0.9V RX:0V
Q28 2SC2407A
Q31 2SA1359
TX HI:0.7V LOW:0.4V RX:0V
TX:8.2V RX:0V
Q29 2SA1359
TX HI:3.8V LOW:1.2V RX:0V
D36 M1402
D37 1SS55
D38 1SS55
D39 1SS55
L31 LA-256
EP 2 OPC-186
ANT.
TX:7.6V RX:0V
Q30 2SC2458
Q33 RN1204
Q34 RN1204
TX HI:1.2V LOW:0.3V RX:0V
TX HI:1.2V LOW:0V RX:0V
TX HI:11.8V LOW:12.6V RX:0V
TX HI:1.1V LOW:0.3V RX:0V
TX HI:7.4V LOW:7.0V RX:0V
IC 6 a
IC 6 b
Q32 2SC2458
TX HI:0.7V LOW:0.6V RX:0V
TX HI:4.6V LOW:4.1V RX:0V
TX HI:1.2V LOW:0.3V RX:0V
HI:0V LOW:5.0V
TX:1.0V RX:0V
IC6 μPC358C
CKD
DATA
PSTB
208μsec.
0.3msec.
TX,RX: 5.0V
L30 100μH

SECTION 8 PARTS LIST

[MAIN UNIT]

REF. NO.	DESCRIPTION	PART NO.
IC1	IC	MC3357P
IC2	IC	MB3756
IC3	IC	TA78L005AP
IC4	IC	SC-1069
IC5	IC	PLL2001
IC6	IC	µPC358C
Q1	Transistor	2SC2668 O
Q2	Transistor	2SC2458 GR
Q3	FET	2SK241 Y
Q4	Transistor	2SC2458 GR
Q5	Transistor	2SC2458 GR
Q6	FET	3SK121 Y
Q7	Transistor	2SC3355
Q8	Transistor	2SA1048 GR
Q9	Transistor	2SB909M R
Q10	Transistor	2SC2458 GR
Q11	Transistor	2SA639(S) Q
Q12	Transistor	2SA1048 GR
Q13	Transistor	2SC2458 GR
Q14	Transistor	RN1204
Q15	FET	2SK125
Q16	Transistor	2SC2026
Q17	Transistor	2SA1048 GR
Q18	FET	2SK184 Y
Q19	FET	2SK184 Y
Q21	Transistor	2SC2458 GR
Q22	Transistor	2SC2458 GR
Q23	Transistor	2SA1048 GR
Q24	Transistor	2SC2458 GR
Q25	Transistor	2SC2458 GR
Q26	Transistor	2SC2026
Q27	Transistor	2SC2458 GR
Q28	Transistor	2SC2407 A
Q29	Transistor	2SA1359 Y
Q30	Transistor	2SC2458 GR
Q31	Transistor	2SA1359 Y
Q32	Transistor	2SC2458 GR
Q33	Transistor	RN1204
Q34	Transistor	RN1204
D1	Zener	RD6.2E B2
D2	Diode	1S953
D3	Diode	1S953
D4	Diode	1S953
D5	Diode	1SS133
D6	Diode	1S953
D7	Diode	1S953
D8	Varicap	1SV50E
D9	Varicap	1SV50E
D10	Varicap	1SV50E
D11	Varicap	1SV50E
D12	Diode	1S953
D13	Diode	1SS216
D14	Diode	1SS216
D15	Diode	1SS216
D16	Diode	1SS216
D17	Diode	15CD11
D18	Diode	1SS133
D19	Diode	1S953
D20	Zener	RD30E B2
D21	Zener	RD20E B2
D23	Diode	1SS216
D24	Varicap	1SV50E
D25	Varicap	1T25
D26	Varicap	1SV50E
D27	Diode	1SS133
D28	Diode	1SS133

[MAIN UNIT]

REF. NO.	DESCRIPTION	PART NO.	
D29	Diode	1SS133	
D30	Diode	1SS216	
D31	Diode	1SS216	
D32	Diode	1SS53	
D33	Diode	1SS133	
D34	Diode	1SS97	
D35	Diode	1SS97	
D36	Diode	MI402	
D37	Diode	1SS55	
D38	Diode	1SS55	
D39	Diode	1SS55	
D40	Diode	1SS133	
D41	Diode	1SS133	
FI1	Ceramic	CFV455E10	
FI2	Crystal	14M15B	
X1	Discriminator	CDB455C7A	
X2	Crystal	HC43/U (14.445MHz)	
X3	Crystal	CR192	
L1	Coil	LS-66	
L2	Coil	LS-66	
L3	Coil	LS-171	
L4	Coil	S4 101K	
L5	Coil	LS-114	
L6	Coil	LS-114	
L7	Coil	LS-114	
L8	Coil	LS-114	
L9	Coil	LA-248	
L10	Coil	LA-247	
L11	Coil	LAL03NA 8R2K	
L12	Coil	LAL03NA 8R2K	
L13	Coil	LB-100	
L14	Coil	LB-100	
L15	Coil	LA-247	
L16	Coil	LA-247	
L17	Coil	LW-19	
L18	Coil	LAL03NA 102K	
L19	Coil	LW-30	
L20	Coil	LAL02KR 3R3K	
L21	Coil	LB-218	
L22	Coil	LAL02KR 3R3K	
L23	Coil	LAL02KR 3R3K	
L24	Coil	LR-116	
L25	Coil	LAL03NA 8R2K	
L26	Coil	LA-258	
L27	Coil	LA-247	
L28	Coil	LA-266	
L29	Coil	LA-247	
L30	Coil	LAL03NA 101K	
L31	Coil	LA-256	
L32	Coil	LW-19	
L33	Coil	LA-246	
L34	Coil	LA-257	
L35	Coil	LA-257	
L36	Coil	LW-19	
L37	Coil	LA-247	
L38	Coil	LA-246	
R1	Resistor	1.5kΩ	ELR20
R2	Resistor	1.5kΩ	R20
R3	Resistor	47kΩ	R20
R4	Resistor	470Ω	R25
R5	Resistor	330kΩ	ELR20
R6	Resistor	5.6kΩ	R20

[MAIN UNIT]

REF. NO.	DESCRIPTION	PART NO.	
R7	Resistor	68kΩ	ELR20
R8	Resistor	100kΩ	ELR20
R9	Resistor	100Ω	ELR20
R10	Resistor	1.5kΩ	R20
R11	Resistor	1kΩ	ELR20
R12	Resistor	56kΩ	ELR20
R13	Resistor	18kΩ	ELR20
R14	Resistor	22kΩ	R20
R15	Resistor	100Ω	R20
R16	Resistor	100Ω	R20
R17	Resistor	10kΩ	R20
R18	Resistor	1.2kΩ	ELR20
R19	Resistor	47kΩ	R20
R20	Resistor	47kΩ	ELR20
R21	Resistor	100Ω	R20
R22	Resistor	180kΩ	R20
R23	Trimmer	4.7kΩ	RH0521CS3J04A
R24	Resistor	2.7kΩ	ELR20
R25	Resistor	47kΩ	ELR20
R26	Resistor	100kΩ	ELR20
R27	Resistor	1.5kΩ	ELR20
R28	Resistor	1kΩ	R20
R29	Resistor	12kΩ	ELR20
R30	Resistor	470Ω	ELR20
R31	Resistor	100Ω	R20
R32	Resistor	470Ω	ELR20
R33	Resistor	8.2kΩ	R20
R34	Resistor	6.8kΩ	ELR20
R35	Resistor	100kΩ	R20
R36	Resistor	100kΩ	ELR20
R37	Resistor	100kΩ	ELR20
R38	Resistor	100kΩ	ELR20
R39	Resistor	68Ω	R20
R40	Resistor	56Ω	ELR20
R41	Resistor	68Ω	R20
R42	Resistor	820Ω	R20
R43	Resistor	120Ω	ELR20
R44	Resistor	3.9kΩ	ELR20
R45	Resistor	12kΩ	R20
R46	Resistor	3.3kΩ	R20
R47	Resistor	12kΩ	R20
R48	Resistor	3.9kΩ	ELR20
R49	Resistor	220Ω	ELR20
R50	Resistor	10kΩ	R20
R51	Resistor	4.7kΩ	R20
R52	Resistor	1kΩ	R20
R53	Resistor	47Ω	R20
R54	Trimmer	10kΩ	RH0651C14J2WA
R55	Resistor	15kΩ	R20
R56	Resistor	2.2kΩ	R20
R57	Resistor	68kΩ	R20
R58	Resistor	10kΩ	ELR20
R59	Resistor	470Ω	ELR20
R60	Resistor	470Ω	ELR20
R61	Resistor	6.8kΩ	ELR20
R62	Resistor	470Ω	R20
R63	Resistor	1.2kΩ	ELR20
R64	Resistor	47kΩ	R20
R65	Resistor	68kΩ	ELR20
R66	Resistor	2.2kΩ	ELR20
R67	Resistor	47kΩ	ELR20
R68	Resistor	47kΩ	ELR20
R69	Resistor	47Ω	ELR20
R70	Resistor	47Ω	ELR20
R71	Resistor	220Ω	ELR20
R72	Resistor	100Ω	ELR20
R73	Resistor	4.7kΩ	ELR20
R74	Resistor	680Ω	ELR20
R75	Resistor	47Ω	ELR20
R76	Resistor	100kΩ	R20
R77	Resistor	150kΩ	ELR20
R79	Resistor	220kΩ	ELR20
R80	Resistor	2.2kΩ	ELR20
R81	Resistor	270Ω	ELR20
R82	Resistor	10kΩ	R20

[MAIN UNIT]

REF. NO.	DESCRIPTION	PART NO.		
R83	Resistor	1kΩ	R20	
R84	Resistor	2.2MΩ	ELR20	
R85	Resistor	100kΩ	ELR20	
R86	Resistor	270kΩ	ELR20	
R87	Resistor	220kΩ	ELR20	
R88	Resistor	4.7kΩ	ELR20	
R89	Resistor	56kΩ	ELR20	
R90	Resistor	10kΩ	ELR20	
R91	Resistor	560kΩ	ELR20	
R92	Resistor	150kΩ	ELR20	
R93	Resistor	220kΩ	ELR20	
R94	Resistor	47kΩ	ELR20	
R95	Resistor	100kΩ	ELR20	
R96	Resistor	56Ω	ELR20	
R99	Resistor	47Ω	R20	
R100	Resistor	100Ω	ELR20	
R101	Resistor	4.7kΩ	ELR20	
R102	Resistor	680Ω	ELR20	
R103	Resistor	47Ω	ELR20	
R104	Resistor	100Ω	ELR20	
R105	Resistor	82Ω	R20	
R106	Resistor	820Ω	ELR20	
R107	Resistor	82Ω	R20	
R108	Resistor	10kΩ	R20	
R109	Resistor	10kΩ	ELR20	
R110	Resistor	4.7kΩ	R20	
R111	Resistor	2.2kΩ	R20	
R112	Resistor	2.2kΩ	R20	
R113	Resistor	47Ω	ELR20	
R114	Resistor	10Ω	ELR20	
R115	Resistor	390Ω	ELR20	
R116	Resistor	270Ω	R20	
R117	Resistor	27Ω	ELR20	
R119	Resistor	1.5kΩ	R20	
R120	Resistor	330Ω	R20	
R121	Resistor	4.7kΩ	R20	
R122	Resistor	4.7kΩ	ELR20	
R123	Resistor	4.7kΩ	R20	
R124	Resistor	470Ω	R20	
R125	Resistor	10kΩ	ELR20	
R126	Resistor	47kΩ	R20	
R127	Resistor	10kΩ	R20	
R128	Resistor	100Ω	R20	
R129	Resistor	12kΩ	ELR20	
R130	Resistor	2.2MΩ	ELR20	
R131	Resistor	56kΩ	R20	
R132	Resistor	1kΩ	ELR20	
R133	Resistor	180kΩ	ELR20	
R134	Resistor	1.2kΩ	R20	
R135	Trimmer	3.3kΩ	RH0521CN3J04A	
R136	Trimmer	1kΩ	RH0521C13J0BA	
R137	Resistor	220Ω	R20	
R138	Resistor	39kΩ	R20	
R139	Resistor	56kΩ	ELR20	
R140	Resistor	1kΩ	ELR20	
R141	Resistor	47kΩ	ELR20	
R142	Resistor	220kΩ	ELR20	
C1	Ceramic	0.0047μF	50V	
C5	Ceramic	0.0047μF	50V	
C6	Ceramic	0.0047μF	50V	
C7	Ceramic	0.0047μF	50V	
C8	Ceramic	0.0047μF	50V	
C9	Ceramic	0.0047μF	50V	
C10	Ceramic	0.0047μF	50V	
C11	Tantalum	0.1μF	35V	DN
C12	Barrier Layer	0.01μF	25V	
C13	Ceramic	82pF	50V	
C14	Barrier Layer	0.1μF	16V	
C15	Ceramic	0.001μF	50V	
C16	Ceramic	0.001μF	50V	
C17	Ceramic	0.001μF	50V	
C18	Ceramic	33pF	50V	
C19	Barrier Layer	0.01μF	25V	

[MAIN UNIT]

REF. NO.	DESCRIPTION	PART NO.		
C20	Ceramic	0.001μF	50V	
C21	Barrier Layer	0.01μF	25V	
C22	Electrolytic	0.1μF	50V	MS7
C23	Electrolytic	4.7μF	25V	MS7
C24	Tantalum	4.7μF	16V	DN
C25	Ceramic	10pF	50V	
C26	Ceramic	100pF	50V	
C27	Ceramic	120pF	50V	
C28	Barrier Layer	0.01μF	25V	
C29	Electrolytic	0.47μF	50V	MS7
C30	Barrier Layer	0.01μF	25V	
C31	Ceramic	33pF	50V	
C32	Ceramic	100pF	50V	
C33	Ceramic	56pF	50V	
C34	Barrier Layer	0.01μF	25V	
C35	Ceramic	68pF	50V	
C36	Barrier Layer	0.01μF	25V	
C37	Barrier Layer	0.01μF	25V	
C38	Barrier Layer	0.1μF	16V	
C39	Electrolytic	1μF	50V	MS7
C40	Barrier Layer	0.1μF	16V	
C41	Barrier Layer	0.01μF	25V	
C42	Electrolytic	10μF	16V	MS7
C43	Barrier Layer	0.01μF	25V	
C44	Ceramic	8pF	50V	
C45	Ceramic	68pF	50V	CH
C46	Ceramic	220pF	50V	CH
C47	Ceramic	0.0047μF	50V	
C48	Ceramic	0.0047μF	50V	
C49	Barrier Layer	0.01μF	25V	
C50	Barrier Layer	0.01μF	25V	
C51	Ceramic	10pF	50V	
C52	Ceramic	3pF	50V	
C53	Ceramic	24pF	50V	
C54	Ceramic	120pF	50V	
C55	Ceramic	7pF	50V	
C56	Ceramic	33pF	50V	
C57	Ceramic	10pF	50V	
C58	Ceramic	120pF	50V	
C59	Ceramic	0.5pF	50V	
C60	Ceramic	12pF	50V	
C61	Ceramic	120pF	50V	
C62	Ceramic	10pF	50V	
C63	Barrier Layer	0.01μF	25V	
C64	Barrier Layer	0.01μF	25V	
C65	Barrier Layer	0.01μF	25V	
C66	Barrier Layer	0.01μF	25V	
C67	Barrier Layer	0.01μF	25V	
C68	Ceramic	0.001μF	50V	
C69	Ceramic	47pF	50V	
C70	Ceramic	47pF	50V	
C71	Ceramic	47pF	50V	
C72	Barrier Layer	0.01μF	25V	
C73	Barrier Layer	0.01μF	25V	
C74	Ceramic	0.001μF	50V	
C75	Ceramic	56pF	50V	
C76	Ceramic	56pF	50V	
C77	Ceramic	0.0047μF	50V	
C78	Ceramic	33pF	50V	
C79	Ceramic	47pF	50V	
C80	Ceramic	47pF	50V	
C81	Barrier Layer	0.01μF	25V	
C82	Ceramic	0.001μF	50V	
C83	Barrier Layer	0.1μF	16V	
C84	Electrolytic	10μF	16V	MS7
C85	Electrolytic	4.7μF	25V	MS7
C86	Barrier Layer	0.1μF	16V	
C87	Barrier Layer	0.1μF	16V	
C88	Barrier Layer	0.1μF	16V	
C89	Barrier Layer	0.01μF	25V	
C90	Barrier Layer	0.1μF	16V	
C91	Electrolytic	10μF	16V	MS7
C92	Barrier Layer	0.01μF	25V	
C93	Barrier Layer	0.1μF	16V	
C94	Electrolytic	22μF	6.3V	MS7

[MAIN UNIT]

REF. NO.	DESCRIPTION	PART NO.		
C95	Ceramic	0.0047μF	50V	
C96	Electrolytic	16TWSS470		
C97	Electrolytic	16TWSS470		
C98	Feed Through	TF318-450E 102GMV 50V		
C99	Ceramic	0.0047μF	50V	
C100	Ceramic	0.0047μF	50V	
C101	Ceramic	0.0047μF	50V	
C102	Ceramic	0.0047μF	50V	
C103	Barrier Layer	0.01μF	25V	
C104	Electrolytic	10μF	16V	MS7
C105	Ceramic	100pF	50V	
C106	Electrolytic	3.3μF	50V	MS7
C107	Electrolytic	3.3μF	50V	MS7
C108	Electrolytic	47μF	25V	MS9
C109	Barrier Layer	0.01μF	25V	
C110	Barrier Layer	0.01μF	25V	
C111	Ceramic	470pF	50V	
C112	Barrier Layer	0.01μF	25V	
C113	Barrier Layer	0.01μF	25V	
C114	Tantalum	0.33μF	35V	DN
C115	Ceramic	470pF	50V	
C116	Ceramic	24pF	50V	
C117	Ceramic	2pF	50V	
C118	Barrier Layer	0.01μF	25V	
C119	Ceramic	1.5pF	50V	
C120	Ceramic	0.001μF	50V	
C121	Barrier Layer	0.01μF	25V	
C122	Electrolytic	47μF	10V	MS9
C123	Ceramic	0.001μF	50V	
C124	Ceramic	1pF	50V	
C125	Barrier Layer	0.01μF	25V	
C126	Ceramic	100pF	50V	
C127	Tantalum	0.1μF	35V	DN
C128	Tantalum	10μF	35V	DN
C129	Tantalum	10μF	35V	DN
C130	Tantalum	2.2μF	35V	DN
C131	Barrier Layer	0.01μF	25V	
C132	Ceramic	22pF	50V	
C133	Barrier Layer	0.01μF	25V	
C134	Electrolytic	4.7μF	25V	MS7
C135	Electrolytic	100μF	10V	MS7
C136	Barrier Layer	0.01μF	25V	
C137	Ceramic	0.001μF	50V	
C138	Ceramic	39pF	50V	
C139	Ceramic	56pF	50V	
C140	Ceramic	56pF	50V	
C141	Electrolytic	4.7μF	25V	MS7
C142	Ceramic	0.0047μF	50V	
C143	Ceramic	0.0047μF	50V	
C144	Barrier Layer	0.01μF	25V	
C145	Ceramic	0.0047μF	50V	
C146	Ceramic	0.001μF	50V	
C147	Barrier Layer	0.01μF	25V	
C148	Barrier Layer	0.1μF	16V	
C149	Ceramic	18pF	50V	
C150	Trimmer	20pF	CV05D2001	
C151	Ceramic	27pF	50V	
C152	Ceramic	47pF	50V	
C153	Barrier Layer	0.01μF	25V	
C154	Barrier Layer	0.01μF	25V	
C155	Ceramic	0.0047μF	50V	
C156	Barrier Layer	0.01μF	25V	
C157	Ceramic	0.0047μF	50V	
C158	Barrier Layer	0.01μF	25V	
C159	Ceramic	0.0047μF	50V	
C160	Ceramic	120pF	50V	
C161	Ceramic	120pF	50V	
C162	Ceramic	120pF	50V	
C163	Barrier Layer	0.01μF	25V	
C164	Ceramic	0.0047μF	50V	
C165	Barrier Layer	0.01μF	25V	
C166	Tantalum	10μF	35V	DN
C167	Barrier Layer	0.01μF	25V	
C168	Barrier Layer	0.01μF	25V	
C169	Tantalum	10μF	35V	DN

[MAIN UNIT]

REF. NO.	DESCRIPTION	PART NO.		
C170	Ceramic	0.0047μF	50V	
C171	Ceramic	0.0047μF	50V	
C172	Electrolytic	47μF	25V	MS9
C173	Barrier Layer	0.01μF	25V	
C174	Ceramic	0.0047μF	50V	
C175	Ceramic	82pF	500V	
C176	Ceramic	1pF	50V	
C177	Barrier Layer	0.01μF	25V	
C178	Ceramic	18pF	50V	
C179	Ceramic	18pF	50V	
C180	Ceramic	1pF	50V	
C181	Ceramic	56pF	500V	
C182	Ceramic	0.0047μF	50V	
C183	Ceramic	39pF	500V	
C184	Ceramic	20pF	500V	
C185	Ceramic	82pF	500V	
C186	Ceramic	10pF	500V	
C187	Ceramic	82pF	500V	
C188	Ceramic	3pF	500V	
C189	Ceramic	47pF	500V	
C190	Ceramic	0.0022μF	500V	
C191	Ceramic	47pF	500V	
C192	Ceramic	47pF	500V	
C193	Barrier Layer	0.01μF	25V	
C194	Barrier Layer	0.01μF	25V	
C195	Tantalum	10μF	16V	DN
C196	Barrier Layer	0.01μF	25V	
C197	Ceramic	0.0047μF	50V	
C198	Barrier Layer	0.01μF	25V	
C199	Barrier Layer	0.01μF	25V	
C200	Barrier Layer	0.01μF	25V	
C201	Barrier Layer	0.01μF	25V	
C202	Ceramic	68pF	50V	
C203	Ceramic	82pF	50V	
C204	Ceramic	82pF	50V	
J1	Connector	3024-15AH		
J2	Connector	IMSA-9201B-1-02-T		
EP3	P.C. Board	B-1392C		
EP4	P.C. Board	B-1348A		
EP5	Ferrite Bead	DL2-OP2.6-3-1.2H		
EP6	Ferrite Bead	DL2-OP2.6-3-1.2H		
EP7	Ferrite Bead	DL2-OP2.6-3-1.2H		
W1	Jumper	JPW-02A		
W2	Jumper	JPW-02A		
W3	Jumper	JPW-02A		
W4	Jumper	JPW-02A		
W5	Jumper	JPW-02A		

SERVICE MANUAL

UX-29A
UX-29E
UX-29H

This part of the service manual covers all service information of the **UX-29A/E/H** 144MHz BAND UNIT except for information common to all band units.
Refer to COMMON for information related to repair, mechanical parts, disassembly and FRONT UNIT.

TABLE OF CONTENTS

SECTION 1 SPECIFICATIONS

GENERAL

- Frequency coverage :

VERSION	GUARANTEED RANGE	OPERATIONAL RANGE	
		RECEIVER	TRANSMITTER
UX-29A (U.S.A.)	144.00~148.00	138.00~174.00	140.10~150.00
UX-29A (Australia)	144.00~148.00	144.00~148.00	144.00~148.00
UX-29A (Asia)	144.00~148.00	138.00~174.00	140.10~150.00
UX-29E (Europe)	144.00~146.00	144.00~146.00	144.00~146.00
UX-29E (Italy)	144.00~148.00	140.00~150.00	140.00~150.00

Unit: MHz

- Antenna impedance : 50Ω unbalanced
- Frequency stability : ±10ppm (−10°C~+60°C) (+14°F~+140°F)
- Power supply requirement : 13.8V DC±15% (Negative ground)
- Current drain (at 13.8V DC) :

MODEL	TRANSMIT		RECEIVE
	HIGH	LOW	
UX-29A/E	6.0A (25W)	3.0A (5W)	250mA
UX-29H	9.5A (45W)	3.5A (5W)	

- Dimensions : 177(W)×25(H)×191(D) mm 7.0(W)×1.0(H)×7.5(D) inches
  (Projections not included)
- Weight : 1.1kg (2.4 lbs.)
- Usable temperature range : −10°C~+60°C (+14°F~+140°F)

TRANSMITTER

- RF output power :

MODEL	HIGH	LOW
UX-29A/E	25W	5W
UX-29H	45W	5W

- Emission mode : F3
  F2 (During "digital code squelch" operation with UT-28)
- Modulation system : Variable reactance frequency modulation
- Max. frequency deviation : ±5.0kHz
- Spurious emission : More than 60dB below carrier output power

RECEIVER

- Receiver system : Double-conversion superheterodyne
- Modulation acceptance : F3
- Intermediate frequencies : 1st 17.2MHz 2nd 455kHz
- Sensitivity : Less than 0.18μV for 12dB SINAD
- Squelch sensitivity : Less than 0.11μV
- Selectivity : 12.5kHz/−6dB 25.0kHz/−60dB
- Spurious and image rejection : More than 60dB

※ All stated specifications are subject to change without notice or obligation.

SECTION 2 INSIDE VIEW

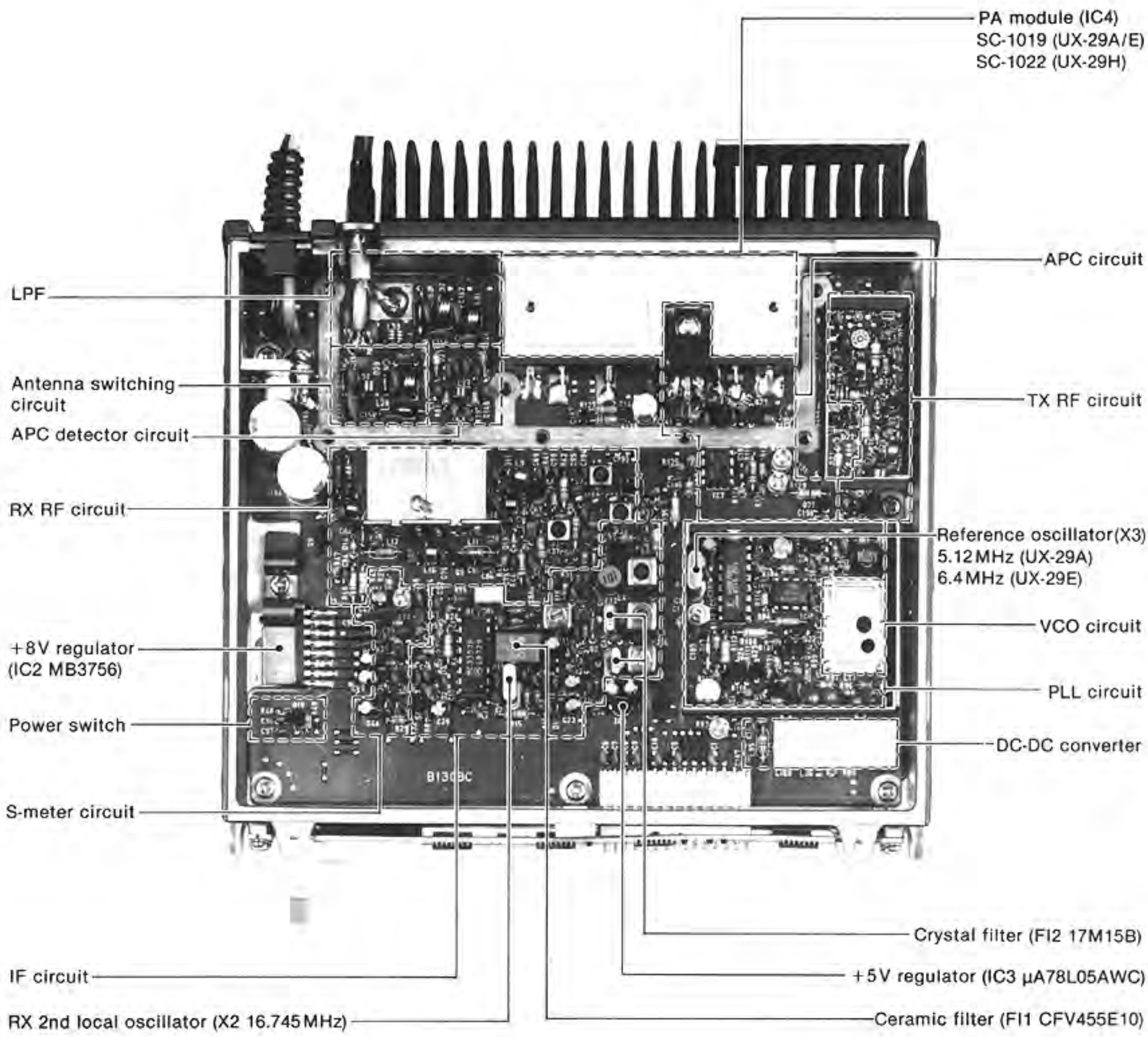

This picture shows the UX-29H model.

SECTION 3 BLOCK DIAGRAM

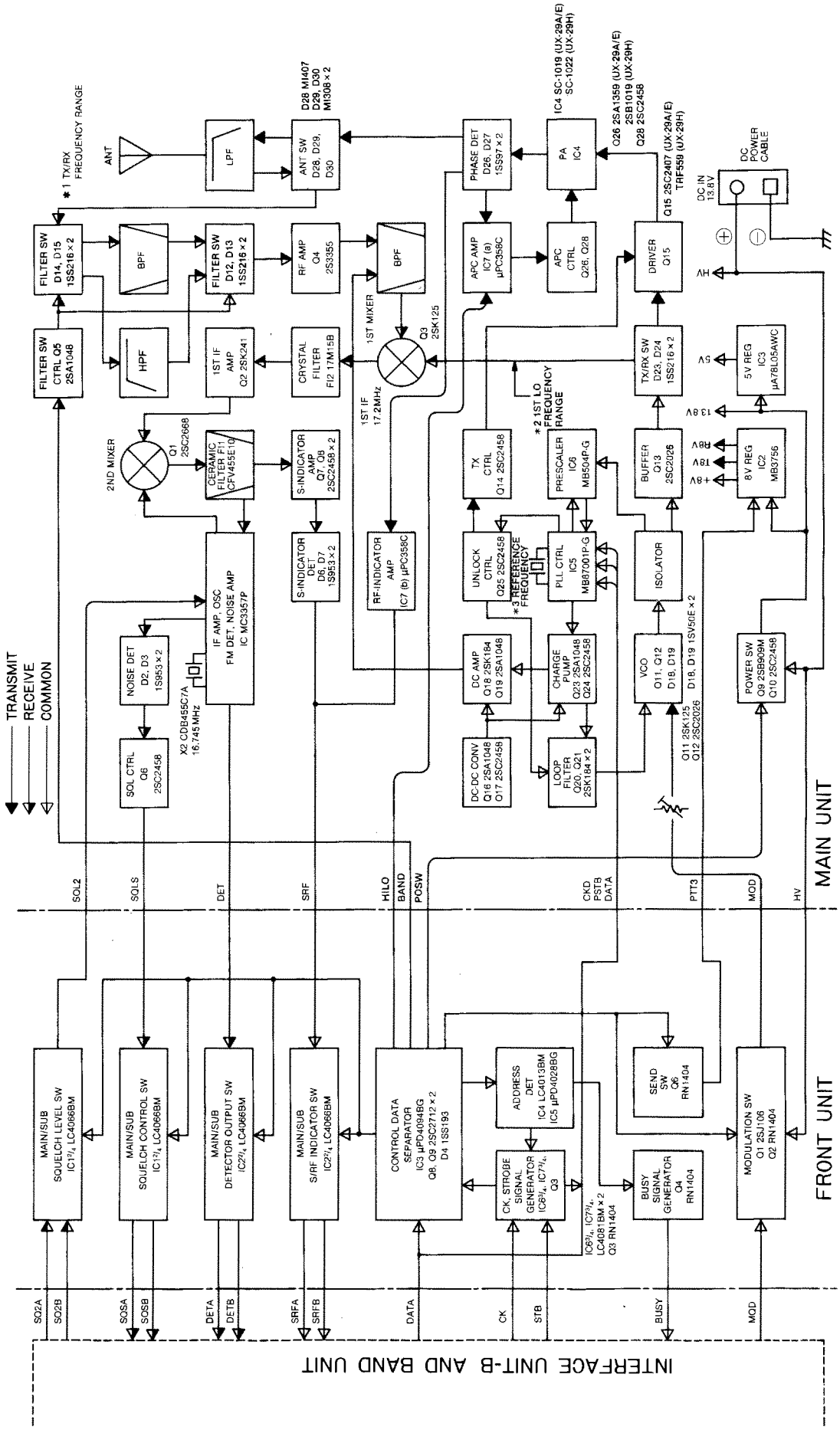

VERSION	*1 TRANSMIT FREQUENCY (MHz)	*1 RECEIVE FREQUENCY (MHz)	*2 1ST LO FREQUENCY (MHz)	*3 REFERENCE FREQUENCY (MHz)
UX-29A (U.S.A.)	140.10~150.00	138.00~174.00	120.80~156.80	5.12
UX-29A (Australia)	144.00~148.00	144.00~148.00	126.80~130.80	5.12
UX-29A (Asia)	140.10~150.00	138.00~174.00	120.80~156.80	5.12
UX-29E (Europe)	144.00~146.00	144.00~146.00	126.80~128.80	6.4
UX-29E (Italy)	140.00~150.00	140.00~150.00	122.80~132.80	6.4

SECTION 4 CIRCUIT DESCRIPTION

4-1 CONSTRUCTION

UX-29A/E/H consists of the MAIN UNIT and the FRONT UNIT.

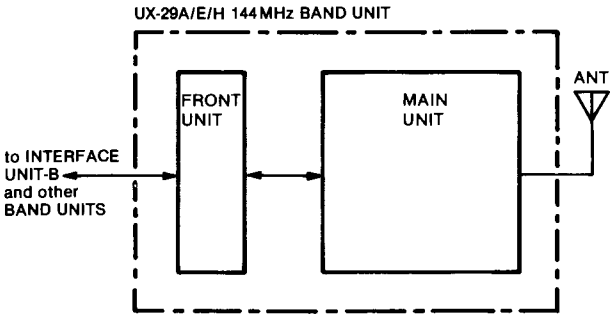

Fig. 1

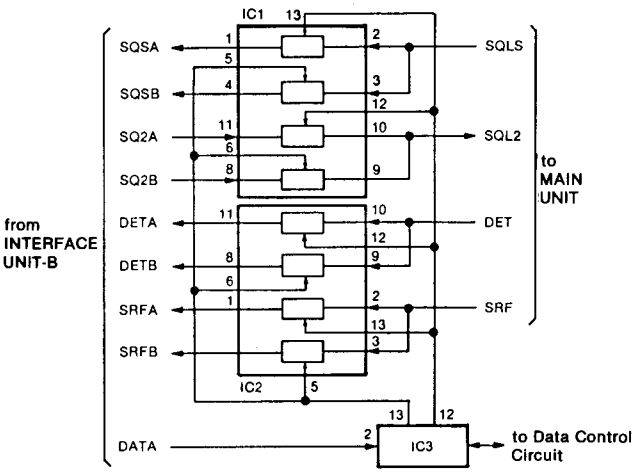

Fig. 2

4-2 FRONT UNIT

4-2-1 SIGNAL SWITCHING CIRCUIT

The serial data signals from INTERFACE UNIT-B are fed to IC3. UX-29A/E/H operation as a main band transceiver or a sub band receiver is determined by the commands of the serial data signals.

When pin 12 of IC3 outputs "HIGH," the analog switches (IC1, IC2) are controlled so that UX-29A/E/H operates as a main band transceiver.

When pin 13 of IC3 outputs "HIGH," the analog switches are controlled so that UX-29A/E/H operates as a sub band receiver.

4-2-2 DATA CONTROL CIRCUIT

To get the address control bits from the serial data signals, IC6 and IC7 create CK and STB signals. IC4 applies the band selection data to IC5. Then pin 15 of IC5 outputs data for 144MHz band selection.

For error-free operation, Q8 and Q9 operate as follows. When the power switch is turned ON, Q8 and Q9 keep the output impedance of IC3 pin 15 high until the FRONT UNIT receives the first STB signal.

4-2-3 MIC MUTE CIRCUIT

While receiving, Q1 and Q2 mute the microphone signals (MOD signal).

4-3 POWER SUPPLY CIRCUIT (MAIN UNIT)

The power supply circuit consists of Q9, Q10, IC2 and IC3. When UX-29A/E/H is selected with the REMOTE CONTROLLER, the power switch signal (POSW signal) is applied from the FRONT UNIT and 13.8V is applied to IC2 and IC3 via Q9.

IC2 is an 8V voltage regulator which outputs +8V and either R8V or T8V. IC2 is controlled by the PTT3 line input. IC3 outputs +5V to the PLL circuits.

POWER SUPPLY CIRCUIT

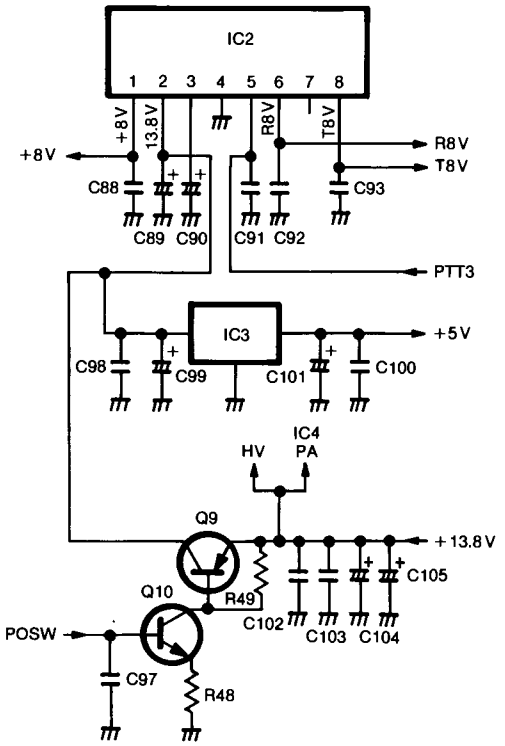

Fig. 3

4-4 RECEIVER CIRCUITS

4-4-1 RF CIRCUIT (MAIN UNIT)

Receive signals enter the MAIN UNIT from the ANTENNA CONNECTOR and pass through a low-pass filter consisting of L29~L33 and other parts, the antenna switching circuit consisting of D29 and D30, and a bandpass filter (Fig. 4). The signals are amplified at RF amplifier Q4 and are fed to the bandpass filter. This bandpass filter employs a 3-stage variable resonator circuit consisting of L6~L8, D8~D10 and C56~C63 and suppresses out-of-band signals. Diodes D8~D10 are varactor diodes. A voltage from the charge pump passes through the DC amplifier (Q18, Q19), and is applied to varactor diodes (D8~D10) in the bandpass filter. The voltage varies the capacitance of the diodes, thus varying the center frequency of the bandpass filter.

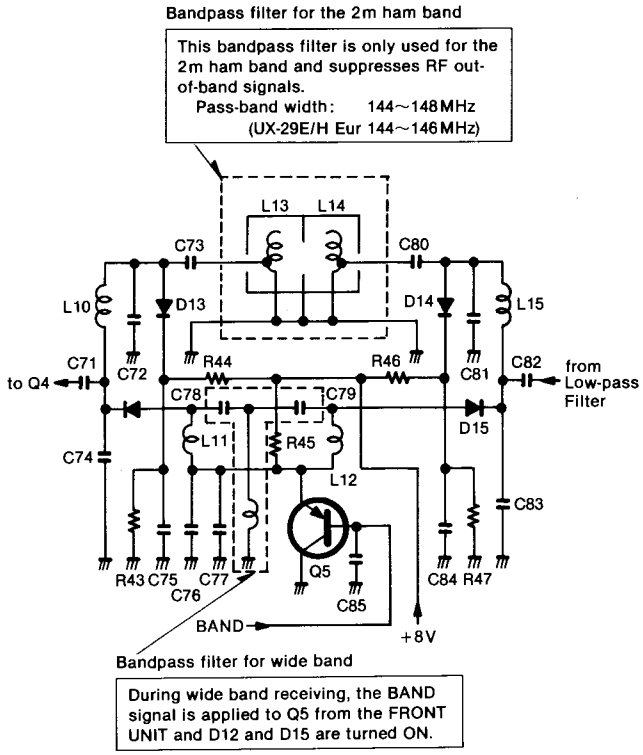

Fig. 4

4-4-2 IF CIRCUIT (MAIN UNIT)

After passing through the bandpass filter, signals are fed to the mixer circuit Q3, and are mixed with 1st LO signals from the PLL circuit to produce the 17.2MHz 1st IF signals. 1st IF signals from Q3 pass through the matching coil L3 and a pair of crystal filters (FI2) to suppress out-of-band signals. Then the 1st IF signals pass through the matching coil L2 and are amplified at IF amplifier Q2.

1st IF signals from Q2 are fed to the 2nd mixer circuit, Q1, and are mixed with 2nd LO signals for converting the 1st IF signals to 455kHz 2nd IF signals. IC1 contains the local oscillator, limiter amplifier, and active filter circuits. The 2nd LO circuit and X2 generate 16.745MHz 2nd LO signals.

The 2nd IF signals from Q1 pass through the ceramic filter, FI1, to suppress unwanted signals. They are then amplified at the limiter amplifier section (pin 5 of IC1) and applied to the quadrature detector section (pin 8 of IC1 and ceramic discriminator X1) to demodulate 2nd IF signals to AF signals.

AF signals output from pin 9 on IC1 are applied to the FRONT UNIT as the DET signal.

Signals output from pin 11 on IC1 are rectified by D2 and D3 for conversion to DC voltage and then applied to the FRONT UNIT as the SQLS signal via the squelch control circuit Q6.

A portion of the signals from FI1 is amplified at S-meter amplifier Q7 and Q8, and is detected at the rectifiers D6 and D7. These signals are then applied to the FRONT UNIT as the SRF signal. R23 adjusts the SRF signal level.

2ND IF CIRCUIT

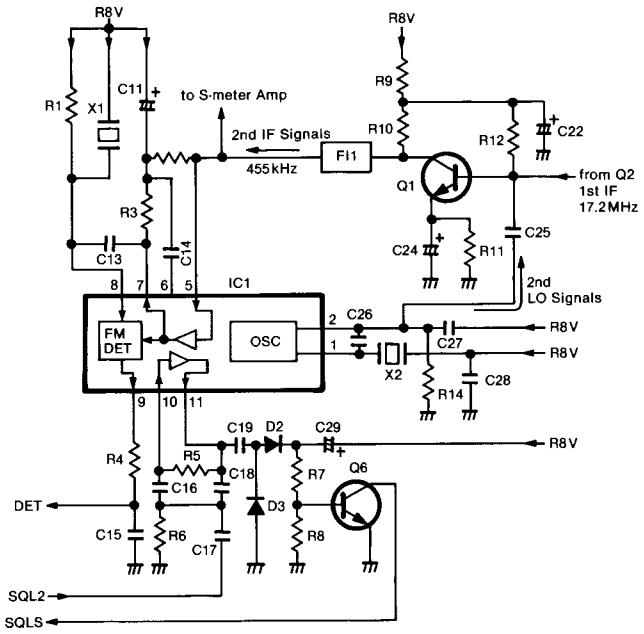

Fig. 5

4-5 PLL CIRCUITS

4-5-1 GENERAL

The PLL circuit, adopting a dual modulus prescaler system, allows the desired frequency to be generated directly from the VCO circuit. The PLL consists of a prescaler (IC6) and PLL IC (IC5). These circuits receive N-data from the CPU (REMOTE CONTROLLER) in order to determine the operating frequency.

N-data is determined by dividing the desired frequency by the reference frequency. The desired frequency is the transmit frequency in transmit mode and the 1st LO frequency in receive mode.

$$\text{N-data} = \frac{\text{Desired frequency}}{\text{Reference frequency}}$$

A reference frequency* is produced by X3, IC5 and the divider inside IC5. A signal from the VCO circuit is fed into IC6, and divided N times at IC5 and IC6.

*** Reference frequency**

VERSION	FREQUENCY
UX-29E/H	6.25kHz
UX-29A/H	5.0kHz

The divided signal is applied to the phase detector in IC5. Phase detection results in lock voltages being output from pin 9.

Output from pin 9 is fed into a charge pump circuit consisting of Q23 and Q24 and is then applied to the loop filter consisting of Q20 and Q21. The signal passing through the loop filter is fed to varactor diodes D18 and D19 to control the VCO output frequency.

The DC-DC converter consisting of Q16 and Q17 creates approximately 30V DC from 8V DC to obtain wide range lock voltages for the PLL circuit and a power source for the DC amplifier consisting of Q18 and Q19. This DC amplifier amplifies the control voltage for the varactor diodes D8~D10 of the bandpass filter located in the RF circuit.

When the PLL circuit is unlocked, IC5 pin 7 is "LOW." Q25 is turned OFF, and Q14 is turned ON. The bias voltage to Q15, the driver, is cut off, deactivating it—thus preventing the transmission of unwanted signals.

PLL CIRCUIT

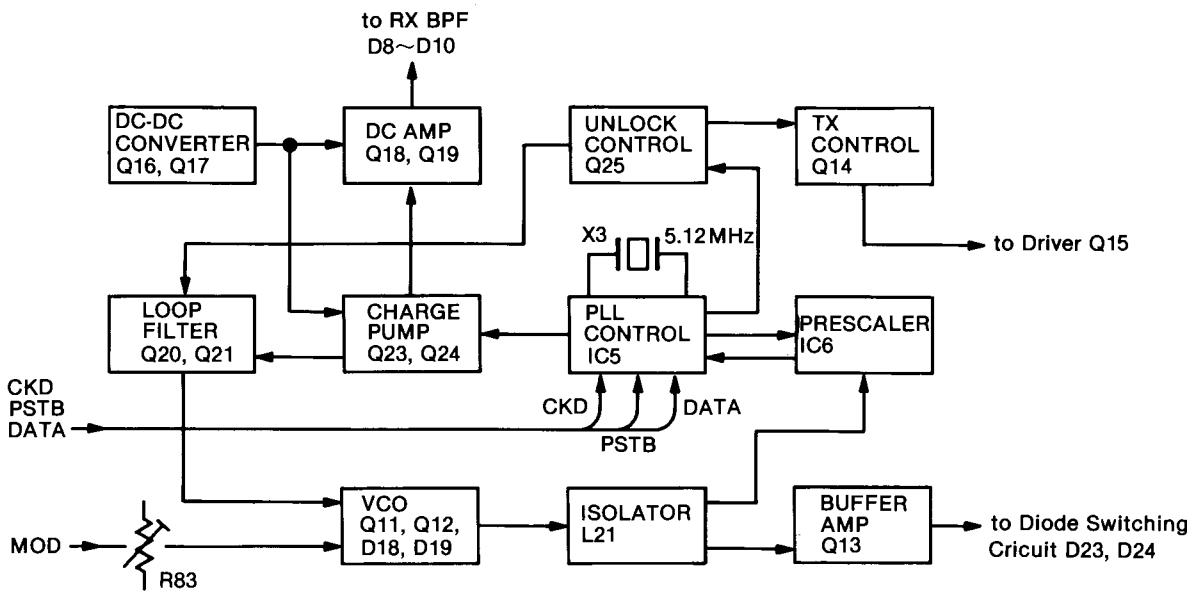

Fig. 6

4-5-2 VCO CIRCUIT (MAIN UNIT)

The VCO, Q11, employs a Hartley oscillator circuit. VCO oscillating signals are controlled by varactor diodes (D18, D19) with PLL lock voltage from the loop filter (Q20, Q21).

Modulation signals then change the capacitance of D19 to produce FM modulation.

The output from the VCO circuit is buffer amplified at Q13, and passes through the low-pass filter consisting of C121, C124, C125, L23 and L24.

VCO CIRCUIT

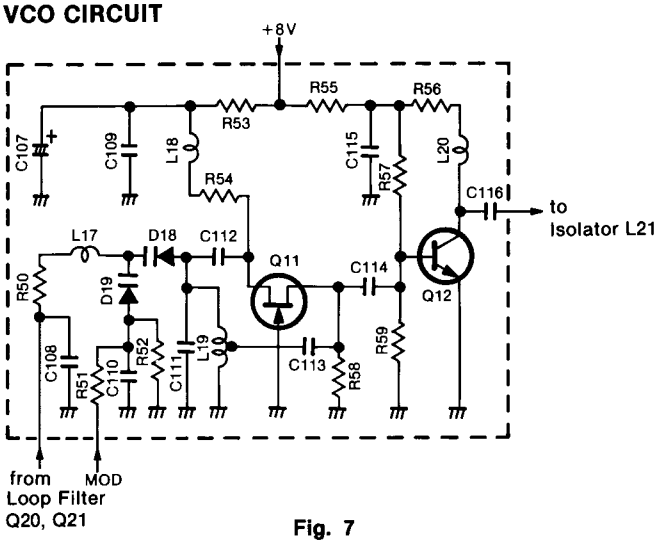

Fig. 7

4-5-3 DIODE SWITCHING CIRCUIT (MAIN UNIT)

The diode switching circuit consists of D23 and D24. While receiving, D23 is turned ON and VCO signals are applied to the 1st mixer circuit Q3. While transmitting, D24 is turned ON and VCO signals are applied to the driver Q15.

4-6 TRANSMITTER CIRCUITS

4-6-1 DRIVER CIRCUIT (MAIN UNIT)

The VCO output is amplified at Q15 and obtains the driver output as shown below. After passing through the low-pass filter consisting of C133, C134 (UX-29A/E only), C135 and L26, the amplified signals are applied to the PA circuit (IC4).

DRIVER OUTPUT

UX-29A/E	23dBm, 200mW
UX-29H	26dBm, 400mW

4-6-2 PA CIRCUIT (MAIN UNIT)

RF signals from Q15 pass through the low-pass filter and then are applied to pin 1 of IC4. The PA circuit IC4 is a power amplifier which provides RF power output as shown below. Amplified signals at IC4 are applied to the APC detector circuit.

PA CIRCUIT OUTPUT

UX-29A/E	25W
UX-29H	45W

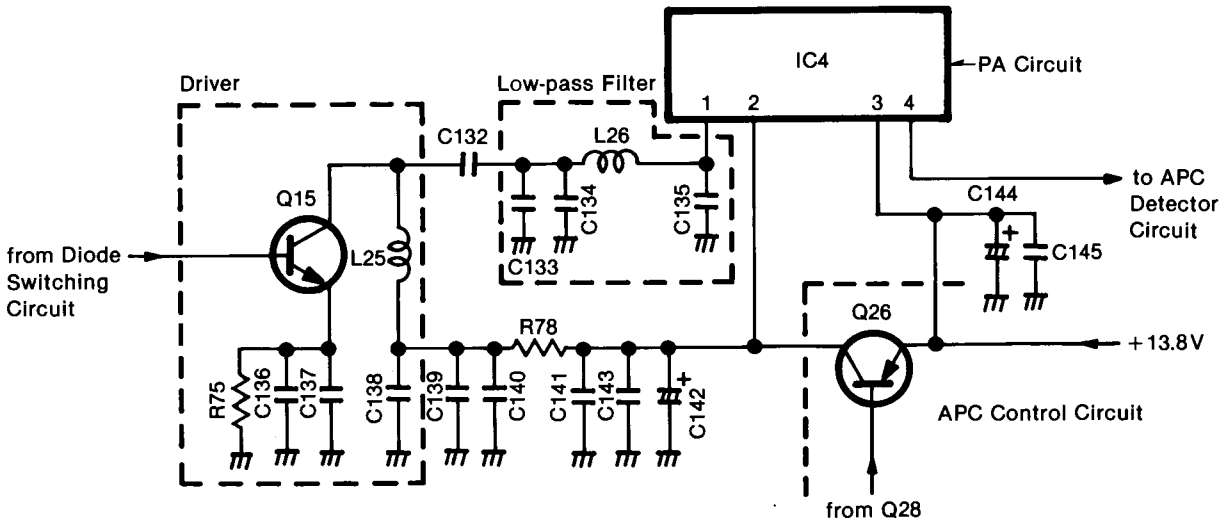

This diagram shows the UX-29A/E model.

Fig. 8

4-6-3 APC DETECTOR CIRCUIT (MAIN UNIT)

The APC detector circuit consists of C146~C152, R79~R81, D26, D27 and L27.

When antenna impedance is matched at 50Ω, voltage detected at D26 and D27 is at a minimum. When antenna impedance is mismatched, the detected voltage is greater than when matched.

The voltage detected at D26 and D27 is fed to pin 2 of IC7A. IC7A is a differential amplifier. The APC reference voltage is fed to pin 3.

When the antenna impedance is mismatched, the voltage of IC7A pin 2 is greater than the reference voltage. The output voltage of IC7A pin 1 decreases, decreasing Q28 and Q26 collector current.

The change in collector current decreases the output power of IC4 until the voltage of IC7A pin 2 equals the voltage of pin 3. Thus, stable RF output power is obtained.

The output power from IC4 passes through the APC detector circuit, the antenna switching circuit (D28), the low-pass filter (C161~C164, C199, L31~L33), and is then applied to the antenna connector.

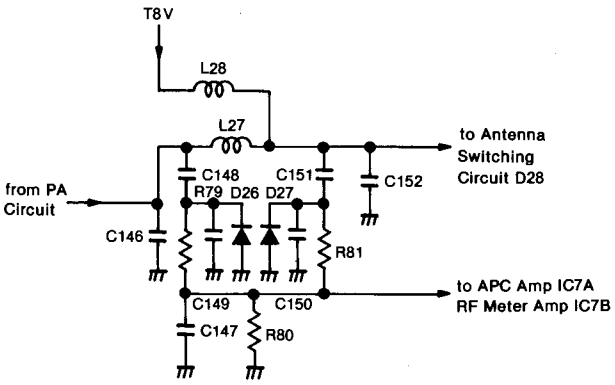

Fig. 9

4-6-4 OUTPUT POWER SELECTION CIRCUIT (MAIN UNIT)

The output power selection circuit consists of R121, R126~R129, and Q29. This circuit shifts the RF output power by shifting the APC reference voltage.

When HIGH output power is selected, Q29 is turned OFF. RF output power is adjusted with R126.

When LOW output power is selected, Q29 is turned ON. Series resistors R128 and R129 are connected in parallel with series resistors R126 and R127. RF output power is adjusted with R128.

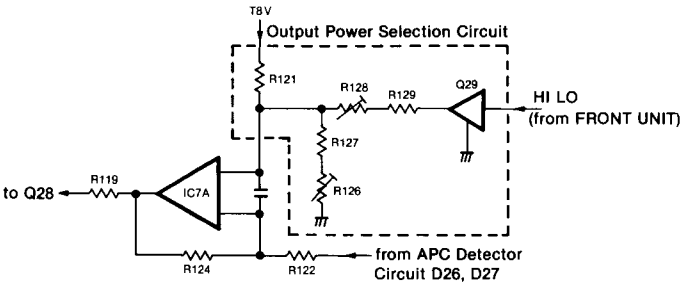

Fig. 10

4-6-5 RF METER AMP (MAIN UNIT)

The voltage detected at D26 and D27 is amplified at IC7B and then applied to the FRONT UNIT as the SRF signal.

SECTION 5 ADJUSTMENT PROCEDURES

5-1 PLL ADJUSTMENT

TEST INSTRUMENTS REQUIRED	MEASUREMENT CONNECTION LOCATION
(1) AC POWER SUPPLY • Output voltage : 13.8V DC • Current capacity : 20A or more (2) FREQUENCY COUNTER • Frequency range : 0.1~180MHz • Frequency accuracy : ±1ppm or better • Sensitivity : 100mV or better (3) DC VOLTMETER • Input impedance : 50kΩ/DC or better	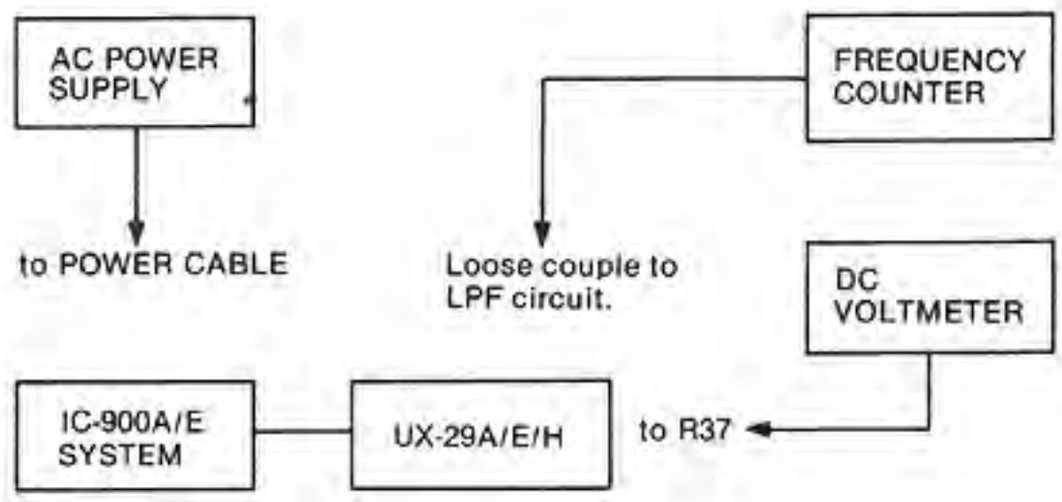

ADJUSTMENT		ADJUSTMENT CONDITIONS	MEASUREMENT		VALUE	ADJUSTMENT POINT	
			UNIT	LOCATION		UNIT	ADJUST
LOCK VOLTAGE	1	• Frequency display: 145.000MHz • Receiving	MAIN	Connect the DC voltmeter to R37 (C67 side).	5.5V	MAIN	L19
REFERENCE FREQUENCY	1	• Frequency display: 145.000MHz • Transmitting	MAIN	Loose couple the frequency counter to the LPF circuit.	145.000MHz	MAIN	C181

MAIN UNIT

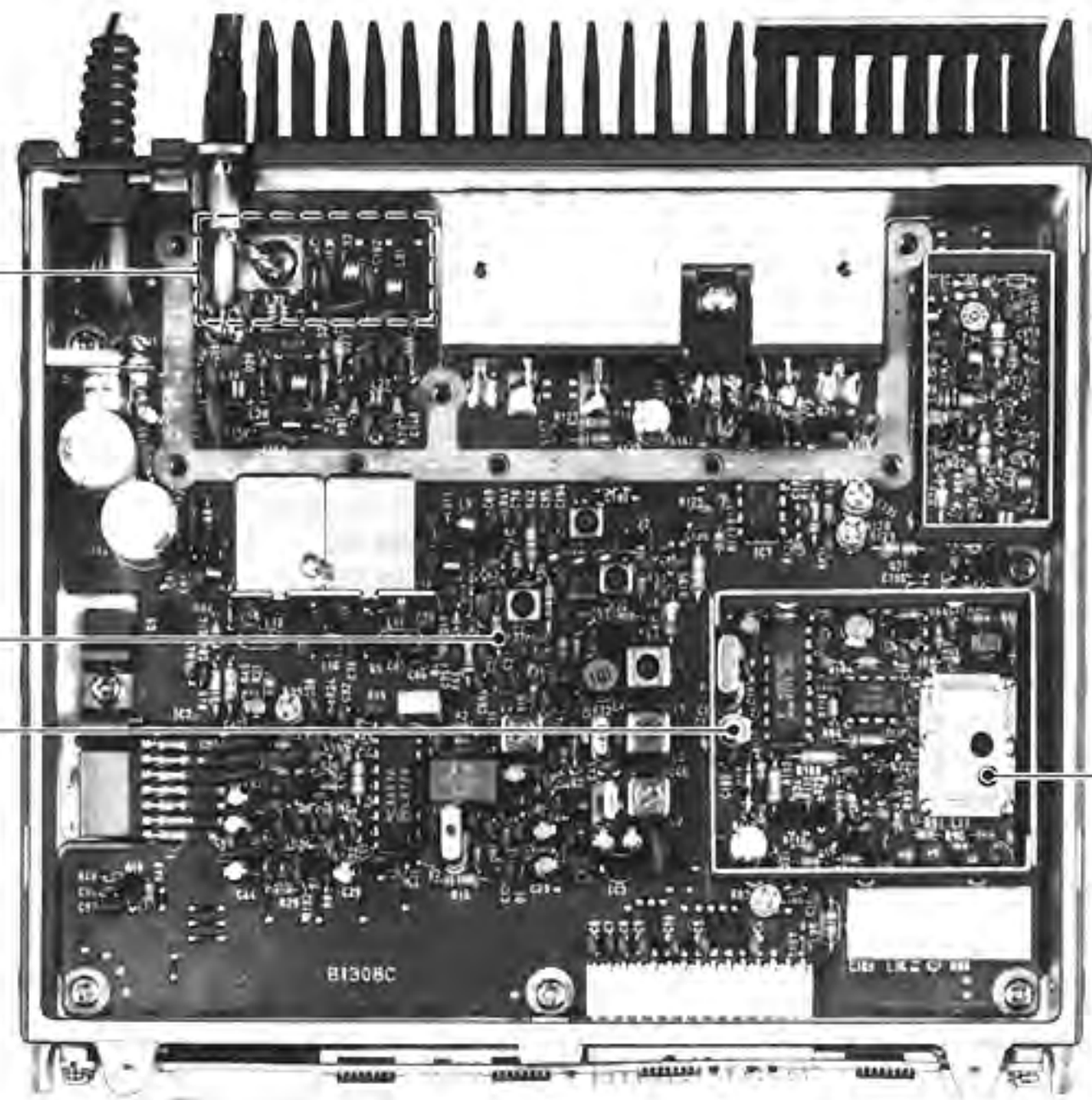

This picture shows the UX-29H model.

5-2 RECEIVER ADJUSTMENT

TEST INSTRUMENTS REQUIRED	MEASUREMENT CONNECTION LOCATION
(1) AC POWER SUPPLY • Output voltage : 13.8V DC • Current capacity : 20A or more (2) STANDARD SIGNAL GENERATOR (SSG) • Frequency range : 0.1~180MHz • Output level : −127~−17dBm (0.1μV~32mV) (3) DC VOLTMETER • Input impedance : 50kΩ/DC or better (4) OSCILLOSCOPE • Frequency range : DC~20MHz • Measuring range : 0.01~10V (5) SWEEP GENERATOR • Frequency range : 0.1~180MHz • Sweep bandwidth : At least 30MHz • Output impedance : 50Ω (6) DETECTOR 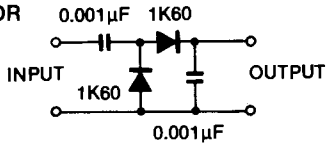	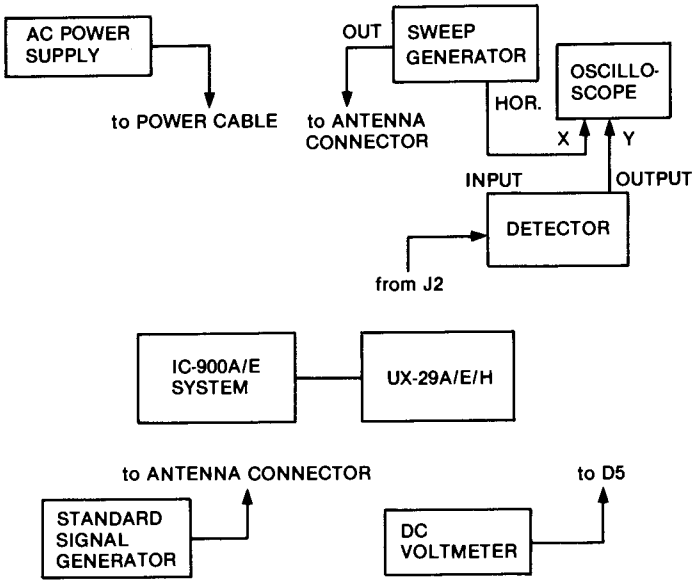

ADJUSTMENT		ADJUSTMENT CONDITIONS	MEASUREMENT		VALUE	ADJUSTMENT POINT	
			UNIT	LOCATION		UNIT	ADJUST
BANDPASS FILTER	1	• Frequency display: 146.000MHz (UX-29E/H Eur: 145.000MHz) • Apply an RF sweep signal to the ANTENNA CONNECTOR. Sweep level: −20dBm (22mV) Center frequency: Same as the frequency display. Sweep band width: 10MHz or 20MHz • Ground C48 with the jumper wire.	MAIN	Connect the oscilloscope to J2 pin 1 via the detector.	Adjust as follows: 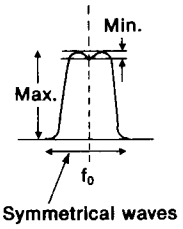	BPF MAIN	L14 L13 L8 L7 L6
		NOTE: Remove the jumper wire from C48 after adjustment.					
SENSI-TIVITY	1	• Frequency display: 145.000MHz • Receiving • Apply an RF signal to the ANTENNA CONNECTOR. Level: −107dBm (1μV) (Approx.) Dev. : ±3.5kHz Mod. : 1kHz • R23: Max. CCW.*	MAIN	Connect the DC voltmeter to D5 cathode.	Maximum	MAIN	L5, L3 L2, L1
		NOTE: Adjust the signal generator output level for each time showing the DC voltmeter at 30% of the lowest range full scale.					

*CCW: Counterclockwise

RECEIVER ADJUSTMENT (CONTINUED)

ADJUSTMENT		ADJUSTMENT CONDITIONS	MEASUREMENT		VALUE	ADJUSTMENT POINT	
			UNIT	LOCATION		UNIT	ADJUST
S-METER	1	• Frequency display: 145.000 MHz • Receiving • Apply an RF signal to the ANTENNA CONNECTOR. Level: −107 dBm (1 μV) Dev. : ±3.5 kHz Mod. : 1 kHz	FUNC-TION DISPLAY	S/RF INDICATOR	S3 (2 dots)	MAIN	R23

MAIN AND BPF UNITS

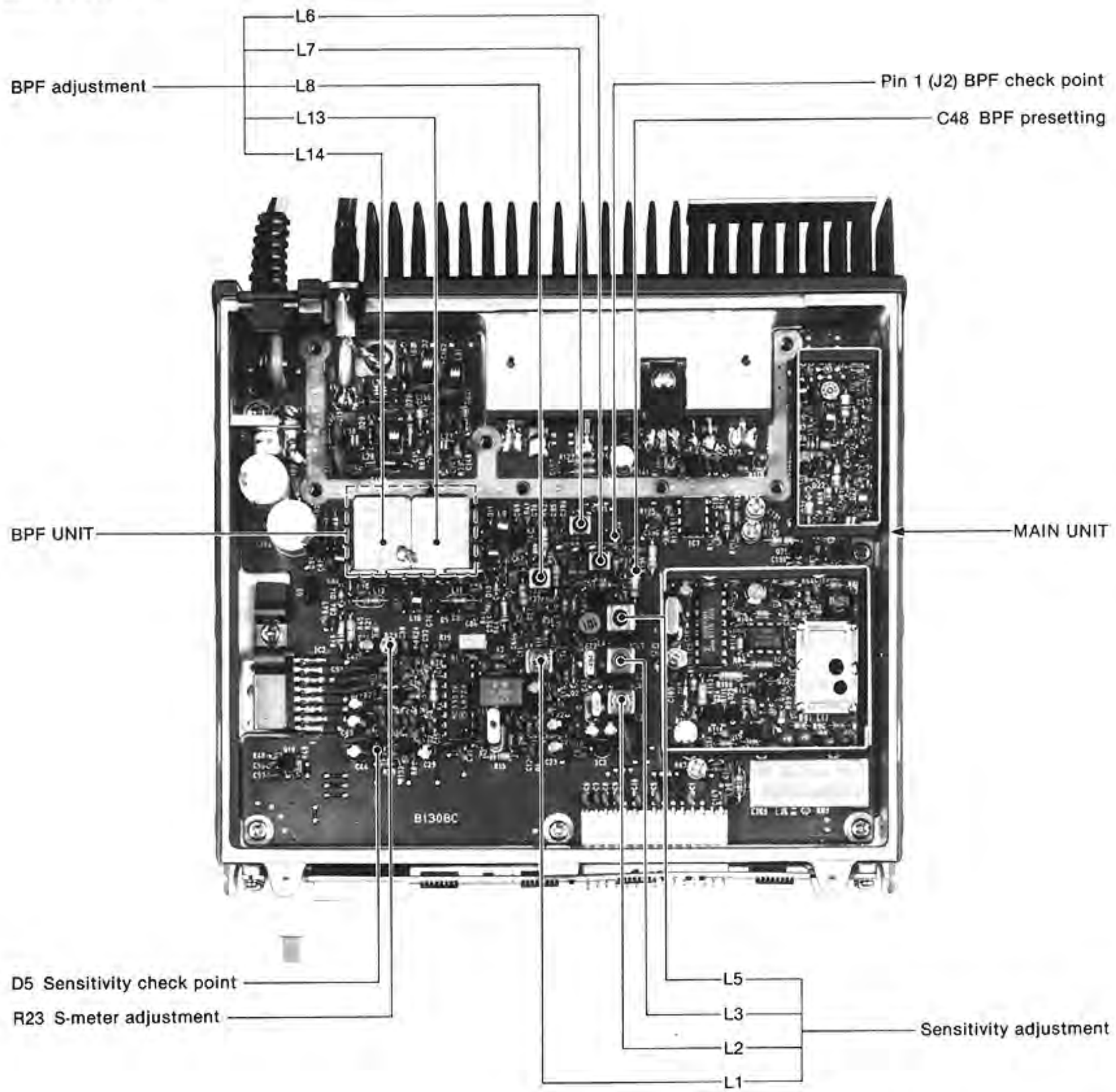

This picture shows the UX-29H model.

5-3 TRANSMITTER ADJUSTMENT

TEST INSTRUMENTS REQUIRED	MEASUREMENT CONNECTION LOCATION
(1) AC POWER SUPPLY • Output voltage : 13.8V DC • Current capacity : 20A or more (2) RF POWER METER (TERMINATED TYPE) • Measuring range : 1~100W • Frequency range : 120~180MHz • Impedance : 50Ω • SWR : Less than 1.2: 1 (3) AF GENERATOR (AG) • Frequency range : 200~2000Hz • Output level : 0~100mV (4) AC MILLI-VOLTMETER • Measuring range : 2~100mV (5) FM DEVIATION METER • Frequency minimum : 180MHz • Measuring range : 0~±5kHz	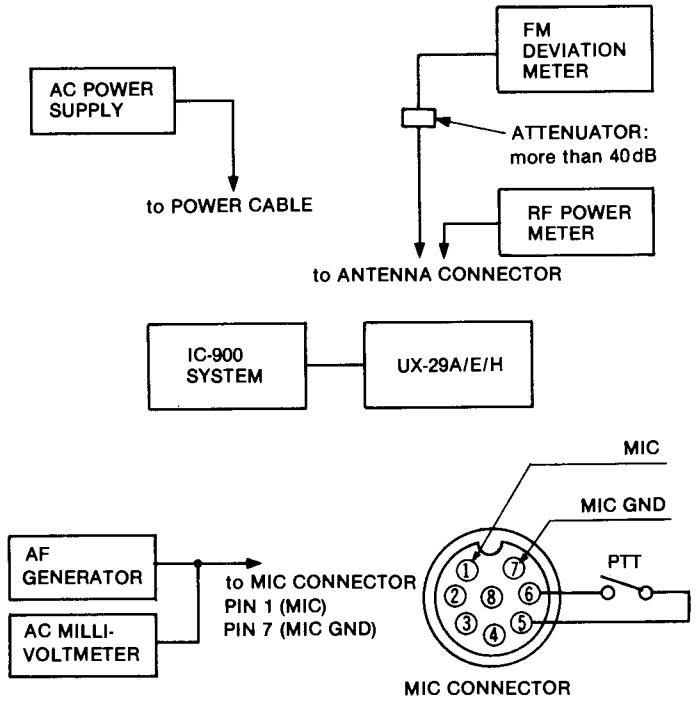

ADJUSTMENT		ADJUSTMENT CONDITIONS	MEASUREMENT		VALUE	ADJUSTMENT POINT	
			UNIT	LOCATION		UNIT	ADJUST
OUTPUT POWER	1	• Frequency display: 146.000MHz (UX-29E/H Eur: 145.000MHz) • Transmitting • HIGH/LOW POWER SWITCH: HIGH	Rear panel	Connect the RF power meter to the ANTENNA CONNECTOR.	25W (UX-29A/E) 45W (UX-29H)	MAIN	R126
	2	• HIGH/LOW POWER SWITCH: LOW			5W (Any model)		R128
DEVIATION	1	• Frequency display: 146.000MHz (UX-29E/H Eur: 145.000MHz) • Transmitting • Apply an AF signal to the MIC CONNECTOR pin 1 (pin 7 is ground). Level: 20mV/1kHz (UX-29A/H U.S.A. 65mV/1kHz) • Set the FM deviation meter. HPF: 50Hz LPF : 20kHz • TONE SWITCH: OFF	Rear panel	Connect the FM deviation meter to the ANTENNA CONNECTOR via the attenuator.	±4.8kHz	MAIN	R83

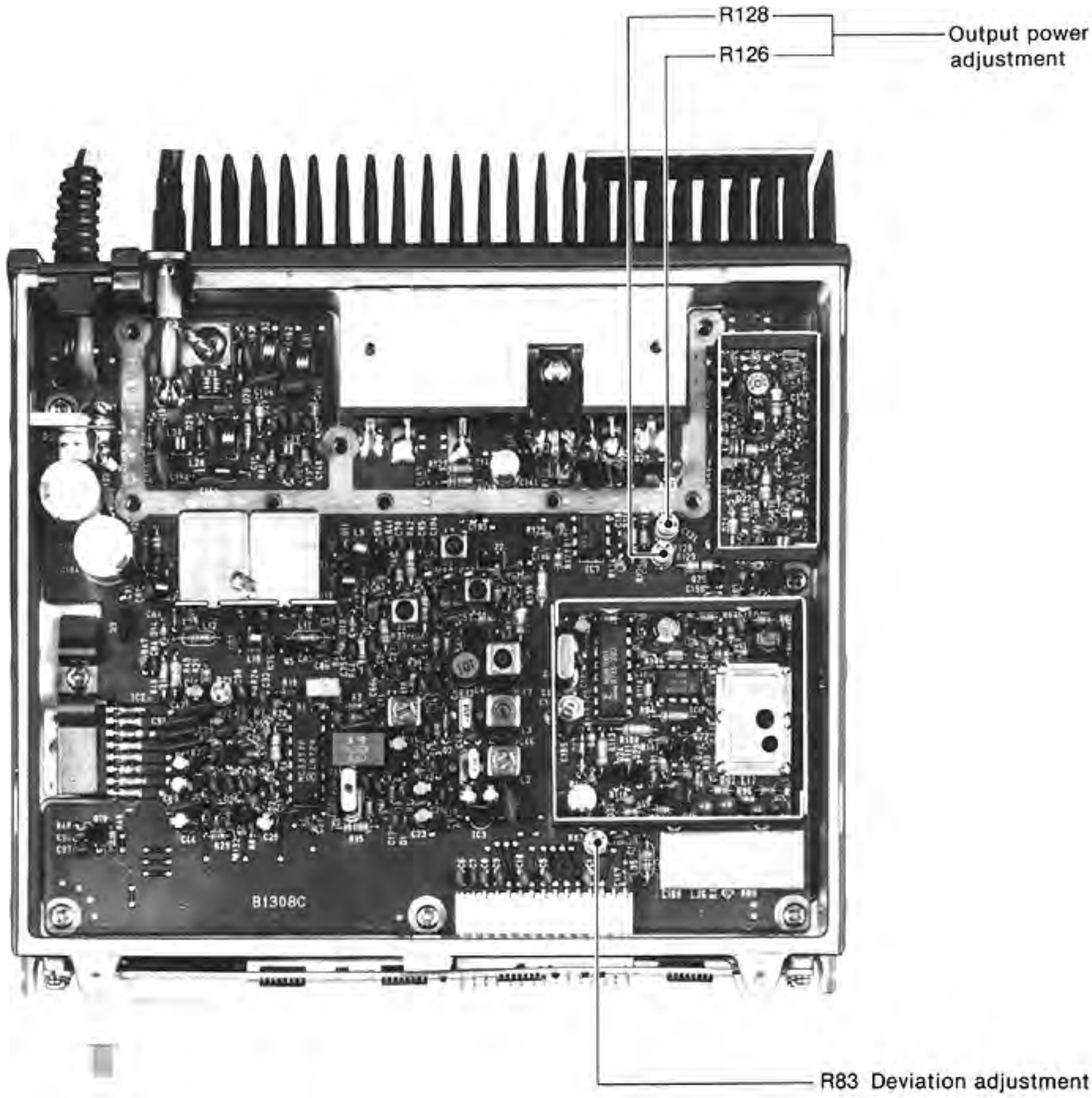

This picture shows the UX-29H model.

SECTION 6 BOARD LAYOUTS

MC3357P IC1
(LOW POWER FM IF)

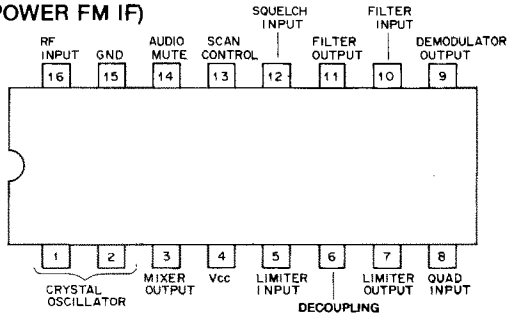

MB3756 IC2
(VOLTAGE REGULATOR)

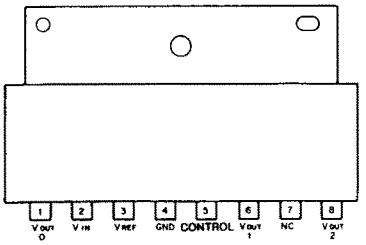

μA78L05AWC IC3
(3-TERMINAL 5V REGULATOR)

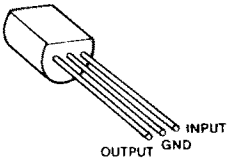

SC-1019 IC4 (UX-29A/E only)
SC-1022 IC4 (UX-29H only)
(POWER AMPLIFIER)

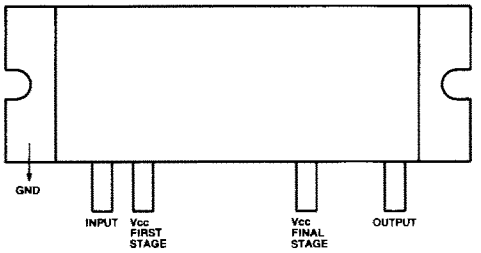

MB87001P-G IC5
(PLL FREQUENCY SYNTHESIZER)

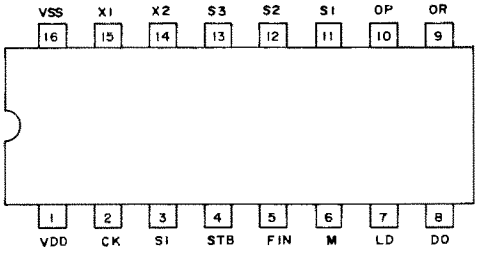

MB504P-G IC6
(PRESCALER)

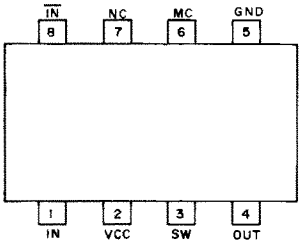

μPC358C IC7
(DUAL DRIVER)

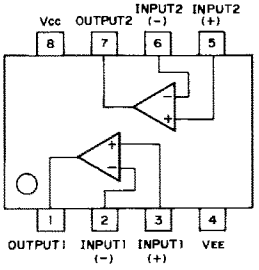

• MAIN UNIT

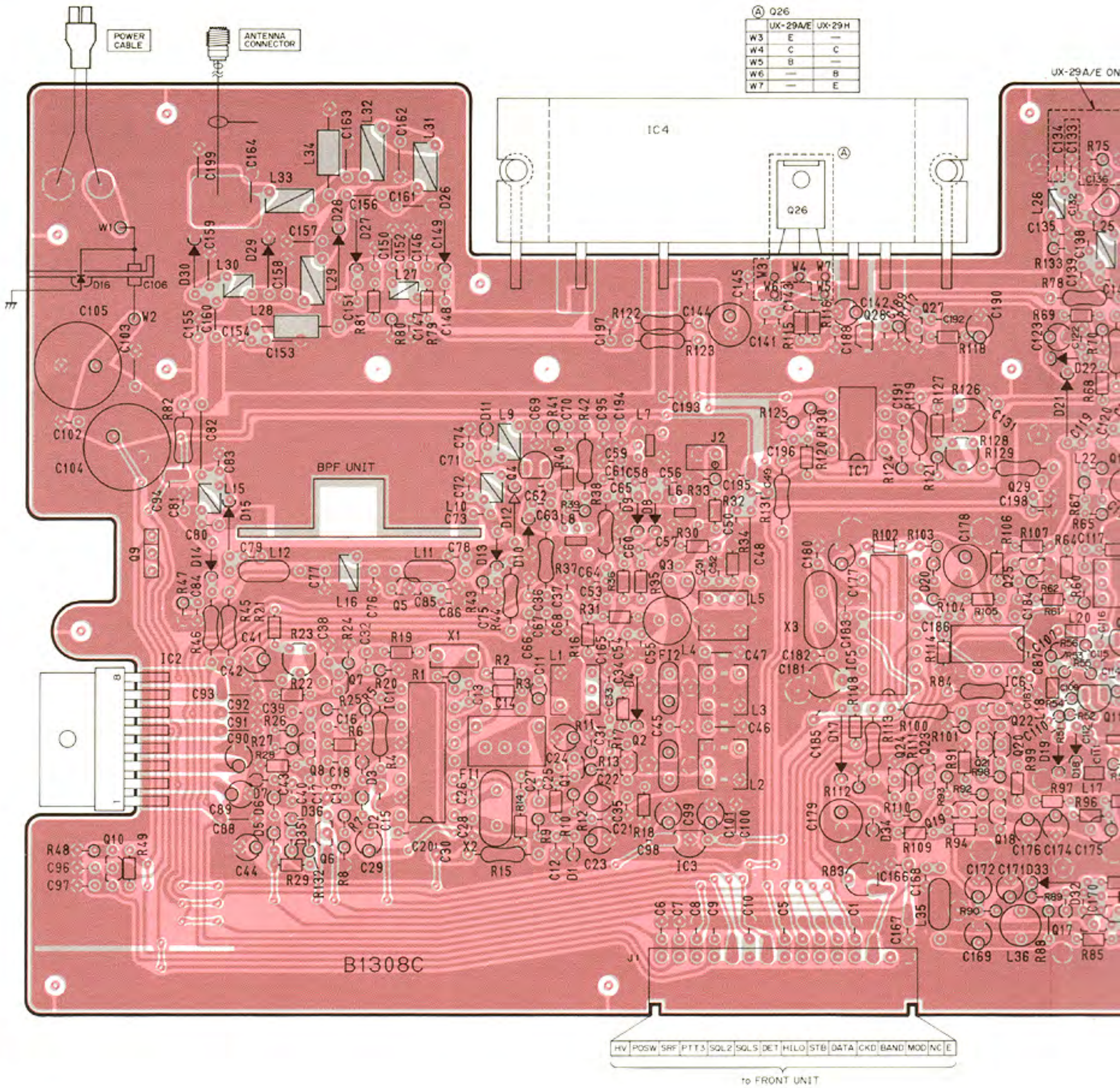

• BPF UNIT

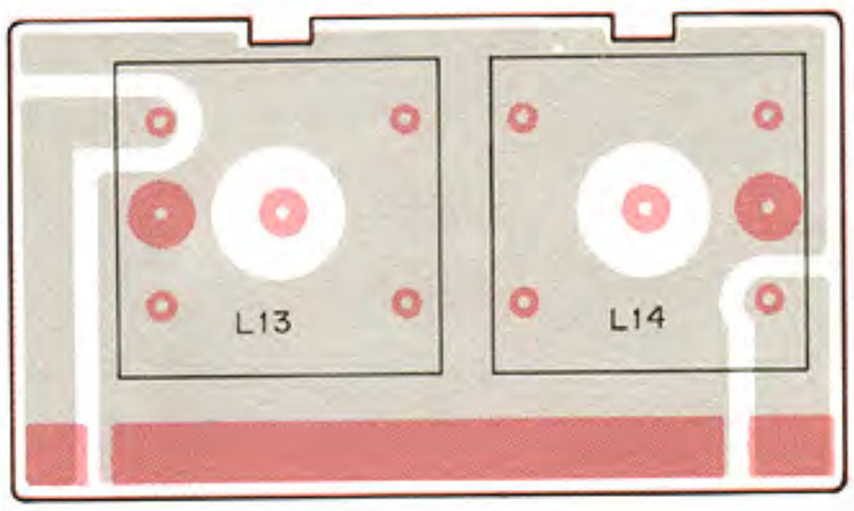

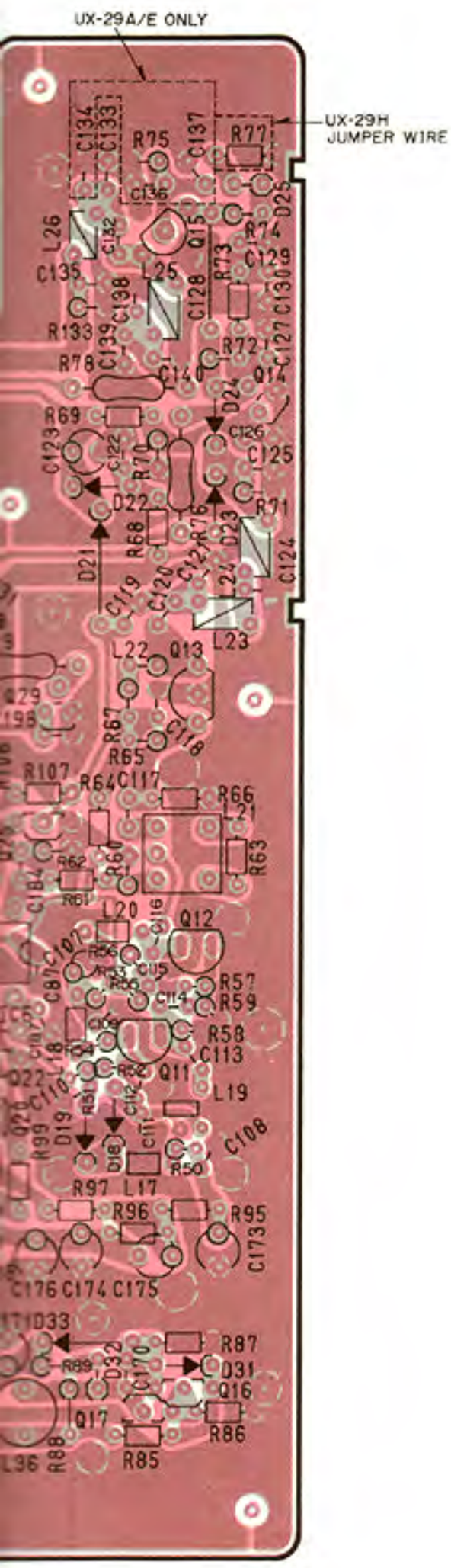

2SC2668 O
Q1

2SK241 Y
Q2

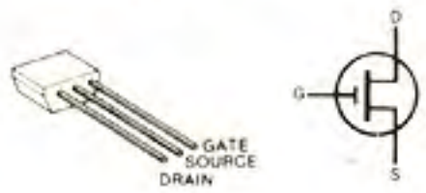

2SK125
Q3, Q11

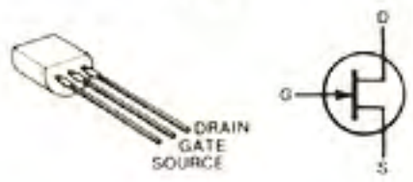

2SC3355
Q4

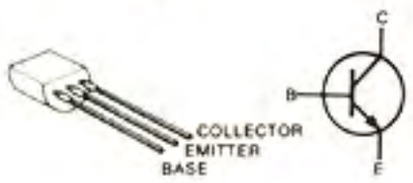

2SA1048 GR
Q5, Q16, Q19,
Q23

2SC2458 GR
Q6, Q7, Q8,
Q10, Q14,
Q17, Q22,
Q24, Q25,
Q28 (UX-29A/E only)

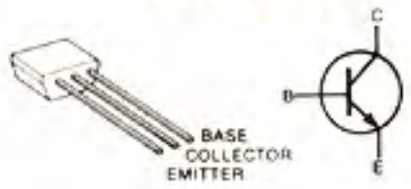

2SB909M R
Q9

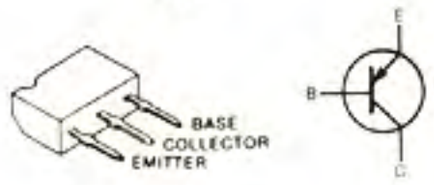

2SC2026
Q12, Q13

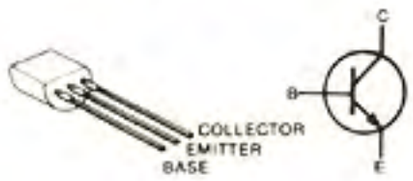

2SC2407
Q15
(UX-29A/E only)

TRF559
Q15
(UX-29H only)

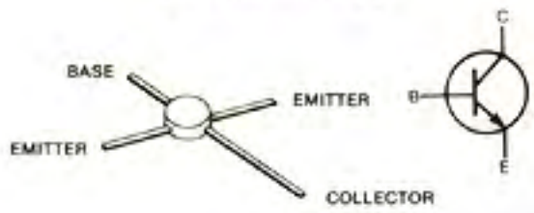

2SK184 Y
Q18, Q20, Q21

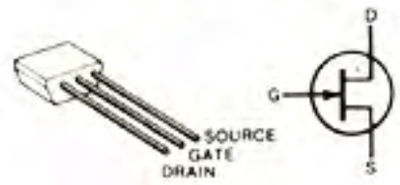

2SA1359 Y
Q26
(UX-29A/E only)

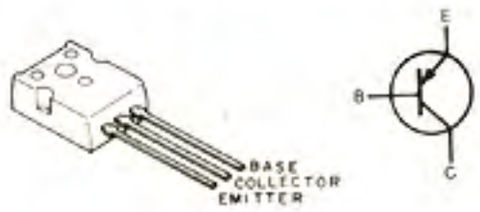

2SB1019 O/Y
Q26
(UX-29H only)

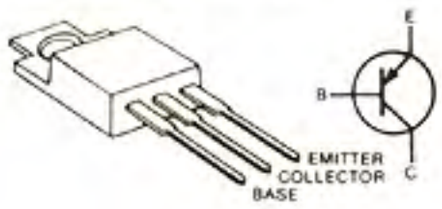

RN1204
Q27, Q29

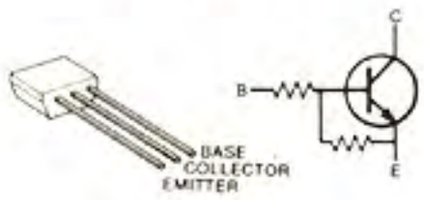

2SC1645B
Q28 (UX-29H only)

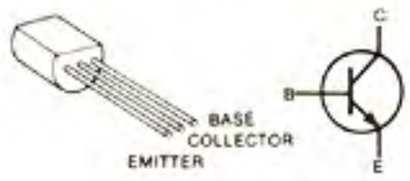

SECTION 7 VOLTAGE DIAGRAM

- **UX-29A/E/H**

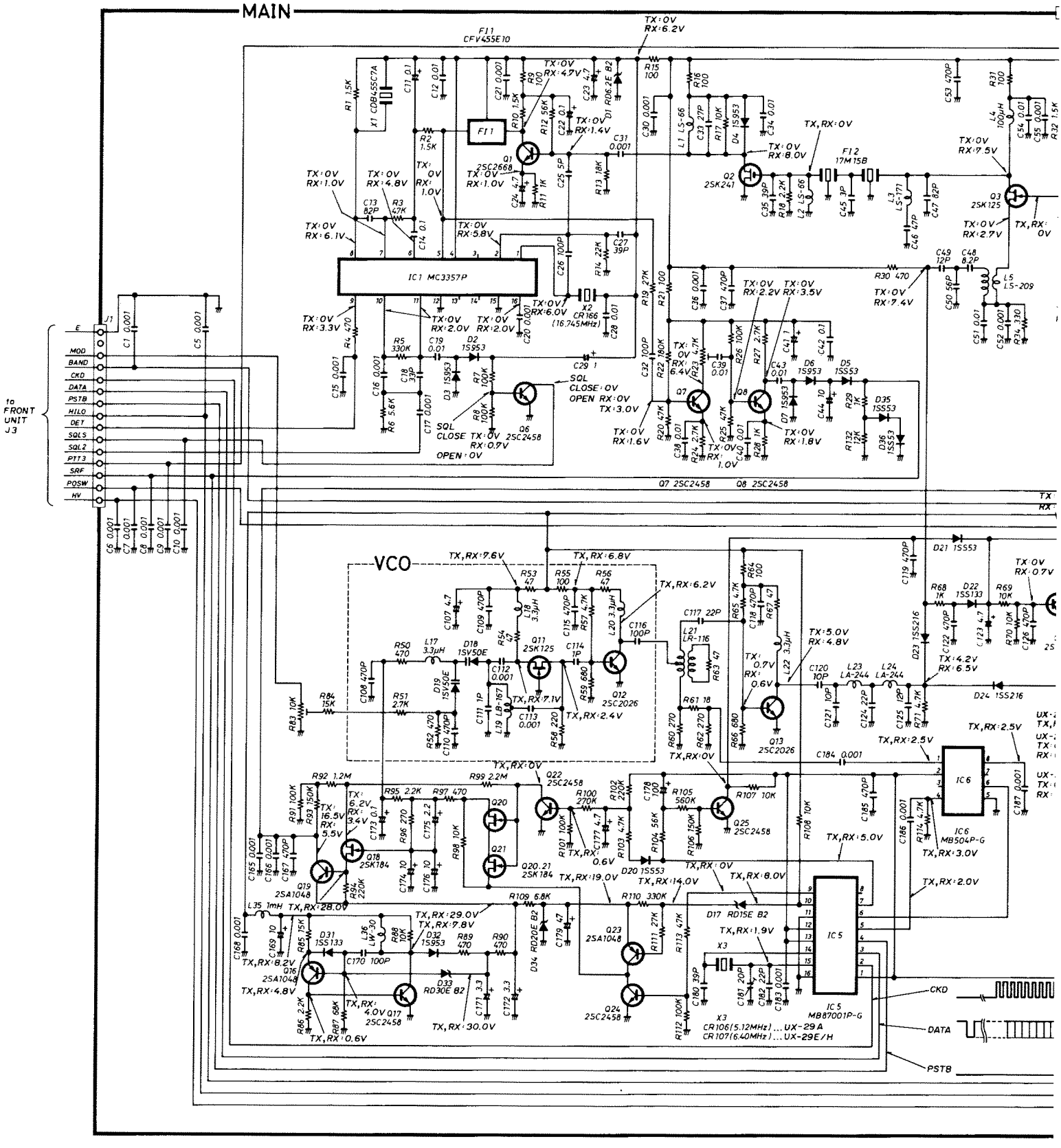

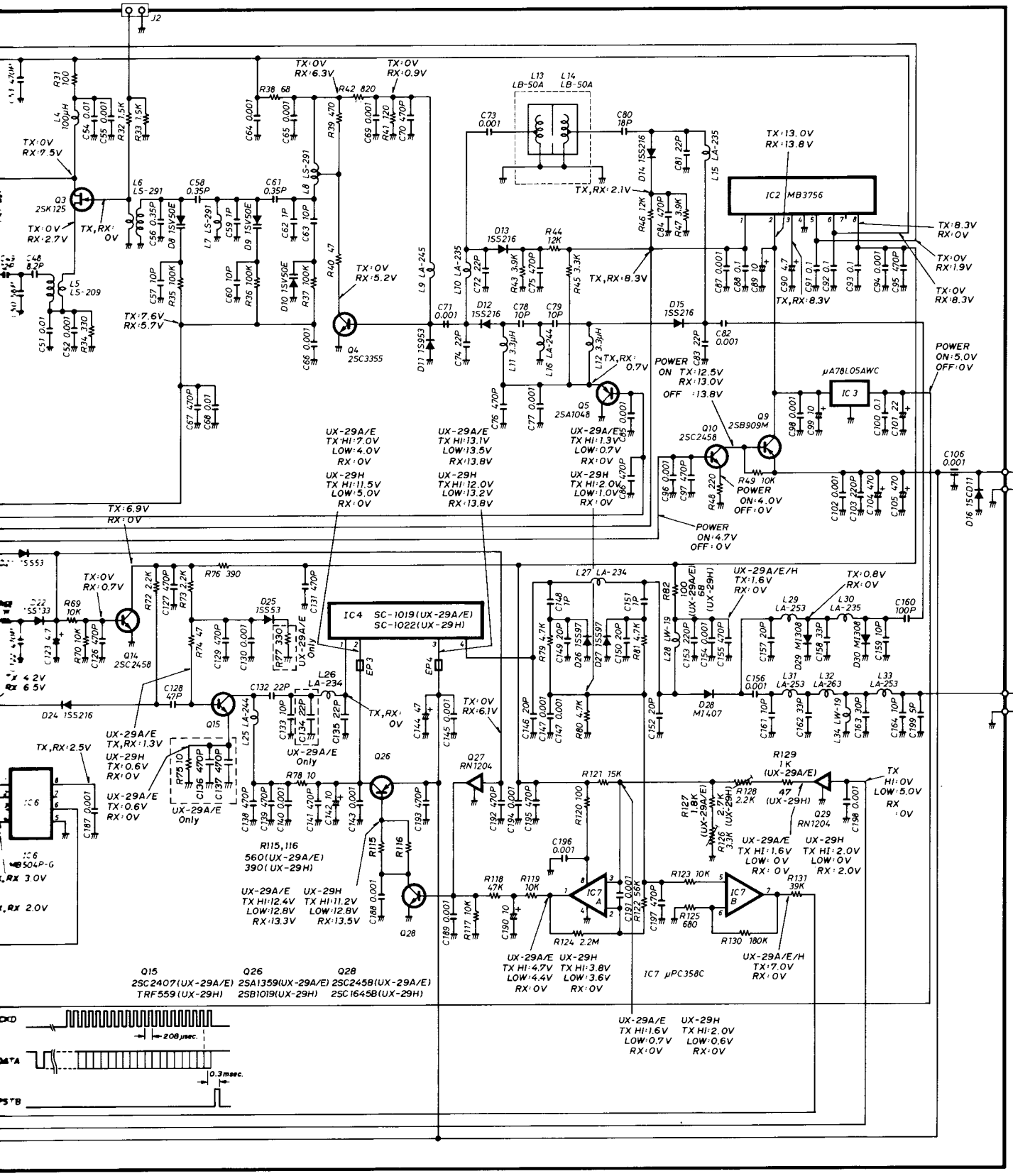
IC2 MB3756
IC3 μA78L05AWC
IC4 SC-1019(UX-29A/E)
SC-1022(UX-29H)
IC7 μPC358C
Q15
2SC2407(UX-29A/E)
TRF559(UX-29H)
Q26
2SA1359(UX-29A/E)
2SB1019(UX-29H)
Q28
2SC2458(UX-29A/E)
2SC1645B(UX-29H)
DC IN 13.8V
to INTERFACE UNIT-B
EP 1 OPC-169
ANT.
EP 2 OPC-090
POWER ON:5.0V OFF:0V
POWER ON:4.7V OFF:0V
POWER ON:4.0V OFF:0V
POWER ON TX:12.5V RX:13.0V OFF :13.8V
208μsec.
0.3msec.

SECTION 8 PARTS LIST

[MAIN UNIT]

REF. NO.	DESCRIPTION	PART NO.
IC1	IC	MC3357P
IC2	IC	MB3756
IC3	IC	µA78L05AWC
IC4	IC (UX-29A/E only)	SC-1019
IC4	IC (UX-29H only)	SC-1022
IC5	IC	MB87001P-G
IC6	IC	MB504P-G
IC7	IC	µPC358C
Q1	Transistor	2SC2668 O
Q2	FET	2SK241 Y
Q3	FET	2SK125
Q4	Transistor	2SC3355
Q5	Transistor	2SA1048 GR
Q6	Transistor	2SC2458 GR
Q7	Transistor	2SC2458 GR
Q8	Transistor	2SC2458 GR
Q9	Transistor	2SB909M R
Q10	Transistor	2SC2458 GR
Q11	FET	2SK125
Q12	Transistor	2SC2026
Q13	Transistor	2SC2026
Q14	Transistor	2SC2458 GR
Q15	Transistor (UX-29A/E only)	2SC2407
Q15	Transistor (UX-29H only)	TRF559
Q16	Transistor	2SA1048 GR
Q17	Transistor	2SC2458 GR
Q18	FET	2SK184 Y
Q19	Transistor	2SA1048 GR
Q20	FET	2SK184 Y
Q21	FET	2SK184 Y
Q22	Transistor	2SC2458 GR
Q23	Transistor	2SA1048 GR
Q24	Transistor	2SC2458 GR
Q25	Transistor	2SC2458 GR
Q26	Transistor (UX-29A/E only)	2SA1359 Y
Q26	Transistor (UX-29H only)	2SB1019 O/Y
Q27	Transistor	RN1204
Q28	Transistor (UX-29A/E only)	2SC2458 GR
Q28	Transistor (UX-29H only)	2SC1645B
Q29	Transistor	RN1204
D1	Zener	RD6.2E B2
D2	Diode	1S953
D3	Diode	1S953
D4	Diode	1S953
D5	Diode	1SS53
D6	Diode	1S953
D7	Diode	1S953
D8	Varicap	1SV50E
D9	Varicap	1SV50E
D10	Varicap	1SV50E
D11	Diode	1S953
D12	Diode	1SS216
D13	Diode	1SS216
D14	Diode	1SS216
D15	Diode	1SS216
D16	Diode	15CD11

[MAIN UNIT]

REF. NO.	DESCRIPTION	PART NO.
D17	Zener	RD15E B2
D18	Varicap	1SV50E
D19	Varicap	1SV50E
D20	Diode	1SS53
D21	Diode	1SS53
D22	Diode	1SS133
D23	Diode	1SS216
D24	Diode	1SS216
D25	Diode	1SS53
D26	Diode	1SS97
D27	Diode	1SS97
D28	Diode	MI407
D29	Diode	MI308
D30	Diode	MI308
D31	Diode	1SS133
D32	Diode	1S953
D33	Zener	RD30E B2
D34	Zener	RD20E B2
D35	Diode	1SS53
D36	Diode	1SS53
FI1	Ceramic	CFV455E10
FI2	Crystal	17M15B
X1	Discriminator	CDB455C7A
X2	Crystal	CR166
X3	Crystal (#05, #07, #08)	CR106
X3	Crystal (#02, #03)	CR107
L1	Coil	LS-66
L2	Coil	LS-66
L3	Coil	LS-171
L4	Coil	S4 101K
L5	Coil	LS-209
L6	Coil	LS-291
L7	Coil	LS-291
L8	Coil	LS-291
L9	Coil	LA-245
L10	Coil	LA-235
L11	Coil	LAL03NA 3R3K
L12	Coil	LAL03NA 3R3K
L13	Coil	LB-50A
L14	Coil	LB-50A
L15	Coil	LA-235
L16	Coil	LA-244
L17	Coil	LAL02KR 3R3K
L18	Coil	LAL02KR 3R3K
L19	Coil	LB-167
L20	Coil	LAL02KR 3R3K
L21	Coil	LR-116
L22	Coil	LAL03NA 3R3K
L23	Coil	LA-244
L24	Coil	LA-244
L25	Coil	LA-244
L26	Coil	LA-234
L27	Coil	LA-234
L28	Coil	LW-19
L29	Coil	LA-253
L30	Coil	LA-235
L31	Coil	LA-253
L32	Coil	LA-263
L33	Coil	LA-253
L34	Coil	LW-19

[MAIN UNIT]

REF. NO.	DESCRIPTION	PART NO.	
L35	Coil	LAL03NA 102K	
L36	Coil	LW-30	
R1	Resistor	1.5kΩ	ELR20
R2	Resistor	1.5kΩ	R20
R3	Resistor	47kΩ	R20
R4	Resistor	470Ω	R25
R5	Resistor	330kΩ	ELR20
R6	Resistor	5.6kΩ	R20
R7	Resistor	100kΩ	ELR20
R8	Resistor	100kΩ	ELR20
R9	Resistor	100Ω	ELR20
R10	Resistor	1.5kΩ	R20
R11	Resistor	1kΩ	ELR20
R12	Resistor	56kΩ	ELR20
R13	Resistor	18kΩ	ELR20
R14	Resistor	22kΩ	R20
R15	Resistor	100Ω	R25
R16	Resistor	100Ω	R20
R17	Resistor	10kΩ	R20
R18	Resistor	2.2kΩ	R20
R19	Resistor	27kΩ	R20
R20	Resistor	47kΩ	ELR20
R21	Resistor	100Ω	R20
R22	Resistor	180kΩ	R20
R23	Trimmer	4.7kΩ	RH0521CS3J04A
R24	Resistor	2.7kΩ	ELR20
R25	Resistor	47kΩ	ELR20
R26	Resistor	100kΩ	ELR20
R27	Resistor	2.7kΩ	ELR20
R28	Resistor	1kΩ	R20
R29	Resistor	1kΩ	R20
R30	Resistor	470Ω	R20
R31	Resistor	100Ω	R20
R32	Resistor	1.5kΩ	R20
R33	Resistor	1.5kΩ	ELR20
R34	Resistor	330Ω	R20
R35	Resistor	100kΩ	R20
R36	Resistor	100kΩ	R20
R37	Resistor	100kΩ	R25
R38	Resistor	68Ω	R25
R39	Resistor	470Ω	ELR20
R40	Resistor	47Ω	R20
R41	Resistor	120Ω	ELR20
R42	Resistor	820Ω	R25
R43	Resistor	3.9kΩ	ELR20
R44	Resistor	12kΩ	R25
R45	Resistor	3.3kΩ	R25
R46	Resistor	12kΩ	R25
R47	Resistor	3.9kΩ	ELR20
R48	Resistor	220Ω	R20
R49	Resistor	10kΩ	R20
R50	Resistor	470Ω	ELR20
R51	Resistor	2.7kΩ	ELR20
R52	Resistor	470Ω	ELR20
R53	Resistor	47Ω	ELR20
R54	Resistor	47Ω	ELR20
R55	Resistor	100Ω	ELR20
R56	Resistor	47Ω	ELR20
R57	Resistor	4.7kΩ	ELR20
R58	Resistor	220Ω	ELR20
R59	Resistor	680Ω	ELR20
R60	Resistor	270Ω	ELR20
R61	Resistor	18Ω	R20
R62	Resistor	270Ω	ELR20
R63	Resistor	47Ω	R20
R64	Resistor	100Ω	R20
R65	Resistor	4.7kΩ	ELR20
R66	Resistor	680Ω	R20
R67	Resistor	47Ω	ELR20
R68	Resistor	1kΩ	R20
R69	Resistor	10kΩ	R20
R70	Resistor	10kΩ	ELR20
R71	Resistor	4.7kΩ	ELR20

[MAIN UNIT]

REF. NO.	DESCRIPTION	PART NO.	
R72	Resistor	2.2kΩ	ELR20
R73	Resistor	2.2kΩ	R20
R74	Resistor	47Ω	ELR20
R75	Resistor (UX-29A/E only)	10Ω	ELR20
R76	Resistor	390Ω	R25
R77	Resistor (UX-29A/E only)	330Ω	R20
R78	Resistor	10Ω	R25
R78	Resistor (UX-29H only)	10Ω	R50X
R79	Resistor	4.7kΩ	R20
R80	Resistor	4.7kΩ	ELR20
R81	Resistor	4.7kΩ	R20
R82	Resistor (UX-29A/E only)	100Ω	R50X
R82	Resistor (UX-29H only)	68Ω	R50X
R83	Trimmer	10kΩ	RH0521C14J08A
R84	Resistor	15kΩ	R25
R85	Resistor	15kΩ	R20
R86	Resistor	2.2kΩ	R20
R87	Resistor	68kΩ	R20
R88	Resistor	10kΩ	ELR20
R89	Resistor	470Ω	ELR20
R90	Resistor	470Ω	ELR20
R91	Resistor	100kΩ	R20
R92	Resistor	1.2MΩ	ELR20
R93	Resistor	150kΩ	ELR20
R94	Resistor	220kΩ	R20
R95	Resistor	2.2kΩ	R20
R96	Resistor	270Ω	R20
R97	Resistor	470Ω	R20
R98	Resistor	10kΩ	ELR20
R99	Resistor	2.2MΩ	R20
R100	Resistor	270kΩ	R25
R101	Resistor	100kΩ	ELR20
R102	Resistor	220kΩ	R20
R103	Resistor	4.7kΩ	ELR20
R104	Resistor	56kΩ	ELR20
R105	Resistor	560kΩ	R20
R106	Resistor	150kΩ	R20
R107	Resistor	10kΩ	R20
R108	Resistor	10kΩ	R20
R109	Resistor	6.8kΩ	R20
R110	Resistor	330kΩ	ELR20
R111	Resistor	27kΩ	ELR20
R112	Resistor	100kΩ	ELR20
R113	Resistor	47kΩ	R25
R114	Resistor	4.7kΩ	R20
R115	Resistor (UX-29A/E only)	560Ω	R20
R115	Resistor (UX-29H only)	390Ω	R25
R116	Resistor (UX-29A/E only)	560Ω	R20
R116	Resistor (UX-29H only)	390Ω	R25
R117	Resistor (UX-29A/E only)	10kΩ	ELR20
R117	Resistor (UX-29H only)	33kΩ	ELR20
R118	Resistor	47kΩ	R20
R119	Resistor	10kΩ	R25
R120	Resistor	100Ω	R20
R121	Resistor	15kΩ	ELR20
R122	Resistor	56kΩ	R25
R123	Resistor	10kΩ	R25
R124	Resistor	2.2MΩ	ELR20
R125	Resistor	680Ω	ELR20
R126	Trimmer	3.3kΩ	RH0521CN3J04A
R127	Resistor (UX-29A/E only)	1.8kΩ	R20
R127	Resistor (UX-29H only)	2.7kΩ	R20

[MAIN UNIT]

REF. NO.	DESCRIPTION	PART NO.		
R128	Trimmer	2.2kΩ	RH0521CJ3J05A	
R129	Resistor (UX-29A/E only)	1kΩ	R25	
R129	Resistor (UX-29H only)	47Ω	R25	
R130	Resistor	180kΩ	ELR20	
R131	Resistor	39kΩ	R25	
R132	Resistor	12kΩ	ELR20	
R133	Resistor	150Ω	ELR20	
C1	Ceramic	0.001μF	50V	
C5	Ceramic	0.001μF	50V	
C6	Ceramic	0.001μF	50V	
C7	Ceramic	0.001μF	50V	
C8	Ceramic	0.001μF	50V	
C9	Ceramic	0.001μF	50V	
C10	Ceramic	0.001μF	50V	
C11	Tantalum	0.1μF	35V	DN
C12	Barrier Layer	0.01μF	25V	
C13	Ceramic	82pF	50V	
C14	Barrier Layer	0.1μF	16V	
C15	Ceramic	0.001μF	50V	
C16	Ceramic	0.001μF	50V	
C17	Ceramic	0.001μF	50V	
C18	Ceramic	33pF	50V	
C19	Barrier Layer	0.01μF	25V	
C20	Ceramic	0.001μF	50V	
C21	Ceramic	0.001μF	50V	
C22	Electrolytic	0.1μF	50V	MS7
C23	Electrolytic	4.7μF	25V	MS7
C24	Electrolytic	4.7μF	25V	MS7
C25	Ceramic	5pF	50V	
C26	Ceramic	100pF	50V	
C27	Ceramic	39pF	50V	
C28	Barrier Layer	0.01μF	25V	
C29	Electrolytic	1μF	50V	MS7
C30	Ceramic	0.001μF	50V	
C31	Ceramic	0.001μF	50V	
C32	Ceramic	100pF	50V	
C33	Ceramic	27pF	50V	
C34	Barrier Layer	0.01μF	25V	
C35	Ceramic	39pF	50V	
C36	Ceramic	0.001μF	50V	
C37	Ceramic	470pF	50V	
C38	Barrier Layer	0.01μF	25V	
C39	Barrier Layer	0.01μF	25V	
C40	Barrier Layer	0.01μF	25V	
C41	Electrolytic	1μF	50V	MS7
C42	Barrier Layer	0.1μF	16V	
C43	Barrier Layer	0.01μF	25V	
C44	Electrolytic	10pF	16V	MS7
C45	Ceramic	3pF	50V	
C46	Ceramic	47pF	50V	CH
C47	Ceramic	82pF	50V	CH
C48	Cylinder	UP125 SL 8R2K		
C49	Ceramic	12pF	50V	
C50	Ceramic	56pF	50V	
C51	Barrier Layer	0.01μF	25V	
C52	Ceramic	0.001μF	50V	
C53	Ceramic	470pF	50V	
C54	Barrier Layer	0.01μF	25V	
C55	Ceramic	0.001μF	50V	
C56	Ceramic	0.35pF	50V	
C57	Ceramic	10pF	50V	
C58	Ceramic	0.35pF	50V	
C59	Ceramic	1pF	50V	
C60	Ceramic	10pF	50V	
C61	Ceramic	0.35pF	50V	
C62	Ceramic	1pF	50V	
C63	Ceramic	10pF	50V	
C64	Ceramic	0.001μF	50V	
C65	Ceramic	0.001μF	50V	
C66	Ceramic	0.001μF	50V	

[MAIN UNIT]

REF. NO.	DESCRIPTION	PART NO.		
C67	Ceramic	470pF	50V	
C68	Barrier Layer	0.01μF	25V	
C69	Ceramic	0.001μF	50V	
C70	Ceramic	470pF	50V	
C71	Ceramic	0.001μF	50V	
C72	Ceramic	22pF	50V	
C73	Ceramic	0.001μF	50V	
C74	Ceramic	22pF	50V	
C75	Ceramic	470pF	50V	
C76	Ceramic	470pF	50V	
C77	Ceramic	0.001μF	50V	
C78	Ceramic	10pF	50V	
C79	Ceramic	10pF	50V	
C80	Ceramic	18pF	50V	
C81	Ceramic	22pF	50V	
C82	Cylinder	UP125 B 102K		
C83	Ceramic	22pF	50V	
C84	Ceramic	470pF	50V	
C85	Ceramic	0.001μF	50V	
C86	Ceramic	470pF	50V	
C87	Ceramic	0.001μF	50V	
C88	Barrier Layer	0.1μF	16V	
C89	Electrolytic	10μF	16V	MS7
C90	Electrolytic	4.7μF	25V	MS7
C91	Barrier Layer	0.1μF	16V	
C92	Barrier Layer	0.1μF	16V	
C93	Barrier Layer	0.1μF	16V	
C94	Ceramic	0.001μF	50V	
C95	Ceramic	470pF	50V	
C96	Ceramic	0.001μF	50V	
C97	Ceramic	470pF	50V	
C98	Ceramic	0.001μF	50V	
C99	Electrolytic	10μF	16V	MS7
C100	Barrier Layer	0.1μF	16V	
C101	Electrolytic	22μF	6.3V	MS7
C102	Ceramic	0.001μF	50V	
C103	Ceramic	220pF	50V	
C104	Electrolytic	470μF	16V	MS16
C105	Electrolytic	470μF	16V	MS16
C106	Feed Through	TF318-450E 102GMV 50V		
C107	Tantalum	4.7μF	16V	DN
C108	Ceramic	470pF	50V	
C109	Ceramic	470pF	50V	
C110	Ceramic	470pF	50V	
C111	Ceramic	1pF	50V	
C112	Ceramic	0.001μF	50V	
C113	Ceramic	0.001μF	50V	
C114	Ceramic	1pF	50V	
C115	Ceramic	470pF	50V	
C116	Ceramic	100pF	50V	
C117	Ceramic	22pF	50V	
C118	Ceramic	470pF	50V	
C119	Ceramic	470pF	50V	
C120	Ceramic	10pF	50V	
C121	Ceramic	10pF	50V	
C122	Ceramic	470pF	50V	
C123	Electrolytic	4.7μF	25V	MS7
C124	Ceramic	22pF	50V	
C125	Ceramic	12pF	50V	
C126	Ceramic	470pF	50V	
C127	Ceramic	470pF	50V	
C128	Cylinder (UX-29A/E only)	UP125 SL 120J		
C128	Cylinder (UX-29H only)	UP125 SL 470J		
C129	Ceramic	470pF	50V	
C130	Ceramic	0.001μF	50V	
C131	Ceramic	470pF	50V	
C132	Ceramic	22pF	50V	
C133	Ceramic	10pF	50V	
C134	Ceramic (UX-29A/E only)	22pF	50V	
C135	Ceramic	22pF	50V	
C136	Ceramic (UX-29A/E only)	470pF	50V	

[MAIN UNIT]

REF. NO.	DESCRIPTION	PART NO.		
C137	Ceramic (UX-29A/E only)	470pF	50V	
C138	Ceramic	470pF	50V	
C139	Ceramic	470pF	50V	
C140	Ceramic	0.001μF	50V	
C141	Ceramic	470pF	50V	
C142	Tantalum	10μF	35V	DN
C143	Ceramic	0.001μF	50V	
C144	Electrolytic	47μF	25V	MS9
C145	Ceramic	0.001μF	50V	
C146	Ceramic	20pF	500V	
C147	Ceramic	0.001μF	50V	
C148	Ceramic	1pF	50V	
C149	Ceramic	20pF	50V	
C150	Ceramic	20pF	50V	
C151	Ceramic	1pF	50V	
C152	Ceramic	20pF	500V	
C153	Ceramic	220pF	50V	
C154	Ceramic	0.001μF	50V	
C155	Ceramic	470pF	50V	
C156	Ceramic	0.001μF	500V	
C157	Ceramic	20pF	500V	
C158	Ceramic	33pF	500V	
C159	Ceramic	10pF	500V	
C160	Ceramic	100pF	500V	
C161	Ceramic	10pF	500V	
C162	Ceramic	33pF	500V	
C163	Ceramic	30pF	500V	
C164	Ceramic	10pF	500V	
C165	Ceramic	0.001μF	50V	
C166	Ceramic	0.001μF	50V	
C167	Ceramic	470pF	50V	
C168	Ceramic	0.001μF	50V	
C169	Electrolytic	10μF	16V	MS7
C170	Ceramic	100pF	50V	
C171	Electrolytic	3.3μF	50V	MS7
C172	Electrolytic	3.3μF	50V	MS7
C173	Tantalum	0.1μF	35V	DN
C174	Tantalum	10μF	35V	DN
C175	Tantalum	2.2μF	35V	DN
C176	Tantalum	10μF	35V	DN
C177	Electrolytic	4.7μF	25V	MS7
C178	Electrolytic	100μF	10V	MS7
C179	Electrolytic	47μF	25V	MS9
C180	Ceramic	39pF	50V	
C181	Trimmer	CV05D2001		
C182	Ceramic	22pF	50V	
C183	Ceramic	0.001μF	50V	
C184	Ceramic	0.001μF	50V	
C185	Ceramic	470pF	50V	
C186	Ceramic	0.001μF	50V	
C187	Ceramic	0.001μF	50V	
C188	Ceramic	0.001μF	50V	
C189	Ceramic	0.001μF	50V	
C190	Tantalum	10μF	10V	DN
C191	Ceramic	0.001μF	50V	
C192	Ceramic	470pF	50V	
C193	Ceramic	470pF	50V	
C194	Ceramic	0.001μF	50V	
C195	Ceramic	470pF	50V	
C196	Ceramic	0.001μF	50V	
C197	Ceramic	470pF	50V	
C198	Ceramic	0.001μF	50V	
C199	Ceramic	5pF	500V	
J1	Connector	3024-15AH		
J2	Connector	IMSA-9201B-1-02-T		
EP1	Power Cable	OPC-169		
EP2	ANT Connector	OPC-186		
EP3	Ferrite Bead	DL2-OP2.6-3-1.2H		

[MAIN UNIT]

REF. NO.	DESCRIPTION	PART NO.
EP4	Ferrite Bead	DL2-OP2.6-3-1.2H
EP5	P.C. Board	B-1308C
EP6	P.C. Board	B-1348A
W1	Jumper	JPW-02A
W2	Jumper	JPW-02A
W3	Jumper (UX-29A/E only)	JPW-02A
W4	Jumper	JPW-02A
W5	Jumper (UX-29A/E only)	JPW-02A
W6	Jumper (UX-29H only)	JPW-02A
W7	Jumper (UX-29H only)	JPW-02A

SERVICE MANUAL

UX-39A

This part of the service manual covers all service information of the **UX-39A** 220MHz BAND UNIT except for information common to all band units.
Refer to COMMON for information related to repair, mechanical parts, disassembly and FRONT UNIT.

TABLE OF CONTENTS

SECTION 1 SPECIFICATIONS

GENERAL

• Frequency coverage	:	Transmit 220.00MHz~225.00MHz Receive 216.00MHz~236.00MHz Specifications guaranteed from 220.00 to 225.00MHz
• Antenna impedance	:	50Ω unbalanced
• Frequency stability	:	±10ppm (−10°C~+60°C) (+14°F~+140°F)
• Power supply requirement	:	13.8V DC±15% (Negative ground)
• Current drain (at 13.8V DC)	:	Transmit (HIGH) 6.5A (LOW) 3.5A Receive 250mA
• Dimensions	:	177(W)×25(H)×191(D) mm 7.0(W)×1.0(H)×7.5(D) inches (Projections not included)
• Weight	:	1.1kg (2.4 lbs.)
• Usable temperature range	:	−10°C~+60°C (+14°F~+140°F)

TRANSMITTER

• RF output power	:	HIGH 25W LOW 5W
• Emission mode	:	F3 F2 (During "digital code squelch" operation with UT-28)
• Modulation system	:	Variable reactance frequency modulation
• Max. frequency deviation	:	±5.0kHz
• Spurious emission	:	More than 60dB below carrier output power

RECEIVER

• Receiver system	:	Double-conversion superheterodyne
• Modulation acceptance	:	F3
• Intermediate frequencies	:	1st 17.2MHz 2nd 455kHz
• Sensitivity	:	Less than 0.18μV for 12dB SINAD
• Squelch sensitivity	:	Less than 0.13μV
• Selectivity	:	12.5kHz/−6dB 25.0kHz/−60dB
• Spurious and image rejection	:	More than 60dB

※ All stated specifications are subject to change without notice or obligation.

SECTION 2 INSIDE VIEW

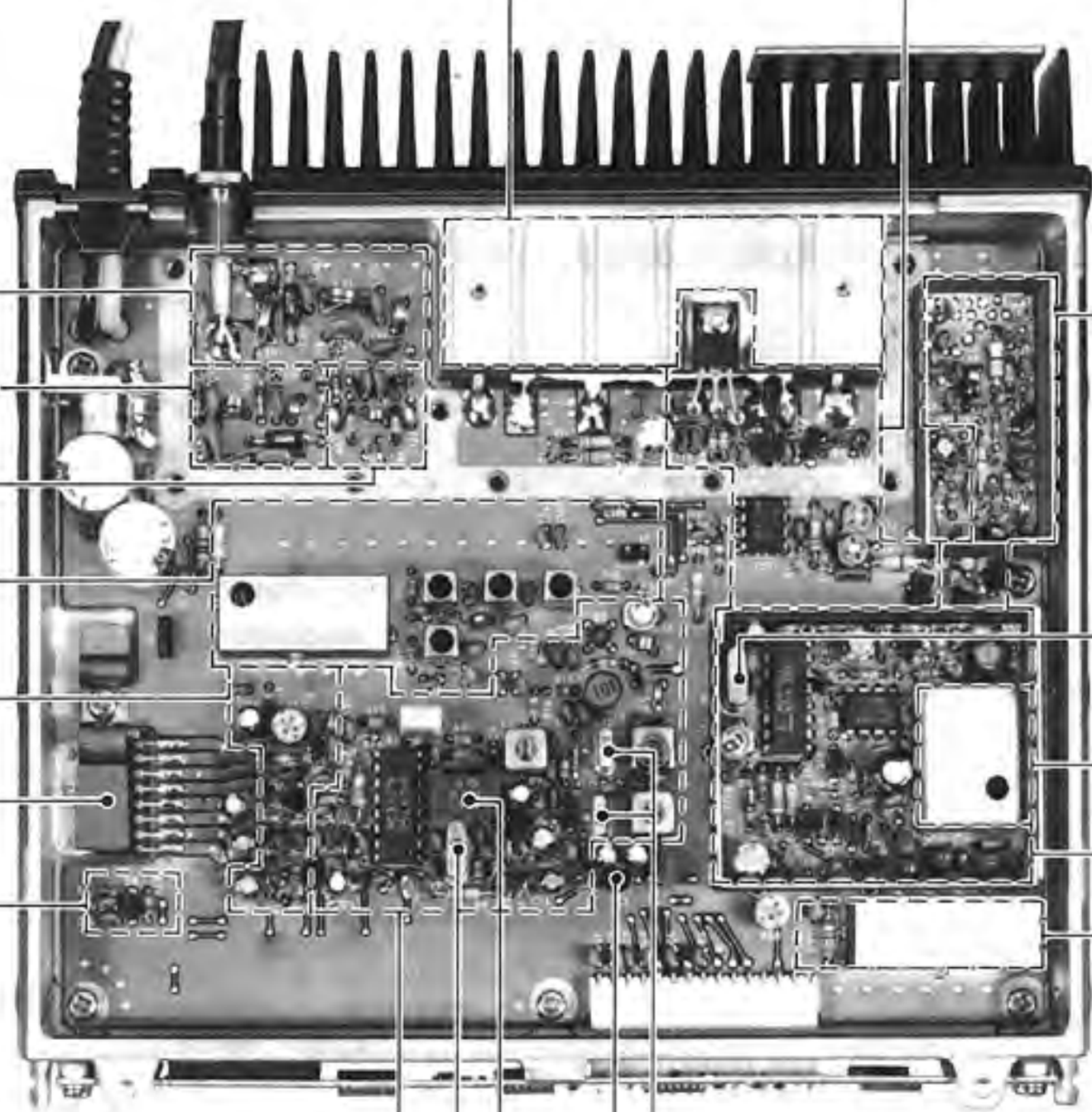

SECTION 3 BLOCK DIAGRAM

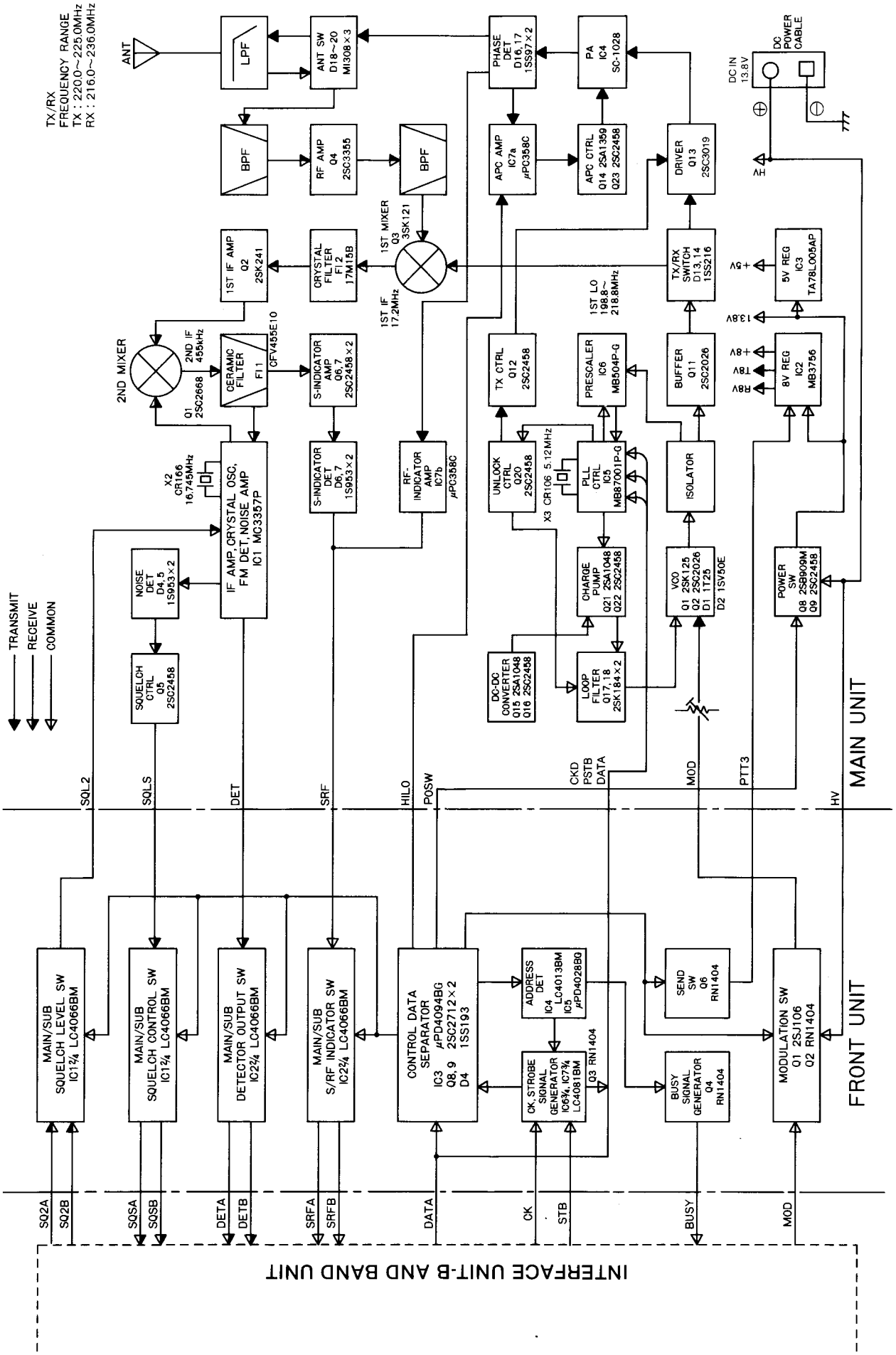

SECTION 4 CIRCUIT DESCRIPTION

4-1 CONSTRUCTION

UX-39A consists of the MAIN UNIT and the FRONT UNIT.

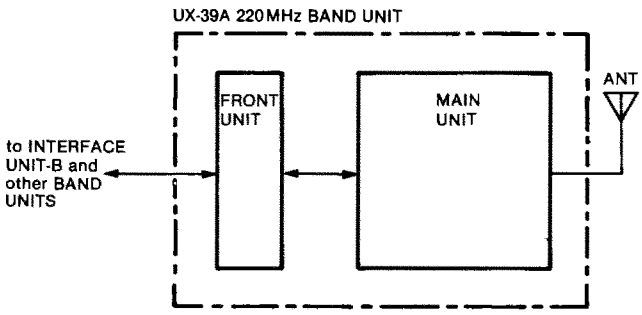

Fig. 1

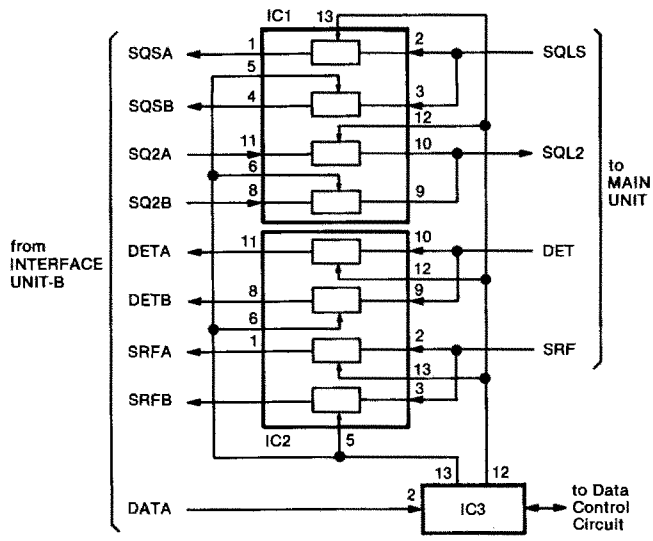

Fig. 2

4-2 FRONT UNIT

4-2-1 SIGNAL SWITCHING CIRCUIT

The serial data signals from INTERFACE UNIT-B are fed to IC3. UX-39A operation as a main band transceiver or a sub band receiver is determined by the commands of the serial data signals.

When pin 12 of IC3 outputs "HIGH," the analog switches (IC1, IC2) are controlled so that UX-39A operates as a main band transceiver.

When pin 13 of IC3 outputs "HIGH," the analog switches are controlled so that UX-39A operates as a sub band receiver.

4-2-2 DATA CONTROL CIRCUIT

To get the address control bits from the serial data signals, IC6 and IC7 create CK and STB signals. IC4 applies the band selection data to IC5. Then pin 1 of IC5 outputs data for 220MHz band selection.

For error-free operation, Q8 and Q9 operate as follows. When the power switch is turned ON, Q8 and Q9 keep the output impedance of IC3 pin 15 high until the FRONT UNIT receives the first STB signal.

4-2-3 MIC MUTE CIRCUIT

While receiving, Q1 and Q2 mute the microphone signals (MOD signal).

4-3 POWER SUPPLY CIRCUIT (MAIN UNIT)

The power supply circuit consists of Q8, Q9, IC2 and IC3. When UX-39A is selected with the REMOTE CONTROLLER, the power switch signal (POSW signal) is applied from the FRONT UNIT and 13.8V is applied to IC2 and IC3 via Q8.

IC2 is an 8V voltage regulator which outputs +8V and either R8V or T8V. IC2 is controlled by the PTT3 line input. IC3 outputs +5V to the PLL circuits.

POWER SUPPLY CIRCUIT

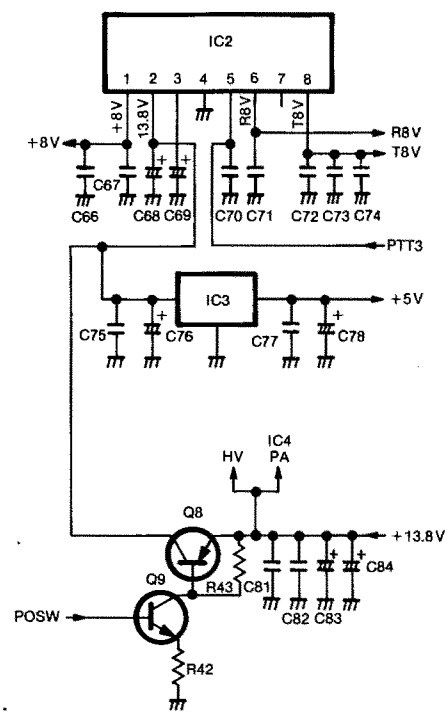

Fig. 3

4-4 RECEIVER CIRCUITS

4-4-1 RF CIRCUIT (MAIN UNIT)

Receive signals enter the MAIN UNIT from the ANTENNA CONNECTOR and pass through the low-pass filter consisting of L21~L26 and other parts, the antenna switching circuit consisting of D18~D20, and the singie resonator circuit consisting of L12 and C42. The signals are amplified at RF amplifier Q4 and are fed to the bandpass filter. This band-pass filter employs a 4-stage resonator circuit consisting of L7~L10 and other parts, and suppresses out-of-band signals.

4-4-2 IF CIRCUIT (MAIN UNIT)

After passing through the bandpass filter, signals are fed to the mixer circuit Q3, and are mixed with 1st LO signals from the PLL circuit to produce the 17.2MHz 1st IF signals. 1st IF signals from Q3 pass through the matching coil L3 and a pair of crystal filters (FI2) to suppress out-of-band signals. Then the 1st IF signals pass through the matching coil L2 and are amplified at IF amplifier Q2.

1st IF signals from Q2 are fed to the 2nd mixer circuit, Q1, and are mixed with 2nd LO signals for converting the 1st IF signals to 455kHz 2nd IF signals. IC1 contains the local oscillator, limiter amplifier, and active filter circuits. The 2nd LO circuit and X2 generate 16.745MHz 2nd LO signals.

The 2nd IF signals from Q1 pass through the ceramic filter, FI1, to suppress unwanted signals. They are then amplified at the limiter amplifier section (pin 5 of IC1) and applied to the quadrature detector section (pin 8 of IC1 and ceramic discriminator X1) to demodulate 2nd IF signals to AF signals.

AF signals output from pin 9 on IC1 are applied to the FRONT UNIT as the DET signal.

Signals output from pin 11 on IC1 are rectified by D4 and D5 for conversion to DC voltage and then applied to the FRONT UNIT as the SQLS signal via the squelch control circuit Q5.

A portion of the signals from FI1 is amplified at S-meter amplifier Q6 and Q7, and is detected at the rectifiers D6 and D7. These signals are then applied to the FRONT UNIT as the SRF signal. R31 adjusts the SRF signal level.

2ND IF CIRCUIT

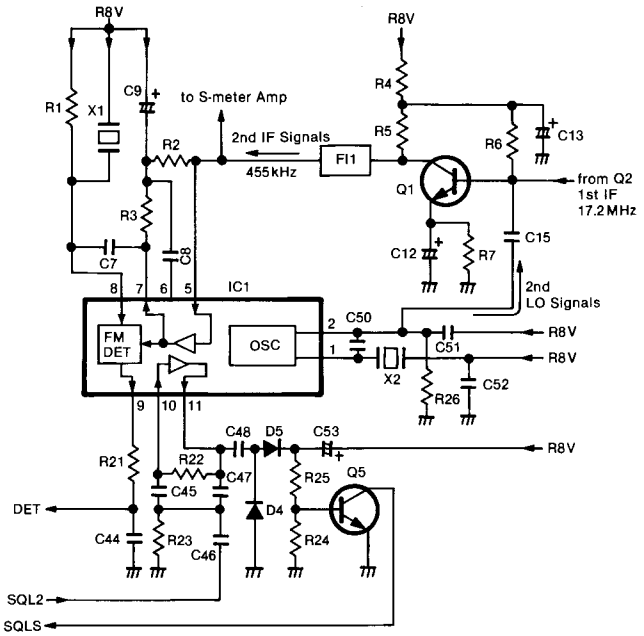

Fig. 4

4-5 PLL CIRCUITS

4-5-1 GENERAL

The PLL circuit, adopting a dual modulus prescaler system, allows the desired frequency to be generated directly from the VCO circuit. The PLL consists of a prescaler (IC6) and PLL IC (IC5). These circuits receive N-data from the CPU (REMOTE CONTROLLER) in order to determine the operating frequency.

N-data is determined by dividing the desired frequency by the reference frequency. The desired frequency is the transmit frequency in transmit mode and the 1st LO frequency in receive mode.

$$\text{N-data} = \frac{\text{Desired frequency}}{\text{Reference frequency}}$$

A reference frequency of 5kHz is produced by X3, IC5 and the divider inside IC5. A signal from the VCO circuit is fed into IC6, and divided N times at IC5 and IC6.

The divided signal is applied to the phase detector in IC5. Phase detection results in lock voltages being output from pin 9.

Output from pin 9 is fed into a charge pump circuit consisting of Q21 and Q22 and is then applied to the loop filter consisting of Q17 and Q18. The signal passing through the loop filter is fed to varactor diodes D1 and D2 to control the VCO output frequency.

The DC-DC converter consisting of Q15 and Q16 creates approximately 30V DC from 8V DC to obtain wide range lock voltages for the PLL circuit.

When the PLL circuit is unlocked, IC5 pin 7 is "LOW." Q20 is turned OFF and Q12 is turned ON. The bias voltage to Q13, the driver, is cut off, deactivaing it—thus preventing the transmission of unwanted signals.

PLL CIRCUIT

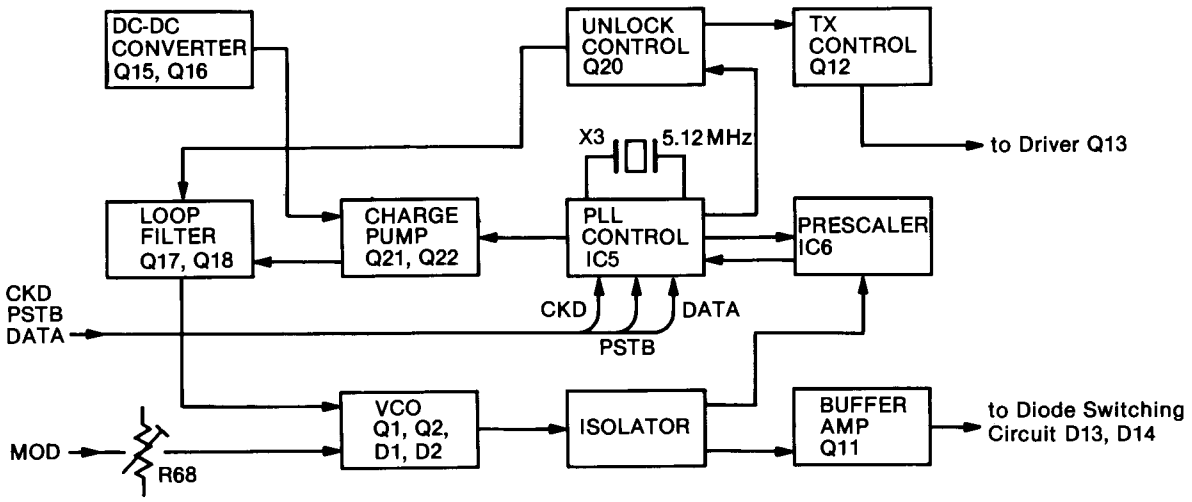

Fig. 5

4-5-2 VCO CIRCUIT (MAIN UNIT)

The VCO, Q1, employs a Hartley oscillator circuit. VCO oscillating signals are controlled by varactor diodes (D1, D2) with PLL lock voltage from the loop filter (Q17, Q18).

Modulation signals then change the capacitance of D1 to produce FM modulation.

The output from the VCO circuit is buffer amplified at Q11, and passes through the low-pass filter consisting of C91~C93, L15 and L16.

VCO CIRCUIT

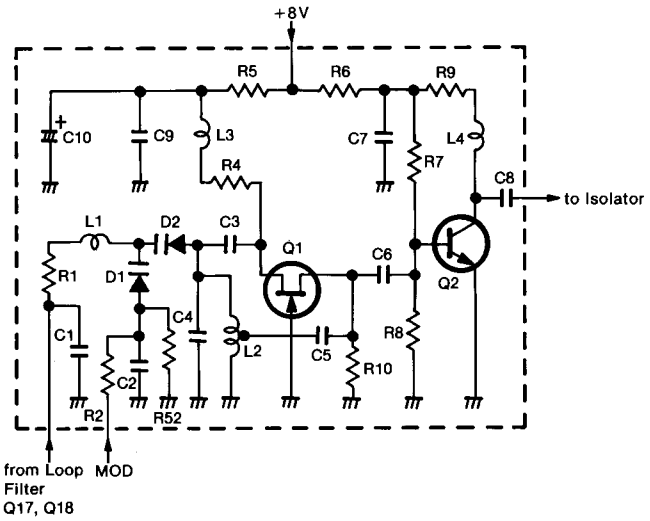

Fig. 6

4-5-3 DIODE SWITCHING CIRCUIT (MAIN UNIT)

The diode switching circuit consists of D13 and D14. While receiving, D13 is turned ON and VCO signals are applied to the 1st mixer circuit Q3. While transmitting, D14 is turned ON and VCO signals are applied to the driver Q13.

4-6 TRANSMITTER CIRCUITS

4-6-1 DRIVER CIRCUIT (MAIN UNIT)

The VCO output is amplified at Q13 and obtains more than 23dBm, 200mW. After passing through the bandpass filter consisting of C108, C110, C112, L17 and L18, the amplified signals are applied to the PA circuit (IC4).

4-6-2 PA CIRCUIT (MAIN UNIT)

The PA circuit IC4 is a power amplifier which provides 25W output. Amplified signals at IC4 are applied to the APC detector circuit.

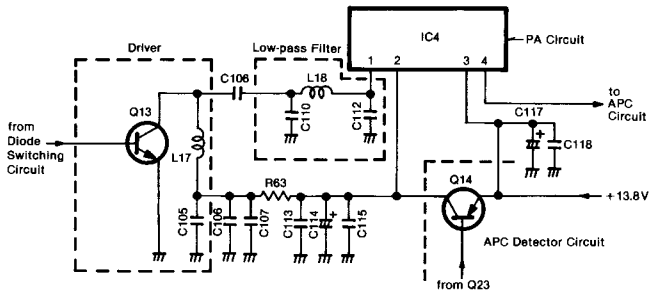

Fig. 7

4-6-3 APC DETECTOR CIRCUIT (MAIN UNIT)

The APC detector circuit consists of C120~C123, L19, D16, and D17.

When antenna impedance is matched at 50Ω, voltage detected at D16 and D17 is at a minimum. When antenna impedance is mismatched, the detected voltage is greater than when matched.

The voltage detected at D16 and D17 is fed to pin 2 of IC7A. IC7A is a differential amplifier. The APC reference voltage is fed to pin 3.

When the antenna impedance is mismatched, the voltage of IC7A pin 2 is greater than the reference voltage. The output voltage of IC7A pin 1 decreases, decreasing Q23 and Q14 collector current.

The change in collector current decreases the output power of IC4 until the voltage of IC7A pin 2 equals the voltage of pin 3. Thus, stable RF output power is obtained.

The output power from IC4 passes through the APC detector circuit, the antenna switching circuit (D18), the low-pass filter (C134~C136, C138, L23~L26), and is then applied to the antenna connector.

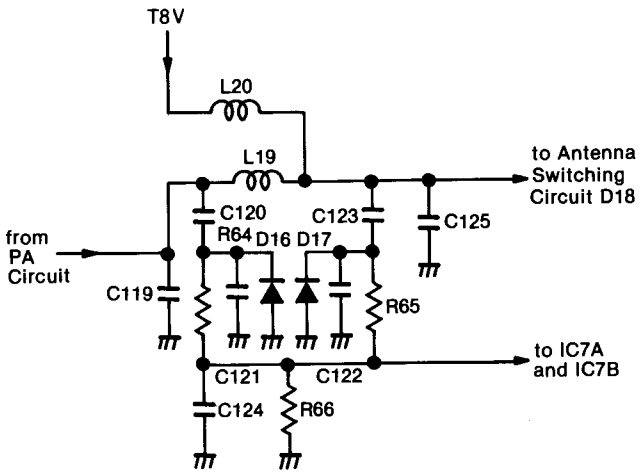

Fig. 8

4-6-4 OUTPUT POWER SELECTION CIRCUIT (MAIN UNIT)

The output power selection circuit consists of R103, R107~R110, and Q25. This circuit shifts the RF output power by shifting the APC reference voltage.

When HIGH output power is selected, Q25 is turned OFF. RF output power is adjusted with R107.

When LOW output power is selected, Q25 is turned ON. Series resistors R109 and R110 are connected in parallel with series resistors R108 and R107. RF output power is adjusted with R109.

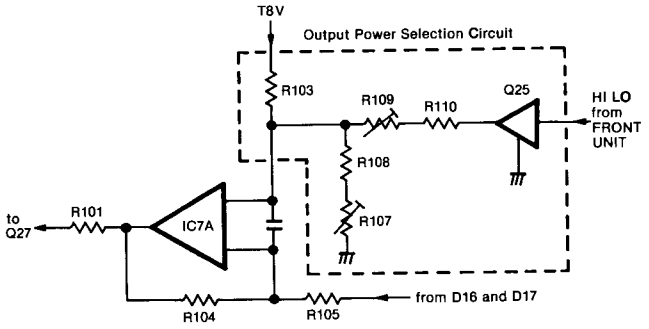

Fig. 9

4-6-5 RF METER AMP (MAIN UNIT)

The voltage detected at D16 and D17 is amplified at IC7B and then applied to the FRONT UNIT as the SRF signal.

SECTION 5 ADJUSTMENT PROCEDURES

5-1 PLL ADJUSTMENT

TEST INSTRUMENTS REQUIRED	MEASUREMENT CONNECTION LOCATION
(1) AC POWER SUPPLY • Output voltage : 13.8V DC • Current capacity : 20A or more (2) FREQUENCY COUNTER • Frequency range : 0.1~250MHz • Frequency accuracy : ±1ppm or better • Sensitivity : 100mV or better (3) DC VOLTMETER • Input impedance : 50kΩ/DC or better	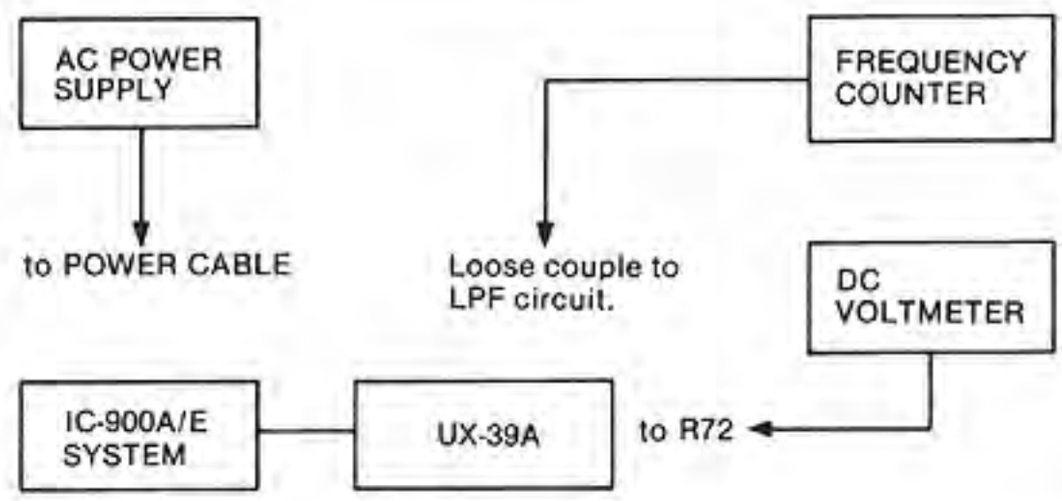

ADJUSTMENT		ADJUSTMENT CONDITIONS	MEASUREMENT		VALUE	ADJUSTMENT POINT	
			UNIT	LOCATION		UNIT	ADJUST
LOCK VOLTAGE	1	• Frequency display: 220.000MHz • Receiving	MAIN	Connect the DC voltmeter to R72.	4.0V	VCO	L2
REFERENCE FREQUENCY	1	• Frequency display: 220.000MHz • Transmitting	MAIN	Loose couple the frequency counter to the LPF circuit.	220.000MHz	MAIN	C154

MAIN AND VCO UNITS

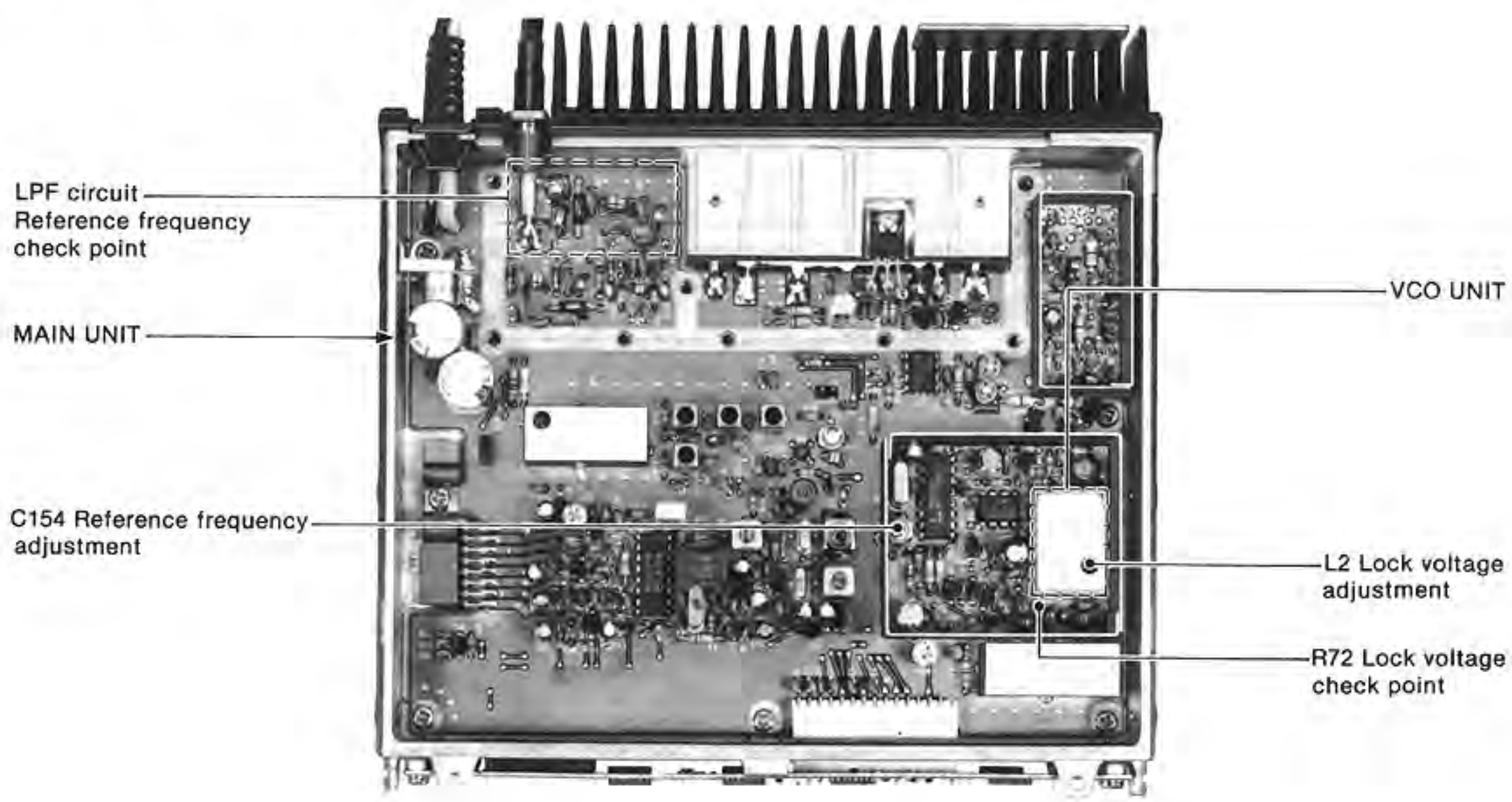

5-2 RECEIVER ADJUSTMENT

TEST INSTRUMENTS REQUIRED

(1) AC POWER SUPPLY
- Output voltage : 13.8V DC
- Current capacity : 20A or more

(2) STANDARD SIGNAL GENERATOR (SSG)
- Frequency range : 0.1~250MHz
- Output level : −127~−17dBm (0.1μV~32mV)

(3) DC VOLTMETER
- Input impedance : 50kΩ/DC or better

(4) OSCILLOSCOPE
- Frequency range : DC~20MHz
- Measuring range : 0.01~10V

(5) SWEEP GENERATOR
- Frequency range : 0.1~250MHz
- Sweep bandwidth : At least 30MHz
- Output impedance : 50Ω

(6) DETECTOR

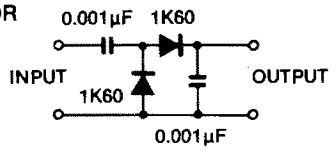

MEASUREMENT CONNECTION LOCATION

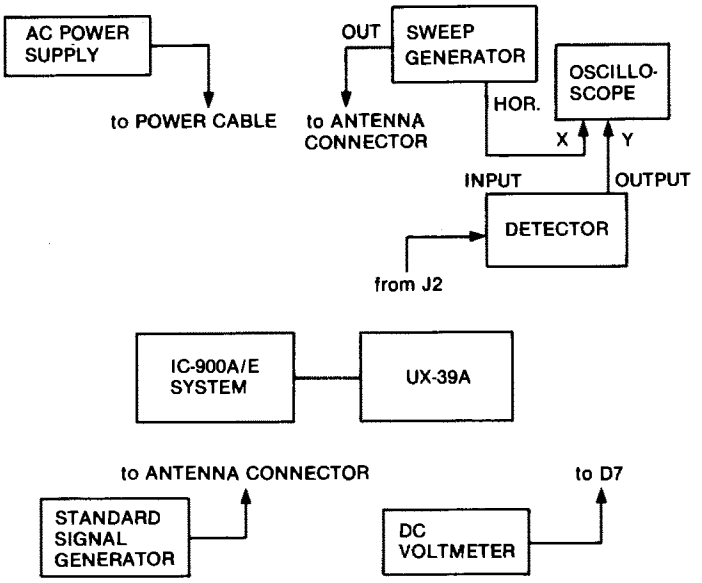

ADJUSTMENT		ADJUSTMENT CONDITIONS	MEASUREMENT UNIT	MEASUREMENT LOCATION	VALUE	ADJUSTMENT POINT UNIT	ADJUSTMENT POINT ADJUST
BANDPASS FILTER	1	• Frequency display: 222.500MHz • Apply an RF sweep signal to the ANTENNA CONNECTOR. Sweep level: −20dBm (22mV) Center frequency: 222.500MHz Sweep band width: 30MHz • Ground C72 with the jumper wire.	MAIN	Connect the oscilloscope to J2 pin 1 via the detector.	Adjust as follows: 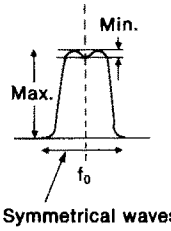 Symmetrical waves f_0=222.5MHz	MAIN	L7, L8 L9, L10 C42
		NOTE: Remove the jumper wire from C72 after adjustment.					
SENSI-TIVITY	1	• Frequency display: 223.000MHz • Receiving • Apply an RF signal to the ANTENNA CONNECTOR. Level: −107dBm (1μV) (Approx.) Dev. : ±3.5kHz Mod. : 1kHz • R31: Max. CCW.*	MAIN	Connect the DC voltmeter to D7 cathode.	Maximum	MAIN	C30, L3 L2, L1
		NOTE: Adjust the signal generator output level for each time showing the DC voltmeter at 30% of the lowest range full scale.					

*CCW: Counterclockwise

RECEIVER ADJUSTMENT (CONTINUED)

ADJUSTMENT		ADJUSTMENT CONDITIONS	MEASUREMENT		VALUE	ADJUSTMENT POINT	
			UNIT	LOCATION		UNIT	ADJUST
S-METER	1	• Frequency display: 222.500 MHz • Receiving • Apply an RF signal to the ANTENNA CONNECTOR. Level: −107 dBm (1μV) Dev. : ±3.5 kHz Mod. : 1 kHz	FUNC-TION DISPLAY	S/RF INDICATOR	S3 (2 dots)	MAIN	R31

MAIN UNIT

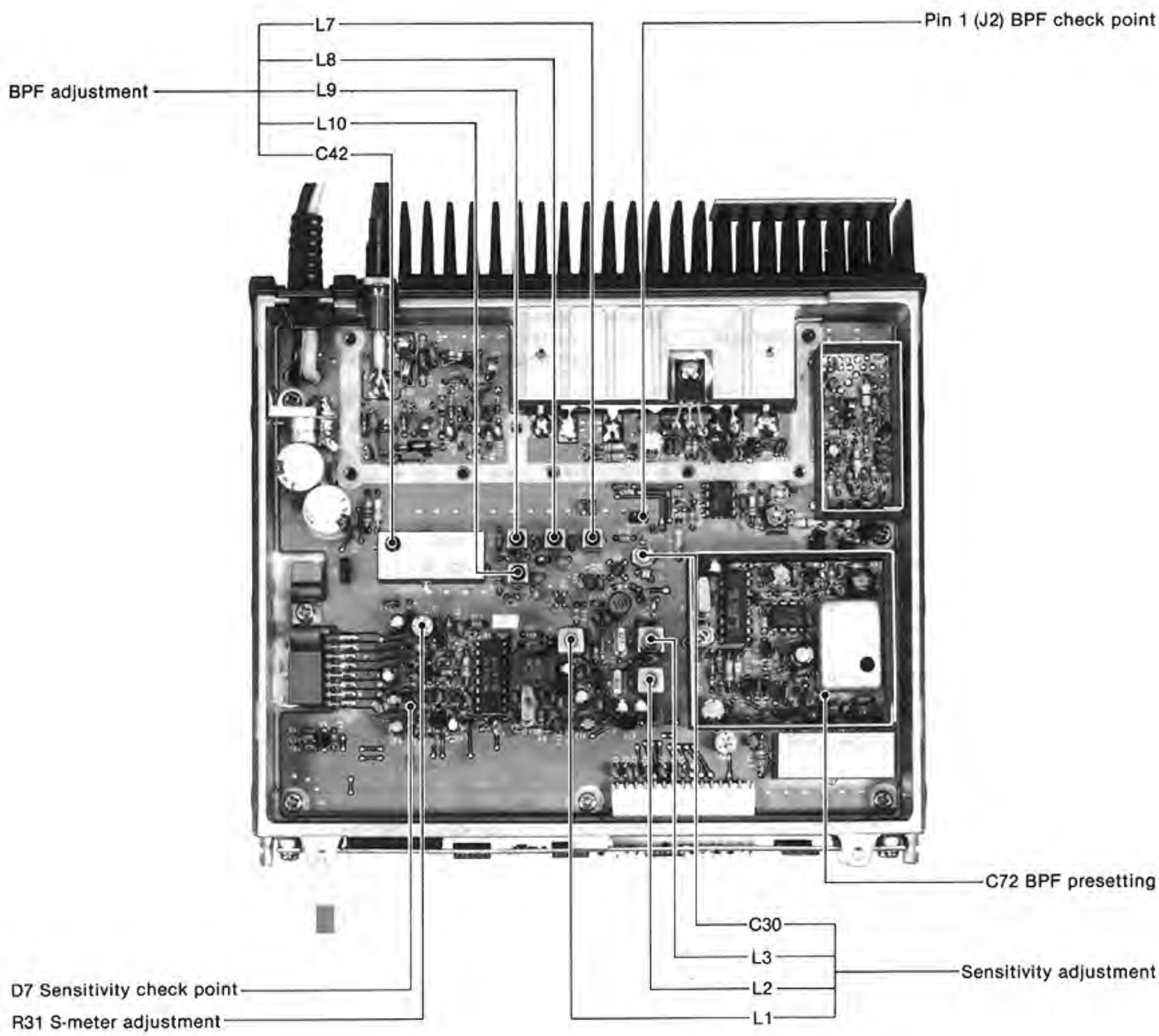

5-3 TRANSMITTER ADJUSTMENT

TEST INSTRUMENTS REQUIRED	MEASUREMENT CONNECTION LOCATION
(1) AC POWER SUPPLY • Output voltage : 13.8V DC • Current capacity : 20A or more (2) RF POWER METER (TERMINATED TYPE) • Measuring range : 1~40W • Frequency range : 200~250MHz • Impedance : 50Ω • SWR : Less than 1.2: 1 (3) AF GENERATOR (AG) • Frequency range : 200~2000Hz • Output level : 0~100mV (4) AC MILLI-VOLTMETER • Measuring range : 2~100mV (5) FM DEVIATION METER • Frequency minimum : 250MHz • Measuring range : 0~±5kHz	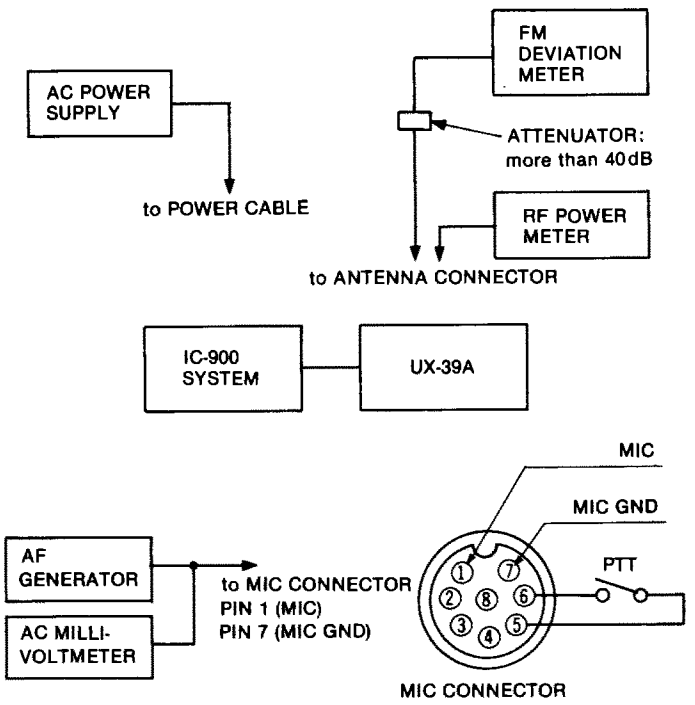

ADJUSTMENT		ADJUSTMENT CONDITIONS	MEASUREMENT		VALUE	ADJUSTMENT POINT	
			UNIT	LOCATION		UNIT	ADJUST
OUTPUT POWER	1	• Frequency display: 222.500MHz • Transmitting • HIGH/LOW POWER SWITCH: HIGH	Rear panel	Connect the RF power meter to the ANTENNA CONNECTOR.	25W	MAIN	R107
	2	• HIGH/LOW POWER SWITCH: LOW			5W		R109
DEVIATION	1	• Frequency display: 222.500MHz • Transmitting • Apply an AF signal to the MIC CONNECTOR pin 1 (pin 7 is ground). Level: 65mV/1kHz • Set the FM deviation meter. HPF: 50Hz LPF : 20kHz • TONE SWITCH: OFF	Rear panel	Connect the FM deviation meter to the ANTENNA CONNECTOR via the attenuator.	±4.8kHz	MAIN	R68

MAIN UNIT

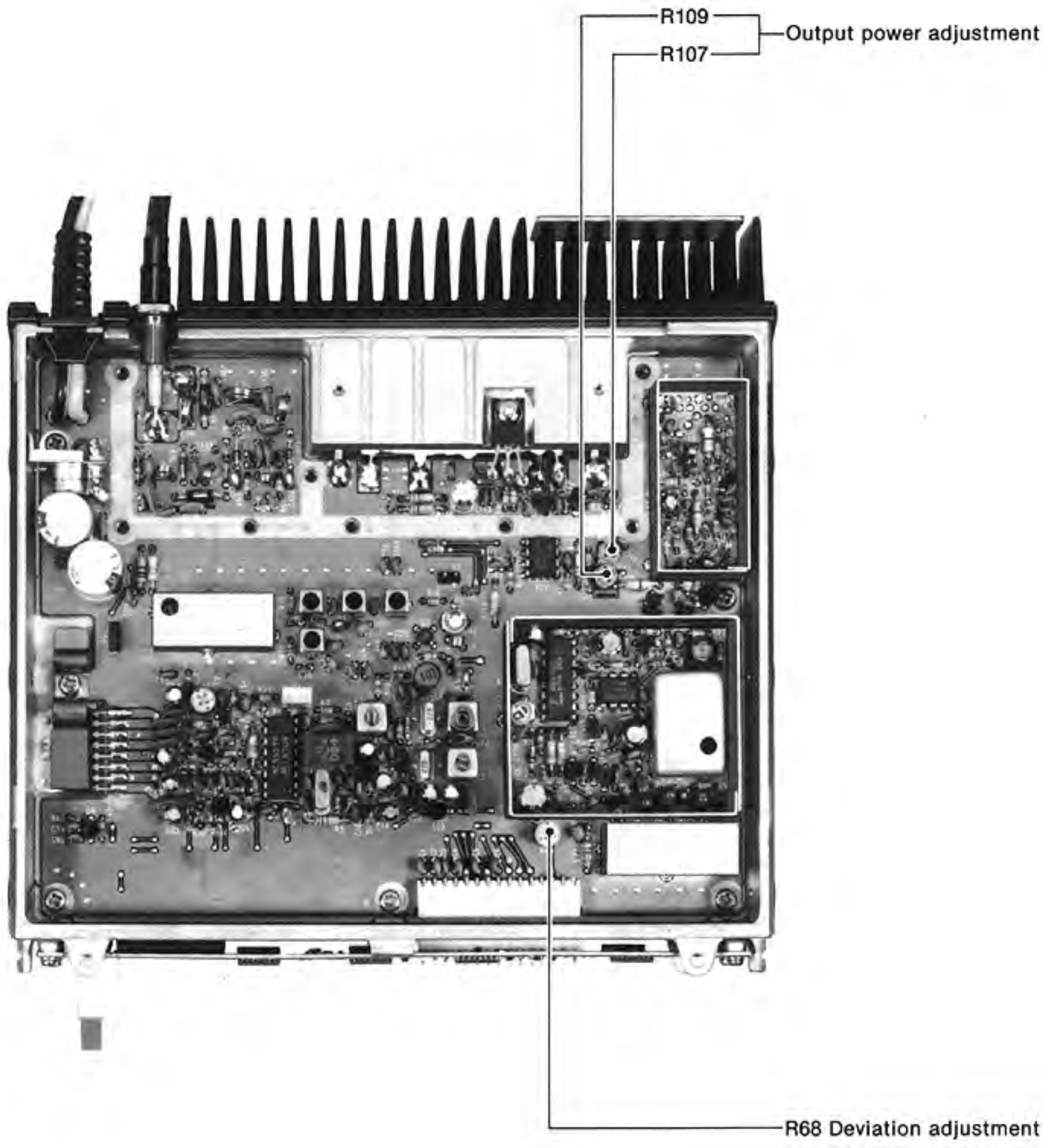
R109
R107
Output power adjustment
R68 Deviation adjustment

SECTION 6 BOARD LAYOUTS

MC3357P IC1
(LOW POWER FM IF)

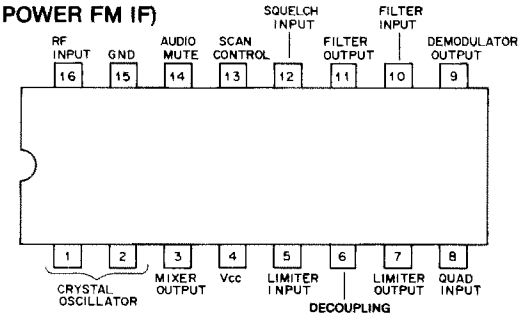

MB3756 IC2
(VOLTAGE REGULATOR)

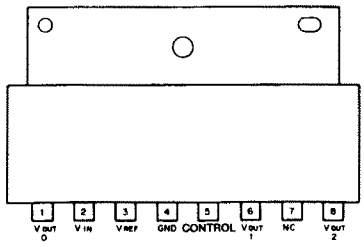

TA78L005AP IC3
(3-TERMINAL 5V REGULATOR)

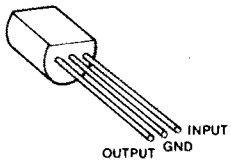

SC-1028 IC4
(POWER MODULE)

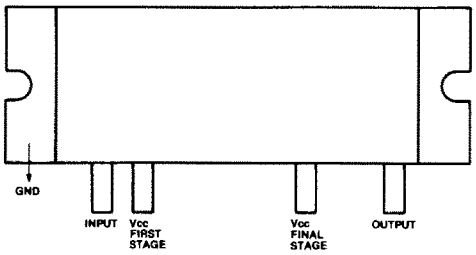

MB87001P-G IC5
(PLL FREQUENCY SYNTHESIZER)

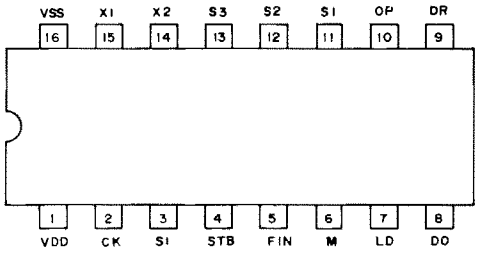

MB504P-G IC6
(PRESCALER)

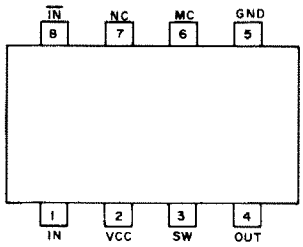

μPC358C IC7
(DUAL DRIVER)

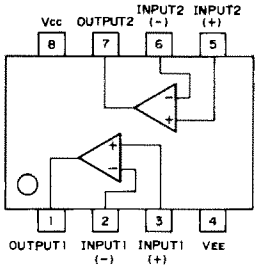

• MAIN UNIT

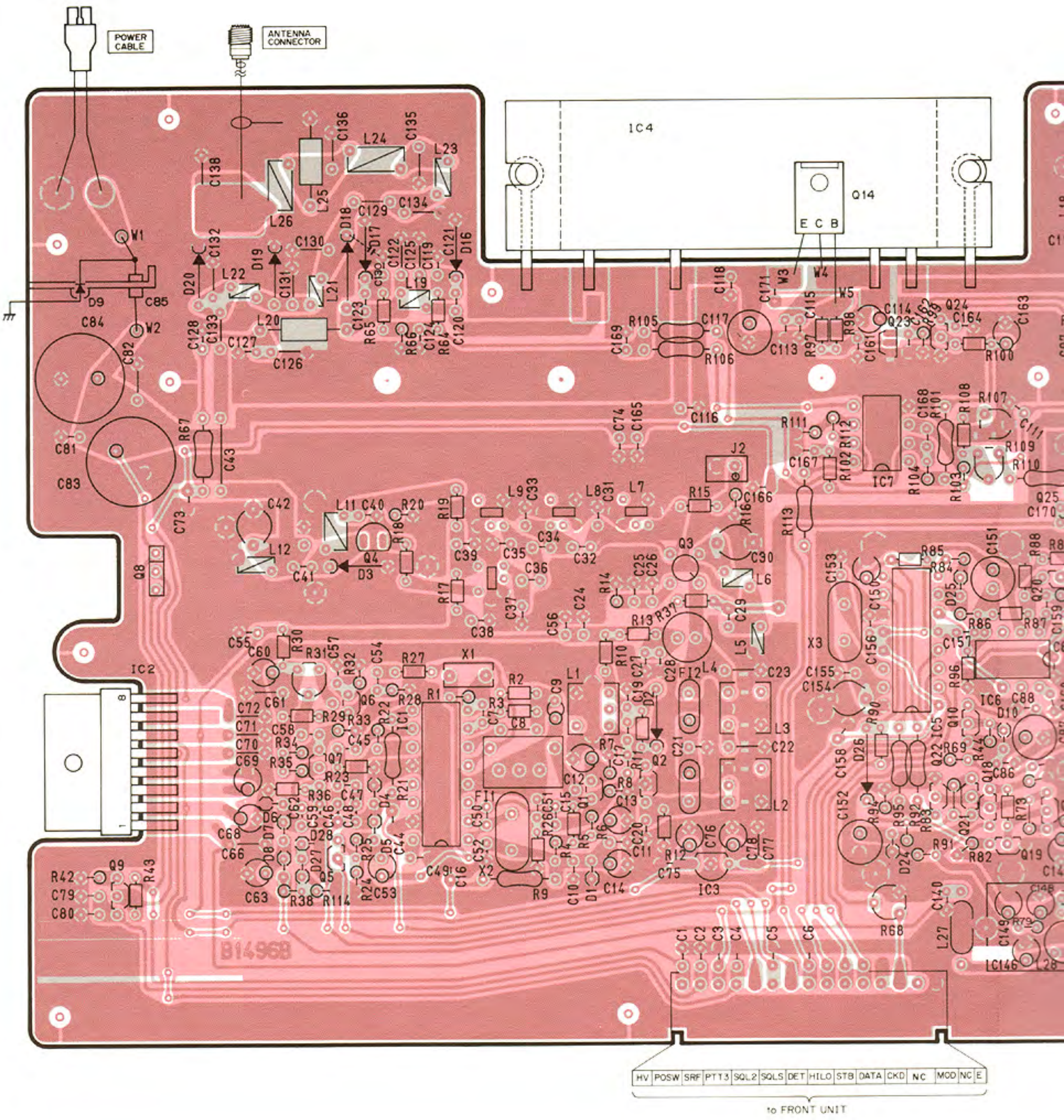
POWER CABLE
ANTENNA CONNECTOR
IC4
Q14
E C B
W1
W2
W3
W4
W5
IC2
IC3
IC6
IC7
X1
X2
X3
B1496B
HV
POSW
SRF
PTT3
SQL2
SQLS
DET
HILO
STB
DATA
CKD
NC
MOD
NC
E
to FRONT UNIT

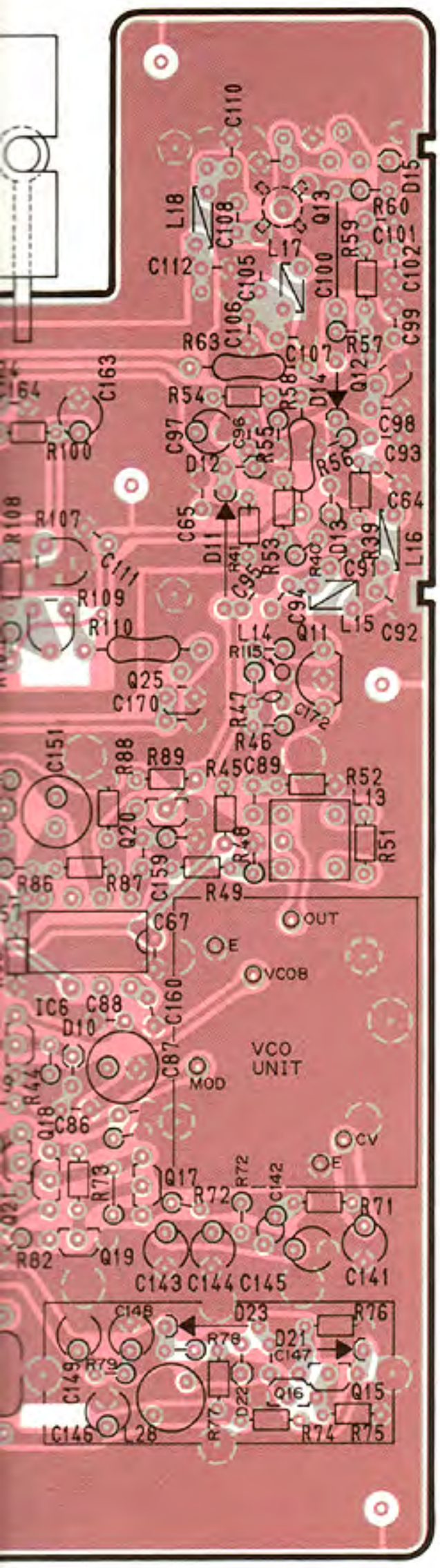

2SC2668 O
Q1

2SC3019
Q13

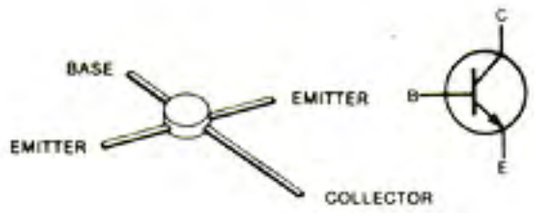

2SK241 Y
Q2

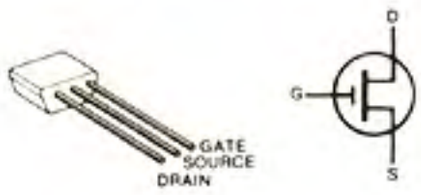

2SA1359 Y
Q14

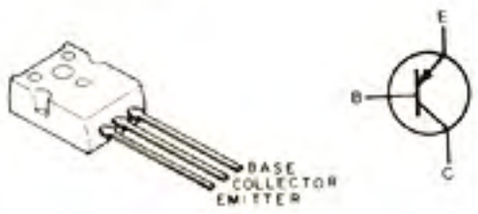

3SK121 Y
Q3

2SA1048 GR
Q15, Q21

2SC3355
Q4

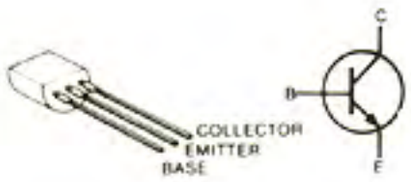

2SK184 Y
Q17, Q18

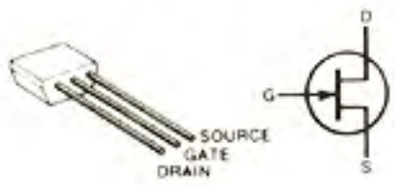

• VCO UNIT

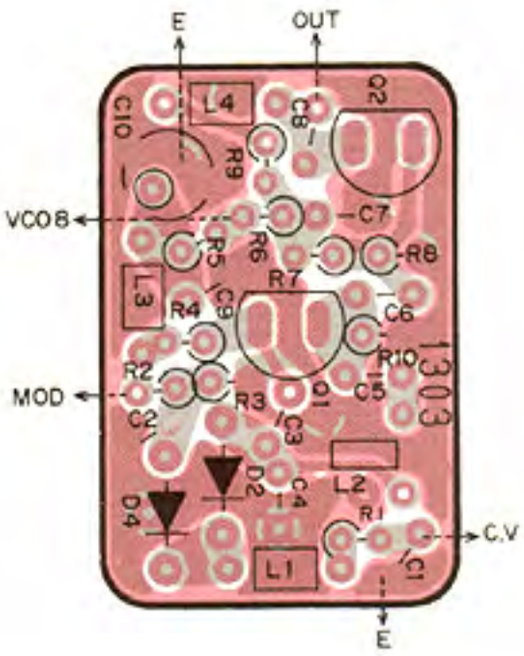

2SC2458 GR
Q5, Q6, Q7
Q9, Q10, Q12
Q16, Q19, Q20
Q22, Q23

RN1204
Q24, Q25

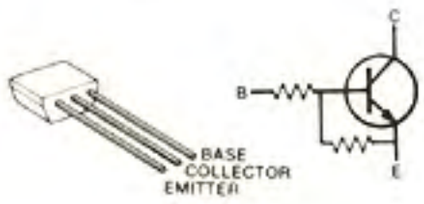

2SB909M R
Q8

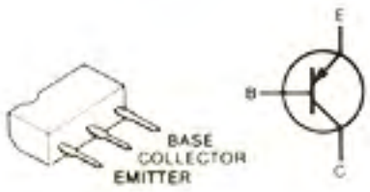

2SK125
Q1

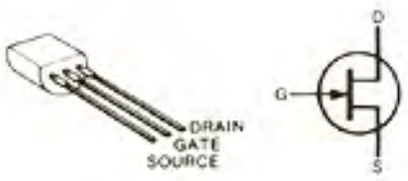

2SC2026
Q11 Q2 (VCO)

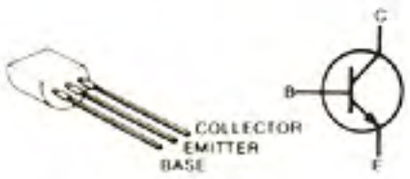

SECTION 7 VOLTAGE DIAGRAM

• **UX-39A**

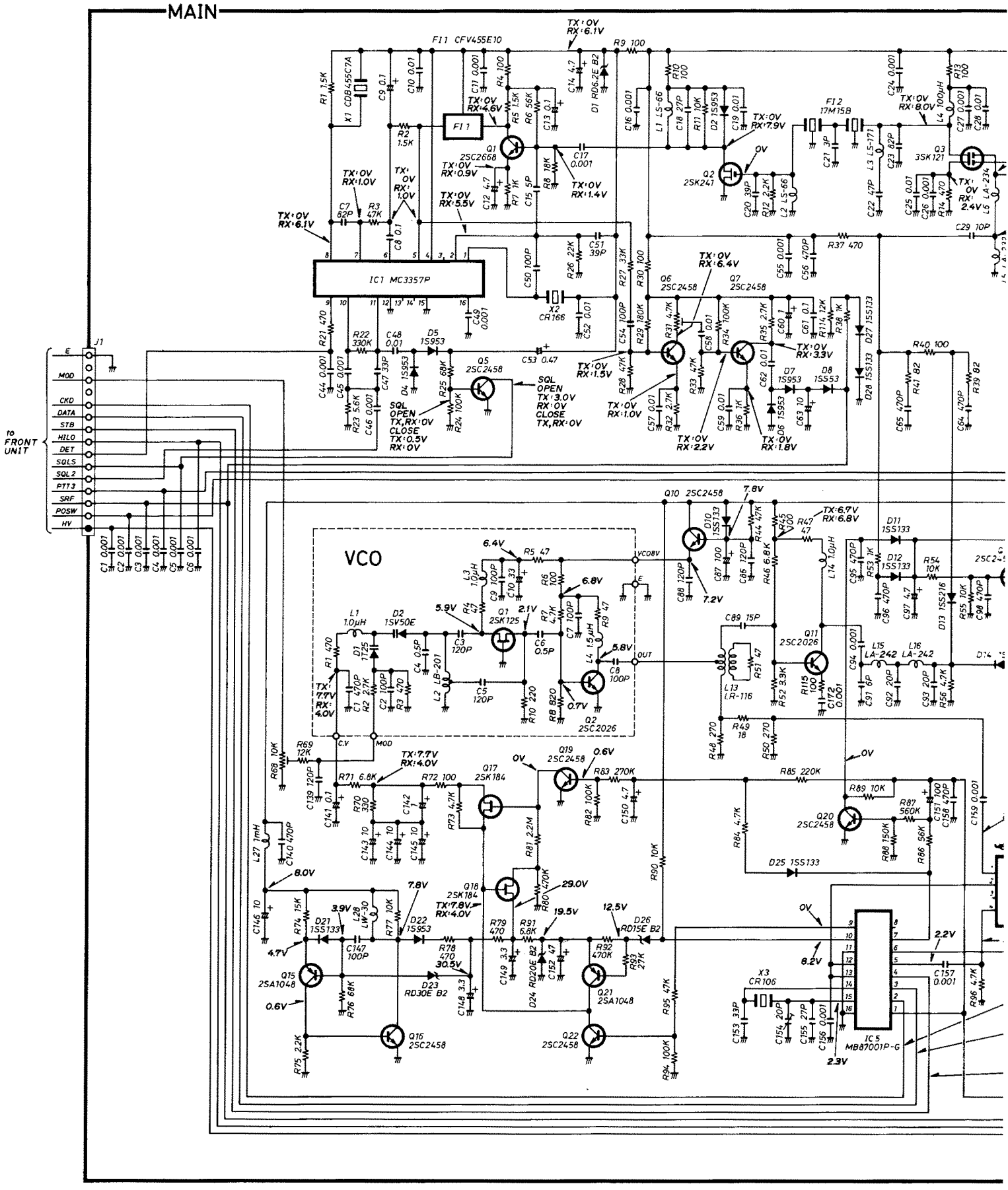

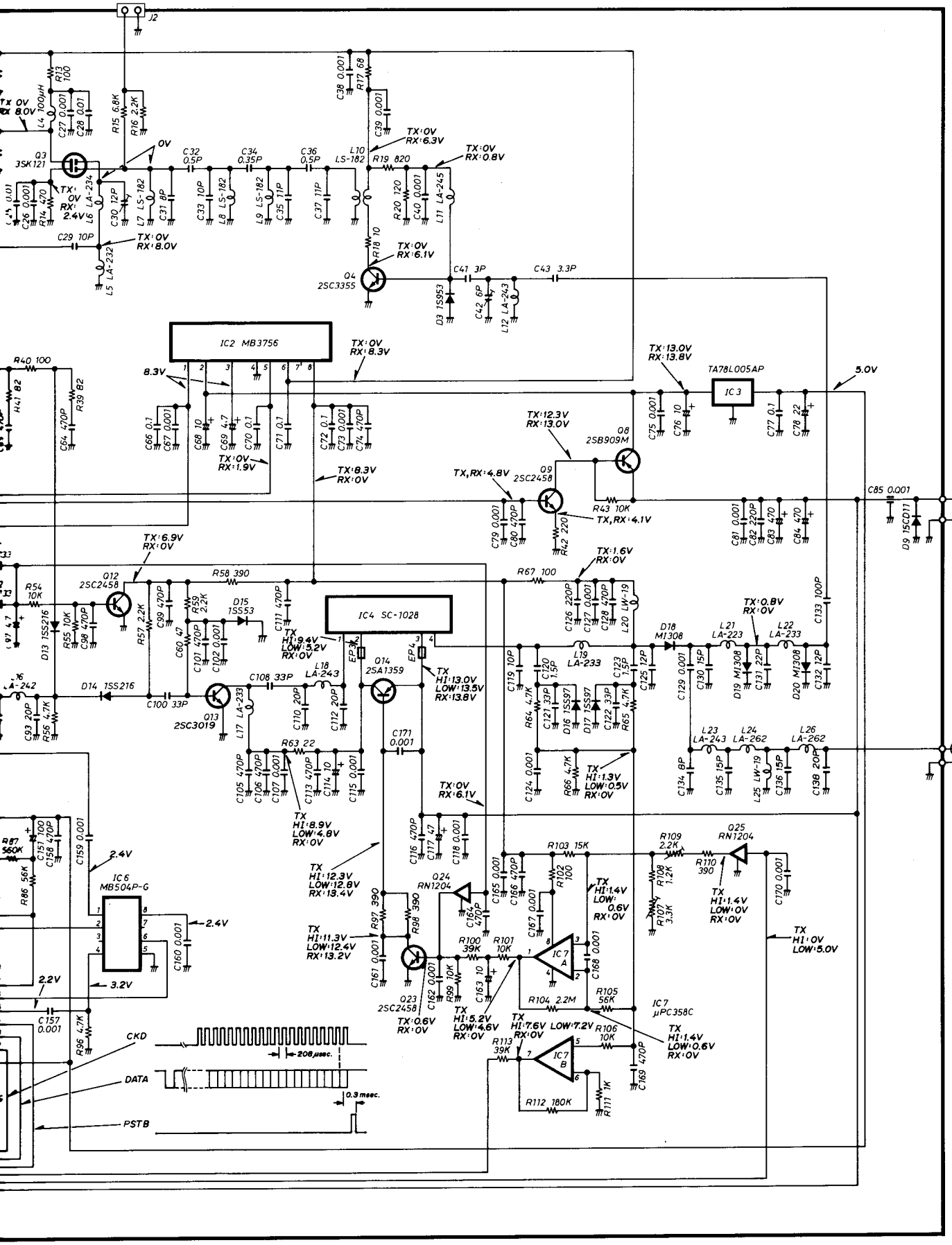
J2
IC2 MB3756
IC3 TA78L005AP
IC4 SC-1028
IC6 MB504P-G
IC7 A
IC7 B
IC7 μPC358C
Q3 3SK121
Q4 2SC3355
Q8 2SB909M
Q9 2SC2458
Q12 2SC2458
Q13 2SC3019
Q14 2SA1359
Q23 2SC2458
Q24 RN1204
Q25 RN1204
EP1 OPC-169
DC 13.8V
to INTERFACE UNIT B
EP2 OPC-186
ANT.
CKD
DATA
PSTB
208μsec.
0.3 msec.

SECTION 8 PARTS LIST

[MAIN UNIT]

REF. NO.	DESCRIPTION	PART NO.
IC1	IC	MC3357P
IC2	IC	MB3756
IC3	IC	TA78L005AP
IC4	IC	SC-1028
IC5	IC	MB87001P-G
IC6	IC	MB504P-G
IC7	IC	µPC358C
Q1	Transistor	2SC2668 O
Q2	FET	2SK241 Y
Q3	FET	3SK121 Y
Q4	Transistor	2SC3355
Q5	Transistor	2SC2458 GR
Q6	Transistor	2SC2458 GR
Q7	Transistor	2SC2458 GR
Q8	Transistor	2SB909M R
Q9	Transistor	2SC2458 GR
Q10	Transistor	2SC2458 GR
Q11	Transistor	2SC2026
Q12	Transistor	2SC2458 GR
Q13	Transistor	2SC3019
Q14	Transistor	2SA1359 Y
Q15	Transistor	2SA1048 GR
Q16	Transistor	2SC2458 GR
Q17	FET	2SK184 Y
Q18	FET	2SK184 Y
Q19	Transistor	2SC2458 GR
Q20	Transistor	2SC2458 GR
Q21	Transistor	2SA1048 GR
Q22	Transistor	2SC2458 GR
Q23	Transistor	2SC2458 GR
Q24	Transistor	RN1204
Q25	Transistor	RN1204
D1	Zener	RD6.2E B2
D2	Diode	1S953
D3	Diode	1S953
D4	Diode	1S953
D5	Diode	1S953
D6	Diode	1S953
D7	Diode	1S953
D8	Diode	1SS53
D9	Diode	15CD11
D10	Diode	1SS133
D11	Diode	1SS133
D12	Diode	1SS133
D13	Diode	1SS216
D14	Diode	1SS216
D15	Diode	1SS53
D16	Diode	1SS97
D17	Diode	1SS97
D18	Diode	MI308
D19	Diode	MI308
D20	Diode	MI308
D21	Diode	1SS133
D22	Diode	1S953
D23	Zener	RD30E B2
D24	Zener	RD20E B2
D25	Diode	1SS133
D26	Zener	RD15E B2
D27	Diode	1SS133
D28	Diode	1SS133
FI1	Ceramic	CFV455E10
FI2	Crystal	17M15B

[MAIN UNIT]

REF. NO.	DESCRIPTION	PART NO.
X1	Discriminator	CDB455C7A
X2	Crystal	CR166
X3	Crystal	CR106
L1	Coil	LS-66
L2	Coil	LS-66
L3	Coil	LS-171
L4	Coil	S4 101K
L5	Coil	LA-232
L6	Coil	LA-234
L7	Coil	LS-182
L8	Coil	LS-182
L9	Coil	LS-182
L10	Coil	LS-182
L11	Coil	LA-245
L12	Coil	LA-243
L13	Coil	LR-116
L14	Coil	LAL03NA 1R0M
L15	Coil	LA-242
L16	Coil	LA-242
L17	Coil	LA-233
L18	Coil	LA-243
L19	Coil	LA-233
L20	Coil	LW-19
L21	Coil	LA-233
L22	Coil	LA-233
L23	Coil	LA-243
L24	Coil	LA-262
L25	Coil	LW-19
L26	Coil	LA-262
L27	Coil	LAL03NA 102K
L28	Coil	LW-30
R1	Resistor	1.5kΩ ELR20
R2	Resistor	1.5kΩ R20
R3	Resistor	47kΩ R20
R4	Resistor	100Ω ELR20
R5	Resistor	1.5kΩ R20
R6	Resistor	56kΩ ELR20
R7	Resistor	1kΩ ELR20
R8	Resistor	18kΩ ELR20
R9	Resistor	100Ω R25
R10	Resistor	100Ω R20
R11	Resistor	10kΩ R20
R12	Resistor	2.2kΩ R20
R13	Resistor	100Ω R20
R14	Resistor	470Ω ELR20
R15	Resistor	6.8kΩ R20
R16	Resistor	2.2kΩ ELR20
R17	Resistor	68Ω R20
R18	Resistor	10Ω R20
R19	Resistor	820Ω R20
R20	Resistor	120Ω ELR20
R21	Resistor	470Ω R25
R22	Resistor	330kΩ ELR20
R23	Resistor	5.6kΩ R20
R24	Resistor	100kΩ ELR20
R25	Resistor	68kΩ ELR20
R26	Resistor	22kΩ R20
R27	Resistor	33kΩ R20
R28	Resistor	47kΩ ELR20
R29	Resistor	180kΩ R20
R30	Resistor	100Ω R20
R31	Trimmer	4.7kΩ RH0651CS3J2KA
R32	Resistor	2.7kΩ ELR20
R33	Resistor	47kΩ ELR20
R34	Resistor	100kΩ ELR20
R35	Resistor	2.7kΩ ELR20

[MAIN UNIT]

REF. NO.	DESCRIPTION	PART NO.	
R36	Resistor	1kΩ	R20
R37	Resistor	470Ω	R20
R38	Resistor	1kΩ	ELR20
R39	Resistor	82Ω	R20
R40	Resistor	100Ω	ELR20
R41	Resistor	82Ω	R20
R42	Resistor	220Ω	ELR20
R43	Resistor	10kΩ	R20
R44	Resistor	47kΩ	ELR20
R45	Resistor	100Ω	R20
R46	Resistor	6.8kΩ	ELR20
R47	Resistor	47Ω	ELR20
R48	Resistor	270Ω	ELR20
R49	Resistor	18Ω	R20
R50	Resistor	270Ω	ELR20
R51	Resistor	47Ω	R20
R52	Resistor	3.3kΩ	R20
R53	Resistor	1kΩ	R20
R54	Resistor	10kΩ	R20
R55	Resistor	10kΩ	ELR20
R56	Resistor	4.7kΩ	ELR20
R57	Resistor	2.2kΩ	ELR20
R58	Resistor	390Ω	R25
R59	Resistor	2.2kΩ	R20
R60	Resistor	47Ω	ELR20
R63	Resistor	22Ω	R25
R64	Resistor	4.7kΩ	R20
R65	Resistor	4.7kΩ	R20
R66	Resistor	4.7kΩ	ELR20
R67	Resistor	100Ω	R50X
R68	Trimmer	10kΩ	RH0651C14J2WA
R69	Resistor	12kΩ	ELR20
R70	Resistor	330Ω	ELR20
R71	Resistor	6.8kΩ	R20
R72	Resistor	100Ω	R20
R73	Resistor	4.7kΩ	ELR20
R74	Resistor	15kΩ	R20
R75	Resistor	2.2kΩ	R20
R76	Resistor	68kΩ	R20
R77	Resistor	10kΩ	R20
R78	Resistor	470Ω	ELR20
R79	Resistor	470Ω	ELR20
R80	Resistor	470kΩ	ELR20
R81	Resistor	2.2MΩ	R20
R82	Resistor	100kΩ	ELR20
R83	Resistor	270kΩ	R25
R84	Resistor	4.7kΩ	ELR20
R85	Resistor	220kΩ	R20
R86	Resistor	56kΩ	ELR20
R87	Resistor	560kΩ	R20
R88	Resistor	150kΩ	R20
R89	Resistor	10kΩ	R20
R90	Resistor	10kΩ	R20
R91	Resistor	6.8kΩ	ELR20
R92	Resistor	470kΩ	ELR20
R93	Resistor	27kΩ	ELR20
R94	Resistor	100kΩ	ELR20
R95	Resistor	47kΩ	R25
R96	Resistor	4.7kΩ	R20
R97	Resistor	390Ω	R20
R98	Resistor	390Ω	R20
R99	Resistor	10kΩ	ELR20
R100	Resistor	39kΩ	R20
R101	Resistor	10kΩ	R25
R102	Resistor	100Ω	R20
R103	Resistor	15kΩ	ELR20
R104	Resistor	2.2MΩ	ELR20
R105	Resistor	56kΩ	R25
R106	Resistor	10kΩ	R25
R107	Trimmer	3.3kΩ	RH0521CN3J04A
R108	Resistor	1.2kΩ	R20
R109	Trimmer	2.2kΩ	RH0521CJ3J05A
R110	Resistor	390Ω	R25
R111	Resistor	1kΩ	ELR20
R112	Resistor	180kΩ	ELR20

[MAIN UNIT]

REF. NO.	DESCRIPTION	PART NO.		
R113	Resistor	39kΩ	R25	
R114	Resistor	12kΩ	ELR20	
R115	Resistor	100Ω	R20	
C1	Ceramic	0.001μF	50V	
C2	Ceramic	0.001μF	50V	
C3	Ceramic	0.001μF	50V	
C4	Ceramic	0.001μF	50V	
C5	Ceramic	0.001μF	50V	
C6	Ceramic	0.001μF	50V	
C7	Ceramic	82pF	50V	
C8	Barrier Layer	0.1μF	16V	
C9	Tantalum	0.1μF	35V	DN
C10	Barrier Layer	0.01μF	25V	
C11	Ceramic	0.001μF	50V	
C12	Electrolytic	4.7μF	25V	MS7
C13	Electrolytic	0.1μF	50V	MS7
C14	Electrolytic	4.7μF	25V	MS7
C15	Ceramic	5pF	50V	
C16	Ceramic	0.001μF	50V	
C17	Ceramic	0.001μF	50V	
C18	Ceramic	27pF	50V	
C19	Barrier Layer	0.01μF	25V	
C20	Ceramic	39pF	50V	
C21	Ceramic	3pF	50V	
C22	Ceramic	47pF	50V	CH
C23	Ceramic	82pF	50V	CH
C24	Ceramic	0.001μF	50V	
C25	Barrier Layer	0.01μF	25V	
C26	Ceramic	0.001μF	50V	
C27	Ceramic	0.001μF	50V	
C28	Barrier Layer	0.01μF	25V	
C29	Ceramic	10pF	50V	
C30	Trimmer	12pF	CV05C1201	
C31	Ceramic	8pF	50V	
C32	Ceramic	0.5pF	50V	
C33	Ceramic	10pF	50V	
C34	Ceramic	0.35pF	50V	
C35	Ceramic	11pF	50V	
C36	Ceramic	0.5pF	50V	
C37	Ceramic	11pF	50V	
C38	Ceramic	0.001μF	50V	
C39	Ceramic	0.001μF	50V	
C40	Ceramic	0.001μF	50V	
C41	Ceramic	3pF	50V	
C42	Trimmer	6pF	CV05A0601	
C43	Cylinder	UP125	SL	3R3K
C44	Ceramic	0.001μF	50V	
C45	Ceramic	0.001μF	50V	
C46	Ceramic	0.001μF	50V	
C47	Ceramic	33pF	50V	
C48	Barrier Layer	0.01μF	25V	
C49	Ceramic	0.001μF	50V	
C50	Ceramic	100pF	50V	
C51	Ceramic	39pF	50V	
C52	Barrier Layer	0.01μF	25V	
C53	Electrolytic	0.47μF	50V	MS7
C54	Ceramic	100pF	50V	
C55	Ceramic	0.001μF	50V	
C56	Ceramic	470pF	50V	
C57	Barrier Layer	0.01μF	25V	
C58	Barrier Layer	0.01μF	25V	
C59	Barrier Layer	0.01μF	25V	
C60	Electrolytic	1μF	50V	MS7
C61	Barrier Layer	0.1μF	16V	
C62	Barrier Layer	0.01μF	25V	
C63	Electrolytic	10μF	16V	MS7
C64	Ceramic	470pF	50V	
C65	Ceramic	470pF	50V	
C66	Barrier Layer	0.1μF	16V	
C67	Ceramic	0.001μF	50V	
C68	Electrolytic	10μF	16V	MS7
C69	Electrolytic	4.7μF	25V	MS7
C70	Barrier Layer	0.1μF	16V	

[MAIN UNIT]

REF. NO.	DESCRIPTION	PART NO.		
C71	Barrier Layer	0.1μF	16V	
C72	Barrier Layer	0.1μF	16V	
C73	Ceramic	0.001μF	50V	
C74	Ceramic	470pF	50V	
C75	Ceramic	0.001μF	50V	
C76	Electrolytic	10μF	16V	MS7
C77	Barrier Layer	0.1μF	16V	
C78	Electrolytic	22μF	6.3V	MS7
C79	Ceramic	0.001μF	50V	
C80	Ceramic	470pF	50V	
C81	Ceramic	0.001μF	50V	
C82	Ceramic	220pF	50V	
C83	Electrolytic	470μF	16V	MS16
C84	Electrolytic	470μF	16V	MS16
C85	Feed Through	TF318-450E 102GMV 50V		
C86	Ceramic	120pF	50V	
C87	Electrolytic	100μF	10V	MS7
C88	Ceramic	120pF	50V	
C89	Ceramic	15pF	50V	
C91	Ceramic	6pF	50V	
C92	Ceramic	20pF	50V	
C93	Ceramic	20pF	50V	
C94	Ceramic	0.001μF	50V	
C95	Ceramic	470pF	50V	
C96	Ceramic	470pF	50V	
C97	Electrolytic	4.7μF	25V	MS7
C98	Ceramic	470pF	50V	
C99	Ceramic	470pF	50V	
C100	Cylinder	UP125 SL 330J		
C101	Ceramic	470pF	50V	
C102	Ceramic	0.001μF	50V	
C105	Ceramic	470pF	50V	
C106	Ceramic	470pF	50V	
C107	Ceramic	0.001μF	50V	
C108	Ceramic	33pF	50V	
C110	Ceramic	20pF	50V	
C111	Ceramic	470pF	50V	
C112	Ceramic	20pF	50V	
C113	Ceramic	470pF	50V	
C114	Tantalum	10μF	35V	DN
C115	Ceramic	0.001μF	50V	
C116	Ceramic	470pF	50V	
C117	Electrolytic	47μF	25V	MS9
C118	Ceramic	0.001μF	50V	
C119	Ceramic	10pF	500V	
C120	Ceramic	1.5pF	50V	RK
C121	Ceramic	33pF	50V	CH
C122	Ceramic	33pF	50V	CH
C123	Ceramic	1.5pF	50V	RK
C124	Ceramic	0.001μF	50V	
C125	Ceramic	12pF	500V	
C126	Ceramic	220pF	50V	
C127	Ceramic	0.001μF	50V	
C128	Ceramic	470pF	50V	
C129	Ceramic	0.001μF	500V	
C130	Ceramic	15pF	500V	
C131	Ceramic	22pF	500V	
C132	Ceramic	12pF	500V	
C133	Ceramic	100pF	500V	
C134	Ceramic	8pF	500V	
C135	Ceramic	15pF	500V	
C136	Ceramic	15pF	500V	
C138	Ceramic	20pF	500V	
C139	Ceramic	120pF	50V	
C140	Ceramic	470pF	50V	
C141	Tantalum	0.1μF	35V	DN
C142	Tantalum	1μF	35V	DN
C143	Tantalum	10μF	35V	DN
C144	Tantalum	10μF	35V	DN
C145	Tantalum	10μF	35V	DN
C146	Electrolytic	10μF	16V	MS7
C147	Ceramic	100pF	50V	
C148	Electrolytic	3.3μF	50V	MS7
C149	Electrolytic	3.3μF	50V	MS7
C150	Electrolytic	4.7μF	25V	MS7

[MAIN UNIT]

REF. NO.	DESCRIPTION	PART NO.		
C151	Electrolytic	100μF	10V	MS7
C152	Electrolytic	47μF	25V	MS9
C153	Ceramic	33pF	50V	CH
C154	Trimmer	20pF	CV05D2001	
C155	Ceramic	27pF	50V	CH
C156	Ceramic	0.001μF	50V	
C157	Ceramic	0.001μF	50V	
C158	Ceramic	470pF	50V	
C159	Ceramic	0.001μF	50V	
C160	Ceramic	0.001μF	50V	
C161	Ceramic	0.001μF	50V	
C162	Ceramic	0.001μF	50V	
C163	Tantalum	10μF	10V	DN
C164	Ceramic	470pF	50V	
C165	Ceramic	0.001μF	50V	
C166	Ceramic	470pF	50V	
C167	Ceramic	0.001μF	50V	
C168	Ceramic	0.001μF	50V	
C169	Ceramic	470pF	50V	
C170	Ceramic	0.001μF	50V	
C171	Ceramic	0.001μF	50V	
C172	Ceramic	0.001μF	50V	
J1	Connector	3024-15AH		
J2	Connector	IMSA-9201B-1-02-T		
EP3	Ferrite Bead	DL2-OP2.6-3-1.2H		
EP4	Ferrite Bead	DL2-OP2.6-3-1.2H		
EP5	P.C. Board	B-1496B		
W1	Jumper	JPW-02A		
W2	Jumper	JPW-02A		
W3	Jumper	JPW-02A		
W4	Jumper	JPW-02A		
W5	Jumper	JPW-02A		

[VCO UNIT]

REF. NO.	DESCRIPTION	PART NO.	
Q1	FET	2SK125	
Q2	Transistor	2SC2026	
D1	Varicap	1T25	
D2	Varicap	1SV50E	
L1	Coil	LAL02KR 1R0M	
L2	Coil	LB-201	
L3	Coil	LAL02KR 1R0M	
L4	Coil	LAL02KR 1R5M	
R1	Resistor	470Ω	ELR20
R2	Resistor	2.7kΩ	ELR20
R3	Resistor	470Ω	ELR20
R4	Resistor	47Ω	ELR20
R5	Resistor	47Ω	ELR20
R6	Resistor	100Ω	ELR20
R7	Resistor	4.7kΩ	ELR20
R8	Resistor	820Ω	ELR20
R9	Resistor	47Ω	ELR20
R10	Resistor	220Ω	ELR20

[VCO UNIT]

REF. NO.	DESCRIPTION	PART NO.		
C1	Ceramic	470pF	50V	
C2	Ceramic	100pF	50V	
C3	Ceramic	120pF	50V	
C4	Ceramic	0.5pF	50V	
C5	Ceramic	120pF	50V	
C6	Ceramic	0.5pF	50V	
C7	Ceramic	100pF	50V	
C8	Ceramic	100pF	50V	
C9	Ceramic	100pF	50V	
C10	Electrolytic	33μF	10V	MS5
EP1	P.C. Board	B-1303		

SERVICE MANUAL

UX-49A
UX-49E

This part of the service manual covers all service information of the **UX-49A/E** 430/440MHz BAND UNIT except for information common to all band units. Refer to COMMON for information related to repair, mechanical parts, disassembly and FRONT UNIT.

TABLE OF CONTENTS

SECTION 1 SPECIFICATIONS

■ GENERAL

• Frequency coverage	:	430.00MHz~440.00MHz (UX-49A Australia, Asia) (UX-49E) 440.00MHz~450.00MHz (UX-49A U.S.A.)
• Antenna impedance	:	50Ω unbalanced
• Frequency stability	:	±10ppm (−10°C~+60°C) (+14°F~+140°F)
• Power supply requirement	:	13.8V DC±15% (Negative ground)
• Current drain (at 13.8V DC)	:	Transmit (HIGH) 7.5A (LOW) 3.5A Receive 250mA
• Dimensions	:	177(W)×25(H)×191(D) mm 7.0(W)×1.0(H)×7.5(D) inches (Projections not included)
• Weight	:	1.1kg (2.4 lbs.)
• Usable temperature range	:	−10°C~+60°C (+14°F~+140°F)

■ TRANSMITTER

• RF output power	:	HIGH 25W LOW 5W
• Emission mode	:	F3 F2 (During "digital code squelch" operation with UT-28)
• Modulation system	:	Variable reactance frequency modulation
• Max. frequency deviation	:	±5.0kHz
• Spurious emission	:	More than 60dB below carrier output power

■ RECEIVER

• Receiver system	:	Double-conversion superheterodyne
• Modulation acceptance	:	F3
• Intermediate frequencies	:	1st 23.15MHz 2nd 455kHz
• Sensitivity	:	Less than 0.18μV for 12dB SINAD
• Squelch sensitivity	:	Less than 0.11μV
• Selectivity	:	12.5kHz/−6dB 25.0kHz/−60dB
• Spurious and image rejection	:	More than 60dB

※ All stated specifications are subject to change without notice or obligation.

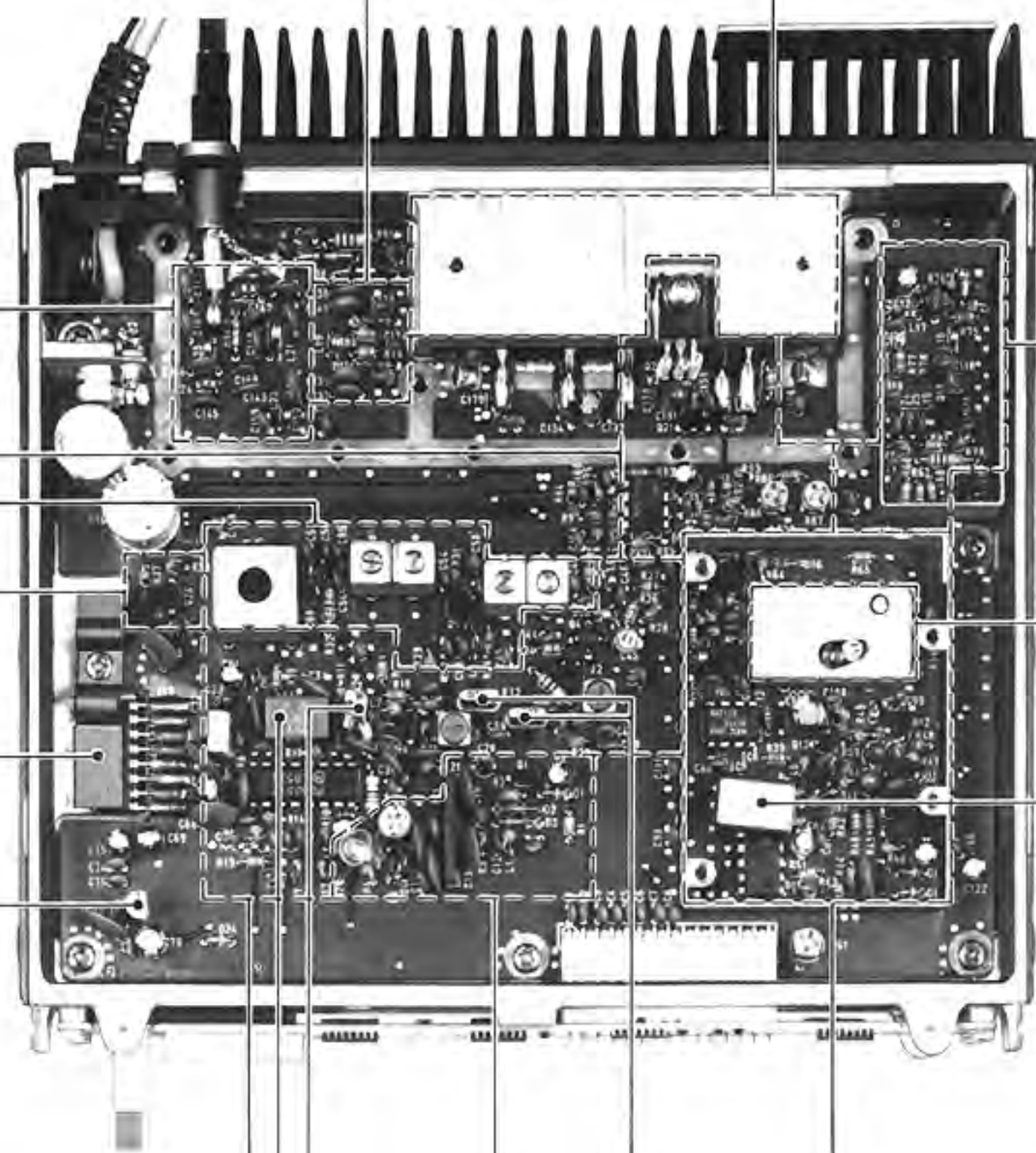
APC detector circuit
PA module
(IC8 SC-1027)
LPF
TX RF circuit
APC circuit
RX RF circuit
Power switch
VCO UNIT
+8V regulator
(IC3 MB3756)
Reference oscillator
5.12MHz (UX-49A)
6.4MHz (UX-49E)
+5V regulator
(IC4 TA78L005AP)
IF circuit
PLL circuit
Ceramic filter (FI1 CFV455E10)
Crystal filter (FI2 23M15B2)
RX 2nd local oscillator
S-meter circuit

SECTION 3 BLOCK DIAGRAM

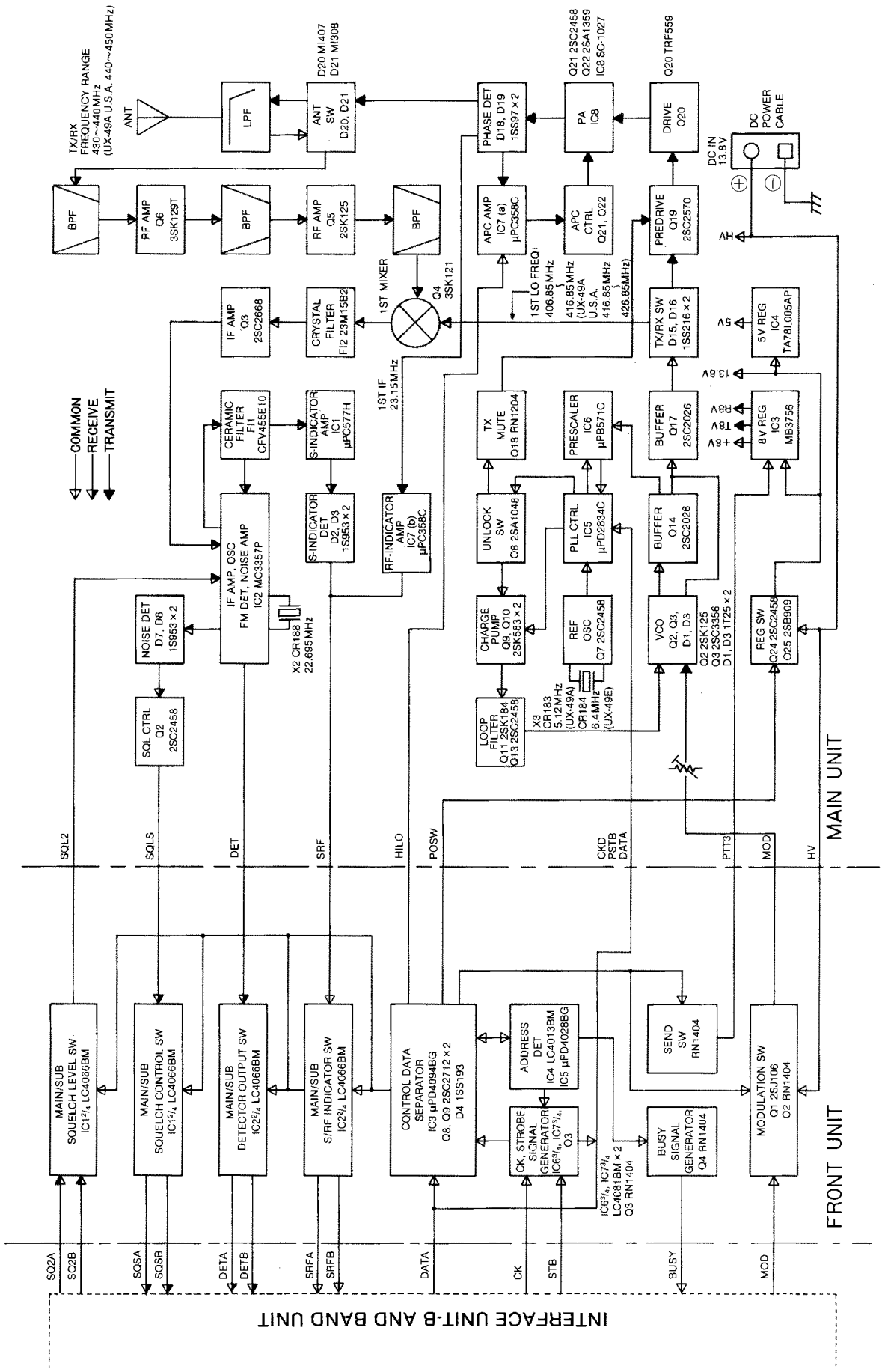

SECTION 4 CIRCUIT DESCRIPTION

4-1 CONSTRUCTION

UX-49A/E consists of the MAIN UNIT and the FRONT UNIT.

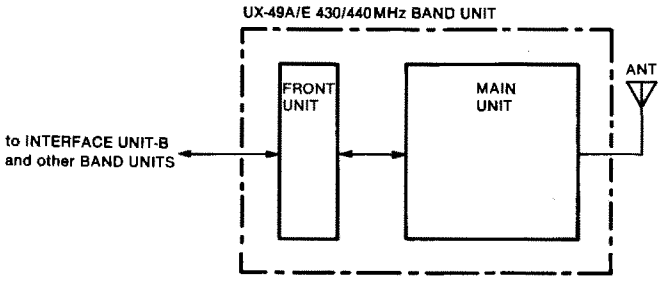

Fig. 1

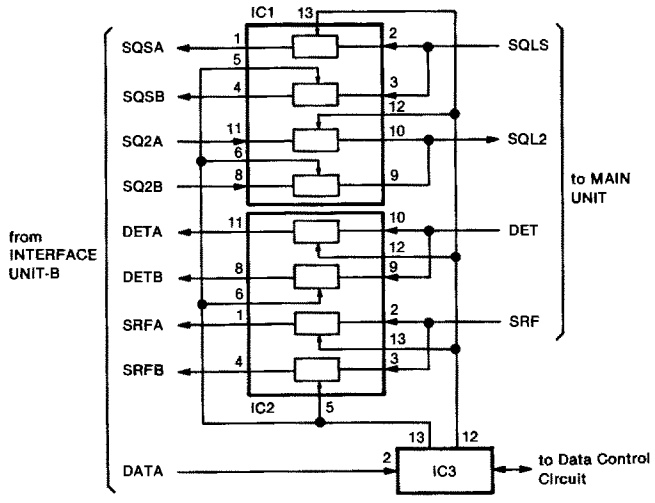

Fig. 2

4-2 FRONT UNIT

4-2-1 SIGNAL SWITCHING CIRCUIT

The serial data signals from INTERFACE UNIT-B are fed to IC3. UX-49A/E operation as a main band transceiver or a sub band receiver is determined by the commands of the serial data signals.

When pin 12 of IC3 outputs "HIGH," the analog switches (IC1, IC2) are controlled so that UX-49A/E operates as a main band transceiver.

When pin 13 of IC3 outputs "HIGH," the analog switches are controlled so that UX-49A/E operates as a sub band receiver.

4-2-2 DATA CONTROL CIRCUIT

To get the address control bits from the serial data signals, IC6 and IC7 create CK and STB signals. IC4 applies the band selection data to IC5. Then pin 6 of IC5 outputs data for 430/440MHz band selection.

For error-free operation, Q8 and Q9 operate as follows. When the power switch is turned ON, Q8 and Q9 keep the output impedance of IC3 pin 15 high until the FRONT UNIT receives the first STB signal.

4-2-3 MIC MUTE CIRCUIT

While receiving, Q1 and Q2 mute the microphone signals (MOD signal).

4-3 POWER SUPPLY CIRCUIT (MAIN UNIT)

The power supply circuit consists of Q24, Q25, IC3 and IC4. When UX-49A/E is selected with the REMOTE CONTROLLER, the power switch signal (POSW signal) is applied from the FRONT UNIT and 13.8V is applied to IC3 and IC4 via Q25.

IC3 is an 8V voltage regulator which outputs +8V and either R8V or T8V. IC3 is controlled by the PTT3 line input. IC4 outputs +5V to the PLL circuits.

POWER SUPPLY CIRCUIT

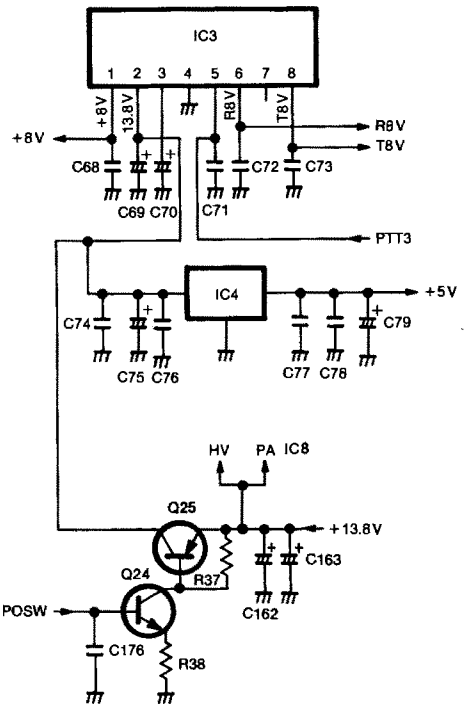

Fig. 3

4-4 RECEIVER CIRCUITS

4-4-1 RF CIRCUIT (MAIN UNIT)

Receive signals enter the MAIN UNIT from the ANTENNA CONNECTOR and pass through the low-pass filter consisting of C145~C147, L24 and L25, and the single resonator circuit consisting of L11, C62 and C63. The signals are amplified at RF amplifier Q6 and are fed to the helical type resonator. This resonator suppresses out-of-band signals. Then the signals are amplified at Q5 and are fed to the helical type resonator L7.

4-4-2 IF CIRCUIT (MAIN UNIT)

After passing through L7, signals are fed to the mixer circuit Q4, and are mixed with 1st LO signals from the PLL circuit to produce the 23.15MHz 1st IF signals. 1st IF signals from Q4 pass through the matching coil L4 and a pair of crystal filters (FI2) to suppress out-of-band signals. Then the 1st IF signals pass through the matching coil L3 and are amplified at IF amplifier Q3.

1st IF signals from Q3 are fed to the 2nd mixer circuit, section of IC2, and are mixed with 2nd LO signals for converting the 1st IF signals to 455kHz 2nd IF signals. IC2 contains the local oscillator, limiter amplifier, and active filter circuits. The 2nd LO circuit and X2 generate 22.695MHz 2nd LO signals.

The 2nd IF signals from pin 3 of IC2 pass through the ceramic filter, FI1, to suppress unwanted signals. They are then amplified at the limiter amplifier section (pin 5 of IC2) and applied to the quadrature detector section (pin 8 of IC2 and ceramic discriminator X1) to demodulate 2nd IF signals to AF signals.

AF signals output from pin 9 on IC2 are applied to the FRONT UNIT as the DET signal.

Signals output from pin 11 on IC2 are rectified by D7 and D8 for conversion to DC voltage and then applied to the FRONT UNIT as the SQLS signal via the squelch control circuit Q2.

A portion of the signals from FI1 is amplified at S-meter amplifier IC1, and is detected at the rectifiers D2 and D3. These signals are then applied to the FRONT UNIT as the SRF signal. R6 adjusts the SRF signal level.

2ND IF CIRCUIT

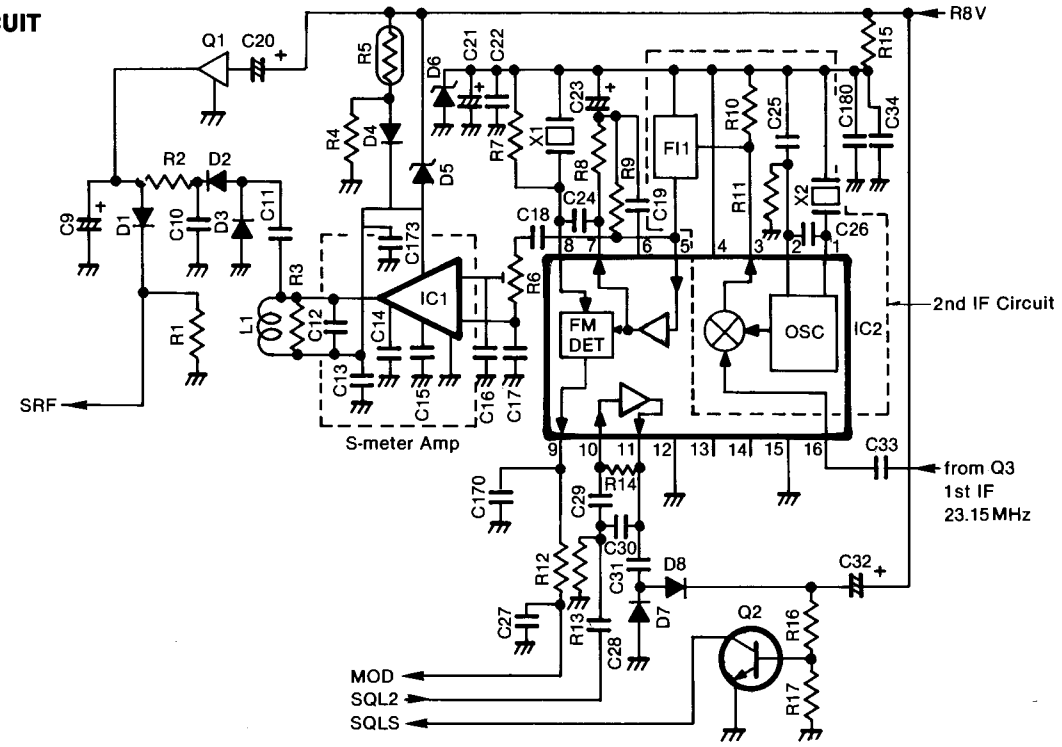

Fig. 4

4-5 PLL CIRCUITS

4-5-1 GENERAL

The PLL circuit, adopting a dual modulus prescaler system, allows the desired frequency to be generated directly from the VCO circuit. The PLL consists of a prescaler (IC6) and PLL IC (IC5). These circuits receive N-data from the CPU (REMOTE CONTROLLER) in order to determine the operating frequency.

N-data is determined by dividing the desired frequency by the reference frequency. The desired frequency is the transmit frequency in transmit mode and the 1st LO frequency in receive mode.

$$\text{N-data} = \frac{\text{Desired frequency}}{\text{Reference frequency}}$$

A reference frequency* is produced by X3, Q7 and the divider inside IC5. A signal from the VCO circuit is fed into IC6, and divided N times at IC5 and IC6.

*** Reference frequency**

VERSION	FREQUENCY
#02, #03	6.25kHz
#05, #07, #08	5.0kHz

The divided signal is applied to the phase detector in IC5. Phase detection results in lock voltages being output from pin 11.

Output from pin 11 is fed into a charge pump circuit consisting of Q9 and Q10 and is then applied to the loop filter consisting of Q11 and Q12. The signal passing through the loop filter is fed to varactor diode D1 to control the VCO output frequency.

When the PLL circuit is unlocked, IC5 pin 10 is "LOW." Q8 is turned ON, and Q18 is turned ON. The bias voltage to Q19, the transmit predriver, is cut off, deactivating it—thus preventing the transmission of unwanted signals.

PLL CIRCUIT

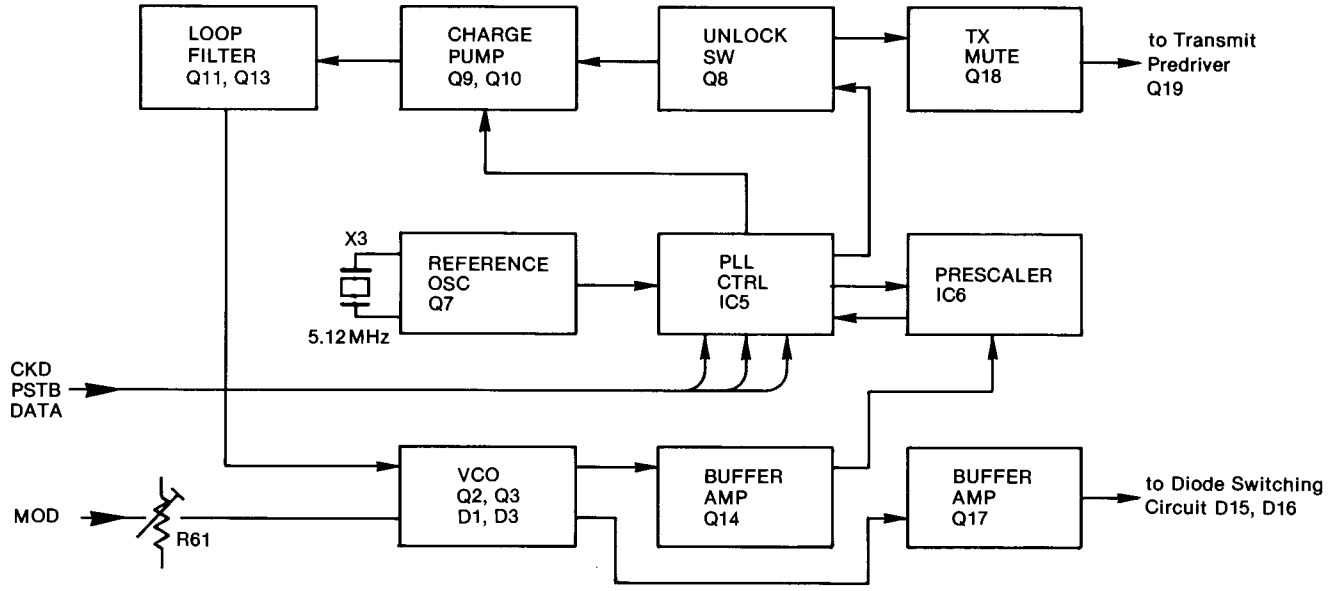

Fig. 5

4-5-2 VCO CIRCUIT (VCO UNIT)

The VCO, Q2, employs a Colpitts oscillator circuit. VCO oscillating signals are controlled by varactor diode (D1) with PLL lock voltage from the loop filter (Q11, Q12).

Modulation signals then change the capacitance of D3 to produce FM modulation.

The output from the VCO circuit is buffer amplified at Q3 and Q17.

In receive mode, the T8V voltage is "LOW." This turns Q1 and D2 ON, and series combination of C5~C7 is connected in parallel with C2, C3 and D1 for oscillation.

In transmit mode, the T8V voltage is "HIGH." This turns Q1 and D2 OFF and the VCO free-run frequency is shifted lower than the receive frequency.

VCO CIRCUIT

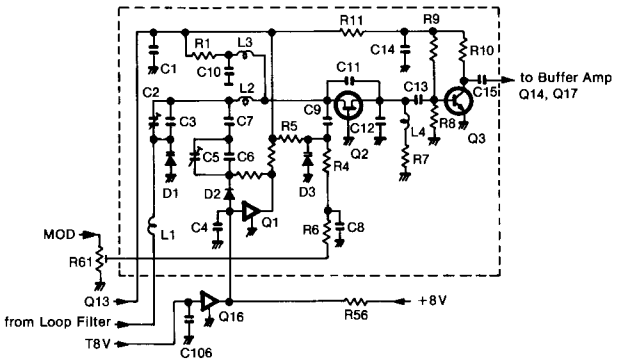

Fig. 6

4-5-3 DIODE SWITCHING CIRCUIT (MAIN UNIT)

The diode switching circuit consists of D15 and D16. While receiving, D15 is turned ON and VCO signals are applied to the 1st mixer circuit Q4 via the attenuator consisting of R26~R28. Signals are attenuated by 3dB and the circuit impedance is matched at 50Ω by this attenuator.

While transmitting, D16 is turned ON and VCO signals are applied to the transmit predriver Q19.

4-6 TRANSMITTER CIRCUITS

4-6-1 TRANSMIT PREDRIVER (MAIN UNIT)

The VCO output is amplified at Q19 and Q20 and obtains more than 25dBm, 300mW. The amplified signals are applied to the PA circuit (IC8) via C119.

4-6-2 PA CIRCUIT (MAIN UNIT)

RF signals from Q20 are applied to pin 1 of IC8. The PA circuit IC8 is a power amplifier which provides 25W output. Amplified signals at IC8 are applied to the APC detector circuit.

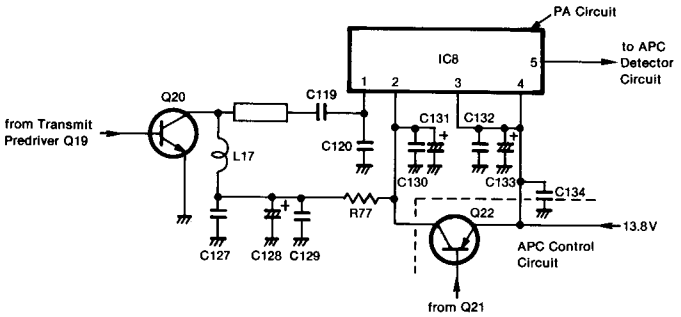

Fig. 7

4-6-3 APC DETECTOR CIRCUIT (MAIN UNIT)

The APC detector circuit consists of L19, C135~C140, C174, R79, R80, D18 and D19.

When antenna impedance is matched at 50Ω, voltage detected at D18 and D19 is at a minimum. When antenna impedance is mismatched, the detected voltage is greater than when matched.

The voltage detected at D18 and D19 is fed to pin 2 of IC7A. IC7A is a differential amplifier. The APC reference voltage is fed to pin 3.

When the antenna impedance is mismatched, the voltage of IC7A pin 2 is greater than the reference voltage. The output voltage of IC7A pin 1 decreases, decreasing Q21 and Q22 collector current.

The change in collector current decreases the output power of IC8 until the voltage of IC7A pin 2 equals as the voltage of pin 3. Thus, stable RF output power is obtained.

The output power from IC8 passes through the APC detector circuit, the antenna switching circuit (D20), the low-pass filter (L23~L25, C141~C147), and is then applied to the antenna connector.

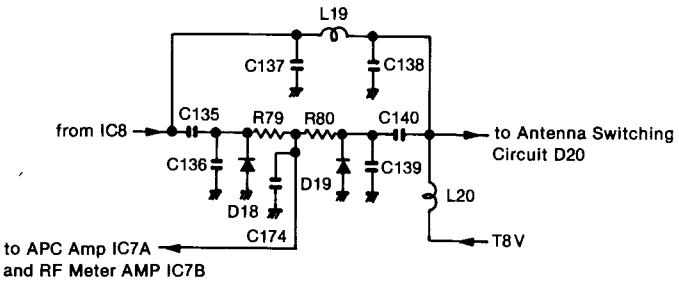

Fig. 8

4-6-4 OUTPUT POWER SELECTION CIRCUIT (MAIN UNIT)

The output power selection circuit consists of R85~R89 and Q23. This circuit shifts the RF output power by shifting the APC reference voltage.

When HIGH output power is selected, Q23 is turned OFF. RF output power is adjusted with R87.

When LOW output power is selected, Q23 is turned ON. Series resistors R88 and R89 are connected in parallel with series resistors R86 and R87. RF output power is adjusted with R89.

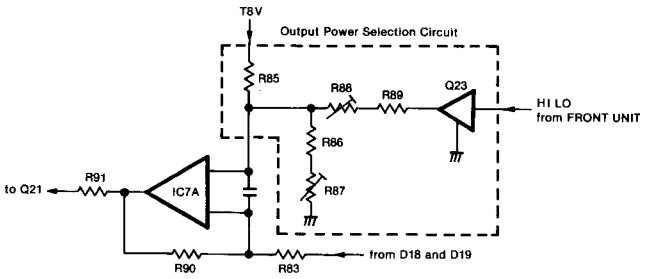

Fig. 9

4-6-5 RF METER AMP (MAIN UNIT)

The voltage detected at D18 and D19 is amplified at IC7B and then applied to the FRONT UNIT as the SRF signal.

SECTION 5 ADJUSTMENT PROCEDURES

5-1 PLL ADJUSTMENT

TEST INSTRUMENTS REQUIRED	MEASUREMENT CONNECTION LOCATION
(1) AC POWER SUPPLY • Output voltage : 13.8V DC • Current capacity : 20A or more (2) FREQUENCY COUNTER • Frequency range : 0.1~500MHz • Frequency accuracy : ±1ppm or better • Sensitivity : 100mV or better (3) DC VOLTMETER • Input impedance : 50kΩ/DC or better	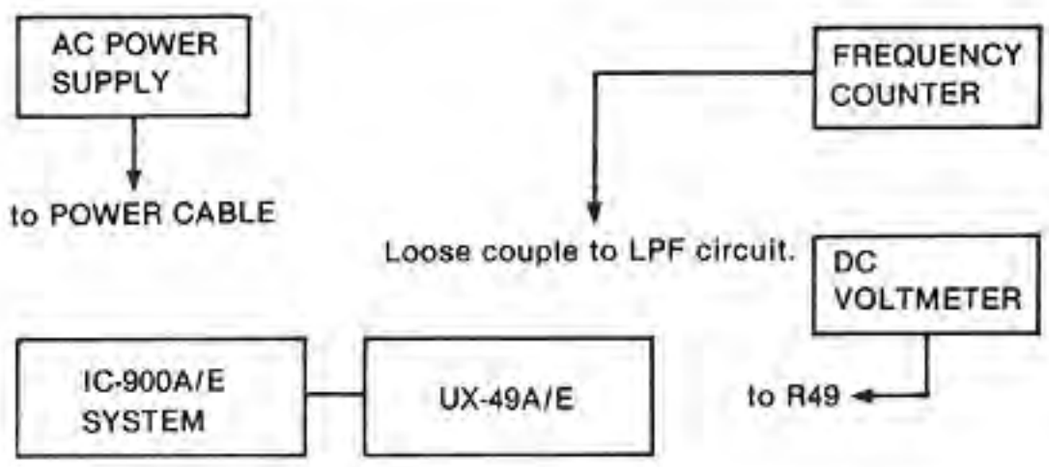

ADJUSTMENT		ADJUSTMENT CONDITIONS	MEASUREMENT		VALUE	ADJUSTMENT POINT	
			UNIT	LOCATION		UNIT	ADJUST
LOCK VOLTAGE	1	• Frequency display: 430.000MHz (UX-49A U.S.A.: 440.000MHz) • Transmitting	MAIN	Connect the DC voltmeter to R49.	2.5V	VCO	C2
	2	• Receiving			2.0V		C5
REFERENCE FREQUENCY	1	• Frequency display: 435.000MHz (UX-49A U.S.A.: 445.000MHz) • Transmitting	MAIN	Loose couple the frequency counter to the LPF circuit.	435.000MHz 445.000MHz (UX-49A U.S.A.)	MAIN	C82

MAIN AND VCO UNITS

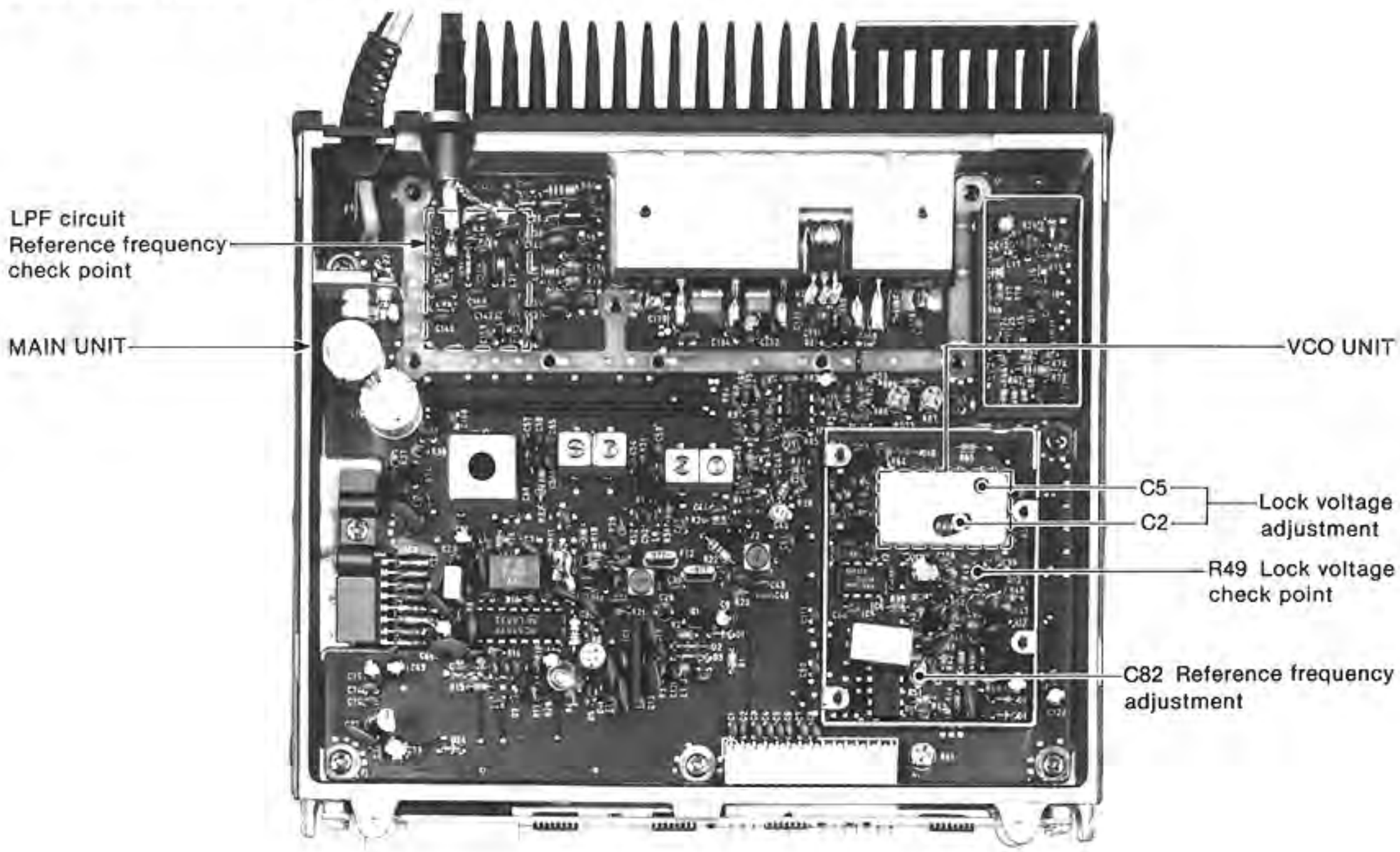

5-2 RECEIVER ADJUSTMENT

TEST INSTRUMENTS REQUIRED	MEASUREMENT CONNECTION LOCATION
(1) AC POWER SUPPLY • Output voltage : 13.8V DC • Current capacity : 20A or more (2) STANDARD SIGNAL GENERATOR (SSG) • Frequency range : 0.1~500MHz • Output level : −127~−17dBm (0.1μV~32mV) (3) DC VOLTMETER • Input impedance : 50kΩ/DC or better (4) OSCILLOSCOPE • Frequency range : DC~20MHz • Measuring range : 0.01~10V (5) SWEEP GENERATOR • Frequency range : 0.1~500MHz • Sweep bandwidth : At least 30MHz • Output impedance : 50Ω (6) DETECTOR 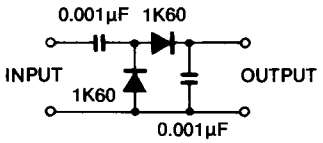	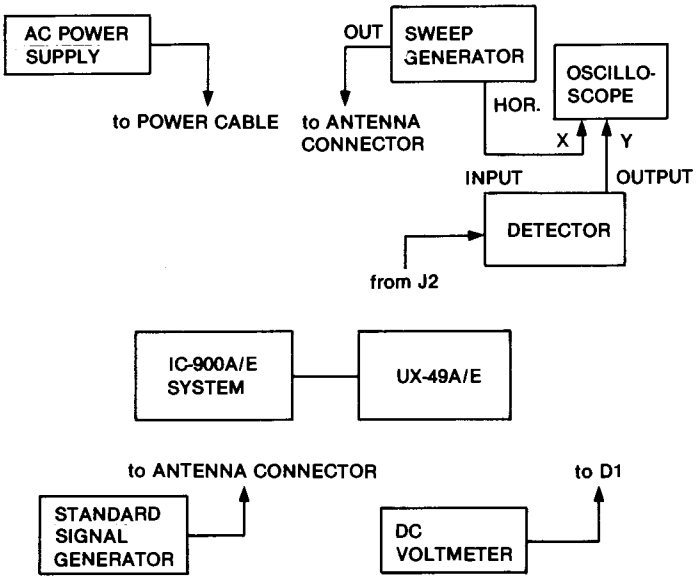

ADJUSTMENT		ADJUSTMENT CONDITIONS	MEASUREMENT		VALUE	ADJUSTMENT POINT	
			UNIT	LOCATION		UNIT	ADJUST
BANDPASS FILTER	1	• Frequency display: 435.000MHz (UX-49A U.S.A.: 445.000MHz) • Apply an RF sweep signal to the ANTENNA CONNECTOR. Sweep level: −20dBm (22mV) Center frequency: Same as the frequency display. Sweep band width: 20MHz • Ground R49 with the jumper wire.	MAIN	Connect the oscilloscope to J2 pin 1 via the detector.	Adjust as follows: 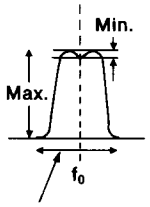 Symmetrical waves f_0=435MHz (U.S.A.: 445MHz)	MAIN	C63, L9 L7
		NOTE: Remove the jumper wire from R49 after adjustment.					
SENSI-TIVITY	1	• Frequency display: 435.000MHz (UX-49A U.S.A.: 445.000MHz) • Receiving • Apply an RF signal to the ANTENNA CONNECTOR. Level: −107dBm (1μV) (Approx.) Dev. : ±3.5kHz Mod. : 1kHz • R6: Max. CCW.*	MAIN	Connect the DC voltmeter to D1 cathode.	Maximum	MAIN	C45, L3 L4
		NOTE: Adjust the signal generator output level for each time showing the DC voltmeter at 30% of the lowest range full scale.					

*CCW: Counterclockwise

RECEIVER ADJUSTMENT (CONTINUED)

ADJUSTMENT		ADJUSTMENT CONDITIONS	MEASUREMENT		VALUE	ADJUSTMENT POINT	
			UNIT	LOCATION		UNIT	ADJUST
S-METER	1	• Frequency display: 435.000 MHz (UX-49A U.S.A.: 445.000 MHz) • Receiving • Apply an RF signal to the ANTENNA CONNECTOR. Level: −107 dBm (1μV) Dev. : ±3.5 kHz Mod. : 1 kHz	FUNC-TION DISPLAY	S/RF INDICATOR	S3 (2 dots)	MAIN	R6

MAIN UNIT

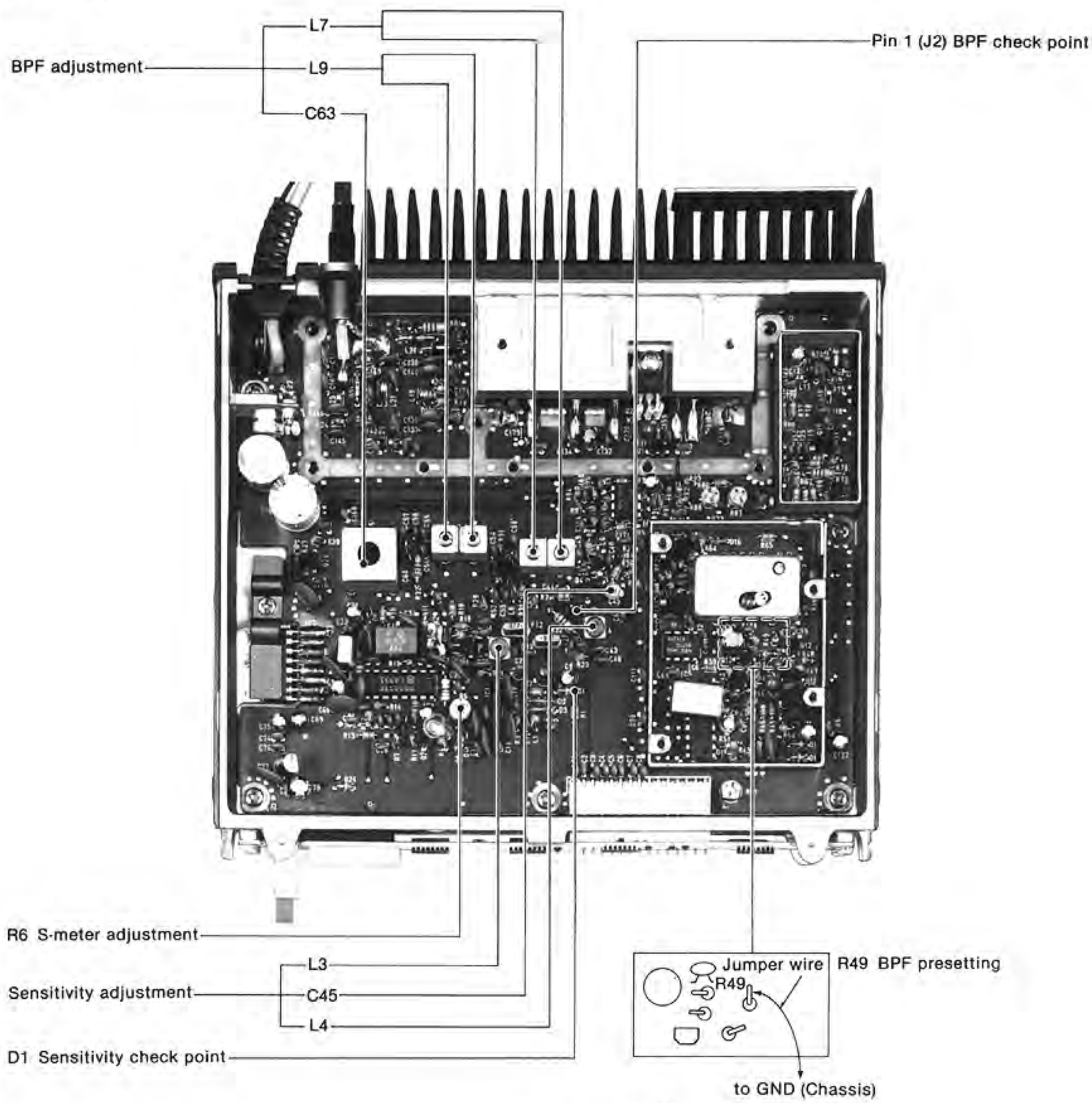

5-3 TRANSMITTER ADJUSTMENT

TEST INSTRUMENTS REQUIRED	MEASUREMENT CONNECTION LOCATION
(1) AC POWER SUPPLY • Output voltage : 13.8V DC • Current capacity : 20A or more (2) RF POWER METER (TERMINATED TYPE) • Measuring range : 1~40W • Frequency range : 400~500MHz • Impedance : 50Ω • SWR : Less than 1.2 : 1 (3) AF GENERATOR (AG) • Frequency range : 200~2000Hz • Output level : 0~100mV (4) AC MILLI-VOLTMETER • Measuring range : 2~100mV (5) FM DEVIATION METER • Frequency minimum : 500MHz • Measuring range : 0~±5kHz	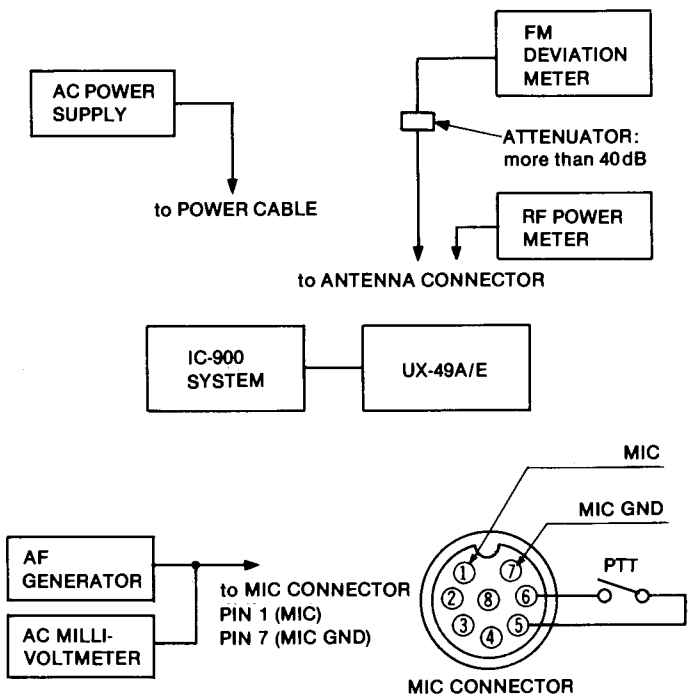

ADJUSTMENT		ADJUSTMENT CONDITIONS	MEASUREMENT		VALUE	ADJUSTMENT POINT	
			UNIT	LOCATION		UNIT	ADJUST
OUTPUT POWER	1	• Frequency display: 435.000MHz (UX-49A U.S.A.: 445.000MHz) • Transmitting • HIGH/LOW POWER SWITCH: HIGH	Rear panel	Connect the RF power meter to the ANTENNA CONNECTOR.	25W	MAIN	R87
	2	• HIGH/LOW POWER SWITCH: LOW			5W		R89
DEVIATION	1	• Frequency display: 435.000MHz (UX-49A U.S.A.: 445.000MHz) • Transmitting • Apply an AF signal to the MIC CONNECTOR pin 1 (pin 7 is ground). Level: 20mV/1kHz (UX-49A U.S.A. 65mV/1kHz) • Set the FM deviation meter. HPF: 50Hz LPF : 20kHz • TONE SWITCH: OFF	Rear panel	Connect the FM deviation meter to the ANTENNA CONNECTOR via the attenuator.	±4.8kHz	MAIN	R61

MAIN UNIT

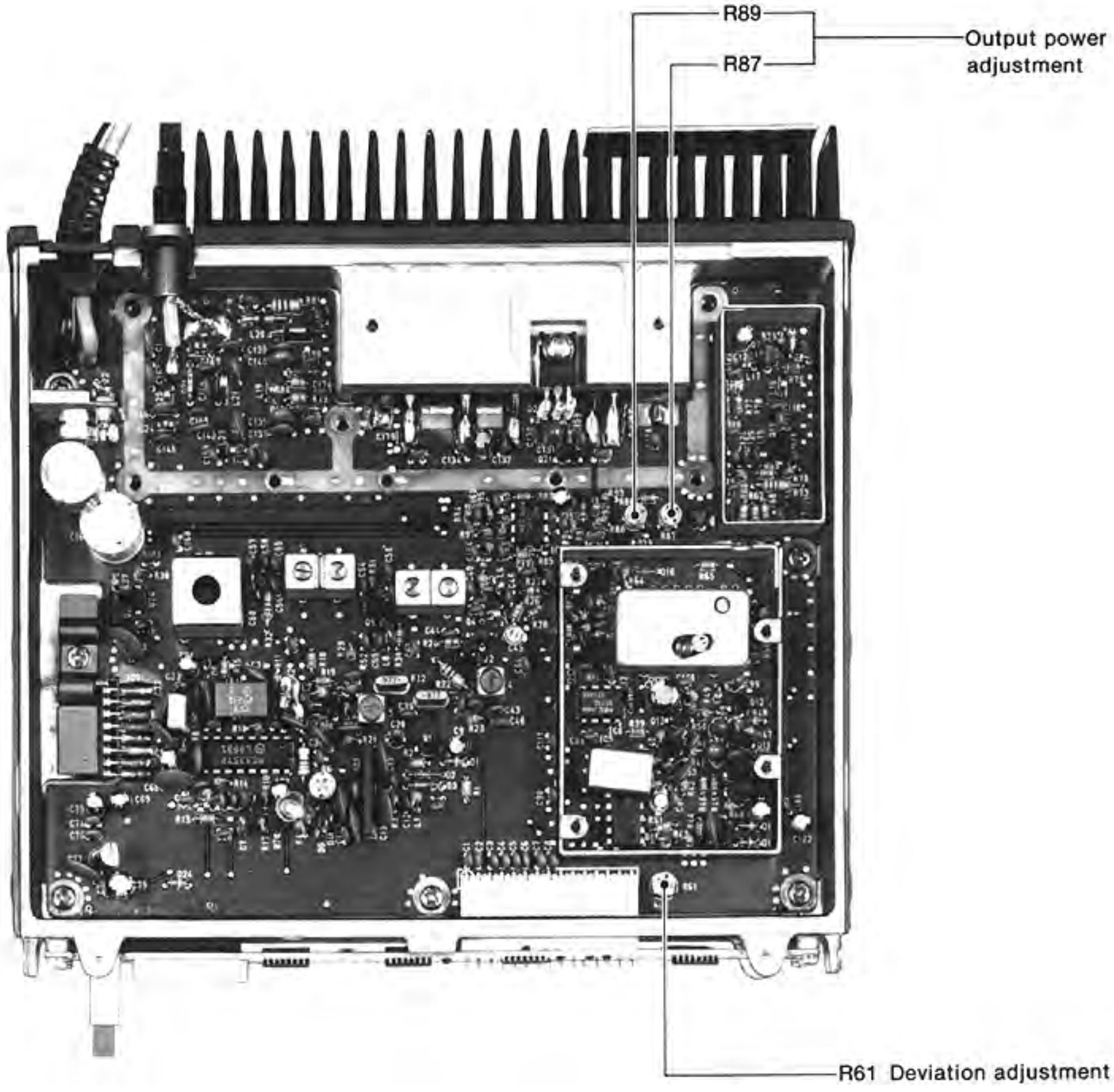

SECTION 6 BOARD LAYOUTS

μPC577H IC1
(FM IF AMPLIFIER)

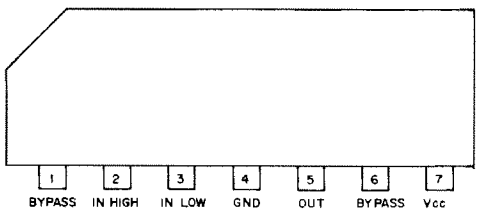

MC3357P IC2
(LOW POWER FM IF)

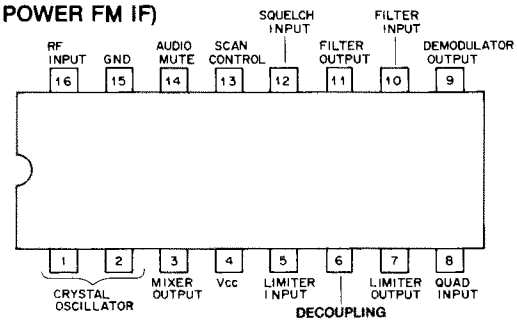

MB3756 IC3
(VOLTAGE REGULATOR)

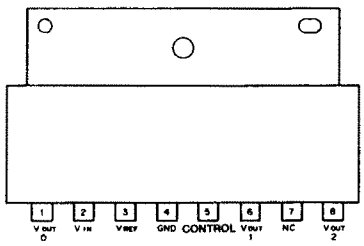

TA78L005AP IC4
(3-TERMINAL 5V REGULATOR)

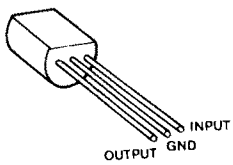

μPD2834C IC5
(PLL FREQUENCY SYNTHESIZER)

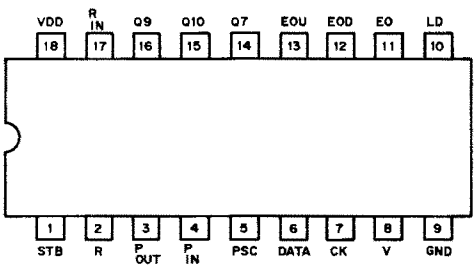

μPB571C IC6
(LOW POWER PRESCALER)

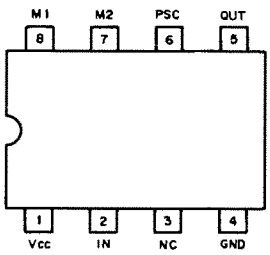

μPC358C IC7
(DUAL DRIVER)

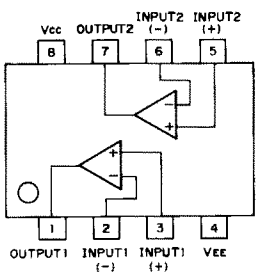

SC-1027 IC8
(POWER MODULE)

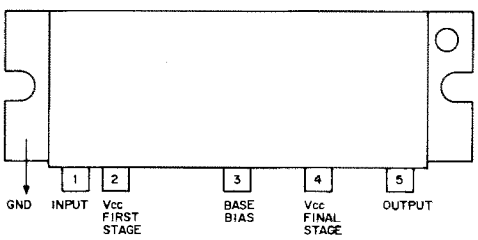

• MAIN UNIT

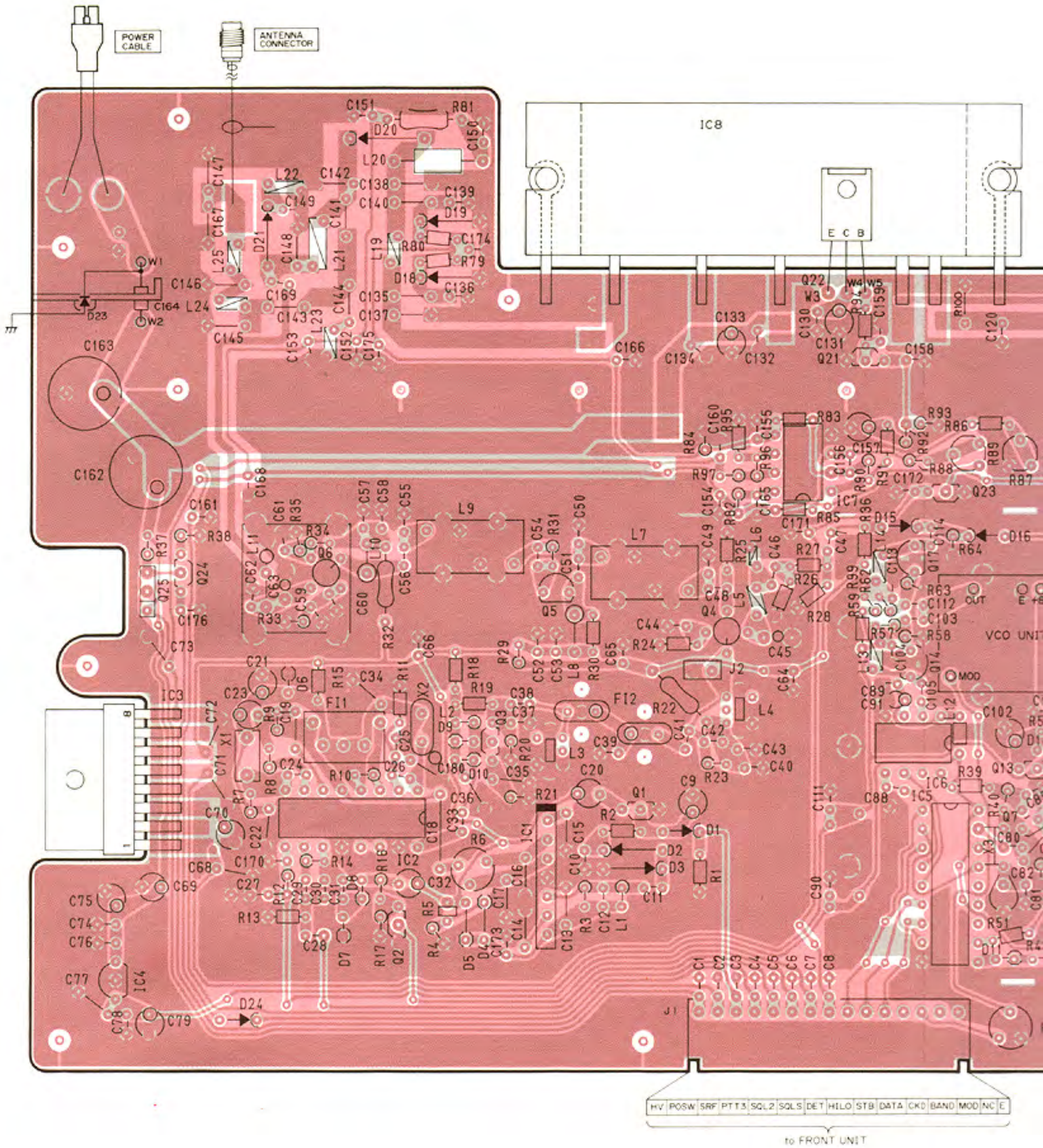

• VCO UNIT

COMPONENT SIDE

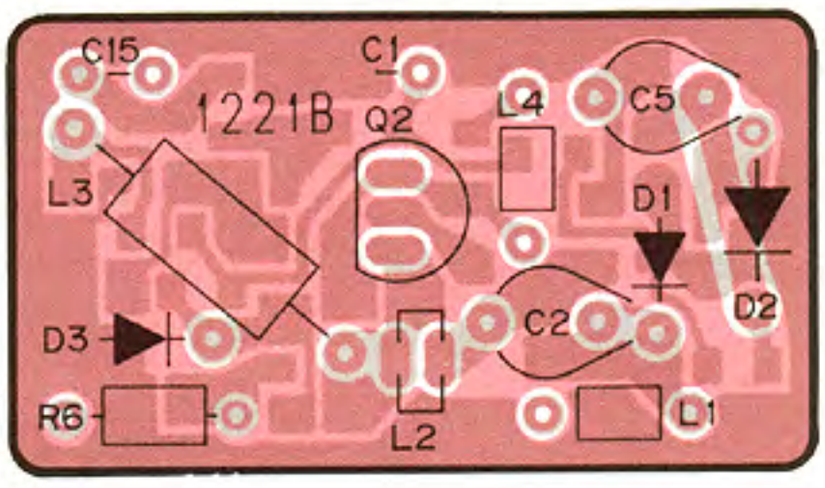

FOIL SIDE

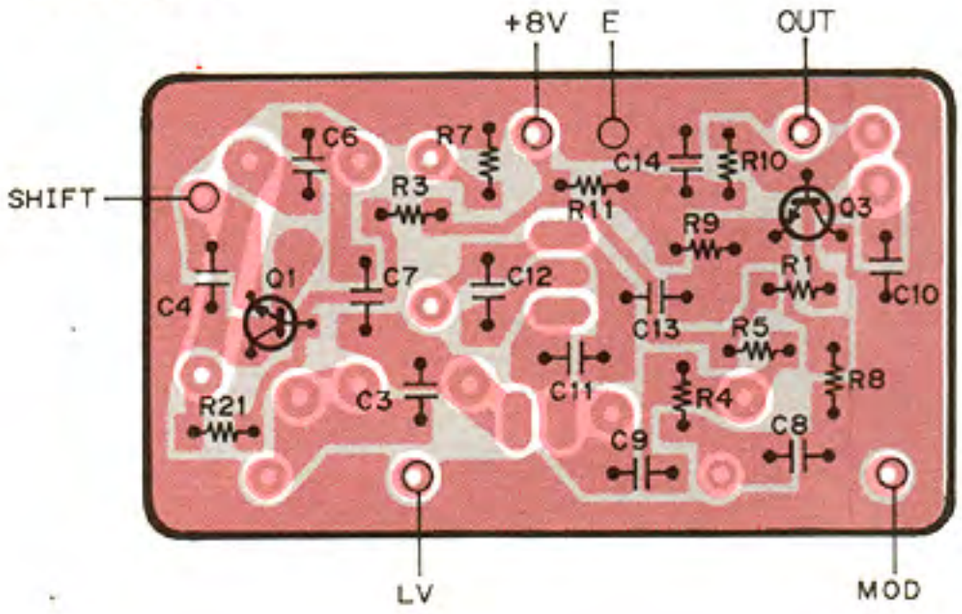

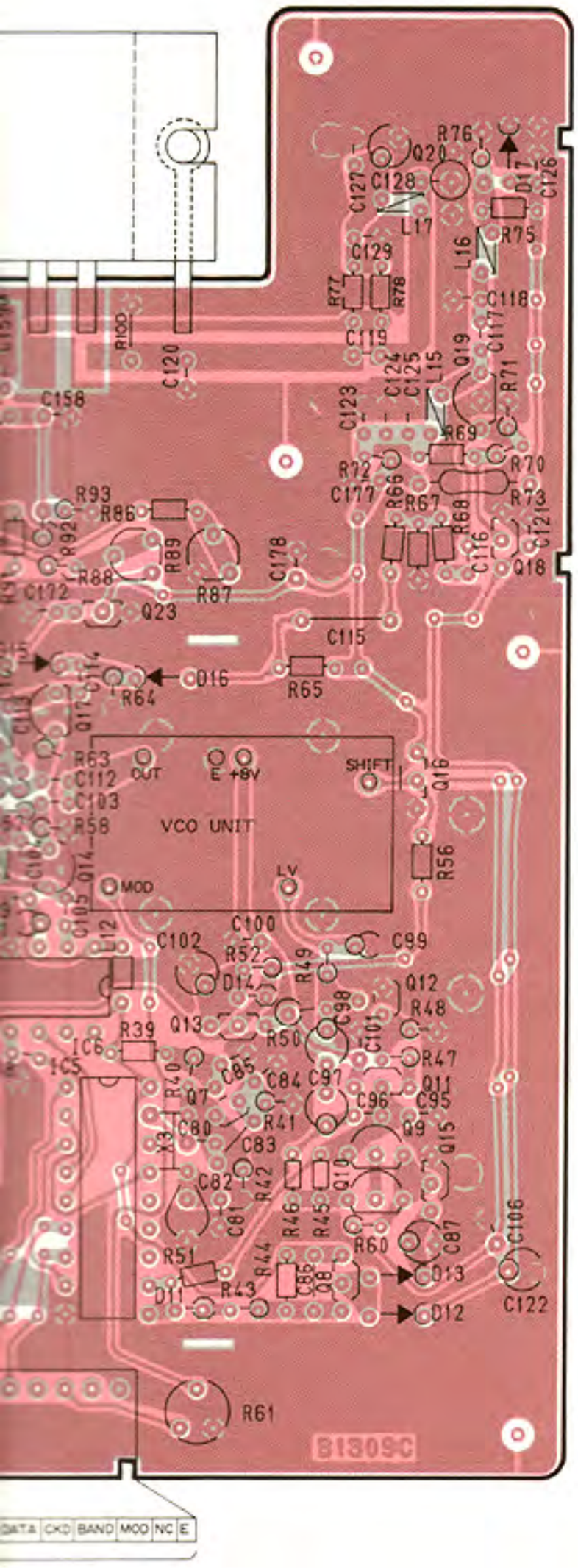

RN1204
Q1, Q15,
Q18, Q23

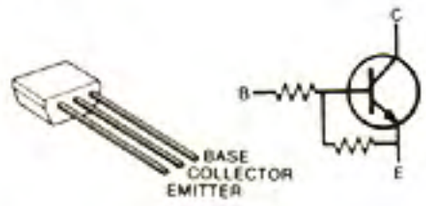

2SC2458 GR
Q2, Q7, Q13,
Q21, Q24

2SC2458 LG
Q12

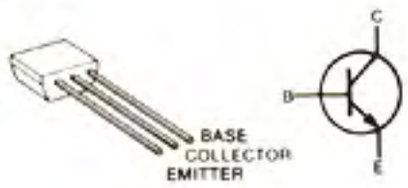

2SC2668 O
Q3

3SK121 Y
Q4

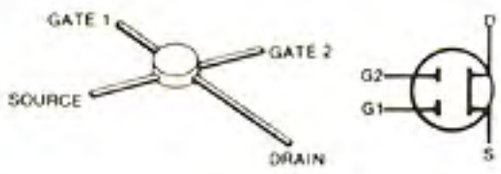

2SK125
Q5

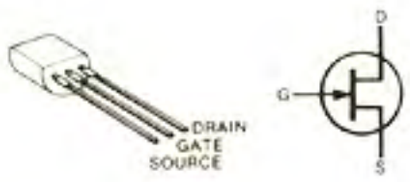

3SK129 T
Q6

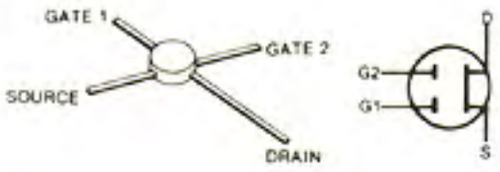

2SA1048 Y
Q8

2SK583
Q9, Q10

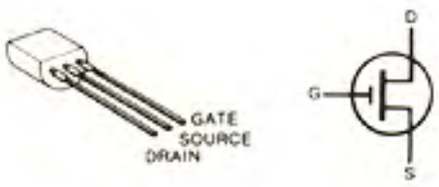

2SK184 Y
Q11

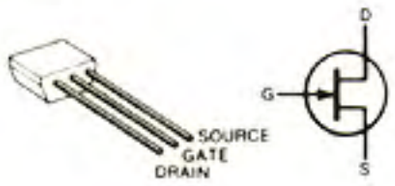

2SC2026
Q14, Q17

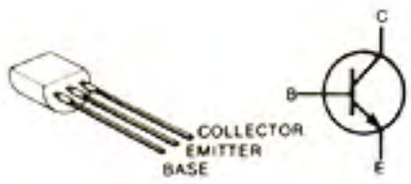

RN1202
Q16

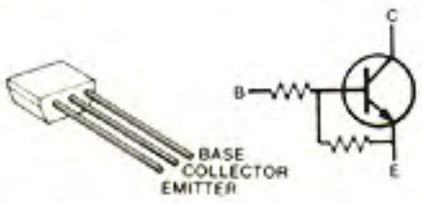

2SC2570 A
Q19

TRF559
Q20

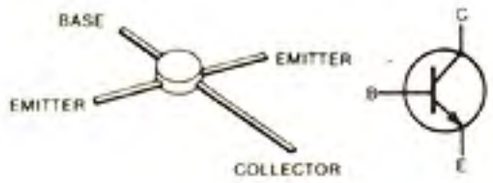

2SA1359
Q22

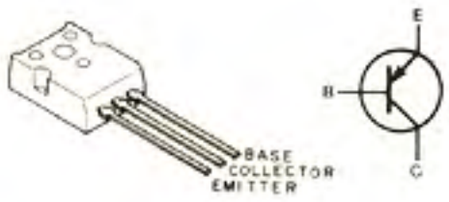

2SB909M
Q25

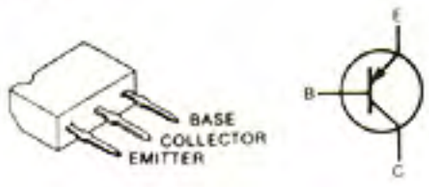

DTC124
Q1

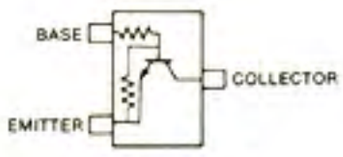

Symbol: R25

2SC3356
Q3

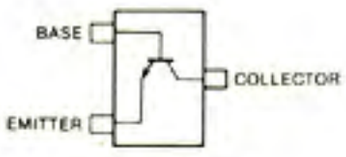

Symbol: R22

2SK125
Q2

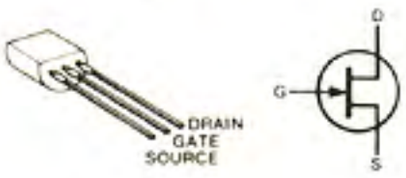

SECTION 7 VOLTAGE DIAGRAM

• **UX-49A/E**

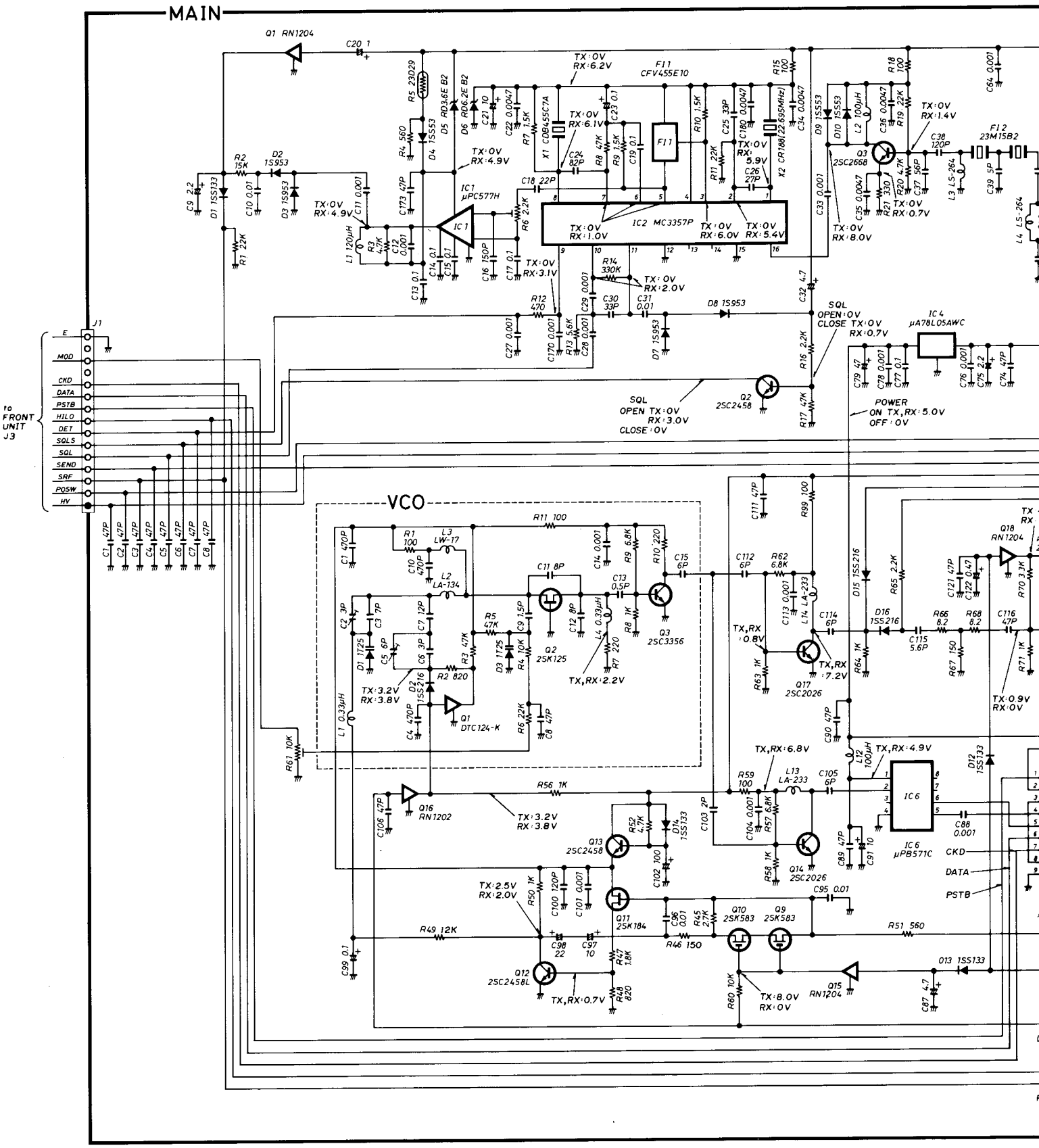

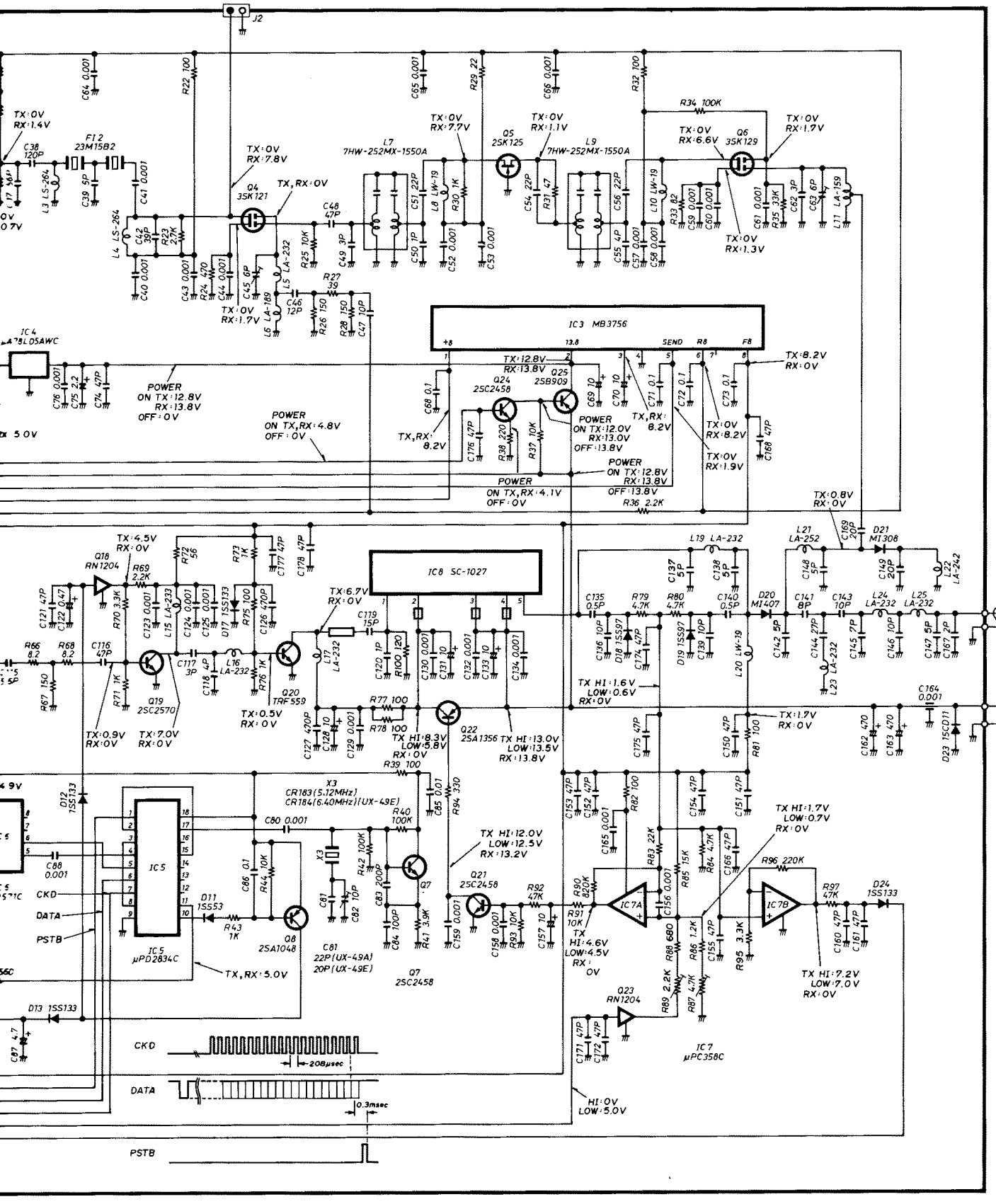
J2
IC3 MB3756
IC8 SC-1027
IC5 μPD2834C
IC7A
IC7B
IC7 μPC358C
Q4 3SK121
Q5 2SK125
Q6 3SK129
Q24 2SC2458
Q25 2SB909
Q18 RN1204
Q19 2SC2570
Q20 TRF559
Q22 2SA1356
Q21 2SC2458
Q7 2SC2458
Q8 2SA1048
Q23 RN1204
L7 7HW-252MX-1550A
L9 7HW-252MX-1550A
X3 CR183(5.12MHz) CR184(6.40MHz)(UX-49E)
C81 22P(UX-49A) 20P(UX-49E)
ANT.
EP2 OPC-123
DC IN 13.8V
EP3 OPC-169
to INTERFACE UNIT-8
CKD
DATA
PSTB
CKD
DATA
PSTB
208μsec
0.3msec
POWER ON TX:12.8V RX:13.8V OFF:0V
POWER ON TX,RX:4.8V OFF:0V
POWER ON TX:12.0V RX:13.0V OFF:13.8V
POWER ON TX:12.8V RX:13.8V OFF:13.8V
POWER ON TX,RX:4.1V OFF:0V
TX,RX:5.0V
HI:0V LOW:5.0V

SECTION 8 PARTS LIST

[MAIN UNIT]

REF. NO.	DESCRIPTION	PART NO.
IC1	IC	μPC577H
IC2	IC	MC3357P
IC3	IC	MB3756
IC4	IC	TA78L005AP
IC5	IC	μPD2834C
IC6	IC	μPB571C
IC7	IC	μPC358C
IC8	IC	SC-1027
Q1	Transistor	RN1204
Q2	Transistor	2SC2458 GR
Q3	Transistor	2SC2668 O
Q4	FET	3SK121 Y
Q5	FET	2SK125
Q6	FET	3SK129 T
Q7	Transistor	2SC2458 GR
Q8	Transistor	2SA1048 Y
Q9	FET	2SK583
Q10	FET	2SK583
Q11	FET	2SK184 Y
Q12	Transistor	2SC2458L G
Q13	Transistor	2SC2458 GR
Q14	Transistor	2SC2026
Q15	Transistor	RN1204
Q16	Transistor	RN1202
Q17	Transistor	2SC2026
Q18	Transistor	RN1204
Q19	Transistor	2SC2570 A
Q20	Transistor	TRF559
Q21	Transistor	2SC2458 GR
Q22	Transistor	2SA1359
Q23	Transistor	RN1204
Q24	Transistor	2SC2458 GR
Q25	Transistor	2SB909 M
D1	Diode	1SS133
D2	Diode	1S953
D3	Diode	1S953
D4	Diode	1SS53
D5	Diode	RD3.6E B2
D6	Diode	RD6.2E B2
D7	Diode	1S953
D8	Diode	1S953
D9	Diode	1SS53
D10	Diode	1SS53
D11	Diode	1SS53
D12	Diode	1SS133
D13	Diode	1SS133
D14	Diode	1SS133
D15	Diode	1SS216
D16	Diode	1SS216
D17	Diode	1SS133
D18	Diode	1SS97
D19	Diode	1SS97
D20	Diode	MI407
D21	Diode	MI308
D23	Diode	15CD11
D24	Diode	1SS133
FI1	Ceramic	CFV455E10
FI2	Crystal	23M15B2

[MAIN UNIT]

REF. NO.	DESCRIPTION	PART NO.	
X1	Discriminator	CDB455C7A	
X2	Crystal	CR188 (22.695MHz)	
X3	Crystal (#05, #07, #08)	CR183 (5.12MHz)	
X3	Crystal (#02, #03)	CR184 (6.4MHz)	
L1	Coil	LAL03NA 121K	
L2	Coil	LAL03NA 101K	
L3	Coil	LS-264	
L4	Coil	LS-264	
L5	Coil	LA-232	
L6	Coil	LA-189	
L7	Coil	7HW-252MX-1550A	
L8	Coil	LW-19	
L9	Coil	7HW-252MX-1550A	
L10	Coil	LW-19	
L11	Coil	LA-159	
L12	Coil	LAL02KR 101K	
L13	Coil	LA-233	
L14	Coil	LA-233	
L15	Coil	LA-233	
L16	Coil	LA-232	
L17	Coil	LA-232	
L19	Coil	LA-232	
L20	Coil	LW-19	
L21	Coil	LA-252	
L22	Coil	LA-242	
L23	Coil	LA-232	
L24	Coil	LA-232	
L25	Coil	LA-232	
R1	Resistor	22kΩ	R20
R2	Resistor	15kΩ	R20
R3	Resistor	4.7kΩ	ELR20
R4	Resistor	560Ω	ELR20
R5	Thermistor	23D29	
R6	Trimmer	2.2kΩ	RH0651CJ3J0CA
R7	Resistor	1.5kΩ	ELR20
R8	Resistor	47kΩ	ELR20
R9	Resistor	1.5kΩ	ELR20
R10	Resistor	1.5kΩ	ELR20
R11	Resistor	22kΩ	R20
R12	Resistor	470Ω	ELR20
R13	Resistor	5.6kΩ	R20
R14	Resistor	330kΩ	ELR20
R15	Resistor	100Ω	R20
R16	Resistor	2.2kΩ	ELR20
R17	Resistor	47kΩ	ELR20
R18	Resistor	100Ω	R20
R19	Resistor	22kΩ	R20
R20	Resistor	4.7kΩ	ELR20
R21	Resistor	330Ω	ELR20
R22	Resistor	100Ω	R25
R23	Resistor	2.7kΩ	ELR20
R24	Resistor	470Ω	R20
R25	Resistor	10kΩ	R20
R26	Resistor	150Ω	R20
R27	Resistor	39Ω	R20
R28	Resistor	150Ω	R20
R29	Resistor	22Ω	ELR20
R30	Resistor	1kΩ	R20
R31	Resistor	47Ω	ELR20
R32	Resistor	100Ω	R25
R33	Resistor	82Ω	ELR20
R34	Resistor	100kΩ	ELR20
R35	Resistor	33kΩ	ELR20

[MAIN UNIT]

REF. NO.	DESCRIPTION	PART NO.		
R36	Resistor	2.2kΩ	R20	
R37	Resistor	10kΩ	ELR20	
R38	Resistor	220Ω	ELR20	
R39	Resistor	100Ω	R20	
R40	Resistor	100kΩ	ELR20	
R41	Resistor	3.9kΩ	ELR20	
R42	Resistor	100kΩ	ELR20	
R43	Resistor	1kΩ	ELR20	
R44	Resistor	10kΩ	R20	
R45	Resistor	2.7kΩ	R20	
R46	Resistor	150Ω	R20	
R47	Resistor	1.8kΩ	ELR20	
R48	Resistor	820Ω	ELR20	
R49	Resistor	12kΩ	R20	
R50	Resistor	1kΩ	ELR20	
R51	Resistor	560Ω	R20	
R52	Resistor	4.7kΩ	ELR20	
R56	Resistor	1kΩ	R20	
R57	Resistor	6.8kΩ	ELR20	
R58	Resistor	1kΩ	ELR20	
R59	Resistor	100Ω	R20	
R60	Resistor	10kΩ	ELR20	
R61	Trimmer	10kΩ	RH0521C14J08A	
R62	Resistor	6.8kΩ	ELR20	
R63	Resistor	1kΩ	ELR20	
R64	Resistor	1kΩ	ELR20	
R65	Resistor	2.2kΩ	R20	
R66	Resistor	8.2Ω	R20	
R67	Resistor	150Ω	R20	
R68	Resistor	8.2Ω	R20	
R69	Resistor	2.2kΩ	R20	
R70	Resistor	3.3kΩ	ELR20	
R71	Resistor	1kΩ	ELR20	
R72	Resistor	56Ω	ELR20	
R73	Resistor	1kΩ	R25	
R75	Resistor	100Ω	R20	
R76	Resistor	1kΩ	ELR20	
R77	Resistor	100Ω	R20	
R78	Resistor	100Ω	R20	
R79	Resistor	4.7kΩ	R20	
R80	Resistor	4.7kΩ	R20	
R81	Resistor	100Ω	R50	
R82	Resistor	100Ω	ELR20	
R83	Resistor	22kΩ	R20	
R84	Resistor	4.7kΩ	ELR20	
R85	Resistor	15kΩ	R20	
R86	Resistor	1.2kΩ	R20	
R87	Trimmer	4.7kΩ	RH0521CS3J04A	
R88	Resistor	680Ω	ELR20	
R89	Trimmer	2.2kΩ	RH0521CJ3J05A	
R90	Resistor	820kΩ	ELR20	
R91	Resistor	10kΩ	R20	
R92	Resistor	47kΩ	ELR20	
R93	Resistor	10kΩ	ELR20	
R94	Resistor	330Ω	R20	
R95	Resistor	3.3kΩ	R20	
R96	Resistor	220kΩ	ELR20	
R97	Resistor	47kΩ	ELR20	
R99	Resistor	100Ω	ELR20	
R100	Resistor	120Ω	R20	
C1	Ceramic	47pF	50V	
C2	Ceramic	47pF	50V	
C3	Ceramic	47pF	50V	
C4	Ceramic	47pF	50V	
C5	Ceramic	47pF	50V	
C6	Ceramic	47pF	50V	
C7	Ceramic	47pF	50V	
C8	Ceramic	47pF	50V	
C9	Electrolytic	2.2μF	50V	MS7
C10	Barrier Layer	0.01μF	25V	
C11	Ceramic	0.001μF	50V	
C12	Ceramic	0.001μF	50V	

[MAIN UNIT]

REF. NO.	DESCRIPTION	PART NO.		
C13	Barrier Layer	0.1μF	16V	
C14	Barrier Layer	0.1μF	16V	
C15	Barrier Layer	0.1μF	16V	
C16	Ceramic	150pF	50V	
C17	Barrier Layer	0.1μF	16V	
C18	Cylinder	UP125SL220K		
C19	Barrier Layer	0.1μF	16V	
C20	Tantalum	1μF	35V	DN
C21	Electrolytic	10μF	16V	MS7
C22	Ceramic	0.0047μF	50V	
C23	Tantalum	0.1μF	35V	DN
C24	Ceramic	82pF	50V	
C25	Ceramic	33pF	50V	
C26	Ceramic	27pF	50V	
C27	Ceramic	0.001μF	50V	
C28	Ceramic	0.001μF	50V	
C29	Ceramic	0.001μF	50V	
C30	Ceramic	33pF	50V	
C31	Barrier Layer	0.01μF	25V	
C32	Electrolytic	4.7μF	25V	MS7
C33	Ceramic	0.001μF	50V	
C34	Ceramic	0.0047μF	50V	
C35	Ceramic	0.0047μF	50V	
C36	Ceramic	0.0047μF	50V	
C37	Ceramic	56pF	50V	
C38	Ceramic	120pF	50V	
C39	Ceramic	5pF	50V	
C40	Ceramic	0.001μF	50V	
C41	Ceramic	0.001μF	50V	
C42	Ceramic	39pF	50V	
C43	Ceramic	0.001μF	50V	
C44	Ceramic	0.001μF	50V	
C45	Trimmer	6pF	ECR-GA006A30	
C46	Ceramic	12pF	50V	
C47	Ceramic	10pF	50V	
C48	Ceramic	47pF	50V	
C49	Ceramic	3pF	50V	
C50	Ceramic	1pF	50V	
C51	Ceramic	22pF	50V	
C52	Ceramic	0.001μF	50V	
C53	Ceramic	0.001μF	50V	
C54	Ceramic	22pF	50V	
C55	Ceramic	4pF	50V	
C56	Ceramic	22pF	50V	
C57	Ceramic	0.001μF	50V	
C58	Ceramic	0.001μF	50V	
C59	Ceramic	0.001μF	50V	
C60	Ceramic	0.001μF	50V	
C61	Ceramic	0.001μF	50V	
C62	Ceramic	3pF	50V	
C63	Trimmer	6pF	ECR-GA006A30	
C64	Ceramic	0.001μF	50V	
C65	Ceramic	0.001μF	50V	
C66	Ceramic	0.001μF	50V	
C68	Barrier Layer	0.1μF	16V	
C69	Electrolytic	10μF	16V	MS7
C70	Electrolytic	10μF	16V	MS7
C71	Barrier Layer	0.1μF	16V	
C72	Barrier Layer	0.1μF	16V	
C73	Barrier Layer	0.1μF	16V	
C74	Ceramic	47pF	50V	
C75	Electrolytic	2.2μF	50V	MS7
C76	Ceramic	0.001μF	50V	
C77	Barrier Layer	0.1μF	16V	
C78	Ceramic	0.001μF	50V	
C79	Electrolytic	47μF	6.3V	MS7
C80	Ceramic	0.001μF	50V	
C81	Ceramic (#05, #07, #08)	22pF	50V	
C81	Ceramic (#02, #03)	20pF	50V	
C82	Trimmer	10pF	CV38D1001	
C83	Ceramic	200pF	50V	
C84	Ceramic	100pF	50V	
C85	Barrier Layer	0.01μF	25V	

[MAIN UNIT]

REF. NO.	DESCRIPTION	PART NO.		
C86	Barrier Layer	0.1μF	16V	
C87	Electrolytic	4.7μF	25V	MS7
C88	Ceramic	0.001μF	50V	
C89	Ceramic	47pF	50V	
C90	Ceramic	47pF	50V	
C91	Tantalum	10μF	16V	DN
C95	Barrier Layer	0.01μF	25V	
C96	Barrier Layer	0.01μF	25V	
C97	Tantalum	22μF	10V	DN
C98	Tantalum	22μF	10V	DN
C99	Tantalum	0.1μF	35V	DN
C100	Ceramic	120pF	50V	
C101	Ceramic	0.001μF	50V	
C102	Electrolytic	100μF	10V	MS7
C103	Ceramic	2pF	50V	
C104	Ceramic	0.001μF	50V	
C105	Ceramic	6pF	50V	
C106	Ceramic	47pF	50V	
C111	Ceramic	47pF	50V	
C112	Ceramic	6pF	50V	
C113	Ceramic	0.001μF	50V	
C114	Ceramic	6pF	50V	
C115	Cylinder	UP050SL5R6K		
C116	Ceramic	47pF	50V	
C117	Ceramic	2pF	50V	
C118	Ceramic	4pF	50V	
C119	Ceramic	15pF	50V	
C120	Ceramic	1pF	50V	
C121	Ceramic	47pF	50V	
C122	Electrolytic	0.47μF	50V	MS7
C123	Ceramic	0.001μF	50V	
C124	Ceramic	0.001μF	50V	
C125	Ceramic	0.001μF	50V	
C126	Ceramic	470pF	50V	
C127	Ceramic	470pF	50V	
C128	Electrolytic	10μF	16V	MS7
C129	Ceramic	0.001μF	50V	
C130	Ceramic	0.001μF	50V	
C131	Tantalum	10μF	35V	DN
C132	Ceramic	0.001μF	50V	
C133	Electrolytic	10μF	16V	MS7
C134	Ceramic	0.001μF	50V	
C135	Ceramic	0.5pF	500V	
C136	Ceramic	10pF	50V	
C137	Ceramic	5pF	500V	
C138	Ceramic	5pF	500V	
C139	Ceramic	10pF	50V	
C140	Ceramic	0.5pF	500V	
C141	Ceramic	8pF	500V	
C142	Ceramic	5pF	500V	
C143	Ceramic	10pF	500V	
C144	Ceramic	27pF	500V	
C145	Ceramic	7pF	500V	
C146	Ceramic	10pF	500V	
C147	Ceramic	5pF	500V	
C148	Ceramic	5pF	500V	
C149	Ceramic	20pF	50V	
C150	Ceramic	47pF	50V	
C151	Ceramic	47pF	50V	
C152	Ceramic	47pF	50V	
C153	Ceramic	47pF	50V	
C154	Ceramic	47pF	50V	
C155	Ceramic	47pF	50V	
C156	Ceramic	0.001μF	50V	
C157	Electrolytic	10μF	16V	MS7
C158	Ceramic	0.001μF	50V	
C159	Ceramic	0.001μF	50V	
C160	Ceramic	47pF	50V	
C161	Ceramic	47pF	50V	
C162	Electrolytic	470μF	16V	MS16
C163	Electrolytic	470μF	16V	MS16
C164	Feed Through	TF318-450E 102GMV 50V		
C165	Ceramic	0.001μF	50V	
C166	Ceramic	47pF	50V	
C167	Ceramic	2pF	500V	

[MAIN UNIT]

REF. NO.	DESCRIPTION	PART NO.	
C168	Ceramic	47pF	50V
C169	Ceramic	20pF	50V
C170	Ceramic	0.001μF	50V
C171	Ceramic	47pF	50V
C172	Ceramic	47pF	50V
C173	Ceramic	47pF	50V
C174	Ceramic	47pF	50V
C175	Ceramic	47pF	50V
C176	Ceramic	47pF	50V
C177	Ceramic	47pF	50V
C178	Ceramic	47pF	50V
C180	Ceramic	0.0047μF	50V
J1	Connector	3024-15AH	
J2	Connector	IMSA-9201B-1-02-T	
EP1	P.C. Board	B-1309C	
EP4	Ferrite Bead	DL2-OP2.6-3-1.2H	
W1	Jumper	JPW-02A	
W2	Jumper	JPW-02A	
W3	Jumper	JPW-02A	
W4	Jumper	JPW-02A	
W5	Jumper	JPW-02A	
W6	Jumper	JPW-01 R-01	

[VCO UNIT]

REF. NO.	DESCRIPTION	PART NO.	
Q1	Transistor	DTC124-K	
Q2	FET	2SK125	
Q3	Transistor	2SC3356	
D1	Varicap	1T25	
D2	Diode	1SS216	
D3	Varicap	1T25	
L1	Choke	LAL02NA R33	
L2	Coil	LA-134	
L3	Choke	LW-17	
L4	Choke	LAL02NA R33	
R1	Resistor	100Ω	MCR10
R2	Resistor	820Ω	MCR10
R3	Resistor	47kΩ	MCR10
R4	Resistor	10kΩ	MCR10
R5	Resistor	47kΩ	MCR10
R6	Resistor	22kΩ	R20
R7	Resistor	220Ω	MCR10
R8	Resistor	1kΩ	MCR10
R9	Resistor	6.8kΩ	MCR10
R10	Resistor	220Ω	MCR10
R11	Resistor	100Ω	MCR10

[VCO UNIT]

REF. NO.	DESCRIPTION	PART NO.	
C1	Ceramic	470pF	50V
C2	Trimmer	3pF	CV38A0301
C3	Monolithic	7pF	GRM40
C4	Monolithic	470pF	GRM40
C5	Trimmer	6pF	CV38B0601
C6	Monolithic	3pF	GRM40
C7	Monolithic	12pF	GRM40
C8	Monolithic	47pF	GRM40
C9	Monolithic	1.5pF	GRM40
C10	Monolithic	470pF	GRM40
C11	Monolithic	8pF	GRM40
C12	Monolithic	8pF	GRM40
C13	Monolithic	0.5pF	GRM40
C14	Monolithic	0.001μF	GRM40
C15	Ceramic	6pF	50V
EP1	P.C. Board	B-1221B	

SERVICE MANUAL

UX-129A
UX-129E

This part of the service manual covers all service information of the **UX-129A/E** 1200MHz BAND UNIT except for information common to all band units.
Refer to COMMON for information related to repair, mechanical parts, disassembly and FRONT UNIT.

TABLE OF CONTENTS

SECTION 1 SPECIFICATIONS

■ GENERAL

• Frequency coverage	:	1240.00MHz~1300.00MHz
• Antenna impedance	:	50Ω unbalanced
• Frequency stability	:	±10ppm (−10°C~+60°C) (+14°F~+140°F)
• Power supply requirement	:	13.8V DC±15% (Negative ground)
• Current drain (at 13.8V DC)	:	Transmit (HIGH) 6.0A (LOW) 2.5A Receive 550mA
• Dimensions	:	177(W)×25(H)×191(D) mm 7.0(W)×1.0(H)×7.5(D) inches (Projections not included)
• Weight	:	1.3kg (2.9 lbs.)
• Usable temperature range	:	−10°C~+60°C (+14°F~+140°F)

■ TRANSMITTER

• RF output power	:	HIGH 10W LOW 1W
• Emission mode	:	F3 F2 (During "digital code squelch" operation with UT-28)
• Modulation system	:	Variable reactance frequency modulation
• Max. frequency deviation	:	±5.0kHz
• Spurious emission	:	More than 50dB below carrier output power More than 40dB below carrier output power (LOW output power)
• VXO variable range	:	±7kHz

■ RECEIVER

• Receiver system	:	Triple-conversion superheterodyne
• Modulation acceptance	:	F3
• Intermediate frequencies	:	1st 136.6MHz 2nd 17.2MHz 3rd 455kHz
• Sensitivity	:	Less than 0.22μV for 12dB SINAD
• Squelch sensitivity	:	Less than 0.13μV
• Selectivity	:	15.0kHz/−6dB 30.0kHz/−60dB
• Spurious and image rejection	:	More than 60dB
• RIT variable range	:	±7kHz

※ All stated specifications are subject to change without notice or obligation.

SECTION 2 INSIDE VIEW

• COMPONENT SIDE

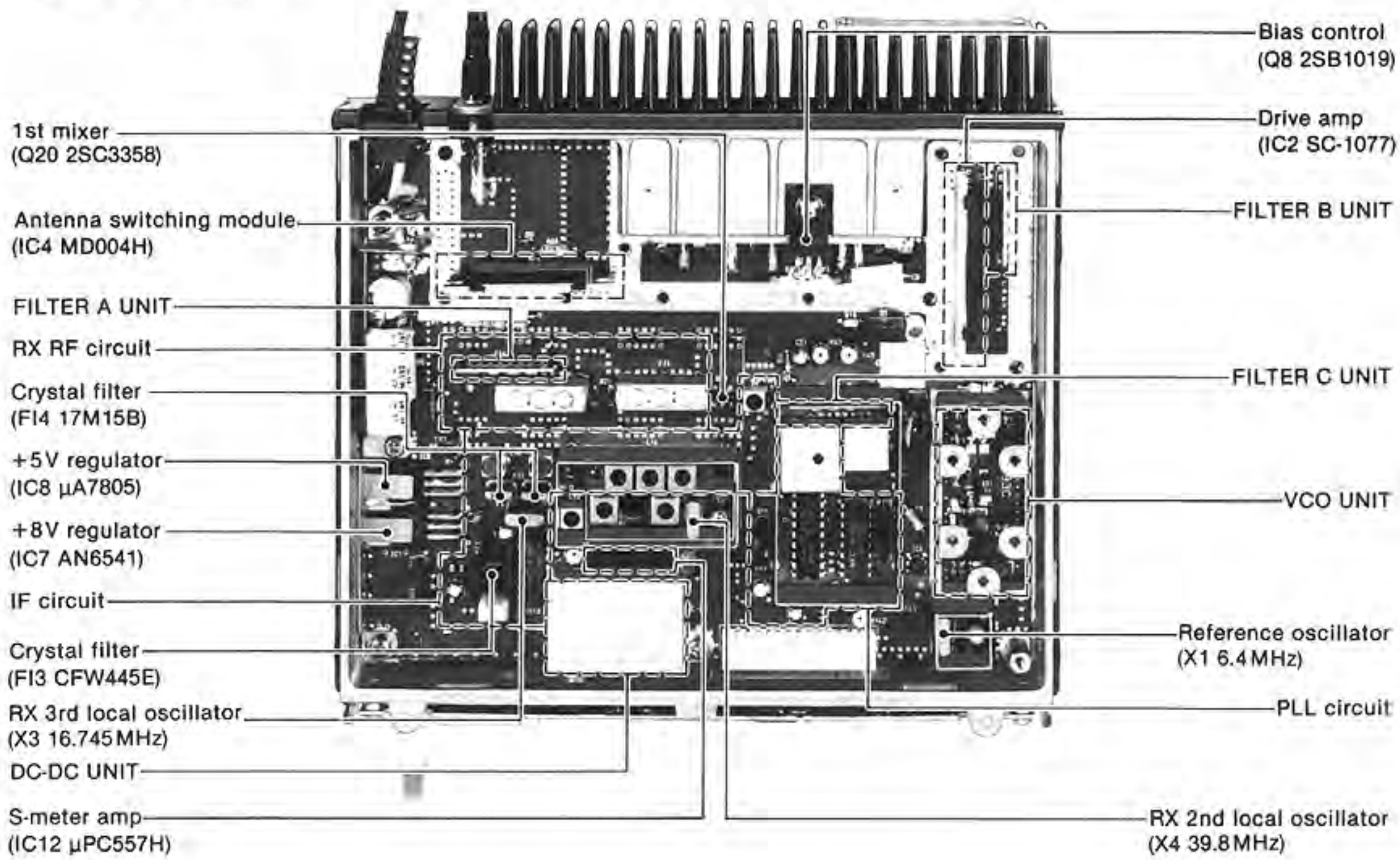

• FOIL SIDE

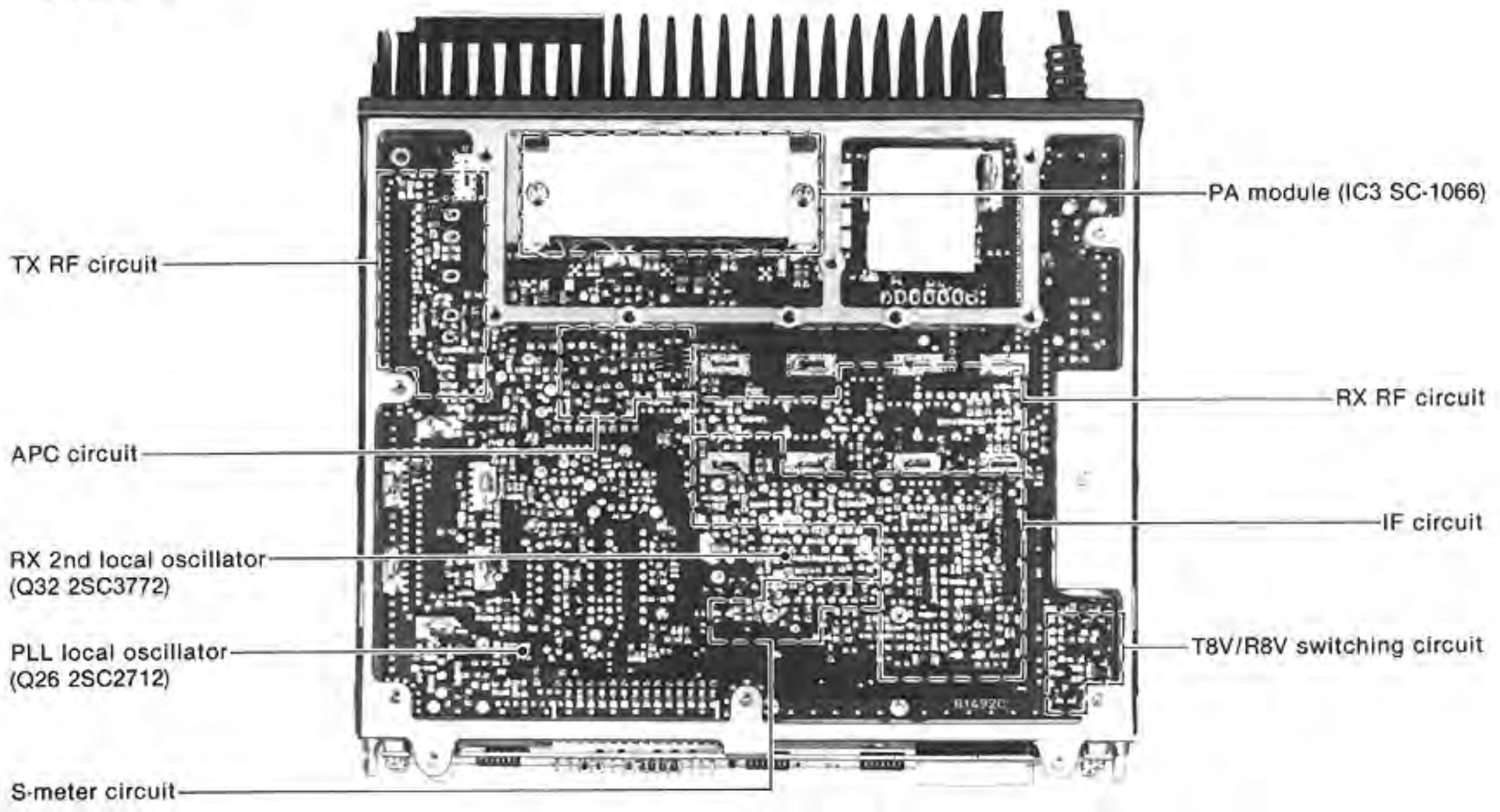

SECTION 3 BLOCK DIAGRAM

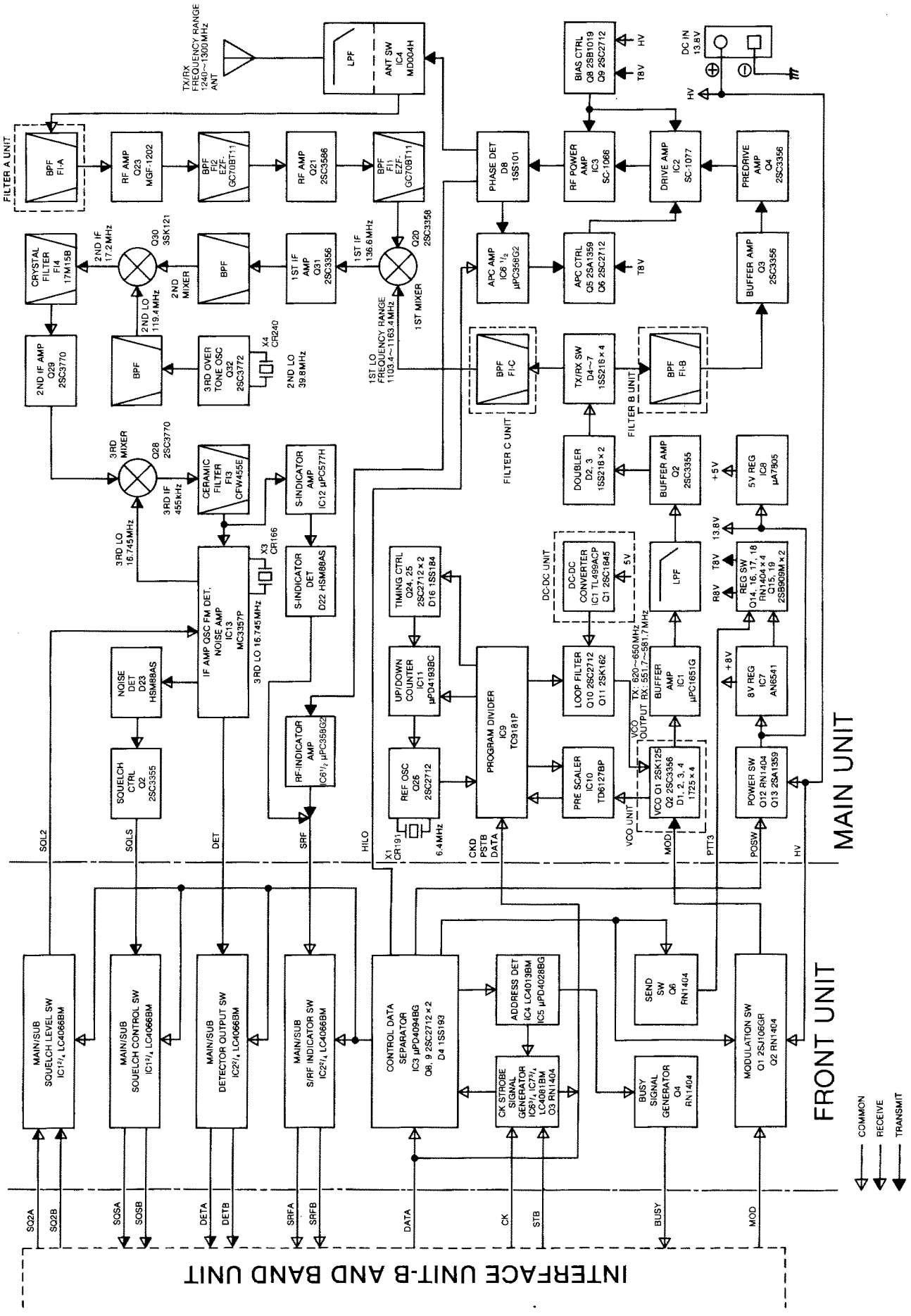

SECTION 4 CIRCUIT DESCRIPTION

4-1 CONSTRUCTION

UX-129A/E mainly consists of the MAIN UNIT and the FRONT UNIT.

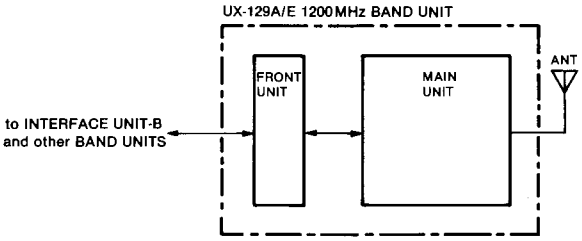

Fig. 1

4-2 FRONT UNIT

4-2-1 SIGNAL SWITCHING CIRCUIT

The serial data signals from INTERFACE UNIT-B are fed to IC3. UX-129A/E operation as a main band transceiver or a sub band receiver is determined by the commands of the serial data signals.

When pin 12 of IC3 outputs "HIGH," the analog switches (IC1, IC2) are controlled so that UX-129A/E operates as a main band transceiver.

When pin 13 of IC3 outputs "HIGH," the analog switches are controlled so that UX-129A/E operates as a sub band receiver.

4-2-2 DATA CONTROL CIRCUIT

To get the address control bits from the serial data signals, IC6 and IC7 create CK and STB signals. IC4 applies the band selection data to IC5. Then pin 7 of IC5 outputs data for 1200MHz band selection.

For error-free operation, Q8 and Q9 operate as follows. When the power switch is turned ON, Q8 and Q9 keep the output impedance of IC3 pin 15 high until the FRONT UNIT receives the first STB signal.

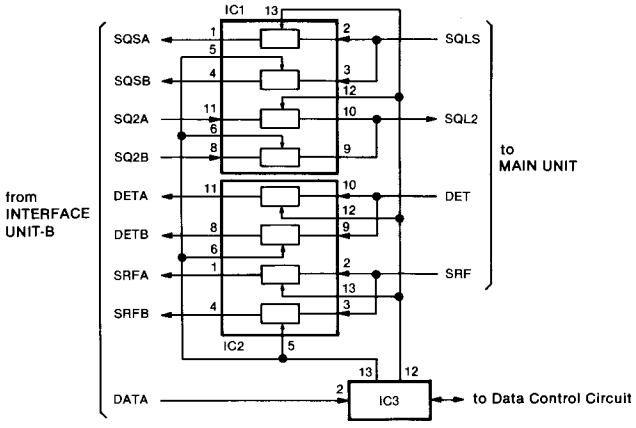

Fig. 2

4-2-3 MIC MUTE CIRCUIT

While receiving, Q1 and Q2 mute the microphone signals (MOD signal).

4-3 POWER SUPPLY CIRCUIT (MAIN UNIT)

The power supply circuit consists of Q12~Q19, IC7, IC8, and D14. When UX-129A/E is selected with the REMOTE CONTROLLER, the power switch signal (POSW signal) is applied from the FRONT UNIT and Q12 and Q13 turns ON. 13.8V is applied to IC7 and IC8 via Q13.

VOLTAGE LINES

LINE	DESCRIPTION
HV	From DC IN directly.
+8V	8V regulated by IC7.
+5V	5V regulated by IC8.
T8V	Transmit 8V controlled by a PTT3 signal. Supplied by Q15.
R8V	Receive 8V controlled by a PTT3 signal. Supplied by Q19.

POWER SUPPLY CIRCUIT

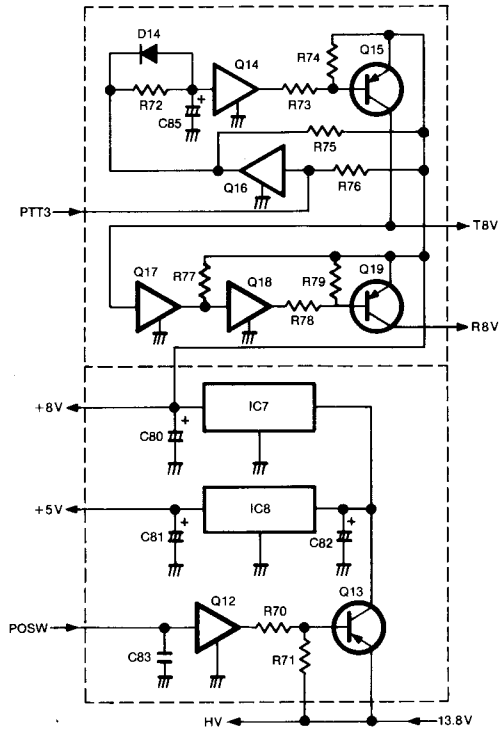

Fig. 3

4-4 RECEIVER CIRCUITS

4-4-1 RF CIRCUIT (MAIN UNIT)

Receive signals enter the MAIN UNIT from the ANTENNA CONNECTOR and pass through the antenna switching module and FILTER A UNIT. The FILTER A UNIT suppresses out-of-band signals. Then the signals are amplified at Q23 and Q21 via the bandpass filters FI2 and FI1.

4-4-2 IF CIRCUIT (MAIN UNIT)

After passing through FI1, signals are fed to 1st mixer circuit Q20, and are mixed with 1st LO signals from the PLL circuit to produce the 136.6MHz 1st IF signals. The 1st IF signals are amplified at IF amplifier Q31 and are fed to a bandpass filter. This bandpass filter employs a resonator circuit consisting of L13~L15 and C166~C171 and suppresses out-of-band signals.

The 1st IF signals from the bandpass filter are fed to 2nd mixer circuit, Q30, and are mixed with 2nd LO signals for converting the 1st IF signals to 17.2MHz 2nd IF signals. The 2nd IF signals from Q30 pass through the matching coil L11 and a pair of crystal filters (FI4) to suppress out-of-band signals. Then the 2nd IF signals pass through the matching coil L10 and are amplified at IF amplifier Q29.

To get 119.4MHz 2nd LO signals, Q32 and X4 oscillate 39.8MHz signals. They are fed to the 3rd overtone resonator circuit consisting of L16~L18 and C175 ~C180 and are applied to the 2nd mixer.

The 2nd IF signals from Q29 are fed to 3rd mixer circuit, Q28, and are mixed with 3rd LO signals for converting the 2nd IF signals to 455kHz 3rd IF signals. IC13 contains the local oscillator, limiter amplifier, and active filter circuits. The 3rd LO circuit and X3 generate 16.745MHz 3rd LO signals.

The 3rd IF signals from Q28 pass through the ceramic filter, FI3, to suppress unwanted signals. They are then amplified at the limiter amplifier section (pin 5 of IC13) and applied to the quadrature detector section (pin 8 of IC13 and ceramic discriminator X2) to demodulate 3rd IF signals to AF signals.

AF signals output from pin 9 on IC13 are applied to the FRONT UNIT as the DET signal.

Signals output from pin 11 on IC13 are rectified by D23 for conversion to DC voltage and then applied to the FRONT UNIT as the SQLS signal via the squelch control circuit Q27.

A portion of the signals from FI3 is amplified at S-meter amplifier IC12, and is detected at the rectifiers D22. These signals are then applied to the FRONT UNIT as the SRF signal. R109 adjusts the SRF signal level.

3RD IF CIRCUIT~FM DETECTOR

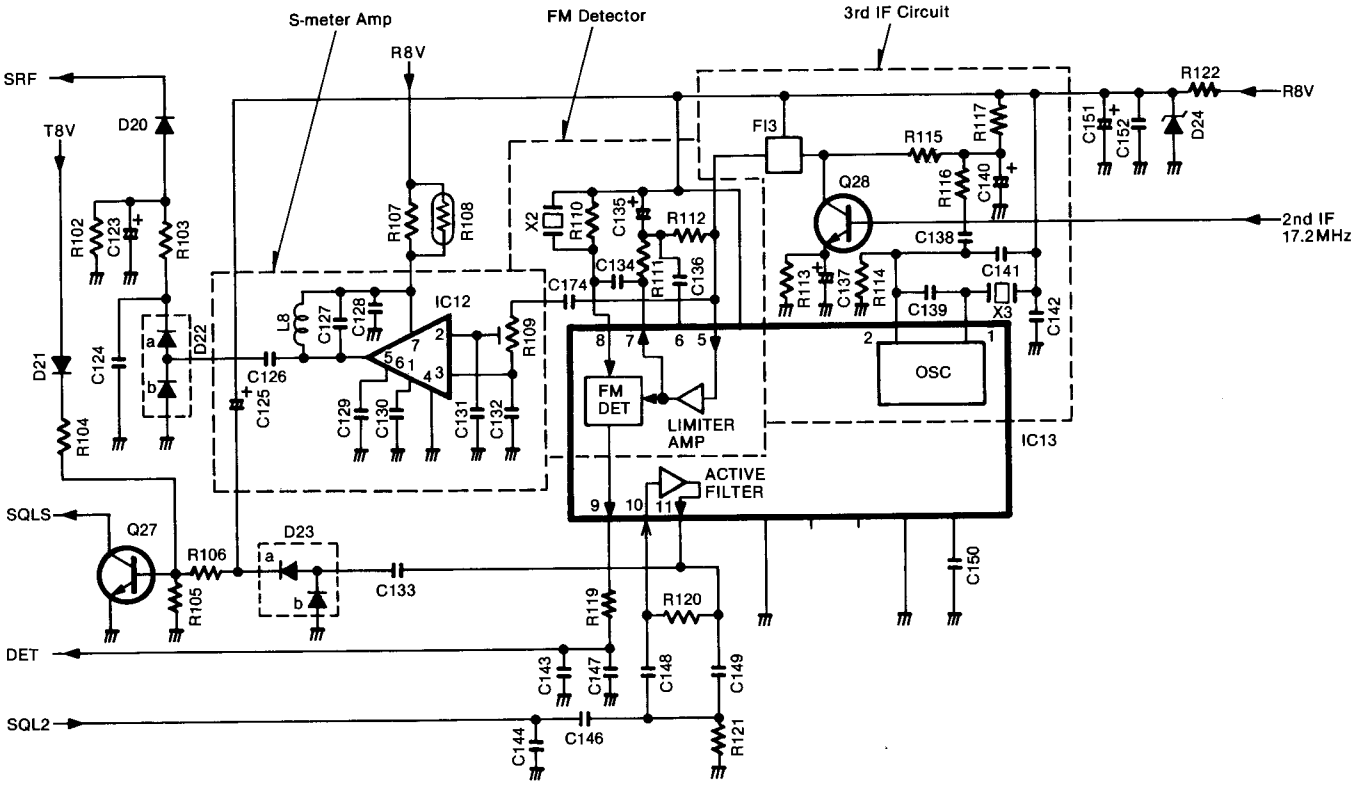

Fig. 4

4-5 PLL CIRCUITS

4-5-1 GENERAL

The PLL circuit, adopting a dual modulus prescaler system, allows half of desired frequency to be generated directly from the VCO circuit. The PLL consists of a prescaler (IC10) and PLL IC (IC9). These circuits receive N-data from the CPU (REMOTE CONTROLLER) in order to determine the operating frequency.

N-data is determined by dividing the half of desired frequency by the reference frequency. The desired frequency is the transmit frequency in transmit mode and the 1st LO frequency in receive mode.

$$\text{N-data} = \frac{\text{Desired frequency} \times 0.5}{\text{Reference frequency}}$$

A reference frequency of 5kHz is produced by X1, Q26 and the divider inside IC9. A signal from the VCO circuit is fed into IC10, and divided N times at IC9 and IC10.

The divided signal is applied to the phase detector in IC9. Phase detection results in lock voltages being output from pin 17.

Output from pin 17 is applied to a loop filter consisting of Q10 and Q11. The signal passing through the loop filter is fed to varactor diodes D1~D4 to control the VCO output frequency.

RIT/VXO frequency shift controls reference frequency shifting. Signals from pin 4 and pin 5 of IC9 control RIT/VXO frequency shift. The signals are applied to a D/A converter consisting of IC11 and R101. DC output from the D/A converter applies varactor diode D17 and shifts reference frequency. The timing control circuit consisting of Q24, Q25 and D16 generates timing control signals for pin 11 of IC11.

4-5-2 DC-DC CONVERTER (DC-DC UNIT)

To create wide-band oscillation characteristics in the VCO, a high voltage is applied to the loop filter. The DC-DC converter consisting of IC1 and Q1 creates approximately 20V DC from 5V DC to obtain wide range lock voltages for the PLL circuit.

4-5-3 VCO CIRCUIT (VCO UNIT)

The VCO, Q1, employs a Colpitts oscillator circuit. VCO oscillating signals are controlled by varactor diodes (D1~D4) with PLL lock voltage from the loop filter (Q10, Q11).

Modulation signals then change the capacitance of D1 and D2 to produce FM modulation.

The output from the VCO circuit is buffer amplified at Q2 and IC1 and is fed to low-pass filter consisting of strip line. Then the signals are buffer amplified at Q2 and are fed to the doubler circuit.

PLL CIRCUIT

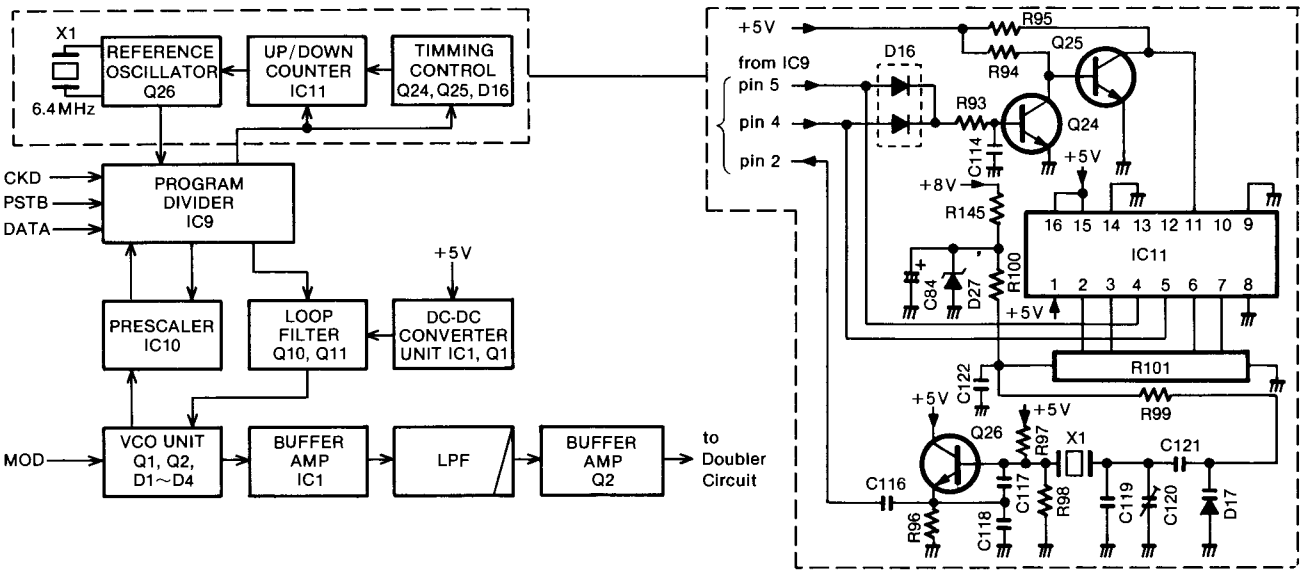

Fig. 5

4-5-4 DOUBLER CIRCUIT (MAIN UNIT)

VCO signals from Q2 are doubled at the doubler circuit consisting of D2, D3, L3 and L4. Doubled VCO signals are fed to the diode switching circuit.

4-5-5 DIODE SWITCHING CIRCUIT (MAIN UNIT)

The diode switching circuit consists of D4~D7. While receiving, D7 is turned ON and the doubled VCO signals are applied to the 1st mixer circuit Q20 via FILTER C UNIT.

While transmitting, D4 is turned ON and the doubled VCO signals are applied to buffer amplifier Q3 via FILTER B UNIT.

4-6 TRANSMITTER CIRCUITS

4-6-1 TRANSMIT PREDRIVER (MAIN UNIT)

The doubled VCO output is amplified at Q3 and Q4 and obtains more than 10dBm, 10mW. The amplified signals are applied to YGR module (IC2) via C32 and R33.

4-6-2 PA CIRCUIT (MAIN UNIT)

The YGR module (IC2) is a driver amplifier which provides 1W output. RF signals from IC2 are applied to pin 1 of IC3. The PA circuit IC3 is a power amplifier which provides 10W output. Amplified signals at IC3 are applied to the antenna switching module.

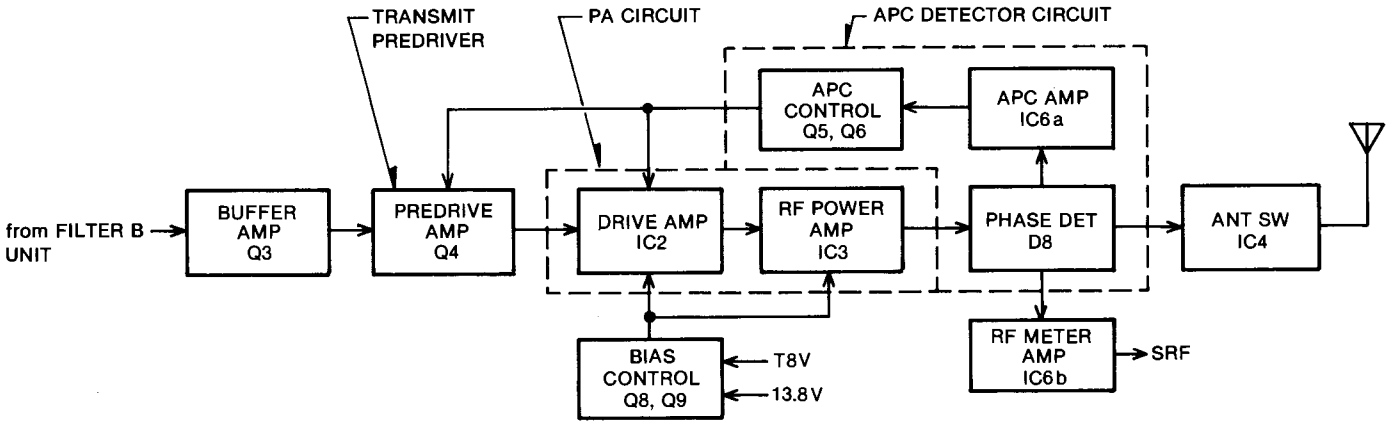

Fig. 6

4-6-3 APC DETECTOR CIRCUIT (MAIN UNIT)

The APC detector circuit consists of strip line, C57 ~C59, R55~R57 and D8.

When antenna impedance is matched at 50Ω, voltage detected at D8 is at a minimum. When antenna impedance is mismatched, the detected voltage is greater than when matched.

The voltage detected at D8 is fed to pin 6 of IC6A. IC6A is a differential amplifier. The APC reference voltage is fed to pin 5.

When the antenna impedance is mismatched, the voltage of IC6A pin 6 is greater than the reference voltage. The output voltage of IC6A pin 7 decreases, decreasing Q5 and Q6 collector current.

The change in collector current decreases the output power of Q4 and IC2 until the voltage of IC6A pin 6 equals the voltage of pin 5. Thus, stable RF output power is obtained.

The output power from IC3 passes through the antenna switching module with the low-pass filter (IC4), and is then applied to the ANTENNA CONNECTOR.

4-6-4 OUTPUT POWER SELECTION CIRCUIT (MAIN UNIT)

The output power selection circuit consists of R47~ R50 and Q7. This circuit shifts the RF output power by shifting APC reference voltage.

When HIGH output power is selected, Q7 is turned OFF. RF output power is adjusted with R49.

When LOW output power is selected, Q7 is turned ON. Series resistors R47 and R48 are connected in parallel with series resistors R49 and R50. RF output power is adjusted with R47.

4-6-5 RF METER AMP (MAIN UNIT)

The voltage detected at D8 is amplified at IC6B and then applied to the FRONT UNIT as the SRF signal.

SECTION 5 ADJUSTMENT PROCEDURES

5-1 PLL ADJUSTMENT

TEST INSTRUMENTS REQUIRED	MEASUREMENT CONNECTION LOCATION
(1) AC POWER SUPPLY • Output voltage : 13.8V DC • Current capacity : 20A or more (2) FREQUENCY COUNTER • Frequency range : 0.1~1400MHz • Frequency accuracy : ±1ppm or better • Sensitivity : 100mV or better	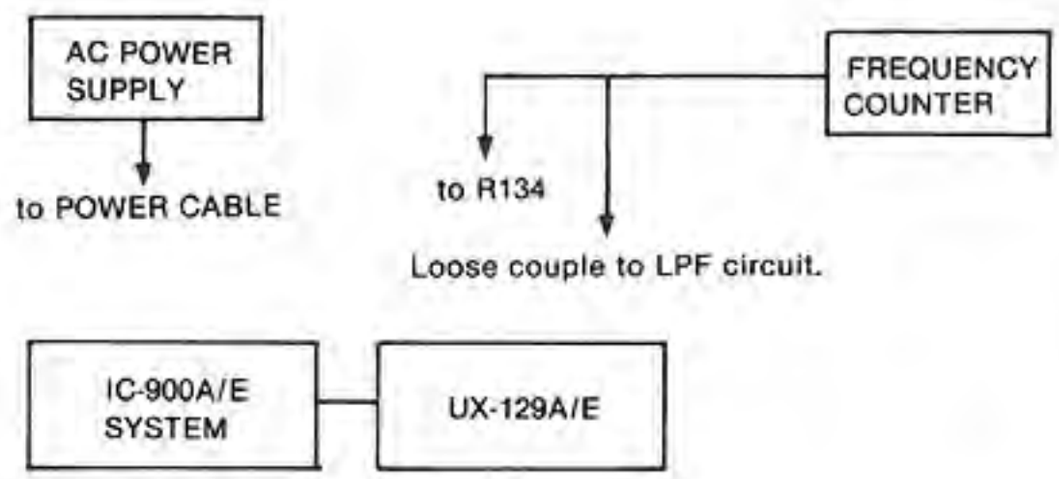

ADJUSTMENT		ADJUSTMENT CONDITIONS	MEASUREMENT		VALUE	ADJUSTMENT POINT	
			UNIT	LOCATION		UNIT	ADJUST
REFERENCE FREQUENCY	1	• Frequency display: 1280.000MHz • Transmitting	MAIN	Loose couple the frequency counter to the LPF circuit.	1280.000MHz	MAIN	C120
2nd LO FREQUENCY	1	• Frequency display: 1280.000MHz • Receiving	MAIN	Connect the frequency counter to R134.	119.400MHz	MAIN	C185

MAIN UNIT

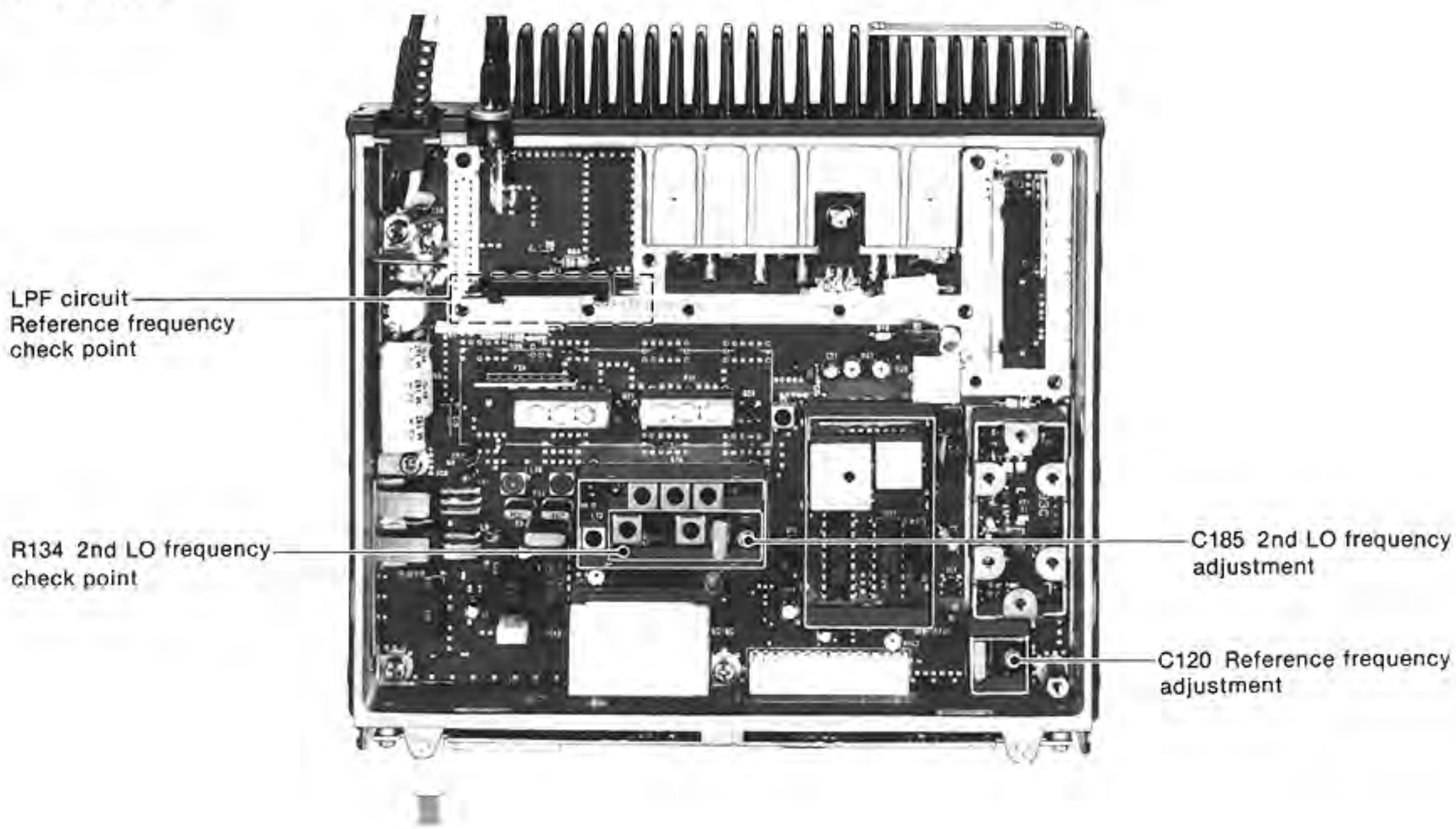

5-2 RECEIVER ADJUSTMENT

TEST INSTRUMENTS REQUIRED	MEASUREMENT CONNECTION LOCATION
(1) AC POWER SUPPLY • Output voltage : 13.8V DC • Current capacity : 20A or more (2) STANDARD SIGNAL GENERATOR (SSG) • Frequency range : 0.1~1400MHz • Output level : −127~−17dBm (0.1μV~32mV) (3) DC VOLTMETER • Input impedance : 50kΩ/DC or better (4) FREQUENCY COUNTER • Frequency range : 0.1~150MHz • Frequency accuracy : ±1ppm or better • Sensitivity : 100mV or better	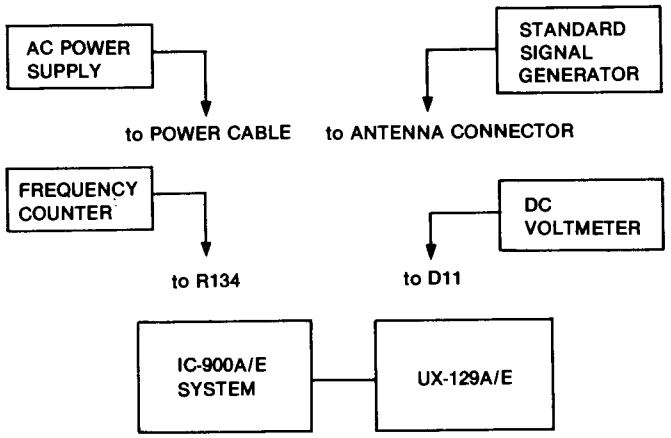

ADJUSTMENT		ADJUSTMENT CONDITIONS	MEASUREMENT		VALUE	ADJUSTMENT POINT	
			UNIT	LOCATION		UNIT	ADJUST
SENSI-TIVITY	1	• Frequency display: 1270.000MHz • Receiving • Apply an RF signal to the ANTENNA CONNECTOR. Level: −107dBm (1μV) (Approx.) Dev. : ±3.5kHz Mod. : 1kHz • R109: Max. CW.*	MAIN	Connect the DC voltmeter to D11 cathode.	Maximum	MAIN	L7
	2				Maximum (Repeat several times.)		L18, L17 L16
	3				Maximum		L12
	4				Maximum (Repeat several times.)		L15, L14 L13
	5			Connect the frequency counter to R134.	119.400MHz (±50Hz)		Verify
	6			Connect the DC voltmeter to D11 cathode.	Maximum		L11, L10
		NOTE: Adjust the signal generator output level for each time showing the DC voltmeter at 30% of the lowest range full scale.					
S-METER	1	• Frequency display: 1270.000MHz • Receiving • Apply an RF signal to the ANTENNA CONNECTOR. Level: −107dBm (1μV) Dev. : ±3.5kHz Mod. : 1kHz	FUNC-TION DISPLAY	S/RF INDICATOR	S9 (5 dots)	MAIN	R109

*CW: Clockwise

MAIN UNIT

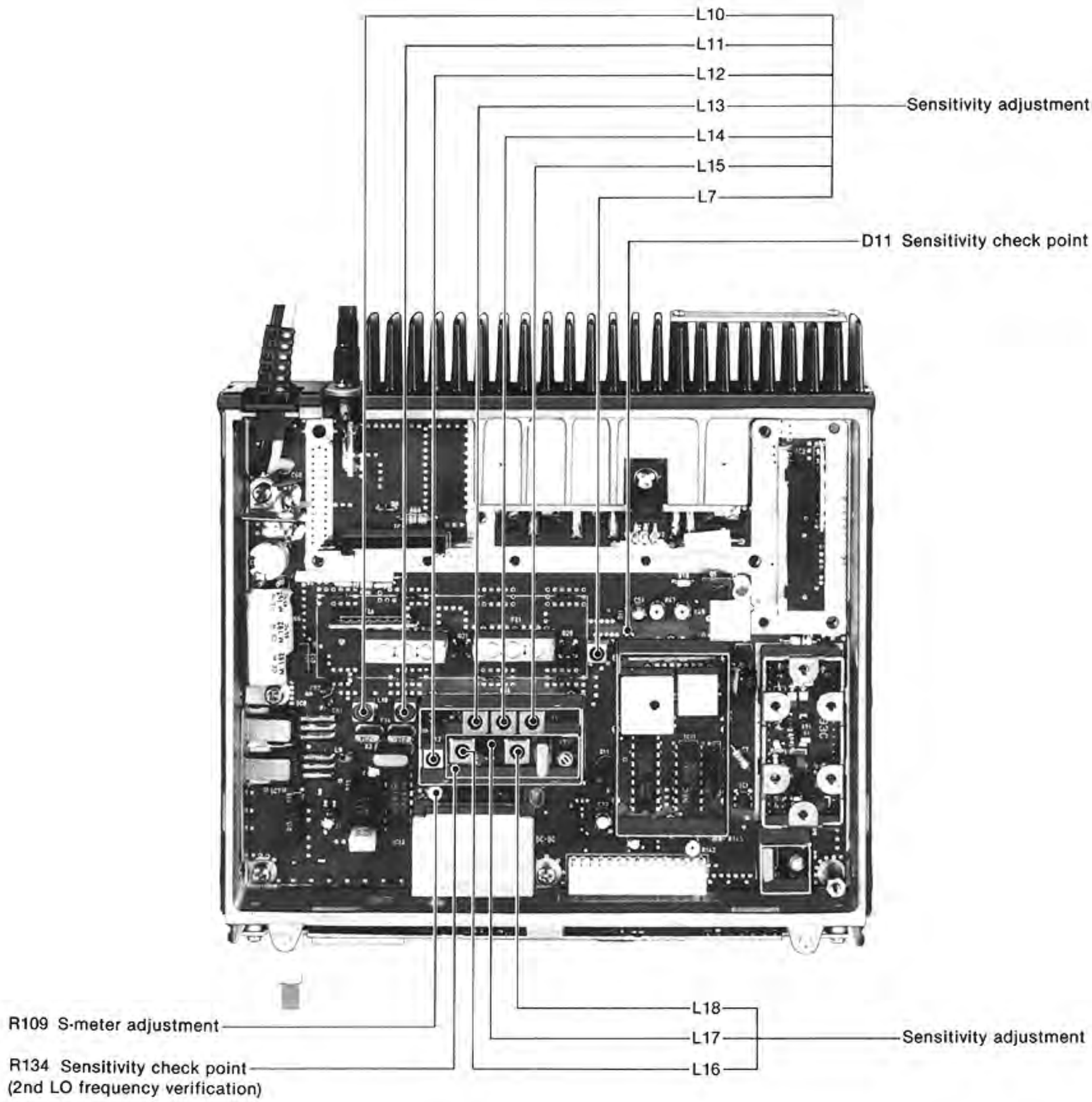
L10
L11
L12
L13
L14
L15
L7
Sensitivity adjustment
D11 Sensitivity check point
L18
L17
L16
Sensitivity adjustment
R109 S-meter adjustment
R134 Sensitivity check point
(2nd LO frequency verification)

5-3 TRANSMITTER ADJUSTMENT

TEST INSTRUMENTS REQUIRED	MEASUREMENT CONNECTION LOCATION
(1) AC POWER SUPPLY • Output voltage : 13.8V DC • Current capacity : 20A or more (2) RF POWER METER (TERMINATED TYPE) • Measuring range : 1~20W • Frequency range : 1200~1400MHz • Impedance : 50Ω • SWR : Less than 1.2 : 1 (3) AF GENERATOR (AG) • Frequency range : 200~2000Hz • Output level : 0~100mV (4) AC MILLI-VOLTMETER • Measuring range : 2~100mV (5) FM DEVIATION METER • Frequency minimum : 1400MHz • Measuring range : 0~±5kHz	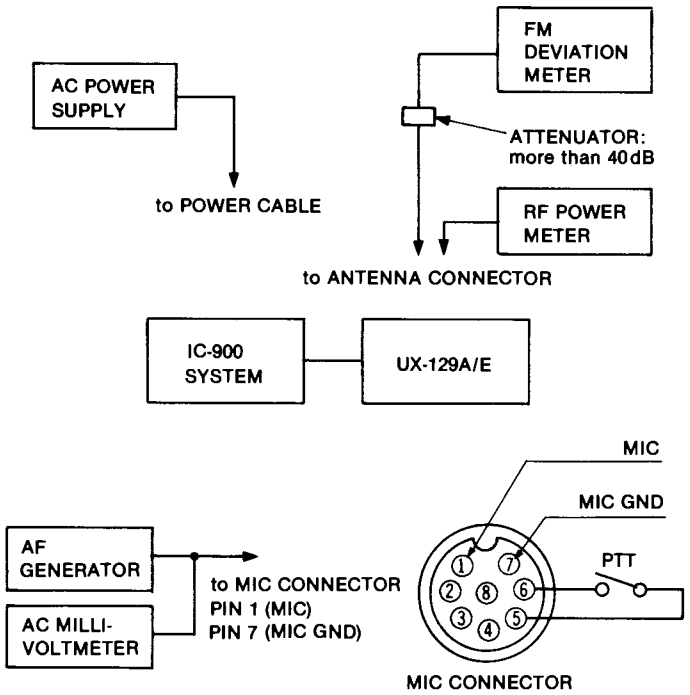

ADJUSTMENT		ADJUSTMENT CONDITIONS	MEASUREMENT		VALUE	ADJUSTMENT POINT	
			UNIT	LOCATION		UNIT	ADJUST
OUTPUT POWER	1	• Frequency display: 1270.000MHz • Transmitting • HIGH/LOW POWER SWITCH: HIGH	Rear panel	Connect the RF power meter to the ANTENNA CONNECTOR.	10W	MAIN	R49
	2	• HIGH/LOW POWER SWITCH: LOW			1W		R47
DEVIATION	1	• Frequency display: 1270.000MHz • Transmitting • Apply an AF signal to the MIC CONNECTOR pin 1 (pin 7 is ground). Level: 20mV/1kHz (UX-129A U.S.A. 65mV/1kHz) • Set the FM deviation meter. HPF: 300Hz LPF : 3kHz • TONE SWITCH: OFF	Rear panel	Connect the FM deviation meter to the ANTENNA CONNECTOR via the attenuator.	±4.8kHz	MAIN	R142

MAIN UNIT

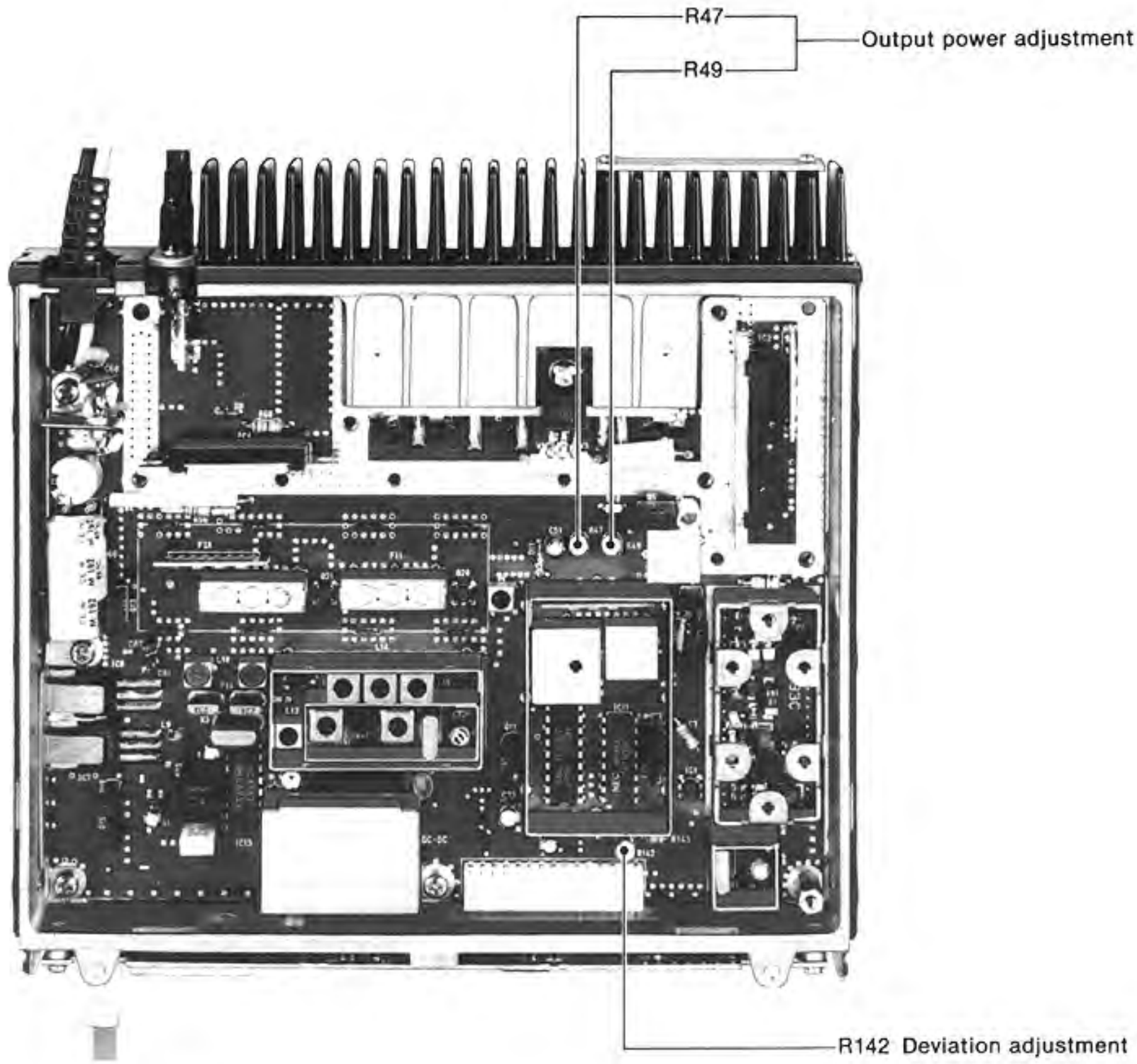
R47
R49
Output power adjustment
R142 Deviation adjustment

SECTION 6 BOARD LAYOUTS

• MAIN UNIT

μPC1651G IC1
(RF WIDE BAND AMP)

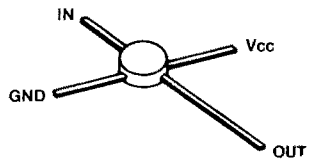

SC-1077 IC2
(POWER AMP)

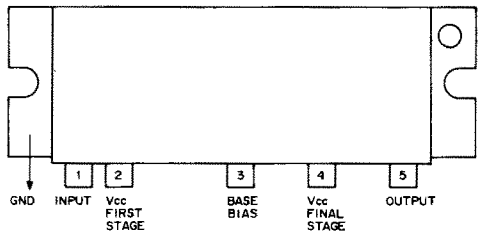

SC-1066 IC3
(POWER AMP)

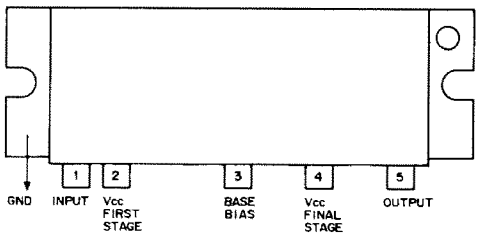

MD004H IC4
(ANT SELECTOR)

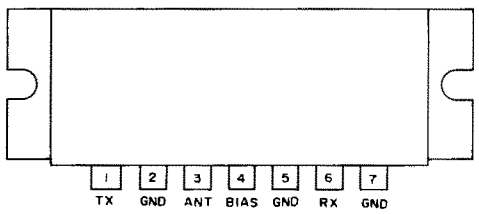

μPC358G2 IC6
(DUAL DRIVER)

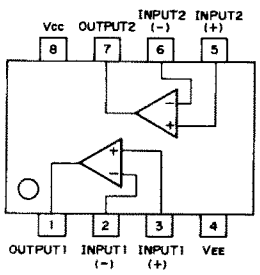

AN6541 IC7
(3-TERMINAL 8V REGULATOR)

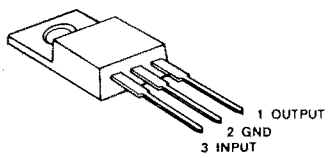

μA7805 IC8
(3-TERMINAL 5V REGULATOR)

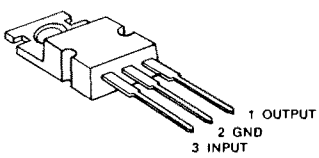

TC9181P IC9
(PROGRAM DIVIDER)

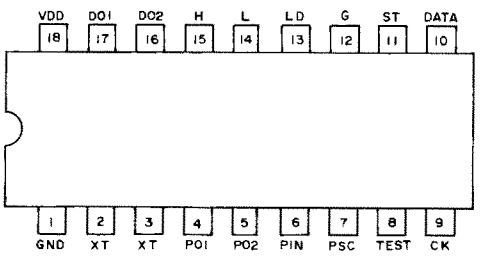

TD6127BP IC10
(PRESCALER)

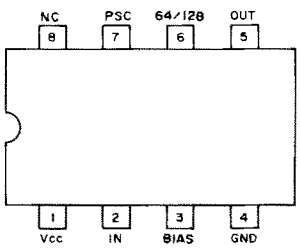

μPD4193BC IC11
(UP/DOWN COUNTER)

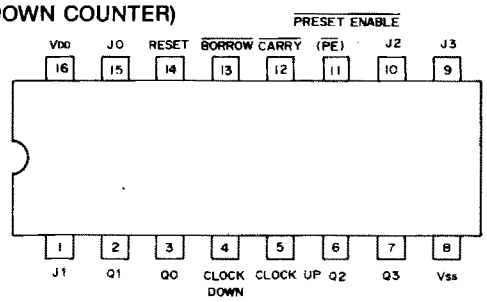

μPC577H IC12
(FM IF AMP)

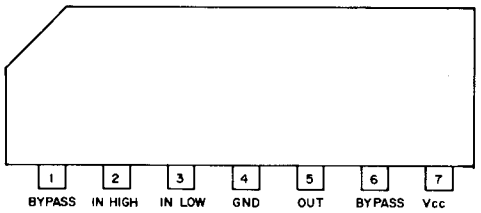

MC3357P IC13
(LOW POWER FM AMP)

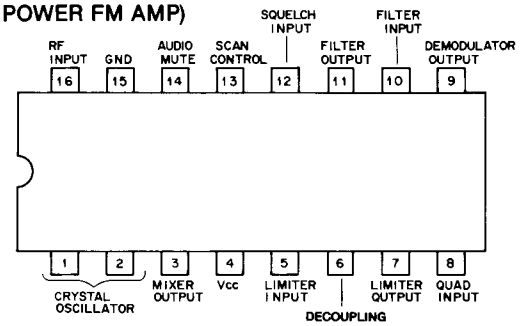

• DC-DC UNIT

TL499ACP IC1
(SWITCHING REGULATOR)

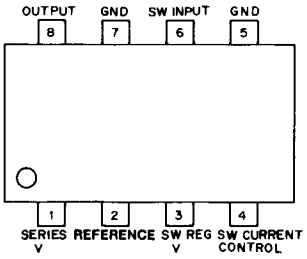

• MAIN

2SC1645 B
Q1

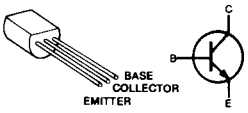

2SC3355
Q2

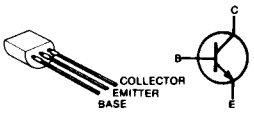

2SC3356
Q3, Q4, Q31

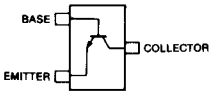

Symbol : R22

2SA1359
Q5, Q13

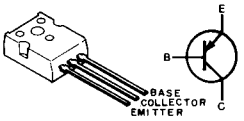

2SC2712 Y
Q6, Q9, Q10,
Q22, Q24, Q25,
Q26, Q27

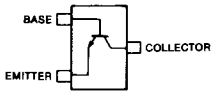

Symbol : LY

RN1404
Q7, Q12, Q14,
Q16, Q17, Q18

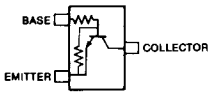

Symbol : XD

2SB1019
Q8

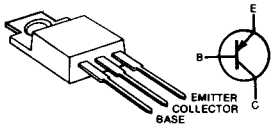

2SK162
Q11

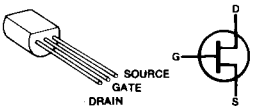

2SB909M
Q15, Q19

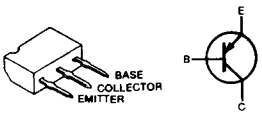

2SC3358
Q20

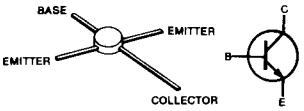

2SC3586
Q21

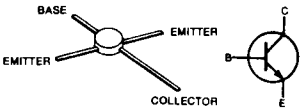

MGF-1202
Q23

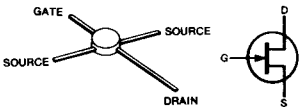

2SC2712GR
Q27

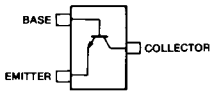

Symbol: LG

2SC3770 rank 3
Q28, Q29

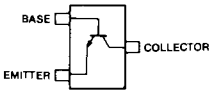

Symbol : JY3

3SK121 Y
Q30

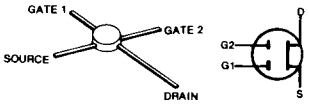

2SC3772 rank 3
Q32

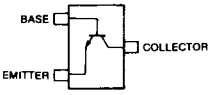

Symbol : LY3

• VCO

2SK125
Q1

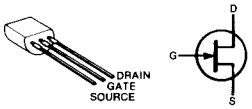

2SC3356
Q2

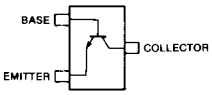

Symbol : R22

• DC-DC

2SC1645 B
Q1

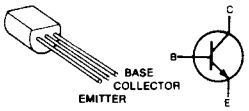

• MAIN UNIT

COMPONENT SIDE

• ANT UNIT

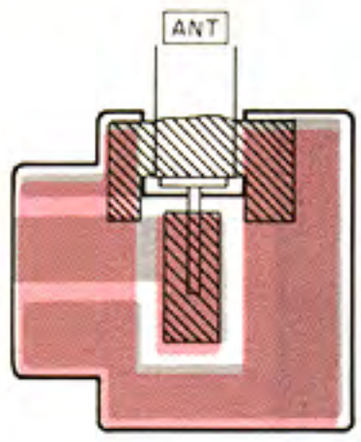

• FILTER B UNIT

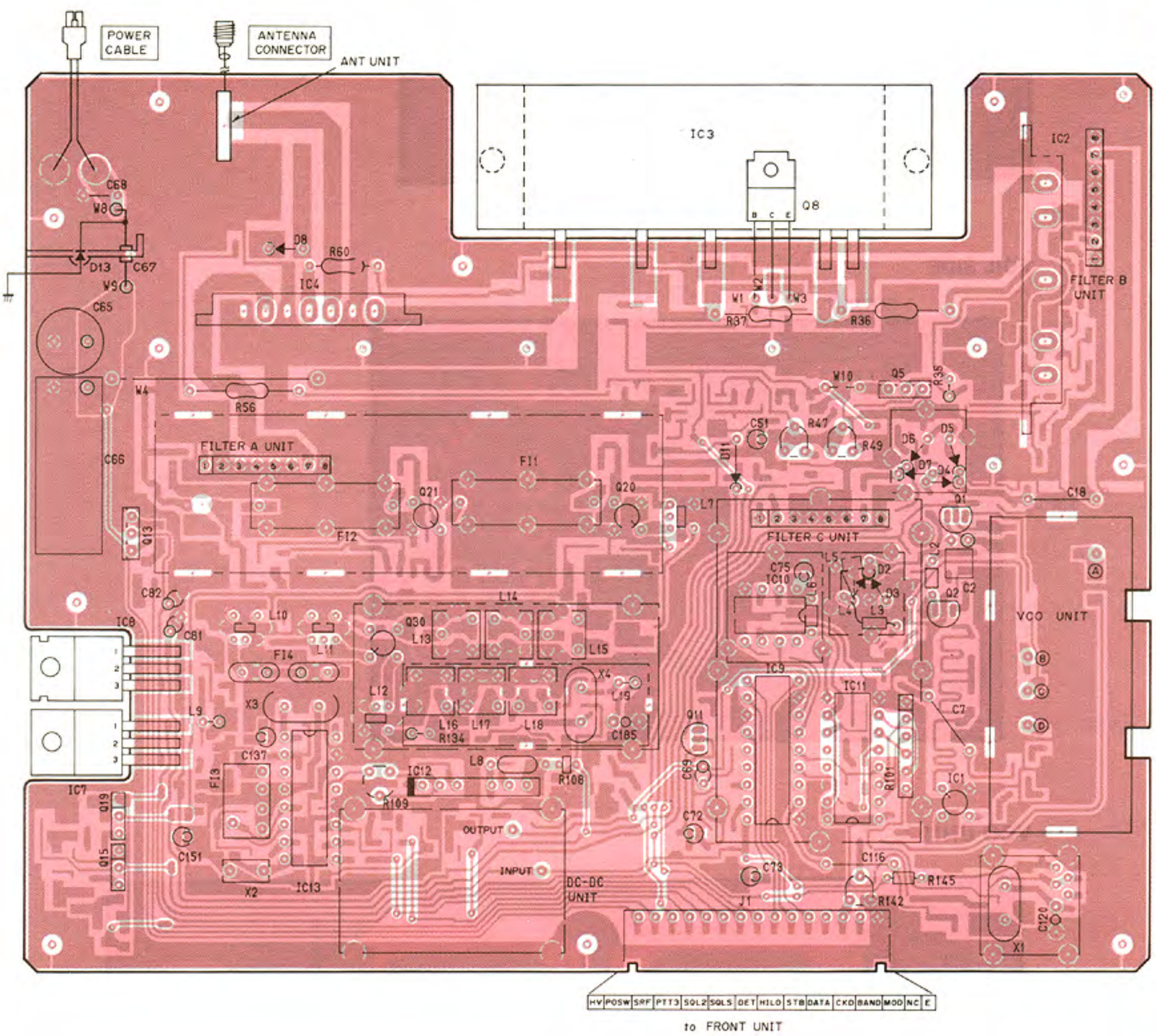

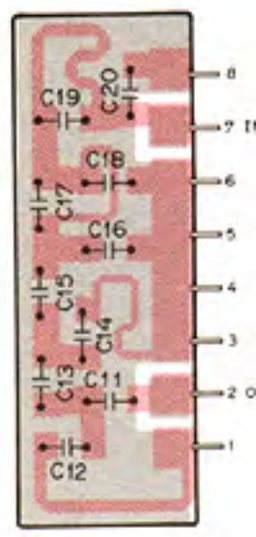

• FILTER A UNIT

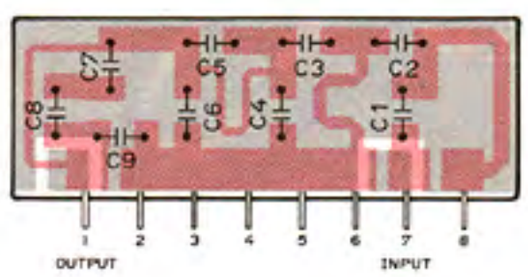

• FILTER C UNIT

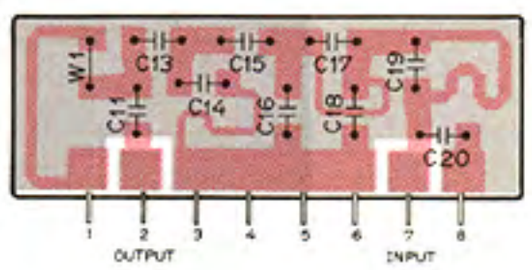

FOIL SIDE

• FILTER B UNIT

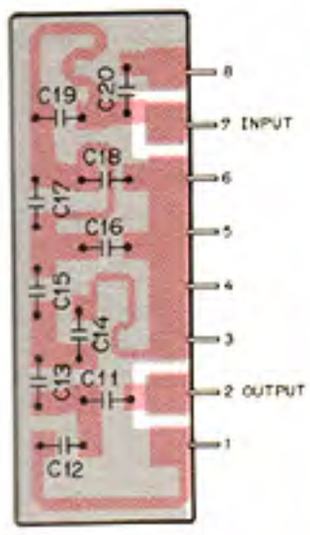

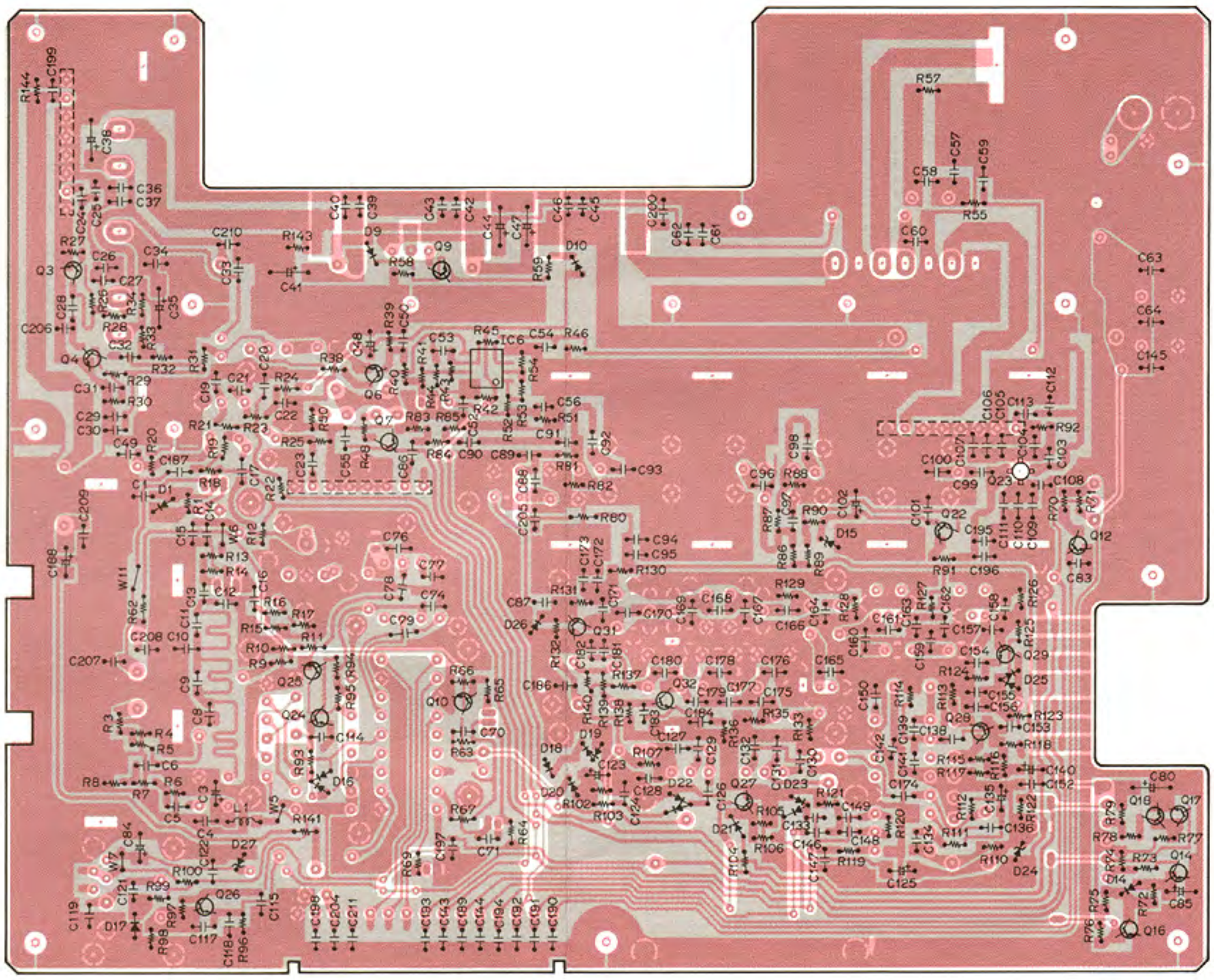

• **DC-DC UNIT**

COMPONENT SIDE

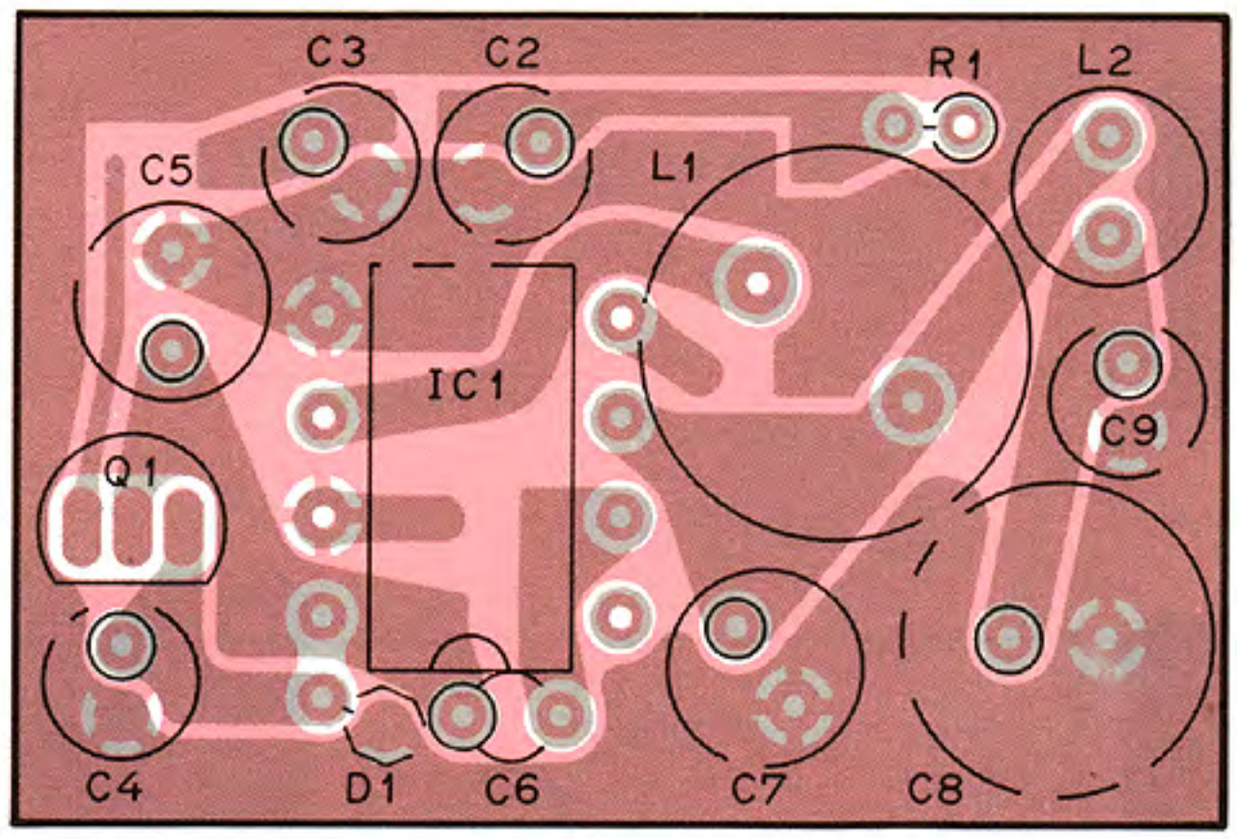

FOIL SIDE

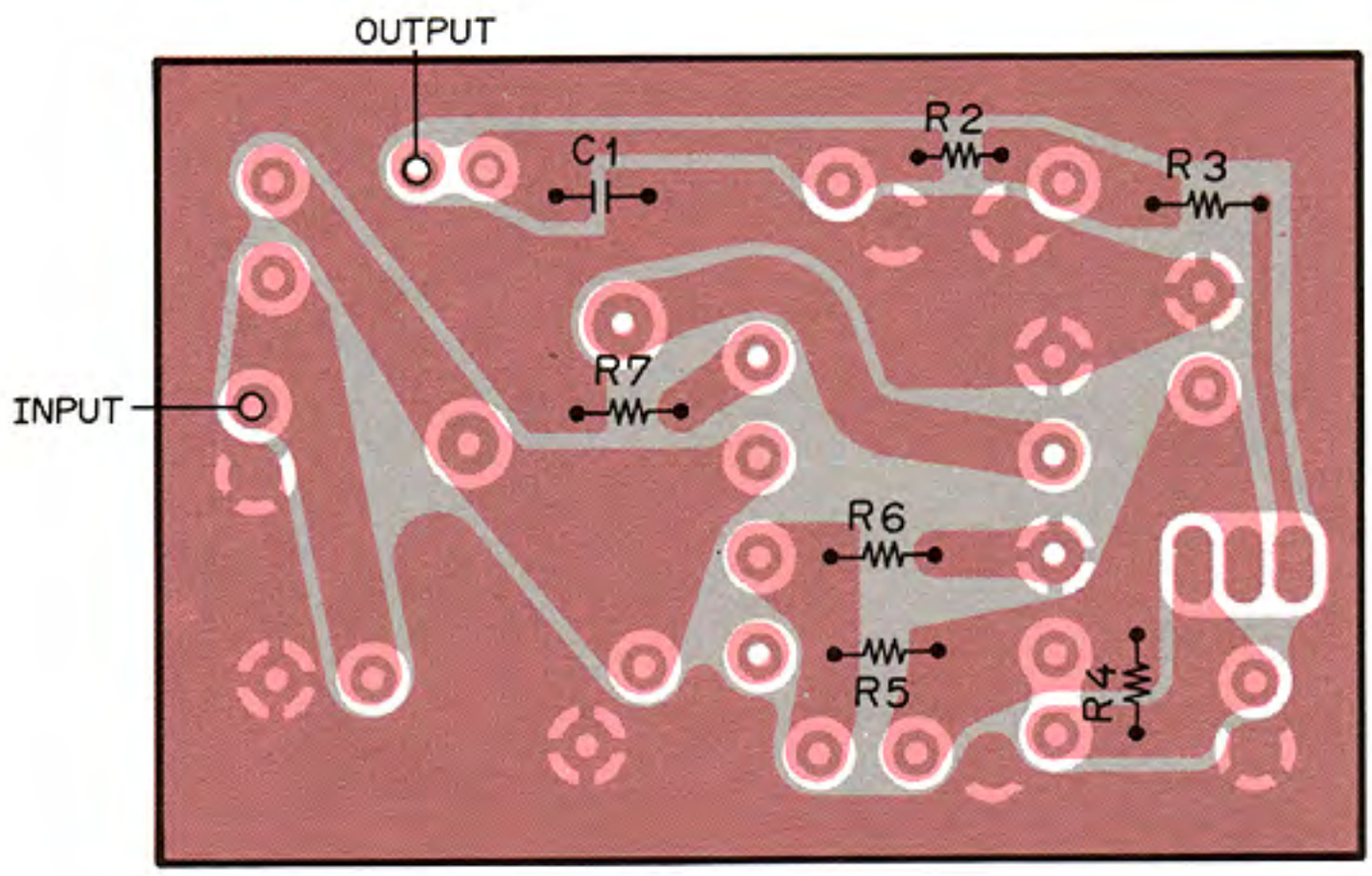

• **VCO UNIT**

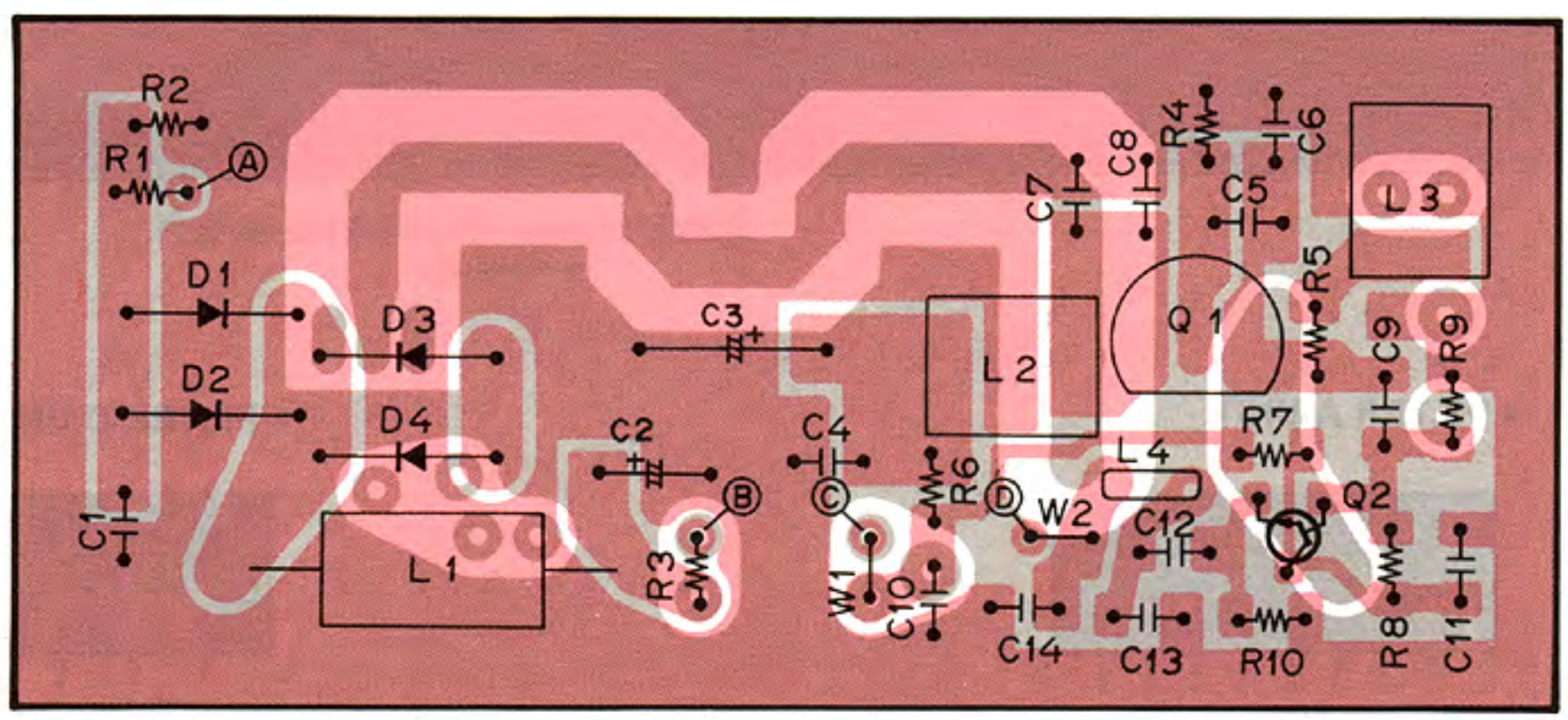

SECTION 7 VOLTAGE DIAGRAM

• **UX-129A/E**

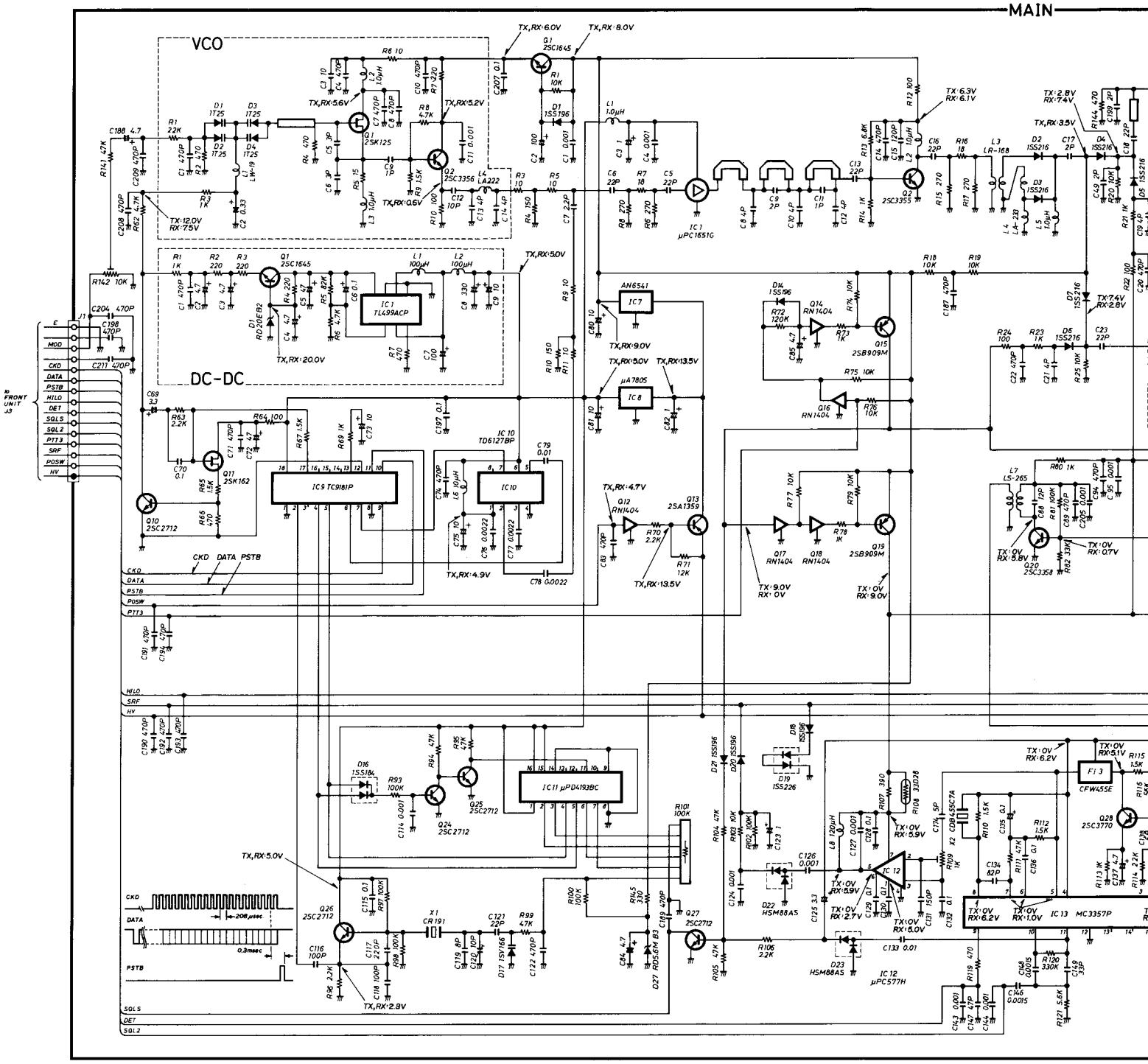

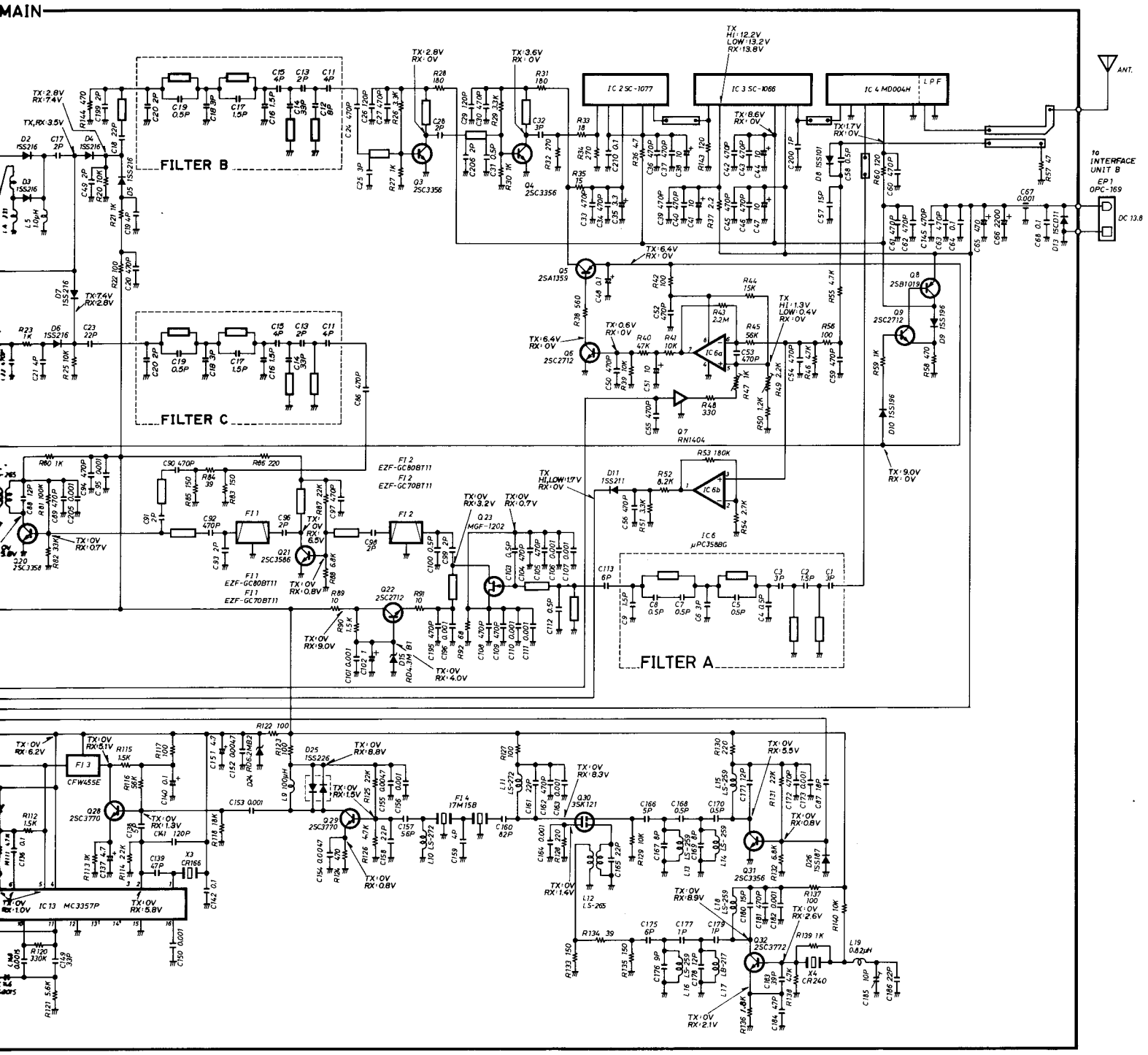
MAIN
FILTER B
FILTER C
FILTER A
IC 2 SC-1077
IC 3 SC-1066
IC 4 MD004H
LPF
ANT.
to INTERFACE UNIT B
EP1 OPC-169
DC 13.8
IC 6a
IC 6b
IC 6 μPC358G
IC 13 MC3357P
Q3 2SC3356
Q4 2SC3356
Q5 2SA1359
Q6 2SC2712
Q7 RN1404
Q8 2SB1019
Q9 2SC2712
Q20 2SC3356
Q21 2SC3586
Q22 2SC2712
Q23 MGF-1202
Q28 2SC3770
Q29 2SC3770
Q30 3SK121
Q31 2SC3356
Q32 2SC3772
F1 1 EZF-GC80BT11
F1 2 EZF-GC70BT11
F1 3 CFW455E
F1 4 17M15B
X3 CR166
X4 CR240
TX H1:12.2V LOW:13.2V RX:13.8V
TX H1:1.3V LOW:0.4V RX:0V
TX H1:LOW:1.7V RX:0V

SECTION 8 PARTS LIST

[MAIN UNIT]

REF. NO.	DESCRIPTION	PART NO.
IC1	IC	µPC1651G
IC2	IC	SC-1077
IC3	IC	SC-1066
IC4	IC	MD004H
IC6	IC	µPC358G2
IC7	IC	AN6541
IC8	IC	µA7805
IC9	IC	TC9181P
IC10	IC	TD6127BP
IC11	IC	µPD4193BC
IC12	IC	µPC577H
IC13	IC	MC3357P
Q1	Transistor	2SC1645 B
Q2	Transistor	2SC3355
Q3	Transistor	2SC3356
Q4	Transistor	2SC3356
Q5	Transistor	2SA1359
Q6	Transistor	2SC2712 Y
Q7	Transistor	RN1404
Q8	Transistor	2SB1019
Q9	Transistor	2SC2712 Y
Q10	Transistor	2SC2712 Y
Q11	FET	2SK162
Q12	Transistor	RN1404
Q13	Transistor	2SA1359
Q14	Transistor	RN1404
Q15	Transistor	2SB909M
Q16	Transistor	RN1404
Q17	Transistor	RN1404
Q18	Transistor	RN1404
Q19	Transistor	2SB909M
Q20	Transistor	2SC3358
Q21	Transistor	2SC3586
Q22	Transistor	2SC2712 Y
Q23	FET	MGF-1202
Q24	Transistor	2SC2712 Y
Q25	Transistor	2SC2712 Y
Q26	Transistor	2SC2712 Y
Q27	Transistor	2SC2712 GR
Q28	Transistor	2SC3770 3
Q29	Transistor	2SC3770 3
Q30	FET	3SK121 Y
Q31	Transistor	2SC3356
Q32	Transistor	2SC3772 3
D1	Diode	1SS196
D2	Diode	1SS216
D3	Diode	1SS216
D4	Diode	1SS216
D5	Diode	1SS216
D6	Diode	1SS216
D7	Diode	1SS216
D8	Diode	1SS101
D9	Diode	1SS196
D10	Diode	1SS196
D11	Diode	1SS211
D13	Diode	15CD11
D14	Diode	1SS196
D15	Zener	RD4.3M B1
D16	Diode	1SS184
D17	Varicap	1SV166 T2B
D18	Diode	1SS196
D19	Diode	1SS226
D20	Diode	1SS196
D21	Diode	1SS196
D22	Diode	HSM88AS
D23	Diode	HSM88AS

[MAIN UNIT]

REF. NO.	DESCRIPTION	PART NO.	
D24	Zener	RD6.2M B2	
D25	Diode	1SS226	
D26	Diode	1SS187	
D27	Zener	RD5.6M B3	
FI1	Dielectric	EZF-GC70BT11	
FI2	Dielectric	EZF-GC70BT11	
FI3	Ceramic	CFW455E	
FI4	Crystal	17M15B	
X1	Crystal	CR191	
X2	Discriminator	CDB455C7A	
X3	Crystal	CR166	
X4	Crystal	CR240	
L1	Coil	MLF3216A 1R0M	
L2	Coil	LAL02TB 1R0	
L3	Coil	LR-168	
L4	Coil	LA-233	
L5	Coil	LAL02TB 1R0	
L6	Coil	LAL02TB 100K	
L7	Coil	LS-265	
L8	Coil	LAL03NA 121K	
L9	Coil	LAL03NA 101K	
L10	Coil	LS-272	
L11	Coil	LS-272	
L12	Coil	LS-265	
L13	Coil	LS-259	
L14	Coil	LS-259	
L15	Coil	LS-259	
L16	Coil	LS-259	
L17	Coil	LB-217	
L18	Coil	LS-259	
L19	Coil	LAL03NA R82M	
R1	Resistor	10kΩ	MCR10
R3	Resistor	10Ω	MCR10
R4	Resistor	150Ω	MCR10
R5	Resistor	10Ω	MCR10
R6	Resistor	270Ω	MCR10
R7	Resistor	18Ω	MCR10
R8	Resistor	270Ω	MCR10
R9	Resistor	10Ω	MCR10
R10	Resistor	150Ω	MCR10
R11	Resistor	10Ω	MCR10
R12	Resistor	100Ω	MCR10
R13	Resistor	6.8kΩ	MCR10
R14	Resistor	1kΩ	MCR10
R15	Resistor	270Ω	MCR10
R16	Resistor	18Ω	MCR10
R17	Resistor	270Ω	MCR10
R18	Resistor	10kΩ	MCR10
R19	Resistor	10kΩ	MCR10
R20	Resistor	10kΩ	MCR10
R21	Resistor	1kΩ	MCR10
R22	Resistor	100Ω	MCR10
R23	Resistor	1kΩ	MCR10
R24	Resistor	100Ω	MCR10
R25	Resistor	10kΩ	MCR10
R26	Resistor	3.3kΩ	MCR10
R27	Resistor	1kΩ	MCR10
R28	Resistor	180Ω	MCR10
R29	Resistor	3.3kΩ	MCR10
R30	Resistor	1kΩ	MCR10
R31	Resistor	180Ω	MCR10
R32	Resistor	270Ω	MCR10

[MAIN UNIT]

REF. NO.	DESCRIPTION	PART NO.	
R33	Resistor	18Ω	MCR10
R34	Resistor	270Ω	MCR10
R35	Resistor	15Ω	R50
R36	Resistor	CRH200R-02J4.7	
R37	Resistor	CRH100XR-02J2.2	
R38	Resistor	560Ω	MCR10
R39	Resistor	10kΩ	MCR10
R40	Resistor	47kΩ	MCR10
R41	Resistor	10kΩ	MCR10
R42	Resistor	100Ω	MCR10
R43	Resistor	2.2MΩ	MCR10
R44	Resistor	15kΩ	MCR10
R45	Resistor	56kΩ	MCR10
R46	Resistor	4.7kΩ	MCR10
R47	Trimmer	1kΩ	RH0421C13J09A
R48	Resistor	330Ω	MCR10
R49	Trimmer	2.2kΩ	RH0421CJ3J09A
R50	Resistor	1.2kΩ	MCR10
R51	Resistor	3.3kΩ	MCR10
R52	Resistor	8.2kΩ	MCR10
R53	Resistor	180kΩ	MCR10
R54	Resistor	2.7kΩ	MCR10
R55	Resistor	4.7kΩ	MCR10
R56	Resistor	100Ω	R25
R57	Resistor	47Ω	MCR10
R58	Resistor	470Ω	MCR10
R59	Resistor	1kΩ	MCR10
R60	Resistor	120Ω	R50
R62	Resistor	4.7kΩ	MCR10
R63	Resistor	2.2kΩ	MCR10
R64	Resistor	100Ω	MCR10
R65	Resistor	1.5kΩ	MCR10
R66	Resistor	470Ω	MCR10
R67	Resistor	1.5kΩ	MCR10
R69	Resistor	1kΩ	MCR10
R70	Resistor	2.2kΩ	MCR10
R71	Resistor	12kΩ	MCR10
R72	Resistor	120kΩ	MCR10
R73	Resistor	1kΩ	MCR10
R74	Resistor	10kΩ	MCR10
R75	Resistor	10kΩ	MCR10
R76	Resistor	10kΩ	MCR10
R77	Resistor	10kΩ	MCR10
R78	Resistor	1kΩ	MCR10
R79	Resistor	10kΩ	MCR10
R80	Resistor	1kΩ	MCR10
R81	Resistor	100kΩ	MCR10
R82	Resistor	33kΩ	MCR10
R83	Resistor	150Ω	MCR10
R84	Resistor	39Ω	MCR10
R85	Resistor	150Ω	MCR10
R86	Resistor	220Ω	MCR10
R87	Resistor	22kΩ	MCR10
R88	Resistor	6.8kΩ	MCR10
R89	Resistor	10Ω	MCR10
R90	Resistor	1.5kΩ	MCR10
R91	Resistor	10Ω	MCR10
R92	Resistor	68Ω	MCR10
R93	Resistor	100kΩ	MCR10
R94	Resistor	47kΩ	MCR10
R95	Resistor	47kΩ	MCR10
R96	Resistor	2.2kΩ	MCR10
R97	Resistor	100kΩ	MCR10
R98	Resistor	100kΩ	MCR10
R99	Resistor	47kΩ	MCR10
R100	Resistor	100kΩ	MCR10
R101	Array	RKM6L J 104	
R102	Resistor	100kΩ	MCR10
R103	Resistor	10kΩ	MCR10
R104	Resistor	47kΩ	MCR10
R105	Resistor	47kΩ	MCR10
R106	Resistor	2.2kΩ	MCR10
R107	Resistor	390Ω	MCR10
R108	Thermistor	33D28	
R109	Trimmer	1kΩ	RH0421C13J09A

[MAIN UNIT]

REF. NO.	DESCRIPTION	PART NO.	
R110	Resistor	1.5kΩ	MCR10
R111	Resistor	47kΩ	MCR10
R112	Resistor	1.5kΩ	MCR10
R113	Resistor	1kΩ	MCR10
R114	Resistor	22kΩ	MCR10
R115	Resistor	1.5kΩ	MCR10
R116	Resistor	56kΩ	MCR10
R117	Resistor	100Ω	MCR10
R118	Resistor	18kΩ	MCR10
R119	Resistor	470Ω	MCR10
R120	Resistor	330kΩ	MCR10
R121	Resistor	5.6kΩ	MCR10
R122	Resistor	100Ω	MCR10
R123	Resistor	100Ω	MCR10
R124	Resistor	470Ω	MCR10
R125	Resistor	22kΩ	MCR10
R126	Resistor	4.7kΩ	MCR10
R127	Resistor	100Ω	MCR10
R128	Resistor	220Ω	MCR10
R129	Resistor	10kΩ	MCR10
R130	Resistor	220Ω	MCR10
R131	Resistor	22kΩ	MCR10
R132	Resistor	6.8kΩ	MCR10
R133	Resistor	150Ω	MCR10
R134	Resistor	39Ω	R20
R135	Resistor	150Ω	MCR10
R136	Resistor	1.8kΩ	MCR10
R137	Resistor	100Ω	MCR10
R138	Resistor	4.7kΩ	MCR10
R139	Resistor	1kΩ	MCR10
R140	Resistor	10kΩ	MCR10
R141	Resistor	47kΩ	MCR10
R142	Trimmer	10kΩ	RH0421C14J0KA
R143	Resistor	120Ω	MCR50
R144	Resistor	470Ω	MCR10
R145	Resistor	330Ω	R20
C1	Ceramic	0.001μF	GRM40
C2	Electrolytic	100μF	10V MS7
C3	Tantalum	1μF	16V SV
C4	Ceramic	0.001μF	GRM40
C5	Ceramic	22pF	GRM40
C6	Ceramic	22pF	GRM40
C7	Cylinder	UP125	SL 2R2K
C8	Ceramic	4pF	GRM40
C9	Ceramic	2pF	GRM40
C10	Ceramic	4pF	GRM40
C11	Ceramic	1pF	GRM40
C12	Ceramic	4pF	GRM40
C13	Ceramic	22pF	GRM40
C14	Ceramic	470pF	GRM40
C15	Ceramic	120pF	GRM40
C16	Ceramic	22pF	GRM40
C17	Ceramic	2pF	GRM40 CH
C18	Cylinder	UP125	SL 220J
C19	Ceramic	4pF	GRM40
C20	Ceramic	470pF	GRM40
C21	Ceramic	4pF	GRM40
C22	Ceramic	470pF	GRM40
C23	Ceramic	22pF	GRM40
C24	Ceramic	470pF	GRM40
C25	Ceramic	3pF	GRM40
C26	Ceramic	120pF	GRM40
C27	Ceramic	470pF	GRM40
C28	Ceramic	2pF	GRM40
C29	Ceramic	120pF	GRM40
C30	Ceramic	470pF	GRM40
C31	Ceramic	0.5pF	GRM40
C32	Ceramic	3pF	GRM40
C33	Ceramic	470pF	GRM40
C34	Ceramic	470pF	GRM40
C35	Tantalum	3.3μF	10V SV
C36	Ceramic	470pF	GRM40
C37	Ceramic	470pF	GRM40

[MAIN UNIT]

REF. NO.	DESCRIPTION	PART NO.
C38	Tantalum	10μF 16V SV
C39	Ceramic	470pF GRM40
C40	Ceramic	470pF GRM40
C41	Tantalum	10μF 16V SV
C42	Ceramic	470pF GRM40
C43	Ceramic	470pF GRM40
C44	Tantalum	10μF 16V SV
C45	Ceramic	470pF GRM40
C46	Ceramic	470pF GRM40
C47	Tantalum	10μF 16V SV
C48	Tantalum	0.1μF 35V SV
C49	Ceramic	2pF GRM40
C50	Ceramic	470pF GRM40
C51	Electrolytic	10μF 16V MS7
C52	Ceramic	470pF GRM40
C53	Ceramic	470pF GRM40
C54	Ceramic	470pF GRM40
C55	Ceramic	470pF GRM40
C56	Ceramic	470pF GRM40
C57	Ceramic	15pF GRM40
C58	Ceramic	0.5pF GRM40 CH
C59	Ceramic	470pF GRM40
C60	Ceramic	470pF GRM40
C61	Ceramic	470pF GRM40
C62	Ceramic	470pF GRM40
C63	Ceramic	470pF GRM40
C64	Ceramic	0.1μF GRM40 F
C65	Electrolytic	470μF 16V SS
C66	Electrolytic	2200μF 16V SS
C67	Feed Through	TF318-450E 102 GMV 50V
C68	Barrier Layer	0.1μF 16V
C69	Tantalum	3.3μF 35V DN
C70	Ceramic	0.1μF GRM40 F
C71	Ceramic	470pF GRM40
C72	Electrolytic	47μF 6.3V MS7
C73	Electrolytic	10μF 16V MS7
C74	Ceramic	470pF GRM40
C75	Electrolytic	10μF 16V MS5
C76	Ceramic	0.0022μF GRM40
C77	Ceramic	0.0022μF GRM40
C78	Ceramic	0.0022μF GRM40
C79	Ceramic	0.01μF GRM40 F
C80	Tantalum	10μF 16V SV
C81	Tantalum	10μF 16V DN
C82	Tantalum	1μF 35V DN
C83	Ceramic	470pF GRM40
C84	Tantalum	4.7μF 10V SV
C85	Tantalum	4.7μF 10V SV
C86	Ceramic	470pF GRM40
C87	Ceramic	18pF GRM40
C88	Ceramic	12pF GRM40
C89	Ceramic	470pF GRM40
C90	Ceramic	470pF GRM40
C91	Ceramic	2pF GRM40
C92	Ceramic	470pF GRM40
C93	Ceramic	2pF GRM40
C94	Ceramic	470pF GRM40
C95	Ceramic	0.001μF GRM40
C96	Ceramic	2pF GRM40
C97	Ceramic	470pF GRM40
C98	Ceramic	2pF GRM40
C99	Ceramic	2pF GRM40
C100	Ceramic	0.5pF GRM40
C101	Ceramic	0.001μF GRM40
C102	Tantalum	1μF 16V SV
C103	Ceramic	0.5pF GRM40
C104	Ceramic	470pF GRM40
C105	Ceramic	470pF GRM40
C106	Ceramic	0.001F GRM40
C107	Ceramic	0.001F GRM40
C108	Ceramic	470pF GRM40
C109	Ceramic	470pF GRM40
C110	Ceramic	0.001μF GRM40
C111	Ceramic	0.001μF GRM40
C112	Ceramic	0.5pF GRM40

[MAIN UNIT]

REF. NO.	DESCRIPTION	PART NO.
C113	Ceramic	6pF GRM40
C114	Ceramic	0.001μF GRM40
C115	Ceramic	0.1μF GRM40 F
C116	Cylinder	UP125 SL 101J
C117	Ceramic	220pF GRM40
C118	Ceramic	100pF GRM40
C119	Ceramic	8pF GRM40 UJ
C120	Trimmer	ECR-GA010A30
C121	Ceramic	22pF GRM40 CH
C121	Ceramic	22pF GRM40 UJ
C122	Ceramic	470pF GRM40
C123	Tantalum	1μF 16V SV
C124	Ceramic	0.001μF GRM40
C125	Tantalum	3.3μF 16V SV
C126	Ceramic	0.001μF GRM40
C127	Ceramic	0.001μF GRM40
C128	Ceramic	0.1μF GRM40 F
C129	Ceramic	0.1μF GRM40 F
C130	Ceramic	0.1μF GRM40 F
C131	Ceramic	150pF GRM40
C132	Ceramic	0.1μF GRM40 F
C133	Ceramic	0.01μF GRM40 F
C134	Ceramic	82pF GRM40
C135	Tantalum	0.1μF 35V SV
C136	Ceramic	0.1μF GRM40 F
C137	Electrolytic	4.7μF 25V MS7
C138	Ceramic	5pF GRM40
C139	Ceramic	47pF GRM40
C140	Tantalum	0.1μF 35V SV
C141	Ceramic	120pF GRM40
C142	Ceramic	0.1μF GRM40 F
C143	Ceramic	0.001μF GRM40
C144	Ceramic	0.001μF GRM40
C145	Ceramic	470pF GRM40
C146	Ceramic	0.0015μF GRM40
C147	Ceramic	47pF GRM40
C148	Ceramic	0.0015μF GRM40
C149	Ceramic	33pF GRM40
C150	Ceramic	0.001μF GRM40
C151	Electrolytic	4.7μF 25V MS7
C152	Ceramic	0.0047μF GRM40
C153	Ceramic	0.001μF GRM40
C154	Ceramic	0.0047μF GRM40
C155	Ceramic	0.0047μF GRM40
C156	Ceramic	0.001μF GRM40
C157	Ceramic	56pF GRM40
C158	Ceramic	22pF GRM40
C159	Ceramic	4pF GRM40
C160	Ceramic	82pF GRM40
C161	Ceramic	22pF GRM40
C162	Ceramic	470pF GRM40
C163	Ceramic	0.001μF GRM40
C164	Ceramic	0.001μF GRM40
C165	Ceramic	22pF GRM40
C166	Ceramic	5pF GRM40
C167	Ceramic	8pF GRM40
C168	Ceramic	0.5pF GRM40
C169	Ceramic	8pF GRM40
C170	Ceramic	0.5pF GRM40
C171	Ceramic	12pF GRM40
C172	Ceramic	470pF GRM40
C173	Ceramic	0.001μF GRM40
C174	Ceramic	5pF GRM40
C175	Ceramic	6pF GRM40
C176	Ceramic	9pF GRM40
C177	Ceramic	1pF GRM40
C178	Ceramic	12pF GRM40
C179	Ceramic	1pF GRM40
C180	Ceramic	15pF GRM40
C181	Ceramic	470pF GRM40
C182	Ceramic	0.001μF GRM40
C183	Ceramic	39pF GRM40
C184	Ceramic	47pF GRM40
C185	Trimmer	ECR-GA015E30
C186	Ceramic	22pF GRM40

[MAIN UNIT]

REF. NO.	DESCRIPTION	PART NO.	
C187	Ceramic	470pF	GRM40
C188	Tantalum	4.7μF	10V SV
C189	Ceramic	470pF	GRM40
C190	Ceramic	470pF	GRM40
C191	Ceramic	470pF	GRM40
C192	Ceramic	470pF	GRM40
C193	Ceramic	470pF	GRM40
C194	Ceramic	470pF	GRM40
C195	Ceramic	470pF	GRM40
C196	Ceramic	0.001μF	GRM40
C197	Ceramic	0.1μF	GRM40 F
C198	Ceramic	470pF	GRM40
C199	Ceramic	2pF	GRM40
C200	Ceramic	1pF	GRM42-6 CH
C204	Ceramic	47pF	GRM40
C205	Ceramic	0.001μF	GRM40
C206	Ceramic	2pF	GRM40
C207	Ceramic	0.1μF	GRM40 F
C208	Ceramic	470pF	GRM40
C209	Ceramic	470pF	GRM40
C210	Ceramic	0.1μF	GRM40 F
C211	Ceramic	470pF	GRM40
J1	Connector	3024-15AH	
EP3	P.C. Board	B-1492C	
EP4	P.C. Board	B-1529B	
W1	Jumper	JPW-02A	
W2	Jumper	JPW-02A	
W3	Jumper	JPW-02A	
W5	Jumper	MCR10-JPW	
W6	Jumper	MCR10-JPW	
W7	Jumper	MCR10-JPW	
W8	Jumper	JPW-02A	
W9	Jumper	JPW-02A	
W10	Jumper	JPW-01 R-01	
W11	Jumper	MCR10-JPW	

[VCO UNIT]

REF. NO.	DESCRIPTION	PART NO.	
Q1	FET	2SK125	
Q2	Transistor	2SC3356	
D1	Varicap	1T25	
D2	Varicap	1T25	
D3	Varicap	1T25	
D4	Varicap	1T25	
L1	Coil	LW-19	
L2	Coil	LQN5N 1R0M	
L3	Coil	LQN5N 1R0M	
L4	Coil	LA222	
R1	Resistor	22kΩ	R20
R2	Resistor	470Ω	MCR10
R3	Resistor	1kΩ	R20
R4	Resistor	470Ω	MCR10
R5	Resistor	15Ω	MCR10
R6	Resistor	10Ω	MCR10

[VCO UNIT]

REF. NO.	DESCRIPTION	PART NO.	
R7	Resistor	220Ω	MCR10
R8	Resistor	4.7kΩ	MCR10
R9	Resistor	1.5kΩ	MCR10
R10	Resistor	100Ω	MCR10
C1	Ceramic	470pF	GRM40
C2	Tantalum	0.47pF	25V SV
C3	Tantalum	10pF	16V SV
C4	Ceramic	470pF	GRM40
C5	Ceramic	3pF	GRM40
C6	Ceramic	3pF	GRM40
C7	Ceramic	470pF	GRM40
C8	Ceramic	470pF	GRM40
C9	Ceramic	1pF	GRM40
C10	Ceramic	470pF	GRM40
C11	Ceramic	0.001pF	GRM40
C12	Ceramic	10pF	GRM40
C13	Ceramic	4pF	GRM40
C14	Ceramic	4pF	GRM40
EP1	P.C. Board	B-1493C	
W1	Jumper	JPW-01 R-01	
W2	Jumper	JPW-01 R-01	

[FILTER A B C UNIT]

REF. NO.	DESCRIPTION	PART NO.	
C1	Ceramic	3pF	GRM40
C2	Ceramic	GRM40 SL 1R5C 50PT	
C3	Ceramic	3pF	GRM40
C4	Ceramic	0.5pF	GRM40
C5	Ceramic	0.5pF	GRM40
C6	Ceramic	3pF	GRM40
C7	Ceramic	0.5pF	GRM40
C8	Ceramic	0.5pF	GRM40
C9	Ceramic	GRM40 SL 1R5C 50PT	
C11	Ceramic	4pF	GRM40
C12	Ceramic	8pF	GRM40
C13	Ceramic	2pF	GRM40
C14	Ceramic	33pF	GRM40
C15	Ceramic	4pF	GRM40
C16	Ceramic	GRM40 SL 1R5C 50PT	
C17	Ceramic	GRM40 SL 1R5C 50PT	
C18	Ceramic	3pF	GRM40
C19	Ceramic	0.5pF	GRM40
C20	Ceramic	2pF	GRM40
EP1	P.C. Board	B-1121B	
EP2	P.C. Board	B-1122B	
W1	Jumper	MCR10-JPW	

[DC-DC UNIT]

REF. NO.	DESCRIPTION	PART NO.		
IC1	IC	TL499ACP		
Q1	Transistor	2SC1645 B		
D1	Zener	RD20E B2		
L1	Coil	S0971136-101K		
L2	Coil	FL5H 101K		
R1	Resistor	1kΩ	ELR20	
R2	Resistor	220Ω	MCR10	
R3	Resistor	220Ω	MCR10	
R4	Resistor	220Ω	MCR10	
R5	Resistor	82kΩ	MCR10	
R6	Resistor	4.7kΩ	MCR10	
R7	Resistor	470Ω	MCR10	
C1	Ceramic	470pF	GRM40	
C2	Electrolytic	4.7μF	25V	MS7
C3	Electrolytic	4.7μF	25V	MS7
C4	Electrolytic	4.7μF	25V	MS7
C5	Electrolytic	47μF	25V	MS7
C6	Tantalum	0.1μF	35V	DN
C7	Electrolytic	100μF	6.3V	MS7
C8	Electrolytic	330μF	6.3V	MS9
C9	Electrolytic	10μF	16V	MS7
EP1	P.C. Board	B-1558A		

OPTIONS

TABLE OF CONTENTS

SECTION 1 VOLTAGE DIAGRAMS

1-1 CF-11 COOLING FAN UNIT

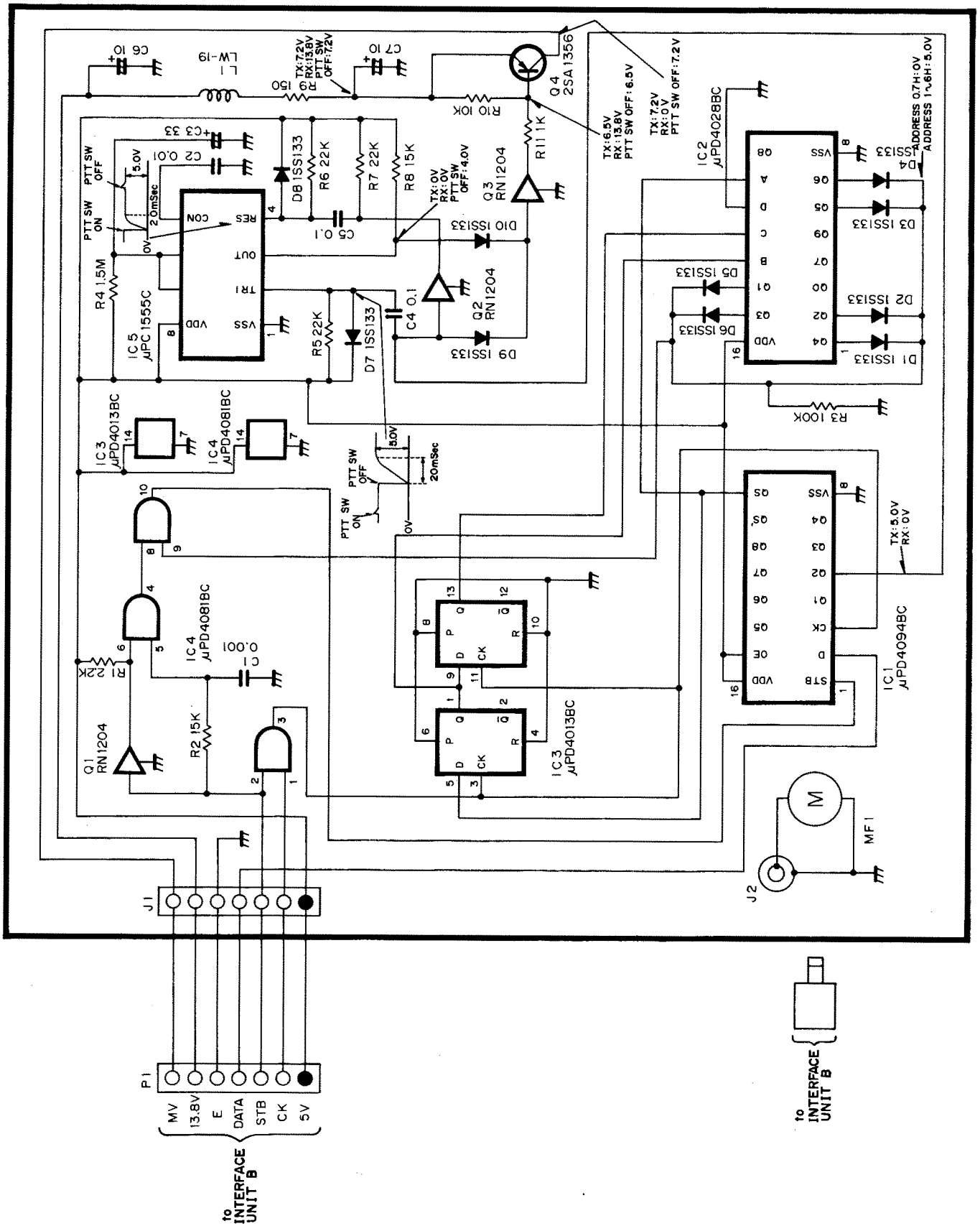

1-2 UT-28 DIGITAL CODE SQUELCH UNIT

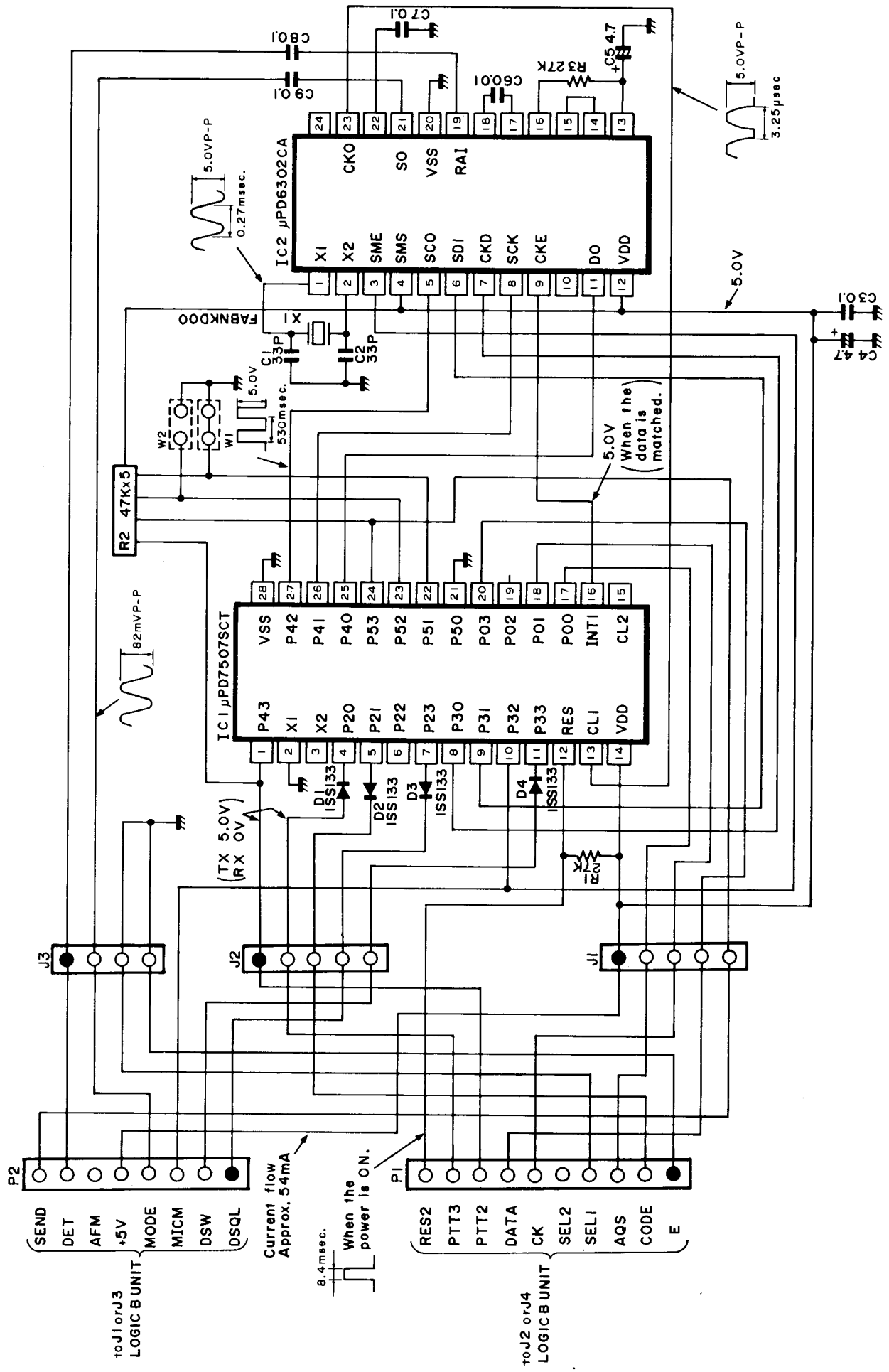

1-3 UT-29 TONE SQUELCH UNIT

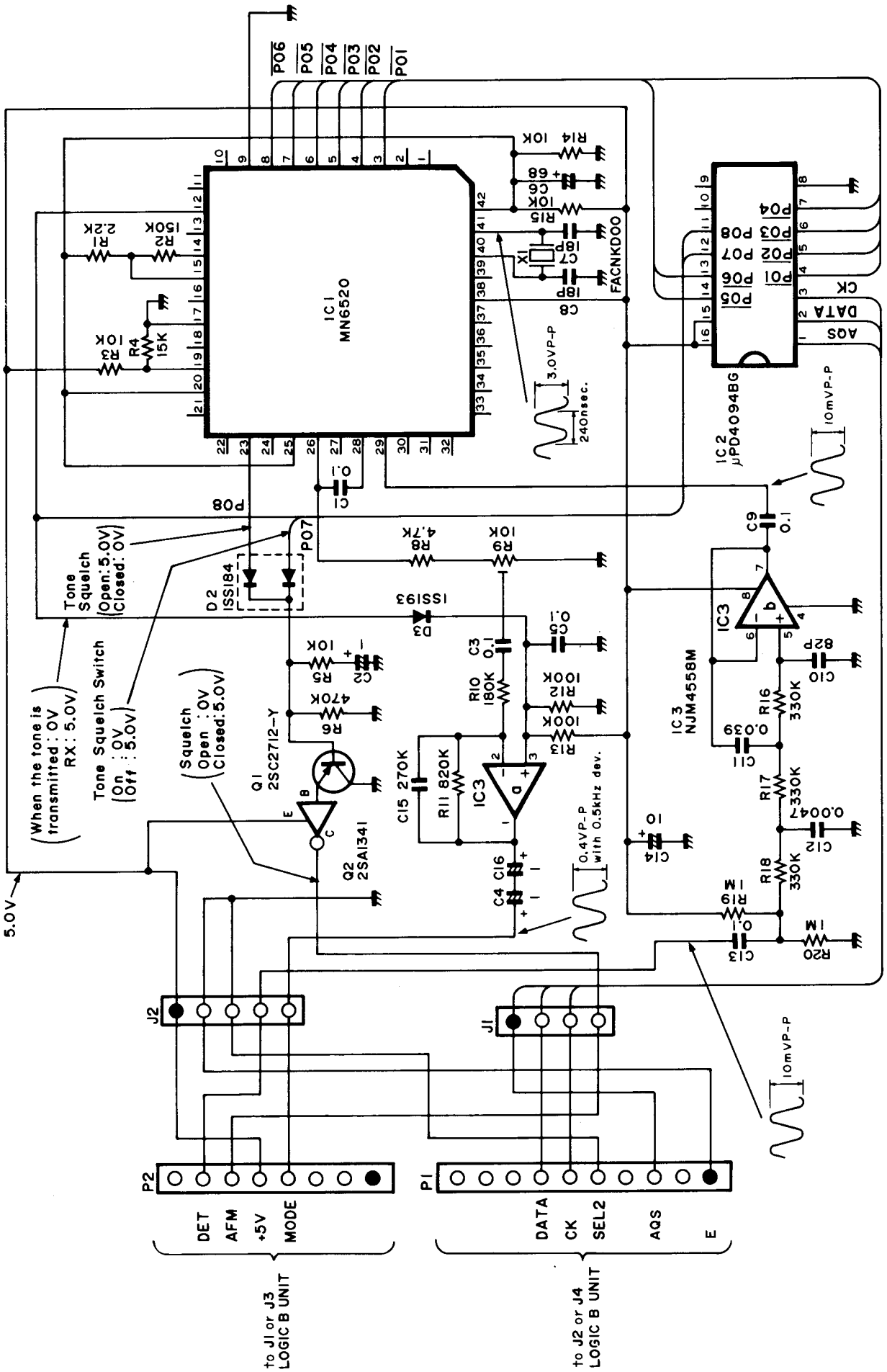

IC-900A/E SCHEMAT

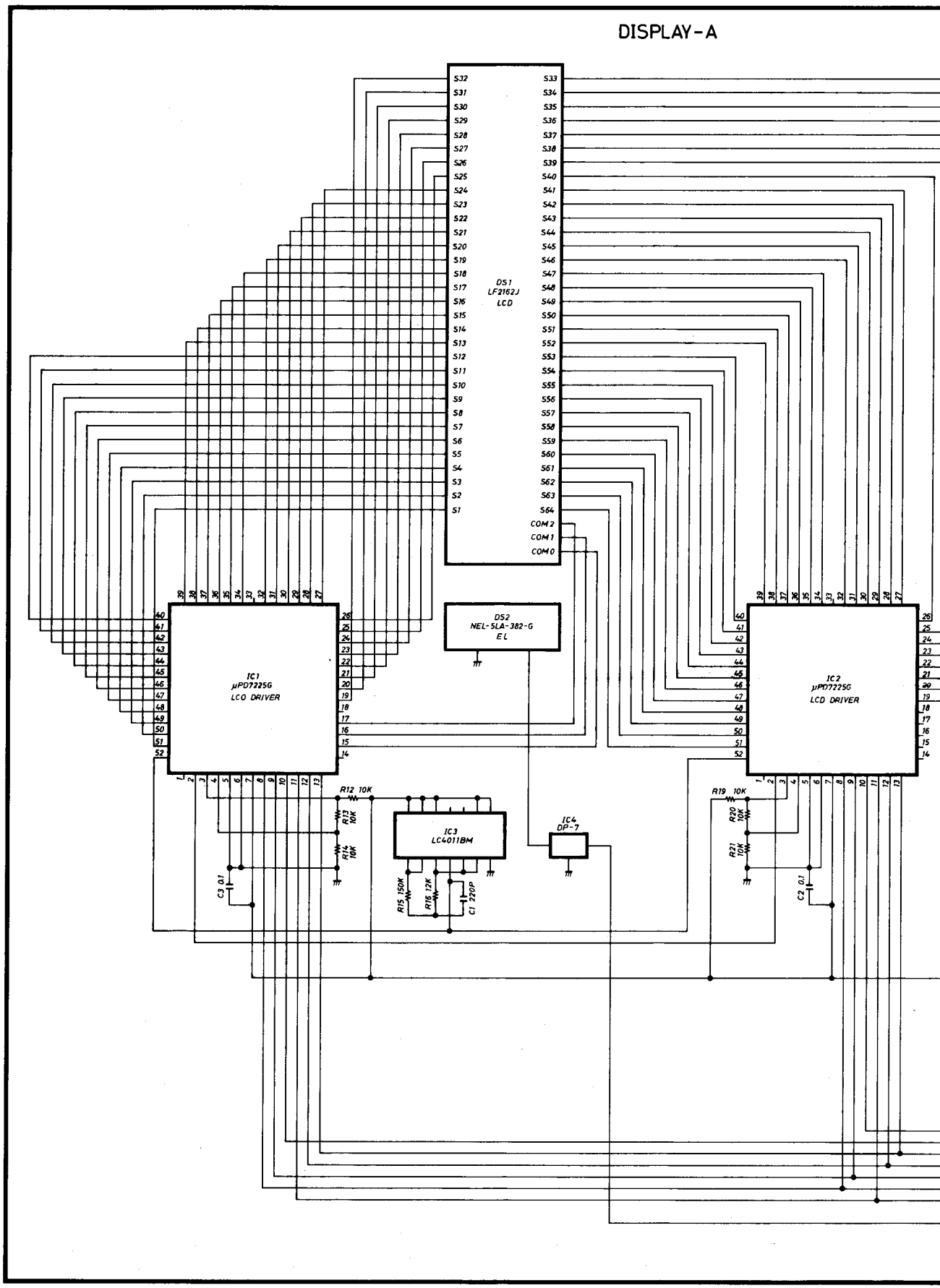

C DIAGRAM

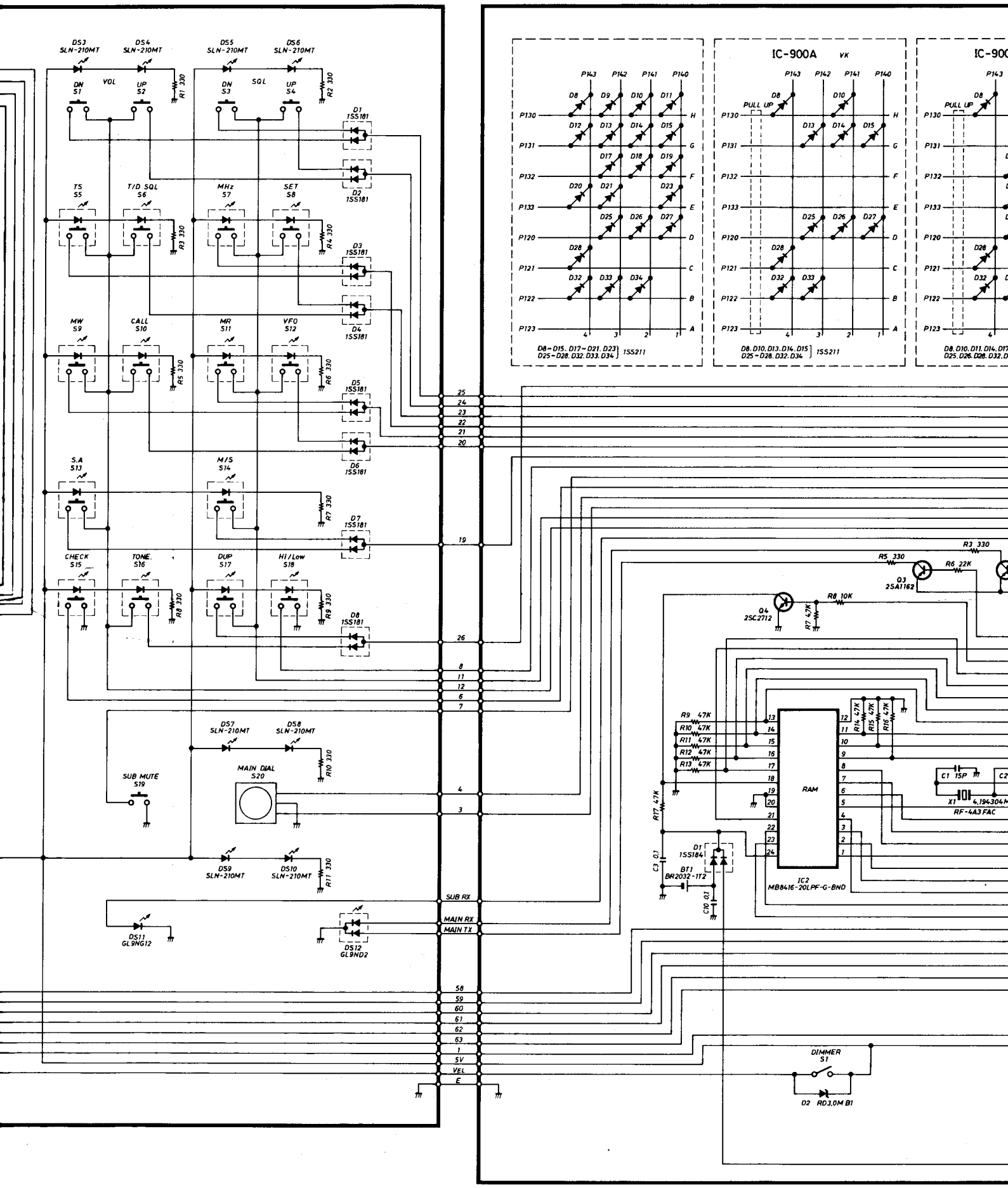
DS3 SLN-210MT
DS4 SLN-210MT
DS5 SLN-210MT
DS6 SLN-210MT
DN S1
VOL
UP S2
DN S3
SQL
UP S4
R1 330
R2 330
D1 1SS181
D2 1SS181
TS S5
T/D SQL S6
MHz S7
SET S8
R3 330
R4 330
D3 1SS181
D4 1SS181
MW S9
CALL S10
MR S11
VFO S12
R5 330
R6 330
D5 1SS181
D6 1SS181
S.A S13
M/S S14
R7 330
D7 1SS181
CHECK S15
TONE S16
DUP S17
HI/Low S18
R8 330
R9 330
D8 1SS181
DS7 SLN-210MT
DS8 SLN-210MT
R10 330
SUB MUTE S19
MAIN DIAL S20
DS9 SLN-210MT
DS10 SLN-210MT
R11 330
DS11 GL9NG12
DS12 GL9ND2
SUB RX
MAIN RX
MAIN TX
IC-900A VK
PULL UP
D8~D15, D17~D21, D23, D25~D28, D32, D33, D34 1SS211
D8, D10, D13, D14, D15, D25~D28, D32, D34 1SS211
R3 330
R5 330
R6 22K
Q3 2SA1162
Q4 2SC2712
R8 10K
R7 47K
R9 47K
R10 47K
R11 47K
R12 47K
R13 47K
R14 47K
R15 47K
R16 47K
RAM
C1 15P
X1 4.194304M
RF-4A3 FAC
R17 47K
C3 0.1
D1 1SS184
BT1 BR2032-1T2
C10 0.1
IC2 MB8416-20LPF-G-BND
DIMMER S1
D2 RD3.0M B1

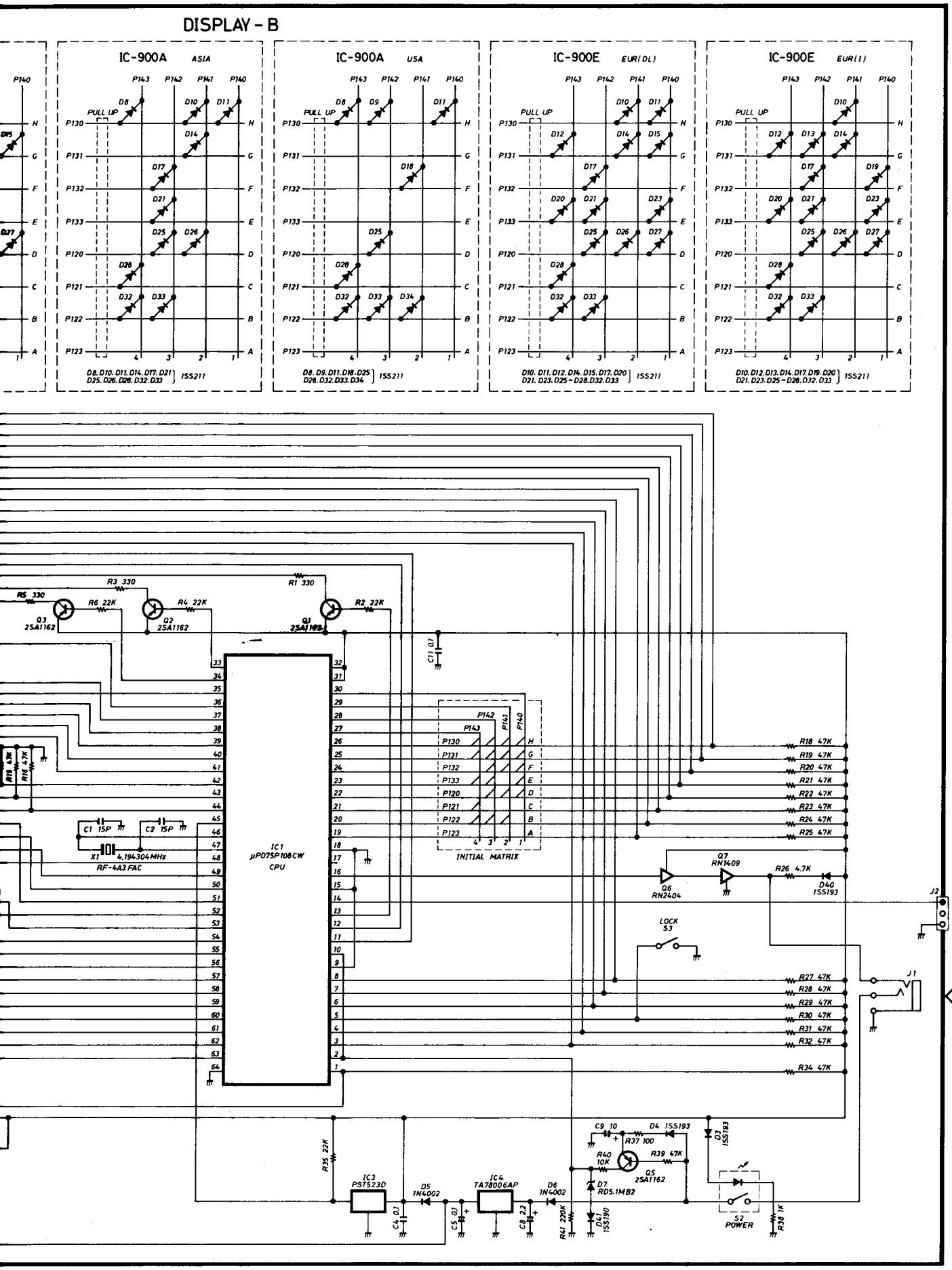
DISPLAY - B
IC-900A ASIA
IC-900A USA
IC-900E EUR(DL)
IC-900E EUR(I)
PULL UP
D8, D10, D11, D14, D17, D21, D25, D26, D28, D32, D33 1SS211
D8, D9, D11, D18, D25, D28, D32, D33, D34 1SS211
D10, D11, D12, D14, D15, D17, D20, D21, D23, D25~D28, D32, D33 1SS211
D10, D12, D13, D14, D17, D19, D20, D21, D23, D25~D28, D32, D33 1SS211
IC1 μPD75P108CW CPU
INITIAL MATRIX
X1 4.194304MHz RF-4A3FAC
IC3 PST523D
IC4 TA78006AP
S2 POWER
S3 LOCK
J1
J2
P1

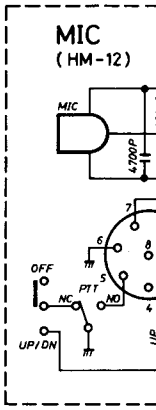
MIC
(HM-12)
OFF
PTT
NC
NO
UP/DN

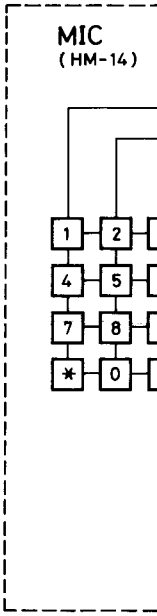
MIC
(HM-14)

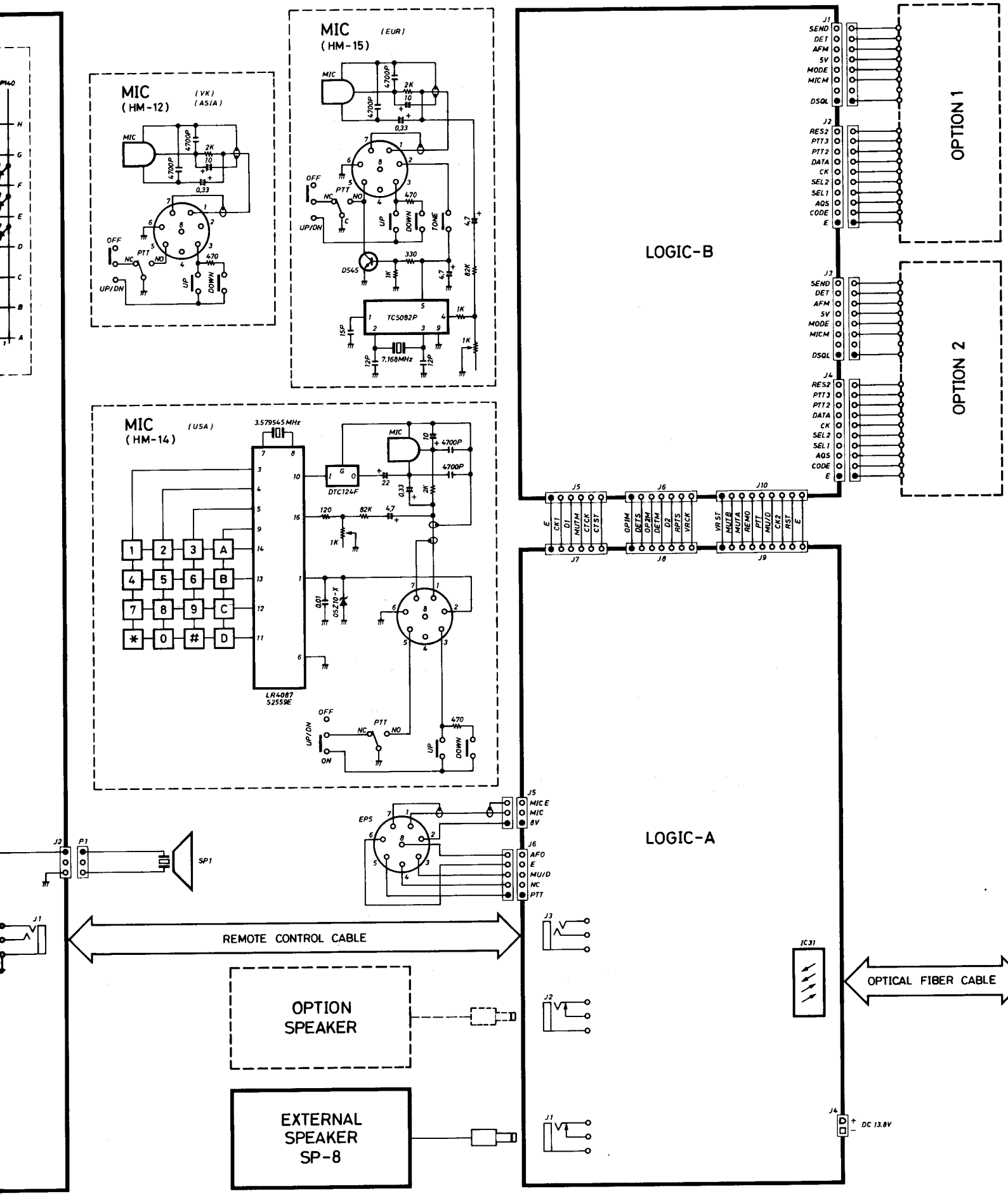

ICOM INCORPORATED

To upgrade
be subject

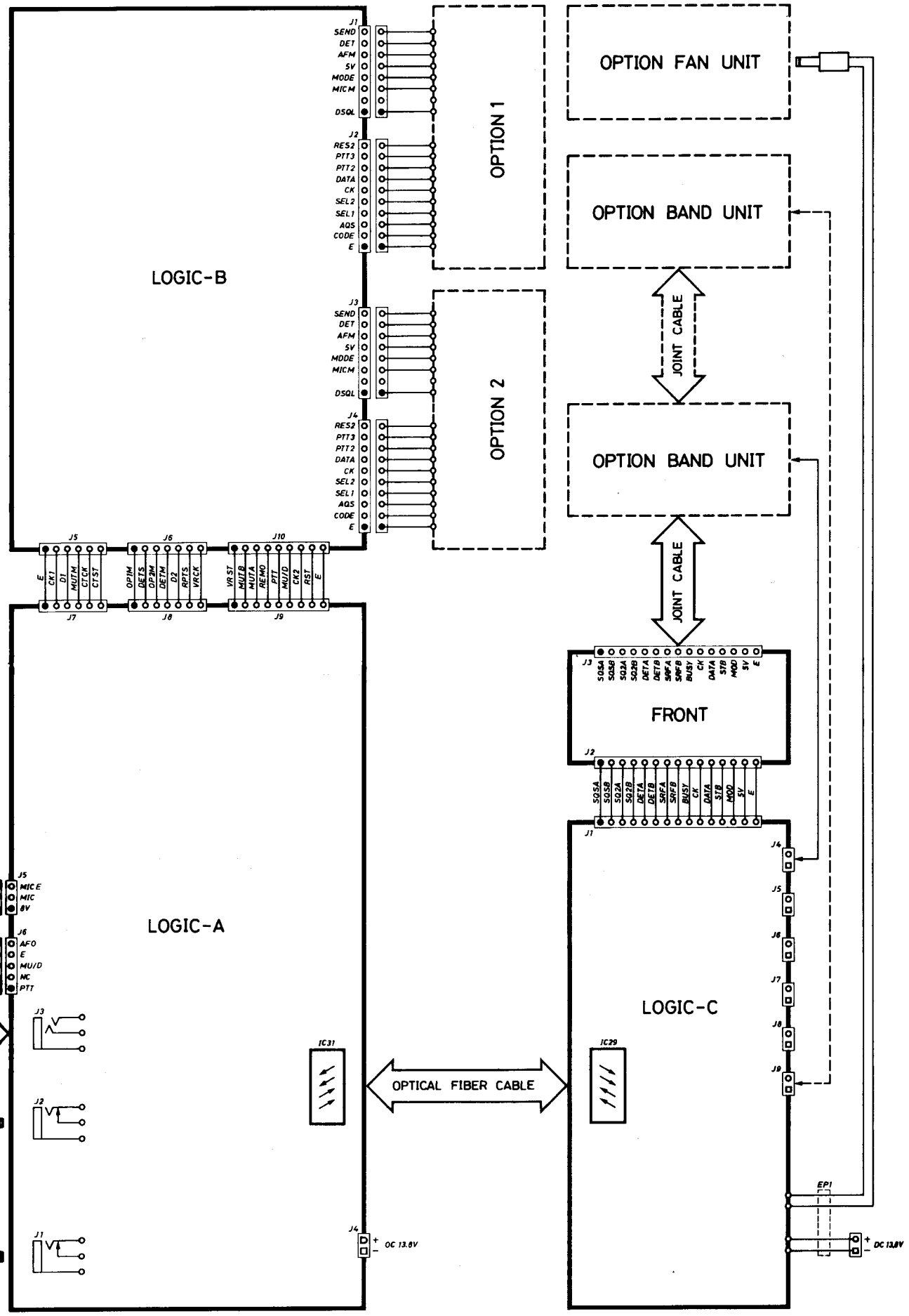

To upgrade quality, some components may be subject to change without notice.

LOGIC-B

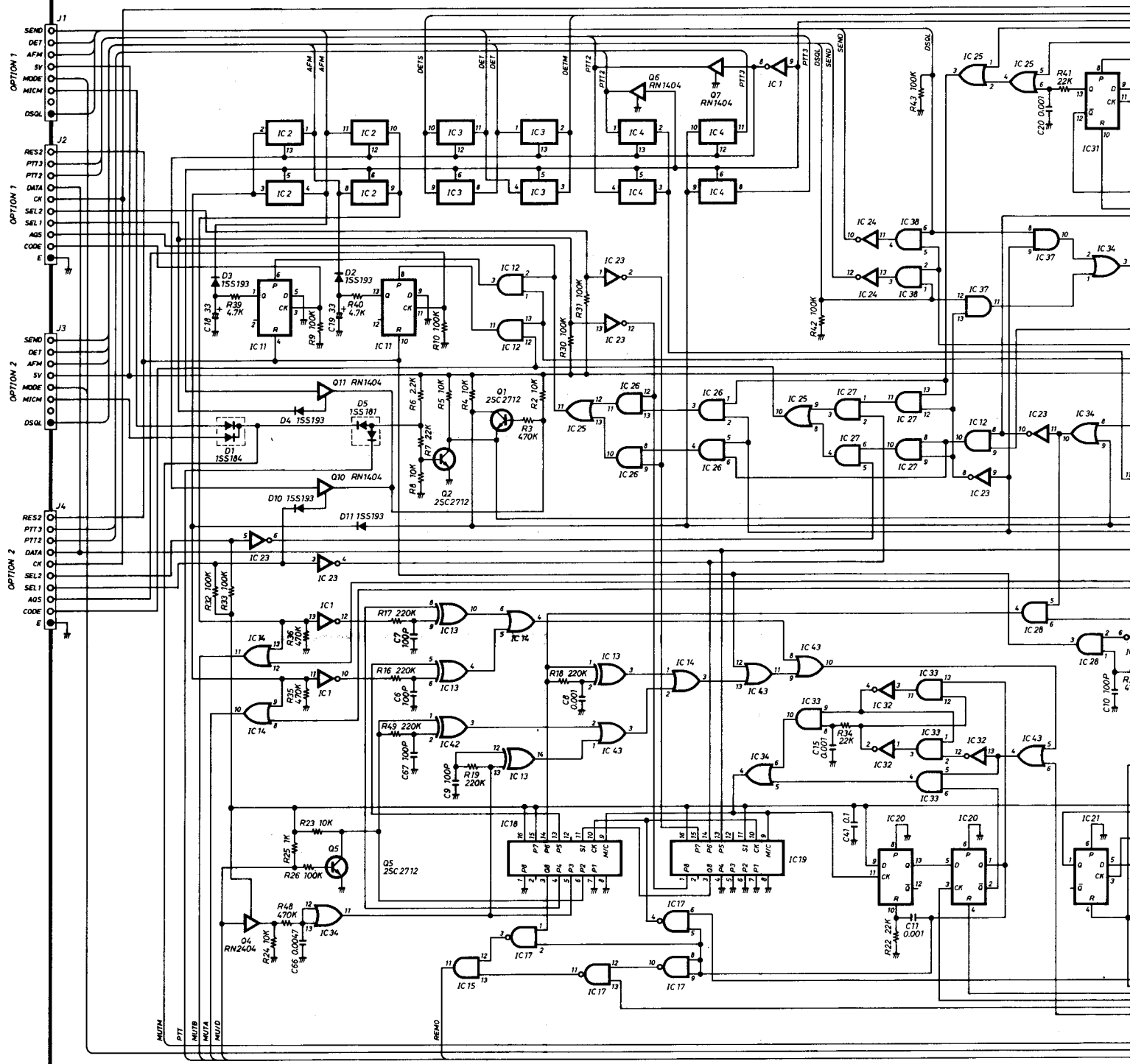

C23 0.1	IC 1	C24 0.1	IC 2	C25 0.1	IC 3	C26 0.1	IC 4	C27 0.1	IC 5	C28 0.1	IC 6	C29 0.1	IC 7	C30 0.1	IC 8	C32 0.1	IC 10	C33 0.1	IC 11	C43 0.1	IC 21	C44 0.1	IC 22
C45 0.1	IC 23	C46 0.1	IC 24	C47 0.1	IC 25	C48 0.1	IC 26	C49 0.1	IC 27	C50 0.1	IC 28	C51 0.1	IC 29	C52 0.1	IC 30	C59 0.1	IC 38						

IC 1	μPD4584BG	IC 11	LC4013BM	IC 21	LC4013BM	IC 31	LC4013BM	IC 41	μPD4094BG
IC 2	LC4066BM	IC 12	LC4081BM	IC 22	μPD4520BG	IC 32	LC4069UBM	IC 42	μPD4030BG
IC 3	LC4066BM	IC 13	μPD4030BG	IC 23	LC4069UBM	IC 33	LC4081BM	IC 43	μPD4071BG
IC 4	LC4066BM	IC 14	μPD4071BG	IC 24	LC4069UBM	IC 34	μPD4071BG	IC 44	μPD4520BG
IC 5	μPD4520BG	IC 15	LC4081BM	IC 25	μPD4071BG	IC 35	LC4069UBM		
IC 6	LC4081BM	IC 16	μPD4042BG	IC 26	LC4081BM	IC 36	LC4013BM		
IC 7	LC4081BM	IC 17	LC4011BM	IC 27	LC4081BM	IC 37	LC4081BM		
IC 8	LC4081BM	IC 18	μPD4021BC	IC 28	LC4081BM	IC 38	LC4081BM		
IC 9	μPD4094BG	IC 19	μPD4021BC	IC 29	μPD4520BG	IC 39	μPD4538BG		
IC 10	LC4013BM	IC 20	LC4013BM	IC 30	LC4081BM	IC 40	LC4081BM		

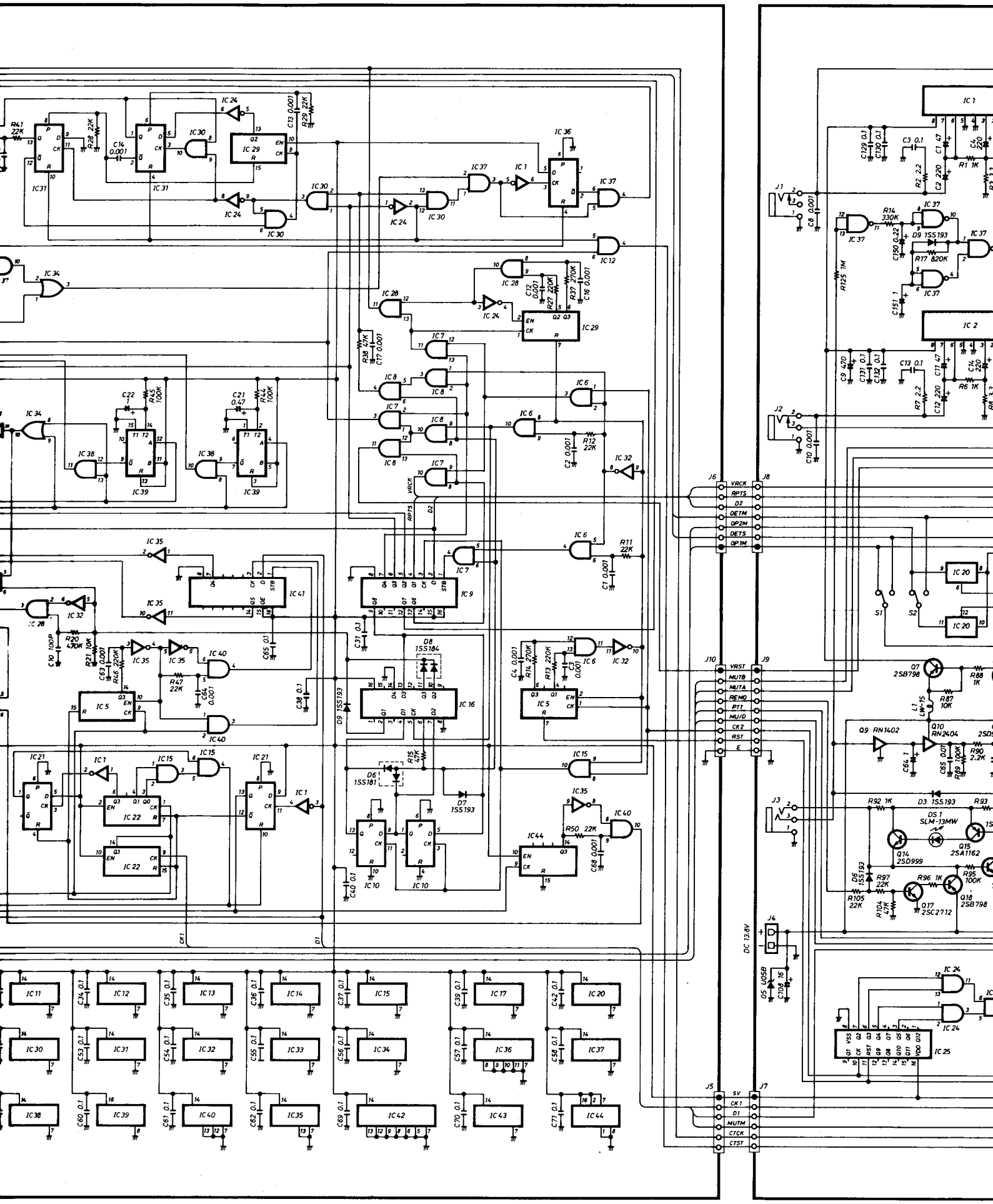
IC 1
IC 2
IC 5
IC 6
IC 7
IC 8
IC 9
IC 10
IC 11
IC 12
IC 13
IC 14
IC 15
IC 16
IC 17
IC 20
IC 21
IC 22
IC 24
IC 25
IC 28
IC 29
IC 30
IC 31
IC 32
IC 34
IC 35
IC 36
IC 37
IC 38
IC 39
IC 40
IC 41
IC 42
IC 43
IC 44
J1
J2
J3
J4
J5
J6
J7
J8
J9
J10
VRCK
RPTS
D2
DETM
OP2M
DETS
OP1M
VRST
MUTB
MUTA
REMO
PTT
MUID
CK2
RST
E
5V
CK1
D1
MUTM
CTCK
CTST
DC 13.8V
S1
S2
Q7 2SB798
Q9 RN1402
Q10 RN2404
Q14 2SD999
Q15 2SA1162
Q17 2SC2712
Q18 2SB798
D8 1SS184
D6 1SS181
D7 1SS193
D9 1SS193
D3 1SS193
D5 U05B
DS 1 SLM-13MW

LOGIC-A

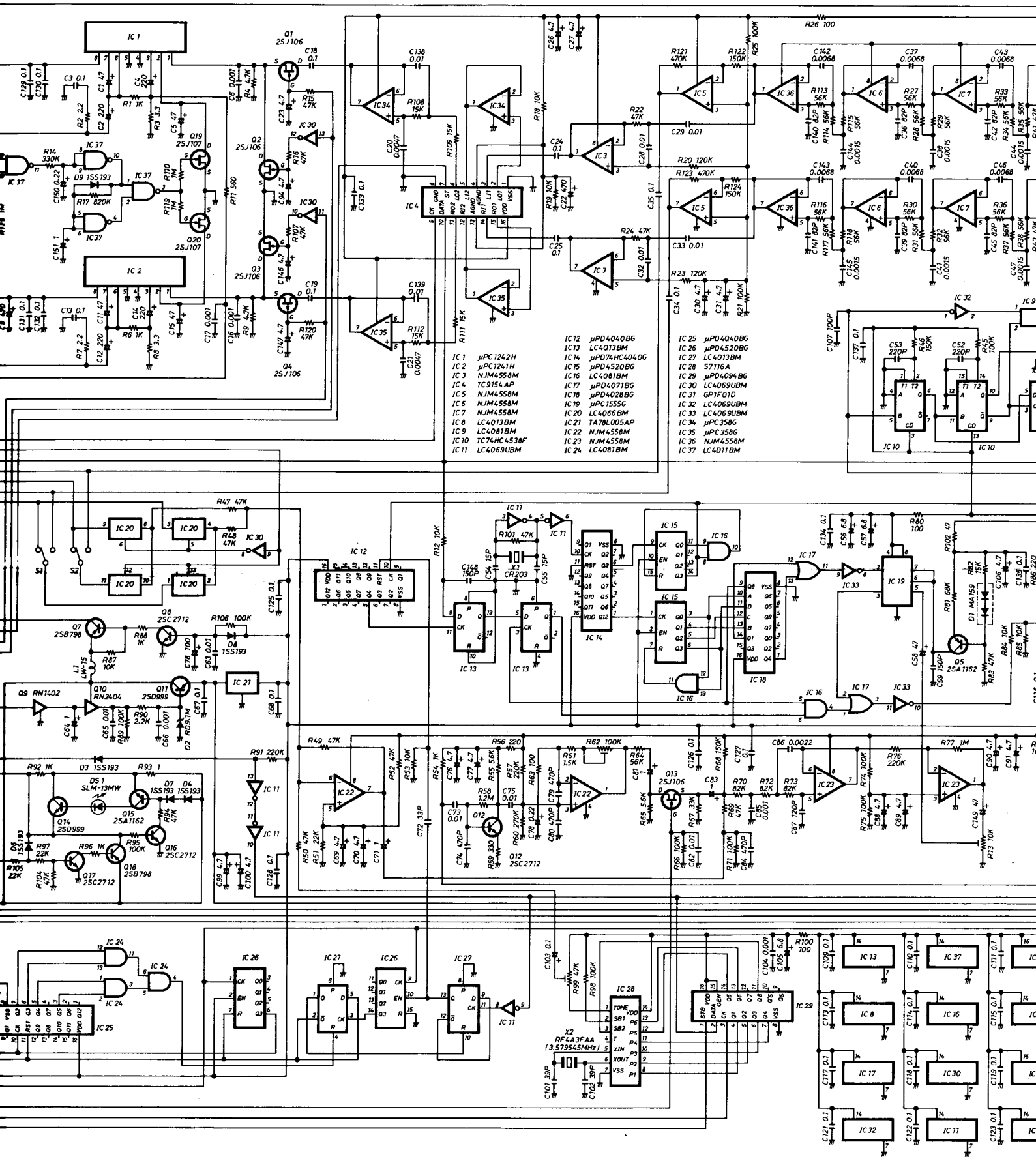
IC 1 μPC1242H
IC 2 μPC1241H
IC 3 NJM4558M
IC 4 TC9154AP
IC 5 NJM4558M
IC 6 NJM4558M
IC 7 NJM4558M
IC 8 LC4013BM
IC 9 LC4081BM
IC 10 TC74HC4538F
IC 11 LC4069UBM
IC 12 μPD4040BG
IC 13 LC4013BM
IC 14 μPD74HC4040G
IC 15 μPD4520BG
IC 16 LC4081BM
IC 17 μPD4071BG
IC 18 μPD4028BG
IC 19 μPC1555G
IC 20 LC4066BM
IC 21 TA78L005AP
IC 22 NJM4558M
IC 23 NJM4558M
IC 24 LC4081BM
IC 25 μPD4040BG
IC 26 μPD4520BG
IC 27 LC4013BM
IC 28 S7116A
IC 29 μPD4094BG
IC 30 LC4069UBM
IC 31 GP1F01D
IC 32 LC4069UBM
IC 33 LC4069UBM
IC 34 μPC358G
IC 35 μPC358G
IC 36 NJM4558M
IC 37 LC4011BM
X2 RF4A3FAA (3.579545MHz)

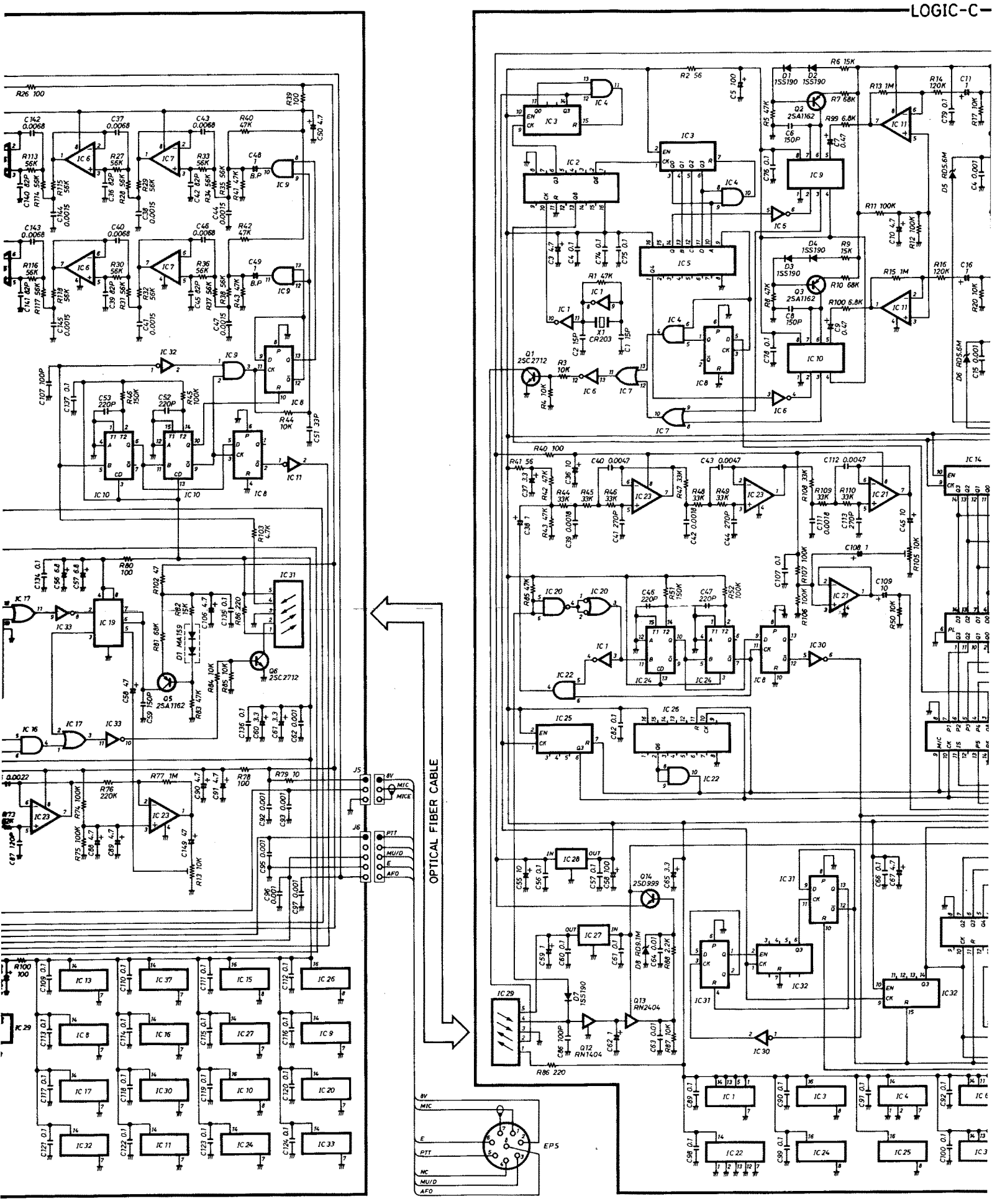
OPTICAL FIBER CABLE
J5
J6
8V
MIC
MICE
PTT
MUID
E
AFO
EP5
NC

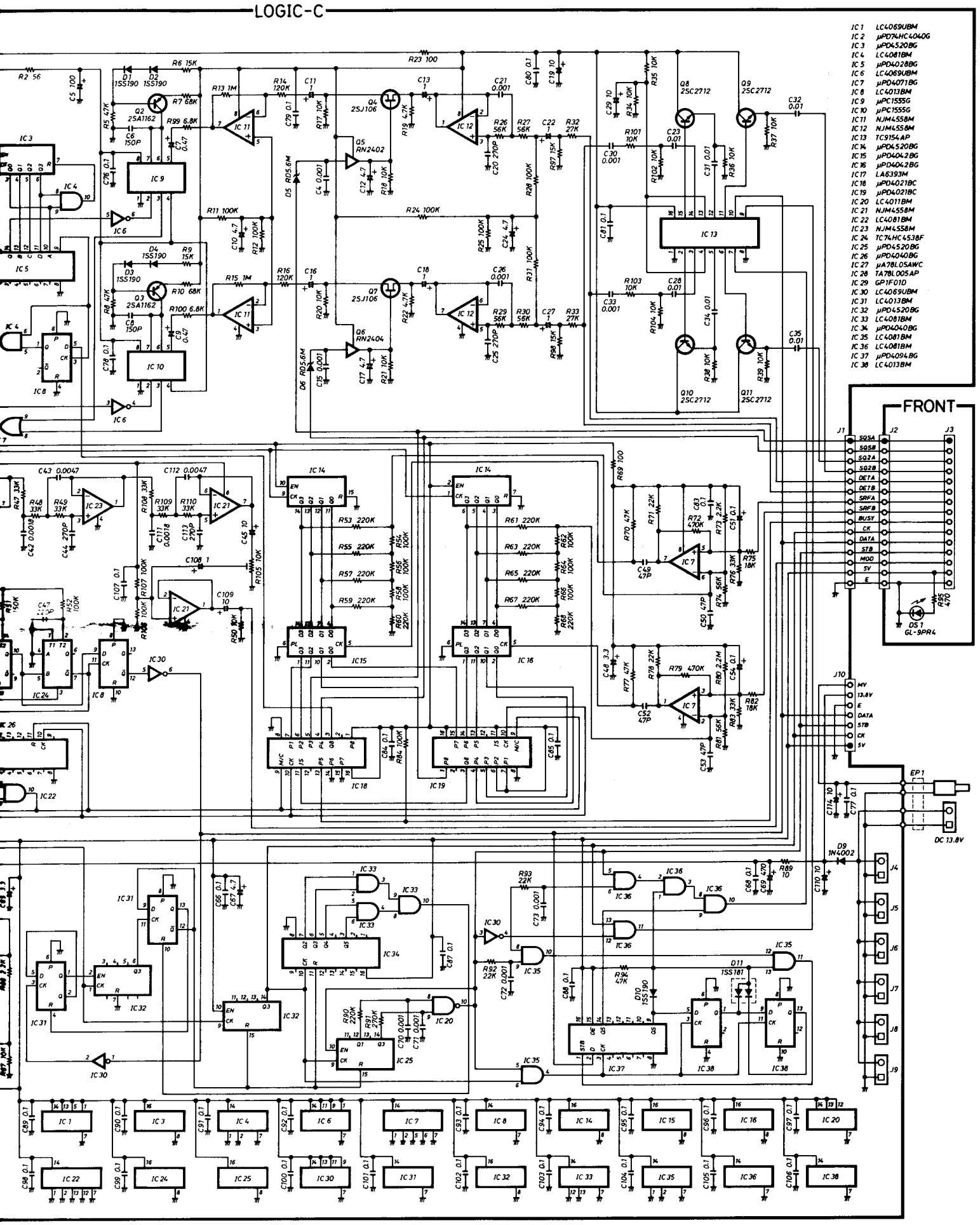
LOGIC-C
IC 1 LC4069UBM
IC 2 μPD74HC4040G
IC 3 μPD4520BG
IC 4 LC4081BM
IC 5 μPD4028BG
IC 6 LC4069UBM
IC 7 μPD4071BG
IC 8 LC4013BM
IC 9 μPC1555G
IC 10 μPC1555G
IC 11 NJM4558M
IC 12 NJM4558M
IC 13 TC9154AP
IC 14 μPD4520BG
IC 15 μPD4042BG
IC 16 μPD4042BG
IC 17 LA6393M
IC 18 μPD4021BC
IC 19 μPD4021BC
IC 20 LC4011BM
IC 21 NJM4558M
IC 22 LC4081BM
IC 23 NJM4558M
IC 24 TC74HC4538F
IC 25 μPD4520BG
IC 26 μPD4040BG
IC 27 μA78L05AWC
IC 28 TA78L005AP
IC 29 GP1F01D
IC 30 LC4069UBM
IC 31 LC4013BM
IC 32 μPD4520BG
IC 33 LC4081BM
IC 34 μPD4040BG
IC 35 LC4081BM
IC 36 LC4081BM
IC 37 μPD4094BG
IC 38 LC4013BM
FRONT
J1
J2
J3
SQSA
SQSB
SQZA
SQZB
DETA
DETB
SRFA
SRFB
BUSY
CK
DATA
STB
MOD
5V
E
DS 1
GL-9PR4
J10
MV
13.8V
E
DATA
STB
CK
5V
EP 1
DC 13.8V
D9
1N4002
J4
J5
J6
J7
J8
J9

Icom Inc.

6-9-16, Kamihigashi, Hirano-ku, Osaka 547, Japan
Phone: 06 793 5301
Fax : 06 793 0013
Telex : 05277822 ICOMTR J

Icom America Inc.

<Corporate Headquarters>
2380 116th Avenue N.E., Bellevue, WA 98004, U.S.A.
Phone : (206) 454-8155
Fax : (206) 454-1509
Telex : 152210 ICOM AMER BVUE

<Customer Service>
Phone : (206) 454-7619

<Regional Customer Service Centers>
3150 Premier Drive, Suite 126, Irving, TX 75063, U.S.A.
Phone : (214) 550-7525
Fax : (214) 550-7423

1777 Phoenix Parkway, Suite 201, Atlanta, GA 30349, U.S.A.
Phone : (404) 991-6166
Fax : (404) 991-6327

Icom Canada

A Division of Icom America Inc.
3071 #5 Road, Unit 9, Richmond, B.C., V6X 2T4, Canada
Phone : (604) 273-7400
Fax : (604) 273-1900

Icom (Europe) GmbH

Communication Equipment
Himmelgeister Str. 100, 4000 Düsseldorf 1, W. Germany
Phone : 0211 346047
Fax : 0211 333639
Telex : 8588082 ICOM D

Icom (Australia) Pty. Ltd.

Incorporated In Victoria
7 Duke Street, Windsor, Victoria, 3181, Australia
Phone : 03 529 7582, 03 529 8765
Fax : 03 529 8485
Telex : AA 35521 ICOM AS

Icom (UK) Ltd.

Unit 9, Sea St., Herne Bay, Kent, U.K.
Phone : 0227 363859
Fax : 0227 360155
Telex : 965179 ICOM G

Icom France S.a

120 Route de Revel, BP4063, 31029 Toulouse Cedex, France
Phone : 61. 20. 31. 49
Fax : 61. 34. 05. 91
Telex : 521515 ICOM FRA

Count on us!

Icom Inc.
6-9-16, Kamihigashi, Hirano-ku, Osaka 547, Japan