ICOM

SERVICE MANUAL

VHF/UHF FM TRANSCEIVER

IC-91A

VHF/UHF DIGITAL TRANSCEIVER

IC-91AD

S-14230HZ-C1
May. 2006

Icom Inc.

INTRODUCTION

This service manual describes the latest service information for the **IC-91A** VHF/UHF FM TRANSCEIVER**, IC-91AD** VHF/UHF DIGITAL TRANSCEIVER at the time of publication.

MODEL	VERSION	SYMBOL
IC-91AD	U.S.A.	USA
	Export	EXP
IC-91A	U.S.A.	USA-1
	Taiwan	TPE
	Korea	KOR
	Australia	AUS
	Export	EXP-1
		EXP-2

To upgrade quality, all electrical or mechanical parts and internal circuits are subject to change without notice or obligation.

CAUTION

NEVER connect the transceiver to an AC outlet or to a DC power supply 3.7 V. Such a connection could cause a fire or electric hazard.

DO NOT expose the transceiver to rain, snow or any liquids.

DO NOT reverse the polarities of the power supply when connecting the transceiver.

DO NOT apply an RF signal of more than 20 dBm (100 mW) to the antenna connector. This could damage the transceiver's front end.

ORDERING PARTS

Be sure to include the following four points when ordering replacement parts:

1. 10-digit Icom parts number
2. Component name and informations
3. Equipment model name and unit name
4. Quantity required

<**SAMPLE ORDER**>

5030002880 LCD	HLM7972-010100	IC-91A	Main unit 5 pieces
8810009560 Screw	PH BT M2×6 ZK	IC-91A	Chassis 10 pieces

Addresses are provided on the inside back cover for your convenience.

REPAIR NOTES

1. Make sure the problem is internal before disassembling the transceiver.
2. **DO NOT** open the transceiver until the transceiver is disconnected from its power source.
3. **DO NOT** force any of the variable components. Turn them slowly and smoothly.
4. **DO NOT** short any circuits or electronic parts. An insulated turning tool **MUST** be used for all adjustments.
5. **DO NOT** keep power ON for a long time when the transceiver is defective.
6. **DO NOT** transmit power into a signal generator or a sweep generator.
7. **ALWAYS** connect a 30 dB to 40 dB attenuator between the transceiver and a deviation meter or spectrum analyzer when using such test equipment.
8. **READ** the instructions of test equipment thoroughly before connecting equipment to the transceiver.

TABLE OF CONTENTS

SECTION 1 SPECIFICATIONS

■ GENERAL

• Frequency coverange :

(unit: MHz)

Version	A band	B band
U.S.A.	Tx: 144–148, 420–450*1 Rx: 0.495–823.995*1, *2, 849–868.995, 894–999.990	Tx: 144–148, 420–450*1 Rx: 118–174*2, 350–470*1
Taiwan	144–146, 430–432	144–146, 430–432
Korean	144–146, 430–440	144–146, 430–440
Australian	Tx: 144–148, 420–450*3 Rx: 0.495–999.990*2, *3	Tx: 144–148, 420–450*3 Rx: 118–174*2, 350–470*3
Export	Tx: 137–174*2, 400–470*3 Rx: 0.495–999.990*2, *3	Tx: 137–174*2, 400–470*3 Rx: 118–174*2, 350–470*3

*1Guaranteed 440–450 MHz only, *2Guaranteed 144–148 MHz only, *3Guaranteed 430–440 MHz only

• Operating mode : FM, AM*, WFM*, DV† (*RX only)
• Memory channels : 1304 channels (Incl. 100 scan edges and 4 call ch.)
• Frequency stability : ±2.5 ppm (–20°C to +60°C; –4°F to 140°F)
• Tuning steps : 5‡/6.25‡/8.33‡/9‡/10/12.5/15/20/25/30/50/100/125 and 200 kHz
• Antenna impedance : 50 Ω (SMA type)
• Power supply : 10.0–16.0 V DC for external DC power, or specified Icom's battery pack
• Digital transmission speed : 4.8 kbps†
• Voice coding speed : 2.4 kbps†
• Current drain (at 7.4 V DC) :

TRANSMIT	VHF	High	2.1 A typ.
		Low	0.8 A (approx.)
	UHF	High	2.2 A typ.
		Low	0.8 A (approx.)
RECEIVE	Stand-by		170 mA typ. (dualwatch; FM/DV†)
	Max. audio		340 mA typ. (dualwatch; FM/DV†)

• Operating temp. range : –20°C to +60°C; –4°F to 140°F
• Dimensions (projections not included) : 58.4 (W) × 103 (H) × 34.2 (D) mm
2 9/32 (W) × 4 1/16 (H) × 1 11/32 (D) in
• Weight (approx.) : 300 g; 10.6 oz (antenna, BP-217 included)

■ TRANSMITTER

• Output power (at 7.4 V DC) : 5.0 W (High)
0.5 W (Low; aprrox.)
• Modulation system FM : Variable reactance frequency modulation
DV† GMSK reactance frequency modulation
• Maximum deviation : ±5.0 kHz (FM wide: approx.)
±2.5 kHz (FM narrow: approx.)
• Spurious emissions : Less than –60 dB
• Ext. mic. connector : 3-conductor 2.5 (d) mm; (1/10″)/2 kΩ

■ RECEIVER

• Receiving system :
FM/AM/DV† Double-conversion superheterodyne system
WFM Triple-conversion superheterodyne system
• Intermediate frequencies :
1st A band 61.65/59.25 MHz (WFM)
B band 46.35 MHz
2nd 450 kHz/13.35 MHz (WFM)
3rd 1.95 MHz (WFM only)
• Sensitivity : (except spurious points)

- AM (1 kHz/30% Mod.; 10 dB S/N)

0.495–4.995 MHz	1.3 µV typ.
5.000–29.995 MHz	0.56 µV typ.
118.000–137.000 MHz	0.5 µV typ.
222.000–246.995 MHz	0.79 µV typ.
247.000–329.995 MHz	1 µV typ.

- FM (1 kHz/3.5 kHz Dev.; 12 dB SINAD)

VHF (Amateur band only)	0.14 µV typ.
UHF (Amateur band only)	0.16 µV typ.
1.625–29.995 MHz	0.4 µV typ.
30.000–117.995 MHz	0.25 µV typ.
118.000–173.995 MHz	0.18 µV typ.
174.000–349.995 MHz	0.32 µV typ.
350.000–469.995 MHz	0.22 µV typ.
470.000–599.995 MHz	0.32 µV typ.
600.000–999.990 MHz	0.56 µV typ.

- WFM (1 kHz/52.5 kHz Dev.; 12 dB SINAD)

76.000–108.000 MHz	1 µV typ.
175.000–221.995 MHz	1.8 µV typ.
470.000–770.000 MHz	2.5 µV typ.

- DV (digital/PN9 4.8 kbps; BER 1%)†

Amateur bands	0.22 µV typ.

• Selectivity :
FM (Wide), AM More than 50 dB
FM (Narrow), DV† More than 45 dB
WFM More than 300 kHz/–3 dB
Less than 700 kHz/–20 dB
• Spurious image rejection :
VHF More than 60 dB
UHF More than 50 dB
(IF; More than 60 dB)
• Audio output power (at 7.4 V DC) : More than 200 mW (at 10% distortion with an 8 Ω load)
• Ext. speaker connector : 3-conductor 3.5 (d) mm; (1/8″)/8 Ω

†Available for the IC-91AD or when UT-121 is installed into the IC-91A.
All stated specifications are subject to change without notice or obligation.

SECTION 2 INSIDE VIEWS

• LOGIC UNIT

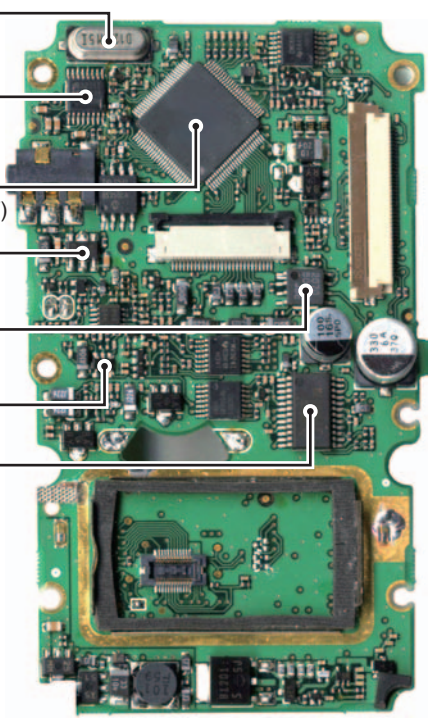

• UT-121 (Optional Product ; CODEC UNIT for IC-91AD) (TOP VIEW)

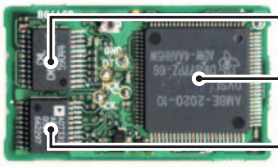

• UT-121 (Optional Product ; CODEC UNIT for IC-91AD) (BOTTOM VIEW)

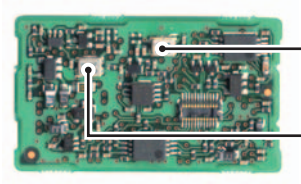

• MAIN UNIT (TOP VIEW)

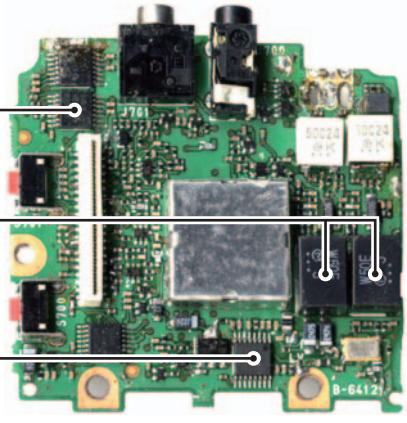

• MAIN UNIT (BOTTOM VIEW)

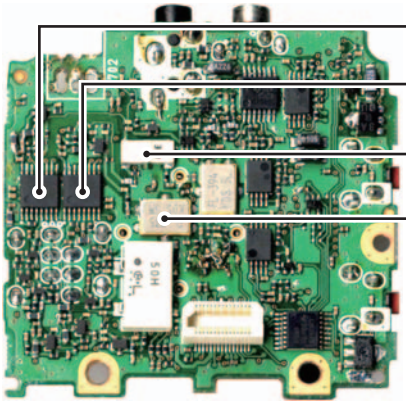

• RF UNIT (TOP VIEW)

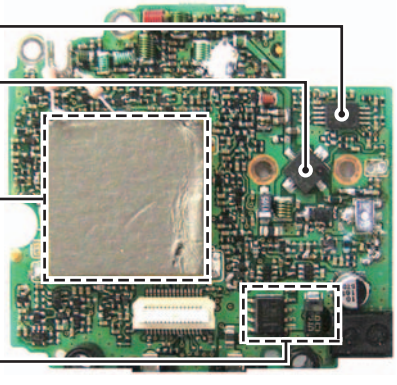

• RF UNIT (BOTTOM VIEW)

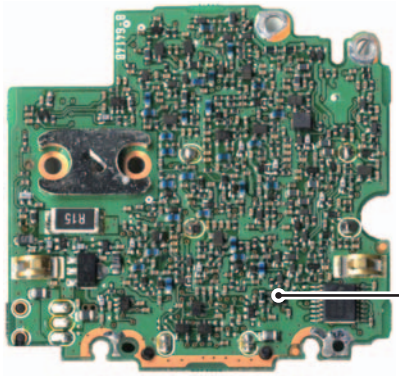

SECTION 3 DISASSEMBLY INSTRUCTIONS

• Removing the rear panel

① Unscrew 2 screws Ⓐ and remove the plate Ⓑ.
② Remove the CODEC unit (UT-121) if installed. (See the page 4-1 "②" for uninstallation)
③ Unscrew 2 screws Ⓒ and 2 screws Ⓓ.
④ Disconnect the flat cable Ⓔ from MAIN unit J702.
⑤ Remove the rear panel.

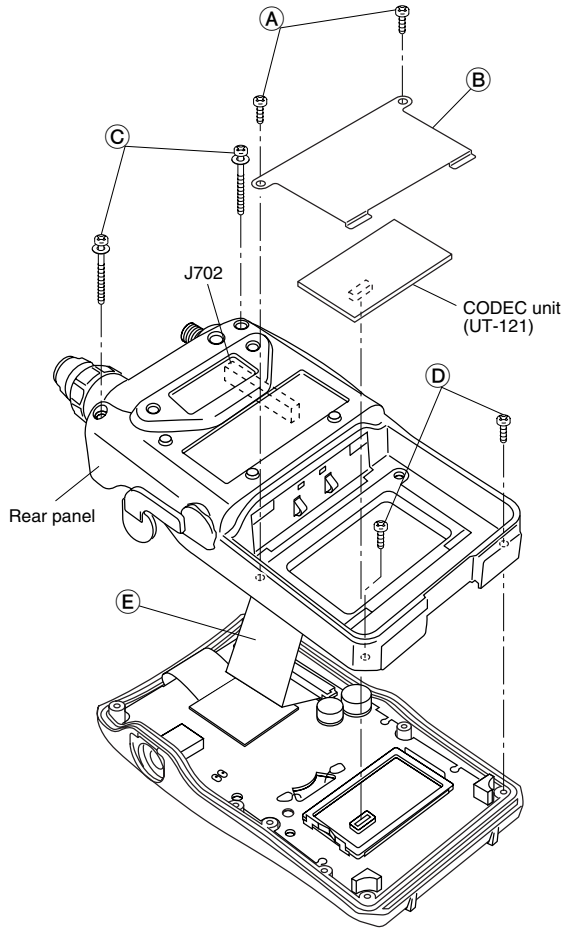

• Removing the MAIN unit

① Unscrew the screw Ⓐ and 2 screws Ⓑ.
② Unsolder 6 points Ⓒ.
③ Remove the MAIN unit from the rear panel in the direction of the arrow.

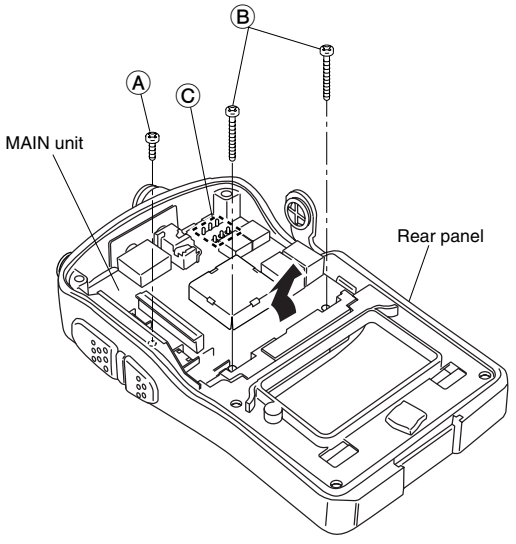

• Removing the RF unit

① Unsolder 2 points Ⓐ.
② Unsolder 3 points Ⓑ and remove the shield plate Ⓒ.
③ Unscrew 4 screws Ⓓ and remove the RF unit from the rear panel

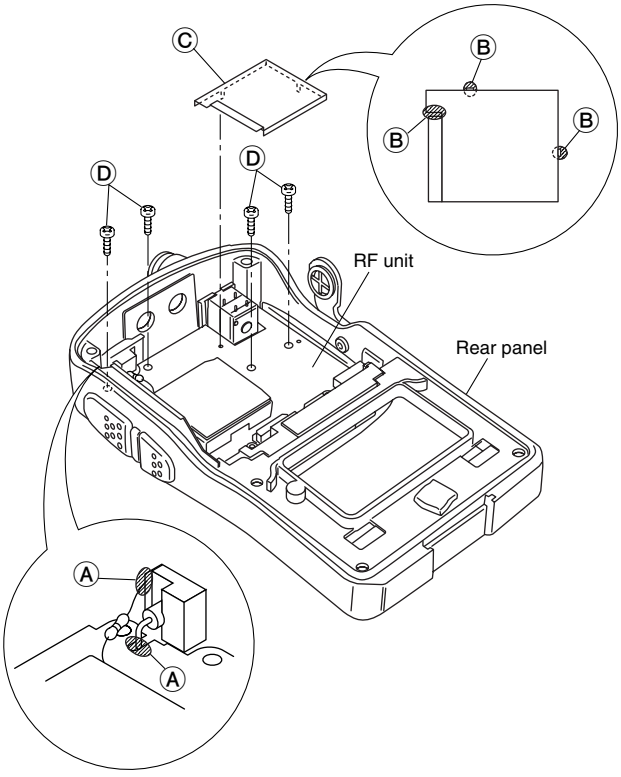

• Removing the LOGIC unit

① Unsolder 2 points Ⓐ.
② Unscrew 6 screws Ⓑ and remove the LOGIC unit from the front panel.

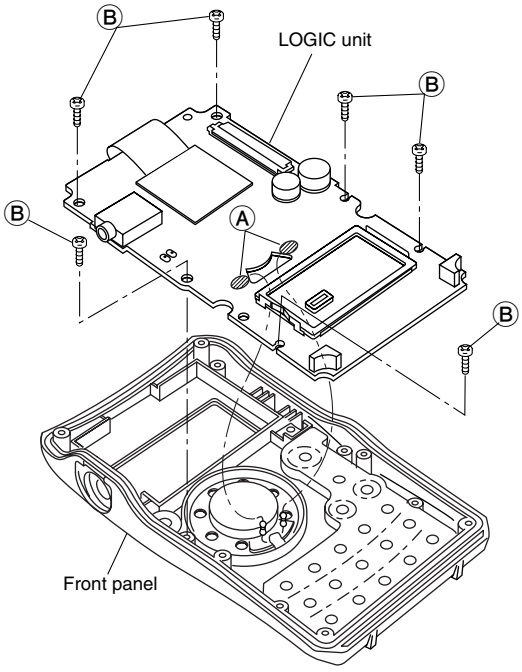

SECTION 4 UT-121 UNINSTALLATION

RECOMMENDATION:
Critical technique is necessary for the UT-121 uninstallation, therefore, we recommend you to uninstall it at your dealer or service center.

① Turn the power OFF, and remove the battery pack.
② Unscrew 2 screws to remove the unit cover.

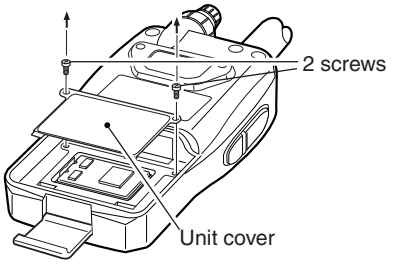

③ Insert the tweezers into the notches of the UT-121, and remove it as shown below.

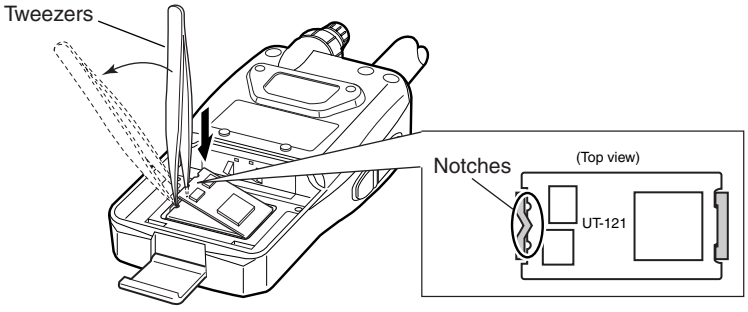

④ Screw 2 screws to assemble the unit cover.

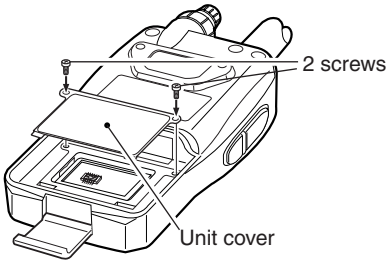

SECTION 5 CIRCUIT DESCRIPTION

5-1 RECEIVER CIRCUITS

This transceiver has two receiving lines called A_BAND and B_BAND for dualwatch capability. A_BAND corresponds to FM/WFM/AM mode receiving within 0.495–999 MHz range, and B_BAND corresponds to FM/FM-N/AM/DV mode receiving within 118–174 MHz and 350–470 MHz ranges.

5-1-1 RF CIRCUITS (RF UNIT)

This transceiver has six RF circuits to provide wide receiving range. The received signals from the antenna connector (CHASSIS; J1) are applied to each RF circuit for the frequency coverage, and amplified within the frequency coverage.

• While receiving 0.495–76 MHz

The received signals of 76 MHz and below are passed through the low-pass filter (LPF; L200, L201, C201–C204) via the two LPFs (L1–L3, C1–C6; L5–L7, C10–C14), attenuator (D10) and band switch (D200).

The 0.495–30 MHz band signals are passed through the band switch (D201), then applied to the RF amplifier (Q200) via the low-pass filter (L202, L203, C205–C209). The 30–76 MHz band signals are applied to the tuned RF amplifier (Q250, D252, D255) via the band switch (D250).

The amplified signals are applied to the A_BAND 1st mixer (IC900, pin 1) via the band switches (D203 or D256, D707).

- 0.495–76 MHz -

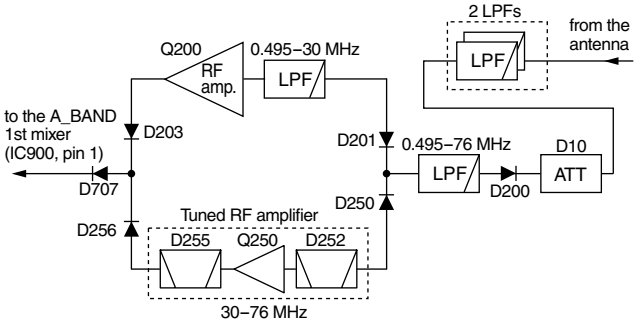

• While receiving 76–118 MHz or 174–260 MHz

The 76–118 MHz band signals are passed through the two LPFs (L1–L3, C1–C6; L5–L7, C10–C14), attenuator (D10) and low-pass filter (L300, L301, C301–C305) via the band switch (D300).

The 174–260 MHz band signals are passed through the LPF (L1–L3, C1–C6), HPF (L4, C7–C9), attenuator (D7) and high-pass filter (HPF; L302, L303, C306–C310) via the band switch (D302).

The filtered signals are applied to the tuned RF amplifier (Q300, Q301, D305, D307, D308) via the band switch (D301/D303).

The amplified signals are applied to the A_BAND 1st mixer (IC900, pin 1) via the band switches (D311, D707).

- 76–118 MHz or 174–260 MHz -

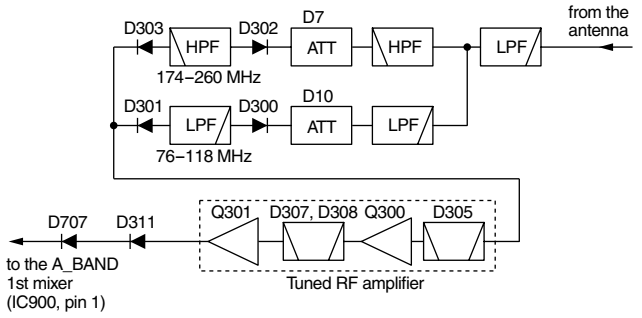

• While receiving 118–174 MHz

The 118–174 MHz band signals are passed through the two LPFs (L1–L3, C1–C6; L5–L7, C10–C14) and attenuator (D10), then applied to the RF amplifier (Q400) via the band switch (D400) and bandpass filter (BPF; L400, L405, C400, C401).

The amplified signals are applied to the tuned RF amplifiers for A_BAND (Q401, D401–D403) and B_BAND (Q450, D450–D452).

The amplified signals by Q401 are then applied to the A_BAND 1st mixer (IC900, pin 1) via the band switches (D405, D509).

The amplified signals by Q450 are then applied to the B_BAND 1st mixer (MAIN UNIT; IC50, pin 1) via the band switch (D454) and J1001 (pin 15).

- 118–174 MHz -

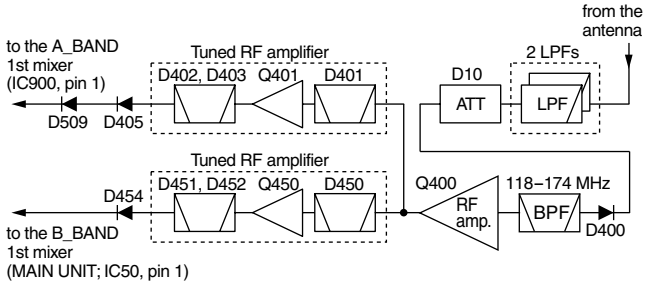

• While receiving 260–350 MHz or 470–600 MHz

The 260–350 MHz and 470–600 MHz band signals passed through the LPF (L1–L3, C1–C6) and HPF (L4, C7–C9), then applied to the tuned RF amplifier (Q500, Q501, D502, D505, D506) via the attenuator (D7) and band switch (D500).

The amplified signals are applied to the A_BAND 1st mixer (IC900, pin 1) via the band switches (D508, D509).

- 260–350 MHz or 470–600 MHz -

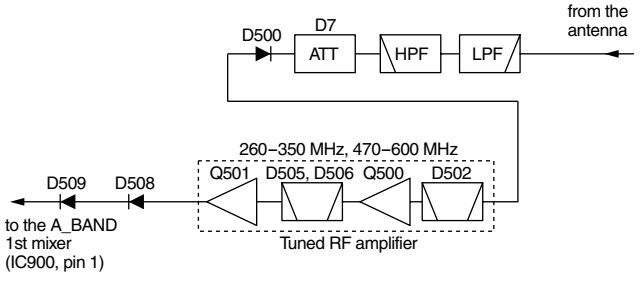

• While receiving 350–470 MHz
The 350–470 MHz band signals are passed through the LPF (L1–L3, C1–C6), HPF (L4, C7–C9) and attenuator (D7), then applied to the RF amplifier (Q600) via the band switch (D600) and HPF (L600, L601, L608, L611, C600–C602, C630, C631, C633).

The amplified signals are applied to the tuned RF amplifiers for A_BAND (Q601, D601, D602, D604, D605) and B_BAND (Q651, D650, D651, D653, D654).

The amplified signals by Q601 are then applied to the A_BAND 1st mixer (IC900, pin 1) via the band switch (D606).

The amplified signals by Q651 are then applied to the B_BAND 1st mixer (MAIN UNIT; IC50, pin 1) via the band switch (D655) and J1001 (pin 15).

- 350–470 MHz -

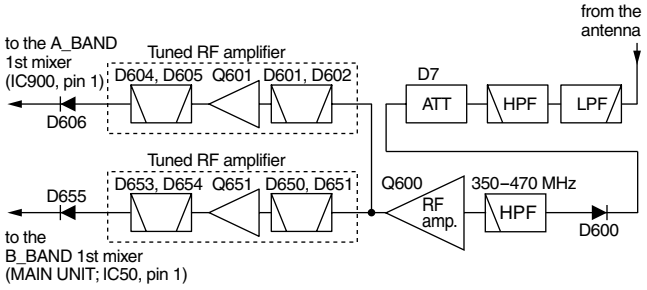

• While receiving 600–999 MHz
The 600–999 MHz band signals are passed through the HPF (L8, L9, C16–C18) and band switch (D700), then applied to the tuned RF amplifier (Q700, Q701, D702–D704) via the attenuator (D701).

The amplified signals are applied to the A_BAND 1st mixer (IC900, pin 1) via the band switch (D706).

- 600–999 MHz -

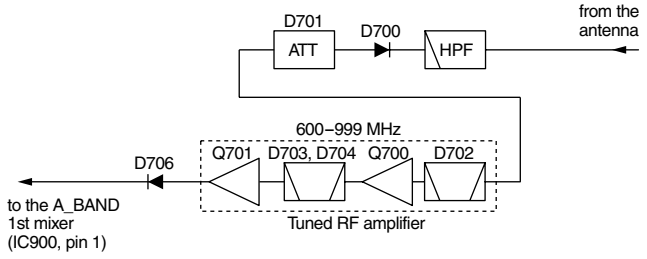

5-1-2 1ST IF CIRCUITS (RF AND MAIN UNITS)

The 1st IF circuits contain the 1st mixer, 1st IF amplifier and the 1st IF filter. The 1st IF mixer converts the received signals into a fixed frequency of the 1st Intermediate Frequency (IF) signal. The converted 1st IF signal is filtered at the 1st IF filters and amplified at the IF amplifier.

• A_BAND (0.495–999 MHz)
The received signals from the RF circuits are applied to the A_BAND 1st IF mixer (RF UNIT; IC900, pin 1), and converted into the 61.65 MHz (FM/AM)/59.25 MHz (WFM) 1st IF signal by being mixed with 1st Local Oscillator (LO) signals from the VCOs (VCO UNIT).

While receiving 0.495–76 MHz band signals, the 1st LO signals are generated at BC BAND VCO (VCO UNIT; Q1, D1, D3, D5, D6), and for receiving 76–260 MHz band signals, the 1st LO signals are generated at VHF BAND VCO (VCO UNIT; Q51, D51, D54).

While receiving 260–999 MHz band signals, the 1st LO signals are generated at UHF BAND VCO (VCO UNIT; Q101, D101, D104). If the receiving frequency is 600 MHz or higher, the VCO output signal is doubled at the doubler circuit (RF UNIT; Q850) before being applied to the 1st mixer (RF UNIT; IC900, pin 3).

In FM/AM mode, the converted IF signal is applied to the 1st IF filter (MAIN UNIT; FI1) via the mode switch (D2) to filter out the unwanted signals, then applied to the IF amplifier (MAIN UNIT; Q100).

In WFM mode, the converted IF signal is applied to the 1st IF amplifier (MAIN UNIT; Q1) via the mode switch (D2). The amplified 1st IF signal is applied to the 2nd IF mixer (MAIN UNIT; Q2), and converted into the 13.35 MHz IF signal by being mixed with the 45.95 MHz Lo signal. The converted IF signal is passed through the IF filter (MAIN UNIT; FI2) to filter out the unwanted signal, then applied to the IF amplifier (MAIN UNIT; Q100).

The amplified 1st or 2nd IF signal from the IF amplifier (MAIN UNIT; Q100) is then applied to the A_BAND IF IC (MAIN UNIT; IC100, pin 16).

• A_BAND 1st IF CIRCUIT

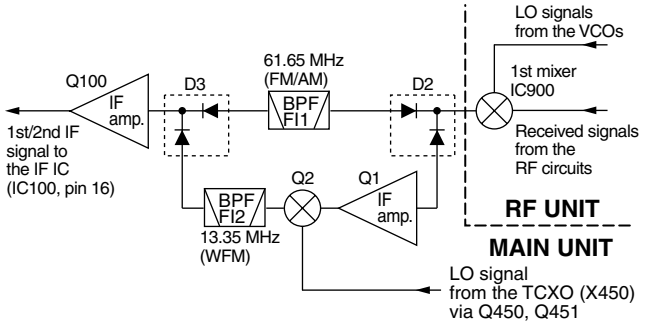

• B_BAND (118–174 MHz, 350–470 MHz.)
The received signals from the RF circuits are applied to the B_BAND 1st IF mixer (MAIN UNIT; IC50, pin 1), and converted into the 46.35 MHz 1st IF signal by being mixed with 1st Local Oscillator (LO) signals from the VCOs.

While receiving 118–174 MHz band signals, the 1st LO signals are generated at B_BAND VBVCO (MAIN UNIT; Q301, D300, D301), and for receiving 350–470 MHz band signals, the 1st LO signals are generated at B_BAND UBVCO (MAIN UNIT; Q351, D350, D352).

The converted 1st IF signal is passed through the 1st IF filter (MAIN UNIT; FI50) to filter out the unwanted signal, then applied to the 1st IF amplifier (MAIN UNIT; Q200). The amplified 1st IF signal is then applied to the B_BAND IF IC (MAIN UNIT; IC200, pin 16).

• B_BAND 1st IF CIRCUIT

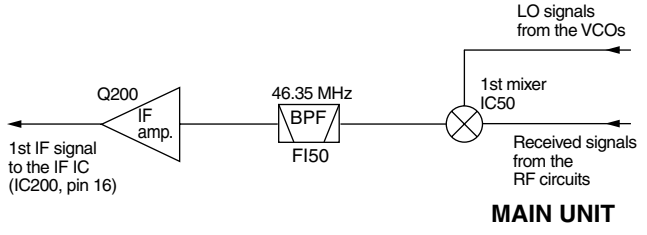

5-1-3 2ND IF AND DEMODULATOR CIRCUITS (MAIN UNIT)

The 1st IF signal is converted into the 2nd IF signal and demodulated in the IF IC. The IF IC contains 2nd mixer, limiter amplifier, quadrature detector, etc. in its package.

5-1-3-1 2ND IF CIRCUITS

- A_BAND (0.495–999 MHz) -

• FM/AM mode

The 1st IF signal from the IF amplifier (Q100) is applied to the 2nd mixer in the A_BAND IF IC (IC100, pin 16), and converted into the 450 kHz 2nd IF signal by being mixed with the 61.2 MHz 2nd LO signal from the reference frequency oscillator (X450) quadrupled by the quadruplicater (Q452).

The converted 2nd IF signal is output from pin 3, and passed through the 2nd IF filter (FI100) via the mode switch (D102) to suppress sideband noise.

In FM mode, the filtered 2nd IF signal is applied to the limiter amplifier (IC100, pin 5) via the mode switch (D103).

In AM mode, the filtered 2nd IF signal is applied to the IF amplifier (Q103) via the mode switch (D103).

• WFM mode

The 2nd IF signal from the IF amplifier (Q100) is applied to the 3rd mixer in the A_BAND IF IC (IC100, pin 16), and converted into the 1.95 MHz 3rd IF signal by being mixed with the 15.3 MHz 2nd LO signal from the reference frequency oscillator (X450).

The converted IF signal is output from pin 3, and applied to the limiter amplifier (IC100, pin 5) via the mode switches (D102, D103).

5-1-3-2 DEMODULATOR CIRCUITS

• FM/WFM mode

The amplified IF signal from the limiter amplifier in the IF IC is FM-demodulated at the quadrature detector (IC100, pins, 10, 11, X100) and output from pin 9. The demodulated AF signals are applied to the AF amplifier circuits.

• AM mode

The amplified IF signal from the IF amplifier (Q103) is applied to the AM demodulator (Q104, Q105).

The demodulated AF signals are applied to the AF amplifier circuits.

- B_BAND (118–174 MHz, 350–470 MHz) -

The 1st IF signal from the 1st IF amplifier (Q200) is applied to the 2nd mixer in the B_BAND IF IC (IC200, pin 16), and converted into the 2nd IF signal by being mixed with the 2nd LO signal from the reference frequency oscillator (X450) tripled by the tripler (Q451).

The converted 2nd IF signal is output from pin 3, and passed through the 2nd IF filter (FM/AM mode: FI200; FM-N mode: FI201) via the mode switch (D202) to suppress sideband noise.

• FM/FM-N mode

The filtered 2nd IF signal is applied to the limiter amplifier in the B_BAND IF IC (IC200, pin 5) via the mode switch (D203). The amplified 2nd IF signal is FM-demodulated at the quadrature detector (IC200, pins, 10, 11, X200) and output from pin 9. The demodulated AF signals are applied to the AF amplifier circuits.

• AM mode

The 2nd IF signal is passed through the FI200 and applied to the AM demodulator circuit (Q203, Q204) via the IF amplifier (Q202). The demodulated AF signals are applied to the AF amplifier circuits.

• A_BAND 2ND IF AND DEMODULATOR CIRCUITS

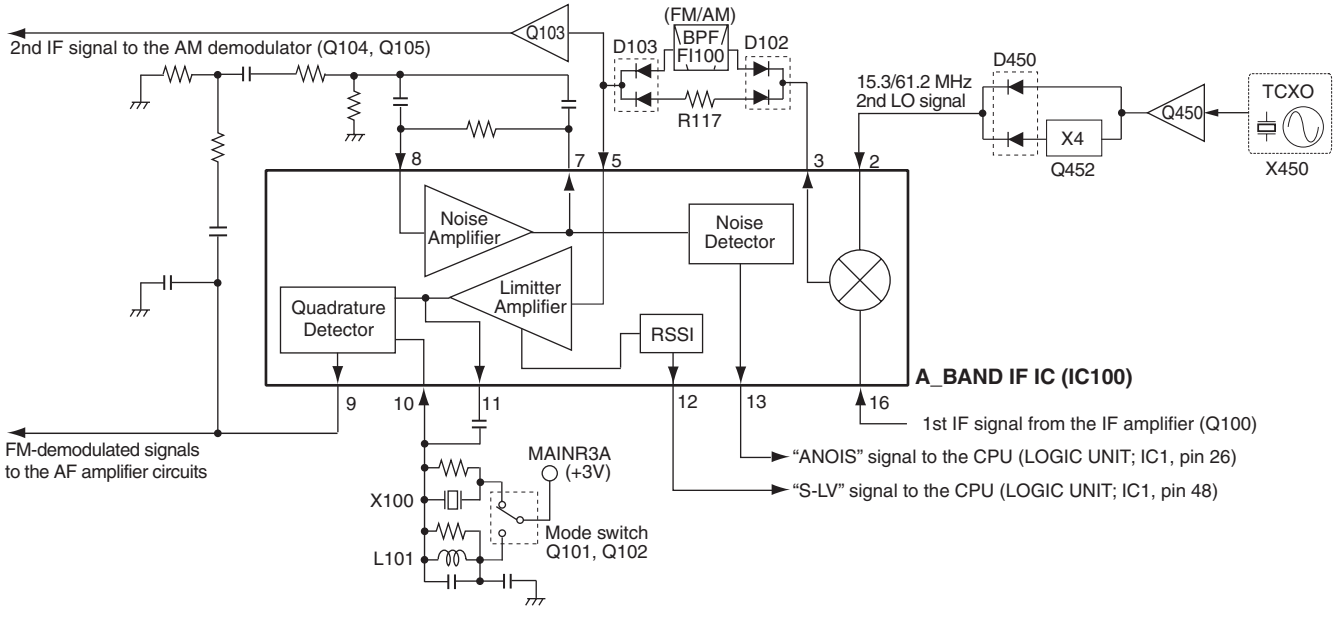

• **B_BAND 2ND IF AND DEMODULATOR CIRCUITS**

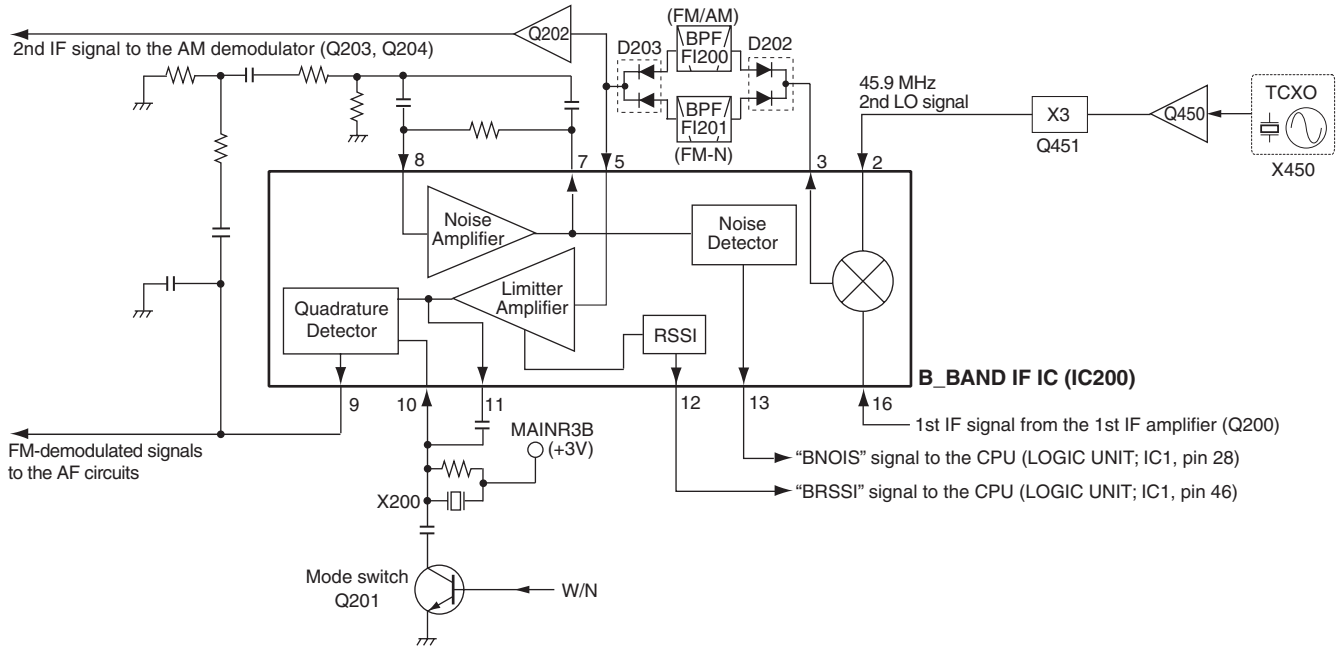

5-1-4 AF AMPLIFIER CIRCUITS (MAIN AND LOGIC UNITS)

The demodulated AF signals from the demodulator circuits are amplified and filtered in AF amplifier circuits.

- A_BAND -

• FM/WFM mode

The demodulated AF signals from the A_BAND IF IC (MAIN UNIT; IC100, pin 9) are applied to the mode switch (MAIN UNIT; IC500, pins 1, 2) and then passed through the AF filter (MAIN UNIT; Q550, Q552).

• AM mode

The demodulated AF signals from the AM-demodulator circuit (MAIN UNIT; Q104, Q105) are applied to the AF switch (MAIN UNIT; D105) and then passed through the AF filter (MAIN UNIT; Q550, Q552).

- B_BAND -

• FM/FM-N mode

The demodulated AF signals from the B_BAND IF IC (MAIN UNIT; IC200, pin 9) are applied to the mode switches (MAIN UNIT; IC500, pins 10, 11, IC700, pins 11, 10) and then passed through the AF filter circuit (MAIN UNIT; IC501 pins 1, 2; 6, 7).

• AM mode

The demodulated AF signals from the AM-demodulator circuit (MAIN UNIT; Q203, Q204) are applied to the AF (MAIN UNIT; D205) and mode switches (MAIN UNIT; IC700, pins 10, 11) and then passed through the AF filter (MAIN UNIT; IC501 pins 1, 2; 6, 7).

The filtered AF signals are applied to the D/A converter (LOGIC UNIT; IC303 for A_BAND; pins 21, 22; 23, 24/for B_BAND; pins 13–16) and level adjusted. The level adjusted AF signals are applied to the AF power amplifier (LOGIC UNIT; IC550, pin 2). The power amplified AF signals are then output from pin 6, and applied to the internal speaker (CHASSIS; SP1) via [SP] connector (MAIN UNIT; J700).

5-1-5 AGC CIRCUIT (MAIN AND RF UNITS)

A portion of the AM-demodulated signals are converted into DC voltage by AGC (Automatic Gain Control) detector (MAIN UNIT; Q104; A_BAND/Q203; B_BAND), and fed back to the IF and RF circuits as the AGC signal.

• **AF CIRCUITS**

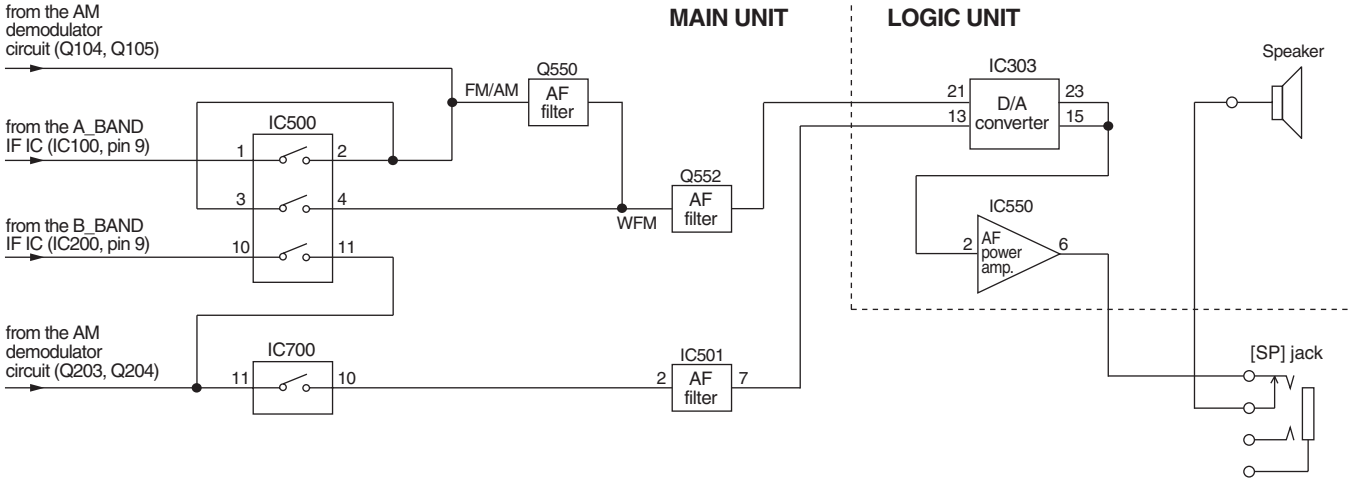

The AGC signal controls the bias of the IF amplifiers (MAIN UNIT; Q100, Q103/Q200, Q202) and RF amplifiers (RF UNIT; Q200, Q250, Q300, Q301, Q401, Q500, Q501, Q601/Q700, Q701, Q450, Q651) according to the received signal strength to prevent audio distortion and stabilize the demodulated AF signal level.

5-1-6 SQUELCH CIRCUITS (MAIN AND LOGIC UNITS)

• NOISE SQUELCH

The noise squelch mutes the AF output signals when no RF signals are received. By detecting noise components in the demodulated AF signals, the squelch circuit toggles the AF power amplifier ON and OFF.

A portion of the FM-demodulated AF signals from the IF IC (MAIN UNIT; IC100/IC200 (A_BAND/B_BAND), pin 9) is passed through the noise filter (MAIN UNIT; IC100/IC200, pins 7, 8, R109–R113, C118–C122/R212–R216, C218–C222). The filtered noise signals are then applied to the noise amplifier in the IF IC to be amplified the noise components only.

The amplified noise components are converted into the pulse-type signal at the noise detector section, and output from pin 13 as the noise signal (A_BAND: "ANOIS"/B_BAND: "BNOIS"). The noise signal is applied to the CPU (LOGIC UNIT; IC1, pin 26/28), then the CPU outputs "AFON" signal from pin 97 according to the noise detection signal level to toggle the AF power amplifier regulator (LOGIC UNIT; Q105, Q106) ON and OFF.

• TONE SQUELCH

The tone squelch detects the tone signal in the demodulated AF signals, and opens the squelch only when matched subaudible tone frequency is detected in the received signal.

While the tone squelch is in use, and the received signal contains no sub-audible tone signal or mismatched tone frequency, the tone squelch mutes the AF signals even if the noise squelch is open.

A portion of the demodulated AF signals from the IF IC (MAIN UNIT; IC100/IC200, pin 9) are passed through the two-staged CTCSS/DTCS filter (MAIN UNIT; IC150/IC250, pins 3, 1 and pins 5, 7) via the mode switch (MAIN UNIT; IC500, pins 1, 2/10, 11) to suppress unwanted voice signals. The filtered CTCSS/DTCS signals (A_BAND: "ATONE"/B_BAND: "BTONE") are applied to the CPU (LOGIC UNIT; IC1, pin 49/45) via the tone selector (MAIN UNIT; IC703, pins 3, 4/10, 11).

The CPU decodes the CTCSS/DTCS signal, and outputs "AFON" signal from pin 97 according to the set CTCSS/DTCS signal to toggle the AF power regulator (LOGIC UNIT; Q105, Q106) ON and OFF.

5-2 TRANSMITTER CIRCUITS

5-2-1 MICROPHONE AMPLIFIER CIRCUIT (LOGIC UNIT)

The microphone amplifier circuit contains AF amplifier, IDC, splatter filter, etc. The AF signals from the microphone (thereafter, it is called "MIC signals") are filtered and level-adjusted at this circuit.

MIC signals from the microphone (MC300) are applied to the MIC amplifier (Q302), then the amplified MIC signals are applied to the mode switch (IC301, pin 1). In FM mode, the MIC signals are output from pin 6 and applied to the IDC (Instantaneous Deviation Control; IC302, pin 5).

In DV mode†, the MIC signals are output from pin 7 and applied to the IDC (IC302, pin 5) via the ALC amplifier (IC300, pins 3, 5).

The IDC limits the level of the amplitude of MIC signals to prevent over deviation. The limited MIC signals are output from pin 7 and passed through the splatter filter (IC302, pins 8, 9).

The splatter filter suppresses 3 kHz and higher audio components.

The filtered MIC signals are applied to the D/A converter (IC303, pin 1) via the mode switch (IC304, pins 10, 11). The D/A converter (IC303) adjusts the deviation according to "DATA" signal from the CPU (IC1, pin 30).

The level adjusted MIC signals are output from pin 2 and then applied to the modulation circuit (VCO UNIT; D55 or D100) to modulate the VCO oscillating signal.

• MICROPHONE AMPLIFIER CIRCUIT

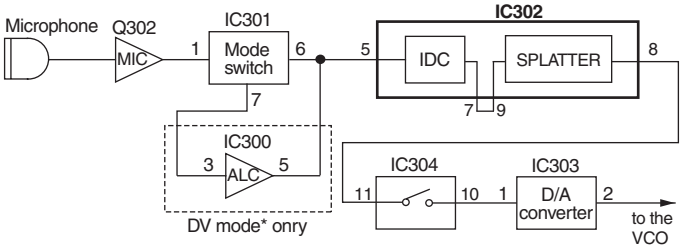

5-2-2 MODULATION CIRCUIT (VCO UNIT)

The modulation circuit modulates the VCO oscillating signal with the AF signals from the microphone and the tone signals from the CPU.

• MICROPHONE SIGNALS

The level adjusted MIC signals from the D/A converter (LOGIC UNIT; IC303, pin 2) are applied to the D55 (in transmitting on 144 MHz band) or D100 (in transmitting on 430 MHz band) to modulate the VCO oscillating signal by changing the reactance of D55 or D100. The modulated VCO output signal is buffer-amplified by Q200 and Q201, then applied to the transmit amplifiers via TX/RX switch (RF UNIT; D100) and amplifier (RF UNIT; IC100, pins 1, 4), as a transmit signal.

• TONE SIGNALS

The CTCSS and DTCS signals are generated by the CPU (LOGIC UNIT; IC1) and output from pin 43.

The CTCSS/DTCS signals are passed through the tone filter (Q307, R338–R340, C339, C340). The filtered tone signals are mixed with the MIC signal coving from the IDC amplifier (LOGIC UNIT; IC302 pin 7), then applied to the modulation circuit via the the splatter filter, mode switch and D/A converter.

The CTCSS/DTCS signals are passed through the tone filter (Q307, R338–R340, C339, C340). The filtered tone signals are mixed with the MIC signals come from the IDC amplifier (LOGIC UNIT; IC302, pin 7), then applied to the modulation circuit (D55 or D100) via the splatter filter (LOGIC UNIT; IC302, pins 9, 8), mode switch (LOGIC UNIT; IC304, pins 11, 10) and D/A converter (LOGIC UNIT; IC303, pins 4, 3).

5-2-3 TRANSMIT AMPLIFIERS (RF UNIT)

The VCO output signal is amplified to transmit output power level by the transmit amplifiers.

The VCO output signal from the amplifier (IC100) is applied to the pre-driver (Q102), driver (Q101) and power (Q100) amplifiers in sequence to be amplified to the transmit output power level. The power amplified transmit signal is passed through the antenna switching circuit and transmit filters.

†Available for IC-91AD or when the optional UT-121 is installed into IC-91A.

5-2-4 APC CIRCUIT (RF UNIT)

The APC (Automatic Power Control) circuit stabilizes transmit output power and controls it High or Low. The APC of this transceiver is a current monitoring type that detects the transmit signal current of the transmit amplifiers and controls the transmit output power.

While transmitting, the voltagedrop in R161 is detected by the current detection circuit (Q150) and applied to the APC controller (IC150, pin 6). Also, "PSET" signal (power setting reference voltage) from the D/A converter (IC950, pin 19) is applied to another input (pin 5).

Then the voltage difference between pins 5 and 6 is output from pin 7, and the transmit output power is controlled by varying of the gate voltage of the power amplifier (Q100).

When the transmit output power is set to Low, the driver gate voltage "DSET" is controlled at the same time as the power setting reference voltage "PSET" and the dynamic range of the power control is ensured. Thus, the APC circuit maintains a constant transmit output power.

• APC CIRCUIT

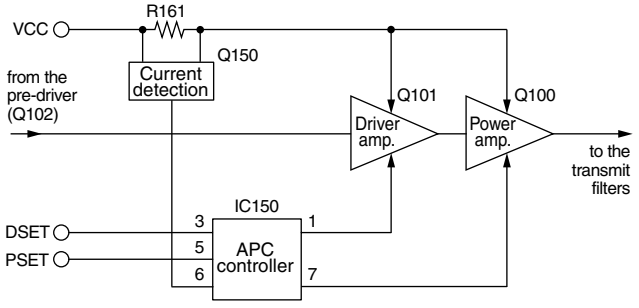

5-2-5 TRANSMIT FILTERS (RF UNIT)

The power amplified transmit signal from the power amplifier is filtered at the transmit filters. The transmit filters prevent unwanted RF signals being emitted to the air.

While transmitting in 144 MHz band, the power amplified transmit signal is passed through the LPF (L102, L103, C106, C107), antenna switch (D8) and two LPFs (L5–L7, C10–C14; L1–L3, C1–C6) before being applied to the antenna connector (CHASSIS; J1).

• 144 MHz

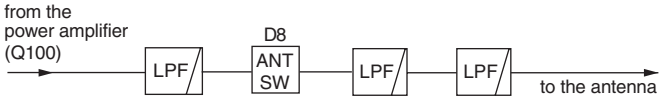

While transmitting in 430 MHz band, the power amplified transmit signal is passed through the HPF (L100, L101, C100–C103), antenna switch (D1, D2), HPF (L4, C7–C9) and LPF (L1–L3, C1–C6) before being applied to the antenna connector (CHASSIS; J1).

• 430 MHz

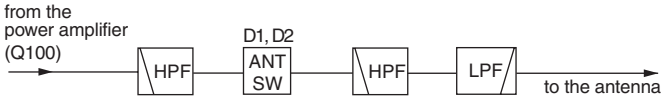

5-3 PLL CIRCUITS

5-3-1 VCO CIRCUITS (VCO UNIT AND MAIN UNIT)

This transceiver has 5 VCOs; BC BAND VCO, VHF BAND VCO, UHF BAND VCO, B_BAND VBVCO and B_BAND UBVCO. The BC BAND VCO, B_BAND VBVCO and B_BAND UBVCO oscillate the 1st LO signals. The VHF BAND VCO and UHF BAND VCO oscillate both transmit output signal and 1st LO signals.

- A_BAND -

• BC BAND VCO

The BC BAND VCO (VCO UNIT; Q1, D1, D3, D5, D6) generates the 1st LO signals for receiving 0.495–76 MHz signals. The output signals are amplified at the buffer amplifiers (VCO UNIT; Q200, Q201), then applied to the 1st mixer (RF UNIT; IC900, pin 3) via TX/RX switch (RF UNIT; D850).

• VHF BAND VCO

The VHF BAND VCO (VCO UNIT; Q51, D51, D54, D55) generates both of transmit output signal for 144 MHz band and 1st LO signals for receiving 76–260 MHz.

While receiving, the VCO oscillates the 1st LO frequency, and the output signals are amplified at the buffer amplifiers (VCO UNIT; Q200, Q201). The buffer-amplified signals are applied to the 1st mixer (RF UNIT; IC900, pin 3) via TX/RX switch (RF UNIT; D850).

While transmitting, the VCO oscillates the transmit frequency, and the output signal is amplified at the buffer amplifiers (VCO UNIT; Q200, Q201). The buffer-amplified signals are applied to the transmit amplifiers via TX/RX switch (RF UNIT; D100).

• UHF BAND VCO

The UHF BAND VCO (Q101, D100, D101, D104) generates both of the transmit output signal for 430 MHz band and 1st LO signals for receiving 260–999 MHz.

While receiving, the VCO oscillates the 1st LO frequency, and the output signals are amplified by the buffer amplifiers (VCO UNIT; Q200, Q201). If the receiving frequency is 600 MHz and below, the buffer-amplified signals are applied to the 1st mixer (RF UNIT; IC900, pin 3) via TX/RX switch (RF UNIT; D850). If the receiving frequency is 600 MHz and higher, the buffer-amplified signals are applied to the doubler circuit (RF UNIT; Q850), then the doubled signals are applied to the 1st mixer (RF UNIT; IC900, pin 3).

While transmitting, the VCO oscillates the transmit frequency, and the output signal is amplified at the buffer amplifiers (VCO UNIT; Q200, Q201), then applied to the transmit amplifiers via TX/RX switch (RF UNIT; D100).

A portion of the VCO output signals generated at BC/VHF/UHF BAND VCO are applied to the PLL IC (RF UNIT; IC800, pin 4) via buffer amplifiers (VCO UNIT; Q200, Q202) for comparison signal.

- B_BAND -

• VBVCO

The VBVCO (MAIN UNIT; Q301, D300, D301) generates the 1st LO signals for receiving 118–174 MHz signals. The output signals are amplified at the buffer amplifier (MAIN UNIT; Q353), then applied to the 1st mixer (MAIN UNIT; IC50, pin 3).

• UBVCO

The UBVCO (MAIN UNIT; Q351, D350, D352) generates the 1st LO signals for receiving 350–470 MHz signals. The output signals are amplified at the buffer amplifier (MAIN UNIT; Q353), then applied to the 1st mixer (MAIN UNIT; IC50, pin 3).

A portion of the VCO output signals generated at VBVCO/UBVCO are applied to the PLL IC (MAIN UNIT; IC400, pin 8) via buffer amplifier (MAIN UNIT; Q353) for comparison signal.

5-3-2 PLL CIRCUITS (RF AND MAIN UNITS)

The PLL circuit provides stable oscillation of the transmit frequency and receive 1st LO frequency. The PLL circuit compares the phase of the divided VCO frequency with the reference frequency. The PLL output frequency is controlled by the divided ratio (N-data) from the CPU.

• A_BAND PLL CIRCUIT

The buffer amplified signals from the buffer amplifier (VCO UNIT; Q202) are applied to the PLL IC (RF UNIT; IC800, pin 4). The applied signals are divided at the prescaler and OSC counter according to the "PLLDATA" signal from the CPU (LOGIC UNIT; IC1, pin 94). The divided signal is phasecompared with the reference frequency at the phase detector.

The phase difference is output from pin 2 as a pulse type signal after being passed through the internal charge pump. The output signal is applied to the BC/VHF/UHF BAND VCOs (VCO UNIT) after being converted into the DC voltage (lock voltage) at the loop filter (RF UNIT; C820–C823, R806–R808).

The lock voltage for BC BAND VCO ("BCLV") from the loop filter is applied to the VCO (VCO UNIT) via R815 and pin 1 of J800 (RF UNIT). The lock voltage for VHF BAND VCO ("VLV") from the loop filter is applied to the VCO (VCO UNIT) via R811 and pin 6 of J800 (RF UNIT). The lock voltage for UHF BAND VCO ("ULV") from the loop filter is applied to the VCO (VCO UNIT) via pin 16 of J800 (RF UNIT).

• A_BAND PLL AND VCO CIRCUITS

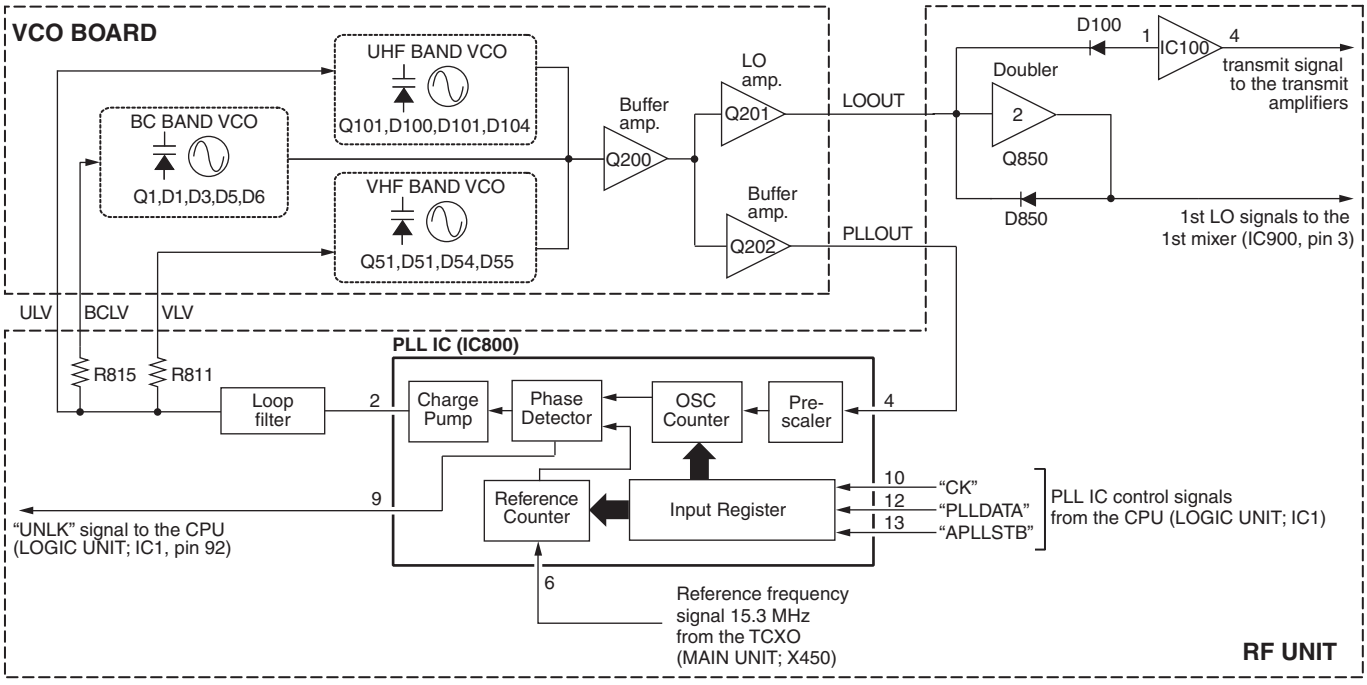

• B_BAND PLL CIRCUIT

The buffer amplified signals from the buffer amplifier (MAIN UNIT; Q353) are applied to the PLL IC (MAIN UNIT; IC400, pin 8). The applied signals are divided at the prescaler and OSC counter according to the "PLLDATA" signal from the CPU (LOGIC UNIT; IC1, pin 94). The divided signal is phasecompared with the reference frequency at the phase detector.

The phase difference is output from pin 5 as a pulse type signal after being passed through the charge pump. The output signal is applied to the B_BAND VBVCO/UBVCO (MAIN UNIT) after being converted into the DC voltage (lock voltage) at the loop filter (MAIN UNIT; R404–R406, C410–C412, C414). The lock voltage from the loop filter is applied to each VCO.

If the oscillated signal drifts, its phase changes from that of the reference frequency, causing a lock voltage change to compensate for the drift in the oscillated frequency.

• B_BAND PLL AND VCO CIRCUITS

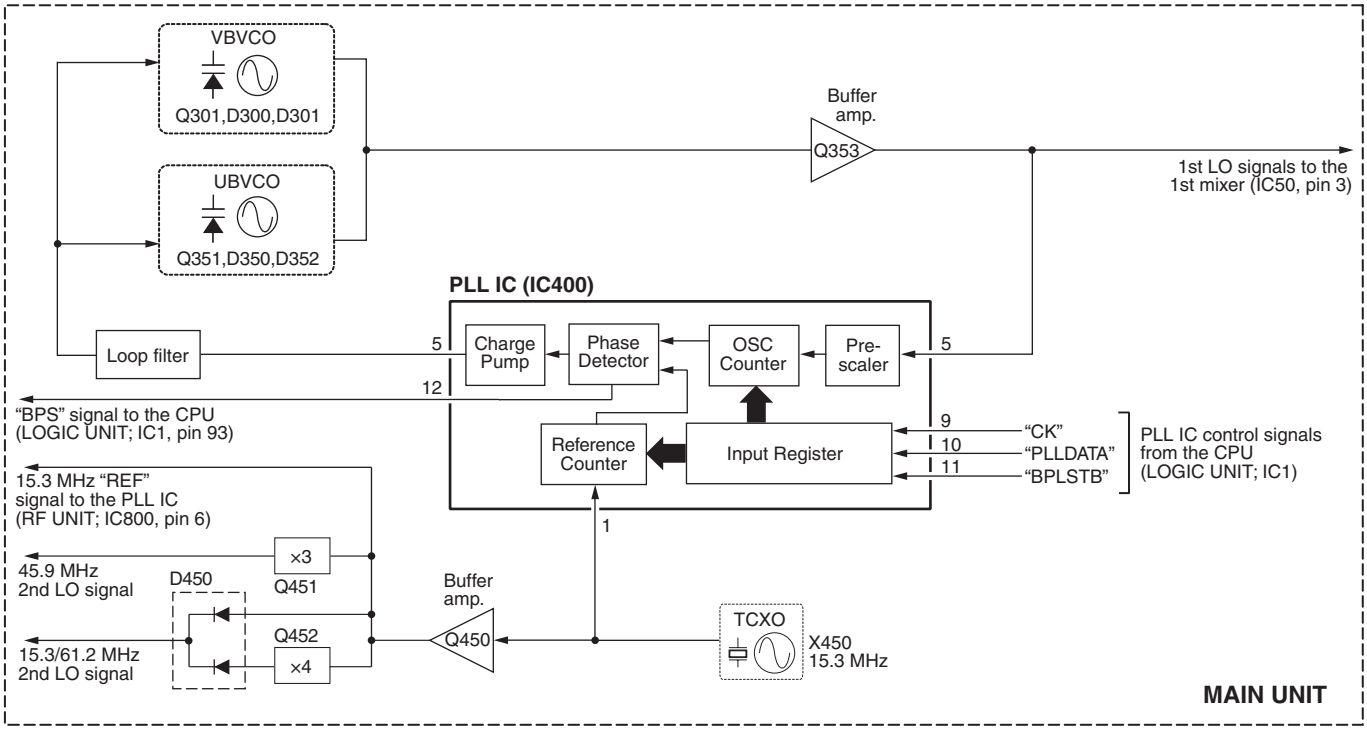

5-4 DIGITAL CIRCUITS

5-4-1 LINER CODEC (UT-121; CODEC UNIT for IC-91AD)

IC350 is a liner codec IC which converts transmitting AF signals from the LOGIC unit into digital signals, and outputs them to the audio codec IC (IC101) as 16-bit audio data.

IC350 also converts the 16-bit audio data from the audio codec IC (IC101) into analog signals, and outputs them to the LOGIC unit as the receiving AF signals.

5-4-2 AUDIO CODEC (UT-121; CODEC UNIT for IC-91AD)

IC101 is an AMBE audio codec IC. While receiving, digital signals from the LOGIC unit are expansion decoded in IC101, and output to the liner codec IC (IC350).

While transmitting, 16-bit audio data from the liner codec IC (IC350) are compression coded in IC101, and output to the LOGIC unit.

5-4-3 MODEM (UT-121; CODEC UNIT for IC-91AD)

IC202 is a GMSK modem IC. While receiving, demodulated AF signals from the MAIN unit are output to the LOGIC unit as digital signals synchronized with clock signal.

While transmitting, digital signals from the LOGIC unit are converted into GMSK base-band signal, and output to the LOGIC unit.

5-5 POWER SUPPLY CIRCUITS (LOGIC UNIT)

Line	Description
HV	The same voltage as the connected external power supply thrugh the external DC IN jack (RF UNIT; J1000).
VCC	The same voltage as the attached battery pack passed through the DC switch (RF UNIT; Q1000, D1000, D1001). The voltage is applied to the drive amplifier (RF UNIT; Q101), power amplifier (RF UNIT; Q100) and LED driver (LOGIC UNIT; Q202, Q203).
+3CPU	Common 3 V converted from VCC line at the CPU3 regulator (LOGIC UNIT; IC100). The converted voltage is applied to the CPU (IC1), EEPROM (IC51), etc.
+3V	Common 3 V converted from +3CPU line at the +3V regulator (Q100, Q101, D100). The converted voltage is applied to the PLL IC (RF UNIT; IC800), D/A converters (MAIN UNIT; IC701, IC702), etc.
RFR3	Rceive 3 V controlled by RFR3 regulator (Q602, Q603) using “R3C” signal from the expand IC (MAIN UNIT; IC701, pin 14), controlled by strobe signal "IOSTB3" from the CPU (LOGIC UNIT; IC1, pin 87). The voltage is applied to the RF circuits (RF UNIT).
T5	Transmit 5 V controlled by T5 regulator (Q650–Q652) using “TXC” signal from the CPU (IC1, pin 99). The controlled voltage is applied to the APC amplifier (IC150), pre-driver (Q102), etc.
VCO3V	Common 3 V converted from VCC line at the VCO3V regulator (Q800, Q801, D800, D801). The voltage is applied to the VCO regulators.
BCVCO3	Rceive 3 V controlled by BCVCO3 regulator (RF UNIT; Q801) using “BCVCOC" signal from the expander (RF UNIT; IC951, pin 5), controlled by “IOSTB1” signal from the CPU (IC1, pin 29). The controlled voltage is applied to the BC BAND VCO (VCO UNIT; Q1, D1, D3, D5).
VVCO3	Common 3 V controlled by VVCO3 regulator (Q800) using “VAVCOC” signal from the expander (IC951, pin 6), controlled by the “IOSTB1” from the CPU (LOGIC UNIT; IC1, pin 29). The controlled voltage is applied to the VHF BAND VCO (VCO UNIT; Q51, D51, D54, D55).
UVCO3	Common 3 V controlled by VVCO3 regulator (Q800) using “UAVCOC” signal from the expander (IC951, pin 7), controlled by the “IOSTB1” from the CPU (LOGIC UNIT; IC1, pin 29). The controlled voltage is applied to the UHF BAND VCO (VCO UNIT; Q101, D100, D101, D104).
+5.5V	Common 5.5 V boosted at the DC-DC up-converter (IC101, D101). The boosted voltage is applied to the PLL IC (RF UNIT; IC800), PLL IC (MAIN UNIT; IC400), reference oscilator (X450), etc.

5-6 CPU PORT ALLOCATION

Pin No.	Port Name	Description
1	BLED	Outputs TX/RX indicator (DS201) control signal to the TX/RX LED driver (Q201). “High”=While the squelch is open.
2	LIGHT	Outputs backlight control signal to the backlight LEDs driver (Q203). “High”=While backlight is ON.
3–7	KR0–KR4	Input ports for keypad.
8	POWER	Input port for [PWR] key (S1). “Low”=When the key is pushed.
9	BATT	Outputs power supply line select signal to the DC switch (IC50, Q35).
10	ESIO	I/O port for data signal from the EEPROM (IC51).
11	ECK	Outputs clock signal to the EEPROM (IC51).
13–17	KS0–KS3	Input ports for keypad.
22	PTT	Input port for [PTT] key (MAIN UNIT; S701). “High”=While the key is pushed.
23	SQL	Input port for [SQL] key (MAIN UNIT; S700). “Low”=While the key is pushed.
24, 5	DICK, DIUD	Input ports for [DIAL] (MAIN UNIT; S702).
26	ANOIS	Input port for noise signal from the A_BAND IF IC (MAIN UNIT; IC100).
27	DTCS	Outputs tone filter passband control signal to the tone filter (R337–R340, C338–C341) switch (Q307). “High”=During mode operation.
28	BNOIS	Input port for noise signal from the B_BAND IF IC (MAIN UNIT; IC200).
29	IOSTB1	Outputs strobe signal to the D/A converter (RF UNIT; IC951).
30	DATA	Outputs common data signal to the D/A converters (LOGIC UNIT; IC303, MAIN UNIT; IC702, RF UNIT; IC951).
31	AMBETXD†	Outputs AME TX data to the attached UT-121 (CODEC UNIT for IC-91AD).
32	AMBERXD†	Input ports for AME RX data from the attached UT-121 (CODEC UNIT for IC-91AD).
33	CK	Outputs common clock signal to the D/A converters (LOGIC UNIT; IC303, MAIN UNIT; IC702, RF UNIT; IC951).
34	DASTB1	Outputs strobe signal to the D/A converter (RF UNIT; IC950).
35	DASTB2	Outputs strobe signal to the D/A converter (IC303).
36	CHGC	Outputs charge control signal to the charger circuit (Q150, Q153, D150, D152). “High”=While charging.
37	CHGH	Outputs charging current control signal to the charger circuit (Q150, Q153, D150, D152). “High”=When the charging is completed.
38	CPUHV	Inputs HV line detection signal from the HV line voltage detector (Q51, D52). “Low”=While no exrternal DC power supply is connected.
39	PCON	Outputs power control signal to the +3V regulator (Q100, Q101, D100). “Low”=While the transceiver’s power is OFF.
41	MUTE	Outputs TX mute signal to the mode switch (IC301). “High”=While the transmitting is muted.
43	CTCOUT	Outputs CTCSS/DTCS signals.

†Available for the IC-91AD or when UT-121 is installed into the IC-91A.

5-6 CPU PORT ALLOCATION (continued)

Pin No.	Port Name	Description
44	DTMF	Outputs DTMF/beep/1750 Hz tone signals.
45	BTONE	Input port for tone signals (B_BAND; CTCSS, DTCS, etc.) from the tone selector (MAIN UNIT; IC703).
46	ATONE	Input port for tone signals (A_BAND; CTCSS, DTCS, etc.) from the tone selector (MAIN UNIT; IC703).
47	S-LV	Input port for RSSI signal from the D/A converter (MAIN UNIT; IC700).
48	VOL	Input port for audio level setting signal from the volume controller (MAIN UNIT; S702).
49	BRSSI	Input port for RSSI signal (B_BAND) from the IF IC (MAIN UNIT; IC200).
50	TEMP	Input port for transceiver's temperature detection signal from the detecting temperature selector (IC50).
51	VIN	Input port for the volatge level from the connected power supply.
59	RESET	Input port for reset signal from the reset IC (IC100).
69	CLSFT	Outputs CPU clock frequency shift signal to the clock frequency oscillator (X1, D103).
70	ACQ†	Outputs ACQ signal to the modem IC (UT-121; IC202).
71	DCEL†	Outputs DSEL signal to the modem IC (UT-121; IC202).
72	RXCK†	Input port for RX clock signal from the modem IC (UT-121; IC202).
73	RXDT†	Input port for RX data to the modem IC (UT-121; IC202).
74	TXDT†	Outputs TX data to the modem IC (UT-121; IC202).
75	TXCK†	Input port for TX clock signal from the modem (UT-121; IC202).
83	TX232	Outputs data signal to the RS-232C driver (IC52).
84	RX232	Input port for data signal from the RS-232C driver (IC52).
85	AMBECLK†	Outputs AME clock signal to the DSP IC (UT-121; IC101).
86	AMBERES†	Outputs AME reset signal to the DSP IC (UT-121; IC101).
87	IOSTB3	Outputs strobe signal to the D/A converter (MAIN UNIT; IC701).
88	AMBESTB†	Outputs AME strobe signal to the DSP IC (UT-121; IC101).
89	AMBEEPR†	Input port for AMEEPR signal from the DSP IC (UT-121; IC101).
90	DVC	Outputs +3D line control signal to the 3.3 V regulator (UT-121; Q50, Q51). "Low"=During DV† mode operation.
91	D_AS	Outputs mode select signal to the mode switch (IC301). "Low"=During DV† mode operation.
92	BPS	Outputs power control signal to the B_BAND PLL IC (MAIN UNIT; IC400). "Low"=During in power save mode.
93	UNLK	Input port for unlock signal from the PLL IC (RF UNIT; IC800). "Low"=While the PLL is unlocked.
94	PLLDATA	Outputs data signal to the PLL IC's (MAIN UNIT; IC400, RF UNIT; IC800).
95	BPLSTB	Outputs strobe signal to the PLL IC (MAIN UNIT; IC400).
96	IOSTB2	Outputs strobe signal to the D/A converter (MAIN UNIT; IC702).
97	AFON	Outputs AF power amplifier control signal to the AF6V regulator (Q105, Q106). "High"=While the squelch is open.
98	APLLSTB	Outputs strobe signal to the A_BAND PLL IC (RF UNIT; IC800).
99	TXC	• Outputs transmitter circuit control signal to the LED driver (Q200) and the T5 regulator (MAINUNIT; Q650–Q652) "High"=While transmitting.
100	MICC	Outputs microphone amplifier (Q302) and ALC circuit (IC301) control signal to the microphone amplifier driver (Q300). "Low"=While transmitting.

†Available for the IC-91AD or when UT-121 is installed into the IC-91A.

SECTION 6 ADJUSTMENT PROCEDURES

6-1 PREPARATION

When adjusting IC-91A/AD, these test equipments, OPC-254L and the JIG cables (see the illust below) are required.

■ REQUIRED TEST EQUIPMENTS

EQUIPMENT	GRADE AND RANGE	EQUIPMENT	GRADE AND RANGE
DC power supply	Output voltage : 5.0–13.5 V DC Current capacity : More than 2.5 A	Standard signal generator (SSG)	Frequency range : 0.1–1800 MHz Output level : 0.1 µV to 32 mV (–127 to –17 dBm)
RF power meter (terminated type)	Measuring range : 0.1–7 W Frequency range : 100–500 MHz Impedance : 50 Ω SWR : Less than 1.2 : 1		
Frequency counter	Frequency range : 0.1–500 MHz Frequency accuracy : ±1 ppm or better Sensitivity : 100 mV or better	Oscilloscope	Frequency range : DC–20 MHz Measuring range : 0.01–20 V
FM deviation meter	Frequency range : 30–500 MHz Measuring range : 0 to ±10 kHz	AC millivoltmeter	Measuring range : 10 mV to 10 V
Audio generator	Frequency range : 300–3000 Hz Output level : 1–500 mV (–47 to 7 dBm)	External speaker	Input impedance : 8 Ω Capacity : More than 50 mW
		Attenuator	Power attenuation : 20 or 30 dB Capacity : More than 7 W

■ CONNECTION

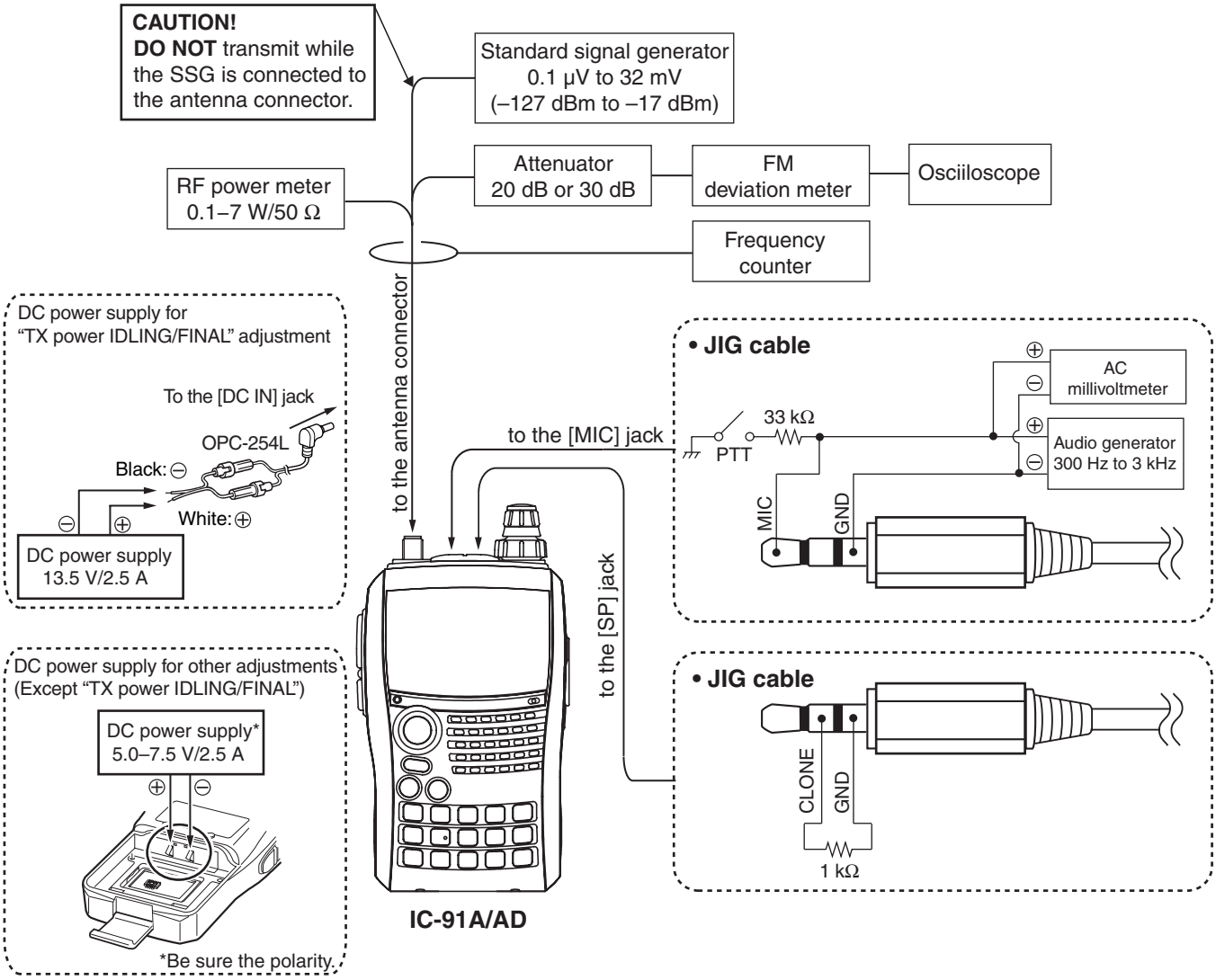

CAUTION!: BACK UP the originally programmed memory data in the transceiver before starting the adjustment.
There is possiblity of losing original memory data when the adjustment is finished.

■ ENTERING ADJUSTMENT MODE

① Turn the power OFF.
② Connect the JIG cables (see page 6-1) to the [SP] and [MIC] jacks.
③ While pushing **[SQL]** and **[8]** keys, turn the power ON.

During adjustment mode, the function dispaly shows the adjustment item, frequency, etc. as below.

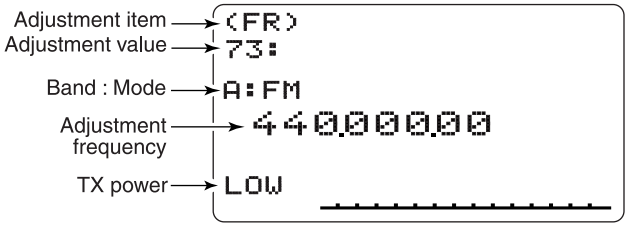

■ KEY ASSIGNMENTS FOR ADJUSTMENT MODE

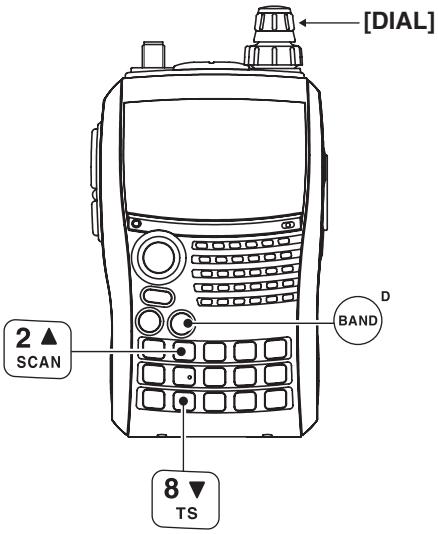

- 2 ▲ SCAN : Selects the next adjustment item.
- 8 ▼ TS : Selects the previous adjustment item.
- : Adjusts the value for the item manually.
- D BAND : Stores the set value.
  Adjusts the value for the item automatically.
  NOTE: The set value storing cannot be performed during transmit. Release PTT switch to return to receive first, then push this key to store the set value.

■ QUITING ADJUSTMENT MODE

- While pushing **[VFO]**, **[MR]** and **[BAND]** keys, turn the power OFF.

6-2 TRANSMITTER ADJUSTMENT

• Set the specified value using **[DIAL]**, and push **[BAND]** to store the set value. Then push **[2]** to move to the next adjustment item.

NOTE: "REFERENCE FREQUENCY" should be adjusted before "FM DEVIATION" and "RXBPF." Otherwise, these adjustments will not be adjusted properly.

ADJUSTMENT ITEM		ADJUSTMENT CONDITION	VALUE
REFERENCE FREQUENCY [Fr] (FR)	1	• Connect an RF power meter to the antenna connector. • Loosely couple a frequency counter to the antenna connector. • Transmitting	440.000 MHz
TX POWER IDLING 5.0 V (VHF) [id] (id)	1	• Power supply voltage : 5.0 V • Adjustment value of (Po): 00 • Connect an RF power meter to the antenna connector. • Transmitting	10 mW
(UHF)	2	• Transmitting	
FINAL 5.0V (VHF) [Po] (Po)	1	• Transmitting	0.1 W
(UHF)	2	• Transmitting	
TX POWER IDLING 7.4V [Id] (Id) (VHF)	1	• Power supply voltage : 7.4 V • Adjustment value of (Po): 00 • Transmitting	[HIGH]: 5.0 W [LOW]: 40–100 mW
(UHF)	2	• Transmitting	
	NOTE: Take notes of this adjustment value. (This value is used as reference for "TX POWER IDLING 13.5V" adjustment)		
FINAL 7.4V [Po] (Po) (VHF)	1	• Transmitting	[HIGH]: 5 W [LOW]: 0.5 W
(UHF)	2	• Transmitting	
TX POWER IDLING 13.5V [Id] (Id) (VHF)	1	• Power supply voltage : 13.5 V • Adjustment value of (Po): 00 • Transmitting	[HIGH]: • Adjustment value: 58 or • TX pwr.: 3.0–4.0 W(1) [LOW]: 40–100 mW
(UHF)	2	• Transmitting	[HIGH] • Adjustment value: 58 or • TX power: 3.0–4.0 W [LOW]: Adjustment value: (2)
FINAL 13.5V [Po] (Po) (VHF)	1	• Transmitting	[HIGH]: 4.6–5.2 W [LOW]: 0.4–0.6 W
(UHF)	2	• Transmitting	

(1); Adjustment value for the case If the output power exceeds 4.0 W.
(2); Set to the value in which 3 is subtracted from the [Id] value set by "TX POWER IDLING 7.4 V (UHF)/[LOW]."

6-2 TRANSMITTER ADJUSTMENT (continued)

• Set the specified value using **[DIAL]**, and push **[BAND]** to store the set value. Then push **[2]** to move to the next adjustment item.

ADJUSTMENT ITEM		ADJUSTMENT CONDITION	VALUE
FM DEVIATION [FMV] (FMU) (VHF)	1	• Connect an audio generator to the [MIC] jack through the JIG cable (see the page 6-1) and set as; Frequency : 1.0 kHz Level : 90 mVrms • Connect a modulation analyzer to the antenna connector through an attenuator and set as; LPF : 20 kHz HPF : OFF De-emphasis : OFF Detector : (P-P)/2 • Transmitting	±4.4 kHz
(UHF)	2	• Transmitting	
[FMR] (FMR) (VHF)	3	• Set the audio generator to the [MIC] jack through the JIG cable (see the page 5-1) and as; Frequency : 300 Hz Level : 90 mVrms • Transmitting	
(UHF)	4	• Transmitting	
DIGITAL DEVIATION‡ [DVV] (DVU) (VHF)	1	• Connect a modulation analyzer to the antenna connector through an attenuator and set as; LPF : 20 kHz HPF : OFF De-emphasis : OFF Detector : (P-P)/2 • Transmitting	±1.2 kHz
(UHF)	2	• Transmitting	
[DVR] (DVR) (VHF)	3	• Transmitting	minimum deviation
(UHF)	4	• Transmitting	
DTMF, CTCSS/DTCS DEVIATION [DTMF] (DTMF) (DTMF, VHF)	1	• Connect a modulation analyzer to the antenna connector through an attenuator and set as; LPF : 20 kHz HPF : OFF De-emphasis : OFF Detector : (P-P)/2 • No audio signals are applied to [MIC] jack. • Transmitting	±3.5 kHz
(DTMF, UHF)	2	• Transmitting	
[CT] (CT) (CTCSS, VHF)	3	• Transmitting	±0.75 kHz
(CTCSS, UHF)	4	• Transmitting	
[DT] (DT) (DTCS, VHF)	5	• Transmitting	
(DTCS, UHF)	6	• Transmitting	

*Displayed on the function display.

†The output level of the standard signal generator (SSG) is indicated as the SSG's open circuit.

‡Necessary for the IC-91AD or when UT-121 is installed into the IC-91A.

6-3 RECEIVER ADJUSTMENT

• Set the specified value using **[DIAL]**, and push **[BAND]** to store the set value. Then push **[2]** to move to the next adjustment item.

ADJUSTMENT ITEM		ADJUSTMENT CONDITION	VALUE
RXBPF (A_BAND) [TrA] (TrA)		• Connect an SSG to the ANT connector and set as; Dev. : 3.5 kHz AF :1 kHz	Push **[BAND]** (Automatic adjustment)
30–118 MHz bands	1	• Set the SSG as; Frequency : Specified frequencies* Level : 0 dBμ† (–107 dBm) • Receiving	
118–174 MHz bands	2	• Set the SSG as; Frequency : Specified frequencies* Level : –3 dBμ† (–110 dBm) • Receiving	
174–350 MHz bands	3	• Set the SSG as; Frequency : Specified frequencies* Level : 0 dBμ† (–107 dBm) • Receiving	
350–470 MHz bands	4	• Set the SSG as; Frequency : Specified frequencies* Level : –3 dBμ† (–110dBm) • Receiving	
470–999.9 MHz bands	5	• Set the SSG as; Frequency : Specified frequencies* Level : 0 dBμ† (–107 dBm) • Receiving	
RXBPF (B_BAND) [TrB] (TrB)		• Connect an SSG to the ANT connector and set as; Dev. : 3.5 kHz AF : 1 kHz	
118–470 MHz bands	1	• Set the SSG as; Frequency : Specified frequencies* Level : –3 dBμ† (–110 dBm) • Receiving	
FM S-METER (A_BAND) [S3A] (S3A)		• Connect an SSG to the ANT connector and set as; Dev. : 3.5 kHz AF : 1 kHz	Push **[BAND]** (Automatic adjustment)
1.0–145 MHz bands	1	• Set the SSG as; Frequency : Specified frequencies* Level : –6 dBμ† (–113 dBm) • Receiving	
220–305.1 MHz bands	2	• Set the SSG as; Frequency : Specified frequencies* Level : –4 dBμ† (–111 dBm) • Receiving	
430 MHz band	3	• Set the SSG as; Frequency : Specified frequency* Level : –6 dBμ† (–113 dBm) • Receiving	
530–800 MHz bands	4	• Set the SSG as; Frequency : Specified frequencies* Level : –2 dBμ† (–109 dBm) • Receiving	
FM S-METER (B_BAND) [S3B] (S3B) (VHF)	1	• Set the SSG as; Frequency : Specified frequency* Level : –6 dBμ† (–113 dBm) • Receiving	
(UHF)	2	• Set the SSG as; Frequency : Specified frequency* Level : –6 dBμ† (–113 dBm) • Receiving	

*Displayed on the function display.

†The output level of the standard signal generator (SSG) is indicated as the SSG's open circuit.

6-4 RECEIVER ADJUSTMENT (continued)

ADJUSTMENT ITEM		ADJUSTMENT CONDITION	VALUE
WFM S-METER [S3A] (S3A)		• Connect an SSG to the ANT connector and set as; Dev. : 3.5 kHz AF : 1 kHz	Push **[BAND]** (Automatic adjustment)
1.0–145 MHz bands	1	• Set the SSG as; Frequency : Specified frequencies* Level : 0 dBμ† (–107 dBm) • Receiving	
15.1–40.1 MHz bands	2	• Set the SSG as; Frequency : Specified frequencies* Level : –3 dBμ† (–110 dBm) • Receiving	
60.1 MHz band	3	• Set the SSG as; Frequency : Specified frequency* Level : –4 dBμ† (–111 dBm) • Receiving	
87.5 MHz band	4	• Set the SSG as; Frequency : Specified frequency* Level : 2 dBμ† (–105 dBm) • Receiving	
107.9 MHz band	5	• Set the SSG as; Frequency : Specified frequency* Level : –1 dBμ† (–108 dBm) • Receiving	
145.1 MHz band	6	• Set the SSG as; Frequency : Specified frequency* Level : 0 dBμ† (–107 dBm) • Receiving	
220 MHz band	7	• Set the SSG as; Frequency : Specified frequency* Level : –2 dBμ† (–109 dBm) • Receiving	
305 MHz band	8	• Set the SSG as; Frequency : Specified frequency* Level : 5 dBμ† (–102 dBm) • Receiving	
435 MHz band	9	• Set the SSG as; Frequency : Specified frequency* Level : –4 dBμ† (–111 dBm) • Receiving	
530 MHz band	10	• Set the SSG as; Frequency : Specified frequency* Level : 10 dBμ† (–97 dBm) • Receiving	
800 MHz band	11	• Set the SSG as; Frequency : Specified frequency* Level : 6 dBμ† (–101 dBm) • Receiving	

*Displayed on the function display.

†The output level of the standard signal generator (SSG) is indicated as the SSG's open circuit.

• **ADJUSTMENT FREQUENCY LIST**

NOTE: Adjustment frequency may difer depending on the transceiver.

ADJUSTMENT ITEM			FREQUENCY (MHz)	
REFERENCE FREQUENCY [FR]			440.0	
IDLING [id] 5.0 V		VHF	145.0	(146.0)*
		UHF	435.0	(445.0)*
FINAL [Po] 5.0 V		VHF	145.0	(146.0)*
		UHF	435.0	(445.0)*
IDLING [Id] 7.4 V	HIGH	VHF	145.0	(146.0)*
		UHF	435.0	(445.0)*
	LOW	VHF	145.0	(146.0)*
		UHF	435.0	(445.0)*
FINAL [Po] 7.4 V	HIGH	VHF	145.0	(146.0)*
		UHF	435.0	(445.0)*
	LOW	VHF	145.0	(146.0)*
		UHF	435.0	(445.0)*
IDLING [Id] 13.5 V	HIGH	VHF	145.0	(146.0)*
		UHF	435.0	(445.0)*
	LOW	VHF	145.0	(146.0)*
		UHF	435.0	(445.0)*
FINAL [Po] 13.5 V	HIGH	VHF	145.0	(146.0)*
		UHF	435.0	(445.0)*
	LOW	VHF	145.0	(146.0)*
		UHF	435.0	(445.0)*
FMDEVIATION [FMV]		VHF	145.0	(146.0)*
		UHF	435.0	(445.0)*
[FMR]		VHF	145.0	(146.0)*
		UHF	435.0	(445.0)*
DIGITAL DEVIATION [DVV]†		VHF	145.0	(146.0)*
		UHF	435.0	(445.0)*
[DVR]†		VHF	145.0	(146.0)*
		UHF	435.0	(445.0)*
TONE DEVIATION [DTMF]		VHF	145.0	(146.0)*
		UHF	435.0	(445.0)*
[CT]		VHF	145.0	(146.0)*
		UHF	435.0	(445.0)*
[DTMF]		VHF	145.0	(146.0)*
		UHF	435.0	(445.0)*

*[USA] version.

†Necessary for the IC-91AD or when UT-121 is installed into the IC-91A.

ADJUSTMENT ITEM		FREQUENCY (MHz)
RXBPF (A_BAND) [TrA]		30.1
		49.9
		50.1
		75.9
		76.1
		90.1
		117.9
		118.1
		146.1
		173.9
		174.1
		222.1
		159.9
		260.1
		305.1
		149.1
		350.1
		349.1
		350.1
		440.1
		469.9
		470.1
		535.1
		599.9
		600.1
		800.1
		999.9
RXBPF (B_BAND) [TrB]		118.1
		146.1
		173.9
		350.1
		440.1
		469.9
FM/WFM S-METER (A_BAND) [S3A]		1.01
		15.1
		40.1
		60.1
		87.5
		145.1
		220.1
		305.1
		435.1
		535.1
		800.1
FM S-METER (B_BAND) [S3B]	VHF	145.1
	UHF	435.1

SECTION 7 PARTS LIST

• IC-91AD/A

[LOGIC UNIT]

REF NO.	ORDER NO.	DESCRIPTION	M.	H/V LOCATION
IC1	1140013020	S.IC HD64F2238RTF13V	B	29.9/78.2
IC2	1130013010	S.IC SN74AHC1G08DCK3	B	23.3/85.1
IC50	1130011770	S.IC CD4066BPWR	B	16.7/88.5
IC51	1140012950	S.IC 24LC512T-I/SM	B	40.7/68.7
IC52	1120003020	S.IC MAX3221IPWR	B	44.7/81.9
IC100	1180002790	S.REG R1150H022D-T1-F	B	45.4/61.2
IC101	1110006930	S.IC XC6371A551PR	B	45.2/3.4
IC300	1110005310	S.IC AN6123MS	B	42.8/46.3
IC301	1130011781	S.IC SN74AHC2G53HDCT3	B	42/52.6
IC302	1110006470	S.IC LMV324IPWR	B	26.9/47.5
IC303	1190001350	S.IC M62364FP 600D	B	15.5/40
IC304	1130011770	S.IC CD4066BPWR	B	26.9/41.5
IC550	1110002810	S.IC NJM2070M-TE1	B	16.1/56.4
IC560	1110006090	S.IC XC6202P502PR	B	49.3/6.2
Q50	1540000660	S.TR 2SD2216J-S	B	39.6/79
Q51	1540000660	S.TR 2SD2216J-S	B	17.8/81.4
Q52	1590003250	S.TR UNR9115J-(TX)	B	18/84.5
Q53	1590003250	S.TR UNR9115J-(TX)	B	16/84.5
Q100	1520000460	S.TR 2SB1132 T100 R	B	46.3/36.3
Q101	1590001170	S.TR XP1501-(TX) AB	B	44.4/41
Q105	1520000460	S.TR 2SB1132 T100 R	B	15.2/70.4
Q106	1590001170	S.TR XP1501-(TX) AB	B	15.2/66.5
Q150	1510000581	S.TR 2SA1362-GR (TE85R)	B	18.8/2.7
Q151	1520000651	S.TR 2SB1201S-TL-E	B	25.1/4
Q152	1590003280	S.TR UNR9211J-(TX)	B	15.3/2
Q153	1590001170	S.TR XP1501-(TX) AB	B	11.7/4.7
Q200	1590003390	S.TR UNR9215J-(TX)	T	13.9/55.7
Q201	1590003390	S.TR UNR9215J-(TX)	T	13.8/53.7
Q202	1520000460	S.TR 2SB1132 T100 R	B	34.7/41.3
Q203	1590001170	S.TR XP1501-(TX) AB	T	44.6/27.7
Q300	1590003250	S.TR UNR9115J-(TX)	T	39.6/55.3
Q301	1590003390	S.TR UNR9215J-(TX)	B	49.9/56.8
Q302	1530002280	S.TR 2SC4081 T106 S	B	45.7/56.6
Q303	1520000830	S.TR 2SB1462J-R	T	43.2/49.1
Q304	1590003250	S.TR UNR9115J-(TX)	B	38/45.4
Q305	1590003390	S.TR UNR9215J-(TX)	B	36.9/50.4
Q306	1590003390	S.TR UNR9215J-(TX)	B	38/47.4
Q307	1590003390	S.TR UNR9215J-(TX)	B	35.7/57.3
Q308	1590003250	S.TR UNR9115J-(TX)	B	21.9/42.4
Q309	1590003390	S.TR UNR9215J-(TX)	B	39/50.3
D1	1790001200	S.DIO MA6S121 (TX)	T	21.7/47.8
D2	1790001250	S.DIO MA2S111-(TX) Except [TPE], [AUS] only	T	22.2/51.3
D3	1790001250	S.DIO MA2S111-(TX) Except [USA], [EXP-2] only	T	19.6/51.3
D11	1790001250	S.DIO MA2S111-(TX) Except [TPE], [KOR] only	T	21.7/50.1
D12	1790001250	S.DIO MA2S111-(TX) [TPE], [KOR] only	T	23.5/49.6
D13	1790000850	S.DIO MA132WK (TX) Except [EXP], [EXP-1], [EXP-2] only	B	8.3/83.6
D15	1790001250	S.DIO MA2S111-(TX) [TPE], [KOR] only	B	11/83.8
D50	1790001240	S.DIO MA2S728-(TX)	B	41.2/78.9
D51	1790001250	S.DIO MA2S111-(TX)	B	40.1/74.9
D52	1790001250	S.DIO MA2S111-(TX)	B	14.3/82.4
D53	1790001240	S.DIO MA2S728-(TX)	B	40.7/80.6
D100	1790001250	S.DIO MA2S111-(TX)	B	41.5/41.1
D101	1750000880	S.DIO RB551V-30TE-17	B	41.3/7.3
D102	1790001250	S.DIO MA2S111-(TX)	B	49.5/64.2
D103	1790001260	S.DIO MA2S077-(TX)	B	40.6/85.1
D150	1790000860	S.DIO MA133 (TX)	B	14.2/5
D152	1790000671	S.DIO SB07-03C-TB-E	B	6.4/5.9
D201	1790001250	S.DIO MA2S111-(TX)	T	16.5/55.3
D300	1790001810	S.VSR AVR-M1005C080MTABB	B	48/57.1
X1	6050011830	S.XTL CR-774 (12.288 MHz)	B	41.6/88.7
L100	6190001571	S.COL CDRH5D28NP-101NC 100U	B	36.5/3.7
R1	7030005120	S.RES ERJ2GEJ 102 X (1 k)	B	31.2/87.7
R2	7030005120	S.RES ERJ2GEJ 102 X (1 k)	B	28.5/87.7
R3	7030005120	S.RES ERJ2GEJ 102 X (1 k)	B	27.5/87.7
R4	7030005120	S.RES ERJ2GEJ 102 X (1 k)	B	26.5/87.7
R5	7030005120	S.RES ERJ2GEJ 102 X (1 k)	B	25.5/87.7
R6	7030005120	S.RES ERJ2GEJ 102 X (1 k)	B	24.5/87.7
R7	7030005120	S.RES ERJ2GEJ 102 X (1 k)	B	23.5/87.7
R8	7030005240	S.RES ERJ2GEJ 473 X (47 k)	B	24.4/70.1

[LOGIC UNIT]

REF NO.	ORDER NO.	DESCRIPTION	M.	H/V LOCATION
R9	7030005530	S.RES ERJ2GEJ 100 X (10)	B	37.8/83.7
R10	7030005160	S.RES ERJ2GEJ 105 X (1 M)	B	37.4/85.5
R11	7030008010	S.RES ERJ2GEJ 123 X (12 k)	B	40.9/83.1
R12	7030005530	S.RES ERJ2GEJ 100 X (10)	B	36/68.5
R13	7030005090	S.RES ERJ2GEJ 104 X (100 k)	B	40/81.9
R14	7030008010	S.RES ERJ2GEJ 123 X (12 k)	B	41.3/81.9
R50	7030005240	S.RES ERJ2GEJ 473 X (47 k)	B	37.3/69.7
R51	7030005050	S.RES ERJ2GEJ 103 X (10 k)	B	36.4/69.7
R52	7510001660	S.TMR NTCG16 4LH 473KT	B	11.5/86.3
R53	7030005840	S.RES RR0510R-473-D (47 k)	B	12/87.6
R54	7030011000	S.RES RR0510P-392-D (3.9 k)	B	41.2/76.9
R55	7030005240	S.RES ERJ2GEJ 473 X (47 k)	B	41.4/75.7
R56	7030005120	S.RES ERJ2GEJ 102 X (1 k)	B	40/77.5
R57	7030005240	S.RES ERJ2GEJ 473 X (47 k)	B	19.8/83
R58	7030005120	S.RES ERJ2GEJ 102 X (1 k)	B	19.8/82.1
R59	7030005040	S.RES ERJ2GEJ 472 X (4.7 k)	B	16.3/81.1
R60	7030005050	S.RES ERJ2GEJ 103 X (10 k)	B	16.4/82.4
R61	7030007290	S.RES ERJ2GEJ 222 X (2.2 k)	B	13.6/81.1
R62	7030004980	S.RES ERJ2GEJ 101 X (100)	B	42.8/77.7
R63	7030004980	S.RES ERJ2GEJ 101 X (100)	T	51.2/71.9
R64	7030005090	S.RES ERJ2GEJ 104 X (100 k)	B	21/86.6
R65	7030005120	S.RES ERJ2GEJ 102 X (1 k)	B	21.4/88
R66	7030010040	S.RES ERJ2GEJ-JPW	B	29.2/56.7
R100	7030007290	S.RES ERJ2GEJ 222 X (2.2 k)	B	43.2/39.1
R101	7030005090	S.RES ERJ2GEJ 104 X (100 k)	B	42.4/62.5
R102	7030005160	S.RES ERJ2GEJ 105 X (1 M)	B	41.4/42.1
R103	7030005050	S.RES ERJ2GEJ 103 X (10 k)	B	41.9/40
R104	7030005120	S.RES ERJ2GEJ 102 X (1 k)	B	45.2/43.2
R105	7030008270	S.RES RR0510R-104-D (100 k)	B	14/85
R106	7030005830	S.RES RR0510R-223-D (22 k)	B	21.4/89.8
R111	7030000190	S.RES MCR10EZHJ 27 (270)	B	13.3/78
R112	7030000190	S.RES MCR10EZHJ 27 (270)	B	15.1/78
R113	7030000190	S.RES MCR10EZHJ 27 (270)	B	16.8/78
R114	7030005050	S.RES ERJ2GEJ 103 X (10 k)	B	18.3/69
R115	7030008010	S.RES ERJ2GEJ 123 X (12 k)	B	19.5/69.5
R116	7030005120	S.RES ERJ2GEJ 102 X (1 k)	B	15.8/64.2
R117	7030005240	S.RES ERJ2GEJ 473 X (47 k)	B	14.1/62.4
R118	7030005160	S.RES ERJ2GEJ 105 X (1 M)	B	15.3/61.9
R150	7030003210	S.RES ERJ3GEYJ 120 V (12)	B	19.8/5.6
R151	7030003210	S.RES ERJ3GEYJ 120 V (12)	B	18.5/5.6
R152	7030003200	S.RES ERJ3GEYJ 100 V (10)	B	17.2/5.6
R153	7030007860	S.RES ERJ3GEYJ 8R2V (8.2)	B	15.9/5.6
R154	7030005120	S.RES ERJ2GEJ 102 X (1 k)	B	16.7/1.6
R155	7030005120	S.RES ERJ2GEJ 102 X (1 k)	B	12.6/2.8
R156	7030005800	S.RES RR0510P-102-D (1 k)	B	9.5/5.6
R157	7030005810	S.RES RR0510P-152-D (1.5 k)	B	9.5/3.7
R158	7030007280	S.RES ERJ2GEJ 331 X (330)	B	9.5/2.8
R159	7030008270	S.RES RR0510R-104-D (100 k)	B	6.8/8.1
R160	7030005830	S.RES RR0510R-223-D (22 k)	B	5.6/9.1
R161	7030005800	S.RES RR0510P-102-D (1 k)	B	9.5/4.6
R200	7030007280	S.RES ERJ2GEJ 331 X (330)	T	10.9/53.5
R201	7030007280	S.RES ERJ2GEJ 331 X (330)	T	10/53.5
R202	7030005040	S.RES ERJ2GEJ 472 X (4.7 k)	T	39.7/27.9
R203	7030007280	S.RES ERJ2GEJ 331 X (330)	T	39.7/27
R204	7030008370	S.RES ERJ2GEJ 561 X (560)	T	42.8/25.7
R205	7030005120	S.RES ERJ2GEJ 102 X (1 k)	T	41.9/25.7
R206	7030005120	S.RES ERJ2GEJ 102 X (1 k)	T	41/25.7
R207	7030008370	S.RES ERJ2GEJ 561 X (560)	T	44.6/25.7
R208	7030008370	S.RES ERJ2GEJ 561 X (560)	T	43.7/25.7
R209	7030008370	S.RES ERJ2GEJ 561 X (560)	T	45.5/25.7
R210	7030007280	S.RES ERJ2GEJ 331 X (330)	T	36.6/26.5
R211	7030009160	S.RES ERJ2GEJ 181 X (180)	T	41/27.5
R212	7030009160	S.RES ERJ2GEJ 181 X (180)	T	41.9/27.5
R213	7030005090	S.RES ERJ2GEJ 104 X (100 k)	B	30.6/58.3
R300	7030005060	S.RES ERJ2GEJ 333 X (33 k)	B	48/56
R301	7030005120	S.RES ERJ2GEJ 102 X (1 k)	T	41.4/55.3
R302	7030004980	S.RES ERJ2GEJ 101 X (100)	B	41.4/55.7
R303	7030007300	S.RES ERJ2GEJ 332 X (3.3 k)	B	43.9/56.1
R304	7030005090	S.RES ERJ2GEJ 104 X (100 k)	B	45.5/54.8
R305	7030005240	S.RES ERJ2GEJ 473 X (47 k)	B	48.8/51.3
R307	7030007290	S.RES ERJ2GEJ 222 X (2.2 k)	B	45.5/53
R308	7030005000	S.RES ERJ2GEJ 471 X (470)	T	39.6/53.6
R309	7030005050	S.RES ERJ2GEJ 103 X (10 k)	T	41.4/52.6
R310	7030005120	S.RES ERJ2GEJ 102 X (1 k)	T	41.4/53.5
R311	7030007290	S.RES ERJ2GEJ 222 X (2.2 k)	T	41.4/54.4
R312	7030005110	S.RES ERJ2GEJ 224 X (220 k)	T	44.9/47.4
R313	7030005160	S.RES ERJ2GEJ 105 X (1 M)	B	47.5/49
R314	7030005110	S.RES ERJ2GEJ 224 X (220 k)	B	41/50.4
R316	7030008410	S.RES ERJ2GEJ 392 X (3.9 k)	B	45.8/50.5
R317	7030005030	S.RES ERJ2GEJ 152 X (1.5 k)	B	44/50
R318	7030010040	S.RES ERJ2GEJ-JPW	B	38.6/52.6
R319	7030005100	S.RES ERJ2GEJ 154 X (150 k)	B	38.6/54.2
R320	7030005040	S.RES ERJ2GEJ 472 X (4.7 k)	B	38.6/55.8
R321	7030005120	S.RES ERJ2GEJ 102 X (1 k)	B	39.8/55.7
R322	7030005240	S.RES ERJ2GEJ 473 X (47 k)	B	39.9/48.7

M.=Mounted side (T: Mounted on the Top side, B: Mounted on the Bottom side)
S.=Surface mount

[LOGIC UNIT]

REF NO.	ORDER NO.	DESCRIPTION	M.	H/V LOCATION
R323	7030007340	S.RES ERJ2GEJ 153 X (15 k)	B	35.9/52
R324	7030007340	S.RES ERJ2GEJ 153 X (15 k)	B	32.8/50
R325	7030007340	S.RES ERJ2GEJ 153 X (15 k)	B	21.4/47.7
R326	7030005110	S.RES ERJ2GEJ 224 X (220 k)	B	32.3/48.4
R327	7030005090	S.RES ERJ2GEJ 104 X (100 k)	B	21.4/48.6
R328	7030005090	S.RES ERJ2GEJ 104 X (100 k)	B	21.4/46.8
R331	7030005100	S.RES ERJ2GEJ 154 X (150 k)	B	32.3/46.5
R332	7030005000	S.RES ERJ2GEJ 471 X (470)	B	34.7/49
R333	7030009140	S.RES ERJ2GEJ 272 X (2.7 k)	B	34.7/48.1
R334	7030005080	S.RES ERJ2GEJ 823 X (82 k)	B	34.7/47.2
R335	7030005090	S.RES ERJ2GEJ 104 X (100 k)	B	31.2/49.1
R336	7030005080	S.RES ERJ2GEJ 823 X (82 k)	B	34.6/50.8
R337	7030007350	S.RES ERJ2GEJ 393 X (39 k)	B	34.1/53.7
R338	7030005050	S.RES ERJ2GEJ 103 X (10 k)	B	34.1/55.3
R339	7030007350	S.RES ERJ2GEJ 393 X (39 k)	B	35.1/55.3
R340	7030008410	S.RES ERJ2GEJ 392 X (3.9 k)	B	36/55.3
R341	7030005070	S.RES ERJ2GEJ 683 X (68 k)	B	34.7/45.4
R342	7030007350	S.RES ERJ2GEJ 393 X (39 k)	B	34.7/46.3
R343	7030005090	S.RES ERJ2GEJ 104 X (100 k)	B	21.4/49.5
R344	7030005170	S.RES ERJ2GEJ 474 X (470 k)	B	22.6/49.4
R345	7030007290	S.RES ERJ2GEJ 222 X (2.2 k)	B	22.7/39.8
R346	7030008290	S.RES ERJ2GEJ 183 X (18 k)	B	49.7/51.3
R347	7030010040	S.RES ERJ2GEJ-JPW	B	43.8/54.8
R348	7030004980	S.RES ERJ2GEJ 101 X (100)	B	30.3/54
R349	7030007290	S.RES ERJ2GEJ 222 X (2.2 k)	B	28.5/17
R350	7030005030	S.RES ERJ2GEJ 152 X (1.5 k)	B	24.4/17
R351	7030005090	S.RES ERJ2GEJ 104 X (100 k)	B	22.4/44.3
R352	7030007320	S.RES ERJ2GEJ 225 X (2.2 M)	B	37.3/53.7
R353	7030010040	S.RES ERJ2GEJ-JPW	B	42.2/50
R401	7030005240	S.RES ERJ2GEJ 473 X (47 k)	B	38.4/82.5
R402	7030005090	S.RES ERJ2GEJ 104 X (100 k)	B	39.7/20.3
R500	7030005050	S.RES ERJ2GEJ 103 X (10 k)	B	8.4/35.7
R501	7030005160	S.RES ERJ2GEJ 105 X (1 M)	B	9.6/42
R502	7030005050	S.RES ERJ2GEJ 103 X (10 k)	B	8.4/37.4
R503	7030005160	S.RES ERJ2GEJ 105 X (1 M)	B	10.5/36.8
R504	7030010040	S.RES ERJ2GEJ-JPW	B	39.8/57.5
R505	7030007290	S.RES ERJ2GEJ 222 X (2.2 k)	B	39.8/56.6
R506	7030005050	S.RES ERJ2GEJ 103 X (10 k)	B	10.5/39
R507	7030005050	S.RES ERJ2GEJ 103 X (10 k)	B	8.7/42
R508	7030005050	S.RES ERJ2GEJ 103 X (10 k)	B	9.6/35.7
R509	7030003440	S.RES ERJ3GEYJ 102 V (1 k)	B	41.1/58.2
R550	7030007260	S.RES ERJ2GEJ 330 X (33)	B	19.5/53.1
R551	7030005530	S.RES ERJ2GEJ 100 X (10)	B	14.5/59.7
R552	7030005210	S.RES ERJ2GEJ 822 X (8.2 k)	B	20.5/56.6
R553	7030005120	S.RES ERJ2GEJ 102 X (1 k)		
		[USA], [USA-1], [EXP-2]	B	17.2/53.1
	7030008010	S.RES ERJ2GEJ 123 X (12 k)		
		Except [USA], [USA-1], [EXP-2]	B	17.2/53.1
R601	7030005120	S.RES ERJ2GEJ 102 X (1 k)	B	3.7/55.9
R602	7030005120	S.RES ERJ2GEJ 102 X (1 k)	B	2.8/55.9
R603	7030005120	S.RES ERJ2GEJ 102 X (1 k)	B	11.6/67.2
R604	7030005120	S.RES ERJ2GEJ 102 X (1 k)	B	11.1/62.9
R605	7030005120	S.RES ERJ2GEJ 102 X (1 k)	B	11.1/65.1
C1	4030016930	S.CER ECJ0EB1A104K	B	35.5/69.7
C2	4030016930	S.CER ECJ0EB1A104K	B	39.3/83.3
C3	4030016930	S.CER ECJ0EB1A104K	B	36.6/83.5
C4	4030016930	S.CER ECJ0EB1A104K	B	34.2/86.1
C5	4030017460	S.CER ECJ0EB1E102K	B	31.2/90
C6	4030017460	S.CER ECJ0EB1E102K	B	28.5/90
C7	4030017460	S.CER ECJ0EB1E102K	B	27.5/90
C8	4030017460	S.CER ECJ0EB1E102K	B	26.5/90
C9	4030017460	S.CER ECJ0EB1E102K	B	25.5/90
C10	4030017460	S.CER ECJ0EB1E102K	B	24.5/90
C11	4030017460	S.CER ECJ0EB1E102K	B	23.5/90
C12	4030016930	S.CER ECJ0EB1A104K	B	23.9/71.8
C13	4030017640	S.CER ECJ0EC1H150J	B	36.2/85.1
C14	4030017620	S.CER ECJ0EC1H100C	B	37.7/84.6
C15	4030017400	S.CER ECJ0EC1H220J	B	40.9/84
C16	4030016930	S.CER ECJ0EB1A104K	B	38.9/85.2
C17	4030016930	S.CER ECJ0EB1A104K	B	20.3/84.2
C32	4550007720	S.TAN TEESVP 0G 476M8R	B	33.1/88.5
C50	4030017460	S.CER ECJ0EB1E102K	B	19.9/85.4
C51	4030017460	S.CER ECJ0EB1E102K	B	22.2/87.1
C52	4030017460	S.CER ECJ0EB1E102K	B	21.7/88.9
C53	4030017460	S.CER ECJ0EB1E102K	B	12/89.1
C54	4030017460	S.CER ECJ0EB1E102K	B	12/90
C55	4030017460	S.CER ECJ0EB1E102K	B	37.3/68
C56	4030017460	S.CER ECJ0EB1E102K	B	41.1/74.5
C57	4030017400	S.CER ECJ0EC1H220J	B	42/74.5
C58	4030017460	S.CER ECJ0EB1E102K	B	20.2/80.9
C59	4030017460	S.CER ECJ0EB1E102K	B	19.3/80.9
C60	4030017460	S.CER ECJ0EB1E102K	B	15.4/81.1
C61	4030017460	S.CER ECJ0EB1E102K	B	14.5/81.1
C62	4030016930	S.CER ECJ0EB1A104K	T	51.1/78.1
C63	4030011810	S.CER C1608 JB 1A 224K-T	B	48.4/78.1
C64	4030011810	S.CER C1608 JB 1A 224K-T	B	49.6/78.1
C65	4030011810	S.CER C1608 JB 1A 224K-T	B	47.2/76
C66	4030011810	S.CER C1608 JB 1A 224K-T	B	50.5/80.1
C69	4030017620	S.CER ECJ0EC1H100C	B	42.8/76.7

[LOGIC UNIT]

REF NO.	ORDER NO.	DESCRIPTION	M.	H/V LOCATION
C70	4030017620	S.CER ECJ0EC1H100C	T	51.2/69.8
C100	4030017460	S.CER ECJ0EB1E102K	B	50/38
C101	4030011600	S.CER C1608 JB 1E 104K-T	B	48.8/62.2
C102	4030011600	S.CER C1608 JB 1E 104K-T	B	42.3/60
C103	4550006250	S.TAN TEESVA 1A 106M8R	B	50.5/61.1
C104	4030016930	S.CER ECJ0EB1A104K	B	48.8/60.1
C105	4550007320	S.TAN F930J226MAABMA	B	39.4/41.5
C106	4030016790	S.CER ECJ0EB1C103K	B	42.8/43.3
C107	4030017460	S.CER ECJ0EB1E102K	B	41.9/43.3
C108	4550007320	S.TAN F930J226MAABMA	B	48.3/42.2
C109	4030016930	S.CER ECJ0EB1A104K	B	43.7/43.3
C110	4030017460	S.CER ECJ0EB1E102K	B	50/37
C111	4550007320	S.TAN F930J226MAABMA	B	48.3/40.1
C112	4030017460	S.CER ECJ0EB1E102K	B	41/43.3
C113	4550006760	S.TAN TEESVB21A336M8R	B	41.2/3.8
C114	4550007680	S.TAN TEESVP 0J 226M8R	B	32.4/2
C115	4550007680	S.TAN TEESVP 0J 226M8R	B	45.4/6.8
C116	4550007680	S.TAN TEESVP 0J 226M8R	B	32.4/6.6
C119	4030017460	S.CER ECJ0EB1E102K	B	19.1/78.2
C120	4030017460	S.CER ECJ0EB1E102K	B	18.2/78.2
C121	4550006470	S.TAN TEESVB2 1D 106M8R	B	15.4/74.6
C122	4030017460	S.CER ECJ0EB1E102K	B	17.8/72.3
C123	4030016930	S.CER ECJ0EB1A104K	B	14.5/60.6
C125	4030017460	S.CER ECJ0EB1E102K	B	19.5/68.5
C126	4030018860	S.CER ECJ0EB0J105K	B	14.6/64.6
C127	4030017460	S.CER ECJ0EB1E102K	B	14.6/63.7
C128	4030017460	S.CER ECJ0EB1E102K	B	15.3/62.8
C130	4030018860	S.CER ECJ0EB0J105K	B	48.6/9.2
C131	4030018860	S.CER ECJ0EB0J105K	B	48.6/10.1
C132	4030012610	S.CER C2012 JB 1C 474K-T	B	49.8/11.5
C150	4030017460	S.CER ECJ0EB1E102K	B	14.5/6.5
C151	4030017460	S.CER ECJ0EB1E102K	B	13.4/1.8
C152	4030017460	S.CER ECJ0EB1E102K	B	9.5/1.9
C153	4030017460	S.CER ECJ0EB1E102K	B	5/10
C200	4550007690	S.TAN TEESVP 1C 105M8R	T	18.8/54.9
C201	4550007690	S.TAN TEESVP 1C 105M8R	T	20.6/54.9
C202	4550007690	S.TAN TEESVP 1C 105M8R	T	22.3/54.9
C203	4550007690	S.TAN TEESVP 1C 105M8R	T	24.1/54.9
C204	4550007690	S.TAN TEESVP 1C 105M8R	T	25.8/54.9
C205	4550007700	S.TAN TEESVP 1C 225M8R	B	22.5/55.8
C206	4550007700	S.TAN TEESVP 1C 225M8R	B	24.3/55.8
C207	4550007700	S.TAN TEESVP 1C 225M8R	B	26.1/55.8
C208	4550007700	S.TAN TEESVP 1C 225M8R	B	27.8/55.8
C209	4030017460	S.CER ECJ0EB1E102K	T	15.4/55.7
C210	4030017460	S.CER ECJ0EB1E102K	T	16.5/53.2
C211	4030017460	S.CER ECJ0EB1E102K	T	43.7/29.8
C212	4030017460	S.CER ECJ0EB1E102K	B	37.9/43.3
C213	4030018910	S.CER C1608 JB 0J 475K-T	T	38/26.2
C214	4030017460	S.CER ECJ0EB1E102K	T	39.2/25.7
C215	4030017460	S.CER ECJ0EB1E102K	T	40.1/25.7
C300	4030017460	S.CER ECJ0EB1E102K	T	37.7/54.8
C301	4030016790	S.CER ECJ0EB1C103K	T	37.7/55.7
C302	4030017460	S.CER ECJ0EB1E102K	B	51.5/51.3
C303	4030016930	S.CER ECJ0EB1A104K	B	50.6/51.3
C305	4030016930	S.CER ECJ0EB1A104K	B	47.9/51.3
C306	4550007730	S.TAN TEESVJ 0J 106M8R	B	42.8/56.6
C308	4030017460	S.CER ECJ0EB1E102K	T	37.7/53.9
C309	4030017460	S.CER ECJ0EB1E102K	T	45.8/47.4
C310	4030016950	S.CER ECJ0EB1A473K	T	44/47.4
C311	4550006250	S.TAN TEESVA 1A 106M8R	B	45.6/47
C312	4030016790	S.CER ECJ0EB1C103K	B	47.1/47.8
C313	4030016930	S.CER ECJ0EB1A104K	B	41.3/48.9
C314	4030016930	S.CER ECJ0EB1A104K	B	44.9/50.4
C316	4030016930	S.CER ECJ0EB1A104K	B	43.1/50
C317	4030016930	S.CER ECJ0EB1A104K	B	41.4/54.8
C318	4030016950	S.CER ECJ0EB1A473K	B	37.3/51.9
C319	4030018390	S.CER ECJ0EB1A563K	B	34.7/49.9
C320	4030017460	S.CER ECJ0EB1E102K	B	40/45.4
C321	4030017460	S.CER ECJ0EB1E102K	B	40/46.3
C322	4030017460	S.CER ECJ0EB1E102K	B	37.3/49
C323	4030017460	S.CER ECJ0EB1E102K	B	39.9/47.7
C324	4030018860	S.CER ECJ0EB0J105K	B	37.3/52.8
C326	4030016930	S.CER ECJ0EB1A104K	B	39.8/54.8
C327	4030017770	S.CER ECJ0EB1E332K	B	37.3/54.6
C328	4030016790	S.CER ECJ0EB1C103K	B	37.3/55.5
C329	4030017460	S.CER ECJ0EB1E102K	B	33.9/52
C330	4550000460	S.TAN TEESVA 1C 105M8R	B	24.9/51.4
C331	4030017710	S.CER ECJ0EC1H181J	B	31.4/46.5
C332	4030017920	S.CER ECJ0EB1A683K	B	36/48.8
C333	4030018860	S.CER ECJ0EB0J105K	B	36.7/46.5
C334	4030018110	S.CER ECJ0EB1H272K	B	35/52
C335	4030016790	S.CER ECJ0EB1C103K	B	30.3/53.1
C336	4550006120	S.TAN TEESVA 0G 226M8R	B	30.1/51.5
C338	4550006010	S.TAN TEESVA 0G 106M8R	B	32.4/55.4
C339	4030017920	S.CER ECJ0EB1A683K	B	34.1/57
C340	4030017040	S.CER ECJ0EB1A333K	B	35.1/53.7
C341	4030017460	S.CER ECJ0EB1E102K	B	37.2/57.3
C342	4030018140	S.CER ECJ0EB1H391K	B	33.4/45.8
C343	4030017040	S.CER ECJ0EB1A333K	B	22.3/41
C344	4030017460	S.CER ECJ0EB1E102K	B	21.1/37.4
C345	4030017460	S.CER ECJ0EB1E102K	B	9.6/38.7

M.=Mounted side (T: Mounted on the Top side, B: Mounted on the Bottom side)
S.=Surface mount

[LOGIC UNIT]

REF NO.	ORDER NO.	DESCRIPTION	M.	H/V LOCATION
C346	4550007730	S.TAN TEESVJ 0J 106M8R	B	18.7/46.7
C347	4030017460	S.CER ECJ0EB1E102K	B	21.2/39.8
C348	4030018860	S.CER ECJ0EB0J105K	B	17.6/46.2
C349	4030017460	S.CER ECJ0EB1E102K	B	21.5/44.3
C350	4030017460	S.CER ECJ0EB1E102K	B	20.6/44.3
C351	4550007730	S.TAN TEESVJ 0J 106M8R	B	46.9/51
C352	4030016960	S.CER ECJ0EB1C183K	B	24.4/17.9
C353	4030018860	S.CER ECJ0EB0J105K	T	42.2/51
C400	4030017460	S.CER ECJ0EB1E102K	B	3.7/79.1
C505	4550007720	S.TAN TEESVP 0G 476M8R	B	8.6/40.4
C506	4030018860	S.CER ECJ0EB0J105K	B	7.5/35.7
C509	4030018860	S.CER ECJ0EB0J105K	B	7.5/37.4
C510	4030016930	S.CER ECJ0EB1A104K	B	39.8/58.4
C550	4030017780	S.CER ECJ0EB1E472K	B	17.9/49.5
C551	4030016930	S.CER ECJ0EB1A104K	B	18.8/49.5
C553	4550002960	S.TAN TEESVA 1C 155M8R	B	19.7/51.4
C554	4510008500	S.ELE EEE1CA101WP	B	13.6/49.6
C555	4030016950	S.CER ECJ0EB1A473K	B	15.8/60.2
C556	4030017460	S.CER ECJ0EB1E102K	B	10.9/45.6
C655	4510005590	S.ELE ECEV0JA331P		
		[USA], [USA-1], [TPE], [EXP-2]	B	5.6/47.3
	4510009020	S.ELE EEE0JA331P		
		Except [USA], [USA-1], [TPE], [EXP-2]	B	5.6/47.3
J50	6510024580	S.CNR HSJ1621-019011	B	53.3/70.5
J200	6510023390	S.CNR 27FLZ-SM1-TB		
		[USA], [USA-1], [TPE], [EXP-2]	B	27/62.1
	6510023391	S.CNR 27FLZ-SM2-TB (LF) (SN)		
		Except [USA], [USA-1], [TPE], [EXP-2]		B
27/62.1				
J400	6510025540	S.CNR AXK724127G	B	33.9/18.9
J401	6510025080	S.CNR 04-6240-040-001-800+	B	7.5/67.8
DS1	5030002880	LCD HLM7972-010100		
DS201	5040002670	S.LED CL-165HR/YG	T	5.1/55.6
DS202	5040002930	S.LED SML-512MW T86	T	11.1/38
DS203	5040002930	S.LED SML-512MW T86	T	13.1/23
DS204	5040002930	S.LED SML-512MW T86	T	22.7/14.6
DS205	5040002930	S.LED SML-512MW T86	T	39.9/14.8
DS206	5040002930	S.LED SML-512MW T86	T	14.1/7.8
DS207	5040002930	S.LED SML-512MW T86	T	31.3/7.3
DS208	5040002930	S.LED SML-512MW T86	T	48.5/8.3
DS209	5040002930	S.LED SML-512MW T86	T	5.1/49.5
DS210	5040002960	S.LED SML-A12MT T86	T	18/87
DS211	5040002960	S.LED SML-A12MT T86	T	36/87
MC300	7700002310	MIC EM-140		
SP1	2510000840	SP CS028014-12		
W1	8900010520	CBL OPC-1033		
W2	7120000470	JMP ERDS2T0		
W3	7120000470	JMP ERDS2T0		
EP50	6910015370	S.BEA ACZ1005Y-102-T	B	48.3/81.4
EP51	6910015370	S.BEA ACZ1005Y-102-T	B	44.4/76.7
EP52	6910015370	S.BEA ACZ1005Y-102-T	T	51.2/68.6
EP53	6910015370	S.BEA ACZ1005Y-102-T	T	52.1/66.9
EP100	6910015370	S.BEA ACZ1005Y-102-T	B	43.4/6.4
EP101	6910015370	S.BEA ACZ1005Y-102-T	B	32.6/4

[MAIN UNIT]

REF NO.	ORDER NO.	DESCRIPTION	M.	H/V LOCATION
IC50	1110005230	S.IC μPC2757TB-E3	T	24.3/17.8
IC100	1110003201	S.IC TA31136FNG (EL)	B	47.3/27.4
IC150	1110005330	S.IC NJM12904V-TE1	B	18.3/29.3
IC200	1110003201	S.IC TA31136FNG (EL)	B	41.7/27.4
IC250	1110005330	S.IC NJM12904V-TE1	B	13.4/39.9
IC400	1130011671	S.IC MB15E03SLPFV1-G-BND-E1	T	31.9/6.9
IC500	1130011770	S.IC CD4066BPWR	B	18.4/40.5
IC501	1110005330	S.IC NJM12904V-TE1	B	18.3/20.3
IC700	1130011770	S.IC CD4066BPWR	T	8.9/40
IC701	1130011760	S.IC CD4094BPWR	B	12.5/9
IC702	1130011760	S.IC CD4094BPWR	T	12.5/9.1
IC703	1130011770	S.IC CD4066BPWR	T	8.9/45.5
Q1	1530002280	S.TR 2SC4081 T106 S	T	23.6/20.8
Q2	1530003260	S.TR 2SC5006-T1	T	26.6/27.5
Q100	1530002601	S.TR 2SC4215-O (TE85R)	B	47.2/37.9
Q101	1590003390	S.TR UNR9215J-(TX)	T	33.9/39.7
Q102	1590002380	S.TR XP1115 (TX)	T	36.5/40.3
Q103	1590001190	S.TR XP6501-(TX) AB	B	27.8/34.1
Q104	1590001190	S.TR XP6501-(TX) AB	B	25.5/38.9
Q105	1590003250	S.TR UNR9115J-(TX)	T	24.7/38.4
Q150	1590003250	S.TR UNR9115J-(TX)	T	20.9/38.9
Q200	1530002601	S.TR 2SC4215-O (TE85R)	B	39.4/33.4
Q201	1530002280	S.TR 2SC4081 T106 S	T	33.1/32.2
Q202	1590001190	S.TR XP6501-(TX) AB	T	16.2/18.5
Q203	1590001190	S.TR XP6501-(TX) AB	T	17.3/23.6
Q204	1590003250	S.TR UNR9115J-(TX)	T	17.5/15.9
Q205	1590003250	S.TR UNR9115J-(TX)	T	31.7/35.6
Q206	1590003390	S.TR UNR9215J-(TX)	T	35.7/32.2
Q250	1590003250	S.TR UNR9115J-(TX)	T	17.5/13.5
Q300	1590003250	S.TR UNR9115J-(TX)	T	31.4/27.4
Q301	1530003560	S.TR 2SC5195-T1	T	30.7/22.1
Q350	1590003250	S.TR UNR9115J-(TX)	T	33.4/26.4
Q351	1530003560	S.TR 2SC5195-T1	T	34.3/18.1
Q353	1530003260	S.TR 2SC5006-T1	T	30.1/16.7
Q450	1530002601	S.TR 2SC4215-O (TE85R)	B	36.6/7
Q451	1530002601	S.TR 2SC4215-O (TE85R)	B	41.7/9.2
Q452	1530002601	S.TR 2SC4215-O (TE85R)	B	45.7/7.2
Q453	1590001980	S.TR XP4315 (TX)	T	36.4/42.8
Q500	1590003390	S.TR UNR9215J-(TX)	B	14.3/17.6
Q550	1590001190	S.TR XP6501-(TX) AB	T	18.2/32.2
Q552	1530002280	S.TR 2SC4081 T106 S	T	15.1/36.3
Q600	1520000460	S.TR 2SB1132 T100 R	B	4/37.2
Q601	1590001170	S.TR XP1501-(TX) AB	B	6.1/41.1
Q602	1520000460	S.TR 2SB1132 T100 R	B	4.5/6.1
Q603	1590001170	S.TR XP1501-(TX) AB	T	5.3/6.9
Q604	1590002380	S.TR XP1115 (TX)	B	11.2/25.8
Q650	1590003280	S.TR UNR9211J-(TX)	T	19.7/5
Q651	1590001170	S.TR XP1501-(TX) AB	T	22.5/6.8
Q652	1520000460	S.TR 2SB1132 T100 R	T	26.6/8.4
D10	1750001210	S.DIO HSB88ASTR-E	T	25.3/23.4
D100	1790001240	S.DIO MA2S728-(TX)	T	26.3/35.3
D104	1790001240	S.DIO MA2S728-(TX)	B	24.6/35.9
D105	1790001250	S.DIO MA2S111-(TX)	B	22.1/36.3
D200	1790001240	S.DIO MA2S728-(TX)	B	35.5/28.8
D204	1790001240	S.DIO MA2S728-(TX)	T	19.5/20.4
D205	1790001250	S.DIO MA2S111-(TX)	T	17.2/27.3
D300	1750001270	S.VCP 1SV325 (TPH3)	T	28.2/24.9
D301	1750000771	S.VCP HVC376BTRF-E	T	28.7/23.2
D350	1750000721	S.VCP HVC375BTRF-E	T	32.3/21.1
D351	1790000850	S.DIO MA132WK (TX)	T	28.1/19.8
D352	1750000721	S.VCP HVC375BTRF-E	T	34/21.9
D451	1790001240	S.DIO MA2S728-(TX)	T	48.2/5.7
FI1	2030000450	S.MLH FL-394 (61.65 MHz)	B	23.6/27.6
FI2	2020001800	S.CER SFECV13M3DA0001-B0	B	33.1/32.5
FI50	2030000150	S.MLH FL-335 (46.350 MHz)	B	30.7/24
FI100	2020001270	CER CFWLB450KE2A-B0		
FI200	2020001270	CER CFWLB450KE2A-B0		
FI201	2020002180	S.CER CFWKA450KHFA-R0	B	33.2/14.5
X100	6070000190	S.DCR CDBCB450KCAY24-R0	T	47.5/35.8
X200	6070000190	S.DCR CDBCB450KCAY24-R0	T	41/35.8
X450	6050012380	S.XTL CR-826 (15.3 MHz)	T	46.4/8.3
L1	6200009101	S.COL ELJRE R18GFA	T	25.2/25.4
L10	6200011031	S.COL ELJRF R10JFB	B	22.3/18.6
L30	6200010380	S.COL ELJRE R15J-F3 [USA-1], [EXP-2]	B	23.8/17
	6200010381	S.COL ELJRE R15JFA		
		Except [USA-1], [EXP-2]	B	23.8/17
L50	6200011021	S.COL ELJRF 82NJFB	T	26.9/16.2
L100	6200003540	S.COL MLF1608D R22K-T	B	48.7/35.1
L101	6200003131	S.COL NLV32T-120J	T	48.6/40.8
L102	6200003540	S.COL MLF1608D R22K-T	B	50.6/34.2
L103	6200003540	S.COL MLF1608D R22K-T	B	51.2/23.9

M.=Mounted side (T: Mounted on the Top side, B: Mounted on the Bottom side)
S.=Surface mount

[MAIN UNIT]

REF NO.	ORDER NO.	DESCRIPTION	M.	H/V LOCATION
L200	6200003540	S.COL MLF1608D R22K-T	B	41.6/34.8
L201	6200003540	S.COL MLF1608D R22K-T	B	42.2/33
L202	6200003540	S.COL MLF1608D R22K-T	B	41.4/20.9
L301	6200011580	S.COL LQW18AN33NG00D	T	27.5/22.9
L351	6200009220	S.COL LQW18AN15NG00D	T	34.1/20.7
L450	6200005190	S.COL MLF1608D R56K-T	B	43.7/8.2
L451	6200005190	S.COL MLF1608D R56K-T	B	43.9/11.9
L452	6200004790	S.COL MLF1608D R47K-T	B	47.7/6.5
L453	6200004790	S.COL MLF1608D R47K-T	B	47.9/10.8
L454	6200004920	S.COL MLF1608A 2R2K-T	T	41.4/6.5
R6	7030007290	S.RES ERJ2GEJ 222 X (2.2 k)	B	22.6/22
R7	7030007290	S.RES ERJ2GEJ 222 X (2.2 k)	B	25.4/20.8
R8	7030008280	S.RES ERJ2GEJ 271 X (270)	B	25/22.2
R9	7030009160	S.RES ERJ2GEJ 181 X (180)	B	23.5/32.5
R10	7030007290	S.RES ERJ2GEJ 222 X (2.2 k)	B	25.3/33.4
R11	7030007290	S.RES ERJ2GEJ 222 X (2.2 k)	B	34.4/36.6
R14	7030005580	S.RES ERJ2GEJ 560 X (56)	B	25.2/18.7
R15	7030005090	S.RES ERJ2GEJ 104 X (100 k)	T	23/23.2
R16	7030007280	S.RES ERJ2GEJ 331 X (330)	T	23/25.6
R17	7030005090	S.RES ERJ2GEJ 104 X (100 k)	T	23.6/27.9
R18	7030007280	S.RES ERJ2GEJ 331 X (330)	T	22.6/27.9
R19	7030007290	S.RES ERJ2GEJ 222 X (2.2 k)	B	35.1/40
R23	7030010040	S.RES ERJ2GEJ-JPW	B	30.5/29.4
R24	7030007280	S.RES ERJ2GEJ 331 X (330)	B	34.7/29.8
R51	7030007270	S.RES ERJ2GEJ 151 X (150)	B	26.6/20.5
R52	7030009160	S.RES ERJ2GEJ 181 X (180)	B	35.6/26.4
R55	7030005120	S.RES ERJ2GEJ 102 X (1 k)	B	27.5/5
R100	7030007340	S.RES ERJ2GEJ 153 X (15 k)	B	46.8/33.9
R101	7030005290	S.RES ERJ2GEJ 682 X (6.8 k)	B	46.3/35.2
R102	7030004970	S.RES ERJ2GEJ 470 X (47)	B	44.9/38.1
R104	7030004990	S.RES ERJ2GEJ 221 X (220)	B	47.8/32.7
R105	7030005010	S.RES ERJ2GEJ 681 X (680)	T	48.7/43.1
R106	7030009270	S.RES ERJ2GEJ 821 X (820)	T	51.3/33.5
R107	7030005240	S.RES ERJ2GEJ 473 X (47 k)	B	48.7/32.7
R108	7030005030	S.RES ERJ2GEJ 152 X (1.5 k)	B	48.3/23.1
R109	7030005720	S.RES ERJ2GEJ 563 X (56 k)	T	45.7/28.3
R110	7030007340	S.RES ERJ2GEJ 153 X (15 k)	T	44.1/27.4
R111	7030005100	S.RES ERJ2GEJ 154 X (150 k)	T	45.7/26.5
R112	7030005120	S.RES ERJ2GEJ 102 X (1 k)	T	44.1/26.5
R113	7030005310	S.RES ERJ2GEJ 124 X (120 k)	T	45/24.1
R114	7030008010	S.RES ERJ2GEJ 123 X (12 k)	T	49.4/23.2
R115	7030008010	S.RES ERJ2GEJ 123 X (12 k)	B	50.1/17.4
R116	7030008010	S.RES ERJ2GEJ 123 X (12 k)	B	49.9/18.3
R117	7030005120	S.RES ERJ2GEJ 102 X (1 k)	B	48.5/17.4
R118	7030008010	S.RES ERJ2GEJ 123 X (12 k)	T	51.3/23.7
R119	7030008010	S.RES ERJ2GEJ 123 X (12 k)	B	47.6/20.5
R120	7030005030	S.RES ERJ2GEJ 152 X (1.5 k)	B	26.6/37
R121	7030005120	S.RES ERJ2GEJ 102 X (1 k)	B	28.2/37
R122	7030005240	S.RES ERJ2GEJ 473 X (47 k)	B	28.2/36
R123	7030005100	S.RES ERJ2GEJ 154 X (150 k)	B	25.9/34.7
R124	7030005170	S.RES ERJ2GEJ 474 X (470 k)	B	24.3/37
R125	7030005600	S.RES ERJ2GEJ 273 X (27 k)	B	23.6/40.2
R126	7030005060	S.RES ERJ2GEJ 333 X (33 k)	B	21.8/40.2
R127	7030005040	S.RES ERJ2GEJ 472 X (4.7 k)	B	23.6/38.5
R129	7030004980	S.RES ERJ2GEJ 101 X (100)	T	26.2/37.8
R130	7030007340	S.RES ERJ2GEJ 153 X (15 k)	B	25/34.6
R131	7030005040	S.RES ERJ2GEJ 472 X (4.7 k)	B	22.1/37.3
R132	7030005050	S.RES ERJ2GEJ 103 X (10 k)	B	22.8/35
R133	7030009140	S.RES ERJ2GEJ 272 X (2.7 k)	B	21.9/35
R150	7030005050	S.RES ERJ2GEJ 103 X (10 k)	B	21.8/41.9
R151	7030005090	S.RES ERJ2GEJ 104 X (100 k)	B	22.7/41.9
R152	7030005080	S.RES ERJ2GEJ 823 X (82 k)	B	19.5/35.8
R153	7030005080	S.RES ERJ2GEJ 823 X (82 k)	B	19.1/34.6
R154	7030005080	S.RES ERJ2GEJ 823 X (82 k)	B	17.8/34.1
R155	7030005230	S.RES ERJ2GEJ 334 X (330 k)	B	15.7/27.6
R156	7030005100	S.RES ERJ2GEJ 154 X (150 k)	B	15.7/31.7
R157	7030005070	S.RES ERJ2GEJ 683 X (68 k)	B	14.8/31.7
R158	7030005240	S.RES ERJ2GEJ 473 X (47 k)	B	15.3/30.4
R159	7030005160	S.RES ERJ2GEJ 105 X (1 M)	B	14.8/29.2
R200	7030007340	S.RES ERJ2GEJ 153 X (15 k)	B	41.8/36.6
R201	7030005290	S.RES ERJ2GEJ 682 X (6.8 k)	B	38.1/31.7
R202	7030004970	S.RES ERJ2GEJ 470 X (47)	B	38.6/36.2
R203	7030005120	S.RES ERJ2GEJ 102 X (1 k)	B	42.6/34.4
R204	7030004990	S.RES ERJ2GEJ 221 X (220)	B	43.1/35.7
R205	7030007570	S.RES ERJ2GEJ 122 X (1.2 k)	T	42.2/30.9
R206	7030005120	S.RES ERJ2GEJ 102 X (1 k)	T	35.1/33.6
R207	7030005240	S.RES ERJ2GEJ 473 X (47 k)	T	31.3/32.5
R208	7030005240	S.RES ERJ2GEJ 473 X (47 k)	T	30.9/33.7
R209	7030005240	S.RES ERJ2GEJ 473 X (47 k)	T	43.5/31.4
R210	7030005030	S.RES ERJ2GEJ 152 X (1.5 k)	B	42.7/23.1
R211	7030005120	S.RES ERJ2GEJ 102 X (1 k)	T	38.5/29.2
R212	7030005720	S.RES ERJ2GEJ 563 X (56 k)	T	40.1/28.3
R213	7030005600	S.RES ERJ2GEJ 273 X (27 k)	T	38.5/26.8
R214	7030005100	S.RES ERJ2GEJ 154 X (150 k)	T	40.1/26.3
R215	7030005120	S.RES ERJ2GEJ 102 X (1 k)	T	38.5/25.9
R216	7030005310	S.RES ERJ2GEJ 124 X (120 k)	T	38.6/23.2
R217	7030005120	S.RES ERJ2GEJ 102 X (1 k)	T	15.8/21.5
R218	7030005030	S.RES ERJ2GEJ 152 X (1.5 k)	T	17.4/21.5
R219	7030005240	S.RES ERJ2GEJ 473 X (47 k)	T	15.8/20.6

[MAIN UNIT]

REF NO.	ORDER NO.	DESCRIPTION	M.	H/V LOCATION
R220	7030005100	S.RES ERJ2GEJ 154 X (150 k)	T	18.2/19.6
R221	7030005240	S.RES ERJ2GEJ 473 X (47 k)	T	15.3/23
R222	7030004980	S.RES ERJ2GEJ 101 X (100)	T	19.2/18
R223	7030005230	S.RES ERJ2GEJ 334 X (330 k)	T	17.2/25.9
R224	7030005700	S.RES ERJ2GEJ 274 X (270 k)	T	19.3/27.2
R225	7030005040	S.RES ERJ2GEJ 472 X (4.7 k)	T	19.3/25.4
R227	7030008010	S.RES ERJ2GEJ 123 X (12 k)	B	38.3/19.5
R228	7030008010	S.RES ERJ2GEJ 123 X (12 k)	B	38.1/12.5
R229	7030008010	S.RES ERJ2GEJ 123 X (12 k)	B	40.6/17.2
R230	7030008010	S.RES ERJ2GEJ 123 X (12 k)	B	39.6/17.2
R231	7030008010	S.RES ERJ2GEJ 123 X (12 k)	B	40.6/22.7
R232	7030008010	S.RES ERJ2GEJ 123 X (12 k)	B	38.4/17.7
R233	7030007340	S.RES ERJ2GEJ 153 X (15 k)	T	18.7/17
R234	7030007350	S.RES ERJ2GEJ 393 X (39 k)	T	17.2/28.6
R235	7030005060	S.RES ERJ2GEJ 333 X (33 k)	T	37.3/31.3
R250	7030005050	S.RES ERJ2GEJ 103 X (10 k)	B	7.9/44.6
R251	7030010040	S.RES ERJ2GEJ-JPW	B	6.4/45.5
R252	7030005080	S.RES ERJ2GEJ 823 X (82 k)	B	18/45.3
R253	7030005080	S.RES ERJ2GEJ 823 X (82 k)	B	11.4/44.6
R254	7030005080	S.RES ERJ2GEJ 823 X (82 k)	B	13.2/44.6
R255	7030005230	S.RES ERJ2GEJ 334 X (330 k)	B	10.8/37.7
R256	7030005100	S.RES ERJ2GEJ 154 X (150 k)	B	10.4/41.6
R257	7030005070	S.RES ERJ2GEJ 683 X (68 k)	B	10/42.8
R258	7030005240	S.RES ERJ2GEJ 473 X (47 k)	B	10.9/42.8
R259	7030005160	S.RES ERJ2GEJ 105 X (1 M)	B	10.4/39.8
R300	7030004970	S.RES ERJ2GEJ 470 X (47)	T	31.8/25.4
R301	7030005290	S.RES ERJ2GEJ 682 X (6.8 k)	T	29.3/21
R302	7030005050	S.RES ERJ2GEJ 103 X (10 k)	T	30/19.3
R303	7030007270	S.RES ERJ2GEJ 151 X (150)	T	32.2/23.3
R304	7030005120	S.RES ERJ2GEJ 102 X (1 k)	T	28.5/25.9
R305	7030005040	S.RES ERJ2GEJ 472 X (4.7 k)	T	18.1/28.6
R306	7030005050	S.RES ERJ2GEJ 103 X (10 k)	T	15.2/27.9
R350	7030004970	S.RES ERJ2GEJ 470 X (47)	T	34/24.3
R351	7030005290	S.RES ERJ2GEJ 682 X (6.8 k)	T	32.8/19.1
R352	7030005050	S.RES ERJ2GEJ 103 X (10 k)	T	31.5/18.3
R353	7030007280	S.RES ERJ2GEJ 331 X (330)	T	34.6/16.3
R354	7030007270	S.RES ERJ2GEJ 151 X (150)	T	28.7/18
R355	7030005070	S.RES ERJ2GEJ 683 X (68 k)	T	28.3/15.9
R356	7030005120	S.RES ERJ2GEJ 102 X (1 k)	T	34.4/23
R400	7030005120	S.RES ERJ2GEJ 102 X (1 k)	B	32.4/6.4
R401	7030005120	S.RES ERJ2GEJ 102 X (1 k)	B	31.5/6.4
R402	7030005120	S.RES ERJ2GEJ 102 X (1 k)	B	30.6/6.4
R403	7030005120	S.RES ERJ2GEJ 102 X (1 k)	B	30.1/4.5
R404	7030009270	S.RES ERJ2GEJ 821 X (820)	T	36.3/8
R405	7030008250	S.RES RR0510P-562-D (5.6 k)	T	35.6/9.6
R406	7030011170	S.RES RR0510P-471-D (470)	T	35.1/11.6
R410	7030005580	S.RES ERJ2GEJ 560 X (56)	T	28.2/12.1
R450	7030006610	S.RES ERJ2GEJ 394 X (390 k)	T	50/8.3
R451	7030007340	S.RES ERJ2GEJ 153 X (15 k)	T	48.5/11.3
R452	7030005100	S.RES ERJ2GEJ 154 X (150 k)	T	45.7/10.9
R453	7030005700	S.RES ERJ2GEJ 274 X (270 k)	T	49.4/11.3
R455	7030004980	S.RES ERJ2GEJ 101 X (100)	B	38.6/6.8
R456	7030005070	S.RES ERJ2GEJ 683 X (68 k)	B	34.9/6.7
R457	7030005080	S.RES ERJ2GEJ 823 X (82 k)	B	33.4/7.6
R458	7030005120	S.RES ERJ2GEJ 102 X (1 k)	B	38.7/9.5
R459	7030005000	S.RES ERJ2GEJ 471 X (470)	B	42.5/6.6
R460	7030005090	S.RES ERJ2GEJ 104 X (100 k)	B	41.3/7.5
R470	7030005000	S.RES ERJ2GEJ 471 X (470)	B	48.8/6.3
R471	7030005110	S.RES ERJ2GEJ 224 X (220 k)	B	45.3/5.5
R472	7030007290	S.RES ERJ2GEJ 222 X (2.2 k)	B	47.8/12.2
R473	7030007290	S.RES ERJ2GEJ 222 X (2.2 k)	B	45.8/13.2
R474	7030007290	S.RES ERJ2GEJ 222 X (2.2 k)	B	45.3/14.6
R500	7030005090	S.RES ERJ2GEJ 104 X (100 k)	B	14.5/15.1
R501	7030005120	S.RES ERJ2GEJ 102 X (1 k)	B	13.6/13.4
R503	7030008010	S.RES ERJ2GEJ 123 X (12 k)	B	16.3/15.1
R504	7030007060	S.RES ERJ2GEJ 684X (680 k)	B	17.8/13.5
R505	7030005110	S.RES ERJ2GEJ 224 X (220 k)	B	15.8/18.9
R506	7030005090	S.RES ERJ2GEJ 104 X (100 k)	B	15.8/17.3
R507	7030005220	S.RES ERJ2GEJ 223 X (22 k)	B	15.5/20.7
R508	7030005220	S.RES ERJ2GEJ 223 X (22 k)	B	15.7/21.9
R509	7030005220	S.RES ERJ2GEJ 223 X (22 k)	B	14.9/23.5
R550	7030007290	S.RES ERJ2GEJ 222 X (2.2 k)	T	21.9/34.5
R551	7030005290	S.RES ERJ2GEJ 682 X (6.8 k)	T	15.2/31
R552	7030005050	S.RES ERJ2GEJ 103 X (10 k)	T	17.1/30.2
R553	7030008290	S.RES ERJ2GEJ 183 X (18 k)	T	16.2/32.7
R554	7030008290	S.RES ERJ2GEJ 183 X (18 k)	T	18.3/34.3
R555	7030008290	S.RES ERJ2GEJ 183 X (18 k)	T	21.3/32.8
R556	7030008300	S.RES ERJ2GEJ 184 X (180 k)	T	18.5/30.5
R557	7030007340	S.RES ERJ2GEJ 153 X (15 k)	T	20.9/35.1
R558	7030005530	S.RES ERJ2GEJ 100 X (10)	T	15/38.3
R559	7030007290	S.RES ERJ2GEJ 222 X (2.2 k)	T	14.1/38.3
R560	7030007340	S.RES ERJ2GEJ 153 X (15 k)	T	17.4/35.8
R561	7030008300	S.RES ERJ2GEJ 184 X (180 k)	T	19.5/38.3
R562	7030005160	S.RES ERJ2GEJ 105 X (1 M)	T	17.7/38.3
R564	7030005170	S.RES ERJ2GEJ 474 X (470 k)	T	15.2/34.3
R565	7030009280	S.RES ERJ2GEJ 391 X (390)	T	16.8/38.3
R566	7030009140	S.RES ERJ2GEJ 272 X (2.7 k)	T	22.5/33.3
R568	7030004980	S.RES ERJ2GEJ 101 X (100)	T	20.1/32.6
R600	7030005120	S.RES ERJ2GEJ 102 X (1 k)	B	6.1/43.4
R601	7030005120	S.RES ERJ2GEJ 102 X (1 k)	T	7.1/6.4
R602	7030005050	S.RES ERJ2GEJ 103 X (10 k)	T	3.9/4.8

M.=Mounted side (T: Mounted on the Top side, B: Mounted on the Bottom side)
S.=Surface mount

[MAIN UNIT]

REF NO.	ORDER NO.	DESCRIPTION	M.	H/V LOCATION
R650	7030005160	S.RES ERJ2GEJ 105 X (1 M)	T	20.3/9.7
R651	7030005050	S.RES ERJ2GEJ 103 X (10 k)	T	21.3/8.5
R652	7030005000	S.RES ERJ2GEJ 471 X (470)	T	21.7/5
R653	7030005050	S.RES ERJ2GEJ 103 X (10 k)	T	20.3/6.7
R654	7030005290	S.RES ERJ2GEJ 682 X (6.8 k)	T	22.9/8.5
R700	7030005120	S.RES ERJ2GEJ 102 X (1 k)	B	5.2/30.5
R701	7030004980	S.RES ERJ2GEJ 101 X (100)	B	47.1/44.4
R702	7030005120	S.RES ERJ2GEJ 102 X (1 k)	T	3.7/39.7
R703	7030009140	S.RES ERJ2GEJ 272 X (2.7 k)	T	3.6/40.9
R704	7030010040	S.RES ERJ2GEJ-JPW	T	29.9/34.6
R706	7030007280	S.RES ERJ2GEJ 331 X (330)	B	21.6/46.8
C3	4030016790	S.CER ECJ0EB1C103K	B	21.1/18.4
C4	4030016790	S.CER ECJ0EB1C103K	B	23.8/21.7
C5	4030017590	S.CER ECJ0EC1H070C	B	23.8/22.6
C6	4030017620	S.CER ECJ0EC1H100C	B	26.9/29.3
C7	4030017590	S.CER ECJ0EC1H070C	B	21.8/32.5
C8	4030016790	S.CER ECJ0EB1C103K	B	25.3/32.5
C9	4030016790	S.CER ECJ0EB1C103K	B	35.6/36.6
C10	4030016790	S.CER ECJ0EB1C103K	B	24.7/19.9
C12	4030016790	S.CER ECJ0EB1C103K	T	22.6/24.4
C13	4030017670	S.CER ECJ0EC1H390J	T	24.5/27.8
C14	4030017510	S.CER ECJ0EC1H680J	B	28/27.3
C15	4030016790	S.CER ECJ0EB1C103K	T	24.3/26.6
C16	4030016930	S.CER ECJ0EB1A104K	B	30.1/28.2
C17	4030016930	S.CER ECJ0EB1A104K	B	35.6/35.7
C18	4030017420	S.CER ECJ0EC1H470J	B	22.3/17.7
C19	4030017510	S.CER ECJ0EC1H680J	B	22.8/16.5
C24	4030017780	S.CER ECJ0EB1E472K	B	23.5/33.4
C25	4030017780	S.CER ECJ0EB1E472K	B	36.5/42.6
C26	4030017780	S.CER ECJ0EB1E472K	B	26/17.4
C29	4030017780	S.CER ECJ0EB1E472K	B	25.9/22.2
C30	4030017640	S.CER ECJ0EC1H150J	B	23.9/18.7
C31	4030017670	S.CER ECJ0EC1H390J	B	24.9/16.5
C50	4030017510	S.CER ECJ0EC1H680J	T	26.5/17.4
C51	4030017620	S.CER ECJ0EC1H100C	T	27.5/18.3
C52	4030017460	S.CER ECJ0EB1E102K	T	24/15.9
C54	4030016790	S.CER ECJ0EB1C103K	T	25.5/19.6
C55	4030017430	S.CER ECJ0EC1H101J	B	27/19.3
C56	4030017570	S.CER ECJ0EC1H040B	B	27.9/20.7
C57	4030017390	S.CER ECJ0EC1H180J	B	29.2/20.3
C58	4030017570	S.CER ECJ0EC1H040B	B	35.6/24.8
C59	4030016790	S.CER ECJ0EB1C103K	B	36.1/27.6
C60	4030017510	S.CER ECJ0EC1H680J	T	26/16.2
C61	4030017620	S.CER ECJ0EC1H100C	B	27.7/6.3
C102	4030016790	S.CER ECJ0EB1C103K	B	44.9/39
C104	4030017460	S.CER ECJ0EB1E102K	B	47.2/39.9
C105	4030017640	S.CER ECJ0EC1H150J	B	49.6/33.7
C106	4030017460	S.CER ECJ0EB1E102K	B	35/42.2
C108	4030017430	S.CER ECJ0EC1H101J	T	47.8/43.1
C109	4030018140	S.CER ECJ0EB1H391K	T	49.6/43.1
C111	4030017680	S.CER ECJ0EC1H820J	T	45.7/30.8
C112	4030017430	S.CER ECJ0EC1H101J	T	47.8/30.4
C113	4030016790	S.CER ECJ0EB1C103K	T	49.3/27.6
C114	4550006010	S.TAN TEESVA 0G 106M8R	T	47.8/26.8
C115	4030016930	S.CER ECJ0EB1A104K	B	50.9/26.8
C116	4030016930	S.CER ECJ0EB1A104K	T	50.2/27.6
C117	4030017040	S.CER ECJ0EB1A333K	T	46.9/30.4
C118	4030017460	S.CER ECJ0EB1E102K	T	44.1/28.3
C119	4030017460	S.CER ECJ0EB1E102K	T	45.7/29.2
C120	4030017460	S.CER ECJ0EB1E102K	T	45.7/27.4
C121	4030017730	S.CER ECJ0EB1E471K	T	44.6/25.3
C122	4030017730	S.CER ECJ0EB1E471K	T	45.5/25.3
C123	4030016930	S.CER ECJ0EB1A104K	T	48.2/23.4
C124	4030016930	S.CER ECJ0EB1A104K	B	47.6/21.7
C125	4030016930	S.CER ECJ0EB1A104K	B	50.9/27.7
C126	4030017430	S.CER ECJ0EC1H101J	B	48.6/21.7
C127	4030018900	S.CER ECJ0EB0J474K	B	28.4/38.1
C128	4030016790	S.CER ECJ0EB1C103K	B	26.6/36
C129	4030017460	S.CER ECJ0EB1E102K	B	28.4/39.4
C130	4550007090	S.TAN TEESVA 1A 226M8R	B	23.4/43.8
C131	4030016930	S.CER ECJ0EB1A104K	T	23.3/38.7
C132	4030017460	S.CER ECJ0EB1E102K	T	24.3/40
C133	4030017460	S.CER ECJ0EB1E102K	B	22.7/40.2
C134	4030016790	S.CER ECJ0EB1C103K	B	22.7/38.5
C135	4030018860	S.CER ECJ0EB0J105K	B	20.7/35.3
C136	4030016930	S.CER ECJ0EB1A104K	B	48.7/13.9
C137	4030016930	S.CER ECJ0EB1A104K	B	49.9/19.2
C138	4030016790	S.CER ECJ0EB1C103K	B	47.6/16.2
C139	4030017420	S.CER ECJ0EC1H470J	B	49.9/32.5
C140	4030017380	S.CER ECJ0EC1H050B	B	49.9/31.6
C141	4030017420	S.CER ECJ0EC1H470J	B	50.9/25.6
C142	4030017430	S.CER ECJ0EC1H101J	B	26.5/31.9
C143	4030018860	S.CER ECJ0EB0J105K	B	21.8/38.5
C144	4030018860	S.CER ECJ0EB0J105K	T	24.3/36.8
C150	4030017770	S.CER ECJ0EB1E332K	B	23.9/42.3
C151	4030017720	S.CER ECJ0EB1H331K	B	23.9/41.4
C152	4030016940	S.CER ECJ0EB1A393K	B	20.4/33.7
C153	4030017910	S.CER ECJ0EB1H152K	B	19.1/33.7
C154	4030016930	S.CER ECJ0EB1A104K	B	16.8/34.1

[MAIN UNIT]

REF NO.	ORDER NO.	DESCRIPTION	M.	H/V LOCATION
C155	4550000460	S.TAN TEESVA 1C 105M8R	B	11.8/32.1
C156	4030016930	S.CER ECJ0EB1A104K	B	15.8/26
C157	4030016930	S.CER ECJ0EB1A104K	B	13.9/29.2
C158	4030017430	S.CER ECJ0EC1H101J	B	15.7/29.2
C159	4030017460	S.CER ECJ0EB1E102K	T	22.4/38.7
C160	4030017460	S.CER ECJ0EB1E102K	T	22.7/40
C203	4030016790	S.CER ECJ0EB1C103K	B	38.6/35.3
C204	4030017460	S.CER ECJ0EB1E102K	B	40.2/35.3
C205	4030017420	S.CER ECJ0EC1H470J	B	44.7/34.4
C206	4030016930	S.CER ECJ0EB1A104K	T	43.1/30.1
C207	4030017680	S.CER ECJ0EC1H820J	T	40.1/30.9
C208	4030016930	S.CER ECJ0EB1A104K	T	36.7/33.6
C209	4030016930	S.CER ECJ0EB1A104K	T	30.4/32.5
C210	4030017460	S.CER ECJ0EB1E102K	T	29/33.7
C211	4030017430	S.CER ECJ0EC1H101J	T	44/30.1
C212	4030017040	S.CER ECJ0EB1A333K	T	41.3/30.4
C213	4030016790	S.CER ECJ0EB1C103K	T	43.5/24.9
C214	4550006010	S.TAN TEESVA 0G 106M8R	T	42/26.1
C215	4030016930	S.CER ECJ0EB1A104K	B	38.1/26.4
C216	4030016930	S.CER ECJ0EB1A104K	T	43.4/23.2
C217	4030017780	S.CER ECJ0EB1E472K	T	38.3/30.4
C218	4030017460	S.CER ECJ0EB1E102K	T	38.5/27.7
C219	4030017460	S.CER ECJ0EB1E102K	T	40.1/29.2
C220	4030017460	S.CER ECJ0EB1E102K	T	40.1/27.2
C221	4030017460	S.CER ECJ0EB1E102K	T	38.6/24.5
C222	4030017460	S.CER ECJ0EB1E102K	T	39.5/24.5
C223	4030016930	S.CER ECJ0EB1A104K	T	40.4/24.5
C224	4030016930	S.CER ECJ0EB1A104K	B	41.5/22.7
C225	4030016930	S.CER ECJ0EB1A104K	B	38.1/25.5
C226	4030017420	S.CER ECJ0EC1H470J	B	40.8/15.5
C227	4030018900	S.CER ECJ0EB0J474K	T	18/18.2
C228	4030016790	S.CER ECJ0EB1C103K	T	17.4/20.6
C229	4030017460	S.CER ECJ0EB1E102K	T	19.4/22.1
C230	4550007680	S.TAN TEESVP 0J 226M8R	T	19.4/12.4
C231	4030017460	S.CER ECJ0EB1E102K	T	19.3/26.3
C232	4030016790	S.CER ECJ0EB1C103K	T	19.3/24.5
C233	4030018860	S.CER ECJ0EB0J105K	T	16/28.9
C234	4030016930	S.CER ECJ0EB1A104K	T	19.4/23.3
C235	4030017460	S.CER ECJ0EB1E102K	T	15.6/15.7
C236	4030016930	S.CER ECJ0EB1A104K	B	39/12.5
C237	4030016930	S.CER ECJ0EB1A104K	B	38.8/11.3
C238	4030016930	S.CER ECJ0EB1A104K	B	38.4/16.8
C239	4030016930	S.CER ECJ0EB1A104K	T	29.9/36.4
C240	4030016930	S.CER ECJ0EB1A104K	T	31.1/37.5
C241	4030016930	S.CER ECJ0EB1A104K	B	38.3/18.6
C242	4030017780	S.CER ECJ0EB1E472K	B	37.2/15.2
C243	4030017780	S.CER ECJ0EB1E472K	B	37.8/39.5
C244	4030017780	S.CER ECJ0EB1E472K	B	36.9/39.5
C245	4030017650	S.CER ECJ0EC1H270J	B	44.3/33.2
C246	4030017380	S.CER ECJ0EC1H050B	B	44.3/32.3
C247	4030017650	S.CER ECJ0EC1H270J	B	43.5/20.7
C248	4030017350	S.CER ECJ0EC1H020B	B	43.1/21.8
C250	4030017910	S.CER ECJ0EB1H152K	B	5.2/46
C252	4030016940	S.CER ECJ0EB1A393K	B	10.4/38.9
C253	4030017910	S.CER ECJ0EB1H152K	B	14.8/44.9
C254	4030016930	S.CER ECJ0EB1A104K	B	12.3/44.6
C255	4550000460	S.TAN TEESVA 1C 105M8R	B	11.8/34.2
C256	4030016930	S.CER ECJ0EB1A104K	B	14.4/35.7
C257	4030016930	S.CER ECJ0EB1A104K	B	10.2/44
C258	4030017430	S.CER ECJ0EC1H101J	B	10.4/40.7
C259	4030017460	S.CER ECJ0EB1E102K	T	15.5/14.8
C260	4030017460	S.CER ECJ0EB1E102K	T	15.5/13.9
C261	4030018860	S.CER ECJ0EB0J105K	T	18.1/25.9
C262	4030018860	S.CER ECJ0EB0J105K	T	19.3/28.7
C263	4030017460	S.CER ECJ0EB1E102K	T	33.6/37.1
C300	4030017460	S.CER ECJ0EB1E102K	T	29.5/28.1
C301	4030017460	S.CER ECJ0EB1E102K	T	29.5/27.2
C302	4550007030	S.TAN TEESVP 0J 106M8R	T	30.2/25.1
C303	4030017460	S.CER ECJ0EB1E102K	T	32/24.5
C305	4030017640	S.CER ECJ0EC1H150J	T	28.1/21.2
C306	4030017650	S.CER ECJ0EC1H270J	T	30.6/20.6
C307	4030017420	S.CER ECJ0EC1H470J	T	33.1/23.3
C308	4030017340	S.CER ECJ0EC1H010B	T	31.8/17.1
C309	4030017400	S.CER ECJ0EC1H220J	T	26.5/21.1
C350	4030017460	S.CER ECJ0EB1E102K	B	32.1/28.2
C351	4030017460	S.CER ECJ0EB1E102K	T	34.9/27.4
C352	4030017460	S.CER ECJ0EB1E102K	T	34.9/24.3
C353	4030017430	S.CER ECJ0EC1H101J	T	34.5/19.6
C355	4030017640	S.CER ECJ0EC1H150J	T	31.6/19.5
C356	4030017630	S.CER ECJ0EC1H120J	T	32.8/17.1
C357	4030017390	S.CER ECJ0EC1H180J	T	33.7/16.3
C358	4030017550	S.CER ECJ0EC1H1R5B	T	32.5/15.9
C359	4030017460	S.CER ECJ0EB1E102K	T	27.8/17.1
C360	4030017460	S.CER ECJ0EB1E102K	T	29.9/18.1
C400	4030018890	S.CER ECJ0EB0J224K	T	36.2/5.7
C401	4030017460	S.CER ECJ0EB1E102K	T	35.2/5.7
C402	4030018890	S.CER ECJ0EB0J224K	T	34.2/11.6
C403	4030017460	S.CER ECJ0EB1E102K	T	33.3/11.6
C404	4030017460	S.CER ECJ0EB1E102K	T	30.3/11.6
C405	4030016790	S.CER ECJ0EB1C103K	B	34.6/7.9
C406	4030017420	S.CER ECJ0EC1H470J	B	32.3/4.1

M.=Mounted side (T: Mounted on the Top side, B: Mounted on the Bottom side)
S.=Surface mount

[MAIN UNIT]

REF NO.	ORDER NO.	DESCRIPTION	M.	H/V LOCATION
C407	4030017420	S.CER ECJ0EC1H470J	B	31.4/4.1
C408	4030017420	S.CER ECJ0EC1H470J	B	29.7/6.6
C409	4030017420	S.CER ECJ0EC1H470J	T	28.1/4.6
C410	4030016930	S.CER ECJ0EB1A104K	T	31.5/11.6
C411	4550007260	S.TAN F931C475MAABMA	T	39.5/10.2
C412	4340000260	S.MLR ECPU1C104MA5	T	36.5/11.7
C414	4550007610	S.TAN F931E474MAABMA	T	41.6/10.2
C415	4030017620	S.CER ECJ0EC1H100C	T	43.1/11.4
C416	4030017460	S.CER ECJ0EB1E102K	T	29.4/11.6
C450	4030016930	S.CER ECJ0EB1A104K	T	46.3/5
C451	4030017460	S.CER ECJ0EB1E102K	T	43.4/5.8
C452	4030018860	S.CER ECJ0EB0J105K	T	47.3/11.8
C453	4030017460	S.CER ECJ0EB1E102K	T	45.7/11.8
C454	4030017460	S.CER ECJ0EB1E102K	T	50.6/11.8
C455	4030016790	S.CER ECJ0EB1C103K	B	34.9/5.1
C456	4030016790	S.CER ECJ0EB1C103K	B	38.7/8.6
C457	4030017460	S.CER ECJ0EB1E102K	B	43.4/5.6
C458	4030016790	S.CER ECJ0EB1C103K	B	41/11
C459	4030017430	S.CER ECJ0EC1H101J	B	39.9/8.1
C460	4030017400	S.CER ECJ0EC1H220J	B	44.6/9.9
C461	4030017360	S.CER ECJ0EC1H030B	B	43.4/10.5
C462	4030017640	S.CER ECJ0EC1H150J	B	44.6/10.8
C463	4030017570	S.CER ECJ0EC1H040B	B	44.9/13.2
C464	4030017460	S.CER ECJ0EB1E102K	B	48.9/8
C465	4030016790	S.CER ECJ0EB1C103K	B	45.3/9
C466	4030017420	S.CER ECJ0EC1H470J	B	41.3/6.6
C467	4030017630	S.CER ECJ0EC1H120J	B	48/8.6
C468	4030017350	S.CER ECJ0EC1H020B	B	47.1/8.6
C469	4030017600	S.CER ECJ0EC1H080C	B	47.6/9.8
C470	4030017570	S.CER ECJ0EC1H040B	B	46.9/12.2
C472	4030017460	S.CER ECJ0EB1E102K	T	33.8/43.4
C473	4030016790	S.CER ECJ0EB1C103K	B	38.7/7.7
C474	4030017780	S.CER ECJ0EB1E472K	B	34.1/39
C475	4030017780	S.CER ECJ0EB1E472K	B	49/11.9
C476	4030017620	S.CER ECJ0EC1H100C	T	43/7.8
C477	4030017500	S.CER ECJ0EC1H560J	T	42/5.2
C478	4030017440	S.CER ECJ0EC1H221J	T	49/3
C500	4030016930	S.CER ECJ0EB1A104K	B	21.9/45.4
C501	4030017460	S.CER ECJ0EB1E102K	B	15.6/34.5
C502	4030017460	S.CER ECJ0EB1E102K	B	20.1/45.4
C503	4030017460	S.CER ECJ0EB1E102K	B	19.2/45.4
C504	4030018860	S.CER ECJ0EB0J105K	B	14.5/13.4
C505	4030016790	S.CER ECJ0EB1C103K	B	15.4/13.4
C506	4030017770	S.CER ECJ0EB1E332K	B	16.6/13
C507	4030016790	S.CER ECJ0EB1C103K	B	16.6/13.9
C508	4030016930	S.CER ECJ0EB1A104K	B	17.5/15.9
C509	4030016930	S.CER ECJ0EB1A104K	B	19.8/24.8
C510	4030016790	S.CER ECJ0EB1C103K	B	14.5/19.6
C511	4030017460	S.CER ECJ0EB1E102K	B	12.9/17.4
C512	4030017770	S.CER ECJ0EB1E332K	B	15.8/23.5
C513	4030017910	S.CER ECJ0EB1H152K	B	16.7/24.7
C514	4030016930	S.CER ECJ0EB1A104K	T	15.8/26
C550	4030018860	S.CER ECJ0EB0J105K	T	19.4/37
C551	4030016790	S.CER ECJ0EB1C103K	T	19.8/30.1
C552	4030016960	S.CER ECJ0EB1C183K	T	15.6/29.8
C553	4030016780	S.CER ECJ0EB1C153K	T	16.2/31
C554	4030016790	S.CER ECJ0EB1C103K	T	19.7/35.7
C555	4030017780	S.CER ECJ0EB1E472K	T	19.2/34.3
C556	4030017760	S.CER ECJ0EB1H222K	T	22.5/32.4
C557	4030017330	S.CER ECJ0EF1C104Z	T	15.2/32.7
C558	4030018860	S.CER ECJ0EB0J105K	T	15.9/38.3
C559	4030016960	S.CER ECJ0EB1C183K	T	18.6/38.3
C560	4030017330	S.CER ECJ0EF1C104Z	T	17.8/37
C561	4030017330	S.CER ECJ0EF1C104Z	T	16.2/34.3
C562	4030016930	S.CER ECJ0EB1A104K	T	14.3/32.9
C563	4030018860	S.CER ECJ0EB0J105K	T	20.5/31.3
C600	4030017460	S.CER ECJ0EB1E102K	B	8.2/43.1
C601	4030017460	S.CER ECJ0EB1E102K	B	7/43.4
C602	4030017460	S.CER ECJ0EB1E102K	B	5.2/44.1
C603	4030017460	S.CER ECJ0EB1E102K	B	2.1/40.8
C604	4550007320	S.TAN F930J226MAABMA	B	3.6/42.2
C605	4030017460	S.CER ECJ0EB1E102K	T	5.7/4.8
C606	4030017460	S.CER ECJ0EB1E102K	T	8/4.8
C607	4030017460	S.CER ECJ0EB1E102K	T	4.8/4.8
C608	4030017460	S.CER ECJ0EB1E102K	B	7.6/4.2
C609	4550007320	S.TAN F930J226MAABMA	T	2.4/6.6
C614	4030017440	S.CER ECJ0EC1H221J	B	12.8/27.6
C650	4030017460	S.CER ECJ0EB1E102K	T	18.2/6.1
C651	4030017460	S.CER ECJ0EB1E102K	T	19.1/9.4
C652	4030017460	S.CER ECJ0EB1E102K	T	19.7/8.5
C653	4030017460	S.CER ECJ0EB1E102K	T	20.3/7.6
C654	4550007320	S.TAN F930J226MAABMA	T	23.1/11.7
C655	4030017440	S.CER ECJ0EC1H221J	T	26.6/12
C700	4030017460	S.CER ECJ0EB1E102K	T	4.6/38
C701	4030017460	S.CER ECJ0EB1E102K	T	4.6/39.7
C702	4030017460	S.CER ECJ0EB1E102K	B	8.1/11.7
C703	4030017460	S.CER ECJ0EB1E102K	T	8.2/8.7
C704	4030017460	S.CER ECJ0EB1E102K	B	3.4/13.1
C705	4030017460	S.CER ECJ0EB1E102K	B	3.4/29.6
C706	4030017460	S.CER ECJ0EB1E102K	B	4.3/30.5
C707	4030017420	S.CER ECJ0EC1H470J	B	27.7/45.7

[MAIN UNIT]

REF NO.	ORDER NO.	DESCRIPTION	M.	H/V LOCATION
C708	4030017420	S.CER ECJ0EC1H470J	B	28.6/45.7
C709	4030017420	S.CER ECJ0EC1H470J	B	21.6/47.7
C710	4030017420	S.CER ECJ0EC1H470J	B	19.9/46.6
C711	4030017460	S.CER ECJ0EB1E102K	T	3.7/42.7
C712	4030017460	S.CER ECJ0EB1E102K	T	3.7/43.6
C713	4030017460	S.CER ECJ0EB1E102K	T	13.5/45.7
C714	4030017460	S.CER ECJ0EB1E102K	T	13.5/47.2
C715	4030017460	S.CER ECJ0EB1E102K	T	3.7/44.5
C716	4030017460	S.CER ECJ0EB1E102K	T	3.7/38
C717	4030017460	S.CER ECJ0EB1E102K	T	13.6/39.9
C718	4030017460	S.CER ECJ0EB1E102K	T	13.6/40.8
C719	4030017460	S.CER ECJ0EB1E102K	B	25.7/45.4
C720	4030017420	S.CER ECJ0EC1H470J	T	40.9/39.8
C721	4030017420	S.CER ECJ0EC1H470J	T	44/39.8
C722	4030017420	S.CER ECJ0EC1H470J	B	48/44.2
C723	4030017420	S.CER ECJ0EC1H470J	T	3.4/41.8
C724	4030017420	S.CER ECJ0EC1H470J	B	31.3/37.8
C725	4030017460	S.CER ECJ0EB1E102K	B	47.8/42.1
C730	4030017440	S.CER ECJ0EC1H221J	B	25.1/14.5
C731	4030017440	S.CER ECJ0EC1H221J	B	26.1/14.7
C733	4030017440	S.CER ECJ0EC1H221J	B	21.6/4.7
C734	4030017440	S.CER ECJ0EC1H221J	T	24.8/5.4
C751	4030017420	S.CER ECJ0EC1H470J	T	13.4/13.4
C752	4030017420	S.CER ECJ0EC1H470J	T	8.1/13.4
C754	4030017400	S.CER ECJ0EC1H220J	B	8.7/18.1
C755	4030017400	S.CER ECJ0EC1H220J	T	7/20
C756	4030017400	S.CER ECJ0EC1H220J	T	6/21.3
C757	4030017420	S.CER ECJ0EC1H470J	B	7/22.6
C760	4030017460	S.CER ECJ0EB1E102K	T	7.1/24.5
C764	4030017420	S.CER ECJ0EC1H470J	T	7.1/29.4
C765	4030017620	S.CER ECJ0EC1H100C	B	9.4/30.2
C766	4030017620	S.CER ECJ0EC1H100C	T	7.1/30.3
C767	4030017620	S.CER ECJ0EC1H100C	T	7.1/31.2
C768	4030017420	S.CER ECJ0EC1H470J	T	7.1/32.1
C771	4030017440	S.CER ECJ0EC1H221J	T	12.9/14.6
C772	4030017400	S.CER ECJ0EC1H220J	T	14.2/16.3
C773	4030017420	S.CER ECJ0EC1H470J	T	15.4/16.6
C775	4030017420	S.CER ECJ0EC1H470J	T	14.2/20.3
C777	4030017420	S.CER ECJ0EC1H470J	T	14.2/21.5
C779	4030017420	S.CER ECJ0EC1H470J	T	14.8/23.9
C781	4030017420	S.CER ECJ0EC1H470J	T	14.2/25.8
C789	4030017420	S.CER ECJ0EC1H470J	T	13.4/34.7
C790	4030017420	S.CER ECJ0EC1H470J	T	14.2/18.7
C791	4030017420	S.CER ECJ0EC1H470J	T	12.9/36.2
J700	6450002250	CNR HSJ1456-010320		
J701	6450000131	CNR HSJ1102-018540		
		Except [EXP-2] only		
J702	6510022470	S.CNR 40FLT-SM1-TB		
		[USA], [USA-1], [TPE], [EXP-2]	T	10.7/25
	6510022471	S.CNR 40FLT-SM2-TB (LF) (SN)		
		Except [USA], [USA-1], [TPE], [EXP-2]	T	10.7/25
J703	6510022880	S.CNR AXK5S30340P	B	23.1/9.4
S700	2260002840	SW SKHLLFA010		
S701	2260002840	SW SKHLLFA010		
EP50	6910015370	S.BEA ACZ1005Y-102-T	T	22.5/16.4
EP100	6910015370	S.BEA ACZ1005Y-102-T	T	49.8/26.4
EP200	6910015370	S.BEA ACZ1005Y-102-T	T	41.7/23.2
EP400	6910015370	S.BEA ACZ1005Y-102-T	T	37.1/5.7
EP401	6910015370	S.BEA ACZ1005Y-102-T	T	32.4/11.6
EP450	6910015370	S.BEA ACZ1005Y-102-T	T	48.5/4.2
EP701	6910015370	S.BEA ACZ1005Y-102-T	B	29.5/45.3
EP702	6910014680	S.BEA MMZ1608Y 121BT	B	26/46.5
EP704	6910015370	S.BEA ACZ1005Y-102-T	B	17.6/46.3
EP705	6910015370	S.BEA ACZ1005Y-102-T	B	19.9/47.5
EP706	6910015370	S.BEA ACZ1005Y-102-T	T	46.6/43.5
EP707	6910014680	S.BEA MMZ1608Y 121BT	B	27.2/44.3
EP750	6910015370	S.BEA ACZ1005Y-102-T	T	8.1/15
EP751	6910015370	S.BEA ACZ1005Y-102-T	T	7.8/20.9
EP752	6910015370	S.BEA ACZ1005Y-102-T	T	7.8/21.8
EP755	6910015370	S.BEA ACZ1005Y-102-T	T	13.3/16.3
EP756	6910015370	S.BEA ACZ1005Y-102-T	T	13.7/17.5
EP757	6910015370	S.BEA ACZ1005Y-102-T	T	13.3/18.7
EP758	6910015370	S.BEA ACZ1005Y-102-T	T	13.3/20.3
EP759	6910015370	S.BEA ACZ1005Y-102-T	T	13.3/25.7
EP760	6910015370	S.BEA ACZ1005Y-102-T	T	13.3/28

M.=Mounted side (T: Mounted on the Top side, B: Mounted on the Bottom side)
S.=Surface mount

[RF UNIT]

REF NO.	ORDER NO.	DESCRIPTION	M.	H/V LOCATION
IC100	1110005590	S.IC μPC2762TB-E3	T	34/14.3
IC150	1110004050	S.IC NJM3404AV-TE1	T	43.8/34.7
IC800	1130013000	S.IC LMX2313USLDX/NOPB	T	20.6/21.9
IC900	1110005230	S.IC μPC2757TB-E3	B	14.9/9.6
IC950	1110006360	S.IC M62366GP D60J	T	15.9/30.3
IC951	1130011760	S.IC CD4094BPWR	B	6.8/8.9
IC952	1130013240	S.IC TC75S51FU (TE85L)	T	9.6/31.3
IC953	1130013240	S.IC TC75S51FU (TE85L)	T	22/32.3
IC954	1130013240	S.IC TC75S51FU (TE85L)	T	21.9/29.3
IC955	1130013240	S.IC TC75S51FU (TE85L)	T	9.2/27.2
Q1	1590003280	S.TR UNR9211J-(TX)	B	30.8/46
Q2	1590002010	S.TR XP1114 (TX)	T	30.4/46.8
Q3	1590003390	S.TR UNR9215J-(TX)	T	33/45.4
Q4	1590003390	S.TR UNR9215J-(TX)	T	33/47.5
Q100	1560001150	S.FET 2SK3476 (TE12L)	T	39/27.7
Q101	1560001241	S.FET RD01MUS1-T113	T	46.6/21.7
Q102	1530002920	S.TR 2SC4226-T1 R25	T	42/18
Q104	1590003390	S.TR UNR9215J-(TX)	T	36/17.7
Q105	1590001980	S.TR XP4315 (TX)	T	39.4/14.4
Q150	1590002160	S.TR XP6401-(TX)	B	36/36
Q151	1590003390	S.TR UNR9215J-(TX)	B	45.9/34.6
Q200	1530002601	S.TR 2SC4215-O (TE85R)	B	12.5/36.1
Q201	1590003250	S.TR UNR9115J-(TX)	T	9.2/8.1
Q250	1530003260	S.TR 2SC5006-T1	B	10.4/26.6
Q251	1590002380	S.TR XP1115 (TX)	T	4.1/5.7
Q300	1530003260	S.TR 2SC5006-T1	T	10.4/37
Q301	1530003260	S.TR 2SC5006-T1	T	2.9/29
Q302	1590003250	S.TR UNR9115J-(TX)	T	2/10.8
Q303	1590003250	S.TR UNR9115J-(TX)	T	24.1/39.1
Q304	1590003250	S.TR UNR9115J-(TX)	T	3.9/8.1
Q400	1580000790	S.FET 3SK318YB-TL-E	B	18.9/39.9
Q401	1580000790	S.FET 3SK318YB-TL-E	B	17.2/32.2
Q450	1580000790	S.FET 3SK318YB-TL-E	B	22.2/31.5
Q451	1590002380	S.TR XP1115 (TX)	B	25.6/8.3
Q452	1590002380	S.TR XP1115 (TX)	B	24.6/5.4
Q500	1530003260	S.TR 2SC5006-T1	T	30.7/31.8
Q501	1530003260	S.TR 2SC5006-T1	T	30.3/18.8
Q600	1580000790	S.FET 3SK318YB-TL-E	B	29.1/33.6
Q601	1580000790	S.FET 3SK318YB-TL-E	B	22.7/17.5
Q651	1580000790	S.FET 3SK318YB-TL-E	B	30.6/17.9
Q652	1590002380	S.TR XP1115 (TX)	B	27.5/5.5
Q700	1530003780	S.TR 2SC5624VH-TL [USA], [USA-1], [EXP-2]	B	3.4/26.5
	1530003781	S.TR 2SC5624VH-TL-E Except [USA], [USA-1], [EXP-2]	B	3.4/26.5
Q701	1530003260	S.TR 2SC5006-T1	B	10.3/13.8
Q702	1590002380	S.TR XP1115 (TX)	T	6.6/10.9
Q703	1590003250	S.TR UNR9115J-(TX)	T	9.2/10.2
Q704	1590003390	S.TR UNR9215J-(TX)	T	7.1/8.5
Q800	1590002380	S.TR XP1115 (TX)	B	35.2/8.9
Q801	1590003250	S.TR UNR9115J-(TX)	B	37.6/16.7
Q802	1560000541	S.FET 2SK880-Y (T5RICOM)	T	21.8/17.7
Q803	1520000460	S.TR 2SB1132 T100 R	B	40.2/13.5
Q804	1540000660	S.TR 2SD2216J-S	B	43.3/17.2
Q850	1530003260	S.TR 2SC5006-T1	T	13/9.1
Q900	1590003250	S.TR UNR9115J-(TX)	B	18.4/7.7
Q1000	1590003720	S.FET HAT1026R-EL-E	T	34.2/8.8
D1	1750000581	S.DIO 1SV307 (TPH3)	T	26.3/40.4
D2	1750000581	S.DIO 1SV307 (TPH3)	T	29.2/40.8
D6	1790001621	S.DIO 1SV308 (TPL3)	B	22.3/40.7
D8	1790001621	S.DIO 1SV308 (TPL3)	T	26.9/45.3
D9	1790001621	S.DIO 1SV308 (TPL3)	B	25.8/47.3
D11	1790001621	S.DIO 1SV308 (TPL3)	B	27.1/39.3
D100	1790001621	S.DIO 1SV308 (TPL3)	T	30.5/14.1
D101	1790000850	S.DIO MA132WK (TX)	B	48.1/23.6
D150	1790001240	S.DIO MA2S728-(TX)	B	37.6/34.1
D152	1790001240	S.DIO MA2S728-(TX) [EXP-2] only	T	42.1/31.4
D200	1790001621	S.DIO 1SV308 (TPL3)	B	18.9/45.1
D201	1790001260	S.DIO MA2S077-(TX)	B	10.4/42.5
D202	1790001240	S.DIO MA2S728-(TX)	B	10.8/30.7
D203	1790001621	S.DIO 1SV308 (TPL3)	B	12/30.7
D250	1790001260	S.DIO MA2S077-(TX)	B	9.2/42.5
D251	1790001260	S.DIO MA2S077-(TX)	B	7.8/27.3
D252	1750001270	S.VCP 1SV325 (TPH3)	B	6.1/31.9
D253	1790001250	S.DIO MA2S111-(TX)	B	9/23
D254	1790001260	S.DIO MA2S077-(TX)	B	12.4/19.5
D255	1750001270	S.VCP 1SV325 (TPH3)	B	11.4/21.3
D256	1790001621	S.DIO 1SV308 (TPL3)	B	11.4/17.9
D300	1790001621	S.DIO 1SV308 (TPL3)	T	19.9/40.7
D301	1790001260	S.DIO MA2S077-(TX)	T	20.3/36.8
D302	1790001621	S.DIO 1SV308 (TPL3)	T	27.4/38.3
D303	1790001260	S.DIO MA2S077-(TX)	T	21.1/35.6
D304	1790001260	S.DIO MA2S077-(TX)	T	14.9/36.5
D305	1750000721	S.VCP HVC375BTRF-E	T	13.1/36.4
D306	1790001260	S.DIO MA2S077-(TX)	T	4.4/38.3
D307	1750000721	S.VCP HVC375BTRF-E	T	3.6/37.1
D308	1750000721	S.VCP HVC375BTRF-E	T	3.8/33.9

[RF UNIT]

REF NO.	ORDER NO.	DESCRIPTION	M.	H/V LOCATION
D309	1790001260	S.DIO MA2S077-(TX)	T	3.2/31.6
D310	1790001240	S.DIO MA2S728-(TX)	T	4.1/26.3
D311	1790001621	S.DIO 1SV308 (TPL3)	T	2.7/24.5
D400	1790001621	S.DIO 1SV308 (TPL3)	B	21.4/44.9
D401	1750000771	S.VCP HVC376BTRF-E	B	17.4/36
D402	1750000771	S.VCP HVC376BTRF-E	B	16.9/27.1
D403	1750000771	S.VCP HVC376BTRF-E	B	15.6/23.4
D404	1790001250	S.DIO MA2S111-(TX)	B	15.1/27.3
D405	1790001621	S.DIO 1SV308 (TPL3)	B	17.3/20.8
D450	1750000771	S.VCP HVC376BTRF-E	B	22.8/34.1
D451	1750000771	S.VCP HVC376BTRF-E	B	21.9/25.5
D452	1750000771	S.VCP HVC376BTRF-E	B	20.7/24.4
D453	1790001250	S.DIO MA2S111-(TX)	B	19.7/29.8
D454	1790001621	S.DIO 1SV308 (TPL3)	B	26.6/14.6
D500	1790001621	S.DIO 1SV308 (TPL3)	T	32.2/37
D501	1790001260	S.DIO MA2S077-(TX)	T	30.1/36.3
D502	1750000721	S.VCP HVC375BTRF-E	T	29.7/33.6
D503	1790001250	S.DIO MA2S111-(TX)	T	32.5/17.3
D504	1790001260	S.DIO MA2S077-(TX)	T	30.1/25.1
D505	1750000721	S.VCP HVC375BTRF-E	T	27.9/26.2
D506	1750000721	S.VCP HVC375BTRF-E	T	30.1/23.9
D507	1790001260	S.DIO MA2S077-(TX)	T	28.9/21.4
D508	1790001621	S.DIO 1SV308 (TPL3)	T	30.5/15.3
D509	1790001621	S.DIO 1SV308 (TPL3)	B	14.6/12.1
D600	1790001621	S.DIO 1SV308 (TPL3)	B	28.8/38.6
D601	1750000771	S.VCP HVC376BTRF-E	B	24.9/25.1
D602	1750000771	S.VCP HVC376BTRF-E	B	23.8/22.3
D603	1790001250	S.DIO MA2S111-(TX)	B	25.2/13.6
D604	1750000771	S.VCP HVC376BTRF-E	B	20/13.9
D605	1750000771	S.VCP HVC376BTRF-E	B	18.2/13.5
D606	1790001621	S.DIO 1SV308 (TPL3)	B	14.9/14.9
D650	1750000771	S.VCP HVC376BTRF-E	B	29.3/23.8
D651	1750000771	S.VCP HVC376BTRF-E	B	28.6/21.7
D652	1790001250	S.DIO MA2S111-(TX)	B	34.1/16.9
D653	1750000771	S.VCP HVC376BTRF-E	B	32.5/12
D654	1750000771	S.VCP HVC376BTRF-E	B	30.4/11.5
D655	1790001621	S.DIO 1SV308 (TPL3)	B	27.4/12.1
D700	1790001621	S.DIO 1SV308 (TPL3)	B	3.6/35.8
D702	1750000721	S.VCP HVC375BTRF-E	B	3.2/28.9
D703	1750000721	S.VCP HVC375BTRF-E	B	7.6/21
D704	1750000721	S.VCP HVC375BTRF-E	B	8.4/18.1
D705	1790001250	S.DIO MA2S111-(TX)	B	6.2/24.8
D706	1790001621	S.DIO 1SV308 (TPL3)	B	13/13.6
D707	1790001621	S.DIO 1SV308 (TPL3)	B	13.1/15.2
D800	1790001240	S.DIO MA2S728-(TX)	B	45/17.1
D801	1790001250	S.DIO MA2S111-(TX)	B	40.9/16.7
D850	1790001621	S.DIO 1SV308 (TPL3)	T	15.6/10.6
D851	1790001250	S.DIO MA2S111-(TX)	T	12.4/12.4
D1000	1790001240	S.DIO MA2S728-(TX)	B	38.1/9.3
D1001	1750000540	S.DIO RB060L-40 TE-25	T	40.1/8.7
L1	6200008530	S.COL 0.30-1.0-4TR 12N	T	10.4/42.3
L2	6200008700	S.COL 0.30-0.9-6TR 17.5N	T	12.7/41.7
L3	6200008700	S.COL 0.30-0.9-6TR 17.5N	T	15.5/42.3
L4	6200008280	S.COL 0.30-1.7-7TL 50N	T	25.6/42.9
L5	6200008170	S.COL 0.35-1.6-8TL 54N	T	18.7/43.4
L6	6200009750	S.COL 0.30-2.0-7TL 68N	T	19.6/47.1
L7	6200008260	S.COL 0.30-1.7-8TL 60N	T	22.8/46.5
L8	6200007921	S.COL ELJRF 15NJFB	B	3.2/40.3
L9	6200007921	S.COL ELJRF 15NJFB	B	3.2/39.4
L10	6200004480	S.COL MLF1608D R82K-T	B	25.9/41.1
L11	6200004480	S.COL MLF1608D R82K-T	B	32/42.6
L12	6200004480	S.COL MLF1608D R82K-T	T	30.7/40.5
L13	6200009070	S.COL LQW18AN18NG00D	B	23.5/39.4
L14	6200004480	S.COL MLF1608D R82K-T	T	26.4/46.5
L15	6200010910	S.COL LQW18AN56NG00D	B	24.2/46
L16	6200010700	S.COL LQW18AN12NG00D	B	25.4/38.7
L100	6200008340	S.COL 0.26-1.1-5TR 19.5N	T	34.1/36.9
L101	6200010240	S.COL 0.40-0.8-2TL	T	33.6/33.7
L102	6200008430	S.COL 0.20-1.0-4TL 15N	T	30.5/44.5
L103	6200008430	S.COL 0.20-1.0-4TL 15N	T	35.2/39.4
L104	6200010260	S.COL 0.40-1.5-5TL 24N	T	36.1/22.6
L105	6200006771	S.COL ELJRE 1N5ZFA	T	42.6/23.9
L106	6200005601	S.COL ELJRE 3N3ZFA [USA], [USA-1]	T	46/24.8
	6200005611	S.COL ELJRE 3N9ZFA Except [USA], [USA-1]	T	46/24.8
L107	6200007810	S.COL LQH31HN95NK03L	T	41/22.1
L109	6200009250	S.COL LQW18ANR22G00D Except [USA], [USA-1]	T	44.4/18
	6200011860	S.COL LQW18ANR47G00D [USA], [USA-1]	T	44.4/18
L110	6200007871	S.COL ELJRF 39NJFB	T	36.3/14.2
L111	6200007911	S.COL ELJRF 18NJFB	T	38.3/16.4
L112	6200007871	S.COL ELJRF 39NJFB	T	47.2/17.7
L113	6200007911	S.COL ELJRF 18NJFB [USA], [USA-1] only	T	48.2/18.1
L200	6200006981	S.COL ELJRE R10GFA	B	15.8/43.1
L201	6200009571	S.COL ELJRE R12GFA	B	13.2/43.1
L202	6200005140	S.COL MLF1608D R33K-T	B	11.4/40.7
L203	6200005140	S.COL MLF1608D R33K-T	B	12.3/38.8

M.=Mounted side (T: Mounted on the Top side, B: Mounted on the Bottom side)
S.=Surface mount

[RF UNIT]

REF NO.	ORDER NO.	DESCRIPTION	M.	H/V LOCATION
L204	6200002041	S.COL NLV25T-101J	B	11.6/33.1
L250	6200004590	S.COL MLF1608D R18K-T	B	8.6/30.3
L251	6200004600	S.COL MLF1608D R15K-T	B	8.2/29.1
L252	6200003960	S.COL MLF1608A 1R0K-T	B	10.1/24.8
L253	6200004590	S.COL MLF1608D R18K-T	B	11.4/22.5
L254	6200004600	S.COL MLF1608D R15K-T	B	12.7/23.7
L300	6200011001	S.COL ELJRF 56NJFB	T	18.6/39.4
L301	6200011021	S.COL ELJRF 82NJFB	T	18.6/37.8
L302	6200010991	S.COL ELJRF 47NJFB	T	26.4/36.4
L303	6200007871	S.COL ELJRF 39NJFB	T	26.4/35.5
L304	6200007871	S.COL ELJRF 39NJFB	T	18.1/36.6
L305	6200006981	S.COL ELJRE R10GFA	T	16.7/37.4
L306	6200006981	S.COL ELJRE R10GFA	T	7.8/36.7
L307	6200007871	S.COL ELJRF 39NJFB	T	8.8/37.7
L308	6200007871	S.COL ELJRF 39NJFB	T	4.2/32.8
L309	6200009571	S.COL ELJRE R12GFA	T	2.1/32.8
L310	6200011031	S.COL ELJRF R10JFB	T	2.6/27.5
L400	6200011031	S.COL ELJRF R10JFB	B	21.7/38.4
L401	6200009250	S.COL LQW18ANR22G00D	B	17.3/38.1
L402	6200011670	S.COL LQW18AN82NG00D	B	14.8/34.2
L403	6200011670	S.COL LQW18AN82NG00D	B	17.8/30.3
L404	6200011650	S.COL LQW18AN68NG00D	B	15.6/24.6
L405	6200011660	S.COL LQW18ANR15G00D	B	21.1/43.1
L450	6200011670	S.COL LQW18AN82NG00D	B	24/35.4
L451	6200011670	S.COL LQW18AN82NG00D	B	21.9/28.6
L452	6200011650	S.COL LQW18AN68NG00D	B	19.5/24.4
L500	6200007961	S.COL ELJRF 6N8JFB (6.8)	T	30.1/34.6
L501	6200007921	S.COL ELJRF 15NJFB	T	28.2/34.5
L502	6200007941	S.COL ELJRF 10NJFB	T	30.1/29.6
L503	6200007941	S.COL ELJRF 10NJFB	T	31.3/29.3
L504	6200007961	S.COL ELJRF 6N8JFB (6.8)	T	30.4/22.7
L505	6200007931	S.COL ELJRF 12NJFB	T	28.8/22.5
L506	6200007881	S.COL ELJRF 33NJFB	T	30.2/17.3
L507	6200007921	S.COL ELJRF 15NJFB	T	31.7/34.4
L600	6200010850	S.COL LQW18AN22NG00D	B	31.8/34.7
L601	6200011650	S.COL LQW18AN68NG00D	B	27.2/34.1
L602	6200009280	S.COL LQW18AN27NG00D	B	29.4/29.3
L603	6200009220	S.COL LQW18AN15NG00D	B	26.8/26
L604	6200009220	S.COL LQW18AN15NG00D	B	24.6/20.9
L605	6200009290	S.COL LQW18AN47NG00D	B	20.7/16.9
L606	6200010850	S.COL LQW18AN22NG00D	B	20/15.1
L607	6200009220	S.COL LQW18AN15NG00D	B	17/13.5
L608	6200009280	S.COL LQW18AN27NG00D	B	32/36.5
L609	6200009280	S.COL LQW18AN27NG00D	B	29.5/31.4
L610	6200005180	S.COL MLF1608D R39K-T	B	27.2/36.7
L611	6200011001	S.COL ELJRF 56NJFB	B	28.2/37.3
L650	6200009220	S.COL LQW18AN15NG00D	B	29.4/25
L651	6200009220	S.COL LQW18AN15NG00D	B	28.6/20.5
L652	6200009290	S.COL LQW18AN47NG00D	B	31.4/15.9
L653	6200010850	S.COL LQW18AN22NG00D	B	33.3/13.8
L654	6200009220	S.COL LQW18AN15NG00D	B	29.2/11.5
L700	6200008011	S.COL ELJRF 2N7DFB (2.7)	B	2.1/30.8
L701	6200011031	S.COL ELJRF R10JFB	B	5.1/25.3
L702	6200008011	S.COL ELJRF 2N7DFB (2.7)	B	5.6/21.6
L703	6200008001	S.COL ELJRF 3N3DFB (3.3)	B	8.7/17.1
L704	6200007941	S.COL ELJRF 10NJFB	B	10.3/12.2
L801	6200003960	S.COL MLF1608A 1R0K-T	T	24.3/19.2
L850	6200007941	S.COL ELJRF 10NJFB	T	14.3/9.9
L851	6200007981	S.COL ELJRF 4N7DFB (4.7)	T	14.3/7.4
L900	6200011031	S.COL ELJRF R10JFB	T	21.9/4
L901	6200009351	S.COL ELJRE R22GFA	B	16.9/9.7
R1	7030009280	S.RES ERJ2GEJ 391 X (390)	B	28.4/45.6
R2	7030009280	S.RES ERJ2GEJ 391 X (390)	B	29.3/45.6
R3	7030004980	S.RES ERJ2GEJ 101 X (100)	T	31.8/42.2
R4	7030005120	S.RES ERJ2GEJ 102 X (1 k)	T	30.9/42.6
R5	7030004980	S.RES ERJ2GEJ 101 X (100)	T	26.5/47.5
R6	7030005120	S.RES ERJ2GEJ 102 X (1 k)	T	28.6/47.9
R7	7030005120	S.RES ERJ2GEJ 102 X (1 k)	B	34.3/41.2
R8	7030007290	S.RES ERJ2GEJ 222 X (2.2 k)	B	32.5/38.2
R9	7030005120	S.RES ERJ2GEJ 102 X (1 k)	B	19.8/46.9
R10	7030007290	S.RES ERJ2GEJ 222 X (2.2 k)	B	24.2/44.1
R14	7030007270	S.RES ERJ2GEJ 151 X (150)	B	23.8/42
R15	7030007270	S.RES ERJ2GEJ 151 X (150)	B	31.8/44.7
R100	7030007250	S.RES ERJ2GEJ 220 X (22)	T	43.5/30.4
R102	7030005030	S.RES ERJ2GEJ 152 X (1.5 k)	T	43.5/31.3
R103	7030004980	S.RES ERJ2GEJ 101 X (100)	T	43.1/20.6
R104	7030004980	S.RES ERJ2GEJ 101 X (100)	B	48.4/19.9
R105	7030005240	S.RES ERJ2GEJ 473 X (47 k)	B	48.2/29.9
R106	7030005030	S.RES ERJ2GEJ 152 X (1.5 k)	B	48.6/31.1
R108	7030008010	S.RES ERJ2GEJ 123 X (12 k)	T	41.7/16.2
R110	7030009320	S.RES ERJ2GEJ 4R7 X (4.7)	T	34.5/17.4
R111	7030005530	S.RES ERJ2GEJ 100 X (10)	T	36.8/16
R112	7030009320	S.RES ERJ2GEJ 4R7 X (4.7)	T	33.6/17.4
R113	7030007270	S.RES ERJ2GEJ 151 X (150)	T	45/15.3
R114	7030007270	S.RES ERJ2GEJ 151 X (150)	T	45/16.2
R118	7030004980	S.RES ERJ2GEJ 101 X (100)	T	31.1/13
R119	7030007290	S.RES ERJ2GEJ 222 X (2.2 k)	T	31.1/12.1
R150	7030005160	S.RES ERJ2GEJ 105 X (1 M)	T	39.4/34.4
R151	7030005050	S.RES ERJ2GEJ 103 X (10 k)	T	37.7/35.9

[RF UNIT]

REF NO.	ORDER NO.	DESCRIPTION	M.	H/V LOCATION
R153	7030005110	S.RES ERJ2GEJ 224 X (220 k)	B	44.5/33.9
R154	7030005160	S.RES ERJ2GEJ 105 X (1 M)	T	49.1/35.1
R155	7030005230	S.RES ERJ2GEJ 334 X (330 k)	T	49.1/36.7
R156	7030005230	S.RES ERJ2GEJ 334 X (330 k)	T	47/37.4
R157	7030005110	S.RES ERJ2GEJ 224 X (220 k)	T	47/36.5
R158	7030008400	S.RES ERJ2GEJ 182 X (1.8 k)	B	36.5/37.9
R159	7030005050	S.RES ERJ2GEJ 103 X (10 k)	B	35.8/33.8
R160	7030005050	S.RES ERJ2GEJ 103 X (10 k)	B	47.7/35.8
R161	7030007330	S.RES ERJ1WRSJR15U (0.15)	B	41.7/20.1
R162	7510001661	S.TMR NTCG16 4LH 473JT	B	47.1/20.7
R163	7030005220	S.RES ERJ2GEJ 223 X (22 k)	B	48.3/26.6
R165	7510001770	S.TMR NTCG10 4LH 473JT	T	27.6/42
R166	7030005220	S.RES ERJ2GEJ 223 X (22 k)	B	48.4/21.7
R167	7030005110	S.RES ERJ2GEJ 224 X (220 k)	B	20.9/6.6
R168	7030003860	S.RES ERJ3GE JPW V	B	34.1/36
R169	7030003860	S.RES ERJ3GE JPW V	B	44.9/36.7
R170	7030007340	S.RES ERJ2GEJ 153 X (15 k)		
		Except [EXP-2] only	T	40.6/36.4
R200	7030007290	S.RES ERJ2GEJ 222 X (2.2 k)	B	9.2/32.8
R201	7030005240	S.RES ERJ2GEJ 473 X (47 k)	B	10.8/35.1
R202	7030005050	S.RES ERJ2GEJ 103 X (10 k)	B	10.8/36.7
R203	7030005010	S.RES ERJ2GEJ 681 X (680)	B	14.5/37.1
R204	7030007300	S.RES ERJ2GEJ 332 X (3.3 k)	B	18.4/46.6
R205	7030005240	S.RES ERJ2GEJ 473 X (47 k)	B	29.6/40.9
R250	7030007290	S.RES ERJ2GEJ 222 X (2.2 k)	B	7.2/32.2
R251	7030005040	S.RES ERJ2GEJ 472 X (4.7 k)	B	7.5/25.7
R252	7030005240	S.RES ERJ2GEJ 473 X (47 k)	B	5/32.9
R253	7030005220	S.RES ERJ2GEJ 223 X (22 k)	B	9/27.8
R254	7030005050	S.RES ERJ2GEJ 103 X (10 k)	B	9/26.2
R255	7030007280	S.RES ERJ2GEJ 331 X (330)	B	11.5/29.1
R256	7030005050	S.RES ERJ2GEJ 103 X (10 k)	B	12.4/17.5
R257	7030005240	S.RES ERJ2GEJ 473 X (47 k)	B	13.1/22.4
R258	7030007290	S.RES ERJ2GEJ 222 X (2.2 k)	B	10/20.1
R300	7030007290	S.RES ERJ2GEJ 222 X (2.2 k)	T	17.9/40.7
R301	7030007290	S.RES ERJ2GEJ 222 X (2.2 k)	T	26/39
R302	7030007290	S.RES ERJ2GEJ 222 X (2.2 k)	T	23.4/36.7
R303	7030007290	S.RES ERJ2GEJ 222 X (2.2 k)	T	21.9/37.2
R304	7030005050	S.RES ERJ2GEJ 103 X (10 k)	T	8.5/38.9
R305	7030005240	S.RES ERJ2GEJ 473 X (47 k)	T	15.2/38.5
R306	7030005050	S.RES ERJ2GEJ 103 X (10 k)	T	9.2/35.5
R307	7030005220	S.RES ERJ2GEJ 223 X (22 k)	T	10.8/35.5
R308	7030009280	S.RES ERJ2GEJ 391 X (390)	T	10.6/38.8
R309	7030008410	S.RES ERJ2GEJ 392 X (3.9 k)	T	6.4/38.5
R310	7030008410	S.RES ERJ2GEJ 392 X (3.9 k)	T	2.7/39.6
R311	7030005240	S.RES ERJ2GEJ 473 X (47 k)	T	5.2/36.8
R312	7030005240	S.RES ERJ2GEJ 473 X (47 k)	T	3.6/34.9
R313	7030005030	S.RES ERJ2GEJ 152 X (1.5 k)	T	1.5/34.2
R314	7030005220	S.RES ERJ2GEJ 223 X (22 k)	T	4.2/28
R315	7030005530	S.RES ERJ2GEJ 100 X (10)	T	1.2/27.7
R316	7030007270	S.RES ERJ2GEJ 151 X (150)	T	1.2/30.7
R317	7030007290	S.RES ERJ2GEJ 222 X (2.2 k)	T	2.1/26.3
R318	7030007300	S.RES ERJ2GEJ 332 X (3.3 k)	T	27.6/36.2
R319	7030007300	S.RES ERJ2GEJ 332 X (3.3 k)	B	22.5/42.9
R320	7030005240	S.RES ERJ2GEJ 473 X (47 k)	T	28.6/38.4
R321	7030005720	S.RES ERJ2GEJ 563 X (56 k)	T	12.4/38.8
R322	7030005720	S.RES ERJ2GEJ 563 X (56 k)	T	4.4/29.2
R323	7030005050	S.RES ERJ2GEJ 103 X (10 k)	B	8.2/40
R324	7030005050	S.RES ERJ2GEJ 103 X (10 k)	T	2/8.3
R325	7030005050	S.RES ERJ2GEJ 103 X (10 k)	T	15.6/39.8
R400	7030007300	S.RES ERJ2GEJ 332 X (3.3 k)	B	19.7/44
R401	7030008300	S.RES ERJ2GEJ 184 X (180 k)	B	19.7/42.2
R402	7030008300	S.RES ERJ2GEJ 184 X (180 k)	B	20.8/38.4
R403	7030005240	S.RES ERJ2GEJ 473 X (47 k)	B	19.7/43.1
R404	7030005110	S.RES ERJ2GEJ 224 X (220 k)	B	19.9/37.9
R405	7030005120	S.RES ERJ2GEJ 102 X (1 k)	B	17.7/37
R406	7030004990	S.RES ERJ2GEJ 221 X (220)	B	18.5/41.9
R407	7030010040	S.RES ERJ2GEJ-JPW	B	21/36.7
R408	7030005530	S.RES ERJ2GEJ 100 X (10)	B	18.5/43.5
R409	7030004990	S.RES ERJ2GEJ 221 X (220)	B	21/35.8
R410	7030004990	S.RES ERJ2GEJ 221 X (220)	B	22.6/36.7
R411	7030005240	S.RES ERJ2GEJ 473 X (47 k)	B	15.7/36.1
R412	7030008300	S.RES ERJ2GEJ 184 X (180 k)	B	14.8/30.2
R413	7030008300	S.RES ERJ2GEJ 184 X (180 k)	B	15.2/33.2
R414	7030005220	S.RES ERJ2GEJ 223 X (22 k)	B	15.2/29
R415	7030005220	S.RES ERJ2GEJ 223 X (22 k)	B	15.7/30.2
R416	7030005110	S.RES ERJ2GEJ 224 X (220 k)	B	15.2/32.3
R417	7030005120	S.RES ERJ2GEJ 102 X (1 k)	B	16.9/29.2
R418	7030004990	S.RES ERJ2GEJ 221 X (220)	B	13.5/30.9
R419	7030005090	S.RES ERJ2GEJ 104 X (100 k)	B	15.8/25.7
R420	7030005530	S.RES ERJ2GEJ 100 X (10)	B	13.8/26.4
R421	7030005240	S.RES ERJ2GEJ 473 X (47 k)	B	16.2/21.2
R422	7030005240	S.RES ERJ2GEJ 473 X (47 k)	B	15.3/21.2
R423	7030009270	S.RES ERJ2GEJ 821 X (820)	B	17.5/22.4
R450	7030005240	S.RES ERJ2GEJ 473 X (47 k)	B	21.5/33.3
R451	7030008300	S.RES ERJ2GEJ 184 X (180 k)	B	20.2/32.4
R452	7030008300	S.RES ERJ2GEJ 184 X (180 k)	B	20.5/34.9
R453	7030005220	S.RES ERJ2GEJ 223 X (22 k)	B	19/32
R454	7030005220	S.RES ERJ2GEJ 223 X (22 k)	B	20.2/31.5
R455	7030005110	S.RES ERJ2GEJ 224 X (220 k)	B	24.2/32.8
R456	7030005120	S.RES ERJ2GEJ 102 X (1 k)	B	21.4/27.5
R457	7030004990	S.RES ERJ2GEJ 221 X (220)	B	24.2/30.1

M.=Mounted side (T: Mounted on the Top side, B: Mounted on the Bottom side)
S.=Surface mount

[RF UNIT]

REF NO.	ORDER NO.	DESCRIPTION	M.	H/V LOCATION
R458	7030005090	S.RES ERJ2GEJ 104 X (100 k)	B	24.1/26.9
R459	7030005530	S.RES ERJ2GEJ 100 X (10)	B	20.2/27.3
R460	7030005240	S.RES ERJ2GEJ 473 X (47 k)	B	22.2/21.9
R461	7030005240	S.RES ERJ2GEJ 473 X (47 k)	B	21.3/22
R462	7030007290	S.RES ERJ2GEJ 222 X (2.2 k)	B	19.3/27.8
R500	7030007290	S.RES ERJ2GEJ 222 X (2.2 k)	T	31.2/36.5
R501	7030005050	S.RES ERJ2GEJ 103 X (10 k)	T	28.8/35.4
R502	7030005240	S.RES ERJ2GEJ 473 X (47 k)	T	28.9/32.5
R503	7030005060	S.RES ERJ2GEJ 333 X (33 k)	T	32.9/30.2
R504	7030005050	S.RES ERJ2GEJ 103 X (10 k)	T	32.9/31.1
R506	7030004990	S.RES ERJ2GEJ 221 X (220)	T	28.2/31.3
R507	7030008410	S.RES ERJ2GEJ 392 X (3.9 k)	T	28/25.2
R508	7030008410	S.RES ERJ2GEJ 392 X (3.9 k)	T	30.5/26.4
R509	7030005240	S.RES ERJ2GEJ 473 X (47 k)	T	28.9/28.2
R510	7030005240	S.RES ERJ2GEJ 473 X (47 k)	T	29.6/26.4
R511	7030005050	S.RES ERJ2GEJ 103 X (10 k)	T	29.6/20.4
R512	7030005720	S.RES ERJ2GEJ 563 X (56 k)	T	31.8/19.1
R513	7030005530	S.RES ERJ2GEJ 100 X (10)	T	29/16.5
R514	7030004990	S.RES ERJ2GEJ 221 X (220)	T	28.6/18.6
R515	7030007290	S.RES ERJ2GEJ 222 X (2.2 k)	T	30.9/16.3
R516	7030005240	S.RES ERJ2GEJ 473 X (47 k)	B	15.7/11.7
R517	7030007300	S.RES ERJ2GEJ 332 X (3.3 k)	T	28.8/36.3
R518	7030005240	S.RES ERJ2GEJ 473 X (47 k)	T	31.4/38.8
R602	7030008300	S.RES ERJ2GEJ 184 X (180 k)	B	25.8/34.1
R603	7030008300	S.RES ERJ2GEJ 184 X (180 k)	B	25.8/33.2
R604	7030005240	S.RES ERJ2GEJ 473 X (47 k)	B	30.8/33.2
R605	7030005110	S.RES ERJ2GEJ 224 X (220 k)	B	32/33.6
R607	7030004990	S.RES ERJ2GEJ 221 X (220)	B	25.5/32
R609	7030005530	S.RES ERJ2GEJ 100 X (10)	B	26.1/36.2
R610	7030004980	S.RES ERJ2GEJ 101 X (100)	B	27.8/27.3
R611	7030004980	S.RES ERJ2GEJ 101 X (100)	B	30.2/26.3
R612	7030005240	S.RES ERJ2GEJ 473 X (47 k)	B	26/24.7
R613	7030005240	S.RES ERJ2GEJ 473 X (47 k)	B	24.9/23.5
R614	7030008300	S.RES ERJ2GEJ 184 X (180 k)	B	22.5/15.8
R615	7030008300	S.RES ERJ2GEJ 184 X (180 k)	B	24.9/17.1
R616	7030005220	S.RES ERJ2GEJ 223 X (22 k)	B	23.7/14.2
R617	7030005220	S.RES ERJ2GEJ 223 X (22 k)	B	23.7/15.4
R618	7030005110	S.RES ERJ2GEJ 224 X (220 k)	B	24.9/16.2
R619	7030005120	S.RES ERJ2GEJ 102 X (1 k)	B	19.7/16.7
R620	7030004990	S.RES ERJ2GEJ 221 X (220)	B	20.5/19.6
R621	7030005530	S.RES ERJ2GEJ 100 X (10)	B	17.9/17.1
R622	7030005240	S.RES ERJ2GEJ 473 X (47 k)	B	20.9/11.6
R623	7030005240	S.RES ERJ2GEJ 473 X (47 k)	B	19.7/11
R624	7030009270	S.RES ERJ2GEJ 821 X (820)	B	16.3/16.1
R650	7030005240	S.RES ERJ2GEJ 473 X (47 k)	B	31.2/22.3
R651	7030005240	S.RES ERJ2GEJ 473 X (47 k)	B	31.5/21.1
R652	7030008300	S.RES ERJ2GEJ 184 X (180 k)	B	28.8/19.1
R653	7030008300	S.RES ERJ2GEJ 184 X (180 k)	B	30.6/19.7
R654	7030005220	S.RES ERJ2GEJ 223 X (22 k)	B	32.7/16.9
R655	7030005220	S.RES ERJ2GEJ 223 X (22 k)	B	32.7/17.8
R656	7030005110	S.RES ERJ2GEJ 224 X (220 k)	B	33.2/19.7
R657	7030005120	S.RES ERJ2GEJ 102 X (1 k)	B	32.4/14.8
R658	7030004990	S.RES ERJ2GEJ 221 X (220)	B	27.9/15
R659	7030005530	S.RES ERJ2GEJ 100 X (10)	B	27.9/14.1
R660	7030005240	S.RES ERJ2GEJ 473 X (47 k)	B	33.6/11.5
R661	7030005240	S.RES ERJ2GEJ 473 X (47 k)	B	31.7/10.3
R662	7030009270	S.RES ERJ2GEJ 821 X (820)	B	27.9/13.2
R700	7030007290	S.RES ERJ2GEJ 222 X (2.2 k)	B	2.4/38.2
R701	7030007290	S.RES ERJ2GEJ 222 X (2.2 k)	B	2.6/35
R702	7030005120	S.RES ERJ2GEJ 102 X (1 k)	B	3.2/33.5
R703	7030008290	S.RES ERJ2GEJ 183 X (18 k)	B	5.6/26.5
R704	7030005600	S.RES ERJ2GEJ 273 X (27 k)	B	5.6/27.4
R705	7030004970	S.RES ERJ2GEJ 470 X (47)	B	7.9/22.5
R706	7030010040	S.RES ERJ2GEJ-JPW	B	5.1/23.7
R707	7030005240	S.RES ERJ2GEJ 473 X (47 k)	B	2/29.9
R708	7030005240	S.RES ERJ2GEJ 473 X (47 k)	B	6.6/17
R709	7030005240	S.RES ERJ2GEJ 473 X (47 k)	B	5.7/17
R710	7030007250	S.RES ERJ2GEJ 220 X (22)	B	10.3/15.3
R711	7030005220	S.RES ERJ2GEJ 223 X (22 k)	B	9.1/15.9
R712	7030007280	S.RES ERJ2GEJ 331 X (330)	B	9.1/12.5
R713	7030004990	S.RES ERJ2GEJ 221 X (220)	B	8.6/14.6
R714	7030007290	S.RES ERJ2GEJ 222 X (2.2 k)	B	11.9/12.1
R715	7030005240	S.RES ERJ2GEJ 473 X (47 k)	B	12.7/16.3
R800	7030005050	S.RES ERJ2GEJ 103 X (10 k)	T	24.1/20.9
R801	7030005050	S.RES ERJ2GEJ 103 X (10 k)	T	18.3/25.8
R802	7030005120	S.RES ERJ2GEJ 102 X (1 k)	T	21.7/25.1
R803	7030005120	S.RES ERJ2GEJ 102 X (1 k)	T	22.6/25.1
R804	7030005120	S.RES ERJ2GEJ 102 X (1 k)	T	23.9/22.7
R805	7030005120	S.RES ERJ2GEJ 102 X (1 k)	T	24.1/21.8
R806	7030011170	S.RES RR0510P-471-D (470)	T	9.5/18.5
R807	7030009190	S.RES RR0510P-332-D (3.3 k)	T	11.2/22.9
R808	7030005990	S.RES RR0510P-122-D (1.2 k)	T	9.5/19.4
R811	7030010040	S.RES ERJ2GEJ-JPW	T	14/21.9
R815	7030010040	S.RES ERJ2GEJ-JPW	T	10.6/17.1
R818	7030004980	S.RES ERJ2GEJ 101 X (100)	T	24.8/15.7
R819	7030009530	S.RES ERJ2GEJ 270 X (27)	T	19.2/16.2
R820	7030005050	S.RES ERJ2GEJ 103 X (10 k)	T	19.6/18.4
R821	7030005720	S.RES ERJ2GEJ 563 X (56 k)	T	22.1/15.7
R822	7030005080	S.RES ERJ2GEJ 823 X (82 k)	T	21.2/15.7
R823	7030005040	S.RES ERJ2GEJ 472 X (4.7 k)	B	46.1/17.1
R824	7030007290	S.RES ERJ2GEJ 222 X (2.2 k)	B	41.3/17.8

[RF UNIT]

REF NO.	ORDER NO.	DESCRIPTION	M.	H/V LOCATION
R830	7030010090	S.RES ERJ2GEJ 180 X (18)	T	18.8/24.6
R831	7030010090	S.RES ERJ2GEJ 180 X (18)	T	17.1/24
R832	7030010090	S.RES ERJ2GEJ 180 X (18)	T	23.3/19.7
R850	7030004970	S.RES ERJ2GEJ 470 X (47)	T	13.7/11.1
R851	7030005070	S.RES ERJ2GEJ 683 X (68 k)	T	12.8/10.8
R852	7030007570	S.RES ERJ2GEJ 122 X (1.2 k)	T	14.5/12.3
R853	7030007290	S.RES ERJ2GEJ 222 X (2.2 k)	T	16.1/12.3
R854	7030007300	S.RES ERJ2GEJ 332 X (3.3 k)	T	15.8/7
R855	7030007290	S.RES ERJ2GEJ 222 X (2.2 k)	T	15.8/5.3
R900	7030007290	S.RES ERJ2GEJ 222 X (2.2 k)	B	12.7/10.4
R901	7030007290	S.RES ERJ2GEJ 222 X (2.2 k)	T	27.9/11.7
R962	7030004970	S.RES ERJ2GEJ 470 X (47)	T	22.4/27.2
R970	7030005090	S.RES ERJ2GEJ 104 X (100 k)	T	7/31.7
R971	7030005100	S.RES ERJ2GEJ 154 X (150 k)	T	7.4/32.9
R972	7030007270	S.RES ERJ2GEJ 151 X (150)	T	11.5/30.1
R973	7030005090	S.RES ERJ2GEJ 104 X (100 k)	T	24.5/33.2
R974	7030005100	S.RES ERJ2GEJ 154 X (150 k)	T	24/32
R975	7030007270	S.RES ERJ2GEJ 151 X (150)	T	20.2/29.6
R976	7030005090	S.RES ERJ2GEJ 104 X (100 k)	T	23.8/28.6
R977	7030005100	S.RES ERJ2GEJ 154 X (150 k)	T	24.7/28.6
R978	7030007270	S.RES ERJ2GEJ 151 X (150)	T	20.8/27.5
R980	7030005090	S.RES ERJ2GEJ 104 X (100 k)	T	7.3/24.7
R981	7030005100	S.RES ERJ2GEJ 154 X (150 k)	T	7.3/26.3
R982	7030007270	S.RES ERJ2GEJ 151 X (150)	T	11.5/28.5
R983	7030005120	S.RES ERJ2GEJ 102 X (1 k)	T	7.9/31.7
R1000	7030010040	S.RES ERJ2GEJ-JPW	B	36.8/10.7
R1001	7030005090	S.RES ERJ2GEJ 104 X (100 k)	T	37.5/12.3
C1	4030017560	S.CER ECJ0EC1H2R5B	T	10.1/43.8
C2	4030017380	S.CER ECJ0EC1H050B	T	11.3/44.1
C3	4030017350	S.CER ECJ0EC1H020B	T	14.5/40.7
C4	4030017380	S.CER ECJ0EC1H050B	T	12.2/44.1
C5	4030017350	S.CER ECJ0EC1H020B	T	16.1/40.7
C6	4030017560	S.CER ECJ0EC1H2R5B	T	16.3/43.8
C7	4030017400	S.CER ECJ0EC1H220J	T	21.8/41.5
C8	4030017400	S.CER ECJ0EC1H220J	T	23.4/41.6
C9	4030017400	S.CER ECJ0EC1H220J	T	23/40.6
C10	4030017550	S.CER ECJ0EC1H1R5B	T	20.6/42.3
C11	4030017660	S.CER ECJ0EC1H330J	T	21.8/42.4
C12	4030017580	S.CER ECJ0EC1H060C	T	20.6/43.9
C13	4030017400	S.CER ECJ0EC1H220J	T	21.8/43.3
C14	4030017550	S.CER ECJ0EC1H1R5B	T	21.8/44.2
C16	4030017550	S.CER ECJ0EC1H1R5B	B	4.9/40.1
C17	4030017550	S.CER ECJ0EC1H1R5B	B	4.2/38.2
C18	4030017380	S.CER ECJ0EC1H050B	B	3.3/38.2
C20	4030017440	S.CER ECJ0EC1H221J	B	33.4/43.2
C22	4030017460	S.CER ECJ0EB1E102K	B	30.7/47.5
C23	4030016790	S.CER ECJ0EB1C103K	B	27/45.3
C25	4030017440	S.CER ECJ0EC1H221J	B	32.9/45.7
C26	4030017460	S.CER ECJ0EB1E102K	T	29.7/43
C27	4030017460	S.CER ECJ0EB1E102K	T	34.6/45.3
C28	4030017380	S.CER ECJ0EC1H050B	B	25/42.4
C29	4030017620	S.CER ECJ0EC1H100C	B	24.9/39.7
C30	4030017460	S.CER ECJ0EB1E102K	B	29.6/39.7
C31	4030017460	S.CER ECJ0EB1E102K	B	34.3/40.3
C32	4030017460	S.CER ECJ0EB1E102K	B	30.8/39.8
C34	4030017460	S.CER ECJ0EB1E102K	T	27.7/47.9
C35	4030017460	S.CER ECJ0EB1E102K	T	28.5/45.7
C36	4030017460	S.CER ECJ0EB1E102K	T	35/47.7
C37	4030017390	S.CER ECJ0EC1H180J	B	26.3/46.2
C38	4030017390	S.CER ECJ0EC1H180J	B	23.7/45
C39	4030018860	S.CER ECJ0EB0J105K	B	23.7/47.1
C40	4030017460	S.CER ECJ0EB1E102K	B	20.2/48.1
C41	4030018860	S.CER ECJ0EB0J105K	B	22.1/45.9
C43	4030017330	S.CER ECJ0EF1C104Z	T	24.7/45.6
C44	4030017460	S.CER ECJ0EB1E102K	T	32.6/40.9
C45	4030017460	S.CER ECJ0EB1E102K	T	24.7/47.2
C46	4030016790	S.CER ECJ0EB1C103K	B	27.6/41.3
C47	4030017340	S.CER ECJ0EC1H010B	B	5.3/39.2
C48	4030017460	S.CER ECJ0EB1E102K	B	23.8/41.1
C49	4030017400	S.CER ECJ0EC1H220J	B	19/47.8
C100	4030017670	S.CER ECJ0EC1H390J	T	32.1/39.7
C101	4030017610	S.CER ECJ0EC1H090C [USA], [USA-1]	T	33.8/35.2
	4030017620	S.CER ECJ0EC1H100C Except [USA], [USA-1]	T	33.8/35.2
C102	4030006990	S.CER C1608 CH 1H 080D-T [USA], [USA-1]	T	35.9/34
	4030007010	S.CER C1608 CH 1H 100D-T Except [USA], [USA-1]	T	35.9/34
C103	4030007030	S.CER C1608 CH 1H 150J-T	T	35.9/35.2
C104	4030007070	S.CER C1608 CH 1H 330J-T	T	37.4/32.8
C106	4030017350	S.CER ECJ0EC1H020B	T	28.5/44.1
C107	4030011540	S.CER C1608 CH 1H 750J-T	T	33.7/41
C108	4030017460	S.CER ECJ0EB1E102K	T	38/23.2
C109	4550007650	S.TAN F931V105MAABMA	T	33.7/23.1
C110	4030017460	S.CER ECJ0EB1E102K		
C112	4030017420	S.CER ECJ0EC1H470J Except [USA], [USA-1]	T	43.9/24.9
	4030017500	S.CER ECJ0EC1H560J [USA], [USA-1]	T	43.9/24.9
C113	4030017460	S.CER ECJ0EB1E102K	T	45.1/30.4

M.=Mounted side (T: Mounted on the Top side, B: Mounted on the Bottom side)
S.=Surface mount

[RF UNIT]

REF NO.	ORDER NO.	DESCRIPTION	M.	H/V LOCATION
C114	4030017460	S.CER ECJ0EB1E102K	T	48.1/24.7
C116	4030017640	S.CER ECJ0EC1H150J		
		[USA], [USA-1] only	T	48.5/25.9
C117	4030017460	S.CER ECJ0EB1E102K	T	41/20.3
C119	4030017460	S.CER ECJ0EB1E102K	B	48.4/20.8
C121	4030017460	S.CER ECJ0EB1E102K	T	46.3/17.7
C122	4030017460	S.CER ECJ0EB1E102K	T	42.9/15.7
C123	4030017330	S.CER ECJ0EF1C104Z	T	43.8/15.7
C124	4030017640	S.CER ECJ0EC1H150J	T	39.9/16.4
C125	4030017420	S.CER ECJ0EC1H470J	T	35.9/15.5
C126	4030017460	S.CER ECJ0EB1E102K	T	34.3/12.5
C129	4030017600	S.CER ECJ0EC1H080C	T	32.2/14
C130	4030017580	S.CER ECJ0EC1H060C	T	39.4/17.6
C131	4030017580	S.CER ECJ0EC1H060C	T	38.5/17.6
C132	4030017460	S.CER ECJ0EB1E102K	T	41.3/14.1
C133	4030017460	S.CER ECJ0EB1E102K	T	29.9/12.7
C135	4030017340	S.CER ECJ0EC1H010B	T	29/12.9
C136	4030017330	S.CER ECJ0EF1C104Z	T	41.9/20.3
C137	4030017400	S.CER ECJ0EC1H220J	T	48.4/16.9
C142	4030017330	S.CER ECJ0EF1C104Z	T	39.2/20.3
C143	4030017330	S.CER ECJ0EF1C104Z	T	40.1/20.3
C144	4030017610	S.CER ECJ0EC1H090C		
		[USA], [USA-1] only	T	48.2/16
C150	4030018860	S.CER ECJ0EB0J105K	T	38.5/34.4
C153	4030018860	S.CER ECJ0EB0J105K	T	39.4/37.5
C154	4030016790	S.CER ECJ0EB1C103K	T	45.1/37.5
C155	4030016950	S.CER ECJ0EB1A473K	T	48.2/33.5
C157	4030016950	S.CER ECJ0EB1A473K	T	48.2/36.7
C158	4030017460	S.CER ECJ0EB1E102K	B	35/39.1
C159	4030017460	S.CER ECJ0EB1E102K	B	34.8/37.9
C161	4030017460	S.CER ECJ0EB1E102K	B	37.8/37.1
C162	4030017460	S.CER ECJ0EB1E102K	B	47.7/34
C163	4030017460	S.CER ECJ0EB1E102K	B	34/33.8
C164	4030017460	S.CER ECJ0EB1E102K	B	46/36.5
C166	4030017460	S.CER ECJ0EB1E102K	B	47.7/34.9
C167	4030017460	S.CER ECJ0EB1E102K	B	35.9/39.1
C168	4030017460	S.CER ECJ0EB1E102K	B	37.8/35.5
C170	4030017460	S.CER ECJ0EB1E102K	B	47.7/33.1
C171	4030017460	S.CER ECJ0EB1E102K	T	42.7/37.5
C172	4030017440	S.CER ECJ0EC1H221J	B	28.2/43.3
C173	4030017440	S.CER ECJ0EC1H221J	B	29.1/43.3
C174	4030017730	S.CER ECJ0EB1E471K	B	48.2/25.4
C175	4030017730	S.CER ECJ0EB1E471K	B	46.4/22.4
C176	4030017460	S.CER ECJ0EB1E102K	T	32.1/20.9
C177	4030017460	S.CER ECJ0EB1E102K	T	32.1/24.3
C201	4030017630	S.CER ECJ0EC1H120J	B	14.4/42
C202	4030017500	S.CER ECJ0EC1H560J	B	14.7/40.8
C203	4030017580	S.CER ECJ0EC1H060C	B	11.5/43.5
C204	4030017660	S.CER ECJ0EC1H330J	B	13.2/41.7
C205	4030017680	S.CER ECJ0EC1H820J	B	11.9/41.7
C206	4030017400	S.CER ECJ0EC1H220J	B	10.9/39.6
C207	4030017710	S.CER ECJ0EC1H181J	B	13.5/40.4
C208	4030017600	S.CER ECJ0EC1H080C	B	11.2/38.4
C209	4030017430	S.CER ECJ0EC1H101J	B	13.6/38.9
C210	4030018860	S.CER ECJ0EB0J105K	B	10.3/38.3
C211	4030016930	S.CER ECJ0EB1A104K	B	14.5/36.2
C212	4030016930	S.CER ECJ0EB1A104K	B	13.6/38
C213	4030017460	S.CER ECJ0EB1E102K	T	8.5/6.4
C214	4030017460	S.CER ECJ0EB1E102K	T	10.7/7.9
C215	4030018860	S.CER ECJ0EB0J105K	B	20.5/45.9
C250	4030017660	S.CER ECJ0EC1H330J	B	8.1/31.7
C251	4030016790	S.CER ECJ0EB1C103K	B	6.8/27
C252	4030017460	S.CER ECJ0EB1E102K	B	5/31.2
C253	4030017620	S.CER ECJ0EC1H100C	B	9.9/28.7
C254	4030016790	S.CER ECJ0EB1C103K	B	11.5/28.2
C255	4030016790	S.CER ECJ0EB1C103K	B	12.2/26.6
C256	4030016930	S.CER ECJ0EB1A104K	B	12.2/25.7
C257	4030017620	S.CER ECJ0EC1H100C	B	10.6/23.7
C258	4030016790	S.CER ECJ0EB1C103K	B	13.7/19.2
C259	4030017460	S.CER ECJ0EB1E102K	B	13.4/21.2
C260	4030017660	S.CER ECJ0EC1H330J	B	10.9/20
C261	4030017420	S.CER ECJ0EC1H470J	B	13.6/17.2
C262	4030017420	S.CER ECJ0EC1H470J	T	1.4/6.4
C263	4030017420	S.CER ECJ0EC1H470J	B	12.9/24.8
C264	4030017420	S.CER ECJ0EC1H470J	B	2.5/6.4
C265	4030017420	S.CER ECJ0EC1H470J	B	8/24.6
C300	4030017460	S.CER ECJ0EB1E102K	T	16.8/39.5
C301	4030017390	S.CER ECJ0EC1H180J	T	19.9/39.7
C302	4030017640	S.CER ECJ0EC1H150J	T	17.7/39.4
C303	4030017670	S.CER ECJ0EC1H390J	T	19.9/38.8
C304	4030017380	S.CER ECJ0EC1H050B	T	17.7/37.8
C305	4030017400	S.CER ECJ0EC1H220J	T	19.9/37.9
C306	4030017650	S.CER ECJ0EC1H270J	T	25.7/38.1
C307	4030017420	S.CER ECJ0EC1H470J	T	25.2/36.7
C308	4030017630	S.CER ECJ0EC1H120J	T	24.3/36.7
C309	4030017690	S.CER ECJ0EC1H121J	T	24.8/35.5
C310	4030017400	S.CER ECJ0EC1H220J	T	23.2/35.5
C311	4030017460	S.CER ECJ0EB1E102K	B	24.6/37.6
C312	4030017380	S.CER ECJ0EC1H050B	T	19/35.7
C313	4030016790	S.CER ECJ0EB1C103K	T	13.4/38.5
C314	4030017460	S.CER ECJ0EB1E102K	T	14.3/38.5

[RF UNIT]

REF NO.	ORDER NO.	DESCRIPTION	M.	H/V LOCATION
C315	4030017380	S.CER ECJ0EC1H050B	T	12/36
C316	4030016790	S.CER ECJ0EB1C103K	T	11.5/38.8
C317	4030017460	S.CER ECJ0EB1E102K	T	6.4/37.6
C318	4030016790	S.CER ECJ0EB1C103K	T	9.7/38.8
C319	4030016790	S.CER ECJ0EB1C103K	T	3.6/39.6
C320	4030017460	S.CER ECJ0EB1E102K	T	6.4/36.7
C321	4030017350	S.CER ECJ0EC1H020B	T	6.4/35.8
C322	4030017460	S.CER ECJ0EB1E102K	T	2.3/35.5
C323	4030017460	S.CER ECJ0EB1E102K	T	3.5/36
C324	4030017460	S.CER ECJ0EB1E102K	T	1.1/31.6
C325	4030017380	S.CER ECJ0EC1H050B	T	3.9/30.6
C326	4030017460	S.CER ECJ0EB1E102K	T	1.2/28.9
C327	4030016790	S.CER ECJ0EB1C103K	T	1.2/29.8
C328	4030017730	S.CER ECJ0EB1E471K	T	3/26.3
C329	4030017460	S.CER ECJ0EB1E102K	T	2/9.2
C330	4030017460	S.CER ECJ0EB1E102K	T	1.8/13.2
C331	4030017460	S.CER ECJ0EB1E102K	T	21.5/38.6
C332	4030017460	S.CER ECJ0EB1E102K	T	21.5/39.5
C333	4030017420	S.CER ECJ0EC1H470J	T	1.2/26.1
C334	4030017460	S.CER ECJ0EB1E102K	T	2.3/6.4
C335	4030017460	S.CER ECJ0EB1E102K	T	29.5/38.4
C336	4030016790	S.CER ECJ0EB1C103K	B	22.5/43.8
C337	4030017420	S.CER ECJ0EC1H470J	B	7.3/40
C338	4030017420	S.CER ECJ0EC1H470J	B	9.1/40
C339	4030017440	S.CER ECJ0EC1H221J	T	2.4/12.3
C400	4030017430	S.CER ECJ0EC1H101J	B	20.9/41
C401	4030017570	S.CER ECJ0EC1H040B	B	21.1/39.6
C402	4030018860	S.CER ECJ0EB0J105K	B	15.6/40
C403	4030017460	S.CER ECJ0EB1E102K	B	19/37.9
C404	4030016790	S.CER ECJ0EB1C103K	B	16.8/40.9
C405	4030017460	S.CER ECJ0EB1E102K	B	16.8/40
C407	4030017600	S.CER ECJ0EC1H080C	B	19.4/36.7
C408	4030017550	S.CER ECJ0EC1H1R5B	B	19.4/35.8
C409	4030017430	S.CER ECJ0EC1H101J	B	14.5/35.3
C410	4030017460	S.CER ECJ0EB1E102K	B	15.5/38.4
C411	4030017380	S.CER ECJ0EC1H050B	B	17.3/34.4
C412	4030018860	S.CER ECJ0EB0J105K	B	14/32.1
C413	4030017460	S.CER ECJ0EB1E102K	B	15.2/31.4
C414	4030016790	S.CER ECJ0EB1C103K	B	13.5/29.1
C415	4030017460	S.CER ECJ0EB1E102K	B	13.5/30
C416	4030017420	S.CER ECJ0EC1H470J	B	16.9/28.3
C417	4030017460	S.CER ECJ0EB1E102K	B	18.4/28.9
C418	4030017460	S.CER ECJ0EB1E102K	B	13.6/28.2
C419	4030017430	S.CER ECJ0EC1H101J	B	13.6/27.3
C420	4030017530	S.CER ECJ0EC1H0R5B	B	17.3/25.8
C421	4030017660	S.CER ECJ0EC1H330J	B	15.9/22.4
C422	4030017430	S.CER ECJ0EC1H101J	B	14.3/22.4
C423	4030017610	S.CER ECJ0EC1H090C	B	17.3/24.2
C424	4030017460	S.CER ECJ0EB1E102K	B	16.2/19.6
C425	4030017460	S.CER ECJ0EB1E102K	B	18.3/21.2
C450	4030017550	S.CER ECJ0EC1H1R5B	B	22.6/35.8
C451	4030017430	S.CER ECJ0EC1H101J	B	24.2/33.7
C452	4030017460	S.CER ECJ0EB1E102K	B	20.2/33.7
C453	4030017380	S.CER ECJ0EC1H050B	B	21.7/34.6
C454	4030018860	S.CER ECJ0EB0J105K	B	19/33.6
C455	4030017460	S.CER ECJ0EB1E102K	B	24.2/31.9
C456	4030016790	S.CER ECJ0EB1C103K	B	24.1/29.2
C457	4030017460	S.CER ECJ0EB1E102K	B	24.2/31
C459	4030017460	S.CER ECJ0EB1E102K	B	22.8/27.2
C460	4030017430	S.CER ECJ0EC1H101J	B	19.6/21.5
C461	4030017460	S.CER ECJ0EB1E102K	B	24.1/28.3
C462	4030017530	S.CER ECJ0EC1H0R5B	B	20.6/26.1
C463	4030017660	S.CER ECJ0EC1H330J	B	21.9/23.5
C464	4030017440	S.CER ECJ0EC1H221J	B	20.8/20.8
C465	4030017430	S.CER ECJ0EC1H101J	B	19.8/22.7
C466	4030017580	S.CER ECJ0EC1H060C	B	18.9/26.4
C468	4030017460	S.CER ECJ0EB1E102K	B	17.5/42.5
C469	4030017460	S.CER ECJ0EB1E102K	B	23.7/10.7
C470	4030017420	S.CER ECJ0EC1H470J	B	25.5/10.6
C471	4030017420	S.CER ECJ0EC1H470J	B	24.6/10.6
C472	4030017420	S.CER ECJ0EC1H470J	B	21.9/3.6
C473	4030017420	S.CER ECJ0EC1H470J	B	22.6/5.5
C474	4030017460	S.CER ECJ0EB1E102K	B	22.6/7.3
C475	4030017730	S.CER ECJ0EB1E471K	B	21.1/29.7
C500	4030017380	S.CER ECJ0EC1H050B	T	31.7/33.5
C501	4030017460	S.CER ECJ0EB1E102K	T	28.8/37.2
C502	4030017390	S.CER ECJ0EC1H180J	T	27.6/33.6
C503	4030017460	S.CER ECJ0EB1E102K	T	27.3/32.7
C504	4030017570	S.CER ECJ0EC1H040B	T	32.1/32.3
C505	4030017460	S.CER ECJ0EB1E102K	T	29.1/31.3
C506	4030017460	S.CER ECJ0EB1E102K	T	28.6/30
C507	4030017460	S.CER ECJ0EB1E102K	T	30.1/28
C508	4030017460	S.CER ECJ0EB1E102K	T	28/24.3
C509	4030017390	S.CER ECJ0EC1H180J	T	28.7/29.1
C510	4030017350	S.CER ECJ0EC1H020B	T	31/28
C511	4030017390	S.CER ECJ0EC1H180J	T	28/23.4
C512	4030017440	S.CER ECJ0EC1H221J	T	27.9/27.3
C513	4030017460	S.CER ECJ0EB1E102K	T	28/20.4
C514	4030017630	S.CER ECJ0EC1H120J	T	30.8/21.4
C515	4030017460	S.CER ECJ0EB1E102K	T	28.6/17.7
C516	4030017460	S.CER ECJ0EB1E102K	T	28.6/19.5

M.=Mounted side (T: Mounted on the Top side, B: Mounted on the Bottom side)
S.=Surface mount

[RF UNIT]

REF NO.	ORDER NO.	DESCRIPTION	M.	H/V LOCATION
C517	4030017640	S.CER ECJ0EC1H150J	T	31.4/17.5
C518	4030017460	S.CER ECJ0EB1E102K	T	30.9/37.9
C519	4030017630	S.CER ECJ0EC1H120J	T	31.7/35.3
C600	4030017380	S.CER ECJ0EC1H050B	B	30.4/36.3
C601	4030017650	S.CER ECJ0EC1H270J	B	29.8/35.4
C602	4030017580	S.CER ECJ0EC1H060C	B	28.2/35.7
C603	4030018860	S.CER ECJ0EB0J105K	B	28.3/30.3
C604	4030017460	S.CER ECJ0EB1E102K	B	32/32.7
C606	4030016790	S.CER ECJ0EB1C103K	B	27.3/32
C607	4030017460	S.CER ECJ0EB1E102K	B	26.4/32
C608	4030017380	S.CER ECJ0EC1H050B	B	30.3/27.9
C609	4030017350	S.CER ECJ0EC1H020B	B	26.2/27.3
C610	4030017640	S.CER ECJ0EC1H150J	B	27.2/24.9
C611	4030017530	S.CER ECJ0EC1H0R5B	B	23.6/25
C612	4030017350	S.CER ECJ0EC1H020B	B	23.7/23.6
C613	4030017640	S.CER ECJ0EC1H150J	B	26.2/22.5
C614	4030017460	S.CER ECJ0EB1E102K	B	26.5/23.5
C615	4030017380	S.CER ECJ0EC1H050B	B	24.1/19.6
C616	4030018860	S.CER ECJ0EB0J105K	B	22.5/14.6
C617	4030017460	S.CER ECJ0EB1E102K	B	24.9/15.3
C618	4030016790	S.CER ECJ0EB1C103K	B	21.4/19.6
C619	4030017460	S.CER ECJ0EB1E102K	B	22.3/19.6
C620	4030017460	S.CER ECJ0EB1E102K	B	23.2/19.6
C621	4030017620	S.CER ECJ0EC1H100C	B	18.8/16.7
C622	4030017640	S.CER ECJ0EC1H150J	B	21.3/12.8
C623	4030017340	S.CER ECJ0EC1H010B	B	17.9/15.2
C625	4030017640	S.CER ECJ0EC1H150J	B	17.8/11.8
C626	4030017460	S.CER ECJ0EB1E102K	B	21.8/10.8
C627	4030017570	S.CER ECJ0EC1H040B	B	16.3/15.2
C630	4030017630	S.CER ECJ0EC1H120J	B	30.4/37.2
C631	4030017390	S.CER ECJ0EC1H180J	B	30.9/38.1
C633	4030017600	S.CER ECJ0EC1H080C	B	29.1/37.3
C634	4030017420	S.CER ECJ0EC1H470J	T	15/13.2
C650	4030017350	S.CER ECJ0EC1H020B	B	28.9/26
C651	4030017630	S.CER ECJ0EC1H120J	B	33.1/22
C652	4030017530	S.CER ECJ0EC1H0R5B	B	28.4/22.7
C653	4030017350	S.CER ECJ0EC1H020B	B	30/22.7
C654	4030017640	S.CER ECJ0EC1H150J	B	30.3/21.5
C655	4030017460	S.CER ECJ0EB1E102K	B	34.7/21.8
C656	4030017380	S.CER ECJ0EC1H050B	B	27.9/19.1
C657	4030017460	S.CER ECJ0EB1E102K	B	28.5/17.9
C658	4030017460	S.CER ECJ0EB1E102K	B	32.3/19.2
C659	4030016790	S.CER ECJ0EB1C103K	B	28.5/16.1
C660	4030017460	S.CER ECJ0EB1E102K	B	28.5/17
C662	4030017620	S.CER ECJ0EC1H100C	B	31.2/14.4
C663	4030017640	S.CER ECJ0EC1H150J	B	33.9/12.7
C664	4030017340	S.CER ECJ0EC1H010B	B	31.1/13.2
C666	4030017640	S.CER ECJ0EC1H150J	B	30.4/9.5
C667	4030017460	S.CER ECJ0EB1E102K	B	34.8/11.8
C668	4030017570	S.CER ECJ0EC1H040B	B	29.5/13.2
C671	4030017460	S.CER ECJ0EB1E102K	B	27.8/8.7
C672	4030017440	S.CER ECJ0EC1H221J	T	26.6/5.5
C700	4030017460	S.CER ECJ0EB1E102K	B	4.1/33.7
C701	4030017380	S.CER ECJ0EC1H050B	B	3.5/31.1
C702	4030017460	S.CER ECJ0EB1E102K	B	1.7/34.9
C703	4030017460	S.CER ECJ0EB1E102K	B	2/33.7
C704	4030017650	S.CER ECJ0EC1H270J	B	1.1/29
C705	4030017360	S.CER ECJ0EC1H030B	B	1.6/27.6
C706	4030017460	S.CER ECJ0EB1E102K	B	3.6/29.9
C707	4030017460	S.CER ECJ0EB1E102K	B	1.6/26
C708	4030017420	S.CER ECJ0EC1H470J	B	5.6/22.5
C709	4030017460	S.CER ECJ0EB1E102K	B	6.8/22.5
C710	4030017650	S.CER ECJ0EC1H270J	B	4.5/17.5
C711	4030017550	S.CER ECJ0EC1H1R5B	B	8.6/19.6
C713	4030017650	S.CER ECJ0EC1H270J	B	7.5/16.7
C714	4030017460	S.CER ECJ0EB1E102K	B	4.5/16.6
C715	4030017640	S.CER ECJ0EC1H150J	B	10.2/16.7
C716	4030017460	S.CER ECJ0EB1E102K	B	8.6/13.7
C717	4030017460	S.CER ECJ0EB1E102K	B	8/12.5
C718	4030017620	S.CER ECJ0EC1H100C	B	11.8/13.6
C720	4030017420	S.CER ECJ0EC1H470J	T	4.3/12.2
C721	4030017460	S.CER ECJ0EB1E102K	T	8.9/12
C722	4030017460	S.CER ECJ0EB1E102K	T	7/7
C724	4030017460	S.CER ECJ0EB1E102K	T	9.8/12
C725	4030017730	S.CER ECJ0EB1E471K	B	2.6/36.6
C802	4030017460	S.CER ECJ0EB1E102K	B	32.2/8.1
C803	4030017460	S.CER ECJ0EB1E102K	B	32.9/9
C804	4030017460	S.CER ECJ0EB1E102K	B	37/8.8
C806	4030017460	S.CER ECJ0EB1E102K	B	35.6/16.7
C807	4030016790	S.CER ECJ0EB1C103K	T	19.2/25.9
C808	4030017430	S.CER ECJ0EC1H101J	T	20.4/25.5
C809	4030016790	S.CER ECJ0EB1C103K	T	20.4/24.6
C810	4030017430	S.CER ECJ0EC1H101J	T	17.1/25.4
C811	4030016790	S.CER ECJ0EB1C103K	T	17.1/26.3
C812	4030016790	S.CER ECJ0EB1C103K	T	18/21.8
C813	4030017430	S.CER ECJ0EC1H101J	T	17.1/21.9
C814	4550007680	S.TAN TEESVP 0J 226M8R	T	15.7/23.2
C818	4030017430	S.CER ECJ0EC1H101J	T	20.3/19.3
C819	4030017460	S.CER ECJ0EB1E102K	T	23.9/16.3
C820	4550006910	S.TAN TEESVP 1C 334M8R	T	9.5/21.8
C821	4550007760	S.TAN TEESVP 1A 335M8R	T	7.7/21.8

[RF UNIT]

REF NO.	ORDER NO.	DESCRIPTION	M.	H/V LOCATION
C822	4340000260	S.MLR ECPU1C104MA5	T	11.8/21.5
C823	4550007120	S.TAN F92 1D 224MPA	T	11.9/18.5
C826	4030017420	S.CER ECJ0EC1H470J	B	15.6/17.8
C830	4030017440	S.CER ECJ0EC1H221J	T	24.4/17.5
C831	4030017460	S.CER ECJ0EB1E102K	T	20.3/15.7
C832	4030017460	S.CER ECJ0EB1E102K	B	47.3/16.2
C833	4550007680	S.TAN TEESVP 0J 226M8R	B	48.1/17.6
C834	4030017460	S.CER ECJ0EB1E102K	B	44.4/11.8
C835	4030017460	S.CER ECJ0EB1E102K	B	37.9/15.2
C836	4550007680	S.TAN TEESVP 0J 226M8R	B	36.2/14.6
C837	4030017460	S.CER ECJ0EB1E102K	T	19.6/17.5
C838	4030017730	S.CER ECJ0EB1E471K	B	15.3/19.6
C839	4030017440	S.CER ECJ0EC1H221J	B	18.4/19.3
C840	4030017420	S.CER ECJ0EC1H470J	B	35/19.7
C850	4030017460	S.CER ECJ0EB1E102K	T	10.7/12
C851	4030017460	S.CER ECJ0EB1E102K	T	12.7/7.6
C852	4030017380	S.CER ECJ0EC1H050B	T	14.6/11.1
C853	4030017350	S.CER ECJ0EC1H020B	T	14.9/8.6
C854	4030017460	S.CER ECJ0EB1E102K	T	15.8/8.6
C856	4030017360	S.CER ECJ0EC1H030B	B	13.4/7.7
C857	4030017350	S.CER ECJ0EC1H020B	T	14.3/6.5
C858	4030017620	S.CER ECJ0EC1H100C	T	15.9/25.7
C900	4030016790	S.CER ECJ0EB1C103K	B	13.6/11.6
C901	4030017460	S.CER ECJ0EB1E102K	B	15.6/7.1
C903	4030016790	S.CER ECJ0EB1C103K	T	26.7/12.2
C904	4030017460	S.CER ECJ0EB1E102K	B	20/6.9
C906	4030017440	S.CER ECJ0EC1H221J	B	20.9/8.2
C907	4030017440	S.CER ECJ0EC1H221J	B	23.1/13.3
C908	4030017730	S.CER ECJ0EB1E471K	T	20.9/4.9
C909	4030017650	S.CER ECJ0EC1H270J	B	18/9.5
C910	4030017420	S.CER ECJ0EC1H470J	B	25.4/11.9
C911	4030017420	S.CER ECJ0EC1H470J	B	23.1/11.9
C950	4030016930	S.CER ECJ0EB1A104K	T	12.1/26
C951	4030016930	S.CER ECJ0EB1A104K	B	2.1/11.3
C952	4550007680	S.TAN TEESVP 0J 226M8R	T	12/24.4
C960	4030016930	S.CER ECJ0EB1A104K	T	13/26
C961	4030016930	S.CER ECJ0EB1A104K	T	10.3/29
C962	4030016930	S.CER ECJ0EB1A104K	T	11.4/31.9
C963	4030016930	S.CER ECJ0EB1A104K	T	11.3/33.1
C964	4030016930	S.CER ECJ0EB1A104K	T	15.4/35.2
C965	4030016930	S.CER ECJ0EB1A104K	T	17.2/34.7
C966	4030016930	S.CER ECJ0EB1A104K	T	20.2/33.1
C967	4030016930	S.CER ECJ0EB1A104K	T	15.4/34.3
C1000	4030017460	S.CER ECJ0EB1E102K	B	41.2/9.1
C1002	4030017460	S.CER ECJ0EB1E102K	B	38.1/7
C1003	4030017420	S.CER ECJ0EC1H470J	T	27.5/4.3
C1004	4030017460	S.CER ECJ0EB1E102K	T	24.2/2.8
C1005	4030017460	S.CER ECJ0EB1E102K	T	30.6/5.6
C1006	4030017460	S.CER ECJ0EB1E102K	T	36.6/12.3
C1007	4510004630	S.ELE ECEV1CA100SR [USA], [USA-1], [EXP-2]	T	44.7/12.2
	4510008540	S.ELE EEE1CA100SR Except [USA], [USA-1], [EXP-2]	T	44.7/12.2
C1008	4030017460	S.CER ECJ0EB1E102K	T	35.3/5.5
J800	6510025370	S.CNR AXK816145YG	T	15.9/18
J1000	6450000870	CNR HEC2711-01-020		
J1001	6510022860	S.CNR AXK6S30445P	T	21.9/9.1
EP100	6910014730	S.BEA MPZ2012S331A-T	T	34.5/19.7
EP102	6910015370	S.BEA ACZ1005Y-102-T	T	43.9/37.2
EP104	6910015370	S.BEA ACZ1005Y-102-T	T	37.5/14.6
EP105	6910012350	S.BEA MMZ1608Y 102BT	T	38.2/21.1
EP900	6910015370	S.BEA ACZ1005Y-102-T	B	16.5/8
EP1000	6910014730	S.BEA MPZ2012S331A-T	B	46.3/10.4
EP1001	6910014730	S.BEA MPZ2012S331A-T	B	40.1/7.4
EP1002	6910014730	S.BEA MPZ2012S331A-T	T	29.2/5.8
EP1003	6910014730	S.BEA MPZ2012S331A-T	B	15.9/4.5

M.=Mounted side (T: Mounted on the Top side, B: Mounted on the Bottom side)
S.=Surface mount

[VCO UNIT]

REF NO.	ORDER NO.	DESCRIPTION	M.	H/V LOCATION
Q1	1530003560	S.TR 2SC5195-T1	T	10.4/16.5
Q2	1590003280	S.TR UNR9211J-(TX)	T	4.6/15.1
Q51	1530003560	S.TR 2SC5195-T1	T	14/9.6
Q52	1590003280	S.TR UNR9211J-(TX)	T	18.1/17.4
Q101	1530003260	S.TR 2SC5006-T1	T	9/2.5
Q102	1590003280	S.TR UNR9211J-(TX)	T	19/1.8
Q200	1530003260	S.TR 2SC5006-T1	T	8.8/10.9
Q201	1530003260	S.TR 2SC5006-T1	T	3.8/3.5
Q202	1530003260	S.TR 2SC5006-T1	T	5.6/11.4
D1	1750001270	S.VCP 1SV325 (TPH3)	T	3.2/18
D2	1790001621	S.DIO 1SV308 (TPL3)	T	7.1/16.3
D3	1750001270	S.VCP 1SV325 (TPH3)	T	12.2/15.5
D4	1750000940	S.DIO ISS400 TE61	T	12.8/18.9
D5	1750001270	S.VCP 1SV325 (TPH3)	T	4.4/17.3
D6	1750001270	S.VCP 1SV325 (TPH3)	T	12.2/14.3
D51	1750000771	S.VCP HVC376BTRF-E	T	16.5/14.2
D52	1790001260	S.DIO MA2S077-(TX)	T	14.6/17.7
D53	1750000940	S.DIO ISS400 TE61	T	12.4/7.4
D54	1750001270	S.VCP 1SV325 (TPH3)	T	15.6/12.4
D55	1720000650	S.VCP 1SV286 (TPH3)	T	17.4/10.6
D100	1720000650	S.VCP 1SV286 (TPH3)	T	17.4/1.6
D101	1750000721	S.VCP HVC375BTRF-E	T	12.2/2.2
D102	1790001260	S.DIO MA2S077-(TX)	T	16.8/5.4
D103	1750000940	S.DIO ISS400 TE61	T	7.4/1.6
D104	1750000721	S.VCP HVC375BTRF-E	T	13.9/3.1
L2	6200011650	S.COL LQW18AN68NG00D	T	6.8/18.3
L3	6200011660	S.COL LQW18ANR15G00D	T	5/19.1
L52	6200010850	S.COL LQW18AN22NG00D	T	14.7/13.9
L53	6200012050	S.COL LQW18AN24NG00D	T	14.7/15.1
L101	6200011031	S.COL ELJRF R10JFB	T	7.6/3.5
L102	6200010120	S.COL LQW18AN5N6C00D	T	12.3/4.7
L103	6200012060	S.COL LQW18AN9N1D00D	T	14.1/5.4
L200	6200011021	S.COL ELJRF 82NJFB	T	2.3/1.5
L201	6200011021	S.COL ELJRF 82NJFB	T	4/11.9
L202	6200007951	S.COL ELJRF 8N2JFB (8.2)	T	3.6/10.1
L203	6200007931	S.COL ELJRF 12NJFB	T	4.1/1.5
L204	6200007961	S.COL ELJRF 6N8JFB (6.8)	T	6.3/5
R1	7030005240	S.RES ERJ2GEJ 473 X (47 k)	T	6.2/15
R2	7030007290	S.RES ERJ2GEJ 222 X (2.2 k)	T	8/15
R3	7030004970	S.RES ERJ2GEJ 470 X (47)	T	10.7/18.8
R4	7030005050	S.RES ERJ2GEJ 103 X (10 k)	T	10.7/17.9
R5	7030005050	S.RES ERJ2GEJ 103 X (10 k)	T	9.1/18.8
R6	7030005710	S.RES ERJ2GEJ 121 X (120)	T	10/13.8
R7	7030005090	S.RES ERJ2GEJ 104 X (100 k)	T	11.6/12.4
R8	7030005120	S.RES ERJ2GEJ 102 X (1 k)	T	2.8/16.4
R9	7030010040	S.RES ERJ2GEJ-JPW	T	11.6/13.3
R10	7030007290	S.RES ERJ2GEJ 222 X (2.2 k)	T	7.1/15
R50	7030005120	S.RES ERJ2GEJ 102 X (1 k)	T	17.5/13.9
R51	7030005240	S.RES ERJ2GEJ 473 X (47 k)	T	16.5/17.2
R52	7030007290	S.RES ERJ2GEJ 222 X (2.2 k)	T	15.6/16.4
R53	7030004970	S.RES ERJ2GEJ 470 X (47)	T	12.8/8.4
R54	7030005210	S.RES ERJ2GEJ 822 X (8.2 k)	T	15.5/9.5
R55	7030005050	S.RES ERJ2GEJ 103 X (10 k)	T	16.4/9.5
R56	7030007270	S.RES ERJ2GEJ 151 X (150)	T	12.3/10.2
R58	7030005600	S.RES ERJ2GEJ 273 X (27 k)	T	18.9/11.8
R59	7030005600	S.RES ERJ2GEJ 273 X (27 k)	T	19.8/10.2
R60	7030007290	S.RES ERJ2GEJ 222 X (2.2 k)	T	13.8/16.4
R61	7030007320	S.RES ERJ2GEJ 225 X (2.2 M)	T	19.8/13.4
R62	7030005090	S.RES ERJ2GEJ 104 X (100 k)	T	17.7/12.7
R100	7030005120	S.RES ERJ2GEJ 102 X (1 k)	T	14.3/1.5
R101	7030005240	S.RES ERJ2GEJ 473 X (47 k)	T	17.9/6.5
R102	7030007290	S.RES ERJ2GEJ 222 X (2.2 k)	T	15.6/6.5
R104	7030007300	S.RES ERJ2GEJ 332 X (3.3 k)	T	9.2/1
R105	7030005050	S.RES ERJ2GEJ 103 X (10 k)	T	9/4.7
R106	7030004990	S.RES ERJ2GEJ 221 X (220)	T	10.2/5.6
R107	7030005090	S.RES ERJ2GEJ 104 X (100 k)	T	18.2/7.4
R108	7030007320	S.RES ERJ2GEJ 225 X (2.2 M)	T	16.6/7.4
R109	7030008410	S.RES ERJ2GEJ 392 X (3.9 k)	T	16.6/8.3
R110	7030007340	S.RES ERJ2GEJ 153 X (15 k)	T	18.9/10.2
R111	7030005120	S.RES ERJ2GEJ 102 X (1 k)	T	15.2/3.3
R112	7030007290	S.RES ERJ2GEJ 222 X (2.2 k)	T	16.6/4.1
R113	7030005040	S.RES ERJ2GEJ 472 X (4.7 k)	T	20.2/16.2
R114	7030010040	S.RES ERJ2GEJ-JPW	T	19.4/3.4
R115	7030010040	S.RES ERJ2GEJ-JPW	T	17.8/3.4
R116	7030004980	S.RES ERJ2GEJ 101 X (100) [USA-1] only	T	10/8.2
R200	7030009160	S.RES ERJ2GEJ 181 X (180)	T	7.5/13.2
R201	7030005070	S.RES ERJ2GEJ 683 X (68 k)	T	9.5/9.4
R202	7030005300	S.RES ERJ2GEJ 150 X (15)	T	8.9/7
R203	7030005570	S.RES ERJ2GEJ 820 X (82)	T	7.7/8.2
R204	7030005570	S.RES ERJ2GEJ 820 X (82)	T	7.3/7
R205	7030004970	S.RES ERJ2GEJ 470 X (47)	T	2.1/2.7
R206	7030005060	S.RES ERJ2GEJ 333 X (33 k)	T	5.3/3.9
R207	7030004970	S.RES ERJ2GEJ 470 X (47)	T	5.9/8.1
R208	7030005070	S.RES ERJ2GEJ 683 X (68 k)	T	5.9/9

[VCO UNIT]

REF NO.	ORDER NO.	DESCRIPTION	M.	H/V LOCATION
C1	4030017460	S.CER ECJ0EB1E102K	T	3.1/13.6
C3	4030017690	S.CER ECJ0EC1H121J	T	9.1/17.9
C4	4030016790	S.CER ECJ0EB1C103K	T	7.9/17.6
C5	4030016790	S.CER ECJ0EB1C103K	T	5.5/17
C6	4030017460	S.CER ECJ0EB1E102K	T	3.1/15.2
C7	4030017460	S.CER ECJ0EB1E102K	T	12.8/17.5
C8	4030016790	S.CER ECJ0EB1C103K	T	11.9/17.5
C9	4030017680	S.CER ECJ0EC1H820J	T	8.8/16.6
C10	4030017460	S.CER ECJ0EB1E102K	T	10/14.7
C11	4030017350	S.CER ECJ0EC1H020B	T	10.3/11.9
C51	4030017460	S.CER ECJ0EB1E102K	T	18.9/13.8
C53	4030017660	S.CER ECJ0EC1H330J	T	15.5/11.1
C54	4030017460	S.CER ECJ0EB1E102K	T	14.7/16.4
C55	4030017460	S.CER ECJ0EB1E102K	T	17.5/15.7
C56	4030017460	S.CER ECJ0EB1E102K	T	19.6/17.7
C57	4030017460	S.CER ECJ0EB1E102K	T	12.3/9.3
C58	4030017460	S.CER ECJ0EB1E102K	T	14.9/8
C59	4030017650	S.CER ECJ0EC1H270J	T	13.9/11.1
C60	4030017420	S.CER ECJ0EC1H470J	T	13.4/12.3
C61	4030017520	S.CER ECJ0EC1H0R3B	T	12.3/11.1
C62	4030016930	S.CER ECJ0EB1A104K	T	19.8/11.8
C63	4030017530	S.CER ECJ0EC1H0R5B	T	16.4/11.1
C101	4030017460	S.CER ECJ0EB1E102K	T	15.9/1.5
C102	4030017500	S.CER ECJ0EC1H560J	T	15.9/2.4
C103	4030017620	S.CER ECJ0EC1H100C	T	10.8/1.1
C104	4030017460	S.CER ECJ0EB1E102K	T	14/6.5
C105	4030017460	S.CER ECJ0EB1E102K	T	17.8/4.4
C106	4030017460	S.CER ECJ0EB1E102K	T	19.8/4.5
C107	4030017460	S.CER ECJ0EB1E102K	T	7.2/4.7
C108	4030017460	S.CER ECJ0EB1E102K	T	8.1/4.7
C109	4030017390	S.CER ECJ0EC1H180J	T	10.5/2.5
C110	4030017380	S.CER ECJ0EC1H050B	T	10.2/4.7
C111	4030017350	S.CER ECJ0EC1H020B	T	10.7/6.8
C112	4030017530	S.CER ECJ0EC1H0R5B	T	12.5/1.1
C114	4030017460	S.CER ECJ0EB1E102K	T	18/8.6
C115	4030016930	S.CER ECJ0EB1A104K	T	18.9/8.6
C116	4030017460	S.CER ECJ0EB1E102K	T	19.8/7.7
C117	4030018860	S.CER ECJ0EB0J105K	T	19.8/15
C118	4030017640	S.CER ECJ0EC1H150J	T	10.2/3.8
C200	4030017460	S.CER ECJ0EB1E102K	T	8.4/12.9
C201	4030017460	S.CER ECJ0EB1E102K	T	9.1/8.2
C202	4030017460	S.CER ECJ0EB1E102K	T	2.4/5.6
C203	4030017460	S.CER ECJ0EB1E102K	T	2.3/4.4
C204	4030017460	S.CER ECJ0EB1E102K	T	5.3/5.5
C205	4030017460	S.CER ECJ0EB1E102K	T	3.2/1.5
C206	4030017460	S.CER ECJ0EB1E102K	T	5.6/12.9
C207	4030017460	S.CER ECJ0EB1E102K	T	7.2/10.5
C208	4030017460	S.CER ECJ0EB1E102K	T	3.1/11.9
C209	4030017380	S.CER ECJ0EC1H050B	T	3.3/8.3
C210	4030017380	S.CER ECJ0EC1H050B	T	2.4/8.3
C211	4030017360	S.CER ECJ0EC1H030B	T	2.7/10.1
C213	4030017590	S.CER ECJ0EC1H070C	T	5.5/2.7
J1	6510025380	S.CNR AXK716147G	B	4.8/10

M.=Mounted side (T: Mounted on the Top side, B: Mounted on the Bottom side)
S.=Surface mount

• UT-121 (Optional product; [CODEC UNIT] for IC-91AD)

[MAIN UNIT]

REF NO.	ORDER NO.	DESCRIPTION	M.	H/V LOCATION
IC1	1180002371	S.REG R1111N321B-TR-F	B	30.6/13.6
IC101	1130010920	S.IC AMBE-2020	T	25.4/10.7
IC102	1130011930	S.IC SN74LVC1G04DCKR	B	29.9/17.3
IC201	1130012511	S.IC SN74AHC2G74HDCT3	B	18.4/10.5
IC202	1110005430	S.IC CMX589AD5	T	6.3/13.4
IC203	1130011801	S.IC SN74AHC1G66HDBV3	B	6.1/11.7
IC300	1110005290	S.IC NJM2115V-TE1	B	17.5/3.5
IC301	1110005290	S.IC NJM2115V-TE1	B	5.6/16.6
IC350	1130011631	S.IC AD73311ARSZ	T	5.9/4.7
Q1	1510000581	S.TR 2SA1362-GR (TE85R F)	T	15.2/2.7
Q2	1590003280	S.TR UNR9211J-(TX)	T	18/2.2
Q50	1510000581	S.TR 2SA1362-GR (TE85R F)	B	26.1/7.9
Q51	1590001170	S.TR XP1501-(TX) AB	B	28/3.7
Q100	1530002280	S.TR 2SC4081 T106 S	B	26.3/17.3
Q200	1590003390	S.TR UNR9215J-(TX)	B	11.3/13.7
Q201	1590003390	S.TR UNR9215J-(TX)	B	9.3/13.7
Q202	1530002280	S.TR 2SC4081 T106 S	B	19.5/13.7
D100	1790001240	S.DIO MA2S728-(TX)	T	26.9/1.6
X100	6050012290	S.XTL CR-820 (16.384 MHz)	B	25.3/13.9
X200	6050012300	S.XTL CR-821 (9.8304 MHz)	B	15.7/16.6
R1	7030000180	S.RES MCR10EZHJ 22 (220)	B	26.1/11.2
R2	7030005240	S.RES ERJ2GEJ 473 X (47 k)	B	20.7/1.8
R3	7030005050	S.RES ERJ2GEJ 103 X (10 k)	T	17/3.6
R50	7030005040	S.RES ERJ2GEJ 472 X (4.7 k)	B	26.2/3.8
R100	7030005240	S.RES ERJ2GEJ 473 X (47 k)	T	11.3/2.3
R104	7030005120	S.RES ERJ2GEJ 102 X (1 k)	B	31.9/16
R105	7030007280	S.RES ERJ2GEJ 331 X (330)	T	12.8/5.8
R106	7030004980	S.RES ERJ2GEJ 101 X (100)	B	32.7/18.5
R107	7030005120	S.RES ERJ2GEJ 102 X (1 k)	B	28/18.5
R108	7030005090	S.RES ERJ2GEJ 104 X (100 k)	B	28.2/16.8
R109	7030004990	S.RES ERJ2GEJ 221 X (220)	B	24.1/17.5
R202	7030010040	S.RES ERJ2GEJ-JPW	B	15.2/10.1
R203	7030005240	S.RES ERJ2GEJ 473 X (47 k)	T	11.7/10.6
R204	7030005240	S.RES ERJ2GEJ 473 X (47 k)	T	11.7/11.5
R205	7030005240	S.RES ERJ2GEJ 473 X (47 k)	T	11.7/12.4
R206	7030005240	S.RES ERJ2GEJ 473 X (47 k)	T	11.7/13.3
R207	7030005240	S.RES ERJ2GEJ 473 X (47 k)	T	11.7/14.2
R208	7030005090	S.RES ERJ2GEJ 104 X (100 k)	B	23/4.1
R209	7030005090	S.RES ERJ2GEJ 104 X (100 k)	B	24.7/2.3
R210	7030005220	S.RES ERJ2GEJ 223 X (22 k)	T	2.5/18.6
R211	7030006610	S.RES ERJ2GEJ 394 X (390 k)	B	3.3/11.1
R212	7030005240	S.RES ERJ2GEJ 473 X (47 k)	B	9.7/11.7
R213	7030004980	S.RES ERJ2GEJ 101 X (100)	B	15.9/13
R214	7030005120	S.RES ERJ2GEJ 102 X (1 k)	B	17.5/13
R215	7030005090	S.RES ERJ2GEJ 104 X (100 k)	B	17.7/14.2
R216	7030004990	S.RES ERJ2GEJ 221 X (220)	B	22.4/13.8
R217	7030005050	S.RES ERJ2GEJ 103 X (10 k)	B	11.4/11.3
R300	7030005240	S.RES ERJ2GEJ 473 X (47 k)	B	21.8/5.7
R301	7030005310	S.RES ERJ2GEJ 124 X (120 k)	B	21.8/4
R302	7030005090	S.RES ERJ2GEJ 104 X (100 k)	B	17.9/6.2
R303	7030005240	S.RES ERJ2GEJ 473 X (47 k)	B	10.1/3.3
R304	7030005090	S.RES ERJ2GEJ 104 X (100 k)	B	11.7/2.3
R305	7310004610	S.TRI EVM-2WSX80 B15 (104)	T	13.8/18
R306	7030005060	S.RES ERJ2GEJ 333 X (33 k)	B	10.4/16.9
R307	7030005090	S.RES ERJ2GEJ 104 X (100 k)	B	8.8/18.4
R310	7030005530	S.RES ERJ2GEJ 100 X (10)	T	14.3/5
R350	7030005010	S.RES ERJ2GEJ 681 X (680)	B	1.7/3.7
R351	7030005120	S.RES ERJ2GEJ 102 X (1 k)	B	2.1/8.3
R352	7030005240	S.RES ERJ2GEJ 473 X (47 k)	B	6.9/3.8
R353	7030004980	S.RES ERJ2GEJ 101 X (100)	B	9.2/3.3
R354	7030005240	S.RES ERJ2GEJ 473 X (47 k)	T	11.3/7.1
C1	4550007680	S.TAN TEESVP 0J 226M8R	B	28.7/10
C2	4550007600	S.TAN F920J106MPABMA	B	30.6/10
C3	4030016930	S.CER ECJ0EB1A104K	B	33.2/13.3
C50	4030017460	S.CER ECJ0EB1E102K	B	26.3/2.2
C51	4030017460	S.CER ECJ0EB1E102K	B	25.3/4.7
C52	4550006930	S.TAN TEESVP 0J 225M8R	B	29.6/5.9
C53	4030017460	S.CER ECJ0EB1E102K	B	30.3/3.5
C54	4030017460	S.CER ECJ0EB1E102K	B	24.2/5.9
C100	4030016930	S.CER ECJ0EB1A104K	T	18.7/18.7
C101	4030016930	S.CER ECJ0EB1A104K	B	21.7/15.8
C102	4030016930	S.CER ECJ0EB1A104K	B	33.2/10.1
C103	4030016930	S.CER ECJ0EB1A104K	T	32.5/19.2
C104	4030016930	S.CER ECJ0EB1A104K	T	33.2/3.6
C106	4030016930	S.CER ECJ0EB1A104K	T	16.3/10.9
C107	4030016930	S.CER ECJ0EB1A104K	T	16/7.6
C108	4030016930	S.CER ECJ0EB1A104K	B	20.2/8.3
C109	4030016930	S.CER ECJ0EB1A104K	T	22.8/1.5

[MAIN UNIT]

REF NO.	ORDER NO.	DESCRIPTION	M.	H/V LOCATION
C110	4030017420	S.CER ECJ0EC1H470J	B	29.1/7.3
C111	4030017460	S.CER ECJ0EB1E102K	B	22.9/16.2
C112	4030016930	S.CER ECJ0EB1A104K	B	26.4/19
C113	4030016930	S.CER ECJ0EB1A104K	B	24.1/18.4
C114	4030016930	S.CER ECJ0EB1A104K	B	27.8/14.2
C116	4030016930	S.CER ECJ0EB1A104K	B	31.8/18.5
C117	4030017460	S.CER ECJ0EB1E102K	B	24.1/16.6
C200	4030017460	S.CER ECJ0EB1E102K	B	18.2/15.9
C201	4030016930	S.CER ECJ0EB1A104K	B	16.8/14.2
C202	4030016930	S.CER ECJ0EB1A104K	B	21.2/13.5
C203	4030016930	S.CER ECJ0EB1A104K	B	13/17.5
C204	4030017460	S.CER ECJ0EB1E102K	B	17.8/8.3
C205	4030016930	S.CER ECJ0EB1A104K	T	12.1/15.7
C206	4030017030	S.CER ECJ0EB1A273K	B	2.3/18.4
C207	4030017030	S.CER ECJ0EB1A273K	T	2.5/17.7
C208	4030016930	S.CER ECJ0EB1A104K	B	2.9/12.3
C209	4030017400	S.CER ECJ0EC1H220J	B	24.7/3.2
C210	4030018860	S.CER ECJ0EB0J105K	T	11.2/15.7
C211	4030017460	S.CER ECJ0EB1E102K	B	11.3/15.2
C212	4030017760	S.CER ECJ0EB1H222K	T	11.1/18.8
C213	4030016930	S.CER ECJ0EB1A104K	B	5.2/13.9
C214	4030017460	S.CER ECJ0EB1E102K	B	7.5/13.9
C216	4030017460	S.CER ECJ0EB1E102K	B	19.1/15.9
C300	4030016930	S.CER ECJ0EB1A104K	B	23/2.3
C301	4030018860	S.CER ECJ0EB0J105K	B	18.9/7.1
C302	4030016930	S.CER ECJ0EB1A104K	B	10/4.9
C303	4030016930	S.CER ECJ0EB1A104K	B	9.9/15.7
C304	4030017490	S.CER C1608 JB 1A 105K-T	B	2.2/14
C310	4550007730	S.TAN TEESVJ 0J 106M8R	B	3/5.9
C350	4030016930	S.CER ECJ0EB1A104K	B	2.1/9.2
C351	4030016970	S.CER ECJ0EB1C223K	B	1.7/4.6
C352	4030016950	S.CER ECJ0EB1A473K	B	8.7/4.9
C353	4030016930	S.CER ECJ0EB1A104K	B	2.8/2.8
C354	4030016930	S.CER ECJ0EB1A104K	B	2.8/1.9
C355	4030017420	S.CER ECJ0EC1H470J	T	13/2.7
C356	4550006930	S.TAN TEESVP 0J 225M8R	B	7.2/2.4
C357	4030016930	S.CER ECJ0EB1A104K	B	9.6/1.8
C358	4030016930	S.CER ECJ0EB1A104K	B	4.7/4.2
C360	4030017460	S.CER ECJ0EB1E102K	B	5/1.4
J1	6510025550	S.CNR AXK824125WG	B	10.8/8.2
EP1	6910015370	S.BEA ACZ1005Y-102-T	B	33.2/11.7
EP100	6910015370	S.BEA ACZ1005Y-102-T	B	33.2/15.8
EP200	6910015370	S.BEA ACZ1005Y-102-T	B	13/15.9
EP201	6910015370	S.BEA ACZ1005Y-102-T	B	15/12
EP202	6910015370	S.BEA ACZ1005Y-102-T	T	13.7/15.4
EP203	6910015370	S.BEA ACZ1005Y-102-T	B	8.8/11.7
EP300	6910015370	S.BEA ACZ1005Y-102-T	B	23/3.2
EP350	6910015370	S.BEA ACZ1005Y-102-T	B	4/6.3
EP351	6910015370	S.BEA ACZ1005Y-102-T	B	6.2/5.6
EP352	6910015370	S.BEA ACZ1005Y-102-T	T	11.3/3.4

M.=Mounted side (T: Mounted on the Top side, B: Mounted on the Bottom side)
S.=Surface mount

SECTION 8 MECHANICAL PARTS AND DISASSEMBLY

[CHASSIS PARTS]

REF. NO.	ORDER NO.	DESCRIPTION	QTY.
J1	6510022671	Connector SMA-R235-1	1
S702	2250000540	Encoder TP76D96E20-21.5F-B103-2888	1
MP1	8210022430	2888 rear panel	1
MP2	8610012870	Knob N342	1
MP3	8610012890	Knob N-342 cover	1
MP4	8610012880	Knob N343	1
MP5	8930068280	2888 D-cap	1
MP6	8930068290	2888 jack cap	1
MP7	8930068300	2888 PTT rubber	1
MP8	8930068350	2888 PTT plate	1
MP9	8930069020	O-ring (BG)	1
MP10	8930068360	2888 BP plate	1
MP11	8930056310	2507 terminal holder	1
MP12	8930054371	2372 terminal spring-1	2
MP13	8310050391	2372 lock plate-1	1
MP14	8930054490	2372 shaft	1
MP15	8830000710	VR nut (G)	1
MP16	8830000880	VR nut (I)	1
MP17	8930053590	O ring (AG)	1
MP18	8930039850	Sealing washer (J)	3
MP19	8930057022	Thermally sheet (AE)-2	1
MP20	8610007510	Knob spring No.7800	1
MP21	8810008971	Screw FH BT M2 × 3.5 NI-ZC3	4
MP22	8810009511	Screw PH BT M2 × 4 NI-ZC3	1
MP23	8810008621	Screw PH BT M2 × 20 NI-ZK3	2
MP24	8810009561	Screw PH BT M2 × 6 ZK3	4
MP25	8810010091	Screw PH BT M2 × 12 NI-ZK3	2
MP26	8810000101	Screw PH M2 × 4 ZK3	1
MP27	8930069240	Insulation sheet (LI)	1
MP28	8860001410	2888 ANT rug	1
MP30	8930070220	Thermally sheet (BG)	1
MP31	8510017870	2888 PA cover	1

[MAIN UNIT]

REF. NO.	ORDER NO.	DESCRIPTION	QTY.
J700	6450002250	Connector HSJ1456-010320	1
J701	6450000131	Connector HSJ1102-018540	1
S700	2260002840	Switch SKHLLFA010	1
S701	2260002840	Switch SKHLLFA010	1
MP300	8510016470	2775 VCO case	1
MP301	8510016460	2775 VCO cover	1

[RF UNIT]

REF. NO.	ORDER NO.	DESCRIPTION	QTY.
J1000	6450000870	Connector HEC2711-01-020	1
MP100*	8410002610	2888 PA heat sink	1
MP101*	8510017610	Plate OG-542925	1
MP200*	8510017610	Plate OG-542925	1

[VCO UNIT]

REF. NO.	ORDER NO.	DESCRIPTION	QTY.
MP1	8510017470	2888 VCO case	1
MP2	8930069680	Ferrite sheet (P)	1

[LOGIC UNIT]

REF. NO.	ORDER NO.	DESCRIPTION	QTY.
W1	8900010520	Cable OPC-1033	1
DS1	5030002880	LCD HLM7972-010100	1
MC300	7700002310	Microphone EM-140	1
SP1	2510000840	Speaker CS028014-12	1
MP1	8210022570	2888 front panel assembly [IC-91AD] (incl. MP7)	1
	8210022960	2888 front panel (A) assembly [IC-91A] (incl. MP7)	1
MP2	8310066690	2888 window plate (A) [IC-91A]	1
	8310066710	2888 window plate (C) [IC-91AD]	1
MP3	8310065440	2888 plate	1
MP4	8210022450	2888 reflector	1
MP5	8930068310	2888 key	1
MP6	8930068320	2888 main seal	1
MP8	8930048840	2135 mic sponge	1
MP9	8810009510	Screw PH BT M2 × 4 NI-ZU	6
MP10	8930068870	2888 LCD sponge	1
MP11	8930068880	2888 window sheet	1
MP12	8930054221	2372 lens-1	1
MP13	8930046020	1123 sheet (A)-1	1
MP14	8930069550	2888 rubber sheet	2
MP20*	8510017840	Plate OG-321610G	1
MP21	8930070200	2888 codec plate	1
MP22	8930070170	AL sheet (AO)	1
MP23	8930070340	2888 codec sponge	1

[CODEC UNIT]

REF. NO.	ORDER NO.	DESCRIPTION	QTY.
–	Optional product	UT-121 [IC-91AD] only	1

[ACCESSORIES]

REF. NO.	ORDER NO.	DESCRIPTION	QTY.
EP1	Optional product	Antenna FA-S270C	1
EP2	Optional product	Battery BP-217	1
EP4	Optional product	Charger BC-167D [KOR], [AUS], [EXP-2]	1
	Optional product	Charger BC-167A [USA], [EXP], [USA-1], [TPE], [EXP-1]	1
MP1	8930068840	2933 belt clip	1
MP2	8010018080	Strap belt HK-009	1
MP3	8810010470	Screw trass M3 × 4 SUS SSBC	2

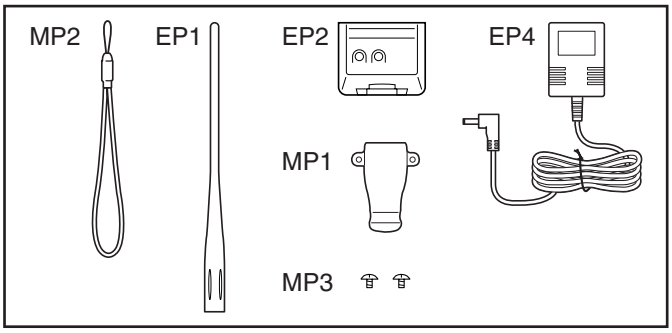

*: Refer to SECTION 10 BOARD LAYOUTS.

Screw abbreviations BT: Self-tapping FH: Flat head
PH: Pan head ZK, NI-ZK3: Black
NI-ZU, NI-ZC3: Nickel-Zinc
SUS: Stainless

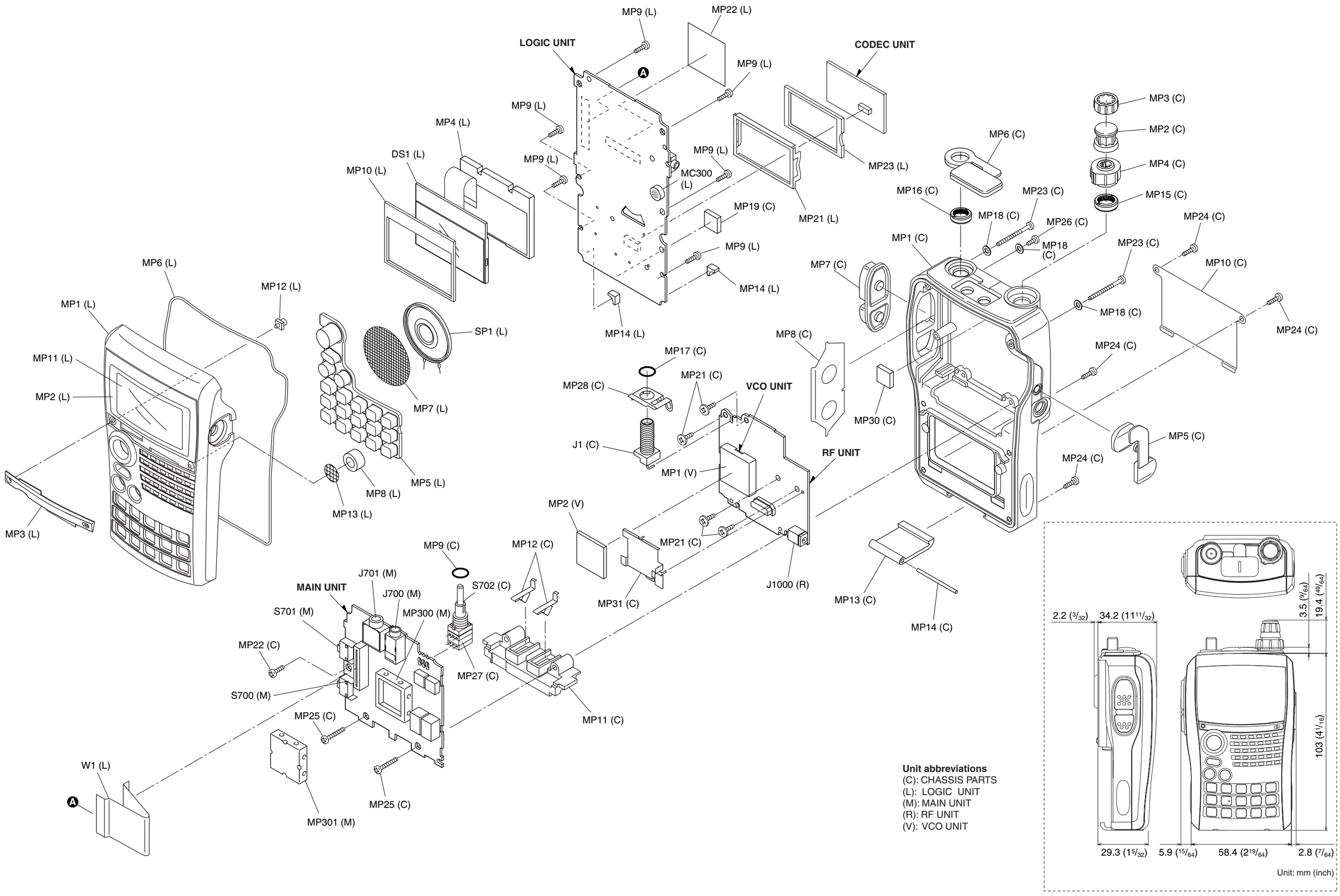
LOGIC UNIT
CODEC UNIT
VCO UNIT
RF UNIT
MAIN UNIT
MP9 (L)
MP22 (L)
MP4 (L)
DS1 (L)
MP10 (L)
MC300 (L)
MP19 (C)
MP14 (L)
MP21 (L)
MP23 (L)
MP6 (L)
MP12 (L)
MP1 (L)
MP11 (L)
MP2 (L)
MP3 (L)
SP1 (L)
MP7 (L)
MP5 (L)
MP8 (L)
MP13 (L)
MP3 (C)
MP2 (C)
MP4 (C)
MP15 (C)
MP6 (C)
MP16 (C)
MP18 (C)
MP23 (C)
MP26 (C)
MP1 (C)
MP7 (C)
MP24 (C)
MP10 (C)
MP8 (C)
MP30 (C)
MP5 (C)
MP17 (C)
MP21 (C)
MP28 (C)
J1 (C)
MP1 (V)
MP2 (V)
MP31 (C)
J1000 (R)
MP13 (C)
MP14 (C)
MP9 (C)
MP12 (C)
S702 (C)
J701 (M)
J700 (M)
MP300 (M)
S701 (M)
MP22 (C)
MP27 (C)
S700 (M)
MP25 (C)
MP11 (C)
MP301 (M)
W1 (L)
A
Unit abbreviations
(C): CHASSIS PARTS
(L): LOGIC UNIT
(M): MAIN UNIT
(R): RF UNIT
(V): VCO UNIT
2.2 (3/32)
34.2 (11 11/32)
3.5 (9/64)
19.4 (49/64)
103 (4 1/16)
29.3 (1 5/32)
5.9 (15/64)
58.4 (2 19/64)
2.8 (7/64)
Unit: mm (inch)

SECTION 9 SEMICONDUCTOR INFORMATION

• TRANSISTORS AND FET'S

2SA1362 GR (Symbol: AEG) 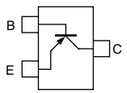	**2SB1132 T100 R** (Symbol: BAR) 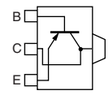	**2SB1201 S** (Symbol: B1201) 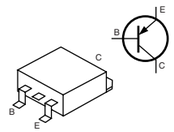	**2SB1462 R** (Symbol: AR) 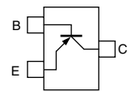	**2SC4081 T106 S** (Symbol: BS) 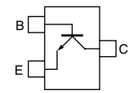
2SC4215 O (Symbol: QO) 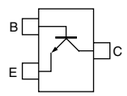	**2SC4226 T1 R25** (Symbol: R25) 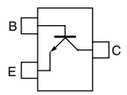	**2SC5006 T1** (Symbol: 24) 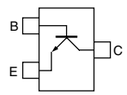	**2SC5195** (Symbol: 88) 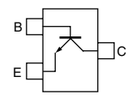	**2SC5624** (Symbol: VH-) 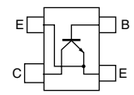
2SD2216J (Symbol: Y) 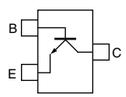	**2SK3476** (Symbol: UC F) 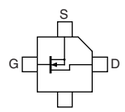	**2SK880 Y** (Symbol: XY) 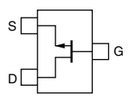	**3SK318YB** (Symbol: YB-) 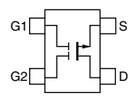	**HAT1026R** (Symbol: 1026) 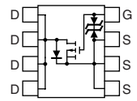
RD01MUS1 (Symbol: K2) 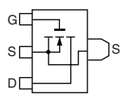	**UNR9115J** (Symbol: 6E) 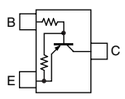	**UNR9211J** (Symbol: 8A) 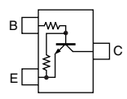	**UNR9215J** (Symbol: 8E) 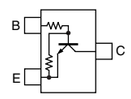	**XP1114** (Symbol: 7Q) 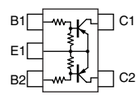
XP1115 (Symbol: 9L) 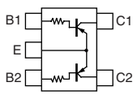	**XP1501 AB** (Symbol: 5R) 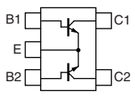	**XP4315** (Symbol: CB) 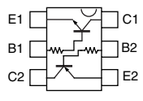	**XP6401** (Symbol: 5O) 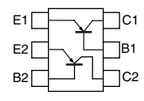	**XP6501 AB** (Symbol: 5N) 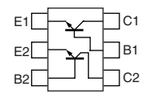

• DIODES

1SS362 (Symbol: C3) 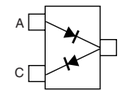	**1SS364** (Symbol: BF) 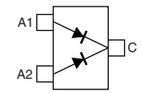	**1SV271** (Symbol: TG) 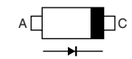	**1SV286** (Symbol: T7) 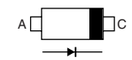	**1SV307** (Symbol: TX) 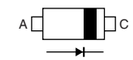
1SV308 (Symbol: TX) 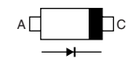	**1SV325** (Symbol: V8) 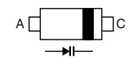	**AVR-M1005C080MTABB** (Symbol: N/Available) 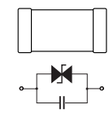	**HSB88AS** (Symbol: C1) 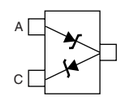	**HVC375B** (Symbol: B8) 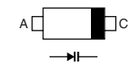
HVC376B (Symbol: B9) 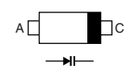	**1SS400** (Symbol: A) 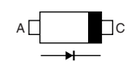	**MA132WK** (Symbol: MU) 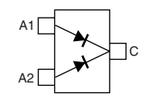	**MA133** (Symbol: MP) 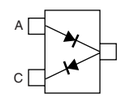	**MA2S077** (Symbol: S) 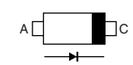
MA2S111 (Symbol: A) 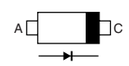	**MA2S728** (Symbol: B) 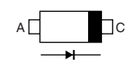	**MA6S121** (Symbol: M2D) 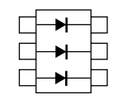	**RB060L 40** (Symbol: 36) 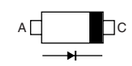	**RB551V-30** (Symbol: D3G) 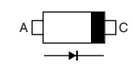
SB07-03C (Symbol: J) 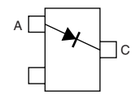				

SECTION 10 BOARD LAYOUTS

10-1 LOGIC UNIT

• TOP VIEW

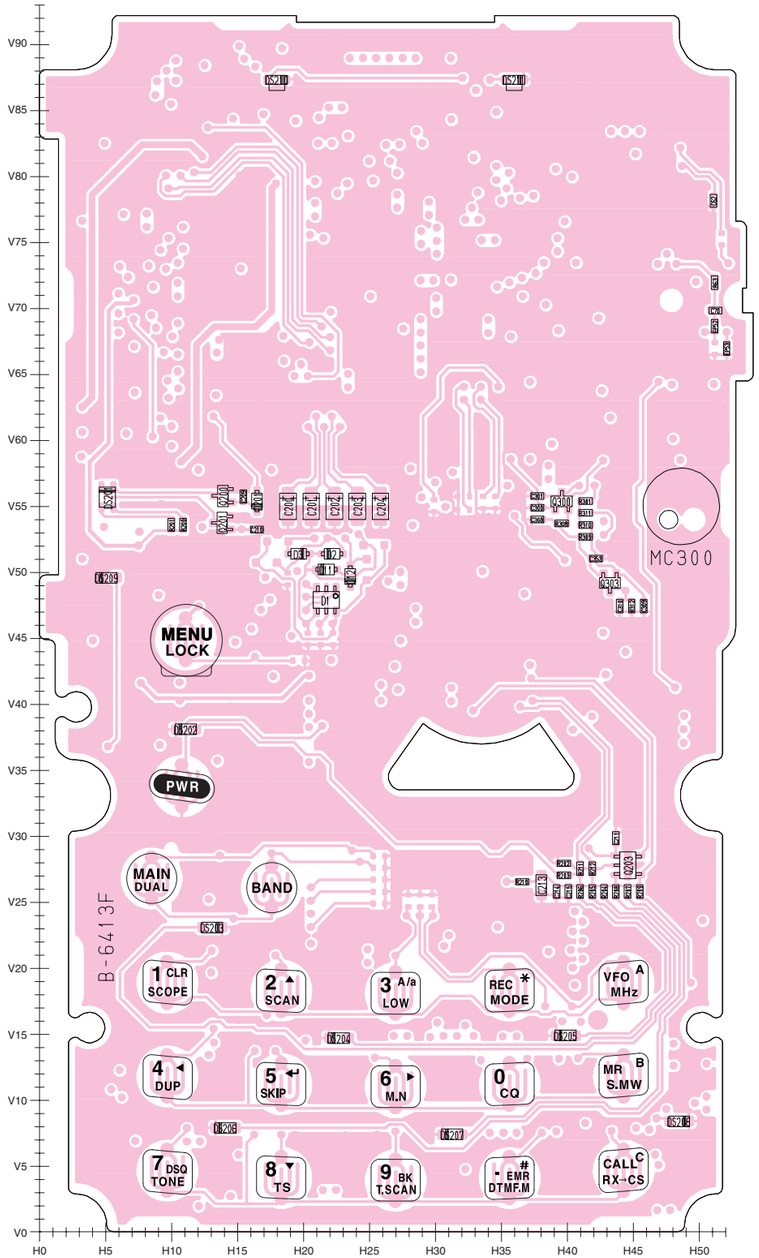

10-2 MAIN UNIT

• TOP VIEW

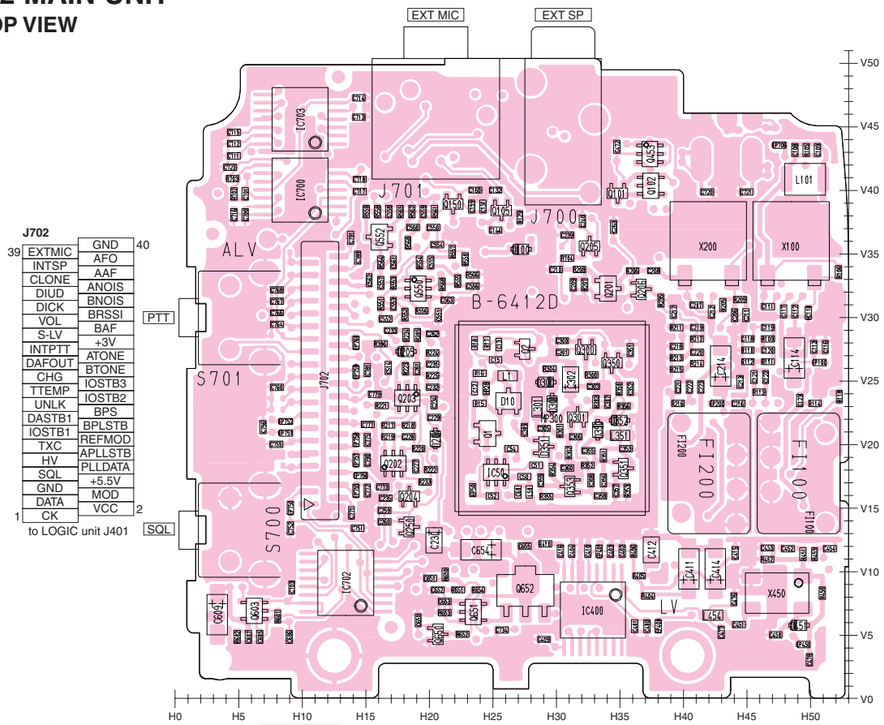

10-4 UT-121 (Optional Product ; CODEC UNIT for IC-91AD)

• TOP VIEW

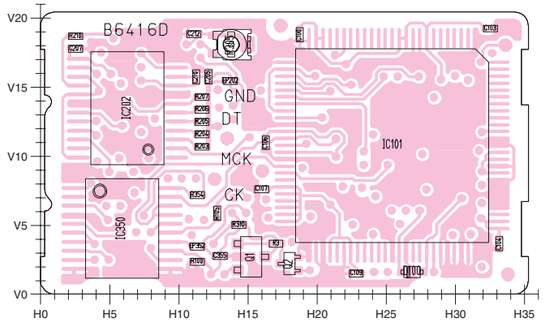

10-3 RF UNIT

• TOP VIEW

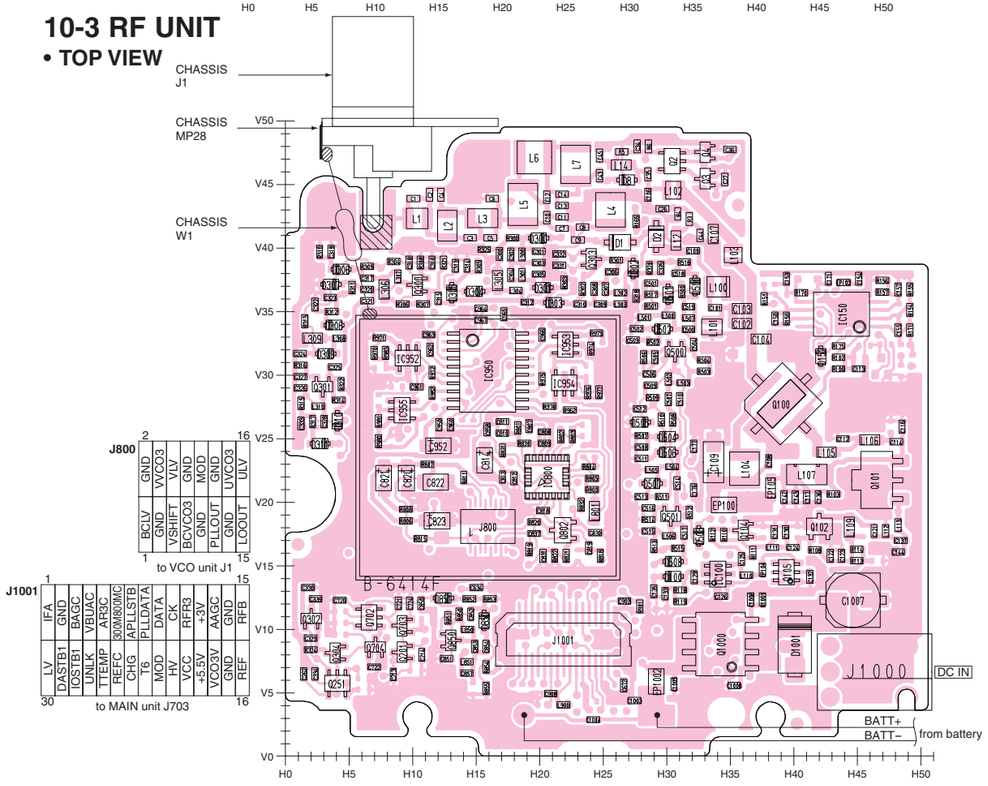

10-5 VCO UNIT

• TOP VIEW

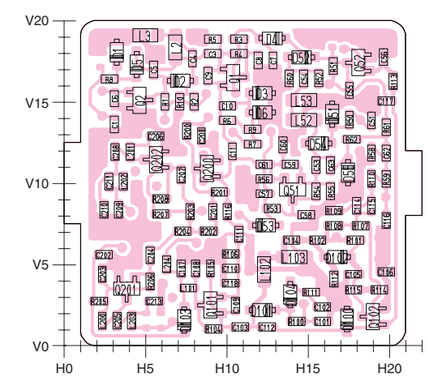

• **BOTTOM VIEW**
(UT-121 (Optional Product ; CODEC UNIT for IC-91AD))

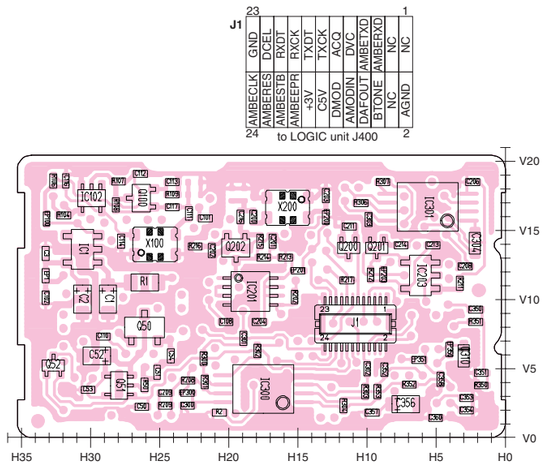

• **BOTTOM VIEW (MAIN UNIT)**

• **BOTTOM VIEW (LOGIC UNIT)**

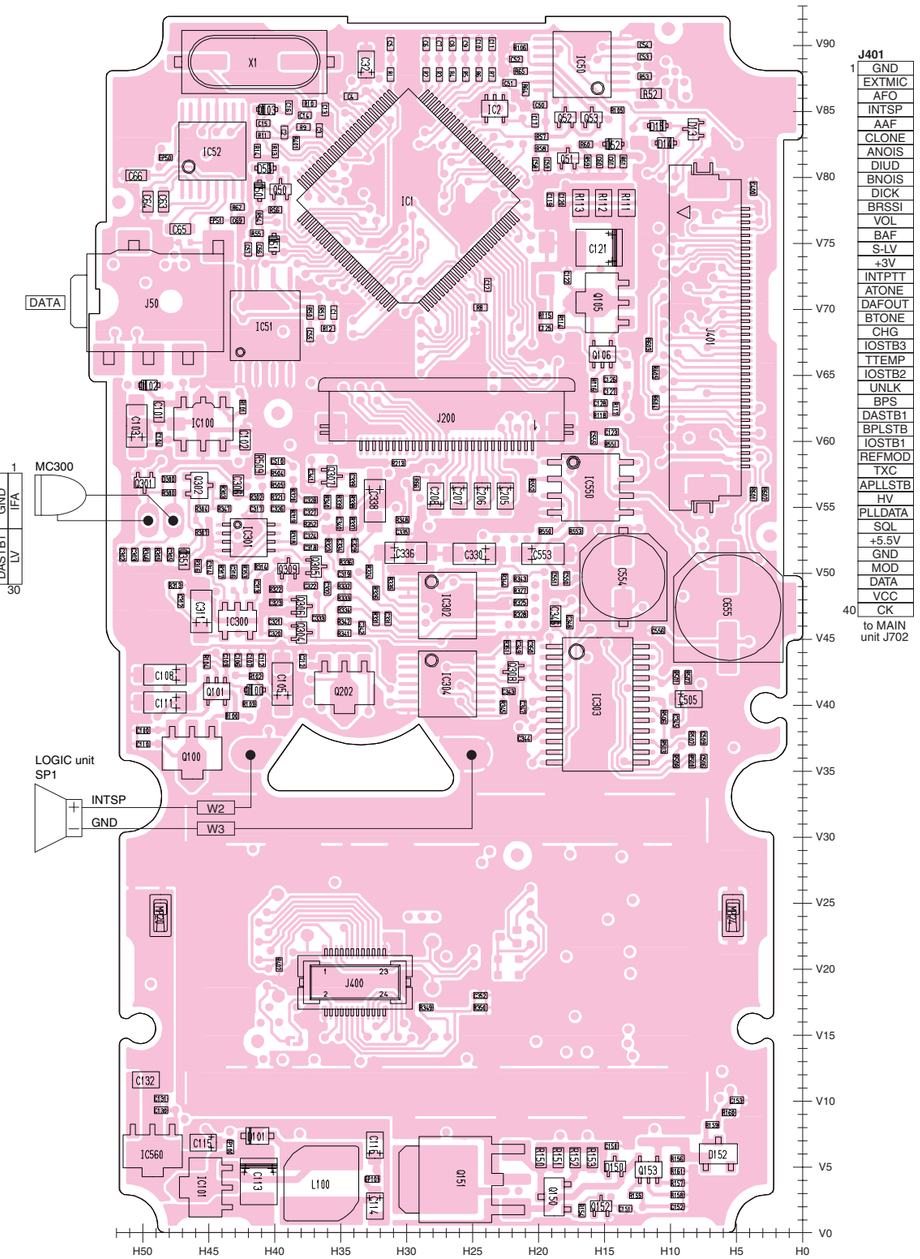

• **BOTTOM VIEW (VCO UNIT)**

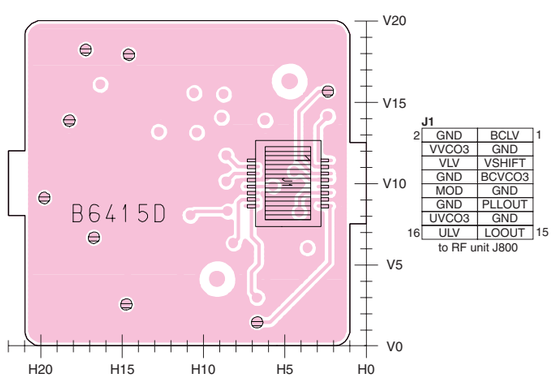

• **BOTTOM VIEW (RF UNIT)**

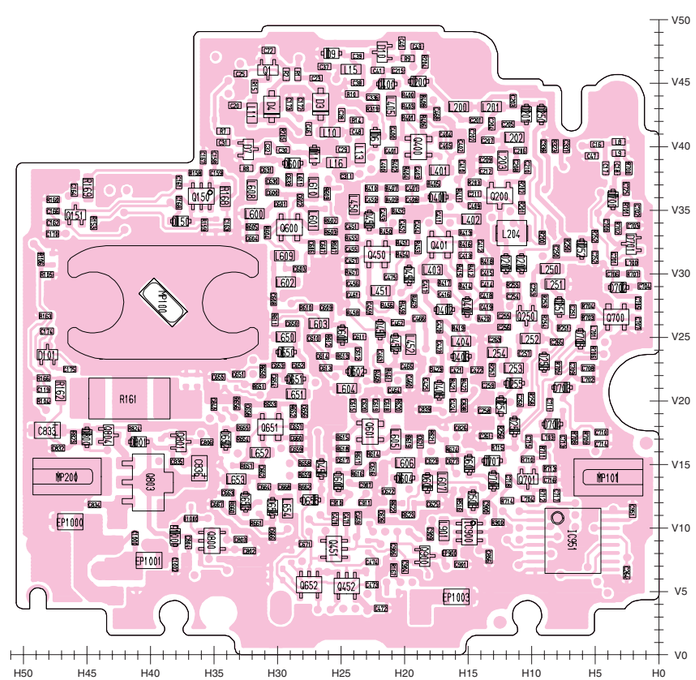

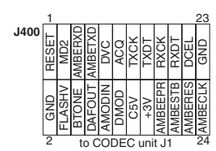

SECTION 11 BLOCK DIAGRAM

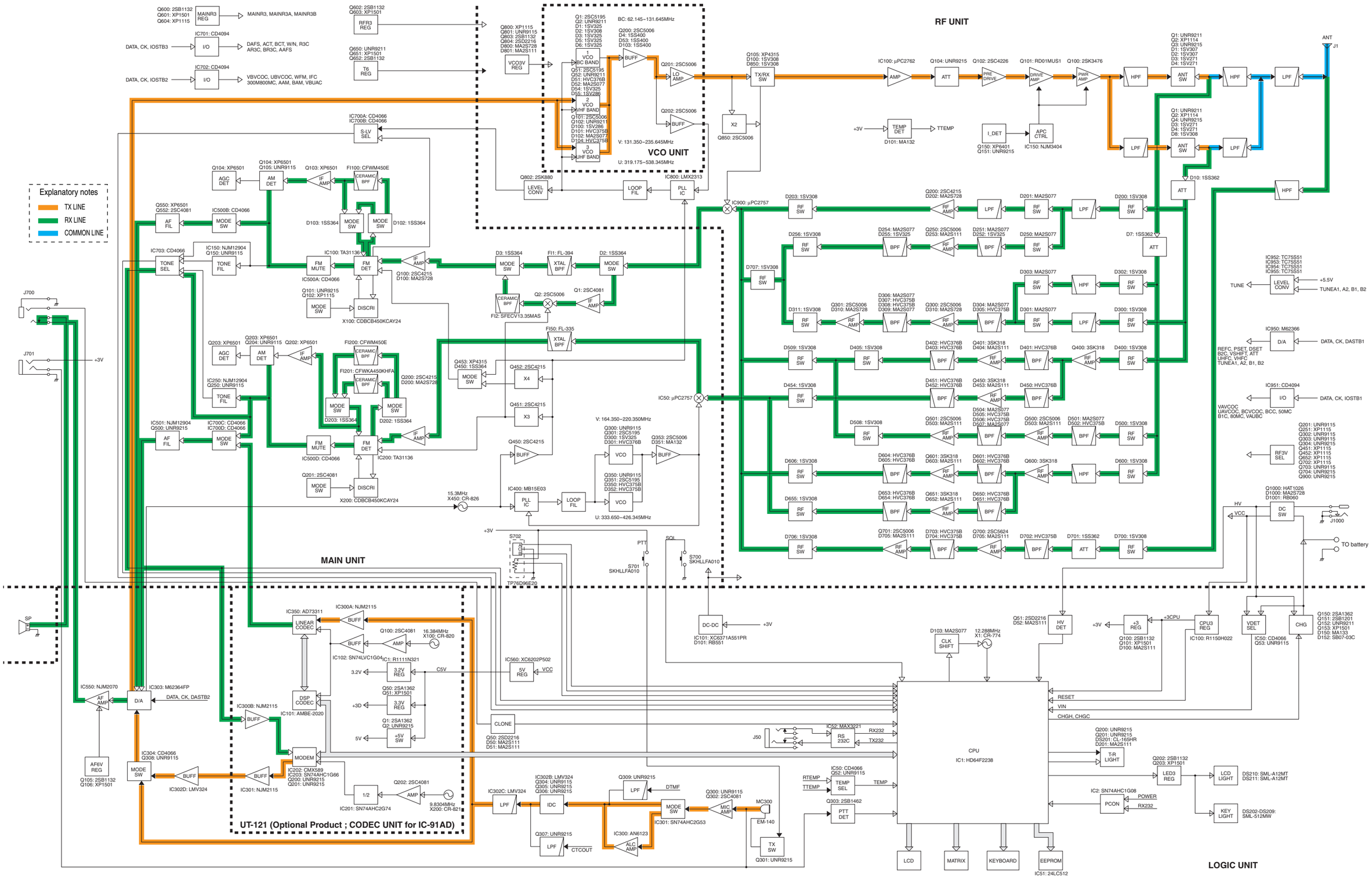

SECTION 12 VOLTAGE DIAGRAMS

12-1 LOGIC UNIT

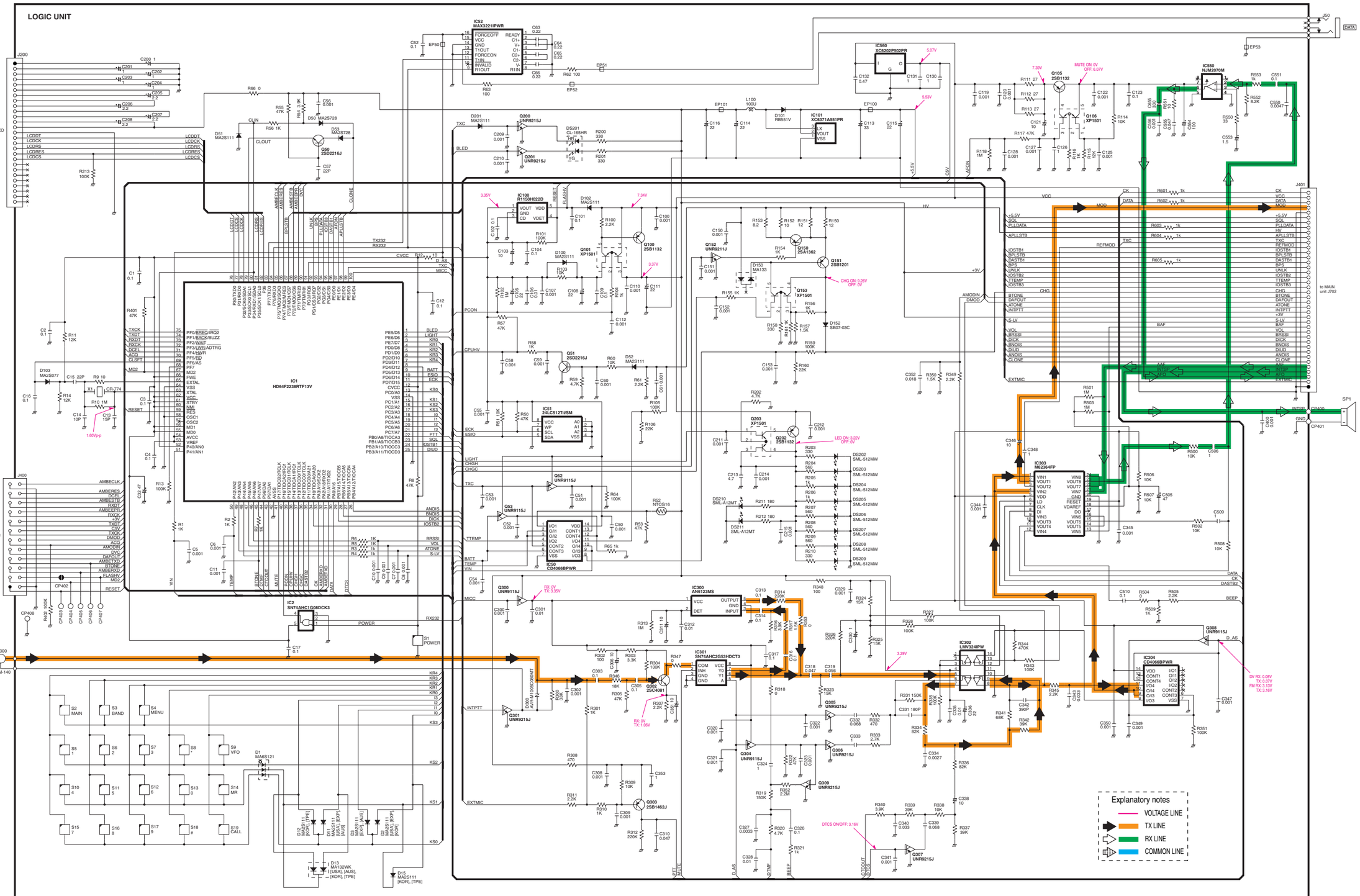

12-2 MAIN UNIT

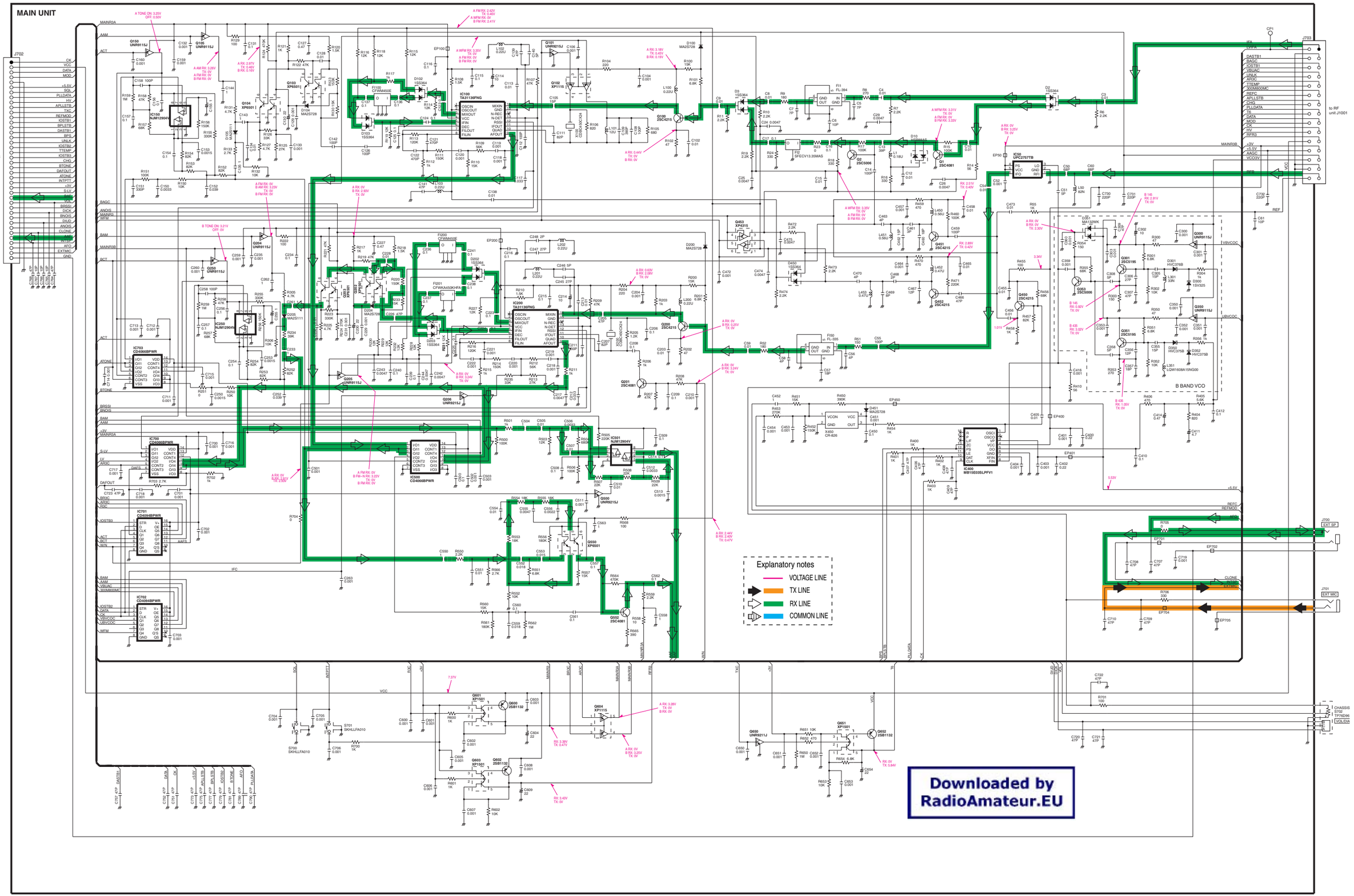

12-3 RF UNIT

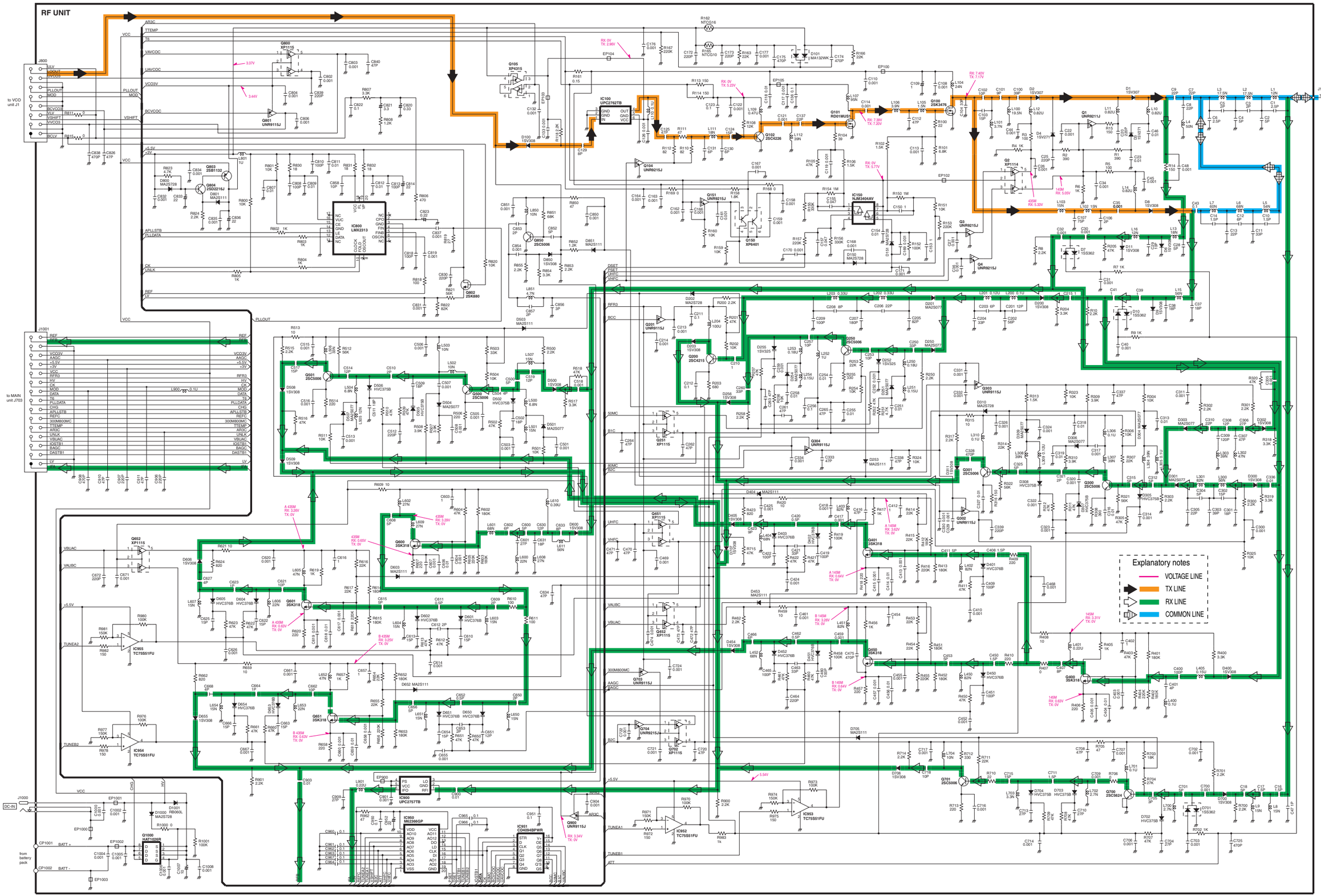
RF UNIT
Explanatory notes
VOLTAGE LINE
TX LINE
RX LINE
COMMON LINE

12-4 VCO UNIT

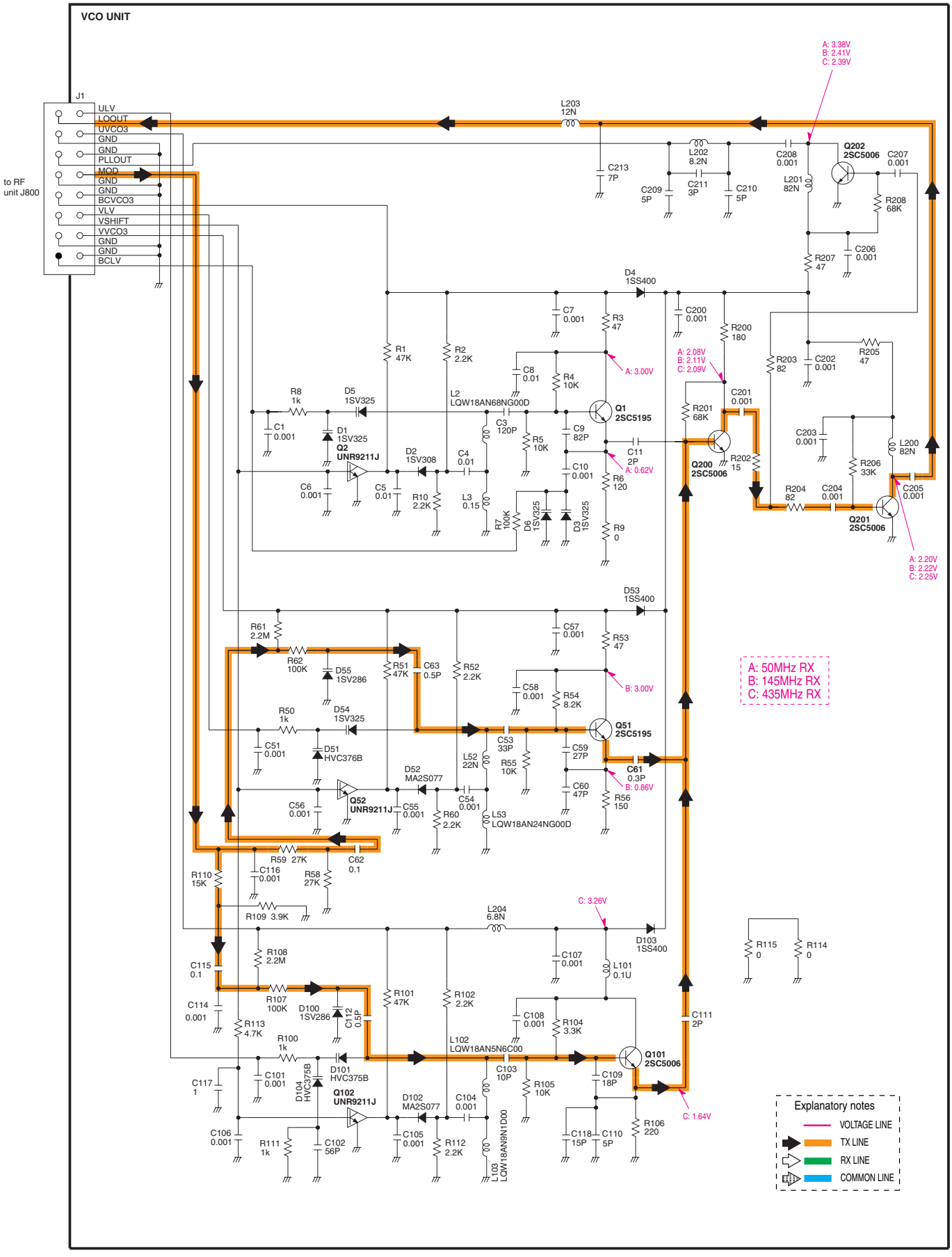
VCO UNIT
J1
ULV
LOOUT
UVCO3
GND
GND
PLLOUT
MOD
GND
GND
BCVCO3
VLV
VSHIFT
VVCO3
GND
GND
BCLV
to RF unit J800
A: 3.38V
B: 2.41V
C: 2.39V
L203 12N
C213 7P
L202 8.2N
C209 5P
C211 3P
C210 5P
C208 0.001
Q202 2SC5006
C207 0.001
L201 82N
R208 68K
C206 0.001
R207 47
D4 1SS400
C7 0.001
R3 47
C200 0.001
R200 180
R1 47K
R2 2.2K
C8 0.01
R4 10K
A: 3.00V
A: 2.08V
B: 2.11V
C: 2.09V
R203 82
C202 0.001
R205 47
R8 1k
D5 1SV325
L2 LQW18AN68NG00D
Q1 2SC5195
C201 0.001
R201 68K
C1 0.001
D1 1SV325
Q2 UNR9211J
C3 120P
R5 10K
C9 82P
C11 2P
A: 0.62V
Q200 2SC5006
R202 15
C203 0.001
L200 82N
D2 1SV308
C4 0.01
C10 0.001
R6 120
R206 33K
C6 0.001
C5 0.01
R10 2.2K
L3 0.15
R7 100K
D6 1SV325
D3 1SV325
R9 0
R204 82
C204 0.001
C205 0.001
Q201 2SC5006
A: 2.20V
B: 2.22V
C: 2.25V
D53 1SS400
R61 2.2M
C57 0.001
R53 47
R62 100K
D55 1SV286
R51 47K
C63 0.5P
R52 2.2K
C58 0.001
R54 8.2K
B: 3.00V
A: 50MHz RX
B: 145MHz RX
C: 435MHz RX
R50 1k
D54 1SV325
Q51 2SC5195
C51 0.001
D51 HVC376B
C53 33P
L52 22N
R55 10K
C59 27P
C61 0.3P
B: 0.86V
D52 MA2S077
C60 47P
Q52 UNR9211J
C56 0.001
C55 0.001
C54 0.001
R56 150
R60 2.2K
L53 LQW18AN24NG00D
R59 27K
C62 0.1
R110 15K
C116 0.001
R58 27K
R109 3.9K
C: 3.26V
L204 6.8N
D103 1SS400
R115 0
R114 0
R108 2.2M
C107 0.001
L101 0.1U
C115 0.1
R107 100K
D100 1SV286
C112 0.5P
R101 47K
R102 2.2K
C114 0.001
R113 4.7K
C108 0.001
R104 3.3K
C111 2P
R100 1k
L102 LQW18AN5N6C00
Q101 2SC5006
C117 1
C101 0.001
D104 HVC375B
D101 HVC375B
C103 10P
R105 10K
C109 18P
Q102 UNR9211J
D102 MA2S077
C104 0.001
C: 1.64V
C106 0.001
R111 1k
C102 56P
C105 0.001
R112 2.2K
L103 LQW18AN9N1D00
C118 15P
C110 5P
R106 220
Explanatory notes
VOLTAGE LINE
TX LINE
RX LINE
COMMON LINE

12-5 UT-121 (Optional Product ; CODEC UNIT for IC-91AD)

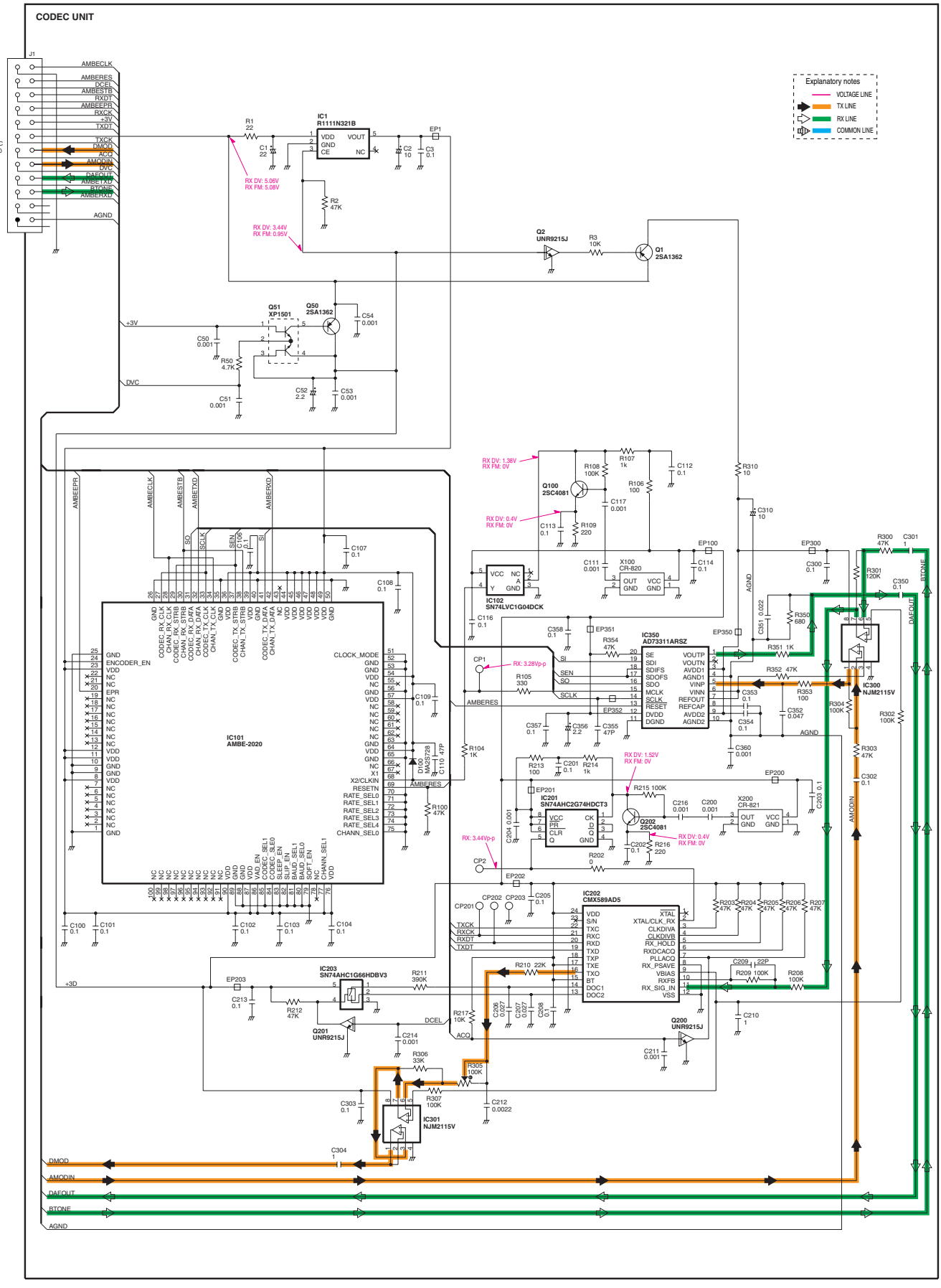

Icom Inc.

1-1-32, Kamiminami, Hirano-ku, Osaka 547-0003, Japan
Phone : +81 (06) 6793 5302
Fax : +81 (06) 6793 0013
URL : http://www.icom.co.jp/world/index.html

Icom America Inc.
<Corporate Headquarters>
2380 116th Avenue N.E., Bellevue, WA 98004, U.S.A.
Phone : +1 (425) 454-8155 Fax : +1 (425) 454-1509
URL : http://www.icomamerica.com
E-mail : sales@icomamerica.com
<Customer Service>
Phone : +1 (425) 454-7619

Icom Canada
Glenwood Centre #150-6165
Highway 17 Delta, B.C., V4K 5B8, Canada
Phone : +1 (604) 952-4266 Fax : +1 (604) 952-0090
URL : http://www.icomcanada.com
E-mail : info@icomcanada.com

Icom (Australia) Pty. Ltd.
A.B.N. 88 006 092 575
Unit 1 / 103 Garden Road, Clayton VIC 3168 Australia
Phone : +61 (03) 9549-7500 Fax : +61 (03) 9549-7505
URL : http://www.icom.net.au
E-mail : sales@icom.net.au

Icom New Zealand
146A Harris Road, East Tamaki,
Auckland, New Zealand
Phone : +64 (09) 274 4062 Fax : +64 (09) 274 4708
URL : http://www.icom.co.nz
E-mail : inquiries@icom.co.nz

Beijing Icom Ltd.
Room C01, 10th Floor, Long Silver Mansion, No. 88,
Yong Ding Road, Haidian District, Beijing, 100039, China
Phone : +86 (010) 5889 4250 Fax : +86 (010) 5889 4250
URL : http://www.bjicom.com
E-mail : bjicom@bjicom.com

Icom (Europe) GmbH
Communication Equipment
Himmelgeister Str. 100, D-40225 Düsseldorf, Germany
Phone : +49 (0211) 346047 Fax : +49 (0211) 333639
URL : http://www.icomeurope.com
E-mail : info@icomeurope.com

Icom Spain S.L
Ctra. Rubi, 88, 08190, Sant Cugat del Valles, Barcelona, SPAIN
Phone : +34 (93) 590 26 70 Fax : +34 (93) 589 04 46
URL : http://www.icomspain.com
E-mail : icom@icomspain.com

Icom (UK) Ltd.
Unit 9, Sea St., Herne Bay, Kent, CT6 8LD, U.K.
Phone : +44 (01227) 741741 Fax : +44 (01227) 741742
URL : http://www.icomuk.co.uk
E-mail : info@icomuk.co.uk

Icom France S.a
Zac de la Plaine, 1, Rue Brindejonc des Moulinais
BP 5804, 31505 Toulouse Cedex, France
Phone : +33 (5) 61 36 03 03 Fax : +33 (5) 61 36 03 00
URL : http://www.icom-france.com
E-mail : icom@icom-france.com

Asia Icom Inc.
6F No.68, Sec. 1 Cheng-Teh Road, Taipei, Taiwan, R.O.C.
Phone : +886 (02) 2559 1899 Fax : +886 (02) 2559 1874
URL : http://www.asia-icom.com
E-mail : sales@asia-icom.com

Icom Polska
Sopot, 3 Maja 54 Poland
Phone : +48 (58) 550 7135 Fax : +48 (58) 551 0484
E-mail : icompolska@icompolska.com.pl

Count on us!

Icom Inc.
1-1-32, Kamiminami, Hirano-ku, Osaka 547-0003, Japan

S-14230HZ-C1