Downloaded by
RadioAmateur.EU

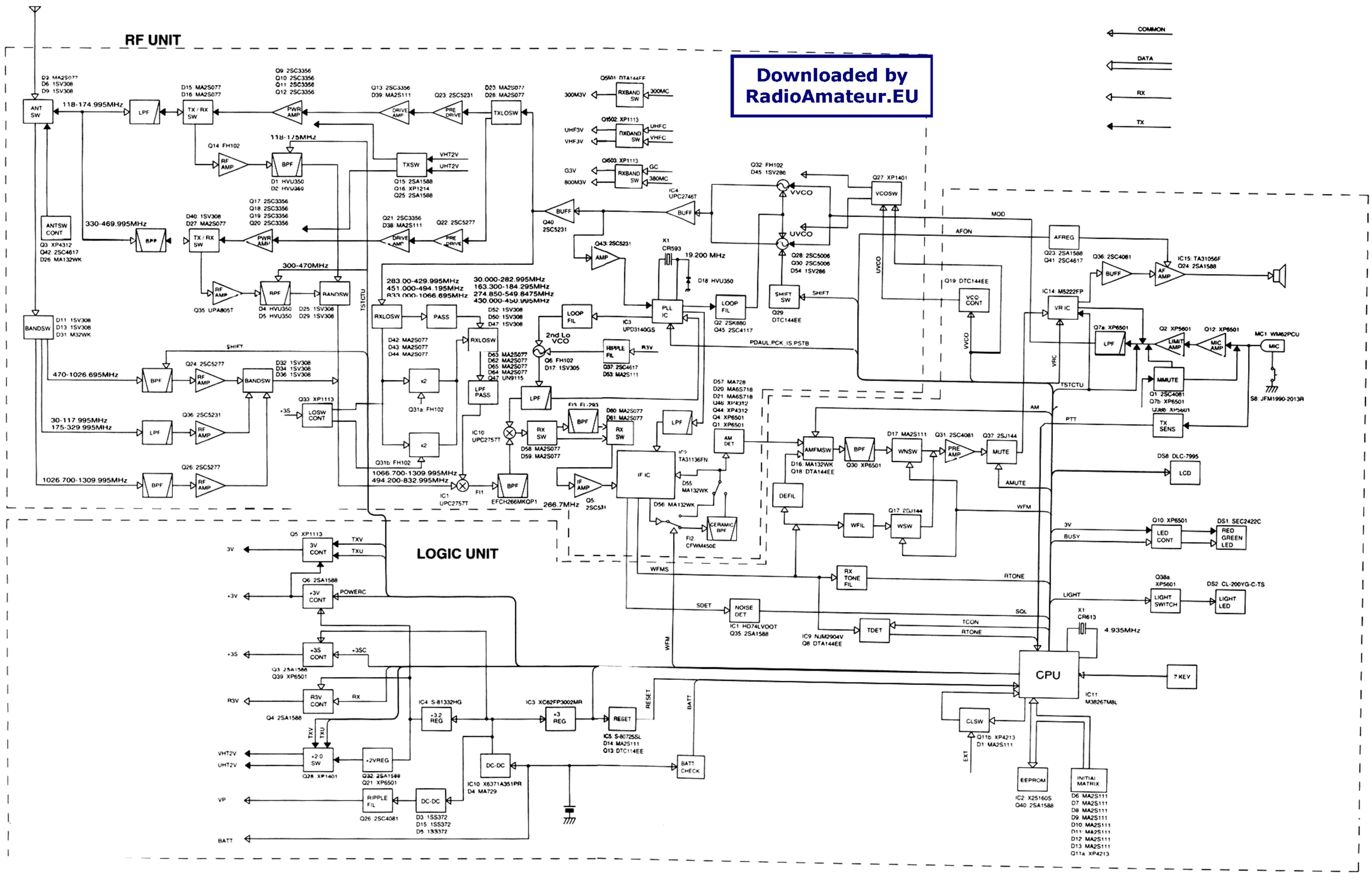

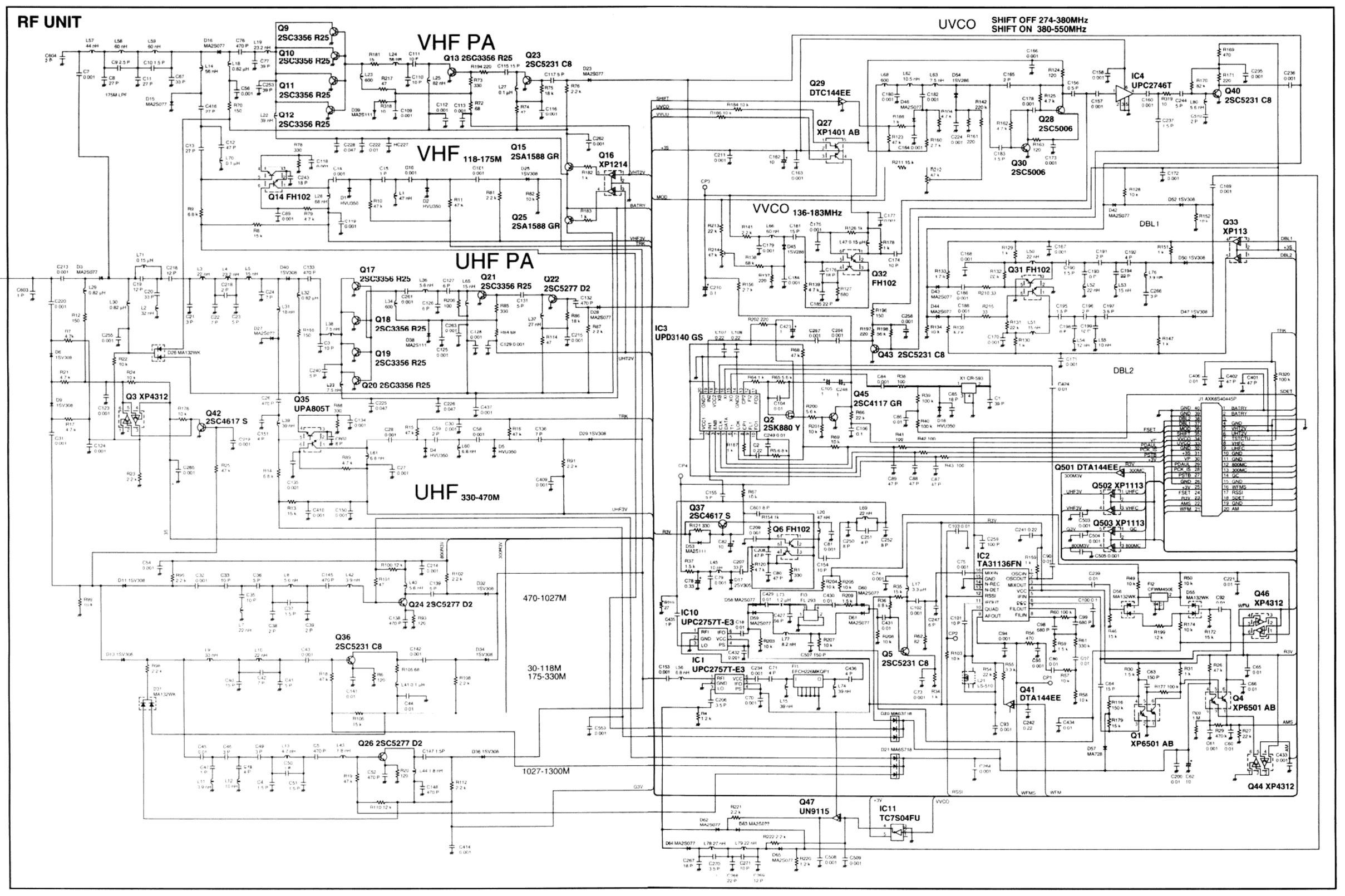
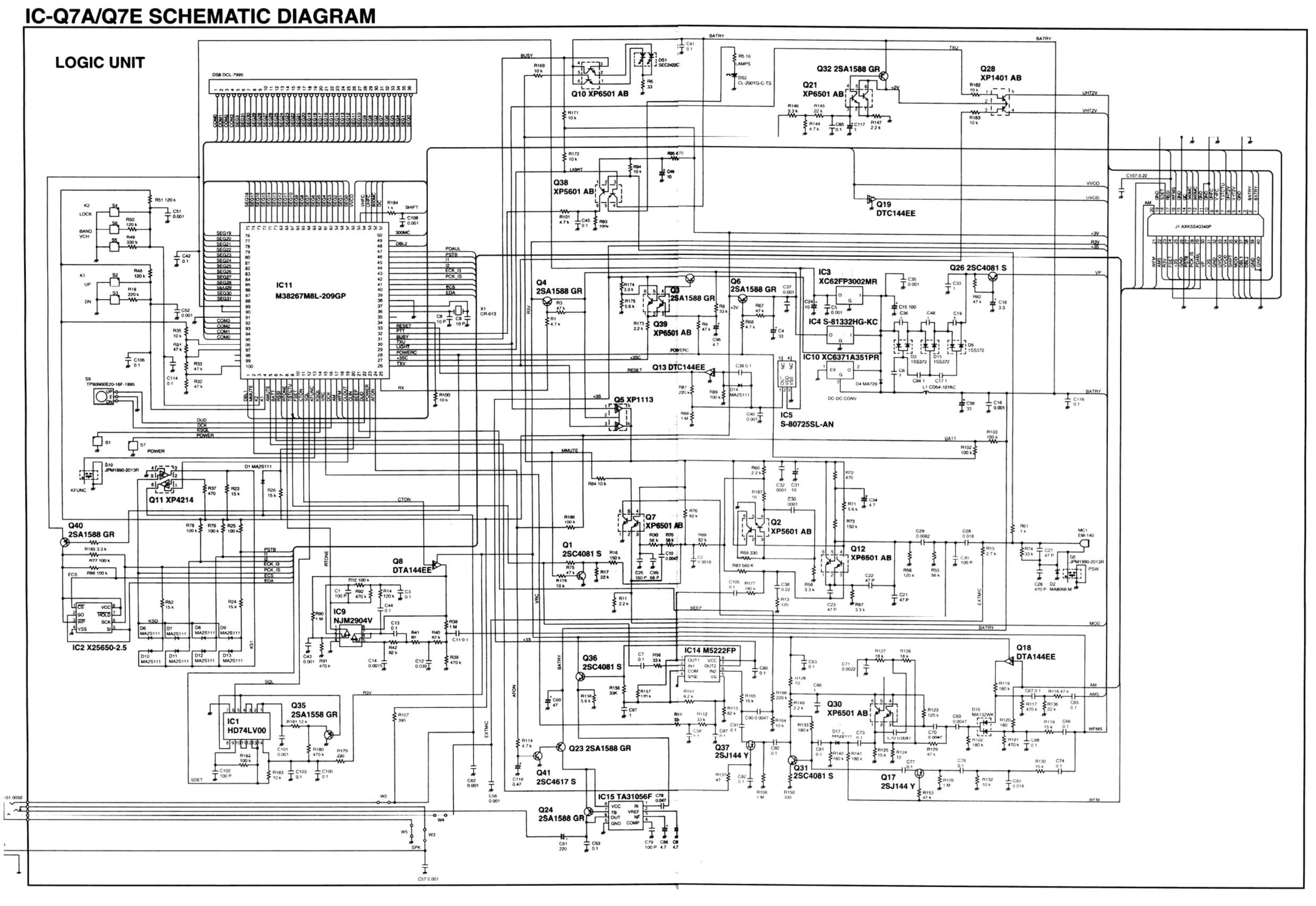
IC-Q7A/Q7E SCHEMATIC DIAGRAM