430MHz ALL MODE TRANSCEIVER

TM-455A/E

SERVICE MANUAL

KENWOOD

213659

B51-8250-00 (S) 1060

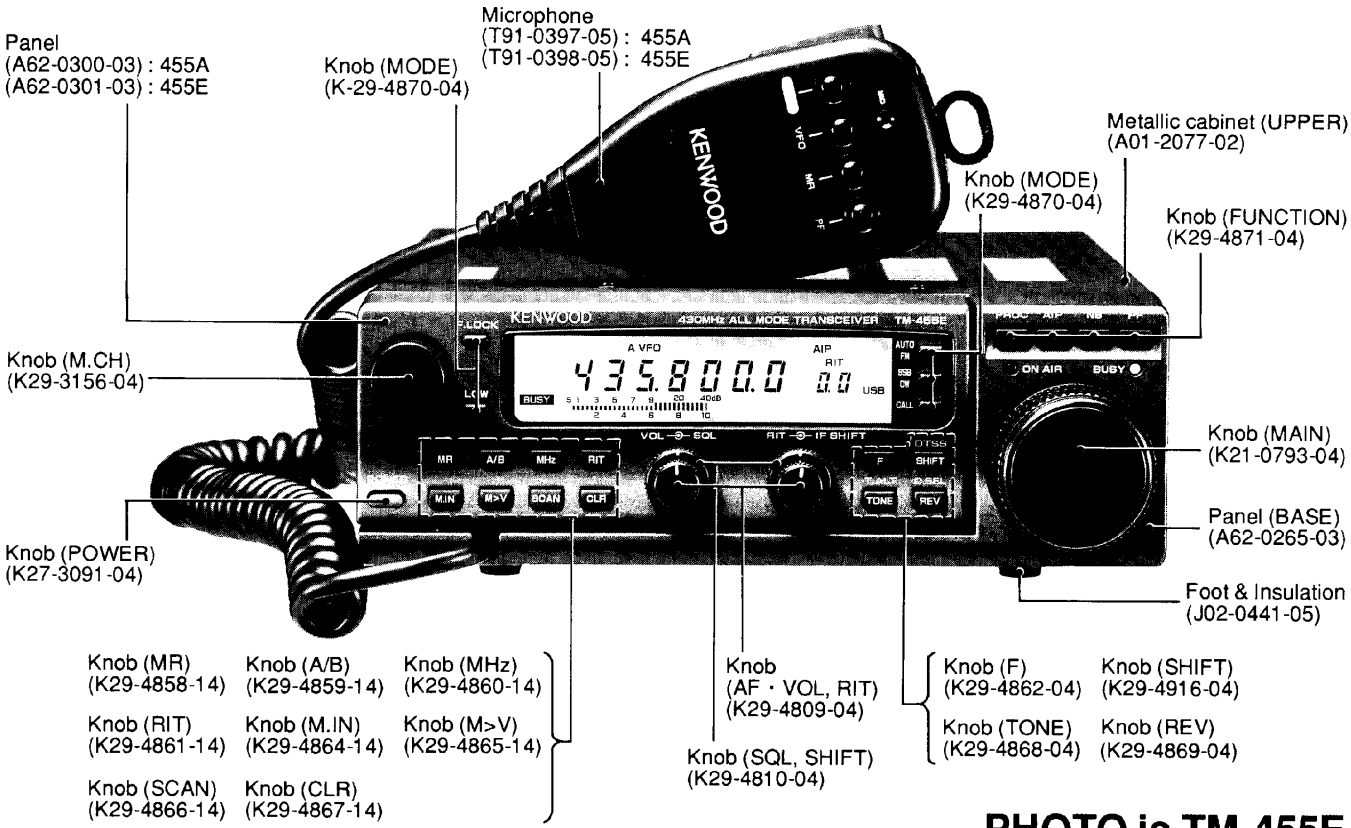

PHOTO is TM-455E

CONTENTS

DESTINATION LIST

Type		Unit	Destination	Freq. range (Guaranteed specification)	Transmit power
TM-455A	K	Y52-3170-11	North America	430.0 to 439.999995 MHz	35 W
TM-455E	E	Y52-3172-71	Europe	430.0 to 439.999995 MHz	35 W

CIRCUIT DESCRIPTION

FREQUENCY CONFIGURATION

The TM-455 uses double conversion for all transmit and receive modes except FM reception, where triple conversion is used. (Fig. 1) The frequency for SSB reception is given by the following equation when the receiver tone produced by the input frequency (f_{IN}) from the antenna is zero beat (when an SSB signal with a carrier point of f_{IN} is zeroed in):

$$f_{IN} = f_{LO1} + f_{LO2} + f_{CAR}$$

Since all these frequencies are generated by the PLL as shown in Figure 2 (PLL frequency configuration), the receive frequency is determined only by the reference frequency, f_{STD}, and the PLL divide ratio. Therefore, the accuracy of the reference frequency determines the accuracy of the operating frequency.

The accuracy of the temperature-compensated crystal oscillator (TCXO) used in the TM-455 is 1 ppm (–20 to +60°C).

In SSB and CW transmission, the receiver frequency is also determined by the reference frequency f_{STD} and the PLL divide ratio. The accuracy of the frequency is 5 ppm (–20 to +60°C) in FM transmission since the 10.695 MHz crystal oscillator circuit is used as a carrier. Table 1 lists the display frequencies in the various modes.

When receiving a CW transmission, the pitch of the resulting audio signal can be varied between 400 and 1000 Hz in 50 Hz steps without changing the center frequency of the IF filter through the use of the CW variable pitch system.

FM transmission is carried out by applying the audio signal from the microphone to the carrier crystal oscillator circuit and modulating it.

Mode	Display frequency
USB, LSB	Carrier point frequency
CW	Transmit carrier frequency
FM	IF filter center frequency

Table 1 Display frequency in each mode

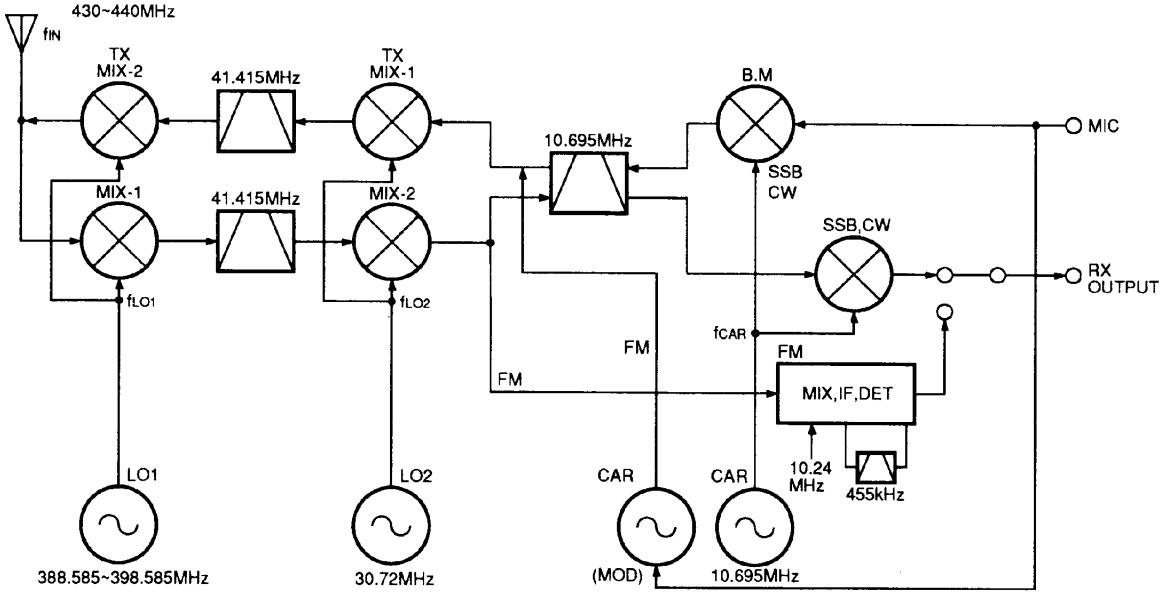

Fig. 1 Signal system frequency configuration

CIRCUIT DESCRIPTION

PLL CIRCUIT

• Frequency Processing PLL

PLL operation is based on a reference frequency of 10.24 MHz, and allows coverage of the 430 to 440 MHz operating band in 5 to 200 Hz steps (50 to 2000 Hz steps for FM), depending on hoow fast the through-type encoder is turned. When the encoder stops, the selected frequency will be an integral multiple of 5 Hz (50 Hz for FM mode). Figure 2 shows the frequency configuration of the transceiver, and Figure 3, the frequency processing block diagram.

• Reference frequency uses

The 10.24 MHz reference frequency, f_{STD}, is generated by temperature-controlled crystal oscillator (TCXO) X201. The reference frequency is used in four main ways:

- It is sent to various other circuits and used, either directly or after multiplication, as a reference frequency.
- It is input to the PLL IC, IC204 (CXD1225M), on the PLL reference frequency.
- It is input to the FM IF HIC, IC3 (KCD04), via Q201 (2SC2712), when it is used as the local oscillator frequency for squelched FM reception.
- It is doubled to 20.48 MHz by Q202 (2SC2714) to produce the DDS reference signal, which is amplified by Q203 (2SC2712) and input to the DDS subunit (X58-4020-00, 01)

• LO1 (PLL loop)

The VCO subunit (X58-4080-00) generates a signal of 388.585 to 398.585 MHz. The 10.24 MHz reference signal, f_{STD}, is input to pin 5 of the PLL IC, IC204 (CXD1225M), where it is divided by 40 to produce a 256 kHz comparison frequency. The VCO output passes through Q214 (2SC3120) amplifier and low-pass filter, and is split into two. One signal is amplified by Q216 (2SC3356) and is output via band-pass filter to the RF circuit as LO1. The other signal is amplified by Q215 (2SC3120) and input to the D201 (ND433G) mixer (DBM).

The DDS2 output is mixed with the 10.24 MHz f_{STD} by IC201 (SN16913P). The resulting signal is passed through the band-pass filter to generate a 11.321 to 11.833 MHz signal, which is input to IC202 (SN16913P). This signal and f_{STD} are tripled by Q207 (2SC2714) and Q209 (2SC2714) to generate a 92.16 MHz signal. It is mixed by IC202 and passed through the band-pass filter, amplified by Q211 (2SC2714) to generate a 103.481 to 103.993 MHz signal. The signal is input to D201 (ND433G) mixer.

This signal is mixed with the VCO output as the minimum step for the encoder, passed through a band-pass filter to generate a 284.672 to 294.912 MHz signal. It is then passed through Q212 and Q213 (2SC3120x2) amplifiers and input to pin 10 of IC204 (CXD1225M). The signal divided by N by the PLL IC is compared with the 256 kHz signal by the phase comparator, and the VCO frequency is locked.

Divide ratio N is transmitted from the control unit as data that covers 430 to 440 MHz in 512 kHz steps (N = 1112 to 1152: a multiple of 2). The divide ratio is changed automatically when the operational frequency is a multiple of 512 kHz, as follows.

When f = 430.080, N= 1114, f_{DDS} = 1.081 MHz
When f = 435.000, N= 1132, f_{DDS} = 1.393 MHz

• LO2

LO2 is amplified by Q208 (2SC2712) and output to the IF circuit after f_{STD} is tripled by Q207 (2SC2714) to generate a 30.72 MHz signal.

• CAR

The DDS1 output is mixed with the 10.24 MHz reference signal f_{STD} by IC203 (SN16913P) to produce a 10.695 MHz signal for local oscillation and detection in modes other than FM. This signal is passed through the ceramic filter and Q206 (2SC2714) amplifier.

In FM mode, the DDS1 stops, and the Q18 (2SC2712) crystal oscillator circuit is operated in transmit mode, and the modulated 10.695 MHz signal is output.

SSB, CW mode switching, IF shift, carrier point fine adjustment, and CW mode pitch change are performed.

CIRCUIT DESCRIPTION

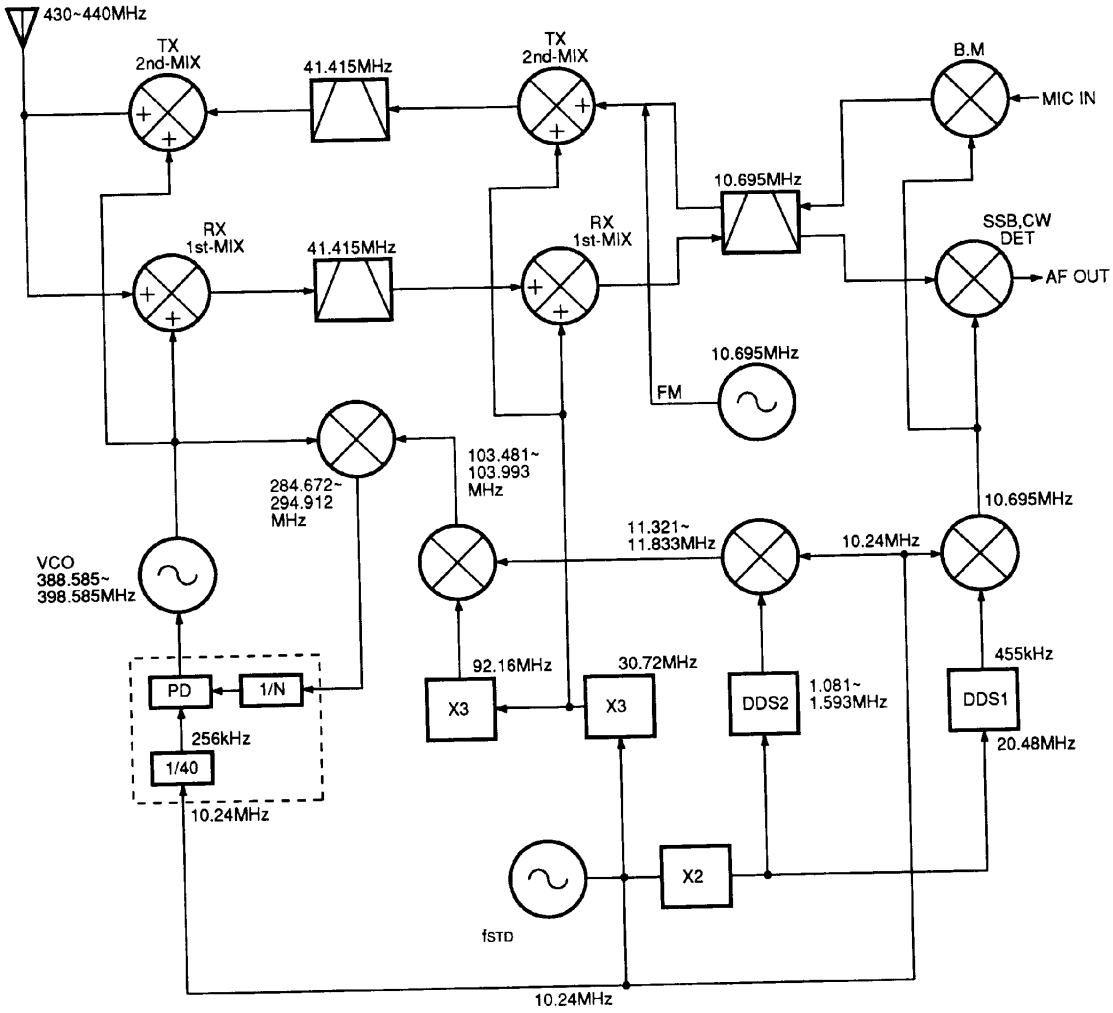

Fig. 2 Transceiver frequency configuration

DDS1

	Receiver	Transmitter
USB	−1.5kHz	−1.5kHz
LSB	+1.5kHz	+1.5kHz
CW	−1.5kHz	+0.7kHz

CIRCUIT DESCRIPTION

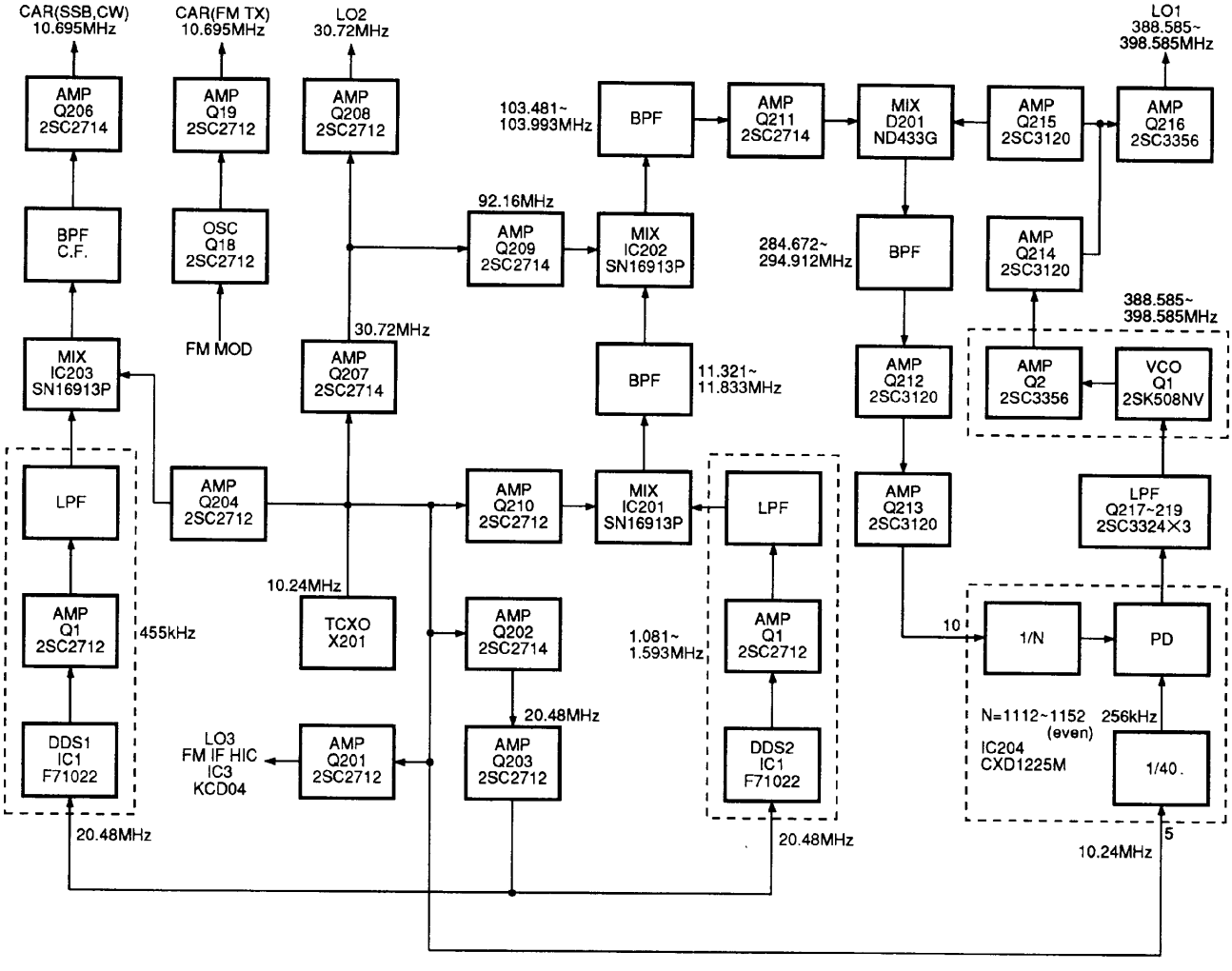

Fig. 3 Frequency processing block diagram

CIRCUIT DESCRIPTION

RECEIVER CIRCUIT CONFIGURATION

Except for FM reception, the receiver uses double conversion with a first IF of 41.415 MHz and a second IF of 10.695 MHz. For FM, tripleconversion is used with a third IF of 455 kHz.

The signal from the antenna passes through a low-pass filter in the final block, and is switched to the front-end of the RF section system via a diode transmit/receive switch. It then passes through a two-stage RF amplifier and two-pole helical resonator comprising a GaAs FET and a junction FET. The signal then enters the first mixer, where it is mixed with the LO1 signal (388.585 to 398.585 MHz) and so converted to the first IF of 41.415 MHz. The first IF signal is then mixed with the 30.72 MHz LO2 signal to produce the second IF of 10.695 MHz, which passes through as MCF to the IF section.

The second IF signal is amplified by a MOS FET IF amplifier and split into two to feed the SSB and FM circuits. In the SSB circuit, the IF amplifier output passes through a crystal filter and entars, goes to the SSB hybrid HIC (KCD08), where it is product-detected. In the FM circuit, the IF amplifier output directly enters the FM hybrid HIC (KCD04), where it is converted to the third IF of 455 kHz and detected. Either of the detected audio signals output from the hybrid HIC can be selected with a analog switch. The selected signal is amplified, passes through a muting circuit and electronic volume control, and is input to the AF amplifier, which drives the speaker. (Fig. 4)

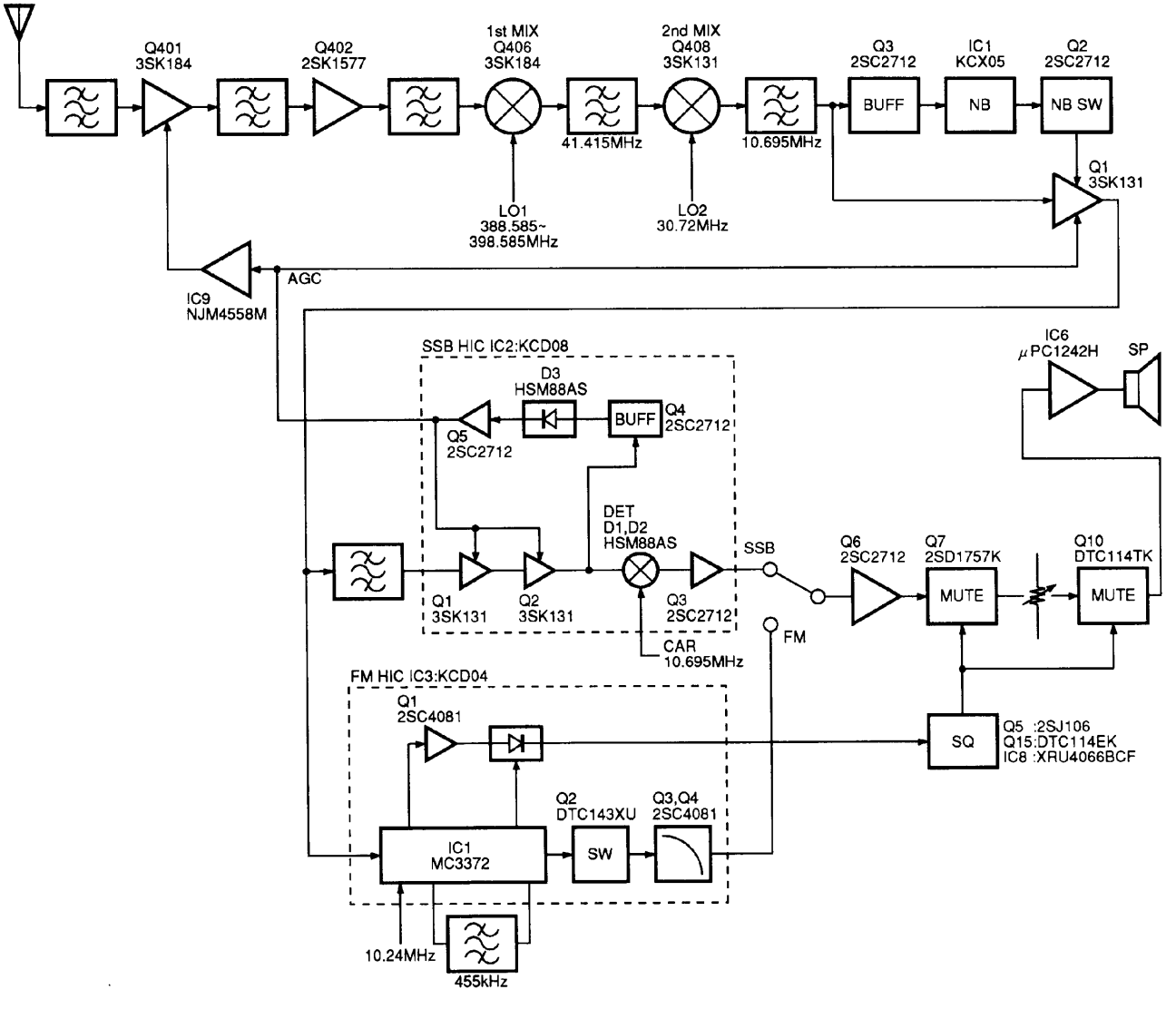

Fig. 4 Receiver circuit block diagram

CIRCUIT DESCRIPTION

• Receiver frontend

The receiver frontend consists of a two-stage RF amplifier comprising GaAs FET Q401 (3SK184) J-FET Q402 (2SK1577), and two, two-pole helical resonators, and first mixer Q406 (3SK184).

The gain is controlled by applying the AGC voltage to the second gate of Q401. When the AIP signal is on, Q403 (DTC114EK) turns on, decreasing the AGC voltage and so reducing the gain of Q401 to produce the AIP effect.

• AGC circuit

In the TM-455 the AGC voltage is applied to both Q401 of the RF amplifier and MOS FET Q1 (3SK131) of the IF amplifier. The AGC voltage is detected and amplified by SSB hybrid HIC IC2 (KCD08). Since the voltage changes in the positive range only, attenuation is not obtained if it is applied to Q401, which is a GaAs FET. Thus, the AGC voltage is applied directly to the second gate of Q1 as IF AGC, and also applied to the second gate of Q401 by converting the level with the non-inverting amplifier comprising, operational amplifier IC9 (NJM4558M), so that the voltage changes in the negative range as well.

The time constant is automatically switched to SLOW for SSB and FAST for CW by Q17 (2SK208). (Fig. 5)

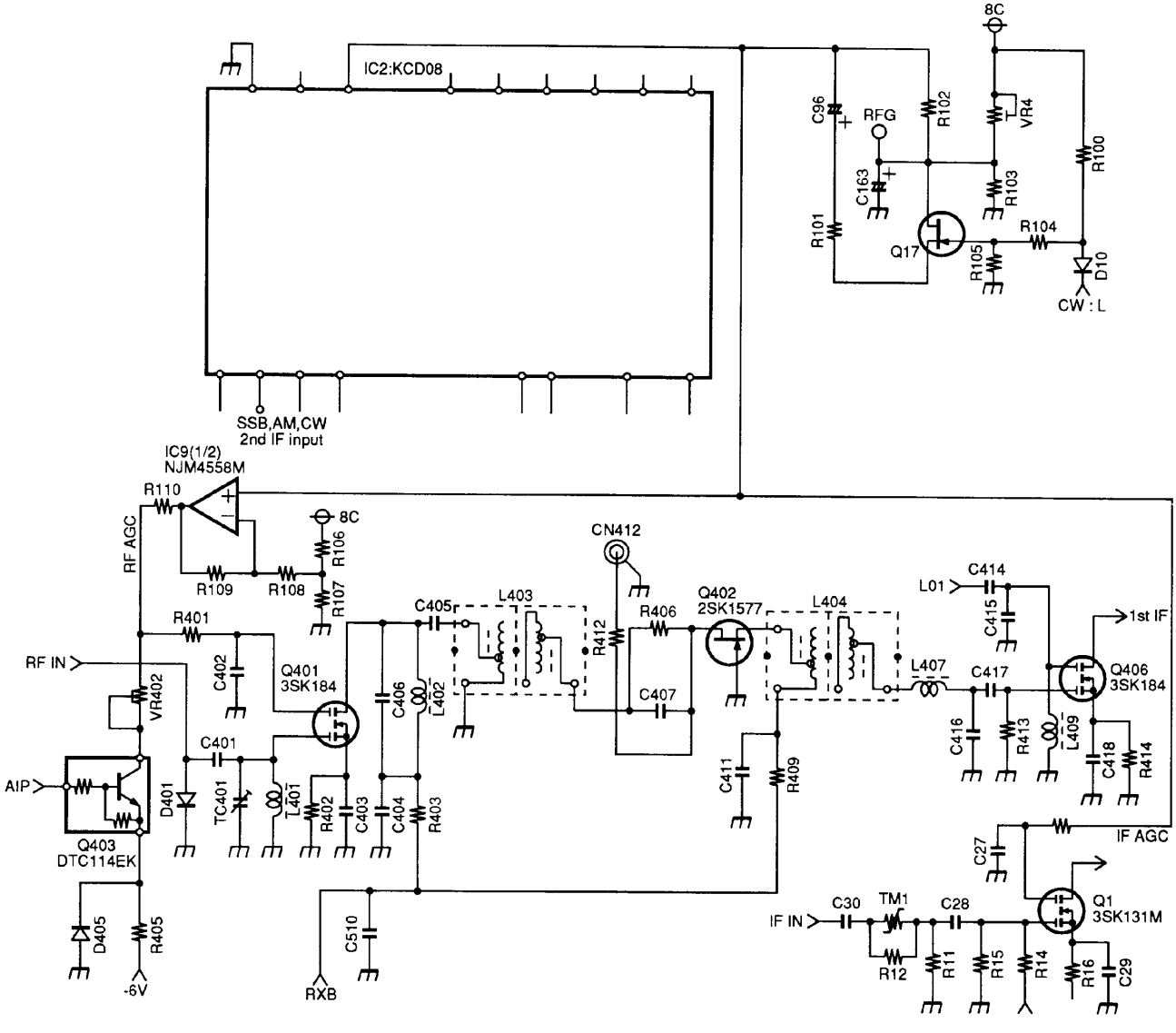

Fig. 5 Receiver front-end and AGC circuit

CIRCUIT DESCRIPTION

- **Noise Blanker Circuit**

The second IF signal from second mixer Q408 (3SK131) is split into two. The part destined for eventual demodulation goes to the IF amplifier, Q1 (3SK131); the other part goes to pin 5 of the noise blanker HIC, IC1 (KCX05), via noise blanker buffer transistor Q3 (2SC2712). The noise blanker HIC amplifies the noise component in the second IF signal, then detects it to produce a control signal that mirrors the presence or absence of noise. This control signal is output from pin 8 of the noise blanker HIC and turns noise blanker swtich Q2 (2SC2712) on or off. Q2, in turn, controls the IF amplifier, Q1, so that when there is a noise spike, Q2 switches Q1 from the source to ground, and the noise is blanked.

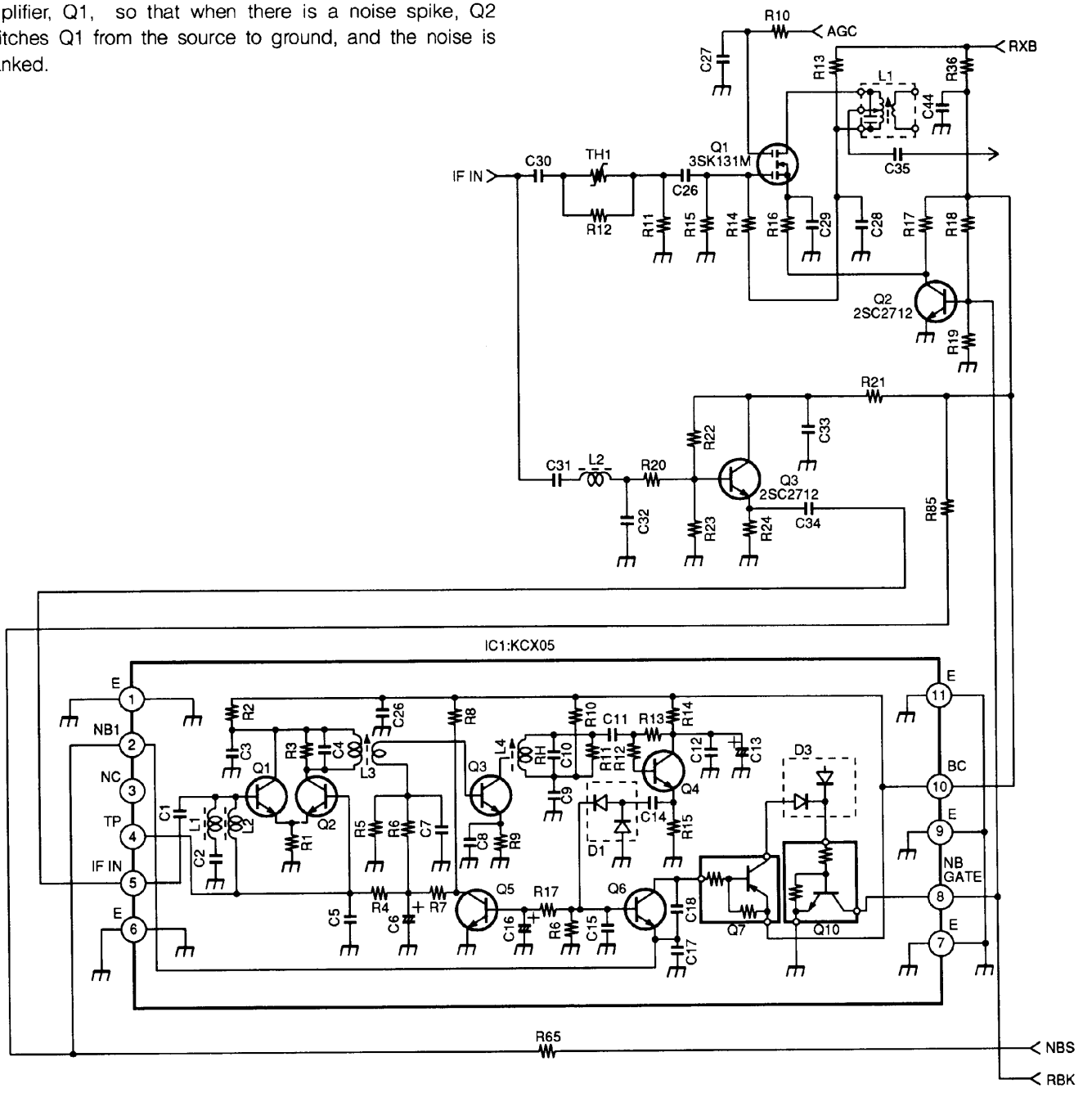

Fig. 6 Noise blanker circuit

CIRCUIT DESCRIPTION

• S-meter circuit

In modes other than FM, the S-meter circuit uses the RF AGC voltage produced by applying the AGC voltage (IF AGC voltage) output from IC2 through IC9 (1/2) (NJM4558M). The signal is input to IC9 (2/2) (NJM4558M) and amplified and output.

In FM, the level detection signal from IC3 pin 11 is used without modification. The S-meter output is changed by analog switch IC4 (XRU4066BCF) according to the mode, and output to the control unit.

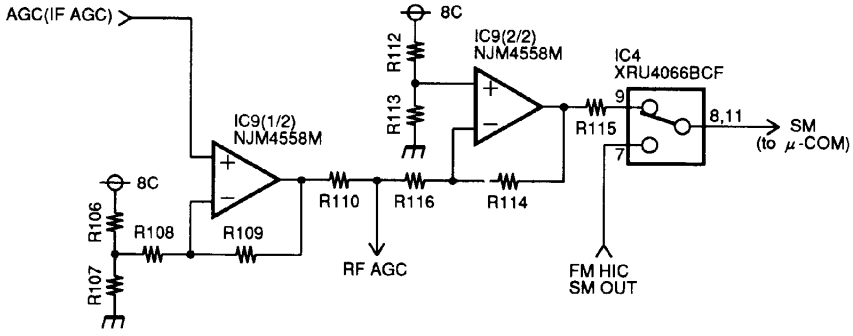

Fig. 7 S meter circuit

• Detection circuit

The signal input to the IF unit is amplified by IF amplifier Q1. In SSB and CW, this signal is split into two: one signal goes to FM detection hybrid IC IC3 (KCD04) for squelch control; the other goes to SSB detection hybrid IC IC2 (KCD08) through crystal filter XF1. The signal is passed through an amplifier in the hybrid IC, mixed with the CAR signal (10.695 MHz), product-detected, and output as an AF signal.

In FM mode, the signal is input to IC3 only and then mixed with the 10.24 MHz oscillator signal applied to HIC pin 3 to generate the third IF signal (455 kHz), which is output from pin 25. The signal is passed through ceramic filter CF1, input to pin 7 again, detected by the quadrature detector with the signal phase-shifted by discriminator CD1, and output as the AF signal.

• Squelch circuit

The TM-455 squelch circuit is of the noise squelch type, and also uses FM hybrid IC IC3 (KCD04) for noise detection in modes other than FM. Therefore, the IF signal is always input to IC3 regardless of the mode.

As the level of the IF signal input to IC3 increases, the noise level decreases. The voltage at IC3 pin 10 (SQ) falls, and pin 9 (SC) goes low. When the SQ pin voltage increases, the SC pin goes high and the current flows through AF mute switches Q7 (2SD1757K) and Q10 (DTC114TK) via R62, turning them on. Thus, the AF signal line is muted.

The SQ pin voltage control method is explained below. The voltage corresponding to the squelch VR angle is read and digitized by the microprocessor in the panel unit. Data is sent to the microprocessor in the control unit. Analog switch IC8 (XRU4066BCF) and Q15 (DTC114EK) are switched according to the data sent to serial-to-parallel converter IC7 (TC9174F). The synthesis resistance between the SQ pin and GND is changed stepwise by connecting R92 to R96 in series or bypassing them.

CIRCUIT DESCRIPTION

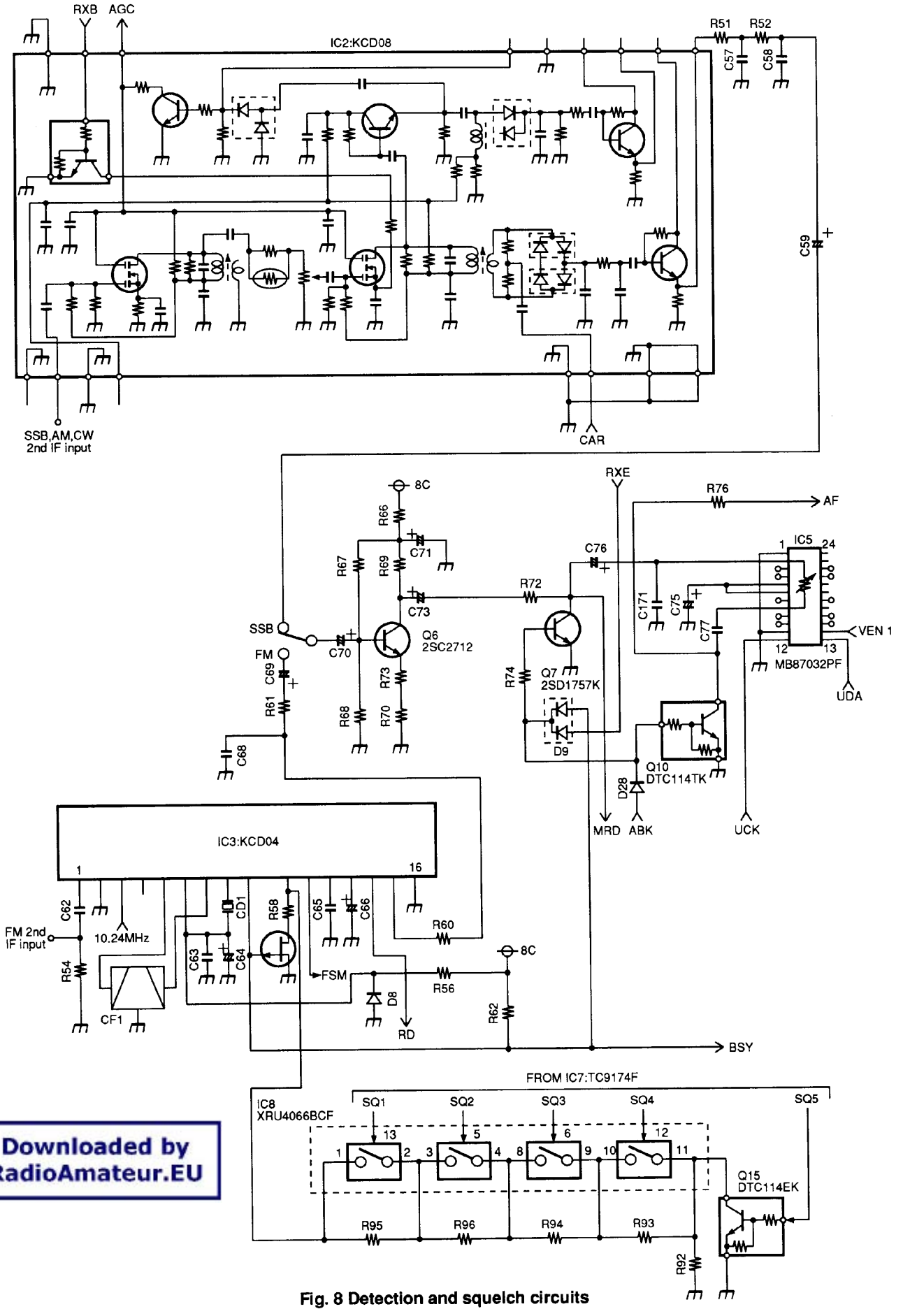

Fig. 8 Detection and squelch circuits

CIRCUIT DESCRIPTION

TRANSMITTER CIRCUIT CONFIGURATION

The audio signal from the microphone enters CN5 of the IF unit and is passed through microphone amplifier IC10 (μPC1313HA). Part of the IC10 output is amplified by Q21 (2SC2712), detected by D15 (1SS355), applied to the ALC pin of IC10, and used to control speech processor operation.

The audio signal amplified by IC10 is passed through Q25 (2SC2712) buffer and electronic volume control IC5 (MB87032PF), and is split into two by analog switch IC13 (XRU4066BCF); one signal is directed to the SSB circuit and the other goes to the FM circuit. In the SSB circuit, the signal is balance-modulated by the CAR signal (10.695 MHz) from the PLL unit by IC14 (μPC1037HA), passed through crystal filter XF1, and enters IF amplifier Q28 (3SK131). In the FM circuit, the signal enters FM microphone amplifier IC12 (KCA06). It is passed through the pre-emphasis and IDC circuits and output. The output signal is input to varicap diode D7 (1SV164) in the crystal oscillator by Q18 (2SC2712), modulated to the oscillator frequency of 10.695 MHz, and input to Q28.

The signal modulated by type in this way is amplified by Q28, output from CN3 as the first IF (10.695 MHz), and input to CN403 in the RF unit. It is mixed with the LO2 signal (30.72 MHz) input from CN404 by the first mixer Q409 and Q410 (3SK131) to generate the second IF (41.415 MHz). The resulting signal is passed through MCF XF401, amplified by Q411 (3SK131), mixed with the LO1 signal (388.585 to 398.585 MHz) input from CN402 by double balanced mixer (DBM) D408 (ND433G), amplified by Q412 to Q415 in four steps, and output from CN406 as the drive output.

The drive output enters the final unit through CN601, is amplified to the appropriate level passed through a low-pass filter, and output from the antenna connector.

In CW, Q31 (DTA124EK) in the IF unit is switched with KEY UP/DOWN, and the signal is input to IC1 in the control unit. The sidetone monitor signal is generated by Q39 (2SC2712) in the IF unit, and output from the speaker. The CW control signal (CKS) is output from IC1 in the control unit to switch Q428 (DTC124EK) and Q416 (DTA143EK) and generate the CW signal. The carrier is produced by turning Q14 in the IF unit on, applying DC to IC14, and breaking the balance.

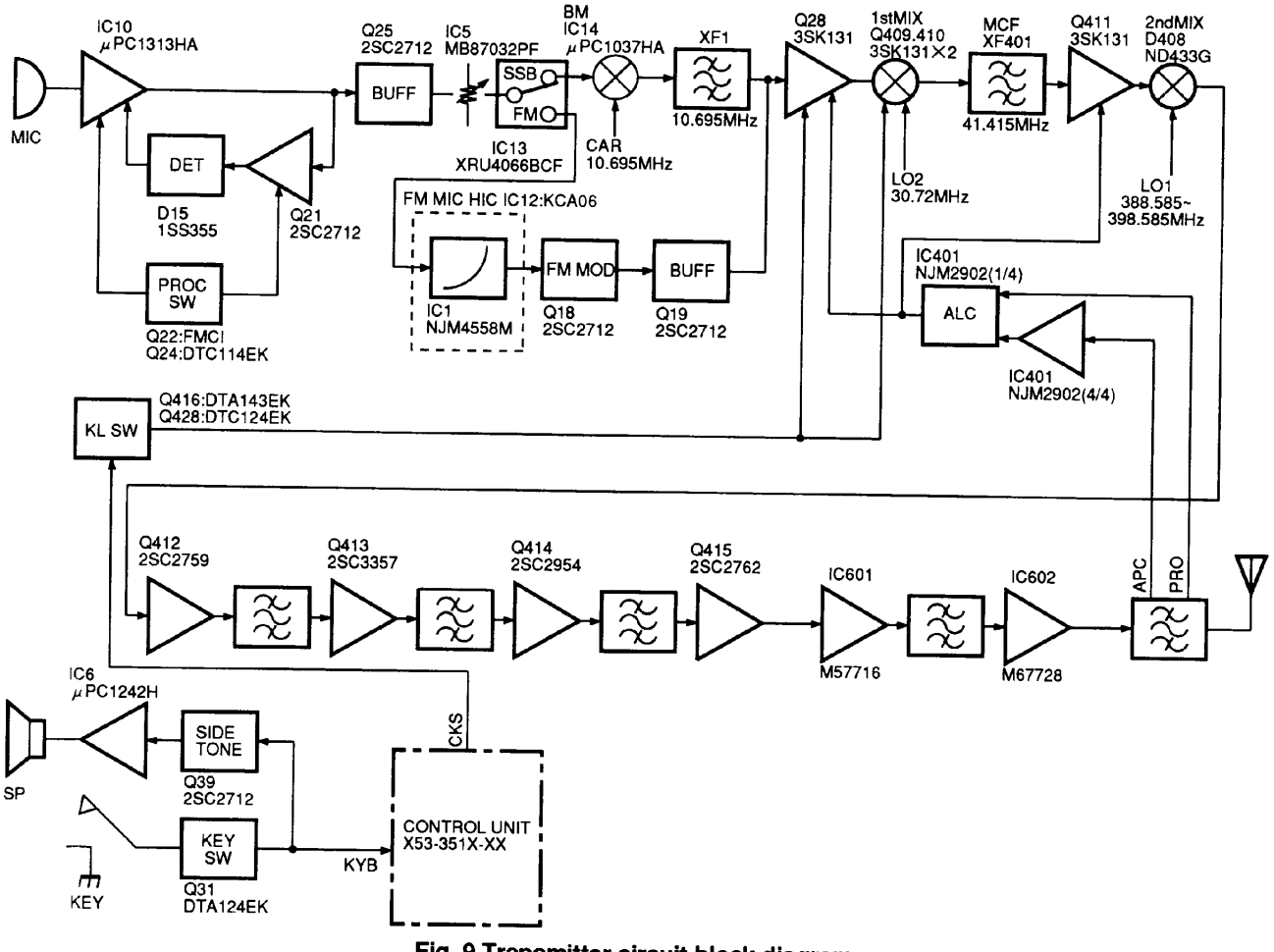

Fig. 9 Transmitter circuit block diagram

CIRCUIT DESCRIPTION

• ALC Circuit

The forward wave voltage detected by the CM coupler in the final unit is detected by D605 (HSM88AS), level-adjusted by VR601, and applied to CN408 in the RF unit. The forward wave voltage is then non-reverve-amplified by IC401 (4/4) (NJM2902M), and input to pin 2 of IC401 (1/4). IC401 (1/4) is a differential amplifier with the power control voltage applied to the + pin (pin 3). When transmission output is present, the output voltage at pin 1 begins to decrease. If the output voltage falls below the ALC reference voltage (about 3.4 V), the ALC operates. The ALC voltage is applied to each second gate of Q411 (3SK131) in the RF unit and Q28 (3SK131) in the IF unit. When the ALC voltage decreases, the voltage of each amplifier and the drive output decrease.

For SWR protection, the reflected wave voltage detected in the same way as the forward wave voltage is level-adjusted by VR603 in the final unit, amplified by Q607 (2SC2712), and applied to the ALC reference voltage by CN408 in the RF unit. The gain is reduced by reducing this voltage to protect the power module when the antenna is not matched.

• Power control circuit

The TM-455 transmission output is switched between high and low. To switch from high to low, press the Low button on the panel. The PH pin of CN409 in the RF unit changes from high to low, Q418 (DTC124EK) and Q417 (DTC124EK) turn off, and VR401 is inserted between the 8 V line and R520, R521. The power control voltage applied to the + pin of IC401 (1/4) decreases and the ALC voltage decreases to reduce the power.

• RF meter circuit

The RF meter circuit non-reverse-amplifies the forward wave voltage with IC401 (3/4) in the RF unit, digitizes its output in the control unit, and displays it.

The TM-455 does not have an ALC meter, but has a meter amplifier because it is required for the a[illegible] microphone gain control function, described later. It is a non-reverse amplifier circuit that inputs the ALC voltage to the + pin (pin 5) of IC401 (2/4) and outputs it from pin 7.

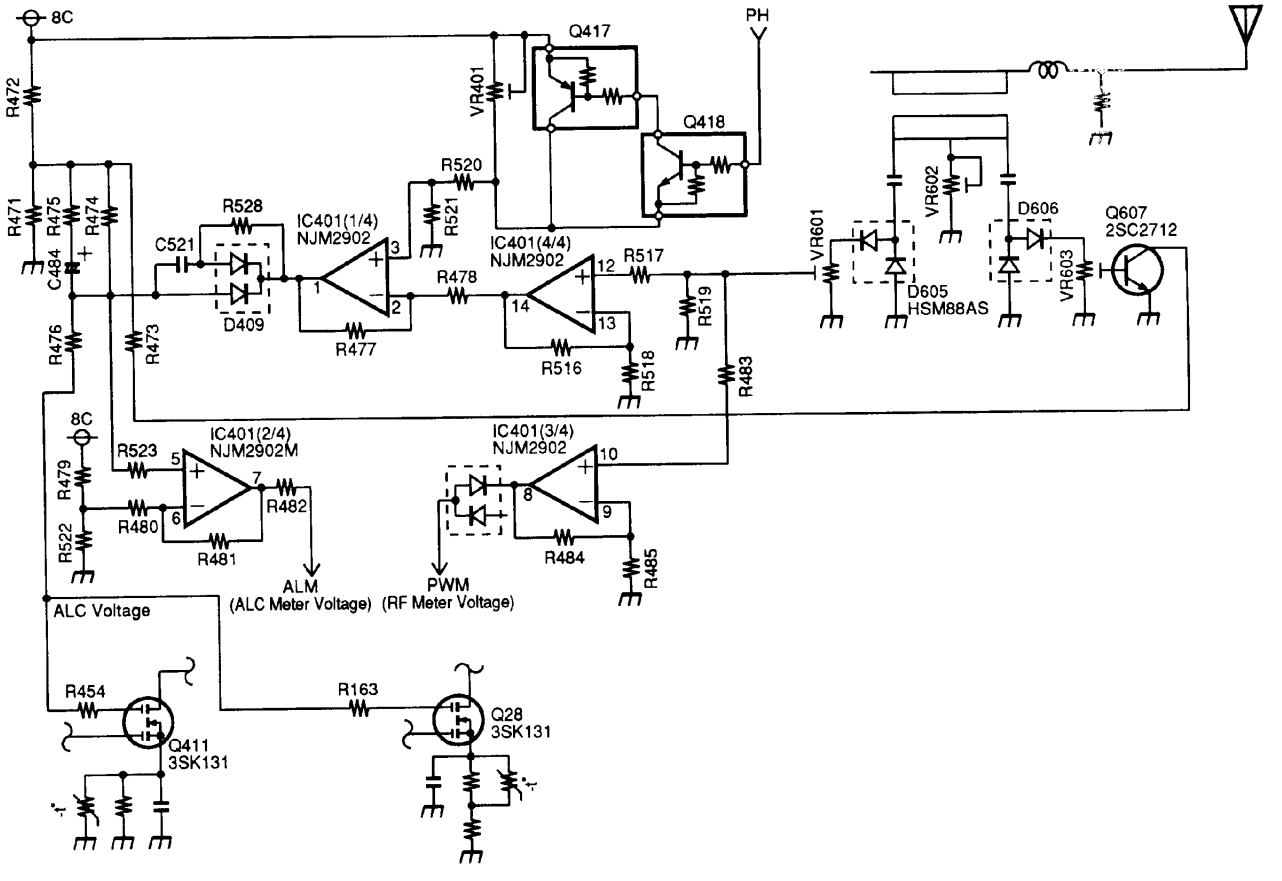

Fig. 10 ALC and power control circuits

CIRCUIT DESCRIPTION

• Thermal protection

The TM-455 have fan control and thermal protection, which are controlled by the module unit (X59-4020).

During transmission, Q2 (DTD114EK) in the module unit is always on and the fan runs at medium speed regardless of the temperature. If the final unit temperature rises, IC1 (1/2) (NJM2904M) output (pin 7) goes high and Q3 (DTD114EK) turns on. During transmission, Q2 is on, R611 and R613 are connected in parallel and the fan runs at high speed. When receiving, Q2 is turned off, and only R613 is grounded, and the fan runs at low speed.

If the temperature rises, the output from the IC1 (2/2) goes high and a high signal is output to the power control circuit from the THP pin of CN603. This reduces the transmission output forcibly to protect the transeiver. If the fan fails, Q1 (DTC114EK) is turned off and the THP pin is made high in the same way to reduce the transmission output.

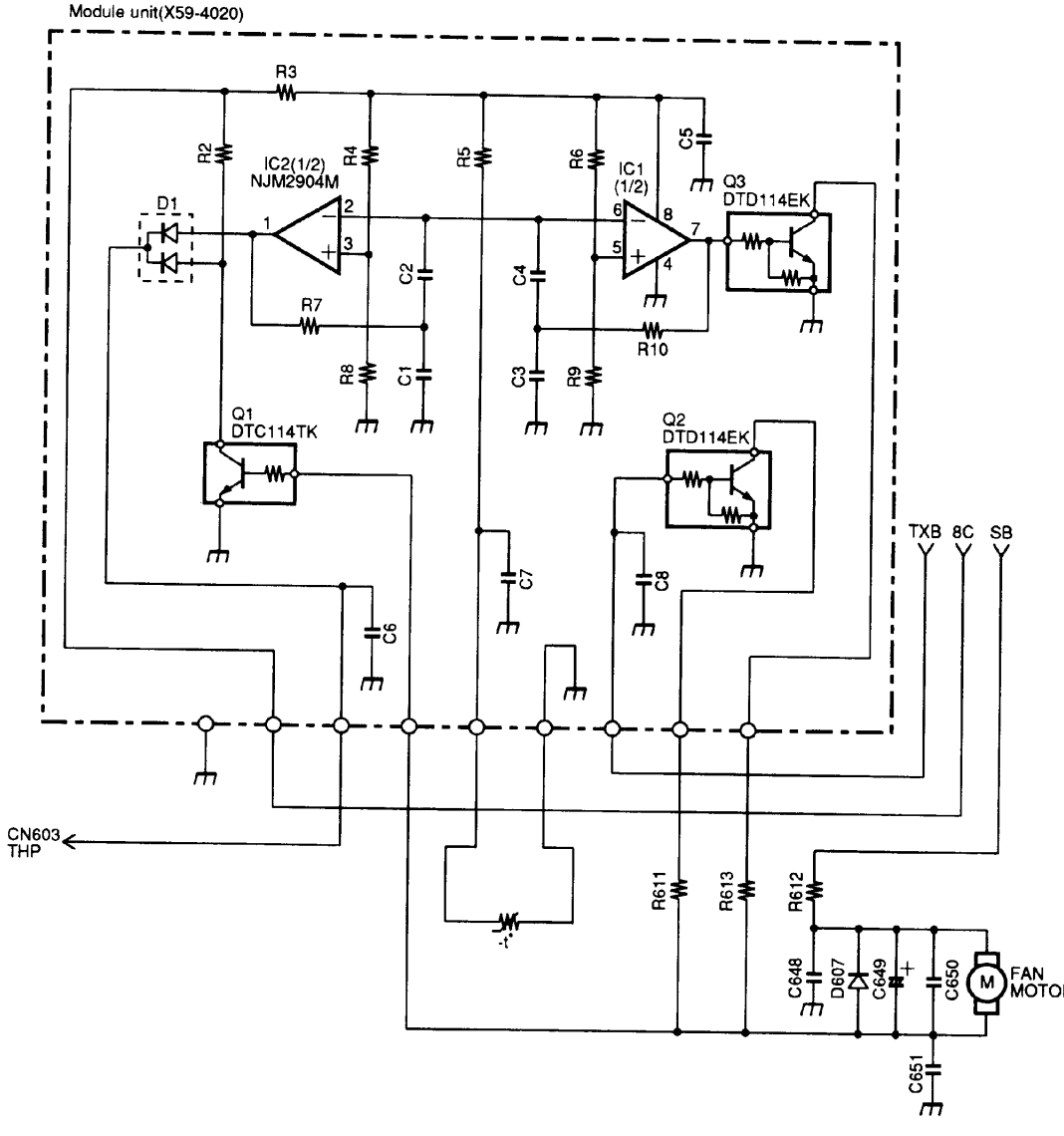

Fig. 11 Thermal protection

CIRCUIT DESCRIPTION

• Auto microphone gain control function (SSB mode)

In a conventional SSB transmitter, the microphone gain volume must be adjusted to gain the ALC properly and keep the output constant. The TM-455 uses an electronic volume control as the microphone gain volume, and automatically controls the microphone gain using the microprocessor according to the ALC effect. This function is available when menu item 61 is turned on (default: on). It can be changed manually if automatic control is not desired or required (when the function is menu No.62). In this case, it can be adjusted in the range -6 dB to +6 dB in 3 dB steps.

If other adjustments are performed, the microphone gain changes gradually, so set the microphone gain control to off (0 dB).

The ALC voltage is amplified by IC1 (1/4) operation amplifier for ALC operation, and input to the A/D converter in the microprocessor. If it is kept in a certain range for a certain time according to this voltage, the microphone gain is changed in 3 dB steps. Its change is shown in figure 12. If the ALC effect is low, the gain is increased, and if it is excessive, the gain is decreased.

Since the range of ±6 dB is exceeded, it is not followed if the sound is lower than the range, and full power may not be gained. This value has been selected because if the range is extended, the signal-to-noise ratio deteriorates or a sneak path may occur.

The microphone gain can be changed between high and low in FM using this electronic volume control (menu item 60). High: +6dB and Low: 0dB (default:LOW). The gain is also changed even if 9600 bps mode is off.

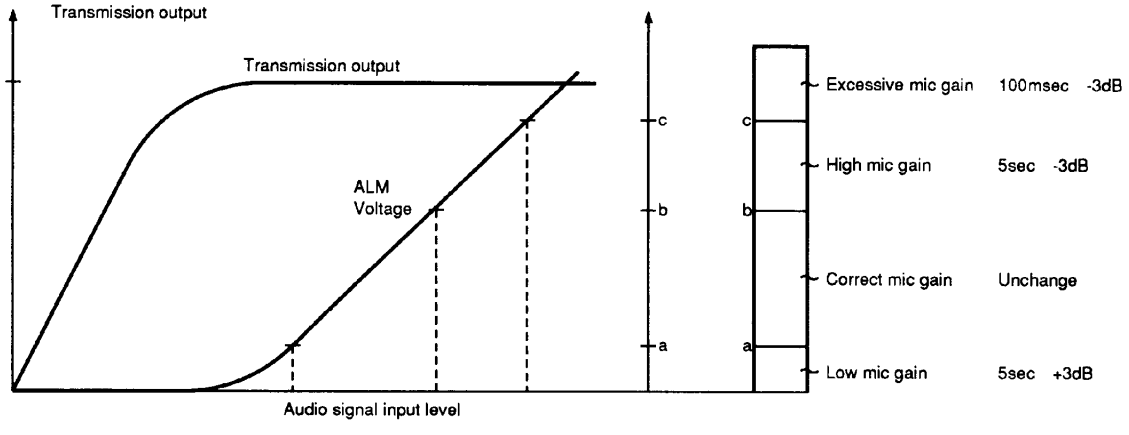

Fig. 12 Auto microphone gain control

CIRCUIT DESCRIPTION

DATA TERMINAL, PERIPHERAL CIRCUITS AND USE

The data communication connector is on the rear to handle transmission control, data input/output, squelch signal, and relay output. (Fig. 13)

There are two data communication modes: 9600 bps mode (menu item 77 on) and conventional 1200 bps mode (off).

The 9600 bps mode is mainly used for 9600 bps GMSK G3RUH packet communication. This type of high-speed modulation performs frequency modulation by passing the base band signal (square wave) though a filter for bandwidth limiting. This signal is similar to the digitally modulated 4800 Hz signal (similar to a sine wave because it is passed through a filter) in 9600 bps GMSK mode, and sounds like noise. There are GMSK and G3RUH systems according to the type of bandwidth limiting filter. They do not work in SSB.

Data communication in SSB includes 1200 bps/PSK (satellite communication), 300 bps/AFSK packet communication, RTTY, and SSTV. They are used by turning 9600 bps off.

• Transmit signals

The transmission modulation signal enters through PKD. The path to the modulator when 9600 bps mode on menu item 77 is on is different from that when it is off. The path when the DATA terminal PKS is low is different from that when PTT is low. Table 2 lists paths A, B, and C and modulation input levels.

When 9600 bps mode is on, the frequency deviation changes according to the input signal level. A protection circuit is provided to inhibit transmission when the level reaches 4 Vp-p.

The input PKD signal is detected by D23, and smothered by C146 and R134. If it reaches 4 Vp-p, Q36 turns on and the PTT control (Q35) signal goes low. PKS transmission is inhibited if the input reaches 4 Vp-p.

• Receive signals

PR9 is the receive output for high-speed data communication, and the FM detection circuit output (RD signal) is amplified by Q32 and output. The FM detection circuit also operates for SSB/CW squelch in modes other than FM, and the signal is always output regardless of the mode and whether the squelch is open or closed.

PR1 is a signal similar to the conventional speaker output, and output without passing through the electronic volume control. This output is squelch-controlled as in the speaker output.

• Squelch signal/relay output

The squelch signal is input to TNC to prevent collision in packet communication. Table 3 lists the logic and the digital transistor output pulled up by 5 V.

The initial setting is squelch and it can be used as relay output with the internal slide switch. The relay is activated and the signal goes low during transmission. It can be used to control vertical type pre-amplifiers and linear amplifiers.

Pin No.	Name	Specification		
1	PKD		Menu No. 77	
			OFF	ON
		Mod. input Freq. dev.	40mVp-p 3±0.5kHz	2Vp-p 2±0.5kHz
4	PR9	Output level 500mVp-p/10kΩ Always output when RX.		
5	PR1	Output level 300mVp-p/10kΩ No output when squelch is closed.		

Table 2 Data terminal, I/O level

Squelch	Logic
Open	H
Close	L

Table 3 Logic of Squelch signal

CIRCUIT DESCRIPTION

TX SW	PK96	Signal path
PKS	ON	B
	OFF	A
PTT	ON	C
	OFF	C

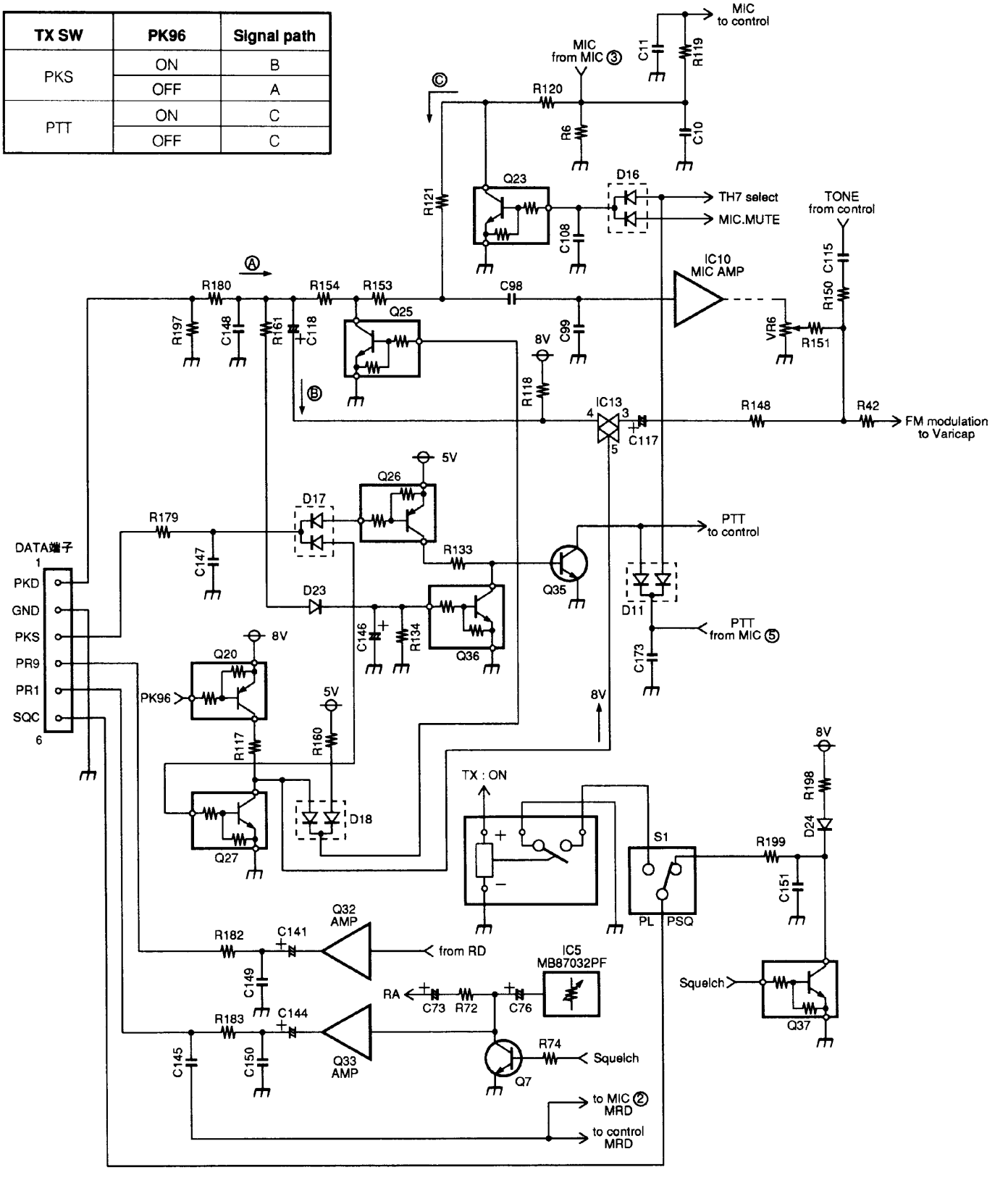

Fig. 13 DATA terminal, peripheral circuits, and their use

CIRCUIT DESCRIPTION

DIGITAL CONTROL CIRCUIT

The digital control circuit is divided into two major sections: the LCD assembly containing panel keys, click encoder, VRs, and display circuit and the control unit containing the backup circuit, DTMF circuit, and keys (Fig. 14).

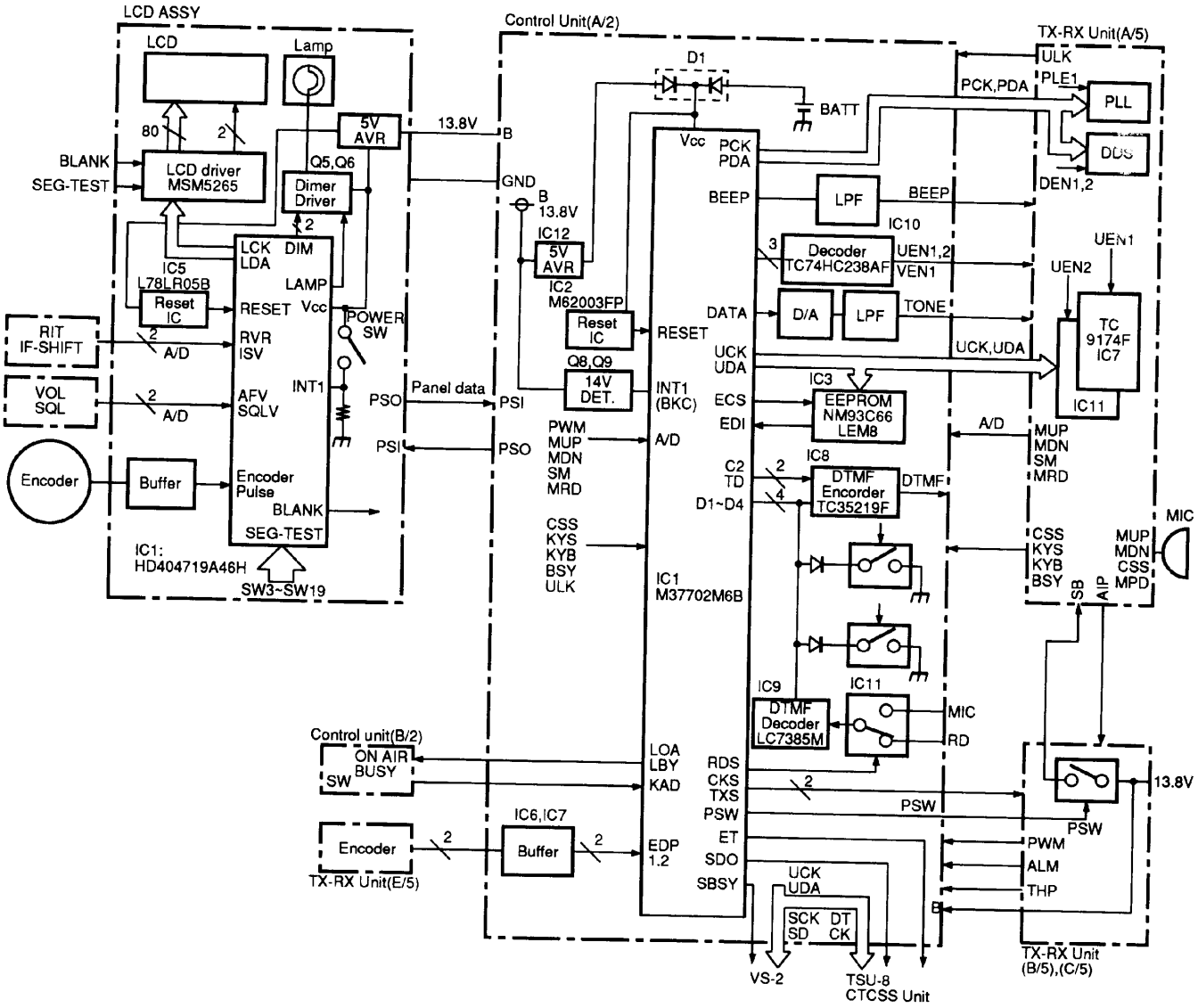

Figure 14 Digital control circuit

CIRCUIT DESCRIPTION

LCD ASSEMBLY AND CONTROL UNIT DATA COMMUNICATION CIRCUIT

Fig. 15 shows the LCD assembly and control unit data communication circuit. SO is serial data out and SI, serial data in. There is a NAND gate between them to protect the microprocessor ports. Data communication is based on start-stop synchronization, and the transmission speed is 31250 bps.

The microprocessor in the control unit checks connection every half second and the microprocessor in the LCD assembly checks connection every five seconds. If a cable is not connected correctly, or the LCD assembly is disconnected, the microprocessors in the LCD assembly and control unit turn the power off.

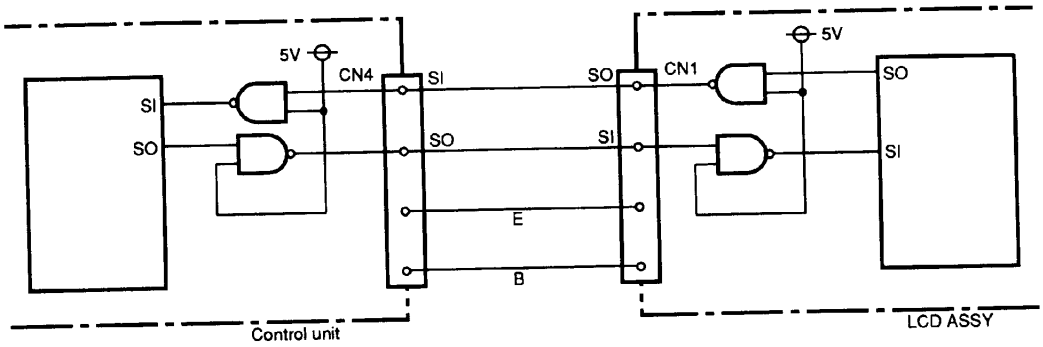

Fig. 15 Data communication circuit

CIRCUIT DESCRIPTION

• Panel unit (LCD assembly)

1. Panel (LCD assembly) microprocessor reset circuit

When 14 V is supplied to IC5 (L78LR05B) from CN1, the microprocessor in the panel is reset by the reset signal output from IC5.

The panel does not back it up. When the power switch is off, panel microprocessor IC1 (HD404719A46H) controls the 5 V line in the LCD assembly through pin 11 to clear the LCD display and reduce current consumption in the LCD assembly. The panel microprocessor always operates when the main power is on.

2. Panel key input

The signal from each key on the panel is input to a port. The keys correspond to pins 26 to 42 of panel microprocessor IC1 (HD404719A46H).

The power switch signal is input to pin 56 (INT1) of the microprocessor by edge interrupt. When the signal goes high, the power is on, and when it goes low, the power is off.

3. VR input

With the volume squelch and RIT/IF-SHIFT VRs the voltage output is digitlized by dividing 5 V applied to the variable resistor at the analog port of the microprocessor in the panel unit, and reading the change.

The voltage of the VR is read all the time. If it changes, a command corresponding to the value is sent to the control unit.

4. Display circuit

The display circuit is in the panel unit (LCD assembly), and is controlled by the microprocessor of the panel unit. It consists of an LCD driver and its peripheral circuits.

Serial data is transferred from pins 51, 52, and 54 of the microprocessor of the panel unit, IC1 (HD404719A46H), to the LCD driver. There are 159 segments.

5. Dimmer circuit

The dimmer circuit changes the brightness of the lamp in five steps (including OFF). Figure 16 shows the dimmer circuit.

Q6 amplifies the error of the stabilized power supply using a 5 V reference voltage. Pins 68 and 69 of the panel microprocessor are open drain, and the output voltage can be output in four steps by combinations of the ports being mode low.

Pin 70 of the microprocessor connected to the emitter of Q5 is also open drain. If it is open, Q5 is turned off, and the lamp voltage is not output. If pin 70 goes low, Q5 turns on and the lamp lights.

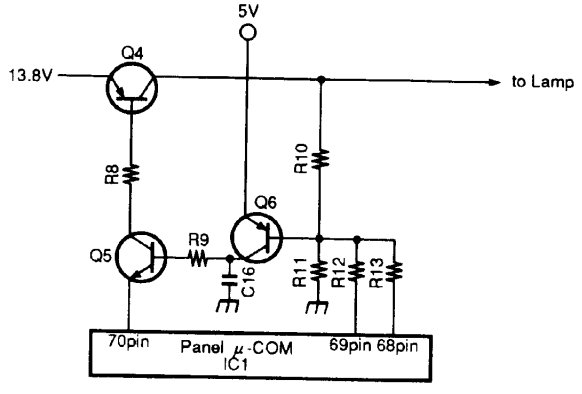

70 pin	H	Off
	L	On

	69 pin	68 pin
Bright	L	L
	H	L
	L	H
Dark	H	H

Fig. 16 Dimmer circuit

CIRCUIT DESCRIPTION

- **Control unit**

1. Reset circuit

IC7 (M62003FP) monitors Vcc applied to the CPU. If the voltage falls below 2.15 V, the IC outputs a reset signal (low) to the CPU, and the CPU initializes all internal data (including memory channel data). The reset signal is not output when the power switch is turned on or off, or 14 V is turned on or off. It is generated only when the battery (BA1) voltage level goes low and 14 V is turned on or off.

C30 generates the signal width (td) required to reset the CPU. (Fig. 17)

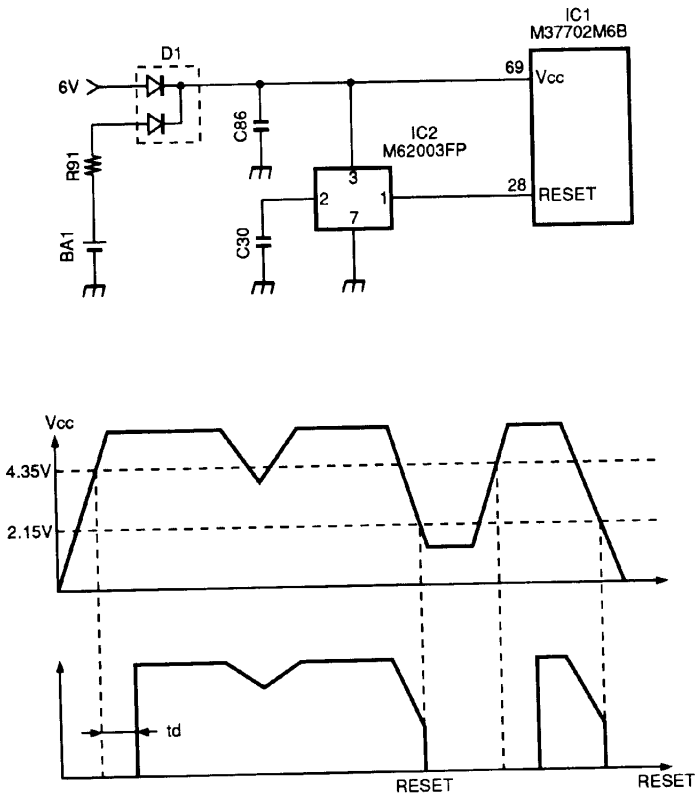

Fig. 17 Reset circuit

2. Backup circuit

The TM-455 has two kinds of backup data stored in the CPU and EEPROM. User data, such as memory channel data, is stored in the CPU, and adjustment data, such as meter curves, is stored in the EEPROM.

The EEPROM is backed up when the power supply voltage is off, but power is required to back up the CPU. If 14 V is not cut power is supplied from the 5 V AVR in the digital unit. If 14 V is cut, power is supplied from a lithium battery. To economise on lithium battery use, the CPU must be in backup mode. So when the backup circuit shown in Figure 18 detects a voltage drop in the 14 V line, it outputs a backup request signal to the CPU.

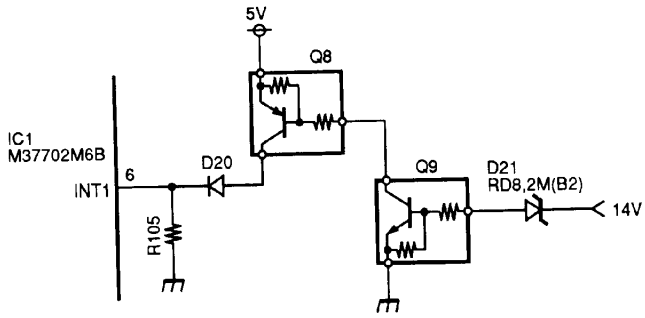

Fig. 18 Backup circuit

CIRCUIT DESCRIPTION

3. EEPROM

Adjustment data is stored in the EEPROM, which consists of 256 16 bit registers. Data can be written to and read from the EEPROM.

Each time the power is switched on, data is read from the EEPROM. If corrupt data is detected, the default adjustment data is used. Adjustment data can be written into the EEPROM in service adjustment mode. (Fig. 19)

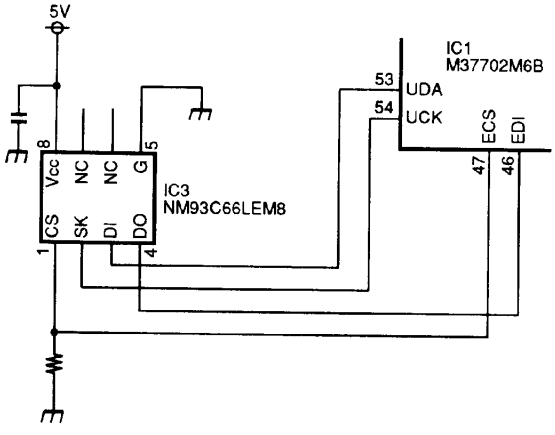

Fig. 19 EEPROM

4. PLL and DDS control circuit

The TM-455 has one PLL and two DDSs. The CPU outputs frequency data to the PLLs and DDSs serially according to the display frequency.

5. TX-RX unit control signal circuit

The CPU sends the mode signal and power signal to the TX-RX unit. The CPU receives meter signals and the standby switch signal from the TX-RX unit, and displays data on the meters and performs a transmit operation. The output signal from the CPU goes to serial-to-parallel converter IC7, IC11 (TC9174F). (Fig. 20)

squelch setting

Q1	Q2	Q3	Q4	Q5	RSQ (kΩ) (SQ-GND)	Remarks
L	L	L	L	L	50.9	Fully clockwise
L	L	L	L	H	49.1	
L	L	L	H	L	47.6	
L	L	L	H	H	45.8	
L	L	H	L	L	44.1	
L	L	H	L	H	42.3	
L	L	H	H	L	40.8	
L	L	H	H	H	39.0	
L	H	L	L	L	38.9	
L	H	L	L	H	37.1	
L	H	L	H	L	35.6	
L	H	L	H	H	33.8	
L	H	H	L	L	32.1	
L	H	H	L	H	30.3	
L	H	H	H	L	28.8	
L	H	H	H	H	27.0	
H	L	L	L	L	23.9	
H	L	L	L	H	22.1	
H	L	L	H	L	20.6	
H	L	L	H	H	18.8	
H	L	H	L	L	17.1	
H	L	H	L	H	15.3	
H	L	H	H	L	13.8	
H	L	H	H	H	12.0	
H	H	L	L	L	11.9	
H	H	L	L	H	10.1	
H	H	L	H	L	8.6	
H	H	L	H	H	6.8	
H	H	H	L	L	5.1	
H	H	H	L	H	3.3	
H	H	H	H	L	1.8	
H	H	H	H	H	0.0	Fully counterclockwise

CIRCUIT DESCRIPTION

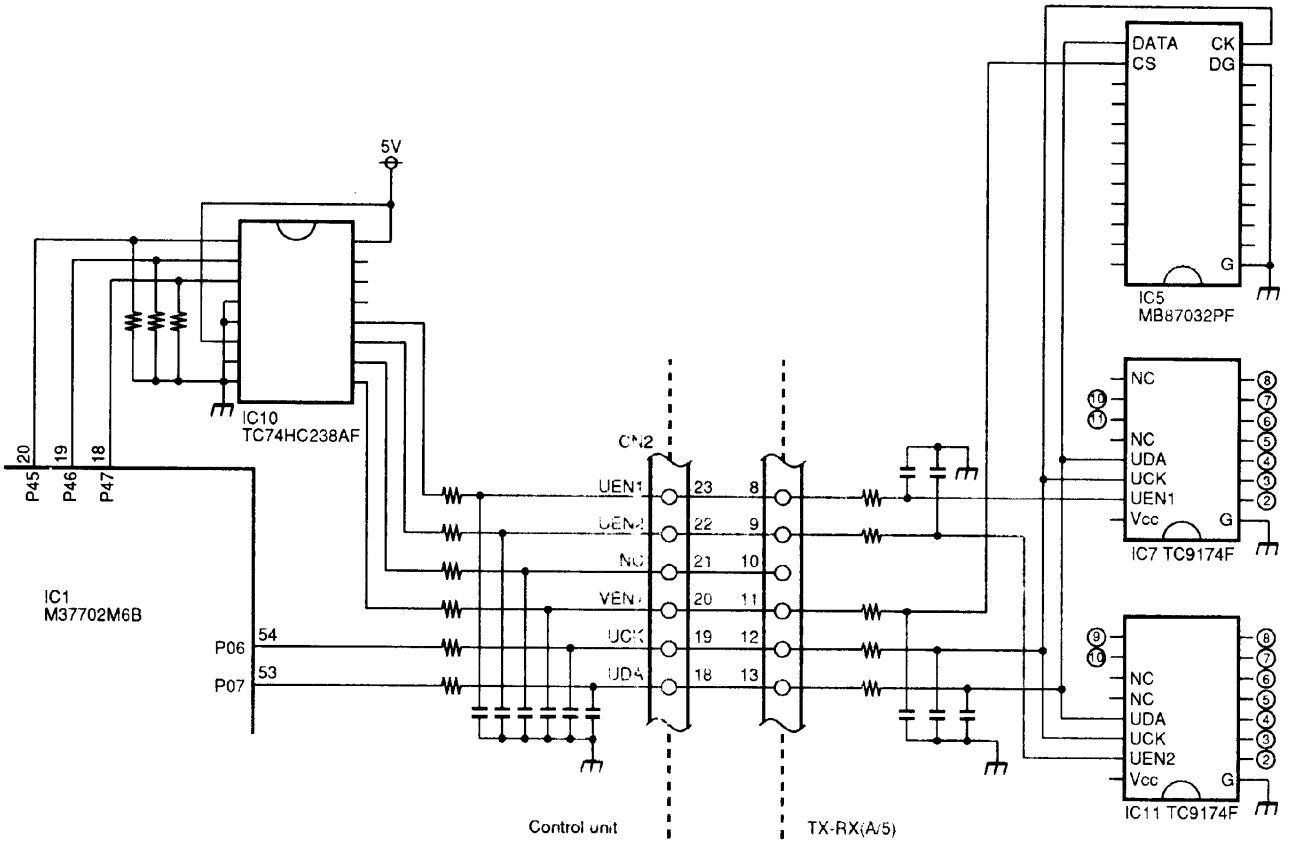

Fig. 20 TX-RX control signal

IC7	
2	Squelch setter signal 3
3	Squelch setter signal 2
4	Squelch setter signal 1
5	Squelch setter signal 4
6	Squelch setter signal 5
7	NB
8	RF cut signal
10	SSB mode signal
11	CW mode signal

IC11	
2	FM mode signal
3	High-speed packet signal (PK96)
4	Processor signal
5	Microphone mute signal
6	AIP
7	PTT line switching
8	High-power select signal
9	AF cut signal
10	Beep sidetone

CIRCUIT DESCRIPTION

6. Main unit key A/D input

The voltage divided by the four switches S1 S4 is applied to the A/D input pin of the CPU when a button is pressed.

When two or more button in the same group are pressed, only the button with the highest priority is detected (listed below).

KAD		Priority
S1	PROC	1
S2	AIP	2
S3	NB	3
S4	PF	4

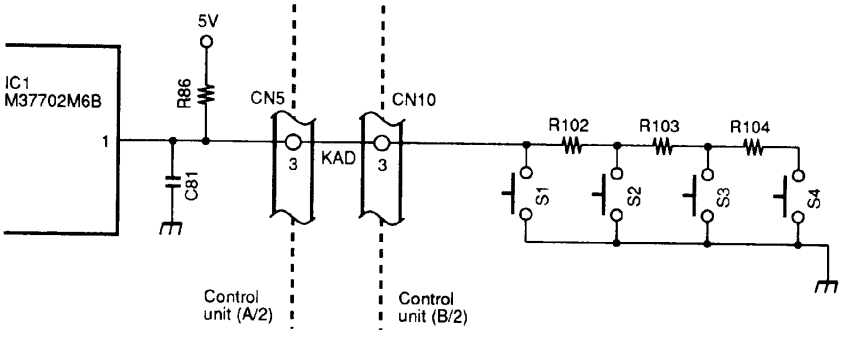

Fig. 21 Key A/D input

4. Encoder Circuit

The encoder is a mechanical one. The waveforms of the encoder pulses are rectified by IC6 and IC7 (TC4S584F), and the number of pulses is counted by the hardware counter in the CPU.

When the encoder is rotated slowly, the frequency step is made small; when it is rotated quickly, the step is made large. This ensures smooth tuning and frequency change.

The minimum frequency step is 5 Hz, and the maximum 200 Hz (10 times this value for FM). The frequency step is changed continuously according to the rotational speed. (Fig. 22)

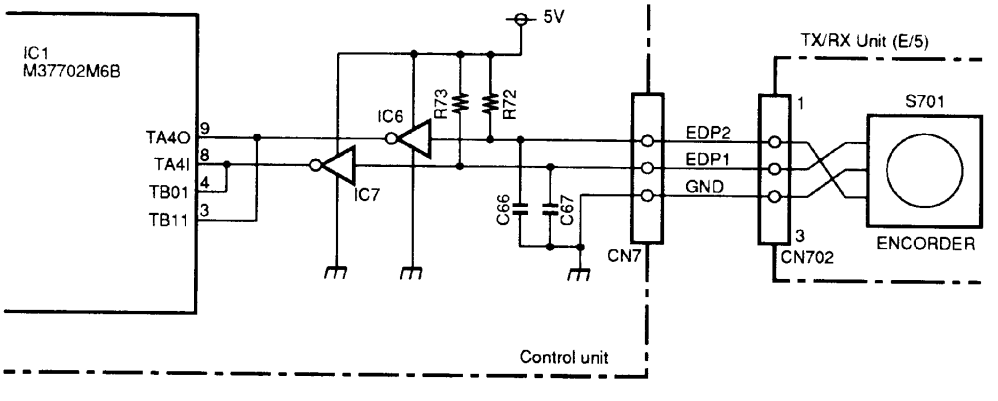

Fig. 22 Encoder circuit

CIRCUIT DESCRIPTION

8. Busy signal

The port level is monitored and BUSY is displayed in receive mode, and the busy signal is stopped during scanning.

9. Beep

The beep signal is generated using the timer in the CPU.

The menu enable data (beep on/off, mode beep, warning Morse) is recognized, and the necessary code is output.

A dot is about 40 ms, a dash about 120 ms. The oscillation frequency is about 1.4 kHz.

10. Subtone

The subtone frequency is converted from digital to analog with a ladder resistor, and the pseudo-sine wave, including 1750 Hz tone, is output. (Fig. 23)

11. CTCSS input/output
(When optional TSU-8 is connected.)

Data to the CTCSS is output from P06 (clock), P07 (data), and P53 (enable) of the microprocessor. When the power is on, connection is checked by P53. If the CTCSS unit (TSU-8) is not connected, the CTCSS does not turn on.

When the CTCSS unit detects a matching tone, a low signal is input to P52 of the microprocessor to open the squelch.

12. DTMF input/output

DTMF data is output from P30 to P33 of the microprocessor. When P42 of the microprocessor is high, data is output to encoder IC8 (TC35219F) from P30 to P33, and the DTMF tone corresponding to each data from the TONE pin of IC8.

The tone passing through analog switch IC11 (XRU4066BCF) is input to decoder IC9 (LC7385M).

When a valid tone is detected, the STD pin goes high, and P40 of the microprocessor is enabled. Data is input to P30 to P33, and the microprocessor checks whether it matches the set DTSS code.

The input from the DTMF microphone is read and controlled by switching IC9 input by Q1 and the microprocessor.

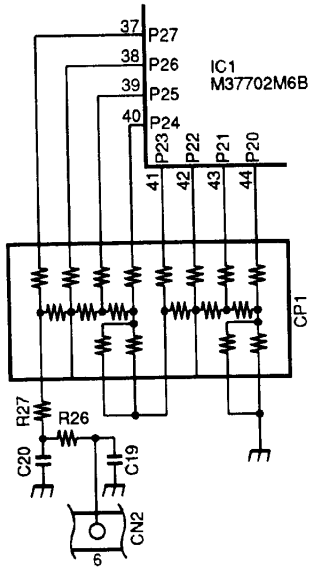

Fig. 23 Subtone circuit

CIRCUIT DESCRIPTION

Menu mode

- **Outline of function**

There are two menu modes: A and B.

- **Functions**

1. Menu mode A

In menu mode A, the frequently-used items are set and changed.

Contents of menu mode A

No.	Description	State (display)	Initial state
00	Dimmer change	OFF/d1/d2/d3/d4	d2
01	CW delay time switching	100 - 1800	600
02	CW pitch frequency change	400 - 1000	800
03	Program scan busy stop setting	ON/OFF	ON
04	Busy scan time operate/carrier operate switching	0/1	0
05	All memory scan setting	ON/OFF	OFF
06	Click encoder step frequency switching (SSB/CW)	See instruction manual.	10kHz
07	Click encoder step frequency switching (FM)	See instruction manual.	20kHz
08	AF volume setting	H/L	H

2. Menu mode B

In menu mode B, the items are not changed once they are set.

Contents of menu mode B

No.	Description	State (display)	Initial state
50	Beep tone	ON/OFF	ON
51	Mode Morse setting	ON/OFF	ON
52	Warning Morse setting	ON/OFF	ON
53	Repeater subtone frequency setting	67 - 250.3Hz	88.5Hz
54	Meter peak hold	ON/OFF	ON
55	Standard memory channel frequency temporary change	ON/OFF	OFF
56	Program scan hold function	ON/OFF	OFF
57	RIT frequency variable range 1.1 kHz/2.2 kHz change	1.1kHz/2.2kHz	1.1kHz
58	Automatic power off	ON/OFF	OFF
59	TOT setting	3/5/10/20/30	OFF
60	FM microphone sensitivity change	H/L	L
61	SSB microphone gain control setting	ON/OFF	ON
62	SSB microphone gain setting	-6/-3/0/3/6	0dB
63	Paging auto cancel function setting	ON/OFF	OFF
64	Open paging setting	ON/OFF	OFF
65	DTSS delay setting	See instruction manual.	350mS
66	S meter squelch setting	ON/OFF	OFF
67	S meter squelch delay setting	See instruction manual.	500
68	Free encoder lock setting	OFF/F3/ALL	OFF
69	Key lock setting	ON/OFF	OFF
70	MIC PF1 key setting	00 - 99	83 (Menu start)
71	MIC PF2 key setting	00 - 99	33(MR)
72	MIC PF3 key setting	00 - 99	20(A/B)
73	MIC PF4 key setting	00 - 99	24(CALL)
74	Main unit PF4 key setting	00 - 99	85(VOICE)
75	Memory mode frequency display setting	ON/OFF	ON
76	Frequency transverter display setting	See instruction manual.	OFF
77	High-speed packet mode setting	ON/OFF	OFF
78	Auto shift setting	ON/OFF	OFF

CIRCUIT DESCRIPTION

- **PF key functions**

Three kinds of functions (panel function, menu A, B function, and non-panel function) are assigned to the four PF keys on the microphone. To assign a function to a key, specify the number in the following table using the UP/DOWN switch in the order of 67 to 70 (PF1 to PF4) on the menu B mode. The PF keys are named PF1, PF2, PF3, and PF4 from the left as viewed from the front of the optional microphone.

PF key settings

No.	Menu A function
00	Menu 00
01	Menu 01
02	Menu 02
03	Menu 03
04	Menu 04
05	Menu 05
06	Menu 06
07	Menu 07
08	Menu 08

No.	Panel key function
20	A/B (VFO)
21	AIP
22	AUTO/FM
23	BELL (T.ALT)
24	CALL
25	CLR
26	CODE
27	DTSS
28	F
29	F.LOCK
30	LOW
31	MHz
32	M.IN
33	MR
34	M>V
35	NB
36	PROC
37	REV
38	RIT
39	SCAN
40	SHIFT
41	SSB/CW
42	TONE

No.	Menu B function
50	Menu 50
51	Menu 51
52	Menu 52
53	Menu 53
54	Menu 54
55	Menu 55
56	Menu 56
57	Menu 57
58	Menu 58
59	Menu 59
60	Menu 60
61	Menu 61
62	Menu 62
63	Menu 63
64	Menu 64
65	Menu 65
66	Menu 66
67	Menu 67
68	Menu 68
69	Menu 69
75	Menu 75
77	Menu 77
78	Menu 78

No.	Special function
80	AF MUTE
81	AF ATT
82	MONITOR
83	Menu start
84	ENT
85	VOICE
86	TF-SET
87	ΔF
99	OFF

Initial values:

Main unit PF = VOICE
PF1 = Menu start
PF2 = MR
PF3 = A/B (VFO)
PF4 = CALL

SEMICONDUCTOR DATA

CPU: M37702M6B-FP (Control unit IC1)

• **Block diagram**

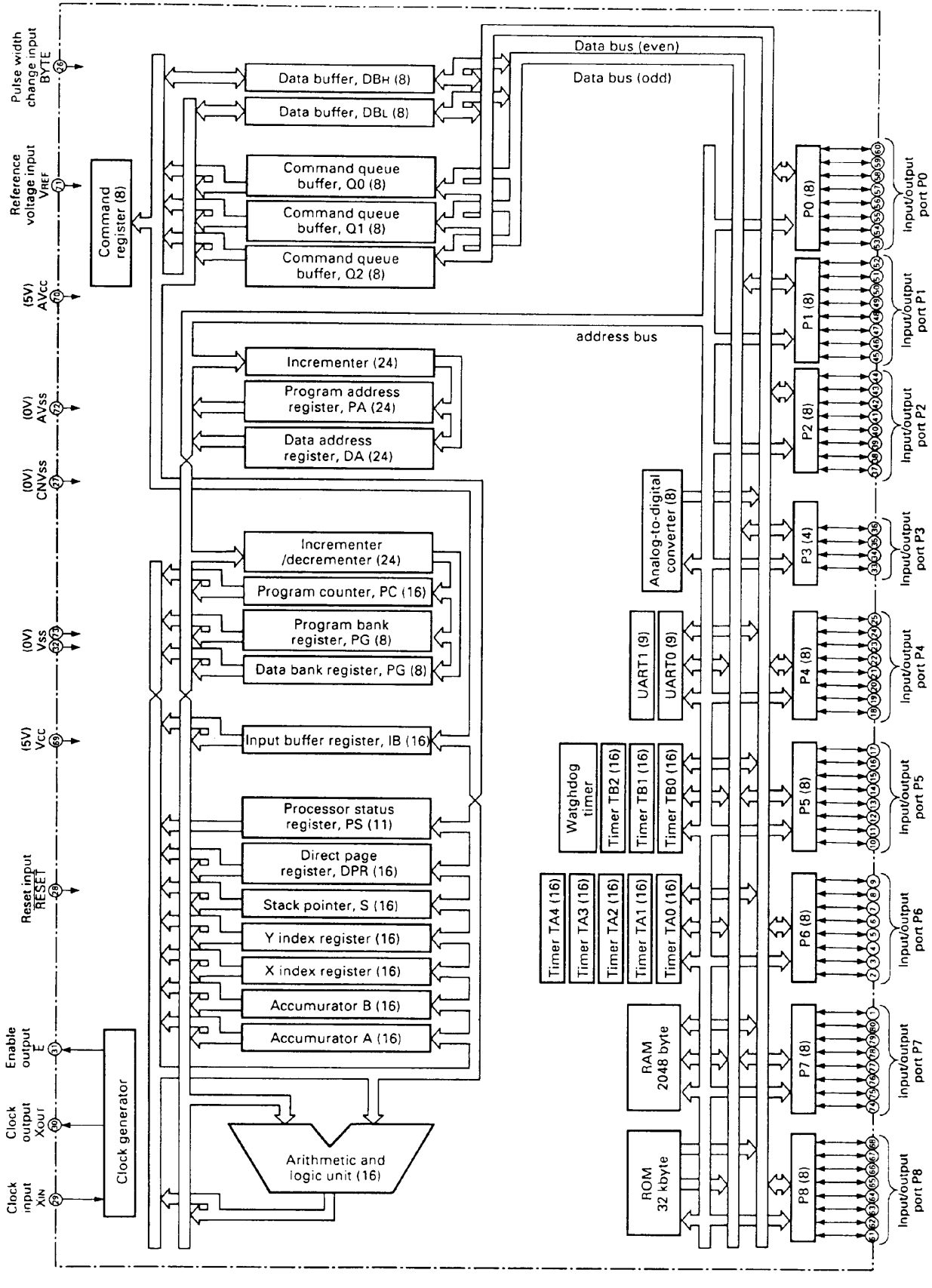

SEMICONDUCTOR DATA

• **Functions of pins**

Pin No.	Pin name	Signal name	I/O	Function	Condition for being active	H/L
1	AN0	KAD	I	Switch AD input	When switch is on (voltage change)	
2	P67	CKS	O	CKY control signal	In transmit mode	H
3	TB1IN	EDP2	I	Encoder pulse	Interrupt ↑↓	
4	TB0IN	EDP1	I			
5	P64	BOVR	I	Overvoltage protection input	When overvoltage occurs	L
6	INT1	BKC	I	Backup Vcc detection	When backup is requested	L
7	P62	TXS	O	TX/RX control	TX	L
8	TA4IN	EDP1	I	Encoder pulse	90 degrees behind EDP2 when the encoder is turned clockwise	
9	TA4OUT	EDP2	I			
10	P57	PSW	O	Power (SB) control	When the power is on	H
11	P56	LOA	O	ON AIR LED control	In transmit mode	H
12	P55	LBY	O	BUSY LED control	When busy	H
13	P54	MRD	I	NKB judgement	When NKB is connected	H
14	P53	ET	I/O	TSU-8 judgement/LATCH	TSU-8 connection/↓ LATCH	L
15	P52	SDO	I	CTCSS detection	CTCSS tone match	L
16	P51	SBSY	I	VS-2 control	When voice is output	L
17	P50	BEEP	O	Beep pulse		
18	P47	DCDC	O	Decoder output		
19	P46	DCDB	O			
20	P45	DCDA	O			
21	P44	STD	I	DTMF detection	Signal detection	H
22	P43	C2	O	Tone selection	Single tone output	L
23	P42	TD	O	Tone control	Tone stop	L
24	P41	RDS	O	DTMF switching	DTMF microphone	H
25	P40	TOE	O	7385 data bus control	Data bus (normally high impedance)	H
26	BYTE		I	External bus width specification	Single chip	L
27	CNVss		I	CPU operation mode specification	Single chip	L
28	RESET	RES	I	CPU reset	When reset	L
29	XIN		I	System clock		
30	XOUT		O			
31	E	NC				
32	Vss		–	GND		
33	P33	D4	I/O	DTMF data bus		
34	P32	D3	I/O			
35	P31	D2	I/O			
36	P30	D1	I/O			
37	P27	DA7	O	D/A data	Single tone output	
38	P26	DA6	O			
39	P25	DA5	O			
40	P24	DA4	O			
41	P23	DA3	O			
42	P22	DA2	O			
43	P21	DA1	O			
44	P20	DA0	O			
45	P17	S5B	O	Power (5 V) control	Power on	L
46	P16	EDI	I	EEPROM data output/busy input	When busy (normally high impedance)	L

SEMICONDUCTOR DATA

Pin No.	Pin name	Signal name	I/O	Function	Condition for being active	H/L
47	P15	ECS	O	EEPROM chip select	When a chip is selected	H
48	P14	BSY	I	Signal busy	When busy	L
49	P13	KYB	I	Key input	When key is down	H
50	P12	KYS	I	Key jack input	When jack is inserted	H
51	P11	RXE	O	TX/RX control	RX	L
52	P10	NC				
53	P07	UDA	O	Serial data	Serial-to-parallel, EEPROM, VR	
54	P06	UCK	O	Serial clock	Serial-to-parallel, EEPROM, VR	
55	P05	ULK	I	Unlock signal	When unlocked	L
56	P04	PLE	O	PLL enable	Latch at a rising edge	H
57	P03	DLE2	O	DDS (LO) enable	Latch at a rising edge	H
58	P02	DLE1	O	DDS (DET) enable	Latch at a rising edge	H
59	P01	PDA	O	PLL/DDS data		
60	P00	PCK	O	PLL/DDS clock		
61	P87	PTT	I/O	PTT switch/NKB TX data	When switch is on	L
62	P86	RXD1	I	NKB RX data		
63	P85	CLK1	I/O	NKB clock		
64	CTS1	CTS1	I	Serial transmission control		L
65	TXD0	PSO	O	Panel data output		
66	RXD0	PSI	I	Panel data input		
67	P81	NC	I			L
68	CTS0	CTS0	I	Serial transmission control		L
69	Vcc		I	Power supply		
70	AVcc		I	A/D power supply		
71	V_{REF}		I	A/D reference power supply		
72	AVss		–	A/D ground		
73	Vss		–	GND		
74	AN7	NC	I			L
75	AN6	NC	I			L
76	AN5	SM	I	S meter		
77	AN4	MDN	I	MIC DWN/PF SW		
78	AN3	MUP	I	MIC UP/PF SW		
79	AN2	PWM	I	RF meter		
80	AN1	ALM	I	ALC voltage		

SEMICONDUCTOR DATA

DTMF encoder: TC35219F (Control unit IC8)

- **Pin connection diagram**

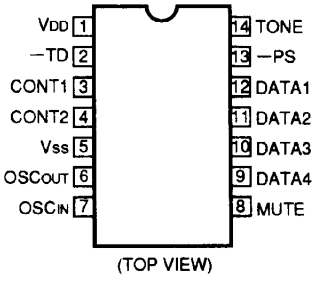

- **Block diagram**

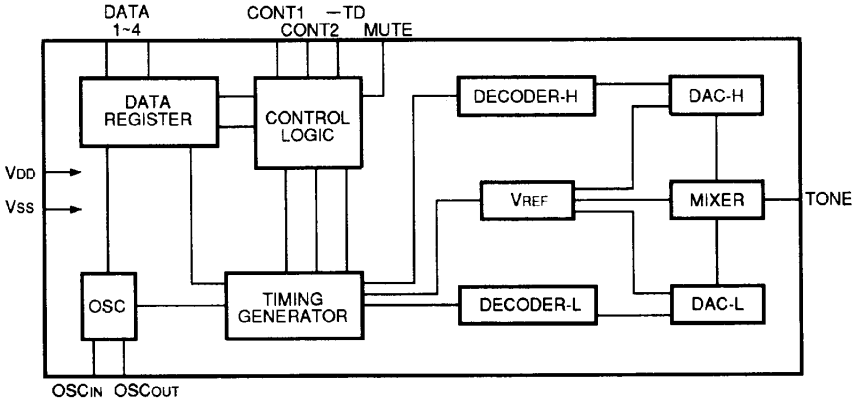

- **Functions of pins**

Pin code	Pin name	Function
1	VDD	Power supply pin
5	Vss	GND pin
2	–TD	Output system select input pin High: The MUTE and TONE Low: MUTE goes low, and TONE goes high.,
8	MUTE	Mute output pin Low: Standby state (when –TD input is low); High: Operating state regardless of whether a valid tone is output or not
14	TONE	Tone output pin Dual tone or single tone is output according to each input.
6	OSCOUT	Oscillator circuit input/output pin
7	OSCIN	
3	CONT1	Single tone output select input pin Normally high. The single tone can be output by the operation.
4	CONT2	
12	DATA1	Data input pin 4 bit data is input.
11	DATA2	
10	DATA3	
9	DATA4	
13	–PS	Oscillation control input pin High: The register latches data of DATA1 to 4, and CONT1, 2 on a rising pulse of –TD. When –TD is low, oscillation stops.

SEMICONDUCTOR DATA

DTMF decoder: LC7385M (Control unit IC9)

• **Pin connection diagram**

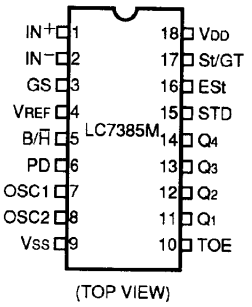

• **Block diagram**

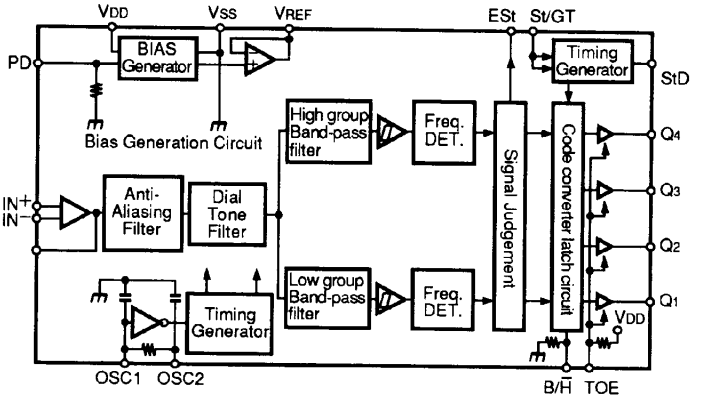

• **Functions of pins**

Pin No.	Name	I/O	Description
1	IN^+	I	Non-inverted input of input amplifier
2	IN^-	I	Inverted input of input amplifier
3	GS	O	Output of input amplifier
4	VREF	O	VDD/2 reference voltage output
5	B/$\overline{H}$	I	Select the output format for Q1 to Q4. High: Binary (2 of 8) code Low: Hexadecimal code
6	PD	I	High: Power down mode
7	OSC1	I	Connect a 3.579545 MHz crystal between these pins to form an oscillation circuit.
8	OSC2	O	
9	Vss		Power supply pin. Normally 0 V
10	TOE	I	Control the three-state output for Q1 to Q4. High: Enable Low: High impedance
11	Q1	O	Three-state receive data output
12	Q2		
13	Q3		
14	Q4		
15	StD	O	High when the valid tone pair continuation time exceeds the time set by CR
16	ESt	O	High when a valid tone pair is detected
17	St/GT	I/O	Set the guard time by connecting CR.
18	VDD		Power supply pin. Normally 5 V

SEMICONDUCTOR DATA

Electronic volume control: MB87032PF (TX-RX unit IC5)

- **Pin connection diagram**

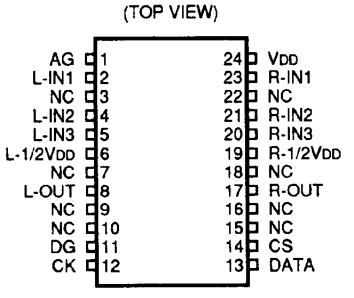

- **Block diagram**

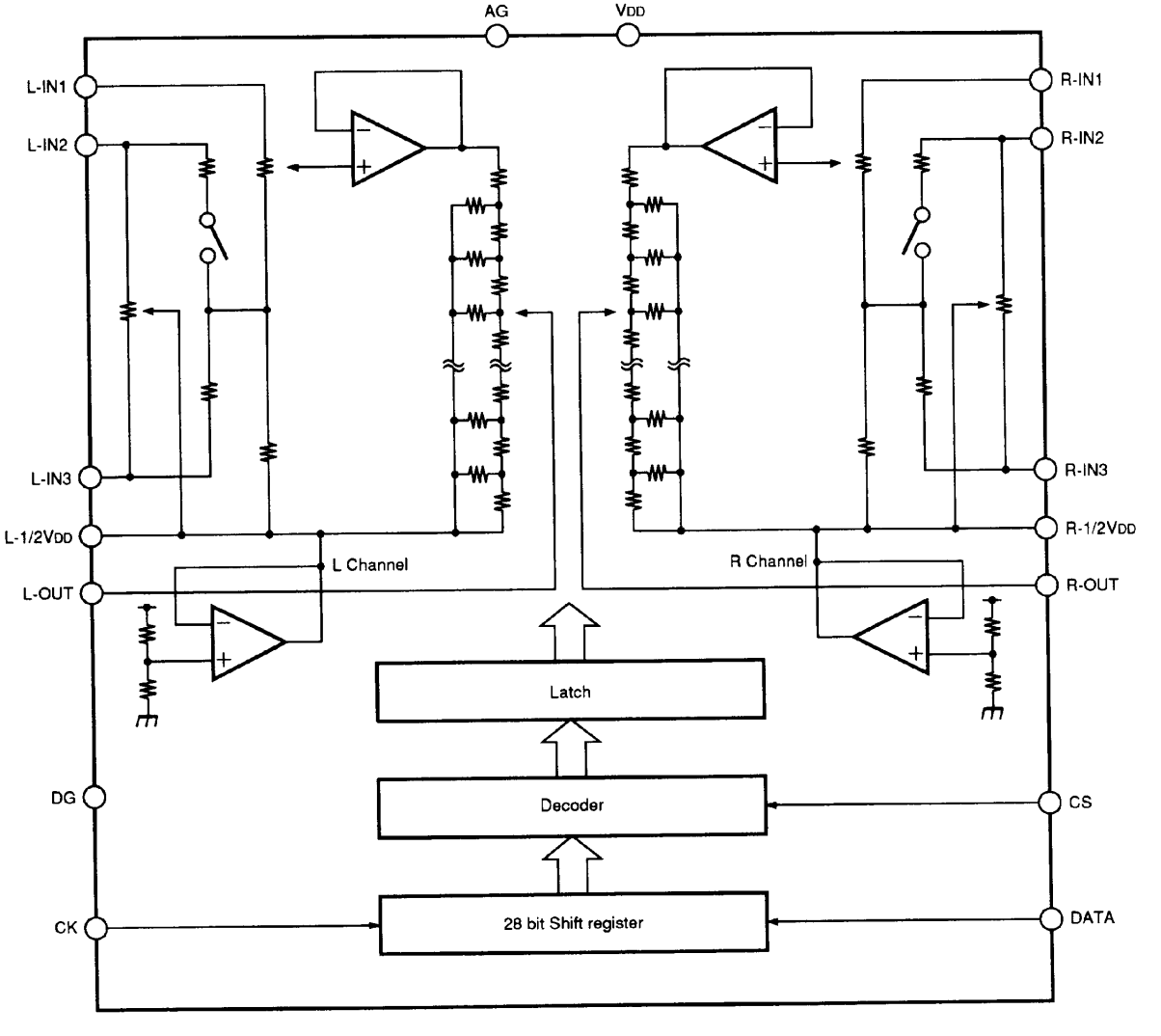

SEMICONDUCTOR DATA

• Functions of pins

Pin No.	Pin name	I/O	Function	Remarks
1	AG	–	Analog ground pin	
2	L-IN1	I	Analog input pin Drive with low impedance (100 or less).	L and R are symmetrical. Analog input
23	R-IN1	I		
4	L-IN2	I		
21	R-IN2	I		
5	L-IN3	I		
20	R-IN3	I	The volume, loudness, and tone are determined by the R1, R2, C1, C2, and C3 values (including open and short) shown in Figure 1.	
6	L-1/2VDD	O	1/2VDD output pin.	L and R are symmetrical. Analog input
19	R-1/2VDD	O		
8	L-OUT	O	Electronic volume control output pin. Since the output is high impedance, an error occurs if the impedance at the next stage is low.	
17	R-OUT	O		
11	DG	–	Digital ground pin.	
12	CK	I	Clock signal input pin Clock signal input pin for reading data from DATA pin.	TTL interface Digital input
13	DATA	I	Volume, tone, channel select data input pin. 28 bit data is input serially with clock signal.	
14	CS	I	Strobe signal Read and latch the control data read through the CK and DATA pins on a rising edge of the CS signal. If strobe is not input, the previous control data is retained.	
24	VDD	–	8V power connection pin	
–	NC	–	No connection	

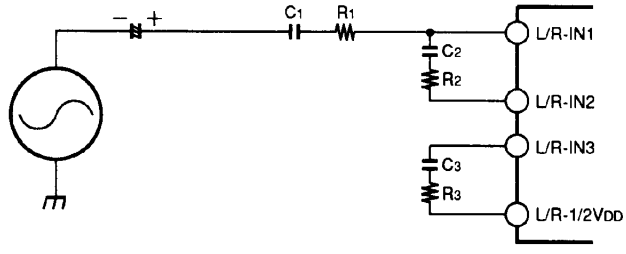

Fig. 1 Connection of each input pin of electronic volume

• Maximum rating

Item	Code	Pin No.	Standard value			Unit
			Minimum	Standard	Maximum	
Power supply voltage	VDD	24	–	–	10	V
Input voltage	VIN	All input pins	GND-0.3	–	VDD+0.3	V
Output voltage	VOUT	All input pins	GND-0.3	–	VDD+0.3	V
Storing temperature	Tstg	–	–50	–	125	°C

• Recommended operating conditions

Item	Code	Pin No.	Standard value			Unit
			Minimum	Standard	Maximum	
Power supply voltage	VDD	24	6	8	10	V
Digital input voltage	VDI	12,13,14	0	–	VDD	V
Analog input voltage	VAI	23	–	1	1.4	Vrms
Operating temperature	Ta	–	0	–	70	°C

DESCRIPTION OF COMPONENTS

X57-4510-00, -11 TX-RX unit (A/5 IF)

Component No.	Use/function	Operation/condition/compatibility
IC1	HIC	NB
IC2	HIC	SSB, CW detection, AGC voltage output
IC3	HIC	FM detection, noise squelch, FM S meter
IC4	Analog switch	Switching of detection output and S meter output between FM and other mode
IC5	Electronic volume control	Right channel: Transmission (microphone gain); Left channel: Reception (AF volume)
IC6	AF amplifier	
IC7	Serial-to-parallel conversion	
IC8	Analog switch	Squelch setting
IC9	Operational amplifier	RF AGC, SSB, CW S meter
IC10	Microphone amplifier	SSB, FM common/speech processor
IC11	Serial-to-parallel conversion	
IC12	HIC	FM microphone amplifier
IC13	Analog switch	MIC signal switching
IC14	Balanced modulator	SSB modulation
Q1	IF amplifier	Receive operation
Q2	Switching	NB gate
Q3	Buffer amplifier	NB HIC (IC1) input
Q5	Switching	Squelch hysterisis
Q6	Amplifier	Receive audio signal
Q7	Switching	AF mute, squelch
Q8	Switching	AF level down (-6 dB)
Q10	Switching	AF mute, squelch
Q11	Switching	On for SSB, CW
Q12	Switching	On for FM
Q13	Switching	On for SSB
Q14	Switching	On for CW
Q15	Switching	Squelch setting
Q16	Switching	On when transmitting FM (frequency modulation circuit power switch)
Q17	AGC time-constant switching	On for SSB
Q18	Crystal oscillator circuit	For frequency modulation
Q19	Buffer amplifier	Frequency modulation circuit output
Q20	Switching	On: 9600 bps (PK96 "high")
Q21	Amplifier	Microphone amplifier output detection
Q22	Switching	On: PROC on
Q23	Switching	Microphone mute (on when DTMF is sent or received)
Q24	Switching	PROC on (microphone amplifier gain switching)
Q25	Amplifier	Microphone amplifier output
Q26	Switching	9600 bps on/PKS low off
Q27	Switching	Off when PKS is low
Q28	IF amplifier	Operates when transmitting (ALC)
Q29	Switching	On when transmitting
Q30	Relay driver	On when Q29 is on
Q31	Switching	On: Key down
Q32	Amplifier	PR9 (FM detection output without squelch control)

DESCRIPTION OF COMPONENTS

Component No.	Use/function	Operation/condition/compatibility
Q33	Amplifier	PR1 (demodulated output with squelch control)
Q34	Switching	On when PKS is low
Q35	Switching	On when PKS is low and Q36 is off
Q36	Switching	On when PKD input is excessive (4 Vp-p)
Q37	Switching	On when squelch is closed
Q38	Switching	RD mute. On when transmitting
Q39	Oscillator	Sidetone generation
Q40	Ripple filter	AF amplifier power supply
D1	Reverse flow prevention	
D2	Reverse flow prevention	MRD input protection
D3, 4	Switching	Crystal filter transmission/reception switching (operates in SSB and CW)
D5, 6	Switching	Crystal filter pass prevention (operates in FM)
D7	Varicap diode	Frequency modulation
D8	Voltage stabilization	5V
D9	Switching	RXE and BSY OR circuit
D10	Reverse flow prevention	
D11	Switching	PTT and PKS OR circuit
D12	Switching	SSB, SW mode signal OR circuit
D13, 14	Reverse flow prevention	
D15	Detection	Microphone amplifier output detection, PROC control
D16	Switching	PTT change signal and mute OR circuit
D17	Switching	PTT and mute OR circuit
D18	Switching	PK96 and PKS OR circuit
D19	Reverse flow prevention	
D20	Relay surge absorption	
D21	Reverse flow prevention	
D22	Switching	KYS and sidetone generator power supply OR circuit
D23	Detection	PKD
D24	Reverse flow prevention	
D25	Temperature compensation	
D26	Switching	
D27	Reverse flow prevention	
D28	Switching (Reverse flow prevention)	
IC201	Mixer	1: 11.321-11.833 MHz output; 2: 10.24 MHz input; 5: 1.081-1.593 MHz input
IC202	Mixer	1: 103.481-103.993 MHz output; 2: 92.16 MHz input; 5: 11.321-11.833 MHz input
IC203	Mixer	1: 10.695 MHz output; 2: 0.455 MHz input; 5: 10.24MHz input
IC204	PLL	2, 3, 4: Divide ratio setting input; 5: 10.24 MHz input; 7: Lock voltage output, 8: Unlock output; High: UL; 10: 284.672-294.912 10: 284.672-294.912 MHz input
IC205	Three-pin regulator	Constant-voltage 8 V output
IC206	Three-pin regulator	Constant-voltage 5 V output
Q201	Buffer amplifier	10.24 MHz
Q202	Double circuit	10.24 MHz * 2
Q203	Amplifier	20.48 MHz, DDS (A201.202) CLK input
Q204	Buffer amplifier	10.24 MHz, mixer (IC203) input
Q206	Amplifier	10.695 MHz
Q207	Triple circuit	10.24 MHz * 3
Q208	Amplifier	LO2 (30.72 MHz) output

DESCRIPTION OF COMPONENTS

Component No.	Use/function	Operation/condition/compatibility
Q209	Triple circuit	30.72 MHz * 3
Q210	Buffer amplifier	10.24 MHz, mixer (IC201) input
Q211	Amplifier	103.481-103.993 MHz, mixer (D201) input
Q212, 213	Amplifier	284.672-294.912 MHz, PLL (IC204) input
Q214	Amplifier	VCO (388.585-398.585 MHz) output
Q215	Amplifier	388.585-398.585 MHz, mixer (D201) input
Q216	Amplifier	LO1 (388.585-398.585 MHz) output
Q217-Q219	Active low-pass filter	PLL
Q220	Switching	On: Unlock
D201	Mixer	IN1: 103.481-103.993 MHz; IN2: 388.585-398.585 MHz; OUT: 284.672-294.912 MHz

DESCRIPTION OF COMPONENTS

X57-4510-00, -11 TX-RX unit (B/5 RF)

Component No.	Use/function	Operation/condition/compatibility
IC401	Operational amplifier	ALC, power meter
Q401	RF amplifier	Operates when receiving (435 MHz)
Q402	RF amplifier	Operates when receiving
Q403	Switching	On when AIP is on
Q405	TX IF gain switching	On: High power
Q406	RX first mixer	IN: 430-440MHz; OUT: 41.415 MHz; LO1: 388.585-398.585 MHz
Q408	RX second mixer	IN: 41.415 MHz; OUT: 10.695 MHz; LO2: 30.72 MHz
Q409, 410	TX first mixer	IN: 10.695 MHz; OUT: 41.415 MHz; LO2: 30.72 MHz
Q411	IF amplifier	Operates when transmitting (ALC)
Q412, 413	RF amplifier	Operates when transmitting (435 MHz)
Q414	Pre-drive amplifier	Operates when transmitting
Q415	Drive amplifier	Operates when transmitting
Q416	Key switch	On when Q428 is on
Q417, 418	High/low changeover switch	On: High power
Q419-Q421	Multivibrator	DC/DC converter (-6 V)
Q422	RXB switching	On when receiving
Q423	TXB switching	On when transmitting
Q424	Switching	On when receiving
Q425	Switching	On when transmitting
Q426	Switching	On when receiving
Q427	Switching	On when temperature rises excessively (power-down control)
Q428	Key switch	On: Key down in CW
Q429	2nd IF amplifier	Operates when transmitting (10.695 MHz)
IC402	Three-pin regulator	Constant-voltage 8 V output
D401	RF amplifier protection	
D402, 403	Switching	MCF-transmission/reception switching
D404	Switching	LO1 transmission/reception switching
D405	Voltage stabilization	−0.6 V
D406	Switching	LO2 transmission/reception switching
D408	TX second mixer	IN: 41.415 MHz; OUT: 430-440 MHz; LO1: 388.585-398.585 MHz
D409	Rectification	ALC voltage
D411	Reverse flow prevention	
D412	Double-voltage rectification	
D414	Voltage stabilization	−6 V
D416	Temperature compensation	
D417	Switching	BOVR and PSW OR circuit
D418	Reverse flow prevention	
D419	Voltage shift	

DESCRIPTION OF COMPONENTS

X57-4510-00, -11 TX-RX unit (C/5 FINAL)

Component No.	Use/function	Operation/condition/compatibility
Q602	Power switch control	On when Q608 is off and PSW is high
Q603	Power switch	On when Q602 is on
Q604-606	DB AVR	12 V output when transmitting
Q607	SWR protection control	
Q608	Switching	On when over-voltage occurs
D601, 604	Antenna switch	On when transmitting
D602	Protection diode	Power supply reverse connection prevention
D603	DB AVR temperature compensation	
D605, 606	RF power detection	
D607	Surge voltage absorption	Fan motor
D608	Surge voltage absorption	+B line
D609	DC over-voltage detection	
D610	Reverse flow prevention	
IC601	Drive amplifier	
IC602	Final amplifier	

X57-4080-00 VCO

Component No.	Use/function	Operation/condition/compatibility
Q1	VCO	
Q2	Buffer amplifier	VCO output, 388.585-398.585 MHz
D1	Varicap diode	

X57-4020-00 FAN

Component No.	Use/function	Operation/condition/compatibility
IC1	Comparator	Fan control
Q1	Switching	On when the fan runs
Q2	Fan motor drive	On when transmitting
Q3	Fan motor drive	On when the temperature rises
D1	Switching	OR circuit

DESCRIPTION OF COMPONENTS

X53-3510-11, 3512-71 CONTROL unit

Component No.	Use/function	Operation/condition/compatibility
IC1	CPU	See circuit description and semiconductor data.
IC2	Reset	When the power is on
IC3	EEPROM	4K byte
IC4, 5	Serial data inverter buffer	When the control unit communicates with the LCD assembly
IC6, 7	Encoder pulse waveform shaping	When the encoder is turned
IC8	DTMF encoder	See circuit description.
IC9	DTMF decoder	See circuit description.
IC10	3-to 8-line decoder	Serial-to-parallel conversion
IC11	Analog switch	DTMF receiver
IC12	Three-pin regulator	Constant-voltage 6-V output
Q1	Switching	Switch DTMF signal between dual and single tones.
Q2, 3	Switching	Destination judgement
Q4, 5	Switching	ON AIR LED, BUSY LED lighting control
Q6	Switching	Unit 5 V control
Q7	Amplifier	DTMF monitor
Q8, 9	Switching	Backup judgement
D1	Switching (Reverse flow prevention)	CPU power supply OR circuit
D3, 4, 5	Protection diode	Input port protection
D9, 10, 11, 15	Switching	Destination selection
D16, 17	Reverse flow prevention	
D18	LED	Lights when busy (green).
D19	LED	Lights when on air (red).
D20	Reverse flow prevention	
D21	Voltage shift	Backup detection

PARTS LIST

* New Parts
Parts without Parts No. are not supplied.
Les articles non mentionnes dans le Parts No. ne sont pas fournis.
Teile ohne Parts No. werden nicht geliefert.

TM-455A/E

Ref. No. 参照番号	Address 位置	New Parts 新	Parts No. 部品番号	Description 部品名／規格	Destination 仕向	Remarks 備考
			TM-455A/E			
1	1B	*	A01-2077-02	METALLIC CABINET(UPPER)		
2	3A	*	A01-2078-02	METALLIC CABINET(LOWER)		
3	2A	*	A22-0786-13	SUB PANEL		
700	3A	*	A62-0264-03	PANEL ASSY(BASE)		
5	3A	*	A62-0265-03	PANEL (BASE)		
701	3C	*	A62-0297-13	PANEL ASSY(455A)	K	
701	3C	*	A62-0298-13	PANEL ASSY(455E)	E	
7	3D	*	A62-0300-03	PANEL (455A)	K	
7	3D	*	A62-0301-03	PANEL (455E)	E	
702	1D	*	A82-0015-02	BACK PANEL		
10	3C	*	B10-1198-04	FRONT GLASS		
11	2A	*	B11-1090-04	FILTER		
13	1D		B41-0696-04	CAUTION LABEL		
14	1B		B42-2455-04	LABEL(M4x8MAX)		
703	2B		B42-3343-04	LABEL(S/NO)		
16	-		B42-3394-14	LABEL (FCC)	K	
17	-		B42-5526-04	LABEL (HYATT)	K	
19	-		B46-0310-03	USER & WARRNTY CARD	E	
20	-	*	B46-0410-30	USER & WARRNTY CARD	K	
21	-	*	B62-0415-10	INSTRUCTION MANUAL		
22	-	*	B62-0416-00	INSTRUCTION MANUAL	E	
23	-	*	B62-0417-00	INSTRUCTION MANUAL	E	
24	2B	*	B72-0633-14	MODEL NAME PLATE(TM-455A)	K	
24	2B	*	B72-0635-04	MODEL NAME PLATE(TM-455E)	E	
26	1B		E04-0167-05	RF COAXIAL CABLE RECEPTACLE(M)	K	
26	1B		E04-0170-05	RF COAXIAL CABLE RECEPTACLE(N)	E	
28	1B		E23-0677-04	TERMINAL(GND)		
29	-		E30-2111-05	DC POWER CODE :ACSY		
-			E30-3006-08	CURL CORD ASSY (MIC)		
31	1B	*	E30-3187-05	DC POWER CODE(BASE)		
32	1D	*	E30-3197-05	CONNECTING WIRE(SEP-BASE)		
33	3B		E31-6118-05	CONNECTING WIRE(IF-RF)		
34	1A,2B	*	E33-1975-15	FINISHED WIRE SET		
35	3B	*	E37-0172-05	FLAT CABLE(CONT-IF)		
36	3B		E37-0197-05	CONNECTING WIRE(IF-RF)		
37	1A		E37-0225-05	CONNECTING WIRE(RF-FIN)		
38	1A,3B		E37-0234-05	FLAT CABLE		
39	3B	*	E37-0420-05	FLAT CABLE(IF-RF)		
40	1A	*	E37-0446-05	CONNECTING WIRE(SP)		
41	1A	*	E37-0447-05	CONNECTING WIRE(RF-FIN)		
42	3A,1D		F07-1345-04	COVER (SEP PANEL)		
-		*	F07-1389-04	COVER		
44	3B		F09-0438-05	FAN		
704	1B	*	F10-2090-03	SHIELDING PLATE(FIN)		
46	2B		F20-1088-04	INSULATING BOARD(LITHIUM)		
47	1B		F51-0017-05	FUSE (15A)		
47	-		F51-0017-05	FUSE (15A) :ACSY		
-			F51-0018-05	FUSE (20A···DC CORD ASSY)		
49	1D		G01-0864-14	LEAF SPRING(RELEASE)		
50	2A		G02-0550-04	GND SPRING(VCO)		
51	1A		G02-0721-14	FLAT SPRING(FIN)		
52	3B	*	G02-0752-04	FLAT SPRING(TX-RX)		

L:Scandinavia K:USA P:Canada
Y:PX(Far East, Hawaii) T:England E:Europe
Y:AAFES(Europe) X:Australia M:Other Areas

⚠ indicates safety critical components.

PARTS LIST

* New Parts
Parts without Parts No. are not supplied.
Les articles non mentionnes dans le Parts No. ne sont pas fournis.
Teile ohne Parts No. werden nicht geliefert.

TM-455A/E

Ref. No. 参照番号	Address 位置	New Parts 新	Parts No. 部品番号	Description 部品名／規格	Destination 仕向	Remarks 備考
53	1A	*	G02-0753-04	FLAT SPRING(RF)		
54	2B	*	G02-0754-04	FLAT SPRING(DC)		
55	1B	*	G02-0758-04	FLAT SPRING		
56	2C		G09-0405-05	KNOB SPRING(M.CH)		
57	1B		G10-0656-04	AUXILIARY PART(SP)		
58	3A,3B		G10-0692-04	AUXILIARY PART(SIDE)		
59	1B		G10-0700-04	AUXILIARY PART(UPPER CASE)		
60	3A,3B		G10-0708-04	AUXILIARY PART(SIDE)		
61	2A	*	G10-0756-04	AUXILIARY PART(SP)		
62	3B		G11-0706-04	AUXILIARY PART(DDS/VS2)		
-			G11-0714-04	AUXILIARY PART		
64	3D	*	G13-1399-04	FORMED PLATE		
65	3D	*	G13-1400-04	FORMED PLATE		
66	2A	*	G13-1401-04	FORMED PLATE		
67	2D	*	G13-1421-04	FORMED PLATE		
68	3D	*	G13-1424-04	FORMED PLATE		
69	2B	*	G13-1434-14	FORMED PLATE(FAN)		
70	2B	*	G13-1435-04	FORMED PLATE(CABLE)		
71	1B	*	G13-1444-04	FORMED PLATE(SHIELD)		
72	-	*	H02-0606-04	INNER PACKING CASE		
73	-	*	H10-2781-02	POLYSTYRENE FOAMED FIXTURE(F)		
74	-	*	H10-2782-02	POLYSTYRENE FOAMED FIXTURE(R)		
75	-	*	H13-0922-04	CARTON BOARD		
76	-	*	H13-0923-04	CARTON BOARD		
77	-	*	H13-0941-04	CARTON BOARD	K	
78	-		H25-0079-04	BAG (200X200)		
79	-		H25-0747-04	BAG (250X250)		
80	-	*	H52-0555-04	ITEM CARTON BOX(455A)	K	
80	-	*	H52-0556-04	ITEM CARTON BOX(455E)	E	
82	3A		J02-0441-05	FOOT&INSULATION		
83	1D	*	J19-1554-04	HOLDER(RELEASE)		
84	-		J20-0319-24	HOOK :ACSY	K	
85	2B	*	J21-4438-04	HARDWARE FIXTURE(FAN)		
86	2A	*	J21-4439-04	HARDWARE FIXTURE(SP)		
87	3B	*	J21-4454-04	HARDWARE FIXTURE(VS-2)		
88	-		J29-0422-13	BRACKET :ACSY		
89	3A		K21-0793-04	KNOB (MAIN)		
90	3C		K27-3091-04	KNOB (POW)		
91	1D		K27-3119-14	KNOB (RELEASE)		
92	2C		K29-3156-04	KNOB (M.CH)		
93	3C		K29-4809-04	KNOB (AF VOL,RIT)		
94	3C		K29-4810-04	KNOB (SQL,SHIFT)		
95	3C	*	K29-4858-14	KNOB (MR)		
96	3C	*	K29-4859-14	KNOB (A/B)		
97	3C	*	K29-4860-14	KNOB (MHZ)		
98	3C	*	K29-4861-14	KNOB (RIT)		
99	3D	*	K29-4862-04	KNOB (F)		
100	3C	*	K29-4864-14	KNOB (M.IN)		
101	3C	*	K29-4865-14	KNOB (M>V)		
102	3C	*	K29-4866-14	KNOB (SCAN)		
103	3C	*	K29-4867-14	KNOB (CLR)		
104	3D	*	K29-4868-04	KNOB (TONE)		
105	3D	*	K29-4869-04	KNOB (REV)		
106	3C	*	K29-4870-04	KNOB (MODE)		

L:Scandinavia **K:**USA **P:**Canada
Y:PX(Far East, Hawaii) **T:**England **E:**Europe
Y:AAFES(Europe) **X:**Australia **M:**Other Areas

⚠ indicates safety critical components.

TM-455A/E

PARTS LIST

* New Parts
Parts without Parts No. are not supplied.
Les articles non mentionnes dans le Parts No. ne sont pas fournis.
Teile ohne Parts No. werden nicht geliefert.

TM-455A/E
CONTROL UNIT (X53-351X-XX)

Ref. No. 参照番号	Address 位置	New Parts 新	Parts No. 部品番号	Description 部品名／規格	Destination 仕向	Remarks 備考
107	3A	*	K29-4871-04	KNOB (FUNCTION)		
108	3D	*	K29-4916-04	KNOB (SHIFT)		
A	1A		N09-2021-05	SCREW (M4x10)		
B	1A,1B		N09-2077-05	SCREW (M3x8)		
C	2B		N15-1040-46	FLAT WASHER(GND)		
D	2A,2B		N32-2606-46	FLAT HEAD MACHIN SCREW		
E	1B,3A		N33-2606-45	OVAL HEAD MACHIN SCREW(CASE)		
F	3B		N35-3018-46	BINDING HEAD MACHINE SCREW(FAN		
G	1B		N35-4008-46	BINDING HEAD MACHINE SCREW(GND		
109	-		N46-3010-46	PAN HEAD TAPPING SCREW :ACSY	K	
H	1D		N78-2030-45	PAN HEAD TAPPING SCREW(RELEASE		
I	1D		N80-2008-45	PAN HEAD TAPPING SCREW		
J	2B,3B		N87-2606-46	BRAZIER HEAD TAPTITE SCREW		
K	1B		N87-3008-46	BRAZIER HEAD TAPTITE SCREW(ANT		
L	2A,3A		N90-3006-45	TP HEAD MACHIN SCREW (PANEL)		
110	-	*	N99-0383-05	SCREW SET :ACSY		
SP	1A		T07-0241-05	LOUDSPEAKER(8ohm 1W)		
MIC	-		T91-0397-05	MICROPHONE (DTMF) :ACSY	K	
MIC	-		T91-0398-05	MICROPHONE :ACSY	E	
111	-		W01-0414-04	SPANNER :ACSY		
705	2A,2B	*	X53-3510-11	CONTROL UNIT(A/2,B/2)	K	
705	2A,2B	*	X53-3512-71	CONTROL UNIT(A/2,B/2)	E	
706	1A,2A	*	X57-4510-00	TX-RX UNIT (A/5···E/5)	E	
706	2B,3B	*	X57-4510-11	TX-RX UNIT (A/5···E/5)	K	
711	2C	*	B38-0701-25	LCD ASSY		
CONTROL UNIT (X53-351X-XX) 0-11: K, 2-71: E						
C1 -3			C92-0009-05	CHIP TAN 4.7UF 10WV		
C4			CK73EF1H104Z	CHIP C 0.1UF Z		
C5			CK73FB1E103K	CHIP C 0.01UF K		
C6			CK73FB1H332K	CHIP C 3300PF K		
C8			CK73FB1E103K	CHIP C 0.01UF K		
C10			CK73FB1E103K	CHIP C 0.01UF K		
C12			CK73FB1H102K	CHIP C 1000PF K		
C15 -18			CK73FB1H102K	CHIP C 1000PF K		
C23			CK73FB1E102K	CHIP C 1000PF K		
C25 ,26			CK73FB1E102K	CHIP C 1000PF K		
C27			CC73FCH1H151J	CHIP C 150PF J		
C28 ,29			CK73FF1E104Z	CHIP C 0.1UF Z		
C30			CK73FF1C105Z	CHIP C 1.0UF Z		
C31			CK73FF1E104Z	CHIP C 0.1UF Z		
C32 ,33			CC73FCH1H330J	CHIP C 33PF J		
C39 -57			CK73FB1H102K	CHIP C 1000PF K		
C58			CK73FB1E103K	CHIP C 0.01UF K		
C61			CK73FB1E103K	CHIP C 0.01UF K		
C63			CK73FB1H102K	CHIP C 1000PF K		
C65			CK73FB1E103K	CHIP C 0.01UF K		
C66 -68			CK73FB1H102K	CHIP C 1000PF K		
C70 -72			CK73FB1H102K	CHIP C 1000PF K		
C75 -84			CK73FB1H102K	CHIP C 1000PF K		
C85 ,86			CK73FB1E103K	CHIP C 0.01UF K		
C87 ,88			CK73FB1H102K	CHIP C 1000PF K		
C89 -91			CC73FCH1H101J	CHIP C 100PF J		
C92			CK73FB1E103K	CHIP C 0.01UF K		

L:Scandinavia K:USA P:Canada
Y:PX(Far East, Hawaii) T:England E:Europe
Y:AAFES(Europe) X:Australia M:Other Areas

⚠ indicates safety critical components.

PARTS LIST

* New Parts
Parts without Parts No. are not supplied.
Les articles non mentionnes dans le Parts No. ne sont pas fournis.
Teile ohne Parts No. werden nicht geliefert.

CONTROL UNIT (X53-351X-XX)

Ref. No. 参照番号	Address 位置	New Parts 新	Parts No. 部品番号	Description 部品名／規格	Destination 仕向	Remarks 備考
C93 ,94			CC73FCH1H330J	CHIP C 33PF J		
C96 -98			CK73FB1H102K	CHIP C 1000PF K		
C99			CK73FB1E103K	CHIP C 0.01UF K		
CN1			E40-3264-05	PIN CONNECTOR FOR INSIDE(6P)		
CN2		*	E40-5384-05	PIN CONNECTOR FOR INSIDE(30P)		
CN3			E40-5618-05	PIN CONNECTOR FOR INSIDE(8P)		
CN4			E40-3262-05	PIN CONNECTOR FOR INSIDE(4P)		
CN5			E40-3263-05	PIN CONNECTOR FOR INSIDE(5P)		
CN6			E40-5477-05	PIN CONNECTOR FOR INSIDE(8P)		
CN7			E40-3261-05	PIN CONNECTOR FOR INSIDE(3P)		
CN10			E40-3249-05	PIN CONNECTOR FOR INSIDE(5P)		
L1 ,2			L40-1001-48	SMALL FIXED INDUCTOR		
L3 -7			L92-0131-05	CORE		
X1			L77-1522-05	CRYSTAL RESONATOR(7.9MHZ)		
X2			L78-0089-05	RESONATOR (480KHZ)		
X3			L78-0301-05	RESONATOR (3.5795MHZ)		
CP1			R90-0711-05	MULTI-COMP		
R1			RK73FB2A472J	CHIP R 4.7K J 1/10W		
R2			RK73FB2A273J	CHIP R 27K J 1/10W		
R3			RK73FB2A103J	CHIP R 10K J 1/10W		
R4			RK73FB2A101J	CHIP R 100 J 1/10W		
R5			RK73FB2A102J	CHIP R 1.0K J 1/10W		
R6			RK73FB2A103J	CHIP R 10K J 1/10W		
R7 ,8			RK73FB2A101J	CHIP R 100 J 1/10W		
R11			RK73FB2A221J	CHIP R 220 J 1/10W		
R12			RK73FB2A474J	CHIP R 470K J 1/10W		
R13			RK73FB2A102J	CHIP R 1.0K J 1/10W		
R14			R92-0670-05	CHIP R 0 OHM		
R15			RK73FB2A103J	CHIP R 10K J 1/10W		
R16			RK73FB2A101J	CHIP R 100 J 1/10W		
R17			RK73FB2A473J	CHIP R 47K J 1/10W		
R18			RK73FB2A103J	CHIP R 10K J 1/10W		
R19			RK73FB2A274J	CHIP R 270K J 1/10W		
R20			RK73FB2A682J	CHIP R 6.8K J 1/10W		
R22			RK73FB2A684J	CHIP R 680K J 1/10W		
R23			RK73FB2A334J	CHIP R 330K J 1/10W		
R24			RK73FB2A473J	CHIP R 47K J 1/10W		
R25			RK73FB2A474J	CHIP R 470K J 1/10W		
R26			RK73FB2A103J	CHIP R 10K J 1/10W		
R27			R92-0670-05	CHIP R 0 OHM		
R28 -31			RK73FB2A103J	CHIP R 10K J 1/10W		
R32			RK73FB2A105J	CHIP R 1.0M J 1/10W		
R33 ,34			RK73FB2A103J	CHIP R 10K J 1/10W		
R35			RK73FB2A101J	CHIP R 100 J 1/10W		
R36 -38			RK73FB2A102J	CHIP R 1.0K J 1/10W		
R39 -44			RK73FB2A101J	CHIP R 100 J 1/10W		
R45			RK73FB2A102J	CHIP R 1.0K J 1/10W		
R46 -50			RK73FB2A101J	CHIP R 100 J 1/10W		
R51 ,52			RK73FB2A103J	CHIP R 10K J 1/10W		
R53 -55			RK73FB2A101J	CHIP R 100 J 1/10W		
R56			RK73FB2A103J	CHIP R 10K J 1/10W		
R57 -59			RK73FB2A473J	CHIP R 47K J 1/10W		
R60			RK73FB2A103J	CHIP R 10K J 1/10W		
R61 -66			RK73FB2A101J	CHIP R 100 J 1/10W		

L:Scandinavia K:USA P:Canada
Y:PX(Far East, Hawaii) T:England E:Europe
Y:AAFES(Europe) X:Australia M:Other Areas

⚠ indicates safety critical components.

PARTS LIST

* New Parts
Parts without Parts No. are not supplied.
Les articles non mentionnes dans le Parts No. ne sont pas fournis.
Teile ohne Parts No. werden nicht geliefert.

CONTROL UNIT (X53-351X-XX)

Ref. No. 参照番号	Address 位置	New Parts 新	Parts No. 部品番号	Description 部品名／規格	Destination 仕向	Remarks 備考
R67 ,68			RK73FB2A473J	CHIP R 47K J 1/10W		
R69 -71			RK73FB2A103J	CHIP R 10K J 1/10W		
R72 ,73			RK73FB2A104J	CHIP R 100K J 1/10W		
R74 -77			RK73FB2A102J	CHIP R 1.0K J 1/10W		
R78 ,79			RK73FB2A101J	CHIP R 100 J 1/10W		
R80			RK73FB2A103J	CHIP R 10K J 1/10W		
R81			RK73FB2A221J	CHIP R 220 J 1/10W		
R82			RK73FB2A271J	CHIP R 270 J 1/10W		
R83			RK73FB2A101J	CHIP R 100 J 1/10W		
R84 ,85			RK73FB2A105J	CHIP R 1.0M J 1/10W		
R86			RK73FB2A123J	CHIP R 12K J 1/10W		
R87 ,88			RK73FB2A103J	CHIP R 10K J 1/10W		
R89			RK73FB2A472J	CHIP R 4.7K J 1/10W		
R90			RK73FB2A154J	CHIP R 150K J 1/10W		
R91			RK73FB2A471J	CHIP R 470 J 1/10W		
R92			RK73FB2A105J	CHIP R 1.0M J 1/10W		
R93			RK73FB2A102J	CHIP R 1.0K J 1/10W		
R94			R92-0670-05	CHIP R 0 ΩHM		
R95 ,96			RK73FB2A102J	CHIP R 1.0K J 1/10W		
R97			RK73FB2A474J	CHIP R 470K J 1/10W		
R102			RK73FB2A392J	CHIP R 3.9K J 1/10W		
R103			RK73FB2A822J	CHIP R 8.2K J 1/10W		
R104			RK73FB2A223J	CHIP R 22K J 1/10W		
R105			RK73FB2A472J	CHIP R 4.7K J 1/10W		
S1 -4			S40-1086-05	PUSH SWITCH		
D1			1SS184	DIODE		
D3 -5			RD5.1M(B2)	DIODE		
D9			LFB01	DIODE		
D10			LFB01	DIODE	K	
D11			LFB01	DIODE	E	
D15			LFB01	DIODE		
D16 ,17			LFB01	DIODE		
D18			B30-0897-05	LED		
D19			B30-2001-05	LED		
D20			1SS355	DIODE (or MA110)		
D21			RD8.2M(B2)	DIODE		
IC1		*	M37702M6B081FP	IC(MPU) or		
IC1		*	M37702M6B085FP	IC(MPU)		
IC2			M62003FP	IC		
IC3			AT93C66-10SI2.7	IC		
IC3			NM93C66LEM8	IC or		
IC4 ,5			SC14S11F	IC		
IC6 ,7			SC14S584F	IC(SCHMITT TRIGGER)or		
IC6 ,7			TC4S584F	IC(SCHMITT TRIGGER)		
IC8			TC35219F	IC		
IC9			LC7385M	IC(DTMF DECODER)		
IC10			TC74HC238AF	IC		
IC11			BU4066BCF	IC		
IC11			XRU4066BCF	IC or		
IC12			TA78L06F	IC		
Q1 -5			DTC114EK	DIGITAL TRANSISTOR		
Q6			2SA1519	TRANSISTOR		
Q7			2SC4116(Y)	TRANSISTOR		
Q8			DTA143EK	DIGITAL TRANSISTOR		

L:Scandinavia **K:**USA **P:**Canada
Y:PX(Far East, Hawaii) **T:**England **E:**Europe
Y:AAFES(Europe) **X:**Australia **M:**Other Areas

⚠ indicates safety critical components.

PARTS LIST

* New Parts
Parts without Parts No. are not supplied.
Les articles non mentionnes dans le Parts No. ne sont pas fournis.
Teile ohne Parts No. werden nicht geliefert.

CONTROL UNIT (X53-351X-XX)
TX-RX UNIT (X57-4510-XX)

Ref. No. 参照番号	Address 位置	New Parts 新	Parts No. 部品番号	Description 部品名／規格			Destination 仕向	Remarks 備考
Q9			DTC143EK	DIGITAL TRANSISTOR				
BA1	2B		W09-0599-05	LITHIUM BATTERY (3V 210mAh)				
TX-RX UNIT (X57-4510-XX) 0-00: E, 0-11: K								
C1 -5			CC73FCH1H101J	CHIP C	100PF	J		
C6 ,7			CK73FB1E103K	CHIP C	0.01UF	K		
C8			CK73FB1H102K	CHIP C	1000PF	K		
C9			CK73FB1E103K	CHIP C	0.01UF	K		
C10			CK73FB1H102K	CHIP C	1000PF	K		
C11			CC73FCH1H101J	CHIP C	100PF	J		
C12			CK73FB1H102K	CHIP C	1000PF	K		
C15			CK73FB1E103K	CHIP C	0.01UF	K		
C16			CK73FB1E393K	CHIP C	0.039UF	K		
C17 -22			CK73FB1E103K	CHIP C	0.01UF	K		
C23			CK73FB1H102K	CHIP C	1000PF	K		
C25 ,26			CK73FB1H102K	CHIP C	1000PF	K		
C27			CK73FF1E104Z	CHIP C	0.1UF	Z		
C28 -30			CK73FB1E103K	CHIP C	0.01UF	K		
C31			CC73FCH1H100D	CHIP C	10PF	D		
C32			CC73FCH1H020C	CHIP C	2.0PF	C		
C33 -40			CK73FB1E103K	CHIP C	0.01UF	K		
C44			CK73FB1E103K	CHIP C	0.01UF	K		
C45			CC73FCH1H100D	CHIP C	10PF	D		
C46			CC73FCH1H030C	CHIP C	3PF	C		
C47 -49			CK73FB1E103K	CHIP C	0.01UF	K		
C50			CK73FF1E104Z	CHIP C	0.1UF	Z		
C51			CK73FB1E103K	CHIP C	0.01UF	K		
C52			CC73FCH1H010C	CHIP C	1PF	C		
C53			CC73FUJ1H100D	CHIP C	10PF	D		
C54			CC73FCH1H101J	CHIP C	100PF	J		
C55			CC73FCH1H151J	CHIP C	150PF	J		
C56			CC73FCH1H030C	CHIP C	3PF	C		
C57 ,58			CK73FB1H472K	CHIP C	4700PF	K		
C59			C92-0004-05	ELECTRO	1.0UF	16WV		
C60 -62			CK73FB1H102K	CHIP C	1000PF	K		
C63			CK73FB1E103K	CHIP C	0.01UF	K		
C64			CE04EW1A470M	ELECTRO	47UF	10WV		
C65			CK73FB1H471K	CHIP C	470PF	K		
C66			C92-0002-05	CHIP TAN	0.22UF	35WV		
C67			CK73FF1C105Z	CHIP C	1.0UF	Z		
C68			CK73FB1E103K	CHIP C	0.01UF	K		
C69 ,70			C92-0004-05	ELECTRO	1.0UF	16WV		
C71			C92-0009-05	CHIP TAN	4.7UF	10WV		
C72			CK73FB1H102K	CHIP C	1000PF	K		
C73			C92-0004-05	ELECTRO	1.0UF	16WV		
C74			CE04EW1A470M	ELECTRO	47UF	10WV		
C75			CE04EW1C220M	ELECTRO	22UF	16WV		
C76			C92-0004-05	ELECTRO	1.0UF	16WV		
C77			CK73FF1C105Z	CHIP C	1.0UF	Z		
C78			CK73FB1E223K	CHIP C	0.022UF	K		
C79			CK73FB1H102K	CHIP C	1000PF	K		
C80 ,81			CK73FB1E103K	CHIP C	0.01UF	K		
C82			C92-0004-05	ELECTRO	1.0UF	16WV		
C83			CE04EW1C331M	ELECTRO	330UF	16WV		

L:Scandinavia K:USA P:Canada
Y:PX(Far East, Hawaii) T:England E:Europe
Y:AAFES(Europe) X:Australia M:Other Areas

⚠ indicates safety critical components.

TM-455A/E

PARTS LIST

* New Parts
Parts without Parts No. are not supplied.
Les articles non mentionnes dans le Parts No. ne sont pas fournis.
Teile ohne Parts No. werden nicht geliefert.

TX-RX UNIT (X57-4510-XX)

Ref. No. 参照番号	Address 位置	New Parts 新	Parts No. 部品番号	Description 部品名／規格			Destination 仕向	Remarks 備考
C84 ,85			CE04EW1C470M	ELECTRO	47UF	16WV		
C86		*	C90-4016-05	ELECTRO	47UF	16WV		
C87			C90-2022-05	OS	22UF	16WV		
C88			CE04EW1A471M	ELECTRO	470UF	10WV		
C89			CK73FF1E104Z	CHIP C	0.1UF	Z		
C90			CK73FB1H102K	CHIP C	1000PF	K		
C91 -95			CK73FB1E103K	CHIP C	0.01UF	K		
C96			C92-0004-05	ELECTRO	1.0UF	16WV		
C97			CK73FB1E103K	CHIP C	0.01UF	K		
C98			CK73FF1C105Z	CHIP C	1.0UF	Z		
C99			CK73FB1H222K	CHIP C	2200PF	K		
C100			CE04EW1A101M	ELECTRO	100UF	10WV		
C101			CE04EW1E4R7M	ELECTRO	4.7UF	25WV		
C102			CK73FF1C105Z	CHIP C	1.0UF	Z		
C103			CE04EW1E4R7M	ELECTRO	4.7UF	25WV		
C104			CE04EW1C100M	ELECTRO	10UF	16WV		
C105			CE04EW1E4R7M	ELECTRO	4.7UF	25WV		
C106			CK73FF1E104Z	CHIP C	0.1UF	Z		
C107,108			CK73FB1E103K	CHIP C	0.01UF	K		
C109			CK73FF1C105Z	CHIP C	1.0UF	Z		
C110			CE04EW1C100M	ELECTRO	10UF	16WV		
C111			CK73FF1C105Z	CHIP C	1.0UF	Z		
C112			CE04EW1C220M	ELECTRO	22UF	16WV		
C113			C92-0004-05	ELECTRO	1.0UF	16WV		
C114			CE04EW1A470M	ELECTRO	47UF	10WV		
C115,116			CK73FF1C105Z	CHIP C	1.0UF	Z		
C117,118			C92-0004-05	ELECTRO	1.0UF	16WV		
C119			CK73FF1C105Z	CHIP C	1.0UF	Z		
C120			CC73FCH1H050C	CHIP C	5PF	C		
C121			C92-0004-05	ELECTRO	1.0UF	16WV		
C122			CK73FB1E103K	CHIP C	0.01UF	K		
C123			CE04EW1C100M	ELECTRO	10UF	16WV		
C124-129			CK73FB1E103K	CHIP C	0.01UF	K		
C130,131			CK73FB1E103K	CHIP C	0.01UF	K		
C133,134			CK73FB1E103K	CHIP C	0.01UF	K		
C135			CK73FB1H102K	CHIP C	1000PF	K		
C136			CK73FB1E103K	CHIP C	0.01UF	K		
C137			CK73FB1H102K	CHIP C	1000PF	K		
C138			CK73FB1E103K	CHIP C	0.01UF	K		
C139			CK73FF1C105Z	CHIP C	1.0UF	Z		
C140			CK73FF1E104Z	CHIP C	0.1UF	Z		
C141			C92-0004-05	ELECTRO	1.0UF	16WV		
C142,143			CK73FF1E104Z	CHIP C	0.1UF	Z		
C144,145			CK73FF1C105Z	CHIP C	1.0UF	Z		
C146			C92-0009-05	CHIP TAN	4.7UF	10WV		
C147-151			CK73FB1H102K	CHIP C	1000PF	K		
C152			C92-0009-05	CHIP TAN	4.7UF	10WV		
C153			C92-0509-05	TANTAL	10UF	6.3WV		
C154			CK73FB1E223K	CHIP C	0.022UF	K		
C155-158			CK73FB1E123K	CHIP C	0.012UF	K		
C159-161			CK73FB1E223K	CHIP C	0.022UF	K		
C162			CK73FB1E103K	CHIP C	0.01UF	K		
C163			C92-0009-05	CHIP TAN	4.7UF	10WV		
C164-167			CK73FB1E103K	CHIP C	0.01UF	K		
C169			CK73FB1H102K	CHIP C	1000PF	K		

L:Scandinavia **K:**USA **P:**Canada
Y:PX(Far East, Hawaii) **T:**England **E:**Europe
Y:AAFES(Europe) **X:**Australia **M:**Other Areas

⚠ indicates safety critical components.

PARTS LIST

⁎ New Parts
Parts without Parts No. are not supplied.
Les articles non mentionnes dans le Parts No. ne sont pas fournis.
Teile ohne Parts No. werden nicht geliefert.

TX-RX UNIT (X57-4510-XX)

Ref. No. 参照番号	Address 位置	New Parts 新	Parts No. 部品番号	Description 部品名／規格			Destination 仕向	Remarks 備考
C170			CE04EW1C470M	ELECTRO	47UF	16WV		
C171			CK73FB1E153K	CHIP C	0.015UF	K		
C172,173			CK73FB1H102K	CHIP C	1000PF	K		
C201			CK73FB1E103K	CHIP C	0.01UF	K		
C202			CE04EW1A470M	ELECTRO	47UF	10WV		
C203,204			CC73FCH1H270J	CHIP C	27PF	J		
C205			CC73FCH1H220J	CHIP C	22PF	J		
C206-210			CK73FB1E103K	CHIP C	0.01UF	K		
C211			CC73FCH1H330J	CHIP C	33PF	J		
C212			CC73FCH1H100D	CHIP C	10PF	D		
C213			CK73FB1E103K	CHIP C	0.01UF	K		
C214			CC73FCH1H220J	CHIP C	22PF	J		
C215			CK73FB1E103K	CHIP C	0.01UF	K		
C216			CC73FCH1H100D	CHIP C	10PF	D		
C217			CC73FCH1H050C	CHIP C	5PF	C		
C218,219			CK73FB1E103K	CHIP C	0.01UF	K		
C220			CK73FF1E104Z	CHIP C	0.1UF	Z		
C221			CK73FB1E103K	CHIP C	0.01UF	K		
C223			CC73FCH1H100D	CHIP C	10PF	D		
C225,226			CK73FB1E103K	CHIP C	0.01UF	K		
C227			CC73FCH1H100D	CHIP C	10PF	D		
C228			CK73FB1E103K	CHIP C	0.01UF	K		
C229			CC73FCH1H0R5C	CHIP C	0.5PF	C		
C230			CC73FCH1H330J	CHIP C	33PF	J		
C231-233			CK73FB1E103K	CHIP C	0.01UF	K		
C234			CC73FCH1H470J	CHIP C	47PF	J		
C235,236			CK73FB1H102K	CHIP C	1000PF	K		
C237			CC73FCH1H0R5C	CHIP C	0.5PF	C		
C238			CC73FCH1H220J	CHIP C	22PF	J		
C239			CC73FCH1H050C	CHIP C	5PF	C		
C240,241			CK73FB1E103K	CHIP C	0.01UF	K		
C242			CK73FF1E104Z	CHIP C	0.1UF	Z		
C243-247			CK73FB1E103K	CHIP C	0.01UF	K		
C248			CC73FSL1H221J	CHIP C	220PF	J		
C249			CC73FCH1H040C	CHIP C	4PF	C		
C250			CC73FSL1H271J	CHIP C	270PF	J		
C251			CC73FCH1H040C	CHIP C	4PF	C		
C252			CC73FSL1H221J	CHIP C	220PF	J		
C253			CK73FB1E103K	CHIP C	0.01UF	K		
C254-259			CK73FB1H102K	CHIP C	1000PF	K		
C260			CC73FCH1H0R5C	CHIP C	0.5PF	C		
C261-264			CK73FB1H102K	CHIP C	1000PF	K		
C265			CC73FCH1H390J	CHIP C	39PF	J		
C266			CC73FCH1H470J	CHIP C	47PF	J		
C267			CC73FCH1H220J	CHIP C	22PF	J		
C268			CC73FCH1H030C	CHIP C	3PF	C		
C269			CC73FCH1H240J	CHIP C	24PF	J		
C270			CC73FCH1H090D	CHIP C	9PF	D		
C271			CC73FCH1H150J	CHIP C	15PF	J		
C272			CC73FCH1H080D	CHIP C	8PF	D		
C273			CC73FCH1H680J	CHIP C	68PF	J		
C274			CC73FCH1H060D	CHIP C	6PF	D		
C275			CC73FSL1H181J	CHIP C	180PF	J		
C276			CC73FCH1H120J	CHIP C	12PF	J		
C277,278			CK73FB1H102K	CHIP C	1000PF	K		

L:Scandinavia **K:**USA **P:**Canada
Y:PX(Far East, Hawaii) **T:**England **E:**Europe
Y:AAFES(Europe) **X:**Australia **M:**Other Areas

⚠ indicates safety critical components.

PARTS LIST

⁎ New Parts
Parts without Parts No. are not supplied.
Les articles non mentionnes dans le Parts No. ne sont pas fournis.
Teile ohne Parts No. werden nicht geliefert.

TX-RX UNIT (X57-4510-XX)

Ref. No. 参照番号	Address 位置	New Parts 新	Parts No. 部品番号	Description 部品名／規格	Destination 仕向	Remarks 備考
C279			CC73FCH1H050C	CHIP C 5PF C		
C280-283			CK73FB1H102K	CHIP C 1000PF K		
C284			CK73FB1E103K	CHIP C 0.01UF K		
C285			CE04EW1A101M	ELECTRO 100UF 10WV		
C286-289			CK73FB1E103K	CHIP C 0.01UF K		
C290			CE04EW1A101M	ELECTRO 100UF 10WV		
C292			CK73FB1E103K	CHIP C 0.01UF K		
C293			CE04EW1A101M	ELECTRO 100UF 10WV		
C295			CK73FB1H102K	CHIP C 1000PF K		
C296,297			C92-0007-05	CHIP TAN 2.2UF 10WV		
C298			C92-0001-05	CHIP TAN 0.1UF 35WV		
C299			CK73FB1H102K	CHIP C 1000PF K		
C300			CE04EW1A221M	ELECTRO 220UF 10WV		
C301,302			CK73FB1E103K	CHIP C 0.01UF K		
C303			CC73FCH1H470J	CHIP C 47PF J		
C304,305			CK73FB1H102K	CHIP C 1000PF K		
C306			CC73FCH1H470J	CHIP C 47PF J		
C307			CC73FCH1H060D	CHIP C 6PF D		
C308			CC73FCH1H100D	CHIP C 10PF D		
C309			CC73FCH1H080D	CHIP C 8PF D		
C310			CC73FCH1H470J	CHIP C 47PF J		
C311			CK73FB1H102K	CHIP C 1000PF K		
C312			CC73FCH1H101J	CHIP C 100PF J		
C313			CC73FCH1H470J	CHIP C 47PF J		
C314			CC73FCH1H050C	CHIP C 5PF C		
C315			CK73FB1H102K	CHIP C 1000PF K		
C316			CC73FCH1H101J	CHIP C 100PF J		
C317			CC73FCH1H010C	CHIP C 1PF C		
C318			CC73FCH1H330J	CHIP C 33PF J		
C319			CC73FCH1H050C	CHIP C 5PF C		
C320			CC73FCH1H270J	CHIP C 27PF J		
C321			CC73FCH1H010C	CHIP C 1PF C		
C322			CC73FCH1H180J	CHIP C 18PF J		
C323			CC73FCH1H030C	CHIP C 3PF C		
C324			CC73FCH1H150J	CHIP C 15PF J		
C325			CK73FB1H102K	CHIP C 1000PF K		
C326,327			CK73FB1H103K	CHIP C 0.010UF K		
C328			CE04EW1A101M	ELECTRO 100UF 10WV		
C329,330			CK73FB1H103K	CHIP C 0.010UF K		
C331-335			CC73FCH1H101J	CHIP C 100PF J		
C336			CK73FB1H102K	CHIP C 1000PF K		
C401			CC73FCH1H030C	CHIP C 3PF C		
C402-404			CK73FB1H102K	CHIP C 1000PF K		
C405			CC73FCH1H030C	CHIP C 3PF C		
C406			CC73FCH1H040C	CHIP C 4PF C		
C407			CC73FCH1H390J	CHIP C 39PF J		
C409,410			CK73FB1H103K	CHIP C 0.010UF K		
C410			CE04NW1E4R7M	ELECTRO 4.7UF 25WV		
C411			CK73FB1H102K	CHIP C 1000PF K		
C412			CK73FB1H103K	CHIP C 0.010UF K		
C413,414			CK73FB1H102K	CHIP C 1000PF K		
C415			CC73FCH1H050C	CHIP C 5PF C		
C416			CC73FCH1H010C	CHIP C 1PF C		
C417			CC73FCH1H330J	CHIP C 33PF J		
C418			CK73FB1H103K	CHIP C 0.010UF K		

L:Scandinavia **K:**USA **P:**Canada
Y:PX(Far East, Hawaii) **T:**England **E:**Europe
Y:AAFES(Europe) **X:**Australia **M:**Other Areas

⚠ indicates safety critical components.

PARTS LIST

⁎ New Parts
Parts without Parts No. are not supplied.
Les articles non mentionnes dans le Parts No. ne sont pas fournis.
Teile ohne Parts No. werden nicht geliefert.

TX-RX UNIT (X57-4510-XX)

Ref. No. 参照番号	Address 位置	New Parts 新	Parts No. 部品番号	Description 部品名／規格	Destination 仕向	Remarks 備考
C419			CC73FCH1H470J	CHIP C 47PF J		
C420			CK73FB1H103K	CHIP C 0.010UF K		
C421			CC73FCH1H220J	CHIP C 22PF J		
C422			CK73FB1H102K	CHIP C 1000PF K		
C423			CC73FCH1H220J	CHIP C 22PF J		
C424,425			CK73FB1H103K	CHIP C 0.010UF K		
C426			CC73FCH1H120J	CHIP C 12PF J		
C427			CC73FSL1H471J	CHIP C 470PF J		
C428			CK73FB1H103K	CHIP C 0.010UF K		
C429			CC73FSL1H471J	CHIP C 470PF J		
C430			CC73FCH1H120J	CHIP C 12PF J		
C431			CC73FCH1H101J	CHIP C 100PF J		
C432,433			CK73FB1H103K	CHIP C 0.010UF K		
C435-437			CK73FB1H103K	CHIP C 0.010UF K		
C439,440			CK73FB1H103K	CHIP C 0.010UF K		
C441			CK73FB1H102K	CHIP C 1000PF K		
C442-445			CK73FB1H103K	CHIP C 0.010UF K		
C446,447			CK73FB1H102K	CHIP C 1000PF K		
C449-451			CK73FB1H103K	CHIP C 0.010UF K		
C452			CC73FCH1H101J	CHIP C 100PF J		
C453,454			CK73FB1H103K	CHIP C 0.010UF K		
C455			CK73FB1H102K	CHIP C 1000PF K		
C456			CK73FB1H103K	CHIP C 0.010UF K		
C457			CK73FB1H102K	CHIP C 1000PF K		
C458			CC73FCH1H101J	CHIP C 100PF J		
C459			CK45B1H561K	CERAMIC 560PF K		
C460			CK73FB1E223K	CHIP C 0.022UF K		
C461			CC73FCH1H040C	CHIP C 4PF C		
C462			CC73FCH1H270J	CHIP C 27PF J		
C464			CK73FB1E223K	CHIP C 0.022UF K		
C465			CC73FCH1H070D	CHIP C 7PF D		
C466			CC73FCH1H150J	CHIP C 15PF J		
C467			CK73FB1H103K	CHIP C 0.010UF K		
C468			CK73FB1E223K	CHIP C 0.022UF K		
C469,470			CC73FCH1H050C	CHIP C 5PF C		
C471			CC73FCH1H020C	CHIP C 2.0PF C		
C472			CK73FB1E223K	CHIP C 0.022UF K		
C473-481			CK73FB1H102K	CHIP C 1000PF K		
C482			CK73FF1E104Z	CHIP C 0.1UF Z		
C483			CK73FF1C105Z	CHIP C 1.0UF Z		
C484			CE04NW1H010M	ELECTOR 1.0UF 50WV		
C485			CK73FB1H102K	CHIP C 1000PF K		
C488			CK73FF1E104Z	CHIP C 0.1UF Z		
C489			CK73FB1H103K	CHIP C 0.010UF K		
C490,491			CK73FB1H102K	CHIP C 1000PF K		
C492			CK73FF1C474Z	CHIP C 0.47UF Z		
C493			CK73FF1E104Z	CHIP C 0.1UF Z		
C494			CE04NW1C470M	ELECTRO 47UF 16WV		
C495			CK73FB1H103K	CHIP C 0.010UF K		
C496,497			CK73FB1H222K	CHIP C 2200PF K		
C498			CE04NW1C330M	ELECTRO 33UF 16WV		
C499,500			CE04NW1C101M	ELECTRO 100UF 16WV		
C501			CK73FB1H103K	CHIP C 0.010UF K		
C502			CC73FCH1H050C	CHIP C 5PF C		
C503			CE04NW1C330M	ELECTRO 33UF 16WV		

L:Scandinavia **K:**USA **P:**Canada
Y:PX(Far East, Hawaii) **T:**England **E:**Europe
Y:AAFES(Europe) **X:**Australia **M:**Other Areas

⚠ indicates safety critical components.

PARTS LIST

✕ New Parts
Parts without Parts No. are not supplied.
Les articles non mentionnes dans le Parts No. ne sont pas fournis.
Teile ohne Parts No. werden nicht geliefert.

TX-RX UNIT (X57-4510-XX)

Ref. No. 参照番号	Address 位置	New Parts 新	Parts No. 部品番号	Description 部品名／規格			Destination 仕向	Remarks 備考
C504			CK73FB1H103K	CHIP C	0.010UF	K		
C506			CK73FB1H102K	CHIP C	1000PF	K		
C507			CE04NW1C470M	ELECTRO	47UF	16WV		
C508,509			CK73FF1E104Z	CHIP C	0.1UF	Z		
C510			CK73FB1H102K	CHIP C	1000PF	K		
C511-513			CK73FB1E223K	CHIP C	0.022UF	K		
C514			CK73FB1H103K	CHIP C	0.010UF	K		
C516-520			CK73FB1H102K	CHIP C	1000PF	K		
C521			CK73FB1E393K	CHIP C	0.039UF	K		
C522,523			CK73FB1H102K	CHIP C	1000PF	K		
C524,525			CK73FB1H103K	CHIP C	0.010UF	K		
C601			CE04NW1C101M	ELECTRO	100UF	16WV		
C602			CK73FB1H102K	CHIP C	1000PF	K		
C603			C90-2039-05	ELECTRO	15UF	16WV		
C604			CK73FB1H102K	CHIP C	1000PF	K		
C605			CE04NW1C220M	ELECTRO	22UF	16WV		
C606			CK73FB1H102K	CHIP C	1000PF	K		
C607			CC45SL2H030C	CERAMIC	3.0PF	C		
C608			CC45SL2H070D	CERAMIC	7.0PF	D		
C609			CC45SL2H090D	CERAMIC	9.0PF	D		
C610			CC45SL2H020C	CERAMIC	2.0PF	C		
C611			C90-2039-05	ELECTRO	15UF	16WV		
C612			CK73FB1H102K	CHIP C	1000PF	K		
C613			CE04NW1C101M	ELECTRO	100UF	16WV		
C614			CK73FB1H102K	CHIP C	1000PF	K		
C615			CE04NW1C220M	ELECTRO	22UF	16WV		
C616			CK73FB1H102K	CHIP C	1000PF	K		
C617			CM73F2H090D	CHIP C	9.0PF	D		
C618,619			CC45SL2H020C	CERAMIC	2.0PF	C		
C620			CM73F2H070D	CHIP C	7.0PF	D		
C621			CM73F2H080D	CHIP C	8.0PF	D		
C622			CC45SL2H050C	CERAMIC	5.0PF	C		
C623			CM73F2H100D	CHIP C	10PF	D		
C624			CM73F2H120J	CHIP C	12PF	J		
C625			CC45SL2H040C	CERAMIC	4.0PF	C		
C626			CM73F2H130J	CHIP C	13PF	J		
C627			CC45SL2H040C	CERAMIC	4.0PF	C		
C628			CK73FB1H102K	CHIP C	1000PF	K		
C629			CC73FCH1H070D	CHIP C	7PF	D		
C630			CK73FB1H102K	CHIP C	1000PF	K		
C633			CK73FB1E393K	CHIP C	0.039UF	K		
C634			CC73FCH1H0R5C	CHIP C	0.5PF	C		
C635			CK73FB1H102K	CHIP C	1000PF	K		
C636			CC73FCH1H0R5C	CHIP C	0.5PF	C		
C637			CK73FB1H102K	CHIP C	1000PF	K		
C638,639			CK73FB1H472K	CHIP C	4700PF	K		
C640			CK73FB1H102K	CHIP C	1000PF	K		
C641			CE04EW1C471M	ELECTRO	470UF	16WV		
C642			CK45F1H473Z	CERAMIC	0.047UF	Z		
C644			C92-0003-05	CHIP TAN	0.47UF	25WV		
C648			CK73FB1H102K	CHIP C	1000PF	K		
C649			CE04EW1C471M	ELECTRO	470UF	16WV		
C650,651			CK73FB1H102K	CHIP C	1000PF	K		
C655-660			CK73FB1H102K	CHIP C	1000PF	K		
C671-676			CK73FB1H102K	CHIP C	1000PF	K		

L:Scandinavia K:USA P:Canada
Y:PX(Far East, Hawaii) T:England E:Europe
Y:AAFES(Europe) X:Australia M:Other Areas

⚠ indicates safety critical components.

PARTS LIST

* New Parts
Parts without Parts No. are not supplied.
Les articles non mentionnes dans le Parts No. ne sont pas fournis.
Teile ohne Parts No. werden nicht geliefert.

TX-RX UNIT (X57-4510-XX)

Ref. No. 参照番号	Address 位置	New Parts 新	Parts No. 部品番号	Description 部品名／規格	Destination 仕向	Remarks 備考
C677			C92-0008-05	CHIP TAN 3.3UF 16WV		
C678			CK73FB1H102K	CHIP C 1000PF K		
C680-687			CK73FB1H102K	CHIP C 1000PF K		
C701-703			CC73FCH1H101J	CHIP C 100PF J		
C704,705			CK73FB1H102K	CHIP C 1000PF K		
TC1			C05-0346-05	TRIM CAP 6PF		
TC401			C05-0346-05	TRIM CAP 6PF		
200	1A		E72-0405-04	DC TERMINAL BOARD (+) (-)		
CN1			E40-5474-05	PIN CONNECTOR FOR INSIDE		
CN2			E40-5469-05	PIN CONNECTOR FOR INSIDE		
CN3			E40-3239-05	PIN CONNECTOR FOR INSIDE		
CN4			E40-3238-05	PIN CONNECTOR FOR INSIDE		
CN5			E40-5347-05	PIN CONNECTOR FOR INSIDE		
CN6 ,7			E04-0154-05	RF COAXIAL CABLE RECEPTACLE		
CN8			E40-3237-05	PIN CONNECTOR FOR INSIDE		
CN401,402		*	E04-0191-05	RF COAXIAL CABLE RECEPTACLE		
CN403			E40-3239-05	PIN CONNECTOR FOR INSIDE		
CN404		*	E04-0191-05	RF COAXIAL CABLE RECEPTACLE		
CN405			E40-3264-05	PIN CONNECTOR FOR INSIDE		
CN406		*	E04-0190-05	RF COAXIAL CABLE RECEPTACLE		
CN407,408			E40-5347-05	PIN CONNECTOR FOR INSIDE		
CN409			E40-5469-05	PIN CONNECTOR FOR INSIDE		
CN410			E40-3300-05	PIN CONNECTOR FOR INSIDE		
CN411			E40-3299-05	PIN CONNECTOR FOR INSIDE		
CN412			E04-0154-05	RF COAXIAL CABLE RECEPTACLE		
CN601,602		*	E04-0191-05	RF COAXIAL CABLE RECEPTACLE		
CN603			E40-5347-05	PIN CONNECTOR FOR INSIDE		
CN604			E40-3246-05	PIN CONNECTOR FOR INSIDE		
CN605			E40-3250-05	PIN CONNECTOR FOR INSIDE		
CN606-608			E23-0465-05	TERMINAL(TEST POINT)		
CN701			E40-5347-05	PIN CONNECTOR FOR INSIDE		
CN702			E40-3247-05	PIN CONNECTOR FOR INSIDE		
J1		*	E56-0405-05	CYLINDRICAL RECEPTACLE		
J2		*	E11-0456-05	PHONE JACK		
J3		*	E11-0455-05	PHONE JACK		
J701			E08-0876-05	RECTANGULAR RECEPTACLE		
W1		*	E37-0436-05	CONNECTING WIRE		
W2		*	E37-0440-05	CONNECTING WIRE		
-			F02-0414-05	HEAT SINK		
-		*	F10-2091-04	SHIELDING PLATE(DDS)		
F601			F53-0095-05	FUSE (1.2A)		
F602			F53-0056-05	FUSE (1A)		
CD1			L79-1013-05	DISCLI FILTER (455KHZ)		
CF1			L72-0366-05	CERAMIC FILTER(455KHZ)		
CF201			L72-0369-05	CERAMIC FILTER(10.7MHZ)		
L1			L30-0281-15	IFT		
L2			L40-1081-48	SMALL FIXED INDUCTOR		
L3 -5			L40-1011-48	SMALL FIXED INDUCTOR		
L6		*	L40-1501-31	SMALL FIXED INDUCTOR		
L7 ,8			L40-1011-48	SMALL FIXED INDUCTOR		
L9			L30-0281-15	IFT		
L201			L40-1011-48	SMALL FIXED INDUCTOR		
L202			L40-1001-48	SMALL FIXED INDUCTOR		

L:Scandinavia **K:**USA **P:**Canada
Y:PX(Far East, Hawaii) **T:**England **E:**Europe
Y:AAFES(Europe) **X:**Australia **M:**Other Areas

⚠ indicates safety critical components.

PARTS LIST

* New Parts
Parts without Parts No. are not supplied.
Les articles non mentionnes dans le Parts No. ne sont pas fournis.
Teile ohne Parts No. werden nicht geliefert.

TX-RX UNIT (X57-4510-XX)

Ref. No. 参照番号	Address 位置	New Parts 新	Parts No. 部品番号	Description 部品名／規格	Destination 仕向	Remarks 備考
L204		*	L34-4367-05	COIL		
L205			L40-1011-48	SMALL FIXED INDUCTOR		
L206			L34-4204-15	COIL		
L207,208		*	L34-4363-05	COIL		
L209		*	L34-4365-05	COIL		
L210,211		*	L34-4366-05	COIL		
L212			L40-8285-48	SMALL FIXED INDUCTOR		
L213			L40-3301-48	SMALL FIXED INDUCTOR		
L214			L40-6885-48	SMALL FIXED INDUCTOR		
L215			L40-3301-48	SMALL FIXED INDUCTOR		
L216			L40-8285-48	SMALL FIXED INDUCTOR		
L217,218		*	L34-4364-05	COIL		
L219			L40-4785-48	COIL		
L220			L40-8272-48			
L221,222			L39-0441-05	COIL		
L223,224			L34-1079-05	COIL		
L225,226			L34-1058-05	COIL		
L229			L40-1011-48	SMALL FIXED INDUCTOR		
L230			L40-1001-48	SMALL FIXED INDUCTOR		
L231		*	L40-1585-48	SMALL FIXED INDUCTOR		
L232			L34-1058-05	COIL		
L233,234		*	L40-1585-48	SMALL FIXED INDUCTOR		
L235			L34-1058-05	COIL		
L236,237			L34-1079-05	COIL		
L237,238			L40-2285-48			
L401,402			L40-1571-48	SMALL FIXED INDUCTOR		
L403,404			L79-0690-05	FILTER(OTHERS)		
L407			L40-1071-48	SMALL FIXED INDUCTOR		
L408			L40-1001-48	SMALL FIXED INDUCTOR		
L409			L40-2271-48	SMALL FIXED INDUCTOR		
L410,411		*	L34-4347-05	COIL		
L412			L40-2295-48	SMALL FIXED INDUCTOR		
L413,414			L30-0281-15	IFT		
L415		*	L34-4026-15	COIL		
L416			L34-4025-05	COIL		
L417		*	L34-4347-05	COIL		
L418,419			L40-1011-48	SMALL FIXED INDUCTOR		
L420		*	L34-4347-05	COIL		
L421			L40-1001-48	SMALL FIXED INDUCTOR		
L422		*	L34-4027-15	COIL		
L423,424		*	L39-1247-05	TOROIDAL COIL		
L425			L79-1037-05	FILTER		
L426,427			L40-2271-48	SMALL FIXED INDUCTOR		
L428			L79-1037-05	FILTER(OTHERS)		
L429			L40-1571-48	SMALL FIXED INDUCTOR		
L430			L79-1037-05	FILTER		
L431			L40-1071-48	SMALL FIXED INDUCTOR		
L432			L34-1083-05	COIL		
L433			L34-1052-05	COIL		
L434			L40-1092-13	SMALL FIXED INDUCTOR		
L435,436			L40-1011-48	SMALL FIXED INDUCTOR		
L437			L40-1095-48	SMALL FIXED INDUCTOR		
L438			L40-1011-48	SMALL FIXED INDUCTOR		
L601-603			L34-1019-05	COIL		
L604			L34-1040-05	COIL		

L:Scandinavia **K**:USA **P**:Canada
Y:PX(Far East, Hawaii) **T**:England **E**:Europe
Y:AAFES(Europe) **X**:Australia **M**:Other Areas

⚠ indicates safety critical components.

PARTS LIST

* New Parts
Parts without Parts No. are not supplied.
Les articles non mentionnes dans le Parts No. ne sont pas fournis.
Teile ohne Parts No. werden nicht geliefert.

TX-RX UNIT (X57-4510-XX)

Ref. No. 参照番号	Address 位置	New Parts 新	Parts No. 部品番号	Description 部品名／規格	Destination 仕向	Remarks 備考
L605			L34-0908-05	COIL		
L606			L34-1019-05	COIL		
L607			L34-1058-05	COIL		
L608			L34-1113-05	COIL		
L609			L34-1040-05	COIL		
L610			L40-1095-48	SMALL FIXED INDUCTOR		
L611			L40-2271-48	SMALL FIXED INDUCTOR		
L612			L34-0908-05	COIL		
L701-708			L92-0131-05	CORE		
X1			L77-1305-15	CRYSTAL RESONATOR(10.705MHZ)		
X201		*	L77-1537-05	TCXO (10.24MHZ)		
XF1			L71-0249-05	CRYSTAL FILTER (10.695MHZ)		
XF401			L71-0268-15	MCF		
XF402			L71-0230-05	CRYSTAL FILTER		
R1 -5			RK73FB2A221J	CHIP R 220 J 1/10W		
R6			RK73FB2A103J	CHIP R 10K J 1/10W		
R9			RK73FB2A103J	CHIP R 10K J 1/10W	K	
R10			RK73FB2A273J	CHIP R 27K J 1/10W		
R11			RK73FB2A472J	CHIP R 4.7K J 1/10W		
R12			RK73FB2A103J	CHIP R 10K J 1/10W		
R13			RK73FB2A101J	CHIP R 100 J 1/10W		
R14			RK73FB2A104J	CHIP R 100K J 1/10W		
R15			RK73FB2A333J	CHIP R 33K J 1/10W		
R16			RK73FB2A101J	CHIP R 100 J 1/10W		
R17			RK73FB2A472J	CHIP R 4.7K J 1/10W		
R18 ,19			RK73FB2A103J	CHIP R 10K J 1/10W		
R20 ,21			RK73FB2A101J	CHIP R 100 J 1/10W		
R22 ,23			RK73FB2A473J	CHIP R 47K J 1/10W		
R24			RK73FB2A152J	CHIP R 1.5K J 1/10W		
R25			RK73FB2A222J	CHIP R 2.2K J 1/10W		
R26			RK73FB2A472J	CHIP R 4.7K J 1/10W		
R27			RK73FB2A101J	CHIP R 100 J 1/10W		
R28			RK73FB2A472J	CHIP R 4.7K J 1/10W		
R29 ,30			RK73FB2A101J	CHIP R 100 J 1/10W		
R31			RK73FB2A183J	CHIP R 18K J 1/10W		
R32			RK73FB2A103J	CHIP R 10K J 1/10W		
R33			RK73FB2A102J	CHIP R 1.0K J 1/10W		
R34			RK73FB2A334J	CHIP R 330K J 1/10W		
R35			RK73FB2A471J	CHIP R 470 J 1/10W		
R36			RK73FB2A470J	CHIP R 47 J 1/10W		
R37 ,38			RK73FB2A472J	CHIP R 4.7K J 1/10W		
R39			RK73FB2A101J	CHIP R 100 J 1/10W		
R40			RK73FB2A222J	CHIP R 2.2K J 1/10W		
R41			RK73FB2A152J	CHIP R 1.5K J 1/10W		
R42			RK73FB2A103J	CHIP R 10K J 1/10W		
R43			RK73FB2A155J	CHIP R 1.5M J 1/10W		
R44			RK73FB2A683J	CHIP R 68K J 1/10W		
R45			RK73FB2A271J	CHIP R 270 J 1/10W		
R46			RK73FB2A101J	CHIP R 100 J 1/10W		
R47			RK73FB2A470J	CHIP R 47 J 1/10W		
R48			RK73FB2A102J	CHIP R 1.0K J 1/10W		
R49			RK73FB2A473J	CHIP R 47K J 1/10W		
R50			RK73FB2A224J	CHIP R 220K J 1/10W		
R51 ,52			RK73FB2A103J	CHIP R 10K J 1/10W		

L:Scandinavia K:USA P:Canada
Y:PX(Far East, Hawaii) T:England E:Europe
Y:AAFES(Europe) X:Australia M:Other Areas

⚠ indicates safety critical components.

PARTS LIST

× New Parts
Parts without Parts No. are not supplied.
Les articles non mentionnes dans le Parts No. ne sont pas fournis.
Teile ohne Parts No. werden nicht geliefert.

TX-RX UNIT (X57-4510-XX)

Ref. No. 参照番号	Address 位置	New Parts 新	Parts No. 部品番号	Description 部品名／規格	Destination 仕向	Remarks 備考
R53			RK73FB2A392J	CHIP R 3.9K J 1/10W		
R54			RK73FB2A681J	CHIP R 680 J 1/10W		
R56			RK73FB2A101J	CHIP R 100 J 1/10W		
R58			RK73FB2A683J	CHIP R 68K J 1/10W		
R59			RK73FB2A104J	CHIP R 100K J 1/10W		
R60 ,61			RK73FB2A103J	CHIP R 10K J 1/10W		
R62			RK73FB2A152J	CHIP R 1.5K J 1/10W		
R63 ,64			RK73FB2A104J	CHIP R 100K J 1/10W		
R65			RK73FB2A391J	CHIP R 390 J 1/10W		
R66			RK73FB2A101J	CHIP R 100 J 1/10W		
R67			RK73FB2A473J	CHIP R 47K J 1/10W		
R68			RK73FB2A103J	CHIP R 10K J 1/10W		
R69			RK73FB2A681J	CHIP R 680 J 1/10W		
R70			RK73FB2A470J	CHIP R 47 J 1/10W		
R71			RK73FB2A104J	CHIP R 100K J 1/10W		
R72			RK73FB2A332J	CHIP R 3.3K J 1/10W		
R73			R92-0670-05	CHIP R 0 ΩHM		
R74			RK73FB2A332J	CHIP R 3.3K J 1/10W		
R75			RK73FB2A101J	CHIP R 100 J 1/10W		
R76			RK73FB2A103J	CHIP R 10K J 1/10W		
R77			RK73FB2A102J	CHIP R 1.0K J 1/10W		
R78			RK73FB2A562J	CHIP R 5.6K J 1/10W		
R79			RK73FB2A104J	CHIP R 100K J 1/10W		
R80			RK73FB2A473J	CHIP R 47K J 1/10W		
R81			RK73FB2A104J	CHIP R 100K J 1/10W		
R82			RK73FB2A471J	CHIP R 470 J 1/10W		
R83			RK73FB2A104J	CHIP R 100K J 1/10W		
R84			RK73FB2A331J	CHIP R 330 J 1/10W		
R85			RK73FB2A682J	CHIP R 6.8K J 1/10W		
R86			RK73FB2A472J	CHIP R 4.7K J 1/10W		
R87 -91			RK73FB2A103J	CHIP R 10K J 1/10W		
R92			RK73FB2A182J	CHIP R 1.8K J 1/10W		
R93			RK73FB2A332J	CHIP R 3.3K J 1/10W		
R94			RK73FB2A682J	CHIP R 6.8K J 1/10W		
R95			RK73FB2A273J	CHIP R 27K J 1/10W		
R96			RK73FB2A123J	CHIP R 12K J 1/10W		
R97			RK73FB2A222J	CHIP R 2.2K J 1/10W		
R98 -101			RK73FB2A103J	CHIP R 10K J 1/10W		
R102			RK73FB2A105J	CHIP R 1.0M J 1/10W		
R103			RK73FB2A822J	CHIP R 8.2K J 1/10W		
R104			RK73FB2A224J	CHIP R 220K J 1/10W		
R105			RK73FB2A104J	CHIP R 100K J 1/10W		
R106			RK73FB2A103J	CHIP R 10K J 1/10W		
R107			RK73FB2A332J	CHIP R 3.3K J 1/10W		
R108			RK73FB2A224J	CHIP R 220K J 1/10W		
R109			RK73FB2A334J	CHIP R 330K J 1/10W		
R110			RK73FB2A473J	CHIP R 47K J 1/10W		
R111			RK73FB2A154J	CHIP R 150K J 1/10W		
R112			RK73FB2A104J	CHIP R 100K J 1/10W		
R113			RK73FB2A563J	CHIP R 56K J 1/10W		
R114			RK73FB2A104J	CHIP R 100K J 1/10W		
R115			RK73FB2A102J	CHIP R 1.0K J 1/10W		
R116			RK73FB2A104J	CHIP R 100K J 1/10W		
R117			RK73FB2A103J	CHIP R 10K J 1/10W		
R118			RK73FB2A105J	CHIP R 1.0M J 1/10W		

L:Scandinavia **K:**USA **P:**Canada
Y:PX(Far East, Hawaii) **T:**England **E:**Europe
Y:AAFES(Europe) **X:**Australia **M:**Other Areas

⚠ indicates safety critical components.

PARTS LIST

⁎ New Parts
Parts without Parts No. are not supplied.
Les articles non mentionnes dans le Parts No. ne sont pas fournis.
Teile ohne Parts No. werden nicht geliefert.

TX-RX UNIT (X57-4510-XX)

Ref. No. 参照番号	Address 位置	New Parts 新	Parts No. 部品番号	Description 部品名／規格	Destination 仕向	Remarks 備考
R119-121			RK73FB2A103J	CHIP R 10K J 1/10W		
R122			RK73FB2A101J	CHIP R 100 J 1/10W		
R123			RK73FB2A223J	CHIP R 22K J 1/10W		
R124			RK73FB2A821J	CHIP R 820 J 1/10W		
R125			RK73FB2A101J	CHIP R 100 J 1/10W		
R126			RK73FB2A332J	CHIP R 3.3K J 1/10W		
R127			RK73FB2A474J	CHIP R 470K J 1/10W		
R128			RK73FB2A101J	CHIP R 100 J 1/10W		
R129,130			RK73FB2A472J	CHIP R 4.7K J 1/10W		
R131			RK73FB2A332J	CHIP R 3.3K J 1/10W		
R132			RK73FB2A474J	CHIP R 470K J 1/10W		
R133			RK73FB2A103J	CHIP R 10K J 1/10W		
R134			RK73FB2A274J	CHIP R 270K J 1/10W		
R135-137			RK73FB2A103J	CHIP R 10K J 1/10W		
R138			RK73FB2A223J	CHIP R 22K J 1/10W		
R139			RK73FB2A103J	CHIP R 10K J 1/10W		
R141			RK73FB2A103J	CHIP R 10K J 1/10W		
R142			RK73FB2A472J	CHIP R 4.7K J 1/10W		
R143			RK73FB2A101J	CHIP R 100 J 1/10W		
R144			RK73FB2A823J	CHIP R 82K J 1/10W		
R145			RK73FB2A473J	CHIP R 47K J 1/10W		
R146			RK73FB2A561J	CHIP R 560 J 1/10W		
R147			RK73FB2A181J	CHIP R 180 J 1/10W		
R148			RK73FB2A682J	CHIP R 6.8K J 1/10W		
R149			RK73FB2A101J	CHIP R 100 J 1/10W		
R150			RK73FB2A124J	CHIP R 120K J 1/10W		
R151,152			RK73FB2A102J	CHIP R 1.0K J 1/10W		
R153			RK73FB2A103J	CHIP R 10K J 1/10W		
R154			RK73FB2A104J	CHIP R 100K J 1/10W		
R155			RK73FB2A101J	CHIP R 100 J 1/10W		
R156,157			RK73FB2A224J	CHIP R 220K J 1/10W		
R158			RK73FB2A821J	CHIP R 820 J 1/10W		
R159			RK73FB2A332J	CHIP R 3.3K J 1/10W		
R160			RK73FB2A103J	CHIP R 10K J 1/10W		
R161			RK73FB2A222J	CHIP R 2.2K J 1/10W		
R162,163			RK73FB2A102J	CHIP R 1.0K J 1/10W		
R164			RK73FB2A101J	CHIP R 100 J 1/10W		
R165			RK73FB2A223J	CHIP R 22K J 1/10W		
R166			RK73FB2A682J	CHIP R 6.8K J 1/10W		
R167			RK73FB2A102J	CHIP R 1.0K J 1/10W		
R169			RK73FB2A331J	CHIP R 330 J 1/10W		
R170			RK73FB2A681J	CHIP R 680 J 1/10W		
R171			RK73FB2A101J	CHIP R 100 J 1/10W		
R172			RK73FB2A104J	CHIP R 100K J 1/10W		
R173			RK73FB2A331J	CHIP R 330 J 1/10W		
R174			RK73FB2A823J	CHIP R 82K J 1/10W		
R175			RK73FB2A101J	CHIP R 100 J 1/10W		
R176			RK73FB2A105J	CHIP R 1.0M J 1/10W		
R177			RK73FB2A102J	CHIP R 1.0K J 1/10W		
R178			RK73FB2A471J	CHIP R 470 J 1/10W		
R179,180			RK73FB2A102J	CHIP R 1.0K J 1/10W		
R181			RK73FB2A473J	CHIP R 47K J 1/10W		
R182,183			RK73FB2A101J	CHIP R 100 J 1/10W		
R184			RK73FB2A472J	CHIP R 4.7K J 1/10W		
R185,186			RK73FB2A823J	CHIP R 82K J 1/10W		

L:Scandinavia **K:**USA **P:**Canada
Y:PX(Far East, Hawaii) **T:**England **E:**Europe
Y:AAFES(Europe) **X:**Australia **M:**Other Areas

⚠ indicates safety critical components.

PARTS LIST

× New Parts
Parts without Parts No. are not supplied.
Les articles non mentionnes dans le Parts No. ne sont pas fournis.
Teile ohne Parts No. werden nicht geliefert.

TX-RX UNIT (X57-4510-XX)

Ref. No. 参照番号	Address 位置	New Parts 新	Parts No. 部品番号	Description 部品名／規格	Destination 仕向	Remarks 備考
R187			RK73FB2A223J	CHIP R 22K J 1/10W		
R188			RK73FB2A101J	CHIP R 100 J 1/10W		
R189			RK73FB2A472J	CHIP R 4.7K J 1/10W		
R190			RK73FB2A102J	CHIP R 1.0K J 1/10W		
R191			RK73FB2A103J	CHIP R 10K J 1/10W		
R192-194			RK73FB2A333J	CHIP R 33K J 1/10W		
R195			RK73FB2A103J	CHIP R 10K J 1/10W		
R196			RK73FB2A183J	CHIP R 18K J 1/10W		
R197			RK73FB2A103J	CHIP R 10K J 1/10W		
R198			RK73FB2A392J	CHIP R 3.9K J 1/10W		
R199			RK73FB2A102J	CHIP R 1.0K J 1/10W		
R200			RK73FB2A101J	CHIP R 100 J 1/10W		
R201			RK73FB2A561J	CHIP R 560 J 1/10W		
R202			RK73FB2A102J	CHIP R 1.0K J 1/10W		
R203			RK73FB2A101J	CHIP R 100 J 1/10W		
R204			RK73FB2A223J	CHIP R 22K J 1/10W		
R205			RK73FB2A103J	CHIP R 10K J 1/10W		
R206			RK73FB2A471J	CHIP R 470 J 1/10W		
R207			RK73FB2A102J	CHIP R 1.0K J 1/10W		
R208			RK73FB2A221J	CHIP R 220 J 1/10W		
R209			RK73FB2A334J	CHIP R 330K J 1/10W		
R210			RK73FB2A101J	CHIP R 100 J 1/10W		
R211			RK73FB2A102J	CHIP R 1.0K J 1/10W		
R212			RK73FB2A184J	CHIP R 180K J 1/10W		
R213			RK73FB2A101J	CHIP R 100 J 1/10W		
R214			RK73FB2A223J	CHIP R 22K J 1/10W		
R215			RK73FB2A103J	CHIP R 10K J 1/10W		
R216			RK73FB2A471J	CHIP R 470 J 1/10W		
R217			R92-0670-05	CHIP R 0 OHM		
R218			RK73FB2A101J	CHIP R 100 J 1/10W		
R221			RK73FB2A101J	CHIP R 100 J 1/10W		
R222			RK73FB2A331J	CHIP R 330 J 1/10W		
R223			RK73FB2A221J	CHIP R 220 J 1/10W		
R224			RK73FB2A334J	CHIP R 330K J 1/10W		
R225			RK73FB2A221J	CHIP R 220 J 1/10W		
R226			RK73FB2A334J	CHIP R 330K J 1/10W		
R227			RK73FB2A101J	CHIP R 100 J 1/10W		
R228			RK73FB2A103J	CHIP R 10K J 1/10W		
R229			RK73FB2A222J	CHIP R 2.2K J 1/10W		
R230			RK73FB2A221J	CHIP R 220 J 1/10W		
R231			RK73FB2A101J	CHIP R 100 J 1/10W		
R232			RK73FB2A103J	CHIP R 10K J 1/10W		
R233			RK73FB2A222J	CHIP R 2.2K J 1/10W		
R234			RK73FB2A221J	CHIP R 220 J 1/10W		
R235			RK73FB2A101J	CHIP R 100 J 1/10W		
R236			RK73FB2A223J	CHIP R 22K J 1/10W		
R237			RK73FB2A103J	CHIP R 10K J 1/10W		
R238			RK73FB2A471J	CHIP R 470 J 1/10W		
R239-241			RK73FB2A101J	CHIP R 100 J 1/10W		
R242			RK73FB2A103J	CHIP R 10K J 1/10W		
R243			RK73FB2A222J	CHIP R 2.2K J 1/10W		
R244			RK73FB2A221J	CHIP R 220 J 1/10W		
R245			RK73FB2A470J	CHIP R 47 J 1/10W		
R246			RK73FB2A271J	CHIP R 270 J 1/10W		
R247			RK73FB2A180J	CHIP R 18 J 1/10W		

L:Scandinavia K:USA P:Canada
Y:PX(Far East, Hawaii) T:England E:Europe
Y:AAFES(Europe) X:Australia M:Other Areas

⚠ indicates safety critical components.

PARTS LIST

× New Parts
Parts without Parts No. are not supplied.
Les articles non mentionnes dans le Parts No. ne sont pas fournis.
Teile ohne Parts No. werden nicht geliefert.

TX-RX UNIT (X57-4510-XX)

Ref. No. 参照番号	Address 位置	New Parts 新	Parts No. 部品番号	Description 部品名／規格	Destination 仕向	Remarks 備考
R248,249			RK73FB2A271J	CHIP R 270 J 1/10W		
R250			RK73FB2A180J	CHIP R 18 J 1/10W		
R251			RK73FB2A271J	CHIP R 270 J 1/10W		
R252			RK73FB2A101J	CHIP R 100 J 1/10W		
R253			RK73FB2A103J	CHIP R 10K J 1/10W		
R254			RK73FB2A222J	CHIP R 2.2K J 1/10W		
R255			RK73FB2A221J	CHIP R 220 J 1/10W		
R256			RK73FB2A101J	CHIP R 100 J 1/10W		
R257			RK73FB2A103J	CHIP R 10K J 1/10W		
R258			RK73FB2A222J	CHIP R 2.2K J 1/10W		
R259			RK73FB2A221J	CHIP R 220 J 1/10W		
R260			RK73FB2A223J	CHIP R 22K J 1/10W		
R261-265			RK73FB2A221J	CHIP R 220 J 1/10W		
R266			RK73FB2A470J	CHIP R 47 J 1/10W		
R267			RK73FB2A101J	CHIP R 100 J 1/10W		
R268			RK73FB2A222J	CHIP R 2.2K J 1/10W		
R269			R92-0670-05	CHIP R 0 OHM		
R270			RK73FB2A472J	CHIP R 4.7K J 1/10W		
R271			RK73FB2A152J	CHIP R 1.5K J 1/10W		
R272			RK73FB2A154J	CHIP R 150K J 1/10W		
R273			RK73FB2A222J	CHIP R 2.2K J 1/10W		
R274			RK73FB2A100J	CHIP R 10 J 1/10W		
R275			RK73FB2A221J	CHIP R 220 J 1/10W		
R276			RK73FB2A101J	CHIP R 100 J 1/10W		
R277			RK73FB2A682J	CHIP R 6.8K J 1/10W		
R278			RK73FB2A222J	CHIP R 2.2K J 1/10W		
R279			RK73FB2A221J	CHIP R 220 J 1/10W		
R280			RK73FB2A101J	CHIP R 100 J 1/10W		
R281			RK73FB2A103J	CHIP R 10K J 1/10W		
R282			RK73FB2A472J	CHIP R 4.7K J 1/10W		
R283			RK73FB2A271J	CHIP R 270 J 1/10W		
R284			RK73FB2A180J	CHIP R 18 J 1/10W		
R285			RK73FB2A271J	CHIP R 270 J 1/10W		
R286			RK73FB2A470J	CHIP R 47 J 1/10W		
R287			RK73FB2A101J	CHIP R 100 J 1/10W		
R288			RK73FB2A392J	CHIP R 3.9K J 1/10W		
R289			RK73FB2A102J	CHIP R 1.0K J 1/10W		
R290			RK73FB2A101J	CHIP R 100 J 1/10W		
R291			RK73FB2A471J	CHIP R 470 J 1/10W		
R292			RK73FB2A470J	CHIP R 47 J 1/10W		
R293			RK73FB2A101J	CHIP R 100 J 1/10W		
R294			RK73FB2A223J	CHIP R 22K J 1/10W		
R295			RK73FB2A153J	CHIP R 15K J 1/10W		
R296			RK73FB2A101J	CHIP R 100 J 1/10W		
R401			RK73FB2A104J	CHIP R 100K J 1/10W		
R402			RK73FB2A101J	CHIP R 100 J 1/10W		
R403			RK73FB2A330J	CHIP R 33 J 1/10W		
R404			RK73FB2A101J	CHIP R 100 J 1/10W		
R405			RK73FB2A472J	CHIP R 4.7K J 1/10W		
R406			RK73FB2A470J	CHIP R 47 J 1/10W		
R408			RK73FB2A151J	CHIP R 150 J 1/10W		
R409			RK73FB2A330J	CHIP R 33 J 1/10W		
R410			RK73FB2A471J	CHIP R 470 J 1/10W		
R411,412			RK73FB2A102J	CHIP R 1.0K J 1/10W		
R413			RK73FB2A223J	CHIP R 22K J 1/10W		

L:Scandinavia K:USA P:Canada
Y:PX(Far East, Hawaii) T:England E:Europe
Y:AAFES(Europe) X:Australia M:Other Areas

⚠ indicates safety critical components.

PARTS LIST

× New Parts
Parts without Parts No. are not supplied.
Les articles non mentionnes dans le Parts No. ne sont pas fournis.
Teile ohne Parts No. werden nicht geliefert.

TX-RX UNIT (X57-4510-XX)

Ref. No. 参照番号	Address 位置	New Parts 新	Parts No. 部品番号	Description 部品名／規格	Destination 仕向	Remarks 備考
R414			RK73FB2A271J	CHIP R 270 J 1/10W		
R415			RK73FB2A330J	CHIP R 33 J 1/10W		
R416			RK73FB2A102J	CHIP R 1.0K J 1/10W		
R417			RK73FB2A103J	CHIP R 10K J 1/10W		
R418			RK73FB2A473J	CHIP R 47K J 1/10W		
R419			RK73FB2A470J	CHIP R 47 J 1/10W		
R420			RK73FB2A274J	CHIP R 270K J 1/10W		
R421			RK73FB2A330J	CHIP R 33 J 1/10W		
R422			RK73FB2A101J	CHIP R 100 J 1/10W		
R424			RK73FB2A102J	CHIP R 1.0K J 1/10W		
R425			RK73FB2A563J	CHIP R 56K J 1/10W		
R426			RK73FB2A100J	CHIP R 10 J 1/10W		
R427			RK73FB2A471J	CHIP R 470 J 1/10W		
R428			RK73FB2A102J	CHIP R 1.0K J 1/10W		
R429			RK73FB2A821J	CHIP R 820 J 1/10W		
R430			RK73FB2A471J	CHIP R 470 J 1/10W		
R431,432			RK73FB2A472J	CHIP R 4.7K J 1/10W		
R433			RK73FB2A103J	CHIP R 10K J 1/10W		
R434			RK73FB2A472J	CHIP R 4.7K J 1/10W		
R435,436			RK73FB2A101J	CHIP R 100 J 1/10W		
R439			RK73FB2A683J	CHIP R 68K J 1/10W		
R440,441			RK73FB2A103J	CHIP R 10K J 1/10W		
R442-445			RK73FB2A470J	CHIP R 47 J 1/10W		
R446,447			RK73FB2A471J	CHIP R 470 J 1/10W		
R448			RK73FB2A102J	CHIP R 1.0K J 1/10W		
R449			RK73FB2A101J	CHIP R 100 J 1/10W		
R451			RK73FB2A100J	CHIP R 10 J 1/10W		
R452			RK73FB2A331J	CHIP R 330 J 1/10W		
R453			RK73FB2A103J	CHIP R 10K J 1/10W		
R454,455			RK73FB2A102J	CHIP R 1.0K J 1/10W		
R456			RK73FB2A470J	CHIP R 47 J 1/10W		
R457			RK73FB2A221J	CHIP R 220 J 1/10W		
R458			RK73FB2A680J	CHIP R 68 J 1/10W		
R459,460			RK73FB2A101J	CHIP R 100 J 1/10W		
R461			RK73FB2A332J	CHIP R 3.3K J 1/10W		
R462			RK73FB2A681J	CHIP R 680 J 1/10W		
R463			RK73FB2A470J	CHIP R 47 J 1/10W		
R464			RK73FB2A332J	CHIP R 3.3K J 1/10W		
R465			RK73FB2A102J	CHIP R 1.0K J 1/10W		
R466			RK73FB2A220J	CHIP R 22 J 1/10W		
R467			RK73FB2A332J	CHIP R 3.3K J 1/10W		
R468,469			RK73FB2A104J	CHIP R 100K J 1/10W		
R470			RK73FB2A473J	CHIP R 47K J 1/10W		
R471			RK73FB2A822J	CHIP R 8.2K J 1/10W		
R472			RK73FB2A103J	CHIP R 10K J 1/10W		
R473			RK73FB2A101J	CHIP R 100 J 1/10W		
R474			RK73FB2A474J	CHIP R 470K J 1/10W		
R475			RK73FB2A221J	CHIP R 220 J 1/10W		
R476			RK73FB2A100J	CHIP R 10 J 1/10W		
R477			RK73FB2A473J	CHIP R 47K J 1/10W		
R478			RK73FB2A103J	CHIP R 10K J 1/10W		
R479			RK73FB2A682J	CHIP R 6.8K J 1/10W		
R480			RK73FB2A103J	CHIP R 10K J 1/10W		
R481			RK73FB2A333J	CHIP R 33K J 1/10W		
R482			RK73FB2A222J	CHIP R 2.2K J 1/10W		

L:Scandinavia K:USA P:Canada
Y:PX(Far East, Hawaii) T:England E:Europe
Y:AAFES(Europe) X:Australia M:Other Areas

⚠ indicates safety critical components.

PARTS LIST

× New Parts
Parts without Parts No. are not supplied.
Les articles non mentionnes dans le Parts No. ne sont pas fournis.
Teile ohne Parts No. werden nicht geliefert.

TX-RX UNIT (X57-4510-XX)

Ref. No. 参照番号	Address 位置	New Parts 新	Parts No. 部品番号	Description 部品名／規格	Destination 仕向	Remarks 備考
R483			RK73FB2A273J	CHIP R 27K J 1/10W		
R484			RK73FB2A223J	CHIP R 22K J 1/10W		
R485			RK73FB2A473J	CHIP R 47K J 1/10W		
R489			RK73FB2A272J	CHIP R 2.7K J 1/10W		
R490,491			RK73FB2A273J	CHIP R 27K J 1/10W		
R492			RK73FB2A473J	CHIP R 47K J 1/10W		
R494			RK73FB2A103J	CHIP R 10K J 1/10W		
R495,496			RK73FB2A681J	CHIP R 680 J 1/10W		
R497			RK73FB2A471J	CHIP R 470 J 1/10W		
R498,499			RK73FB2A102J	CHIP R 1.0K J 1/10W		
R500			RK73FB2A100J	CHIP R 10 J 1/10W		
R501			RK73FB2A470J	CHIP R 47 J 1/10W		
R502			RK73FB2A152J	CHIP R 1.5K J 1/10W		
R503			RK73FB2A470J	CHIP R 47 J 1/10W		
R504			RK73FB2A331J	CHIP R 330 J 1/10W		
R505			RK73FB2A101J	CHIP R 100 J 1/10W		
R506			RK73FB2A330J	CHIP R 33 J 1/10W		
R507			RK73FB2A101J	CHIP R 100 J 1/10W		
R508			RK73FB2A100J	CHIP R 10 J 1/10W		
R509			RK73FB2A101J	CHIP R 100 J 1/10W		
R510			RK73FB2A100J	CHIP R 10 J 1/10W		
R511			RK73FB2A221J	CHIP R 220 J 1/10W		
R512			RK73FB2A150J	CHIP R 15 J 1/10W		
R513			RK73FB2A100J	CHIP R 10 J 1/10W		
R515			RK73FB2A150J	CHIP R 15 J 1/10W		
R516			RK73FB2A104J	CHIP R 100K J 1/10W		
R517			RK73FB2A473J	CHIP R 47K J 1/10W		
R518,519			RK73FB2A104J	CHIP R 100K J 1/10W		
R520,521			RK73FB2A103J	CHIP R 10K J 1/10W		
R522			RK73FB2A332J	CHIP R 3.3K J 1/10W		
R523			RK73FB2A103J	CHIP R 10K J 1/10W		
R524			RK73FB2A471J	CHIP R 470 J 1/10W		
R525-527			RK73FB2A102J	CHIP R 1.0K J 1/10W		
R528			RK73FB2A223J	CHIP R 22K J 1/10W		
R529			RK73FB2A103J	CHIP R 10K J 1/10W		
R531			RK73FB2A152J	CHIP R 1.5K J 1/10W		
R532			RK73FB2A330J	CHIP R 33 J 1/10W		
R601			RK73FB2A471J	CHIP R 470 J 1/10W		
R602			RD14BB2E151J	RD 150 J 1/4W		
R603			RK73FB2A472J	CHIP R 4.7K J 1/10W		
R604			RK73FB2A122J	CHIP R 1.2K J 1/10W		
R605			RK73FB2A561J	CHIP R 560 J 1/10W		
R606			RD14DB2H121J	SMALL-RD 120 J 1/2W		
R609			RK73FB2A563J	CHIP R 56K J 1/10W		
R610			RK73FB2A471J	CHIP R 470 J 1/10W		
R611			R92-1316-05	FIXED RESISTOR 39 1W		
R612		*	R92-1282-05	FIXED RESISTOR 10 1W		
R613			R92-1292-05	FIXED RESISTOR 68 1W		
R614			RK73FB2A121J	CHIP R 120 J 1/10W		
R615			RK73FB2A470J	CHIP R 47 J 1/10W		
R616			RK73FB2A121J	CHIP R 120 J 1/10W		
R617		*	R92-1375-05	CHIP R 22 J 1/4W		
R701-703			RK73FB2A102J	CHIP R 1.0K J 1/10W		
VR1			R12-6413-05	TRIMMING POT 220		
VR2			R12-6744-05	TRIMMING POT 47K		

L:Scandinavia **K:**USA **P:**Canada
Y:PX(Far East, Hawaii) **T:**England **E:**Europe
Y:AAFES(Europe) **X:**Australia **M:**Other Areas

⚠ indicates safety critical components.

PARTS LIST

* New Parts
Parts without Parts No. are not supplied.
Les articles non mentionnes dans le Parts No. ne sont pas fournis.
Teile ohne Parts No. werden nicht geliefert.

TX-RX UNIT (X57-4510-XX)

Ref. No. 参照番号	Address 位置	New Parts 新	Parts No. 部品番号	Description 部品名／規格	Destination 仕向	Remarks 備考
VR3			R12-6740-05	TRIMMING POT 10K		
VR4			R12-6425-05	TRIM POT. 22K		
VR6			R12-6427-05	TRIM POT. 47K		
VR7 ,8			R12-6423-05	TRIM POT. 10K		
VR9			R12-6740-05	TRIMMING POT 10K		
VR401			R12-6746-05	TRIM POT. 470		
VR402			R12-6425-05	TRIM POT. 22K		
VR601			R12-6744-05	TRIMMING POT 47K		
VR602			R12-0091-05	TRIMMING POT 100		
VR603			R12-6744-05	TRIMMING POT 47K		
K1			S51-1436-05	RELAY		
S1			S31-1411-05	SLIDE SWITCH		
D1			LFB01	DIODE		
D2			1SS226	DIODE		
D3 -6			DAN235K	DIODE		
D7			1SV164	DIODE		
D8			RD5.1M(B2)	DIODE		
D9			DAN202K	DIODE		
D10			1SS355	DIODE (or MA110)		
D11			DAN202K	DIODE		
D12			DAP202K	DIODE		
D13 -15			1SS355	DIODE (or MA110)		
D16 -18			DAN202K	DIODE		
D19			HSM88AS	DIODE		
D20			LFB01	DIODE		
D21			1SS355	DIODE (or MA110)		
D22			DAN202K	DIODE		
D23 -28			1SS355	DIODE (or MA110)		
D201		*	ND433G	DIODE		
D401			MA77	DIODE		
D402,403			DAN235K	DIODE		
D404			MA862	DIODE		
D405			1SS355	DIODE (or MA110)		
D406			DAN235K	DIODE		
D408		*	ND433G	DIODE		
D409			DAN235K	DIODE		
D411			HSM88AS	DIODE		
D412			1SS226	DIODE		
D414			RD6.2M(B2)	DIODE		
D416			1SS355	DIODE (or MA110)		
D417			DAN202K	DIODE		
D418			1SS355	DIODE (or MA110)		
D419			RD3.9M(B2)	DIODE		
D601			MI407	DIODE		
D602			DSA3A1	DIODE		
D603			LFB01	DIODE		
D604			MI308	DIODE		
D605,606			HSM88AS	DIODE		
D607			LFB01	DIODE		
D608		*	5Z27(LC3)	DIODE		
D609			RD18M(B1)	DIORD		
D610			DAN202K	DIODE		
IC1		*	KCX05	HIC		
IC2			KCD08	HIC		

L:Scandinavia K:USA P:Canada
Y:PX(Far East, Hawaii) T:England E:Europe
Y:AAFES(Europe) X:Australia M:Other Areas

⚠ indicates safety critical components.

PARTS LIST

* New Parts
Parts without Parts No. are not supplied.
Les articles non mentionnes dans le Parts No. ne sont pas fournis.
Teile ohne Parts No. werden nicht geliefert.

TX-RX UNIT (X57-4510-XX)

Ref. No. 参照番号	Address 位置	New Parts 新	Parts No. 部品番号	Description 部品名／規格	Destination 仕向	Remarks 備考
IC3			KCD04	IC(FM IF)		
IC4			BU4066BCF	IC		
IC4			XRU4066BCF	IC or		
IC5		*	MB87032PF	IC		
IC6			UPC1242H	IC(AF POWER AMP)		
IC7			TC9174F	IC(CMOS I/O EXTENSION)		
IC8			BU4066BCF	IC		
IC8			XRU4066BCF	IC or		
IC9			NJM4558M	IC(OP AMP X2)		
IC10			UPC1313HA	IC(PRE AMP)		
IC11			TC9174F	IC(CMOS I/O EXTENSION)		
IC12		*	KCA06	HIC		
IC13			BU4066BCF	IC		
IC13			XRU4066BCF	IC or		
IC14			UPC1037HA	IC(DUBBLE BALANCE MODULATOR)		
IC201-203			SN16913P	IC(DUBLE BALANCED MIXERS)		
IC204			CXD1225M	IC(PLL SYNTHESIZER)		
IC205			TA78L08F	IC(VOLTAGE REGULATOR)		
IC206			TA78L05F	IC(5V VOLTAGE REGULATOR)		
IC401			NJM2902M	IC(OP AMP X4)		
IC402		*	TA7808F	IC		
IC601			M57716	IC(POWER MODULE)···DRIVE)		
IC602			M67728	IC(POWER MODULE/430-450MHZ)		
Q1			3SK131(M)	FET		
Q2 ,3			2SC2712(Y)	TRANSISTOR		
Q5			2SJ106(GR)	FET		
Q6			2SC2712(Y)	TRANSISTOR		
Q7			2SD1757K(S)	TRANSISTOR		
Q8			DTC114EK	DIGITAL TRANSISTOR		
Q10			DTC114TK	DIGITAL TRANSISTOR		
Q11 -14			DTA124EK	DIGITAL TRANSISTOR		
Q15			DTC114EK	DIGITAL TRANSISTOR		
Q16			DTA124EK	DIGITAL TRANSISTOR		
Q17			2SK208(Y)	FET		
Q18 ,19			2SC2712(Y)	TRANSISTOR		
Q20			DTA124EK	DIGITAL TRANSISTOR		
Q21			2SC2712(Y)	TRANSISTOR		
Q22			FMC1	TRANSISTOR		
Q23 ,24			DTC114EK	DIGITAL TRANSISTOR		
Q25			2SC2712(Y)	TRANSISTOR		
Q26 ,27			DTC114EK	DIGITAL TRANSISTOR		
Q28			3SK131(M)	FET		
Q29			DTC114EK	DIGITAL TRANSISTOR		
Q30 ,31			DTA124EK	DIGITAL TRANSISTOR		
Q32 ,33			2SK210(Y)	FET		
Q34			DTA124EK	DIGITAL TRANSISTOR		
Q35			DTC114EK	DIGITAL TRANSISTOR		
Q36 ,37			DTC114TK	DIGITAL TRANSISTOR		
Q38			DTC124EK	DIGITAL TRANSISTOR		
Q39			2SC2712(GR)	TRANSISTOR		
Q40			2SD1624(S)	TRANSISTOR		
Q201			2SC2712(Y)	TRANSISTOR		
Q202			2SC2714(Y)	TRANSISTOR		
Q203,204			2SC2712(Y)	TRANSISTOR		
Q206,207			2SC2714(Y)	TRANSISTOR		

L:Scandinavia **K:**USA **P:**Canada
Y:PX(Far East, Hawaii) **T:**England **E:**Europe
Y:AAFES(Europe) **X:**Australia **M:**Other Areas

⚠ indicates safety critical components.

PARTS LIST

* New Parts
Parts without Parts No. are not supplied.
Les articles non mentionnes dans le Parts No. ne sont pas fournis.
Teile ohne Parts No. werden nicht geliefert.

TX-RX UNIT (X57-4510-XX)
SUB UNIT (DDS) (X58-4020-0X)

Ref. No. 参照番号	Address 位置	New Parts 新	Parts No. 部品番号	Description 部品名／規格	Destination 仕向	Remarks 備考
Q208			2SC2712(Y)	TRANSISTOR		
Q209			2SC2714(Y)	TRANSISTOR		
Q210			2SC2712(Y)	TRANSISTOR		
Q211			2SC2714(Y)	TRANSISTOR		
Q212-215			2SC3120	TRANSISTOR		
Q216			2SC3356	TRANSISTOR		
Q217-219			2SC3324(G)	TRANSISTOR		
Q220			DTC114TK	DIGITAL TRANSISTOR		
Q401			3SK184(S)	FET		
Q402			2SK1577(2,3)	FET		
Q403			DTC114EK	DIGITAL TRANSISTOR		
Q405			2SC2714(Y)	TRANSISTOR		
Q406			3SK184(S)	FET		
Q408-411			3SK131(M)	FET		
Q412			2SC2759(U23)	TRANSISTOR		
Q413			2SC3357	TRANSISTOR		
Q414			2SC2954	TRANSISTOR		
Q415			2SC2762	TRANSISTOR		
Q416			DTA143EK	DIGITAL TRANSISTOR		
Q417			DTA124EK	DIGITAL TRANSISTOR		
Q418			DTC124EK	DIGITAL TRANSISTOR		
Q419			2SA1162(Y)	TRANSISTOR		
Q420,421			2SC2712(Y)	TRANSISTOR		
Q422,423			2SA1213(Y)	TRANSISTOR		
Q424-427			DTC114EK	DIGITAL TRANSISTOR		
Q428			DTC124EK	DIGITAL TRANSISTOR		
Q429			2SK210(GR)	FET		
Q602			DTC124EK	DIGITAL TRANSISTOR		
Q603			2SB1302(S)	TRANSISTOR		
Q604		*	2SA1824(S)	TRANSISTOR		
Q605		*	2SC2873(Y)	TRANSISTOR		
Q606			2SA1162(Y)	TRANSISTOR		
Q607			2SC2712(Y)	TRANSISTOR		
Q608			DTC114EK	DIGITAL TRANSISTOR		
TH1			157-502-53002	THERMISTOR		
TH2 ,3			157-102-55008	THERMISTOR		
TH401			157-102-53003	THERMISTOR		
TH601			5TP-41S	THERMISTOR		
S701		*	W02-1809-05	ENCODER		
A201			X58-4020-00	SUB UNIT (DDS-1)		
A202		*	X58-4020-01	SUB UNIT (DDS-2)		
A203		*	X58-4080-00	SUB UNIT (VCO)		
A601		*	X59-4020-00	MODULE UNIT (FAN)		
SUB UNIT (DDS) (X58-4020-0X)						
C1			CK73FB1E223K	CHIP C 0.022UF K		
C2			CK73FB1H102K	CHIP C 1000PF K		
C3 ,4			C92-0007-05	CHIP TAN 2.2UF 10WV		
C5			CK73FB1H102K	CHIP C 1000PF K		
C6			CC73FCH1H181J	CHIP C 180PF J		
C7			CC73FCH1H100D	CHIP C 10PF D		
C8			CC73FCH1H221J	CHIP C 220PF J		
C9			CC73FCH1H220J	CHIP C 22PF J		
C10			CC73FCH1H151J	CHIP C 150PF J		
C12 ,13			CC73FCH1H270J	CHIP C 27PF J		

L:Scandinavia **K:**USA **P:**Canada
Y:PX(Far East, Hawaii) **T:**England **E:**Europe
Y:AAFES(Europe) **X:**Australia **M:**Other Areas

⚠ indicates safety critical components.

PARTS LIST

* New Parts
Parts without Parts No. are not supplied.
Les articles non mentionnes dans le Parts No. ne sont pas fournis.
Teile ohne Parts No. werden nicht gellefert.

SUB UNIT (DDS) (X58-4020-0X)
VCO UNIT (X58-4080-00)
FAN UNIT (X59-4020-00)

Ref. No. 参照番号	Address 位置	New Parts 新	Parts No. 部品番号	Description 部品名／規格	Destination 仕向	Remarks 備考
C14 -17			CC73FCH1H101J	CHIP C 100PF J		
CN1			E40-5612-05	PIN CONNECTOR (DDS-1)		
CN1		*	E40-5676-05	PIN CONNECTOR (8P:DDS-2)		
CN2			E40-5611-05	PIN CONNECTOR (DDS-1)		
CN2		*	E40-5675-05	PIN CONNECTOR (2P:DDS-2)		
L1 -3			L40-1011-48	SMALL FIXED INDUCTOR		
L4 ,5			L40-2201-48	SMALL FIXED INDUCTOR		
CP1 ,2			R90-0721-05	MULTIPLE COMPONENTS (C.R.L)		
R1			RK73FB2A103J	CHIP R 10K J 1/10W		
R2			RK73FB2A153J	CHIP R 15K J 1/10W		
R3			RK73FB2A221J	CHIP R 220 J 1/10W		
R4			RK73FB2A101J	CHIP R 100 J 1/10W		
R5			RK73FB2A471J	CHIP R 470 J 1/10W		
IC1			F71022	IC(DDS)		
Q1			2SC2712(GR)	TRANSISTOR		
VCO UNIT (X58-4080-00)						
C1			CK73FB1H102K	CHIP C 1000PF K		
C2			CC73FSL1H101J	CHIP C 100PF J		
C3			CC73FCH1H100D	CHIP C 10PF D		
C4			CC73FCH1H060D	CHIP C 6PF D		
C5			CC73FCH1H020C	CHIP C 2.0PF C		
C6			CC73FCH1H060D	CHIP C 6PF D		
C7			CC73FCH1H220J	CHIP C 22PF J		
C8			CK73FB1H102K	CHIP C 1000PF K		
C9			CC73FCH1H010C	CHIP C 1PF C		
C10			CK73FB1H102K	CHIP C 1000PF K		
C11			CC73FSL1H101J	CHIP C 100PF J		
C12			CK73FB1H102K	CHIP C 1000PF K		
TC1			C05-0346-05	TRIM CAP		
CN1		*	E40-5677-05	PIN CONNECTOR FOR INSIDE		
-		*	F10-2092-04	SHIELDING PLATE		
-			F11-1086-04	SHIELDING CASE		
-			G13-0904-04	FORMED PLATE		
L1			L40-1095-48	SMALL FIXED INDUCTOR		
L2		*	L34-4348-05	COIL		
L3 ,4			L40-1095-48	SMALL FIXED INDUCTOR		
-			N30-2604-41	PAN HEAD MACHIN SCREW		
R1			RK73FB2A180J	CHIP R 18 J 1/10W		
R2			RK73FB2A151J	CHIP R 150 J 1/10W		
R3			RK73FB2A103J	CHIP R 10K J 1/10W		
R4			RK73FB2A472J	CHIP R 4.7K J 1/10W		
R5			RK73FB2A101J	CHIP R 100 J 1/10W		
R6			RK73FB2A820J	CHIP R 82 J 1/10W		
D1			1SV164	DIODE		
Q1			2SK508NV(K52)	FET		
Q2			2SC3356	TRANSISTOR		
FAN UNIT (X59-4020-00)						
C1 -8			CK73FB1H102K	CHIP C 1000PF K		

L:Scandinavia **K:**USA **P:**Canada
Y:PX(Far East, Hawaii) **T:**England **E:**Europe
Y:AAFES(Europe) **X:**Australia **M:**Other Areas

⚠ indicates safety critical components.

PARTS LIST

× New Parts
Parts without Parts No. are not supplied.
Les articles non mentionnes dans le Parts No. ne sont pas fournis.
Teile ohne Parts No. werden nicht geliefert.

FAN UNIT (X59-4020-00)
LCD ASSY (B38-0701-25)

Ref. No. 参照番号	Address 位置	New Parts 新	Parts No. 部品番号	Description 部品名／規格	Destination 仕向	Remarks 備考
-			E23-0471-05	TERMINAL		
R2			RK73GB1J103J	CHIP R 10K J 1/16W		
R3			RK73FB2A101J	CHIP R 100 J 1/10W		
R4 -6			RK73GB1J562J	CHIP R 5.6K J 1/16W		
R7			RK73GB1J472J	CHIP R 4.7K J 1/16W		
R8			RK73GB1J821J	CHIP R 820 J 1/16W		
R9			RK73GB1J472J	CHIP R 4.7K J 1/16W		
R10			RK73GB1J333J	CHIP R 33K J 1/16W		
D1			DAN202K	DIODE		
IC1			NJM2904M	IC(OP AMP X2)		
Q1			DTC114TK	DIGITAL TRANSISTOR		
Q2 ,3			DTD114EK	DIGITAL TRANSISTOR		
LCD ASSY (B38-0701-25)						
C1 ,2			CC73FSL1H101J	CHIP C 100PF J		
C3 ,4			CK73FB1H103K	CHIP C 0.010UF K		
C5			C92-0552-05	ELECTRO 4.7UF 10WV		
C6 -12			CK73FB1H103K	CHIP C 0.010UF K		
C13 ,14			CC73FSL1H330J	CHIP C 33PF J		
C15			CK73FB1E104Z	CHIP C 0.10UF Z		
C16			CK73FB1H223K	CHIP C 0.022UF K		
C17 ,18			CK73FB1H102K	CHIP C 1000PF K		
C19 -22			CK73FB1H103K	CHIP C 0.010UF K		
C23		*	C92-0607-08	ELECTRO 4.7UF 10WV		
C24			CK73FB1H103K	CHIP C 0.010UF K		
CN1			E40-3262-05	CONNECTOR (4 P)		
CN2 ,3			E40-5392-05	CONNECTOR (5 P)		
CN8 ,9			E40-5409-05	CONNECTOR (5 P)		
-		*	F07-1389-04	COVER		
-		*	J21-4473-08	MOUNTING HARDWARE		
XT1			L77-1504-05	CRYSTAL RESONATOR(4MHZ)		
R1			RK73FB2A105J	CHIP R 1.0M J 1/10W		
R2			RK73FB2A103J	CHIP R 10K J 1/10W		
R3			RK73FB2A331J	CHIP R 330 J 1/10W		
R4 -7			RK73FB2A101J	CHIP R 100 J 1/10W		
R8			RK73FB2A222J	CHIP R 2.2K J 1/10W		
R9			RK73FB2A102J	CHIP R 1.0K J 1/10W		
R10			RK73FB2A222J	CHIP R 2.2K J 1/10W		
R11			RK73EB2A392J	CHIP R 3.9K J 1/10W		
R12			RK73FB2A123J	CHIP R 12K J 1/10W		
R13			RK73FB2A272J	CHIP R 2.7K J 1/10W		
R14 ,15			R92-1240-05	CHIP R 10 J 1/4W		
R17 ,18			RK73FB2A104J	CHIP R 100K J 1/10W		
R19			RK73FB2A103J	CHIP R 10K J 1/4W		
R20			RK73FB2A470J	CHIP R 47 J 1/10W		
R21			RK73FB2A100J	CHIP R 10 J 1/10W		
R22			RK73FB2A105J	CHIP R 1.0M J 1/10W		
R23			R92-0670-05	CHIP R 0 OHM		
R24 -41			RK73FB2A103J	CHIP R 10K J 1/10W		
R42 ,43			RK73FB2A100J	CHIP R 10 J 1/10W		
R44 -46			RK73FB2A103J	CHIP R 10K J 1/10W		

L:Scandinavia **K**:USA **P**:Canada
Y:PX(Far East, Hawaii) **T**:England **E**:Europe
Y:AAFES(Europe) **X**:Australia **M**:Other Areas

⚠ indicates safety critical components.

PARTS LIST

* New Parts
Parts without Parts No. are not supplied.
Les articles non mentionnes dans le Parts No. ne sont pas fournis.
Teile ohne Parts No. werden nicht geliefert.

LCD ASSY (B38-0701-25)

Ref. No. 参照番号	Address 位置	New Parts 新	Parts No. 部品番号	Description 部品名／規格	Destination 仕向	Remarks 備考
R47 ,48			RK73FB2A223J	CHIP R 22K J 1/10W		
R49			RK73EB2A105J	CHIP R 1.0M J 1/10W		
R50			RK73FB2A104J	CHIP R 100K J 1/10W		
VR1		*	R23-3410-08	TRIM POT 10K(B)		
VR2		*	R23-3411-08	TRIM POT 10K(B)		
S1			W02-1762-05	ENCODER		
S2			S40-2458-05	PUSH SWICH		
S3 -19			S70-0408-05	TACT SWICH		
D1			MA112	DIORD		
D2			RLS73	DIORD		
IC1		*	HD404719A46H	IC(CPU)		
IC2			MSM5265GS-V1K	IC		
IC3 ,4			TC4S11F	IC(2 INPUT NAND GATE)		
IC5			L78LR05B-FA	IC		
IC6 ,7			TC4S584F	IC		
LCD1		*	B38-0727-08	LCD ELEMENT		
PL1 -4			B30-0865-15	LAMP (6.3V 75mA)		
Q1			DTC114EK	DIGITAL TR		
Q2		*	2SA1745	TR		
Q3			DTC114EK	DIGITAL TR		
Q4			2SA1307(Y)	TR		
Q5			2SC2712(Y)	TR		
Q6			2SA1162(Y)	TR		

L:Scandinavia **K:**USA **P:**Canada
Y:PX(Far East, Hawaii) **T:**England **E:**Europe
Y:AAFES(Europe) **X:**Australia **M:**Other Areas

⚠ indicates safety critical components.

TM-455A/E

EXPLODED VIEW

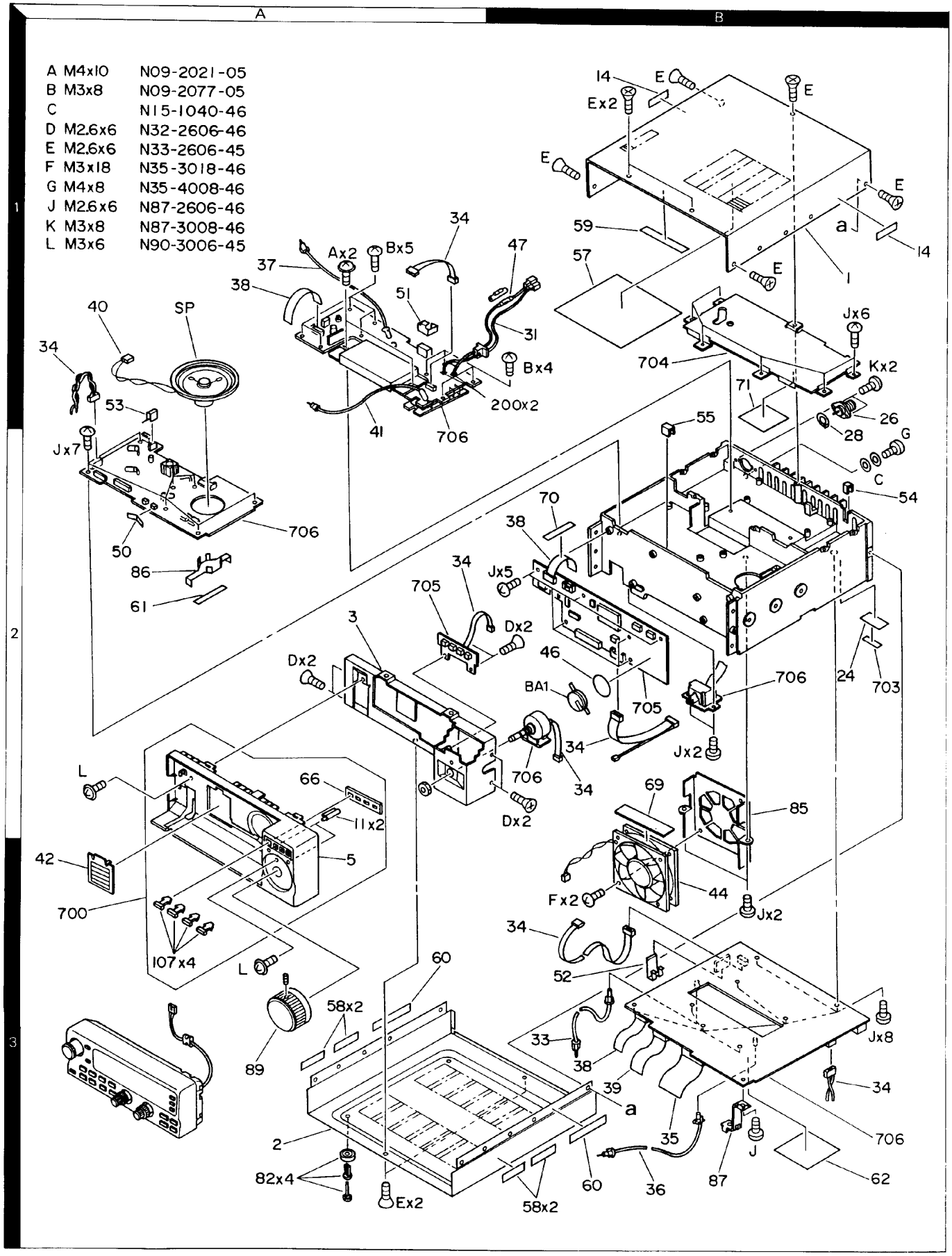

Parts with the exploded numbers larger than 700 are not supplied.

EXPLODED VIEW (CONTROL)

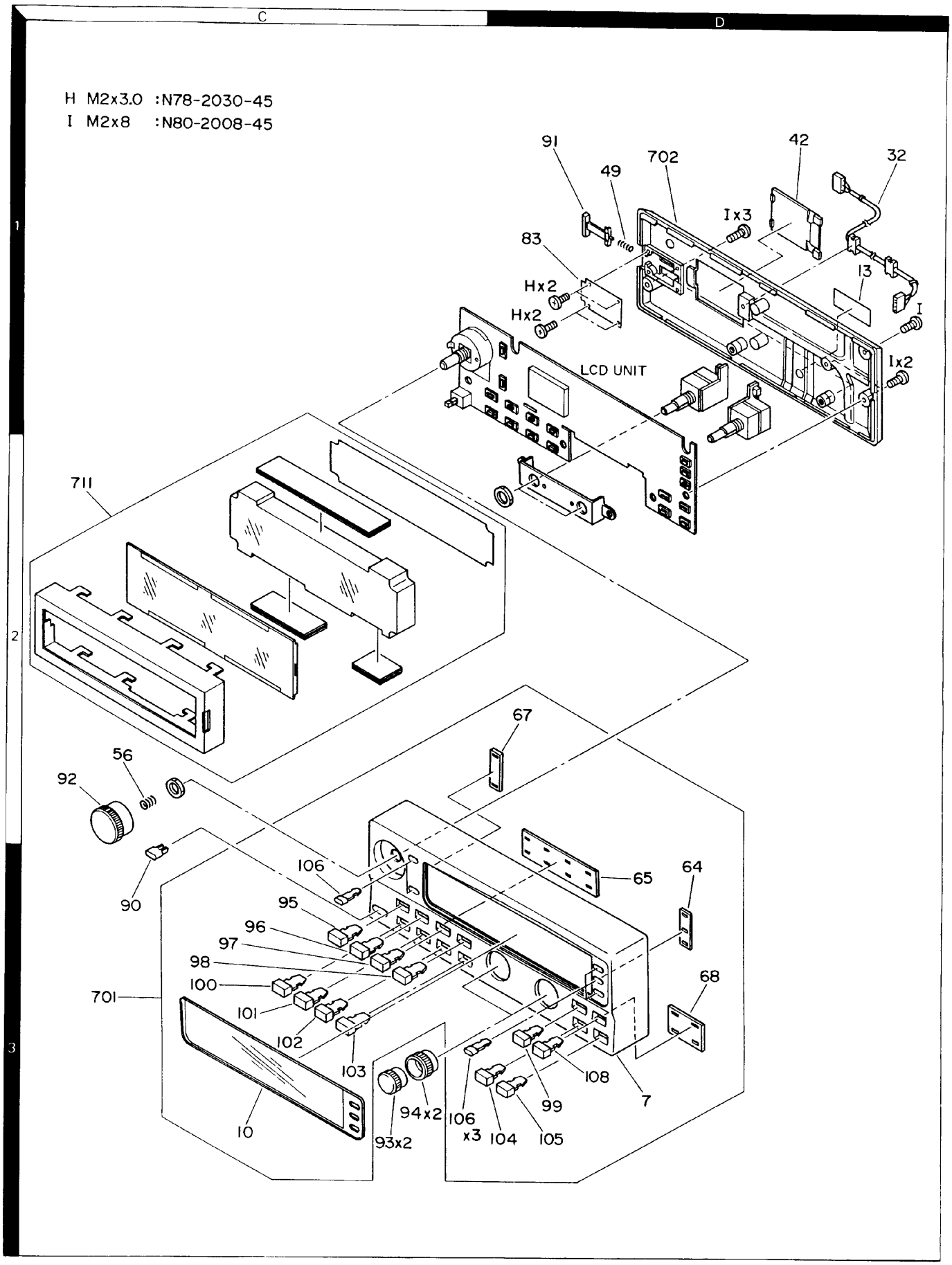

Parts with the exploded numbers larger than 700 are not supplied.

PACKING

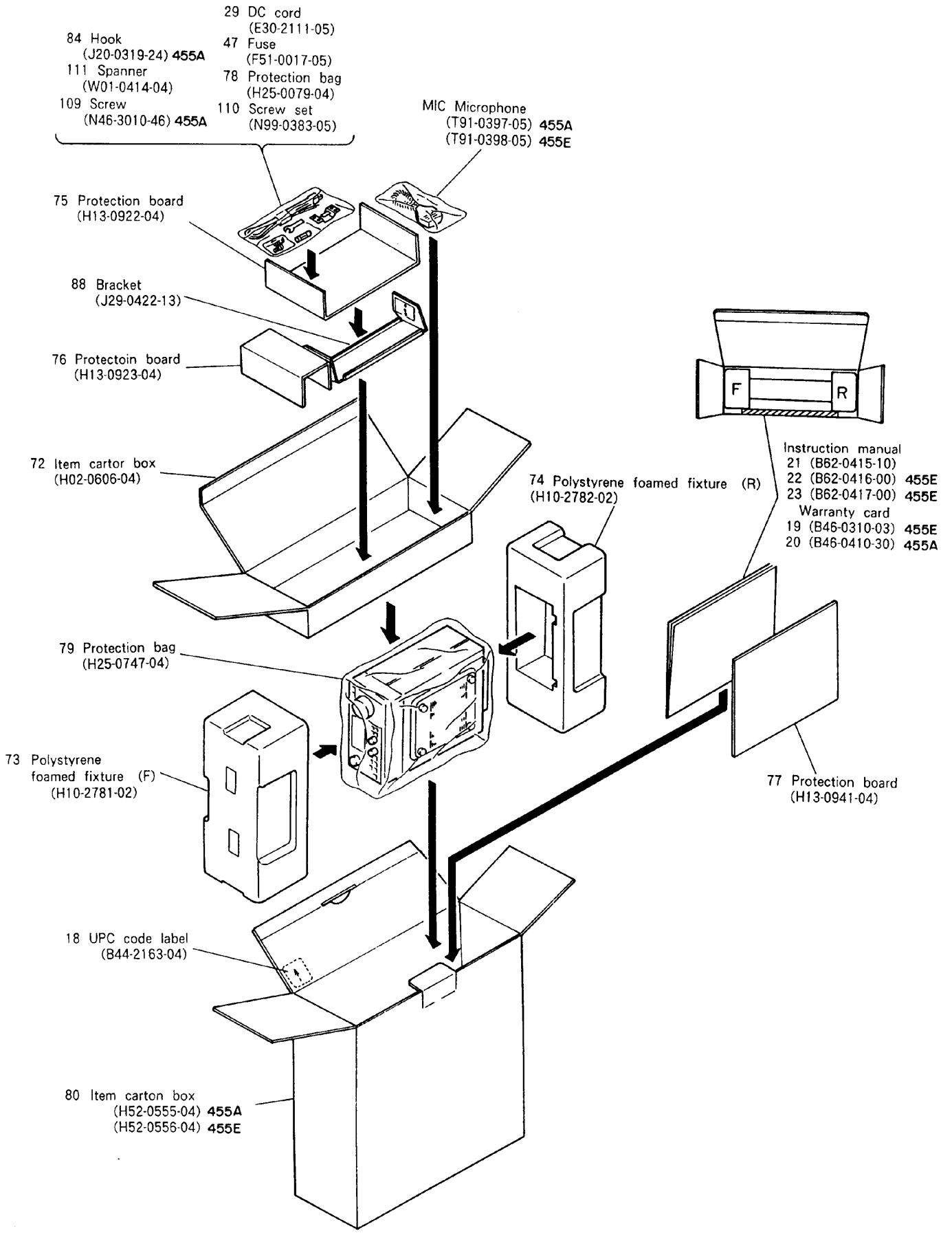
29 DC cord
(E30-2111-05)
84 Hook
(J20-0319-24) 455A
47 Fuse
(F51-0017-05)
111 Spanner
(W01-0414-04)
78 Protection bag
(H25-0079-04)
109 Screw
(N46-3010-46) 455A
110 Screw set
(N99-0383-05)
MIC Microphone
(T91-0397-05) 455A
(T91-0398-05) 455E
75 Protection board
(H13-0922-04)
88 Bracket
(J29-0422-13)
76 Protectoin board
(H13-0923-04)
F
R
72 Item cartor box
(H02-0606-04)
74 Polystyrene foamed fixture (R)
(H10-2782-02)
Instruction manual
21 (B62-0415-10)
22 (B62-0416-00) 455E
23 (B62-0417-00) 455E
Warranty card
19 (B46-0310-03) 455E
20 (B46-0410-30) 455A
79 Protection bag
(H25-0747-04)
73 Polystyrene
foamed fixture (F)
(H10-2781-02)
77 Protection board
(H13-0941-04)
18 UPC code label
(B44-2163-04)
80 Item carton box
(H52-0555-04) 455A
(H52-0556-04) 455E

ADJUSTMENT

OUTLINE OF ADJUSTMENT MODE

The adjustment items on the service adjustment mode menu are set in service adjustment mode. The data is updated when a write operation is performed with the switch on menu No. B3, Write into EEPROM. The following items must be set as shown to adjust correctly:

• Settings for adjustment

Item	Setting
IF-SHIFT	Center (0Hz)
RIT	OFF
AIP	OFF
NB	OFF
Power	HIGH
Microphone gain control by ALC	OFF

• Frequencies and modes for adjustment

Menu No.	Frequency	Mode	TX/RX
A0	435.040	FM	RX
A1	435.040	FM	RX
A2	435.040	FM	RX
A3	435.000	LSB	TX
A4	435.000	USB	TX
A5	435.039	USB	RX
A6	435.039	USB	RX
A7	435.039	USB	RX
A8	435.040	FM	RX
A9	435.040	FM	RX
AA	435.000	USB	TX
AB	435.000	USB	TX
AC	435.000	USB	TX
AD	435.000	FM	TX
AE	435.000	USB	TX
AF	435.000	USB	TX
B0	435.000	USB	TX
B1	435.000	FM	TX
B2	435.000	USB	TX
B3	435.040	FM	RX

SERVICE ADJUSTMENT MODE MENU

Menu No.	Menu contents
A0	Checksum display
A1	RIT VR mechanical center correction
A2	IF-SHIFT VR mechanical center correction
A3	LSB carrier point adjustment
A4	USB carrier point adjustment
A5	S meter curve adjustment (except FM) S1
A6	S meter curve adjustment (except FM) S9
A7	S meter curve adjustment (except FM) Full scale
A8	S meter curve adjustment (FM) Start
A9	S meter curve adjustment (FM) Full scale
AA	RF meter curve adjustment (low)
AB	RF meter curve adjustment (middle)
AC	RF meter curve adjustment (high)
AD	DTMF single tone output
AE	ALC start (for microphone gain control by ALC)
AF	ALC zone max. (for microphone gain control by ALC)
B0	ALC zone max. + 6 dB (for microphone gain control by ALC)
B1	FM microphone gain (high level)
B2	SSB microphone gain
B3	Write into EEPROM

ADJUSTMENT

PANEL OPERATION IN ADJUSTMENT MODE

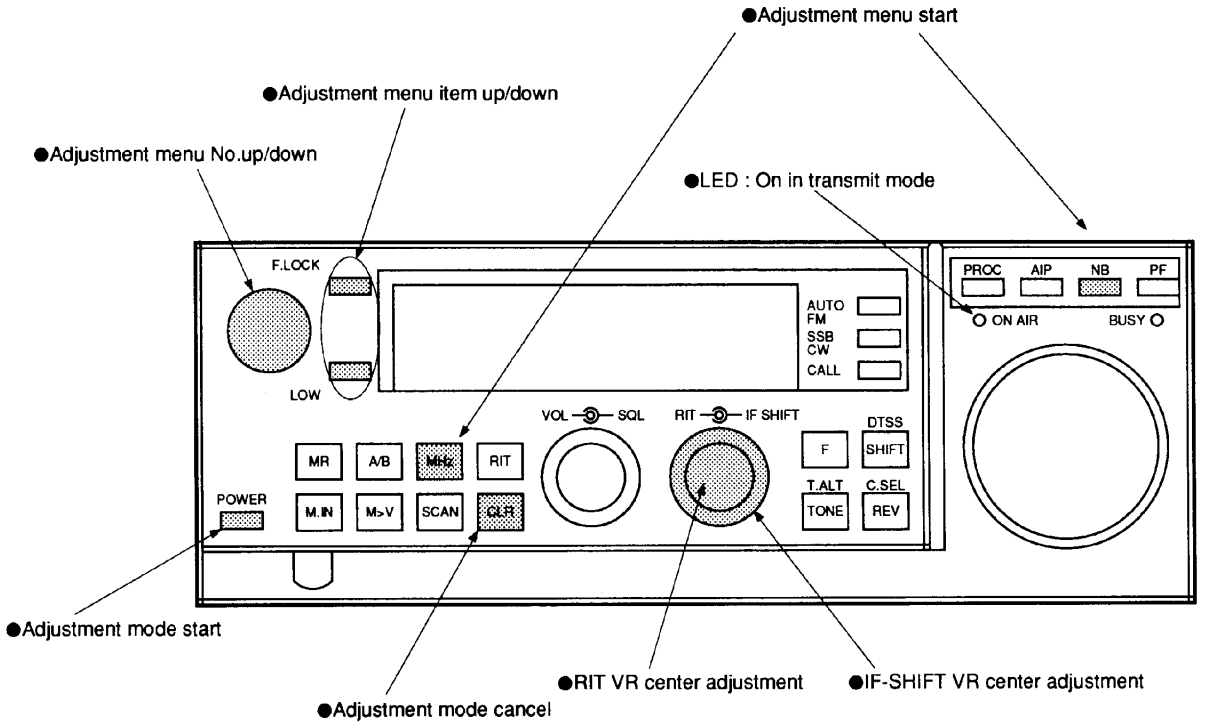

Setting

1) Hold down the NB and MHz keys and switch the power on. (Turn the encoder to change the menu number.)
2) When the UP or DOWN key is pressed, the menu number is set.
3) Menu numbers A1 to A9 and AA to AC can be used in adjustment mode.
4) Press the CLR key to cancel adjustment mode. (It is also canceled when the power is turned off.)

ADJUSTMENT

A0 CHECKSUM DISPLAY

• Adjustment function

Displays the version of the installed program. Displays the two low-order bytes of the checksum obtained by adding all the program codes.

• Adjustment procedure

None

• Display

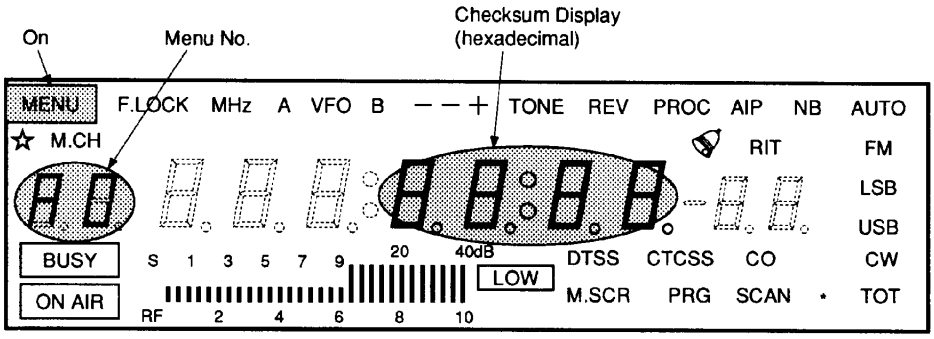

A1 RIT VR MECHANICAL CENTER CORRECTION

• Adjustment function

Input the RIT control center position to the microcomputer so that the RIT frequency is zero when the RIT control is at the center position on the panel.

• Adjustment procedure

1. Set the RIT control to the center position on the panel.
2. Press the F.LOCK/LOW key or the MIC UP/DOWN key.

• Remarks

The center position can be input unconditionally without pressing the key. However, the key must be pressed to prevent this menu item data from being modified accidentally when the RIT control is not at the center. When the key is pressed, data is updated and the two displays match.

• Display

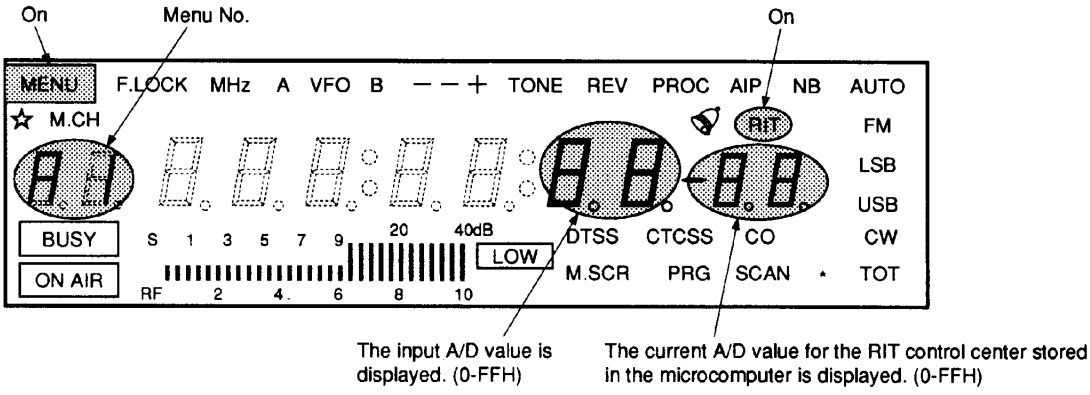

ADJUSTMENT

A2 IF-SHIFT VR MECHANICAL CENTER CORRECTION

• Adjustment function

Input the IF-SHIFT control center position to the microcomputer so that the IF-SHIFT frequency is zero when the IF-SHIFT control is at the center position on the panel.

• Adjustment procedure

1. Set the IF-SHIFT control to the center position on the panel.
2. Press the F.LOCK/LOW key or the MIC UP/DOWN key.

• Remarks

The center position can be input unconditionally without pressing the key. However, the key must be pressed to prevent this menu item data from being modified accidentally when the IF-SHIFT control is not at the center. When the key is pressed, data is updated and the two displays match.

• Display

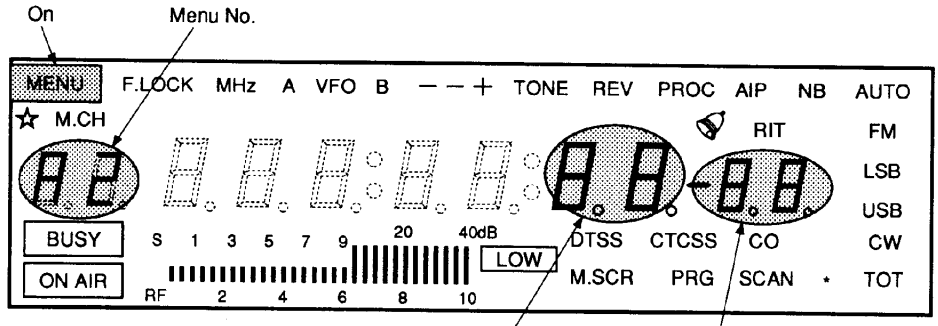

The input A/D value is displayed. (0-FFH)

The current A/D value for the IF-SHIFT control center stored in the microcomputer is displayed. (0-FFH)

A3 LSB CARRIER POINT ADJUSTMENT

• Adjustment function

Adjust the carrier point in 10 Hz steps to correct variations of the IF filter center frequency in LSB mode.

• Adjustment procedure

1. Transmit.
2. Change the correction frequency with the F.LOCK/LOW key or MIC UP/DOWN key.

• Remarks

The plus sign (+) indicates the frequency is moving away from the carrier frequency. (Same as IF-SHIFT)

• Display

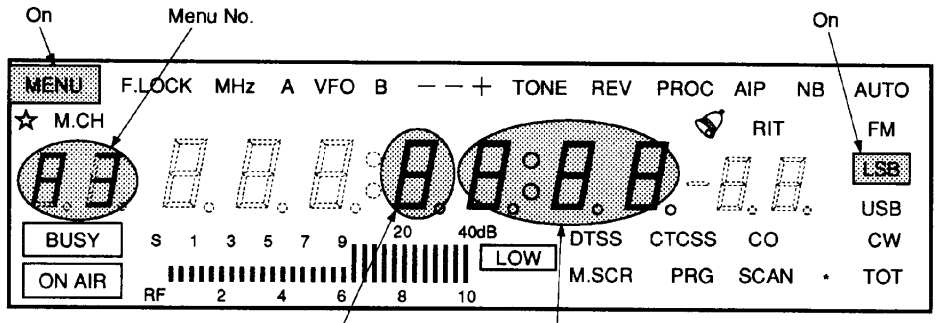

Sign (+: blank)

The correction frequency (Hz) for the center frequency is displayed.

ADJUSTMENT

A4 USB CARRIER POINT ADJUSTMENT

• Adjustment function

Adjust the carrier point in 10 Hz steps to correct variations of the IF filter center frequency in USB mode.

• Adjustment procedure

1. Transmit.
2. Change the correction frequency with the F.LOCK/LOW key or MIC UP/DOWN key.

• Remarks

The plus sign (+) indicates the frequency is moving away from the carrier frequency. (Same as IF-SHIFT)

• Display

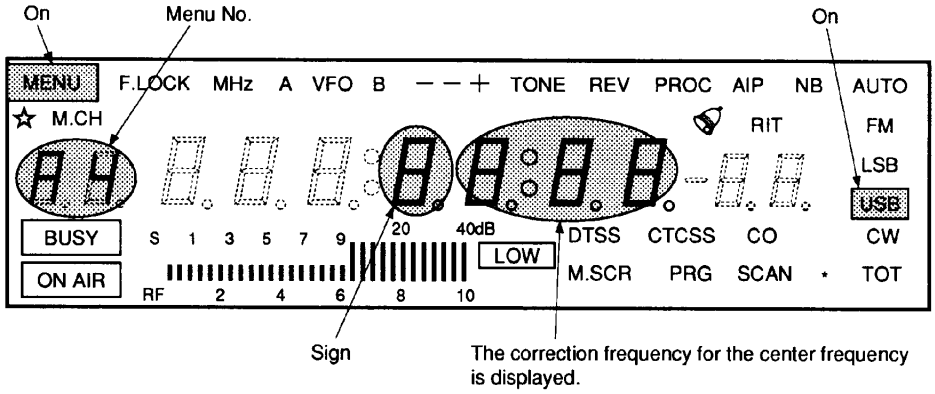

A5 S METER CURVE ADJUSTMENT (S1) (ANY MODE EXCEPT FM)

• Adjustment function

Input the S meter voltage at which two bars of the S meter light to the microcomputer to correct variations of the S1 level of the S meter.

• Adjustment procedure

1. Input the specified level at which S9 begins to light with the SG.
2. Press the F.LOCK/LOW key or the MIC UP/DOWN key.

• Remarks

The threshold is the input level minus the fixed value (9: approximately 0.18 V). When the input signal exceeds the threshold, one bar of the S meter lights. The curve between S1 and S9 is obtained from the levels of menus A5 and A6 by line approximation. Only the A/D values of the S1, S9, and full-scale levels are stored in the EEPROM. The meter bars operate according to the currently set curve. The curve is calculated when the key is pressed. The default for S1 is 63, approximately 1.24 V.

• Display

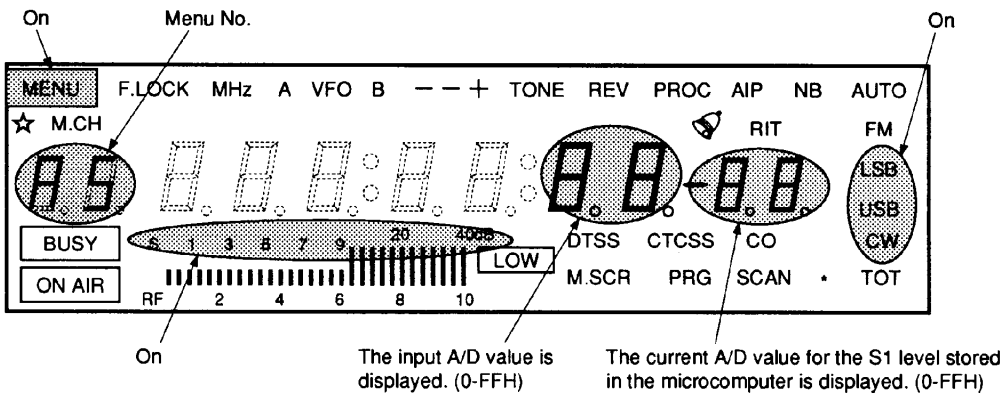

ADJUSTMENT

A6 S METER CURVE ADJUSTMENT (S9) (ANY MODE EXCEPT FM)

- **Adjustment function**

Input the S meter voltage that indicates S9 (the first large segment) to correct variations of the S9 level of the S meter.

- **Adjustment procedure**

1. Input the specified level at which S9 begins to light with the SG.
2. Press the F.LOCK/LOW key or the MIC UP/DOWN key.

- **Remarks**

The curve between S1 and S9 is obtained from the level of menus A5 and A6 by line approximation. The curve between S9 and full scale is obtained from the levels of menus A6 and A7 by line approximation. The meter bars operate according to the currently set curve. The curve is calculated when the UP/DOWN key is pressed. The default for S1 is 121, approximately 2.37 V.

- **Display**

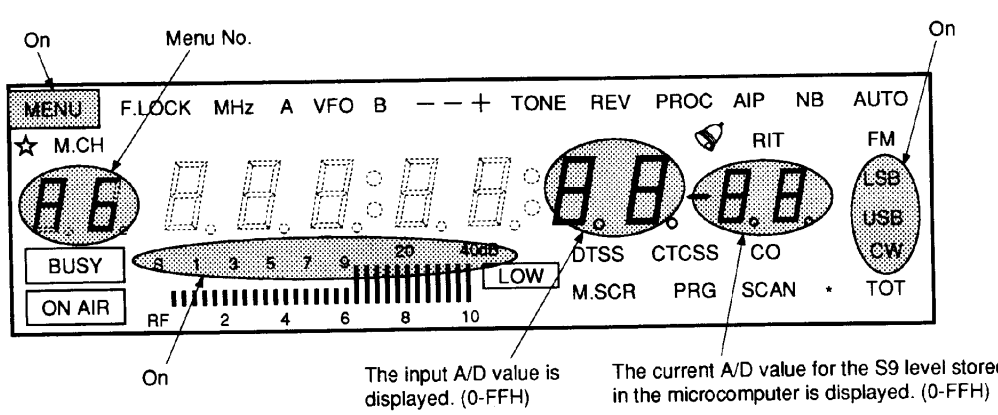

A7 S METER CURVE ADJUSTMENT (FULL SCALE) (ANY MODE EXCEPT FM)

- **Adjustment function**

Input the S meter voltage at which all the segments of the S meter light to correct variations of the full-scale level of the S meter.

- **Adjustment procedure**

1. Input the specified level at which S9+40 dB begins to light with the SG.
2. Press the F.LOCK/LOW key or the MIC UP/DOWN key.

- **Remarks**

The curve between S9 and full scale is obtained from the levels of menus A6 and A7 by line approximation. The meter bars operate according to the currently set curve. The curve is calculated when the key is pressed. The default for full scale is 158, approximately 3.10 V.

- **Display**

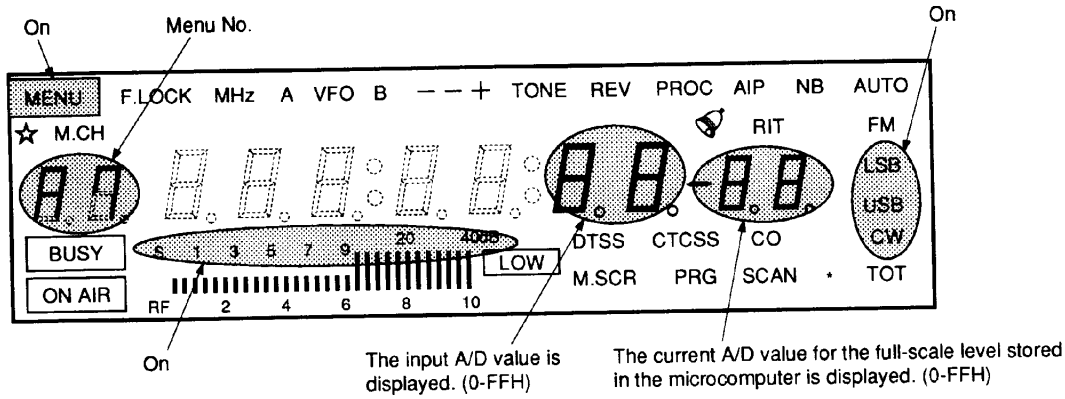

ADJUSTMENT

A8 S METER CURVE ADJUSTMENT (S1) (FM)

• Adjustment function

Input the S meter voltage at which two bars of the S meter light to the microcomputer to correct variations of the S1 level of the S meter.

• Adjustment procedure

1. Input the specified level at key S1 begins to light with the SG.
2. Press the F.LOCK/LOW key or the MIC UP/DOWN key.

• Display

• Remarks

The threshold for the S meter start is the input level minus the fixed value (1; approximately 0.02 V). When the input signal exceeds the threshold, one bar of the S meter lights. The curve between S1 and full scale is obtained from the levels of menus A8 and A9 by line approximation. Only the A/D values of the S1 and full-scale levels are stored in the EEPROM. The meter bars operate according to the currently set curve. The curve is calculated when the key is pressed.

The default for S1 is 111, approximately 2.18 V.

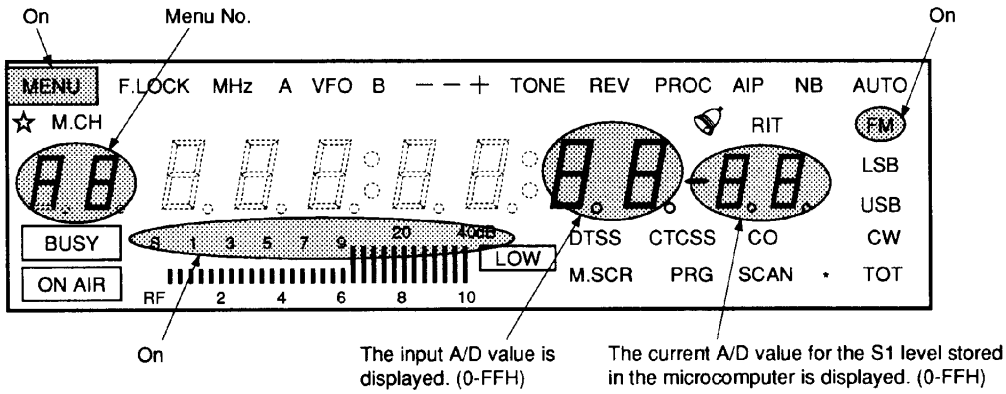

A9 S METER CURVE ADJUSTMENT (FULL SCALE) (FM)

• Adjustment function

Input the voltage at which all the segments of the S meter light to correct variations of the full-scale level of the S meter.

• Adjustment procedure

1. Input the specified level at which S9+40 dB begins to light from the SG.
2. Press the F.LOCK/LOW key or the MIC UP/DOWN key.

• Display

• Remarks

Only the A/D values of S1 and full-scale are stored in the EEPROM. The meter bars operate according to the currently set curve. The curve is calculated when the key is pressed. The default for full scale is 143, approximately 2.80 V.

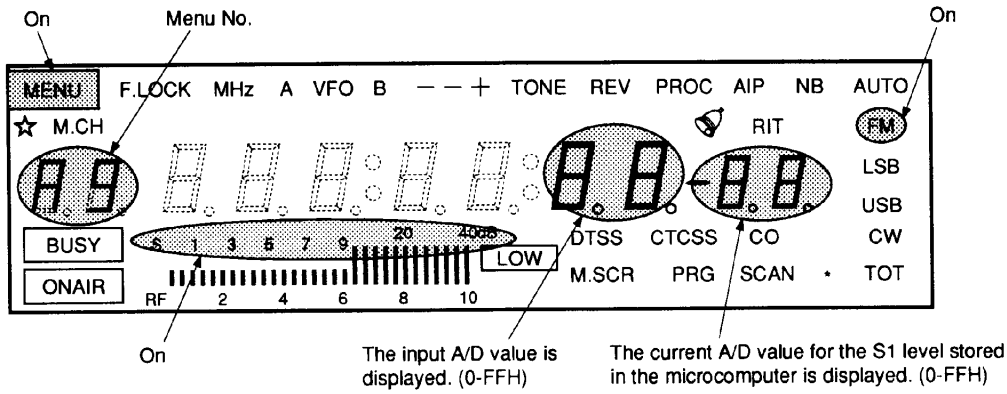

ADJUSTMENT

AA RF METER CURVE ADJUSTMENT (LOW)

- **Adjustment function**

Input the voltage at which the RF meter indicates scale 2 to the microcomputer to correct variations of the low level of the RF meter.

- **Adjustment procedure**

1. Transmit.
2. Connect the AG to the microphone socket and input the specified level at which RF 2 begins to light.
3. Press the F.LOCK/LOW key or the MIC UP/DOWN key.

- **Remarks**

The threshold for the RF meter start is the input level minus the fixed value (19; approximately 0.37 V). The curve is obtained from the levels of menu AA and the start level by line approximation. The curve between 2 and 6 is obtained from the levels of menus AA and AB by line approximation. Only the A/D values for 2, 6, and full scale are stored in the EEPROM. The meter bars operate according to the currently set curve. The curve is calculated when the key is pressed. The default is 56, approximately 1.10 V.

- **Display**

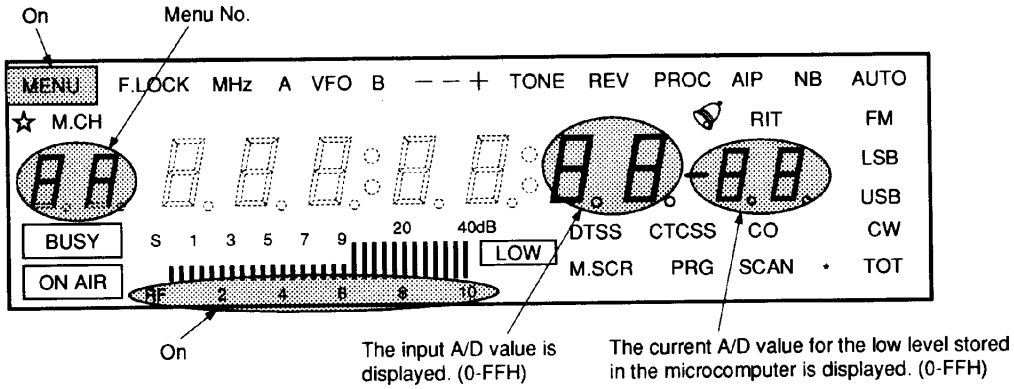

AB RF METER CURVE ADJUSTMENT (MIDDLE)

- **Adjustment function**

Input the voltage at which the RF meter indicates scale 6 to the microcomputer to correct variations of the middle level of the RF meter.

- **Adjustment procedure**

1. Transmit.
2. Connect the AG to the microphone socket and input the specified level at which RF 6 begins to light.
3. Press the F.LOCK/LOW key or the MIC UP/DOWN key.

- **Remarks**

The curve between 2 and 6 is obtained from the levels of menus AA and AB by line approximation. The curve between 6 and full scale is obtained from the levels of menus AB and AC by line approximation. Only the A/D values for 2, 6, and full scale are stored in the EEPROM. The meter bars operate according to the currently set curve. The curve is calculated when the key is pressed. The default is 114, approximately 2.24 V.

- **Display**

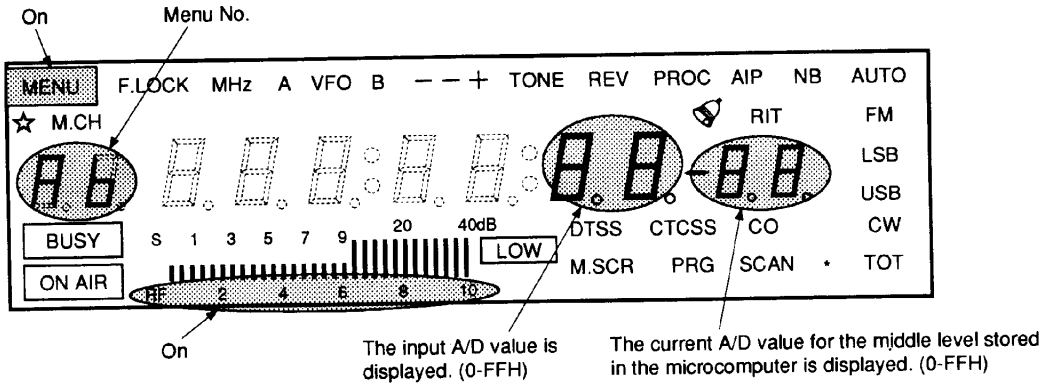

ADJUSTMENT

AC RF METER CURVE ADJUSTMENT (HIGH)

• Adjustment function

Input the voltage at which all the segments of the RF meter light to the microcomputer to correct variations of the full-scale level of the RF meter.

• Adjustment procedure

1. Transmit.
2. Connect the AG to the microphone socket and input the specified level at which RF 10 begins to light.
3. Press the F.LOCK/LOW key or the MIC UP/DOWN key.

• Remarks

The curve between 6 and full scale is obtained from the levels of menus AB and AC by line approximation. Only the A/D values for 2, 6, and full scale are stored in the EEPROM. The meter bars operate according to the currently set curve. The curve is calculated when the UP/DOWN key is pressed. The default is 171, approximately 3.35 V.

• Display

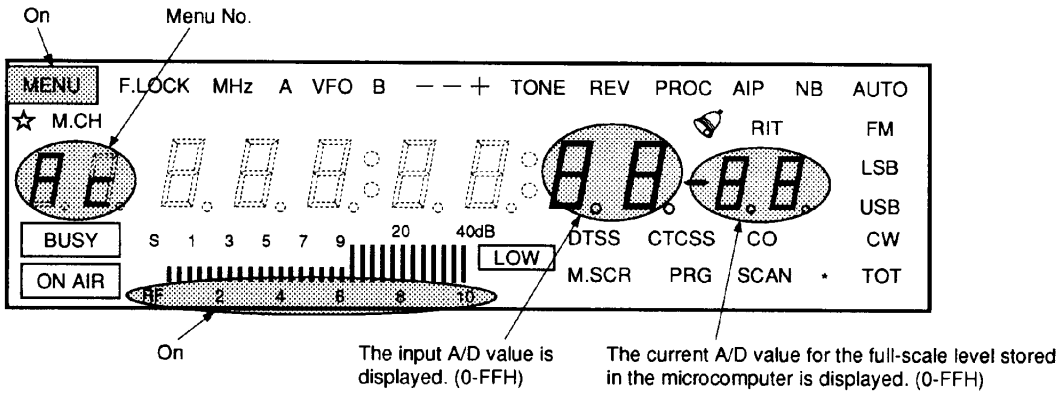

AD DTMF SINGLE TONE OUTPUT

• Adjustment function

Output a single tone to check the DTMF deviation.

• Adjustment procedure

1. Confirm that "1633" is displayed.
   If "OFF" is displayed, press the F.LOCK/LOW key or the MIC UP/DOWN key to display "1633".
2. Transmit.
3. Check the deviation with a tester.

• Display

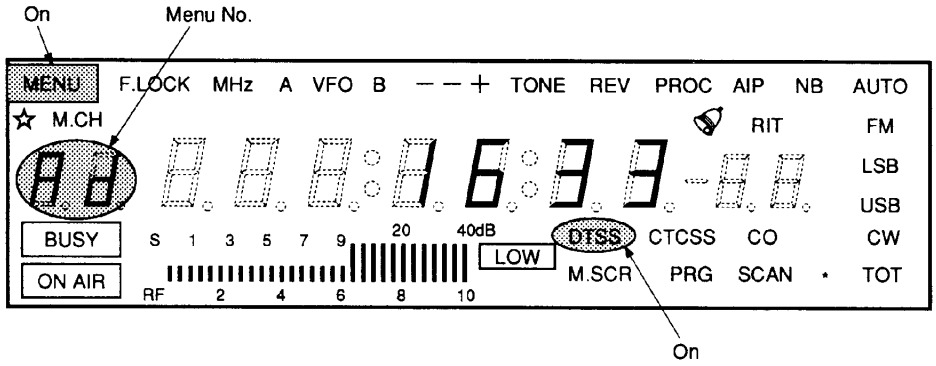

ADJUSTMENT

AE ALC START READ

• **Adjustment function**

Read the threshold voltage for microphone gain control by ALC.

• **Adjustment procedure**

1. Transmit
2. Input the level at which the ALC starts from the AG.
3. Press the F.LOCK/LOW key or the MIC UP/DOWN key.

• **Display**

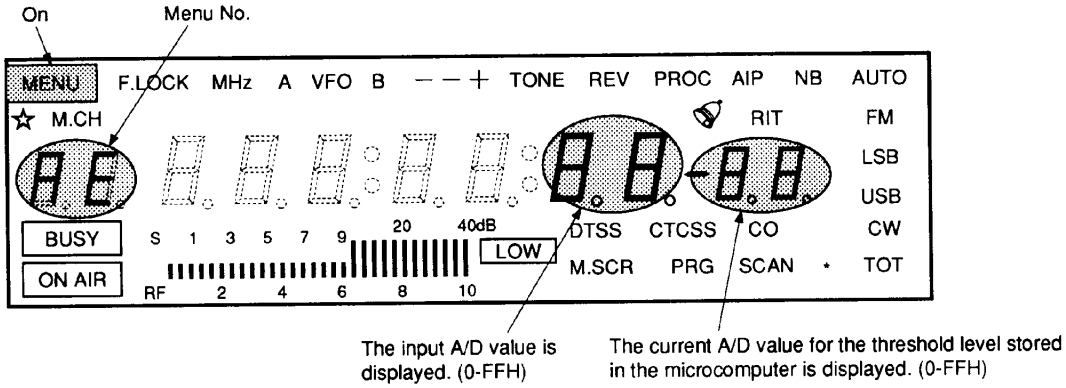

• **Remarks**

The level read in this menu is used as a threshold for the low and correct microphone gain. The default is 224, approximately 4.40 V.

AF ALC ZONE MAX. READ

• **Adjustment function**

Read the threshold voltage for microphone gain control by ALC.

• **Adjustment procedure**

1. Transmit.
2. Input the maximum level of the ALC zone from the AG.
3. Press the F.LOCK/LOW key or the MIC UP/DOWN key.

• **Display**

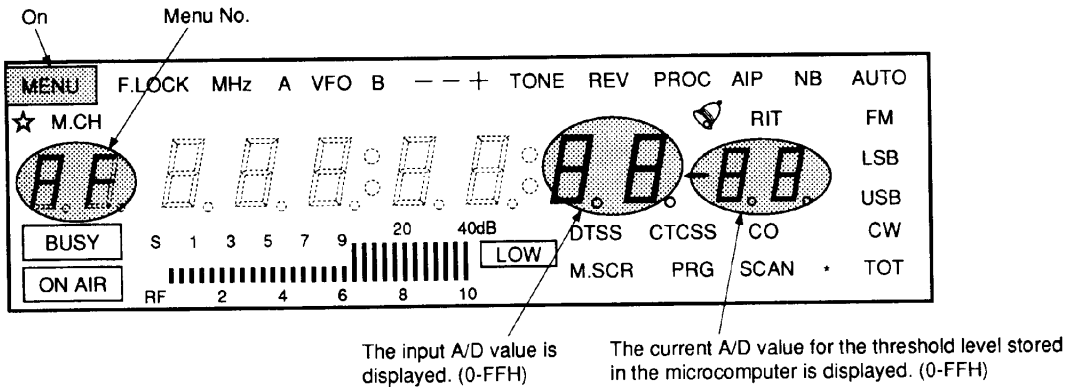

• **Remarks**

The level read in this menu is used as a threshold for the correct and high microphone gain. The default is 82, approximately 1.60 V.

ADJUSTMENT

B0 ALC FULL SCALE READ

• Adjustment function

Read the threshold voltage for microphone gain control by ALC.

• Adjustment procedure

1. Transmit
2. Input the maximum + 6 dB level of the ALC zone from the AG.
3. Press the F.LOCK/LOW key or the MIC UP/DOWN key.

• Display

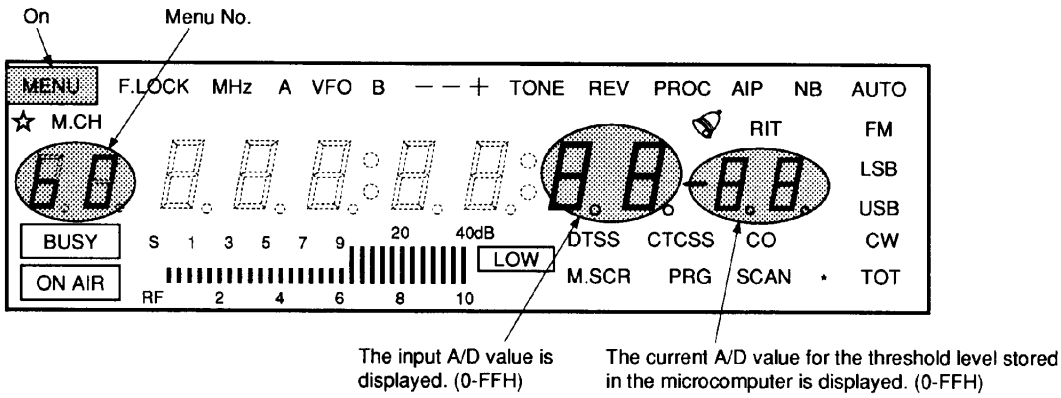

• Remarks

The level read in this menu is used as a threshold for the high and excessive microphone gain. The default is 56, approximately 1.10 V.

B1 FM MICROPHONE GAIN

• Adjustment function

Set the low level for FM microphone gain.

• Adjustment procedure

1. Transmit.
2. Input the specified level from the AG.
3. Press the F.LOCK/LOW key or the MIC UP/DOWN key to change the microphone gain and obtain the specified deviation.

• Display

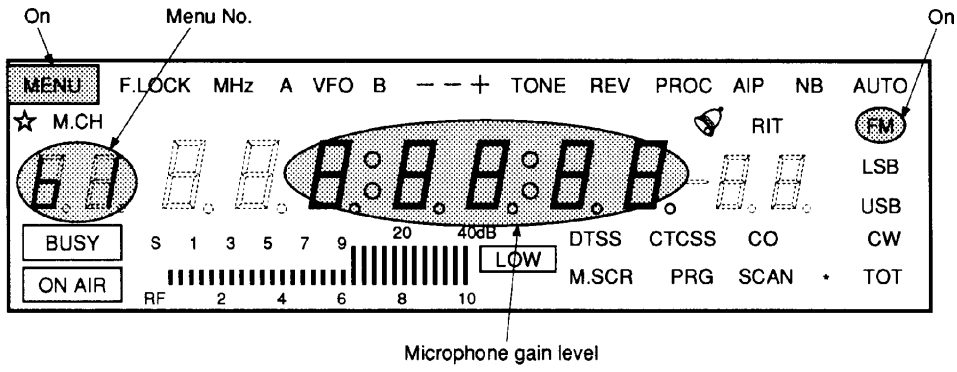

ADJUSTMENT

B2 SSB MICROPHONE GAIN

- **Adjustment function**
  Set the SSB microphone gain.

- **Adjustment procedure**

1. Transmit
2. Input the specified level from the AG.
3. Press the F.LOCK/LOW key or the MIC UP/DOWN key to change the microphone gain and obtain the specified output.

- **Display**

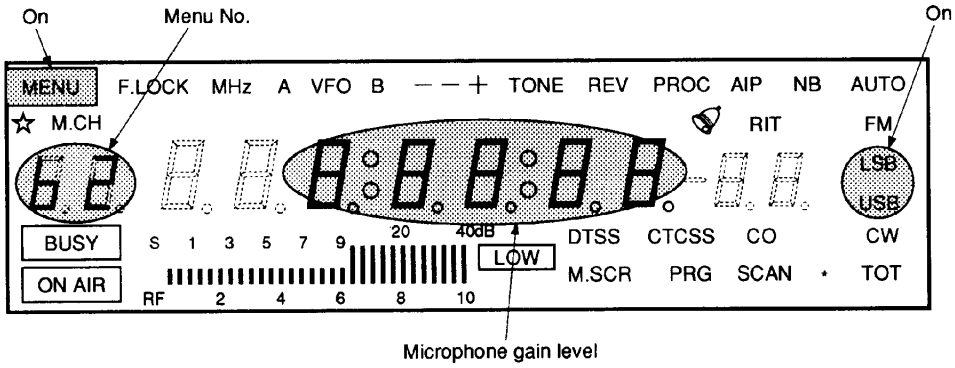

B3 WRITE INTO EEPROM

- **Adjustment function**
  Write setting values into the EEPROM.

- **Adjustment procedure**

1. Press the F.LOCK/LOW key or UP/DOWN key.
2. While data is being written "run" is displayed.
3. If the data is written correctly, "good" is displayed.
4. If a write error occurs, "error" is displayed. If "error" is displayed repeatedly, press the key again. If "error" is still displayed repeatedly, check the EEPROM or other hardware for defects.

- **Remarks**
  When this menu is selected and the key is pressed, the setting is written unconditionally even if it is not changed. Two sets of the same data are written into the EEPROM.

- **Display**

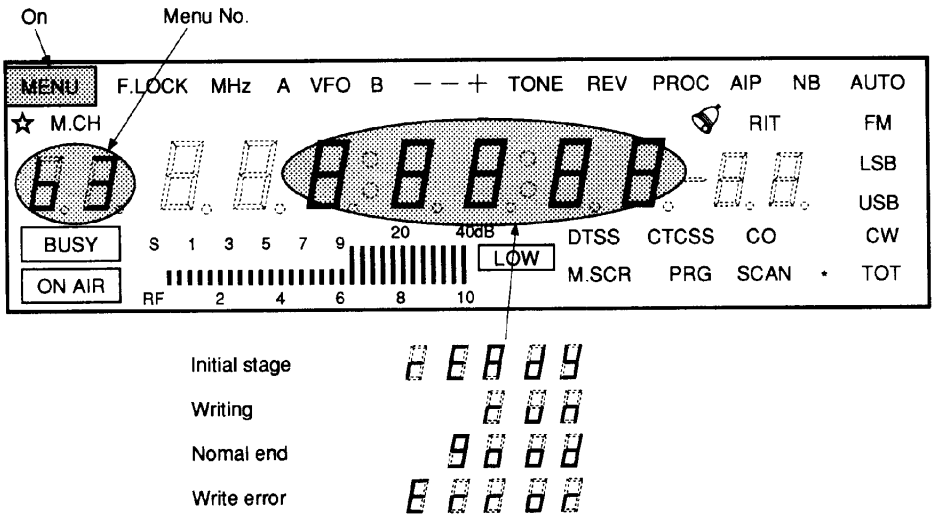

ADJUSTMENT

Test equipment for adjustment

1. Tester or Digital Volt Meter
1) Input resistance: 1MΩ
2) Voltage range: FS = 1.5 to 1000V AC/DC
A tester with high accuracy is acceptable, but beware that a precise reading is not possible when measuring high impedance circuits.

2. DC Ammeter
1) Voltage range: 5A, 10A, 20A

3. RF VTVM (RF V.M)
1) Input impedance: 1MΩ or more, 3pF or less
2) Voltage range: FS = 10mV to 300V
3) Measurable frequency: 500MHz or more

4. AF Voltmeter (AF V.M)
1) Measurable frequency: 50Hz to 10kHz
2) Input resistance: 1MΩ or more
3) Voltage range: FS = 10mV to 30 V

5. AF Generator (AG)
1) Frequency range: 100Hz to 10kHz
2) Output: Can limit range between a maximum of 1V and minimum of 1mV.
Low distortion factor

6. AF Dummy Load (AF DM)
1) Impedance: 8Ω
2) Capacity: 3W or more

7. Oscilloscope (oscillo, synchro)
Something that can get vertical amp frequency characteristics of 100MHz or more; external cycles with as much high sensitivity as possible.

8. Tracking Generator
1) Center frequency: 50kHz to 500MHz.
2) Frequency deviation: ±35MHz.
3) Output voltage: 100mV or more.

9. SSG (Standard Signal Generator)
1) Oscillation frequency: 50kHz to 500MHz
2) Output: −127dBm/0.1μV to 7dBm/0.5V
3) Output impedance: 50Ω
4) Should get AM and FM
Something with oscillation frequency that is stable at non-modulation and has small frequency modulation component.

10. Frequency Counter (f. counter)
1) Minimum input voltage: 50mV
2) Measurable frequency: 500MHz or more

11. Noise Generator
Something that generates noise that includes a high freqency component of up to 450MHz or more that is close to ignition noise.

12. RF Dummy Load (Dummy Load)
1) Impedance: 50Ω
2) Capacity: 50W or more

13. Power Meter (transit type and terminal type)
1) Measurable frequency: 500MHz or more
2) Impedance: 50Ω
3) Measuring range: 50W or more
When there is a 50Ω dummy load for RF use, only transit type is acceptable.

14. Spectrum Analyzer
1) Frequency measuring range: 100kHz to 500MHz or more
2) Resolution range: 1kHz to 3MHz
When there is no spectrum analyzer, an electric intensity measuring device is acceptable (measuring range: 10 to 500MHz)
Voltage: Something with 10 to 17V variability
Current: 20A or more

15. Linear Detector (LD)
Measurable Frequency: 500MHz or more

16. DC Power Source
Voltage: Something with 10 to 17 V variability
Current: 20A or more

17. Microphone with UP/DOWN
MC-47

18. Service Tools
Extension cables (3)

ADJUSTMENT

Adjustment service jig

(Extension Cable .... 15 cm)

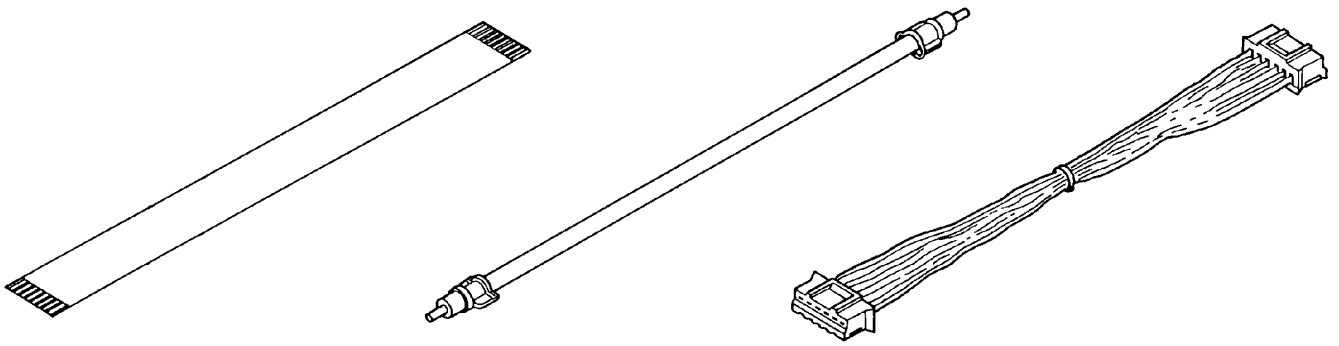

A Flat cable (8P)
E37 – 0456 – 05

B Lead with mini pin
E37 – 0225 – 05

C Cabled with connector (6P)
E37 – 0455 – 05

Service jigs usage

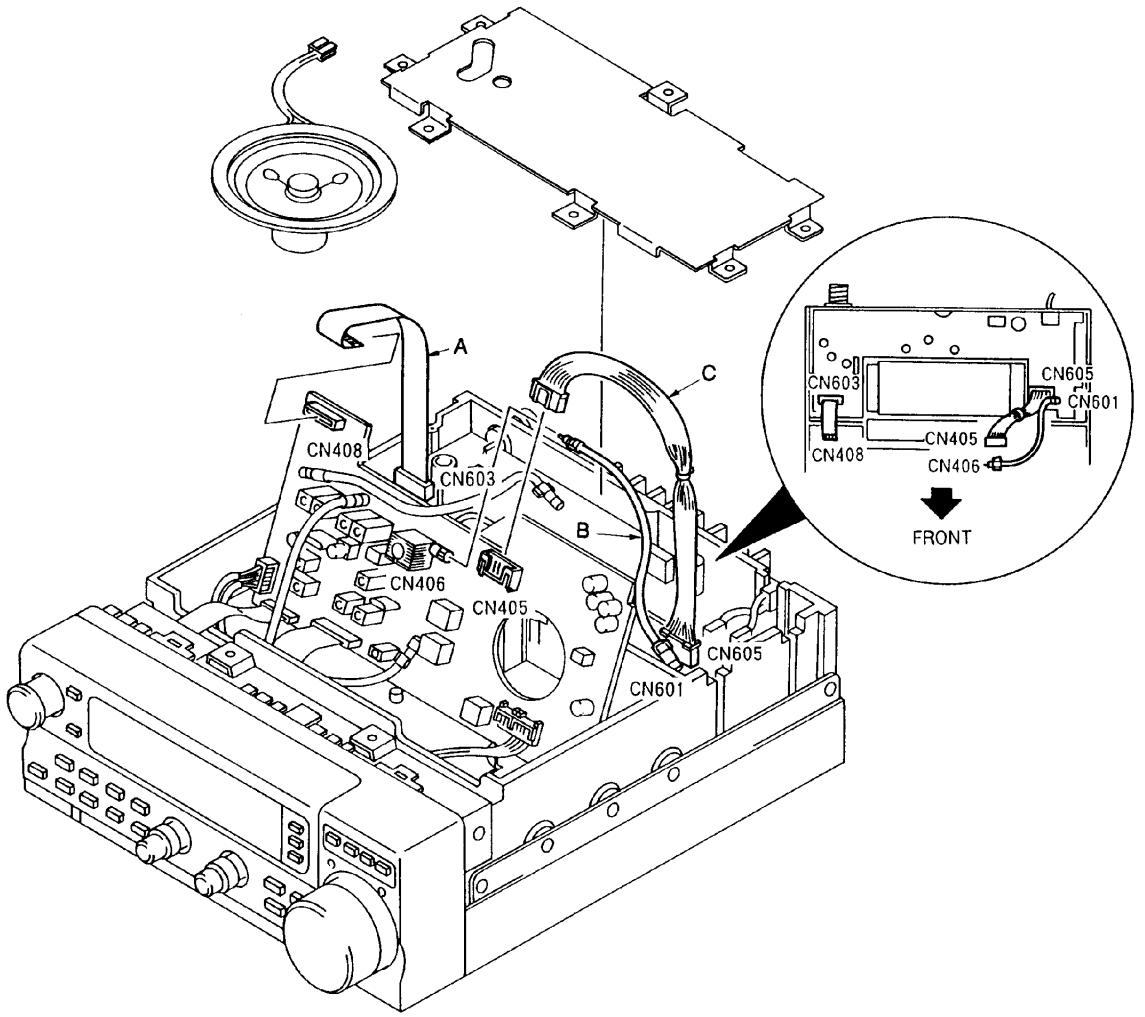

ADJUSTMENT

TX/RX Common Adjustment

Item	Condition	Measurement			Adjustment			Specifications/Remarks
		Test-equipment	Unit	Terminal	Unit	Parts	Method	
1. Setting	1) Supply DC 13.8V				After all LCDs are lighted, A VFO 433.000.0 FM is displayed.			
	2) Reset POWER:OFF While pressing MR key POWER ON							
	3) Auto Mic Gain Control: OFF The lock setting for main unit key is ON.				(1) F key: Press for 1.5 sec will go MENU mode. (2) A/B key: press once MENU A→B (3) Turn encoder and set MENU No. to 61. MENU 61 (4) F.LOCK key: press once ON→OFF (5) Turn encoder and set MENU No. to 69. MENU 69 (6) F.LOCK key: press once OFF→ON (7) CLR key: press once returns to VFO mode.			
	4) Center calibration of RIT and IF SHIFT RIT VR: Center IF SHIFT: Center (Adjustment Mode)				(1) Setting Method While pressing NB key and MHz key at same time, turn POWER: ON. (2) Adjustment Mode (About operations, refer to P to P) (3) Cancellation Method After saving in EEPROM, press CLR key once or POWER: OFF.			

PLL/CAR Adjustment

Item	Condition	Measurement			Adjustment			Specifications/Remarks
		Test-equipment	Unit	Terminal	Unit	Parts	Method	
1. Reference Oscillation (TCXO)	1) MODE: FM	f. counter Oscillo or RF V.M	TX-RX (A/5)	TP3	TX-RX (A/5)		Check.	20.480,000MHz±20Hz
						L204	Level MAX	(Ref.) Align with 2 times standard oscillation.
2. CAR Oscillation level (10.695MHz)	1) MODE: USB	Oscillo or RF V.M		TP4		L206	Level MAX	
3. LO2 level (30.72MHz)	1) MODE: FM	Oscillo or RF V.M		TP6		L207 L208	Level MAX	(Ref.)Align with 3 times standard oscillation.
						L209		
4. 92.16MHz level	1) MODE: FM	RF V.M		IC202 (Pin 2)		L210 L211	Level MAX	
5. 103.665MHz level	1) Frequency: 435.040MHz MODE: FM			TP7		L217 L218	Level MAX	
6. Lock voltage	1) Frequency: 430.000MHz MODE: USB	DC V.M		TP8	(VCO)	TC1	3.0V	±0.1V
	2) Frequency: 439.999MHz MODE: USB						Check.	4.5 to 6.0V

RX Adjustment

Item	Condition	Measurement			Adjustment			Specifications/Remarks
		Test-equipment	Unit	Terminal	Unit	Parts	Method	
1. RFG	1) Frequency: 435.039MHz MODE: USB	DC V.M	TX-RX (A/5)	TP1	TX-RX (A/5)	VR4	3.0V	±0.03V

ADJUSTMENT

Item	Condition	Measurement			Adjustment			Specifications/Remarks
		Test-equipment	Unit	Terminal	Unit	Parts	Method	
2. Helical	1) Remove CN402 and CN404 of TX-RX (B/5) 2) Frequency: 435.040MHz MODE: FM Tracking Generator output: -50dBm Spectrum Analyzer Setting fc: 435.000MHz SPAN: 50MHz REF: -10dBm or -30dBm	Trk. Gen. Spectrum Analyzer	Rear panel TX-RX (B/5)	ANT CN402	TX-RX (B/5)	L403 L404 TC401	Repeat adjustment 2 to 3 times and with gain at maximum, adjust waveform to figure at below. 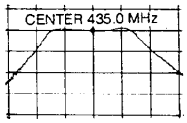 RX 430-440MHz BPF, REF -30.0 dBm, ATT 10 dB, MKR 435.00 MHz -50.1 dBm, TG ATT 50 dB, RBW 100 kHz, POS PK, VBW 30 kHz, SWP 80 ms, SPAN 50 MHz	
3. MCF (41.415MHz)	1) Remove CN402 and CN404 of TX-RX (B/5) 2) Frequency: 435.040MHz MODE: FM Tracking Generator output: -10dBm Spectrum Analyzer Setting REF: -30dBm fc: 41.415MHz SPAN: 100kHz	Trk. Gen. Spectrum Analyzer	TX-RX (B/5)	CN402 TP402	TX-RX (B/5)	L410 L411	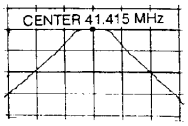 RX 41.415MHz MCF, REF -30.0 dBm, ATT 10 dB, MKR 41.4150 MHz -49.7 dBm, TG ATT 10 dB, RBW 1 kHz, POS PK, VBW 1 kHz, SWP 500 ms, SPAN 100 kHz	
4. MCF (10.695MHz)	1) Remove CN402 and CN404 of TX-RX (B/5) 2) Frequency: 434.040MHz MODE: FM Tracking Generator output: -50dBm Spectrum Analyzer Setting REF: -30dBm fc: 10.695MHz SPAN: 100kHz			CN404 CN403 (Pin 4)		L413 L414	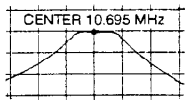 RX 10.695MHz MCF, REF -30.0 dBm, ATT 10 dB, MKR 10.6950 MHz -50.5 dBm, TG ATT 50 dB, RBW 1 kHz, POS PK, VBW 1 kHz, SWP 500 ms, SPAN 100 kHz	
Attach CN402 and CN404.								
5. IF AMP	1) Frequency: 435.039MHz MODE: USB SSG output:-123dBm (0.16μV) IC2 VR: 9 o'clock	SSG SP (AF D.M) Oscillo AF V.M	Rear panel	ANT EXT SP	TX-RX (A/5)	L1 IC2 (L 2pcs.)	AF output MAX	
6. NB	1) Frequency: 435.039MHz MODE: USB SSG output: -103dBm (1.6μV)	SSG Oscillo or DC V.M	Rear panel TX-RX (A/5)	ANT IC1 (Pin 4)		IC1 (L 2pcs.)	Voltage: MIN	(Ref.) Approx. 3.5V
	2) SSG output: OFF						Check	4.0 to 5.0V
7. IF GAIN	1) Frequency: 435.039MHz MODE: USB SSG output: -109dBm (0.8μV)	SSG SP (AF D.M) Oscillo AF V.M	Rear panel	ANT EXT SP	Front panel	AF. VOL	Set AF output to 0.63V	
	2) SSG output: -119dBm (0.25μV)				TX-RX (A/5)	IC2 (VR)	Adjust AF output to 0.4V	
	3) SSG output: -109dBm (0.8μV)						Check.	AF output 0.63V
When adjusting items 8 to 10, set to Adjustment mode and refer to menu operations (P69 to P80).								
8. SSB S meter (S1)	1) MENU No.: A5 SSG freq.: 435.040MHz output: -113dBm (0.5μV)	SSG SP (AF D.M) Oscillo AF V.M	Rear panel	ANT EXT SP	Front panel		F.LOCK key: press once	Note: AF output is 1kHz sine wave. (Fine tune the SSG frequency)
(S9)	2) MENU No.: A6 SSG output: -93dBm (5.0μV)						F.LOCK key: press once	
(FULL)	3) MENU No.: A7 SSG output: -53dBm (500μV)						F.LOCK key: press once	

ADJUSTMENT

Item	Condition	Measurement			Adjustment			Specifications/Remarks
		Test-equipment	Unit	Terminal	Unit	Parts	Method	
9. FM S meter (S1)	1) MENU No.: A8 SSG Freq.: 435.040MHz MOD Freq: 1kHz DEV: 3kHz SSG output: –119dBm (0.25μV)	SSG SP (AF D.M) Oscillo AF V.M	Rear panel	ANT EXT SP	Front panel		F.LOCK key: press once	Note: AF output is 1kHz sine wave. (Fine tune the SSG frequency)
(FULL)	2) MENU No.: A9 SSG output: –93dBm (5.0μV)						F.LOCK key: press once	
10. ROM DATA Writing	1) MENU No.: B3	LCD					LCD display: "ready" F.LOCK key: press once	
							LCD display: "good" CLR key: press once	
11. BEEP	1) AF VR: MIN Continuously ON and OFF SSB/CW key.	AF D.M Oscillo	Rear panel	EXT SP	TX-RX (A/5)	VR2	0.4Vp-p	±0.1V
12. RX Sensitivity(S/N)	1) Frequency: 435.039MHz MODE: USB AIP: OFF SSG output: –127dBm (0.1μV) AF VR: 0.63V (1kHz sine wave)	SSG SP (AF D.M) Oscillo AF V.M)		ANT EXT SP			AF output of SSG output is turned off.	S/N 10dB or more
	2) AIP: ON SSG output: ON				TX-RX (B/5)	VR402		0.2V (–10dB)
	3) Frequency: 435.040MHz MODE: FM SSG output: –122dBm (0.18μV) MOD Freq.: 1kHz DEV: 3kHz						Measuring SINAD	12dB SINAD or more
13. Squelch (FM)	1) Frequency: 435.040MHz MODE: FM SSG output: OFF				Front panel	SQL VR	Adjust where squelch is closing.	SQL VR position: 8:00 to 11:00
	2) SSG output: –128dBm (0.09μV) MOD Freq.: 1kHz DEV: 3kHz							Squelch open.
	3) SQL VR: MAX							Squelch close.
	4) SSG output: –118dBm (0.28μV)							Squelch open.
14. Squelch (SSB)	1) Frequency: 435.039MHz MODE: USB SSG output: OFF						Adjust where squelch is closing.	SQL VR position: 8:00 to 11:00
	2) SSG output: –125dBm (0.126μV) MOD Freq.: 1kHz DEV: 3kHz							Squelch open.
	3) SQL VR: MAX							Squelch close.
	4) SSG output: –115dBm (0.4μV)							Squelch open.

ADJUSTMENT

Item	Condition	Measurement			Adjustment			Specifications/Remarks
		Test-equipment	Unit	Terminal	Unit	Parts	Method	
15. S Meter Sensitivity Check	1) Frequency: 435.039MHz MODE: USB SSG output: ON	SSG SP (AF D.M) Oscillo AF V.M)	Rear panel	ANT EXT SP			SSG output check S1 lights S9 lights	 –119dBm to –107dBm (0.25 to 1.0μV) –99dBm to –87dBm (2.5μV to 10μV)
	2) Frequency: 435.040MHz MODE: FM SSG output: ON MOD Freq: 1kHz DEV: 3kHz						All lights	–99dBm to –87 dBm (2.5μV to 10μV)

TX Adjustment

Note: When adjusting (items 8 to 10) TX-RX unit (A/5), first attach case (upper) to TX-RX unit (B/5, C/5) side or stand set up.

Item	Condition	Measurement			Adjustment			Specifications/Remarks
		Test-equipment	Unit	Terminal	Unit	Parts	Method	
1. FM TX Freq.	1) Remove CN406 of TX-RX unit (B/5)	f.counter	TX-RX (A/5)	VR1 right bottom terminal	TX-RX (A/5)	TC1	10.6950MHz	±50Hz
	2) MODE: FM							
	3) Transmit							
2. TX MCF	1) Remove CN402 to 404, 406 of TX-RX unit (B/5)	Trk.Gen. Spectrum Analyzer	TX-RX (B/5)	CN403 (Pin 2) CN402	TX-RX (B/5)	L422	Gain: MAX	
	2) Frequency: 435.000MHz MODE: FM Tracking Generator output: –10dBm Spectrum Analyzer REF: –30dBm fc: 41.415MHz SPAN: 100kHz					L417 L420	Repeat adjustment 2 to 3 times and with gain at maximum, adjust waveform to figure at right.	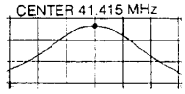 TX 41.415MHz MCF, REF -30.0 dBm/10 dB, ATT 10 dB, MKR 41.4150 MHz -43.6 dBm, TG ATT 10 dB, RBW 1 kHz, POS PK, VBW 1 kHz , SWP 500 ms, SPAN 100 kHz
	3) Transmit.							
Attach CN402 and 404.								
3. TX IF AMP	1) Remove CN406 of TX-RX unit (B/5)	Spectrum Analyzer	TX-RX (B/5)	CN406	TX-RX (B/5)	L415 L416	Repeat adjustment 2 to 3 times and with level at maximum.	Note: If the lelel is over 10dBm, adjust VR9 of TX-RX (A/5).
	2) Frequency: 435.000MHz MODE: CW Set to the center VR7, 8 and 9 of TX-RX(A/5). fc: 435.000MHz (Use 10dB ATT) SPAN: 500kHz				TX-RX (A/5)	L9	Level: MAX	
	3) Transmit.							
When adjusting items 4 to 6, set to Adjustment mode.								
4. MIC sensitivity setting	1) MENU No.: B2	LCD			Front panel		With F.LOCK and LOW key, set characters displayed by LCD to –9dB.	Display: "–9dB"

ADJUSTMENT

Item	Condition	Measurement			Adjustment			Specifications/Remarks
		Test-equipment	Unit	Terminal	Unit	Parts	Method	
5. CAR point	1) Remove CN406 of TX-RX unit 2) LSB CAR Point MENU No.: A3 USB CAR Point MENU No.: A4	Oscillo	TX-RX (A/5)	VR1 right bottom terminal (TP9)			Adjust oscilloscope waves so that they cross by pressing F.LOCK key and LOW key.	OK NG
	3) From MIC terminal AG1: 400Hz 2mV AG2: 2600Hz 2mV 4) Transmit.	AG AF V.M	TX-RX (D/5)	MIC				
6. ROM DATA Writing	1) MENU No.: B3	LCD					LCD Display: "ready" F.LOCK key: press once	
							LCD Display: "good" CLR key: press once	
Attach CN406. When adjusting items 7 to 11, turn VR401 and VR603 fully clockwise.								
7. NULL	1) Frequency: 435.000MHz MODE: FM 2) Transmit	Power meter	Rear panel	ANT	TX-RX (C/5)	VR601	44W	±3.0W
	3) Transmit	Oscillo or DC V.M	TX-RX (C/5)	CN606		VR602	Voltage: MIN	0.1V or less
8. SSB MIC sensitivity	1) Frequency: 435.000MHz MODE: USB 2) MIC terminal AG: 1kHz 5mV :K AG: 1kHz 2.8mV :E 3) Transmit	Power meter AG AF V.M	Rear panel TX-RX (D/5)	ANT MIC	TX-RX (A/5)	VR1	21W	±2.0W
9. Carrier level	1) Frequency: 435.000MHz MODE: CW POWER: LOW 2) Transmit 3) POWER: HI	Power meter	Rear panel	ANT	TX-RX (A/5)	VR9	40W	±3.0W
10. FM MAX DEV.	1) Frequency: 435.000MHz 2) MIC terminal AG: 1kHz 50mV :K AG: 1kHz 30mV :E 3) Transmit.	Power meter LD AG AF V.M	Front panel TX-RX (D/5)	ANT MIC	TX-RX (A/5)	VR6	Check ±. Larger Value should be 4.4kHz	±100Hz
11. POWER	1) Frequency: 435.0000MHz(CW) 2) Transmit.	Power meter	Rear panel	ANT	TX-RX (C/5)	VR601	37W	±1W
	3) POWER: LOW 4) Transmit. 5) POWER: HI				TX-RX (B/5)	VR401	5W	
12. Protection	1) Frequency: 435.000MHz MODE: FM Short ANT terminal. 2) Transmit.	Ammeter		Power supply	TX-RX (C/5)	VR603	5.0A	±0.1A
When adjusting items 13 to 17, set to Adjustment mode and refer to menu operations (P69 to P80).								

ADJUSTMENT

Item	Condition	Measurement			Adjustment			Specifications/Remarks
		Test-equipment	Unit	Terminal	Unit	Parts	Method	
13. RF meter LOW (RF-2)	1) MENU No.: AA Adjust AG input to set transmit output levels shown below.	Power meter AG AF V.M LCD	Rear panel TX-RX (D/5)	ANT MIC	Front panel		F.LOCK key: press once	
	2) Transmit. 5W							
MID (RF-6)	3) MENU No.: AB						F.LOCK key: press once	
	4) Transmit. 21W							
HI (FULL)	5) MENU No.: AC						F.LOCK key: press once	
	6) Transmit. 33W							
14. ALC Meter Start Point	1) MENU No.: AE AG: 1kHz 7mV :K AG: 1kHz 4mV :E						F.LOCK key: press once	
	2) Transmit.							
Zone MAX	1) MENU No.: AF AG: 1kHz 14mV :K AG: 1kHz 8mV :E						F.LOCK key: press once	
	2) Transmit.							
FULL	1) MENU No.: B0 AG: 1kHz 28mV :K AG: 1kHz 16mV :E						F.LOCK key: press once	
	2) Transmit.							
15. FM MIC Sensitivity	1) MENU No.: B1 AG 1kHz 3mV	LD					Adjust to ±3.0kHz using F.LOCK key and LOW key.	±100Hz
	2) Transmit.							
16. DTMF DEV	1) MENU No.: AD LCD Display: 1633 If the display is "OFF", then F.LOCK key press once.						Check DEV.	±2.5kHz or more
	2) Transmit.							
17. ROM DATA Writing	1) MENU No.: B3	LCD					LCD display: "ready" F.LOCK key: press once	
							LCD Display: "good" CLR key: press once	
18. Check TONE DEV.	1) 435.000MHz MODE: FM TONE: ON	Power meter LD	Rear panel	ANT			Check DEV.	0.5 to 1.5kHz
	2) Transmit.							
	3) TONE: OFF							
19. Suppression	1) Frequency: 435.000MHz MODE: USB or LSB Spectrum Analyzer fc: 435.000MHz SPAN: 10MHz	Power meter Spectrum analyzer	Rear panel	ANT	TX-RX (A/5)	VR7 VR8	Repeat USB, LSB alternately, CAR level: MIN	–40dB or more for level at CW.
	2) Transmit.							

ADJUSTMENT

Item	Condition	Measurement			Adjustment			Specifications/Remarks
		Test-equipment	Unit	Terminal	Unit	Parts	Method	
20. SIDE TONE	1) Frequency: 435.000MHz MODE: USB AF VR: MIN KEY: ONF	Oscillo AF V.M	Rear panel	EXT SP KEY	TX-RX (A/5)	VR3	0.2V	±0.1V
21. Check Processor operation	1) Release the lock of main unit key MENU No. 69: ON→OFF	Power meter AG AF V.M	Front panel TX-RX (D/5)	ANT MIC	Front panel		Check by ON and OFF of PROC key.	Power value at ON should be higher than at OFF.
	2) Frequency: 435.000MHz MODE: USB							
	3) MIC terminal AG: 1kHz 2mV							
	4) Transmit.							
22. Auto MIC Gain control check	1) Frequency: 435.000MHz MODE: USB						Set F.LOCK key OFF to ON, check after few seconds.	Power value at ON should be higher than at OFF.
	2) MIC terminal AG: 1kHz 2mV							
	3) Set to MENU No. 61, then transmit.							
23. TX Freq. Check	1) Frequency: 435.000MHz MODE: FM	Power meter LD f.counter	ANT	Rear panel			435.000MHz	±1kHz or less
	2) Transmit.							
24. TX Output Check	1) Frequency: 435.000MHz MODE: CW or FM						Check	[HI] 33 to 40 W [LOW] 3 to 8 W

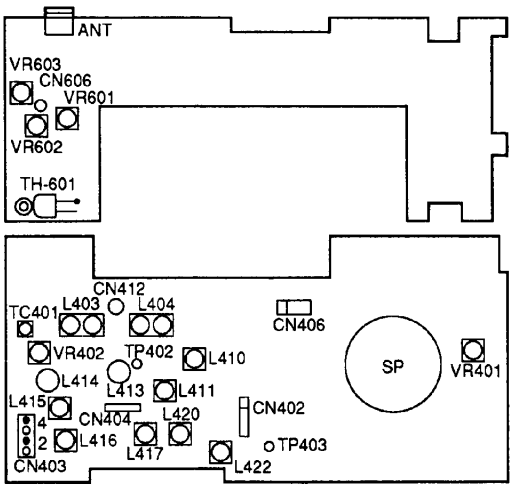

TX-RX UNIT (C/5)

TX-RX UNIT (C/5)
VR601: HI POWER
VR602: NULL
VR603: PROTECTION

TX-RX UNIT (B/5)

TX-RX UNIT (B/5)
TC401: Helical (BPF)
VR401: LOW POWER
VR402: RX S/N
L403: Helical (BPF)
L404: Helical (BPF)
L410: MCF (41.415MHz)
L411: MCF (41.415MHz)
L413: MCF (10.695MHz)
L414: MCF (10.695MHz)
L415: TX IF AMP
L416: TX IF AMP
L417: TX MCF
L420: TX MCF
L422: TX MCF

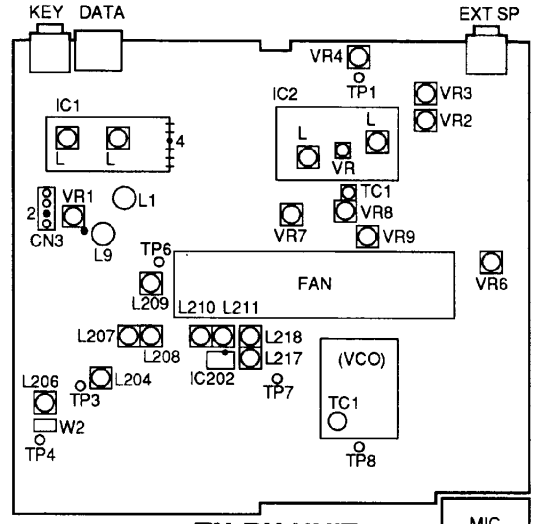

TX-RX UNIT (A/5) (D/5)

TX-RX UNIT (A/5)
TC1: FM TX Frequency
TC1(VCO): Lock Voltage
VR1: SSB MIC Sensitivity
VR2: BEEP
VR3: SIDE TONE
VR4: RFG
VR6: FM MAX DEV.
VR7: Carrier Suppression
VR8: Carrier Suppression
VR9: Carrier Level
VR(IC2): IF Gain
L (IC1): Noise Blanker
L (IC2): IF AMP
L1: IF AMP
L9: TX IF AMP
L204: Ref. Oscillation
L206: CAR Oscillation Level
L207: LO2 Level
L208: LO2 Level
L209: LO2 Level
L210: 92.16MHz Level
L211: 92.16MHz Level
L217: 103.665MHz Level
L218: 103.665MHz Level

PC BOARD VIEWS

CONTROL UNIT (X53-351X-XX) (B/2)
Component side view 0-11: K, 2-71: E

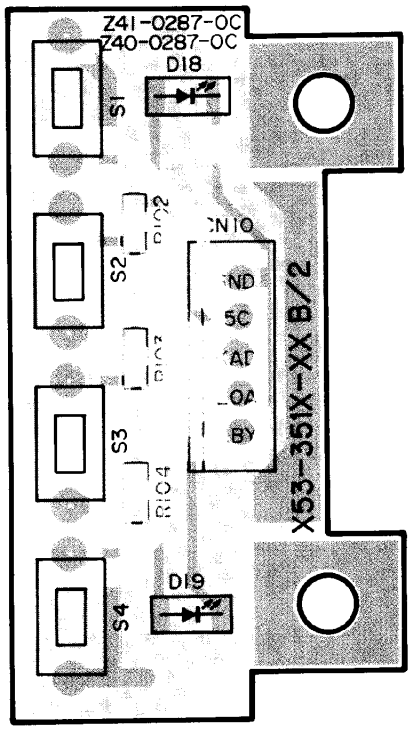

A pattern
B pattern

CONTROL UNIT (X53-351X-XX) (B/2)
Foil side view 0-11: K, 2-71: E

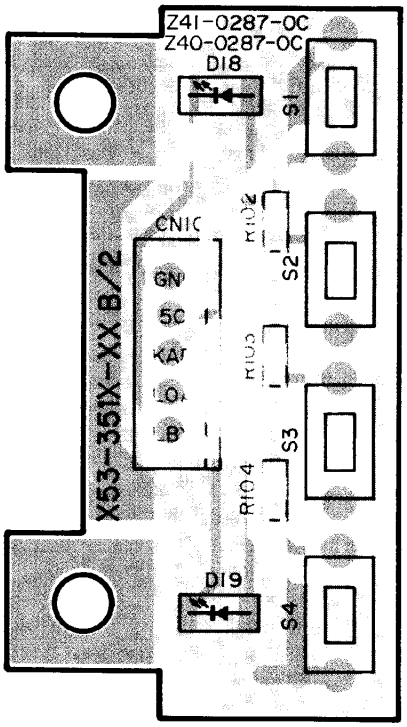

TX-RX UNIT (X57-4510-XX) (D/5)
Component side view 0-00: E, 0-11: K

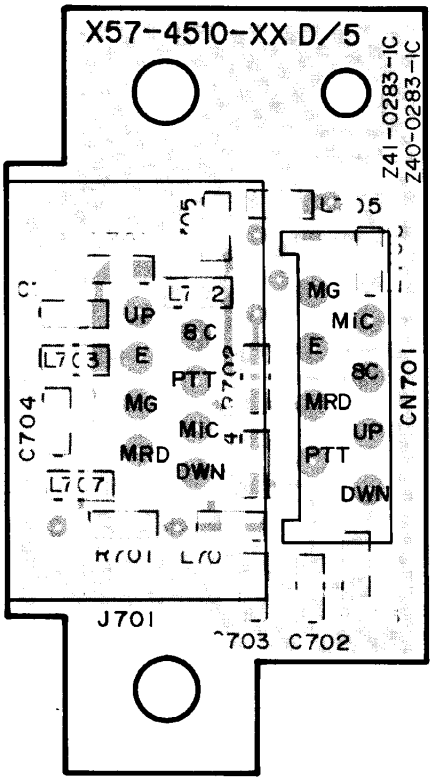

A pattern
B pattern

TX-RX UNIT (X57-4510-XX) (D/5)
Foil side view 0-00: E, 0-11: K

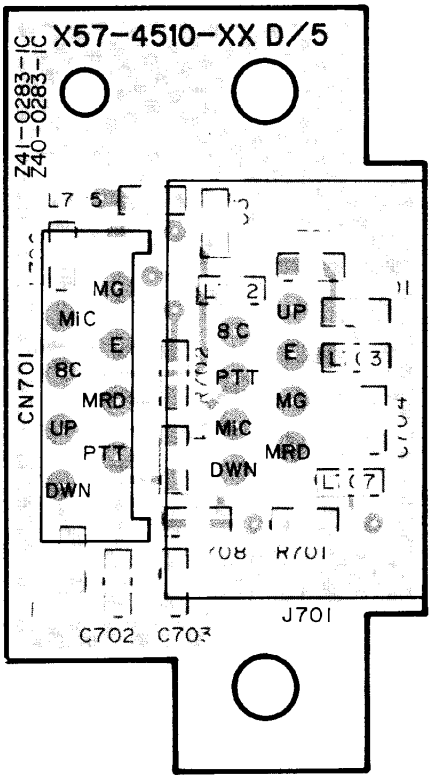

PC BOARD VIEWS

TX-RX UNIT (X57-4510-XX) (E/5) Component side view
0-00: E, 0-11: K

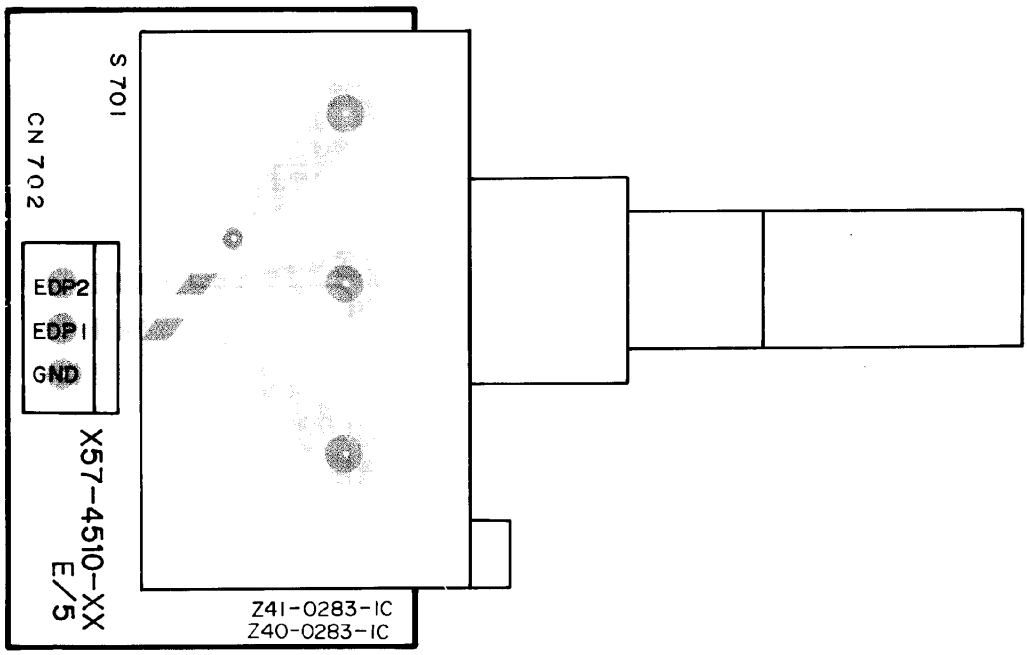

A pattern
B pattern

TX-RX UNIT (X57-4510-XX) (E/5) Foil side view
0-00: E, 0-11: K

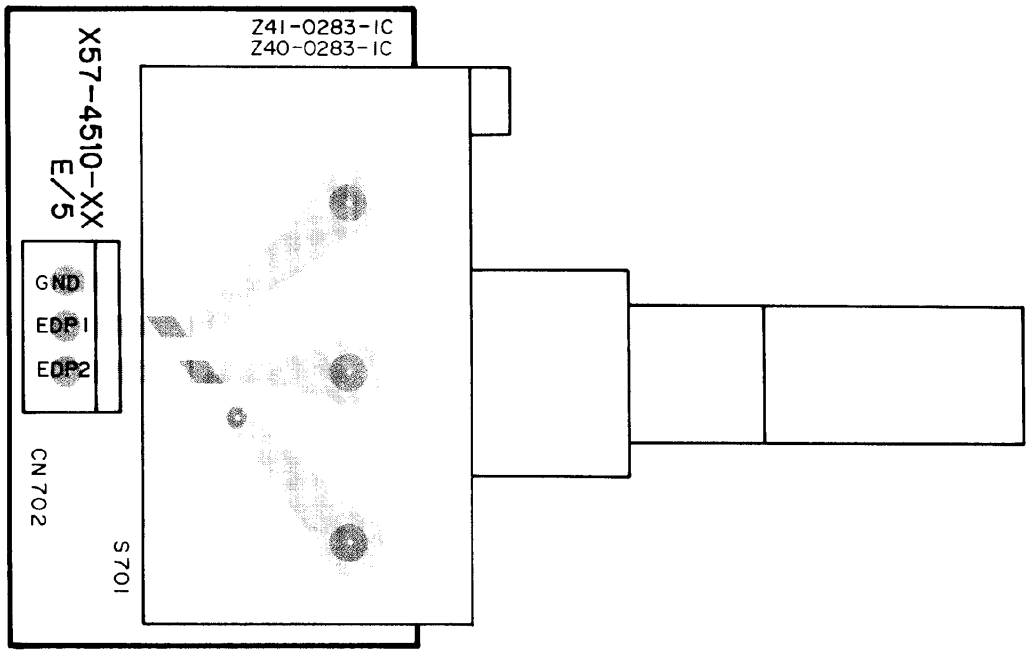

TM-455A/E

PC BOARD VIEWS

TX-RX UNIT (X57-4510-XX) (B/5) Component side view 0-00: E, 0-11: K

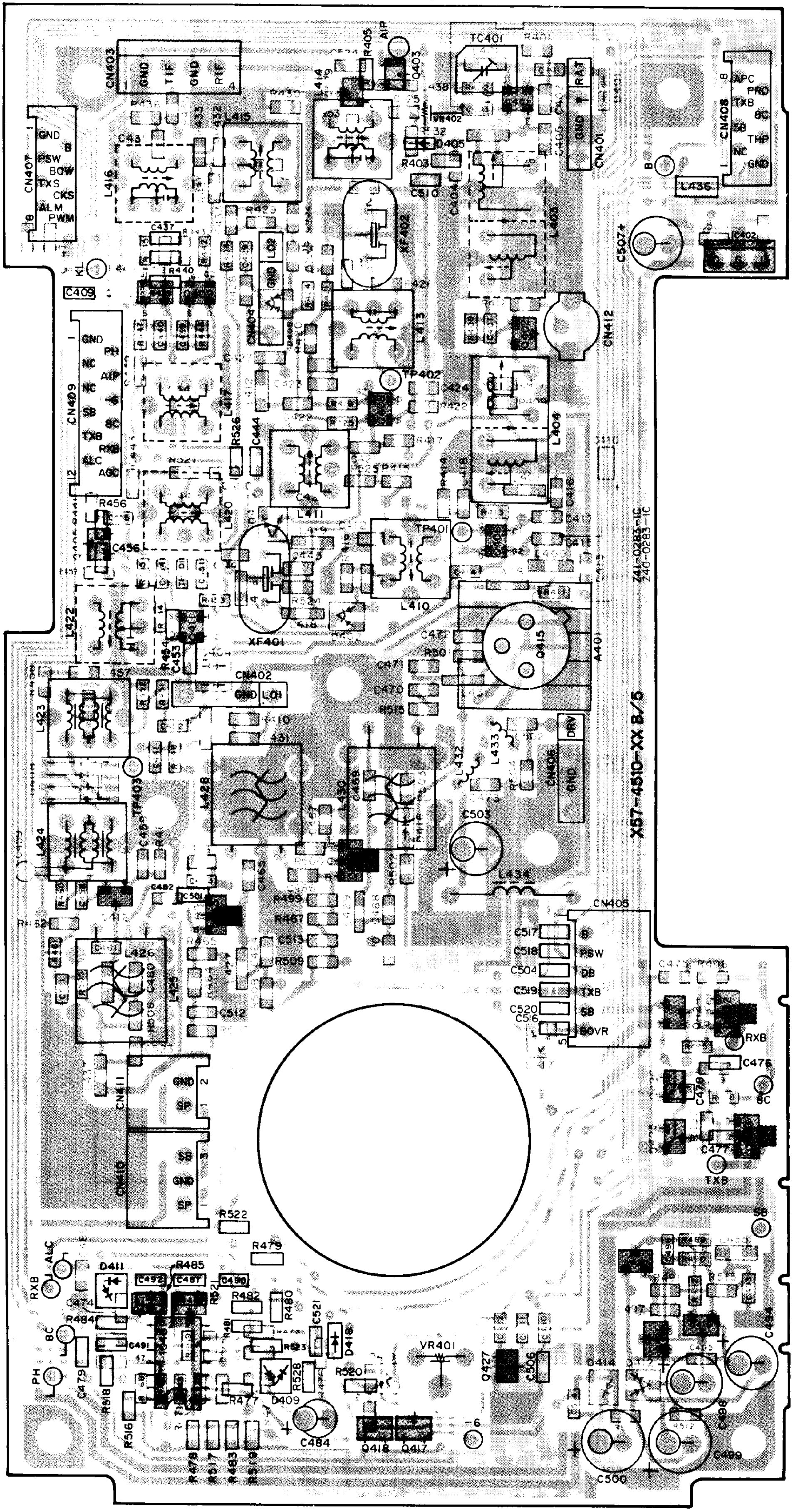

2SC2762

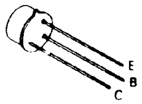

DTA124EK
DTA143EK
DTC114EK
DTC114TK
DTC124EK
DTD114EK
2SA1162
2SC2712
2SC2714
2SC2759

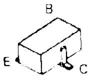

2SA1213
2SC2954
2SC3357

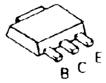

NJM2904M

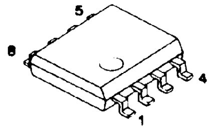

☐ A pattern
▨ B pattern

PC BOARD VIEWS

TX-RX UNIT (X57-4510-XX) (B/5) Foil side view 0-00: E, 0-11: K

2SK210

2SK1577

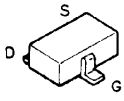

3SK131
3SK184

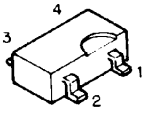

TA78L08F

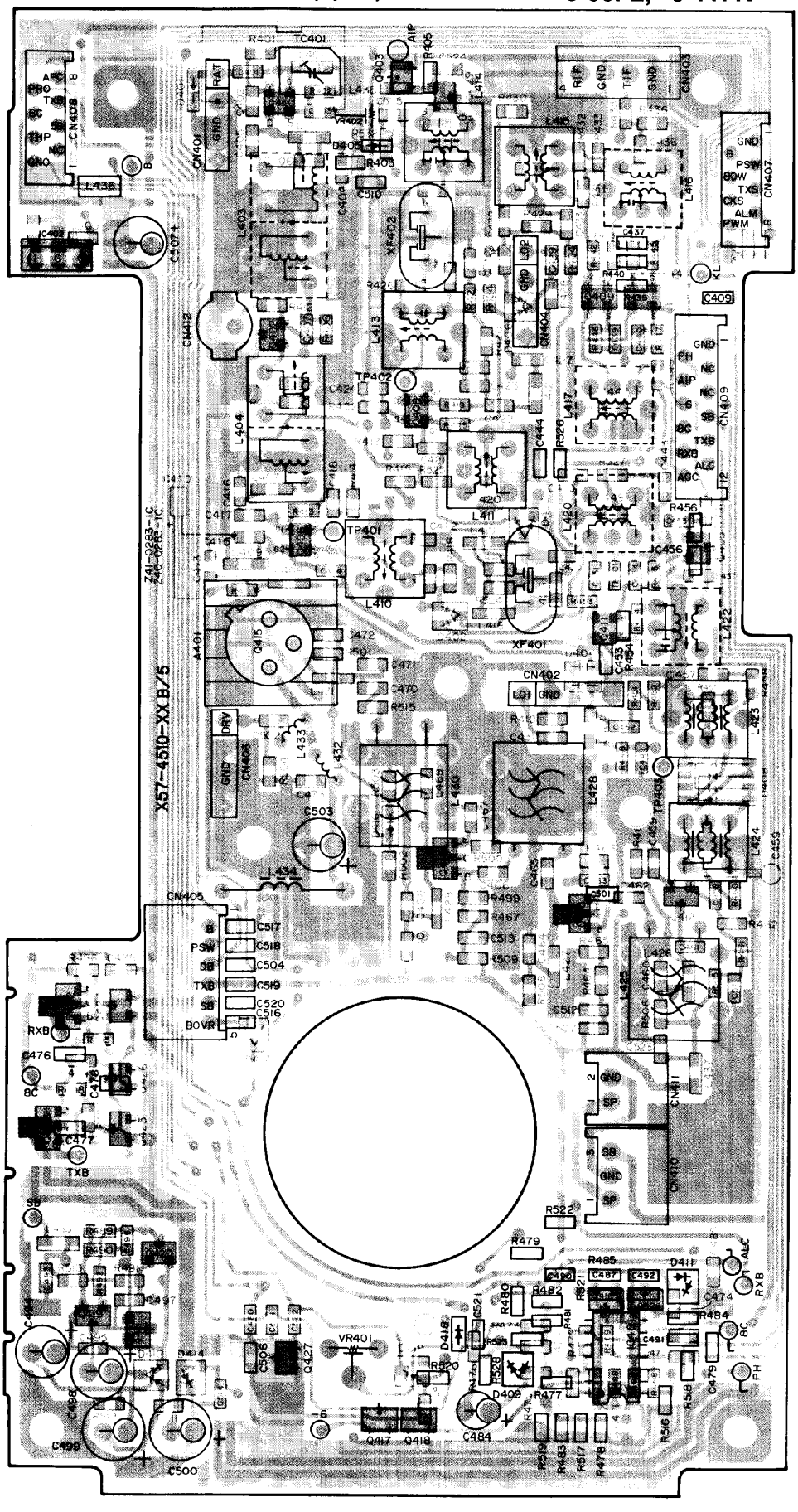

Apattern

Bpattern

PC BOARD VIEWS

TX-RX UNIT (X57-4510-XX) (C/5) Component side view

0-00: E, 0-11: K

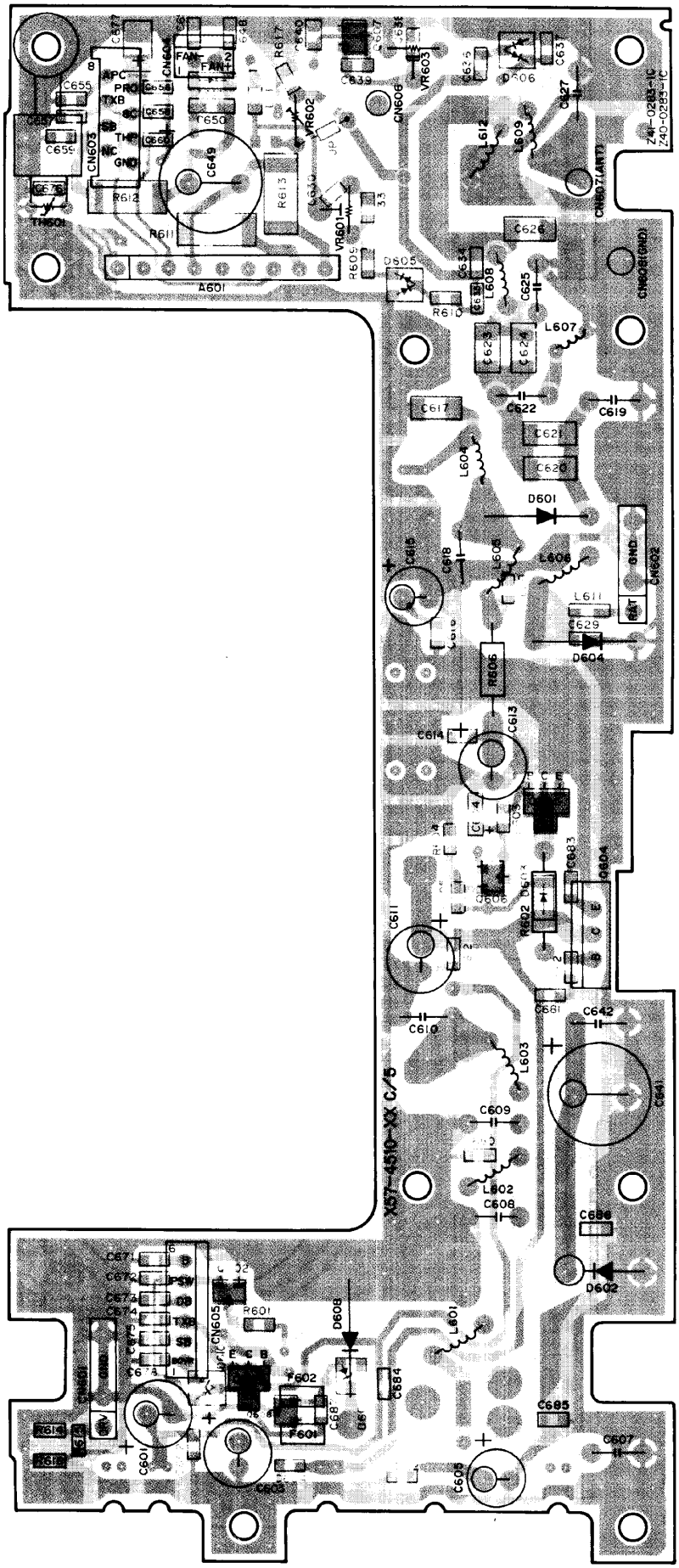

☐ A pattern

▨ B pattern

TX-RX UNIT (X57-4510-XX) (C/5) Foil side view
0-00: E, 0-11: K

DTC114EK
DTC124EK
2SA1162
2SC2712

2SB1302

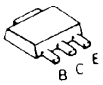

M67728

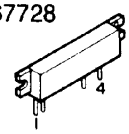

M57716

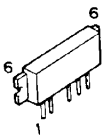

2SC2873

2SA1824

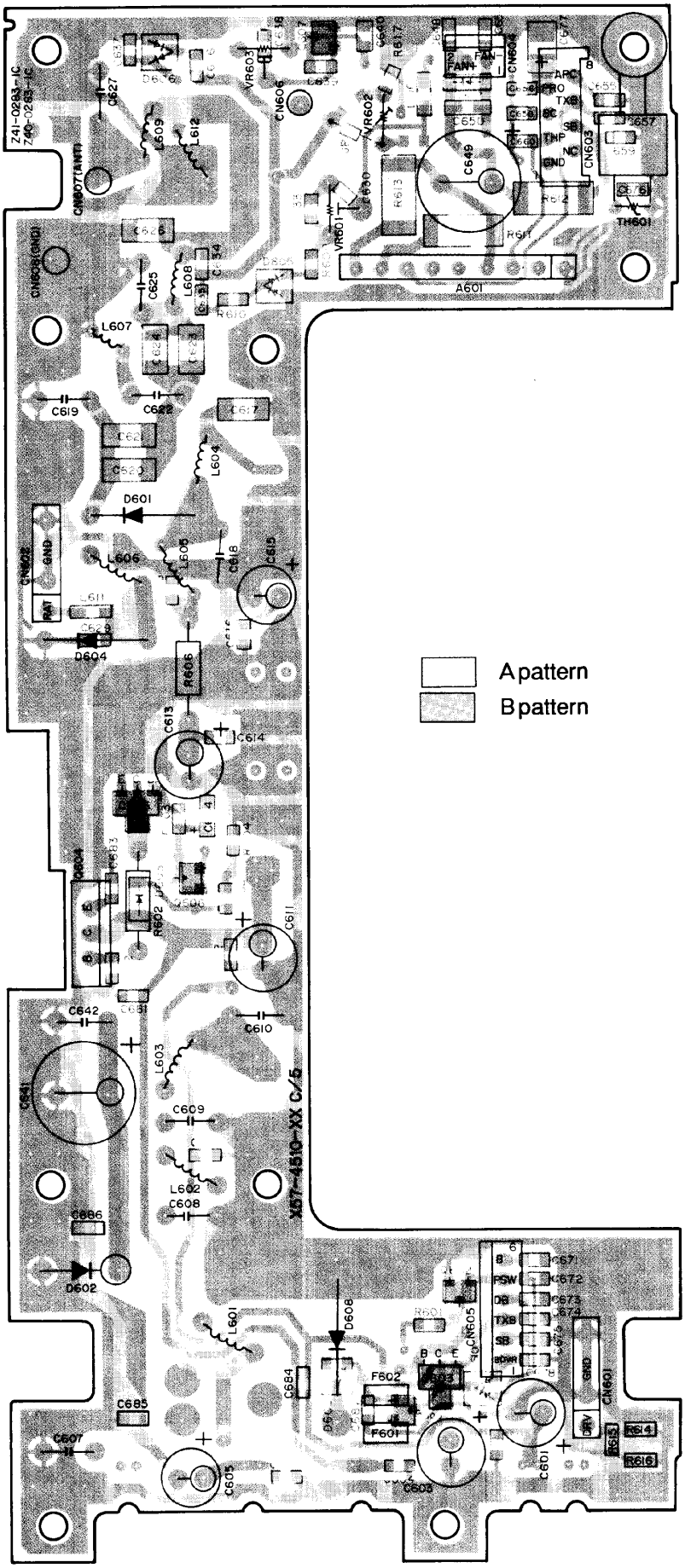

PC BOARD VIEWS TM-455A/E

SUB UNIT (DDS) (X58-4020-0X) Component side view

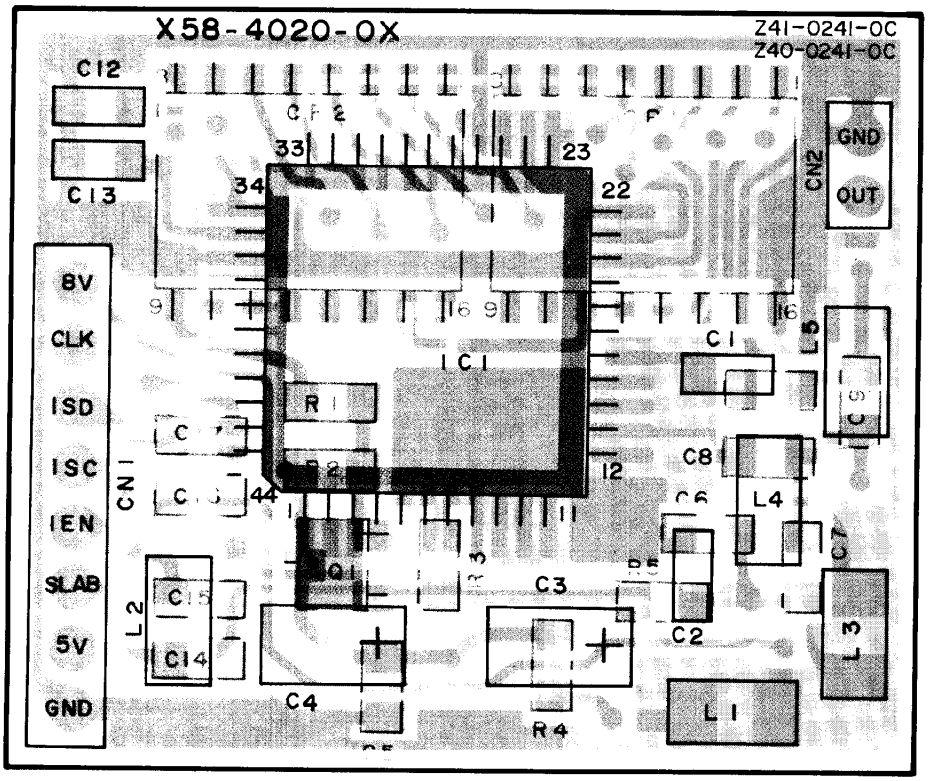

Apattern

Bpattern

SUB UNIT (DDS) (X58-4020-0X) Foil side view

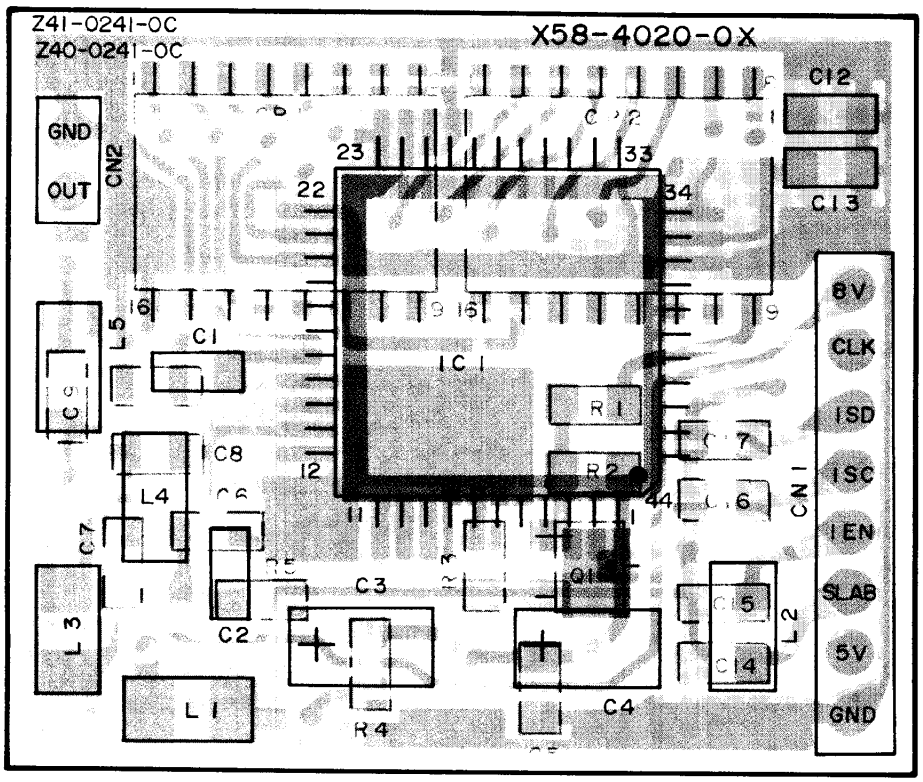

2SC2712

F71022

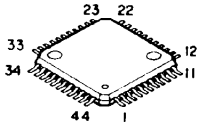

TM-455A/E PC BOARD VIEWS

TX-RX UNIT (X57-4510-XX) (A/5)
Component side view 0-00: E, 0-11: K

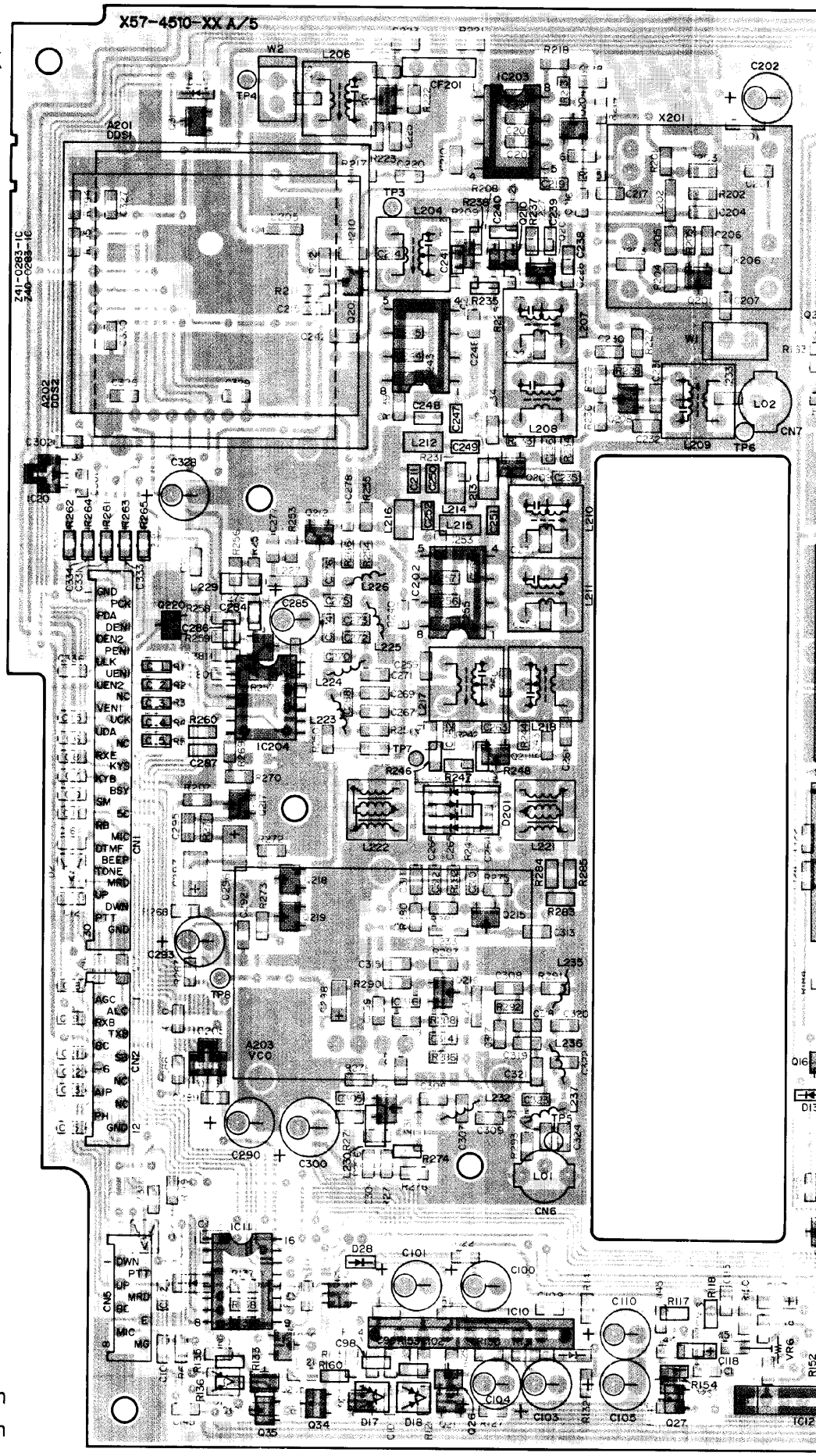

A pattern
B pattern

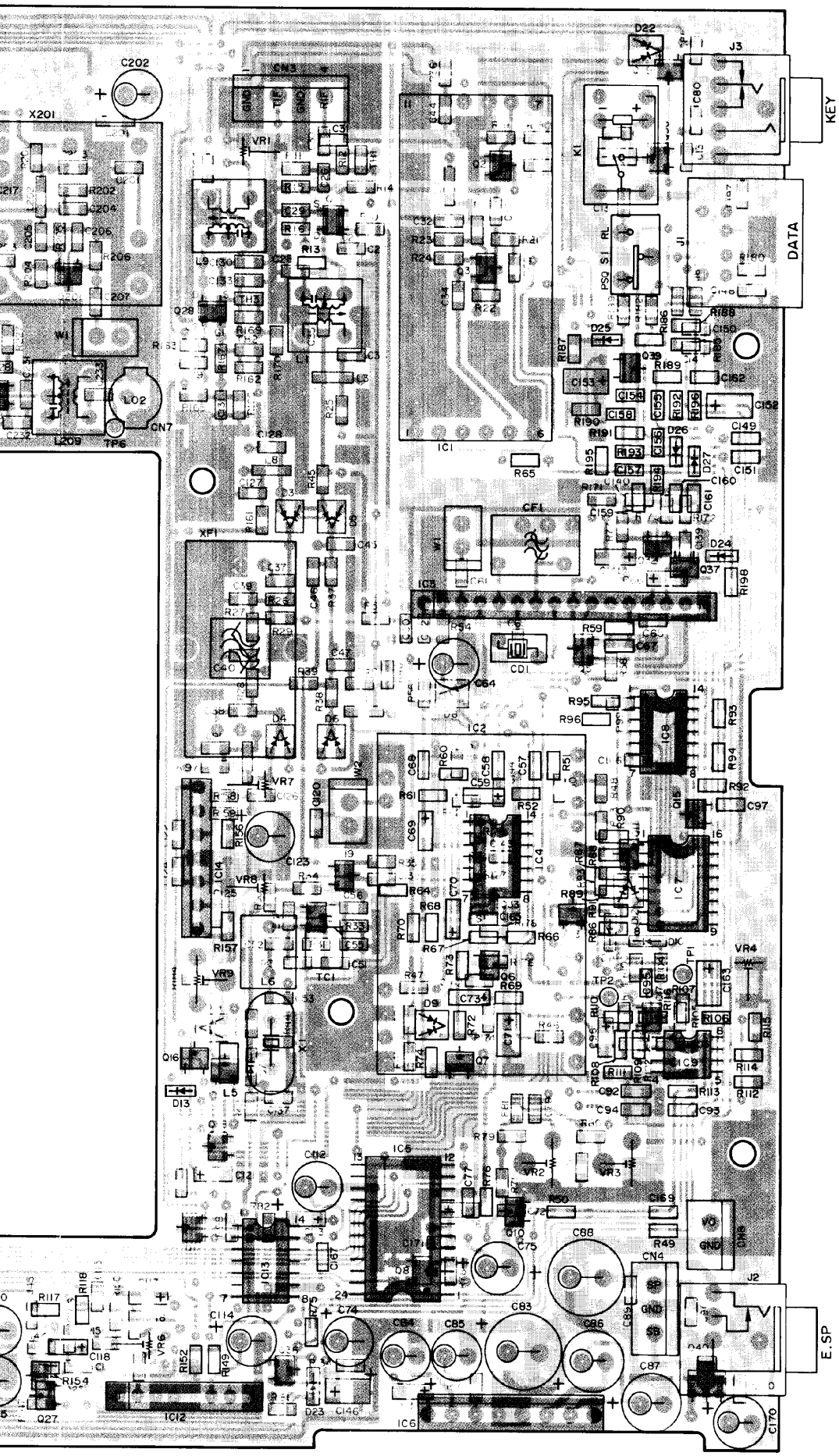

DTA124EK
DTC114EK
DTC114TK
DTC124EK
2SC2712
2SC2714
2SC3120
2SC3324
2SC3356
2SD1757K

2SD1624

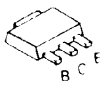

FMC1

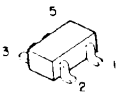

UPC1037HA

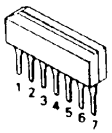

UPC1313HA

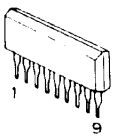

NJM4558M

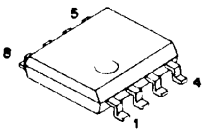

TC9174F

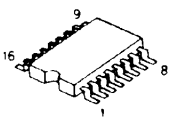

2SK210

2SK208

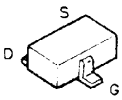

TX-RX UNIT (X57-4510-XX) (A/5) Foil side view 0-00: E, 0-11

3SK131

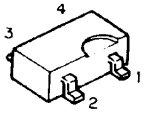

2SJ106

CXD1225M
BU4066BCF
XRU4066BCF

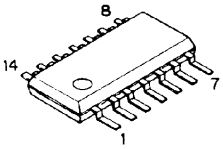

KCA06

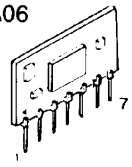

KCD08

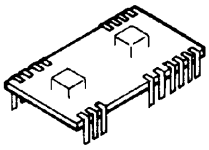

KCX05

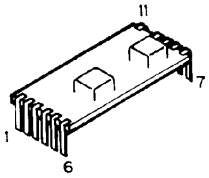

MB87032PF

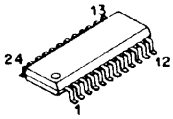

KCD04

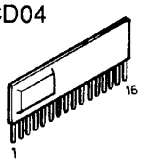

UPC1242H

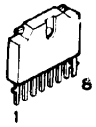

TA78L08F

TA78L05F

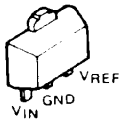

SN16913P

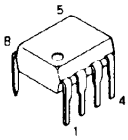

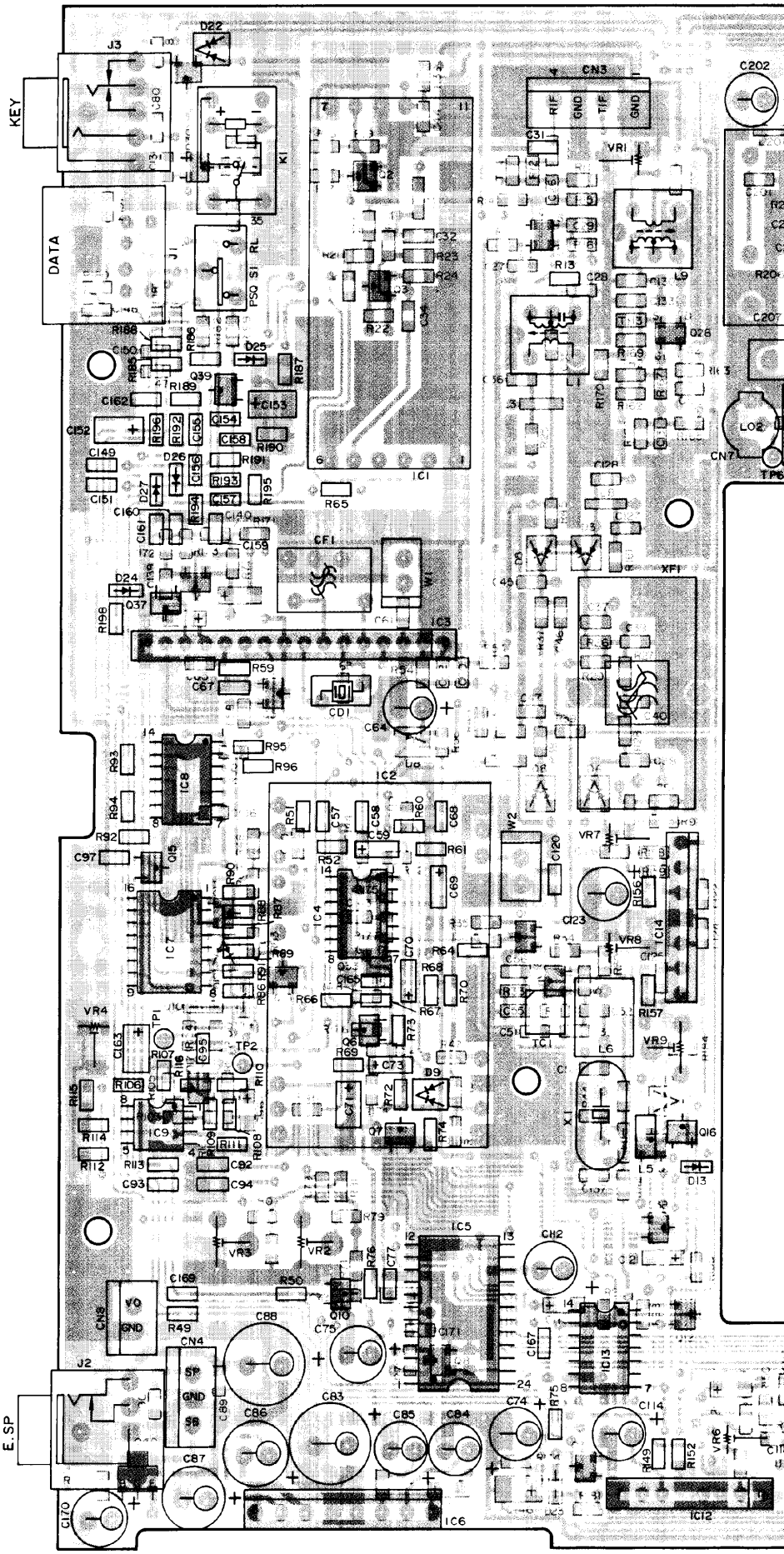

iew 0-00: E, 0-11: K

PC BOARD VIEWS TM-455A/E

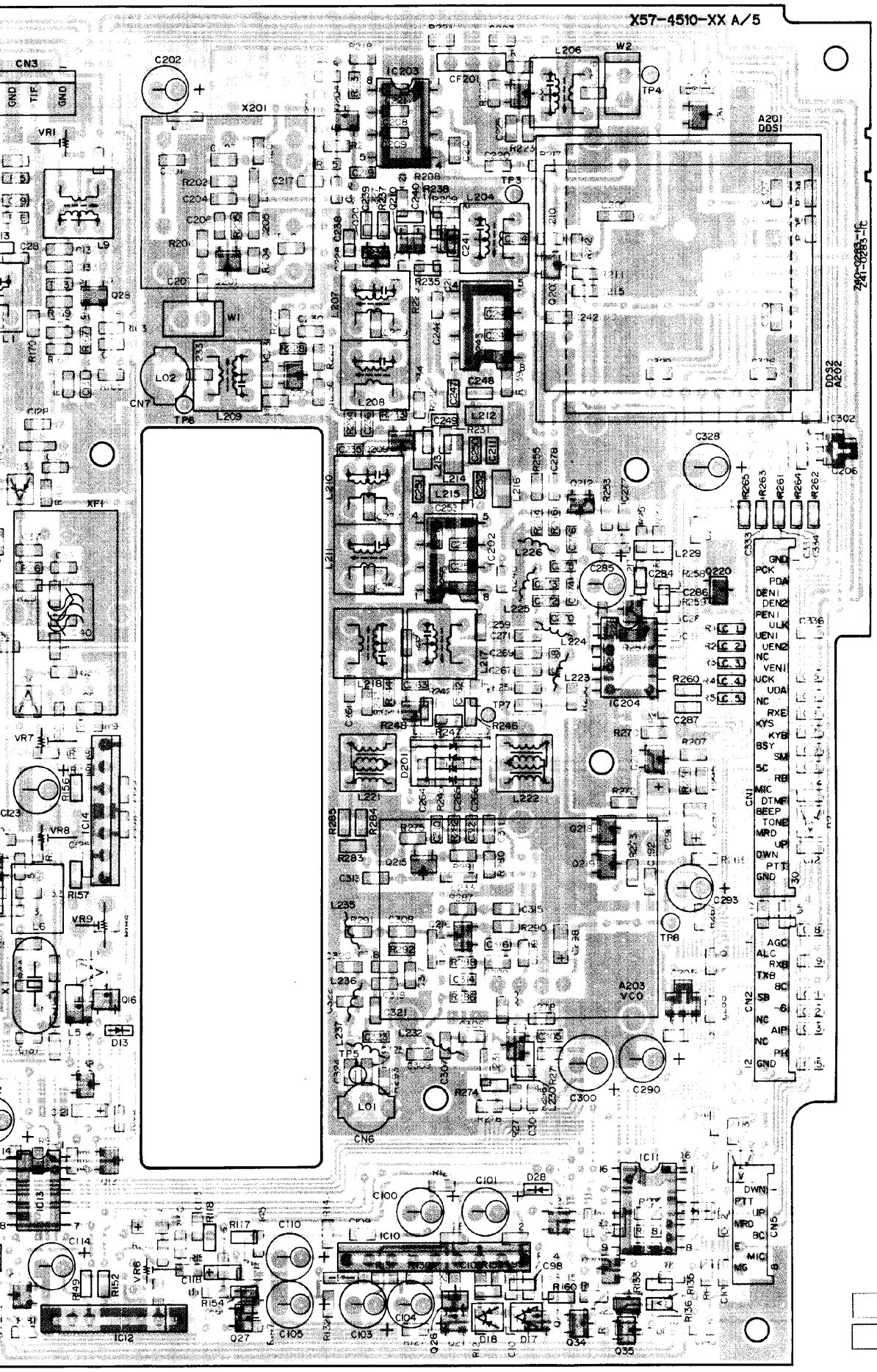

A pattern

B pattern

TM-455A/E PC BOARD VIEWS

DTA143EK
DTC143EK

2SA1519
DTC114EK

TC4S584F
SC14S11F

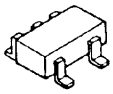

LC7385M

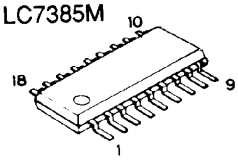

TA78L06F

AT93C66-10SI2.7
M62003FP
NM93C66LEM8

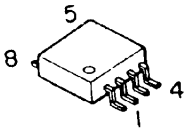

M37702M6B084FP

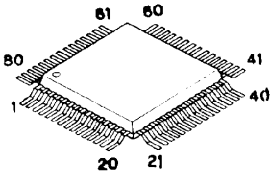

TC35219F
XRU4066BCF

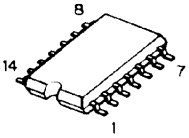

TC74HC238AF

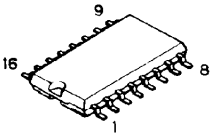

BU4066BCF

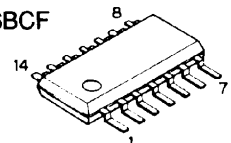

CONTROL UNIT (X53-351X-XX) (A/2) Component side view
0-11: K, 2-71: E

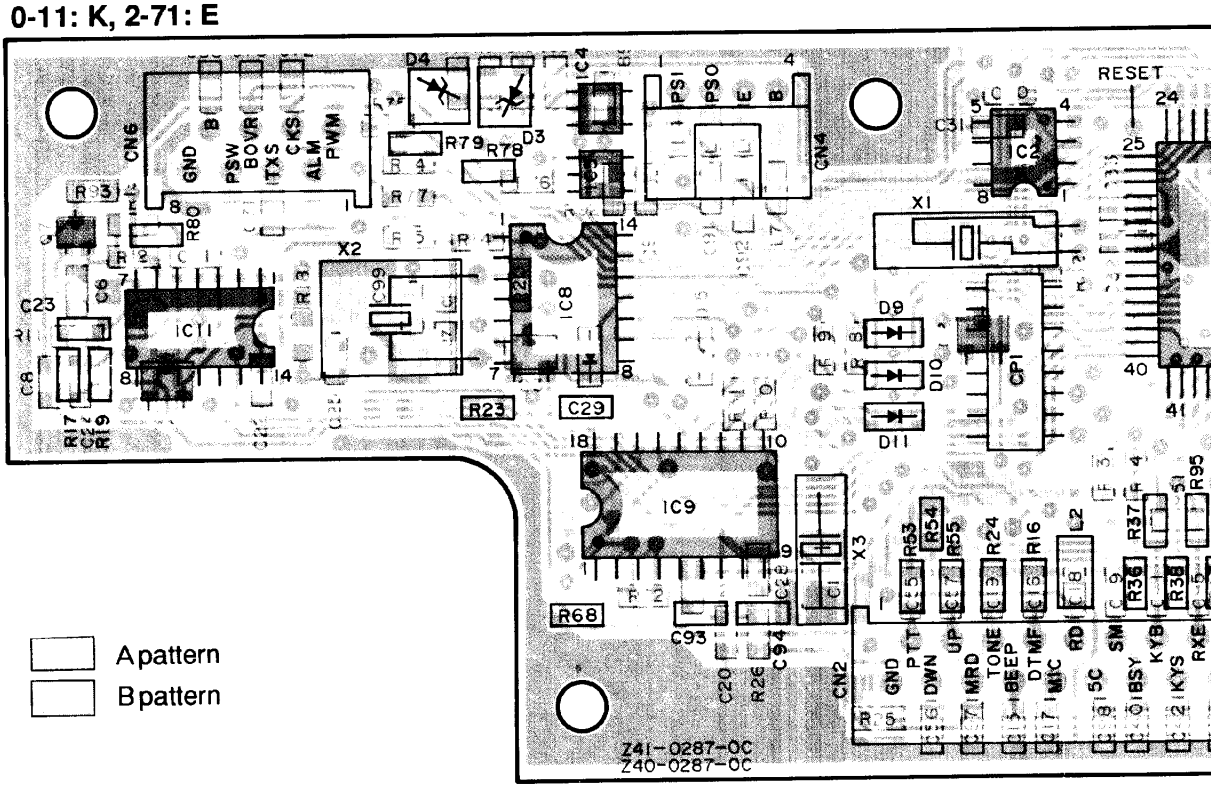

A pattern
B pattern

CONTROL UNIT (X53-351X-XX) (A/2) Foil side view
0-11: K, 2-71: E

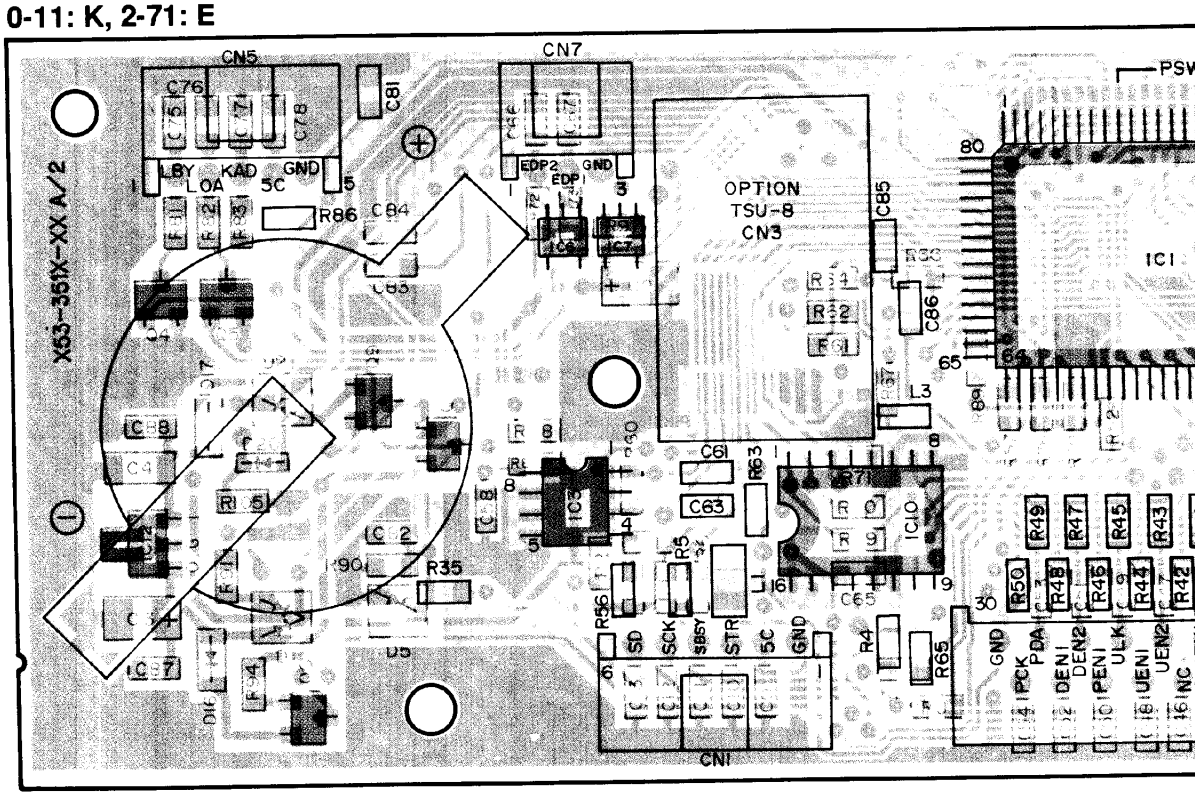

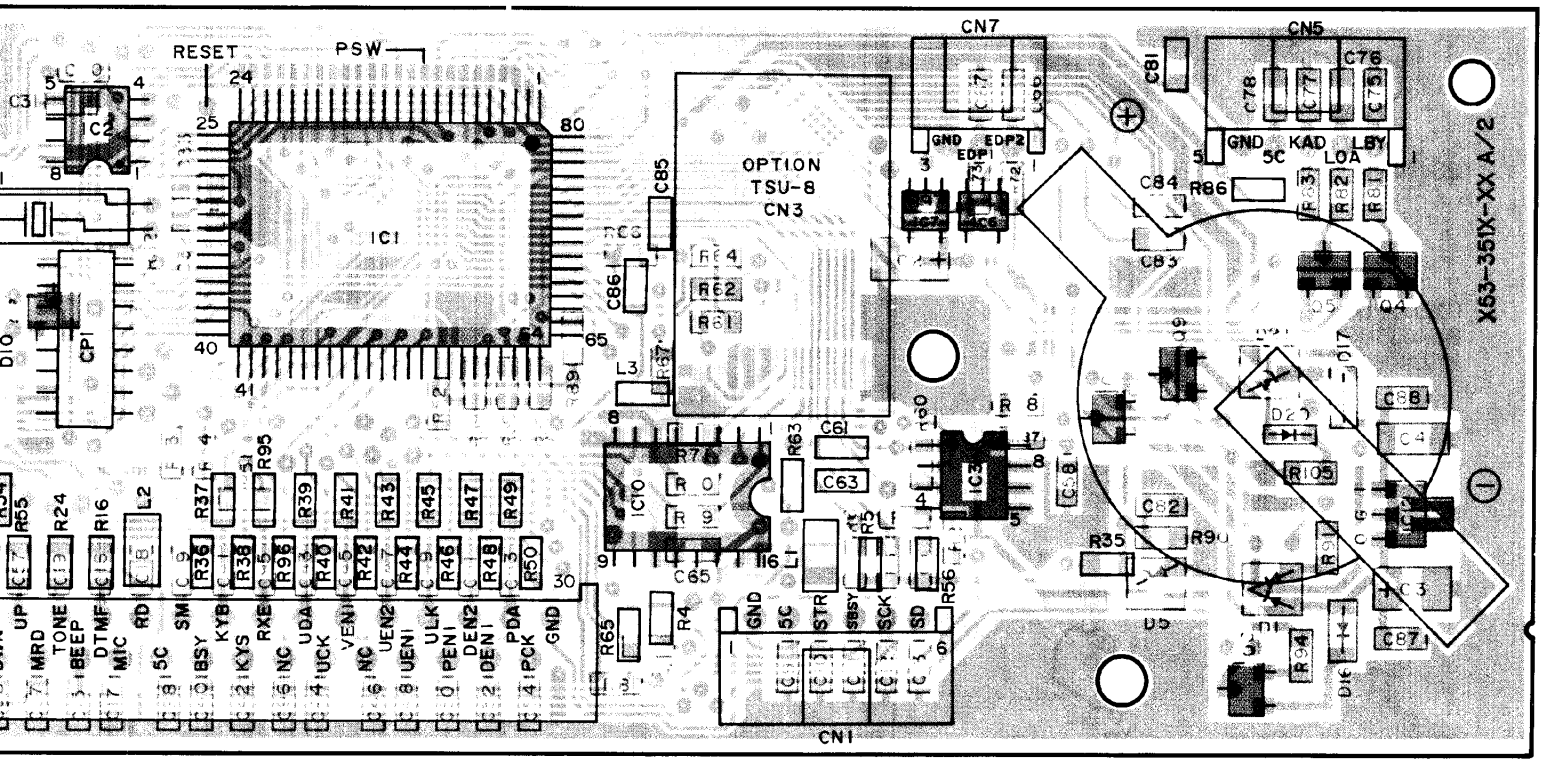

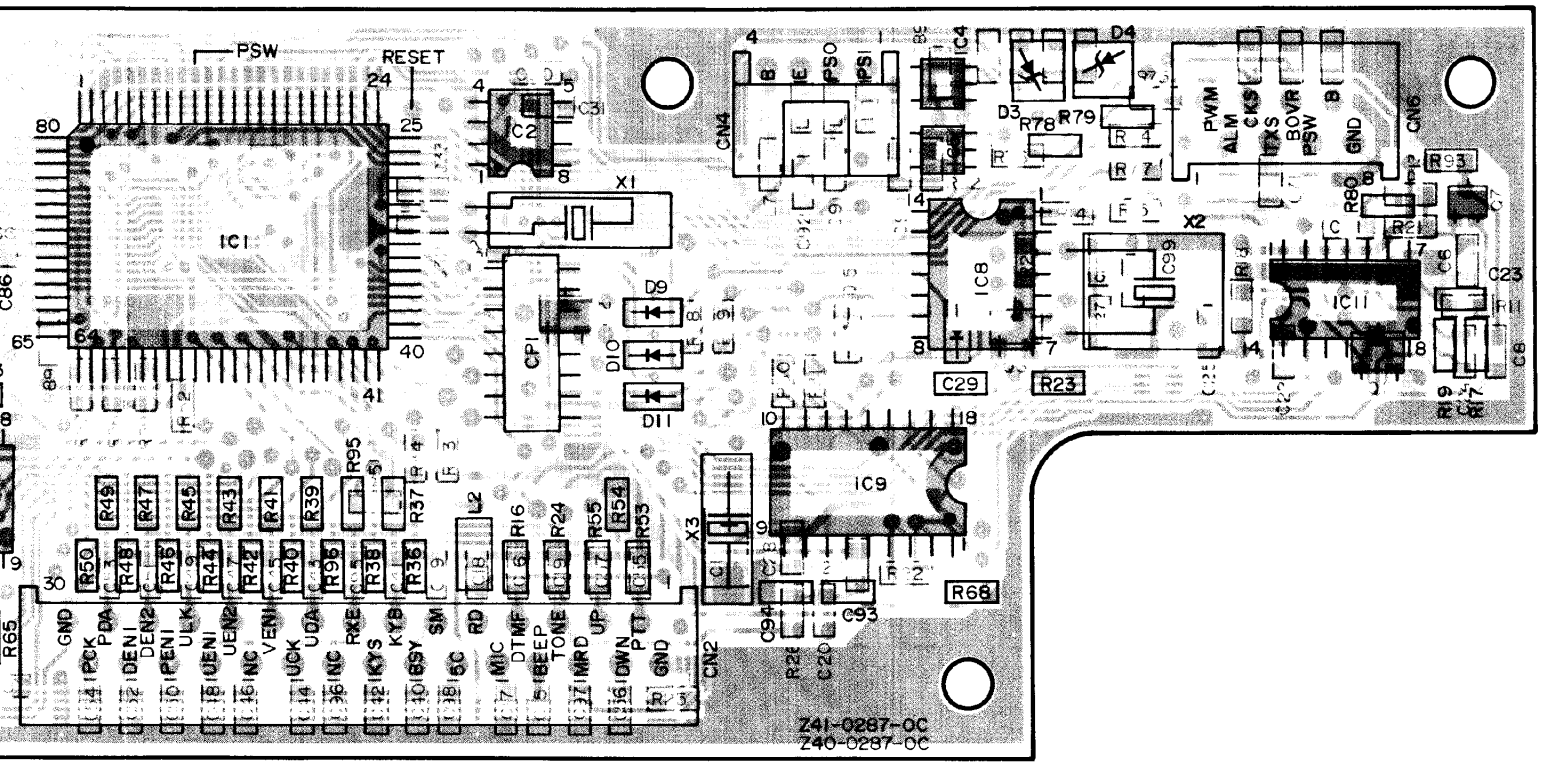

VCO UNIT (X58-4080-00) Component side view

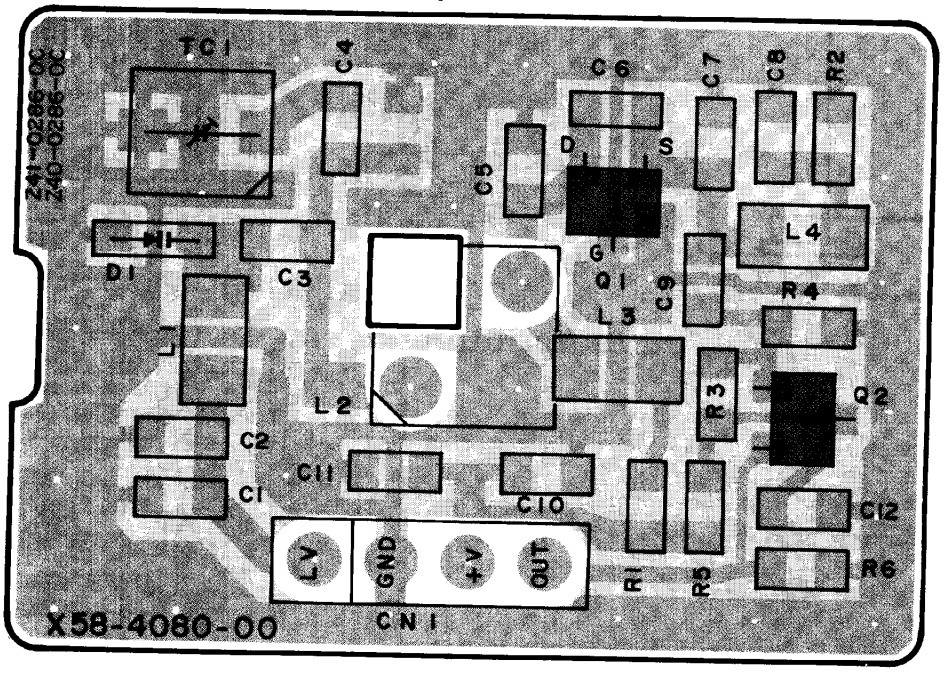

A pattern
B pattern

VCO UNIT (X58-4080-00) Foil side view

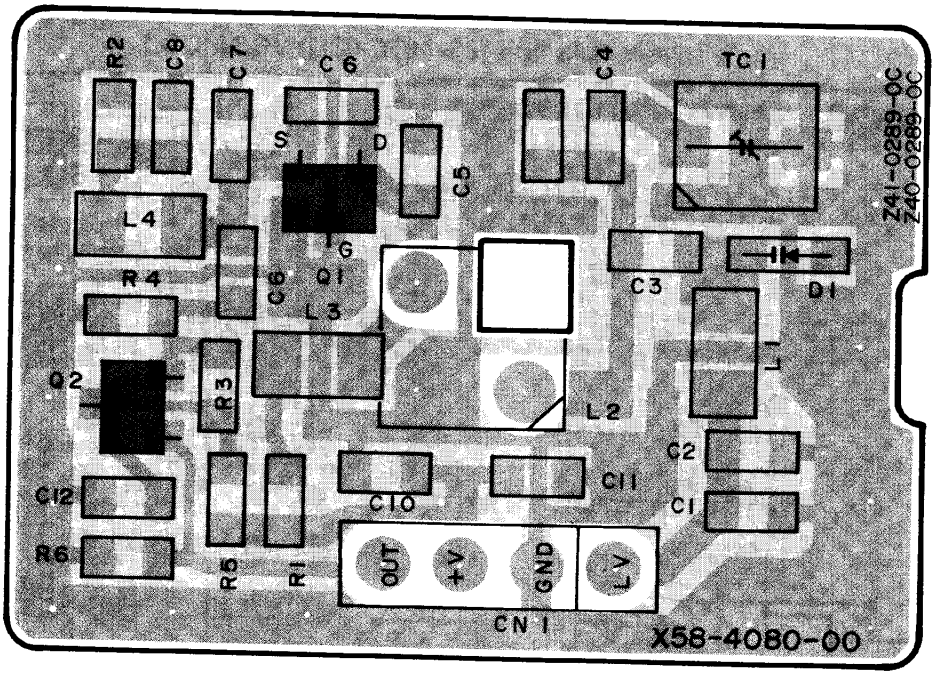

2SK508NV

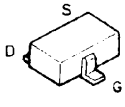

2SC3356

PC BOARD VIEWS TM-455A/E

FAN UNIT (X59-4020-00) Component side view

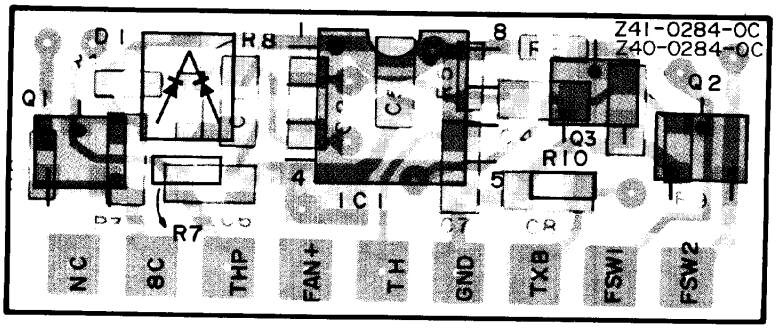

A pattern
B pattern

FAN UNIT (X59-4020-00) Foil side view

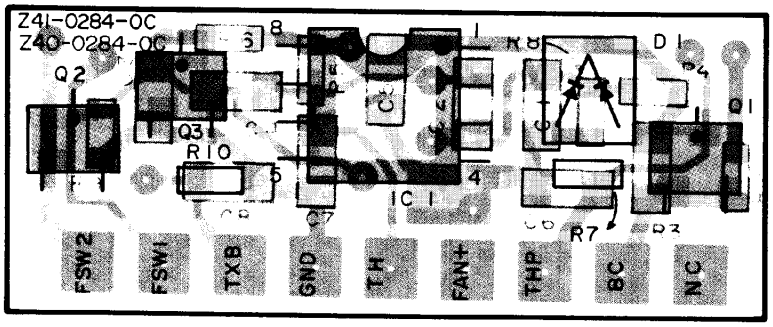

A pattern
B pattern

DTC114TK
DTD114EK

NJM2904M

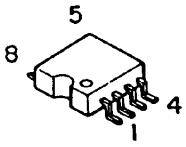

TM-455A/E PC BOARD VIEWS

DTC114EK
2SA1162
2SC2712
2SA1745

2SA1307

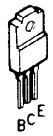

TC4S11F

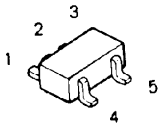

TC4S584F

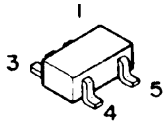

HD404719A46H

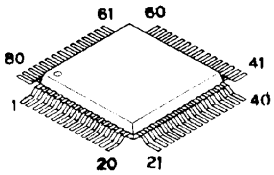

MSM5265GS-VIK

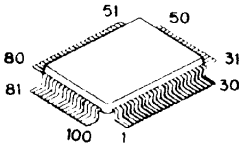

Apattern
Bpattern

LCD ASSY (B38-0701-25) Component side view

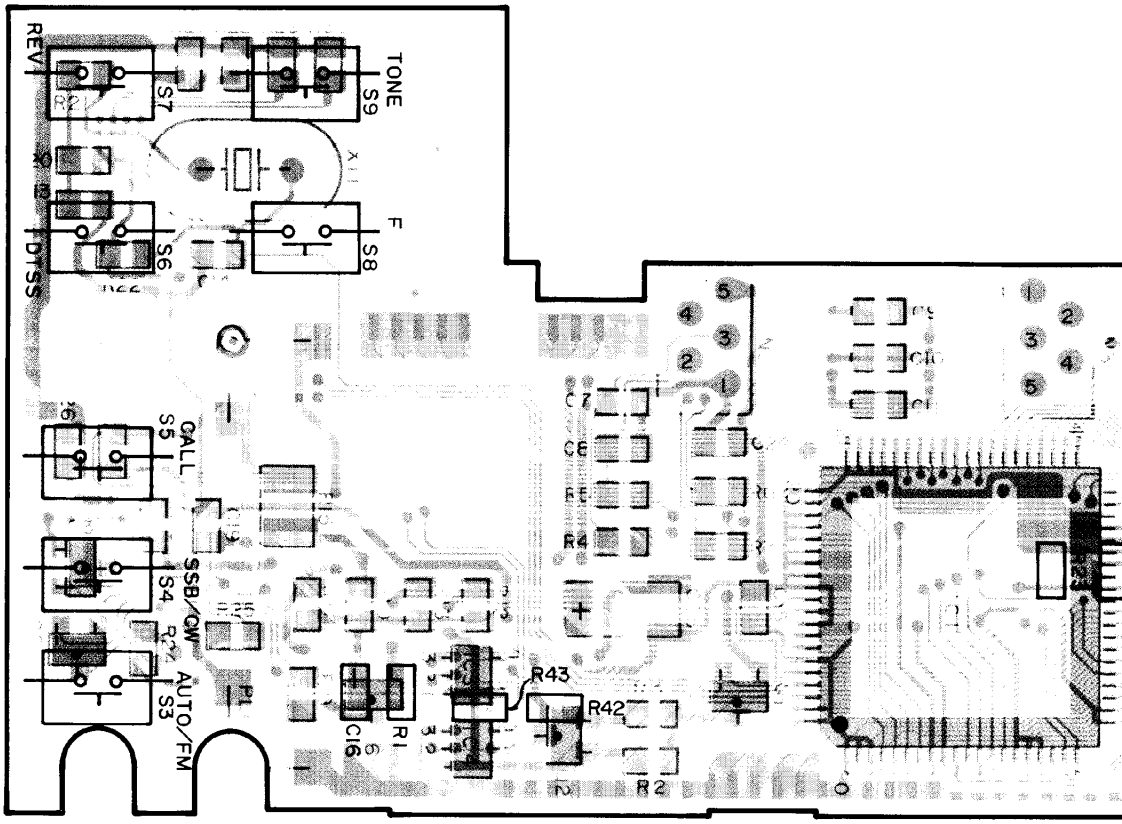

LCD ASSY (B38-0701-25) Foil side view

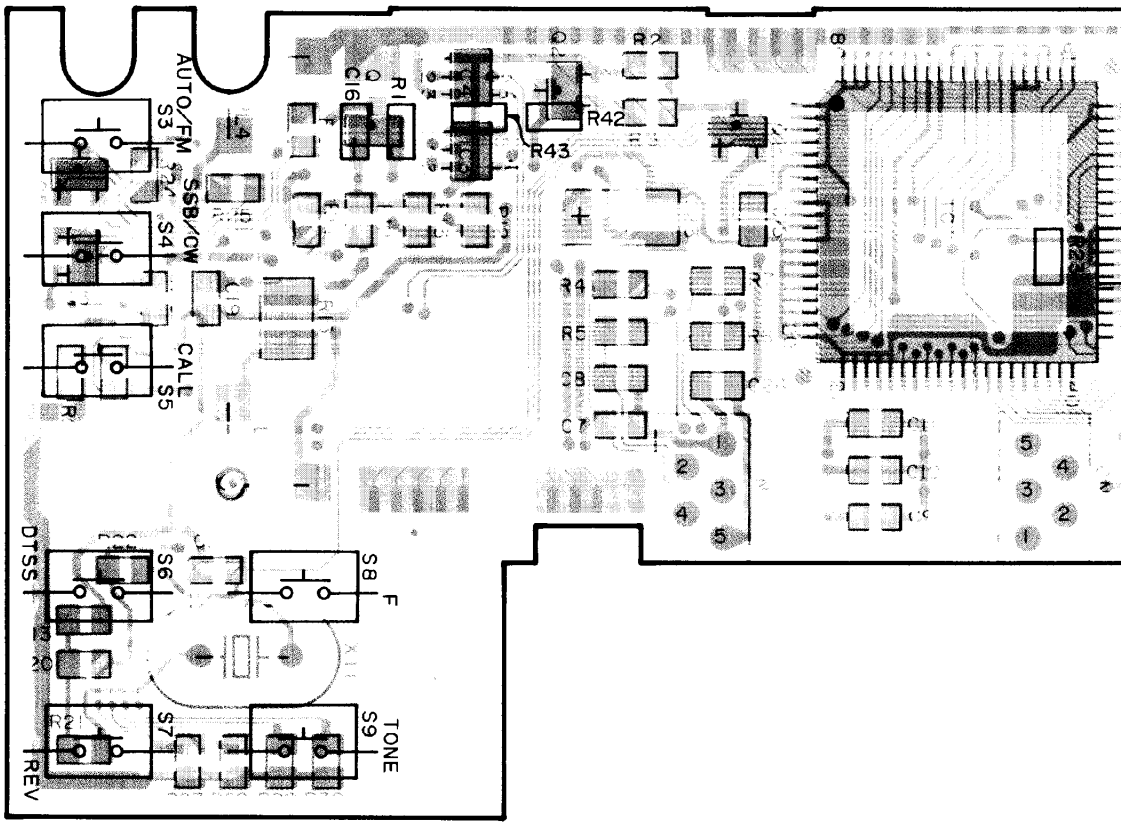

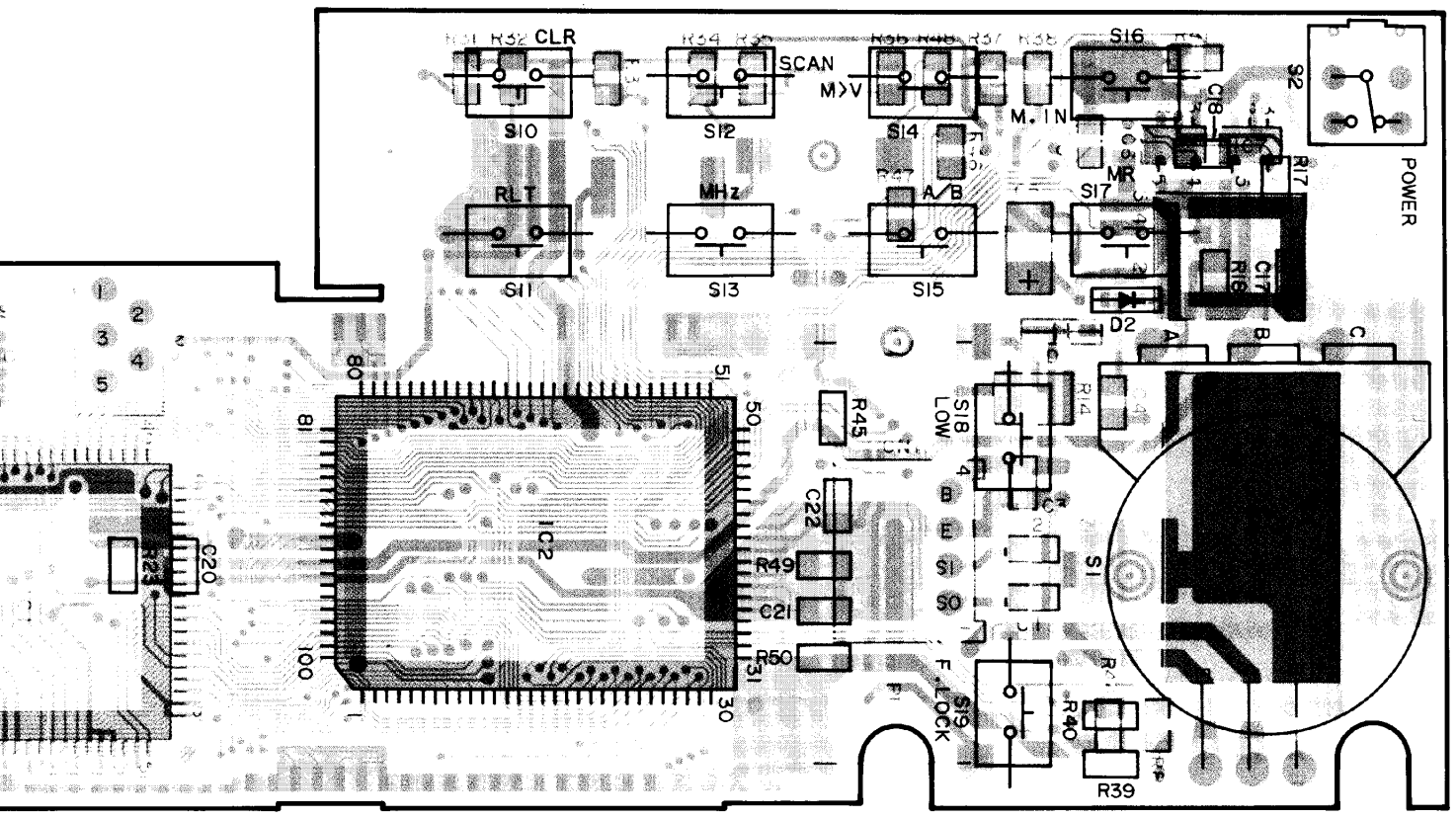
CLR
SCAN
M>V
M. IN
S16
S2
POWER
S10
S12
S14
C18
R17
RLT
MHz
A/B
MR
S17
S11
S13
S15
C17
R16
D2
A
B
C
80
51
50
R45
S18
LOW
R14
81
IC2
C22
R49
C21
R50
S1
S0
S1
E
B
C20
R23
100
31
30
S19
F. LOCK
R40
R39

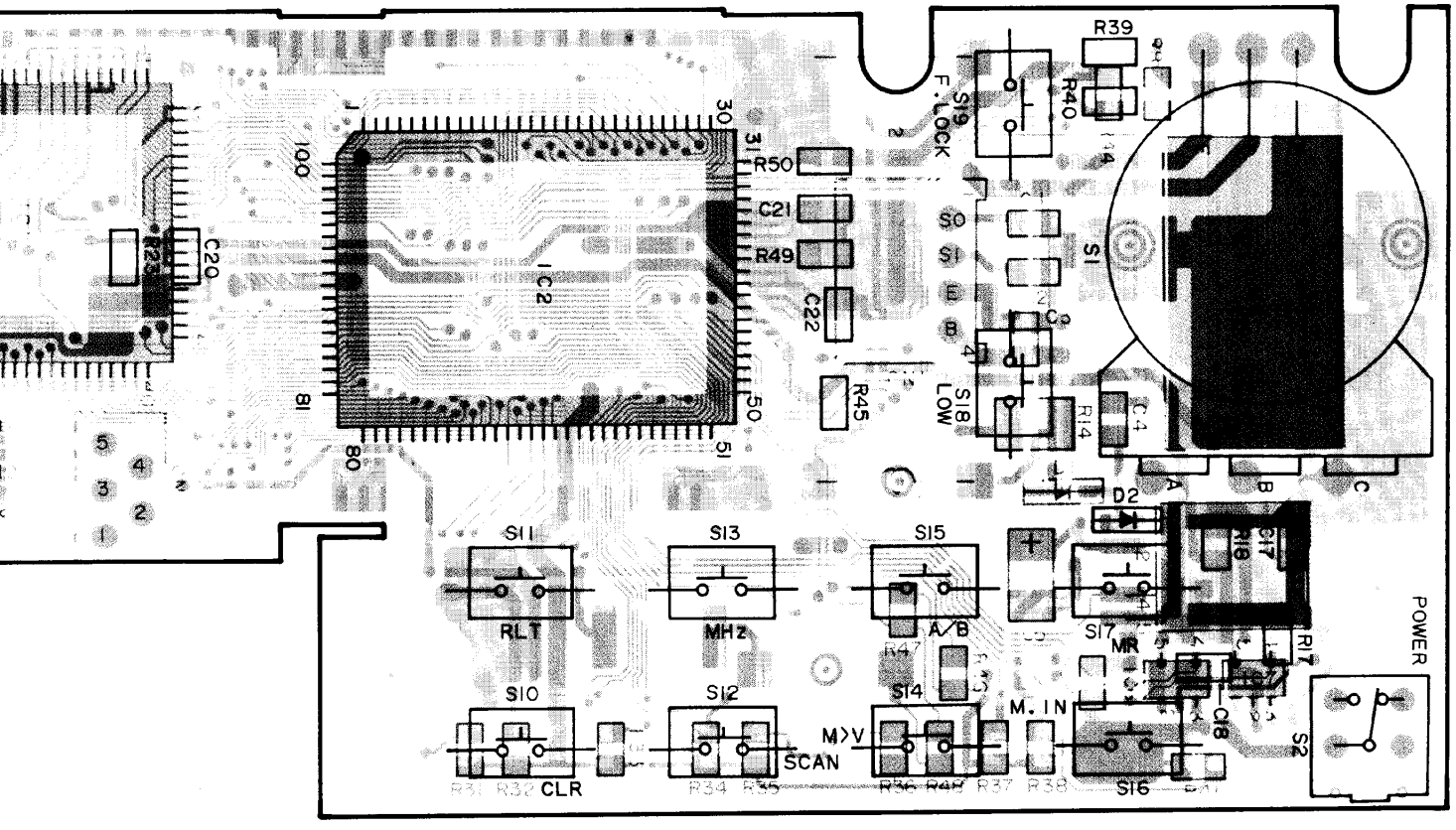
R39
S19
F. LOCK
R40
30
31
R50
C21
R49
S0
S1
E
B
S1
C22
IC2
100
C20
R23
81
50
51
80
R45
S18
LOW
R14
D2
A
B
C
S11
S13
S15
C17
C18
RLT
MHz
A/B
S17
MR
R17
POWER
S10
S12
S14
M. IN
M>V
SCAN
C18
S2
CLR
S16

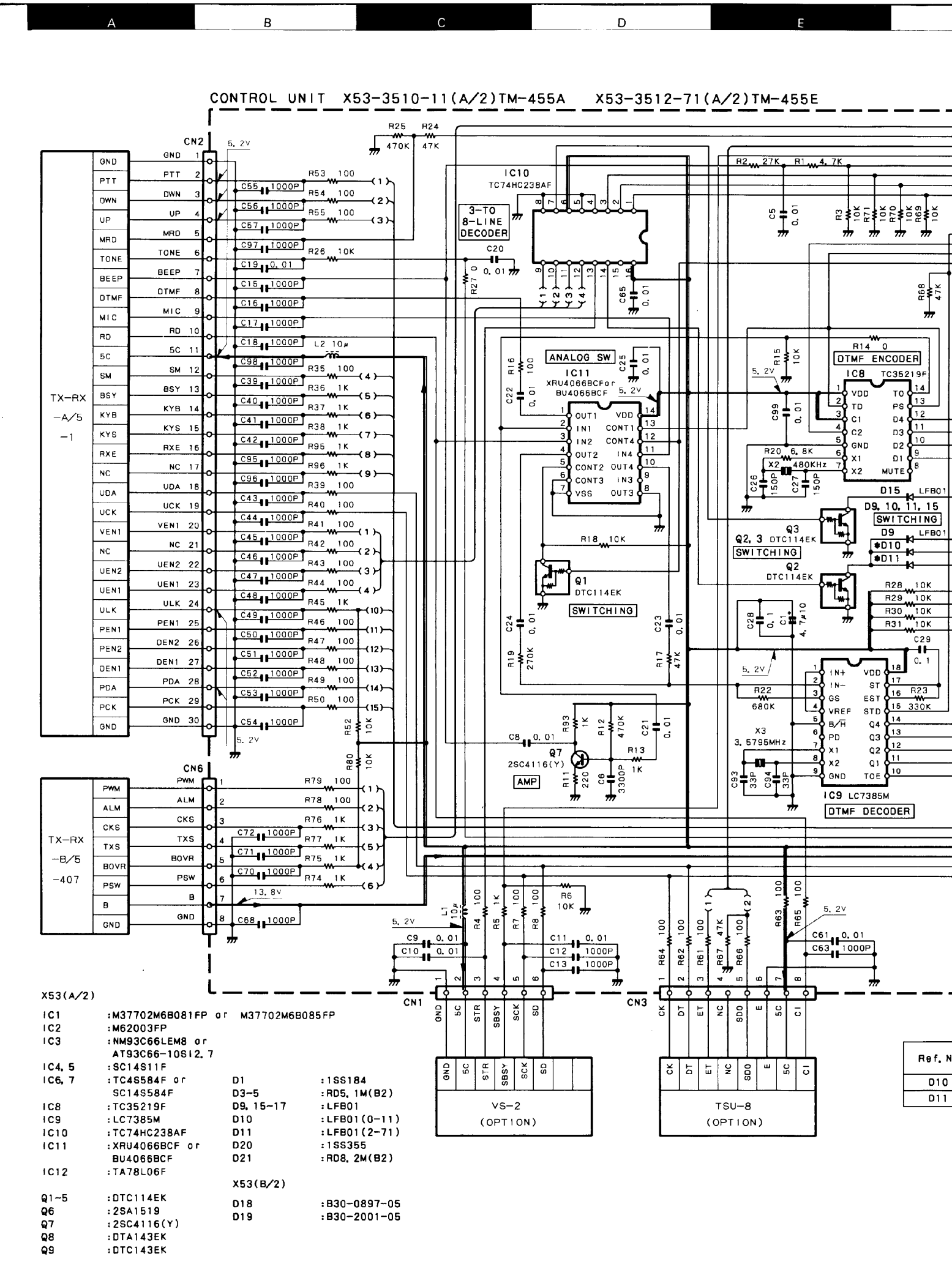

X53(A/2)

IC1	:M37702M6B081FP or M37702M6B085FP		
IC2	:M62003FP		
IC3	:NM93C66LEM8 or AT93C66-10SI2.7		
IC4, 5	:SC14S11F		
IC6, 7	:TC4S584F or SC14S584F	D1	:1SS184
IC8	:TC35219F	D3-5	:RD5.1M(B2)
IC9	:LC7385M	D9, 15~17	:LFB01
IC10	:TC74HC238AF	D10	:LFB01(0-11)
IC11	:XRU4066BCF or BU4066BCF	D11	:LFB01(2-71)
IC12	:TA78L06F	D20	:1SS355
		D21	:RD8.2M(B2)
		X53(B/2)	
Q1-5	:DTC114EK	D18	:B30-0897-05
Q6	:2SA1519	D19	:B30-2001-05
Q7	:2SC4116(Y)		
Q8	:DTA143EK		
Q9	:DTC143EK		

Ref. N
D10
D11

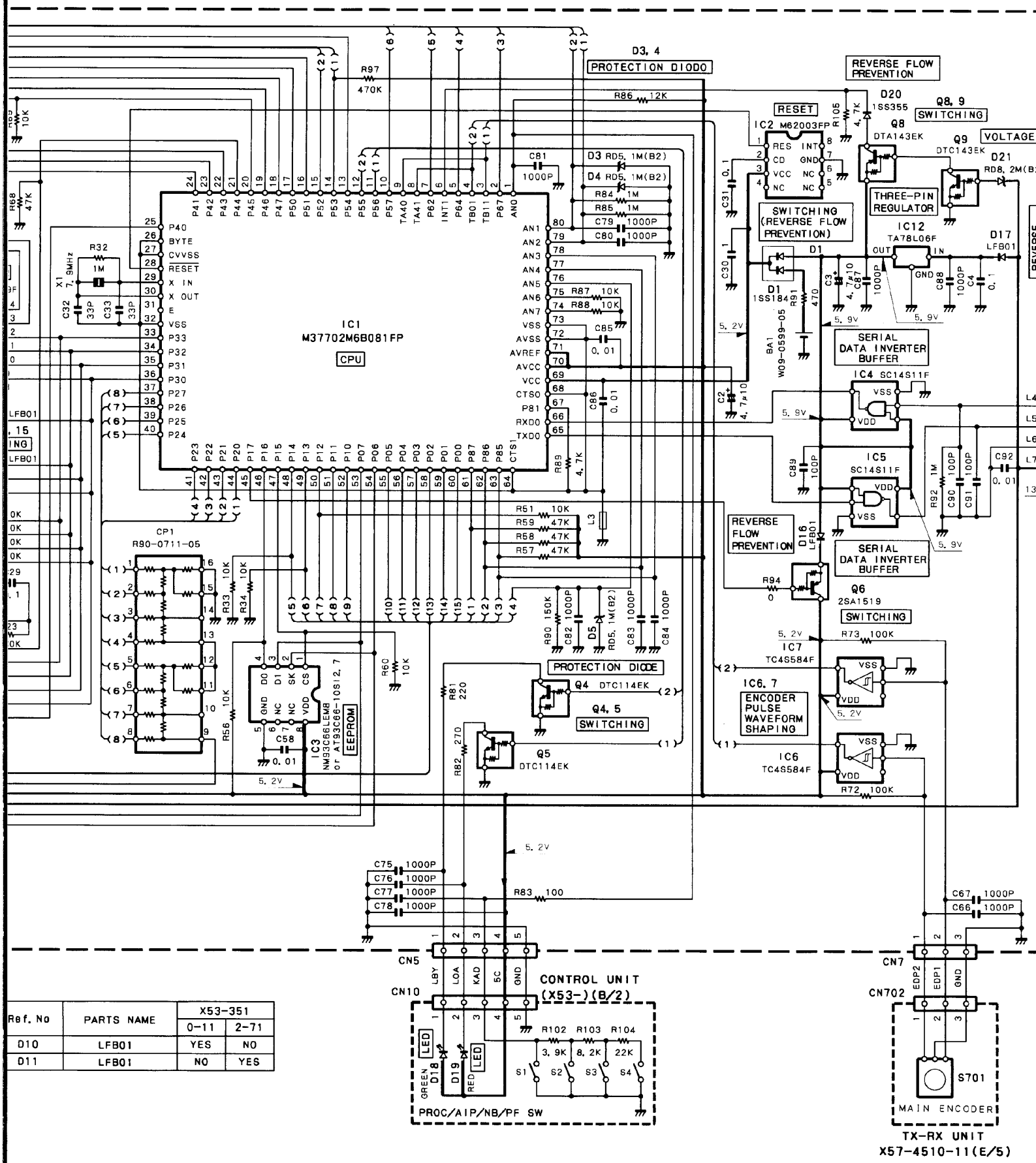

Ref. No	PARTS NAME	X53-351	
		0-11	2-71
D10	LFB01	YES	NO
D11	LFB01	NO	YES

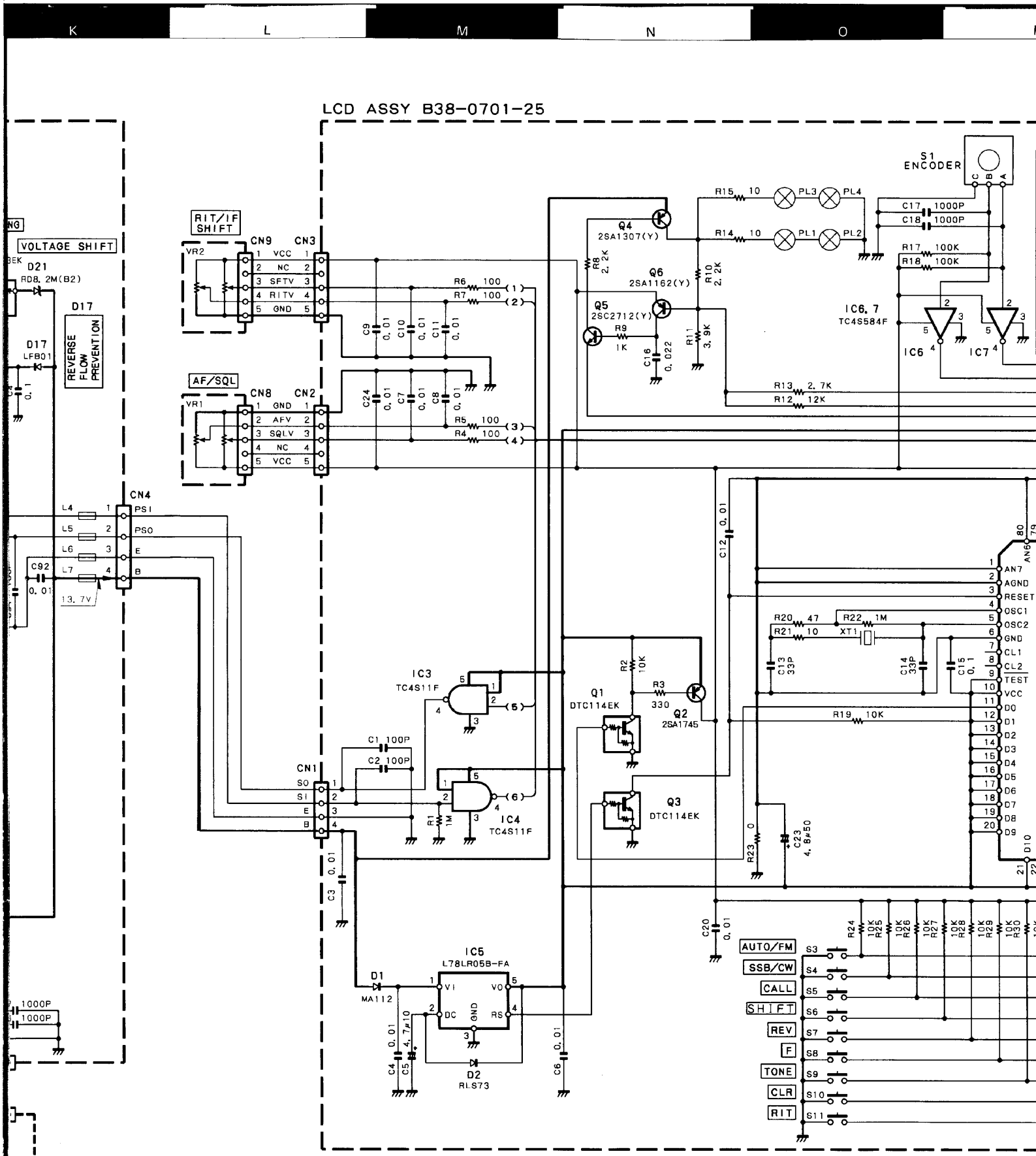

IC1	:HD404719A46H	Q1, 3	:DTC114EK	D1	:MA112
IC2	:MSM5265GS-V1K	Q2	:2SA1745	D2	:RLS73
IC3, 4	:TC4S11F	Q4	:2SA1307(Y)		
IC5	:L78LR05B-FA	Q5	:2SC2712(Y)		
IC6, 7	:TC4S584F	Q6	:2SA1162(Y)		
LCD1	:B38-0727-08				

SCHEMATIC DIAGRAM TM-455A/E

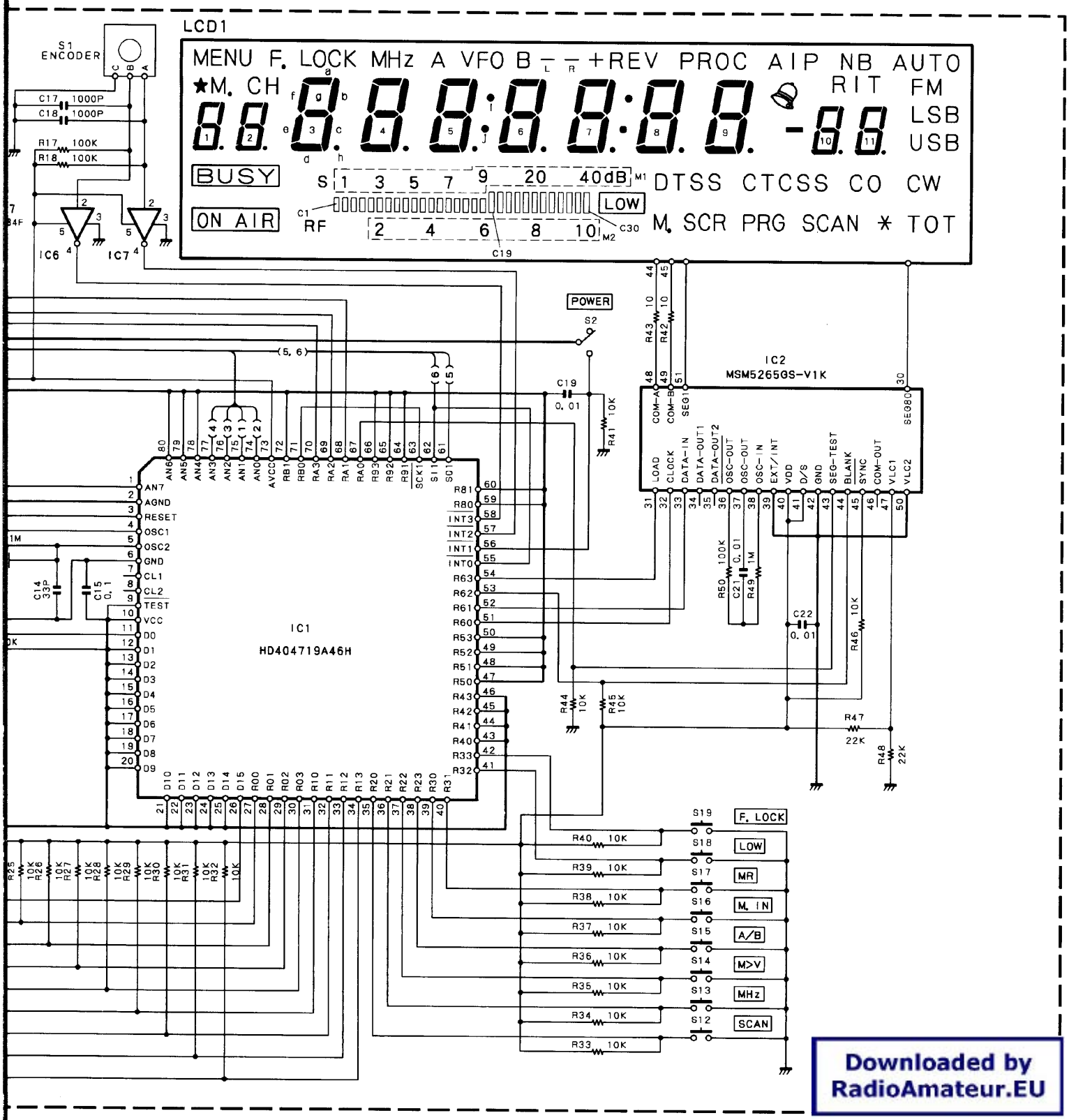

A112
LS73

TM-455A/E SCHEMATIC DIAGRAM

TX-RX UNIT X57-4510-11(A/5):TM-455A X57-4510-00(A/5):TM-455E

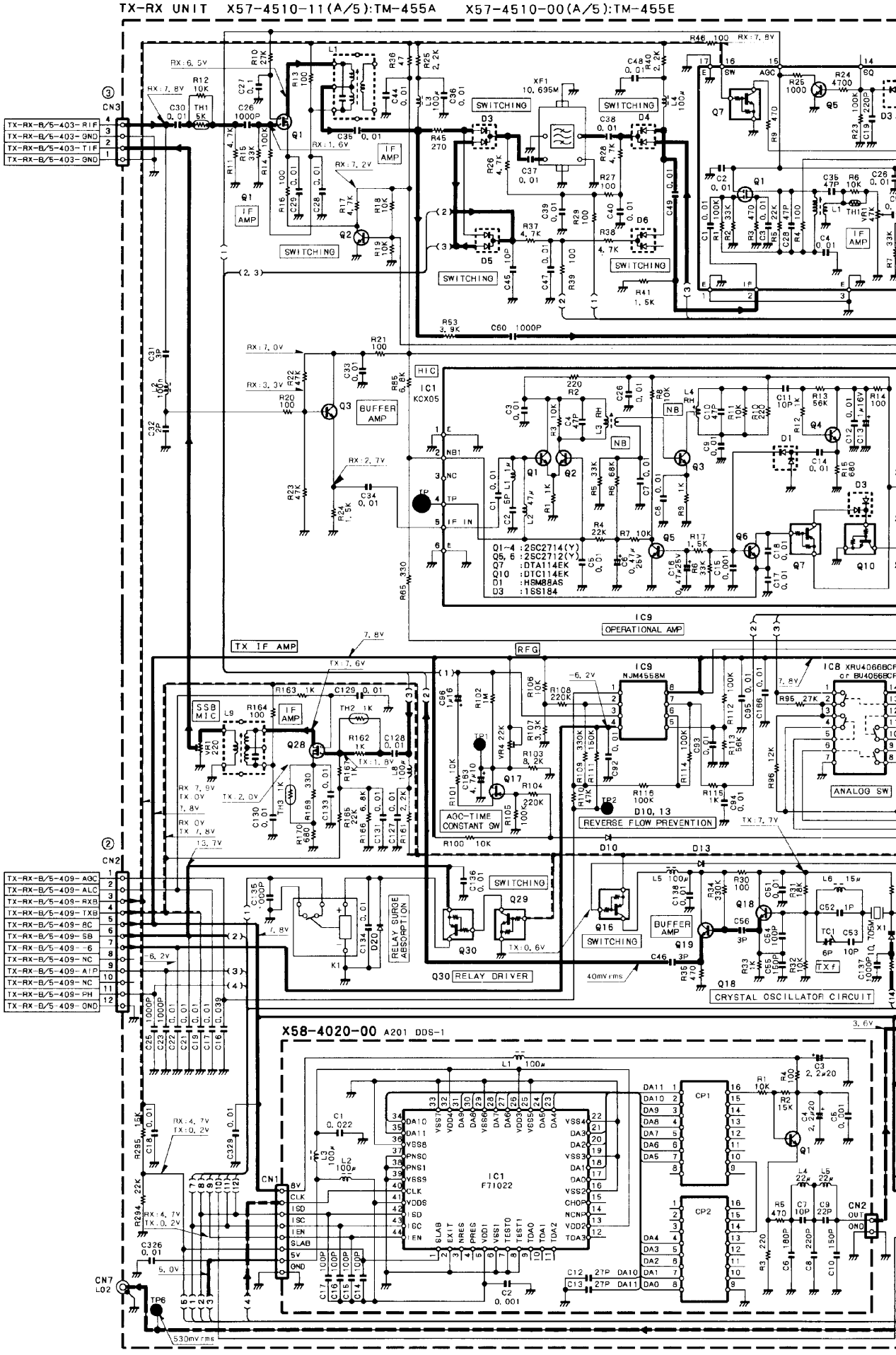

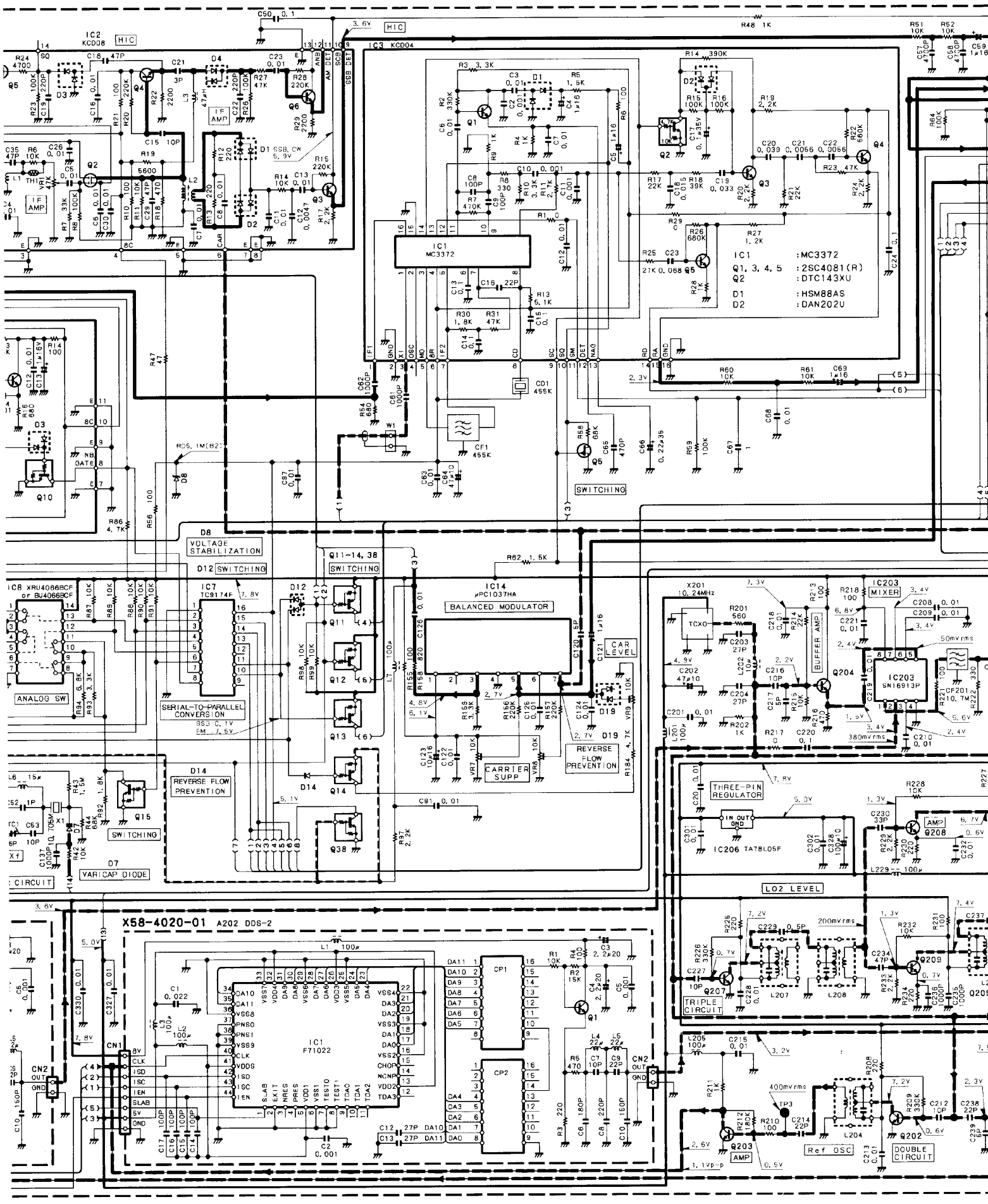
F
G
H
I
J
IC1 : MC3372
Q1, 3, 4, 5 : 2SC4081(R)
Q2 : DTC143XU
D1 : HSM88AS
D2 : DAN202U
IC2 KCD08
IC3 KCD04
IC1 MC3372
CD1 455K
CF1 455K
SWITCHING
IF AMP
HIC
D8 VOLTAGE STABILIZATION
D12 SWITCHING
Q11~14, 38 SWITCHING
IC7 TC9174F
SERIAL-TO-PARALLEL CONVERSION
IC8 XRU4066BCF or BU4066BCF
ANALOG SW
IC14 μPC1037HA
BALANCED MODULATOR
CAR LEVEL
CARRIER SUPP
REVERSE FLOW PREVENTION
D14 REVERSE FLOW PREVENTION
D7 VARICAP DIODE
Q15 SWITCHING
IC203 MIXER
BUFFER AMP
IC203 SN16913P
X201 10.24MHz
TCXO
THREE-PIN REGULATOR
IC206 TA78L05F
LO2 LEVEL
TRIPLE CIRCUIT
DOUBLE CIRCUIT
Ref OSC
X58-4020-01 A202 DDS-2
IC1 F71022
CP1
CP2
CN1
CN2

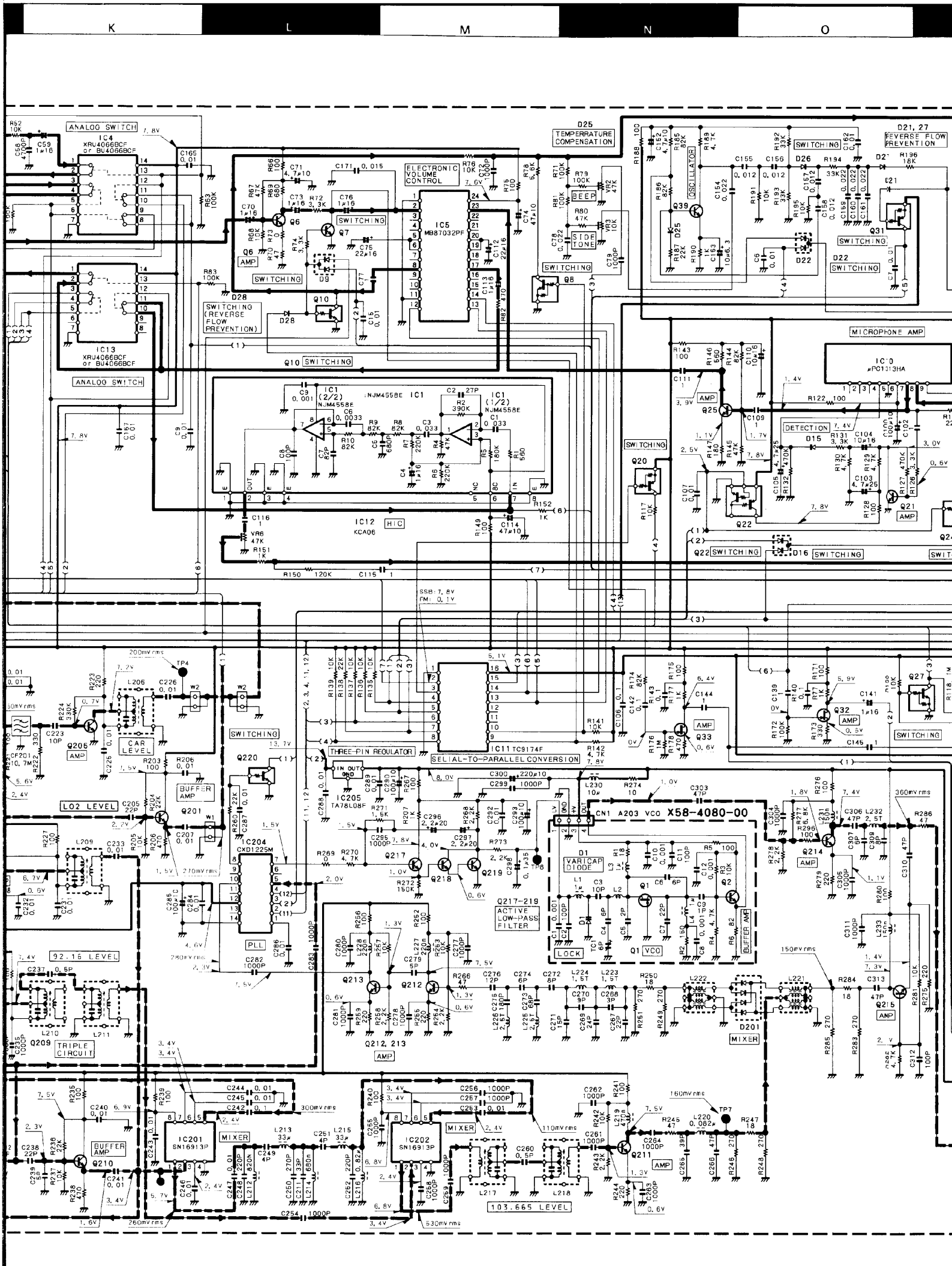
K
L
M
N
O
ANALOG SWITCH
IC4
XRU4066BCF
or BU4066BCF
IC13
XRU4066BCF
or BU4066BCF
ANALOG SWITCH
D25
TEMPERRATURE
COMPENSATION
ELECTRONIC
VOLUME
CONTROL
IC5
MB87032PF
SWITCHING
AMP
SWITCHING
(REVERSE
FLOW
PREVENTION)
BEEP
SIDE
TONE
OSCILLATOR
D21, 27
REVERSE FLOW
PREVENTION
MICROPHONE AMP
IC10
μPC1313HA
DETECTION
IC1
(2/2)
NJM4558E
IC1
(1/2)
NJM4558E
IC12
KCA06
HIC
THREE-PIN REGULATOR
IC11 TC9174F
SERIAL-TO-PARALLEL CONVERSION
IC205
TA78L08F
CAR
LEVEL
BUFFER
AMP
LO2 LEVEL
IC204
CXD1225M
PLL
92.16 LEVEL
TRIPLE
CIRCUIT
CN1 A203 VCO X58-4080-00
VARICAP
DIODE
LOCK
VCO
BUFFER AMP
Q217-219
ACTIVE
LOW-PASS
FILTER
Q212, 213
MIXER
D201
IC201
SN16913P
IC202
SN16913P
103.665 LEVEL
BUFFER
AMP
Q210
Q211
Q215
Q214
Q206
Q201
Q220
Q209
Q33
Q32
Q31
Q22
Q25
Q20
Q21
Q10
Q8
Q6
Q7
Q39
D22
D16
D15
D28
D9
TP4
TP7
TP8
W1
W2

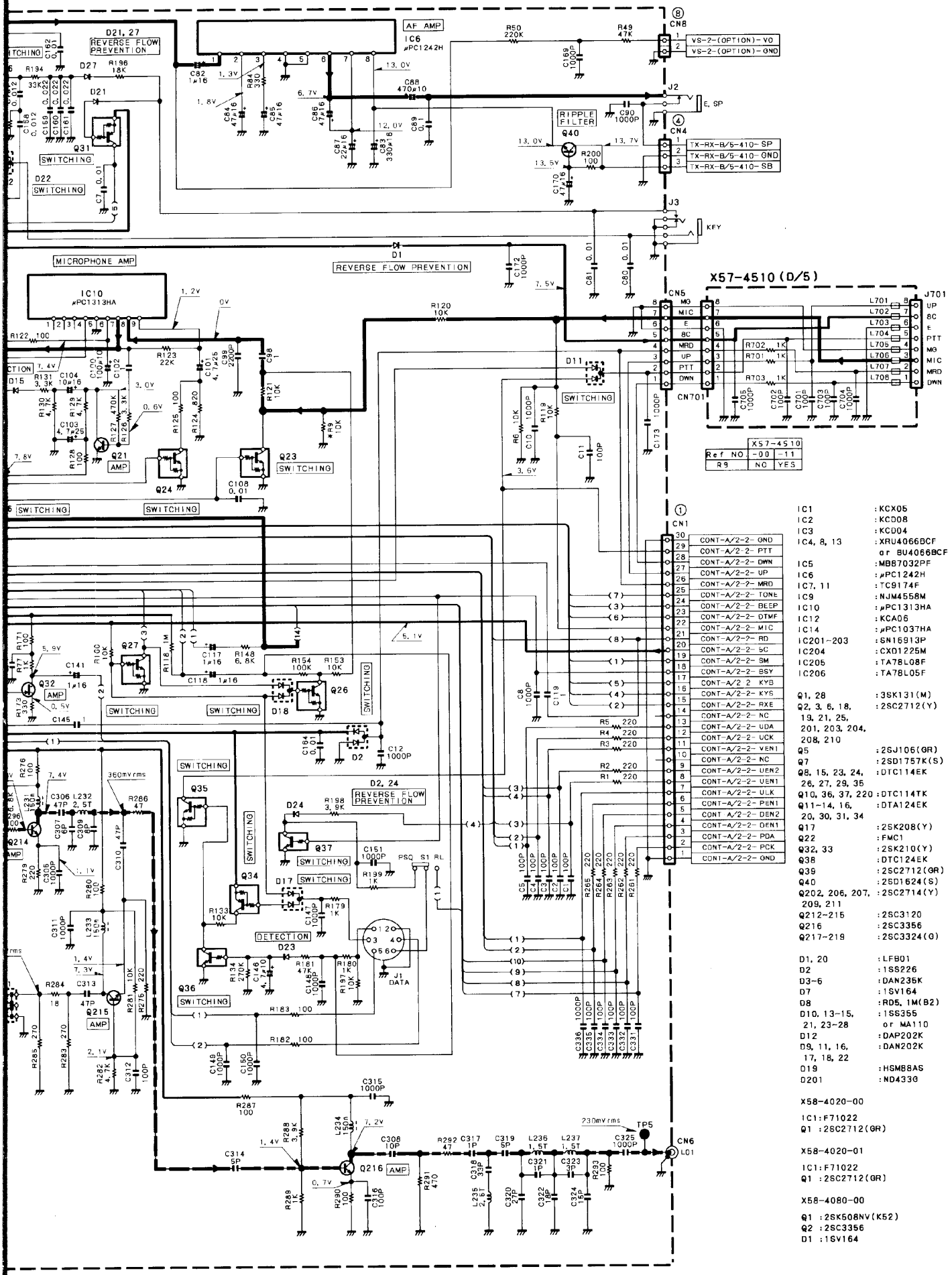

Ref NO.	X57-4510 -00	-11
R9	NO	YES

IC1	:KCX05
IC2	:KCD08
IC3	:KCD04
IC4, 8, 13	:XRU4066BCF or BU4066BCF
IC5	:MB87032PF
IC6	:μPC1242H
IC7, 11	:TC9174F
IC9	:NJM4558M
IC10	:μPC1313HA
IC12	:KCA06
IC14	:μPC1037HA
IC201~203	:SN16913P
IC204	:CXD1225M
IC205	:TA78L08F
IC206	:TA78L05F
Q1, 28	:3SK131(M)
Q2, 3, 6, 18, 19, 21, 25, 201, 203, 204, 208, 210	:2SC2712(Y)
Q5	:2SJ106(GR)
Q7	:2SD1757K(S)
Q8, 15, 23, 24, 26, 27, 29, 35	:DTC114EK
Q10, 36, 37, 220	:DTC114TK
Q11~14, 16, 20, 30, 31, 34	:DTA124EK
Q17	:2SK208(Y)
Q22	:FMC1
Q32, 33	:2SK210(Y)
Q38	:DTC124EK
Q39	:2SC2712(GR)
Q40	:2SD1624(S)
Q202, 206, 207, 209, 211	:2SC2714(Y)
Q212~215	:2SC3120
Q216	:2SC3356
Q217~219	:2SC3324(G)
D1, 20	:LFB01
D2	:1SS226
D3~6	:DAN235K
D7	:1SV164
D8	:RD5.1M(B2)
D10, 13~15, 21, 23~28	:1SS355 or MA110
D12	:DAP202K
D9, 11, 16, 17, 18, 22	:DAN202K
D19	:HSMB8AS
D201	:ND433G

X58-4020-00

IC1:F71022
Q1 :2SC2712(GR)

X58-4020-01

IC1:F71022
Q1 :2SC2712(GR)

X58-4080-00

Q1 :2SK508NV(K52)
Q2 :2SC3356
D1 :1SV164

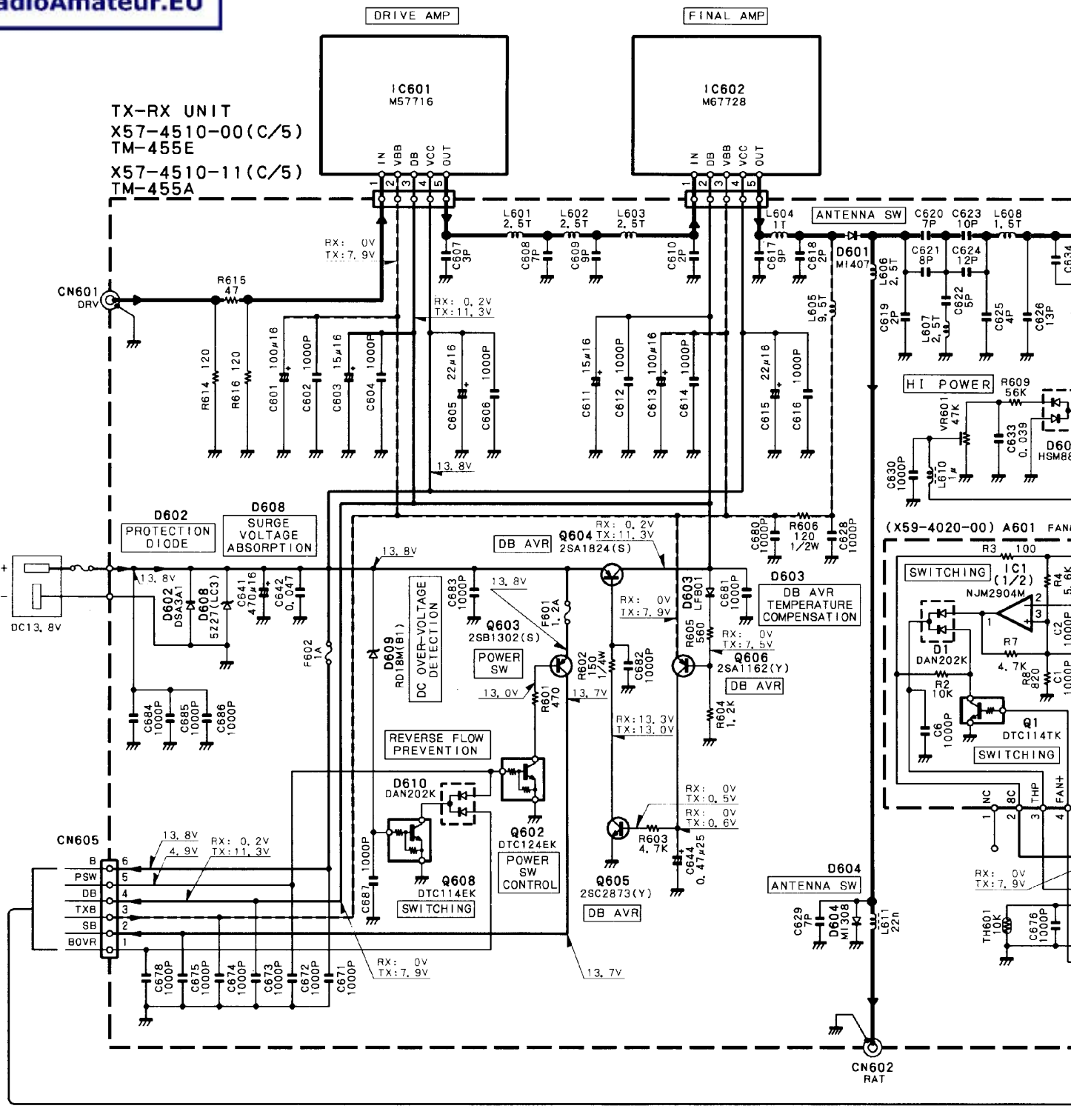

X57-4510(C/5)

IC601	:M57716	D601	:MI407
IC602	:M67728	D602	:DSA3A1
		D603, 607	:LFB01
Q602	:DTC124EK	D604	:MI308
Q603	:2SB1302(S)	D605, 606	:HSM88AS
Q604	:2SA1824(S)	D608	:5Z27(LC3)
Q605	:2SC2873(Y)	D609	:RD18M(B1)
Q606	:2SA1162(Y)	D610	:DAN202K
Q607	:2SC2712(Y)		
Q608	:DTC114EK		

X59-4020-00 A601

IC1	:NJM2904M
Q1	:DTC114TK
Q2, 3	:DTC114EK
D1	:DAN202K

X57-4510(B/5)

IC401	:NJM2902M	Q414
IC402	:TA7808F	Q415
		Q416
Q401, 406	:3SK184(S)	Q417
Q402	:2SK1577(2, 3)	Q418, 428
Q403, 424~427	:DTC114EK	Q419
Q405	:2SC2714(Y)	Q420, 421
Q408-411	:3SK131(M)	Q422, 423
Q412	:2SC2759(U23)	Q429
Q413	:2SC3357	

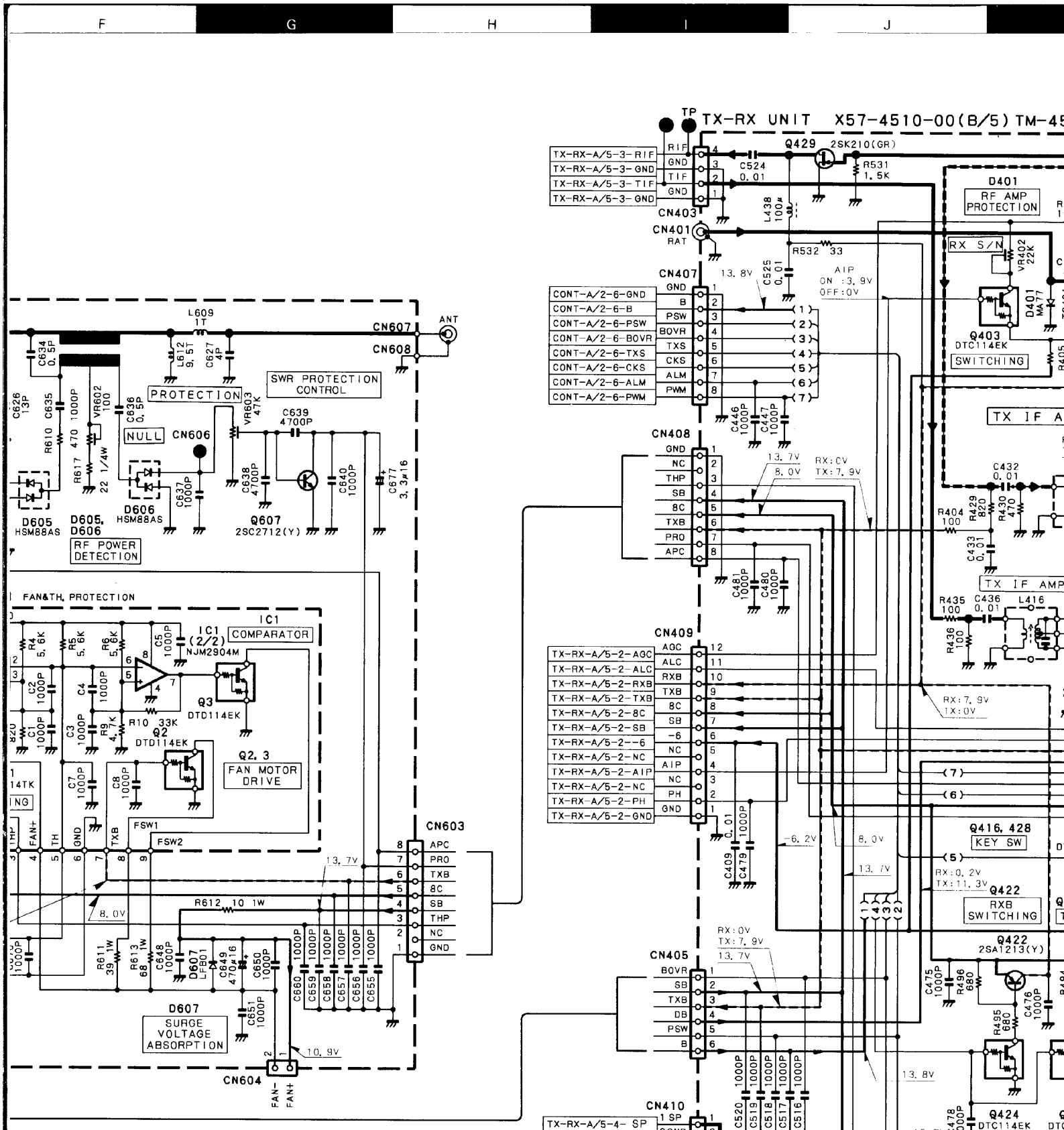
F
G
H
I
J
TX-RX UNIT X57-4510-00(B/5) TM-45
TP
CN403
CN401
CN407
CN408
CN409
CN405
CN410
CN411
CN603
CN604
CN606
CN607
CN608
ANT
Q429
2SK210(GR)
D401
RF AMP PROTECTION
RX S/N
Q403
DTC114EK
SWITCHING
TX IF A
TX IF AMP
Q416, 428
KEY SW
Q422
RXB SWITCHING
Q424
DTC114EK
Q424~426
D417
DAN202K
SWITCHING
PROTECTION
SWR PROTECTION CONTROL
NULL
RF POWER DETECTION
FAN&TH. PROTECTION
IC1 (2/2)
NJM2904M
COMPARATOR
Q3
DTD114EK
Q2
DTD114EK
Q2, 3
FAN MOTOR DRIVE
D607
SURGE VOLTAGE ABSORPTION
Q607
2SC2712(Y)
D605
HSM88AS
D605, D606
D606
HSM88AS
:2SC2954
:2SC2762
:DTA143EK
:DTA124EK
428 :DTC124EK
:2SA1162(Y)
421 :2SC2712(Y)
423 :2SA1213(Y)
:2SK210(GR)
D401 :MA77
D402, 403 406, 409 :DAN235K
D404 :MA862
D405, 416, 418 :1SS355 or MA110
D408 :ND433G
D411 :HSM88AS
D412 :1SS226
D414 :RD6, 2M(B2)
D417 :DAN202K
D419 :RD3, 9M(B2)

) TM-455E X57-4510-11(B/5) TM-455A

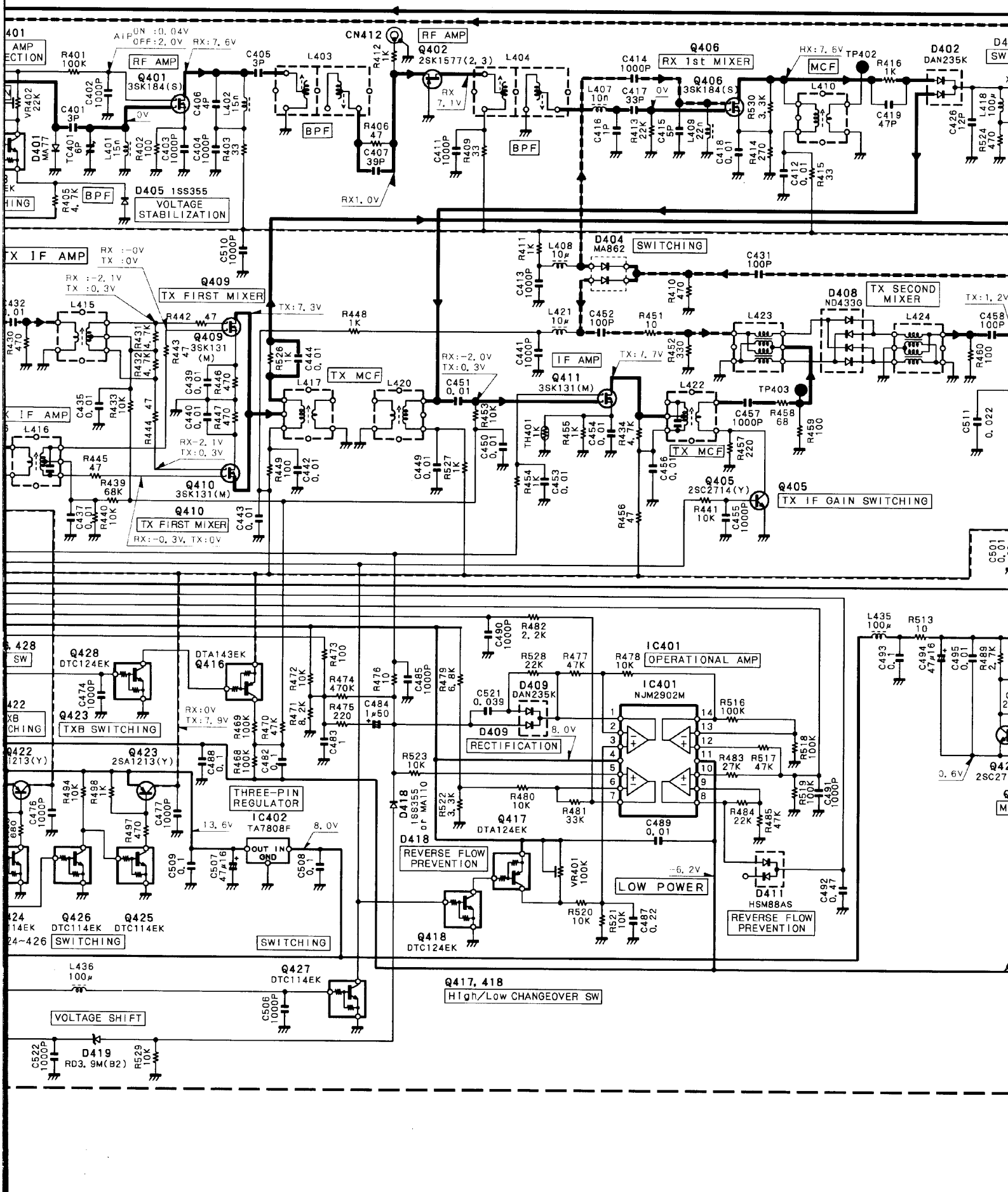

SCHEMATIC DIAGRAM TM-455A/E

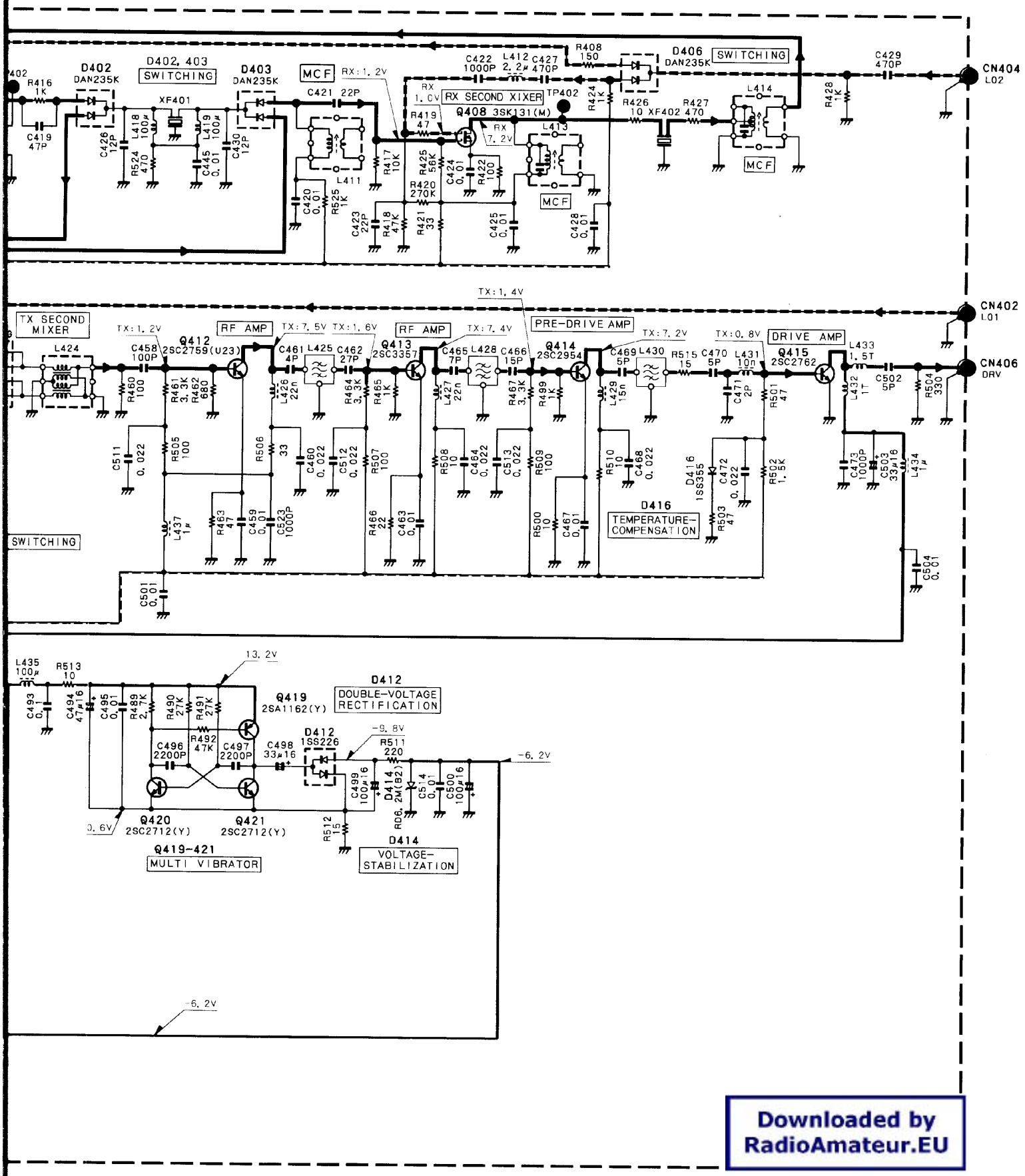

TERMINAL FUNCTION

TX-RX unit (X57-4510-00, -11) (A/5 IF)

Connector No.	Pin No.	Pin name	Function
CN1	1	GND	GND
	2	PCK	PLL clock
	3	PDA	PLL data
	4	DEN1	DDS1 enable
	5	DEN2	DDS2 enable
	6	PEN1	PLL enable
	7	ULK	Unlock detection signal. Low: Unlock
	8	UEN1	Shift register enable 1
	9	UEN2	Shift register enable 2
	10	NC	
	11	VEN1	Electronic volume control enable
	12	UCK	Shift register, electronic volume control clock
	13	UDA	Shift register, electronic volume control data
	14	NC	
	15	RXE	RX enable. Low: Receiving; High: Transmitting
	16	KYS	Key jack input. High: When jack is inserted
	17	KYB	Key input. High: KEY DOWN
	18	BSY	Busy signal
	19	SM	S meter voltage
	20	5C	5V
	21	RD	FM detection output (no squelch control)
	22	MIC	MIC signal output
	23	DTMF	DTMF signal input
	24	BEEP	Beep input
	25	TONE	Subtone signal input
	26	MRD	Demodulated signal output
	27	UP	MIC UP key
	28	DWN	MIC DOWN key
	29	PTT	PTT key
	30	GND	GND
CN2	1	AGC	RF AGC voltage
	2	ALC	ALC voltage
	3	RXB	8 V when receiving
	4	TXB	8 V when transmitting
	5	8C	8V
	6	SB	12 V when the power is on
	7	–6	–6V
	8	NC	
	9	AIP	High when AIP is on
	10	NC	
	11	PH	Transmission output control. High: High power
	12	GND	GND

TERMINAL FUNCTION

Connector No.	Pin No.	Pin name	Function
CN3	1	GND	GND
	2	TIF	Transmission IF output 10.695MHz
	3	GND	GND
	4	RIF	Receive IF input 10.695MHz
CN4	1	SP	Speaker output
	2	GND	GND (for speaker)
	3	SB	12 V when the power is on
CN5	1	DWN	MIC DOWN key
	2	PTT	PTT key
	3	UP	MIC UP key
	4	MRD	Demodulated signal output
	5	8C	8V
	6	E	GND
	7	MIC	MIC input
	8	MG	MIC GND
CN6	Coax.	LO1	LO1 output 388.585 to 398.585 MHz
CN7	Coax.	LO2	LO2 output 30.72 MHz
CN8	1	VO	Audio signal input (for VS-2)
	2	GND	GND
J1	1	PKD	Transmission data input
	2	DE	GND for PKD
	3	PKS	DATA terminal SEND key (Low: transmission, microphone mute)
	4	PR9	9600 bps data output (no squelch control)
	5	PR1	1200 bps data output
	6	SQC	Squelch control output/relay output (switched by S1)
	GND		GND
J2		EXT.SP	External speaker pin
J3		KEY	CW key input pin

TX-RX unit (X57-4510-00, -11) (B/5 RF)

Connector No.	Pin No.	Pin name	Function
CN401	Coax.	RAT	Receive signal input
CN402	Coax.	LO1	LO1 input 388.585 to 398.585 MHz
CN403	1	GND	GND
	2	TIF	Transmit IF input 10.695MHz
	3	GND	GND
	4	RIF	Receive IF output 10.695MHz
CN404	Coax.	LO2	LO2 input 30.72MHz
CN405	1	BOVR	Low: DC over-voltage (approx. 19 V or more)
	2	SB	12 V when the power is on
	3	TXB	8 V when transmitting
	4	DB	12 V when transmitting
	5	PSW	High when the power switch is on
	6	B	Always 14 V

TERMINAL FUNCTION

Connector No.	Pin No.	Pin name	Function
CN406	Coax.	DRV	Drive output
CN407	1	GND	GND
	2	B	Always 14 V
	3	PSW	High when the power switch is on
	4	BOVR	Low: DC over-voltage (approx. 19 V or more)
	5	TXS	Transmission/reception control. Low when transmitting
	6	CKS	Keying control. High when transmitting CW
	7	ALM	ALC meter voltage
	8	PWM	RF meter voltage
CN408	1	GND	GND
	2	NC	
	3	THP	High when thermal protection works
	4	SB	High when the power is on
	5	8C	8V
	6	TXB	8 V when transmitting
	7	PRO	SWR protection voltage
	8	APC	Forward wave voltage
CN409	1	GND	GND
	2	PH	Transmission output control. High: High power
	3	NC	
	4	AIP	High when AIP is on
	5	NC	
	6	-6	-6V
	7	SB	12 V when the power is on
	8	8C	8V
	9	TXB	8 V when transmitting
	10	RXB	8 V when receiving
	11	ALC	ALC voltage
	12	AGC	RF AGC voltage
CN410	1	SP	Speaker input
	2	GND	GND (for speaker)
	3	SB	12 V when the power is on
CN411	1	SP	Speaker output
	2	GND	GND (for speaker)
CN412		TP	Helical adjustment (430-MHz external oscillation input)

TERMINAL FUNCTION

TX-RX unit (X57-4510-00, -11) (C/5 FINAL)

Connector No.	Pin No.	Pin name	Function
CN601	Coax.	DRV	Drive input
CN602	Coax.	RAT	Receive signal output
CN603	1	GND	GND
	2	NC	
	3	THP	Thermal protection. High when it operates
	4	SB	12 V when the power is on
	5	8C	8 V
	6	TXB	8 V when transmitting
	7	PRO	SWR protection voltage
	8	APC	Forward wave voltage
CN604	1	FAN+	Power supply for fan
	2	FAN-	
CN605	1	BOVR	Low: DC over-voltage (approx. 19 V or more)
	2	SB	12 V when the power is on
	3	TXB	8 V when transmitting
	4	DB	12 V when transmitting
	5	PSW	High when the power switch is on
	6	B	Always 14 V
CN606		TP	For adjustment (reflected wave voltage)
CN607		ANT	ANT
CN608		GND	GND

TX-RX unit (X57-4510-00, -11) (D/5, E/5)

Connector No.	Pin No.	Pin name	Function
CN701	1	DWN	MIC DOWN key
	2	PTT	PTT key
	3	UP	MIC UP key
	4	MRD	Demodulated signal input
	5	8C	8 V
	6	E	GND
	7	MIC	MIC output
	8	MG	MIC GND
CN702	1	EDP2	Encoder pulse
	2	EDP1	
	3	GND	GND
J701	1	DWN	MIC DOWN key
	2	MRD	Demodulated signal output
	3	MIC	MIC input
	4	MG	MIC GND
	5	PTT	PTT key
	6	E	GND
	7	8C	8 V
	8	UP	MIC UP key

TERMINAL FUNCTION

Control unit (X53-3510-11, 3512-71) (A/2)

Connector No.	Pin No.	Pin name	Function
CN1	1	GND	GND
	2	5C	5 V
	3	STR	VS-2 voice start. High: Start
	4	SBSY	VS-2 busy. High: Voice is output.
	5	SCK	VS-2 voice clock
	6	SD	VS-2 voice data
CN2	1	GND	GND
	2	PTT	PTT switch
	3	DWN	MIC DOWN key
	4	UP	MIC UP key
	5	MRD	Demodulated signal input
	6	TONE	Subtone signal output
	7	BEEP	Beep output
	8	DTMF	DTMF signal output
	9	MIC	MIC signal input
	10	RD	FM detection input (no squelch control)
	11	5C	5 V
	12	SM	S meter voltage
	13	BSY	Busy signal
	14	KYB	Key input. High: Key down
	15	KYS	Key jack input. High: When jack is inserted
	16	RXE	RX enable. Low: Receiving; High: Transmitting
	17	NC	
CN2	18	UDA	Shift register, electronic volume control clock
	19	UCK	Shift register, electronic volume control data
	20	VEN1	Electronic volume control enable
	21	NC	
	22	UEN2	Shift register enable 2
	23	UEN1	Shift register enable 1
	24	ULK	Unlock detection signal. Low: Unlocked
	25	PEN1	PLL enable
	26	DEN2	DDS2 enable
	27	DEN1	DDS1 enable
	28	PDA	PLL data
	29	PCK	PLL clock
	30	GND	GND
CN3	1	CK	CTCSS clock
	2	DT	CTCSS data output
	3	ET	CTCSS enable
	4	NC	
	5	SDO	CTCSS tone match signal input
	6	E	GND
	7	5C	5 V
	8	CI	CTCSS demodulated signal output

TERMINAL FUNCTION

Connector No.	Pin No.	Pin name	Function
CN4	1	PSI	Front panel serial data input
	2	PSO	Front panel serial data output
	3	E	GND
	4	B	Always 14 V
CN5	1	LBY	"BUSY" LED
	2	LOA	"ON AIR" LD
	3	KAD	Key matrix voltage
	4	5C	5 V
	5	GND	GND
CN6	1	PWM	RF meter voltage
	2	ALM	ALC meter voltage
	3	CKS	Keying control. High when transmitting CW
	4	TXS	Transmission/reception control. Low when transmitting
	5	BOVR	Low: DC over-voltage (approx. 19 V or more)
	6	PSW	High when the power switch is on
	7	B	Always 14 V
	8	GND	GND
CN7	1	EDP2	Encoder pulse
	2	EDP1	
	3	GND	GND

Control unit (X53-3510-11, 3512-71) (B/2)

Connector No.	Pin No.	Pin name	Function
CN10	1	LBY	"BUSY" LED
	2	LOA	"ON AIR" LED
	3	KAD	Key matrix voltage
	4	5C	5 V
	5	GND	GND

BLOCK DIAGRAM

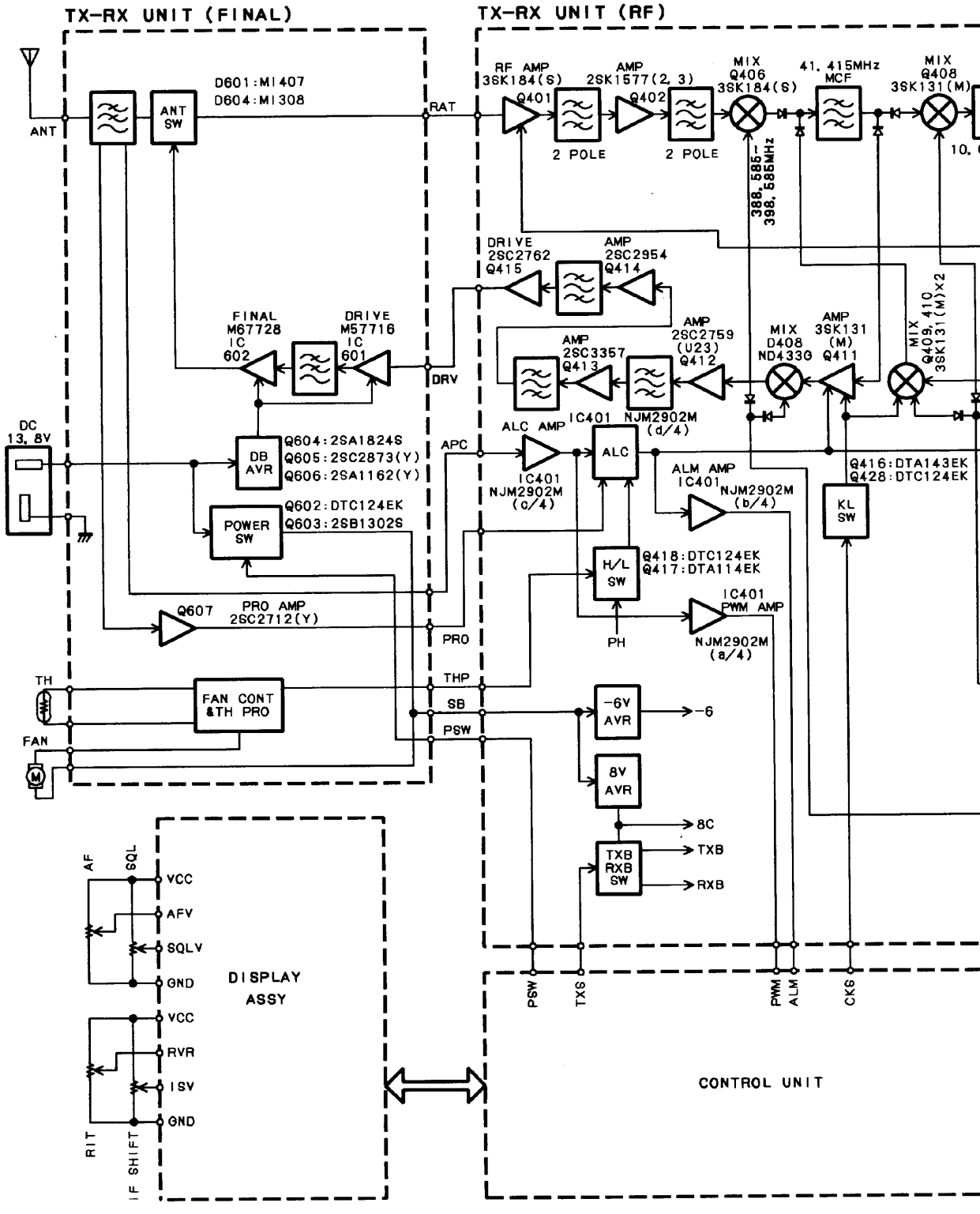

TM-455A/E

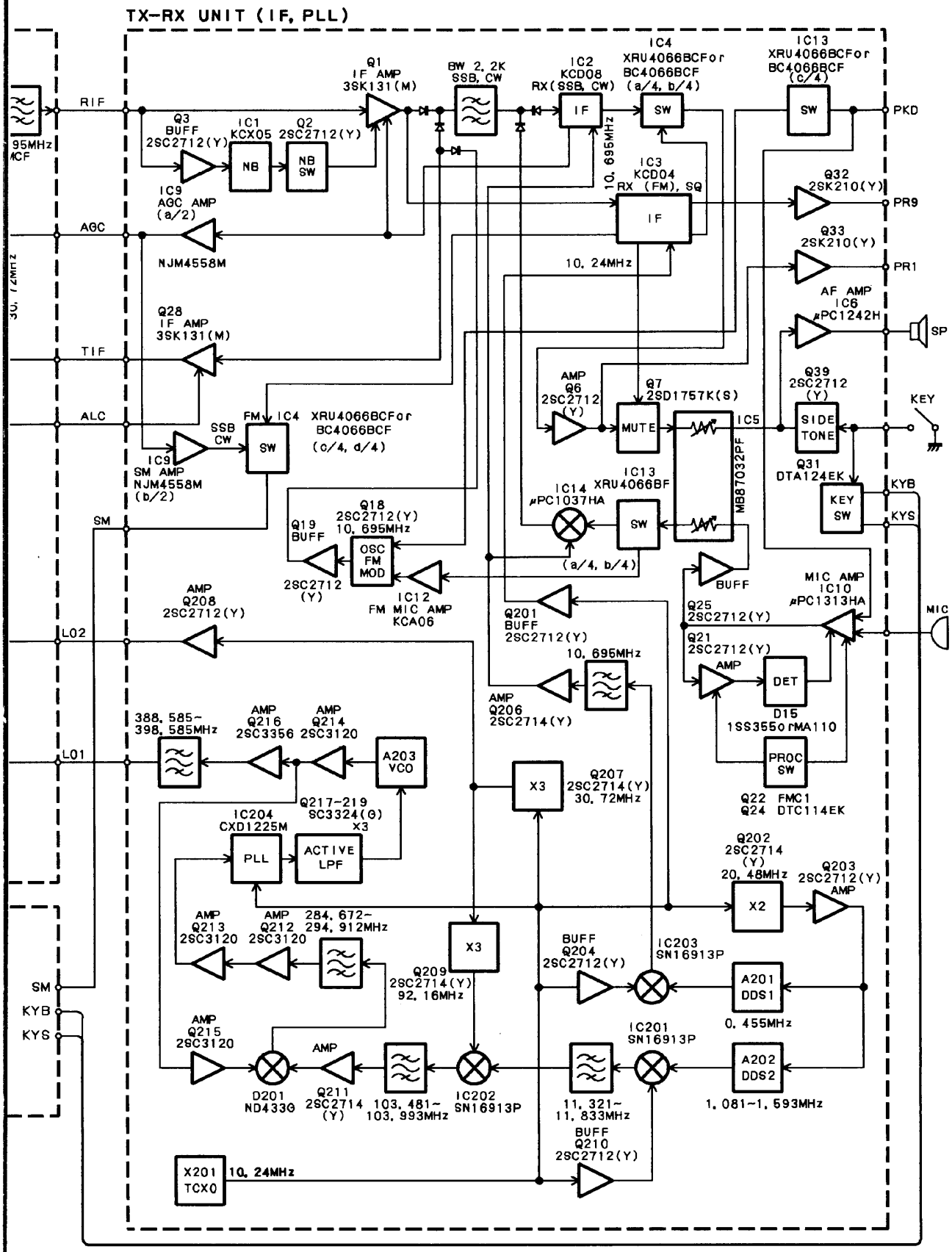
TX-RX UNIT (IF, PLL)
RIF
95MHz
CF
Q1
IF AMP
3SK131(M)
BW 2.2K
SSB, CW
IC2
KCD08
RX(SSB, CW)
IF
IC4
XRU4066BCFor
BC4066BCF
(a/4, b/4)
SW
IC13
XRU4066BCFor
BC4066BCF
(c/4)
SW
PKD
Q3
BUFF
2SC2712(Y)
IC1
KCX05
NB
Q2
2SC2712(Y)
NB
SW
IC9
AGC AMP
(a/2)
NJM4558M
AGC
10.695MHz
IC3
KCD04
RX (FM), SQ
IF
Q32
2SK210(Y)
PR9
Q33
2SK210(Y)
PR1
10.24MHz
AF AMP
IC6
μPC1242H
SP
30.72MHz
Q28
IF AMP
3SK131(M)
TIF
AMP
Q6
2SC2712
(Y)
Q7
2SD1757K(S)
MUTE
IC5
MB87032PF
Q39
2SC2712
(Y)
SIDE
TONE
KEY
ALC
FM
IC4
XRU4066BCFor
BC4066BCF
(c/4, d/4)
SSB
CW
SW
IC9
SM AMP
NJM4558M
(b/2)
Q31
DTA124EK
KEY
SW
KYB
KYS
IC14
μPC1037HA
IC13
XRU4066BF
SW
(a/4, b/4)
SM
Q18
2SC2712(Y)
10.695MHz
Q19
BUFF
2SC2712
(Y)
OSC
FM
MOD
IC12
FM MIC AMP
KCA06
BUFF
MIC AMP
IC10
μPC1313HA
MIC
AMP
Q208
2SC2712(Y)
Q201
BUFF
2SC2712(Y)
Q25
2SC2712(Y)
Q21
2SC2712(Y)
AMP
DET
D15
1SS355orMA110
L02
10.695MHz
AMP
Q206
2SC2714(Y)
388.585~
398.585MHz
AMP
Q216
2SC3356
AMP
Q214
2SC3120
A203
VCO
L01
X3
Q207
2SC2714(Y)
30.72MHz
PROC
SW
Q22 FMC1
Q24 DTC114EK
Q217~219
SC3324(G)
X3
IC204
CXD1225M
PLL
ACTIVE
LPF
Q202
2SC2714
(Y)
20.48MHz
X2
Q203
2SC2712(Y)
AMP
AMP
Q213
2SC3120
AMP
Q212
2SC3120
284.672~
294.912MHz
X3
BUFF
Q204
2SC2712(Y)
IC203
SN16913P
A201
DDS1
0.455MHz
SM
KYB
KYS
Q209
2SC2714(Y)
92.16MHz
AMP
Q215
2SC3120
AMP
IC201
SN16913P
A202
DDS2
1.081~1.593MHz
D201
ND4330
Q211
2SC2714
(Y)
103.481~
103.993MHz
IC202
SN16913P
11.321~
11.833MHz
BUFF
Q210
2SC2712(Y)
X201
TCXO
10.24MHz

WIRING DIAGRAM

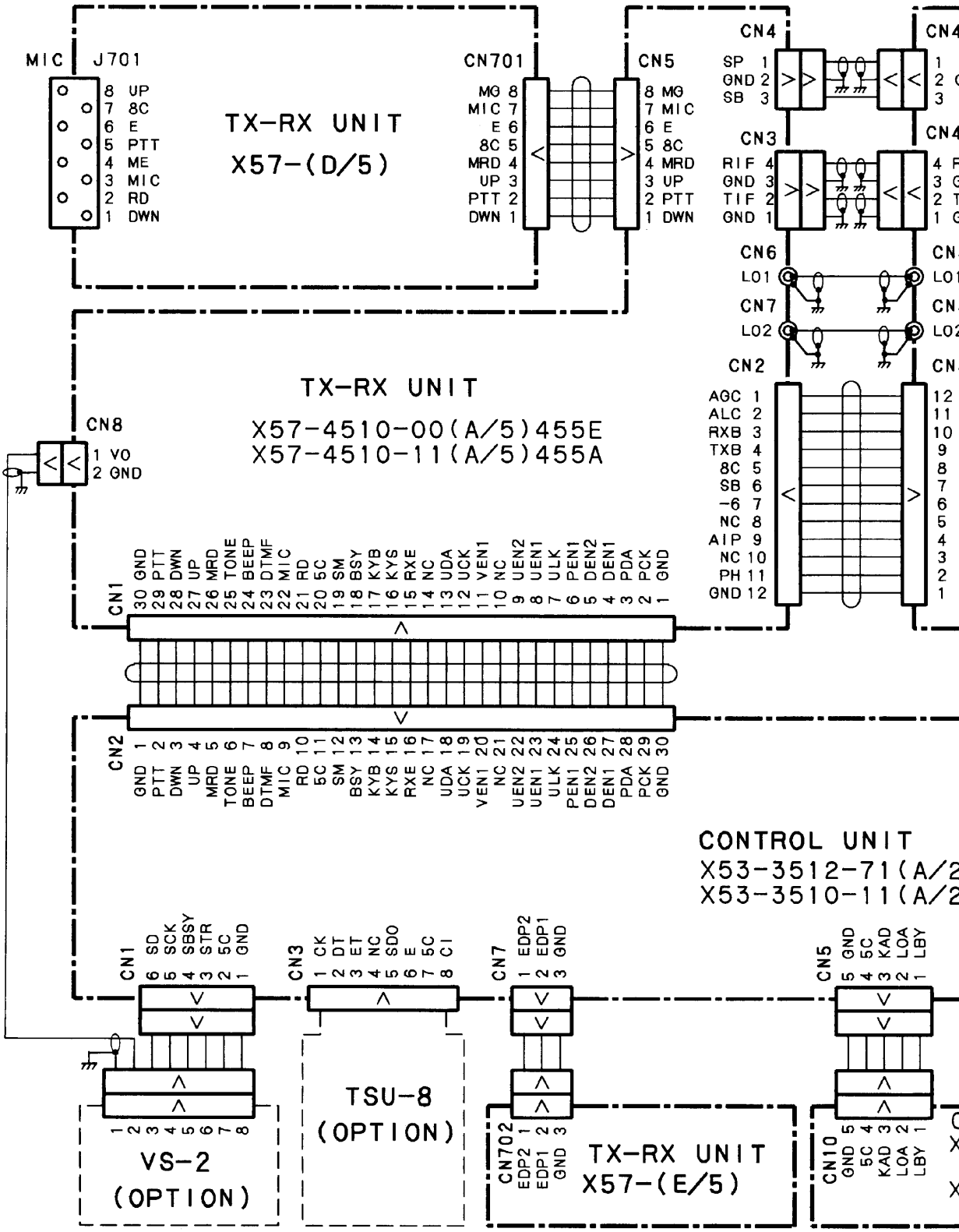

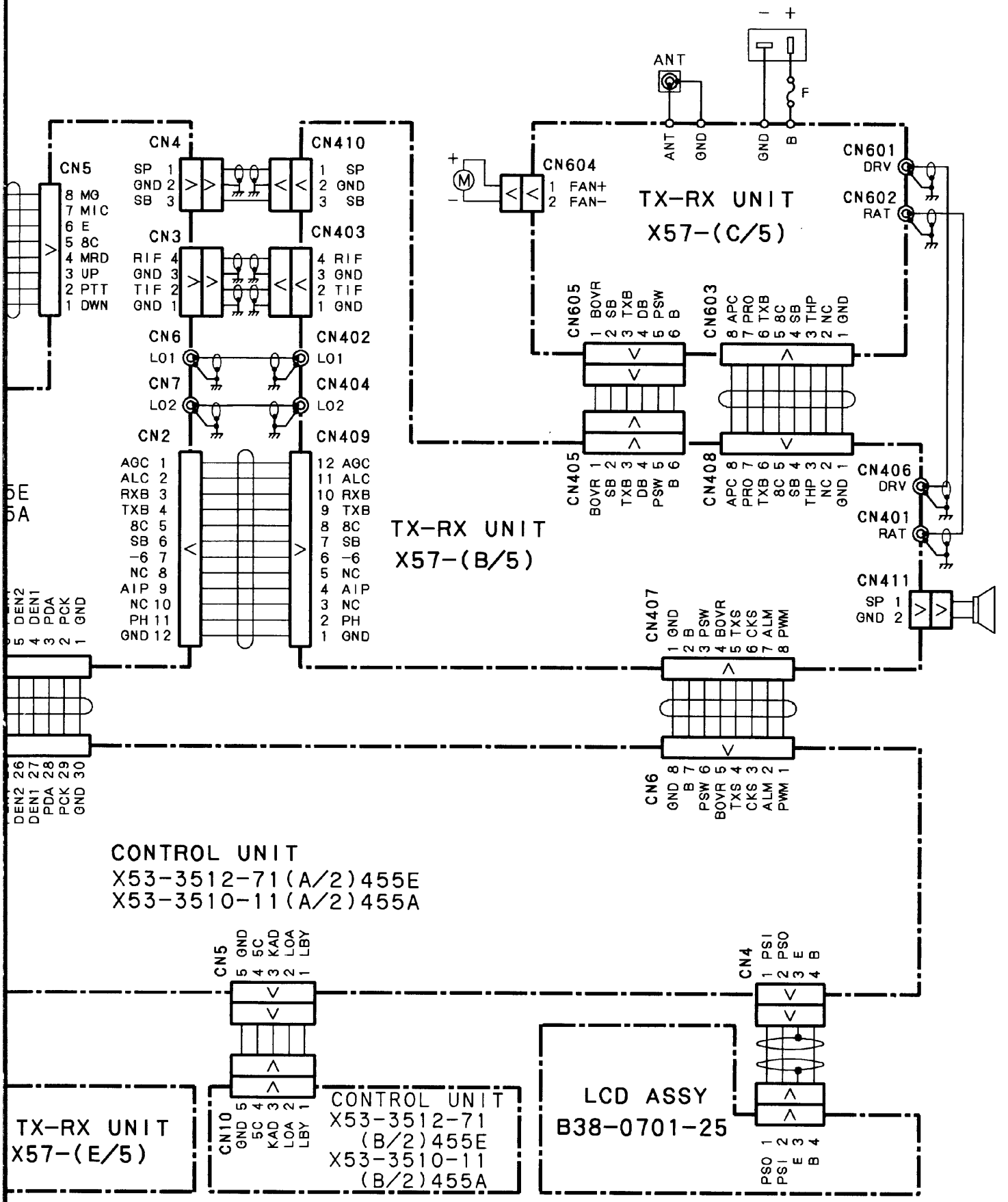
ANT
GND
GND
B
F
CN601
DRV
CN602
RAT
CN604
1 FAN+
2 FAN−
TX-RX UNIT
X57-(C/5)
CN605
1 BOVR
2 SB
3 TXB
4 DB
5 PSW
6 B
CN603
8 APC
7 PRO
6 TXB
5 8C
4 SB
3 THP
2 NC
1 GND
CN405
BOVR 1
SB 2
TXB 3
DB 4
PSW 5
B 6
CN408
APC 8
PRO 7
TXB 6
8C 5
SB 4
THP 3
NC 2
GND 1
CN406
DRV
CN401
RAT
CN411
SP 1
GND 2
CN5
8 MG
7 MIC
6 E
5 8C
4 MRD
3 UP
2 PTT
1 DWN
CN4
SP 1
GND 2
SB 3
CN410
1 SP
2 GND
3 SB
CN3
RIF 4
GND 3
TIF 2
GND 1
CN403
4 RIF
3 GND
2 TIF
1 GND
CN6
LO1
CN402
LO1
CN7
LO2
CN404
LO2
CN2
AGC 1
ALC 2
RXB 3
TXB 4
8C 5
SB 6
−6 7
NC 8
AIP 9
NC 10
PH 11
GND 12
CN409
12 AGC
11 ALC
10 RXB
9 TXB
8 8C
7 SB
6 −6
5 NC
4 AIP
3 NC
2 PH
1 GND
TX-RX UNIT
X57-(B/5)
CN407
1 GND
2 B
3 PSW
4 BOVR
5 TXS
6 CKS
7 ALM
8 PWM
CN6
GND 8
B 7
PSW 6
BOVR 5
TXS 4
CKS 3
ALM 2
PWM 1
CONTROL UNIT
X53-3512-71(A/2)455E
X53-3510-11(A/2)455A
CN5
5 GND
4 5C
3 KAD
2 LOA
1 LBY
CN4
1 PSI
2 PSO
3 E
4 B
TX-RX UNIT
X57-(E/5)
CN10
GND 5
5C 4
KAD 3
LOA 2
LBY 1
CONTROL UNIT
X53-3512-71
(B/2)455E
X53-3510-11
(B/2)455A
LCD ASSY
B38-0701-25
PSO 1
PSI 2
E 3
B 4

LEVEL DIAGRAM

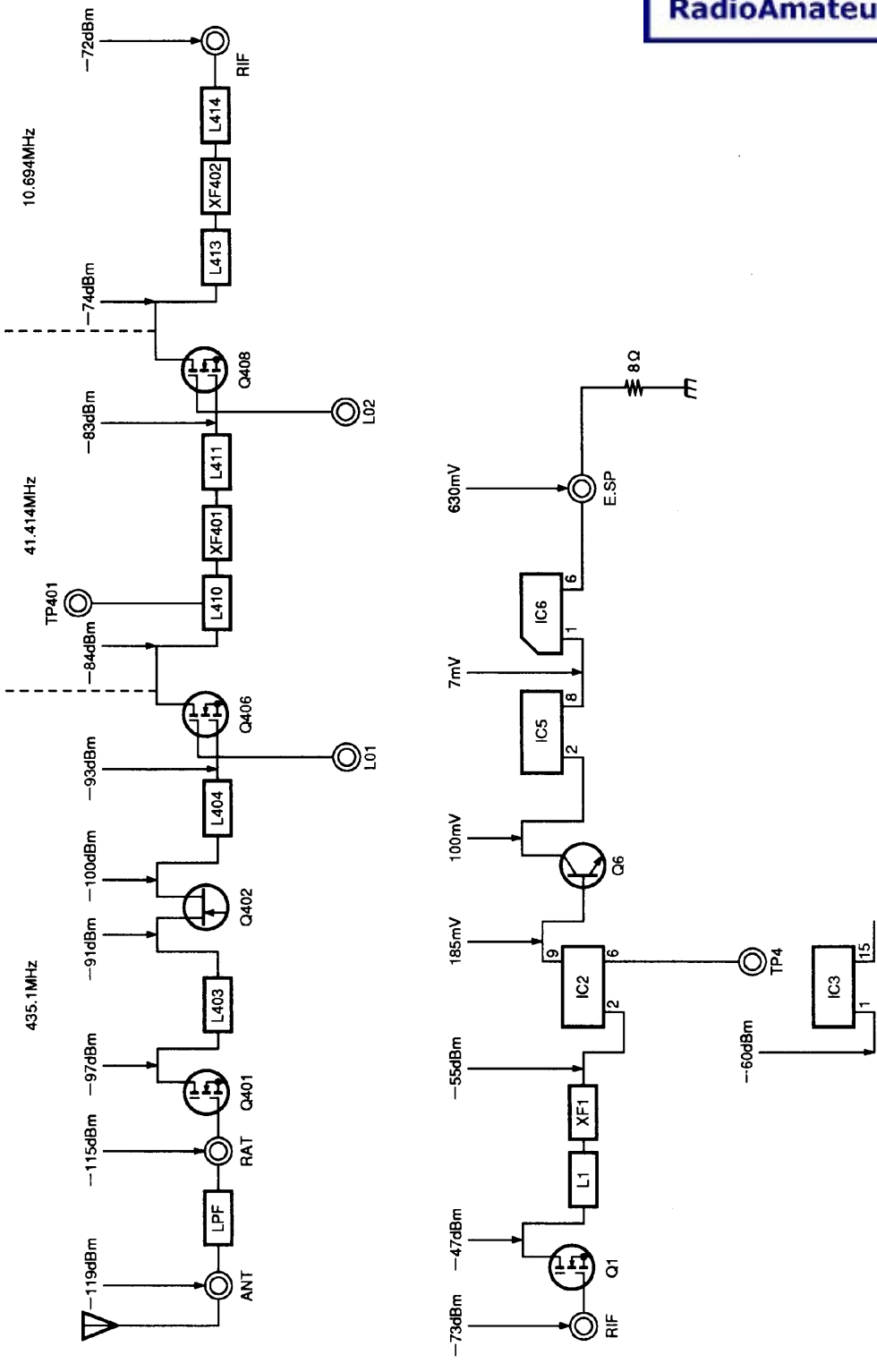

LEVEL DIAGRAM

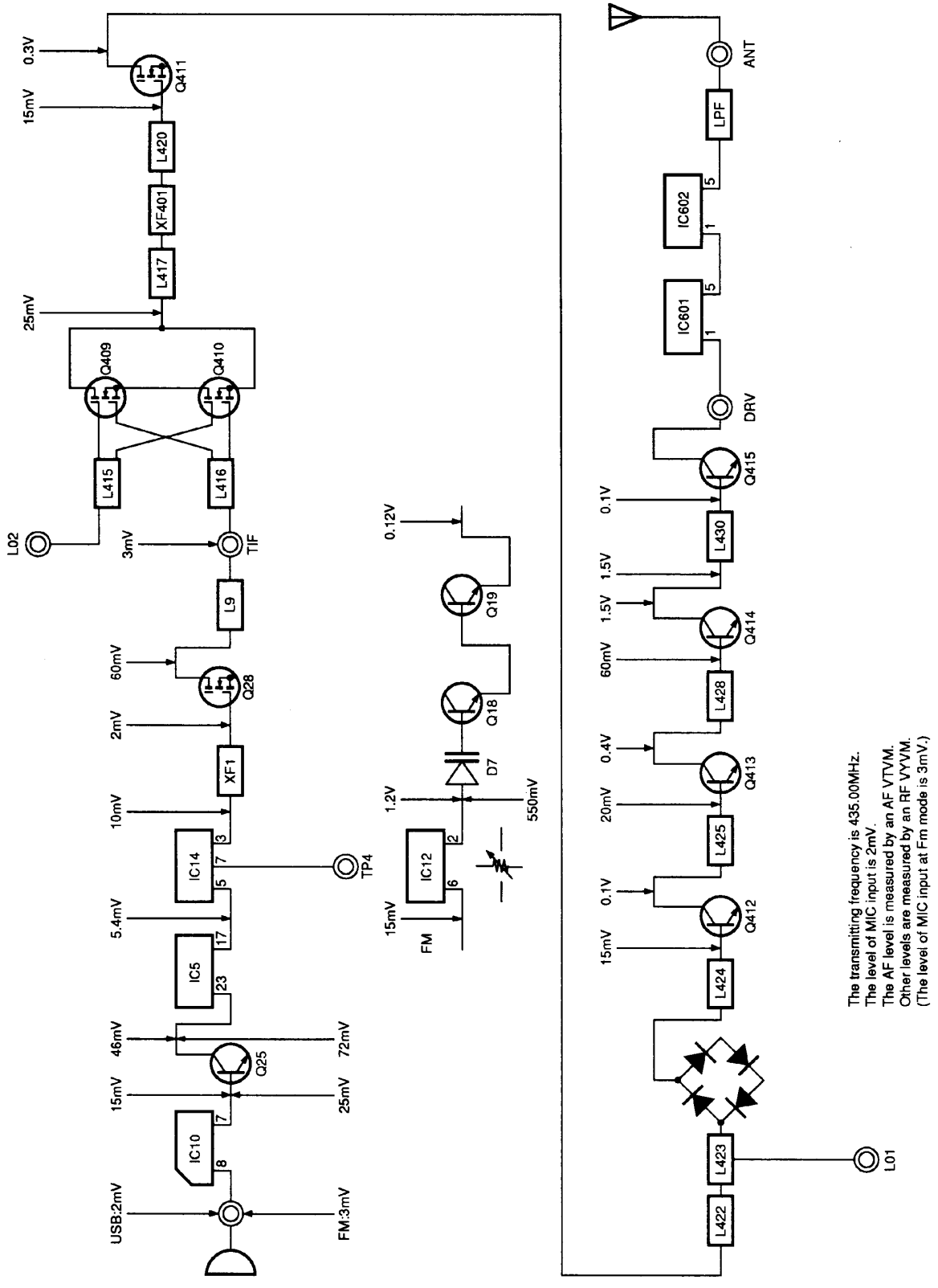

TX Section

DFK-7A (PANEL SEPARATE KIT)
PG-5A (DATA CABLE)

DFK-7A External View

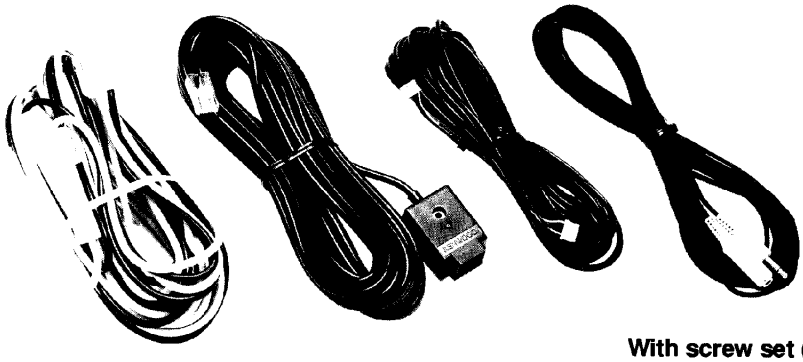

With screw set (N99-0378-05)
With bracket (J29-0475-05)

SPECIFICATION (* New Parts)

Mic cable (E30-3153-05)

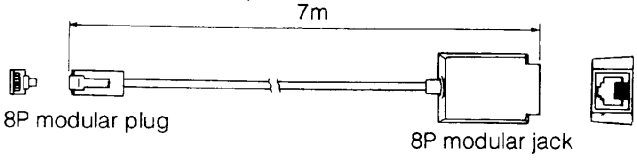

Speaker cable (E30-3200-05)*

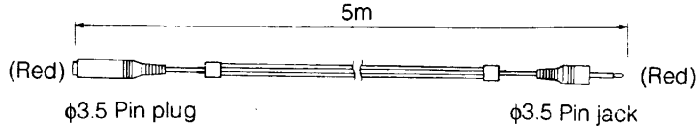

Panel cable (E30-3154-05)

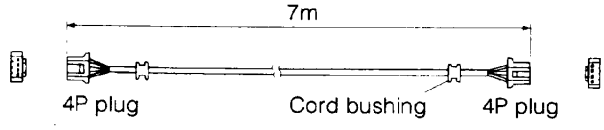

DC cable (E30-3199-05)*

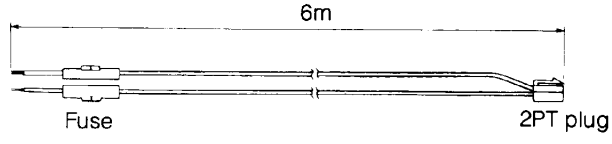

DFK-7A Connection

Usable model: TM-455

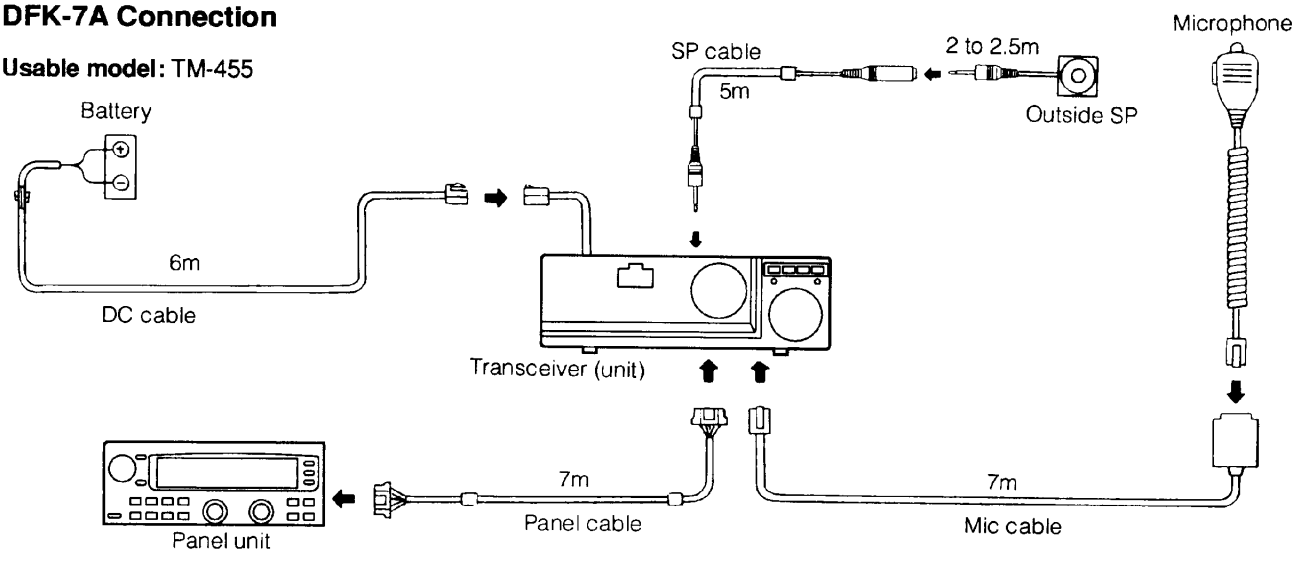

PG-5A External View

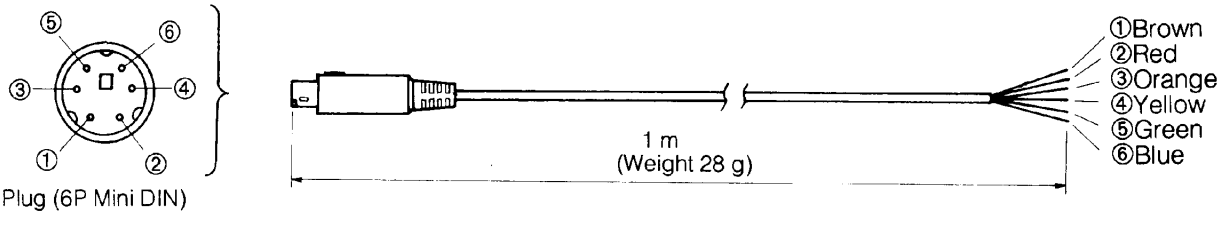

TM-455A/E

SPECIFICATIONS

General

		TM-455A/455E
Frequency range		430 MHz ~ 440 MHz
Mode		A3J (LSB/USB), A1 (CW), F3
Number of memory channels		100
Antenna impedance		50 Ω
Usable temperature range		−20°C ~ +60°C
Power supply		DC 13.8 V ±15%
Grounding method		Negative ground
Current	Transmit (max.)	15.0 A or less
	Receive (no signal)	0.9 A or less
Frequency stability	−10°C ~ +50°C	Within ±1 x 10^{6}
	−20°C ~ +60°C	Within ±2 x 10^{6}
	−20°C ~ +60°C (FM transmit)	Within ±5 x 10^{6}
Frequency accuracy (+15°C to +25°C)		Within ±1 x 10^{6} Within ±2 x 10^{6} (FM transmit)
Dimensions (W x H x D) (projections included)		180 mm x 60 mm x 215.5 mm (180 mm x 68.5 mm x 250 mm)
Weight		Approx. 2.8 kg

Transmitter

		TM-455A/455E
Power output	High	Approx. 35 W
	Low	Approx. 5 W
Modulation	SSB	Balanced
	FM	Reactance
Spurious emissions		−60 or less
Carrier suppression		40 dB or more
Unwanted sideband suppression		40 dB or more
Maximum frequency deviation (FM)		±5 kHz or less
Transmit frequency characteristics (SSB)		400 Hz to 2600 Hz (Within −6 dB)
Audio distortion (at 60 % modulation)		7% or less
Microphone impedance		600 Ω

Receiver

		TM-455A/455E
Circuitry	SSB/CW	Double conversion
	FM	Triple conversion
Intermediate frequency	1st	41.415 MHz
	2nd	10.695 MHz
	3rd	455 kHz (FM only)
Sensitivity	SSB, CW (10 db (S+N) / N)	−126dBm (0.11μV) or less
	FM	−122dBm (0.18μV) or less
Selectivity (−6 dB)	SSB, CW	2.1 kHz or more
	FM	12 kHz or more
Selectivity (−60 dB)	SSB, CW	4.8 kHz or less
	FM	28 kHz or less
Squelch sensitivity	SSB, CW	−125dBm (0.13μV) or less
	FM	−128dBm (0.09μV) or less
Audio output (8 ohms, 5% distortion)		2 W
Audio output impedance		8 Ω
Image rejection		70 dB or more
1st IF rejection		70 dB or more
RIT shift frequency range	10 Hz steps	±1.1 kHz
	20 Hz steps	±2.2 kHz

KENWOOD CORPORATION
Alive Mitake, 2-5, Shibuya 1-chome, Shibuya-ku, Tokyo 150, Japan
KENWOOD SERVICE CORPORATION
P.O. BOX 22745, 2201 East Dominguez Street, Long Beach, CA 90801-5745, U.S.A.
KENWOOD ELECTRONICS DEUTSCHLAND GMBH
Rembrücker Str. 15, 6056 Heusenstamm, Germany
KENWOOD ELECTRONICS BENELUX N.V.
Mechelsesteenweg 418 B-1930 Zaventem, Belgium
TRIO-KENWOOD FRANCE S.A.
13, Boulevard Ney, 75018 Paris, France
TRIO-KENWOOD U.K. LIMITED
KENWOOD House, Dwight Road, Watford, Herts., WD1 8EB United Kingdom
KENWOOD ELECTRONICS NEDERLAND B.V.
Amsterdamseweg 35, 1422 AC Uithoorn, The Netherlands
KENWOOD ELECTRONICS ITALIA S.p.A.
Via G. Sirtori, 7/9 20129 Milano, Italy
KENWOOD ESPAÑA S.A.
Bolivia, 239-08020 Barcelona, Spain
KENWOOD ELECTRONICS AUSTRALIA PTY. LTD.
(A.C.N. 001 499 074)
P.O. Box 504, 8 Figtree Drive, Australia Centre, Homebush, N.S.W. 2140, Australia
KENWOOD & LEE ELECTRONICS, LTD.
Unit 3712-3724, Level 37, Tower one Metroplaza, 223 Hing Fong Road, Kwai Fong, N.T., Hong Kong
KENWOOD ELECTRONICS CANADA INC.
6070 Kestrel Road, Mississauga, Ontario, Canada L5T 1S8