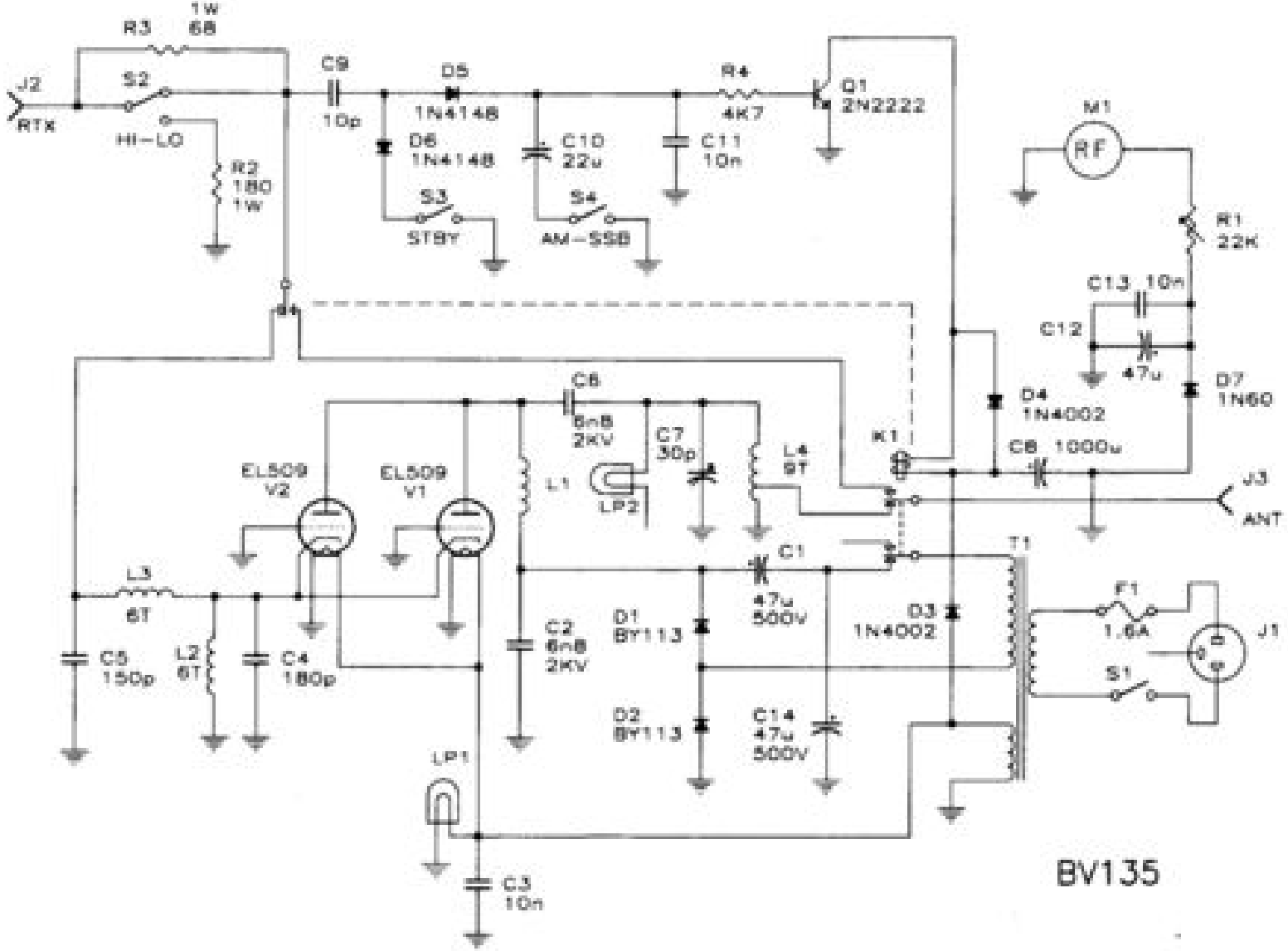

HI - MAX. POWER OUT - (TRANS. 4 W MAX.)

LO - MIN. POWER OUT - (TRANS. 10 W MAX.)

ZG_BV135_N1

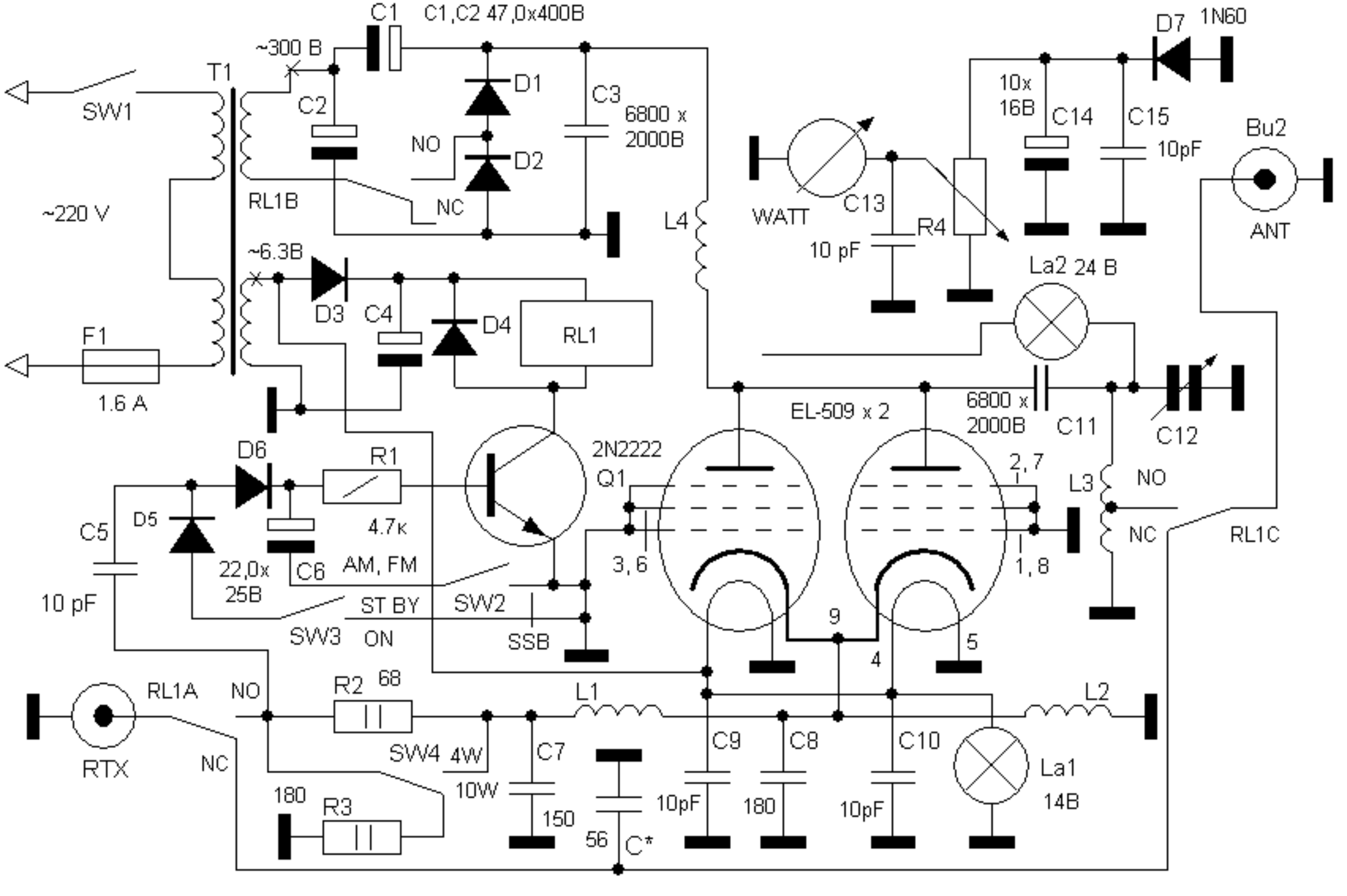
C1
C1,C2 47,0x400B
~300 B
T1
SW1
C2
D1
D2
NO
NC
C3
6800 x
2000B
RL1B
~220 V
~6.3B
D3
C4
D4
RL1
F1
1.6 A
L4
WATT
C13
10 pF
R4
10x
16B
C14
C15
10pF
D7
1N60
Bu2
ANT
La2 24 B
6800 x
2000B
C11
C12
EL-509 x 2
2N2222
Q1
D6
R1
4.7к
D5
C5
10 pF
22,0x
25B
C6
AM, FM
ST BY
SW2
SW3
ON
SSB
2, 7
3, 6
1, 8
9
4
5
L3
NO
NC
RL1C
RL1A
NO
R2
68
SW4
4W
10W
L1
L2
C7
150
56
C*
C9
10pF
C8
180
C10
10pF
La1
14B
RTX
NC
180
R3