BARLOW WADLEY

XCR 30 MARK II RECEIVER

SERVICE MANUAL

BARLOWS TELEVISION COMPANY.
29 SHEPSTONE ROAD – P.O. BOX 23
NEW GERMANY – NATAL
REPUBLIC OF SOUTH AFRICA

BARLOW WADLEY COMMUNICATION RECEIVER

XCR 30 Mk II

SPECIFICATIONS

RF SECTION

Frequency Range	500 KHz to 31 MHz

HF SECTION:

Overall Sensitivity:	Better than 1 μV for 50 mW [– 19 dB (pW)]
Overall Selectivity:	6 KHz on AM 3 KHz on SSB and CW
Overall Image Rejection:	50 dB on all movable images ≥ 60 dB on immovable images
IF Rejection:	455 KHz, 42,5 MHz } 50 dB 45 MHz > 60 dB
IF Selectivity:	For 42,5 MHz — 300 KHz For 45 MHz — 1,3 MHz } 10 dB For 455 KHz — 7,5 KHz
Clarify Range:	± 1,5 KHz

POWER AND LF SECTION:

Max. O/P Power:	400 mW
Speaker Impedance:	8 ohms
Frequency Response:	150 Hz to 3 KHz (3 dB points)
D.C. Power Consumption:	20 mA @ no signal 200 mA peak
Ext. Power Supply:	6 to 12 volts D.C.; Positive Earth; Reverse Polarity Protection

SIGNAL SENSITIVITY – SERVICE GUIDE

Typical Input signal levels required for 50 mW Audio Output

INPUT LEVEL	FREQUENCY	TEST POINT
12,5 mV	1 KHz	Junction of R5 – R50
1,4 mV	455 KHz	TR 12 Base
130 μV	455 KHz	TR 11 Base
25 μV	455 KHz	TR 10 Base
5 μV	455 KHz	TP 3
12 μV	2,5 MHz	TP 3
2 μV	2,5 MHz	TR 8 Base
1 μV	15,5 MHz	TR 5 Collector
<1 μV	15,5 MHz	TR 5 Base

Input signal level to 42,5 MHz and 45 MHz Amplifiers with a D.C. mV meter connected to TP 2 via 4 K7 and C20 shorted out.

INPUT	LEVEL	FREQUENCY	OUTPUT
TP 1 via 1 K	3 mV	42,5 MHz	50 mV
TP 4 via 1 K	120 mV	45 MHz	25 mV

GENERAL CIRCUIT DESCRIPTION

The R.F. signal is fed via C9 to the base of the R.F. amplifier TR5. (Either one of two micro-switches selects the required base circuit tuning coil by means of a cam on the shaft of the antenna trim control). The output from TR5 is fed via a low pass filter to the second balanced mixer (D6, D7) together with an output from the variable oscillator TR6 fed via C29. The output of the second balanced mixer, tuned to 45MHz, is fed to the 45MHz amplifier TR7.

A crystal controlled 1MHz harmonic generator feeds harmonics at 1MHz intervals to the input of the first balanced mixer (D2, D3) together with a second output tapped off TR6 via C35. The output of the first balanced mixer, tuned to 42,5MHz, is fed to the 42,5MHz amplifier chain comprising TR2, TR3 and TR4.

The 42,5MHz signal from TR4 and the 45MHz signal from TR7 are fed to the input of the third balanced mixer (D4, D5). The output of the third balanced mixer is fed to TR8 which is tunable over the frequency range 2MHz to 3MHz. TR8, TR9, TR10, TR11 and TR12 behave as a conventional superheterodyne, TR8 being the signal amplifier, TR9 the oscillator mixer and TR10, TR11 and TR12 the 455KHz I.F. amplifiers. In the collector circuits of TR10 and TR11 are two ceramic filters the bandwidths of which are widened by C63 and C64 when operating in the A.M. mode.

For S.S.B. reception the B.F.O. TR18 is switched in and its output together with the 455KHz signal fed via T3 is detected by D9 and D10. D8 is the conventional A.M. detector.

The audio input is fed via gain control R5 and C4 to the integrated circuit for A.F. amplification.

ALIGNMENT

Note:

1. The receiver is accurately aligned at the Factory and should not require any adjustment with normal handling. Should the receiver require alignment due to accidental damage or unauthorised attention, refer to all or part of the alignment procedures described hereafter, depending upon which section (s) of the receiver has/have been affected.

2. Test instruments required are:-
   (a) RF signal generator terminated with 37 ohms and 10 nF capacitor.
   (b) 0-300 mV DC Voltmeter 20 000 ohms/V.
   (c) Accurate Crystal oscillators for 42,5 MHz and 45 MHz.
   (d) 2 to 3 MHz Crystal controlled oscillator generating harmonics at 100 KHz intervals.

3. All measurements and applied voltages are with respect to P.C. Board common earth.

4. Refer to Circuit Diagram for all D.C. Voltage checks.
   Figures quoted are average and may vary slightly due to component tolerances.

DISMANTLE THE SET AS FOLLOWS:

1. Pull off 4 control knobs.

2. Unscrew back-securing screws, open back 6 mm (¼") only and lift upwards to remove. Disconnect battery lead clips from battery holder.

3. Remove 9 securing screws shown in Fig. 4.

4. Remove die cast front panel. Both sides of the P.C. Board will now be fully accessible. It is not advisable and should not be necessary to remove the board from the cabinet. If it is necessary to do so, remove the three securing nuts and bushes and unsolder the five earth straps. Reverse this procedure to re-assemble.

COMPLETE ALIGNMENT

A.F. SECTION – This section is only applicable to versions not fitted with an integrated circuit.

Output stage quiescent current should be approximately 2 mA at 21°C (70°F) 1 mA at 10°C (50°F) and 4 mA at 32,5°C (90°F). If output transistors are replaced, R21 may have to be reselected to correct quiescent current. **TO MEASURE QUIESCENT CURRENT** disconnect collector of TR15 and measure between collector and P.C. Board common earth.

455 KHz IF.

1. Connect Signal generator to base of interpolation oscillator (TR3) via 10 nF capacitor and tune for maximum deflection on AVC meter. The exact centre frequency is determined by the ceramic filters and may be ± a few KHz off 455 KHz.
   Note: In the absence of an oscilloscope and sweep generator, the bandpass shape can be estimated by sweeping slowly with a normal signal generator whilst noting the output on the AVC meter. Should bandpass be unbalanced, displace generator to drooping side and re-peak to correct this. A slight centre trough is acceptable, as shown in Fig. 3 on the circuit diagram, and is dependent on the selection of the ceramic filters.
2. Adjust slugs in T2 and T3 for maximum output by observing built in AVC meter. To effect fine adjustment the input should be adjusted to give a reading of not more than one division on the AVC meter.
3. Set pre-set potentiometer R28 to give a reading of 4,3V at TP5.
4. Switch mode switch to side band and check that bandpass narrows to approximately half (3 KHz). The sideband bandpass should be smooth and free from troughs.

B.F.O. ADJUSTMENT

1. Establish centre frequency of 455 KHz bandpass on AM position.
2. Displace Signal generator to read centre frequency + 3,5 KHz.
3. Switch to L.S.B. and adjust T4 to give a zero beat in audio.
4. Return Signal generator to centre frequency of AM bandpass again.
5. Switch to U.S.B. and adjust C90 to zero beat.
6. Repeat the foregoing until a separation of approximately 3,5 KHz is established between the zero beats of U.S.B. and L.S.B.
7. To check symmetry, alternate switch between L.S.B. and U.S.B. whilst noting white noise only. The pitch of the noise should remain constant in either position.

2 TO 3 MHz INTERPOLATION ALIGNMENT
(Should be carried out with front panel on)

(a) This section is aligned with clarify control set to central position by tuning slugs at the low frequency end and trimmers at the high frequency end of the KHz dial, 0 KHz being the 3 MHz alignment point, and 1000 KHz being the 2 MHz alignment point. T1 and C44 are the oscillator adjustments, and inductances L10 and L11 together with trimmer C56 and C67 are the R.F. amplifier adjustments.

(b) In order to reduce calibration errors which may occur between alignment points, the following procedure should be adopted:

1. Loosen grub screws holding thumbwheel and calibrated KHz drum on the three-ganged capacitor shaft.
2. Set tuning capacitor fully closed.
3. Set clarify control to centre position.
4. Set KHz drum to read 150 KHz and tighten grub screws.
5. Set thumbwheel for equal overtravel at ends of scale.
6. Re-align as in paragraph (a) above.
7. Check the scale for calibration errors in the intermediate positions and if necessary re-set the KHz drum as in 1, 2, 3 and 5 above as follows:

   If the worst error reads **below** the scale reading, set the KHz drum to read 150 minus twice the error with tuning capacitor fully closed.

If the worst error reads **above** the scale reading, set the KHz drum to read 150 plus twice the error with tuning capacitor fully closed.

(e.g. If calibrated KHz drum reads 510 KHz for 500 KHz, reset KHz drum to read 130 KHz).

8. Reset oscillator alignment and re-peak R.F. stages.

NOTE: The KHz calibration should be checked against a stable crystal controlled generator having harmonics at 100 KHz intervals. The errors in this scale should not be greater than ± 5 KHz.

ALIGNMENT OF 42,5 MHz HARMONIC AMPLIFIER

1. Connect a D.C. 300 mV meter via 4 K7 between TP2 and chassis (R65 - C92 - D5).
2. Connect a 42,5 MHz signal from a crystal controlled oscillator source to the first 42.5 MHz coil (L4 - TP1) via a 1K isolation resistor, and peak L4, L8, L9, L12 and L13 for maximum output as indicated on 300 mV meter. This tuning is accomplished by compressing or expanding the coils with a non-metallic alignment tool. Ensure that output level of oscillator is low enough to detect peak. The bandpass should be approximately 300 KHz.

NOTE: If a reading is observed on the 300 mV meter without excitation from the signal generator, it should be attributed to one of the harmonics from the harmonic generator breaking through after mixing has taken place at the balanced mixer (D2, D3). This breakthrough will take place at every whole megahertz point on the MHz dial when alignment is completed, and can be easily removed by a slight rotation of the megahertz dial. The same breakthrough may be used as a sensitivity check of the 42.5 MHz amplifier, and should produce a reading of approximately 90 mV at the 3rd mixer, provided that the output from the harmonic generator is normal.

ALIGNMENT OF 45 MHz 1ST I.F.

1. Connect the D.C. 300 mV meter to TP2 as for 42,5 MHz alignment.
2. Connect a 45 MHz signal from a crystal controlled source to TP4, and peak L5, L7, L14 and L15, by compressing or expanding coils, taking care not to alter the coupling between pairs, which has been Factory preset. Overcoupling between pairs will result in a noticeable trough in the bandpass shape. (Bandpass approximately 1,3 MHz).
3. Check bandpass response by sweeping with variable generator, and re-peak if necessary until bandpass response conforms as closely as possible to that shown in fig. 2 of the circuit diagram.

ALIGNMENT OF FIRST OSCILLATOR

(Should be carried out with front panel on)

1. Loosen the grub screws holding the thumbwheel and the calibrated MHz drum on the two ganged capacitor shaft.
2. Set tuning capacitor fully open.
3. Set MHz drum to read 0 MHz and tighten grub screws.
4. Reset thumbwheel for equal overtravel at ends of scale.
5. Connect RF signal generator to base of RF stage (TR5) via a blocking capacitor, and use built in AVC meter to tune for maximum deflection.
6. Set KHz drum to read 500 KHz.
7. Use R.F. signal generator at two alignment points (1,5 MHz and 28,5 MHz) and set up oscillator circuit by adjusting L3 at the 1,5 MHz end of the scale, and C32 at the 28,5 MHz end of the scale.

NOTE: Calibration of the intermediate positions of this scale has been corrected at the Factory to be within 1,5 mm (1/16 inch) of the dial scale readings. Further bending of the tuning capacitor plates to correct calibration is not recommended and should difficulty arise due to maladjustment or damage it is advisable to contact the authorised service agents.

HARMONIC GENERATOR

1. Tune receiver to known time signal, e.g. 5 MHz or 10 MHz or alternatively to any other accurate whole MHz frequency source, e.g. 2 MHz, 3 MHz, 4 MHz, etc.
2. Adjust trimmer C6 to produce zero beat in AF amplifier.

ANTENNA CIRCUIT

No alignment is required here as this circuit is tuned manually by the antenna trim control.

ANTENNA TRIM CONTROL ALIGNMENT

1. String drive cord as shown in Fig. 1 with ferrite core free to slide on cord.
2. Turn knob fully clockwise, (cam drum fully anti-clockwise looking from rear of set) set core to protrude approximately 6 mm (¼ inch) from lower end of coil former.
3. Apply a small quantity of suitable quick drying adhesive (e.g. Bostik 1769) to the cord next to the core.
4. Slide core over adhesive and back to original position. Allow adhesive to become "tacky".
5. Slide core over adhesive again and turn control knob anti-clockwise to the switching position of the lower micro-switch (S.2, Fig. 1) and set lower end of core flush with the lower end of coil former.
6. Check upper and lower limits of antenna tuning range (approximately 550 KHz and 31 MHz) using built in meter and if necessary adjust core to correct. Allow adhesive to dry before operating set.

NOTE: Adjustable stops are only provided on models using **Brass** Antenna trim mechanisms. These are set correctly at the factory. Should re-setting become necessary the stop collar (located on circuit side of P.C. board behind front panel) should be adjusted to give even clearance between nose of cam and adjacent disengaged micro-switch at extremities of rotation.
(This operation necessitates removal of front panel).

CLARIFY CONTROL ALIGNMENT

String drive cord and glue core to cord as shown in Fig. 2.

MINOR CALIBRATION DISCREPANCIES

On Models up to Serial No. 0600

These may be corrected without instruments or dismantling of the receiver as follows:

1) Open back cover.

2) **MHz Scale** - If a calibration error becomes noticeable on the MHz scale when tuning a station of known transmission frequency, set the MHz scale to the exact calibration mark for the whole number MHz portion of the frequency (e.g. frequency 16,33 MHz set scale to 16) and adjust trimmer C32 to give maximum signal strength reading on built-in meter.

3) **KHz SCALE** - Slight errors at either end of this scale may be deliberate to compensate for tracking in the middle of the scale. If however adjustment is necessary, set mode switch to USB; set KHz scale to 0 and adjust trimmer C44 to give zero beat in audio.

   Set KHz scale to 1000 and adjust T1 to give zero beat in audio. Repeat these steps until satisfactory result is obtained.

ZERO SET CONTROL

A zero set control is incorporated in all models from Serial No. 0600. This provides a means of zero setting the KHz dial to compensate for calibration errors due to temperature and/or humidity variations should this become necessary.

During alignment set this control in its central position.

Refer to complete alignment procedure if major calibration errors are encountered.

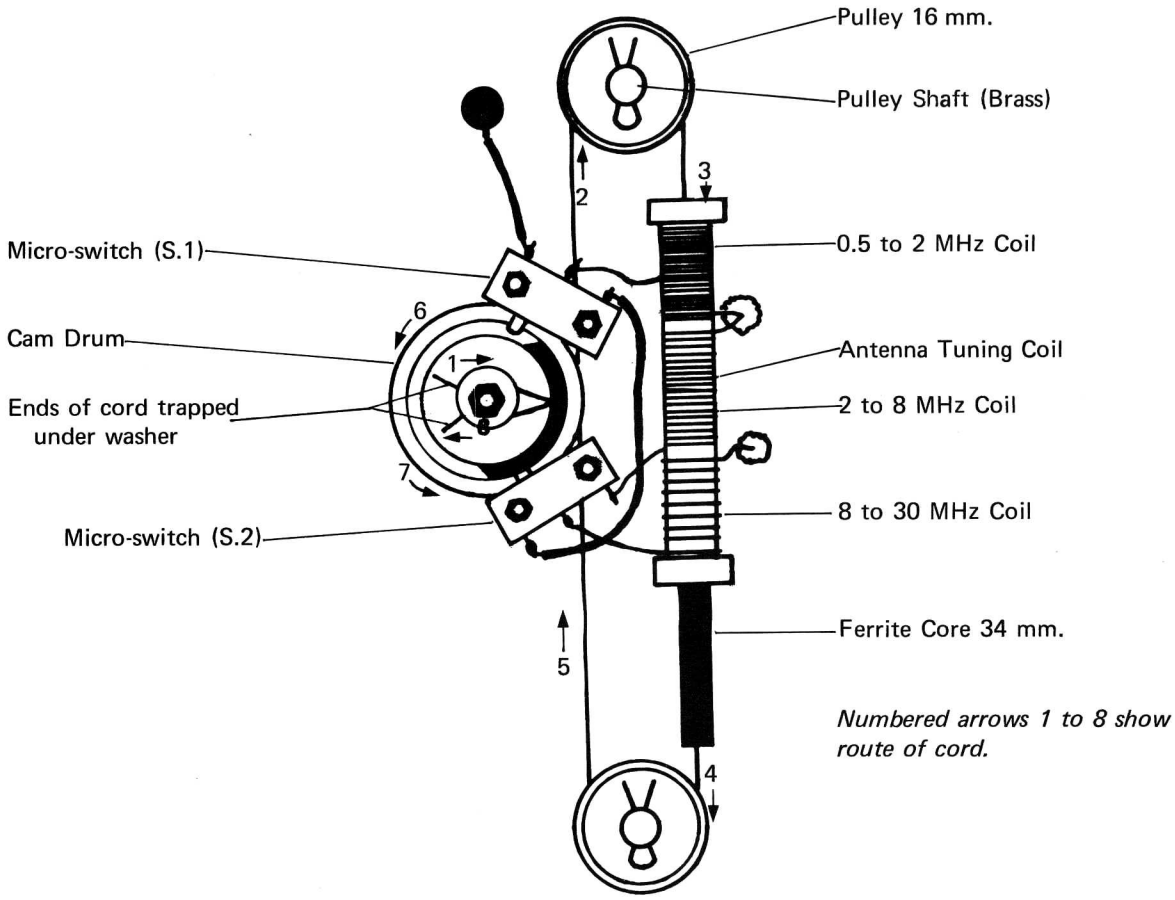

REAR VIEW OF ANTENNA TRIM MECHANISM SHOWN WITH KNOB TURNED FULLY CLOCKWISE

(Cam Drum fully anti-clockwise looking from rear of set)

Fig. 1.

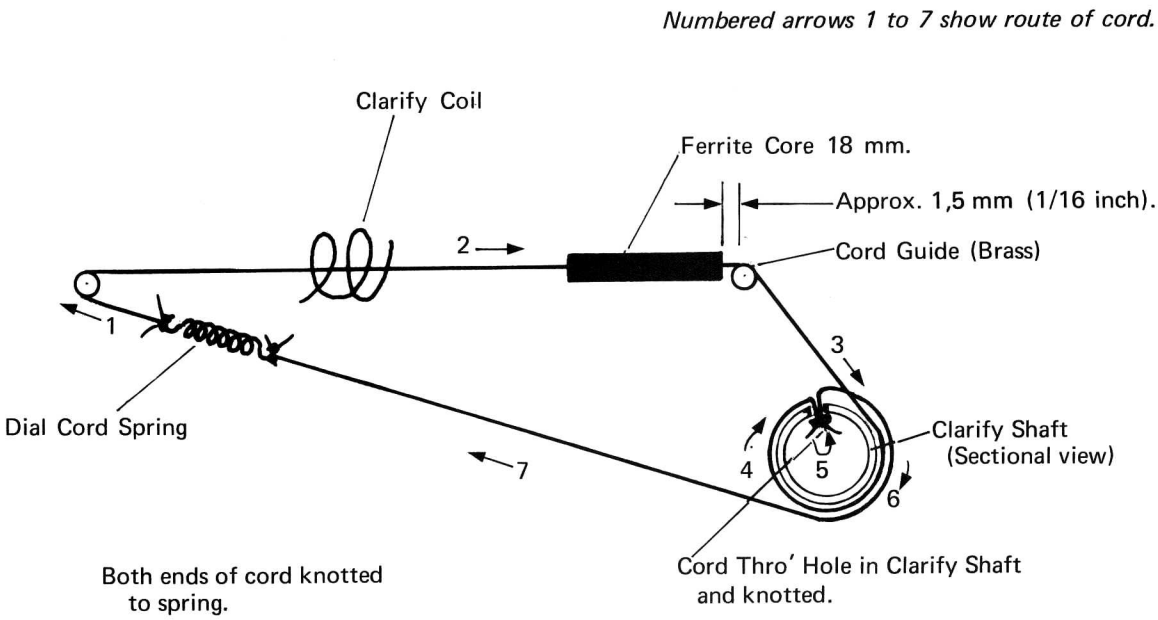

FRONT VIEW OF CLARIFY MECHANISM SHOWN WITH CLARIFY SHAFT FULLY CLOCKWISE.

GLUE FERRITE CORE IN POSITION SHOWN, USING SIMILAR PROCEDURE OUTLINED IN ANTENNA TRIM CONTROL ALIGNMENT.

Fig. 2.

BLOCK SCHEMATIC DIAGRAM

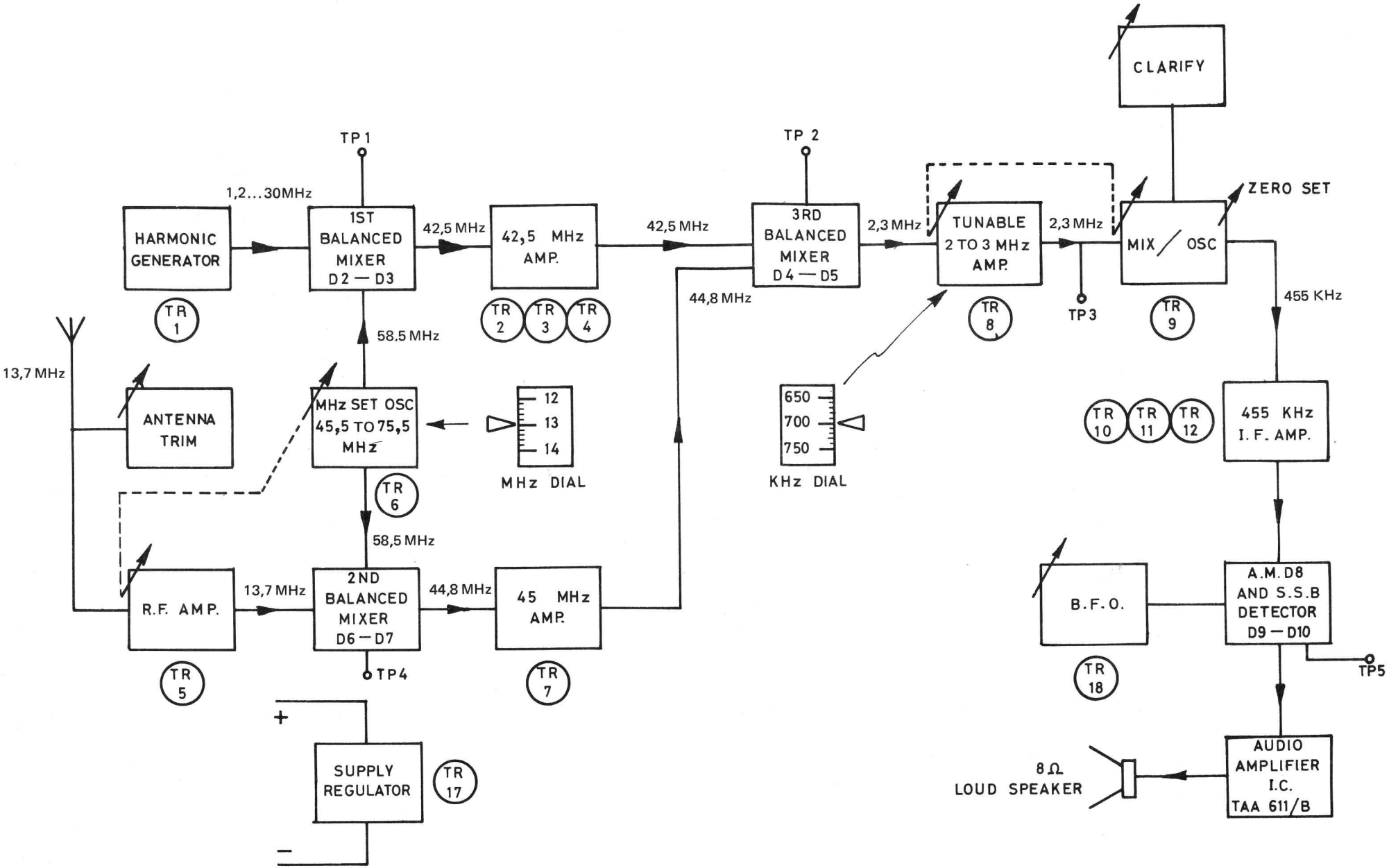

Fig. 3.

Code No.	Description	Drawing No.
AD-09-005	Antenna Bush	A-1989 A
AG-07-021	Handle Chrome	C-1853
AG-07-022	Handle Insert (Modified)	B-1988 A
AG-01-077	Front Panel Painted	D-1923
AG-01-076	Front Panel Chrome	D-1923
AG-11-203	L H Panel Trim	A-1996
AG-11-204	R H Panel Trim	A-1997
AG-11-025	Lower Trim Strip (Barlow Wadley)	A-1998
AD-06-103	Back Vent	
AD-05-401	Loudspeaker Gasket	A-1992
AD-04-815	Dial Scale Backing (Green)	A-1985
AD-04-221	Cam Drum	B-1926
AD-09-007	Cam Drum Bush	B-1927
AD-08-115	Cam Drum Shaft	B-1941
AD-09-009	Clarify Bush	B-1928
AD-08-023	Clarify Shaft	A-1940/B
AD-04-409	Clarify Cord Guide	A-1938
AD-11-012	Speaker Mounting Spacers	A-1939
AA-02-051	P C Board Mounting Fixture	A-1937
AE-01-010	Battery Box "Chitrose"	
AD-01-411	Antenna Coil Mounts	A-1936 A
AG-09-062	Thumbwheel	B-1924
AD-04-201	Dial Drum	B-1925
AD-08-201	Pulley Stud	A-1979
NB-01-201	Back Fixing Screw	A-1978
AA-02-055	Pivot Rod (Card Holder)	B-1931
AG-11-027	Barlow Wadley Badge	A-1999
AE-06-027	External Power Plug	
SA-09-017	Instruction Book	
SA-08-001	Log Card	
SA-11-009	Post Card (Radio/TV Handbook)	
SA-04-001	Frequency Card (Black)	
AE-06-025	Earphone Plug	
NC-02-071	Washer W2 (2mm Flat)	
NC-02-101	Washer SW 2 (2mm Lock)	
AG-01-011	Aerial Yokowa S G 387	
AD-02-001	Spring Clip 1100/8 (Pulley Retaining)	
AD-02-201	Push on Retainer ¼"	
AG-09-061	Black Knob with Embellisher	
NA-02-003	Nut NN2 (2mm) (Micro Switch)	
NB-02-055	Screw M2 x 20 (2mm) (Micro Switch)	
NA-01-301	Rivnut 4 BA (Back Securing)	
AD-07-007	Plastic Pulley 16mm	A-3101
AG-05-001	Rubber Foot	A-1619 A
AD-13-010	Dial Scale Spring	
AD-13-011	Spring (Dial Cord) 28 swg. Closed Coil	
AE-09-021	Micro Switch Omron SS - 5G	
AE-09-208	Band Switch (Mode)	
NC-01-021	Retaining Clip 5 BA Nomel. (Back Screws)	
AG-01-071	Cabinet Trimmed	
AA-02-053	Earphone Socket Mounting Bracket	A-1981
AD-04-721	MHz Drum Scale	A-1984
AD-04-719	KHz Drum Scale	A-1984
AD-11-011	Earphone Socket Bracket Spacer	A-2178/A
NC-01-221	Part Pierced Washer (Ext. Aerial)	A-1983
AA-02-056	Card Holder Tension Plate	A-3009
AD-05-306	Rubber Cushion (Handle)	A-3105
AA-03-027	42 MHz Coil Shield	A-3027
AD-04-413	Cord Guide/Mounting Post	A-3033

Code No.	Description	Drawing No.
AD-08-117	Zero Set Shaft	A-3034
AD-13-008	Zero Set Spring	
AA-02-071	Zero Set Rotor Plate	A-3032
AA-02-072	Zero Set Stator Plate	A-3031
HB-01-060	Harmonic Generator PC Board	A-3090
AD-01-222	Meter Retaining Clip	A-3100
AA-02-052	Card Holder Extruded	B-3077
AA-02-054	Pivot Arm Retainer	B-1930
AE-07-011	Earphone Power Socket	
AD-05-400	1/8" Foam Speaker Cushion	A-3103
AG-06-033	C 14 Bonded Cloth. Speaker Scrim	A-3104
AG-00-042	Cabinet Back Trimmed	
AE-06-022	Banana Plug Red	
AE-06-021	Banana Plug Black	

Code No.	Description	Circuit Designation	Remarks
CU-00-018	Variable Capacitor (2 gang)	C13, C20	Jackson P202
CU-00-017	Variable Capacitor (3 gang)	C47, C59, C73	Jackson P203
CT-01-016	Trimmer Capacitor 4-27 pf	C6, C44, C56, C67	Dau 107 3911.027
CT-01-001	Trimmer Capacitor 2,8-9 pf	C32, C90	Dau 107 1901.007
BP-00-003	Variable Resistor 2 K2	R28	Piher Type-D Preset
BL-00-010	Variable Resistor 5K D/P SW	R5	Volume Control
AE-08-009	Speaker 100 mm 8 ohms		
AE-05-001	Meter		Kisho Yo 4
	Transformers Cores etc.		
GB-05-063	YMC 18648 ZRK	T4	BFO
GB-05-061	YMC 18647 ZRK	T3	Detector
GB-03-031	TKAN 14311 DOG	L11	2 to 3 MHz Tunable Amp.
GB-03-032	TKAN 14312 DFC	L10	2 to 3 MHz Tunable Amp.
GB-02-051	TKAN 14313 BID	T1	Interpolation Oscillator
GB-05-051	YMC 18645 PQC (Pink) / YMC 18646 SIL (Blue)	T2	455 KHz IF (One Pin to be Cut off)
GB-03-033	YMC 18649 ARX	L2	1 MHz Osc.
HB-01-103	Ferrite Core 35mm Vogt		Ant. Trim and Harm. Gen.
HB-01-105	Ferrite Core 18mm Vogt		Clarify Control
GB-03062	Toroid CT	L1	Drawing No. 3111
	Air Coils. All 18 swg Enamelled Wire		
GB-03-057	Air Coil 6 Turns	L3, L7, L14, L15	Drawing No. A-3112
GB-03-060	Air Coil 6 Turns Centre Tapped	L5	Drawing No. A-3113
GB-03-052	Air Coil 4 Turns	L12	Drawing No. A-3117
GB-03-061	Air Coil 4 Turns CT and 1¼ tap	L4	Drawing No. A-3115
GB-03-058	Air Coil 4 Turns ¾ turn LH tap	L9	Drawing No. A-3120
GB-03-059	Air Coil 4 Turns ¾ turn RH tap	L8	Drawing No. A-3118
GB-03-065	Air Coil 4 turns centre tapped	L13	Drawing No. A-3114
GB-03-064	Air Coil 2 Turns	L6	Drawing No. A-3122
GB-01-055	Antenna Trim Coil	L17	Drawing No. A-3108
GB-03-051	Low Pass Filter	L18	Drawing No. A-3109
GB-03-063	F.M. Wave Trap	L16	Drawing No. A-3110
	Transistors and Diodes, etc.		
EA-01-001	AC 117	TR 17	Regulator
EA-01-005	AC 122	D 1	Protection Diode
EB-01-001	AA 112 Telefunken	D2 to D10 incl.	HF Diodes
EB-03-001	ZF 6,8	D11	Zener Diode
EA-02-009	BF 255 Siemens	All 13 transistors in RF/IF/BFO	
EC-01-001	Integrated Circuit TAA 611 B12	1 C 1	Audio
JA-01-001	1 MHz Crystal		Cathodeon HC 6U
JB-01-001	Ceramic Filter		Murata

VIEWED FROM COMPONENT SIDE OF BO

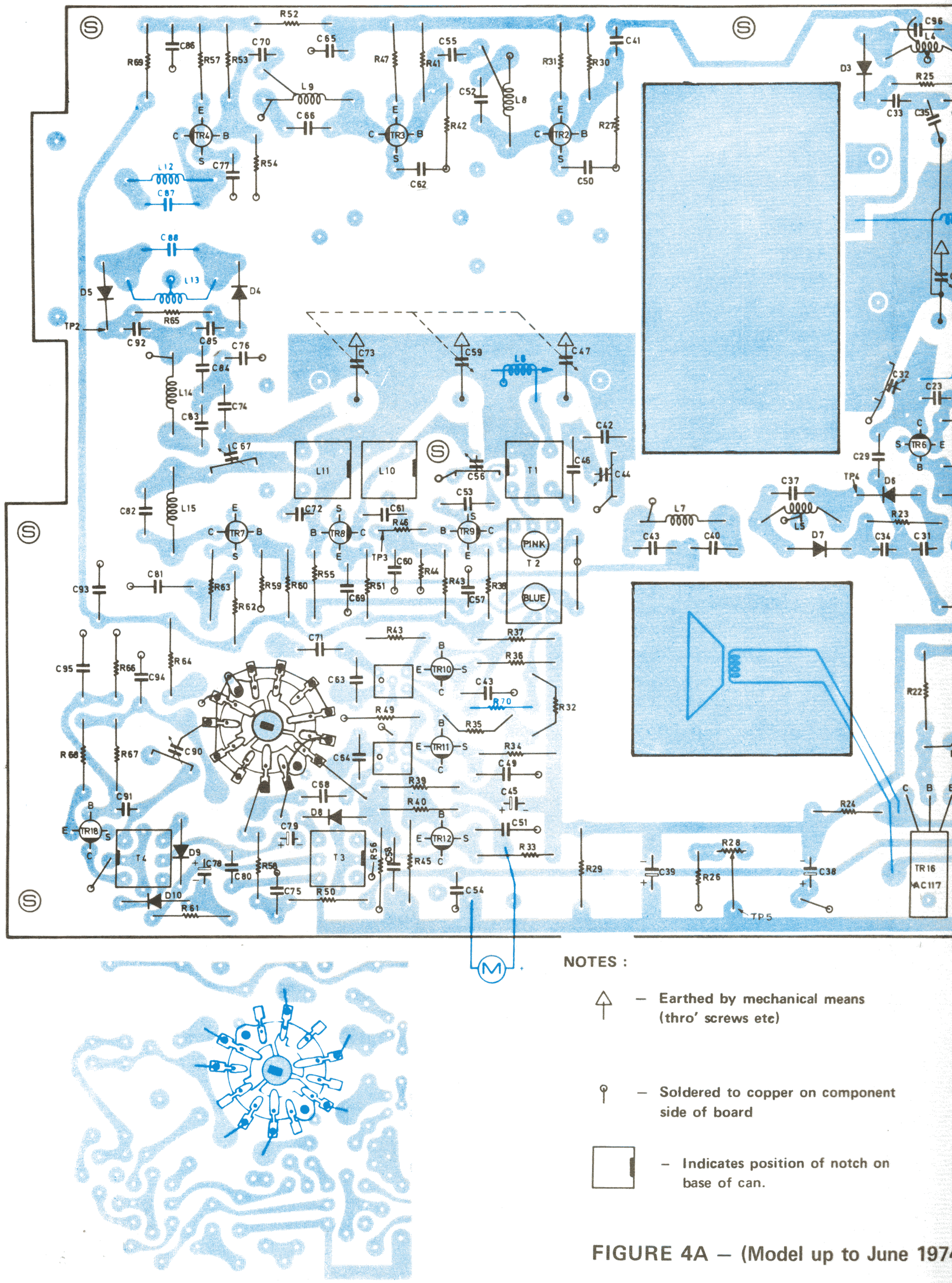

NOTES :

– Earthed by mechanical means (thro' screws etc)

– Soldered to copper on component side of board

– Indicates position of notch on base of can.

FIGURE 4A – (Model up to June 1974

ONENT SIDE OF BOARD

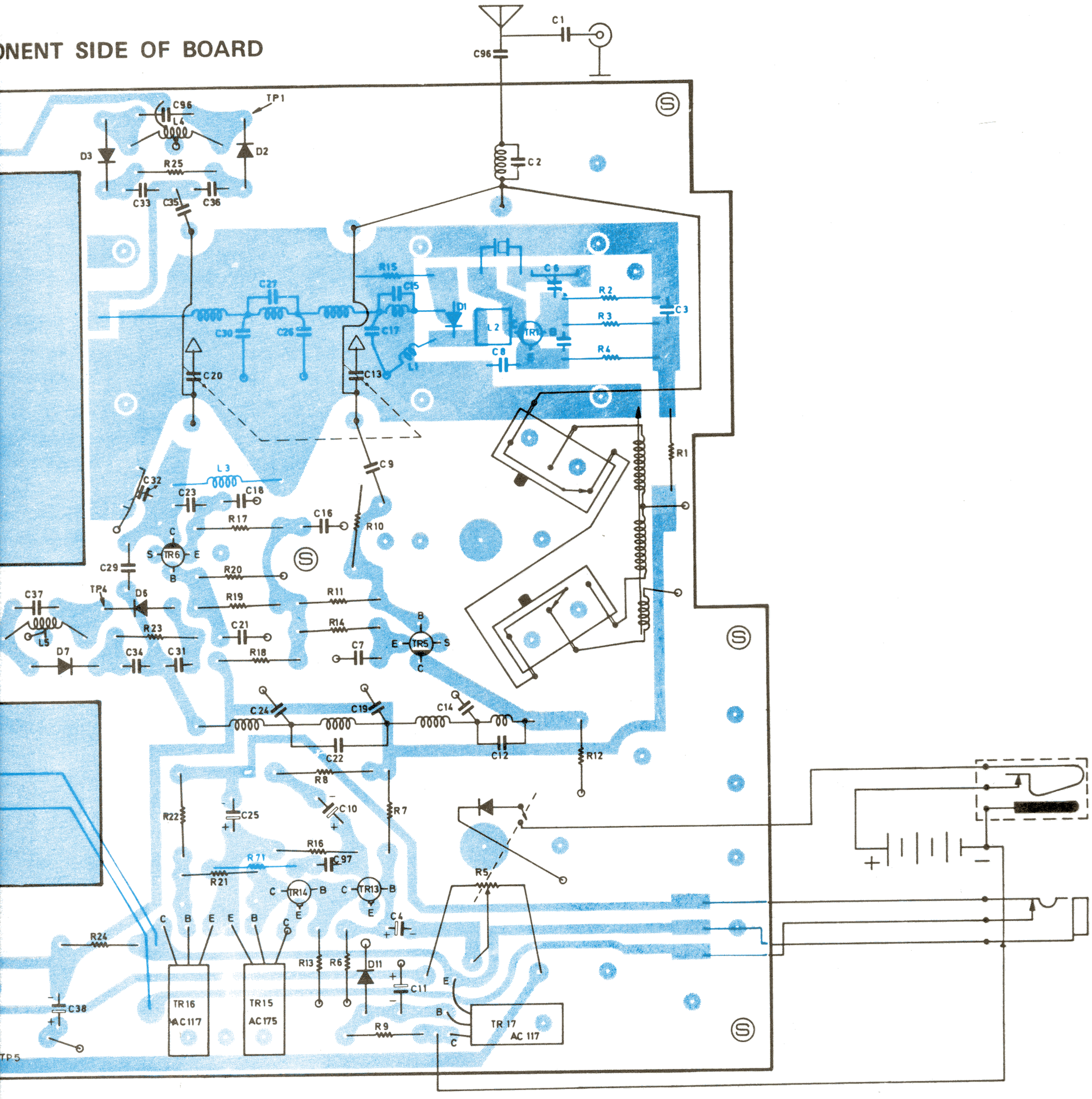

echanical means
etc)

copper on component
d

position of notch on
an.

Ⓢ — Indicates positions of nine mounting screws (front panel)

Components shown in BLUE are mounted on circuit side of board.

Model up to June 1974)

MAIN PC BOARD — COMPONENT SIDE

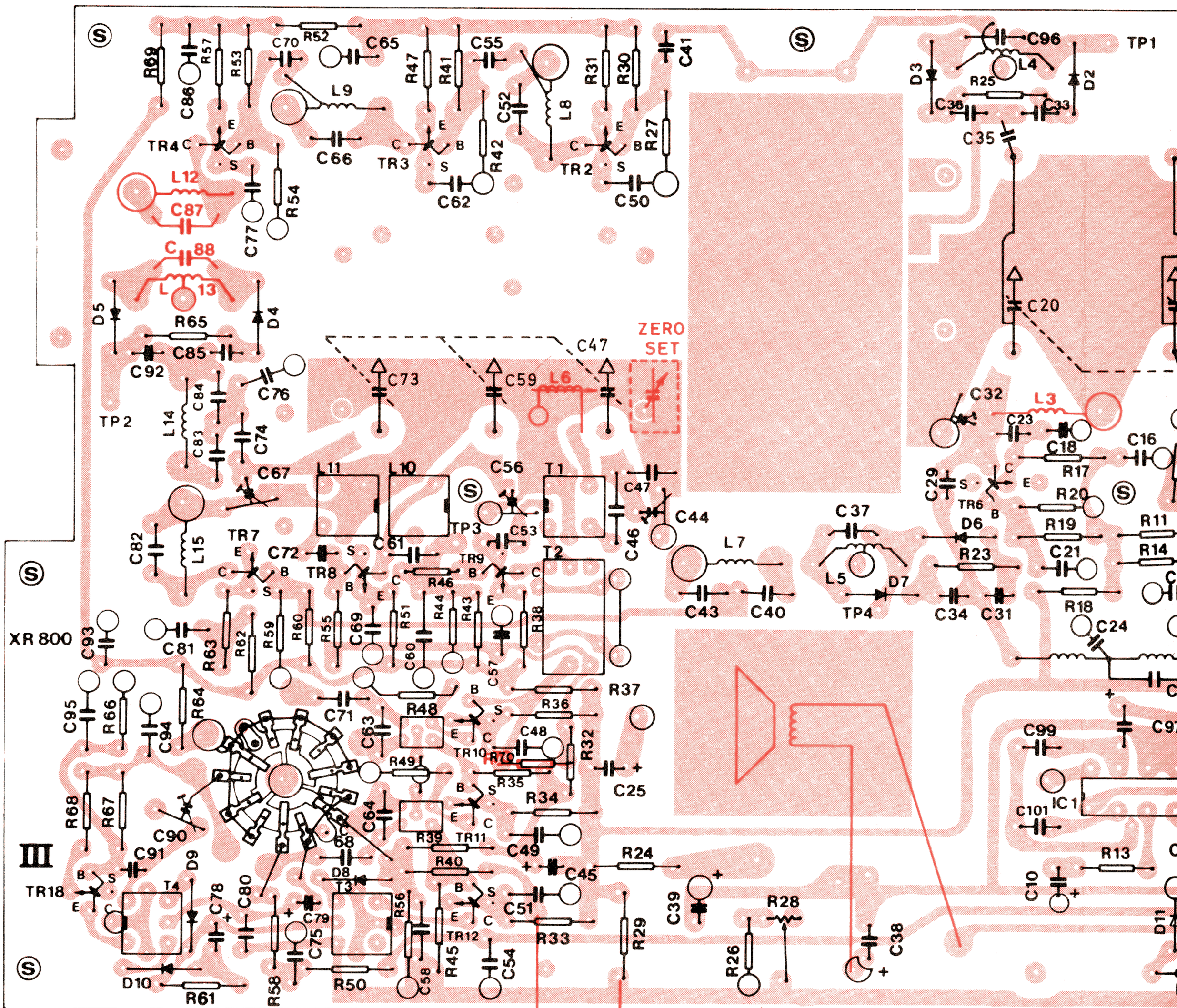

NOTES :

△ — Earthed by mechanical means (thro' screws etc)

Ⓢ — Indicat mounti

○ — Soldered to copper on component side of board

Compo are mo of boa

□ — Indicates position of notch on base of can.

FIGURE 4B — (Model from July 1974)

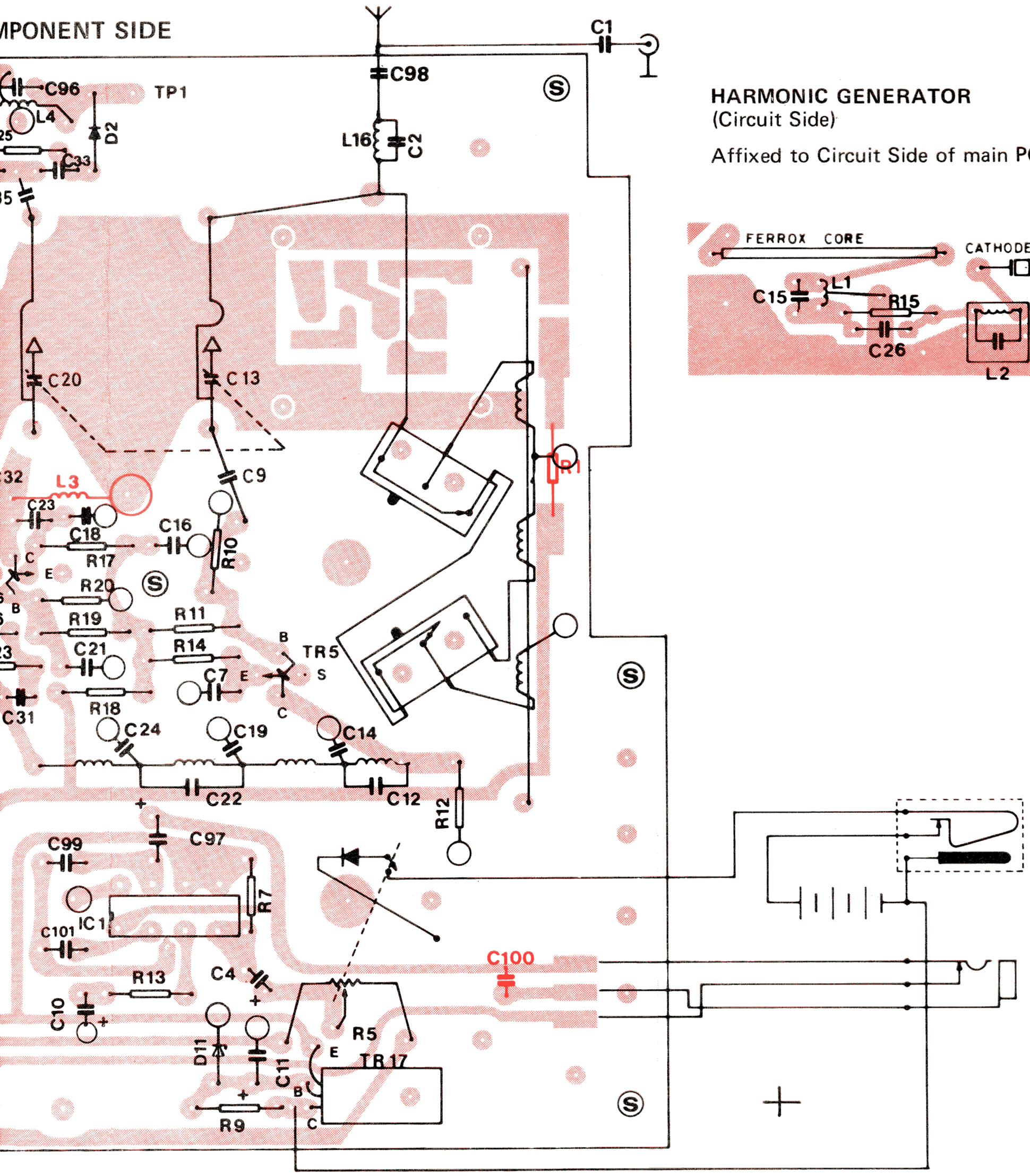

HARMONIC GENERATOR
(Circuit Side)

Affixed to Circuit Side of main PC board

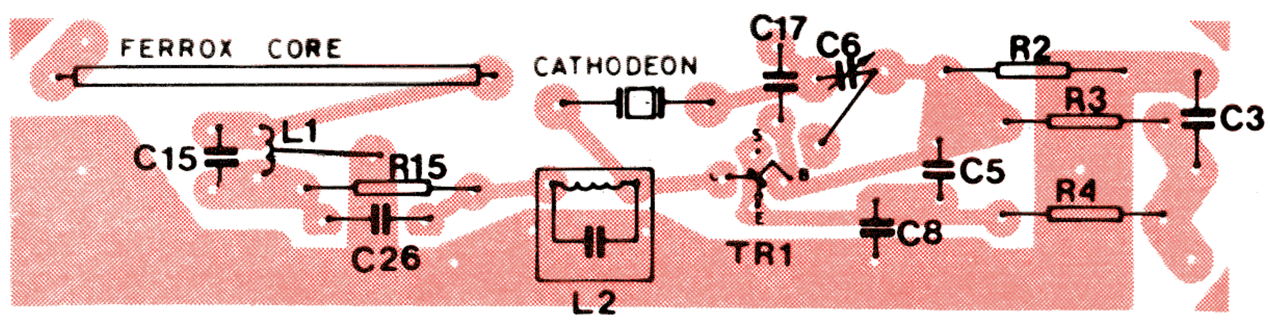

Ⓢ – Indicates positions of nine mounting screws (front panel)

Components shown in RED are mounted on circuit side of board.

1974)

MAIN PC BOARD — COMPONENT SIDE

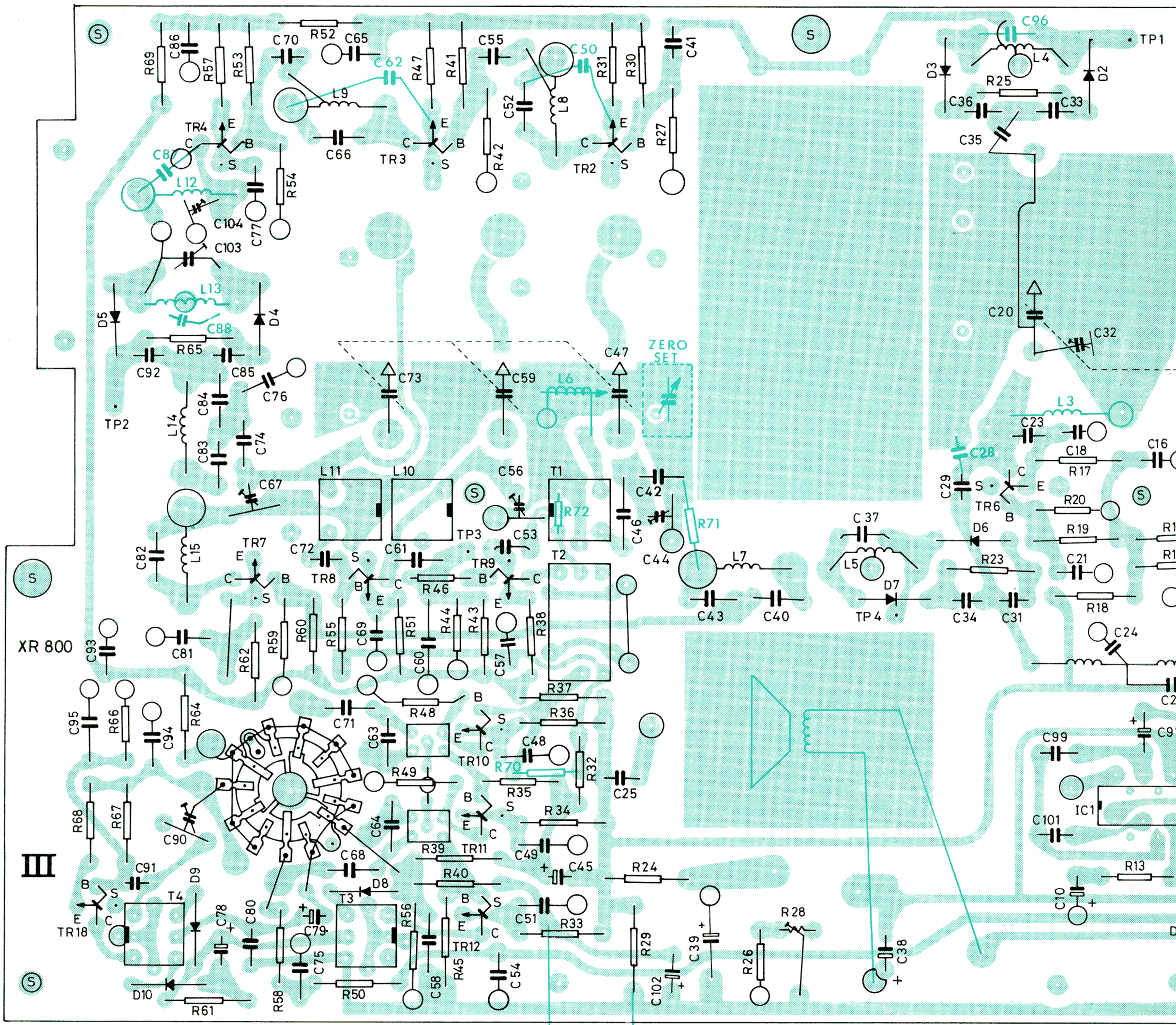

– Earthed by mechanical means (thro' screws etc)

– Soldered to copper on component side of board

– Indicates position of notch on base of can.

– Indic mou

Com are m of bo

FIGURE 4C – (Model from June 1975)

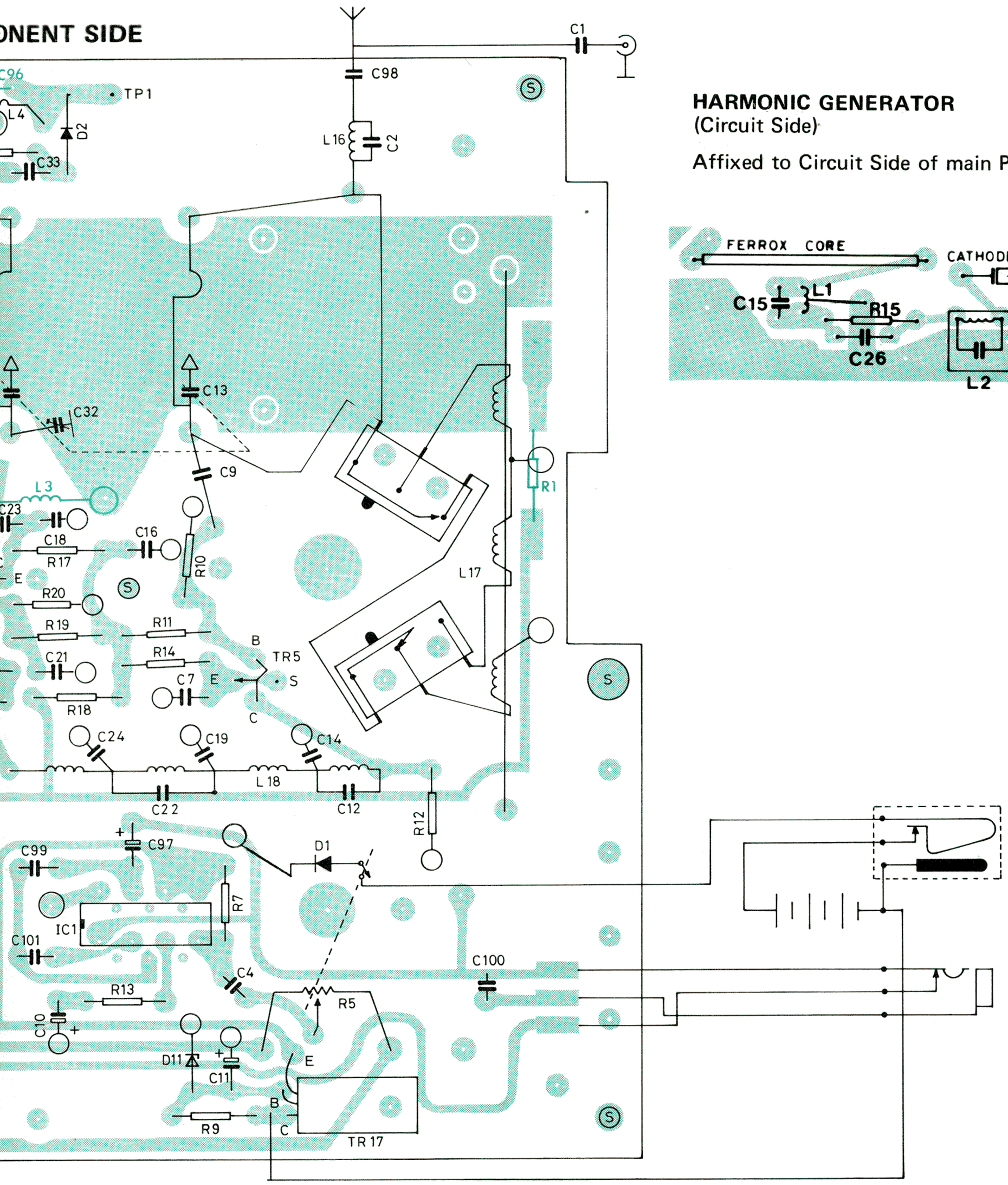

HARMONIC GENERATOR
(Circuit Side)

Affixed to Circuit Side of main PC board

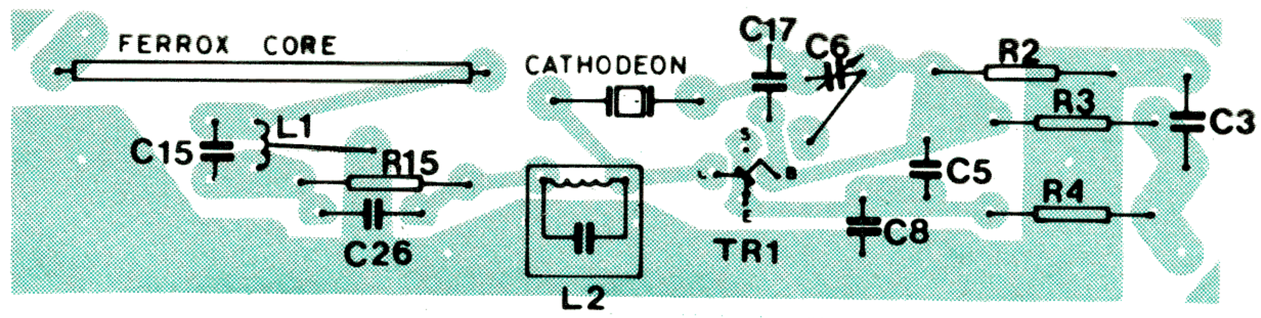

Ⓢ – Indicates positions of nine mounting screws (front panel)

Components shown in GREEN are mounted on circuit side of board

OPERATING INSTRUCTION SUPPLEMENT

FOR

XCR30 RECEIVERS FITTED WITH

TR801 FM TUNER

1. The FM tuner situated immediately below the carry handle of the XCR30 receiver has an AM/FM change over switch situated on the left hand side and a thumb wheel tuning control on the right hand side of the FM dial scale.

2. With the press button change over switch in its inner position, the receiver will operate on FM stations only, and all controls of the XCR30 receiver situated below the FM tuner will be ineffective except for the on/off switch and volume control which is common to both FM and AM.

3. With the press button change over switch in its outer position the receiver will operate on AM stations only and all controls of the XCR30 receiver situated below the FM tuner will be effective.

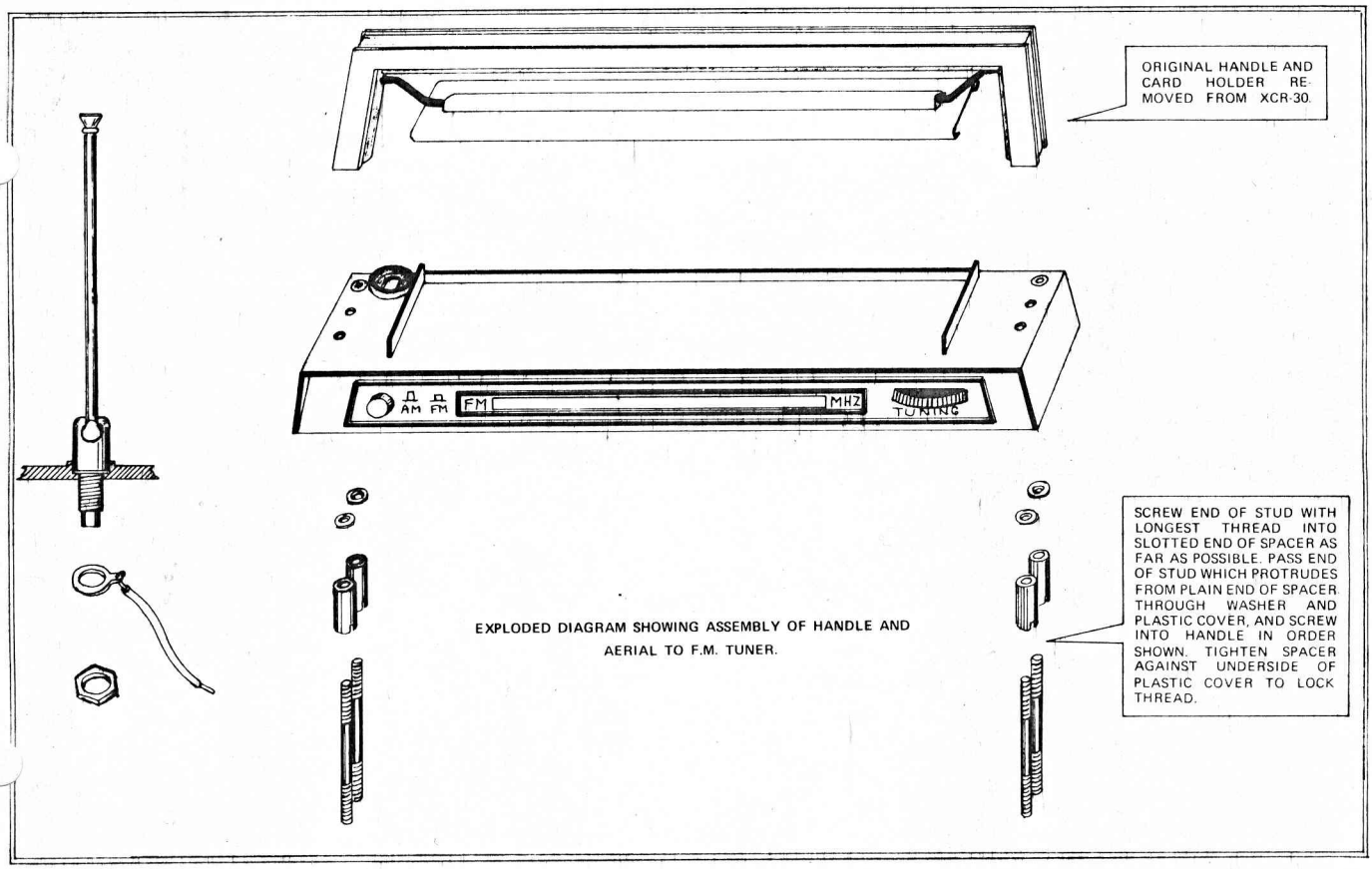

EXPLODED DIAGRAM SHOWING ASSEMBLY OF HANDLE AND AERIAL TO F.M. TUNER.

BARLOW WADLEY COMMUNICATION RECEIVER

XCR 30 Mk 2

SPECIFICATIONS

HF SECTION:

Overall Sensitivity:	Better than 1 μV for 50 mW
Overall Selectivity:	6 KHz on AM 3 KHz on SSB and CW
Overall Image Rejection:	50 dB on all movable images $\geq$ 60 dB on immovable images
IF Rejection:	455 KHz, 42.5 MHz } 50 dB 45 MHz > 60 dB
IF Selectivity:	For 42.5 MHz ——— 300 KHz For 45 MHz ——— 1.3 MHz } 10 dB For 455 KHz ——— 7.5 KHz
Clarify Range:	$\pm$ 1.5 KHz

POWER AND LF SECTION:

Max. O/P Power:	400 mW
Speaker Impedance:	8 ohms
Frequency Response:	150 Hz ——— 3KHz (3 dB points)
D.C. Power Consumption:	20 mA @ no signal 200 mA peak
Ext. Power Supply:	6 to 12 volts D.C.

PROTECTED AGAINST POLARITY REVERSAL OF EXT. SUPPLY (+Ve earth).

TR801 FM TUNER

SPECIFICATION

Operating Voltage	6v Nominal
Frequency Coverage	87.5 to 108 MHz
Sensitivity	-3dB (PW) for 26dB Signal to Noise ratio

GENERAL INSTALLATION INFORMATION

* To be used on positive ground installations only
* Orange Lead – 6 volts into FM/AM switch
* Yellow Lead – 6 volts out from FM/AM switch
* Black Lead – Connect to earth or chassis
* Shielded Lead – Audio output

INSTALLATION TO XCR30 RECEIVERS

(Serial Nos. 0600 Onwards)

NOTE: The back of the XCR30 receiver may be removed for convenience after disconnecting battery leads by opening slightly (approx. ¼") and raising back upwards.

1. Disconnect and remove aerial of XCR30 receiver.
2. Remove handle mounting screws with tool supplied in kit and remove handle.
3. Fit handle and FM aerial (supplied) to FM tuner (Refer to exploded diagram).
4. Connect white lead of FM tuner to aerial terminal.
5. Remove external antenna and earth sockets from XCR30 receiver.
6. Pass black lead of TR801 tuner through hole left by earth socket and twisted yellow and orange lead together with shielded lead through hole left by external antenna socket.
7. Pass white lead from aerial terminal through hole left by aerial.
8. Pass FM tuner mounting studs through holes left by original handle, and secure with 6BA nuts and lock washers using tool supplied.
9. Remove jumper connecting terminals X and Y shown in diagram 'A' and connect twisted orange and yellow leads to terminals X and Y (Orange to X and Yellow to Y).
10. Connect centre lead of shielded wire to centre terminal of volume control and shield to P.C. board earth.
11. Connect black lead to P.C. board earth, and white lead to FM wave trap via 47pf disconnected from original aerial.
    NOTE: The electrolytic condenser included in the kit is to prevent a delay in the A.V.C., when switching from FM to AM and may be installed if desired with reference to diagram B.
    The twisted yellow and orange lead together with the shielded lead may be secured to the side and bottom of the cabinet with a suitable adhesive tape in the interest of tidiness, and to prevent entanglement with other components.

INSTALLATION TO XCR30 RECEIVERS (Serial Nos. 0001 to 0599)

1. Remove nine mounting screws indicated by (S) in diagram 'A' and remove front panel (control knobs pull off)
2. Modify P.C. Board as shown in diagram 'B' and solder in additional condenser included in kit.
3. Install FM tuner as described for later models. (Refer to diagram 'B' for connecting points X and Y before re-fitting front panel).

ERRATA

(A) The free end of the capacitor already connected to the external aerial socket on the F.M.Tuner should be connected to the same aerial terminal as the white lead mentioned in stage 4 of the installation instructions. The capacitor to the original external aerial socket may be discarded when this socket is removed.

(B) The complete F.M. unit, front panel and printed circuit board, may be withdrawn from the plastic housing for servicing without dismantling, by removing the three countersunk screws situated under the card holder, and slackening off (but not removing) the four nuts securing the handle and F.M. unit to the main cabinet.

(C) The terminals X and Y mentioned in stage 9 of the installation instructions are not correctly positioned in diagram 'A'. When installing please observe that terminal X is the left hand terminal, and terminal Y is the right hand terminal when viewed from the back of the receiver.

PACKING LIST FOR

TR801 TUNER KIT

ONE	Complete Tuner Board fitted to plastic housing.
ONE	FM Aerial with securing nut.
ONE	Electrolytic Condenser 500 MDF 6V.
ONE	Flexible white connecting wire 60mm long soldered to aerial solder lug and bared 3mm at other end.
ONE	Solid white P.V.C. jumper wire 140mm long and bared 3mm at each end.
ONE	Solid white P.V.C. jumper wire 65mm long and bared 3mm at each end.
FOUR	Spacers.
FOUR	Threaded Studs.
FOUR	6BA Washers.
FOUR	6BA Lock Washers.
FOUR	6BA Nuts
ONE	Special tool for removing handle securing screws and for tightening 6BA nuts.
ONE	Installation Leaflet.
ONE	Operating Instruction Leaflet.

Bss 2137.10.72

VIEWED FROM COMPONENT SIDE OF BOARD

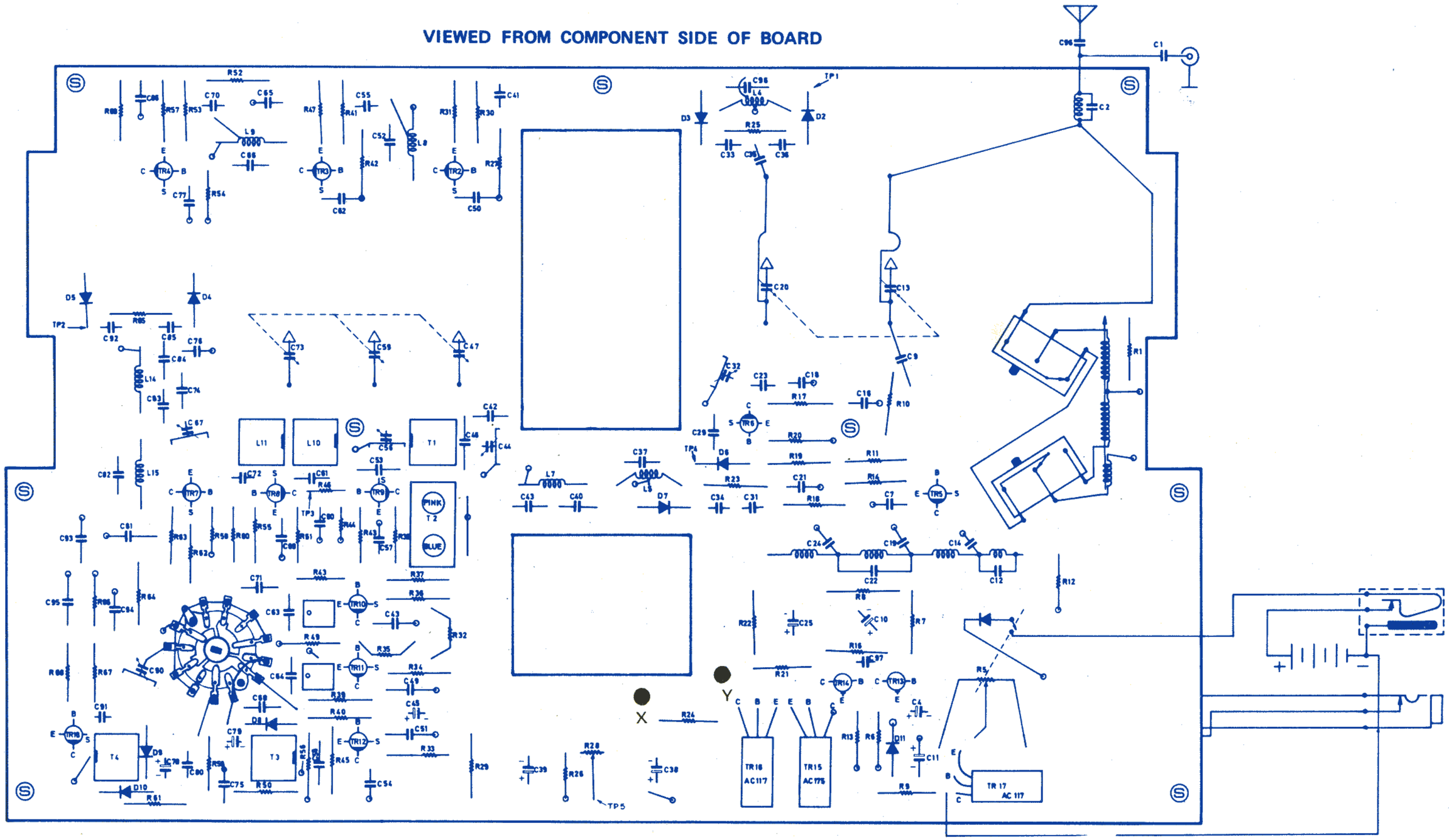

DIAGRAM A.

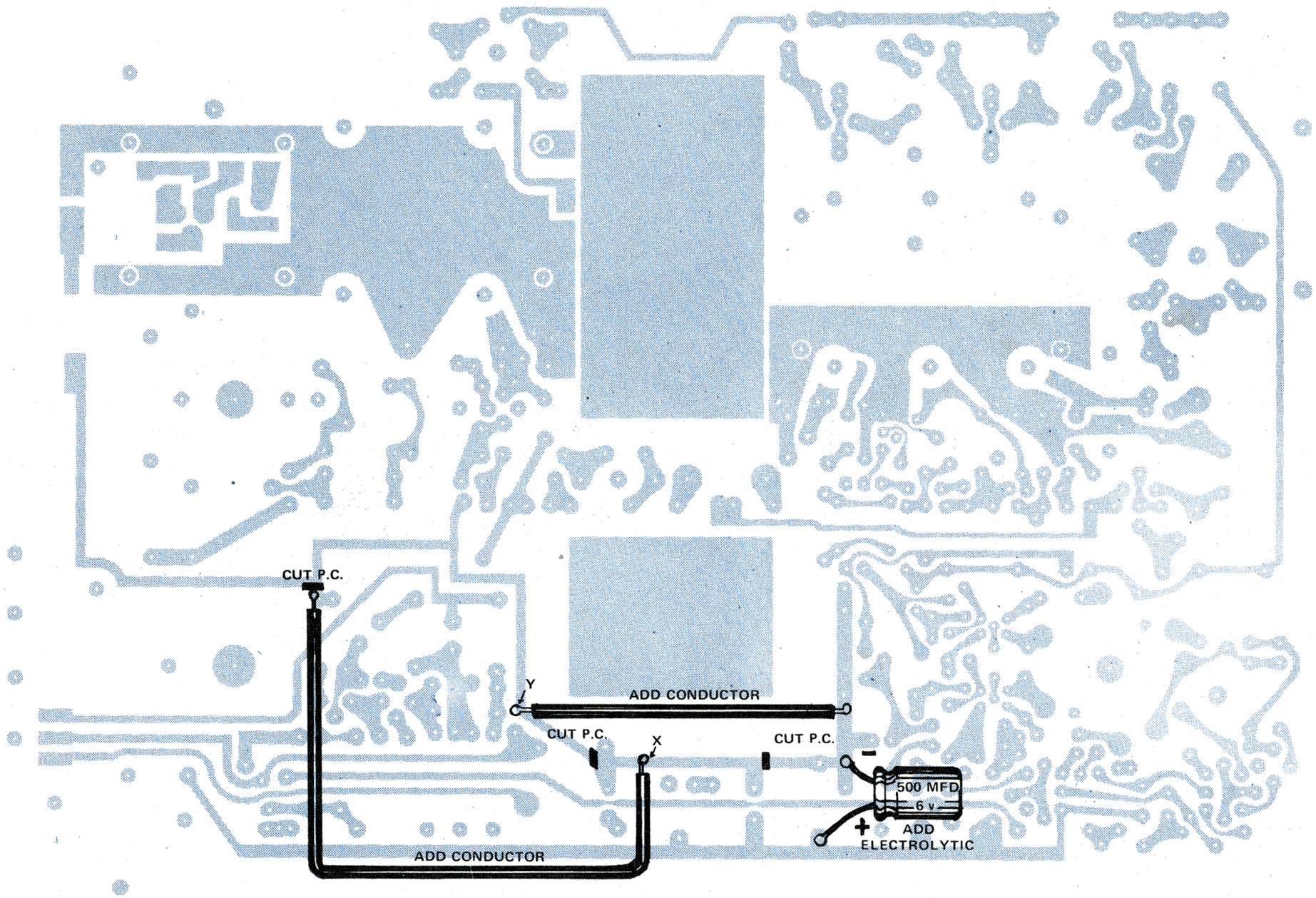
CUT P.C.
Y
ADD CONDUCTOR
CUT P.C.
X
CUT P.C.
−
500 MFD
6 v
+
ADD
ELECTROLYTIC
ADD CONDUCTOR

DIAGRAM B.

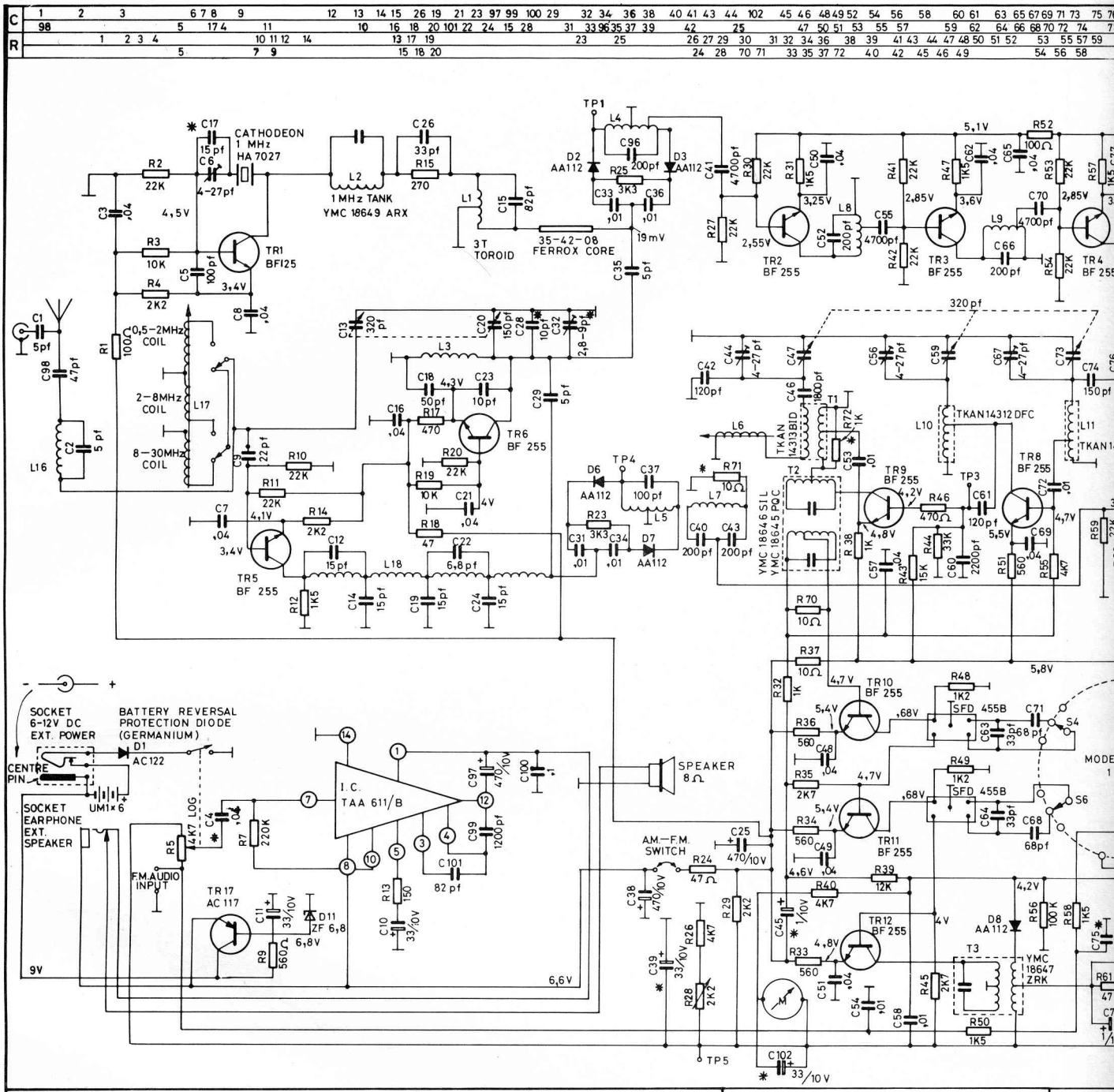

DIODES

D1 AC 122	PROTECTION DIODE	
D2, D3 AA 112	MATCHED PAIR(BALANCED MIXER N°1)	
D4 D5 AA 112	MATCHED PAIR(BALANCED MIXER N°3)	
D6 D7 AA 112	MATCHED PAIR(BALANCED MIXER N°2)	
D8 AA112	A.M. DETECTOR	
D9 D10 AA112	MATCHED PAIR SSB DETECTION	
D11 ZF 6,8	VOLTAGE REGULATOR	

TRANSISTORS

TR1 HARMONIC GENERATOR
TR2, TR3, TR4 42,5 MHz HARMONIC AMP.
TR5 R.F. AMP.
TR6 FIRST OSC.
TR7 45 MHz AMP.
TR8 2 TO 3 MHz AMP. } INTERPOLATION SECTION
TR9 2 TO 3 MHz OSC. MIXER. }
TR10, TR11, TR12 455 KHz I.F. AMP.
TR17 D.C. SUPPLY REGULATOR
TR.18 B.F.O. OSCILLATOR

NOTE: TRANSISTORS TR1—TR12 & TR18 WERE BF 121 & BF 125 ON EARLIER MODELS

* MODIFICATIONS

1. C75 ~ C80 2200 pf SERIAL N°s 0001 TO 0100 ONLY
2. C90 2,5 TO 6pf SERIAL N°s 0001 TO 1100 ONLY
3. C32 7-35pf (AND C28 NOT FITTED) ON EARLY MODELS
4. VALUE OF R40 ON EARLIER MODELS:-
   a) 1K5 WITH METER TYPE KISHO Y04 600
   b) 3K9 WITH METER TYPE TOYO MUSSEN V81
5. C17 ADJUSTING CAPACITOR

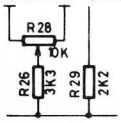

6. APPLICABLE TO SERIAL N°s 0001 TO 0100 ONLY

NOTES

VOLTAGES SHOWN ON THIS DIAGRAM CAN VARY DEPENDING ON THE ACTUAL ZENER DIODE AND RESISTOR TOLERANCES, AND ARE NEGATIVE WITH RESPECT TO CHASSIS.

ALL CAPACITOR VALUES ARE SHOWN IN µf (MICROFARAD) EXCEPT THOSE INDICATED pf (PICOFARAD)

EVERY EFFORT IS MADE TO KEEP THIS DIAGRAM UP TO DATE—BUT THE RIGHT IS RESERVED TO USE DIFFERENT COMPONENTS OR AMEND THE CIRCUIT WITHOUT NOTICE.

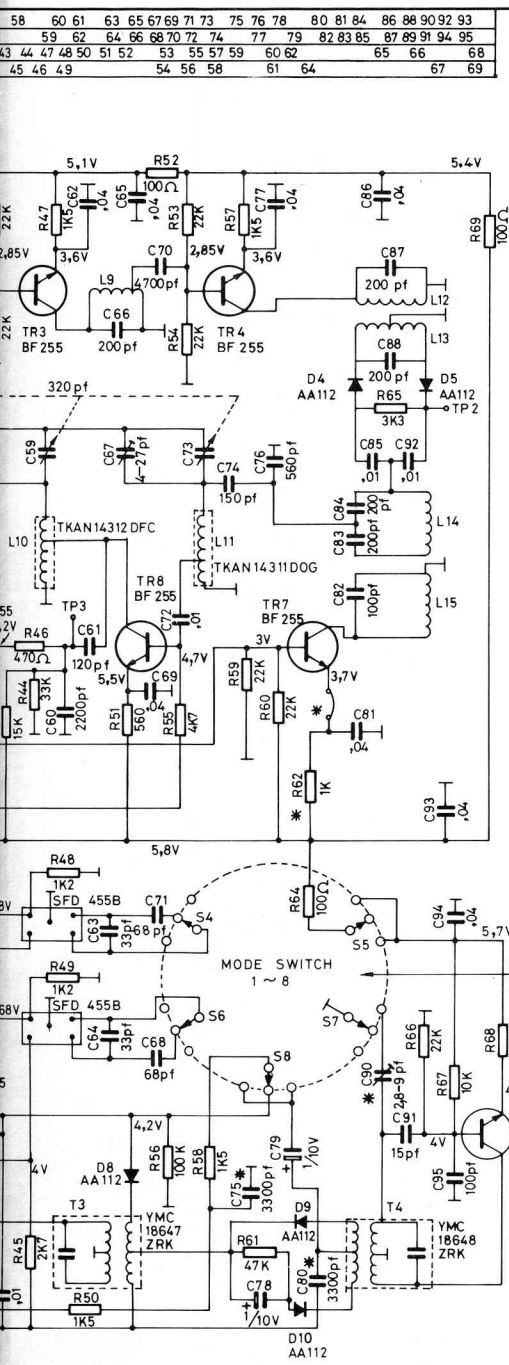

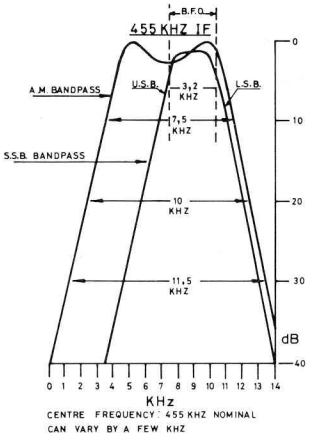

FIG.3.

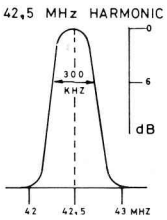

FIG.1.

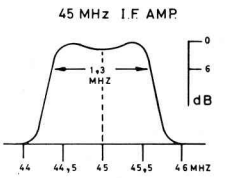

FIG.2.

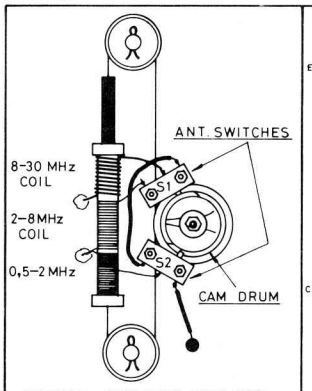

ANTENNA SWITCHES OPERATED BY CAM DRUM ON ANT. TUNE CONTROL. SWITCHING SHOWN IN 8-30 MHz POSITION

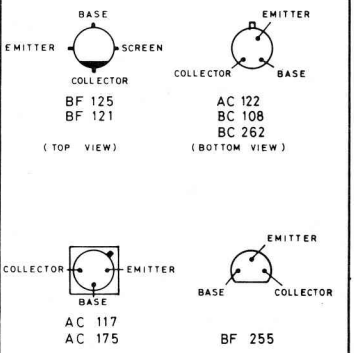

TRANSISTORS

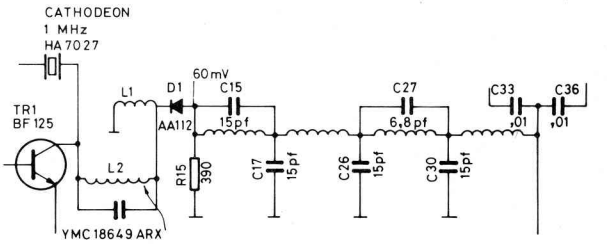

HARMONIC GENERATOR FILTER
(UP TO JUNE 1974)

DIAGRAM CAN VARY
ZENER DIODE AND
ARE NEGATIVE WITH

E SHOWN IN µf
E INDICATED pf

KEEP THIS DIAGRAM
IS RESERVED TO USE
AMEND THE CIRCUIT

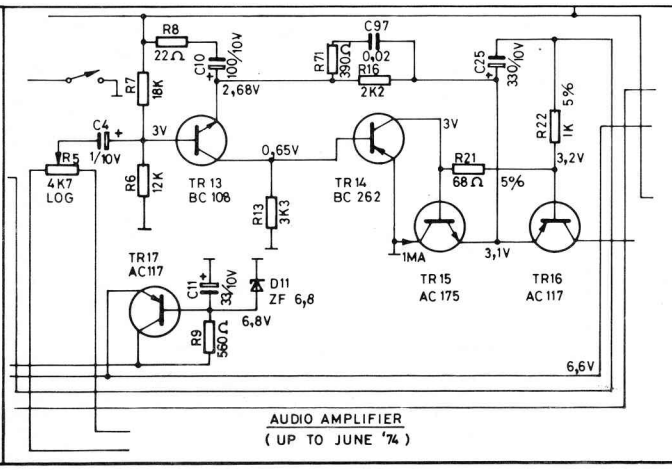

AUDIO AMPLIFIER
(UP TO JUNE '74)

✱ MODIFICATIONS (FROM DECEMBER 1974)

7. C4 FROM 1µF TO 0,04µF
8. R71 10Ω RESISTOR FROM JUNCTION OF L7/C43 TO POSITIVE CHASSIS
9. C 39 FROM 470 µF/10V TO 33 µV/10V
10. R72 1K RESISTOR FROM TAP OF L2 TO POSITIVE CHASSIS
11. ADDITION OF C102 33µF/10V CAPACITOR ACROSS THE METER
12. R62 2K2Ω NOW BECOMES 1KΩ
13. R63 100Ω NOW BECOMES A WIRE LINK
14. C45 33µF/10V NOW BECOMES 1µF/10V
15. C50 AND C62 NOW PLACED UNDER THE CIRCUIT BOARD AND NOT ON THE COMPONENT SIDE.

UNIT mm	PROJECTION	MODIFICATION		DATE
TOLERANCES UNLESS O'WISE INDICATED 1 = ±0,4 1·0 = ±0,2 1·00 = ±0,1	MATERIAL	FINISH		
DRAWN S. F. H.	DATE 14-6-74	TITLE CIRCUIT DIAGRAM MK II		DRG. No. 7470
TRACED	DATE			
MECH. APPR.	DATE 31-7-74	MODEL BARLOW WADLEY XR 800 C		SCALE
ELEC. APPR.	DATE 31-7-74			
BARLOWS TELEVISION COMPANY				NEW GERMANY NATAL