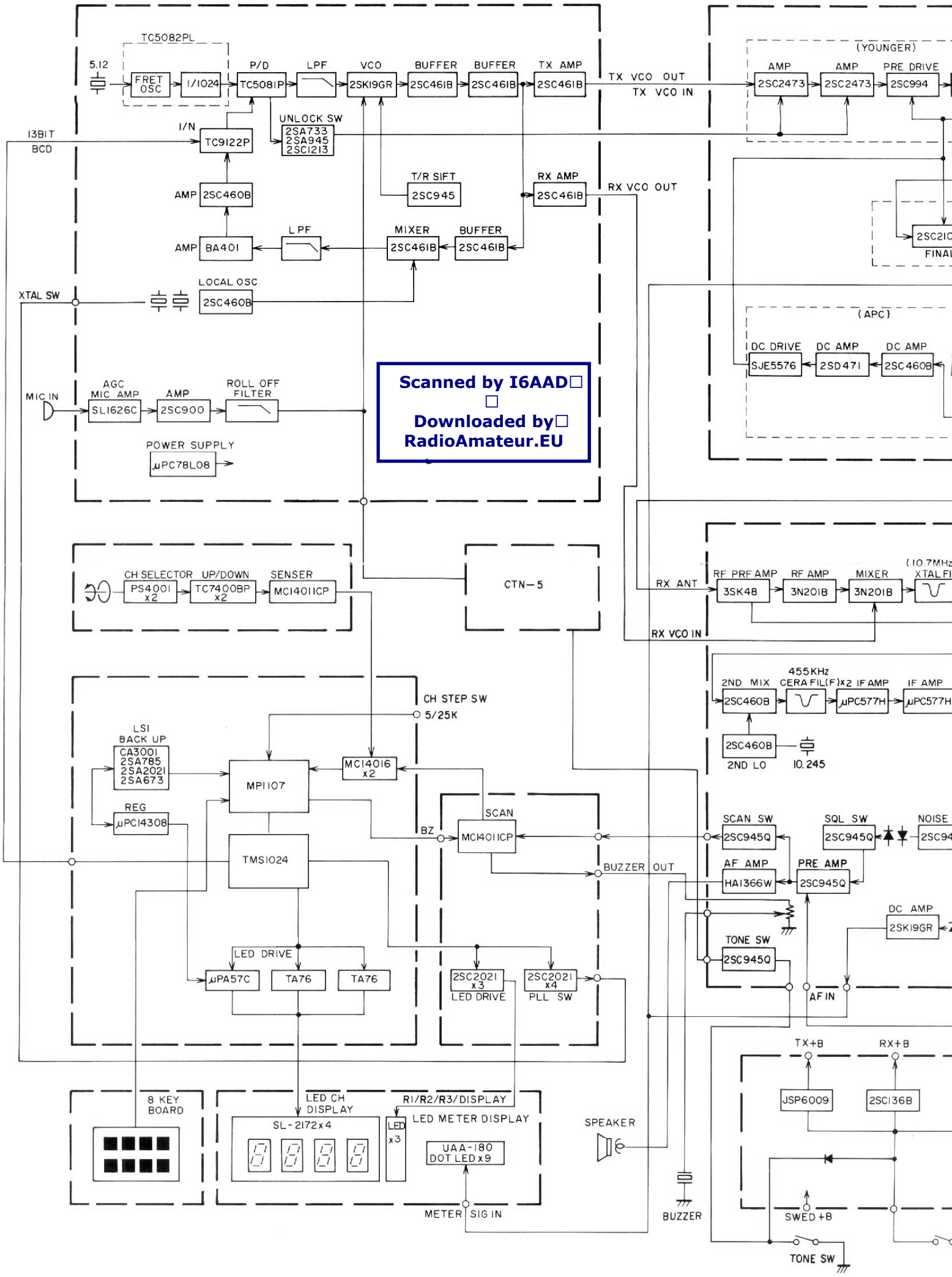
TC5082PL
5.12
FRET OSC
1/1024
P/D
TC5081P
LPF
VCO
2SK19GR
BUFFER
2SC461B
BUFFER
2SC461B
TX AMP
2SC461B
TX VCO OUT
TX VCO IN
(YOUNGER)
AMP
2SC2473
AMP
2SC2473
PRE DRIVE
2SC994
13BIT BCD
I/N
TC9122P
UNLOCK SW
2SA733
2SA945
2SC1213
T/R SIFT
2SC945
RX AMP
2SC461B
RX VCO OUT
AMP
2SC460B
AMP
BA401
LPF
MIXER
2SC461B
BUFFER
2SC461B
2SC210
FINAL
XTAL SW
LOCAL OSC
2SC460B
(APC)
DC DRIVE
SJE5576
DC AMP
2SD471
DC AMP
2SC460B
MIC IN
AGC MIC AMP
SL1626C
AMP
2SC900
ROLL OFF FILTER
POWER SUPPLY
μPC78L08
Scanned by I6AAD
Downloaded by
RadioAmateur.EU
CH SELECTOR
PS4001 x2
UP/DOWN
TC7400BP x2
SENSER
MC14011CP
CTN-5
RX ANT
RF PRE AMP
3SK48
RF AMP
3N201B
MIXER
3N201B
(10.7MHz
XTAL FI
RX VCO IN
2ND MIX
2SC460B
455KHz
CERA FIL(F)x2
IF AMP
μPC577H
IF AMP
μPC577H
2SC460B
2ND LO
10.245
CH STEP SW
5/25K
LSI BACK UP
CA3001
2SA785
2SA2021
2SA673
MPI107
MC14016 x2
REG
μPC14308
TMS1024
BZ
SCAN
MC14011CP
SCAN SW
2SC945Q
SQL SW
2SC945Q
NOISE
2SC94
BUZZER OUT
AF AMP
HA1366W
PRE AMP
2SC945Q
DC AMP
2SK19GR
TONE SW
2SC945Q
LED DRIVE
μPA57C
TA76
TA76
2SC2021 x3
LED DRIVE
2SC2021 x4
PLL SW
AF IN
TX+B
RX+B
JSP6009
2SC136B
8 KEY BOARD
LED CH DISPLAY
SL-2172x4
R1/R2/R3/DISPLAY
LED x3
LED METER DISPLAY
UAA-180
DOT LED x9
METER SIG IN
SPEAKER
BUZZER
SWED+B
TONE SW

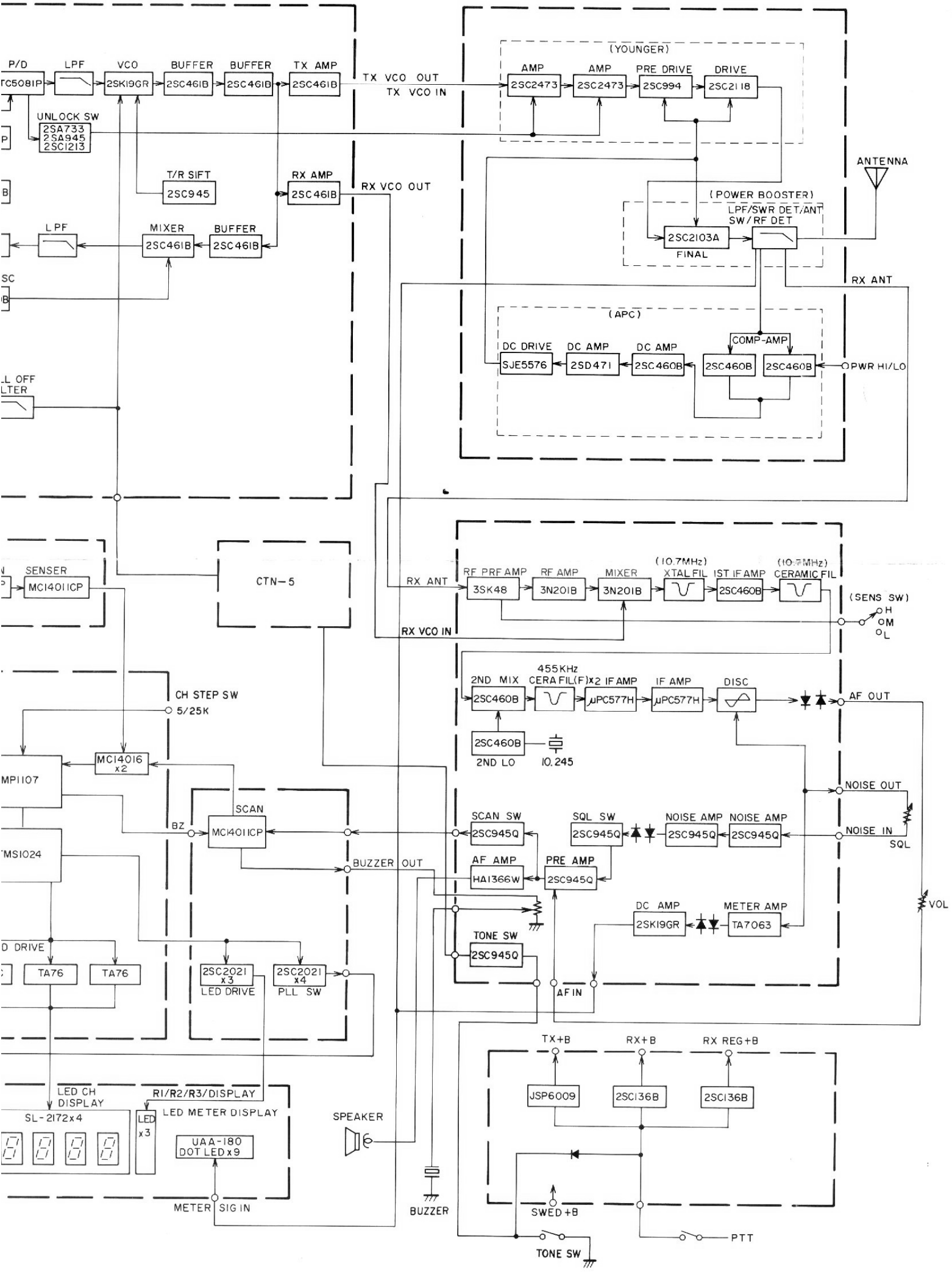
P/D
LPF
VCO
BUFFER
BUFFER
TX AMP
TX VCO OUT
TX VCO IN
(YOUNGER)
AMP
AMP
PRE DRIVE
DRIVE
2SC2473
2SC2473
2SC994
2SC2118
UNLOCK SW
2SA733
2SA945
2SC1213
T/R SIFT
2SC945
RX AMP
2SC461B
RX VCO OUT
ANTENNA
(POWER BOOSTER)
LPF/SWR DET/ANT SW/RF DET
2SC2103A
FINAL
LPF
MIXER
BUFFER
RX ANT
(APC)
COMP-AMP
DC DRIVE
DC AMP
DC AMP
SJE5576
2SD471
2SC460B
2SC460B
2SC460B
PWR HI/LO
SENSER
MC14011CP
CTN-5
RX ANT
RF PRE AMP
RF AMP
MIXER
(10.7MHz)
XTAL FIL
IST IF AMP
(10.7MHz)
CERAMIC FIL
3SK48
3N201B
3N201B
2SC460B
(SENS SW)
H
M
L
RX VCO IN
455KHz
2ND MIX
CERA FIL(F)x2 IF AMP
IF AMP
DISC
2SC460B
μPC577H
μPC577H
AF OUT
2SC460B
2ND LO
10.245
CH STEP SW
5/25K
MC14016 x2
MPI107
NOISE OUT
SCAN
BZ
MC14011CP
SCAN SW
2SC945Q
SQL SW
2SC945Q
NOISE AMP
2SC945Q
NOISE AMP
2SC945Q
NOISE IN
SQL
MSI024
BUZZER OUT
AF AMP
HA1366W
PRE AMP
2SC945Q
VOL
DC AMP
2SK19GR
METER AMP
TA7063
TONE SW
2SC945Q
D DRIVE
TA76
TA76
2SC2021 x3
LED DRIVE
2SC2021 x4
PLL SW
AF IN
TX+B
RX+B
RX REG+B
JSP6009
2SC136B
2SC136B
LED CH DISPLAY
SL-2172x4
R1/R2/R3/DISPLAY
LED METER DISPLAY
LED x3
UAA-180
DOT LED x9
SPEAKER
METER SIG IN
BUZZER
SWED+B
PTT
TONE SW

Scanned by I6AAD
Downloaded by
RadioAmateur.EU

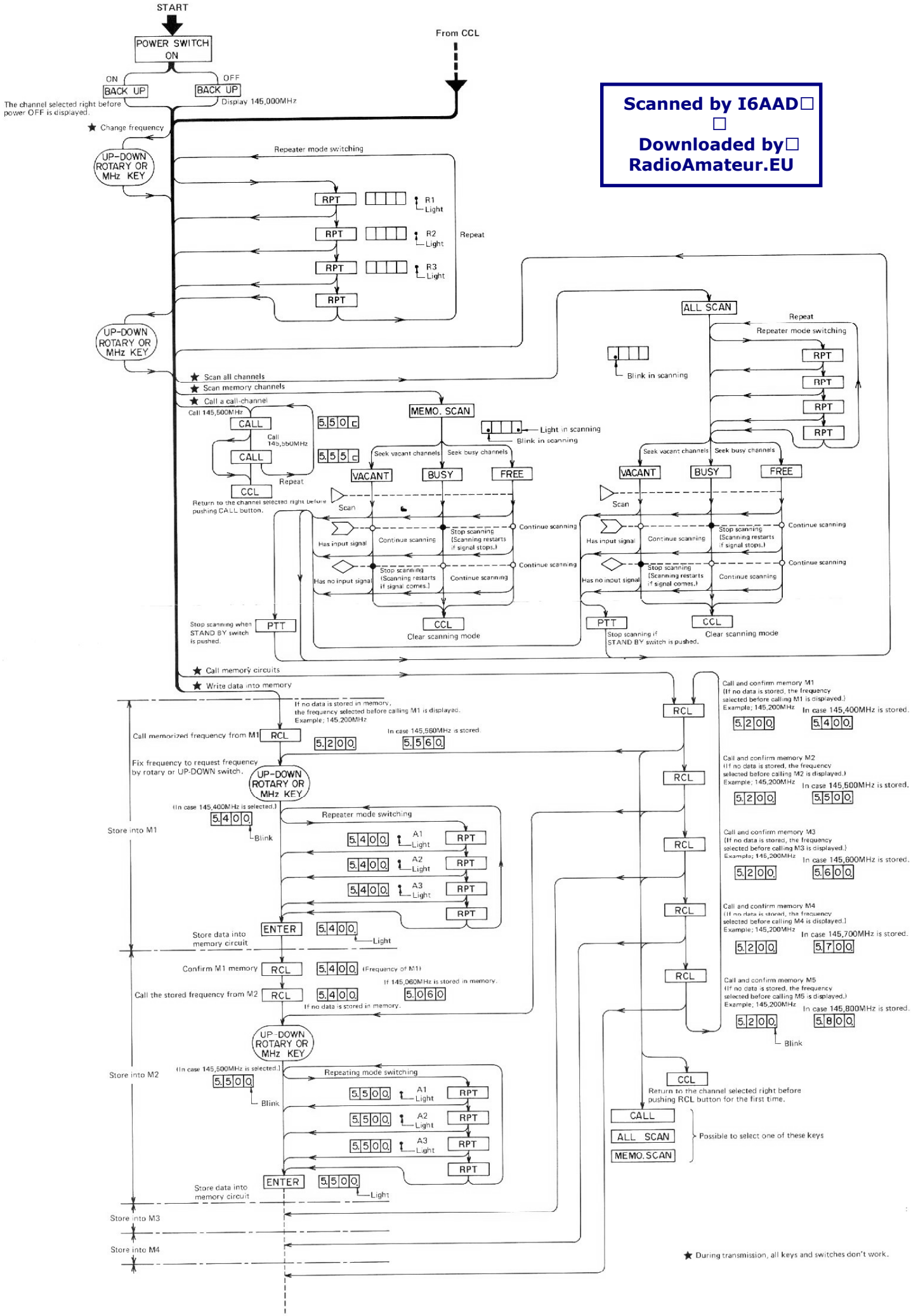

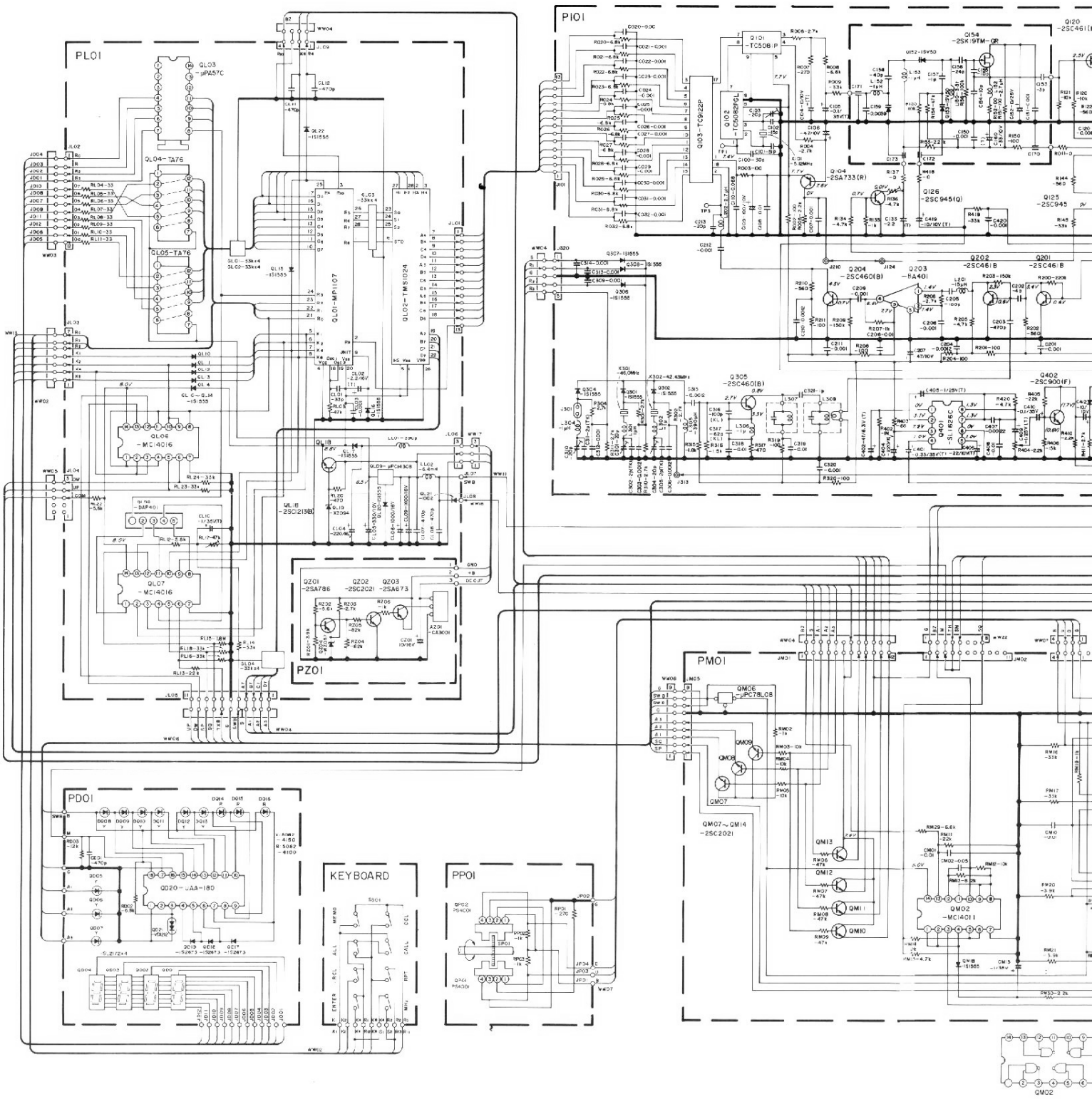
PL01
PI01
PZ01
PD01
KEYBOARD
PP01
PM01
QL01-MPI1107
QL02-TMS1024
QL04-TA76
QL05-TA76
QL03-μPA57C
QL06-MC14016
QL07-MC14016
QL18-2SC2138
QZ01-2SA786
QZ02-2SC2021
QZ03-2SA673
Q101-TC5081P
Q102-TC5082PGL
Q103-TC9122P
Q154-2SK19TM-GR
Q126-2SC945(Q)
Q125-2SC945
Q204-2SC460(B)
Q203-2SA401
Q202-2SC461(B)
Q201-2SC461(B)
Q305-2SC460(B)
Q402-2SC900(F)
Q401-SLR626C
QM06-μPC78L08
QM07~QM14-2SC2021
QM02-MC14011
QD20-UAA-180
QM02

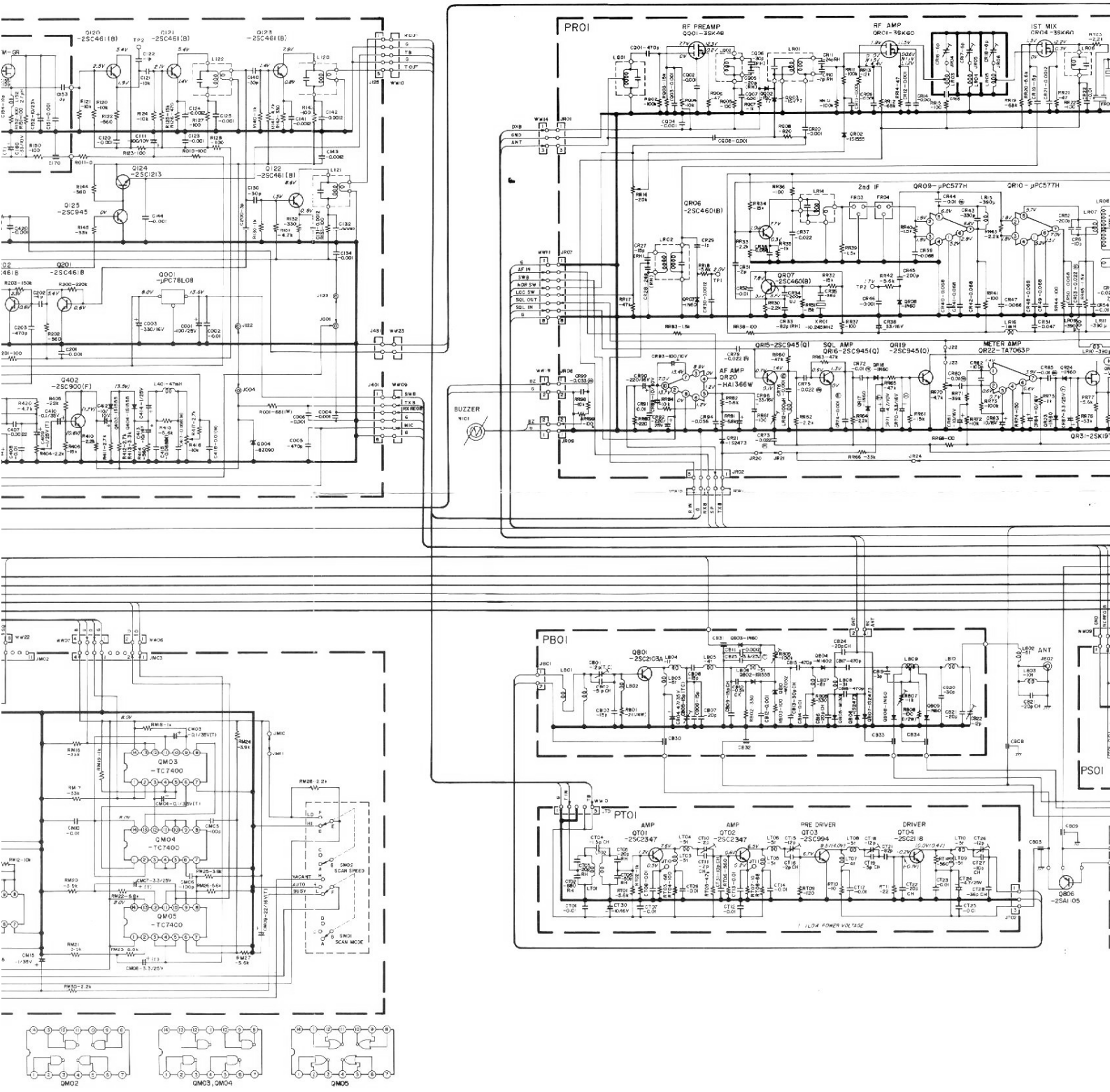
PR01
RF PREAMP
Q001-3SK48
RF AMP
QR01-3SK60
1ST MIX
QR04-3SK60
2nd IF
QR09-μPC577H
QR10-μPC577H
QR06
-2SC460(B)
QR07
-2SC460(B)
QR15-2SC945(Q)
SQ. AMP
QR16-2SC945(Q)
QR19
-2SC945(Q)
METER AMP
QR22-TA7063P
AF AMP
QR20
-HA1366W
BUZZER
Q120
-2SC461(B)
Q121
-2SC461(B)
Q123
-2SC461(B)
Q124
-2SC1213
Q125
-2SC945
Q122
-2SC461(B)
Q201
-2SC461B
Q001
-μPC78L08
Q402
-2SC900(F)
PB01
Q801
-2SC2103A
PT01
AMP
QT01
-2SC2347
AMP
QT02
-2SC2347
PRE DRIVER
QT03
-2SC994
DRIVER
QT04
-2SC2118
Q806
-2SA1105
PS01
QM03
-TC7400
QM04
-TC7400
QM05
-TC7400
SCAN SPEED
SCAN MODE
QM02
QM03, QM04
QM05
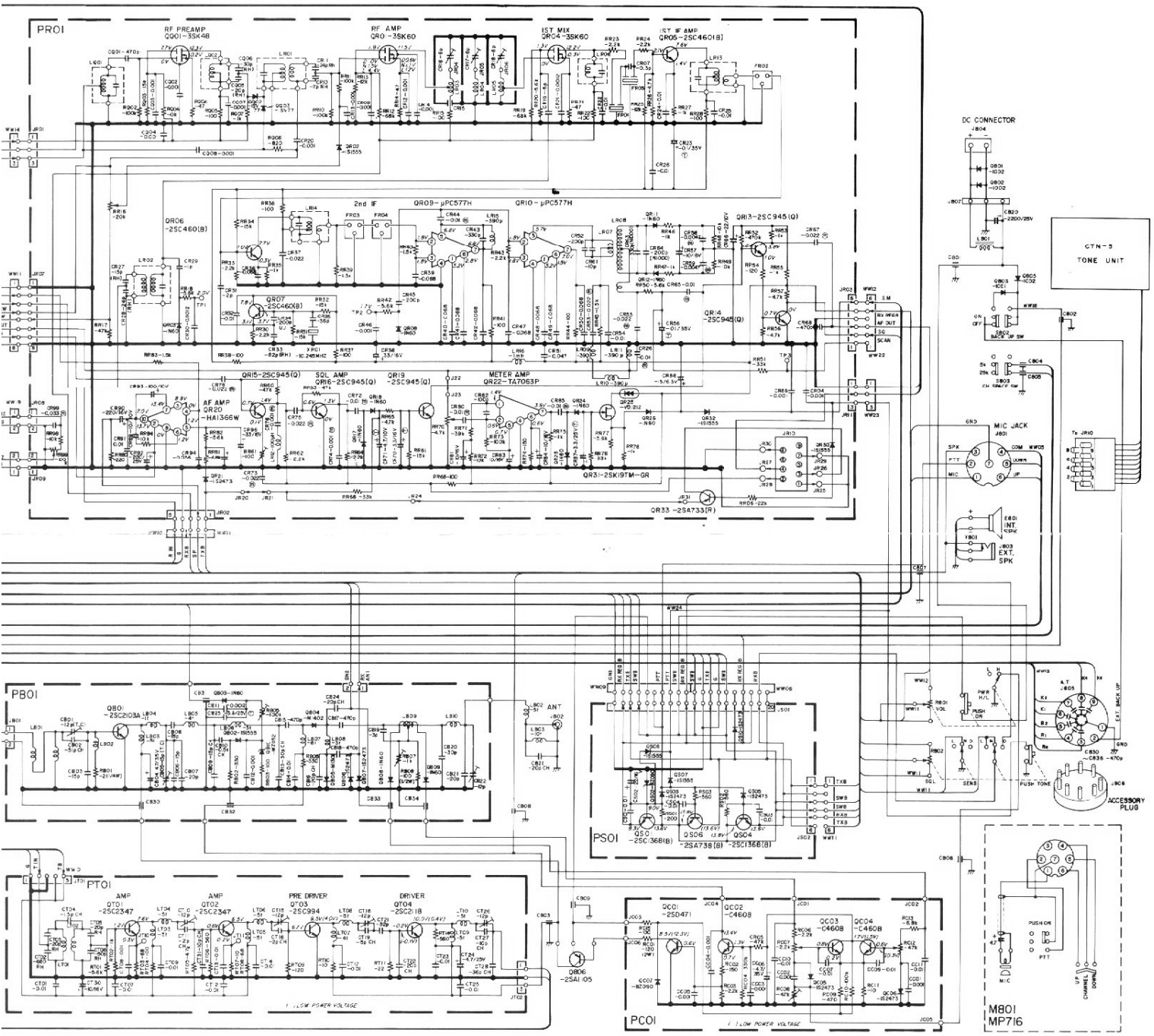
Scanned by I6AAD
Downloaded by
RadioAmateur.EU