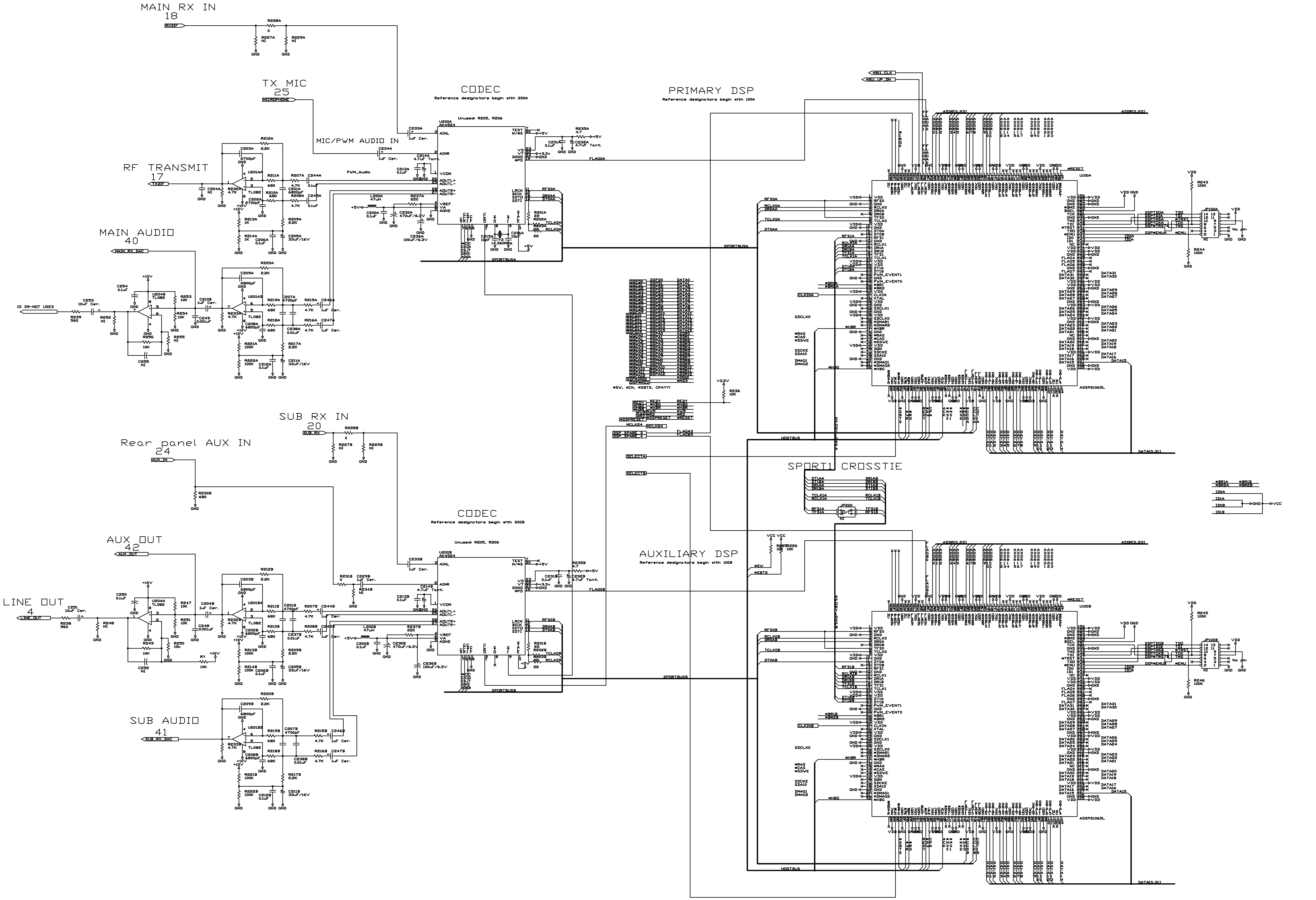

Size	Document Number	REV
E		
Date: February 16, 2006	Sheet 10 of 11	