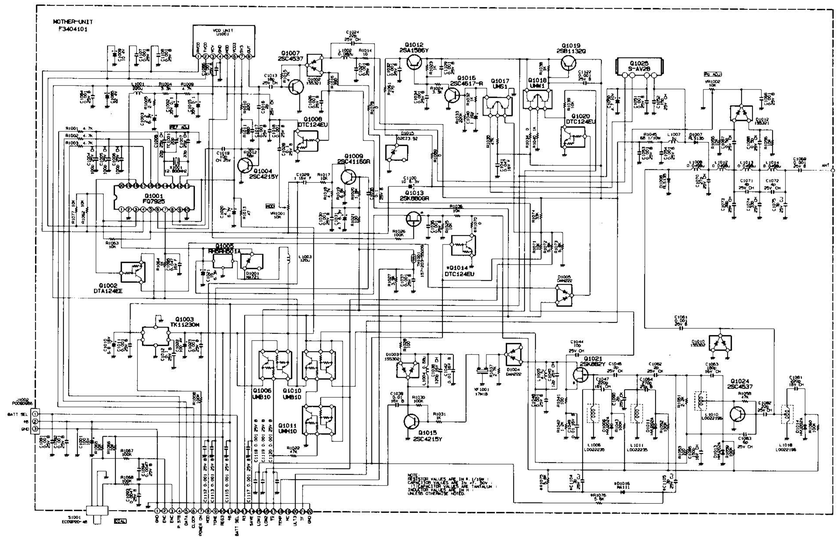

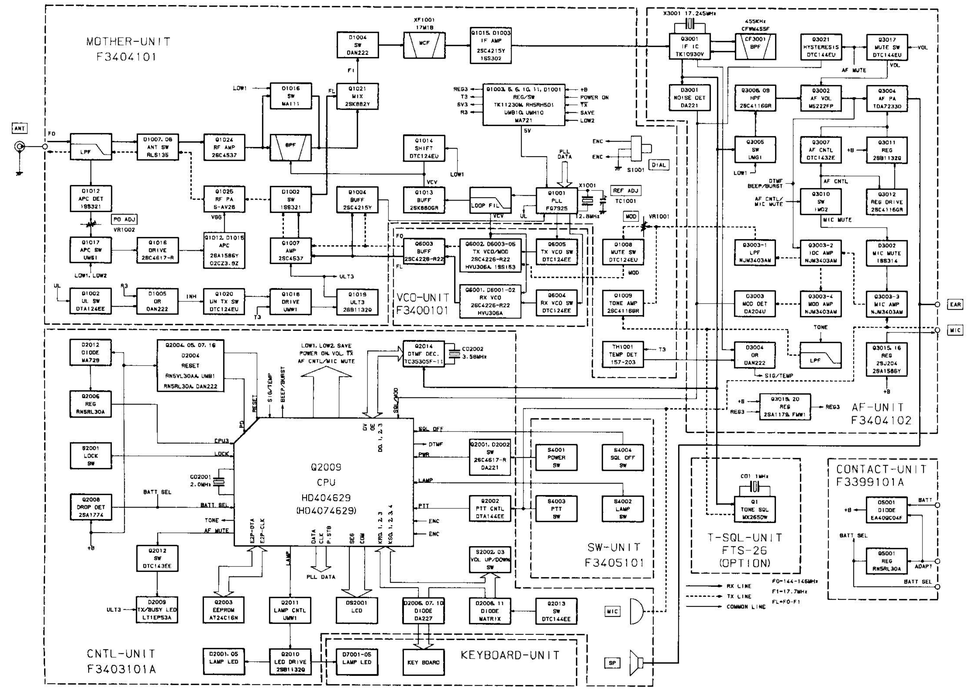

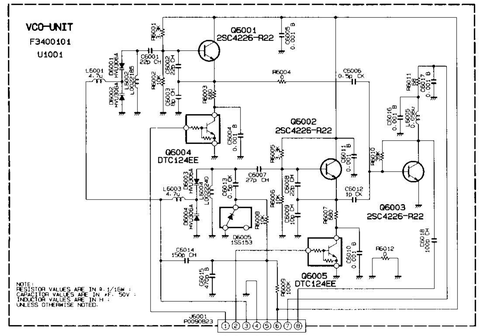

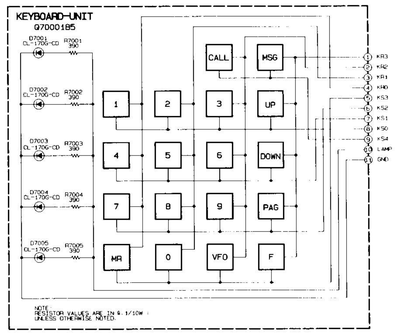

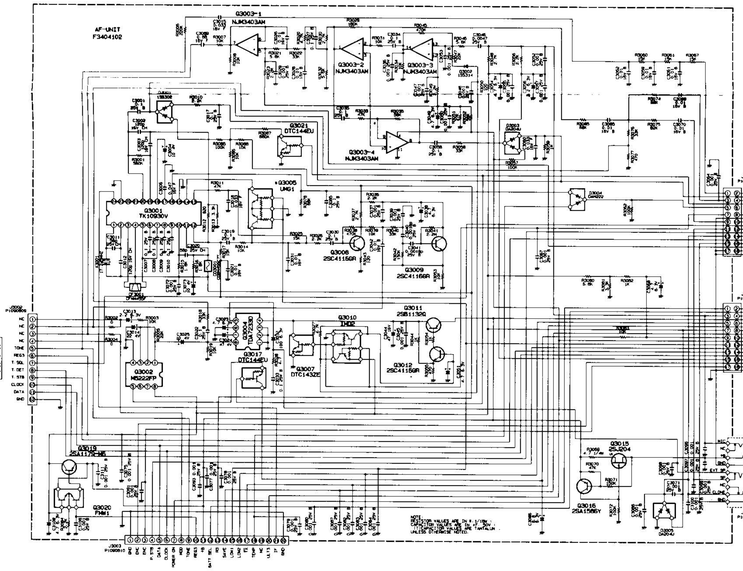

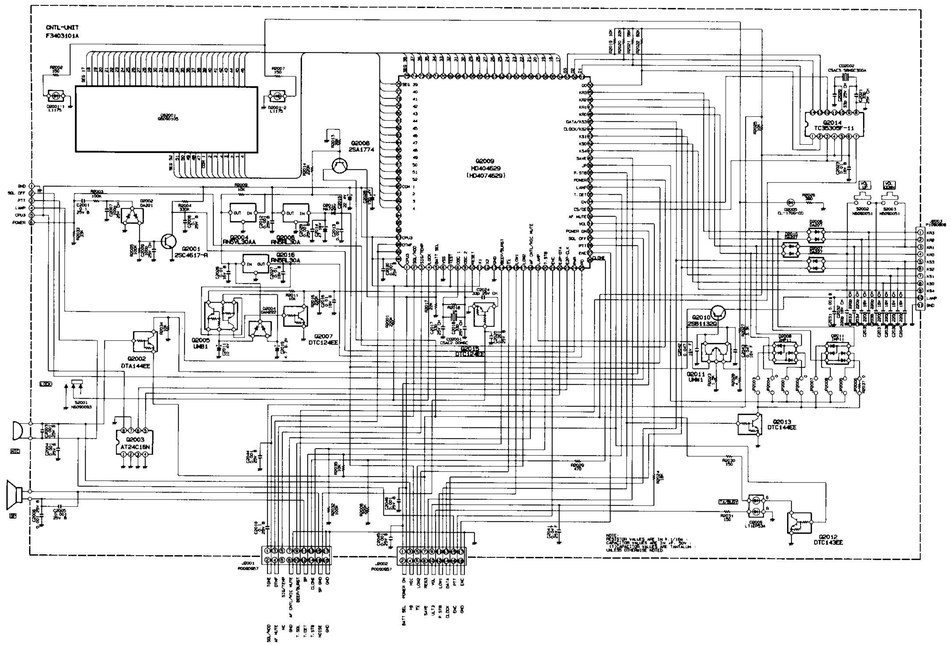

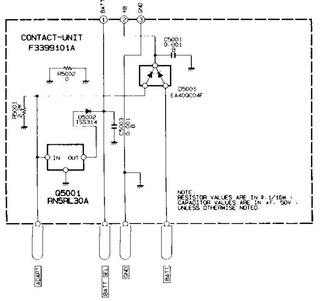

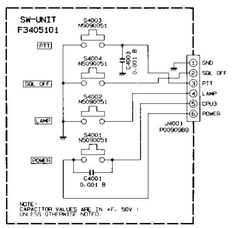

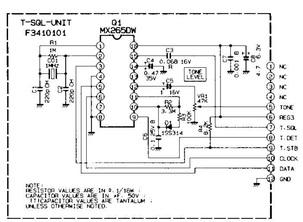

FT-11R Circuit Diagram