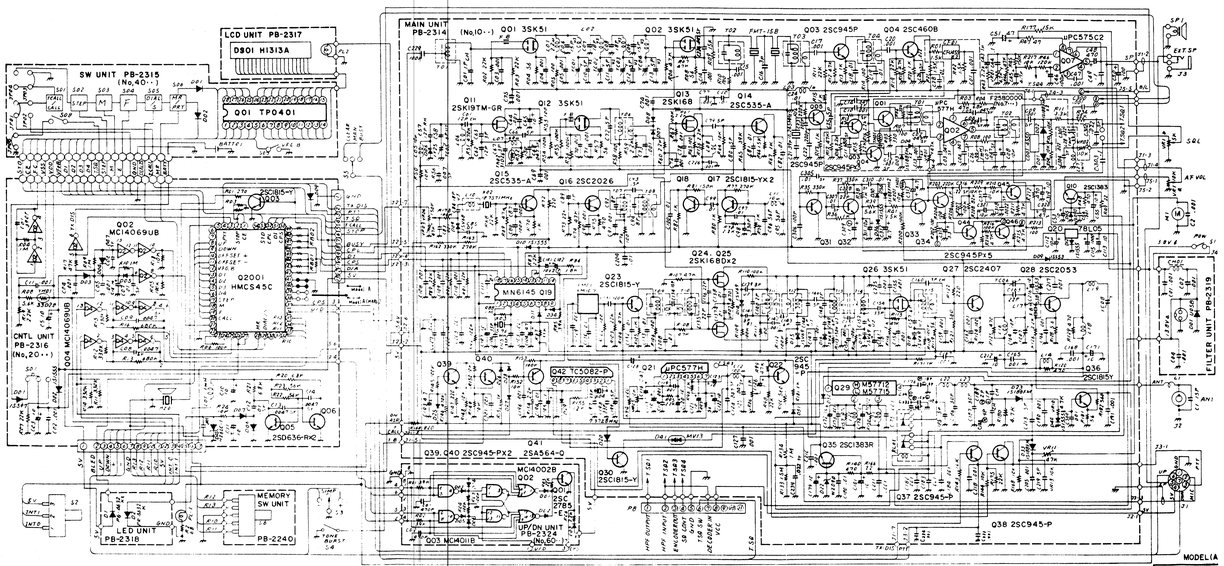


NOTE: 1 RESISTOR VALUES IN Ω, 1/4W, ±5% UNLESS OTHERWISE NOTED
2 CAPACITOR VALUES IN μF UNLESS OTHERWISE NOTED
3 ALL DIODES ARE 1SS53 UNLESS OTHERWISE NOTED
4 VALUE IS NOMINAL
5 ⊗ MARK FT-230R(H) 25W TYPE ⊗ MARK FT-230R 10W TYPE

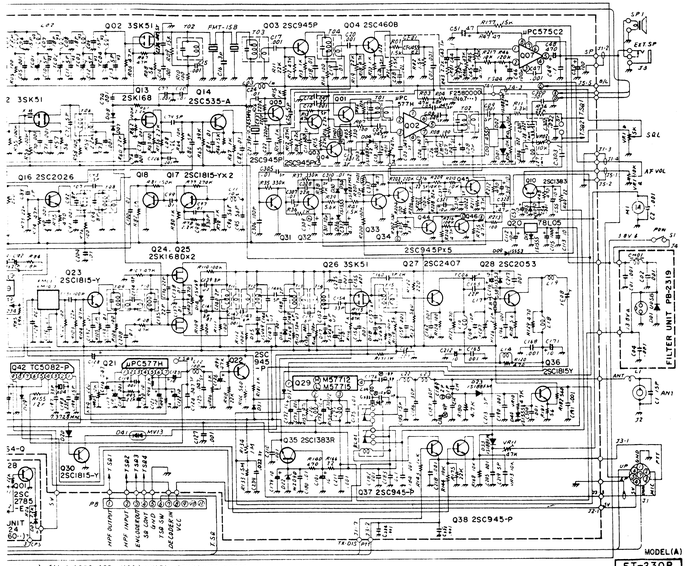


NOTE: 3 ALL DIODES ARE 1SS53 UNLESS OTHERWISE NOTED
4 VALUE IS NOMINAL
5 ⊗ MARK FT-230R(H) 25W TYPE ⊗ MARK FT-230R 10W TYPE

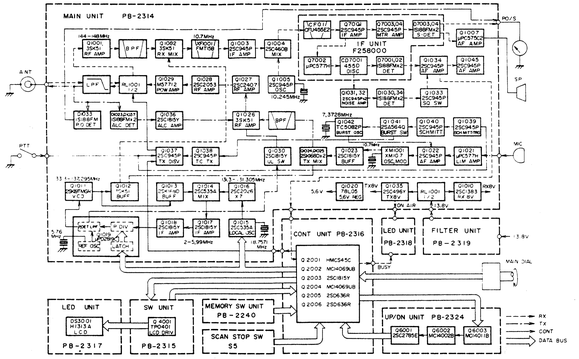


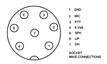

FT-230R
BLOCK DIAGRAM

Downloaded by
RadioAmateur.EU