SCHEMATIC DIAGRAM MODEL GFP-565

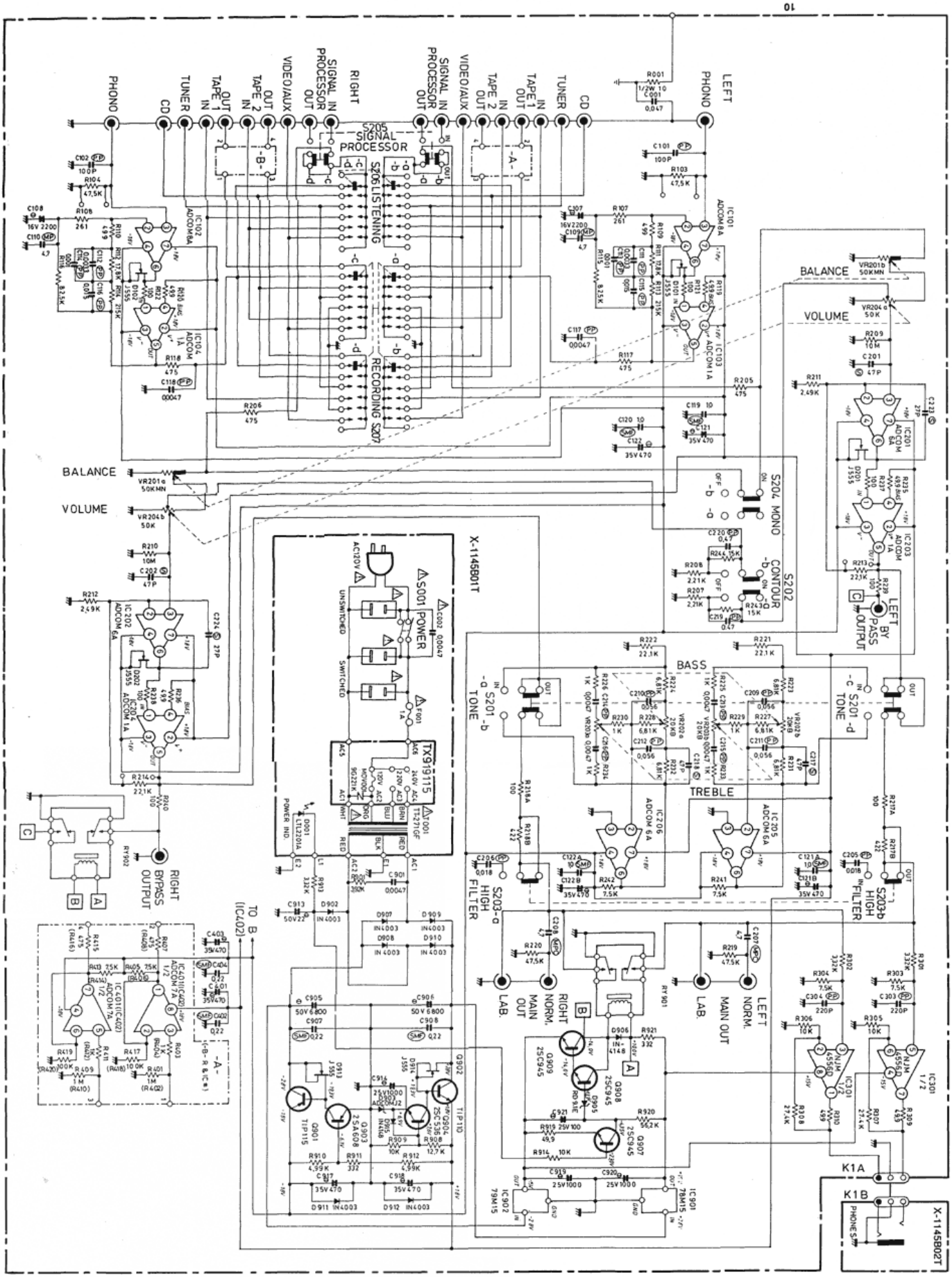

NOTE: ADCOM RESERVES THE RIGHT TO MODIFY CIRCUITRY AND/OR CHANGE COMPONENTS TO UPGRADE PRODUCT WITHOUT PRIOR NOTICE OR INCURRING ANY LIABILITY.

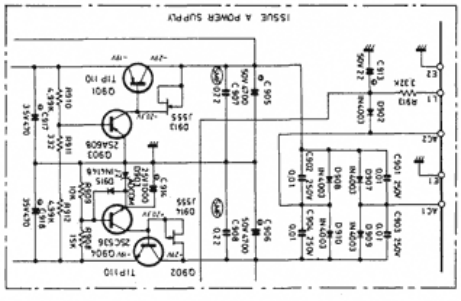

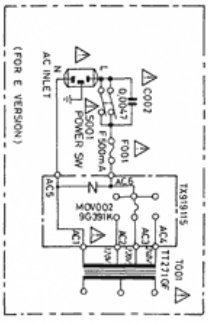

INSTRUCTIONS FOR SERVICING PERSONNEL:

1). USE ONLY REPLACEMENT PARTS THAT HAVE THE CRITICAL CHARACTERISTICS RECOMMENDED BY MANUFACTURER.
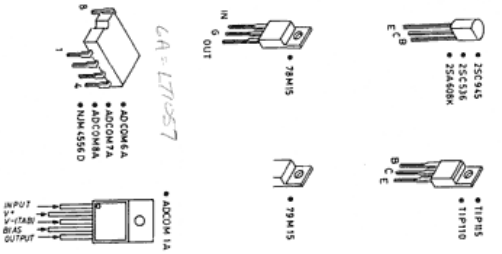
2). MAKE LEAKAGE-CURRENT OR RESISTANCE MEASUREMENTS TO DETERMINE THAT EXPOSED PARTS ARE ACCEPTABLY INSULATED FROM THE AC SUPPLY CIRCUIT BEFORE RETURNING THE UNIT TO THE CUSTOMER.