Alesis QuadraVerb Service Manual

Revision 1.00

6/28/94

PREFACE

This document is intended to assist the service technician in the operation, maintenance and repair of the QuadraVerb digital effects processor. Together with the QuadraVerb Reference Manual, this document provides a complete description of the functionality and serviceability of the QuadraVerb. Any comments or suggestions you may have pertaining to the document are welcome and encouraged.

READ THIS!

In addition to any purchase price that Alesis may charge as consideration for Alesis selling or otherwise transferring this service manual ("Manual") to you, if you are not a service and repair facility ("Service Center") authorized by Alesis in writing to be an authorized Service Center, Alesis sells or transfers the Manual to you on the following terms and conditions:

Only Service Centers authorized by Alesis in writing are authorized to perform service and repairs covered by an Alesis warranty (if any), and transfer of the Manual to you does not authorize you to be an authorized Service Center. **Therefore, if you perform, or if the Manual is used to perform, any service or repairs on any Alesis product or part thereof, any and all warranties of Alesis as to that product and any service contract with Alesis for that product shall be voided and shall no longer apply for such product, even if your services or repairs were done in accordance with the Manual**.

All service or repairs done by you or with reference to the Manual shall be solely your responsibility, and Alesis shall have no liability for any such repairs or service work. **All such service or repairs are performed at the sole risk of the person performing the service or repairs**. You agree that all such work will be performed in a competent, professional and safe manner at all times and to indemnify and fully hold Alesis and its successors and assigns harmless in the event of any failure to so perform.

Your purchase of the Manual shall be for your own ultimate use and shall not be for purposes of resale or other transfer.

As the owner of the copyright to the Manual, Alesis does not give you the right to copy the Manual, and you agree not to copy the Manual without the written authorization of Alesis. Alesis has no obligation to provide to you any correction of, or supplement to, the Manual, or any new or superseding version thereof.

Alesis shall have the right to refuse to sell or otherwise transfer repair parts or materials to you in its sole discretion. You shall not use, sell or otherwise transfer spare or replacement parts supplied by Alesis to you (i) to repair or be used in products manufactured for or by third parties or (ii) to any third parties for any purpose.

You shall not make any warranties or guarantees with respect to the products of Alesis or the use thereof on behalf of Alesis or in your own name.

The foregoing describes the entire understanding related to sale or transfer of the Manual to you, and no other terms shall apply unless in a writing signed by an authorized representative of Alesis.

WARNINGS

TO REDUCE THE RISK OF ELECTRIC SHOCK OR FIRE, DO NOT EXPOSE THIS PRODUCT TO WATER OR MOISTURE.

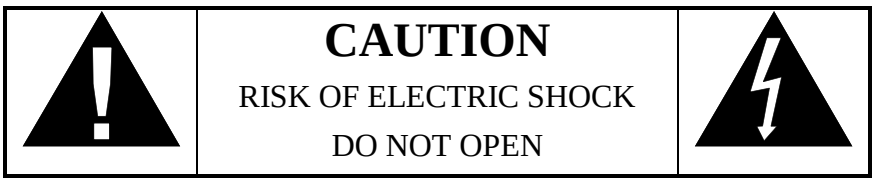

The arrowhead symbol on a lightning flash inside a triangle is intended to alert the user to the presence of un-insulated "dangerous voltage" within the enclosed product which may be of sufficient magnitude to constitute a risk of electric shock to persons.

The exclamation point inside a triangle is intended to alert the user to the presence of important operating, maintenance and servicing instructions in the literature which accompanies the product.

CAUTION

Danger of explosion if battery is incorrectly replaced.
Replace only with the same type or equivalent type
recommended by the equipment manufacturer.
Battery Manufacturer: Tadiran
Type: TL-5101
Rating 3.6V

REPAIR BY ANY PERSON OR ENTITY OTHER THAN AN AUTHORIZED ALESIS SERVICE CENTER WILL VOID THE ALESIS WARRANTY.

PROVISION OF THIS MANUAL DOES NOT AUTHORIZE THE RECIPIENT TO COMPETE WITH ANY ALESIS DISTRIBUTOR OR AUTHORIZED REPAIR SERVICE CENTER IN THE PROVISION OF REPAIR SERVICES OR TO BE OR MAKE REPAIRS AS AN AUTHORIZED SERVICE CENTER.

ALL REPAIRS DONE BY ANY ENTITY OTHER THAN AN AUTHORIZED ALESIS SERVICE CENTER SHALL BE SOLELY THE RESPONSIBILITY OF THAT ENTITY, AND ALESIS SHALL HAVE NO LIABILITY TO THAT ENTITY OR TO ANY OTHER PARTY FOR ANY REPAIRS BY THAT ENTITY.

SAFETY SUGGESTIONS

Carefully read the applicable items of the operating instructions and these safety suggestions before using this product. Use extra care to follow the warnings written on the product itself and in the operating instructions. Keep the operating instructions and safety suggestions for reference in the future.

1. Power Source. The product should only be connected to a power supply which is described either in the operating instructions or in markings on the product.

2. Power Cord Protection. AC power supply cords should be placed such that no one is likely to step on the cords and such that nothing will be placed on or against them.

3. Grounding the Plug. This product has a 3-wire grounding type of plug (a plug with a grounding pin) for safety purposes. This plug can only be used in a grounding power outlet. If the plug does not insert into the outlet you are using, the outlet probably is not a grounding type of power outlet. Contact your electrician to replace the obsolete outlet with a grounding type of outlet instead of defeating the safety feature of the grounding type of plug.

4. Periods of Non-use. If the product is not used for any significant period of time, the product's AC power supply cord should be unplugged from the AC outlet.

5. Foreign Objects and Liquids. Take care not to allow liquids to spill or objects to fall into any openings of the product.

6. Water or Moisture. The product should not be used near any water or in moisture.

7. Heat. Do not place the product near heat sources such as stoves, heat registers, radiators or other heat producing equipment.

8. Ventilation. When installing the product, make sure that the product has adequate ventilation. Improperly ventilating the product may cause overheating, which may damage the product.

9. Mounting. The product should only be used with a rack which the manufacturer recommends. The combination of the product and rack should be moved carefully. Quick movements, excessive force or uneven surfaces may overturn the combination which may damage the product and rack combination.

10. Cleaning. The product should only be cleaned as the manufacturer recommends.

11. Service. The user should only attempt the limited service or upkeep specifically described in the operating instructions for the user. For any other service required, the product should be taken to an authorized service center as described in the operating instructions.

12. Damage to the Product. Qualified service personnel should service the unit in certain situations including without limitation when:

a. Liquid has spilled or objects have fallen into the product,
b. The product is exposed to water or excessive moisture,
c. The AC power supply plug or cord is damaged,
d. The product shows an inappropriate change in performance or does not operate normally, or
e. The enclosure of the product has been damaged.

General Troubleshooting

While this manual assumes that the reader has a fundamental understanding of electronics and basic troubleshooting techniques, a review of some of the techniques used by our staff may help.

1. Visual Inspection - A short visual inspection of the unit under test will often yield results without the need of complex signal analysis (burnt, or loose components are a dead giveaway).
2. Self Test - Alesis products that utilize microprocessor control contain built in test software which exercises many of the units' primary circuit functions. Self test should always be done following any repair to ensure basic functionality.
3. Environmental Testing - Applying heat and cold (heat gun/freeze spray) will often reveal thermally intermittent components (Clock crystals, I.C.s, and capacitors are particularly prone to this type of failure).
4. Burn in Testing - Leaving a unit running overnight often reveals intermittent failures such as capacitors that begin to leak excess current after a significant amount of time.
5. Cable Checks - Wiggling cables can reveal intermittent failures such as loose cables or poorly soldered headers. Remember to check power supply cables as well.
6. Flexing the PC Board - Poor solder joints and broken traces can often be found by pressing the PC Board in various places.
7. Tapping Componants - Somtimes tapping on a component (particularly crystals) will cause it to fail.
8. Power Down/up - Turning the unit off and back on rapidly several times may reveal odd reset and/or power supply failures.
9. Reset Threshold - A Variac (variable transformer) can be used to check reset threshold levels. This can be particularly useful in helping customers with low line problems.
10. Compressors - Using a compressor/limiter is often helpful when attempting to solve low level noise problems, as well as assisting with DAC adjustments.
11. Sweep Tests - Sweep generators are very useful in checking the frequency response envelopes of anti-aliasing filters.
12. Piggybacking - Piggybacking I.C.s is particularly useful when troubleshooting large sections of logic. This is especially true when working with older units.

Table of Contents

PREFACE ii
READ THIS! ii
WARNINGS iii
SAFETY SUGGESTIONS iv
General Troubleshooting v
1.0 QuadraVerb General Description 1
2.0 Power Supply 1
2.1 Battery Backup 2
3.0 Analog Signal Paths 2
3.1 Anti-Aliasing Filters 3
3.2 Successive Approximation 3
4.0 Digital Signal Paths 4
4.1 80C31 Micro Controller Circuit 4
4.2 Reset 4
4.3 Memory Mapped I/O 5
4.4 Analog Input and the 8031 5
4.5 DASP 24 ASIC 5
5.0 Test Procedures 6
6.0 Adjustments 6
7.0 Updates and Revisions 6
7.1 D15 7
7.2 Header Capacitor 7
7.3 R66 7
7.4 SRAM Supply 7
7.5 Battery Ground 7
7.6 Cables 7
7.5 LCD Contrast 7
7.6 LCD Cable Header 7
7.7 Wet VCA Removal 7
7.8 DAC Adjustment Installation 8
7.9 Increasing Output Gain 8
7.10 QV I/P Filter Kit Installation 8
8.0 Helpful Hints & Common Solutions 12
9.0 Schematics 14
10.0 Software History 16
11.0 Quadraverb Plus MIDI Implementation/System Exclusive 18
12.0 Quadraverb Service Parts List 34
Index 37
Service Manual History 39

1.0 QuadraVerb General Description

The QuadraVerb, and other digital reverbs, achieve their results by slicing analog signals into segments, and then converting them to a numeric value, corresponding to the amplitude of the signal at that particular instant. These values are then mathematically manipulated, and stored at various locations in a memory "loop" for eventual playback. By varying the placement and amplitude of incoming samples, discrete time delays are achieved. When mixed together, and converted back into analog, these delays simulate the reflections associated with natural reverbs, and delays, as well as non natural effects such as reverse reverbs, and gated reverbs. The added capabilities of an 80C31 micro controller allow for user manipulation and storage of algorithm parameters, as well as effects such as chorus, and flange, that require real-time manipulation of algorithms. Please note that there are several different main PCB revisions, so differences will be noticed from unit to unit.

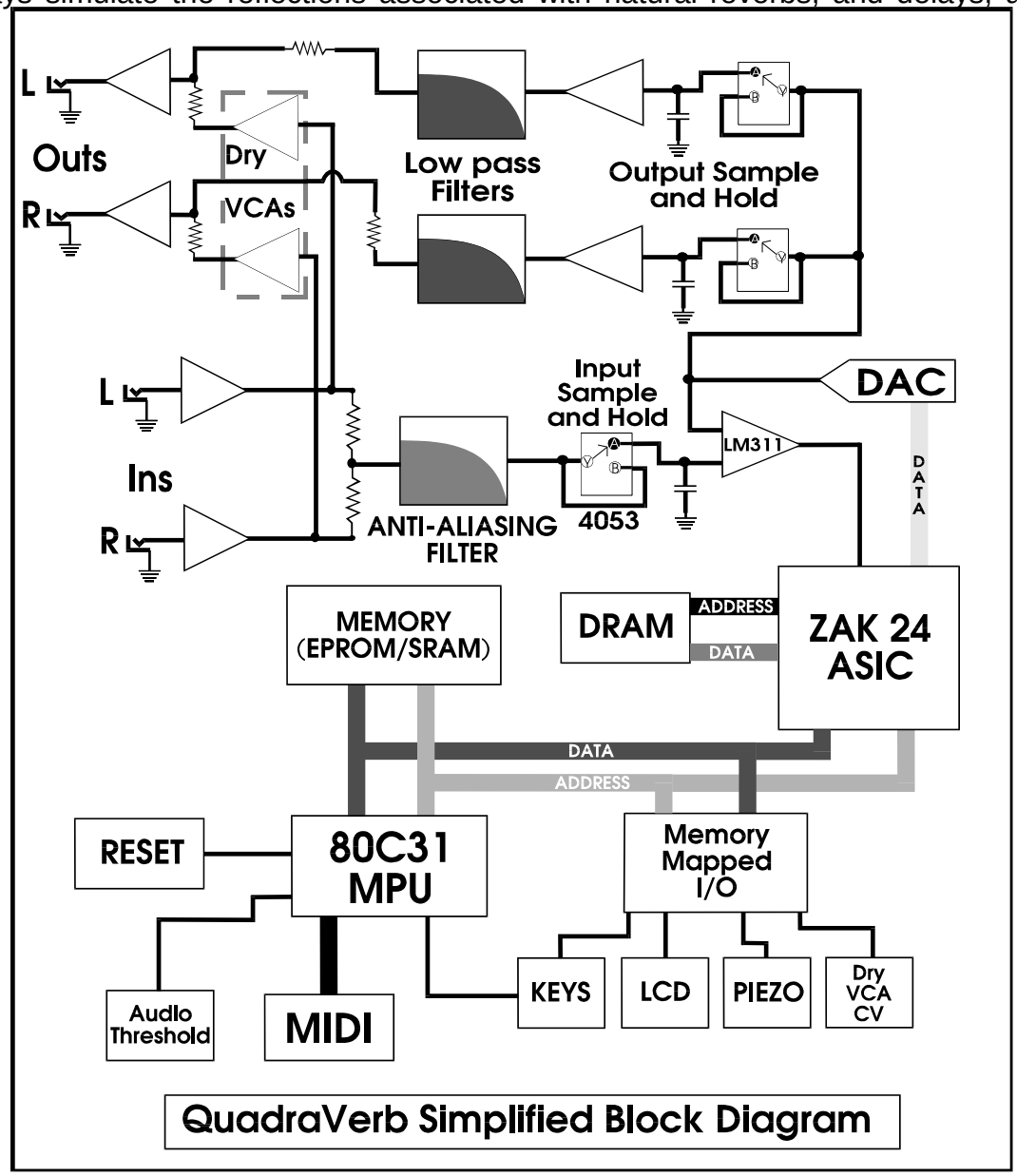

Diagram 1

2.0 Power Supply

The power supply begins with the 9 Volt A.C., adapter. Input from J6 is R.F. filtered by C31 before on/off switch S1. From there it is split for the +12V, -12V, and +5V rails. The +12V rail consists of a voltage doubler (C22, C24, and D13, D14), a 7812 regulator (U31), and filter caps (C3, C14). The -12V rail is a "mirror" of the +12V rail, consisting of voltage doubler (C21, C23, and D10, D11), a 7912 regulator, and filter capacitors (C7, and C15). The +5V rail consists of a rectifier diode (D12), filter capacitors (C17-C20), a 7805 regulator, and a multitude of 0.1uF bypass capacitors. Note that the raw +10V line used by the microprocessor reset, and the SRAM power supply (when retrofitted), and is located at the input to the 7805 regulator.

2.1 Battery Backup

Battery backup is actually more complicated than it might first appear, as it depends on a good system reset (see section 4.2 for details) in order to function properly. The actual backup circuit consists of a battery (3V - 3.6V Lithium), a 10K resistor (R61) for checking standby current (see below), a "steering" diode (D4), a filter capacitor (C16), and a transistor/resistor/diode combination that acts as a steering diode. This combination may be missing on older board revisions, and must be installed (see section 7.0) to prevent data corruption due to a significant difference between V^{CC}, and the amplitude of the data buss.

SRAM standby current should always be checked. While the unit is off, check the voltage across R61. If the voltage is higher than 80mV (specification, although a 1 to 20mV range is more normal) then a problem exists. Usually it indicates a bad (or simply wrong) SRAM, or a short, somewhere along the MEM PWR line. Note, that for a short time, Sony 58256-PM (high power) SRAMs were being installed at the factory, and should be replaced with low power versions (58256-LP) when found (see section 7.0.), in order to eliminate excess battery drain. We are currently using Hitachi 62256ALPs as replacements.

CAUTION: Danger of explosion if battery is incorrectly replaced. Replace only with the same type or equivalent type recommended by the equipment manufacturer.
Battery Manufacturer: Tadiran
Type: TL-5101
Rating 3.6V

3.0 Analog Signal Paths

The inputs (stereo) have their impedances fixed at 1M by R3 and R6. While operating the unit monauraly (left input only) the input impedance fixed at 500K (R3, and R6, in parallel). From there, the inputs are buffered by U1, A.C. coupled (C1, C2), and passed through a variable (input level), X10, gain stage. The stereo signal is then sent to the outputs via the dry VCA (U5). It is also summed to mono (Via R17, R18) before being passed along to the anti-aliasing filter (discussed later), and the LED control circuit. The LED circuit consists of a rectifier (U4, D2), a fairly standard comparator ladder (U7 & associated resistors), and a one shot multivibrator (U24, D3, etc.) to provide a time constant so that ASIC math overflow conditions stay highly visible.

The summed stereo signal, after passing through the anti-aliasing filter, continues into the input sample and hold circuit. The input sample and hold circuit consists of 1/3 of the 4053 analog switch (U9), the input sample cap (C38), a buffer amplifier (U3), and a comparator (U8).

The signal beyond this point is purely digital, until the DAC output cycle of the DASP 24. At the appropriate time, the DAC will output the processed left, and right signals. This action is coordinated with the two output sample and hold circuits (2/3 U9, 2 op amps of U3, C39, C40), so that each receives the correct, separate signal for stereo output. After passing through low pass filters (2 op amps of U4, Misc. Resistors & Capacitors), the signals are summed with the output of the dry VCAs (note that on older board revisions, the signal will pass through the wet VCA [U6] first). The signals then pass through another filter section (U2, etc.), to the output potentiometer. From here, they pass through unity gain amps (U2, etc.), and finally through impedance fixing resistors R9, and R14, to the output jacks. Note that some incompatibilities have been encountered when using the QuadraVerb with some particular amplifier effects loops. If the customer is experiencing level drops when using the unit in such a setup, it is possible to adjust the output stage gain to accommodate the amplifier (see section 7.11).

3.1 Anti-Aliasing Filters

Different QuadraVerb PCB revisions utilize 3 different types anti-aliasing filters, to eliminate Nyquist errors. The 1st is a four pole active filter, and will be seen on the oldest PCB revisions (A through E). If problems occur when using these older board revisions with digital synth's, and some "hot" guitar pickups, it will be necessary to upgrade this filter to a type 2. The type 2 filter is a six pole version of the active filter, and includes a pre-emphasis curve. It will only be seen on older board rev.s that have been upgraded. The 3rd type of filter is the LC block filter. This single component filter is seen on revision F, and later, boards. It eliminates the need for active circuitry, as well as facilitating easier servicing.

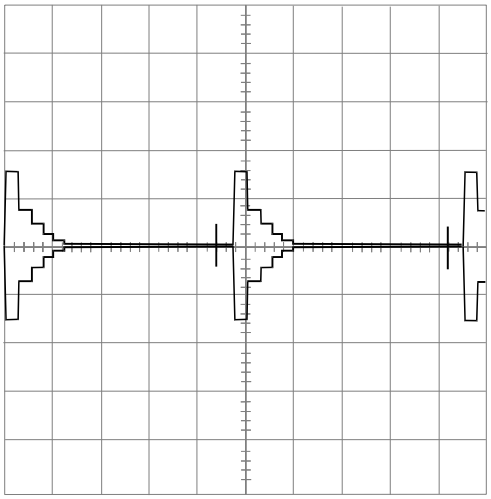

QV "Typical" DAC output w/ inactive SAR

Diagram 2

3.2 Successive Approximation

Successive approximation is a heuristic approach to the process of analog to digital conversion. The idea is to divide the process into short, manageable sections. Each significant binary weight (starting with the Most Significant Bit) is taken in turn, thus requiring only 16 comparisons to achieve a final value.

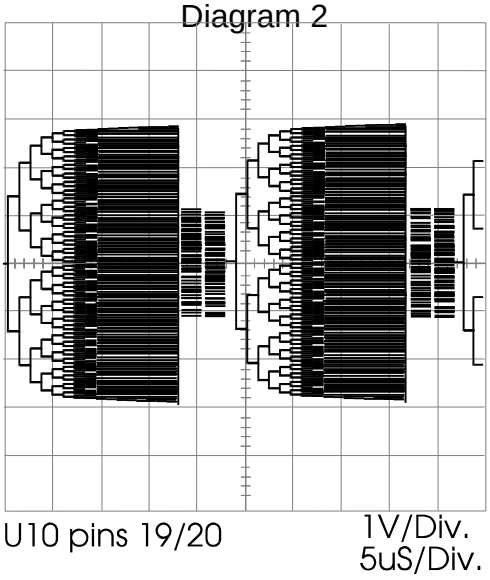

QV "Typical" DAC Output w/ active SAR

Diagram 3

The process begins with the input "sample and hold circuit". 1/3 of the 4053 (U9) is turned on, allowing the input sample capacitor (C38) to charge [or discharge] to the level of the current input signal. When the switch is turned off, the capacitor will hold that level indefinitely [barring internal leakage]. At this point, the SAR (Successive Approximation Register-part of the DASP 24 ASIC) will take over. Starting with the MSB, the SAR will set the bit, and compare the output of the DAC, to the level of the input sample capacitor (via comparator U8). The results of the

comparison are stored, and the next most significant bit is compared. This process continues until a value is found for all 16 bits, and the data is ready for further processing by the ASIC (note that the value is in two's compliment math). In order to view these signals properly on the scope, it will be necessary to use an external scope sync (use U9, pin 9 as the sync source). Diagrams 2, and 3, show the DAC output during a couple of SAR cycles, with no input, and full input.

4.0 Digital Signal Paths

Note that later board revisions incorporate a "split" data buss. In other words, most "external" data lines are separated from the main buss via a de coupling network (R35, R84-90, C28-30, C35-37, C42, C44). This is to provide better RF suppression, however, it can also cause some unique situations. Normal signals on this "secondary" buss, will appear extremely distorted (for digital signals), and sometimes lead a technician to believe that there may be a bad latch, even though all components on the buss are functioning properly. Conversely, a bad latch can load the buss in such a way, that bad timing occurs, corrupting data even though the signals appear "normal".

4.1 80C31 Micro Controller Circuit

The 80C31 MPU controls all "user interface" functions of the QuadraVerb. These functions range from handling the front panel buttons, to continuously updating algorithm information to the DASP 24 ASIC. Note that the 8031 data buss serves a dual purpose. This buss multiplexes between low order addresses (1st 8 bits), and data. Latch U20 is used to hold the low order address half, during 8031 read and write cycles. The EPROM (U19) is used to hold both program information, and algorithm data. The SRAM (U18) holds system variables, as well as user preset data. The 12MHz 8031 clock is derived from the 24MHz clock (Z1) via a divide by 2 counter (1/2 U24). MIDI I/O is handled through the 8031's built in RXD (Read Serial Data), and TXD (Transmit Serial Data) ports. Front panel keypad decoding is handled through a combination of memory mapped I/O (see section 4.3), and the 8031's built in I/O ports.

4.2 Reset

The 8031 reset circuit is perhaps the single most important circuit in the QuadraVerb. When this circuit is functioning incorrectly, problems ranging from loss of battery backup, to a complete lock-up of the machine, can occur. A thorough knowledge of the operation of this circuit will greatly facilitate troubleshooting this unit.

This circuit uses the differential between raw +10V, and regulated +5V, to generate the required signals for system reset. This is necessary due to fact that the system MUST be in a reset state while powering down, otherwise, random noise on the 8031 data, and address, busses could corrupt SRAM data, and destroy any hope that the battery backup will work. C25 acts as a long time constant, to ensure that reset line is enabled long enough for proper system reset. D7 acts as a quick discharge path for C25, ensuring that resets will occur, even if the unit is turned off, and then rapidly back on. R16, R60, R58, and D15, work together as a voltage divider to the base of Q3, and is designed so that transistor Q3 will turn on when the raw +10V supply is roughly 7V. This is to ensure that reset does not occur until after the +5V regulator is fully functioning (i.e. +5V rail is solid). If reset occurs too early, noise on the +5V rail can cause data corruption. Pull-up resistor R59 holds the input of the inverter (U25, pins 13, 12) high, until Q3 turns on, pulling the input low. When this occurs, the output of 2nd inverter (U25 pins 10, 11) will also go low, slowly, due to the time constant of R95, and C32. The power off reset is similar. When the +10V raw supply sinks below 7V, Q3 is turned off, allowing the input of the inverter (U25, pins 13,12) to pull high (via pull-up R59), and thus the same for the output of the 2nd inverter (U25, pins 10,11). Also note the tap between the two inverters, running to the input of AND gate U26 (pins 1,2, and 3). This prevents access to SRAM functions while in the reset condition, thus preventing data corruption.

4.3 Memory Mapped I/O

The QuadraVerb (and many other Alesis products) utilizes a memory mapped I/O system in order to deal with the wide variety of functions that the 8031 needs to access. During the write cycle of the 8031, data on the 8031 data buss is made available to a series of latches. When the WRN (pin 16) signal of the 8031 is enabled, and A15 (address's most significant bit) is active, the 3 to 8 line demux (U23) is used to decode the 3 least significant address lines, and send a strobe to the clock input of one of these latches. Consequently, data can be "stored" into a latch simply by writing a value into a memory location. Note that, in this scenario, data is write only. All input functions to the 8031 are handled through the 8031's built in I/O ports.

4.4 Analog Input and the 8031

While output from the 8031 can be handled simply using memory mapped I/O, and binary weighted networks, analog input to the 8031 is a bit trickier. The method used in the QuadraVerb, is to examine the time it takes a constantly charging capacitor to reach the level of the input signal. The majority of op amp U22 is used to accomplish this. We will examine the audio threshold input. The principle will also apply to the piezo (Z2) value input circuit.

The process begins with the 8031 temporarily turning on Q2 (via mapped I/O latch U29). After turning Q2 back off, the 8031 begins counting. While the 8031 is counting, C56 charges through R51. This signal is compared to the incoming rectified analog signal (from the LED control circuit) by U22 (pins 5, 6, and 7). When the charge on C56 reaches the level of the input signal, U22 pin 7 will change states, informing the 8031 via input port P3.2. The 8031 ceases counting, and can use the "count" value as a "level" value for processing.

4.5 DASP 24 ASIC

The DASP (Digital Audio Signal Processor) 24 ASIC (Application Specific Integrated Circuit), is a complex, VLSI IC designed specifically to handle the specialized needs of digital effects processing. Obviously, a full discussion of this device is beyond the scope of this manual, however, a brief introduction to the device is definitely in order.

The DASP 24 contains a SAR (Successive Approximation Register), a writable control store (internal memory for algorithm storage), and a RISC (Reduced Instruction Set Computer) for use as an Arithmetic Logic Unit. Memory management hardware, and a variety of control hardware round out the package. Some important control signals are outlined below.

Signal	Pin	Function
RAS	3	- DRAM Row Address Strobe
CAS	4	- DRAM Column Address Strobe
MDE	5	-DRAM output enable.
STB	40	- Instructs DASP 24 to accept 8031 DATA
CLK	42	- 24MHz clock from Z1
RST	53	- RESET
INH	54	- Controls sample and hold circuit timing.
SNHOUT 0	55	"
SNHOUT 1	56	"
LSTMSB	57	- This signal indicates the last state of the MSB (the sign bit in two's complement math). This signal, in conjunction with R36, R47, R48, and C13, is used to bias the incoming analog signal slightly positive, or negative, depending on the result of the last DAC cycle (i.e. if the last DAC cycle started off with a negative value, LSTMSB will be 1, causing the input to the sample and hold circuit to pull slightly positive. On the next cycle, the reverse will occur). This reduces any audio pop during the attack portion of the input signal, and allows for a faster response to small signals.
ADC	74	- A/D comparison input.
OVFLO	75	- This signal indicates a math overflow condition, and consequently turns on the clip LED circuit.
WR	84	- DRAM write enable

5.0 Test Procedures

If possible, user data should be saved (a DataDisk is recommended) prior to any servicing. This, of course, may not always be possible (i.e. dead power supply, bad reset signal, corrupt data, etc.). Saving user data may also be accomplished after unit functionality is restored (i.e. power supply, or reset line, is repaired), and prior to further servicing, and testing. The unit should always be reinitialized (power unit up while holding "BYPASS" and "PROG" buttons down) after changing the EPROM, SRAM, or any part of the battery backup. To perform the QuadraVerb's self diagnostics connect a MIDI cable between MIDI in, and MIDI out. Power up the unit while holding the "BYPASS", and "CONFIG", buttons down. The unit will then test ROM, RAM, Button LEDs, MIDI, and the clip LED. In the event of a ROM, RAM, or MIDI failure, the unit will stop, and the display will show "ERROR IN {COMPONENT}".

6.0 Adjustments

There are no adjustments necessary, unless a DAC adjust trimpot has been installed at the time of service. The easiest way to adjust the DAC is to use a fast lezlie program, with no signal input. With the lezlie output turned fully up, adjust the trimpot for a minimum noise floor. (See section 7.0 for installation instructions.)

7.0 Updates and Revisions

Note that these items may not apply to all board revisions. Where updates are board revision specific, the **bold** type characters at the beginning of the note indicates applicable board revision designations.

7.1 D15

A-E Zener diode (D15) at bottom, right-hand corner of board (in reset circuit) should be a metal zener and NOT a glass zener. The glass types have been found to be somewhat unreliable.

7.2 Header Capacitor

A-E There should be a .1uF cap added between pins 1 and 3 of LED cable header J2. This prevents possible oscillation at power up.

7.3 R66

R66, next to opto isolator (U30), should be 10K. If it is 47K, add a 12K or 13K resistor in parallel to make it 10K. This decreases the opto-isolators input threshold, for improved MIDI input performance.

7.4 SRAM Supply

SRAM Supply adjustment (See diagrams 4 and 5). This supplies a solid 5V to the SRAM, preventing input data from being higher in amplitude than the supply voltage, which can cause data corruption.

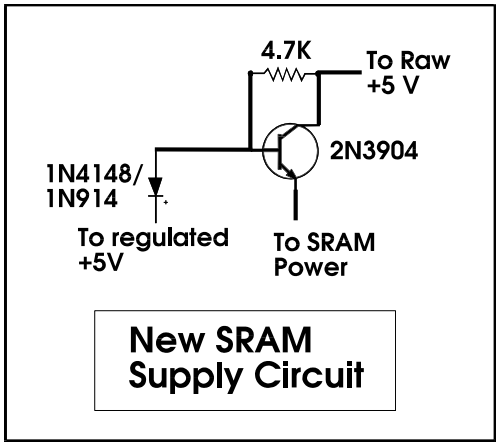

Diagram 4

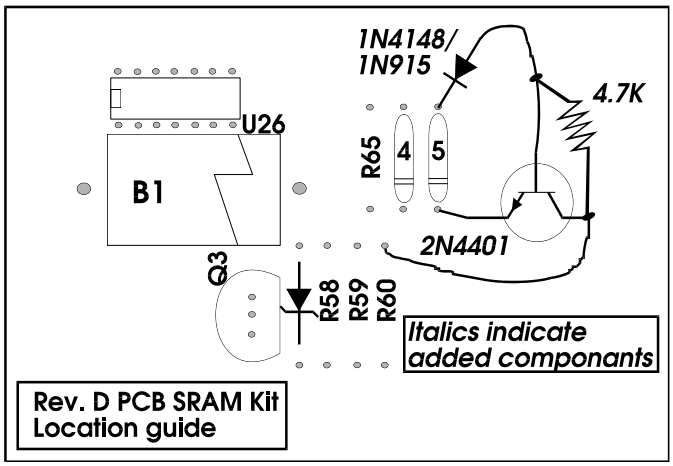

Diagram 5

7.5 Battery Ground

Check battery GND connection and resolder if necessary. Cold solder joints, can exist there, resulting in memory loss and crashing.

7.6 Cables

Check all connector cables are firmly seated. In some cases, they can come 1/2 way off.

7.5 LCD Contrast

Check LCD contrast - if contrast is too dark then short D6.

7.6 LCD Cable Header

Hot glue the LCD cable header to LCD, to prevent it from falling off in transit.

7.7 Wet VCA Removal

A-E Software version 1.07 or above It may be necessary to bypass the wet VCA to decrease the noise floor. To do this, remove U6. Add jumpers across C11, C12, from U6 pin 1 to pin 3, and from pin 5 to pin 7 (see diagram 7).*

7.8 DAC Adjustment Installation

It may also be necessary to install a DAC adjust trimpot to decrease DAC noise. The components required are a 250K trimpot (R43), 2 200K resistors (R20 and R44), and a 1M resistor (R45). See diagram 8 for locations.*

7.9 Increasing Output Gain

It may be necessary to change the gain of the output stage to accommodate the users of some amplifier effects loops. To do this, change R11, and R12, to a value between 4.7K and 10K (the larger the value, the higher the gain).*

* - The application of these items are left to the discretion of the technician.

7.10 QV I/P Filter Kit Installation

The following update enhances the input filter of the Quadraverb by increasing the number of filter poles from 4 to 6. This gives a corresponding increase in the filter rolloff rate, and eliminates problems encountered when using the QV with high bandwidth samplers such as the Ensoniq ESQ-1, the Roland D-50, or the EMU Proteus.

Here is a list of components that will be changed or added:

Component	New Value	Added	Diagram
* R16	9.1K	-------	7
R19	4.3K	-------	7
R23	680R	-------	7
R24	2.4K	-------	7
R25	27K	-------	7
* R26	33K	-------	7
* RA	-------	3.6K	7
* RB	-------	1.3K	7
R42a	-------	750R	8
C35	47pF	-------	7
C36	.033uF	-------	7
C42	1500pF	-------	7
C43	.033uF	-------	7
C44	100pF	-------	7
* CA	-------	3300pF	7
* CB	-------	.01uF	7
**R20	-------	200K	8
**R44	-------	200K	8
**R45	-------	1M	8
**R43	-------	250Ktrm	8

* Requires special installation, see below.

** Recommended, but not necessary.

For the purposes of a common orientation, we will assume that you are looking at the component side of the board, with the front panel facing you. Refer to Diagram 7 for individual component orientation.

Solder one leg of R16 to the left feed through of the original R16 (let the other leg stand straight up). Solder one leg of RB to the right feed through of the original R16. Scrape the solder mask off of the ground plane under the original R16, then solder one leg of CB to the exposed ground plane (again, leaving the other leg sticking up). Twist the three free-standing leads together to form a "teepee", and solder them together. Repeat this procedure with R26, RA, and CA. (R26 on the left, RA on the right. The ground plane between R26 and R27 is the easiest place to attach CA.)

Solder R42a in parallel with R42 (if this is forgotten, the "de-emphasis" will not be correct, and the unit will sound "shrill").

It is recommended (but not absolutely necessary) to install R20 (200K), R44 (200K), R45 (1M), and the 250K trimpot (R43). (When it comes time to adjust the DAC, use a fast LEZLIE program, and adjust the trimpot for minimum output noise with no input signal and maximum output level.)

Replace the rest of the components per the above value change list.

To test, hook the unit up to a signal source, and amplifier. Adjust the DAC trimpot. Audibly, the unit should not sound "shrill" (too much high end), or "muddy" (too little high end). Highs should sound clean up to about 18KHz before rolling off. If a signal/sweep generator is available, the frequency response can be specifically compared to the provided Bode plot (diagram 9). Use the right input channel. Adjust the input level to the QV to about 1Vp-p, sweeping from 20Hz to 25KHz. Observe the filters output at U3 pin 7. Any large deviations from the plot indicate a problem and should be troubleshot.

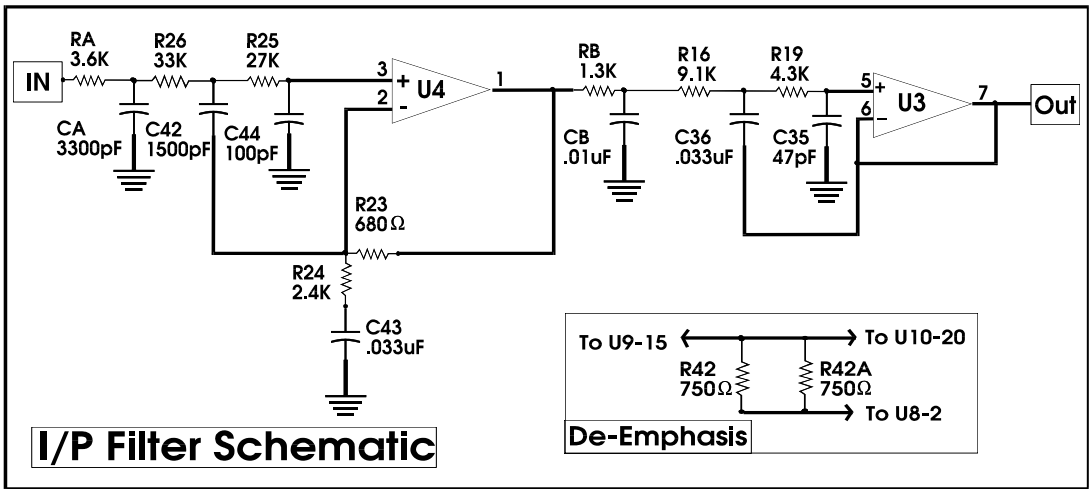

Diagram 6

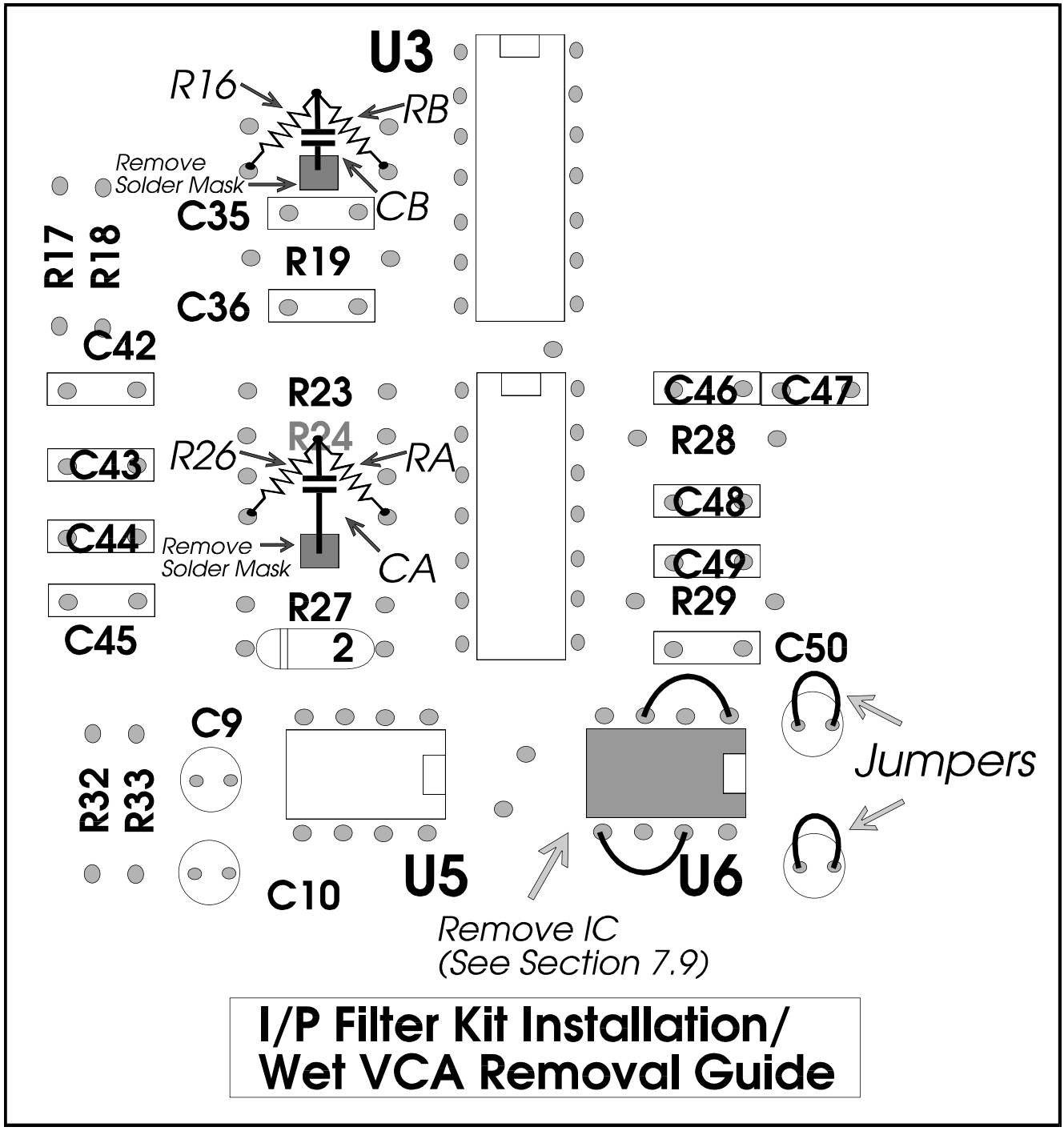
U3
R16
RB
Remove
Solder Mask
CB
C35
R17
R18
R19
C36
C42
R23
R24
C46
C47
R28
R26
RA
C43
C48
C44
Remove
Solder Mask
CA
C49
R27
R29
C45
2
C50
C9
Jumpers
R32
R33
C10
U5
U6
Remove IC
(See Section 7.9)
I/P Filter Kit Installation/
Wet VCA Removal Guide

Diagram 7

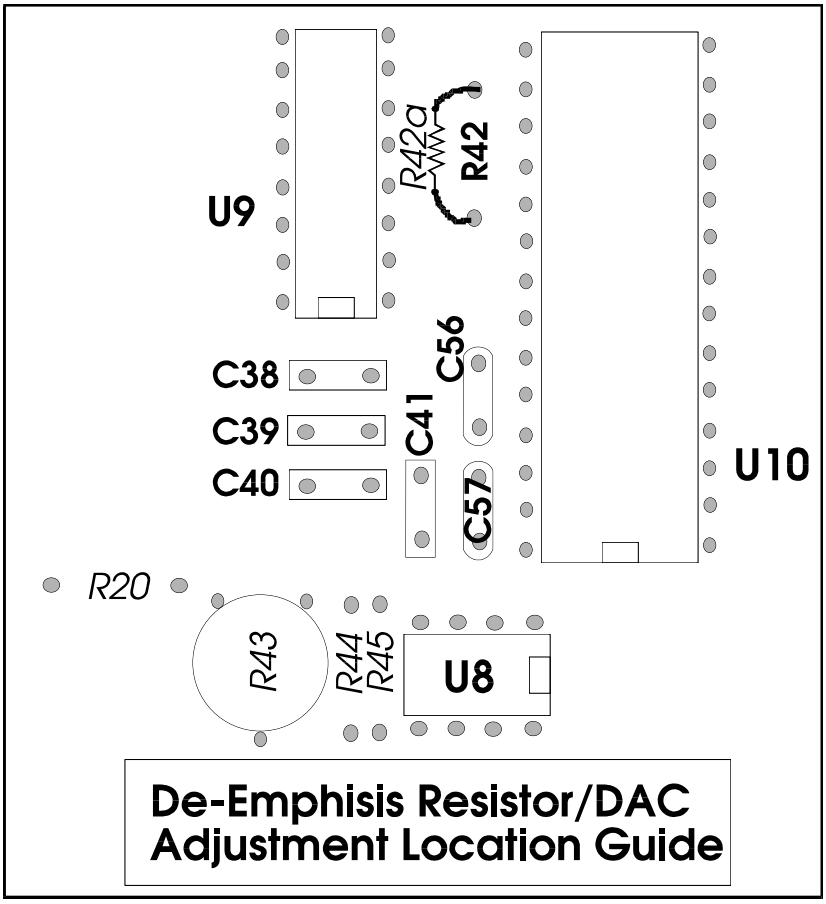

Diagram 8

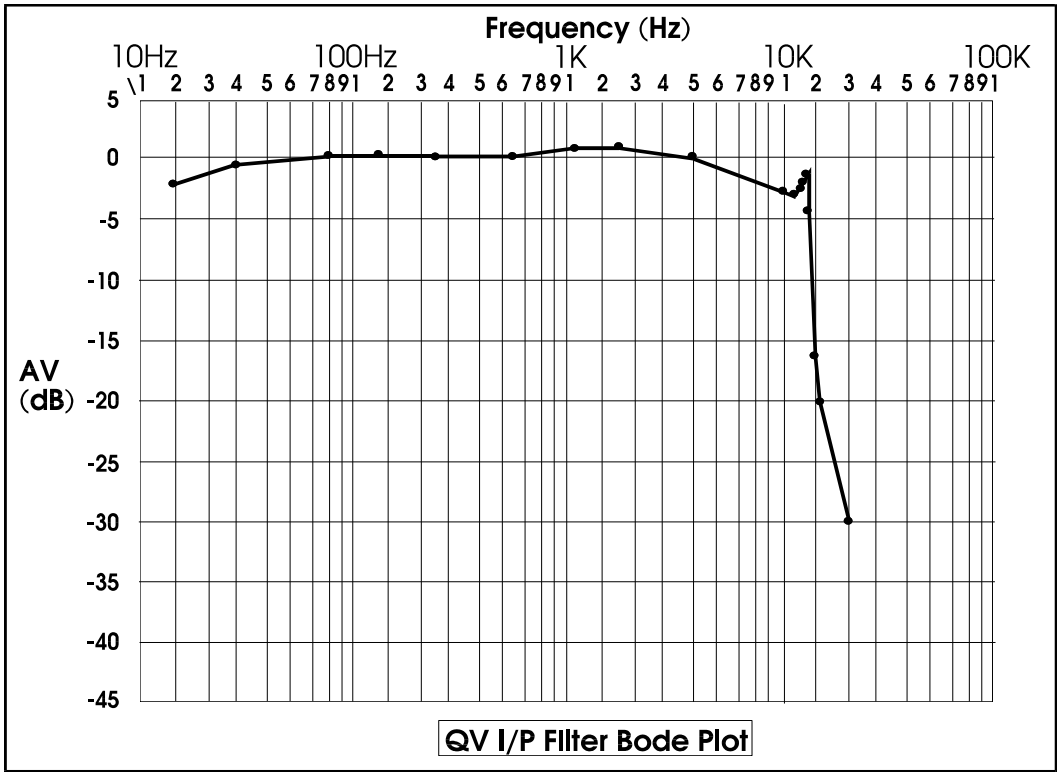

Diagram 9

8.0 Helpful Hints & Common Solutions

Troubleshooting a complex device, such as the QuadraVerb, can range from the simplicity of looking, seeing, and reseating a loose cable, to examining complex timing relationships of data and control, and replacing the "slightly" bad latch. The following chart is presented in an effort to relieve the beleaguered technician from having to "discover" some of the common fixes we have seen. Please note that we only cover the most likely causes, not all of them.

Customer Complaint	Possible Failure	Possible Action
No Power, No Lights, No Life	Bad Ram Cap. (We have found that the blue, monoblock, ram caps are unreliable, and have since switched to ceramic disk only.	Examine the PCB for any burnt, or hot, ram caps, and replace, if necessary.
	Blown DASP 24 ASIC.	If this IC is extremely hot, to the touch, then it is faulty.
	Bad +5V rectifier diode (D12)	The cathode should read roughly 10V (with some ripple). It has been noticed that 1N4001 seem to have problems, and since then have started using 1N4003 diodes exclusively.
Unit lights up, but there is no LCD Display. Unit locks up.	Bad Reset circuit.	Check reset (U21 pin 9), both during power up, and down. Troubleshoot if necessary.
	Bad 80C31.	Replace, and re-test.
	Bad 24MHz Crystal (Z1).	Some crystals are shock sensitive. Tapping on the crystal can sometimes reveal this.
	Bad LCD.	Replace and re-test.
	Bad LCD cable.	Replace and re-test.
No Memory.	Bad battery.	Replace and re-test. Check R61 per section 2.1. Be aware that most battery failures are caused by a component failure on the board.
	Bad reset circuit.	Check reset (U21 pin 9), both during power up, and down. Troubleshoot if necessary.
Distorted audio.	Bad power supply rail.	Check PS rails, and troubleshoot if necessary.
	Faulty DASP-24 ASIC.	Replace and retest.
	Faulty trace, particularly between the DASP 24 ASIC, and the DAC, or analog switch (U9).	Troubleshoot, and replace if necessary.
	Faulty op-amp.	Troubleshoot, and replace if necessary.
	Faulty analog switch (U9).	Troubleshoot, and replace if necessary.
	Faulty power supply bypass capacitor, particularly the cap at the analog switch (U9).	Troubleshoot, and replace if necessary.
No MIDI in.	Faulty Opto-isolator (U30).	Replace and retest.
	Faulty 8031 (U21).	Replace and retest.
No MIDI out.	Faulty 8031 (U21).	Replace and retest.
	Faulty transistor (Q4, Q5).	Replace and retest.

A few final notes: The DAC output is an extremely important test point. Familiarity with the appearance of this signal on a scope, will greatly facilitate troubleshooting audio problems. Exercise caution when examining the output of comparator (U8). Accidentally shorting pins 7, and 8 together

will instantly result in a dead ASIC. Other than there, and in the power supply, you really can't do any harm with a scope probe, so explore.

The Curtiss VCAs (U5, and possibly U6), are current driven devices, so don't expect to see any signals from these chips on a scope.

Be on the watch for user error. (i.e.,if a user complains that it won't load from a DataDisk, check to be sure that "SYSEX ENABLE" is turned on.)

Remember to install ALL of the latest revisions, before returning the unit. This can help prevent many unhappy returns.

All Trademarks are property of their respective companies.

9.0 Schematics

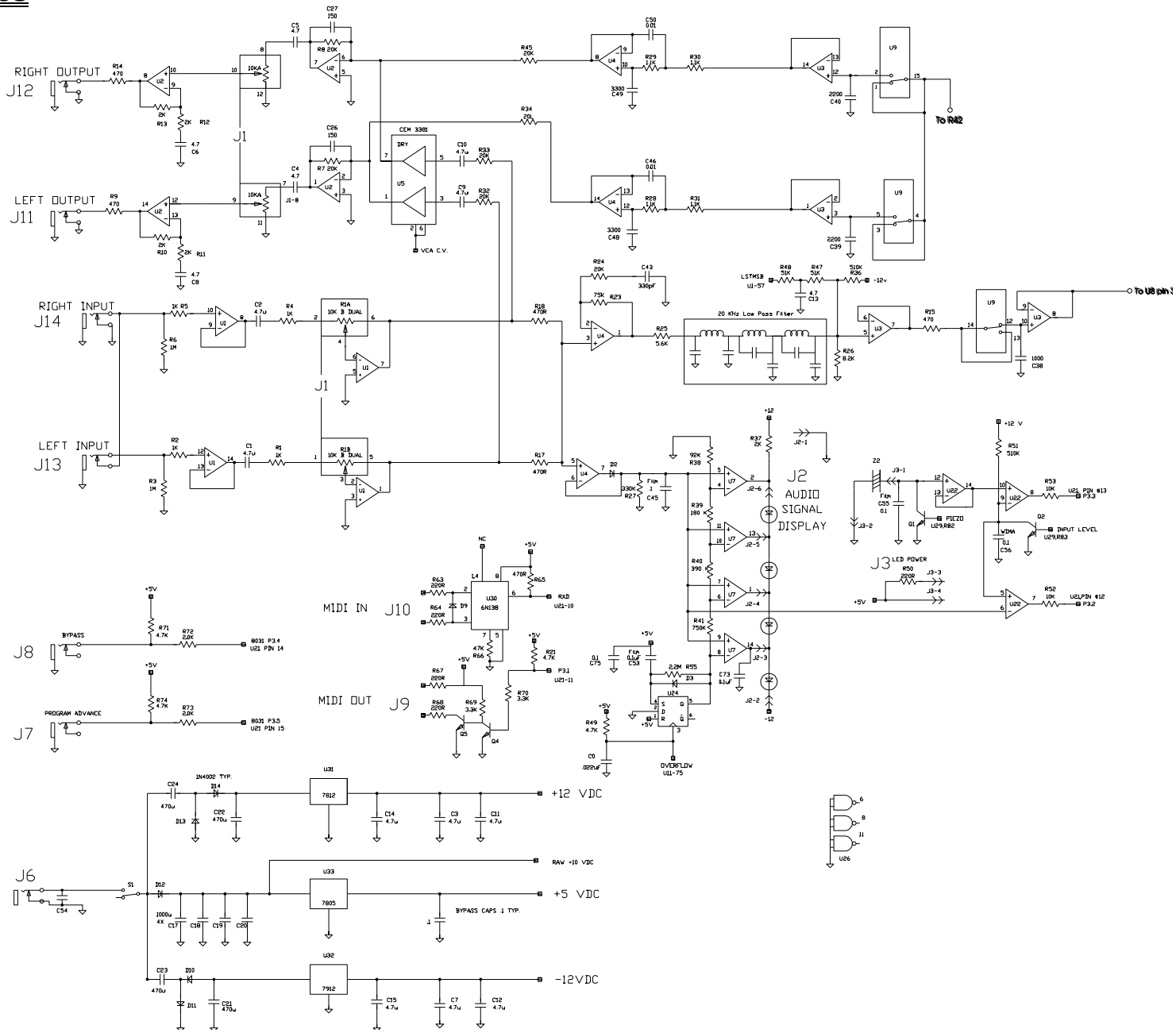

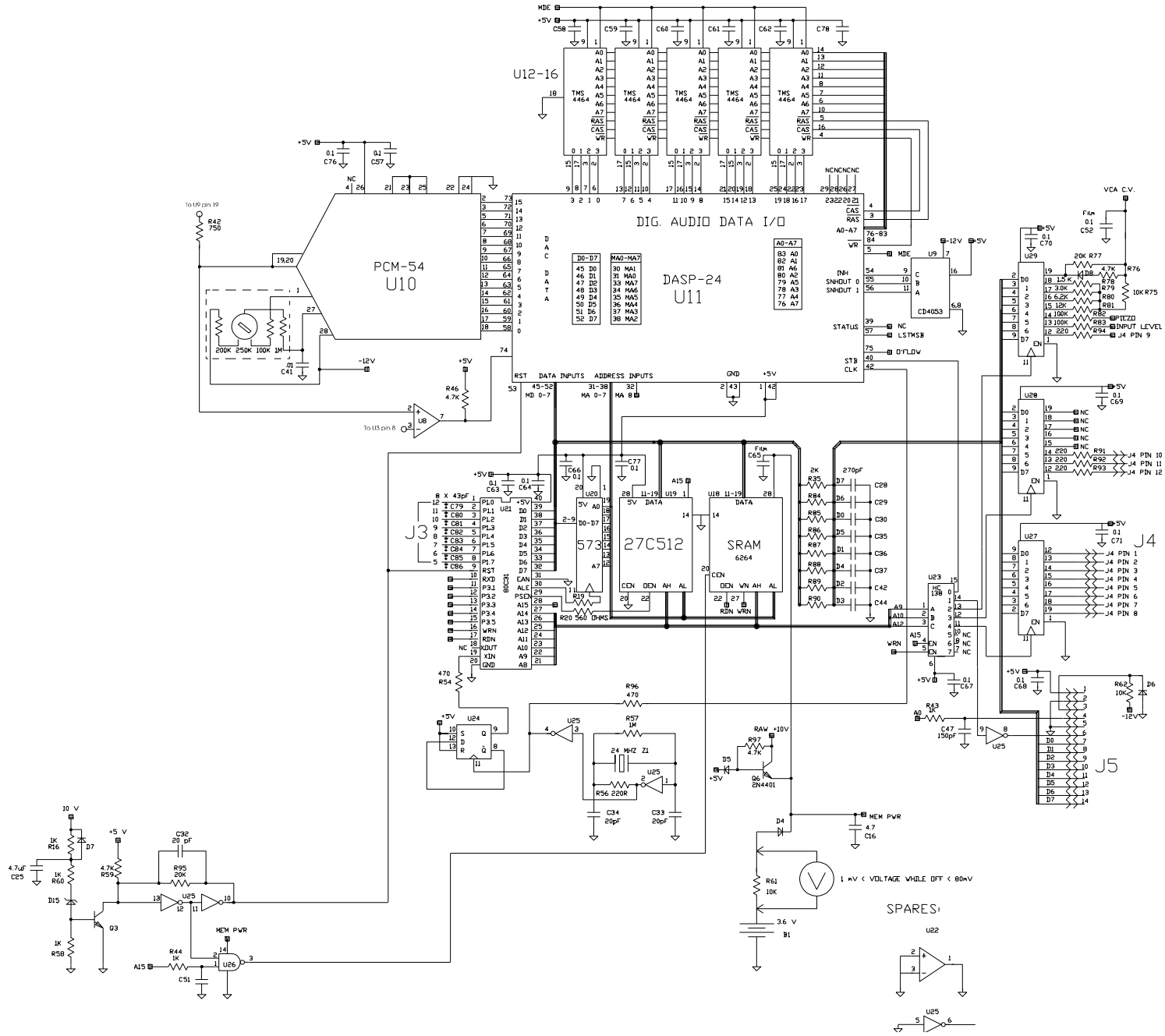
U12-16
TMS 4464
DIG. AUDIO DATA I/O
PCM-54
U10
DASP-24
U11
CD4053
VCA C.V.
J3
J4
J5
573
27C512
SRAM
6264
SPARES
1 mV < VOLTAGE WHILE OFF < 80mV

10.0 Software History

DATE	VERSION	COMMENTS
1/15/89	1.00	1) First production release
1/23/89	1.01	1) Added test routines for production testing, including RAM, ROM, LEDs, MIDI, and CLIP tests.
2/22/89	1.02	1) Fixed bug that caused a gated effect to be heard on graphic EQ and delay mode programs if the previously selected program was a gated program. 2) Fixed bug that caused a volume drop in the mid band EQ if the frequency was 9874Hz, amplitude +14.00 dB, and bandwidth of 2.55 octaves. 3) Default setting for direct signal level changed to 50 from 99. 4) Default setting for reverb level changed to 99 from 50. 5) Fixed bug that caused the bypass level of lezlie programs to be unpredictable. Now, the bypass level will be the same as the lezlie level. 6) All 90 factory programs updated to newer versions.
3/8/89	1.03	1) Changed bypass level of direct signal so that the master effect level would be used to scale the bypass level if the current program did not have any direct signal in it. 2) Changed default mix settings of the last 10 programs (90-99) so that direct level is 50 (instead of 99), delay is 50 (instead of 40), and reverb is 99 (instead of 40). 3) All 90 factory programs updated to newer versions.
11/30/89	1.05	1) Software version accommodates new hardware in which VCA after DAC is removed. This means that the master effects level is controlled by scaling the amplitude of each effect in software, instead of changing the VCA level. If this software is used with older hardware, the VCA will be left full open, so that the operation will be the same as with the newer hardware. 2) When changing programs with bypass on, the dry level will now change with each program to reflect the level of the dry signal in that program. 3) When a program is stored, the display now reads "PROGRAM STORED" instead of "PROGAM STORED".
3/8/90	1.07	1) The 11 band graphic EQ algorithm has been modified to decrease the noise present when one of the bands between 250Hz and 16KHz was set to a few dB of cut. 2) The duty cycle of the EQ cursor flashing has been changed to improve its visibility.
8/10/90	2.00	1) Quadraverb Plus first release. Too many features to describe.

9/5/90	2.01	1) Slight changes to factory programs.
11/14/90	2.02	1) If a sampling program was selected when previously a panning program was selected, audio triggering and MIDI transposing of the sample would not work properly. This is now fixed. 2) When in Sample configuration, the EQ and BYPASS buttons could not be used to enter a new program number while holding the PROG button. This is now fixed. 3) When selecting a program that was set to the Sample configuration while audio was present would occasionally result in noise at the audio output until a sample was recorded. This is now fixed.
3/10/92	2.03	1) If a MIDI controller was routed to modulate the speed of the chorus, an awful sound would occur when the controller was moved. This is now fixed.

11.0 Quadraverb Plus MIDI Implementation/System Exclusive

SYSTEM EXCLUSIVE FORMAT

The QuadraVerb MIDI System Exclusive message format is as follows:

F0	System exclusive status
00 00 0E	Alesis manufacturer id#
02	Quadraverb id#
cc	Opcode
dd	Data
:	:
:	:
F7	End-Of-Exclusive

OPCODES:

01 - MIDI Editting

F0 00 00 0E 02 01<function#><page#>< value1>< value2>< value3>F7

<function#> = 1=reverb, 2=delay, 3=pitch, 4=eq, 7=config, 8=mix, 9=mod, 10=name

<page#> = 0..*n* where *n* is the maximum page # for the selected function
<value1-3> = new parameter value in the following format:

Data: B7 B6 B5 B4 B3 B2 B1 B0 (MSB)
A7 A6 A5 A4 A3 A2 A1 A0 (LSB)

Sent: 0 A7 A6 A5 A4 A3 A2 A1 <value1>
0 A0 B7 B6 B5 B4 B3 B2 <value2>
0 B1 B0 0 0 0 0 0 <value3>

All parameters to be edited must be sent in this format (12 MIDI bytes), regardless of the number of bits required to transmit the value of the parameter. When the QuadraVerb receives this message, it will edit the specified parameter to the new value and display it. If the function and page selected does not exist in the current configuration, the command will be ignored. If the value received is out of range for the parameter selected, the range will be limited to a legal value. The function and page numbers for each parameter are shown in the next section.

02 - MIDI Data Dump F0 00 00 0E 02 02 <program#> <data> F7

<program#> = 0..99 selects individual programs
= 100 selects the edit buffer
= > 100 selects all 100 programs

<data> is in a packed format in order to optimize data transfer. Eight MIDI bytes are used to transmit each block of 7 QuadraVerb data bytes. If the 7 data bytes are looked at as one 56-bit word, the format for transmission is eight 7-bit words beginning with the most significant bit of the first byte, as follows:

SEVEN QUADRAVERB BYTES:

```
0: A7 A6 A5 A4 A3 A2 A1 A0
1: B7 B6 B5 B4 B3 B2 B1 B0
2: C7 C6 C5 C4 C3 C2 C1 C0
3: D7 D6 D5 D4 D3 D2 D1 D0
4: E7 E6 E5 E4 E3 E2 E1 E0
5: F7 F6 F5 F4 F3 F2 F1 F0
6: G7 G6 G5 G4 G3 G2 G1 G0
```

TRANSMITTED AS:

```
0: 0 A7 A6 A5 A4 A3 A2 A1
1: 0 A0 B7 B6 B5 B4 B3 B2
2: 0 B1 B0 C7 C6 C5 C4 C3
3: 0 C2 C1 C0 D7 D6 D5 D4
4: 0 D3 D2 D1 D0 E7 E6 E5
5: 0 E4 E3 E2 E1 E0 F7 F6
6: 0 F5 F4 F3 F2 F1 F0 G7
7: 0 G6 G5 G4 G3 G2 G1 G0
```

There are 147 bytes sent for a single data dump, which corresponds to 128 bytes of program data. There are 14,629 bytes sent for a 100 program dump, which corresponds to 12,800 bytes of program data. The location of each parameter within a program is shown in the next section.

When the QuadraVerb receives a data dump message, the display reads:

```
LOADING
MIDI DATA ...
```

Should the Quadraverb's MIDI input buffer overflow, the display will read:

```
   MIDI INPUT
BUFFER OVERFLOW
```

This message will remain on the display until any button is pressed.

03 - MIDI Dump Request

F0 00 00 0E 02 03 <program#> F7

<program#> = 0..99 selects individual programs
= 100 selects the edit buffer
= > 100 selects all 100 programs

When this message is received, a MIDI data dump will be initiated, and the display will read:

```
MIDI DATA DUMP
 IN PROGRESS
```

Upon completion of the dump, the display will return to its previously displayed page.

INDIVIDUAL PARAMETER LOCATION FUNCTION AND PAGE VALUES

The following lists give the parameter locations and ranges for each of the effects in each of the configurations. The parameter associated with a particular function and page may be dependent on both the current configuration, and the current mode of the effect (e.g., chorus, phase, etc.). In conditions where a page relates to different parameters depending on the mode of the effect, the parameters are listed in tables under each mode. All parameters are offset binary values. This means that a signed parameter with a range of -99 to +99 in the display is actually stored as 0 for -99, 99 for 0, and 198 for +99.

REVERB (FUNCTION 1)

CONFIGURATION 0, 5, & 6:

page

0 (type)	0 (PLATE 1)	1 (ROOM 1)	2 (CHAMBER 1)	3 (HALL 1)	4 (REVERSE 1)
1	0-3 (INPUT 1)	0-3 (INPUT 1)	0-3 (INPUT 1)	0-3 (INPUT 1)	0-3 (INPUT 1)
2	0-1 (INPUT 2)	0-1 (INPUT 2)	0-1 (INPUT 2)	0-1 (INPUT 2)	0-1 (INPUT 2)
3	0-198 (IN MIX)	0-198 (IN MIX)	0-198 (IN MIX)	0-198 (IN MIX)	0-198 (IN MIX)
4	1-140 (PREDLY)	1-140 (PREDLY)	1-140 (PREDLY)	1-140 (PREDLY)	1-140 (PREDLY)
5	1-198 (PRE MIX)	1-198 (PRE MIX)	1-198 (PRE MIX)	1-198 (PRE MIX)	1-198 (PRE MIX)
6	0-99 (DECAY)	0-99 (DECAY)	0-99 (DECAY)	0-99 (DECAY)	0-99 (REV TIME)
7	0-8 (DIFFUSION)	0-8 (DIFFUSION)	0-8 (DIFFUSION)	0-8 (DIFFUSION)	0-8 (DIFFUSION)
8	0-8 (DENSITY)	0-8 (DENSITY)	0-8 (DENSITY)	0-60 (LOW DEC)	0-8 (DENSITY)

9	0-60 (LOW DEC)	0-60 (LOW DEC)	0-60 (LOW DEC)	0-60 (HIGH DEC)	0-60 (LOW DEC)
10	0-60 (HIGH DEC)	0-60 (HIGH DEC)	0-60 (HIGH DEC)	0-1 (GATE ON)	0-60 (HIGH DEC)
11	0-1 (GATE ON)	0-1 (GATE ON)	0-1 (GATE ON)	0-99 (GATE HLD)	
12	0-99 (GATE HLD)	0-99 (GATE HLD)	0-99 (GATE HLD)	0-99 (GATE REL)	
13	0-99 (GATE REL)	0-99 (GATE REL)	0-99 (GATE REL)	0-99 (GATE LEV)	
14	0-99 (GATE LEV)	0-99 (GATE LEV)	0-99 (GATE LEV)		

CONFIGURATION 1:

page

0 (type)	0 (PLATE 1)	1 (ROOM 1)	2 (CHAMBER 1)	3 (HALL 1)	4 (REVERSE 1)
1	0-2 (INPUT 1)	0-2 (INPUT 1)	0-2 (INPUT 1)	0-2 (INPUT 1)	0-2 (INPUT 1)

2-14 same as configuration 0

CONFIGURATION 2, 3 & 7:

Not used

CONFIGURATION 4:

page

0 (type)	0 (PLATE 2)	1 (ROOM 2)	2 (CHAMBER 2)	3 (HALL 2)	4 (REVERSE 2)
1	0-1 (INPUT)	0-1 (INPUT)	0-1 (INPUT)	0-1 (INPUT)	0-1 (INPUT)
2	1-140 (PREDLY)	1-140 (PREDLY)	1-140 (PREDLY)	1-140 (PREDLY)	1-140 (PREDLY)
3	1-198 (PRE MIX)	1-198 (PRE MIX)	1-198 (PRE MIX)	1-198 (PRE MIX)	1-198 (PRE MIX)
4	0-99 (DECAY)	0-99 (DECAY)	0-99 (DECAY)	0-99 (DECAY)	0-99 (REV TIME)
5	0-8 (DIFFUSION)	0-8 (DIFFUSION)	0-8 (DIFFUSION)	0-8 (DIFFUSION)	0-8 (DIFFUSION)
6	0-8 (DENSITY)	0-8 (DENSITY)	0-8 (DENSITY)	0-60 (LOW DEC)	0-8 (DENSITY)
7	0-60 (LOW DEC)	0-60 (LOW DEC)	0-60 (LOW DEC)	0-60 (HIGH DEC)	0-60 (LOW DEC)
8	0-60 (HIGH DEC)	0-60 (HIGH DEC)	0-60 (HIGH DEC)	0-1 (GATE ON)	0-60 (HIGH DEC)
9	0-1 (GATE ON)	0-1 (GATE ON)	0-1 (GATE ON)	0-99 (GATE HLD)	
10	0-99 (GATE HLD)	0-99 (GATE HLD)	0-99 (GATE HLD)	0-99 (GATE REL)	
11	0-99 (GATE REL)	0-99 (GATE REL)	0-99 (GATE REL)	0-99 (GATE LEV)	
12	0-99 (GATE LEV)	0-99 (GATE LEV)	0-99 (GATE LEV)		

DELAY (FUNCTION 2)

CONFIGURATION 0:

page

0 (type)	0 (MONO)	1 (STEREO)	2 (PING-PONG)
1	0-1 (INPUT 1)	0-1 (INPUT 1)	0-1 (INPUT 1)
2	0-198 (IN MIX)	0-198 (IN MIX)	0-198 (IN MIX)
3	1-800 (DELAY)	1-400 (L DELAY)	1-400 (DELAY)
4	0-99 (FEEDB)	0-99 (L FEEDB)	0-99 (FEEDB)
5		1-400 (R DELAY)	
6		0-99 (R FEEDB)	

CONFIGURATION 1, 5:

page

0 (type)	0 (MONO)	1 (STEREO)	2 (PING-PONG)
1	0-198 (IN MIX)	0-198 (IN MIX)	0-198 (IN MIX)
2	1-800 (DELAY)	1-400 (L DELAY)	1-400 (DELAY)
3	0-99 (FEEDB)	0-99 (L FEEDB)	0-99 (FEEDB)
4		1-400 (R DELAY)	
5		0-99 (R FEEDB)	

CONFIGURATION 2:

page

0 (type)	0 (MONO)	1 (STEREO)	2 (PING-PONG)
1	0-1 (INPUT)	0-1 (INPUT)	0-1 (INPUT)
2	1-1500 (DELAY)	1-750 (L DELAY)	1-750 (DELAY)
3	0-99 (FEEDB)	0-99 (L FEEDB)	0-99 (FEEDB)
4		1-750 (R DELAY)	
5		0-99 (R FEEDB)	

CONFIGURATION 3:

page

0 (type)	0 (MONO)	1 (STEREO)	2 (PING-PONG)	3 (MULTI-TAP)
1	0-1 (INPUT)	0-1 (INPUT)	0-1 (INPUT)	0-1 (INPUT)
2	0-198 (IN MIX)	0-198 (IN MIX)	0-198 (IN MIX)	0-198 (IN MIX)
3	1-1500 (DELAY)	1-750 (L DELAY)	1-750 (DELAY)	0-7 (TAP NUMBER)
4	0-99 (FEEDB)	0-99 (L FEEDB)	0-99 (FEEDB)	1-1493 (TAP DELAY)
5		1-750 (R DELAY)		0-99 (TAP VOLUME)
6		0-99 (R FEEDB)		0-198 (TAP PAN)
7				0-99 (TAP FB)
8				0-99 (MASTER FB)

CONFIGURATION 4:

Not used

CONFIGURATION 6:

page

0 (type)	0 (MONO)	1 (STEREO)	2 (PING-PONG)
1	0-198 (IN MIX)	0-198 (IN MIX)	0-198 (IN MIX)
2	1-720 (DELAY)	1-320 (L DELAY)	1-320 (DELAY)
3	0-99 (FEEDB)	0-99 (L FEEDB)	0-99 (FEEDB)
4		1-320 (R DELAY)	
5		0-99 (R FEEDB)	

CONFIGURATION 7:

page

0	0-2 (SAMPLE PLAYBACK)
1	0-150 (SAMPLE START)
2	0-155 (SAMPLE LENGTH)
3	0-1 (AUDIO TRIG)
4	0-2 (MIDI TRIG)
5	0-127 (MIDI LOW LIMIT)
6	0-127 (MIDI BASE NOTE)
7	0-127 (MIDI HI LIMIT)

PITCH (FUNCTION 3)

CONFIGURATION 0 & 3:

page

0 (type)	0 (M CHORUS)	1 (S CHORUS)	2 (M FLANGE)	3 (S FLANGE)	4 (DETUNE)	5 (PHASER)
1	0-1 (INPUT)	0-1 (INPUT)	0-1 (INPUT)	0-1 (INPUT)	0-1 (INPUT)	0-1 (INPUT)
2	0-1 (WAVE)	0-1 (WAVE)	0-99 (SPEED)	0-99 (SPEED)	0-198 (TUNE)	0-99 (SPEED)
3	0-99 (SPEED)	0-99 (SPEED)	0-99 (DEPTH)	0-99 (DEPTH)		0-99 (DEPTH)
4	0-99 (DEPTH)	0-99 (DEPTH)	0-99 (FBACK)	0-99 (FBACK)		
5	0-99 (FBACK)	0-99 (FBACK)	0-1 (TRIGGER)	0-1 (TRIGGER)		

CONFIGURATION 1:

page

0	0-99 (SEPARATION)
1	0-1 (MOTOR)
2	0-1 (SPEED)

CONFIGURATION 2 & 7:

Not used

CONFIGURATION 4:

page

0 (type)	0 (CHORUS OFF)	1 (CHORUS ON)
1		0-1 (WAVE)
2		0-99 (SPEED)
3		0-99 (DEPTH)

CONFIGURATION 5:

page

0 1-300 (RING MOD SPECTRUM)

1 0-198 (RING MOD OUT MIX)

2 0-198 (RING MOD DEL/REV MIX)

CONFIGURATION 6:

page

0 0-1 (RESONATOR GATE MODE)

1 0-99 (RESONATOR DECAY)

2 0-60 (RESONATOR 1 TUNE)

3 0-60 (RESONATOR 2 TUNE)

4 0-60 (RESONATOR 3 TUNE)

5 0-60 (RESONATOR 4 TUNE)

6 0-60 (RESONATOR 5 TUNE)

EQ (FUNCTION 4)

CONFIGURATION 0 & 4:

page

0 20-999 (LOW FREQUENCY)

1 0-560 (LOW BOOST/CUT)

2 200-9999 (MID FREQUENCY)

3 20-255 (MID BANDWIDTH)

4 0-560 (MID BOOST/CUT)

5 2000-18000 (HIGH FREQUENCY)

6 0-560 (HIGH BOOST/CUT)

CONFIGURATION 1:

page

0 0-26 (HIGH ROTOR LEVEL)

CONFIGURATION 2:

page

0 0-28 (16Hz)

1 0-28 (32Hz)

2 0-28 (62Hz)

3 0-28 (126Hz)

4 0-28 (250Hz)

5 0-28 (500Hz)

6 0-28 (1KHz)

7 0-28 (2KHz)

8 0-28 (4KHz)

9 0-28 (8KHz)

10 0-28 (16KHz)

CONFIGURATION 3:

page

0	20-999 (LOW FREQUENCY)
1	0-560 (LOW BOOST/CUT)
2	20-500 (LOW MID FREQUENCY)
3	20-255 (LOW MID BANDWIDTH)
4	0-560 (LOW MID BOOST/CUT)
5	200-9999 (MID FREQUENCY)
6	20-255 (MID BANDWIDTH)
7	0-560 (MID BOOST/CUT)
8	2000-18000 (HIGH MID FREQUENCY)
9	20-255 (HIGH MID BANDWIDTH)
10	0-560 (HIGH MID BOOST/CUT)
11	2000-18000 (HIGH FREQUENCY)
12	0-560 (HIGH BOOST/CUT)

CONFIGURATION 5, 6 & 7:
Not used

CONFIGURATION (FUNCTION 7)

page

0	0-4 (CONFIGURATION)
	0: EQ>PCH>DL>REVERB
	1: LESLIE>DL>REVERB
	2: GRAPHIC EQ>DELAY
	3: 5BAND EQ>PCH>DLY
	4: 3 BAND EQ>REVERB
	5: RING>DL>REVERB
	6: RESONATOR>DL>REVERB
	7: SAMPLING

MIX (FUNCTION 8)

CONFIGURATION 0:

page

0 (type)	0 (PRE-EQ)	1 (POST-EQ)
1	0-99 (DIRECT)	0-99 (MAST FX)
2	0-99 (MAST FX)	0-99 (EQ)
3	0-99 (PITCH)	0-99 (PITCH)
4	0-99 (DELAY)	0-99 (DELAY)
5	0-99 (REVERB)	0-99 (REVERB)

CONFIGURATION 1:

page

0	0-99 (MAST FX)
1	0-99 (LESLIE)
2	0-99 (DELAY)
3	0-99 (REVERB)

CONFIGURATION 2:

page

0	0-99 (MAST FX)
1	0-99 (EQ)
2	0-99 (DELAY)

CONFIGURATION 3:

page

0 (type)	0 (PRE-EQ)	1 (POST-EQ)
1	0-99 (DIRECT)	0-99 (MAST FX)
2	0-99 (MAST FX)	0-99 (EQ)
3	0-99 (PITCH)	0-99 (PITCH)
4	0-99 (DELAY)	0-99 (DELAY)

CONFIGURATION 4:

page

0 (type)	0 (PRE-EQ)	1 (POST-EQ)
1	0-99 (DIRECT)	0-99 (MAST FX)
2	0-99 (MAST FX)	0-99 (EQ)
5	0-99 (REVERB)	0-99 (REVERB)

CONFIGURATION 5:

page

0	0-99 (MAST FX)
1	0-99 (DIRECT)
2	0-99 (RING MOD)
3	0-99 (DELAY)
4	0-99 (REVERB)

CONFIGURATION 6:

page

0	0-99 (MAST FX)
1	0-99 (DIRECT)
2	0-99 (RESONATOR)
3	0-99 (DELAY)
4	0-99 (REVERB)

CONFIGURATION 7:

page

0	0-99 (DIRECT)
1	0-99 (SAMPLE)

MOD (FUNCTION 9)

CONFIGURATION 0-6:

page	
0	0-126 (MOD 1 SOURCE)
1	0-? (MOD 1 TARGET)
2	0-198 (MOD 1 AMPLITUDE)
3	0-126 (MOD 2 SOURCE)
4	0-? (MOD 2 TARGET)
5	0-198 (MOD 2 AMPLITUDE)
6	0-126 (MOD 3 SOURCE)
7	0-? (MOD 3 TARGET)
8	0-198 (MOD 3 AMPLITUDE)
9	0-126 (MOD 4 SOURCE)
10	0-? (MOD 4 TARGET)
11	0-198 (MOD 4 AMPLITUDE)
12	0-126 (MOD 5 SOURCE)
13	0-? (MOD 5 TARGET)
14	0-198 (MOD 5 AMPLITUDE)
15	0-126 (MOD 6 SOURCE)
16	0-? (MOD 6 TARGET)
17	0-198 (MOD 6 AMPLITUDE)
18	0-126 (MOD 7 SOURCE)
19	0-? (MOD 7 TARGET)
20	0-198 (MOD 7 AMPLITUDE)
21	0-126 (MOD 8 SOURCE)
22	0-? (MOD 8 TARGET)
23	0-198 (MOD 8 AMPLITUDE)

CONFIGURATION 7:

Not used

Modulation target values are dependent on the current configuration and mode of a program. The most significant nibble determines the function being modulated as follows:

0XH:	REVERB MOD
1XH:	DELAY MOD
2XH:	PITCH MOD
3XH:	EQ MOD
4XH:	MIX MOD
5XH:	MULTI-TAP MOD (Configuration 3 only)
6XH:	" " " " " " " " "

The possible modulation targets within each of the above is as follows:

REVERB CONFIGURATION 0,1,4,5,6 (nothing in 2, 3, & 7):

Target	PLATE	ROOM	CHAMBER	HALL	REVERSE
00H	IN MIX	IN MIX	IN MIX	IN MIX	IN MIX
01H	PREDLY	PREDLY	PREDLY	PREDLY	PREDLY
02H	PRE MIX	PRE MIX	PRE MIX	PRE MIX	PRE MIX
03H	DECAY	DECAY	DECAY	0DECAY	REV TIME
04H	DIFFUSION	DIFFUSION	DIFFUSION	DIFFUSION	DIFFUSION
05H	DENSITY	DENSITY	DENSITY	LOW DEC	DENSITY
06H	LOW DEC	LOW DEC	LOW DEC	HIGH DEC	LOW DEC
07H	HIGH DEC	HIGH DEC	HIGH DEC		HIGH DEC

DELAY CONFIGURATION 0,1 (nothing in 4 & 7):

Target	MONO	STEREO	PING-PONG
10H	IN MIX	IN MIX	IN MIX
11H	DELAY	L DELAY	DELAY
12H	FEEDB	L FEEDB	FEEDB
13H		R DELAY	
14H		R FEEDB	

CONFIGURATION 3:

Target	MONO	STEREO	PING-PONG	MULTI-TAP
10H	IN MIX	IN MIX	IN MIX	IN MIX
11H	DELAY	L DELAY	DELAY	TAP 1 DELAY
12H	FEEDB	L FEEDB	FEEDB	TAP 2 DELAY
13H		R DELAY		TAP 3 DELAY
14H		R FEEDB		TAP 4 DELAY
15H				TAP 5 DELAY
16H				TAP 6 DELAY
17H				TAP 7 DELAY
18H				TAP 8 DELAY
50H				TAP 1 VOLUME
51H				TAP 2 VOLUME
52H				TAP 3 VOLUME
53H				TAP 4 VOLUME
54H				TAP 5 VOLUME
55H				TAP 6 VOLUME
56H				TAP 7 VOLUME
57H				TAP 8 VOLUME
58H				TAP 1 PANNING
59H				TAP 2 PANNING
5AH				TAP 3 PANNING
5BH				TAP 4 PANNING
5CH				TAP 5 PANNING
5DH				TAP 6 PANNING

5EH	TAP 7 PANNING
5FH	TAP 8 PANNING
60H	TAP 1 FEEDBACK
61H	TAP 2 FEEDBACK
62H	TAP 3 FEEDBACK
63H	TAP 4 FEEDBACK
64H	TAP 5 FEEDBACK
65H	TAP 6 FEEDBACK
66H	TAP 7 FEEDBACK
67H	TAP 8 FEEDBACK
68H	MASTER FEEDBACK

CONFIGURATION 2,5,6:

Target	MONO	STEREO	PING-PONG
10H	DELAY	L DELAY	DELAY
11H	FEEDB	L FEEDB	FEEDB
12H		R DELAY	
13H		R FEEDB	

PITCH CONFIGURATION 0 & 3 (nothing in 2 & 7):

Target	M CHORUS	S CHORUS	M FLANGE	S FLANGE	DETUNE	PHASER
20H	SPEED	SPEED	SPEED	SPEED	DETUNE	SPEED
21H	DEPTH	DEPTH	DEPTH	DEPTH		DEPTH
22H	FBACK	FBACK	FBACK	FBACK		

CONFIGURATION 1:

Target	
20H	SEPARATION
21H	MOTOR
22H	SPEED

CONFIGURATION 4:

Target	
20H	SPEED
21H	DEPTH

CONFIGURATION 5:

Target	
20H	SPECTRUM SHIFT
21H	RING OUTPUT MIX
22H	DEL/REV IN MIX

CONFIGURATION 6:

Target

20H RESONATOR DECAY

EQ CONFIGURATION 0 & 4 (nothing in 5, 6, & 7):

Target

30H LOW FREQUENCY
31H LOW BOOST/CUT
32H MID FREQUENCY
33H MID BANDWIDTH
34H MID BOOST/CUT
35H HIGH FREQUENCY
36H HIGH BOOST/CUT

CONFIGURATION 1:

Target

30H HIGH ROTOR LEVEL

CONFIGURATION 2:

Target

30H 16Hz
31H 32Hz
32H 62Hz
33H 126Hz
34H 250Hz
35H 500Hz
36H 1KHz
37H 2KHz
38H 4KHz
39H 8KHz
3AH 16KHz

CONFIGURATION 3:

Target

30H LOW FREQUENCY
31H LOW BOOST/CUT
32H LOW MID FREQUENCY
33H LOW MID BANDWIDTH
34H LOW MID BOOST/CUT
35H MID FREQUENCY
36H MID BANDWIDTH
37H MID BOOST/CUT
38H HIGH MID FREQUENCY
39H HIGH MID BANDWIDTH
3AH HIGH MID BOOST/CUT
3BH HIGH FREQUENCY
3CH HIGH BOOST/CUT

MIX CONFIGURATION 0:

Target	PRE-EQ	POST-EQ
40H	DIRECT	MAST FX
41H	MAST FX	EQ
42H	PITCH	PITCH
43H	DELAY	DELAY
44H	REVERB	REVERB

CONFIGURATION 1:

Target	
40H	MAST FX
41H	LESLIE
42H	DELAY
43H	REVERB

CONFIGURATION 2:

Target	
40H	MAST FX
41H	EQ
42H	DELAY

CONFIGURATION 3:

Target	
40H	DIRECT
41H	MAST FX
42H	PITCH
43H	DELAY

CONFIGURATION 4:

Target	
40H	DIRECT
41H	MAST FX
42H	REVERB

CONFIGURATION 5:

Target	
40H	DIRECT
41H	MAST FX
42H	RING MOD
43H	DELAY
44H	REVERB

CONFIGURATION 6:

Target

40H	DIRECT
41H	MAST FX
42H	RESONATOR
43H	DELAY
44H	REVERB

NAME (FUNCTION 10)

CONFIGURATION 0-4:

page	
0	32-127 (1st DIGIT NAME)
1	32-127 (2nd DIGIT NAME)
2	32-127 (3rd DIGIT NAME)
3	32-127 (4th DIGIT NAME)
4	32-127 (5th DIGIT NAME)
5	32-127 (6th DIGIT NAME)
6	32-127 (7th DIGIT NAME)
7	32-127 (8th DIGIT NAME)
8	32-127 (9th DIGIT NAME)
9	32-127 (10th DIGIT NAME)
10	32-127 (11th DIGIT NAME)
11	32-127 (12th DIGIT NAME)
12	32-127 (13th DIGIT NAME)
13	32-127 (14th DIGIT NAME)

PARAMETER ADDRESSES WITHIN PROGRAMS

The following addresses are relative to the first address of a program. These addresses assume that the data has been unpacked into byte values. Blank locations should be left 0.

00 LOW EQ FREQ MSB
01 LOW EQ FREQ LSB / 16Hz
02 LOW EQ AMP MSB / 32Hz
03 LOW EQ AMP LSB / 62Hz
04 MID EQ FREQ MSB / 126Hz
05 MID EQ FREQ LSB / 250Hz
06 MID EQ BANDWIDTH / 500Hz
07 MID EQ AMP MSB / 1KHz
08 MID EQ AMP LSB / 2KHz
09 HIGH EQ FREQ MSB / 4KHz
0A HIGH EQ FREQ LSB / 8KHz
0B HIGH EQ AMP MSB / 16KHz
0C HIGH EQ AMP LSB
0D LESLIE HIGH ROTOR LEVEL / TAP 1 DELAY MSB
0E LOW MID EQ FREQ MSB
0F LOW MID EQ FREQ LSB
10 LOW MID EQ BANDWIDTH
11 LOW MID EQ AMP MSB
12 LOW MID EQ AMP LSB
13 HIGH MID EQ FREQ MSB
14 HIGH MID EQ FREQ LSB
15 HIGH MID EQ BANDWIDTH
16 HIGH MID EQ AMP MSB
17 HIGH MID EQ AMP LSB
18 SAMPLE START / TAP 1 DELAY LSB
19 SAMPLE LENGTH / TAP 1 VOLUME
1A PITCH MODE
1B PITCH INPUT
1C LFO WAVEFORM
1D LFO SPEED
1E LFO DEPTH / RESONATOR DECAY
1F SAMPLE PLAYBACK MODE / TAP 1 PAN
20 PITCH FEEDBACK
21 DETUNE AMOUNT / SAMPLE PITCH
22 LESLIE SEPARATION / TAP 1 FEEDBACK
23 LESLIE MOTOR / SAMPLE REC AUDIO TRIG / TAP 2 DELAY MSB
24 LESLIE SPEED / SAMPLE MIDI TRIG / TAP 2 DELAY LSB
25 TRIGGER FLANGE / RES MIDI GATE
26 SAMPLE MIDI BASE NOTE / TAP 2 VOLUME
27 DELAY MODE
28 DELAY INPUT
29 DELAY INPUT MIX
2A DELAY MSB / LEFT DELAY MSB / TAP 2 PAN
2B DELAY LSB / LEFT DELAY LSB /TAP 2 FEEDBACK
2C FEEDBACK / LEFT FEEDBACK / TAP 3 DELAY MSB
2D RIGHT DELAY MSB / TAP 3 DELAY LSB
2E RIGHT DELAY LSB / TAP 3 VOLUME
2F RIGHT FEEDBACK / TAP 3 PAN
30 SAMPLE LOW MIDI NOTE / TAP 3 FEEDBACK
31 SAMPLE HIGH MIDI NOTE / TAP 4 DELAY MSB
32 REVERB MODE / TAP 4 DELAY LSB
33 TAP 4 VOLUME
34 REVERB INPUT 1 / TAP 4 PAN
35 REVERB INPUT 2 / TAP 4 FEEDBACK
36 REVERB INPUT MIX / TAP 5 DELAY MSB
37 REVERB PREDELAY / TAP 5 DELAY LSB
38 REVERB PREDELAY MIX / TAP 5 VOLUME
39 REVERB DECAY / TAP 5 PAN
3A REVERB DIFFUSION / TAP 5 FEEDBACK
3B REVERB LOW DECAY / TAP 6 DELAY MSB
3C REVERB HIGH DECAY / TAP 6 DELAY LSB
3D REVERB DENSITY / TAP 6 VOLUME
3E REVERB GATE / TAP 6 PAN
3F REVERB GATE HOLD / TAP 6 FEEDBACK
40 REVERB GATE RELEASE / TAP 7 DELAY MSB
41 REVERB GATED LEVEL / TAP 7 DELAY LSB
42 RING MOD SHIFT MSB / TAP 7 VOLUME
43 RING MOD SHIFT LSB / TAP 7 PAN
44 CONFIGURATION
45 PRE (00), POST (01), POST PANNING (10), POST TREMOLO (11)
46 DIRECT LEVEL / EQ LEVEL
47 MASTER EFFECTS LEVEL
48 PITCH LEVEL / LESLIE LEVEL / RING MOD LEV
49 DELAY LEVEL
4A REVERB LEVEL
4B RESONATOR PITCH 1 / TAP 8 DELAY MSB
4C RESONATOR PITCH 2 / TAP 8 DELAY LSB
4D RESONATOR PITCH 3 / TAP 8 VOLUME
4E RESONATOR PITCH 4 / TAP 8 PAN
4F RESONATOR PITCH 5 / TAP 8 FEEDBACK
50 MOD 1 SOURCE
51 MOD 1 TARGET
52 MOD 1 AMPLITUDE
53 MOD 2 SOURCE
54 MOD 2 TARGET
55 MOD 2 AMPLITUDE
56 MOD 3 SOURCE
57 MOD 3 TARGET
58 MOD 3 AMPLITUDE
59 MOD 4 SOURCE
5A MOD 4 TARGET
5B MOD 4 AMPLITUDE
5C MOD 5 SOURCE
5D MOD 5 TARGET
5E MOD 5 AMPLITUDE
5F MOD 6 SOURCE
60 MOD 6 TARGET
61 MOD 6 AMPLITUDE
62 MOD 7 SOURCE
63 MOD 7 TARGET
64 MOD 7 AMPLITUDE
65 MOD 8 SOURCE
66 MOD 8 TARGET
67 MOD 8 AMPLITUDE
68 MULTITAP MASTER FEEDBACK
69 MULTITAP NUMBER
6A 1ST DIGIT NAME
6B 2ND DIGIT NAME
6C 3RD DIGIT NAME
6D 4TH DIGIT NAME
6E 5TH DIGIT NAME
6F 6TH DIGIT NAME
70 7TH DIGIT NAME
71 8TH DIGIT NAME
72 9TH DIGIT NAME
73 10TH DIGIT NAME
74 11TH DIGIT NAME
75 12TH DIGIT NAME
76 13TH DIGIT NAME
77 14TH DIGIT NAME
78 RING MOD OUTPUT MIX
79 RING MOD DEL/REV MIX
7A PAN SPEED
7B PAN DEPTH
7C-7F (blank)

12.0 Quadraverb Service Parts List

GROUP	DESCRIPTION	ALPARTNO	QTYPER	POSITION	PCB	MANUFACTURER	NOTES
ASSY	PCB, MAIN ASSY	8-20-0044	1	MAIN BOARD			
ASSY	PCB, KEYPAD ASSY	8-20-0045	1	KEYPAD (BUTTON BOARD)			
CAB	14 PIN DIL 11.5 0.1 CTR	4-18-1214	1	J5	MAIN-LCD		
CAB	12 PIN SIL 3 0.1 CTR	4-19-0312	2	J3,4	MAIN-KEY		
CAB	6 PIN SIL 6 0.1 CTR	4-19-0606	1	J2	MAIN-LED		
CAB	12 PIN SIL 7 0.1 CTR	4-19-0712	1	J1	MAIN-POT		
CAP	0.1 MF CERDISC	1-02-0104	21	C54,57-64,66-73,75-78	MAIN		
CAP	1000 MF ELEC 16V	1-08-0108	4	C17,18,19,20	MAIN		
CAP	470 MF ELEC 25V	1-09-0477	4	C21,22,23,24	MAIN		
CAP	4.7 MF ELEC 50V	1-11-0475	17	C1-16,25	MAIN		
CER	150 PF CERDISC	1-02-0151	4	C26,27,47,51	MAIN		
CER	180 PF CERDISC	1-02-0181	8	C28-30,35,36,37,42,44	MAIN		
CER	20 PF CERDISC	1-02-0200	3	C32,33,34	MAIN		
CER	330 PF CERDISC	1-02-0331	1	C43	MAIN		
CER	43 PF CERDISC	1-02-0430	8	C79-86 (MAY SUB W/47 PF)	MAIN		
FIL	1000 PF FILM	1-20-0102	1	C38	MAIN		
FIL	0.01 MF FILM	1-20-0103	3	C41,46,50	MAIN		
FIL	0.1 MF FILM	1-20-0104	6	C45,52,53,55,56,65	MAIN		
FIL	2200 PF FILM	1-20-0222	2	C39,40	MAIN		
FIL	0.022 MF FILM	1-20-0223	1	C0	MAIN		
FIL	3300 PF FILM	1-20-0332	2	C48,49	MAIN		
HDR	14 PIN DIL HDR 0.1 CTR	4-14-0014	1	J5	MAIN		
HDR	6 PIN SIL HDR 0.1 CTR	4-15-0006	1	LED PCB	LED		
HDR	12 PIN SIL HDR 0.1 CTR	4-15-0012	5	J1,3,4,TWO ON KEY PCB	MAIN-KEY		LOCK
HDR	12 PIN SIL HDR RA 0.1	4-15-0013	1	POT PCB	POT		RA LOCK
HDR	6 PIN SIL HDR RA 0.1	4-15-1006	1	J2	MAIN		RA
HDW	6-32x1/4 PP BLK UNC	5-00-0003	29	CASE			
HDW	6-32x1/4 PF BLK UNC	5-00-0004	4	F/P			
HDW	BEZEL SCREW	5-00-0012	4	INC W/BEZEL			
HDW	#6 INT STAR WASHER	5-01-0002	3	HEATSINKS			
HDW	0.95 NYLON SPACER	5-01-0007	6	F/P ASSY			
HDW	7/16 STAR WASHER	5-01-0008	6				
HDW	0.050 NYLON WASHER	5-01-0050	1	3RD STANDOFF ON SINK			
HDW	6-32x1/2 STANDOFF	5-02-0003	5	FP/HEATSINK			
HDW	6-32 KEP NUT	5-02-6320	10	F/P			
HDW	ANGLE BRACKET F/P	5-07-0001	2	F/P			
HDW	HEAT SINK	9-03-1022	1				
HDW	SOLDER LUG (PCB MNT)	9-03-1036	6	PCB LUG			
HDW	CABLE BRACKET	9-13-1012	1				
HDW	RUBBER STRIP 5 IN	9-23-1006	2	LCD TOP & BOTTOM			
IC	7805 +5 V TO220	2-11-7805	1	U33	MAIN	NAT ONLY	TO-220
IC	7812 +12 V TO220	2-11-7812	1	U31	MAIN	NAT ONLY	TO-220
IC	7912 -12 V TO220	2-11-7912	1	U32	MAIN	NAT ONLY	TO-220
IC	74HC138 DEMUX	2-14-0138	1	U23	MAIN	NAT/TI	16 PIN DIP 0.3
IC	74HC573 3-STATE LATCH	2-14-0573	1	U20	MAIN	NAT/TI	20 PIN DIP 0.3
IC	74HC574 OCTAL FF	2-14-0574	3	U27,28,29	MAIN	NAT/TI	20 PIN DIP 0.3

IC	74HC00 QUAD 2-IN NAND	2-14-7400	1	U26	MAIN	NAT/TI	14 PIN DIP 0.3
IC	74HCU04 HEX INVERTER	2-14-7403	1	U25	MAIN	NAT/TI	14 PIN DIP 0.3
IC	74HC74 DUAL D FF	2-14-7474	1	U24	MAIN	NAT/TI	14 PIN DIP 0.3
IC	64Kx4 DRAM	2-16-4464	5	U12-16	MAIN	TI/SAMSUNG/HYUNDAI/FUJI	18 PIN DIP 0.3
IC	32Kx8 SRAM 58257	2-17-0257	1	U18	MAIN	SONY	28 PIN DIP 0.6
IC	27C512 EPROM	2-19-0512	1	U19	MAIN	NAT/TI/INTEL	28 PIN DIP 0.6
IC	80C31 MPU	2-20-8031	1	U21	MAIN	SIG/INTEL	40 PIN DIP 0.6
IC	TL084 QUAD OP AMP	2-21-0084	5	U1-4,22	MAIN	TI	14 PIN DIP 0.3
IC	CEM3381 DVCA	2-21-3381	1	U5	MAIN	CURTISS	8 PIN DIP 0.3
IC	LM311 ANALOG COMP	2-22-0311	1	U8	MAIN	TI	8 PIN DIP 0.3
IC	LM339 QUAD COMP	2-22-0339	1	U7	MAIN	TI	14 PIN DIP 0.3
IC	4053 ANALOG SWITCH	2-23-4053	1	U9	MAIN	ST/HAR/RCA/SIG	16 PIN DIP 0.3
IC	6N138 OPTOISO	2-24-0138	1	U30	MAIN	HP	8 PIN DIP 0.3
IC	PCM54 DAC	2-25-0054	1	U10	MAIN	BURR-BROWN	28 PIN DIP 0.6
IC	ZAK 24 ASIC	2-27-0005	1	U11	MAIN	HARRIS	PLCC-84
JAC	5 PIN DIN JACK	4-00-0001	2	J9,10 (MIDI)	MAIN		
JAC	4 PIN DIN JACK (P4)	4-00-0004	1	J6	MAIN		
JAC	1/4 CLIFF (MONO)	4-02-0001	6	J7,8,11-14	MAIN		
LCD	LCD MODULE	9-44-1111	1	F/P ASSY			
ME	1N4148 SIGNAL DIODE	2-00-4148	8	D2-9	MAIN		DO-41/0.3 SPC
ME	1N4003 POWER DIODE	2-01-4003	5	D10-14	MAIN		DO-27/0.5 SPC
ME	1N5231B ZENER	2-02-5231	1	D15	MAIN	MOT ONLY	DO-41/0.3 SPC
ME	2N4401 NPN TRANS	2-03-4401	6	Q1-6	MAIN	HARRIS/MOT/NAT	TO-92/0.1 SPC
ME	LED (GRN)	3-00-0001	3	LED PCB	LED		
ME	LED (RED)	3-02-0001	13	LED PCB (1), KEY PCB (12)	KEY/LED		
ME	PIEZO	7-00-0001	1	KEY PCB	KEY		
ME	24 MHz XTAL	7-01-0006	1	Z1	MAIN		
ME	20K LPF	7-20-0001	1		MAIN		
ME	LITHIUM BATTERY (3.6V)	7-05-0001	1	B1	MAIN	TADIRAN	
MTL	SIDE PANEL	9-03-1003	2				
MTL	COVER PANEL	9-03-1005	2				
MTL	FRONT PANEL	9-03-1018	1				
MTL	REAR PANEL	9-03-1019	1				
PCB	PCB, QV MAIN REV F	9-40-1019	1		REV F		
PCB	PCB, QV KEYPAD	9-40-1020	1		REV B		
PCB	PCB, QV LED	9-40-1021	1		REV B		
PCB	PCB, QV POT	9-40-1022	1				
PLS	STANDARD KNOB	9-11-1001	2				
PLS	SWITCH BOOT	9-11-1013	1				
PLS	LCD BEZEL (REV B)	9-11-1015	1				
PLS	POWER BUTTON	9-11-1016	1				
PLS	LED BUTTON	9-11-1017	12				
PLS	PLAIN BUTTON	9-11-1018	4				
PLS	SWITCH XTENDER	9-11-1019	1				
POT	10KA DUAL	0-09-1001	1	POT PCB (O/P)	POT		
POT	10KB DUAL	0-09-1004	1	POT PCB (I/P)	POT		
RES	1K 1/8W 5%	0-00-0102	9	R1,2,4,5,43,44,58,60,16	MAIN		
RES	10K 1/8W 5%	0-00-0103	6	R52,53,61,62,66,75	MAIN		
RES	100K 1/8W 5%	0-00-0104	2	R82,83	MAIN		
RES	1M 1/8W 5%	0-00-0105	3	R3,6,57	MAIN		
RES	1.1K 1/8W 5%	0-00-0112	4	R28,29,30,31	MAIN		

RES	12K 1/8W 5%	0-00-0123	1	R81	MAIN		
RES	1.5K 1/8W 5%	0-00-0152	1	R78	MAIN		
RES	180K 1/8W 5%	0-00-0184	1	R39	MAIN		
RES	2K 1/8W 5%	0-00-0202	15	R10-13,35,37,72,73,84-90	MAIN		
RES	20K 1/8W 5%	0-00-0203	9	R7,8,24,32-34,45,77,95	MAIN		
RES	220 1/8W 5%	0-00-0221	10	R50,56,63,64,67,68,91-94	MAIN		
RES	2.2M 1/8W 5%	0-00-0225	1	R55	MAIN		
RES	3K 1/8W 5%	0-00-0302	1	R79	MAIN		
RES	3.3K 1/8W 5%	0-00-0332	2	R69,70	MAIN		
RES	330K 1/8W 5%	0-00-0334	1	R27	MAIN		
RES	390K 1/8W 5%	0-00-0394	1	R40	MAIN		
RES	470 1/8W 5%	0-00-0471	8	R9,14,15,17,18,54,65,96	MAIN		
RES	4.7K 1/8W 5%	0-00-0472	8	R21,46,49,59,71,74,76,97	MAIN		
RES	51K 1/8W 5%	0-00-0513	2	R47,48	MAIN		
RES	510K 1/8W 5%	0-00-0514	2	R36,51	MAIN		
RES	560 1/8W 5%	0-00-0561	2	R19,20	MAIN		
RES	5.6K 1/8W 5%	0-00-0562	1	R25	MAIN		
RES	6.2K 1/8W 5%	0-00-0622	1	R80	MAIN		
RES	750 1/8W 5%	0-00-0751	1	R42	MAIN		
RES	75K 1/8W 5%	0-00-0753	1	R23	MAIN		
RES	750K 1/8W 5%	0-00-0754	1	R41	MAIN		
RES	8.2K 1/8W 5%	0-00-0822	1	R26	MAIN		
RES	91K 1/8W 5%	0-00-0913	1	R38	MAIN		
RUB	RUBBER KEYPAD	9-23-1005	1	F/P ASSY			
SOC	18 PIN DIP 0.3	4-04-0018	5	U12-16	MAIN		
SOC	28 PIN DIP 0.6	4-06-0028	3	U10,18,19	MAIN		
SOC	40 PIN DIP 0.6	4-06-0040	1	U21	MAIN		
SOC	84 PIN ASIC SOC	4-12-0084	1	U11	MAIN		PLCC-84
SWT	DPDT SWITCH	6-02-0001	1	S1 (POWER)			

Index

+

+10V, 2, 4

+12V, 1

+5V, 1, 4, 12

-

-12V, 1

1

12MHz, 4

2

24MHz clock, 4, 6

4

4053, 2, 3, 35

5

58256, 2

7

7805, 1, 2, 34

7812, 1, 34

7912, 1, 34

8

8031, 4, 5, 6, 12, 35

80C31, 1, 4, 12, 35

A

A15, 5

algorithm, 1, 4, 5, 16

analog switch, 2, 12, 35

analog to digital, 3

anti-aliasing, 2, 3

Arithmetic Logic Unit, 5

ASIC, 4, 5, 12, 13, 35, 36

audio pop, 6

B

backup, 2, 4

battery, 2, 4, 7, 12, 35

bypass capacitors, 1

C

C1, 2, 34

C11, 7

C13, 6

C14, 1

C15, 1

C16, 2

C17-C20, 1

C2, 2

C21, 1, 34

C22, 1

C23, 1

C24, 1

C25, 4

C28-30, 4, 34

C3, 1

C31, 1

C32, 4, 34

C35-37, 4

C38, 2, 3, 34

C39, 2, 34

C40, 2

C42, 4, 8

C44, 4, 8

C56, 5

C7, 1

CA, 8, 9

CAS, 6

CHORUS, 1, 17, 20, 23, 29

clip LED, 6

CLK, 6

comparator, 2, 4, 13

D

D12, 1, 12

D13, 1

D14, 1

D15, 4, 7, 35

D3, 2

D4, 2

D6, 7

D7, 4

DAC, 2, 4, 6, 8, 9, 12, 13, 16, 35

DASP 24, 2, 4, 5, 6, 12

data, 2, 4, 5, 6, 7, 12

DataDisk, 6, 13

DELAY, 16, 18, 21, 22, 23, 25, 26, 27, 28, 29, 31, 32, 33

demux, 5, 34

DETUNE, 23, 29, 33

divide by 2, 4

DRAM, 6, 35

E

EPROM, 4, 6, 35

EQ, 16, 17, 18, 24, 25, 26, 27, 30, 31, 33

F

FEEDBACK, 29, 33

FLANGE, 1, 23, 29, 33

I

I/O, 4, 5

I/P Filter Kit, 8

J

J2, 7, 34

J6, 1, 35

L

LC block filter, 3

LCD, 7, 12, 34, 35

LED, 2, 5, 6, 7, 34, 35

LESLIE, 25, 26, 31, 33

Lithium, 2, 35

LSTMSB, 6

M

MEM PWR, 2

microprocessor, 2

MIDI, 4, 6, 7, 12, 16, 17, 18, 19, 20, 23, 33, 35

MIX, 16, 18, 20, 21, 22, 23, 24, 25, 27, 28, 30, 31, 33

Modulation, 27, 28

Most Significant Bit, 3, 4, 5

MPU, 4, 35

N

Nyquist, 3

O

OPCODES, 18

opto isolator, 7

overflow, 2, 6

OVFLO, 6

P

PANNING, 17, 28, 29, 33

PHASER, 23, 29

PITCH, 18, 23, 25, 26, 27, 29, 31, 33

power supply, 1, 2, 6, 12, 13

Q

Q2, 5

Q3, 4

Q4, 12

Q5, 12

QuadraVerb, 1, 2, 3, 4, 5, 6, 8, 12, 17, 18

Quadraverb, i, ii, 3, 4, 5, 6, 8, 12, 17, 18, 19, 20, 34

R

R11, 8

R12, 8

R14, 2

R16, 4, 8, 9

R17, 2

R18, 2

R20, 8, 9

R26, 8, 9, 36

R27, 9, 36

R3, 2, 36

R35, 4

R36, 6, 36

R42, 9, 36

R42a, 8, 9

R43, 8, 9

R44, 8, 9

R45, 8, 9

R47, 6, 36
R48, 6
R51, 5
R58, 4
R59, 4, 5
R6, 2
R60, 4
R61, 2, 12
R66, 7
R84-90, 4
R9, 2, 36
R95, 4
RA, 8, 9, 34
RAM, 6, 12, 16
RAS, 6
RB, 8, 9
read, 4, 12
regulator, 1, 2, 4
reset, 2, 4, 5, 6, 7, 12
RESONATOR, 24, 25, 26, 30, 32, 33
REVERB, 16, 18, 20, 25, 26, 27, 28, 31, 32, 33
RF, 4
RING MOD, 24, 26, 32, 33
RISC, 5
ROM, 6, 16
RST, 6
RXD, 4

S

S1, 1, 36
SAMPLE, 2, 3, 4, 6, 17, 23, 27, 33
sample and hold, 2, 3, 6
SAMPLING, 17
SAR, 4, 5
scope sync, 4
self diagnostics, 6
SRAM, 2, 4, 5, 6, 7, 35
standby current, 2
STB, 6
Successive approximation, 3, 4, 5
System Exclusive, 18
System exclusive, 18

T

trimpot, 6, 8, 9
TXD, 4

U

U1, 2, 35
U18, 4, 35
U19, 4, 35
U2, 2
U20, 4, 35
U22, 5
U23, 5, 34
U24, 2, 4, 35
U25, 4, 5, 35
U26, 5, 35
U3, 2, 9
U30, 7, 12, 35
U31, 1, 34
U4, 2
U5, 2, 13, 35
U6, 2, 7, 13
U7, 2, 35
U8, 2, 4, 13, 35
U9, 2, 3, 4, 12, 35

V

VCA, 2, 7, 16
Vcc, 2

W

writable control store, 5
write, 4, 5, 6
WRN, 5

Z

Z1, 4, 6, 12, 35
Zener, 7, 35

Service Manual History

6/28/94	1.00	First release.

NOTES