ALESIS
MicroVerb 4 (C4)
Service Manual

P/N: 8-31-0023-B

ATTENTION!

THIS DOCUMENT CONTAINS SENSITIVE PROPRIETARY INFORMATION.
ALL RECIPIENTS MUST HAVE A CURRENT NON-DISCLOSURE AGREEMENT ON FILE WITH ALESIS, LLC.

DO NOT MAKE ILLEGAL COPIES OF THIS DOCUMENT

The information in this document contains privileged and confidential information. It is intended only for the use of those authorized by Alesis. If you are not the authorized, intended recipient, you are hereby notified that any review, dissemination, distribution or duplication of this document is strictly prohibited. If you are not authorized, please contact Alesis and destroy all copies of this document. You may contact Alesis at servicemanuals@alesis.com or at support@alesis.com.

Copyright Alesis, LLC

Microverb (C4) General Description

The Alesis MicroVerb IV is the latest in the line of popular effects processors of the micro series. Similar in performance to the MicroVerb, the NanoVerb is a scaled down version. Combining the well known power of Alesis custom processing with small size and affordability, the MicroVerb IV (Product Code C4) and NanoVerb (Product Code NV) are based largely on the design of the MidiVerb IV. The MidiVerb IV custom chip set, along with the latest ADC and DAC technology help make the C4 and NV two of the most powerful signal processors in their price ranges. Particularly in the NV the use of surface mount technology helps push the envelope of size and weight verses performance. Reference designators for the C4 are taken from the Rev. C schematic. Reference designators for the NV are taken from the Rev. B schematic and are denoted by brackets {} when components are functionally similar to the C4. Note that for both of these units there are several different main PCB revisions. There are no functional differences between these revisions. However, it should be noted that older PCB revisions will have some wire jumpers that later rev.s incorporated into the PCBs. Figure 1 shows the simplified block diagram of the C4. As the NanoVerb is even simpler, there is no need to simplify it beyond the schematic.

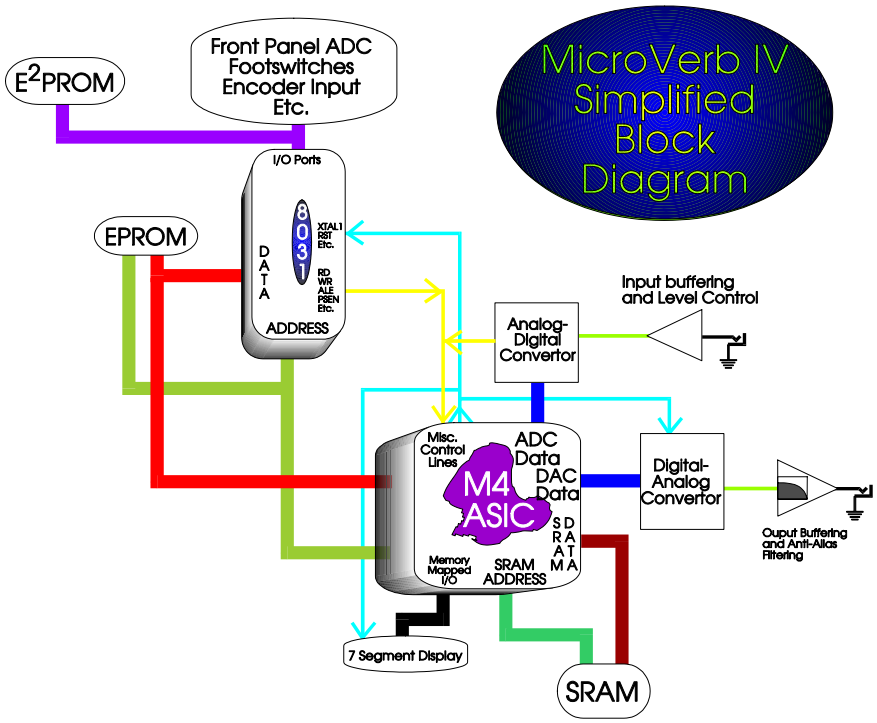

Figure 1

Test Procedures

C4 Self Test

The MicroVerb 4 has two self test modes which allow the user to run diagnostic tests. In **Individual Test** mode, the user can select particular tests to run. In **All Test** mode, the MicroVerb 4 runs all of the tests in series.

To enter Individual Test mode:

- à - Power up the unit while holding down the **Bank** button.
- à - Use the **Value Dial** to select which test to run (each test is described below).
- à - Press **Store** to execute the test. When the test is complete, you can either select another test to run or exit Individual Test mode by holding **Bank** and pressing **Store**.

To enter All Test mode:

- à - Power up the unit while holding down the **Store** button.

C4 Individual Test Descriptions

- **t0**: **ROM Test**. If the unit passes, the MicroVerb 4 will display "P0" and exit the test automatically. If the unit fails, the MicroVerb 4 will display "F0" and won't exit the test. In this case, the user must press **Bank** to exit.
- **t1**: **EEPROM Test**. If the unit passes, the MicroVerb 4 will display "P1" and exit the test automatically. If the unit fails, the MicroVerb 4 will display "F1" and won't exit the test. In this case, the user must press **Bank** to exit.
- **t2**: **LED Test**. Lights up all the LEDs (first, column by column; then row by row). The C4 automatically exits this test.
- **t3**: **Switch/Encoder Test**. Checks the buttons and the rotary encoder. The user must press every button AND rotate the encoder in both directions in order for the test to pass. After doing this, the user should hold **Bank** and press **Store**. If at this point all of the buttons have been pressed (i.e., the unit passed), then the MicroVerb 4 will display "P3" and exit the test. If instead not all of the buttons have been pressed, the MicroVerb 4 will display "F3". The user can either restart the test (by pressing **Store**) or exit the test (by pressing **Bank**.)
- **t4**: **Edit Knob Test**. Checks the Edit A/B knobs. The user must rotate each knob to show all values (0 to 127) in order for the test to pass. To exit the test, press **Bank**.
- **t5**: **MIDI In/Out Test**. Before running this test the user must connect a MIDI cable from the MIDI Out to the MIDI In of the unit. If the unit passes, the MicroVerb 4 will display "P5" and exit the test. If the unit fails, the MicroVerb 4 will display "F5" and won't exit the test. In this case, the user must press **Bank** to exit.
- **t6**: **DSP RAM Test**. If the unit passes, the MicroVerb 4 will display "P6" and exit the test automatically. If the unit fails, the MicroVerb 4 will display "F6" and won't exit the test. In this case, the user must press **Bank** to exit.

Additional Test Procedures

Audio Test. Plug an audio source into the Left Input. Don't plug anything into the Right Input. Verify that audio is passed through (the Input meters should light). Next, test the Right Input (with nothing in the Left Input). Finally, plug a different audio source into each of the Inputs. Verify that the Left Output passes audio from the Left Input and verify that the Right Output passes audio from the Right Input. In addition, all knobs should be turned through the entire range to ensure 1. Audio potentiometers are smooth and there are no audio dropouts or “scratching” noises heard, and 2. Edit knobs/data wheels correctly switch/change the corresponding parameters in accordance with the unit’s User Reference Manual.

Troubleshooting Chart

The charts below were created in an effort to relieve the beleaguered technician from having to "discover" some of the common faults we have seen. Please note that we only cover the most likely causes, not all of them.

C4 Symptom	Possible Cause	Solution
No Lights, No Sound. (Dead).	Faulty AC adapter.	Replace and retest.
	Defective component in power supply circuit.	Troubleshoot and repair as necessary.
	Loose front panel cable.	Troubleshoot and repair as necessary.
No wet (effects) signal.	Faulty ASIC	Replace and retest.
	Faulty DRAM	Replace and retest.
	Faulty Crystal	Replace and retest.
	Faulty DAC	Troubleshoot and repair as necessary.
	Faulty ADC	Troubleshoot and repair as necessary.
Distortion.	Faulty Power Supply Rail	Troubleshoot and repair as necessary.
	Faulty op-amp	Troubleshoot and repair as necessary.
	Faulty DAC	Troubleshoot and repair as necessary.
	Faulty ADC	Troubleshoot and repair as necessary.
Programs not changing.	Faulty shaft encoder.	Replace and retest.
Intermittent operation.	Faulty Crystal.	Replace and retest.
	Faulty potentiometer(s)	Replace and retest.
	Poor through hole Solder	Check all through hole solder connections, particularly near the power supply area.

General Troubleshooting

While this manual assumes that the reader has a fundamental understanding of electronics and basic troubleshooting techniques, a review of some of the techniques used by our staff may help.

1. Visual Inspection - A short visual inspection of the unit under test will often yield results without the need of complex signal analysis (burnt, or loose components are a dead giveaway).
2. Self Test - Alesis products that utilize microprocessor control contain built in test software which exercises many of the units' primary circuit functions. Self test should always be done following any repair to ensure basic functionality.
3. Environmental Testing - Applying heat and cold (heat gun/freeze spray) will often reveal thermally intermittent components (Clock crystals, I.C.s, and capacitors are particularly prone to this type of failure).
4. Burn in Testing - Leaving a unit running overnight often reveals intermittent failures such as capacitors that begin to leak excess current after a significant amount of time.
5. Cable Checks - Wiggling cables can reveal intermittent failures such as loose cables or poorly soldered headers. Remember to check power supply cables as well.
6. Flexing the PC Board - Poor solder joints and broken traces can often be found by pressing the PC Board in various places.
7. Tapping Components - Sometimes tapping on a component (particularly crystals) will cause it to fail.
8. Power Down/up - Turning the unit off and back on rapidly several times may reveal odd reset and/or power supply failures.
9. Reset Threshold - A Variac (variable transformer) can be used to check reset threshold levels. This can be particularly useful in helping customers with low line problems.
10. Compressors - Using a compressor/limiter is often helpful when attempting to solve low level noise problems, as well as assisting with DAC adjustments.
11. Sweep Tests - Sweep generators are very useful in checking the frequency response envelopes of anti-aliasing filters.
12. Piggybacking - Piggybacking I.C.s is particularly useful when troubleshooting large sections of logic. This is especially true when working with older units.

REVISION RECORD			
LTR.	ECO NO:	APPROVED:	DATE:

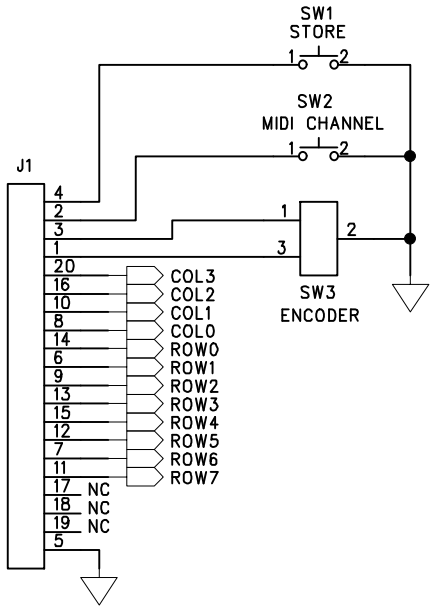

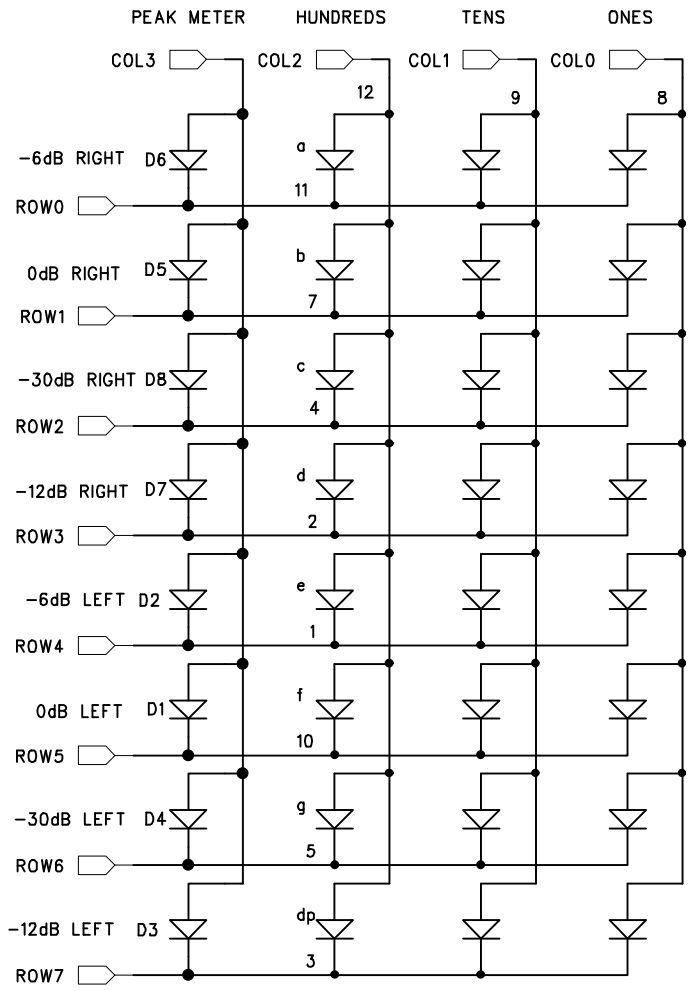

3-DIGIT, 7-SEGMENT DISPLAY

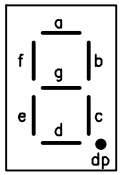

U1

COMPANY: ALESIS			
TITLE: C4 FRONT PANEL PCB P.N. 9-40-1230 C4FNT_A.SCH			
DRAWN: R. SNAVELY	DATED: 6-23-95	SIZE: B	DRAWING NO:	REV: A
RELEASED:	DATED:	SCALE:	SHEET: 1 OF 1

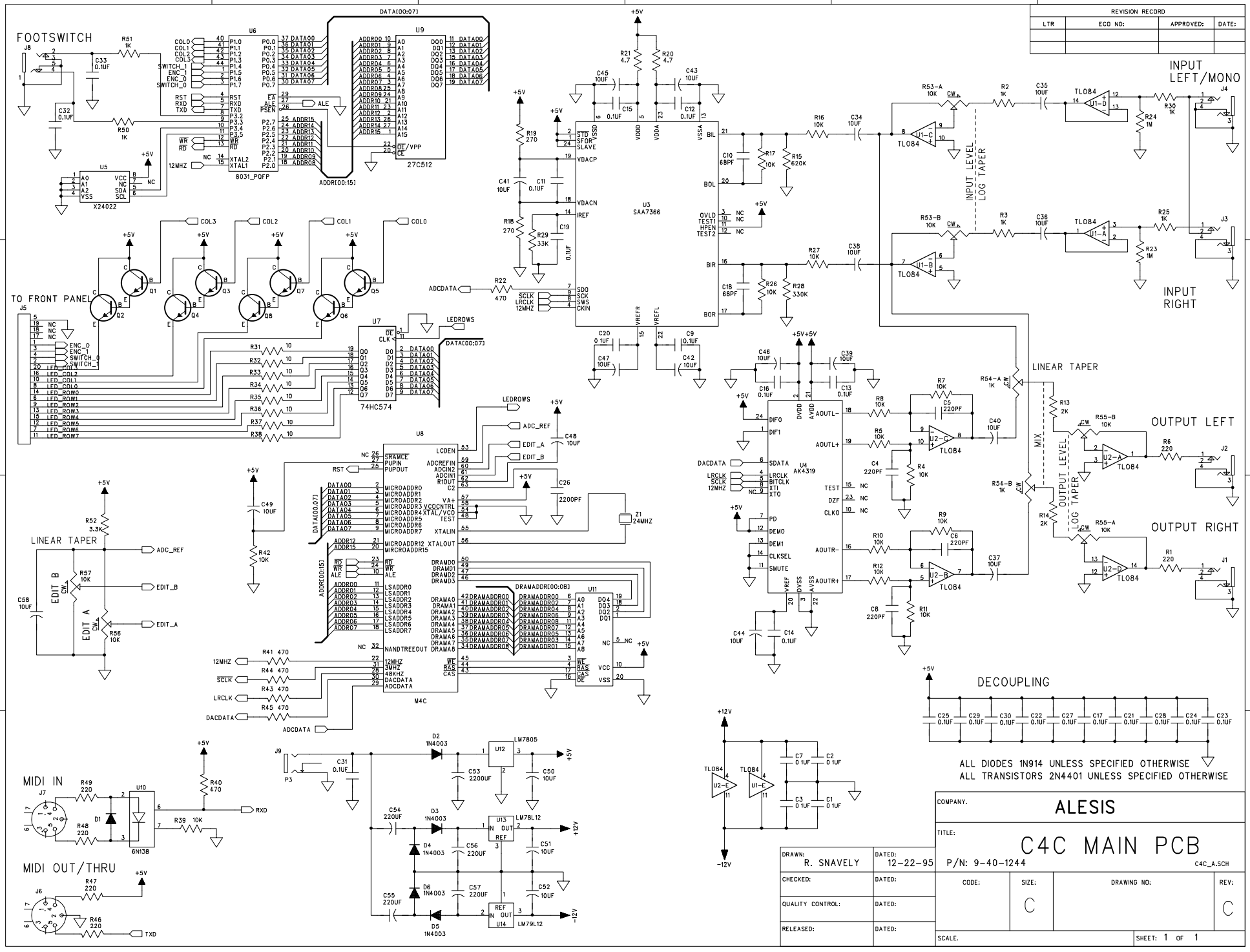
REVISION RECORD
LTR
ECO NO:
APPROVED:
DATE:
FOOTSWITCH
INPUT LEFT/MONO
INPUT RIGHT
INPUT LEVEL LOG TAPER
TO FRONT PANEL
LINEAR TAPER
OUTPUT LEFT
OUTPUT RIGHT
OUTPUT LEVEL LOG TAPER
MIX
DECOUPLING
MIDI IN
MIDI OUT/THRU
ALL DIODES 1N914 UNLESS SPECIFIED OTHERWISE
ALL TRANSISTORS 2N4401 UNLESS SPECIFIED OTHERWISE
COMPANY. ALESIS
TITLE: C4C MAIN PCB
P/N: 9-40-1244
C4C_A.SCH
DRAWN: R. SNAVELY
DATED: 12-22-95
CHECKED:
QUALITY CONTROL:
RELEASED:
CODE:
SIZE: C
DRAWING NO:
REV: C
SCALE:
SHEET: 1 OF 1

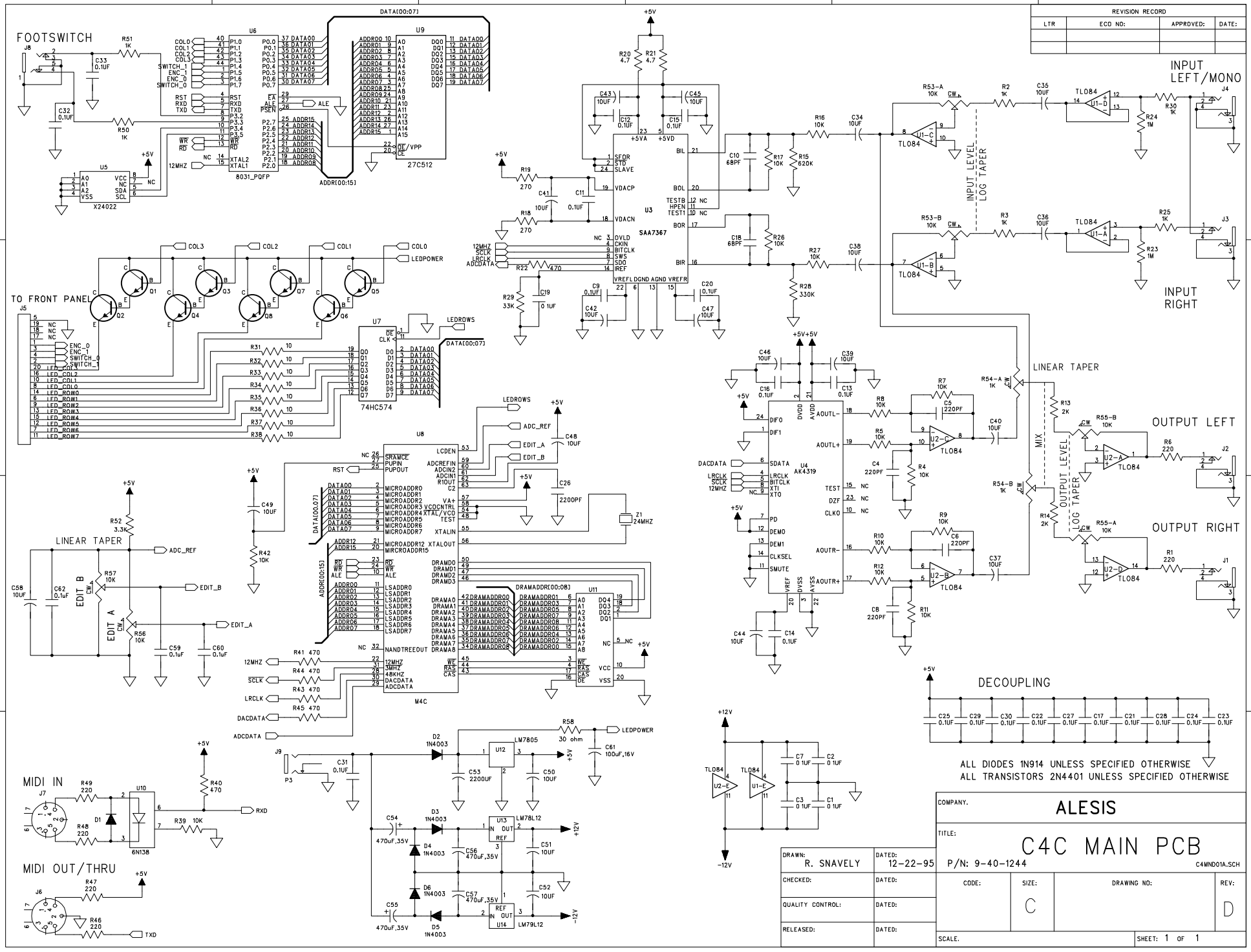
REVISION RECORD
LTR
ECO NO:
APPROVED:
DATE:
FOOTSWITCH
TO FRONT PANEL
INPUT LEFT/MONO
INPUT RIGHT
INPUT LEVEL LOG TAPER
LINEAR TAPER
MIX
OUTPUT LEFT
OUTPUT RIGHT
OUTPUT LEVEL LOG TAPER
DECOUPLING
MIDI IN
MIDI OUT/THRU
ALL DIODES 1N914 UNLESS SPECIFIED OTHERWISE
ALL TRANSISTORS 2N4401 UNLESS SPECIFIED OTHERWISE
COMPANY.
ALESIS
TITLE:
C4C MAIN PCB
P/N: 9-40-1244
C4MND01A.SCH
DRAWN: R. SNAVELY
DATED: 12-22-95
CHECKED:
QUALITY CONTROL:
RELEASED:
CODE:
SIZE: C
DRAWING NO:
REV: D
SCALE:
SHEET: 1 OF 1

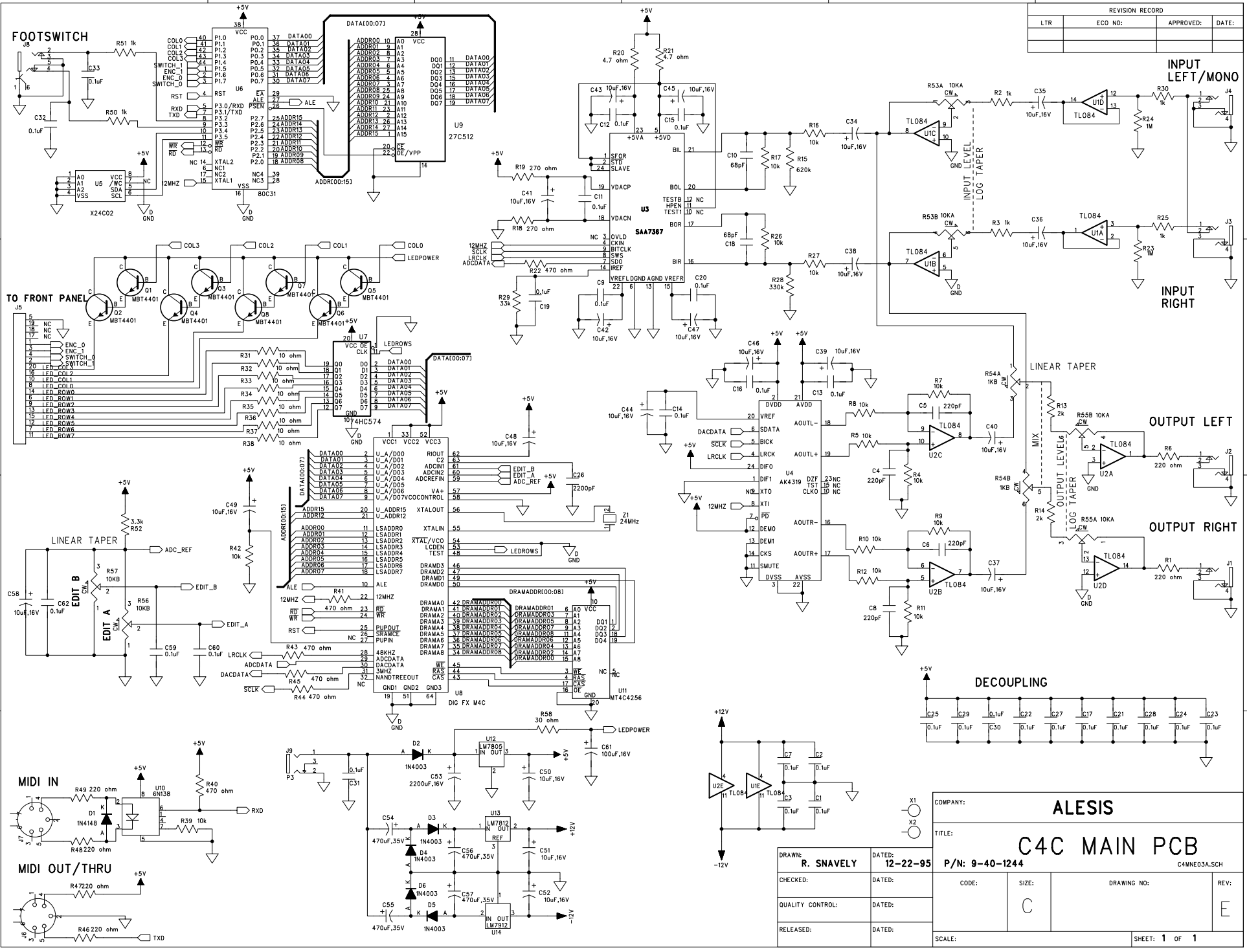
FOOTSWITCH
TO FRONT PANEL
INPUT LEFT/MONO
INPUT RIGHT
OUTPUT LEFT
OUTPUT RIGHT
LINEAR TAPER
INPUT LEVEL LOG TAPER
OUTPUT LEVEL LOG TAPER
MIX
DECOUPLING
MIDI IN
MIDI OUT/THRU
U9 27C512
U6 80C31
U5 X24C02
U3 SAA7367
U4 AK4319
U7 74HC574
U8 DIG FX M4C
U11 MT4C4256
U10 6N138
U12 LM7805
U13 LM7812
U14 LM7912
U2A U2B U2C U2D U1A U1B U1C U1D U2E U1E TL084
Z1 24MHz
REVISION RECORD
LTR
ECO NO:
APPROVED:
DATE:
COMPANY:
ALESIS
TITLE:
C4C MAIN PCB
P/N: 9-40-1244
C4MNE03A.SCH
DRAWN: R. SNAVELY
DATED: 12-22-95
CHECKED:
QUALITY CONTROL:
RELEASED:
CODE:
SIZE: C
DRAWING NO:
REV: E
SCALE:
SHEET: 1 OF 1

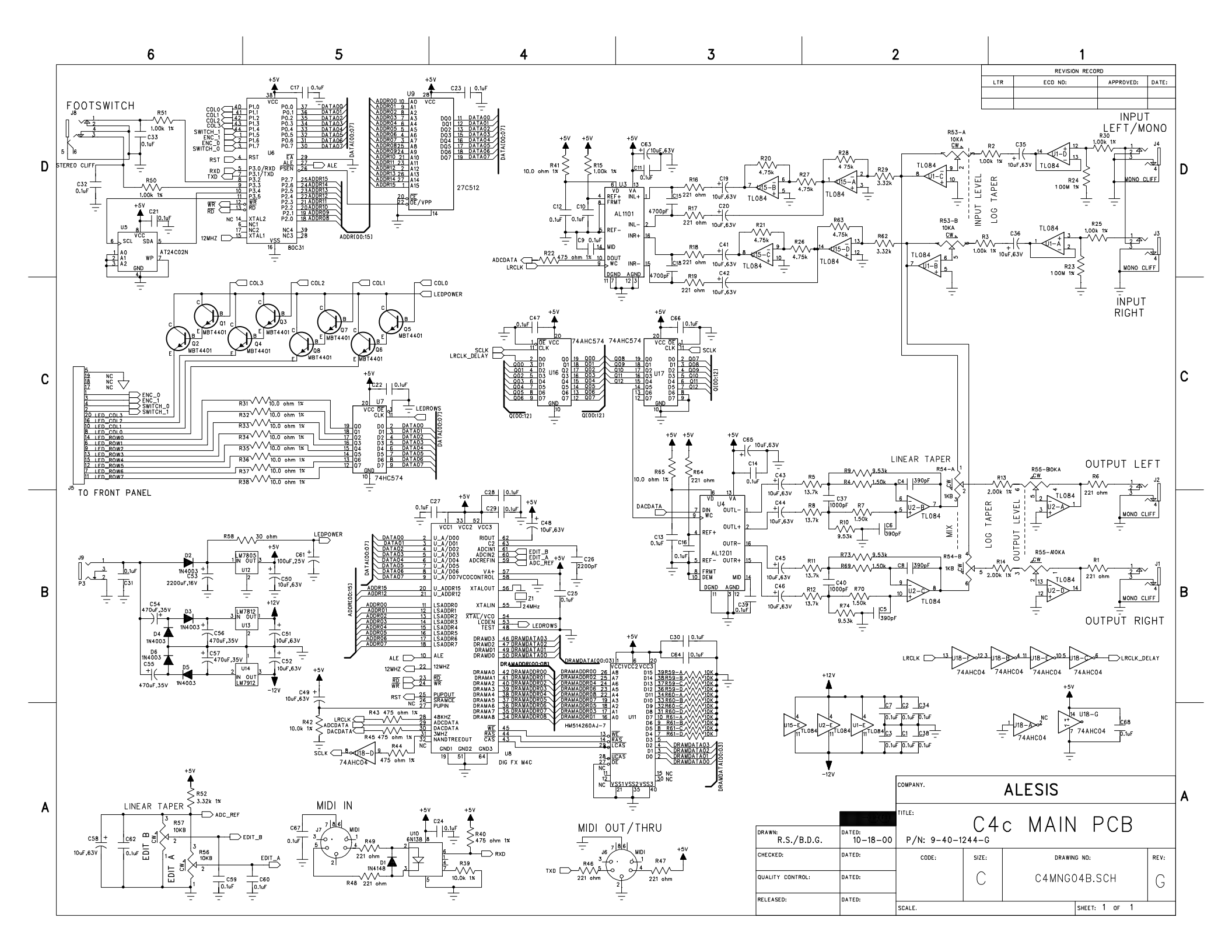
REVISION RECORD
LTR
ECO NO:
APPROVED:
DATE:
FOOTSWITCH
STEREO CLIFF
TO FRONT PANEL
INPUT LEFT/MONO
INPUT RIGHT
INPUT LEVEL
LOG TAPER
LINEAR TAPER
OUTPUT LEFT
OUTPUT RIGHT
OUTPUT LEVEL
MIX
MIDI IN
MIDI OUT/THRU
DIG FX M4C
ALESIS
COMPANY.
TITLE:
C4c MAIN PCB
P/N: 9-40-1244-G
DRAWN:
R.S./B.D.G.
DATED:
10-18-00
CHECKED:
QUALITY CONTROL:
RELEASED:
CODE:
SIZE:
C
DRAWING NO:
C4MNG04B.SCH
REV:
G
SCALE.
SHEET: 1 OF 1

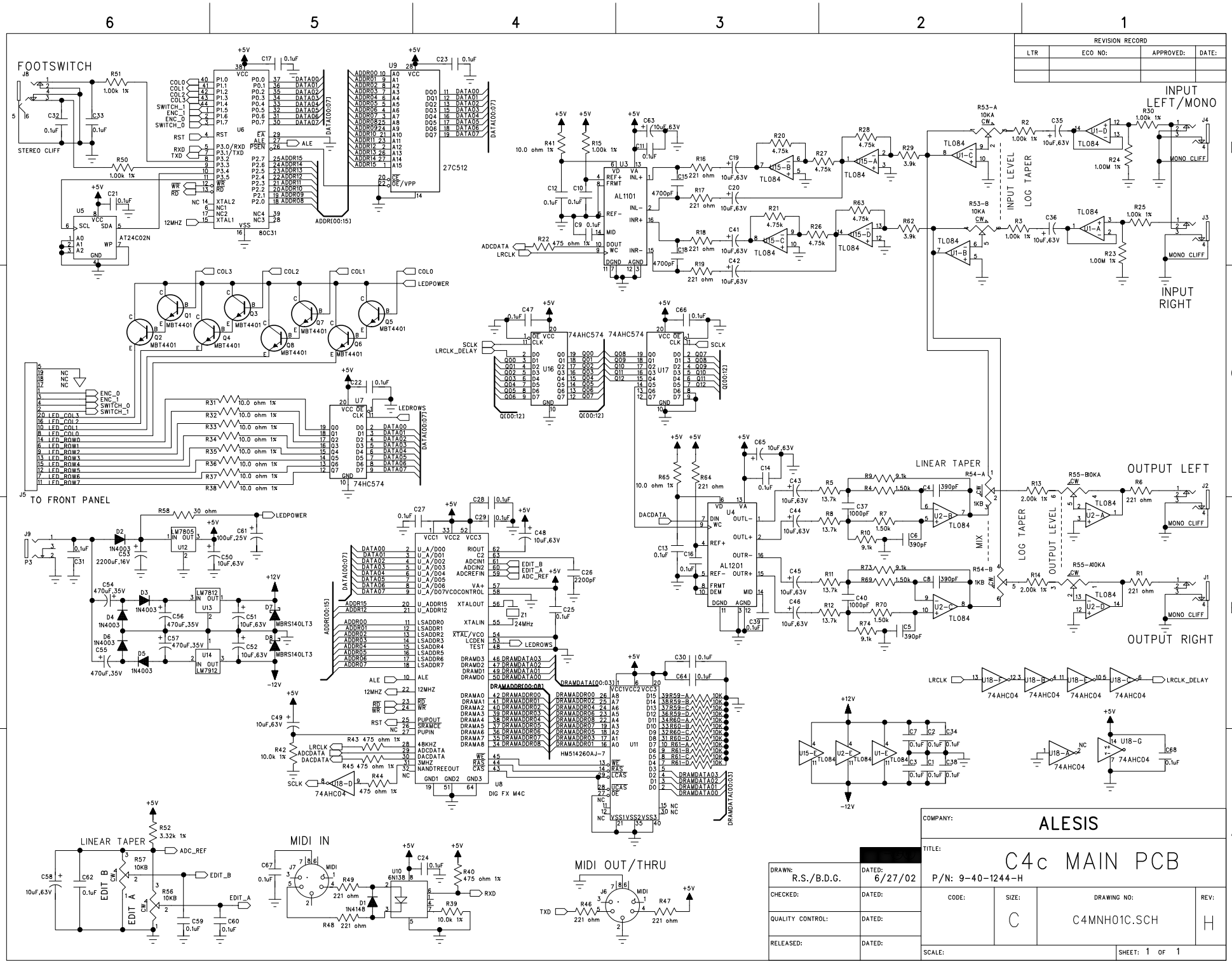

REVISION RECORD			
LTR	ECO NO:	APPROVED:	DATE:

COMPANY: ALESIS

TITLE: C4c MAIN PCB

P/N: 9-40-1244-H

DRAWN: R.S./B.D.G.	DATED: 6/27/02	CODE:	SIZE: C	DRAWING NO: C4MNH01C.SCH	REV: H
CHECKED:	DATED:				
QUALITY CONTROL:	DATED:				
RELEASED:	DATED:	SCALE:		SHEET: 1 OF 1	