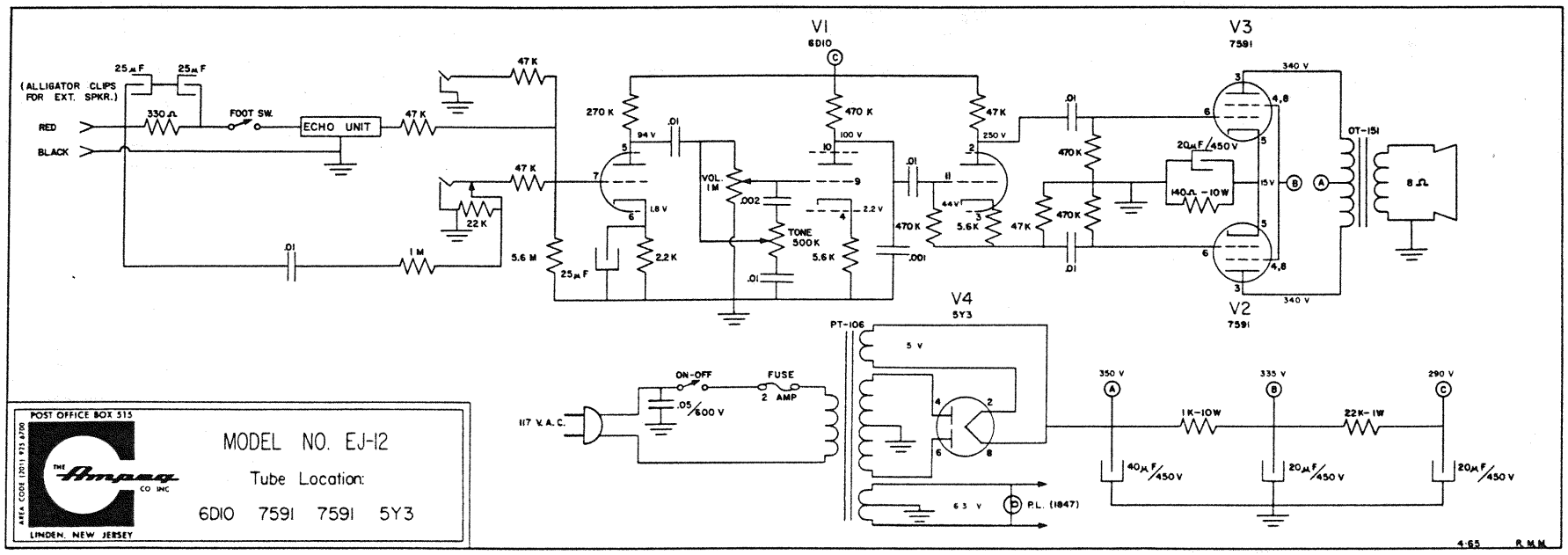
V1
6D10
V3
7591
V2
7591
V4
5Y3
PT-106
OT-151
(ALLIGATOR CLIPS FOR EXT. SPKR.)
RED
BLACK
FOOT SW.
ECHO UNIT
VOL. 1M
TONE 500K
ON-OFF
FUSE 2 AMP
117 V.A.C.
P.L. (1847)
POST OFFICE BOX 515
LINDEN, NEW JERSEY
MODEL NO. EJ-12
Tube Location:
6D10 7591 7591 5Y3
4-65 R.M.M.

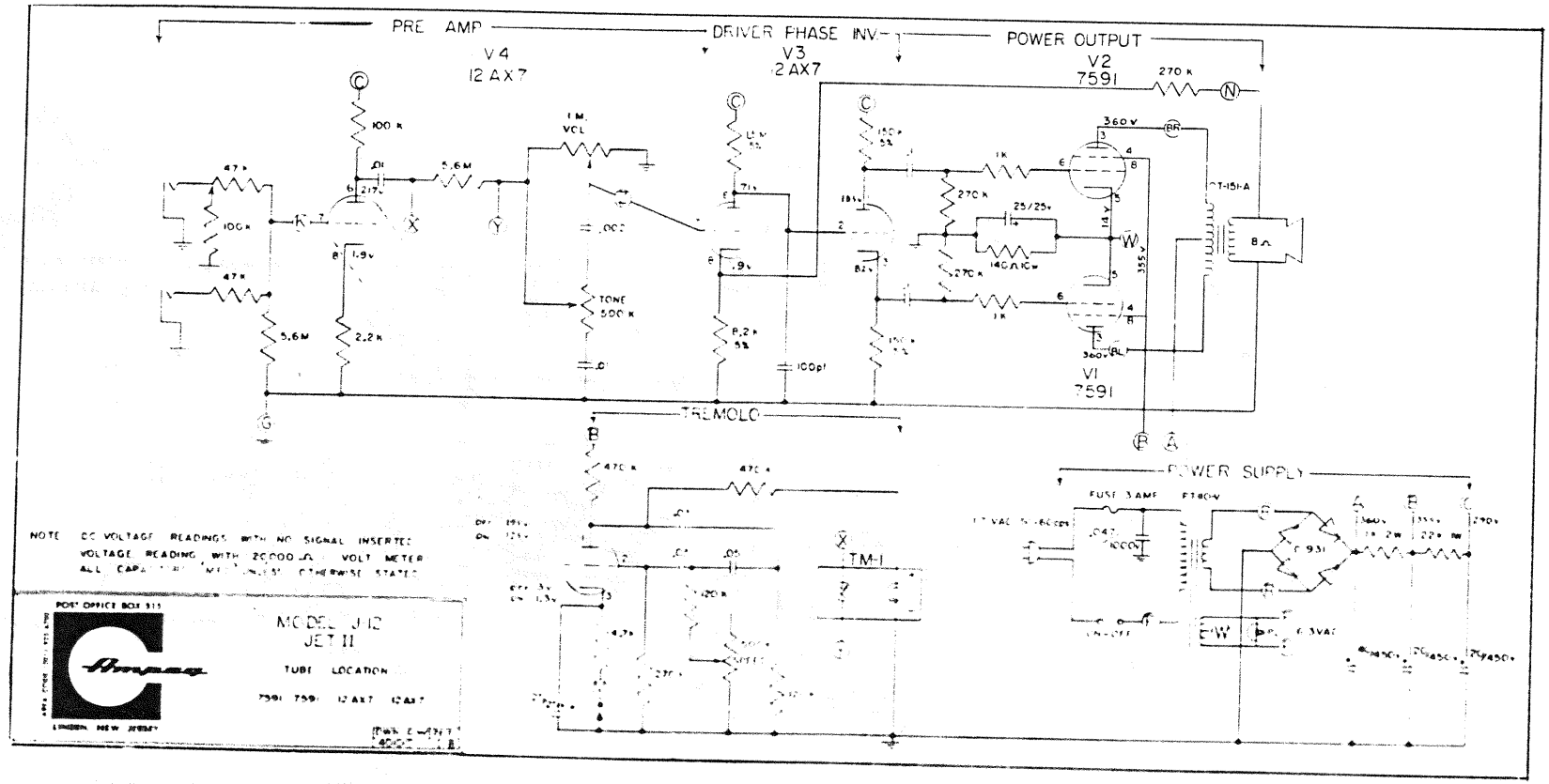
PRE AMP
DRIVER PHASE INV.
POWER OUTPUT
V4
12AX7
V3
12AX7
V2
7591
V1
7591
TREMOLO
POWER SUPPLY
TONE 500K
OT-151-A
TM-1
NOTE DC VOLTAGE READINGS WITH NO SIGNAL INSERTED
POST OFFICE BOX 515
MODEL J-12
JET II
TUBE LOCATION