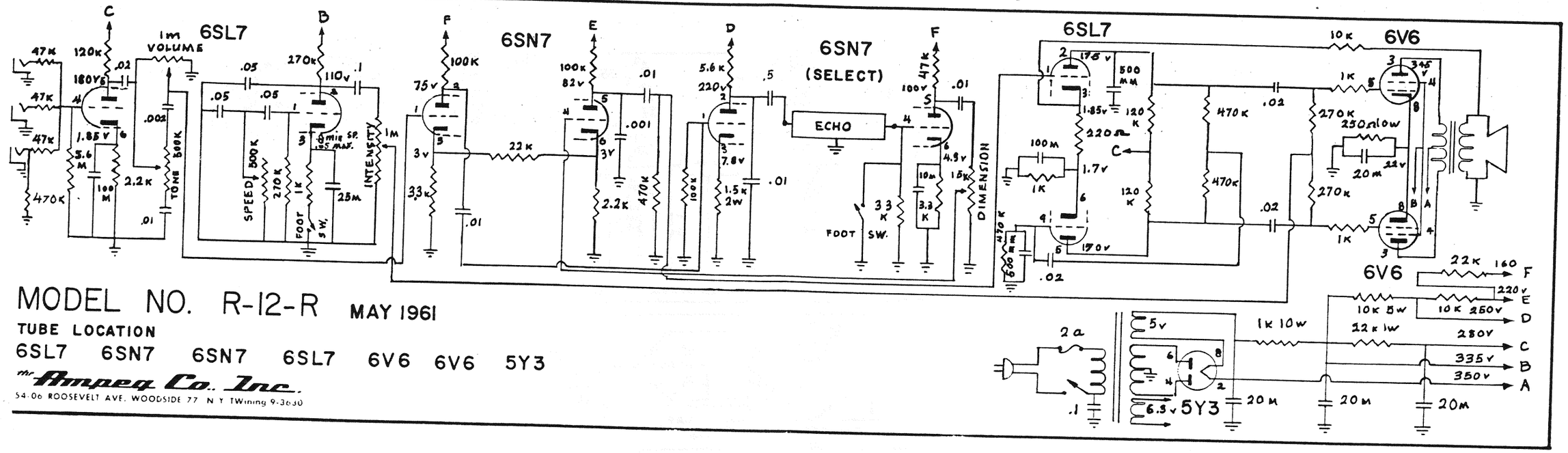
6SL7
6SN7
6SN7
(SELECT)
6SL7
6V6
6V6
5Y3
VOLUME
TONE
SPEED
INTENSITY
FOOT SW.
ECHO
DIMENSION
MODEL NO. R-12-R MAY 1961
TUBE LOCATION
6SL7 6SN7 6SN7 6SL7 6V6 6V6 5Y3
The Ampeg Co. Inc.
54-06 ROOSEVELT AVE. WOODSIDE 77 N Y TWining 9-3630

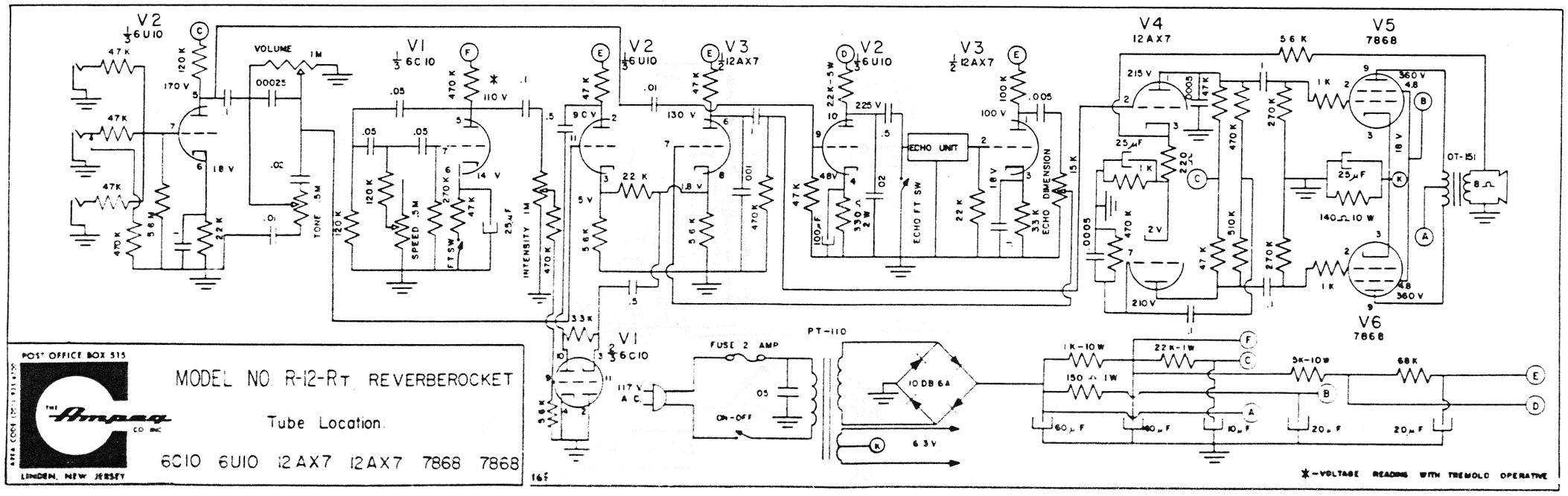
V2 6U10
V1 6C10
V2 6U10
V3 12AX7
V2 6U10
V3 12AX7
V4 12AX7
V5 7868
V6 7868
V1 6C10
VOLUME
TONE
SPEED
INTENSITY
FT SW
ECHO UNIT
ECHO FT SW
DIMENSION
FUSE 2 AMP
PT-110
OT-151
POST OFFICE BOX 515
MODEL NO. R-12-RT REVERBEROCKET
Tube Location
6C10 6U10 12AX7 12AX7 7868 7868
LINDEN, NEW JERSEY
*-VOLTAGE READING WITH TREMOLO OPERATIVE