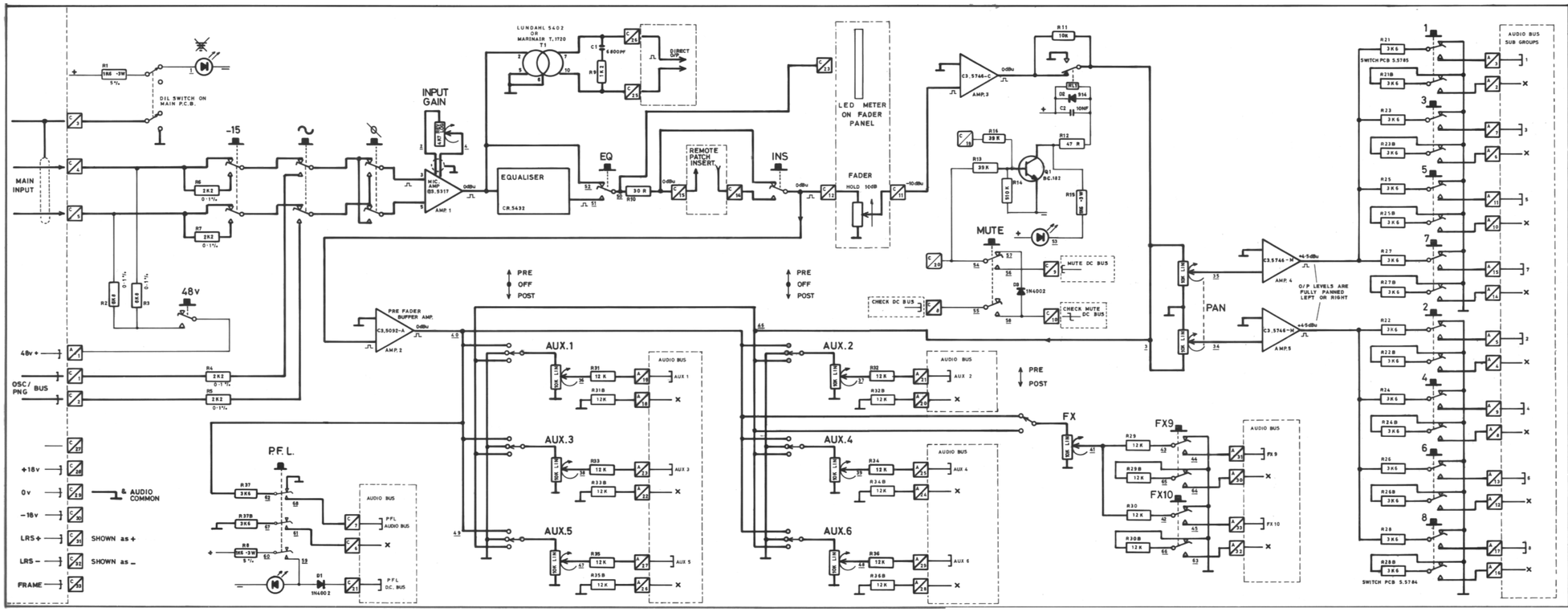

Bar Schedules Nos

Calculation Sheets Nos

INPUT CHANNEL

COLOUR CODE AND PIN Nos FOR 10 WAY RIBBON CABLE

BROWN	= C29	BLUE	= C32
RED	= C12	MAUVE	= C31
ORANGE	= C29	GREY	= C31
YELLOW	= C11	WHITE	= C23
GREEN	= C32	BLACK	= C29

NOTES :-

LRS = LAMP (i.e.d.) & RELAY SUPPLY (22v)

0dBu = 0·775v r.m.s. WITHOUT REF. TO IMPEDANCE

X = COMMON MODE REJECTION BUS

ALL R's TO BE 1% UNLESS STATED

Scale

CADAC ELECTRONICS LTD.

ENGLAND.

Revisions

2	12/12/85							

Contract No

Drawing No. AR.5780

Date Issued 12. 11. 85