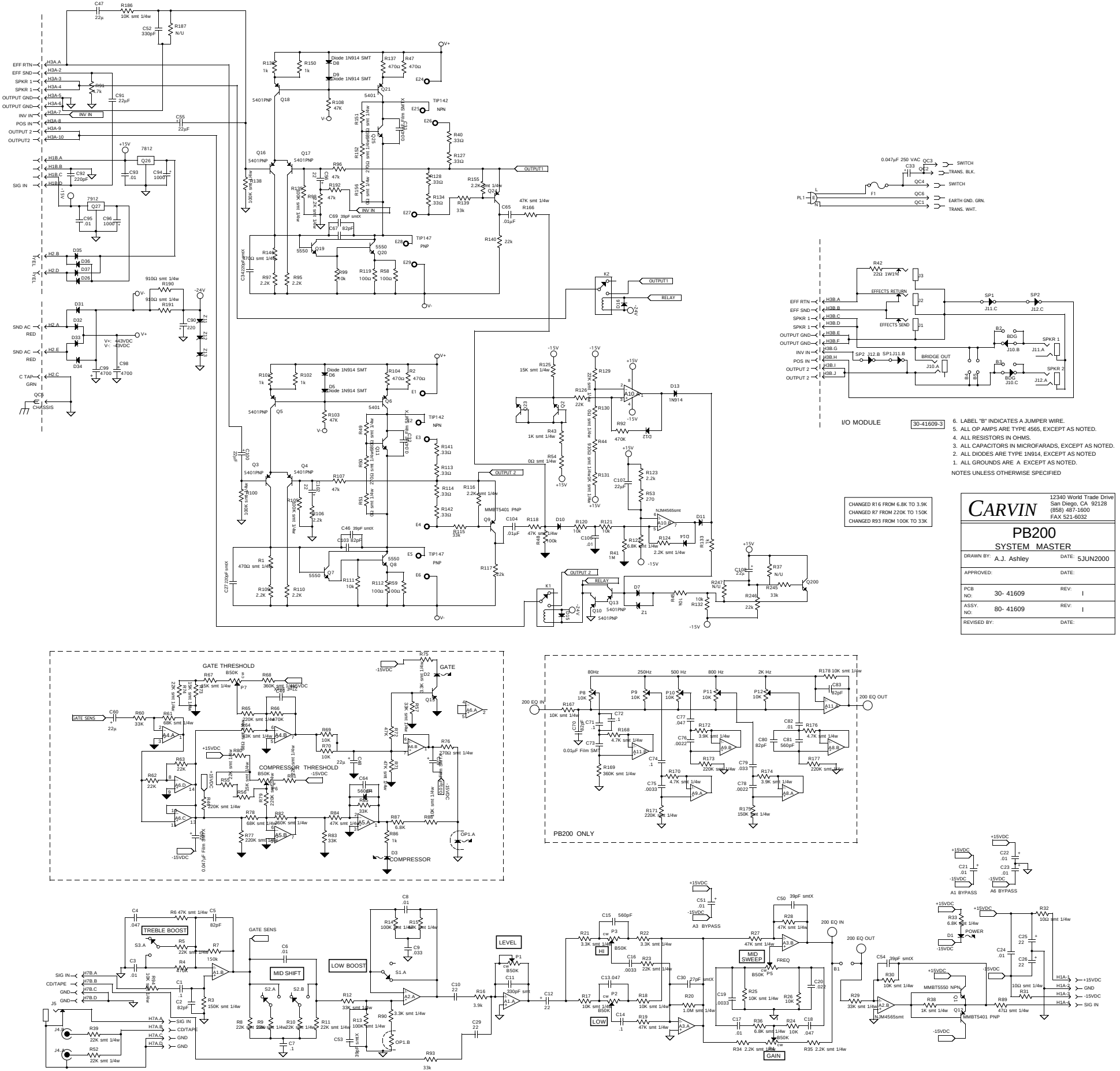
I/O MODULE
30-41609-3
6. LABEL "B" INDICATES A JUMPER WIRE.
5. ALL OP AMPS ARE TYPE 4565, EXCEPT AS NOTED.
4. ALL RESISTORS IN OHMS.
3. ALL CAPACITORS IN MICROFARADS, EXCEPT AS NOTED.
2. ALL DIODES ARE TYPE 1N914, EXCEPT AS NOTED
1. ALL GROUNDS ARE A EXCEPT AS NOTED.
NOTES UNLESS OTHERWISE SPECIFIED
CHANGED R16 FROM 6.8K TO 3.9K
CHANGED R7 FROM 220K TO 150K
CHANGED R93 FROM 100K TO 33K
CARVIN
12340 World Trade Drive
San Diego, CA 92128
(858) 487-1600
FAX 521-6032
PB200
SYSTEM MASTER
DRAWN BY: A.J. Ashley
DATE: 5JUN2000
APPROVED:
DATE:
PCB NO: 30- 41609
REV: I
ASSY. NO: 80- 41609
REV: I
REVISED BY:
DATE:
PB200 ONLY
GATE THRESHOLD
COMPRESSOR THRESHOLD
TREBLE BOOST
MID SHIFT
LOW BOOST
LEVEL
HI
LOW
MID SWEEP
GAIN
A1 BYPASS
A3 BYPASS
A6 BYPASS
POWER