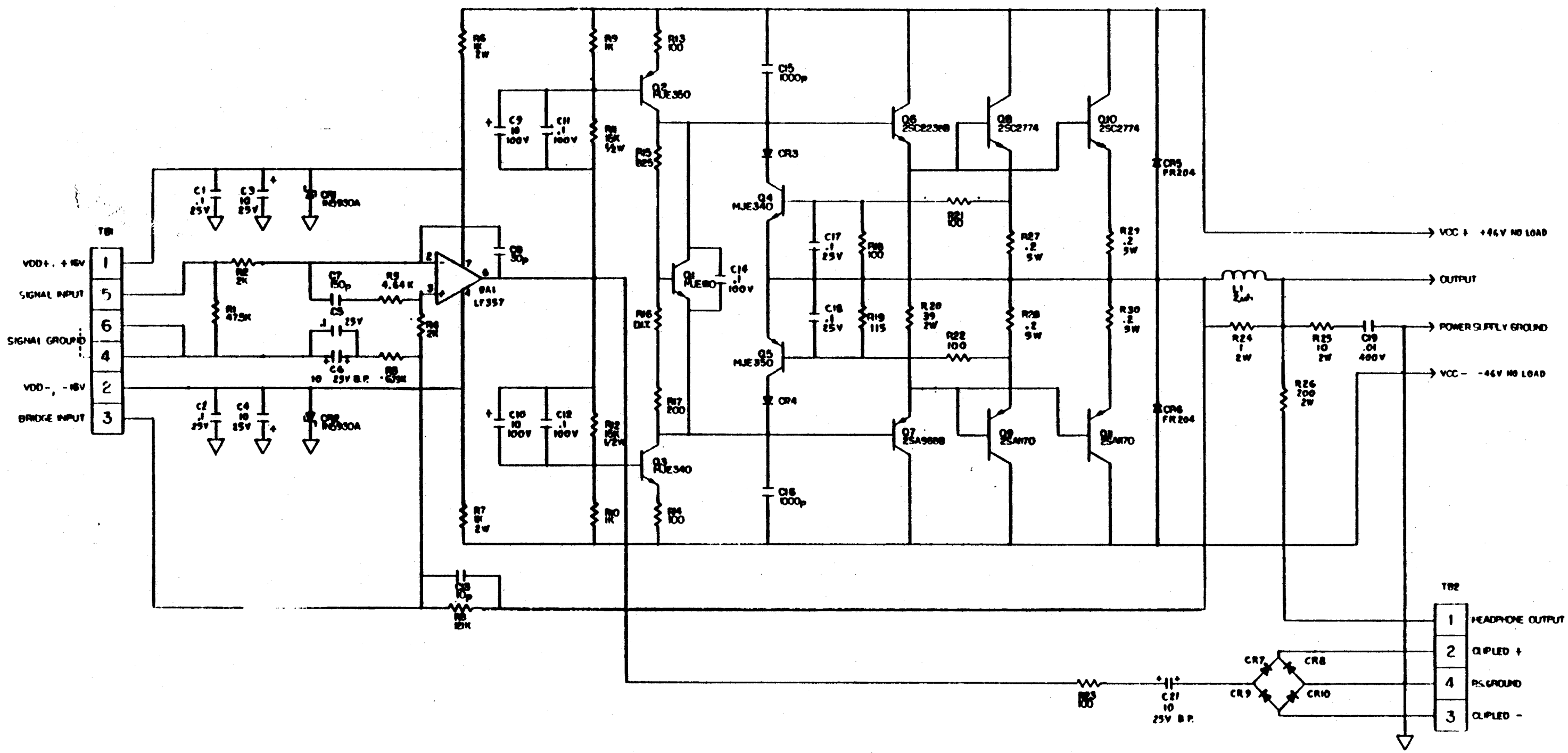

COMP. NOT INSTALLED BY OUTSIDE VENDOR	LAST REF DES. USED	NOT USED
	CR9	
	CR10	
	L1	
	Q4	
	R30	
	Q11	
	TB2	

NOTES

1. CAPS VALUE IN MFD UNLESS SPECIFIED (p) = PICOFARAD
2. DIODES IN4148 UNLESS NOTED (UN)
3. RESISTORS 1/4W, 1% U.N.
4. Q9-11, MOUNTED ON MAIN HEATSINK

REV	DESCRIPTION	DATE

CREST AUDIO

CREST
MODEL 1501A SE
POWER AMPLIFIE
HEATSINK MODUL
SCHEMATIC DWG

2104683