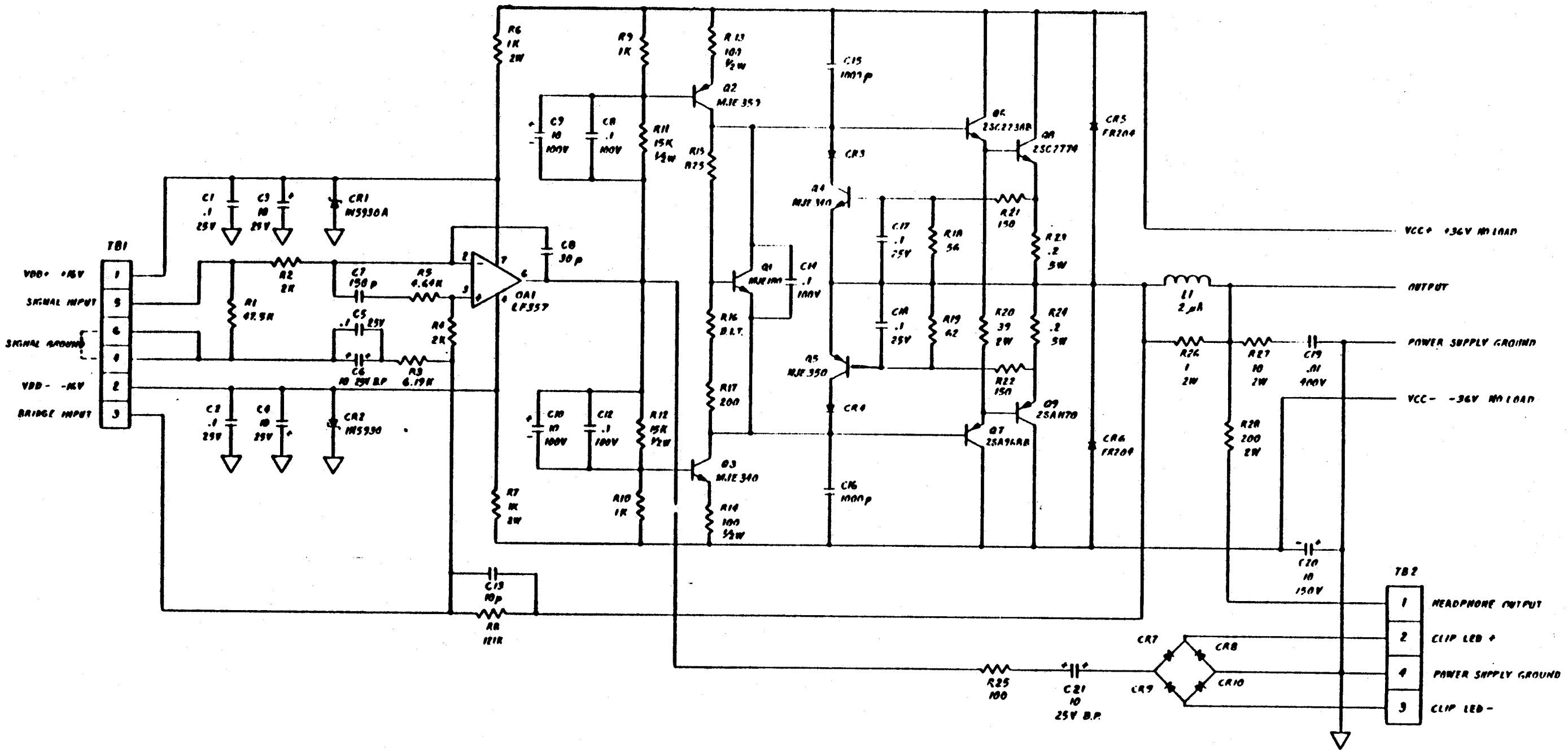

COMP. NOT INSTALLED BY OUTSIDE VENDOR	LAST REF. DESIG. USED	LAST REF. DESIG. NOT USED
	C21	
	CR10	
	L1	
	OA1	
	R28	
	Q9	
	TB2	

NOTES

1. UNLESS SPECIFIED OTHERWISE
   - CAPACITORS ARE IN MFD
     p = PICOFARAD
   - DIODES ARE 1N4148
   - RESISTORS ARE 1/4W 1%
2. Q1, Q4-Q9 MOUNTED ON MAIN HEATSINK

REV	DESCRIPTION	DATE

CREST AUDIO

DWN E.H. DATE 12/2/89
APP T.F. DATE 10/2/85

CREST
MODEL 1001A
POWER AMPLIFIER
HEATSINK MODULE
SCHEMATIC DWG

DWG No. 2104806