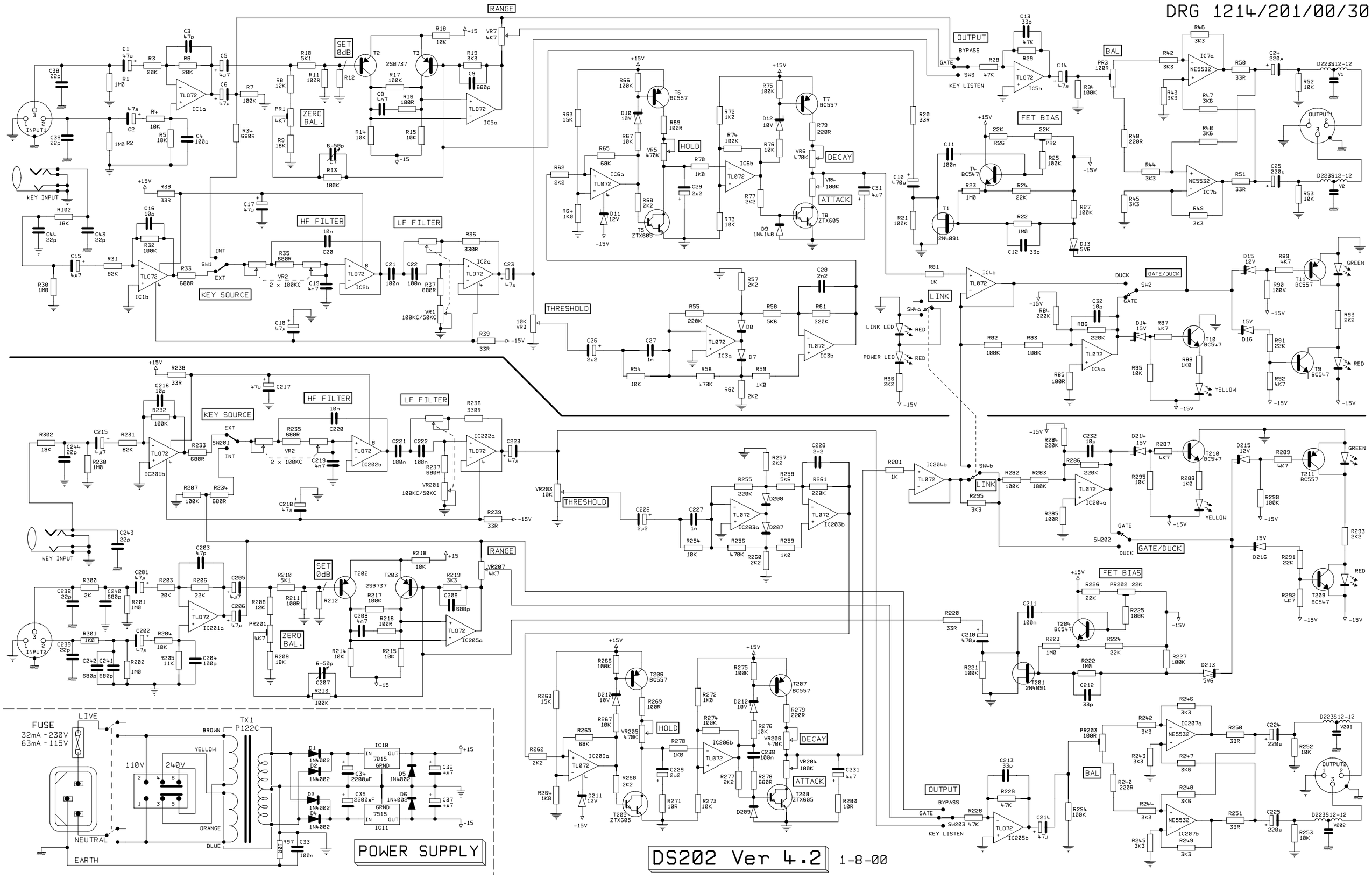DRG 1214/201/00/30