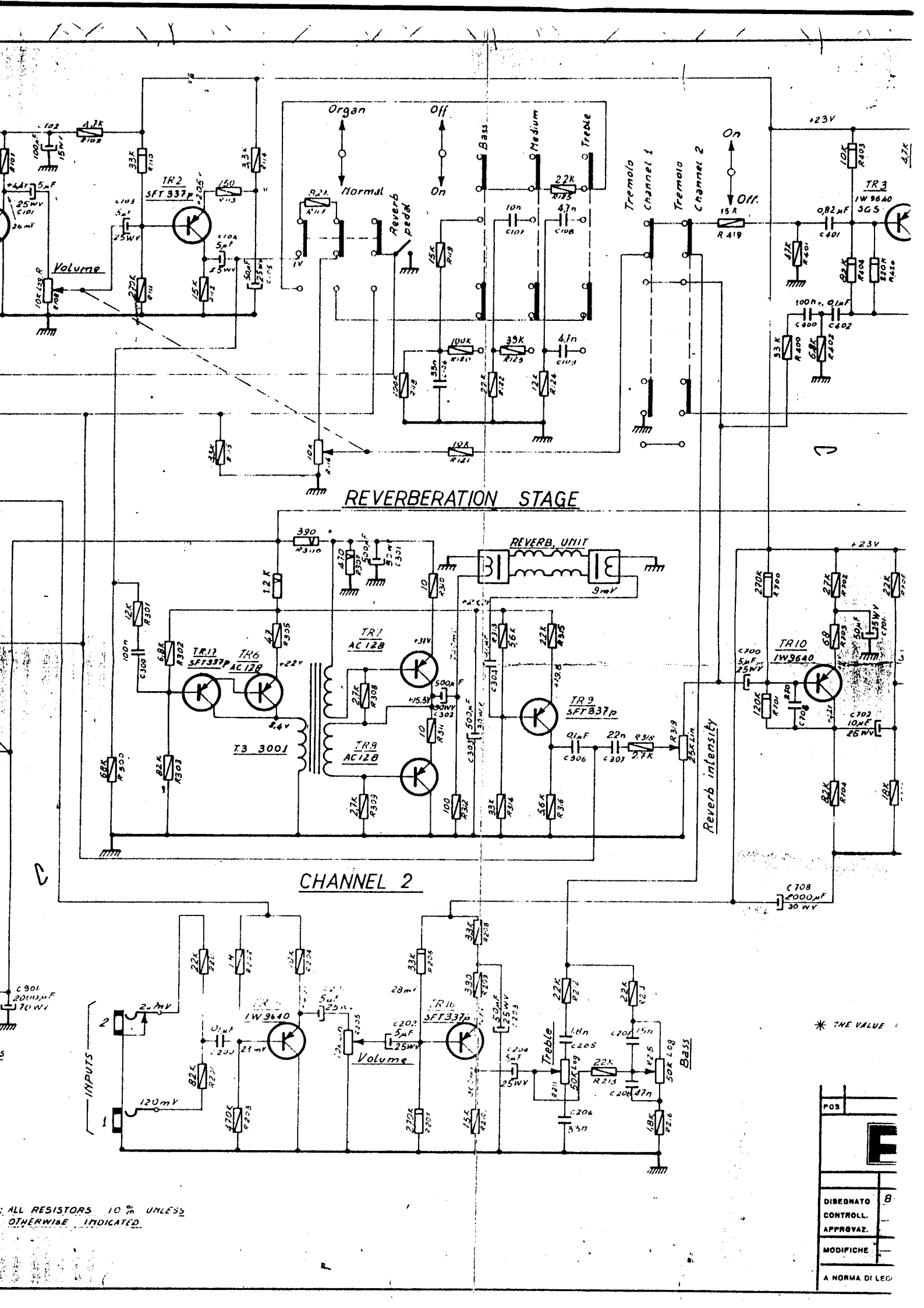
Organ
Normal
Off
On
Reverb pedal
Bass
Medium
Treble
Tremolo Channel 1
Tremolo Channel 2
On
Off
+23V
TR2
SFT 337p
TR3
IW 9640
SGS
Volume
REVERBERATION STAGE
REVERB. UNIT
9mV
TR1
AC128
TR11
SFT337p
TR6
AC128
TR9
AC128
T3 3001
TR9
SFT337p
TR10
IW9640
Reverb intensity
CHANNEL 2
TR8
IW 9640
TR10
SFT337p
Volume
Treble
Bass
INPUTS
2mV
120mV
* THE VALUE
ALL RESISTORS 10 % UNLESS OTHERWISE INDICATED
POS
DISEGNATO
CONTROLL.
APPROVAZ.
MODIFICHE
A NORMA DI LEGGE