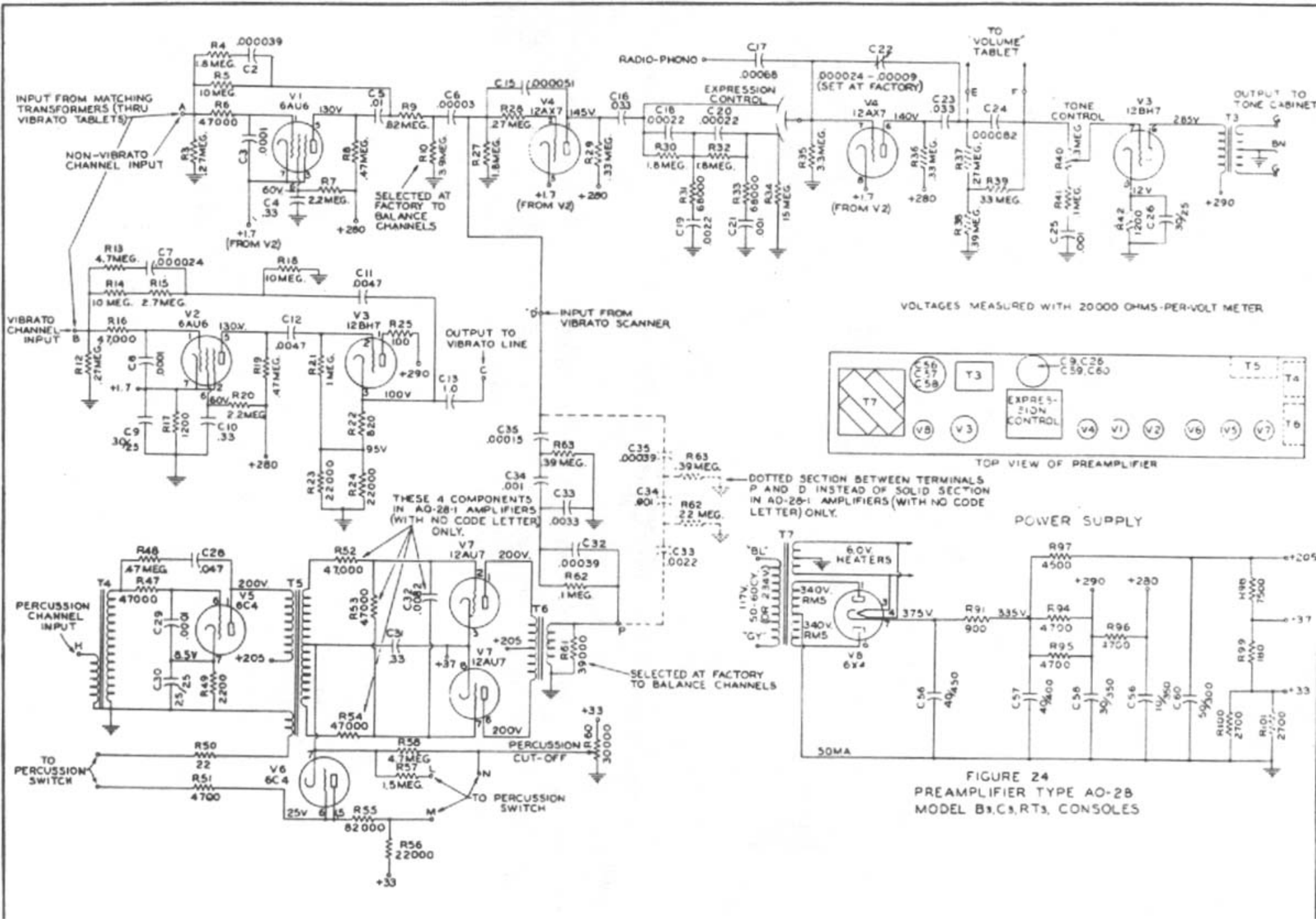

FIGURE 24
PREAMPLIFIER TYPE AO-28
MODEL B3, C3, RT3, CONSOLES