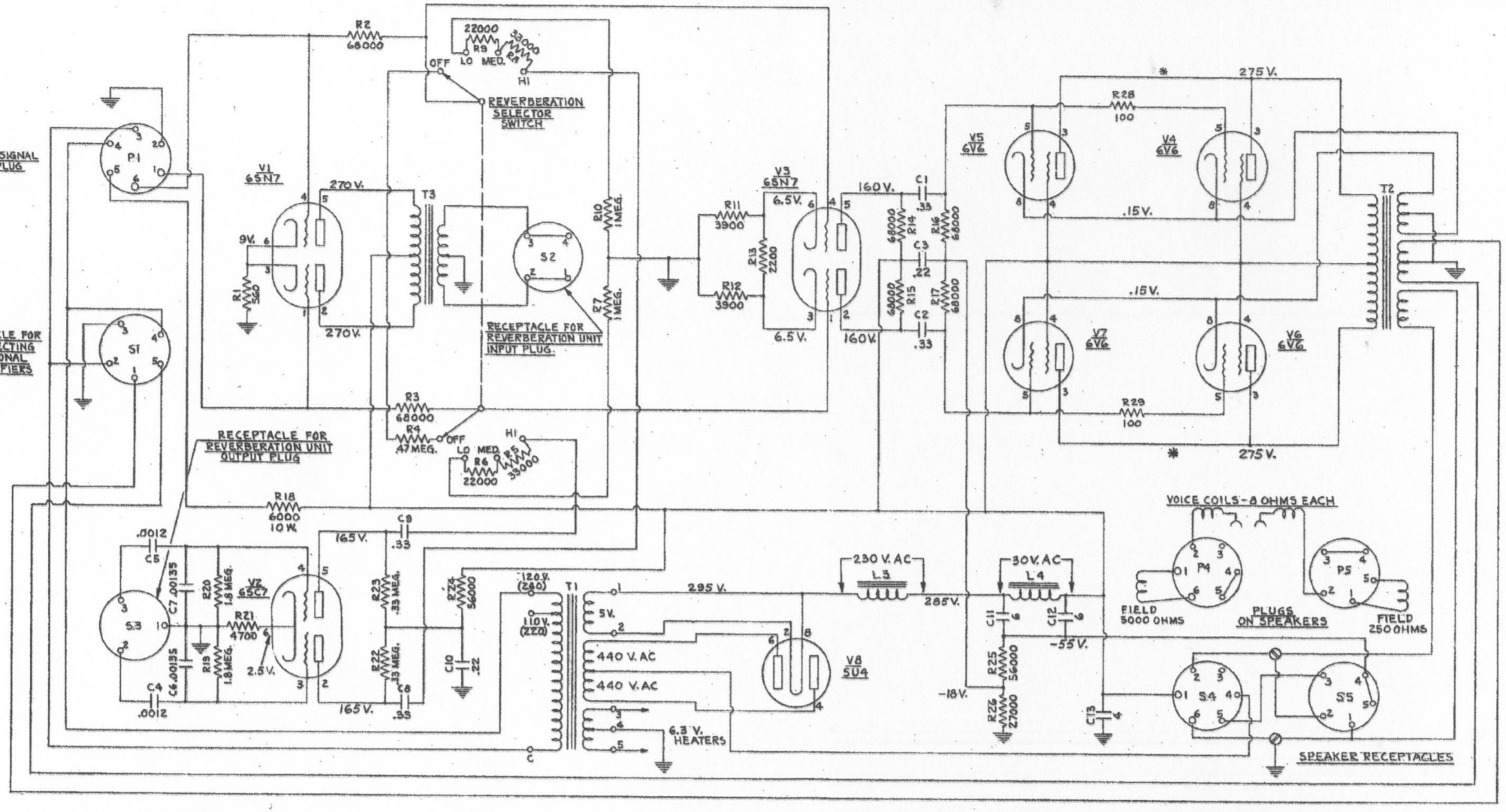

CHOKE COILS

L3,L4	FILTER	A0-16682-2

CONDENSERS

C11,C12	6 MFD.	400 V.	(A0-21574-2
C13	4 MFD.	400 V.	(OIL BLOCK

TRANSFORMERS

T1	POWER (115 V. 60 CY)	A0-20927-1
T1	POWER (115 V. 50 CY)	A0-20927-2
T1	POWER (230 V. 50-60 CY)	A0-20927-3
T2	OUTPUT	A0-16681-3
T3	REVERB. OUTPUT	A0-16134-1

FIGURE 14 POWER AMPLIFIER TYPE HR-1

USED IN DR-20, ER-20 & FR-40 TONE CABINETS
DR-20 SERIAL NO. 35304 AND ABOVE
ER-20 SERIAL NO. 28710 AND ABOVE
FR-40 SERIAL NO. 35425 AND ABOVE

* IN SOME MODELS RF CHOKES ARE INSERTED HERE AND RESISTORS R28 AND R29 ARE OMITTED.