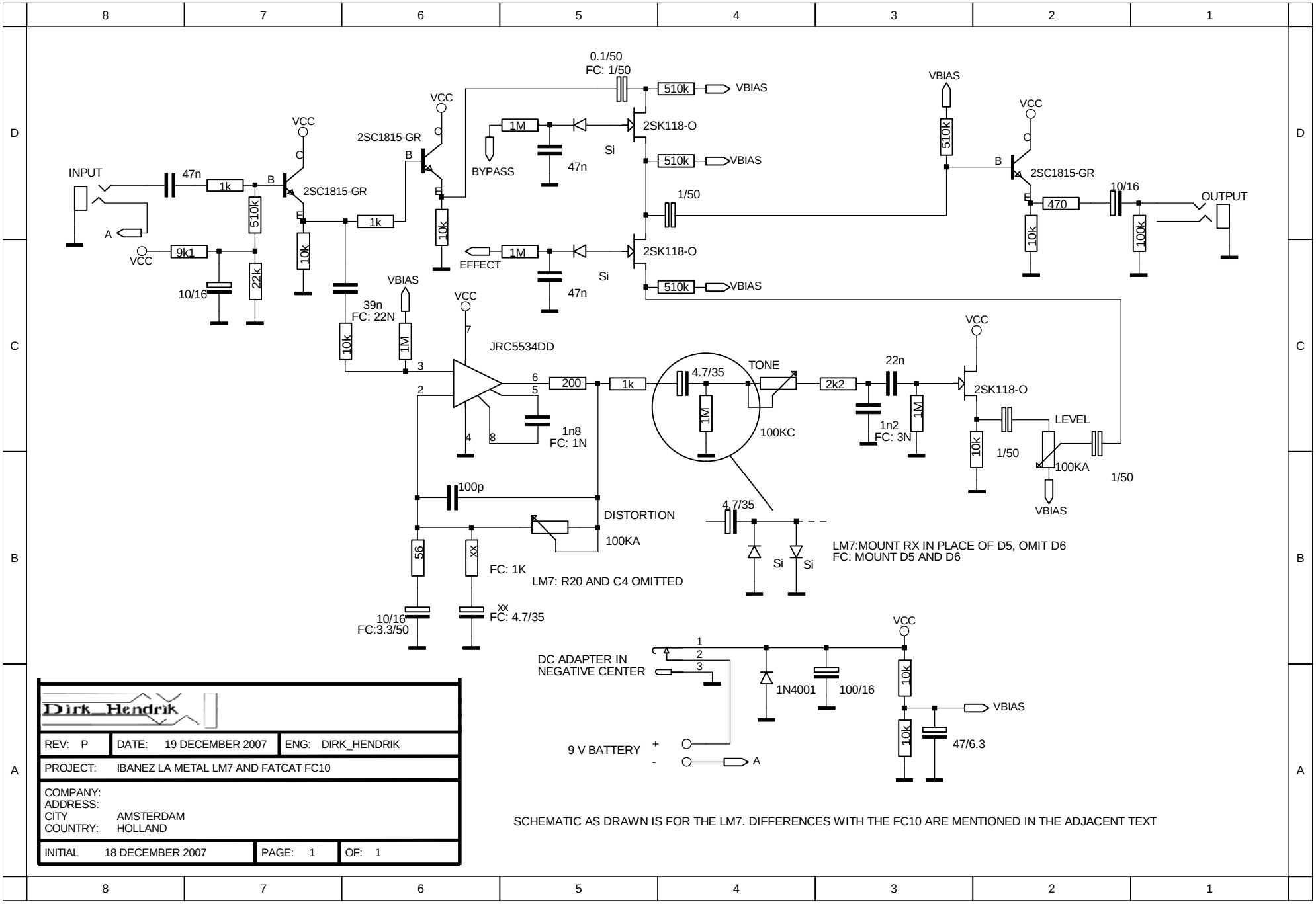
INPUT
A
VCC
9k1
10/16
47n
1k
510k
22k
2SC1815-GR
10k
1k
39n
FC: 22N
VBIAS
1M
JRC5534DD
200
1n8
FC: 1N
100p
DISTORTION
100KA
56
FC: 1K
XX
FC: 4.7/35
10/16
FC:3.3/50
LM7: R20 AND C4 OMITTED
0.1/50
FC: 1/50
510k
2SK118-O
Si
BYPASS
47n
EFFECT
1/50
4.7/35
TONE
100KC
2k2
22n
1n2
FC: 3N
LEVEL
100KA
470
10/16
100k
OUTPUT
LM7:MOUNT RX IN PLACE OF D5, OMIT D6
FC: MOUNT D5 AND D6
DC ADAPTER IN
NEGATIVE CENTER
1N4001
100/16
9 V BATTERY
47/6.3
Dirk_Hendrik
REV: P
DATE: 19 DECEMBER 2007
ENG: DIRK_HENDRIK
PROJECT: IBANEZ LA METAL LM7 AND FATCAT FC10
COMPANY:
ADDRESS:
CITY AMSTERDAM
COUNTRY: HOLLAND
INITIAL 18 DECEMBER 2007
PAGE: 1
OF: 1
SCHEMATIC AS DRAWN IS FOR THE LM7. DIFFERENCES WITH THE FC10 ARE MENTIONED IN THE ADJACENT TEXT