COMPANY	SAMSON	APPLICANT	REVISED NUMBER AND DATE			SIGN	DRAWN	CHECKED	APPROVED	NOTE
TYPE CODE		PS	1.	4.	7.		Limtrust			
APPROVED DATE	JAN.18.2002		2.	5.	8.					
			3.	6.	9.					

SHEET NO. 1/1

SCHEMATIC DIAGRAM

MODEL : HA-5000/7000

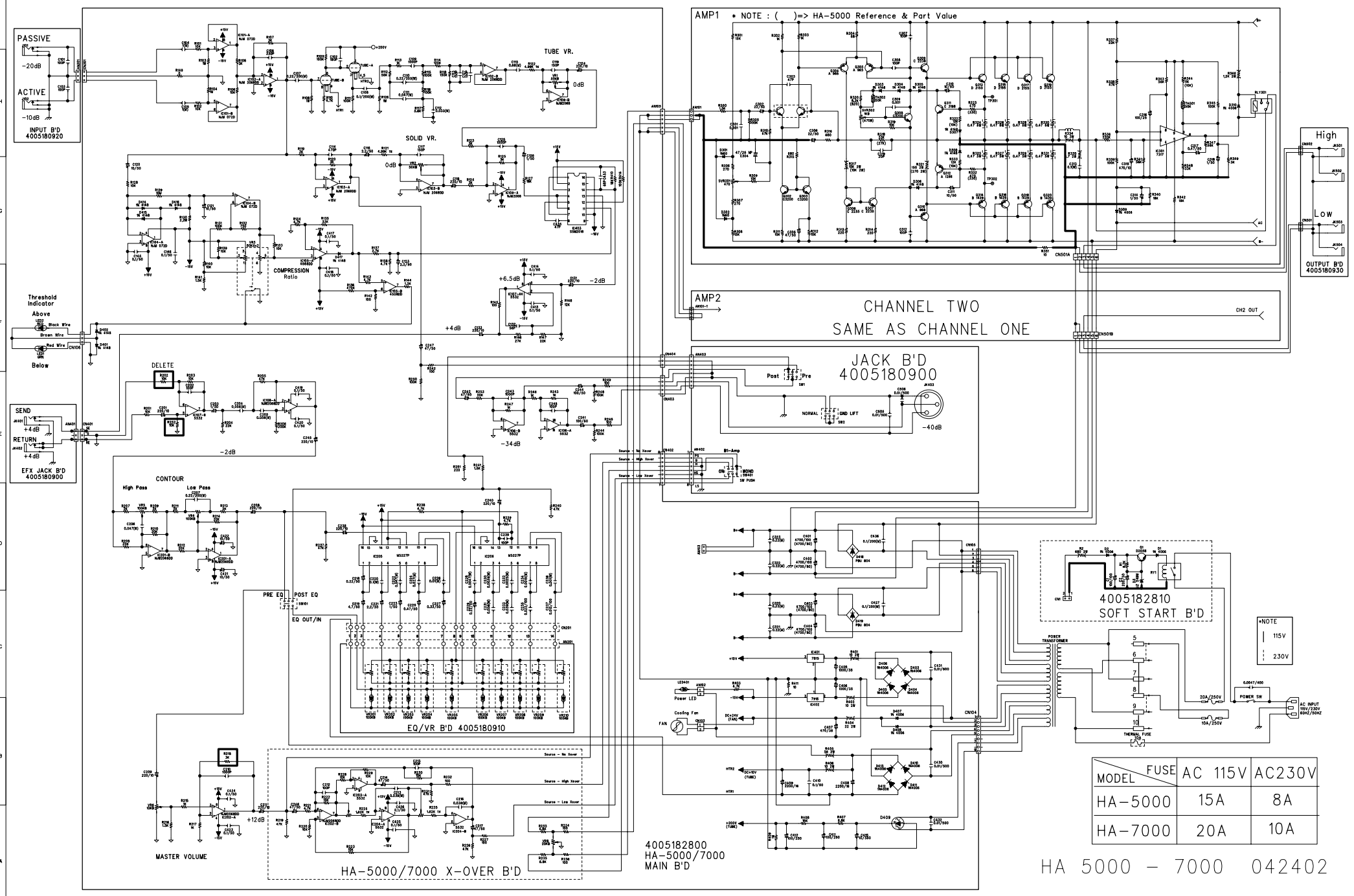

MODEL \ FUSE	AC 115V	AC230V
HA-5000	15A	8A
HA-7000	20A	10A

HA 5000 - 7000 042402