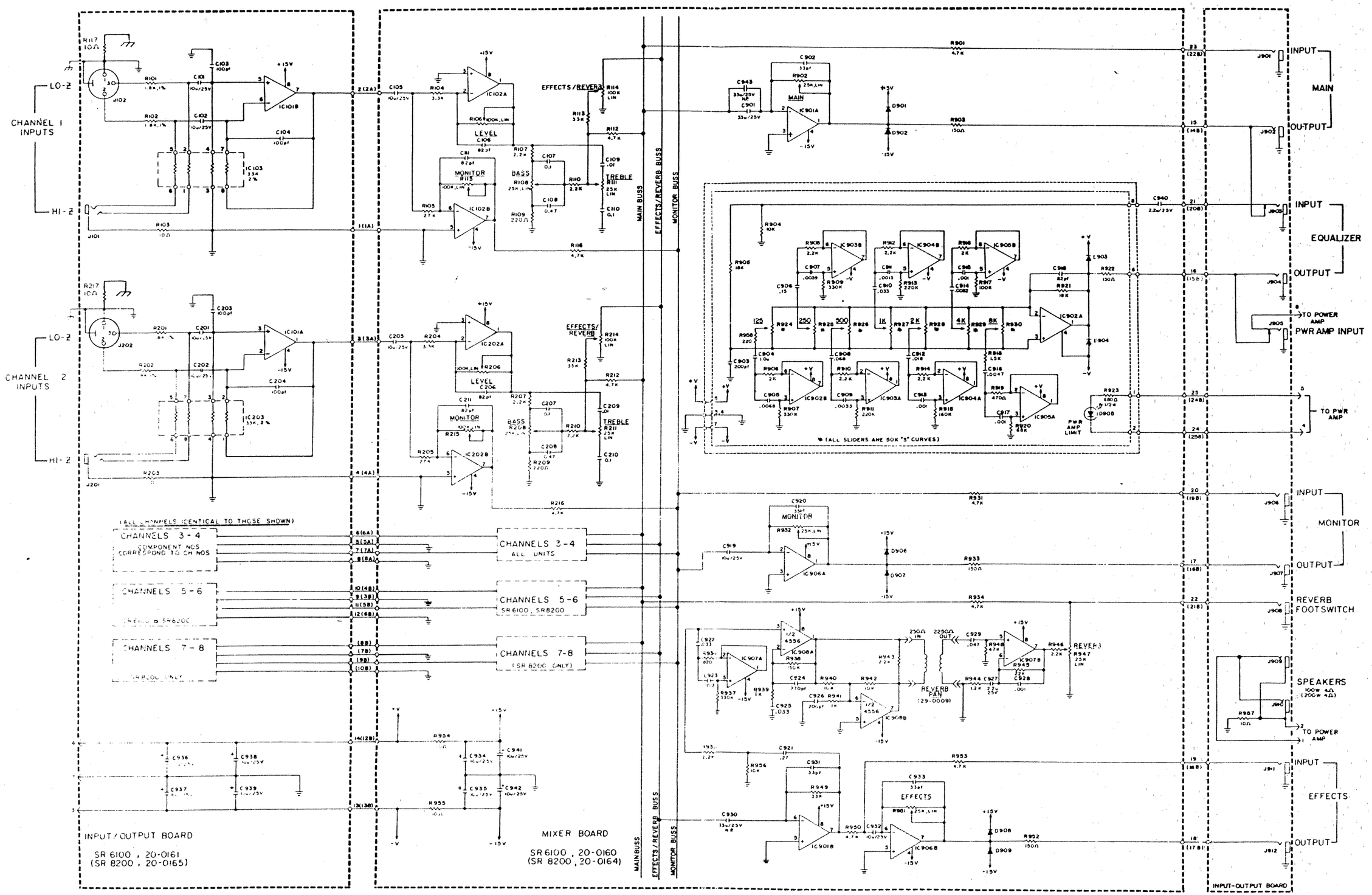SR 6100 8200 PREAMP SCHEMATIC