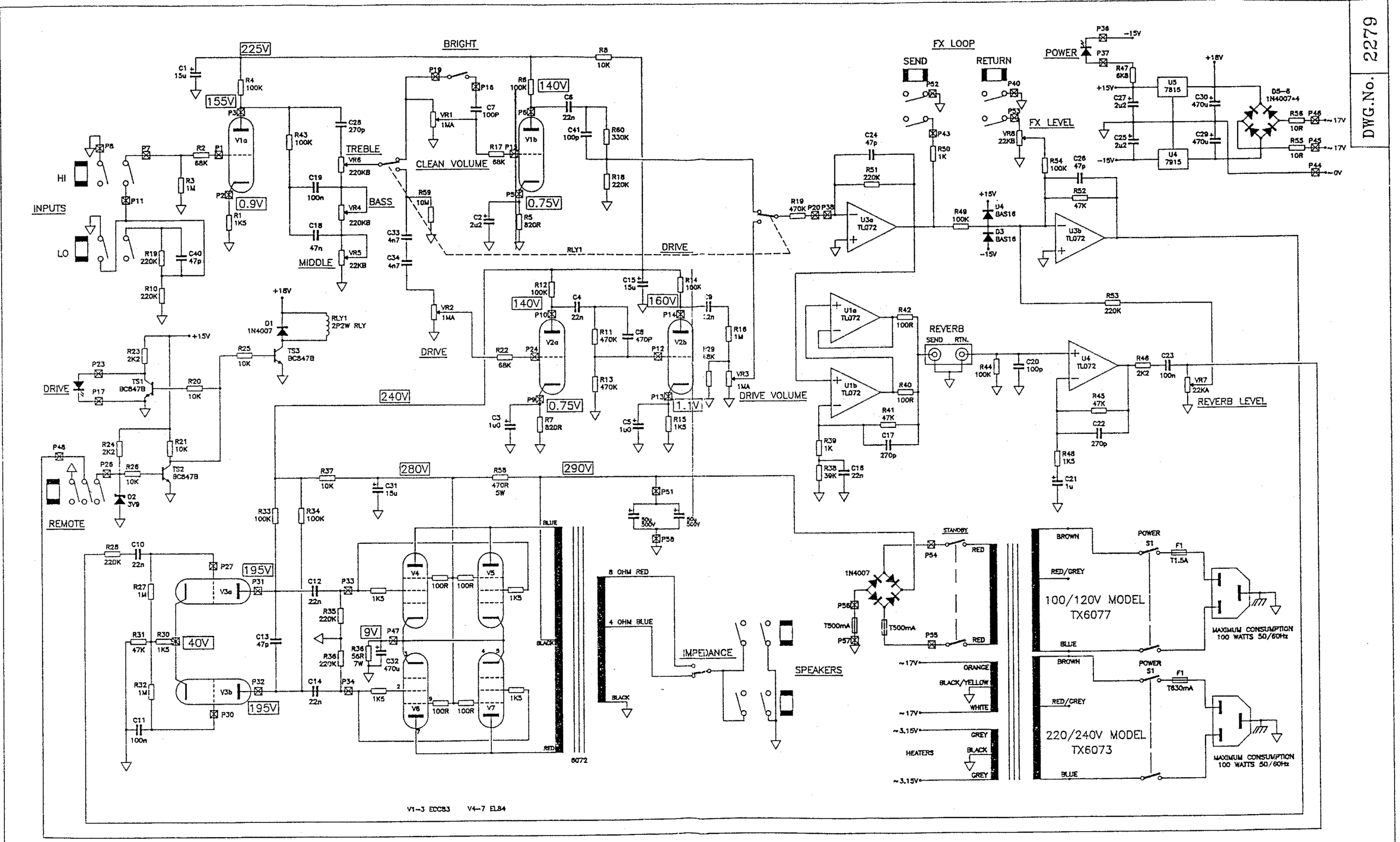

ISSUE	DESCRIPTION	APPD.	DATE

LANEY

TITLE

GC30V 9072_3
SCHEMATIC

DRAWN	TRACED	CHECKED	APPROVED	DATE
D.E.H.				19/10/94

DRAWING No. 2279