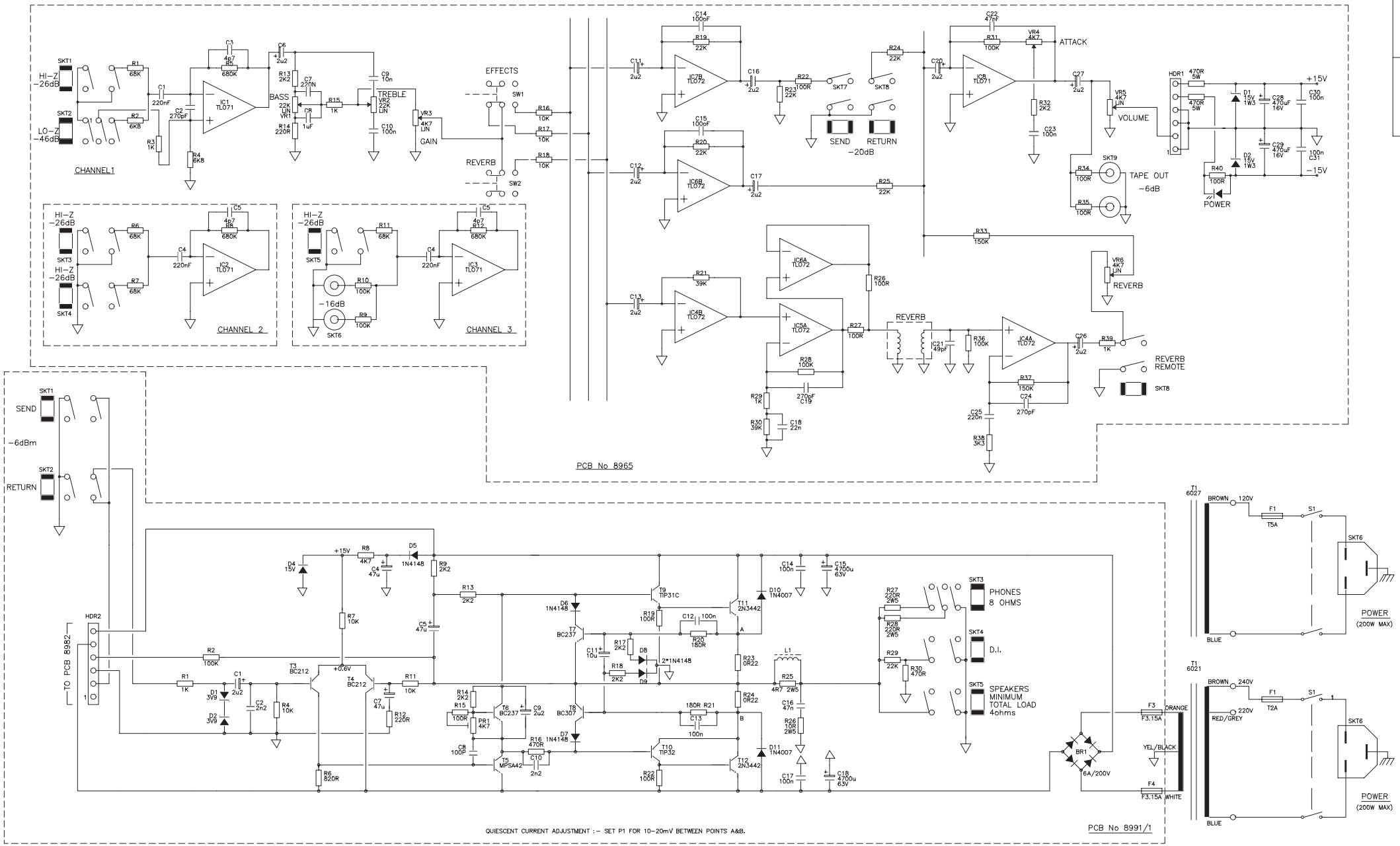

1352

LANEY

KD100 SII
CIRCUIT DIAGRAM

P.A.F.

7/9/89

1352