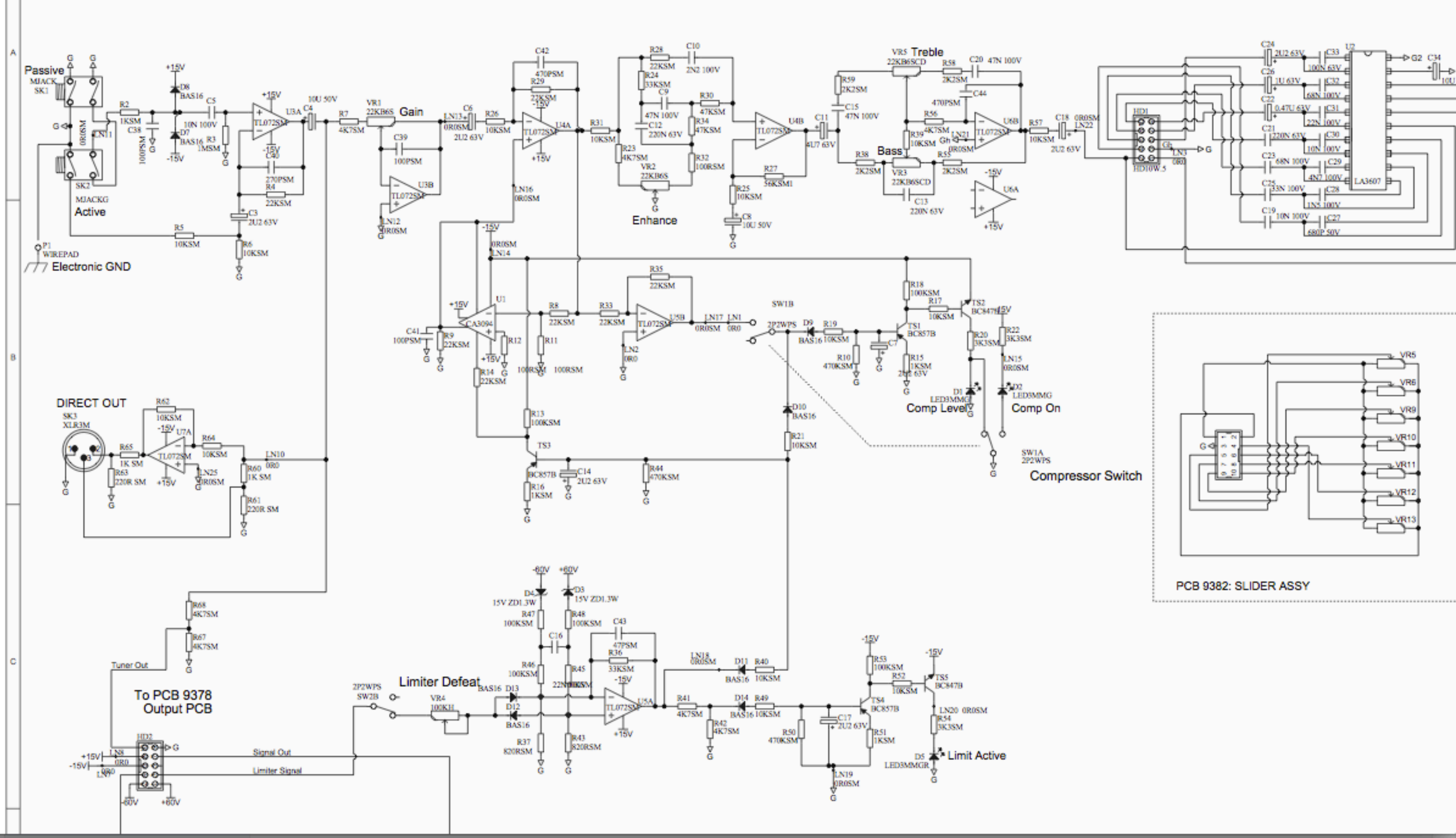

Passive
Active
Electronic GND
Gain
Enhance
Treble
Bass
Comp Level
Comp On
Compressor Switch
DIRECT OUT
Tuner Out
To PCB 9378
Output PCB
Signal Out
Limiter Signal
Limiter Defeat
Limit Active
PCB 9382: SLIDER ASSY