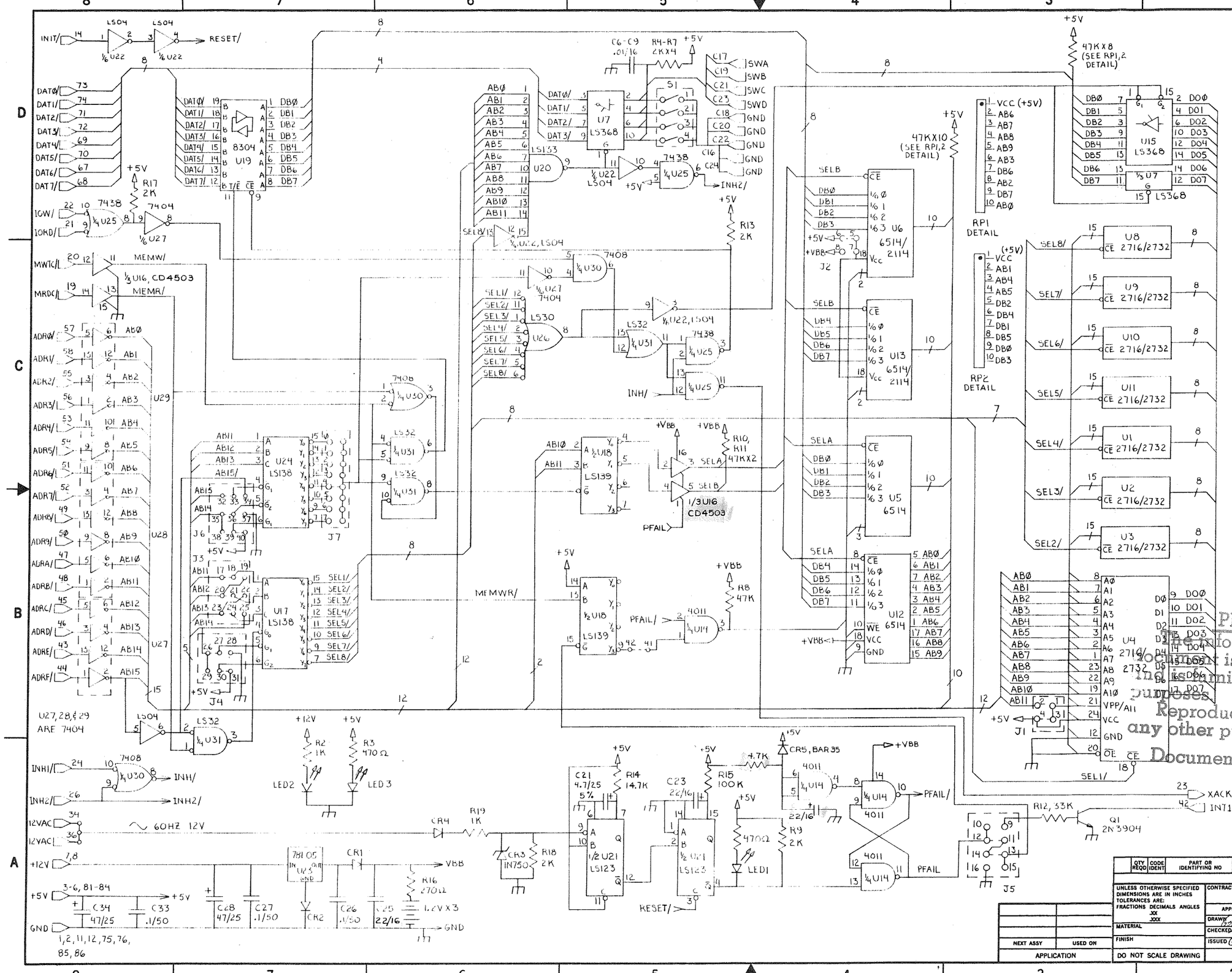

REV.	DESCRIPTION	DATE	APPROVED
1	REDRAWN	3/5/81	
2	ADD GND TO A16 & A24 ADD 12VAC TO A34 ADD JUMPER 41-42 ADD CR5 REF. DES. DELETE INT0/; ADD INT1/ (A42)	3/24/81	
3	CORRECT PINOUT - U21 PULL-UP & BYPASS PINS R14 WAS 12K, NOW 13.7K SEE ECO 224-06-19-81	6/29/81	
4	CHANGED U16 FROM 74LS367 TO CD4503; POWERED WITH BATTERY. ADD POWER-ON RESET TO PFAIL CIRCUIT WITH 4.7K AND 22UF. CHANGED: R14 TO 14.7K C21 TO 5% CORRECTED U15 PIN 3 & 7	6-21-83 JB	C8 7/1/83

NOTES

1. CAPACITORS ARE IN µf/V
2. RESISTORS ARE 1/4 W, 5%
3. DIODES ARE IN914 UNLESS OTHERWISE INDICATED.
4. ⏚ INDICATES DIGITAL GND.
5. CONN. PINS ARE ON "A" CONN. UNLESS OTHERWISE INDICATED.

PROPRIETARY DATA
The information contained in this document is proprietary to Lexicon, Inc., and is furnished solely for maintenance purposes.
Reproduction, distribution or use for any other purpose is expressly prohibited.
Document Control No. L290

QTY REQD	CODE IDENT	PART OR IDENTIFYING NO	NOMENCLATURE OR DESCRIPTION	MATERIAL SPECIFICATION

PARTS LIST

UNLESS OTHERWISE SPECIFIED DIMENSIONS ARE IN INCHES
TOLERANCES ARE:
FRACTIONS DECIMALS ANGLES
.XX
.XXX

MATERIAL

FINISH

DO NOT SCALE DRAWING

NEXT ASSY | USED ON

APPLICATION

CONTRACT NO.

APPROVALS	DATE
DRAWN	3/5/81
CHECKED	3/6/81
ISSUED	3/6/81

lexicon

SCHEMATIC, 224 MEMORY EXPANSION BOARD

SIZE D | FSCM NO. | DWG. NO. 060-02273-D | REV. 4

SCALE NA | SHEET 1 OF 1

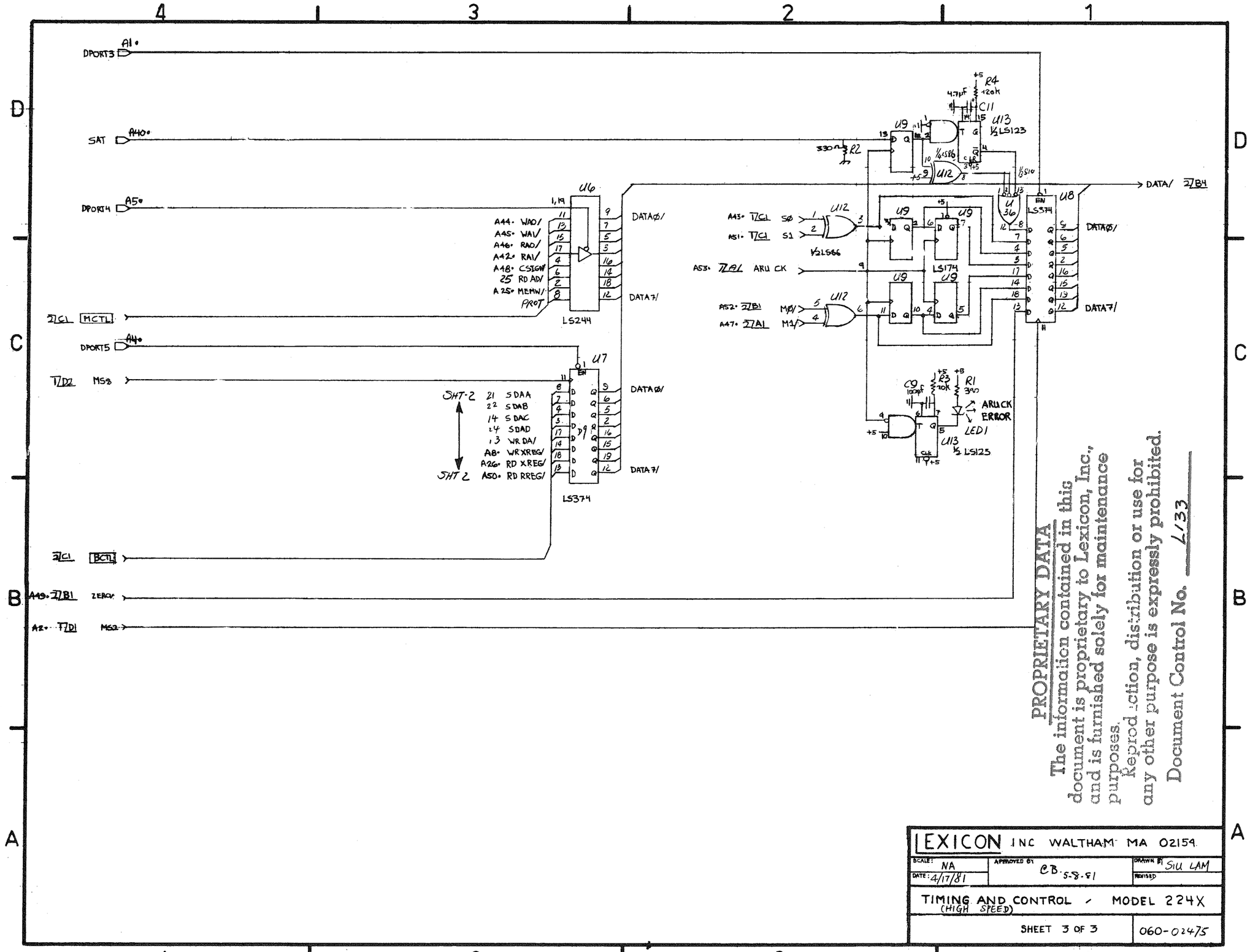

PROPRIETARY DATA
The information contained in this document is proprietary to Lexicon, Inc., and is furnished solely for maintenance purposes.
Reproduction, distribution or use for any other purpose is expressly prohibited.
Document Control No. L133

LEXICON INC WALTHAM MA 02154			
SCALE: NA	APPROVED BY CB 5-8-81	DRAWN BY SIU LAM	
DATE: 4/17/81		REVISED	
TIMING AND CONTROL (HIGH SPEED) - MODEL 224X			
SHEET 3 OF 3		060-02475	

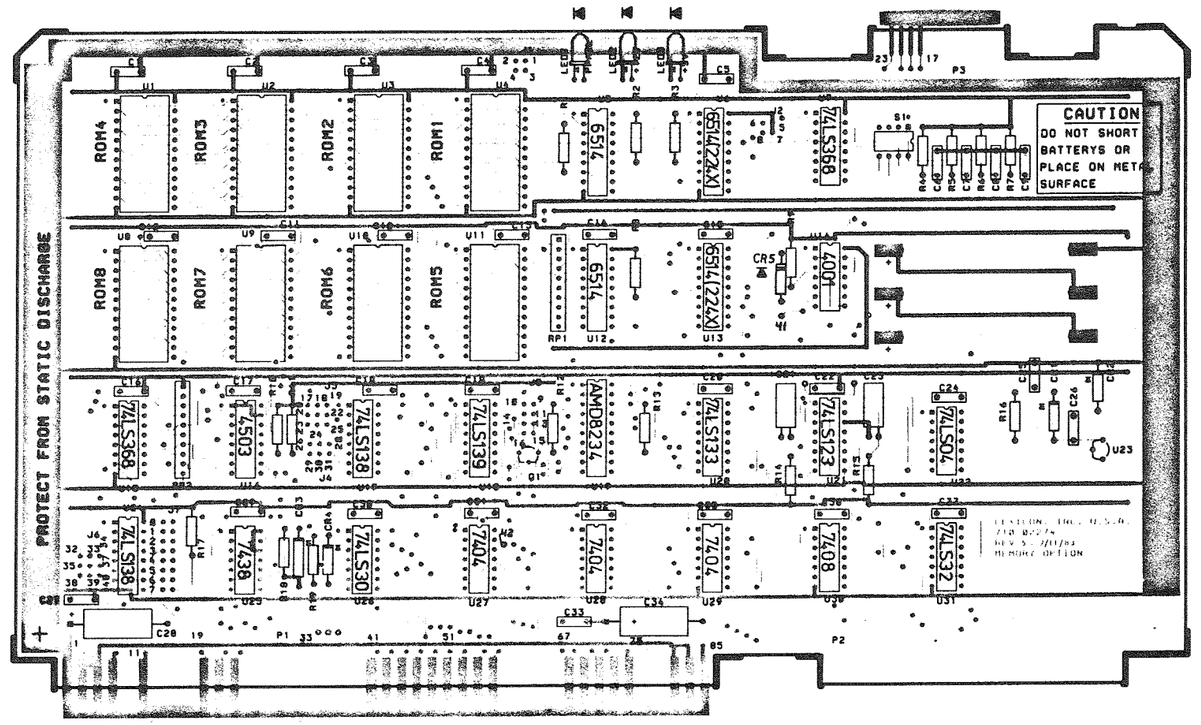

REVISIONS			
REV.	DESCRIPTION	DATE	APPROVED
Ø	RELEASE FOR PRODUCTION	8-15-83 JCR	CLB 8/3/83

NOTES

1. FOR M224 REFER TO BOMS 024-03040 AND 025-03708.
   FOR M224X REFER TO BOMS 024-03704 AND 025-03705.
   FOR M224XL REFER TO BOMS 024-03027 AND 025-03026.
2. SOLDER TAIL PROTRUSION .080" MAX.
3. SOCKET ALL IC POSITIONS.
4. COMPONENT HEIGHT .425" MAX.
5. NOTE DIRECTION OF BATTERIES DURING INSTALLATION.
6. LEDS ARE NOT TO PROTRUDE BEYOND EDGE OF BOARD.
7. DO NOT SOLVENT CLEAN S1 OR BATTERIES.
8. JUMPERS INSTALLED FOR STANDARD M224

JUMPER	PINS
J1	3 TO 4
J2	5 TO 6
J3	17 TO 18, 20 TO 21, 23 TO 24
J4	26 TO 27

JUMPERS INSTALLED FOR M224X AND M224XL

J1	1 TO 2
J2	7 TO 8
J3	18 TO 19, 21 TO 22, 24 TO 25
J4	27 TO 28

ONLY POSITIONS J1-J4 GET MALE JUMPER PINS.

PROPRIETARY DATA
The information contained in this document is proprietary to Lexicon, Inc and is furnished solely for maintenance purposes.
Reproduction, distribution or use for any other purpose is expressly prohibited.

Document Control No. L290

QTY REQD	CODE IDENT	PART OR IDENTIFYING NO	NOMENCLATURE OR DESCRIPTION	MATERIAL SPECIFICATION

PARTS LIST

NEXT ASSY	USED ON
APPLICATION	

UNLESS OTHERWISE SPECIFIED DIMENSIONS ARE IN INCHES
TOLERANCES ARE:
FRACTIONS DECIMALS ANGLES
.XX
.XXX

MATERIAL

FINISH

DO NOT SCALE DRAWING

CONTRACT NO.

APPROVALS		DATE
DRAWN	JCR	8-15-83
CHECKED	MAH.	8/15/83
ISSUED	CLB	8/3/83

lexicon

ASSEMBLY DRAWING
MEMORY EXPANSION BD., M224/M224X

SIZE	FSCM NO.	DWG. NO.	REV.
C		080-02281	Ø

SCALE FULL SHEET 1 OF 1