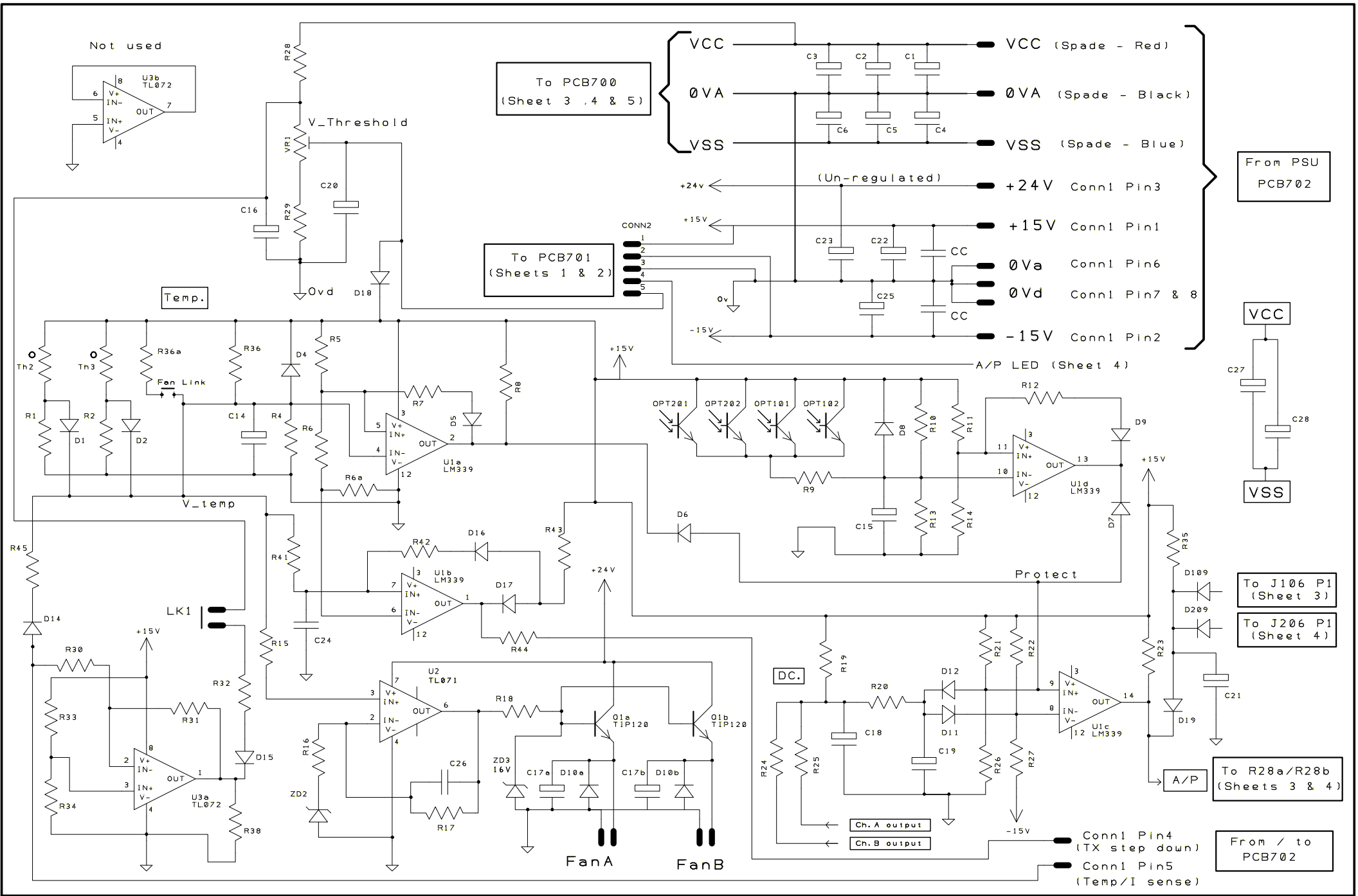

MC² Audio	E15 & E25 PSU & control (PCB700)	6th Feb 2004
	Drwng. No. SCH_E15 & E25 Iss3	Sheet 5 of 5