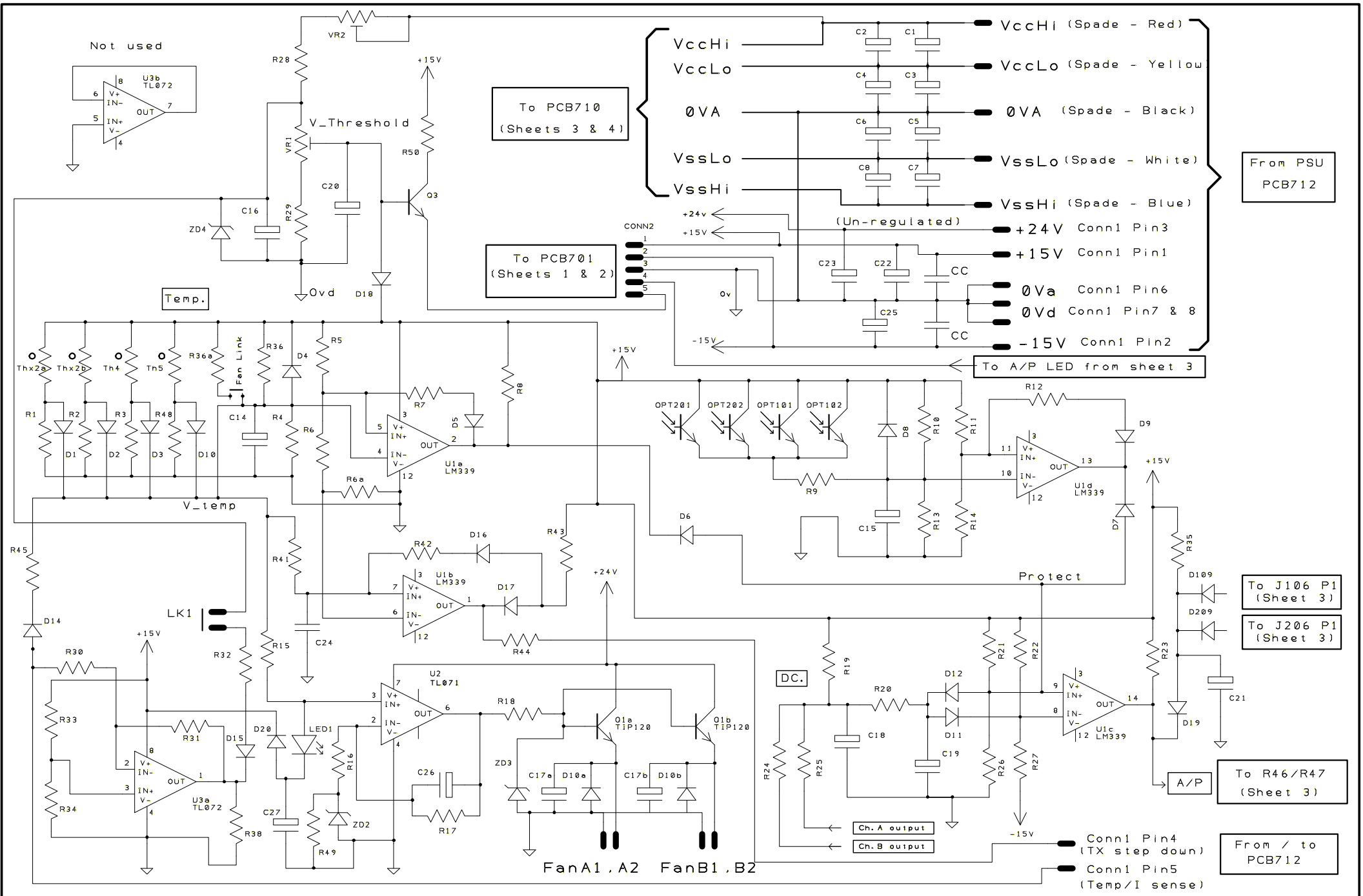

MC² Audio	E45 PSU & control (PCB710)	21st Feb '08
	Drwng. No. SCH_E45 Iss2	Sheet 4 of 4