COPY

PLOT_DATE_8-1-2001

ENGINEERING

REVISIONS				
ZONE	REV	DESCRIPTION	DATE	APPROVED
	A	ORIGINAL	7-31-2001	

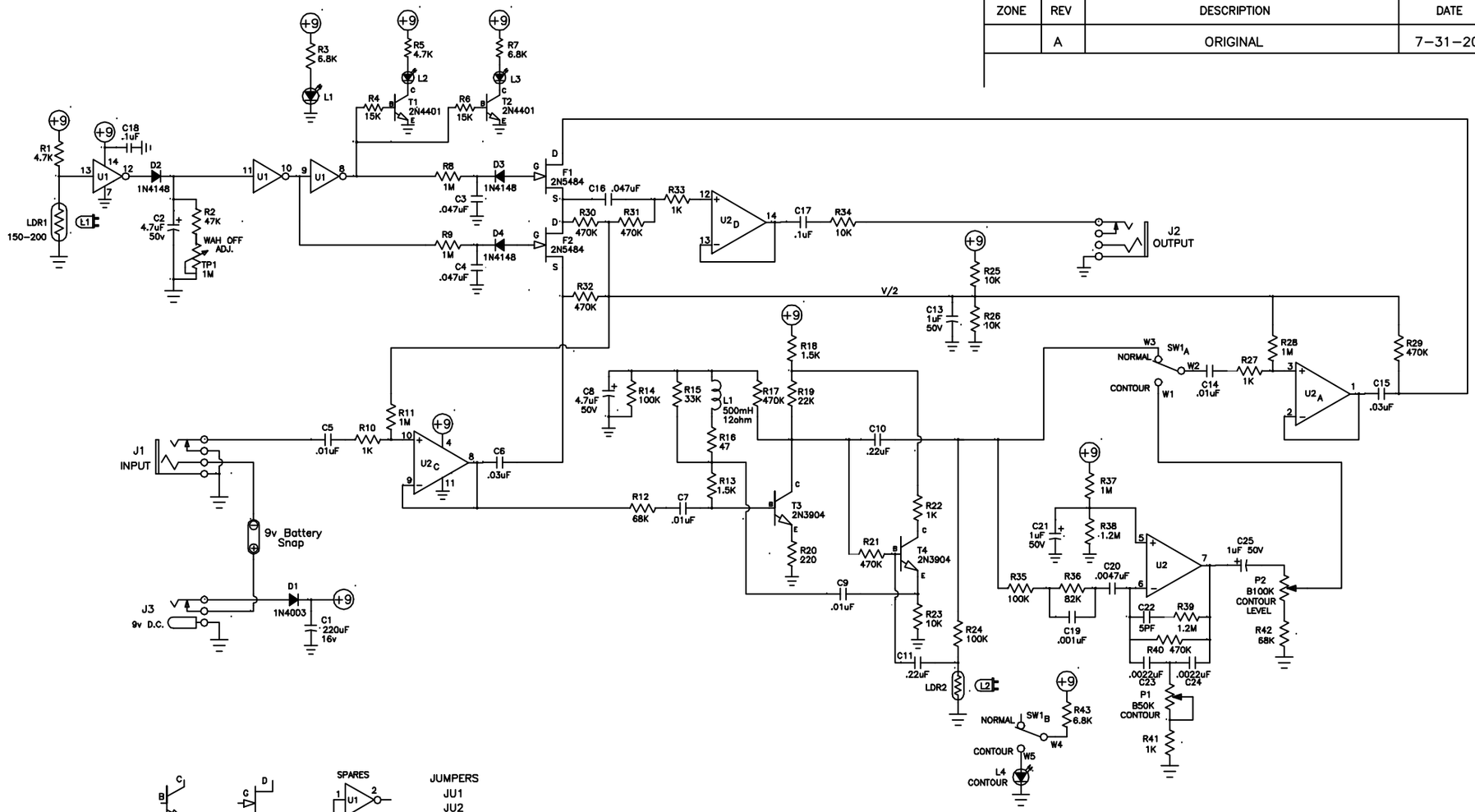

U1 = CD4069UBE
U2 = TL074
T1,T2 = 2N4401
T3,T4 = 2N3904
LDR1,LDR2 = M79-211564-000
L1,L2,L3,L4 = M16-005734-000

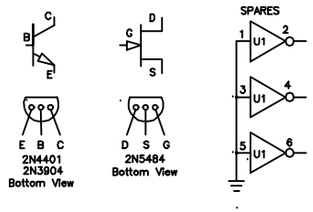

THIS PRINT HAS BEEN APPROVED FOR PRODUCTION

APPROVED: S.F. DATE: 8/1/01

UNLESS OTHERWISE SPECIFIED: DIMENSIONS ARE IN INCHES.

TOLERANCES

FRACTIONS ± 1/64
DECIMAL ± .003
ANGLES ± 1°

MORLEY

SOUND ENHANCEMENTS, INC.
185 DETROIT ST., CARY IL. 60013
(847) 639-4646

VAI-2 SWITCHLESS CONTOUR WAH
(BAD HORSIE 2 CONTOUR WAH)

This drawing and the information contained herein is the exclusive property of Sound Enhancements Inc. Reproduction or use of this information in any form, without our prior written approval, is prohibited.

DRAWN SCOTT FLESHER	SIZE B	FSCM NO.	FILE NAME schmvai2a.dwg	REV A
APPD				
CHECKED				
DATE 2-5-2001	SCALE N.T.S.		STATUS: CURRENT	