COMPRESSOR

179-160 B

NTP

NTP ELEKTRONIK A/S

Theklavej 44
2400 København NV
Telefon 01-10 12 22

Reg. no. 32426
Telegram-adresse Electrolab
Telex 16378 ntp dk

COMPRESSOR

179-160 B

Contents:

	Draw.No.:
Frontplate layout	179-1609-A-4
Technical specifications	179-1611-B-3
User's manual	179-1613-C-3
Instruction for alignment	179-1622-A-3
Schematic diagram, motherboard right	179-16A30-A-2
Components layout	179-16A41-A-3
Partslist	179-16A31-A-3
Schematic diagram, motherboard left	179-16B30-B-4
Components layout	179-16B41-B-3
Partslist	179-16B31-B-3
Schematic diagram, limiter	179-16C30-B-3
Components layout	179-16C41-B-3
Partslist	179-16C31-B-3
Schematic diagram, compressor	179-16D30-A-3
Components layout	179-16D41-A-3
Partslist	179-16D31-A-3
Schematic diagram, noise gate	179-16E30-B-3
Components layout	179-16E41-B-3
Partslist	179-16E31-B-4
Schematic diagram, meter module	179-16F30-A-4
Components layout	179-16F41-A-4
Partslist	179-16F31-A-3
Mechanical parts	179-1604-A-3

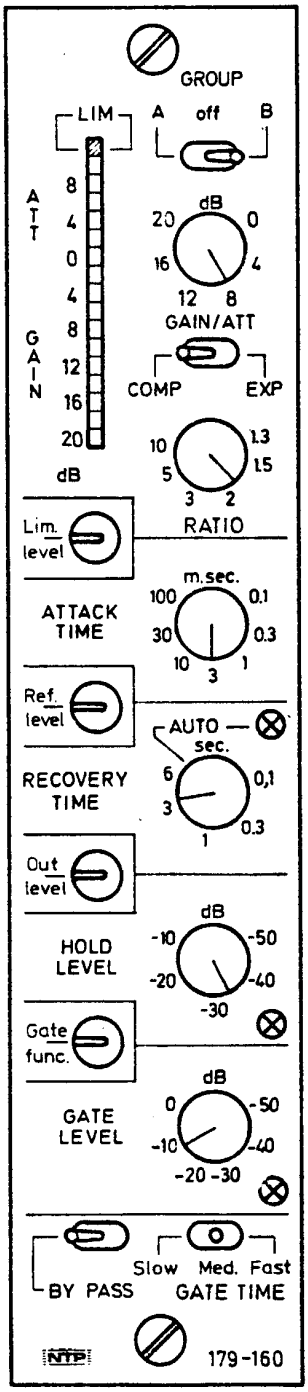

Pos.:	Antal:	Materiale:	Behandl.	Del af
Målestok:		Compressor 179 160		NTP ELEKTRONIK A/S
Tolerance: ± mm		Frontplate Lay-out.		
Tegnet: 22-2-79 JS				
Godkendt:				179-1609-A-4

General:

Supply voltage	:	22 - 32V DC
Current consumption	:	approx. 130 mA
Input impedance, balanced floating	:	10 kOhms ±10%
Input common mode rejection ratio	:	> 60 dB
Input overload level	:	+21 dBu
Output impedance, balanced floating	:	less than 40 Ohms, typ 30 Ohms
Min. load impedance	:	300 Ohms (Uout max.= +19 dBu)
Output overload level at f ≥ 30Hz	:	+21 dBu (R_L > 1kOhm)
" " " " f = 15Hz	:	+15 dBu
Basic gain, adjustable	:	0 to +12dB
Frequency range (0.3 dB points)	:	40 Hz to 15 kHz
Distortion (40 Hz to 15 kHz)	:	less than 0.1% THD (Gain <15dB, Uout <+15dBu)
Output noise (0dB gain)	:	-89 dBu rms 20 Hz to 22kHz (See Note 1 -78 dBu psh. Peak (CCIR-468-1)

Compressor section:

Ref. level, adjustable	:	-8 dBu to +15 dBu
Max. gain/attenuation below threshold, adjustable	:	0 to 20 dB
Compression ratio, adjustable	:	1.3:1 to 20:1
Expansion ratio, adjustable	:	1.25 to 1:1.9
Attack time, adjustable	:	0.1 ms to 100 ms
Recovery time, adjustable	:	0.1s to 6 s
Auto position, dual time constants	:	programme dependant
Recovery delay	:	programme controlled, frecuency dependant.
Recovery hold level, adjustable	:	10 dB to 50 dB below actual operating level
Control voltage, output/input	:	1 V per 5 dB; Maximum number of compressors connected in a group = 10

Limiter section:

Lim. threshold level adjustable	:	0 dBu to +15 dBu output level
Peak limitation level	:	3 dB above threshold level (at 10 dB lim.)
Attack time	:	1.5 ms combined with clipping circuit
Recovery time	:	0,5 s per 10 dB

Gate, section

Threshold level, adjustable	:	0 dBu to -50 dBu input level
Gate attenuation, adjustable	:	0 dB to 20 dB
Expansion ratio	:	1 : 2
Attack time (for increasing input level)	:	approx. 1 ms
Recovery time (for decreasing input level)	:	selectable 20 ms, 100 ms, 500 ms.

Mechanical:

Connector : Tuchel 2700-000

Mechanical outline : See drawing

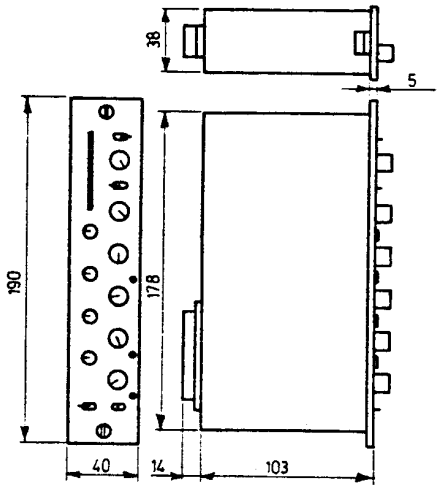

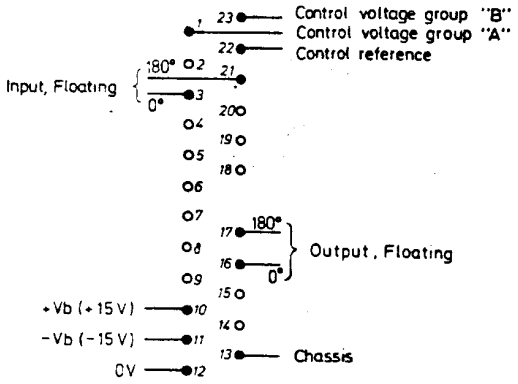

Mating connector: Tuchel 2701-000
seen from soldering side

Note 1.

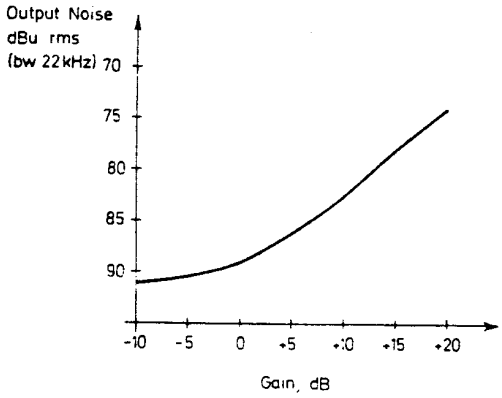

The NTP compressor 179-160B combines functions not normally found in one single unit. The heart of the compressor is a very high quality voltage controlled amplifier, (VCA).

Because of the extremely precise regulation characteristics of the VCA used, advantage can be taken of the "forward regulation" principle. That is to say, the control voltage can be derived from the input signal, rather than from the output signal, which allows for a more complex and accurate control voltage computation.

The simplified block-schematic diagram below, shows this principle.

Fig. 1

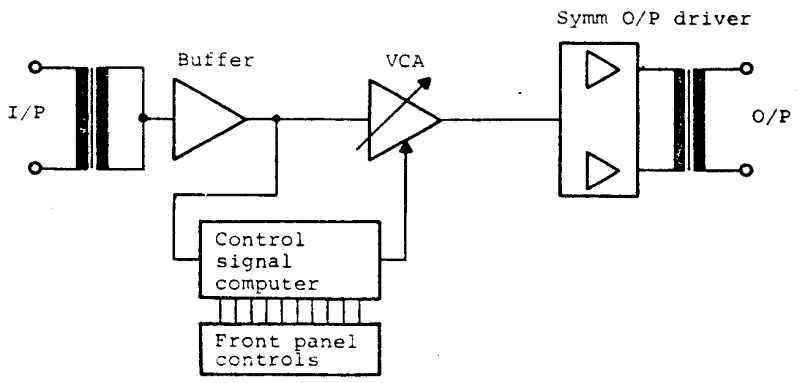

For ease of use as a "users reference manual", the following text, describing the individual functions of the compressor refers to the mechanical lay-out as shown on page 5.

At the end of each section in the text, there is a suggested setting to be used as a "start-point".

1. "BY PASS".

The BY PASS switch simply disconnects the VCA control voltage from the VCA. In this way, a click free switch-off of all the dynamic gain control functions is achieved.

As all the gain computing electronics remain connected to the input signal, the att/gain meter and the dynamic controls, (with the exception of OUT LEVEL), may be adjusted without affecting the signal path. Also, the control voltage is still active and can be used to control another compressor or other device.

Setting: ON.

2. "GAIN/ATT"

The GAIN/ATT control sets the maximum gain or attenuation imposed on signals below the compressor threshold level, in the range 0dB to 20dB.

Most compressors have controls only for "threshold", "ratio" and "output level". The amount of compression or expansion required is thus primarily adjusted by "ear".

However, with the NTP 179-160, the amount of gain or attenuation required for a particular input signal, can be predicted by the operator. If for instance the console level meter indicates that the low level passages need 8dB of gain, then the GAIN/ATT control is simply set at 8dB. See figure 4 and section 7.

Suggested setting: 8dB.

3.4. "ATT/GAIN METER" ; "LIM"

The 16 segment LED meter monitors the VCA voltage and thus reads relative gain or attenuation caused by any or all functions in the module.

Gain caused by the output level control is not indicated.
The uppermost LED (the red LED) is not part of the meter, but is purely an indicator for, when the limiter is in operation.

5. "COMP/EXP".

The COMP/EXP switch selects either compression mode or expansion mode of operation. Theoretically, expansion, is the inversion of compression. So that, if a certain signal level at the input causes a gain of 6 dB when the unit is switched to the compression mode, then the same signal level at the input will cause an attenuation of 6dB, when the unit is switched to the expansion mode. Note that due to mathematical reasons, an exact inversion of the ratio slopes cannot be achieved. (See figure 4, e.g. the +10dB slope in the compression mode is different from the -10dB in the expansion mode).

Suggested setting: "COMP"

6. "RATIO"

The RATIO control, sets the compression or expansion slope, in the range 1.3:1 to 10:1 for compression and 1:1.25 to 1:1.9 for expansion. The scale marked on the front panel of the module is true for compression only, and the table below shows the relationship between the printed scale and the actual expansion ratios.

Compression Ratio	1.3:1	1.5:1	2:1	5:1	10:1
Expansion Ratio	1:1.25	1:1.3	1:1.5	1:1.8	1:1.9

Also refer to figure 4 on the curve sheet and section 5.

Suggested setting: 2:1

7. "REF LEVEL"

REF LEVEL is defined as the input signal level for which the compressor will impose no relative gain or attenuation (independant of ratio setting). Therefore the REF LEVEL control is set such that the att/gain meter reads 0dB for a normal input level being sent from the preceding equipment. During this adjustment, "LIM LEVEL" should be set at a level high enough to prevent activating the lim. function (see 4. "LIM").

The REF LEVEL should be set before the module is used for any programme control.

Suggested setting: Ref. mark (+6dBu).

Additional information.

While most compressors have a threshold and a ratio control, for a particular operating point, a change in the ratio control will cause a change in the output level. This means that the operator will have to compensate for this change by readjusting the output level control. This is shown in figure 2 below.

Fig. 2

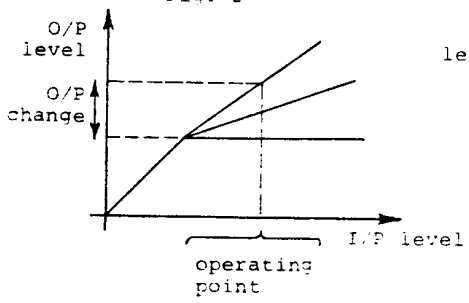

Fig. 3

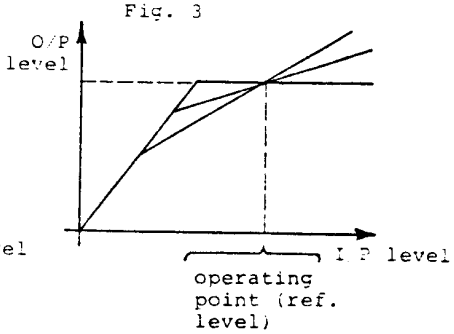

In contrast to this, the 179-160 electronics allow the output to remain constant for any ratio setting, as the characteristic curves all pass through the same point, for a given operating point, provided that the input operating level is equal to the REF LEVEL.

8. "OUT LEVEL"

The OUT LEVEL control provides 0 to 12dB of gain and is used as a normal "gain-make-up" control, so that the output from the module will "level match" the succeeding system.

Suggested setting: Ref. mark (0dB).

9. "LIM LEVEL"

The threshold level of the limiter can be set by the LIM LEVEL control. The attack and recovery times of the limiter are fixed and are quite independant of all the selected compressor time constants.

The limiter function is provided with an instant clipping circuit which ensures "soft" clipping of fast signal peaks and will only overshoot 3dB above the static limiter threshold.

The LIM LEVEL is not dependant on the output level setting.

Suggested setting: Ref. mark (+9dBu).

10. "ATTACK TIME"

The ATTACK TIME control, sets the time taken by the compressor or expander to respond to an input signal which is suddenly applied, before the function takes effect. This can be varied from 0.1 milliseconds (very fast) to 100 milliseconds (slow). If the attack time is fast, the function will be applied almost immediately, even to a signal of short duration.

The figures printed on the scale are derived from the following definition:

> The duration of a tone-burst required for 7dB of gain reduction, provided that the tone burst amplitude is such that a continuous signal having the same amplitude would cause 10dB of gain reduction.

Suggested setting: 3mS.

11.12. "RECOVERY TIME".

The RECOVERY TIME can be varied between 0.1 seconds and 6 seconds. Within this range, the recovery takes place linearly. When the RECOVERY TIME control is set at the maximum clockwise position, a programme dependant dual time constant recovery function is selected. When this occurs, the light emitting diode (LED), marked AUTO is illuminated.

Generally, when the input signal has a short duration, the recovery time can also be short. But when the input signal is of long duration, the recovery time should be set slow, or in the AUTO mode which will accomodate a wide range of input signal duration.

Additional Notes:

Normally, in a compressor, short recovery times are to be avoided when low frequencies are present, due to distortion. To overcome this problem and to some extend allow for short recovery times on low frequency signals, an automatic, frequency dependant, recovery delay circuit has been incorporated. This circuitry inhibits the recovery function for a time equivalent to 2½ periods of the predominant frequency content of the signal. In this way distortion is minimized on most signals containing low frequencies when a short recovery time is required for artistic reasons.

Note that the printed scale for recovery times is derived from the same definition as in section 10.

Suggested setting: 3S or "AUTO"

13.14. "HOLD LEVEL".

The HOLD LEVEL function is particularly useful on programme material such as speech, etc. When a compressor is being used on speech, in the normal way, and the speaker stops to breath or to turn over a page in the script, then the compressor will start to recover before the speech begins again. This can cause the "pumping" effects so often associated with speech recording. However, if a HOLD LEVEL is selected such that it is just below the total dynamic range of speaker, (before compression is introduced), then the normal recovery function is inhibited, and the gain will remain constant. The selected recovery function is re-established when the speech continues.

The threshold level selected by the HOLD LEVEL control operates with a "floating" or "dynamic" reference. This means that even if the average level of the incoming signal varies above or below the initial average level, the setting of the HOLD LEVEL can remain the same, as this setting is not level dependant.

The associated LED 14, indicates when the hold function is activated. The threshold of this function is variable from -10dB to -50dB.

Suggested setting: -10dB for speech, -30dB for music.

15. "GROUP"

The internal gain control voltage generated by the unit may, (by means of the GROUP switch), be connected to one of two terminals on the rear connector. The terminal to which the control voltage is connected is denoted by position "A" or "B". The switch is "centre-off".

If two or more compressors are interconnected in this way, a control voltage "group" is made, within which the gain of all the compressors involved is defined by the one that generates the highest control voltage. The polarity of the control voltage is unaffected by the COMP/EXP switch and therefore the "grouping" can be used either to achieve conventional gain tracking, (by equal settings of GAIN/ATT control on each unit),or one compressor operating on COMP mode, can be used to gate another compressor in EXP mode.

It should be noted that the gain control voltage is generated by the compressor section only, and that gain variations caused by the limiter or gate sections within a specific unit do not effect the gain in the "grouping".

The compressor operates as a control voltage source, even if the compressor function itself is switched "off" by the BY PASS switch.

The maximum number of units connected in the group should not exceed ten.

Suggested setting: "OFF"

16.17. "GATE LEVEL"

The gate threshold level is set by the GATE LEVEL control, in the range, 0dB to -50dB, and the LED indicates, when the modulation level is below the threshold level, i.e. the LED is "on", when the gate turns the incoming programme "off".
See figure 6 in the curve sheet.
Suggested setting: -50dB.

18. "GATE FUNCTION"

The GATE FUNCTION control sets the maximum attenuation imposed on input signals below the gate threshold level. The actual over all gain/attenuation will be the sum of compressor gain (set by control 2) and the gate attenuation. Figure 7 on the curve sheet shows the static input/output characteristics obtainable for various settings of the GATE FUNCTION control.
Suggested setting: Ref. Mark 10dB.

19. "GATE TIME"

The three position toggle switch for GATE TIME controls the speed,with which the gate becomes active again (closes) after a signal which has opened the gate, decays below the gate threshold. If the signal decays quickly, then the gate time can be fast. But if the signal decays slowly, then the gate time should be slow, unless a special effect is required.
The attack time for the gate is fixed and is extremely fast.
Suggested setting: "MED"

FIG. 4

Static comp./exp. characteristics for various GAIN settings.

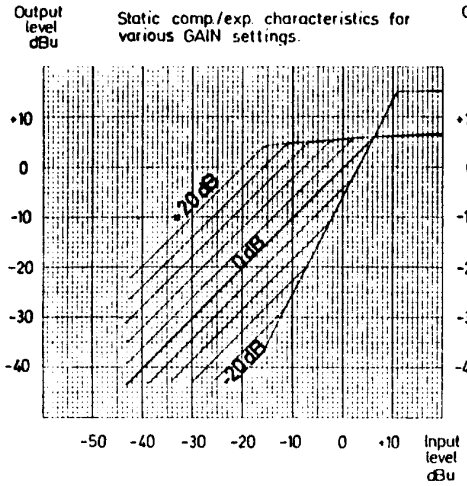

FIG. 5

Static comp./exp. characteristics for various RATIO settings.

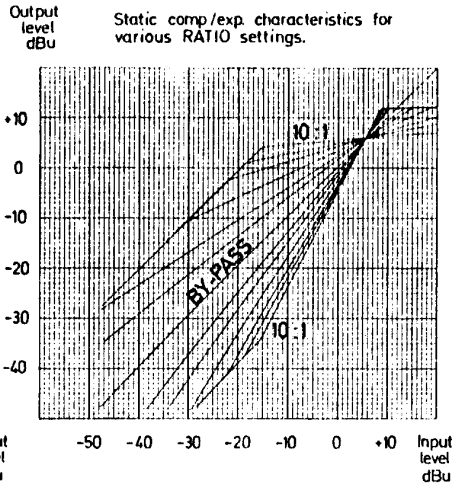

FIG. 6

Static GATE characteristics for various GATE LEVEL settings.

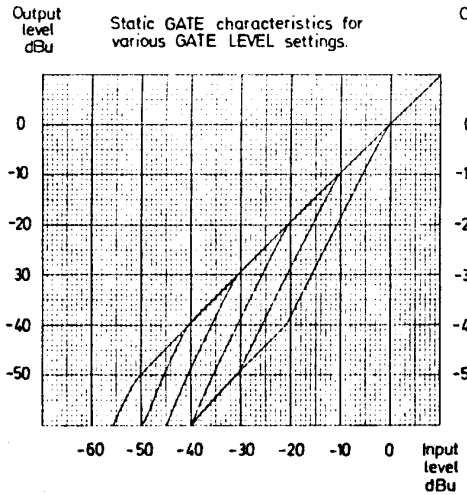

FIG. 7

Static GATE characteristics for various GATE func. settings.

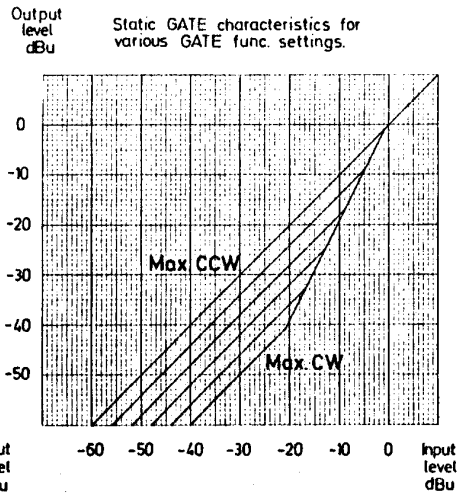

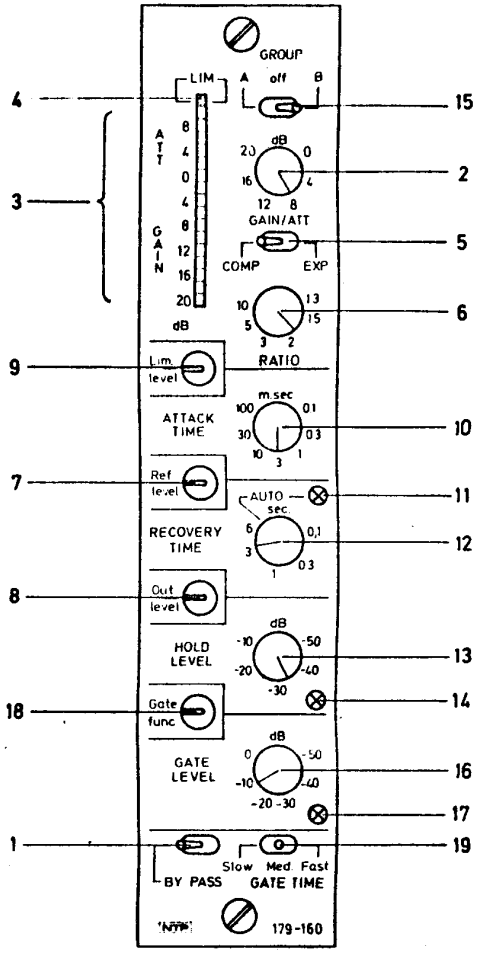

Målestok .	Compressor 179-160 B	NTP ELEKTRONIK A/S
Tolerance: ± mm		
Tegnet : 31.10.80 JS	Users manual, page 5 of 5.	179-1613-C-3
Godkendt :		
Revideret :		

Normally the compressor/expander will stay correctly adjusted after it leaves the factory.

When a component has failed and been replaced, it may be necessary to make certain adjustments.

Positions of adjustment points:

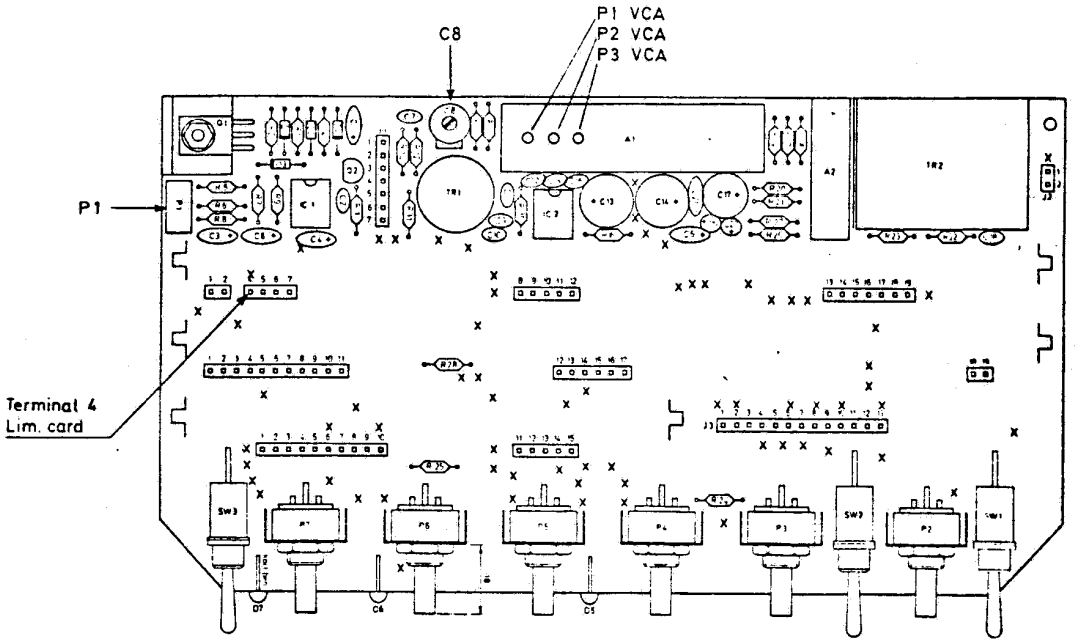

Internal supply voltage adjustment.

The internal supply voltage is adjusted on P1 to 20.00 volt measured at terminal 4 on the lim.card. Check that the internal center voltage is 10V ±20 mv, measured at the housing of the input transformer TR1.

Common mode rejection ratio adjustment.

This adjustment should be carried out with the compressor in "By-pass" mode.
Input signal +20dBu (7.75v) 15kHz is connected to both input terminals (3 and 21) which are shorted together, referring to terminal 11 (- supply). Capacitor C8 is adjusted to minimum output, i.e. best CMRR.

VCA adjustments.

These adjustments should be carried out with the compressor in "By-pass" mode.
Input signal +6 dBu (1.55v) 1kHz.
Sequence for adjustment: P2, P1 and P3.

P2 adjustment.

Output level control is set to max. CCW position (0dB gain), and P2 is adjusted to minimum distortion (THD).

P 1 adjustment.

Output level control is turned fully CW (12dB gain), and P1 is adjusted to minimum distortion (THD).

P 3 adjustment.

Output level control in fully CW position (12dB gain). P3 is adjusted to minimum second harmonic distortion.

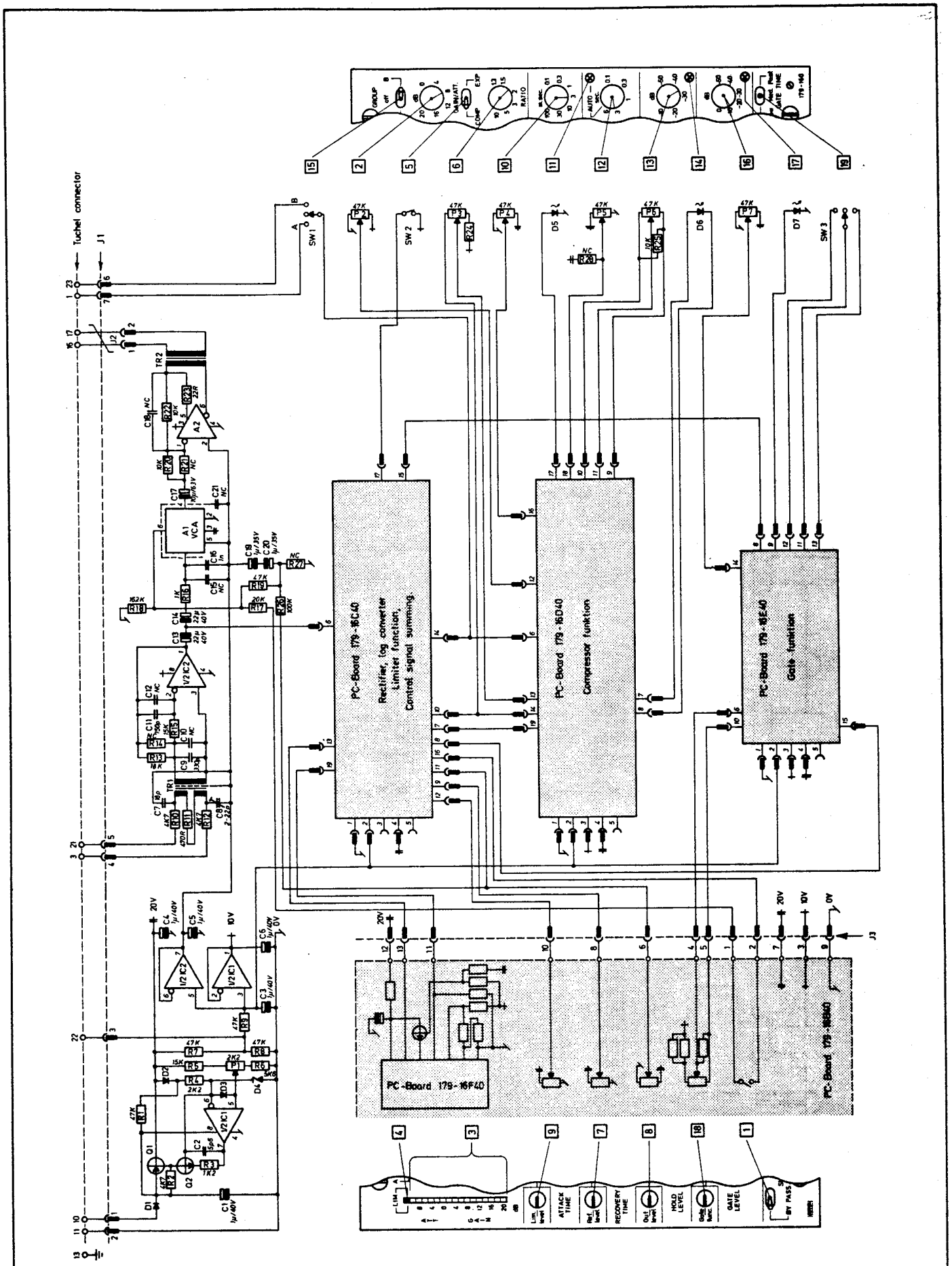

Pos.	Antal:	Materiale:	Behandl.:	Del af:
Målestok:				
Tolerance: ± mm		Compressor 179-160		NTP ELEKTRONIK A/S
Tegnet: 3.7.79 JS		Motherboard, right		
Godkendt:		Schematic Diagram		179-16 A 30-A-2

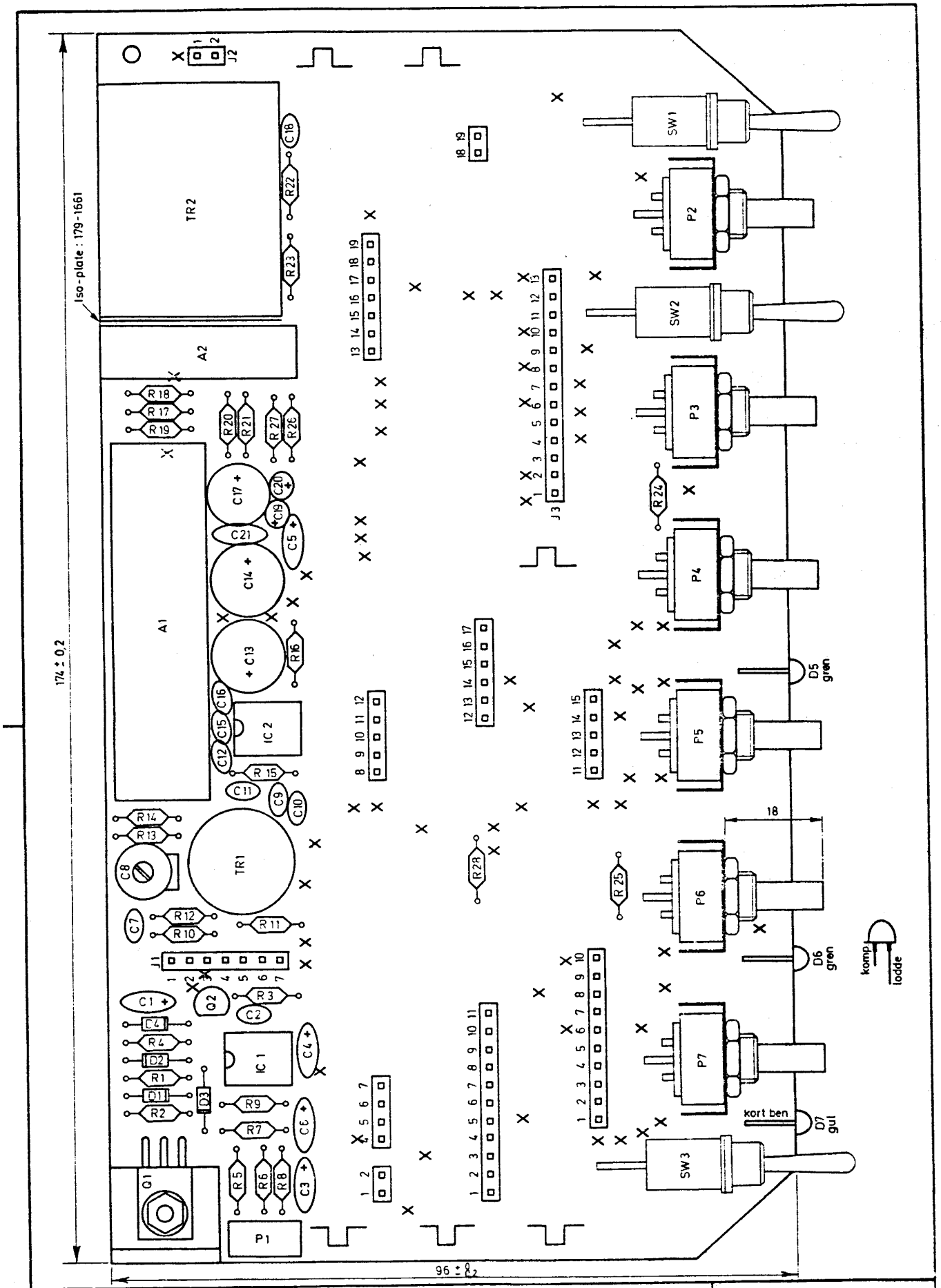

Målestok	:
Konstruktør	: BJ.
Tegnet	: 5. 7. 79 JS
Godkendt	:
Revideret	:

Compressor 179-160
Motherboard, right
Component Lay-out

NTP
NTP ELEKTRONIK A/S

179-16A41-A-3

Ref. no.	Qty.	Description	Value / Size			Type no.	Manufacturer
R23	1	Resistor, carbon	22R	1/8W	5%	SBB 0207	Beyschlag
R11	1	" "	470R	"	"	" "	"
R16	1	" "	1k	"	"	" "	"
R 1, 4	2	" "	1k2	"	"	" "	"
		" "		"	"	" "	"
R 2,10,12	3	" "	4k7	"	"	" "	"
R 6	1	" "	5k6	"	"	" "	"
R20,22,24, 25	4	" "	10k	"	"	" "	"
R 5,15	2	" "	15k	"	"	" "	"
R13	1	" "	18k	"	"	" "	"
R 1, 7, 8, 9,19	5	" "	47k	"	"	" "	"
R26	1	" "	100k	"	"	" "	"
R17	1	" , metal film	20k	"	1%	2322-151-52003	Philips
R18	1	" , " "	162k	"	"	2322-151-51624	"
P 1	1	Potmeter, trim	2k			3386H-1-202	Bourns
P2 - P7	6	"	47k	lin	5%	0620-312	Ruwido
C 7	1	Capacitor, ceramic	18p	100V	2%	2222-632-70189	Philips
C 2	1	" , "	5p6	"	"	2222-632-57568	"
		" , "		"	"		"
C11	1	" , "	150p	"	"	2222-632-70151	"
C 9	1	" , "	330p	"	"	2222-632-70331	"
C16	1	" , "	1n	"	10%	2222-630-02102	"
C 1, 3- 6	5	" , ellyt	1u	40V		2222-122-57108	"
C19,20	2	" , tantal	1u	35V		ETP 1	ERO
C17	1	" , ellyt	10u	63V		EK	"
C13,14	2	" , "	22u	40V		"	"
C 8	1	" , trim	2-22p			2222-808-11229	Philips
D 4	1	Diode, ref.				1 N 821	
D 1	1	"				1 N 4002	
D 2, 3	2	"				1 N 4148	
D 5, 6	2	" , LED	Green			LD 37 II	Siemens
D 7	1	" , "	Yellow			LD 36 II	"
Q 2	1	Transistor	NPN			BC 237 B	"
Q 1	1	"	PNP			BD 140-10	"
IC 1	1	Op-Amp				RC 4559 P	Texas
IC 2	1	"				LF 353 N	National
A 1	1	VCA				M510	NTP
A 2	1	Output Driver				M200D	"
TR 1	1	Transformer				TR BV 310-203-002	Beyer
TR 2	1	"				LL 5001	Lars Lundahl
SW 1, 3	2	Switch				CD 5439 WW 13	APR
SW 2	1	"				CD 5436 WW 13	APR

NTP

COMPRESSOR 179-160
MOTHERBOARD RIGHT

Partslist 1

Ref. no.	Qty.	Description	Value / Size	Type no.	Manufacturer
	3	Pin Connector	2 pole	G09A02C4DBAA702	ITT-Cannon
	1	" "	4 pole	G09A04C4DBAA702	" "
	2	" "	5 pole	G09A05C4DBAA702	" "
	1	" "	6 pole	G09A06C4DBAA702	" "
	2	" "	7 pole	G09A07C4DBAA702	" "
	1	" "	10pole	G09A10C4DBAA702	" "
	1	" "	11pole	G09A11C4DBAA702	" "
	1	" "	13pole	G09A13C4DBAA702	" "
	6	Card Guides		179-1653-A-4	NTP
	1	Cooling Square		179-1660-A-4	"
	1	Screen for M510		179-1659-A-4	"
	1	Iso-plate for trafo		179-1661-A-4	"
	1	P.C. Board		179-16A40	"

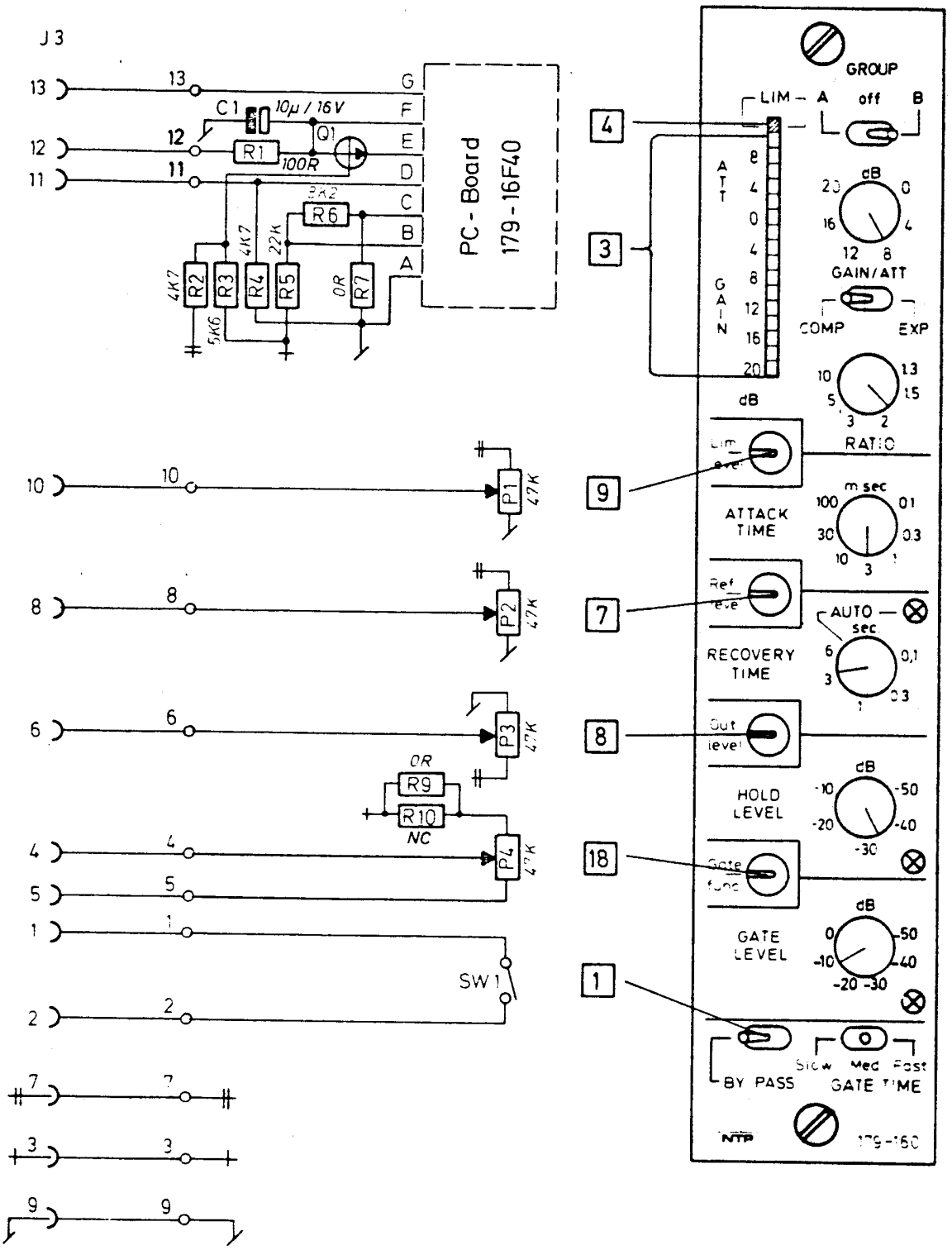

Materiale	
Konstruktør	BJ
Tegnet:	13.1.81. T.L.
Godkendt:	

Compressor 179-160B
Motherboard, left
Schematic Diagram.

NTP
NTP ELEKTRONIK A/S

Ref. no.	Qty.	Description	Value / Size	Type no.	Manufacturer
R 1	1	Resistor, carbon	100R 1/8W 5%	SBB 0207	Beyschlag
R 2, 4	2	" "	4k7 " "	" "	"
R 3	1	" "	5k6 " "	" "	"
R 6	1	" "	8k2 " "	" "	"
R 5	1	" "	22k " "	" "	"
R 7, 9	2	Strap			
P 1- 4	4	Potentiometer	47k lin 20%	0620-312	Ruwido
C 1	1	Capacitor, ellyt	10u 16V	2222-122-55109	Philips
Q 1	1	Transistor	NPN	BC 337-16	Siemens
SW 1	1	Switch		5436 CD WW13	APR
	4	Knob		235-9001	NTP
	2	Bushing		179-1690	NTP
	1	Connector house	13 pole	22-01-2131	Molex
	13	Contacts		08-55-0102	"
	1	P.C. Board		179-16B40	NTP

NTP ELEKTRONIK A/S

COMPRESSOR 179-160
MOTHERBOARD LEFT

Partslist

No. 179-16B31-B-3

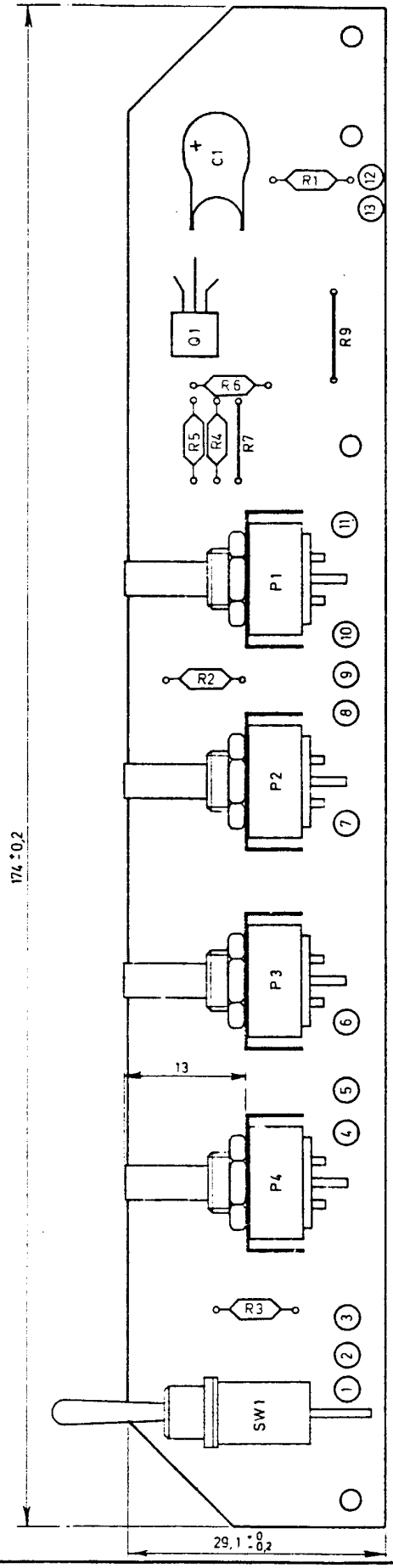

Målestok	
Konstruktør	BJ.
Tegnet	13.1.81. T.L.
Godkendt	

Compressor 179-160 B
Motherboard, left
Component Lay-out.

NTP
NTP ELEKTRONIK A/S

179-16B/1-B-3

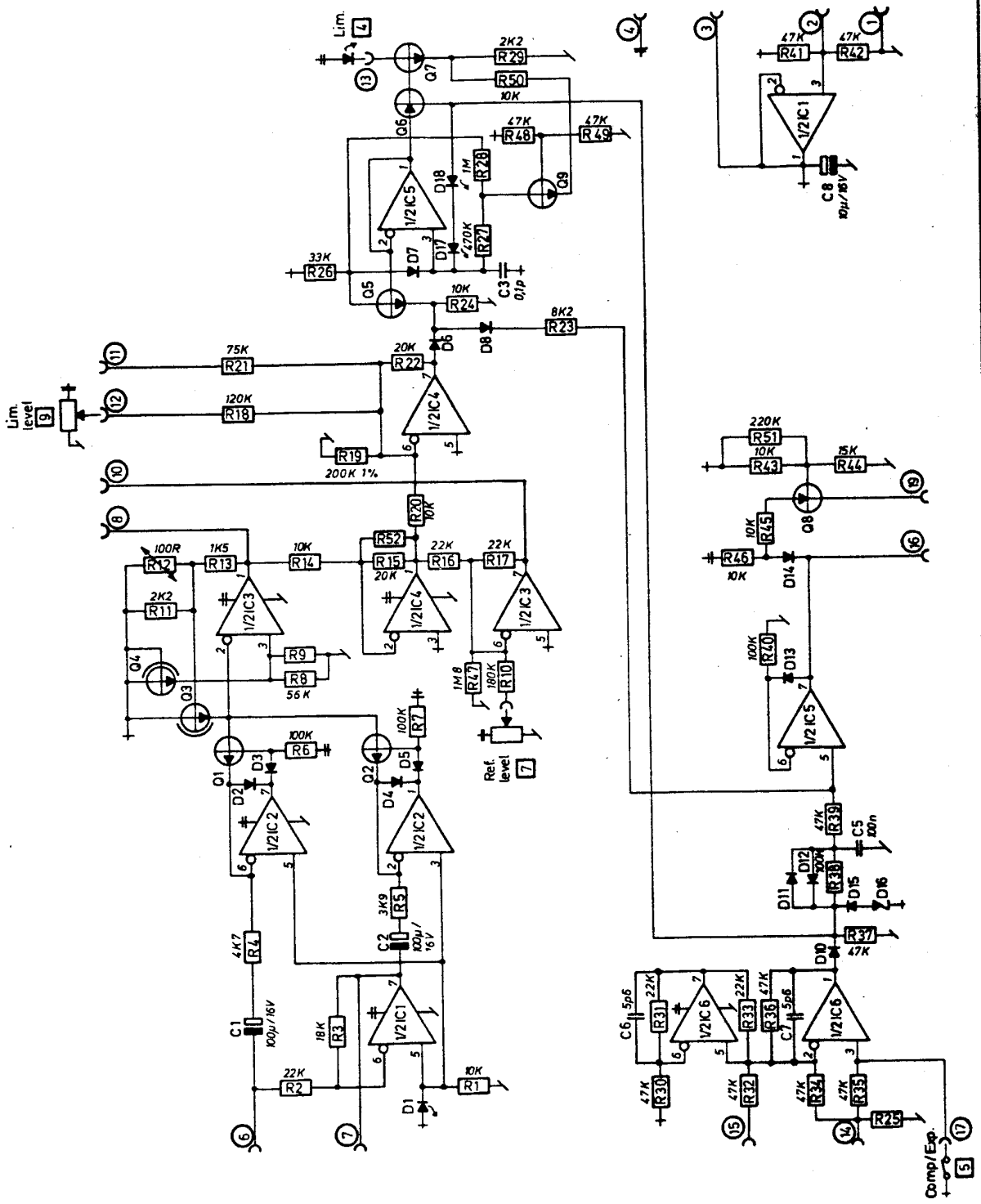

Målestok	
Konstruktør	BJ.
Tegnet	13.1.81. T.L.
Godkendt	

Compressor 179-160 B
Limiter Module
Schematic diagramme

NTP
NTP ELEKTRONIK A/S

179-16C30-B-3

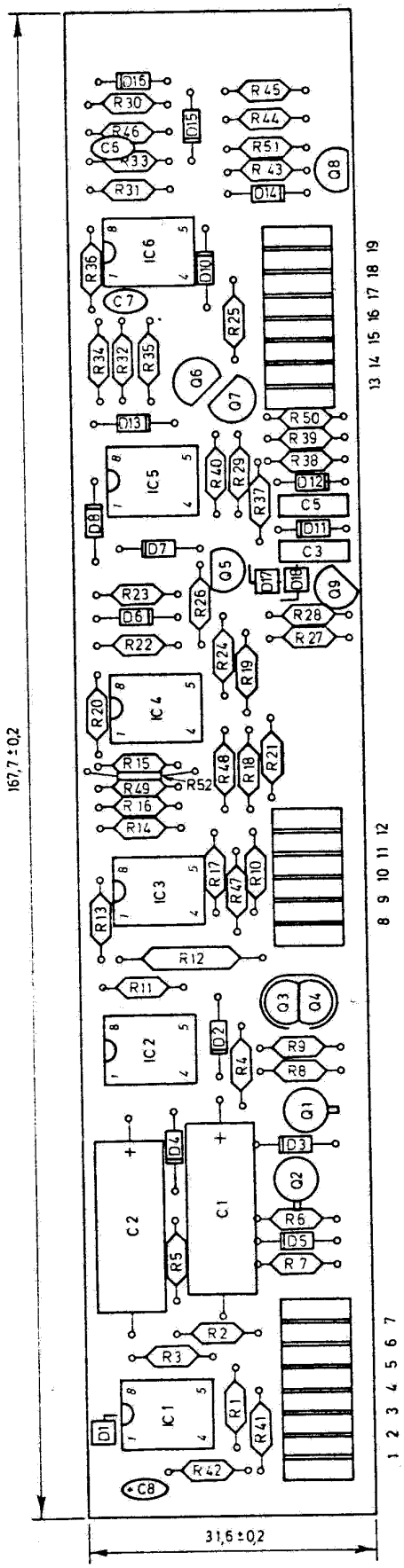

Målestok		
Konstruktør :	BJ.	
Tegnet	: 13.1.81. T.L.	
Godkendt	:	
Revideret	:	

Compressor 179-160 B
Limiter Module
Component Lay-out.

NTP
NTP ELEKTRONIK A/S

179-16C41-B-3

Ref. no.	Qty.	Description	Value / Size			Type no.	Manufacturer
R13	1	Resistor, carbon	1k5	1/8W	5%	SBB 0207	Beyschlag
R11,29	2	" "	2k2	"	"	" "	"
R 5	1	" "	3k9	"	"	" "	"
R 4	1	" "	4k7	"	"	" "	"
R23	1	" "	8k2	"	"	" "	"
R 1,14,20, 24,43,45, 46,50	8	" "	10k	"	"	" "	"
R44	1	" "	15k	"	"	" "	"
R 3	1	" "	18k	"	"	" "	"
R 2,16,17, 25,31,33	6	" "	22k	"	"	" "	"
R26	1	" "	33k	"	"	" "	"
R30,32,34, 35,36,37, 39,41,42, 48,49	11	" "	47k	"	"	" "	"
R 8	1	" "	56k	"	"	" "	"
R 6, 7,38, 40	4	" "	100k	"	"	" "	"
R18	1	" "	120k	"	"	" "	"
R21	1	" "	150k	"	"	" "	"
R10	1	" "	180k	"	"	" "	"
R51	1	" "	220k	"	"	" "	"
R27	1	" "	470k	"	"	" "	"
R28	1	" "	1M	"	"	" "	"
R47	1	" "	1M5	"	"	" "	"
R15,22	2	Resistor, metal film	20k	"	1%	2322-151-52003	Philips
R19	1	" "	200k	"	"	2322-151-52004	"
R12	1	" , PTC	100R		5%	253-9	Witrohm
C 1, 2	2	Capacitor, ellyt	100u	16V		EB	ERO
C 6, 7	2	" , ceramic	5p6	100V	2%	2222-632-57568	Philips
C 3, 5	2	" , polyester	100n	100V	5%	B32560	Siemens
C 8	1	Capacitor, ellyt	10u	16V		2222-122-55109	Philips
D 2- 8,10- 15	13	Diode				1N4148	div.
D 1,17,18	3	" , LED				LD 461	Siemens
D16	1	" , zener	5,6V			ZPD5,6	ITT
Q 1, 2	2	Transistor	NPN			BF 115	Philips
Q 5, 7, 9	3	"	NPN			BC 237 B	Siemens
Q 6, 8	2	"	PNP			BC 307 B	"
Q 3, 4	1	" , pair	NPN			BC 237 B	NTP
	1	" , clips				104509	
IC 1, 3- 6	5	Op-amp				RC 4559P	Raytheon
IC 2	1	"				NE 5532 N	Philips
	1	Socket connector	5 pole			G09A05C3DEAA702	ITT-Cannon
	2	" "	7 pole			G09A07C3DEAA702	"
	1	P.C. Board				179-16C40	NTP

NTP ELEKTRONIK A/S

COMPRESSOR 179-160
LIMITER MODULE

Partslist

Page 1 **of** 1

No.: 179-16C31-B-3

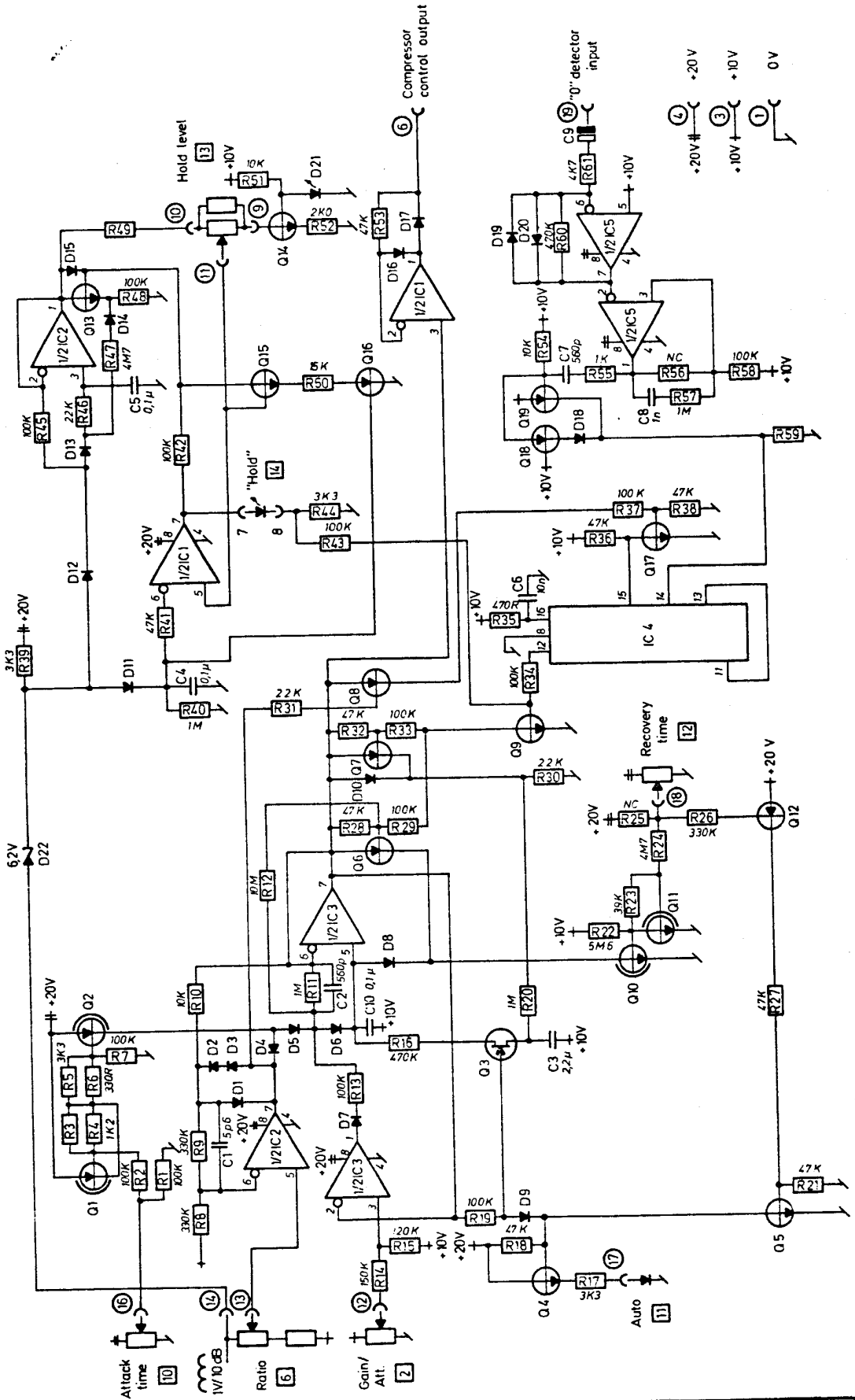

Målestok :	
Konstruktør :	BJ.
Tegnet :	11.6.79 JS
Godkendt :	

Compressor 179-160

Compressor Module

Schematic Diagram

NTP ELEKTRONIK A/S

179-16D30-A-3

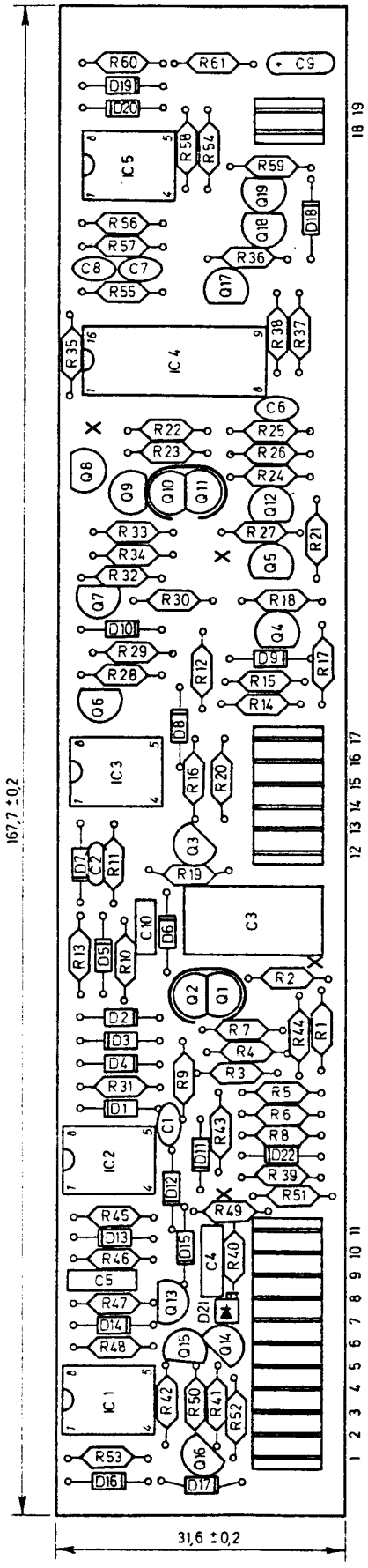

Målestok :	
Konstruktør :	BJ.
Tegnet :	8.6.79 JS
Godkendt :	
Revideret :	

Compressor 179-160
Compressor Module
Component Lay-out.

NTP
NTP ELEKTRONIK A/S

179-16D41-A-3

Ref. no.	Qty.	Description	Value / Size			Type no.	Manufacturer
R 6	1	Resistor, carbon	330R	1/8W	5%	SBB 0207	Beyschlag
R35	1	" , "	470R	"	"	" "	"
R55	1	" , "	1k	"	"	" "	"
R49	1	" , "	1k5	"	"	" "	"
R 4	1	" , "	1k2	"	"	" "	"
R 5,17,39, 44	4	" ,	3k3	"	"	" "	"
R61	1	" , "	4k7	"	"	" "	"
R10,51,54	3	" , "	10k	"	"	" "	"
R50	1	" , "	15k	"	"	" "	"
R30,31,46	3	" , "	22k	"	"	" "	"
R18,21,53 27,28,32, 36,38,41,	9	" , "	47k	"	"	" "	"
R23	1	" , "	39k	"	"	" "	"
R 1, 2, 7, 13,19,29, 33,34,37, 42,43,45, 48,58,59,	15	" , "	100k	"	"	" "	"
R15	1	" , "	120k	"	"	" "	"
R14	1	" , "	150k	"	"	" "	"
R 8, 9,26	3	" , "	330k	"	"	" "	"
R16,60	2	" , "	470k	"	"	" "	"
R11,20,40, 57	4	" , "	1M	"	"	" "	"
R24,47	2	" , "	4M7	"	"	" "	"
R22	1	" , "	5M6	"	"	" "	"
R12	1	" , "	10M	"	10%	" "	"
R52	1	" , metal film	2k0	"	1%	2322-151-52002	Philips
C 1	1	Capacitor, ceramic	5p6	100V	2%	2222-632-57568	Philips
C 2, 7	2	" , "	560p	"	"	2222-632-70561	"
C 8	1	" , "	1n	"	10%	2222-630-02102	"
C 6	1	" , "	10n	63V		2222-629-02103	"
C 4, 5	2	" , polyester	100n	100V	5%	B 32560	Siemens
C10	1	" , "	100n	63V	20%	FKS 2 min	Wima
C 3	1	" , "	2u2	100V	5%	B 32562	Siemens
C 9	1	" , ellyt	10u	16V		2222-122-55109	Philips
D 1-20	20	Diode				1N4148	
D21	1	" , LED				LD461	Siemens
D22	1	" , zener	5,6V	400mW		ZPD 5,6	ITT
Q 4, 5, 9, 13,14,15, 17	7	Transistor	NPN			BC 237 B	Siemens
Q 6, 7, 8, 12,16,18, 19	7	"	PNP			BC 307 B	"
Q10,11	1	" , pair	NPN			BC 237 B	NTP
Q 1, 2	1	" , "	PNP			BC 307 B	"
Q 3	1	" , FET				2N 4393	
IC 1, 2, 3	3	Op-Amp				LF 353 N	National
IC 5	1	"				RC 4559	Raytheon
IC 4	1	C-Mos IC	Counter			CD 4017 B	RCA

NTP ELEKTRONIK A/S

COMPRESSOR 179-160
COMPRESSOR MODULE

Partslist 1

No • 179-16D31-A-3

Ref. no.	Qty.	Description	Value / Size	Type no.	Manufacturer
	1	Socket connector	2 pole	G09A02C3DEAA702	ITT-Cannon
	1	" "	6 pole	G09A06C3DEAA702	"
	1	" "	11 pole	G09A11C3DEAA702	"
	2	Transistor clips		104509	
	1	P.C. Board		179-16D40	NTP

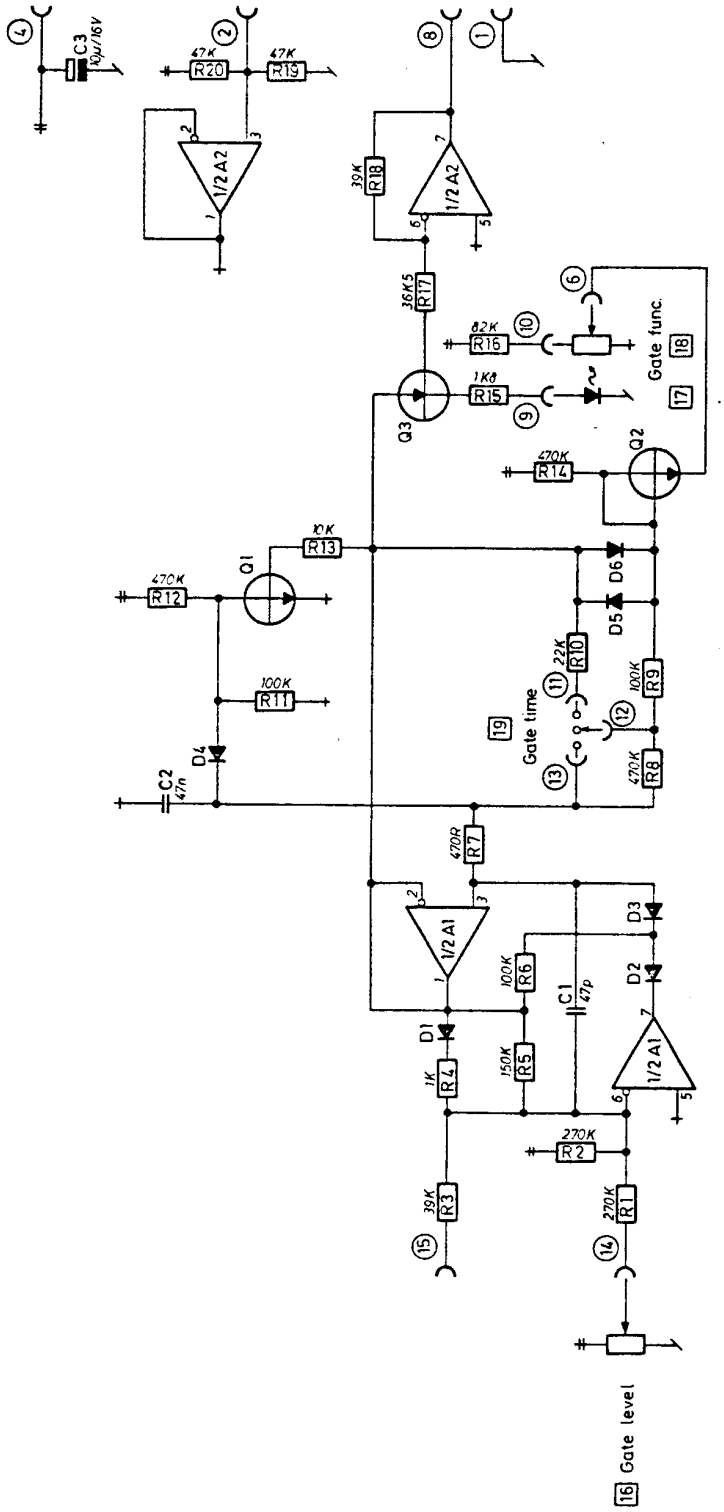

Målestok :	
Konstruktør :	B.S.
Tegnet :	12.12.80. T.L.
Godkendt :	

Compressor 179-160 B

Noise - Gate Module

Schematic diagramme

NTP ELEKTRONIK A/S

179-16 E 20 - B - 2

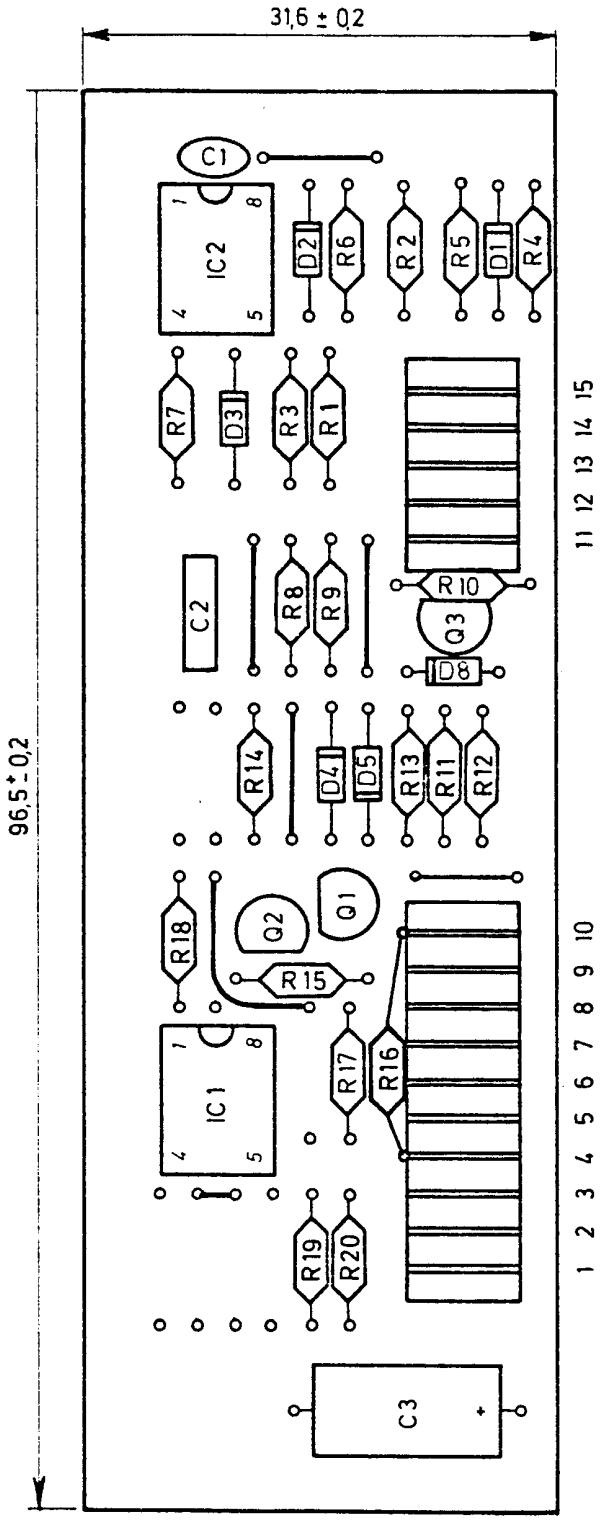

Maestok	
Konstruktor	HB
Tegnet	20-2-79 JS
Godkendt	

Compressor 179-160 B
Noise-Gate Module
Component Lay-out

NTP
NTP ELEKTRONIK A/S

Ref. no.	Qty.	Description	Value / Size			Type no.	Manufacturer
R [illegible]	1	Resistor, carbon	470R	1/8W	5%	SBB 0207	Beyschlag
R 4	1	" "	1k	"	"	" "	"
R15	1	" "	1k8	"	"	" "	"
R13	1	" "	10k	"	"	" "	"
R10	1	" "	22k	"	"	" "	"
R 3,18	2	" "	39k	"	"	" "	"
R19,20	2	" "	47k	"	"	" "	"
R16	1	" "	82k	"	"	" "	"
R 6, 9,11	3	" "	100k	"	"	" "	"
R 5	1	" "	150k	"	"	" "	"
R 1, 2	2	" "	270k	"	"	" "	"
R 8,12,14	3	" "	470k	"	"	" "	"
R17	1	" , metalfilm	36k5	1/8W	1%	MR 25	Philips
C 3	1	Capacitor, ellyt	10u	40V		EB	ERO
C 2	1	Capacitor, polyester	47n	250V		B32560	Siemens
C 1	1	Capacitor, ceramic	47p	100V	2%	2222-632-58479	Philips
D 1- 6	6	Diode	1N4148				
Q 1, 2	2	Transistor	BC 237 B				
Q 3	1	"	BC 307 B				
A 1, 2	2	Op amp.	LF 353 N				National
	1	Socket connector	5 pole			G09A05C3DEAA702	ITT-Cannon
	1	" "	10 "			G09A10C3DEAA702	" "
	1	PC Board				NTP 179-16E40-B	Poxy Print

NTP

COMPRESSOR 179-160 B
NOISE GATE MODULE
ELECTRICAL PARTSLIST

Partslist

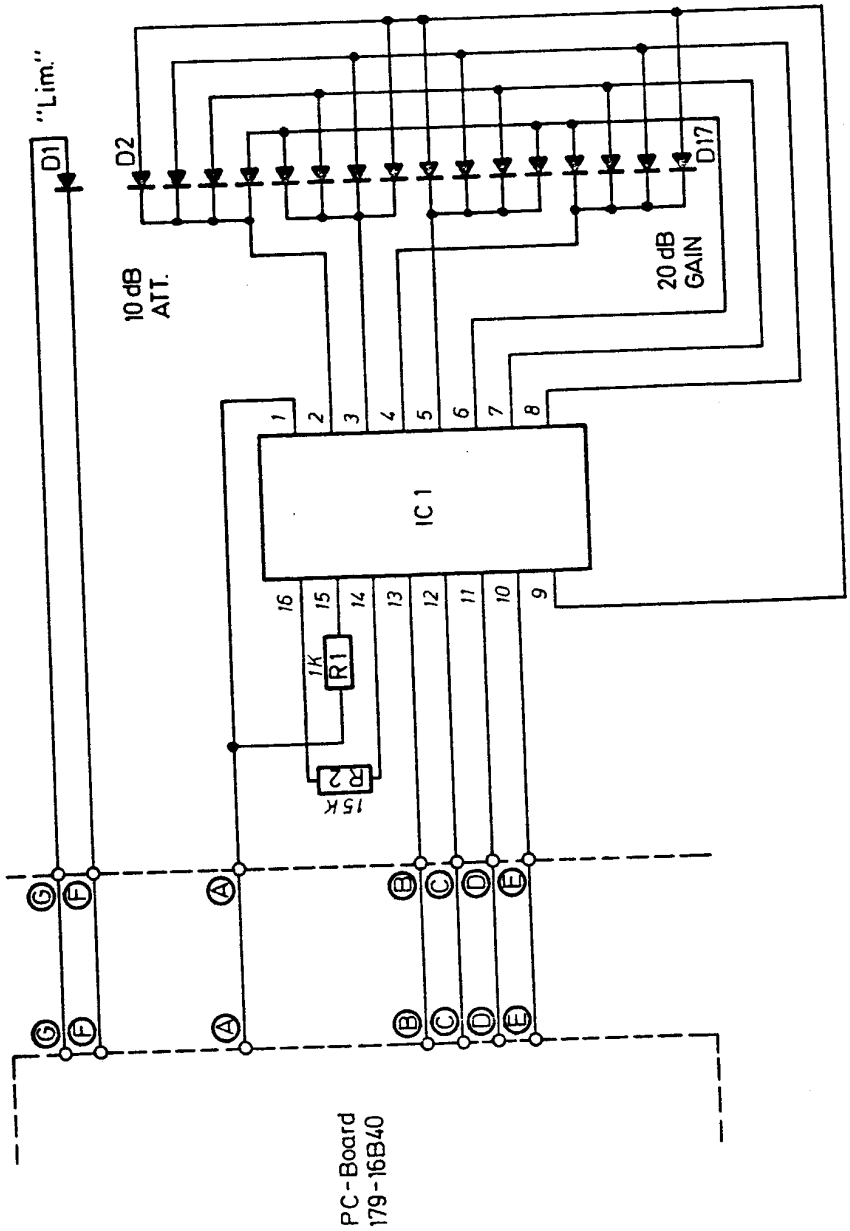

Målestok :	
Konstruktør:	BJ.
Tegnet	: 3.7.79 JS
Godkendt	:
Godkendt	:

Compressor 179-160
Meter - Module
Schematic Diagram.

NTP
NTP ELEKTRONIK A/S

179-16F30-A-4

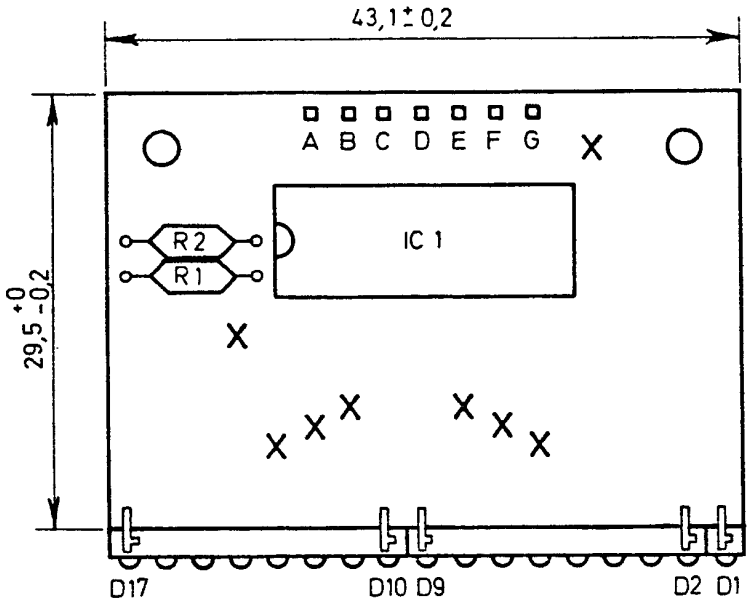

Målestok	:
Konstruktør:	BJ.
Tegnet	: 27. 6. 79 JS
Godkendt	:
Revideret	:

Compressor 179-160
Meter Module
Component Lay-out.

NTP
NTP ELEKTRONIK A/S

179-16F41-A-4

19790712 SH/bn

Ref. no.	Qty.	Description	Value / Size	Type no.	Manufacturer
R 1	1	Resistor, Carbon	1k 1/8W 5%	SBB 0207	Beyschlag
R 2	1	" "	15k " "	" "	"
D 1	1	Diode, LED		TIL 261	Texas
D 2- 9 D10-17	2	8 Element LED array		TIL 278	"
IC 1	1	LED driver		UAA 170	Siemens
	1	P.C. Board		179-16F40	NTP

NTP ELEKTRONIK A/S

COMPRESSOR 179-160
METER-MODULE

Partslist

Page 1 **of** 1

No.: 179-16F31-A-3