674A Stereo Equalizer
OPERATING MANUAL

orban

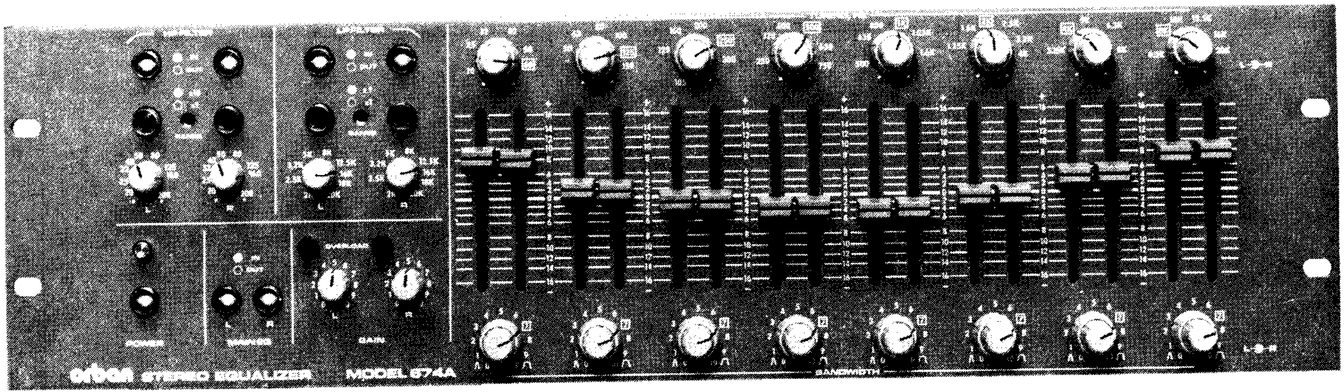

Specifications:

All specifications apply when driving 600 ohms or higher impedances. Noise measured on an average-reading meter through a 20-20,000Hz bandpass filter with 18dB/octave Butterworth skirts.

ELECTRICAL

Input:

Impedance, Load (each leg): 100K in parallel with 1000pF, electronically balanced

Impedance, Driving: Ideally 600 ohms or less, balanced or unbalanced

Nominal Input Level: Between −10 and +4dBm

Absolute Overload Point: +26dBm

Output:

Impedance, Source: 47 ohms in parallel with 1000pF, unbalanced (Optional transformer balanced 600 ohm outputs)

Impedance, Load: Should be 600 ohms or greater—will not ring into any capacitive load

Nominal Output Level: +4dBm

Max. Output Level Before Clipping: greater than +19dBm, 20-20,000Hz

Frequency Response:
±0.25dB; 20-20,000Hz: EQ controls set at zero detents

Available Gain:
+12dB; adjustable to -infinity by means of front-panel GAIN control

Slew Rate:
Varies between 6 and 13V/us depending upon setting of GAIN controls; slewing is symmetrical. Internal bandlimiting assures that slew rate limiting will not occur even with the most severe equalization and program material.

Square Wave Response:
Square wave exhibits no spurious ringing at any output level. The only ringing observable is that theoretically associated with any given equalization curve.

Total Harmonic Distortion:
Less than 0.08%, 20-20,000Hz (+18dBm)

SMPTE Intermodulation Distortion:
Less than 0.05% (+18dBm: 60/700Hz, 4:1)

Noise at Output:
Less than −78dBm (EQ in, filters out, controls centered)

Overload/Noise Ratio:
Better than 113dB for any single band-pass filter, for any settings of TUNING or BANDWIDTH controls.

Equalization Ranges:
±16dB peaking EQ, Reciprocal

Tuning Ranges:
20-60Hz; 40-150Hz; 110-310Hz; 230-750Hz; 480-1900Hz; 1.1-4.5Hz; 2.8-9.0kHz; 5.9-21kHz. Dials calibrated at ISO preferred frequencies.

Crosstalk:
Typically better than −55dB @ 20kHz; improves at 6dB/octave below that frequency.

"Q" Range:
Greater than 0.5 to 10 for any setting of the TUNING control.

Low Pass Filter Section:
Tunable in 2 ranges: 200-2000Hz or 2.0-20kHz, 12dB/octave, (2nd-order Butterworth)

High Pass Filter Section:
Tunable in 2 ranges: 20-200Hz or 200-2000Hz, 12dB/octave, (2nd-order Butterworth)

Overload Indicator:
Lamp lights for 200ms if the instantaneous peak output of any amplifier rises to within 1dB of its clipping point.

Circuit Design:
Active RC realized with FET-input opamps. Line driver employs discrete transistor current booster.

Operating Temperature:
0-50° C

Power Requirements:
115/230VAC ±10%; 50/60Hz; 12 watts

PHYSICAL

Operating Controls (each channel):
EQUALIZATION, TUNING, and BANDWIDTH for each of eight bands. TUNING, RANGE (×1; ×10), and FILTER IN/OUT for each filter. EQUALIZATION IN/OUT, POWER ON/OFF, and GAIN for entire equalizer.

Panel:
19″ × 5¼″ (48.3 × 13.3cm): 3 units

Chassis Depth Behind Panel:
5¼″ (13.3cm)

Weight:
Net: 11lbs. (5 kg); Shipping: 13½ lbs. (6.1 kg)

AC Cord:
3-wire U-ground to USA Standard

Connectors:
140 type barrier strip (5# screw); holes punched for XLR-type connectors (Switchcraft D3F and D3M or equal)

Circuit Ground:
Available on barrier strip; normally jumpered to chassis.

Options:
1) Plexiglass security cover for EQ and filter sections
2) Balanced transformers in two or four outputs
3) XLR-type connectors on input and two or four outputs
4) Phone jacks on input and two or four outputs

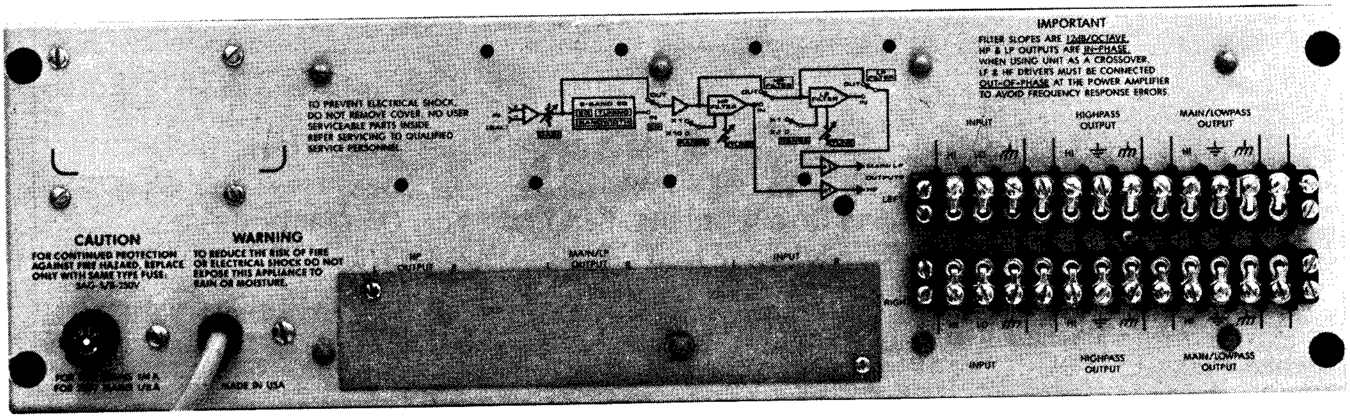

Table of Contents

NOTE

Text references to (+) and (-) input and output terminals mean the same as schematic and rear-panel designations "HI" and "LO", respectively.

REGISTRATION CARD

The original purchaser should have received a postpaid Registration Card packed with this manual.

Registration is of benefit to you because it enables us to tell you of new applications, possible performance improvements, service aids, etc., which may be developed over the life of the product. It also provides us with the date of sale so that we may more promptly respond to possible claims under Warranty in the future (without having to request a copy of your Bill of Sale or other proof of purchase).

Please fill in the Registration Card and return it to us.

If the Registration Card has become lost or you have purchased the unit used, please photocopy the image of the card reproduced below and send it to us in an envelope. Use the address shown on the title page.

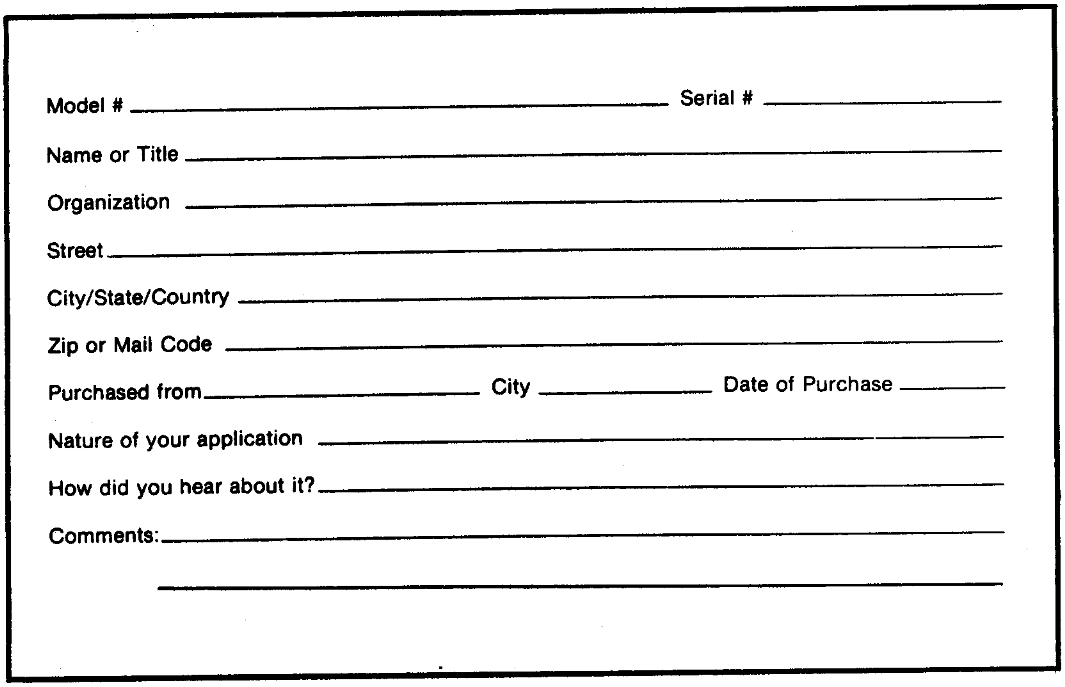

Model # ____________________ Serial # ____________

Name or Title ____________________

Organization ____________________

Street ____________________

City/State/Country ____________________

Zip or Mail Code ____________________

Purchased from ____________ City ____________ Date of Purchase ________

Nature of your application ____________________

How did you hear about it? ____________________

Comments: ____________________

____

Fig. 1: REGISTRATION CARD

WARRANTY

The Warranty, which applies only to the first end-user of record, is stated on the Warranty Certificate on a separate sheet packed with this manual. Save it for future reference.

Part A: Installation and Operation

INTRODUCTION

The Orban 674A is a dual-channel eight-band quasi-parametric equalizer of high professional quality, and is the stereo version of Orban's popular 672A equalizer. Because optimizing the controls for convenient stereo operation required placing corresponding "A" and "B" controls physically close to each other, there is slight crosstalk between the channels at very high frequencies (typically better than -55dB at 20kHz, falling at 6dB/octave at lower frequencies). A small amount of leakage from one channel to the other may be heard if you attempt to use each 674A channel to equalize entirely independent program material, and we recommend that the 674A be used only with stereophonic program material. If you require absolute isolation between the two channels, we recommend use of a pair of 672A equalizers instead.

The 674A is equipped with graphic-type EQ controls providing up to 16dB of reciprocal boost or cut. The center frequency and bandwidth of each band are continuously variable to enable precise control of the audio spectrum. Wide-range high- and low-pass filters (12dB/octave) follow each EQ section for added versatility. When these filters are overlapped (200-2000Hz), the 674A can be used as a combined graphic/parametric equalizer <u>and</u> tunable electronic crossover. Separate lowpass and highpass outputs are provided for this purpose.

Each channel of the 674A has an electronically-balanced bridging input, and unbalanced outputs (which can be balanced by the addition of optional output transformers). Input, outputs, and power line connections all contain effective RF filtering. 12dB of gain is available. <u>All</u> potential overload points in the equalizer are monitored by an extremely fast "peak-stretching" overload detector, so that peak clipping can be detected and corrected before it becomes audible.

The flexibility offered by the 674A makes it a particularly powerful tool in nearly all areas of audio: sound reinforcement, public address, recording studio, broadcasting, motion picture sound, dance bars (discos), theater.....

The 674A easily meets the quality, performance, and reliability requirements of the demanding professional, and is also well-suited for use in semi-pro or audiophile applications.

The controls and features of the 674A are fully described in this manual. It will familiarize you with the unit's potential and enable you to imaginatively use the 674A for your specific installation and application.

PERFORMANCE HIGHLIGHTS

<u>EQ Section</u>

-- Eight bands, each with TUNING and BANDWIDTH control

-- ±16dB equalization range

-- Reciprocal curves

-- Each band tunes over 3:1 frequency range

-- "Q" is variable between 0.5 and 10

-- "Tic" marks on TUNING and BANDWIDTH controls guide you to octave-band graphic equalization settings

-- Bands are totally non-interacting

<u>LP/HP Filter Sections</u>

-- Each section is continuously tunable over 100:1 range in 2 decades

-- Each section is independently switchable

-- 12dB/octave slopes

-- Separate highpass and lowpass outputs permit use as full electronic crossover in the range of 200-2000Hz

<u>General</u>

-- 12dB available gain

-- Very low noise and distortion

-- High slew rate for minimum TIM (SID)

-- "Peak-stretching" overload lamp warns of clipping anywhere in equalizer before distortion is audible

-- EQ controls are long-throw dust-shielded sliders for good resolution

-- Industrial-grade parts and construction, including socketed IC's

-- RFI suppression on input, output, and power leads

-- Balanced output optional (order retrofit kit as required)

-- Holes for XLR-type connectors are provided (retrofit kit available)

FRONT PANEL DESCRIPTION

The GAIN control adjusts the drive level to the filters and equalizers.

The OVERLOAD indicator monitors all critical points to warn of excessive signal amplitude due to excessive input amplitude or to large amounts of peak boost equalization. Overloads are eliminated by turning down the GAIN control.

The EQ IN/OUT switch defeats the graphic EQ section.

The EQ controls adjust the maximum peak or dip in each band over a range of ±16dB. Center detent corresponds to flat output from the band.

The TUNING controls adjust the center frequency of each of the eight bands in the EQ section.

The BANDWIDTH controls adjust the "Q" (sharpness) of each band in the EQ section. The "Q" becomes broader when turned clockwise; sharper when turned counterclockwise.

The HIGHPASS FILTER IN/OUT switch defeats the highpass filter action.

The HIGHPASS FILTER TUNING control adjusts the corner frequency of the highpass filter over two ranges. The RANGE switch determines whether the range is 20-200Hz or 200-2000Hz.

The LOWPASS FILTER IN/OUT switch adjusts the corner frequency of the lowpass filter in two ranges. The RANGE switch determines whether the range is 2-20kHz or 200-2000Hz.

The POWER switch and green LED pilot lamp complete the front panel.

REAR PANEL DESCRIPTION

The FUSE used in the 674A is a 3AG slo-blo type: 1/4 amp for 115V operation and 1/8 amp for 230V operation. Replace with the same type only.

The INPUT and OUTPUT connectors provided allow connection via barrier strip (#5 screw). In addition, a cover plate masks holes for user-installed XLR-type connectors and/or 1/4" phone plugs.

The BLOCK DIAGRAM outlines the signal flow through the various sections of each channel of the 674A. It is reproduced here:

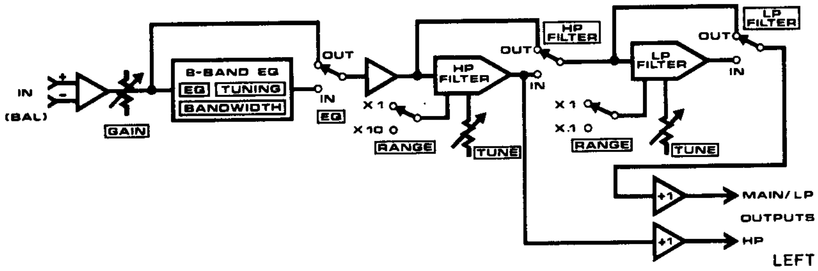

FIG.2: BLOCK DIAGRAM

Please refer to the **Electrical Installation** section for connection instructions.

AC POWER

The power transformer can be strapped for 115 volt or 230 volt 50 or 60Hz AC operation. If the unit was ordered for 230 volts, a tag on the power cord warns of the modification.

The two primary windings of the power transformer are connected in parallel for 115 volt operation, and in series for 230 volt operation. (See the **Schematic Diagram** at the back of this manual.)

To strap the power transformer for a different voltage, remove the top cover of the 674A. Strapping instructions are found on the insulating fishpaper around the power tranformer. It is not necessary to rearrange the heavy insulated wiring; all strapping can be performed with bare jumper wire. Take care not to burn the insulation.

The power cord is terminated in a "U-Ground" plug to USA standards. The green (or green/yellow) wire (which is connected to the long prong) is connected directly to the 674A chassis. If it becomes necessary to lift this ground to suppress ground loops, this should be done with a three-prong to two-prong adapter plug, rather than by damaging the power plug. It is not recommended that this ground be defeated unless absolutely necessary because it eliminates the intrinsic safety feature of the three-wire system.

WARNING!

IF THE GROUND IS DEFEATED, CERTAIN FAULT CONDITIONS IN THE UNIT OR THE SYSTEM TO WHICH IT IS CONNECTED CAN RESULT IN APPEARANCE OF FULL LINE VOLTAGE BETWEEN CHASSIS AND EARTH GROUND. SUCH VOLTAGE IS CAPABLE OF CAUSING SEVERE INJURY OR DEATH!

MECHANICAL INSTALLATION

Vertical space of three standard rack units (5 1/4"/13.3cm) is required.

Mounting the unit directly over large heat-producing devices like a vacuum-tube power amplifier may shorten component life and is not recommended. Ambient temperature should not exceed 113 degrees F (45 degrees C) when equipment is powered.

INSTALLATION OF OPTIONS

XLR Connector Installation: To install the optional XLR connectors, obtain (2 ea.) Switchcraft D3M and (2 ea.) Switchcraft D3F (or equivalent) connectors from a local supplier. These connectors are also available directly from Orban as retrofit kit RET-28.

Remove the cover plate from the rear chassis apron and install each connector with a pair of #4-40-1/4" flat-head screws, nuts, and lockwashers. On each channel in turn, connect jumper wires from the barrier strip to the XLR's as shown in Fig. 1.

Phone Jack Installation: To install the optional phone jacks, obtain (4 ea.) Switchcraft #12B (tip-ring-sleeve) phone jacks from a local supplier. These jacks are also available directly from Orban as RET-29.

Remove the hole plugs from the rear panel and install the jacks using the hardware supplied with the jacks. Then connect jumper wires from the barrier strip to the jacks as shown in Fig. 1.

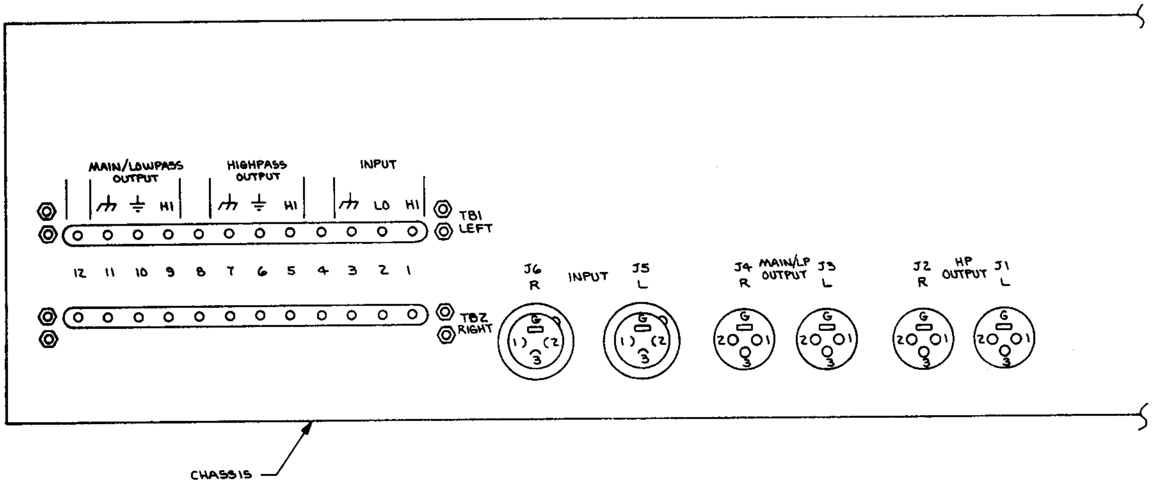

VIEW FROM INSIDE OF 674A CHASSIS

WIRE LIST

XLR CONNECTOR INPUT			XLR CONNECTOR HP OUT			XLR CONNECTOR MAIN/LP OUT		
FROM	TO	COLOR	FROM	TO	COLOR	FROM	TO	COLOR
J5-1 (⏊)	J5-G (GND)	BLK	J1-1 (⏊)	J1-G (GND)	BLK	J3-1 (⏊)	J3-G (GND)	BLK
J5-2 (LO)	TB1-2 IN (LO)	BRN } TWIST	J1-2 (LO)	TB1-6 OUT (⏚)	GRY } TWIST	J3-2 (LO)	TB1-10 OUT (⏚)	GRY } TWIST
J5-3 (HI)	TB1-1 IN (HI)	RED	J1-3 (HI)	TB1-5 OUT (HI)	GRN	J3-3 (HI)	TB1-9 OUT (HI)	YEL

TABLE SHOWN FOR LEFT CHANNEL, REPLICATE FOR RIGHT CHANNEL

Input

pin 1	chassis ground
pin 2	LO
pin 3	HI

Output

pin 1	chassis ground
pin 2	circuit ground (unbalanced) or LO (transformer-balanced)
pin 3	HI (balanced or unbalanced)

Balanced Output Transformer Installation: If transformers were not installed at the factory, refer to the installation instructions furnished with the transformer retrofit kit, available directly from Orban. The transformers supplied with this kit have been designed to have a negligible effect on published specifications. Should you wish to use some other transformers, it would be wise to make careful performance measurements with special attention to LF distortion and HF response at high output levels, thus determining the output level achievable with performance acceptable for your application. A transformer meeting Orban standards should produce approximately +20dBm (limited by clipping in the output amplifier) without significantly compromising performance.

The **Electrical Installation** section describes grounding procedures in the event transformers are used.

ELECTRICAL INSTALLATION

Connecting the 674A Equalizer to other equipment is quite straightforward. Relatively uncomplicated systems (such as home playback systems, "semi-pro" recording studios, electronic music studios, dance bars, etc.) tend to come together without serious grounding problems even if the wiring practices are somewhat casual, provided that high RF fields are not present. Unusual situations can be analyzed if you are familiar with the standard rules governing grounding and interfacing between balanced and unbalanced systems.

Input

The instructions below will apply to the majority of cases. A comprehensive discussion of interconnections and grounding can be found in the **Appendix.**

The electronically-balanced input of each channel of the 674A equalizer is compatible with most professional and semi-professional sound equipment, balanced or unbalanced, whose source impedance is 600 ohms or less. If it is greater (as in some vacuum-tube audiophile preamps), a minor modification may be made to the input to accomodate the situation. Please refer to the **Appendix** for further details.

Nominal input level is between -10 and +4dBm. The absolute overload point is +26dBm.

Output

The two outputs of each channel of the 674A are unbalanced (unless fitted with the optional transformers), and the source impedance is 47 ohms in parallel with 1000pF to the chassis (for RFI suppression).

Use the MAIN/LOWPASS outputs for normal operation when the crossover feature is not used.

If the 674A is being used as a full electronic crossover, use the MAIN/LOWPASS outputs to drive the low-frequency amplifiers, and the HIGHPASS outputs to drive the high-frequency amplifiers.

The LOWPASS and HIGHPASS outputs of a given channel are in-phase. Since correct frequency response from a 12dB/ocatve crossover requires that the drivers be out of phase, phase reversal must be effected elsewhere in the system, such as at the outputs of the power amplifiers.

Wiring the 674A With Two-Conductor Shielded Cable

We recommend wiring with two-conductor shielded cable (such as Belden 8451 or equivalent) because signal current flows through the two conductors only. The shield does not carry signal, is used only for shielding, and is ordinarily connected to ground at one end only. The following table and diagram are applicable to a great majority of installations.

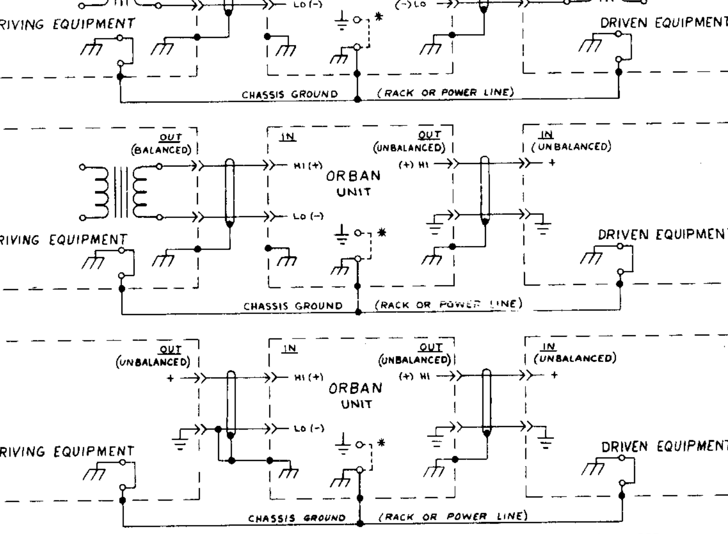

* IF ORBAN UNIT IS EQUIPPED WITH OPTIONAL OUTPUT TRANSFORMER, THEN INSTALL THIS JUMPER.

Fig. 3: GROUNDING

TABLE I:
TYPICAL INPUT/OUTPUT CONNECTION RULES

INPUT

1) Always use "HI" and "LO" as the two input terminals to the 674A.
2) When the 674A is driven from an unbalanced source, connect shield both to circuit ground of source, and to chassis ground of 674A.

OUTPUT

1) When the 674A is driven from a balanced source, connect shield at source end to chassis ground. Do not connect shield at 674A end.
2) On the 674A output, connect shield at 674A end to chassis ground (whether driving balanced or unbalanced). Do not connect shield at other end.
3) When driving a balanced load, jumper circuit ground to chassis ground on 674A (on rear panel). When driving an unbalanced load, do not attach jumper.
4) 674A chassis should always be earth-grounded (i.e. through third wire in power cord or through rack.) For maximum protection from shock, float this ground only as last resort.
5) If optional output transformer(s) are installed on 674A, jumper the circuit ground to chassis ground on the 674A.

Because it is not always possible to determine if the pieces of equipment driving or being driven by the 674A have their circuit grounds internally connected to their chassis grounds (which are always connected to the ground prong of the AC line cord), and because the use of the AC power line ground often introduces problems because it can be noisy or otherwise imperfect, the wiring techniques in the diagram are not universally applicable.

If you follow the diagram and hum or noise appears, don't be afraid to experiment. If the noise sounds like a low-level crackling buzz, then probably there isn't enough grounding. Try connecting the "-" input of the 674A to a chassis ground terminal on the 674A's barrier strip and see if the buzz goes away. You can also try strapping the 674A's chassis and circuit grounds together, and see if this helps.

A ground loop usually sounds like a smooth, steady hum rather than a crackly buzz. If you have a ground loop, you can often break it by disconnecting the jumper between circuit and chassis grounds on the 674A's rear-panel barrier strip. In either case, think carefully about what is going on, and keep in mind the general principle: one and only one circuit ground path should exist between each piece of equipment! (Bear in mind that the circuit grounds of the two channels of the 674A are connected together internally, and could conceivably introduce a ground loop if you do not take this connection into account in planning your wiring.)

Wiring The 674A With Single-Conductor Shielded Cable: Sometimes, particularly if you are using the 674A with musical instruments or home-type equipment, you will find yourself with no time to correctly connect the 674A, and will find instead that you must use single-conductor shielded cables (usually terminated by 1/4" phone plugs which can be plugged into the 674A's optional phone-plug inputs and outputs). If this happens, connect the inner conductors of the shielded cables to the HI sides of the 674A inputs and outputs. Connect the shields to the LO sides. (The HI side appears on the tip of the phone jacks; the LO side on the ring. The sleeve is chassis ground).

The shield will ordinarily receive chassis ground from the external equipment which it is connecting to the 674A. The chassis ground/circuit ground jumper on the rear barrier strip of the 674A should be left in whichever configuration gives minimum hum or buzz. To minimize hum or buzz, it may be necessary to jumper one or more shields to chassis ground. IF A TWO-CONDUCTOR PHONE PLUG IS USED AS THE EXTERNAL CONNECTOR, THIS WILL HAPPEN AUTOMATICALLY, AND MAY INTRODUCE A GROUND LOOP. Because use of single-conductor cables virtually eliminates any possibility of carefully controlling the system grounding scheme, it is NOT RECOMMENDED!

OPERATING INSTRUCTIONS

The operating controls of the 674A have been configured to permit easy adjustment of corresponding controls in channels "A" and "B" in stereo applications.

In the EQ section, "A" and "B" EQ sliders are located next to each other. TUNING and BANDWIDTH controls are (non-clutched) concentric, so that they can be readily manipulated either simultaneously or independently.

For the same reason, the "A" and "B" channels of the LOWPASS and HIGHPASS filters are grouped together by function in adjacent areas of the front panel.

To provide best value, the 674A uses controls of high reliability but modest calibration accuracy. Calibrations are approximate, and are intended primarily as reference guides. However, placing an EQ control on its center detent accurately defeats the equalization in that band. When operating with narrow bandwidths, accurate stereophonic matching on the basis on panel calibrations alone is impractical. However, if the BANDWIDTH controls are operated on, or more clockwise than, their "tic" marks, then no problems will occur. (See the subsection on **Stereo Matching** in **Part B** for matching instructions.)

The following instructions apply to each channel of the 674A.

Using the EQ Section

To use the EQ section alone, switch the HP and LP filter switches OUT. Switch the EQ section switch IN.

For those who have never used a Parametric Equalizer before, the easiest way to become familiar with the 674A is to set the TUNING and BANDWIDTH controls at the "tic" marks. The 674A will now behave like an eight-band octave graphic equalizer (on ISO standard octave frequencies of 63, 125, 250, 500, 1000, 2000, 4000, and 8000Hz). Once you have gotten the "feel" of the 674A in this mode, try experimenting with the TUNING and BANDWIDTH controls to see how they affect the sound.

When you boost the EQ, discover the subtle shelving effects available from broadband peaking (BANDWIDTH control close to full clockwise; EQ control above the center detent). Contrast this with the "ringy", colored quality of setting the BANDWIDTH control toward narrow (ccw).

When you cut the EQ observe the effects you now achieve. Narrowband dips are essentially inaudible, but permit suppressing sounds of fixed frequency (like hum), up to 16dB in each band. (If the sound to be suppressed is rich in harmonics, use one band per dominant harmonic.)

The EQ curves are reciprocal: boost and cut are mirror images of each other. A given amount of EQ (in recording a track, for example) can be precisely cancelled later by passing the track through the equalizer with all TUNING and BANDWIDTH controls set as they were during the original recording, but with all EQ controls set equal but opposite to their original settings. Boost becomes cut, and vice-versa.

More boost or cut can be achieved by tuning adjacent bands to the same frequency. ±32dB of EQ is then available. But beware of overload and noise buildup when boosting!

While in the narrowband boost mode, a band's TUNING control can be continuously swept to give a sound similar to "phasing".

The "Q" increases (i.e., the bandwidth in terms of fractions of an octave decreases) as the TUNING control is moved higher in frequency. But the absolute bandwidth (in Hertz) does not vary.

Specified "Q" range for any setting of the TUNING control exceeds 0.5 to 10. This means that with TUNING centered, the available "Q" range is typically 0.3 to 20.

When varying the BANDWIDTH control, the peak gain remains constant while the skirts of the curve vary.

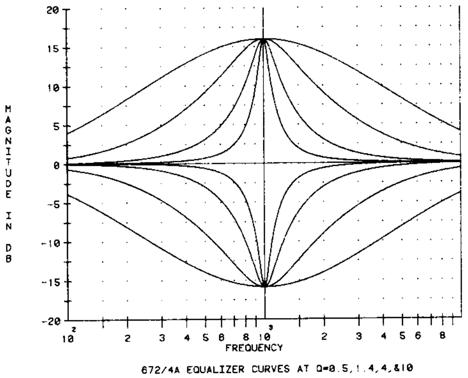

Fig. 4: BOOST/CUT CURVE FAMILIES

Using the Highpass And Lowpass Filters

Be sure that the HP and LP filter switches are IN as appropriate. This creates a passband: the low frequency cutoff is determined by the HP TUNING knob, and the high frequency cutoff by the LP TUNING knob, both in conjunction with their associated RANGE switches.

Because these filters are in series after the EQ section, EQ is possible within the passband. The EQ controls can also modify the 12dB/octave cutoff characteristics of the HP and LP filters when tuned near or at the corner frequency of the filter(s).

The ability of these filters to roll off the frequency extremes obviates the need to use the first and last EQ bands for this function. (The filters are more effective, as well.)

Deliberately narrowing the passband radically (by tuning the filters close to each other) is useful for special effects like telephone, transistor radio, and "old-time" recordings. The authenticity of such effects can often be augmented by deliberately driving the equalizer into clipping distortion (by advancing the GAIN control beyond the point where the OVERLOAD lamp lights).

Using The 674A As An Electronic Crossover

If you do not otherwise need the lowpass and highpass filters, they may be used as a full 12dB/octave Butterworth electronic crossover in bi-amped systems.

Connect the MAIN/LOWPASS output to the low frequency amplifier, and the HIGHPASS output to the high frequency amplifier. Turn the HIGHPASS FILTER IN/OUT switch to OUT, and the LOWPASS FILTER IN/OUT switch to IN. Select the x0.1 range on the LOWPASS FILTER RANGE SWITCH, and the x10 range on the HIGHPASS FILTER RANGE SWITCH. Now adjust both HIGHPASS TUNING and LOWPASS TUNING to the desired crossover frequency. Any frequency between 200Hz and 2kHz can be accomodated.

Refer to the speaker manufacturer's literature to determine the recommended crossover frequency. Typical crossover frequencies used with two-way horn-loaded systems range from 500 to 700Hz.

Ideally, the crossover frequencies can be slightly trimmed for maximally flat response around the crossover frequency by observing a real-time analyzer as the TUNING controls are adjusted. If a real-time analyzer is unavailable and you wish to adjust the crossover frequency to accuracies superior to those offered by the panel calibrations, use an oscillator and AC voltmeter (with dB scale) as follows:

First, <u>disconnect</u> 674A outputs from the amplifiers. Then, switch both filters OUT temporarily.

Connect the oscillator to the 674A input, and the AC VTVM to the 674A's MAIN/LOWPASS output. Adjust the oscillator's output frequency to 1kHz, and its output level for a 0dB reading on the AC VTVM's dB scale. Adjust the oscillator frequency to the desired crossover frequency. Now switch the LOWPASS filter IN, and adjust its TUNING control until the AC VTVM reads -3dB. Then switch the LOWPASS filter OUT and switch the HIGHPASS filter IN. Adjust the HIGHPASS FILTER TUNING until the AC VTVM reads -3dB. Both filters are now matched, and the crossover frequency is correct within the frequency calibration of the oscillator and the accuracy of the AC VTVM.

When the trimming procedure is complete, switch the LOWPASS FILTER IN/OUT switch IN. Reconnect the amplifiers to the 674A outputs. The two outputs are IN-PHASE. The 12dB/octave configuration requires an out-of-phase connection to the drivers for proper blending at the crossover point. Phase reversal can be effected by reversing the connections at the output of one power amplifier (either low or high frequency) only.

Notes On Headroom

The overload-to-noise ratio available from the 674A varies from about 100 to 105dB depending on the settings of the controls. To minimize audible noise while driving power amplifiers, for example, the overload point of the 674A should be matched to the overload point of the power amplifier. This is done by adjusting the INPUT ATTENUATOR settings on the power amp(s) to make the amp(s) barely clip when a sinewave input to the 674A is adjusted in level such that it just barely lights the 674A OVERLOAD lamp. Clipping in the amplifier may be detected by means of an oscilloscope, power output meters, or other overload indicator, depending on the amplifier used. This procedure assures minimum noise and distortion from the 674A/power amp combination.

WARNING!

PRIOR TO TESTING, BE SURE THAT THE POWER AMP LOAD (SUCH AS A LOUDSPEAKER) WILL NOT BE DAMAGED BY FULL-POWER SINEWAVE. IF YOU THINK THAT IT MIGHT BE, USE A DUMMY LOAD OR A TEST SIGNAL WITH A HIGHER PEAK-TO-AVERAGE RATIO (LIKE PINK NOISE LOWPASS FILTERED AT 1KHZ) TO AVOID DAMAGE TO TWEETERS.

Part B: Specific Applications

This part of the manual provides very specific instructions and suggestions on how to use the 674A in the fields of Sound Reinforcement, Recording Studios, Motion Picture Sound, Broadcasting, Dance Bars, and provides comments on Electronic Music. We recommend that anyone involved in pro audio (and certainly those involved in its more eclectic aspects, such as Theater) read all the sections. The applications information in each will undoubtedly provide much food for thought.

1: STEREO MATCHING

For broadband equalization (BANDWIDTH controls at or clockwise of the "tic" marks), no difficulty should result when the channels are matched on the basis of panel calibrations alone. In applications other than monitor tuning or sound reinforcement, however, if any BANDWIDTH control is adjusted "narrowband" (i.e., 0 through 5), then test instruments should be used to assure matching between stereo channels, assuring precise stereo imaging and accurate mono summing of the channels. (See the section on **Dance Bars** below for a discussion of matching requirements in monitor tuning and reinforcement applications.)

The following procedure assumes that both channels have been adjusted by ear to achieve the desired equalization, and that both are adjusted identically with reference to panel calibrations. One channel must be arbitrarily chosen as the "reference", and the other channel's controls must then be slightly tweaked to achieve a precise instrument-match to this reference. This is most readily done by the "differential method": the reference channel and the channel under adjustment are swept out-of-phase, and their outputs are summed. The channel under adjustment is tweaked to minimize the amplitude of the sum. This method is very sensitive because it automatically indicates both phase and amplitude mismatches. It is performed as follows:

1) Connect a sinewave sweep generator with logarithmic sweep to the input of the reference channel such that the hot output is connected to the reference channel's (+) input, and its (-) input is grounded.
2) Connect another output from the sweep generator to the channel under adjustment. Connect the hot output to this channel's (-) input; ground its (+) input.
3) Sum the outputs of the two channels by connecting each (+) output to one side of a 22K 5% 1/4 watt carbon resistor (the value is not particularly critical). Connect the other side of both resistors to the vertical input of an oscilloscope.
4) Sweep the channels from 20-20,000Hz, and adjust the scope sensitivity to easily see the swept component.
5) Switch all IN/OUT switches on both channels OUT. Adjust the GAIN control on the channel under adjustment to null the output observed on the scope.
6) Switch all IN/OUT switches IN (unless some of these switches are normally out on the reference channel).
7) Slightly adjust the various controls on the channel under adjustment to minimize the amplitude of the differential component as observed on the scope.

2: SOUND REINFORCEMENT

The 674A is an extremely versatile sound reinforcement equalizer. It can function as a notch filter, broadband equalizer, filter, and electronic crossover. Many of these functions are simultaneously available.

Many reinforcement systems are mono. In these installations, particularly powerful results can be obtained by connecting both 674A channels in series. A total of sixteen bands are then available for notch filtering or equalization. In addition, the first set of filters can be used to set the passband of the system, while the second set can be used as an electronic crossover.

House Tuning: In an economy installation, the 674A can do a surprisingly effective job of tuning a reinforcement system to a room without the use of a third-octave filter set. Use three or four of the bands in their narrowband notching mode (BANDWIDTH full counterclockwise) to notch out the major ring modes. This is most effectively and safely done if there is a limiter or compressor in the circuit before the power amplifier to prevent speaker damage. Advance system gain until it feeds back at a single frequency. Make sure that the limiter is in gain reduction to protect the speakers. Estimate the frequency of the feedback, and choose a band on the 674A which covers it. Turn the BANDWIDTH control to broad, and pull the EQ control down to -16dB. Adjust the TUNING control until the feedback changes frequency. Continue to adjust the TUNING control until the feedback returns at its original frequency. Set the TUNING control half-way between the two settings where the feedback was observed to change frequency. Now reduce the BANDWIDTH to full CCW (narrowband), and readjust the TUNING as necessary to keep the notch centered on the ring frequency. Finally, move the EQ control up toward center until the ring frequency reappears. Back off about 4dB. This will leave headroom so that the ring frequency will not reappear when the system gain is increased when more ring modes are tuned out later. This procedure may be repeated with the new ring frequencies as they appear. Usually after the first four ring frequencies have been eliminated, the "point of diminishing returns" is reached.

NOTE:

> If you are doing a permanent installation, be aware of the fact that air temperature changes may significantly shift the frequency of the room ring modes. To obtain added stability over time, you may wish to use slightly broader bandwidths than the very narrow (typical "Q"=20) bandwidths created by the full CCW rotation of the BANDWIDTH controls.

The remaining bands on the 674A are now available to perform broadband equalization of the system. Use a pink-noise generator and third-octave real-time analyzer for most precise results. However, if your budget doesn't permit a third-octave analyzer, use your ears. Fortunately, you only have four or five bands to deal with -- not a whole third-octave set!

The filters on the 674A may be used to roll-off the very low and high frequencies. Low frequencies tend to rob amplifier power and can damage speakers (particularly bass horns) if substantial power is applied to the loudspeaker below its cutoff frequency. Removing unnecessary high frequencies can protect tweeters and can help control feedback problems in certain specialized applications like stage monitors.

Notch Filtering: If a third-octave filter set is available for broadband equalization, the 674A may be used solely as a narrowband notch filter set to eliminate up to eight ring modes per channel. The notches obtainable are considerably sharper than those created by a third-octave equalizer. The 674A's highpass and lowpass filters may also be employed to roll-off the system in a controlled way at low and high frequencies.

Full Electronic Crossover: If the highpass and lowpass filters are not otherwise required, the house tuning, notch filtering, and electronic crossover functions can all be performed simultaneously by the 674A. Set up the crossover function as described in the **Operating Instructions** (in **PART A**), and follow the guidelines above for **House Tuning** and **Notch Filtering.**

Partial Electronic Crossover and Individual Driver Equalizer: Substantial advantages are sometimes obtained if each individual driver in a sound reinforcement system is assigned its own equalizer. Some practitioners feel that this is the most powerful way of equalizing a system. The 674A is ideal for this application, because its lowpass and highpass filters can also be used as a 12dB/octave electronic crossover, and because it is cost-effective. (Each channel of the 674A will ordinarily be used for a different driver, as the added power obtained by connecting the two 674A channels in series is not needed in this application.)

For this application, use the MAIN/LOWPASS output on each 674A.

Ordinarily, using 12dB/octave crossovers requires adjacent frequency range drivers to be connected out-of-phase. This phase reversal is readily obtained either at the power amplifier output terminals or at the input terminals of the 674A, exploiting the balanced input feature.

To use a 674A as a high frequency equalizer/crossover, adjust the HIGHPASS FILTER RANGE switch to x10, and switch the HIGHPASS FILTER IN/OUT switch IN. Adjust the HIGHPASS FILTER TUNING control to the desired crossover frequency (200-2000Hz). The bands in the EQ section which are tunable above the cutoff frequency can be used for EQ. The lowpass filter is still available to shape the upper cutoff frequency in the system.

To use a 674A as a low frequency equalizer/crossover, adjust the LOWPASS FILTER RANGE switch to x0.1, and switch the LOWPASS FILTER IN/OUT switch IN. Adjust the LOWPASS FILTER TUNING control to the desired crossover frequency (200-2000Hz). The bands in the EQ section which are tunable below the cutoff frequency can be used for EQ. The highpass filter is still available to shape the lower cutoff frequency of the system.

To use a 674A as a midrange equalizer and crossover, use both the highpass and lowpass filters to create the desired bandpass for the midrange driver. The bands in the EQ section which can be tuned within the passband can be used for EQ.

Stage Monitors: The 674A is the ideal stage monitor equalizer because of its low cost per channel and notching capabilities. Follow the instructions in **House Tuning** above. Use the highpass and lowpass filters to limit the frequency response of the stage monitors in the extreme high and low frequencies. This will result in maximum intelligibility, and will minimize feedback problems.

3: DANCE BARS

The sound generally desired in a dance bar is one that will make the customers get out and boogie (or sit down and drink....). This usually implies a large bass boost in the region of 40-80Hz, and a smaller amount of treble boost. Bands 1 and 8 of the 674A can be employed for this purpose, leaving the remaining bands available for "house tuning". In this case, we mean smoothing out midbass and midrange acoustic response of the loudspeakers in the room.

The amount of bass boost is primarily limited not by subjective considerations but by available amplifier power and loudspeaker bass power-handling capacity. For maximum capability, bi-amping is recommended because the bass amplifier can be clipped occasionally without causing obvious harshness. In this case, the 674A can also be used as an electronic crossover.

In all cases, the setting of the 674A low frequency TUNING and BANDWIDTH controls is quite critical in obtaining bass that is punchy, "tight", and sensual, without being "boomy" (like "jukebox bass"). Correct settings will vary considerably with loudspeaker type and room acoustics. In particular, satisfactory results cannot be obtained with a horn-loaded bass system with a cutoff frequency above 40Hz. Trying to boost bass below the cutoff frequency of the horn will cause severe distortion and also has the potential of damaging the drivers.

We do not recommend that the D.J. be permitted to operate the 674A in the course of his normal activities. The 674A should be adjusted once by the installing contractor to the manager's specifications, and then locked up. If the D.J. is to be provided with equalization, sufficient power to correct the sound of inadequate records can be supplied by a simple 5-band graphic equalizer with more limited range.

If the sound contractor has access to a third-octave real-time analyzer and pink-noise source, these can be of substantial aid in adjusting bands 2-7 for flat acoustic response in the midbass and midrange. Coloration here is undesirable, and can cause customer edginess. It can also interfere with conversation. For the same reason, excessive treble boost should be avoided because of its potential for subliminal irritation.

If a third-octave analyzer is available to monitor the acoustic response of the system, it is not necessary or desirable to exactly match the channels in the frequency range below 200Hz according to **Stereo Matching** above. This is because different loudspeaker locations will ordinarily produce different bass balances in the room unless the room has been acoustically designed and is symmetrical (like a good recording studio control room). In a dance bar, the chances of this occuring are slight, to say the least!

It is quite acceptable to adjust the two 674A channels substantially differently below 200Hz to smooth out standing waves, resonances, and the like. Above 200Hz, equalization is much more useful in correcting the response of the loudspeaker than in correcting room acoustics. If the loudspeakers are reasonably well-matched, the equalizer channels should therefore be adjusted to also be well-matched above 200Hz. If the "A" and "B" channel curves differ greatly, this often results in the system's being well-equalized at only one place in the room (where the measuring microphone was located) at the expense of other locations which may have their problems exaggerated!

4: RECORDING STUDIOS

The 674A can be used in the recording studio just about anywhere that a conventional equalizer is used. Most studios find at least two channels of patchable Parametric Equalization to be invaluable in cleaning up "difficult" tracks that the internal console equalizers can't handle.

If a track is plagued by hum or other interference of fixed pitch, the 674A can be used in its narrowband notching mode (BANDWIDTH full CCW; EQ at -16dB) to reduce the level of the sound and its most important harmonics by 16dB, which is often sufficient to render it inaudible. The notching of each harmonic requires use of a separate band.

The 674A is capable of producing a wide variety of special effects. Sweeping wideband notches gives a true "phasing" sound. Sweeping narrowband peaks gives a different sound with a similar flavor.

Telephone, transistor radio, and "old-time" recording effects are most easily generated by adjusting bands 5 and 6 close together in frequency (around 1.3kHz, for example). The BANDWIDTH controls are adjusted to give moderately narrow bandwidths and both EQ controls are set for 16dB boost. This produces the sound of a ringy bandpass filter with approximately 12dB/octave slopes and gives the distinctive sound desired. If you want further selectivity, use the highpass and lowpass filters. Authentic-sounding distortion can be generated by overdriving the input of the 674A beyond the point where the OVERLOAD lamp flashes.

The 674A can also be effectively employed as a monitor system equalizer/electronic crossover, particularly when a third-octave equalizer is too costly. See the **Sound Reinforcement** section above.

5: MOTION PICTURE SOUND

The 674A can be used to particular advantage as a dialog equalizer because of its many versatile features, such as:

1) Fine-tuning capability, allowing the mixer to obtain the best possible sound for difficult or poorly-recorded location recordings;

2) Instant notch filtering which can reduce hum and camera whine;

3) Instant lowpass and highpass filters which effectively remove both low and high frequency acoustical noise from the track without affecting dialog;

4) Ability to use the equalizer as a standard octave-band graphic by setting TUNING and BANDWIDTH controls to their standard settings.

The scoring mixer can similarly benefit from the fine adjustability of the 674A.

The 674A can be used to equalize the motion picture monitoring environment by adjusting the "B" chain in the re-recording theater to the studio's accepted acoustic response standard. The music scoring stage monitoring system can be similarly adjusted. In many cases, the lowpass filter can be used to simulate the Academy Rolloff used in mixing tracks intended for optical release prints. A curve corresponding to typical studio practice is generated by setting the lowpass filter to 4.5kHz.

Those interested in motion picture applications should also review the section on **Recording Studios** immediately above.

6: BROADCASTING

In AM, FM, and TV broadcasting applications, the integral RF suppression will greatly facilitate installation of the 674A. The optional output transformers are particularly recommended for stations with studio and transmitter at the same site. Normal precautions regarding grounding and shielding should be followed when the 674A is installed.

(Because of slight high frequency crosstalk (because of the proximity of "A" and "B" channel controls), it is recommended that the two 674A channels process stereophonically-related program material <u>only</u>. Do not use each channel for a totally different program.)

The 674A is invaluable in the production studio. It can be used to "sweeten" records, and to equalize the announce microphone for maximum punch.

If sibilance is a problem, the best solution is the use of an Orban Dynamic Sibilance Controller. If one is unavailable, tuning a 674A band to 6kHz, adjusting the BANDWIDTH close to the "tic" mark, and lowering the EQ control as necessary will help control sibilance -- although at the expense of vocal presence.

Use of narrowband peaking, and sweeping can create some wild gimmicks. However, be aware that excessive high frequency boost can saturate the 7.5ips tape cartridges usually used. This can be avoided by following the 674A with the Orban Stereo Compressor/Limiter, which assures clean carts under all EQ conditions.

The 674A can also be used to enhance the sound of telephone calls, remotes, satellite feeds, shortwave broadcasts, and network feeds. Use the LP and HP filters to remove out-of-band noise. Presence and intelligibility can often be enhanced by boosts in the 4-5kHz region.

The 674A is a most effective phone line equalizer. Unlike simpler phone company equalizers, the 674A's flexibility can effectively deal with minor response "glitches".

In the main studio, the 674A can be used to notch out cart or tape machine motor hum and ventilation system noise with minimal effect on voice quality. Use one band for each major 60Hz harmonic, with BANDWIDTH control adjusted close to "narrowband".

The 674A may also be used in the AM program line to equalize the air sound, thus partially compensating for the inadequacies of typical consumer AM radios. A certain amount of high frequency boost is essential to counteract the extremely rolled-off performance of such radios. However, extreme boosts can cause problems with conventional compressors and limiters (such as severe pumping, "gulping" on material with large amounts of high frequency energy, and audibly obvious de-essing). Therefore, for ultimate performance, we recommend using the Orban OPTIMOD-AM, which is a complete signal processor including adjustable equalization.

7: ELECTRONIC MUSIC

The 674A is a highly valuable adjunct to any electronic music synthesizer. It is particularly useful as a formant filter, and can be used as a resonator to simulate certain instrument body sounds. (If both channels are connected in series, up to sixteen high "Q" resonances can be simulated.)

The synthesist will find the more extreme equalization settings to be particularly useful in approaching live instrument sound and getting away from the raw sound of typical synthesizer systems.

As this whole area is highly specialized, we will not explore it further. We suggest that the beginner familiarize himself with the literature on musical instrument physics.

This concludes the **SPECIFIC APPLICATIONS** section.

Part C: Maintenance

Introduction: This part of the manual provides instructions on how to maintain the 674A, how to make sure that it is working according to specifications, and how to repair it if something goes wrong.

Factory service is available throughout the life of the 674A. Please refer to **Factory Service** subsection of **MAINTENANCE AND SERVICE** below for further information.

1: PERFORMANCE EVALUATION

General:

This section provides a series of thorough, definitive bench tests which will verify whether or not the 674A is operating normally. The 674A has only two trimmers (which adjust DC offsets, thus minimizing "pops" when operating the EQ IN/OUT switches). Alignment is ordinarily required only when IC217 or IC218 are replaced. Alignment instructions are found immediately after this **PERFORMANCE EVALUATION** section.

Power Supply:

Equipment Required:

1) VTVM or DVM
2) Oscilloscope

The following tests will verify correct operation of the Power Supply:

1) Using the DC voltmeter, measure the voltage from circuit ground to both positive and negative unregulated supplies. This can be readily measured across the two large filter capacitors. This voltage may be expected to vary widely depending on line voltage; it should measure between ±18 and ±26 volts DC.

2) Measure the voltage between circuit ground and the outputs of the positive and negative voltage regulators, VR1 and VR2. The supplies should put out between ±14.25 and ±15.75 VDC. If either supply exceeds 15.75 VDC, it implies that its associated IC regulator is defective. If either supply is lower than 14.25 VDC, refer to the **Power Supply** portion of **Part 4** in this section for troubleshooting hints.

3) Using the oscilloscope, measure the ripple and noise on the regulated positive and negative power busses. Ripple and noise should be less than 2mV peak on each bus.

Signal Processing Circuitry:

Equipment Required:

1) Oscilloscope with DC-coupled display
2) Audio sweep generator with sinewave output and logarithmic sweep (A Tektronix 5L4N Low-Frequency Spectrum Analyzer in a Tektronix 5111 Bistable Storage mainframe may be substituted for items (1) and (2).)
3) 20-20,000Hz bandpass filter, 18dB/octave slopes

4) VTVM or DVM
5) Harmonic distortion analyzer with built-in 400Hz and 80kHz filters and residual THD below 0.0015%
6) Low-distortion oscillator with residual THD below 0.0015%

(A Sound Technology 1700A or H-P 339 will satisfy (5) and (6))

For the following tests, a 600 ohm load must be provided across each 674A output. 620 ohm 1/2 watt 5% carbon resistors are suitable.

THE TEST PROCEDURE BELOW SHOULD BE FOLLOWED FROM BEGINNING TO END FOR CHANNEL "A", THEN REPEATED FOR CHANNEL "B".

1) Signal Passage Test

a) Connect the high (+) side of the 674A main output to the input of the harmonic distortion analyzer, and also to the vertical input of the oscilloscope. Connect the ground side of the 674A to instrument ground.
b) Ground the (-) input of the 674A and connect the output of the low-distortion oscillator to the (+) input of the 674A.
c) Move all IN/OUT switches to OUT, and center all EQ controls.
d) Adjust the GAIN control clockwise, and verify that an undistorted sinewave appears at the output.
e) Continue to advance the GAIN control until clipping is barely visible. Verify that this clipping level exceeds +19dBm for 20Hz, 1kHz, and 20kHz input signals.
f) Verify that the OVERLOAD lamp flashes at, or slightly below, the clipping level at 1kHz.

2) DC offset

a) Disconnect the oscillator from the 674A input.
b) Move all IN/OUT switches to IN. Measure the DC voltage appearing at each output of the 674A. Either voltage should not exceed 30mV DC.

3) Distortion and Inverting Operation

a) Ground the (+) input of the 674A and connect the low-distortion oscillator to the (-) input of the 674A. Adjust the oscillator to 1kHz.
b) Move the LOWPASS and HIGHPASS FILTER IN/OUT switches to OUT, but leave the EQ IN/OUT switch IN.
c) Using the same procedure as in the **Signal Passage Test** above, verify that the gain is the same as previously measured ±0.3dB.
d) Apply a 20kHz signal and adjust the output level of the oscillator and the 674A's GAIN control until +18dBm is observed at the 674A main output.
e) Measure the Total Harmonic Distortion, using the 400Hz and 80kHz filter on the distortion meter. The THD should not exceed 0.08%.
f) Repeat at 20Hz; +18dBm output; 400Hz filter OUT. The THD should not exceed 0.05%.
g) Repeat step (f) using the lowpass output of the 674A.

4) Noise

a) Adjust the 674A GAIN control to produce unity input/output gain.
b) Switch OUT the 400Hz and 80kHz filters in the analyzer. Connect the 20-20,000Hz bandpass filter between the 674A main output and the analyzer input.
c) Disconnect the oscillator from the 674A, and connect both (+) and (-) 674A inputs to circuit ground.

d) Center all controls except for GAIN (adjusted in step (a)), LOWPASS FILTER TUNING (2-20kHz; full clockwise), and HIGHPASS FILTER TUNING (20-200Hz; full counterclockwise). Place all IN/OUT switches IN.

e) Measure the noise at the main output of the 674A. With the test setup as described, it should not exceed -78dBm and will typically measure -80dBm. If only the 80kHz filter internal to the analyzer is available, the noise will measure somewhat higher.

5) Filter Sweep Tests

a) Set the oscilloscope for an X/Y display.

b) Connect the sweep generator output to the (+) input of the 674A. Leave the (-) input connected to circuit ground. Connect the sweep generator ramp output to the "X" input of the oscilloscope. Verify that the 674A main output is still connected to the "Y" input of the oscilloscope; if not, connect it.

c) Move the EQ IN/OUT switch to OUT.

d) Move the LOWPASS FILTER IN/OUT switch to IN.

e) Adjust the oscilloscope and sweep generator to exhibit a 20-20,000Hz logarithmically-swept response.

f) Adjust the LOWPASS FILTER tuning control from 2kHz to 20kHz while observing the swept response. Verify that the -3dB points correspond to the panel calibrations ± 1/3 octave. Verify that the response exhibits a smooth rolloff with a 12dB/octave ultimate slope.

g) Switch the RANGE to 200-2000Hz and repeat (f).

h) Switch the LOWPASS FILTER <u>OUT</u>. Switch the HIGHPASS FILTER <u>IN</u>.

i) Repeat step (f) while sweeping the highpass filter from 20-200Hz.

j) Repeat step (f) while sweeping the highpass filter from 200-2000Hz.

k) Switch the highpass and lowpass filters OUT.

6) Equalizer Swept Response

The following procedure should be performed on each of the eight equalizer bands in turn. As you perform the tests, be sure that the seven EQ controls of the bands <u>not</u> under test are set at their center detents. If the OVERLOAD lamp flashes at any time, reduce the GAIN.

a) Center the TUNING and BANDWIDTH controls. Adjust the EQ control throughout its range, and verify that a bell-shaped curve is produced. The peak gain should be adjustable between +16dB (6.31 times the "flat" level) and -16dB (0.158 times the "flat" level). The response should be flat ±0.25dB when the EQ control is set at its center detent.

b) Set the EQ control at +16dB. Adjust the BANDWIDTH control throughout its range. The peak gain should change less than 2dB as this is done.

c) Adjust the BANDWIDTH control full counterclockwise (full narrow). Adjust the TUNING control throughout its range, and verify that the dial calibrations are correct ± 1/3 octave. The curve should get sharper as the TUNING control is moved clockwise.

7) Crosstalk

a) Terminate the input of the undriven channel with a jumper wire.

b) Adjust all EQ controls to their center detents.

c) Switch all filters IN. Switch both LOWPASS FILTER RANGE switches to 2k-20kHz. Adjust both HIGHPASS FILTER RANGE switches to 20-200Hz. Adjust both HIGHPASS FILTER TUNING controls to 20Hz, and both LOWPASS FILTER TUNING controls to 20kHz.

d) Adjust both INPUT ATTEN controls to "7".

e) Continue to sweep the channel under test from 20-20kHz as in step (6) above. Adjust the OUTPUT ATTEN of the sweep generator to produce a 10V p-p output as observed on the X/Y scope.

f) Connect the Y input of the X/Y scope to the MAIN OUTPUT of the undriven channel of the 674A to measure crosstalk. Increase the sensitivity of the "Y" amplifier of the X/Y scope until the crosstalk is visible. Ordinarily, crosstalk will be maximum at 20kHz. It should not exceed 17.8mV p-p (-55dB), and should decrease at lower frequencies. (Make sure that the top of the sweep range is truly 20kHz. If the frequency is higher, then the 674A may appear to fail this test.)

Failure to meet crosstalk specifications may be due to sloppy lead dress during reassembly of the 674A after servicing. If crosstalk problems are discovered, examine left and right wiring within the chassis (particularly to and from the rear-panel barrier strip) to see if left and right channel wires have become twisted together or are in close proximity.

This concludes the performance test and verification.

2: ALIGNMENT INSTRUCTIONS

General

This alignment procedure is ordinarily performed in conjunction with the **PERFORMANCE EVALUATION** procedure immediately above, although the alignment can be performed independently if the technician has reasonable confidence that the equalizer is otherwise operating correctly. Alignment is only required if IC217 or IC218 have been replaced, and serves to set the DC output of IC217 and IC218 to 0mV to avoid clicks when EQ IN/OUT switches S101, S102 are operated.

The alignment requires only a DVM with stable zero and a resolution of at least 1mV DC.

Procedure

a) Connect the ground lead of the DVM to the ground side of R121. (It is important not to use a random ground point, as DC currents flowing through the ground system can induce several mV of offset between two "grounded" points.) Connect the hot lead of the DVM to the output of IC217A. Adjust the DVM to its most sensitive DC range, such that at least 1mV can be resolved. Adjust R111 (LEFT OFFSET) until the DVM reads 0mV DC. Adjust R111 slowly enough so that the voltage on composite capacitor C105, C107, C109 can settle to a steady state after each readjustment of R111.

b) Connect the ground lead of the DVM to the ground side of R122. Connect the hot lead of the DVM to the output of IC218A. Adjust the DVM to its most sensitive DC range, such that at least 1mV can be resolved. Adjust R112 (RIGHT OFFSET) until the DVM reads 0mV DC. Adjust R112 slowly enough so that the voltage on composite capacitor C106, C108, C110 can settle to a steady state after each readjustment of R112.

3: MAINTENANCE AND SERVICE

Preventive Maintenance

The front panel may be cleaned with a mild household detergent. Stronger solvents should be avoided, as they may damage the paint, the silk-screened lettering, or the plastic control knobs.

WARNING!

DO NOT LET DETERGENT LEAK INTO THE SLOTS OF THE SLIDER CONTROLS. WHILE THESE CONTROLS ARE EQUIPPED WITH "BOOTS" TO MINIMIZE DUST PENETRATION, THEY ARE NOT MOISTURE-PROOF AND CAN BE DAMAGED BY CARELESSNESS.

The interior of the 674A should be kept free of dust and dirt, since dirt buildup inside the chassis can cause loss of cooling and can also cause high-resistance short-circuits if the dirt absorbs moisture from the air. It is particularly important in a dusty or humid environment that the covers be periodically removed and the interior of the chassis cleaned.

Access

Because of the density of the circuitry in the 674A, unique packaging techniques were used to save space. These techniques mean that disassembly and reassembly can be tricky. Carefully following the access instructions below will save time and aggravation, and will assure continued conformance to specifications.

While all IC's can be replaced after minimal disassembly, other procedures (especially involving removal of the EQ assembly) are quite time-consuming and demand patience and care.

Special Tools Required: In addition to standard tools found on most service benches, the following special tools are required. If you lack these tools, correct disassembly and reassembly without damage will be virtually impossible.

a) Nutdriver, 1/4", 6" shaft
   (Xcelite L8, Vaco S86)
b) Nutdriver, 1/4" magnetic, 6" shaft
   (Xcelite L-8-M, Vaco S86M)
c) Spanner wrench for Sifam Knobs
   (Orban 57026-000, included with this product)
   (Retaining ring pliers such as Vaco 446 may be used)
d) Screwholding screwdriver, 6" blade
   (Kedman 1736 or equal)

General Access: This part describes how to remove and replace the front panel, giving access to the most failure-prone parts. In some cases (such as control replacement), further disassembly must occur. Details on such disassembly are provided subsequently.

1) Remove top and bottom covers.

2) The front panel is mounted to the rest of the chassis by four threaded studs which are part of the front panel. These studs protrude through holes in the chassis, and are fastened by nuts with captive lockwashers. Using tool (a) above, remove the four nuts attaching the front panel to the chassis by inserting the nutdriver through the four large access holes in the rear panel, rearranging wiring as necessary.

3) With the front panel vertical, tilt the chassis away from the panel, guiding any wiring as required. The green POWER LED should be gently pulled away from its lens to allow slack.

   All IC's and most other components are now accessible. Since IC's are socketed, replacement does not require further disassembly.

The unit may be powered-up for additional troubleshooting. However, ensure that the foils of the lowest (input) PC board do not short to any metallic surface.

CAUTION!

FULL MAINS VOLTAGE APPEARS ON THE POWER SWITCH TERMINALS AND OTHER COMPONENTS ON THE CHASSIS. USE EXTREME CARE TO AVOID INJURY!

To avoid further disassembly, we suggest that defective passive components be replaced by clipping out such components very close to their bodies, and then tack-soldering the replacement to the lead stubs. Be careful not to desolder these stubs from the underlying traces. If this operation is performed carefully, it should not compromise the reliability of the unit.

4) **Reassembly:** It is suggested that the unit be electrically checked before the chassis is reattached to the panel. Note the **CAUTION** immediately above. If further access is required, refer to the detailed instructions below.

   To reassemble, replace the POWER LED in its lens. Then insert the four studs on the front panel through the appropriate chassis holes. Use tool (b) to start the nuts on the studs, and tool (a) to tighten the nuts. Check lead dress to make sure that wiring between the PC boards and the rear panel has not become twisted or tangled, and that left and right channel wiring is not in close proximity.

Replacement of Bandwidth and Tuning Pots: These pots can be replaced without further disassembly if careful desoldering technique is used. It may be helpful to clip off each terminal of the pot, to remove the pot, and then to unsolder each terminal individually. (See section **Replacement of Components on Printed Circuit Boards** below for further hints.)

Instructions for knob removal are found immediately below.

Disassembly of EQ Board Assembly (Sandwich Board): It is necessary to perform this procedure to replace any of the EQ slider controls, or if you wish to replace a passive component on the EQ board without using the shortcut "clip and tacksolder" procedure described above.

1) **Knob Removal:** With a pointed instrument or knife, pop off the sixteen caps on the BW and TUNING controls.

   Turn all knobs fully counterclockwise, and note the endstop position so that the knobs can be accurately reinstalled later.

   Using tool (c) above, loosen the collets on each knob and pull the knobs off. Gently pull off the sixteen slide pot knobs.

2) Remove the eight screws attaching the circuit boards to the front panel. Pull the sandwich assembly back so that the pot shafts clear the panel. At the side of the EQ board nearest the filter section, gently disconnect the 16-pin interconnecting plug. Note the orientation of the plug for reassembly.

CAUTION!

The two boards in the EQ "sandwich" are now held together only with fragile pin and socket connectors -- handle the assembly carefully!

3) The EQ sandwich board is now free. The sandwich can now be separated by prying the boards apart slowly and cautiously. Alternate between each end and the center. Each time you move to a new prying location, increase the separation slightly until the boards are finally separated. After they are separated, avoid bending the pins.

   The two boards can now be repaired in the conventional manner as required.

4) **Reassembly:** Reverse the above procedure, checking the alignment of all interconnecting pins between the two boards very carefully before squeezing them together.

   Note that the metal strips bridging the slide pots perform two functions -- they mechanically reinforce the assembly, and they ground the pot cases. The strips must be replaced. Similarly, the eight screws attaching the sandwich to the front panel each perform a grounding function. All should be replaced and carefully tightened.

Disassembly of the Filter Section: The section consists of four small boards, and contains not only the filters but also the input buffers, output amplifiers, and overload indicator circuitry.

1) Noting their correct orientations (for later reassembly), gently remove both the 16-pin socket interconnecting the EQ sandwich assembly and the 6-pin DC power socket at the rear of board #2 1/2.

2) Using long-nose pliers, gently remove each of the OVERLOAD LED's from its lens by gently pulling back.

3) Remove the six knobs from the rotary control using the tools and techniques described for the **EQ Board Assembly** above.

4) Using a 6" slotted screwdriver, remove the four screws attaching the metal plate to the front panel. The entire assembly will then be free of the panel, but will remain attached to the chassis by the wires to the AC switch and barrier strips.

5) The top board (#1) can be accessed more easily by removing the single screw at the center rear and the four screws attaching it to the metal plate in the front. The board then tilts upward at the front using the interconnecting wires as "hinges".

6) Removal of the top (#1) board usually provides adequate access to the #2 board beneath it. Improved access can be obtained by removing the bottom (#3) board. Remove one long screw and spacer, two switch bracket screws, and two 3/8" control nuts. Use caution in handling since the rotary pots will not have adequate support.

   The small (#2 1/2) board swings away upon removal of its two mounting screws.

7) **Reassembly:** Reverse the above procedure. Note that neither connector is keyed, so it is very important that both be reinstalled in their original orientations.

   Replace the LED's by gently pressing them into their lenses while holding the lenses against the panel from the front. Make sure that the wiring to the power switch and the barrier strip has not been damaged. Use tool (d) to reinstall the screws holding the metal plate to the front panel.

Replacement of Components on Printed Circuit Boards

It is important to use the correct technique for replacing components mounted on PC boards. Failure to do so will result in possible circuit damage and/or intermittent problems.

Several of the circuit boards used in the 674A Equalizer are of the double-sided plated-through variety. This means that there are traces on both sides of the board, and that the through-holes contain a metallic plating in order to conduct current through the board. Because of the plated-through holes, solder often creeps 1/16" up into the hole, requiring a sophisticated technique of component removal to prevent serious damage to the board.

If the technician has no practical experience with the elegant and demanding technique of removing components from double-sided PC boards without board damage, it is wiser to cut each of the leads of an offending component from its body while the leads are still soldered into the board. The component is then discarded, and each lead is heated independently and pulled out of the board with a pair of long nose pliers. Each hole may then be cleared of solder by carefully heating with a low-wattage soldering iron and sucking out the remaining solder with a spring-activated desoldering tool. THIS METHOD IS THE ONLY SATISFACTORY METHOD OF CLEARING A PLATED-THROUGH HOLE OF SOLDER!

The new component may now be installed by following the directions below starting with step (4).

Use the following technique to replace a component:

1) Use a 30 watt soldering iron to melt the solder on the solder (underneath) side of the PC board. Do not use a soldering gun or a high-wattage iron! As soon as the solder is molten, vacuum it away with a spring-actuated desoldering tool like the Edsyn "Soldapullt". AVOID OVERHEATING THE BOARD; overheating will almost surely damage the board by causing the conductive foil to separate from the board. Use a pair of fine needle-nose pliers to wiggle the lead horizontally until it can be observed to move freely in the hole.

2) Repeat step (1) until each lead to be removed has been cleared of solder and freed.

3) Now lift the component out.

4) Bend the leads of the replacement component until it will fit easily into the appropriate PC board holes. Using a good brand of rosin-core solder, solder each lead to the bottom side of the board with a 30 watt soldering iron. Make sure that the joint is smooth and shiny. If no damage has been done to the plated-through hole, soldering of the topside pad is not necessary. However, if the removal procedure did not progress smoothly, it would be prudent to solder each lead at the topside as well in order to avoid potential intermittent problems.

5) Cut each lead of the replacement component close to the solder (underneath) side of the PC board with a pair of diagonal cutters.

6) Remove all residual flux with a cotton swab moistened with a solvent like 1,1,1 trichloroethane, naptha, or 99% isopropyl alcohol. The first two solvents are usually available in supermarkets under the brand name "Energine" fireproof spot remover and regular spot remover, respectively. The alcohol, which is less effective, is usually available in drug stores. Rubbing alcohol is highly diluted with water and is ineffective.

It is good policy to make sure that this defluxing operation has actually removed the flux and has not just smeared it so that it is less visible. While most rosin fluxes are not corrosive, they can slowly absorb moisture and become sufficiently conductive to cause progressive deterioration of performance.

Troubleshooting IC Opamps

IC opamps are usually operated such that the characteristics of their associated circuits are essentially independent of IC characteristics and dependent only on external feedback components. The feedback forces the voltage at the (-) input terminal to be extremely close to the voltage at the (+) input terminal. Therefore, if the technician measures more than a few millivolts between these two terminals, the IC is probably bad.

Exceptions are IC's used without feedback (as comparators) and IC's whose outputs have been saturated due to excessive input voltage because of a defect in an earlier stage. Also, be sure that the voltmeter is not interacting with these sensitive points and affecting the measured voltage. However, if an IC's (+) input is more positive than its (-) input, yet the output of the IC is sitting at -14 volts, this almost certainly indicates that it is bad. The same holds if the above polarities are reversed.

A defective opamp may appear to work, yet it may have extreme temperature sensitivity. If parameters appear to drift excessively, freeze-spray may aid in diagnosing the problem. Freeze-spray is also invaluable in tracking down intermittent problems. But, use sparingly, because it can cause resistive short circuits due to moisture condensation on cold surfaces.

Factory Service

Please refer to the terms of your Orban Associates Limited One-Year Standard Warranty, which extends to the first end-user. This warranty was packed separately from the 674A and is not bound with this manual. After expiration of the warranty, a reasonable charge will be made for parts, labor, and packing if you choose to use the factory service facility. Repaired units will be returned C.O.D. In all cases, transportation charges (which are usually quite nominal) shall be borne by the customer.

After a formal Return Authorization number is obtained from the factory, units should be shipped to CUSTOMER SERVICE at the address shown on the front page of this manual.

YOUR RETURN AUTHORIZATION NUMBER MUST BE SHOWN ON THE LABEL, OR THE PACKAGE WILL NOT BE ACCEPTED!

Shipping Instructions

If the original packing material is available, it should be used. Otherwise, a carton of at least 200 pounds bursting test and no smaller than 22" x 10" x 10" should be employed.

The 674A Equalizer should be packed so that there is at least 1-1/2" of packing material protecting every point. A plastic wrap around the chassis will protect the finish. Cushioning material such as Air-Cap, Bubble-Pak, foam "popcorn", or fibre blankets are acceptable. Folded newspaper is not suitable. Blanket-type materials should be tightly wrapped around the 674A Equalizer and taped in place to prevent the unit from shifting out of its packing and contacting the walls of the carton.

The carton should be packed evenly and fully with the packing material filling all voids such that the unit cannot shift in the carton. Test for this by closing but not sealing the carton and shaking vigorously. If the unit can be felt or heard to move, use more packing.

The carton should be well-sealed with 3" reinforced sealing tape applied across the top and bottom of the carton in an "H" pattern. Narrower or parcel-post type tapes will not stand the stresses applied to commercial shipments.

The package should be marked with the name of the shipper, and the words in red: DELICATE INSTRUMENT, FRAGILE! Even so, the freight people will throw the box around as if it were filled with junk. The survival of the unit depends almost solely on the care taken in packing!

4: CIRCUIT DESCRIPTION

General: Except for the power supply, the left and right channels of the 674A are independent and identical. In the following discussion, the LEFT CHANNEL will be described.

The circuitry is divisible into six major blocks. These are:

1) input buffer
2) equalizer
3) highpass filter and output buffer
4) lowpass filter and output buffer
5) overload indicator
6) power supply

These will be described in order.

Input Buffer: The signal enters the 674A in balanced form. C1, C3 shunt RF from the input leads to the chassis. These capacitors are not effective at VHF and higher frequencies; therefore, ferrite beads have been placed around the input and output leads to suppress such high frequency RF. It should be noted that this degree of RF-proofing is moderate but adequate for a vast majority of installations. However, installation next to a high-power transmitter may still cause problems. Additional RF suppression, careful examination of the grounding scheme, and other considerations familiar to the broadcast engineer may have to be used in conjunction with the 674A's built-in RF suppression.

The filtered signal is applied to IC101, a very low-noise opamp configured as a differential amplifier with a gain of 0.5. When both non-inverting and inverting inputs are driven by a source impedance which is small with respect to 100K (such as 600 ohms or less), the amplifier is essentially insensitive to signal components that appear equally on the non-inverting and inverting inputs (such as hum), and responds with full gain to the difference between the non-inverting and inverting inputs. Thus it serves as an "active transformer". Ordinarily, best results are obtained for unbalanced signals if the non-inverting input is grounded and the inverting input is driven.

The GAIN control is located after IC101. Therefore, IC101 will overload if its differential input exceeds approximately +26dBm. The OVERLOAD lamp will indicate this.

Equalizer Sections: The eight equalizer bands are all connected in a non-interacting "series-leapfrog" configuration. Each band requires two main-channel amplifiers. However, to save amplifiers, it is possible to use the second amplifier in an earlier band as the first amplifier in a later band, thus sharing one amplifier between two bands. This creates the "leapfrog" topology.

There are therefore nine main-channel amplifiers in the eight equalizer bands. These equalizer bands are essentially identical topologically, except that the first amplifier IC217A is a special low-noise type which is permitted to take 18dB of gain (thus making up for the 6dB loss in IC101 and yielding 12dB potential gain), and that the last amplifier IC103 is a summing amplifier which incorporates the EQ IN/OUT switch. All of the other amplifiers provide unity gain when no equalization is taking place.

Because band 3 (IC219A, IC219B, IC205) is typical, we will discuss it below. The discussion is readily extended to the other bands by analogy.

Band 3 creates peak boost by passing the output of IC219A through a "quasi-parametric" bandpass resonator (IC205 and associated circuitry). The output of this resonator appears at the output of IC205B, and is added to the main signal in the next amplifier down the chain (IC219B) through half of the EQ control R415. Peak boost from band 3 thus appears at the output of IC219B.

Reciprocal cut is achieved by placing the bandpass resonator in the feedback loop of IC219A. The feedback signal is introduced to IC219A's inverting input through the other half of the EQ control R415. The two halves of R415 are isolated by means of a grounded center tap, so that no interaction between boost and cut functions occurs. Thus the peak cut function appears at the output of IC219A, and is passed to the equalizer output through the remaining amplifiers in the main audio path. Note that the full peak boost and cut functions for band 3 do not appear until the output of IC219B. Similarly, the full effect of band 2 appears at the output of IC219A, which drives the band 3 resonator. Thus band 3 is effectively in series with band 2, and no interaction between bands occurs despite the interleaved "leapfrog" topology.

At frequencies far from the equalization frequency, the gain of IC219A is -1, as determined by input resistor R411 and feedback resistor R259. C217 rolls off the supersonic response of IC219A in a controlled way to eliminate overshoot, supersonic ringing, and potential TIM.

We will now discuss the third resonator, which consists of IC205 and associated circuitry. The resonator is an active bandpass filter. Negative feedback is taken around IC205B through R251, R253; positive feedback is taken around IC205B through R249. The amount of positive feedback is determined by R247 (connected to a very low impedance: the output of IC205A), and by R257, R255 and R243 (the BANDWIDTH control). R257, R255 attenuate the signal entering the resonator such that the overall peak gain from the input of R257 to the output of IC205B is 0dB regardless of the settings of R243 (BANDWIDTH) and R241 (TUNING).

The output of IC205B is integrated by inverting integrator IC205A, R241, R245, C213, and is fed back to IC205B's non-inverting input through R247. This point is also connected to ground through C215. The frequency-selective properties of the integrator plus C215 force the output of IC205B to have a bandpass characteristic. Adjustment of R243 does not affect the center frequency of the bandpass characteristic. These various characteristics are not intuitively obvious, but can be demonstrated by a mathematical analysis of the resonator.

Because of the multiple feedback loops, troubleshooting the resonator is usually a cut-and-try affair. Replace IC205 first; if this does not solve the problem, the individual components must be removed and tested on an impedance bridge. Of course, the adjustable controls R243, R241 are the least reliable passive components, and should be investigated first. The fixed passive components are highly understressed, and failures are most improbable.

EQ IN/OUT Switch: The final summing amplifier associated with the band 8 equalizer (IC103) can be switched from inverting (EQ IN) to non-inverting (EQ OUT) operation in order to maintain consistent input/output polarity as S101, the EQ IN/OUT switch, is operated. In EQ OUT mode, S101B disconnects the output of the equalizer section from IC103. S101A disconnects the input of the band 1 bandpass resonator, thus defeating band 1 equalization but retaining IC217A, with its 18dB gain. S101A simultaneously connects the output of IC217A to the non-inverting input of IC103 through voltage divider R119, R121. The overall gain of IC103 in either inverting or non-inverting modes is -4dB. This compensates for the 4dB gain in IC501A and IC501B.

The composite capacitor C111, C113, C115 eliminates any DC offsets which may have accumulated through the main equalizers while preserving maximum audio quality. R117 assures that C111, C113, C115 do not build up a charge in the OUT mode, which could cause a pop when S101 is operated.

R111 (OFFSET) adjusts the quiescent DC output voltage of IC217A to 0mV, assuring that no step change of DC voltage (and thus no click) will occur when S101 is operated. However, if S101 is operated while program material is passing through the equalizer, a click may be heard because the program is interrupted for a few milliseconds while the switch is changing state.

Highpass Filter; Output Buffer: The highpass filter consists of a "Sallen and Key" positive feedback active filter IC501B and associated circuitry. A discrete complementary-symmetry output stage is appended to IC501B to enable this IC to drive 600 ohm loads. IC501B exhibits 4dB non-inverting gain in its flat response region. This compensates for the gain loss in IC103.

To assure constant gain regardless of the position of HP FILTER IN/OUT switch S601, the non-highpass-filtered signal driving the OUT pole of S601 is amplified 4dB by non-inverting buffer IC501A.

The highpass filter is designed to provide a "second-order Butterworth" response with an ultimate slope of 12dB/octave. R513, R515 set the gain, and thus the "Q" of the filter. R505, R507, R511, C503, C505, C507, C509 determine the tuning and further affect the "Q". This group of components all interact. Therefore, the best way to troubleshoot the filter is:

a) Replace IC501. If this does not cure the problem, then
b) Check the gain in the "flat" part of the filter's response curve. If this is not 4.03dB ±2%, R513, R515 are suspect. If this does not cure, then
c) Check the other passive components on an impedance bridge. In particular, the tracking of dual pot R507 is important to assure consistent "Q" as the filter is tuned. R507 is by far the most suspect component because it can wear and deteriorate in hostile environments.

For further details, see: (Tobey,G.E., Graeme,J.G., & Huelsman,L.P.: Operational Amplifiers: Design and Applications, pp.295-298 (New York, McGraw-Hill, 1971)).

The output transistors Q603, Q607 are operated as emitter followers in a class AB configuration. R603, R607 provide local DC feedback to stabilize the quiescent bias current through the output stage. The output stage is biased by diode-connected transistors Q601, Q605 which are thermally connected to their associated output transistors to provide thermal feedback which stabilizes the output stage against thermal runaway. Current limiting to short-circuit-protect the output stage is provided by CR601, CR603 in conjunction with R603, R605. When the voltage drop across R603, R605 exceeds the turn on voltage of its associated diode (about 0.55 volts), then the diode conducts, shunting the drive current away from Q603, Q607 and into the load, thus protecting Q603, Q607 from burnout.

IC501B, the driver, is loaded by R607, R609. The junction of R607 and R609 is bootstrapped to the current-booster stage output by C601, and thus looks to IC501B like a constant-current (infinite impedance) load. This reduces distortion in IC501B.

The output is connected to the outside world through the load-isolating, RF-suppression network R509, C5, C7. The output impedance of the equalizer is thus 47 ohms in parallel with 1000pF. When the optional output transformer is installed, R509 is omitted.

Lowpass Filter; Output Buffer: This filter consists of IC601 and associated components arranged in a "Sallen and Key" unity-gain positive feedback configuration. The filter characteristic is 12dB/octave Butterworth. The gain of IC601 is +1 in the flat part of its frequency range. The output of IC601 is coupled to a discrete output stage which is included within the overall feedback loop, and which enables the stage to drive 600 ohm loads.

For troubleshooting hints and a reference, see "Highpass Filter; Output Buffer" immediately above.

Overload Indicator: The output of each main-signal-path amplifier in the 674A is connected to its own pair of diodes. One diode is connected to a +10 volt bus (created by voltage divider R719, R721); the other diode is connected to a -10 volt bus (created by R713, R711). If the instantaneous output of any amplifier exceeds ±10.6 volts, then the appropriate diode will conduct and couple a pulse onto one of the busses, which are relatively high impedance.

Positive-going overload pulses are fed into transistor inverter Q703 and appear at Q703's collector amplified and inverted so that they are negative-going. Negative going overload pulses are connected directly to Q703's collector. Thus any overload appears at Q703's collector as a negative-going pulse, and is coupled through C703 to IC701 and associated circuitry, connected as a one-shot multivibrator.

Ordinarily, IC701 is held OFF (pin 6 LOW) because R705 holds IC701's inverting input at a higher voltage than voltage divider R707, R709 holds its non-inverting input. A negative-going pulse transmitted through C703 pulls IC701's inverting input down, thus briefly switching IC701's output HIGH. This in turn pulls IC701's non-inverting input HIGH through R703, C701, and latches IC701's output HIGH until C701 can discharge through R707, R703, R709, which normally takes about 200 milliseconds. While IC701's output is HIGH, the OVERLOAD lamp is illuminated through R701 and Q701, connected as a Zener diode. Thus very fast overloads are "time stretched" and can be easily seen.

Under continuous overload conditions, it is normal for the OVERLOAD lamp to flash on and off.

Power Supply: Unregulated voltage is supplied by two pairs of full wave diode rectifiers CR801, CR803 and CR802, CR804 operating into a pair of energy storage capacitors C801, C802. The power transformer T1 is strappable for either 115 volt or 230 volt operation; the two sections of the primary are paralleled for 115 volt operation and connected in series for 230 volt operation.

The nominal unregulated voltage is ±22 volts DC at rated line voltage. This will vary widely with line voltage variations. Regulator dropout will occur if the unregulated voltage falls below about ±17.8 volts.

Regulated voltages are supplied by a pair of overrated 500mA "three terminal" IC regulators VR801, VR802. Because they are operated so conservatively, they can be expected to be extremely reliable. Therefore, before replacing the regulators, check to see whether other abnormalities in the circuitry (such as a shorted IC) have caused excessive current demand which is causing the regulator IC's to go either into current limiting or into thermal shutdown, their two built-in protective modes. If it becomes necessary to replace a regulator, be sure to replace its heat sink securely.

The regulators VR801 and VR802 are frequency-compensated by C803, C804 at their outputs to prevent high frequency oscillations. If C803 or C804 are ever replaced, be sure to use low-inductance aluminum electrolytics. Tantalums can fail because the current-delivering capacity of the power supply can cause a runaway condition if the dielectric is punctured momentarily; high-inductance aluminums can fail to prevent the regulators from oscillating. It is therefore necessary to check for oscillation on the power bus with an oscilloscope if C803 or C804 is replaced.

CR805, CR806 are connected from ground to each power bus in reverse polarity, and protect the rest of the circuitry from a fault condition that might otherwise cause a reverse polarity voltage on either power bus. In addition, small 0.05uF/25V ceramic capacitors bypass the power busses to ground locally throughout the board to prevent signal-carrying IC's from oscillating due to excessive power-lead inductance.

Appendix: Interconnections and Grounding

Small systems usually come together easily because cable runs are usually short and the interconnections between various pieces of equipment are not terribly complex. Therefore, do not be intimidated by the seeming complexity of the discussion on interconnections and grounding below. This is more information than most people will ever need to successfully install a small system; we have included it in case things don't work right and you need to find out why.

DRIVING THE 674A FROM HIGH-IMPEDANCE/HIGH-LEVEL SOURCES

Both "+" and "-" sides of the 674A inputs are bypassed to chassis ground for RF through 1000pF capacitors. To assure common mode rejection, and to assure that these capacitors do not affect the frequency response of the system, the output impedance of the equipment driving the 674A should be 600 ohms or less. Most professional and semi-professional sound equipment will satisfy this requirement.

The 674A can be driven by unbalanced sources up to 10,000 ohms (such as the outputs of some vacuum tube preamps) by removing the 1000pF capacitors from the "+" inputs, and driving these inputs from the hot side of the driving equipment's outputs. (See the section below on **Grounding** for an explanation of balanced and unbalanced connections.)

If the 1000pF capacitors are left in place and the source impedance is 10K, the capacitors will cause a high frequency rolloff which is 3dB down at 16kHz, and which rolls off at 6dB/octave thereafter.

The absolute clipping level of the 674A input is +26dBm. If such clipping occurs, it will cause the OVERLOAD lamp to flash on and off regardless of the setting of the GAIN control.

If levels greater than +26dBm are expected, an external loss pad must be used before the 674A input. The Audio Cyclopedia, Section 5, contains instructions for making such pads. (Tremaine, H.M.: The Audio Cyclopedia, Second Edition, Indianapolis, Howard W. Sams & Co., Inc., 1969).

GROUNDING

Grounding serves two purposes: it joins the ground references of various pieces of electronic equipment, and it shields the electronics from various electric fields (RFI and hum).

(Interference caused by magnetic fields is not decreased by conventional shielding, and special magnetic shielding materials must be used where hum is a problem. In audio, such shielding is ordinarily used with low-level magnetic transducers like tape heads, magnetic phono cartridges, and dynamic microphones, and with low-level transformers. Line-level equalizers such as the 674A are not normally sensitive to this sort of interference.)

There are two types of ground: circuit and chassis. Circuit ground serves as a ground reference for the electronics. Chassis ground permits use of the chassis as a shield in the same way that the shield on shielded cable protects the inner conductors. Whether the circuit and chassis grounds are identical, are separate, or are intentionally joined depends on the type of equipment and the interconnecting scheme.

In professional systems correct grounding is important. The general principles are these:

1) In an audio system, the chassis of each piece of equipment must be connected to a good common ground point (ideally a cold water pipe or a rod driven into the earth) by one and only one wire.

2) Meanwhile, there must be one and only one circuit ground path between each piece of equipment.

It is when these two requirements become confused, omitted, or redundant that problems develop. If there is a connection missing, hum and noise will result. If more than one ground path exists, then a "ground loop" may develop.

A ground loop can be viewed as a single turn of a giant transformer. Because 60Hz AC magnetic fields exist at every point served by mains power, the ground loop will have a hum current induced in it by stray AC magnetic fields. Because the ground wire has appreciable impedance, this current will cause a hum voltage to appear between different parts of the ground system. If great care is not taken, this hum voltage can intrude on the audio signal.

How grounding is accomplished depends on whether the equipment to be interconnected is balanced or unbalanced.

An unbalanced connection uses two terminals: "hot" and ground. Wires used in such connections are typically single-conductor shielded. (RCA plugs and two-conductor phone plugs are often used to terminate such cables.) If because of stray fields or ground loops, a hum voltage appears between "hot" and ground, then this hum will be mixed into the desired signal since the unbalanced connection cannot distinguish between the desired signal and hum.

In the case of balanced connections, audio is applied to the "+" and "-" terminals; the input responds to the difference between the voltages at the two terminals. A third terminal is connected to chassis ground and is available for the connection of the shield of the two-conductor shielded wire that would be used (Belden 8451, for example). If a hum voltage is developed between the shield and both audio wires, then the balanced input would reject this "common mode" voltage, since the input responds only to the difference in voltage between the audio wires. This ability to reject hum and noise is the primary advantage of a balanced configuration.

Referring back to the **ELECTRICAL INSTALLATION** section, notice how these rules are applied in the table and diagram.

For involved systems such as arena-type sound reinforcement, professional recording studios, or large broadcasting facilities, a formal and systematic "transmission ground system" should be worked out for the entire system. See Section 24 of The Audio Cyclopedia for details (op. cit.).

(Interesting digression: The "balanced" technique was first perfected by the telephone company, which has to run miles of unshielded cables close to each other and also to high voltage AC lines without pickup of excessive hum or crosstalk from other circuits. Originally, telephone circuits were unbalanced on single wires, with the earth providing the ground return. As soon as electric lighting became popular and power lines were placed on telephone poles, the power lines interfered with the telephone service so badly as to render conversation impossible. The telephone company embarked on a research program which led to both the balanced line technique, and to the choice of the familiar 600 ohm impedance as the optimum compromise between rejection of electrical and magnetic interference. Today, the telephone company's specification for maintenance of line balance is extremely tight, as proper common mode rejection is vital to the success of the entire system.)

Parts List

Parts are listed by part class by assembly in Reference Designator order except for certain widely used common parts such as:

Fixed Resistors
3/8" Square Trimmer Resistors
Signal Diodes

which are described generally under the appropriate heading and which must be examined to determine the exact value.

OBTAINING SPARE PARTS

Because special or subtle characteristics of certain components are exploited in order to produce an elegant design at a reasonable cost, it is unwise to make substitutions for listed parts. It is also unwise to ignore notations in the Parts List indicating "Selected" or "Realignment Required" when replacing components. In such cases, the factory should be consulted if optimum performance is to be maintained.

Orban normally maintains an inventory of tested, exact replacement spare parts to supply any present or normal future demand quickly at nominal cost.

When ordering parts from the factory, we will need all of the following information:

- The Orban Part Number, if ascertainable
- The Reference Designator for a defective component
- A brief description of the part
- From the Serial Label on the rear:
    - The exact Model Number
    - The Serial Number
    - The "M" number, if any

Orban can supply standardized Spare Parts Kits for this product during its production life. Consult your dealer or the factory for the consist of such kits and their prices.

Parts for this unit have been chosen from the catalogs of well-known manufacturers for ease in future maintenance. The U.S. headquarter addresses are listed at the end of the Parts List. Most manufacturers have extensive distribution facilities throughout the world and may often be contacted through local offices.

REF DES	DESCRIPTION	ORBAN P/N	VEN (1)	VENDOR P/N	ALTERNATE VENDORS (1)	QUAN/ SYS.	NOTES
CAPACITORS							
Subassembly - Chassis							
C1 THRU C12	Ceramic, 1kV, .001uF	21112-210	CRL	DD-102		12	
Input Board (#3)							
C101	Mica, 22pF, 5%	21020-022	MANY	CM05-STYLE		4	
C102	Same as C101						
C103	Same as C101						
C104	Same as C101						
C105	Polyester, 100V, 1.0uF, 10%	21441-510	PLE	60H105K100		4	
C106	Same as C105						
C107	Aluminum, 16V, 47uF	21205-647	SPR	502D		8	
C108	Same as C107						
C109	Same as C107						
C110	Same as C107						
C111	Same as C105						
C112	Same as C105						
C113	Same as C107						
C114	Same as C107						
C115	Same as C107						
C116	Same as C107						
C117	Ceramic, 25V, .05uF	21106-350	CRL	UK25-503		14	
C118	Not Used						
C119	Same as C117						
C120	Not Used						
Equalizer Board (Rear)							
C201	Metallized Polyester,100V,.47uF,10%	21441-474	PLE	60F474K100		2	
C202	Same as C201						
C203	Metallized Polyester,100V,.82uF,10%	21441-482	PLE	60H824K100		2	
C204	Same as C203						
C205	Mica, CD15, 10pF	21017-010	MANY	CM05-STYLE		2	
C206	Same as C205						
C207	Metallized Polyester,100V,.27uF,10%	21441-427	PLE	60D274K100		2	
C208	Same as C207						
C209	Metallized Polyester,100V,.39uF,10%	21441-439	PLE	60F394K100		2	
C210	Same as C209						

FOOTNOTES:

(1) See last page for abbreviations
(2) No Alternate Vendors known at publication
(3) Actual part is specially selected from
(4) Realignment may be required if replaced, see Circuit Description and/or Alignment Instructions

SPECIFICATIONS AND SOURCES FOR
REPLACEMENT PARTS
STEREO EQUALIZER MODEL 674A
Rev. 04 2/85
CAPACITORS

Equalizer Board (Rear), Cont'd

REF DES	DESCRIPTION	ORBAN P/N	VEN (1)	VENDOR P/N	ALTERNATE VENDORS (1)	QUAN/ SYS.	NOTES
C211	Same as C205. Used if required.						
C212	Same as C205. Used if required.						
C213	Polyester, Radial, 100V, .082uF,10%	21441-382	WES	160 SERIES		2	
C214	Same as C213						
C215	Polyester, Radial, 100V, .15uF, 10%	21441-415		↓		2	
C216	Same as C215						
C217	Same as C205. Used if required.						
C218	Same as C205. Used if required.						
C219	Polyester, Radial, 100V, .039uF, 10%	21441-339				2	
C220	Same as C219						
C221	Polyester, Radial, 100V, .068uF, 10%	21441-368				2	
C222	Same as C221						
C223	Same as C205. Used if required.						
C224	Same as C205. Used if required.						
C225	Polyester, Radial, 100V, .027uF, 10%	21441-327				2	
C226	Same as C225						
C227	Polyester, Radial, 100V, .033uF, 10%	21441-333				2	
C228	Same as C227						
C229	Same as C205. Used if required.						
C230	Same as C205. Used if required.						
C231	Polyester, Radial, 100V, .01uF, 10%	21441-310				2	
C232	Same as C231						
C233	Polyester, Radial, 100V, .015uF, 10%	21441-315				2	
C234	Same as C233						
C235	Same as C205. Used if required.						
C236	Same as C205. Used if required.						
C237	Polyester, Radial, 100V, .0033uF,10%	21441-233				2	
C238	Same as C237						
C239	Polyester, Radial, 100V, .0056uF, 10%	21441-256				2	
C240	Same as C239						
C241	Same as C205. Used if required.						
C242	Same as C205. Used if required.						
C243	Polyester, Radial, 100V, .0022uF, 10%	21441-222				2	
C244	Same as C243						
C245	Polyester, Radial, 100V, .0027uF, 10%	21441-227				2	
C246	Same as C245						
C247	Same as C205. Used if required.						
C248	Same as C205. Used if required.						

FOOTNOTES:

(1) See last page for abbreviations
(2) No Alternate Vendors known at publication
(3) Actual part is specially selected from part listed, consult Factory
(4) Realignment may be required if replaced, see Circuit Description and/or Alignment Instructions

SPECIFICATIONS AND SOURCES FOR
REPLACEMENT PARTS
STEREO EQUALIZER MODEL 674A
Rev. 04 2/85
CAPACITORS

REF DES	DESCRIPTION	ORBAN P/N	VEN (1)	VENDOR P/N	ALTERNATE VENDORS (1)	QUAN/ SYS.	NOTES
CAPACITORS							
C249 THRU C256	Same as C117						
Range Board (#2)							
C501	Mica, ±0.5pF, 10pF	21017-010	MANY	CM05-STYLE		4	
C502	Same as C501						
C503	Polypropylene, 50V, .015uF, 2%	21702-315	WIM	FKP2		4	
C504	Same as C503						
C505	Polypropylene, 50V, .015uF, 2%	21702-320	WIM	FKP2		4	
C506	Same as C505						
C507	Same as C503						
C508	Same as C503						
C509	Same as C505						
C510	Same as C505						
C511	Same as C501						
C512	Same as C501						
C513	Polypropylene, 50V, .015uF, 2%	21504-320	SPR	287P		2	
C514	Same as C513						
C515	Mica, 500V, CD19, 2000pF, 1%	21023-220	MANY	CM06-STYLE		2	
C516	Same as C515						
C517	Polystyrene, 50V, .01uF, 2%	21504-310	SPR	287P		2	
C518	Same as C517						
C519	Mica, 500V, CD19, 1000pF, 1%	21022-210	MANY	CM06-STYLE		2	
C520	Same as C519						
C521	Same as C117						
C522	Not Used						
C523	Same as C117						
C524	Not Used						
Output Board (#1)							
C601	Tantalum, 15V, 22uF, 10%	21304-622	SPR	196D		4	
C602	Same as C601						
C603	Same as C601						
C604	Same as C601						
C605	Aluminum, 25V, 22uF	21206-622	SPR	502D		2	
C606	Not Used						
C607	Same as C605						
C608	Not Used						

FOOTNOTES:

(1) See last page for abbreviations
(2) No Alternate Vendors known at publication
(3) Actual part is specially selected from part listed, consult Factory
(4) Realignment may be required if replaced, see Circuit Description and/or Alignment Instructions

SPECIFICATIONS AND SOURCES FOR
REPLACEMENT PARTS
STEREO EQUALIZER MODEL 674A
Rev. 04 2/85

CAPACITORS

REF DES	DESCRIPTION	ORBAN P/N	VEN (1)	VENDOR P/N	ALTERNATE VENDORS (1)	QUAN/ SYS.	NOTES
CAPACITORS							
C609	Same as C117						
C610	Not Used						
C611	Same as C117						
C612	Not Used						
	Overload Board (#2½)						
C701	Ceramic, 25V, .15uF, 20%	21106-415	CRL	UK25-154		2	
C702	Same as C701						
C703	Ceramic, 50V, .005uF	21108-250	CRL	UK50-502		4	
C704	Same as C703						
C705	Same as C703						
C706	Same as C703						
C707	Same as C605						
C708	Not Used						
C709	Same as C605						
C710	Not Used						
	DC Regulator Board						
C801	Aluminum, Axial, 40V, 1000uF	21224-810	SIE	82000		2	
C802	Same as C801						
C803	Same as C605						
C804	Same as C605						
DIODES							
NOTE:	FOR ZENER DIODES (VR---) SEE MISCELLANEOUS SECTION. ALL OTHER DIODES NOT LISTED BY REFERENCE DESIGNATOR ARE:						
	Diode, Signal	22101-000	FSC	1N4148	Many	61	
	NOTE: This is a silicon small-signal diode, ultra fast recovery, high conductance. It may be replaced with 1N914 or, in Europe, with BAY-61. BV: 75V min. @ I_r = 5V I_r: 25nA max. @ V_r = 20V V_f: 1.0V max. @ I_f = 100 mA t_{rr}: 4ns max.						
	Subassembly - Filter Section						
CR1	LED, Red (OVERLOAD)	25103-000	GI	MV-5053		2	
CR2	Same as CR1						
	Subassembly - Chassis						
CR3	LED, Green (POWER)	25104-000	GI	MV-5253		1	
	DC Regulator Board						
CR801 THRU CR806	Rectifier, 1N4004	22201-400	MANY	1N4004		6	

FOOTNOTES:
(1) See last page for abbreviations
(2) No Alternate Vendors known at publication
(3) Actual part is specially selected from part listed, consult Factory
(4) Realignment may be required if replaced, see Circuit Description and/or Alignment Instructions

SPECIFICATIONS AND SOURCES FOR
REPLACEMENT PARTS
STEREO EQUALIZER MODEL 674A
Rev. 04 2/85

CAPACITORS, DIODES

REF DES	DESCRIPTION	ORBAN P/N	VEN (1)	VENDOR P/N	ALTERNATE VENDORS (1)	QUAN/ SYS.	NOTES
INTEGRATED CIRCUITS							
Input Board (#3)							
IC101	Linear, Single Opamp, 5534	24014-202	SIG	NE5534N		2	
IC102	Same as IC101						
IC103	Linear, Single Opamp, TL071	24013-202	TI	TL071CP		4	
IC104	Same as IC103						
Equalizer Board (Rear)							
IC201 THRU IC214	Linear, Dual Opamp, 4558	24202-202	RAY	RC4558NB		14	
IC215	Linear, Dual Opamp, 5532	24207-202	SIG	NE5532FE		4	
IC216	Same as IC215						
IC217	Same as IC215						
IC218	Same as IC215						
IC219	Linear, Dual Opamp, TL-072	24206-202	TI	TL072CP		8	
IC220	Same as IC219						
IC221	Same as IC219						
IC222	Same as IC219						
IC223	Same as IC219						
IC224	Same as IC219						
Range Board (#2)							
IC501	Same as IC219						
IC502	Same as IC219						
Output Board (#1)							
IC601	Same as IC103						
IC602	Same as IC103						
Overload Board (#2½)							
IC701	Linear, Dual Opamp, 741C	24002-402	NAT	LM741CH		2	
IC702	Same as IC701						
INDUCTORS							
Subassembly - Chassis							
L1	RF Choke, 1mH	29502-000	MIL	4662(Sleeved)		2	
L2	Same as L1						

(1) See last page for abbreviations
(2) No Alternate Vendors known at publication
(3) Actual part is specially selected from part listed, consult Factory
(4) Realignment may be required if replaced, see Circuit Description and/or Alignment Instructions

SPECIFICATIONS AND SOURCES FOR
REPLACEMENT PARTS
STEREO EQUALIZER MODEL 674A
Rev. 04 2/85

INTEGRATED CIRCUITS,
INDUCTORS

REF DES	DESCRIPTION	ORBAN P/N	VEN (1)	VENDOR P/N	ALTERNATE VENDORS (1)	QUAN/ SYS.	NOTES
TRANSISTORS							
Output Board (#1)							
Q601–Q604	Signal, NPN, 2N4400	23202-101	FSC	2N4400		12	
Q605	Signal, PNP, 2N4402	23002-101	FSC	2N4402		8	
Q606	Same as Q605						
Q607	Same as Q605						
Q608	Same as Q605						
Q609–Q612	Same as Q601						
Q613–Q616	Same as Q605						
Overload Board (#2½)							
Q701–Q704	Same as Q601						

RESISTORS

Replace resistors only with the same style and with the exact value as marked on the resistor body, lest performance or stability be compromised. If the resistor is damaged, consult the factory or refer to the Schematic to obtain the value.

ALL COMMON RESISTORS NOT LISTED ARE GENERALLY SPECIFIED BELOW:

Metal Film Resistors

Body: conformally-coated
I.D.: five color bands or printed value
Orban P/N: 20040-XXX
Power Rating: 1/8 Watt @ 70°C
Tolerance: 1%
Temperature Coefficient: 100 PPM/°C
U.S. Military Spec.: MIL-R-10509, Style RN55D
Manufacturers: R-Ohm(CRB-¼FX), TRW/IRC, Beyschlag, Dale, Corning, Matsushita

Carbon Composition Resistors

Body: molded phenolic
I.D.: four color bands
Orban P/N: 20011-XXX
Power Rating: (70°C) ¼ Watt (Body 0.090" x 0.250")
½ Watt (Body 0.140" x 0.375")
Tolerance: 5%
U.S. Military Spec.: MIL-R-11, Style RC-07 (¼W) or RC-20 (½W)
Manufacturers: Allen-Bradley, TRW/IRC, Stackpole, Matsushita

FOOTNOTES:

(1) See last page for abbreviations
(2) No Alternate Vendors known at publication
(3) Actual part is specially selected from part listed, consult Factory
(4) Realignment may be required if replaced, see Circuit Description and/or Alignment Instructions

SPECIFICATIONS AND SOURCES FOR
REPLACEMENT PARTS
STEREO EQUALIZER MODEL 674A
Rev. 04 2/85

TRANSISTORS, RESISTORS

RESISTORS

Carbon Film Resistors

Body: conformally-coated
I.D.: four color bands
Orban P/N: 20001-XXX
Power Rating: ¼ Watt @ 70°C
Tolerance: 5%
Manufacturers: R-Ohm (R-25), Piher, Beyschlag, Dale, Phillips, Matsushita

Cermet Trimmer Resistors

Body: 3/8" square (9mm)
I.D.: printed marking on side
Orban P/N: 20509-XXX
Power Rating: ½ Watt @ 70°C
Tolerance: 10%
Temperature Coefficient: 100 PPM/°C
Manufacturers: Beckman (72X-series), Spectrol, Bourns, Matsushita

REF DES	DESCRIPTION	ORBAN P/N	VEN (1)	VENDOR P/N	ALTERNATE VENDORS (1)	QUAN/ SYS.	NOTES
Subassembly - Filter Section							
R115	Pot, Single, 5K, CW Log	20741-000	CTS	270-SERIES		2	
R116	Same as R115						
Equalizer Board (Rear)							
R201	Pot, Concentric, 100K/100K, CCW Log	20738-000	CTS	270-SERIES		16	
R203	Same as R201						
R221	Same as R201						
R223	Same as R201						
R241	Same as R201						
R243	Same as R201						
R261	Same as R201						
R263	Same as R201						
R281	Same as R201						
R283	Same as R201						
R301	Same as R201						
R303	Same as R201						
R321	Same as R201						
R323	Same as R201						
R341	Same as R201						
R343	Same as R201						

FOOTNOTES:
(1) See last page for abbreviations
(2) No Alternate Vendors known at publication
(3) Actual part is specially selected from part listed, consult Factory
(4) Realignment may be required if replaced, see Circuit Description and/or Alignment Instructions

REF DES	DESCRIPTION	ORBAN P/N	VEN (1)	VENDOR P/N	ALTERNATE VENDORS (1)	QUAN/ SYS.	NOTES
RESISTORS							
Equalizer Board (Front)							
R403	Pot, Slide, 25K, Lin	20749-000	NOB	VJ6012-2PVN 20D1-BM25KΩ		16	
R404	Same as R403						
R409	Same as R403						
R410	Same as R403						
R415	Same as R403						
R416	Same as R403						
R421	Same as R403						
R422	Same as R403						
R427	Same as R403						
R428	Same as R403						
R433	Same as R403						
R434	Same as R403						
R439	Same as R403						
R440	Same as R403						
R445	Same as R403						
R446	Same as R403						
Subassembly - Filter Section							
R507	Pot, Dual, 50K/50K, CCW Log	20739-000	CTS	270-SERIES		4	
R508	Same as R507						
R519	Same as R507						
R520	Same as R507						
SWITCHES							
Input Board (#3)							
S101	Switch Assembly, DPDT	26110-000	SCH	F-SERIES		1	
Range Board (#2)							
S501	Switch Assembly, DPDT	26109-000	SCH	F-SERIES		4	
S502	Same as S501						
S503	Same as S501						
S504	Same as S501						
Output Board (#1)							
S601	Same as S501						
S602	Same as S501						
S603	Same as S501						
S604	Same as S501						

FOOTNOTES:

(1) See last page for abbreviations
(2) No Alternate Vendors known at publication
(3) Actual part is specially selected from part listed, consult Factory
(4) Realignment may be required if replaced, see Circuit Description and/or Alignment Instructions

SPECIFICATIONS AND SOURCES FOR
REPLACEMENT PARTS
STEREO EQUALIZER MODEL 674A
Rev. 04 2/85

RESISTORS, SWITCHES

REF DES	DESCRIPTION	ORBAN P/N	VEN (1)	VENDOR P/N	ALTERNATE VENDORS(1)	QUAN/ SYS.	NOTES
MISCELLANEOUS							
Subassembly - Chassis							
F1	Fuse, 3AG Sloblo, 1/4A	28004-125	LFE	313.250		1	
T1	Transformer, Power	29006-000	ORB	40.2VCT, 9W		1	
--	Line Cord (USA)	28101-000	ELECTRICORD	C-2103-076-GY		1	
DC Regulator Board							
VR801	IC, Regulator +15V	24304-901	FSC	78M15UC		1	
VR802	IC, Regulator -15V	24303-901	FSC	79M15AUC		1	

P/L REVISIONS:

06023-000-02	FINAL
30500-000-02	EQ, FRONT
30505-000-03	EQ, REAR
30510-000-03	OUTPUT(#1)BOARD
30515-000-03	RANGE(#2)BOARD
30520-000-02	OVERLOAD(#2½)BOARD
30525-000-03	INPUT(#3)BOARD
30530-000-02	SUBASSY - FILTER
40020-000-02	SUBASSY - FILTER
40021-000-01	SUBASSY - CHASSIS

(1) See last page for abbreviations
(2) No Alternate Vendors known at publication
(3) Actual part is specially selected from part listed, consult Factory
(4) Realignment may be required if replaced, see Circuit Description and/or Alignment Instructions

Vendor Codes

AB Allen-Bradley Co.
1201 South Second St.
Milwaukee, WI 53204

AD Analog Devices, Inc.
Route 1, Industrial Park
P.O. Box 280
Norwood, MA 02062

AM Amphenol North America
An Allied Company
2122 York Road
Oak Brook, IL 60521

BEK Beckman Instruments, Inc.
Helipot Division
2500 Harbor Blvd.
Fullerton, CA 92634

BEL Belden Corporation
Electronic Division
Richmond, IN 47374

BRN Bourns, Inc.
Trimpot Products Division
1200 Columbia Ave.
Riverside, CA 92507

BUS Bussmann Manufacturing Div.
McGraw-Edison Company
P. O. Box 14460
St. Louis, MO 63178

CD Cornell-Dubilier Electronics
150 Avenue "L"
Newark, NJ 07101

CK C & K Components Inc.
15 Riverdale Avenue
Newton, MA 02158

CRL Centralab Inc.
A North American Co.
5757 North Green Bay Ave.
Milwaukee, WI 53201

COR Corcom, Inc.
1600 Winchester Road
Libertyville, IL 60048

CTS CTS Corporation
905 N. West Blvd.
Elkhart, IN 46514

ECI Electrocube
1710 South Del Mar Avenue
San Gabriel, CA 91776

ERE Erie Technological Products, Inc.
644 West Twelfth Street
Erie, PA 16512

EXR Exar Integrated Systems, Inc.
P. O. Box 62229
Sunnyvale, CA 94088

FSC Fairchild Camera & Instr. Corp.
464 Ellis Street
Mountain View, CA 94042

GI General Instruments
Optoelectronics Div.
3400 Hillview Ave.
Palo Alto, CA 94304

HP Hewlett-Packard Corporation
1501 Page Mill Road
Palo Alto, CA 94304

INS Intersil, Inc.
10710 N. Tantau Avenue
Cupertino, CA 95014

IRC TRW/IRC Resistors
401 North Broad Street
Philadelphia, PA 19108

LFE Littelfuse
A Subsidiary of Tracor
800 East Northwest Highway
Des Plaines, IL 60016

MAL Mallory Timers Company
Emhart Electrical/Electronic Group
3029 East Washington Street
Indianapolis, IN 46206

MIL J. W. Miller Division
Bell Industries
19070 Reyes Avenue
P. O. Box 5825
Compton, CA 90221

MOT Motorola, Inc.
P. O. Box 20912
Phoenix, AZ 85036

NAT National Semiconductor Corp.
2900 Semiconductor Drive
Santa Clara, CA 95051

NOB Noble
Teikoku Tsushin Kogyo Co. Ltd.
335, Kariyado, Nakahara-ku
Kawasaki 211, JAPAN

OHM Ohmite Manufacturing Company
A North American Philips Co.
3601 Howard Street
Skokie, IL 60076

ORB Orban Associates Inc.
645 Bryant Street
San Francisco, CA 94107

PAK Paktron
Div. of Illinois Tool Works Inc.
900 Follin Lane, S.E.
Vienna, VA 22180

RAY Raytheon Semiconductor Division
350 Ellis Street
Mountain View, CA 94042

RCA RCA Solid State Division
Route 202
Somerville, NJ 08876

SCH ITT Schadow, Inc.
8081 Wallace Road
Eden Prairie, MN 55343

SIE Siemens
Components Division
186 Wood Avenue, South
Iselin, NJ 08830

SIG Signetics Corporation
A Subsidiary of U.S. Philips Corp.
P. O. Box 9052
Sunnyvale, CA 94086

SPR Sprague Electric Company
125 Marshall Street
North Adams, MA 01247

STK Stackpole Components Company
P. O. Box 14466
Raleigh, NC 27620

SYL Sylvania Connector Prod. Oper.
GTE Products Corporation
Box 29
Titusville, PA 16354

TI Texas Instruments
P. O. Box 225012
Dallas, TX 75265

WES Westlake
5334 Sterling Center Drive
Westlake Village, CA 91361

WIM WIMA
P.O. Box 2345
Augusta-Anlage 56
D-6800 Mannheim 1
Germany

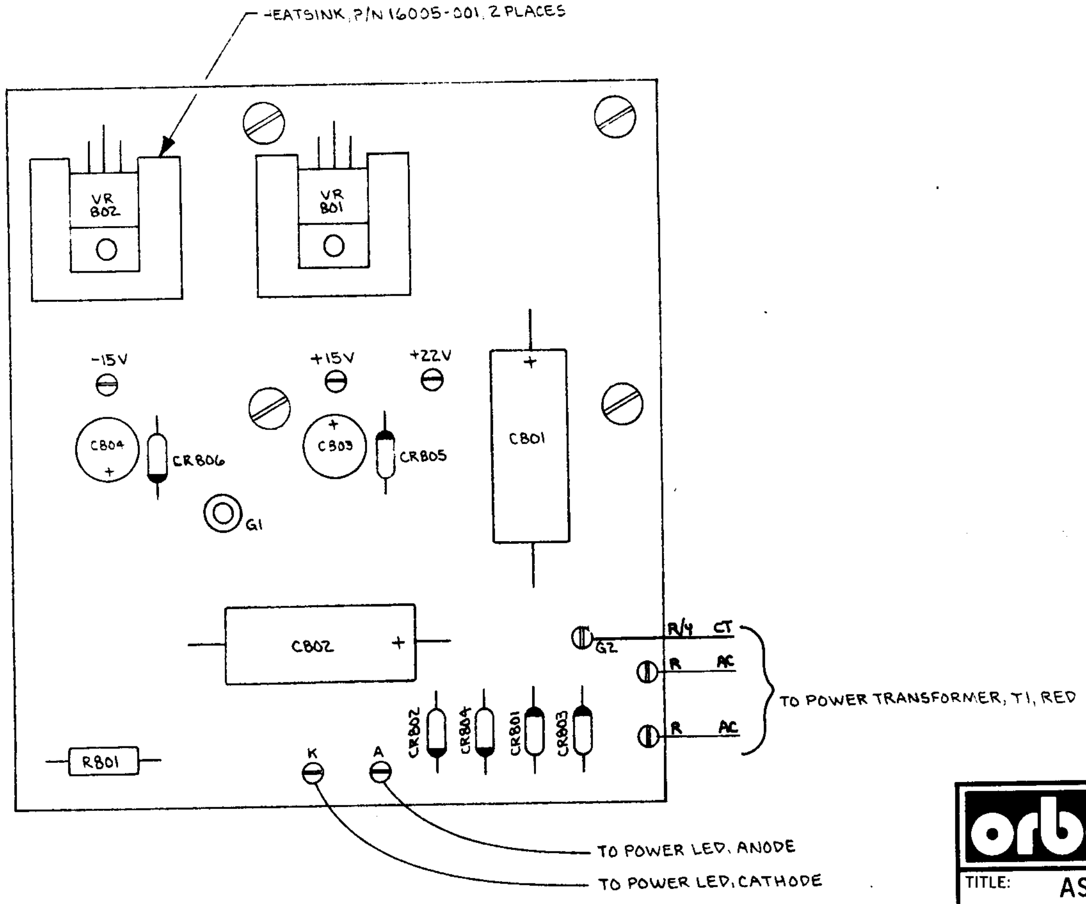

orban Orban Associate
Inc.

TITLE: ASSEMBLY DRAWING
POWER SUPPLY
30530-000-02

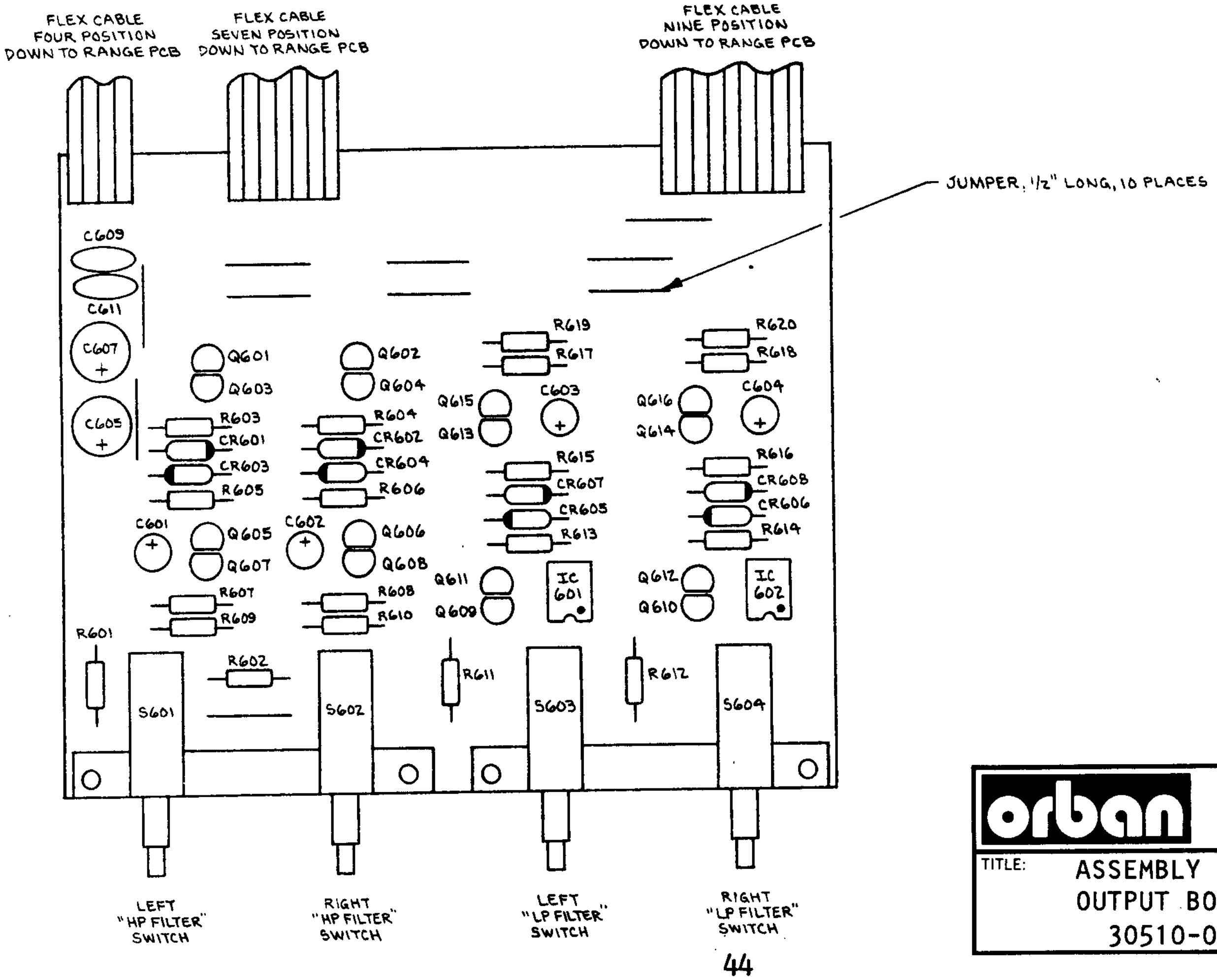

orban Orban Associate
Inc.

TITLE: ASSEMBLY DRAWING
OUTPUT BOARD (#1
30510-000-02

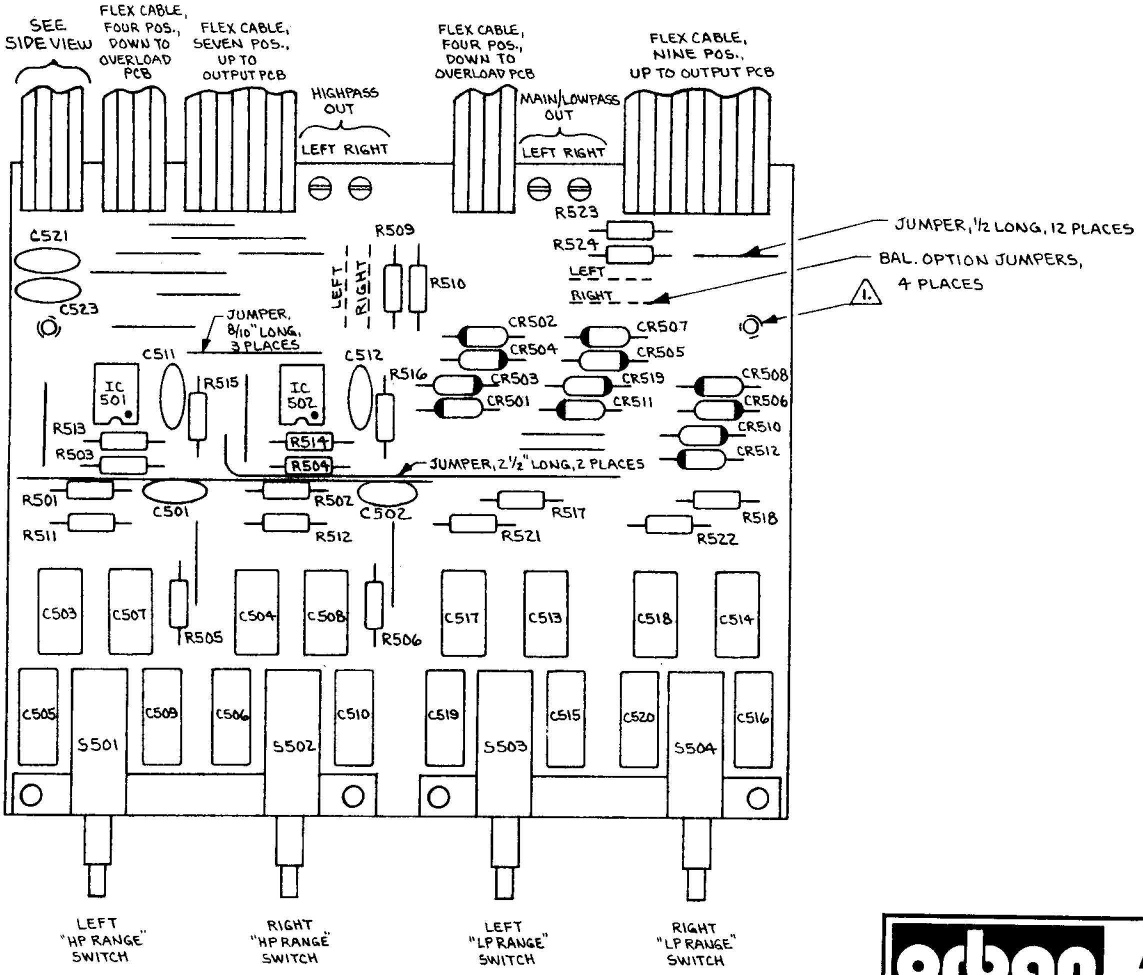

Orban Associates Inc.

TITLE: ASSEMBLY DRAWING
RANGE BOARD (#2)
30515-000-03

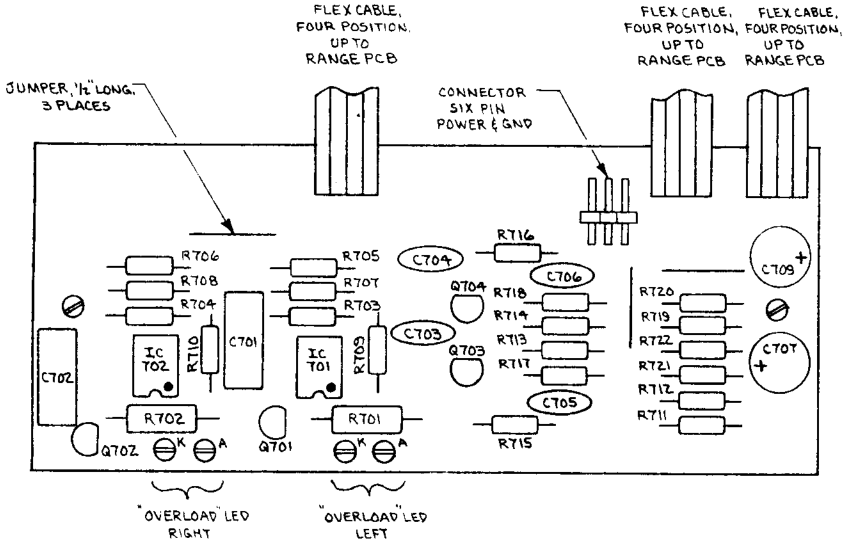

Orban Associates Inc.

TITLE: ASSEMBLY DRAWING
OVERLOAD BOARD (#2½)
30520-000-02

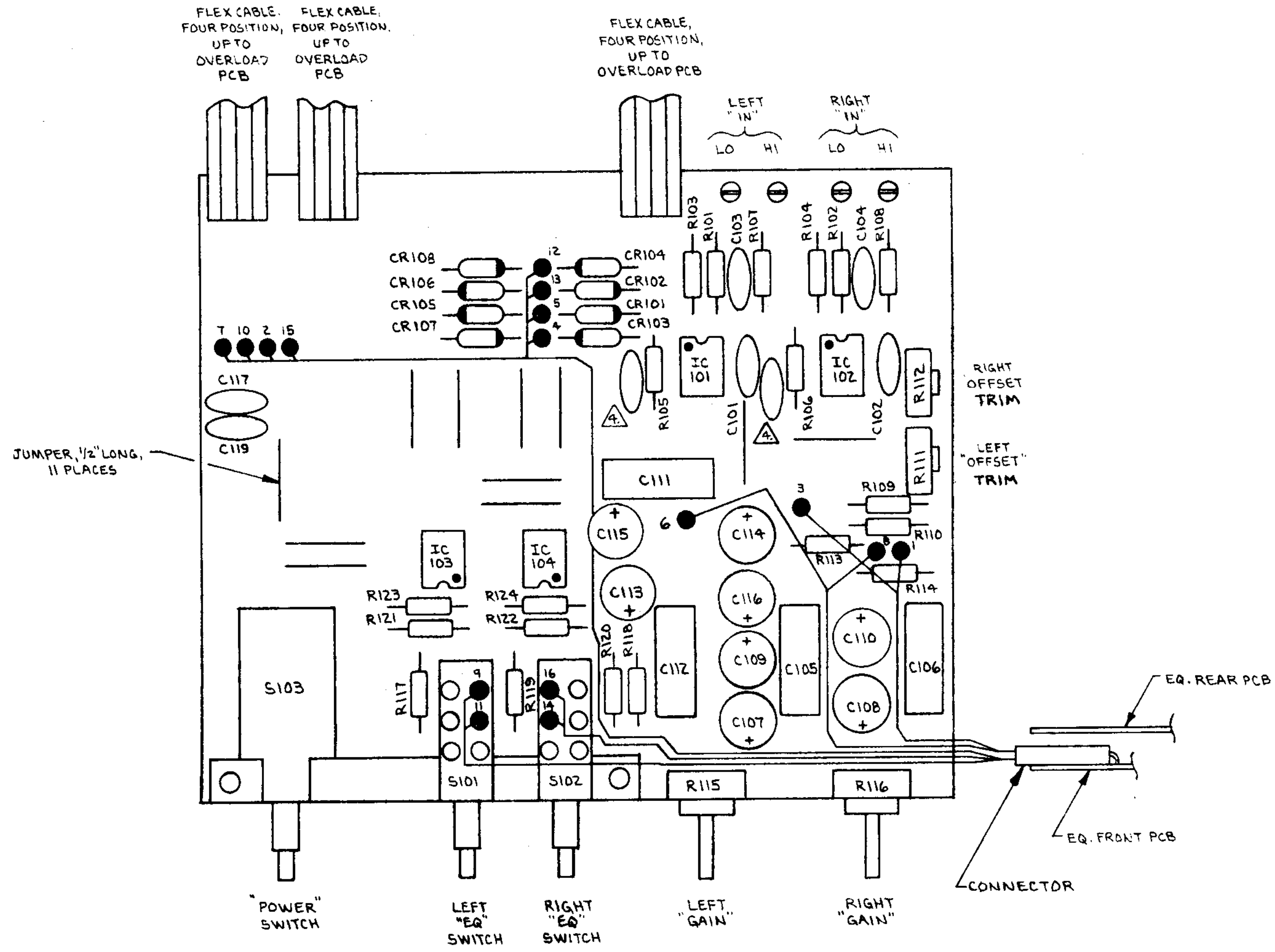

△4 USED AS NEED BY TEST.

3. NUMBERED NODES CORRESPOND TO PINS ON CONNECTOR.

△2 "1-16" TO BE WIRES WHICH RUN TO EQ. FRONT PCB VIA CONNECTOR.

△1 COMPONENT MOUNTING PAD, P/N 15051-000, TO BE ASSEMBLED WITH C107, C108, C109, C110, C113, C114, C115, C116.

NOTES: UNLESS OTHERWISE SPECIFIED

orban

Orban
Associates
Inc.

TITLE: ASSEMBLY DRAWING
INPUT BOARD (#3)
30525-000-03

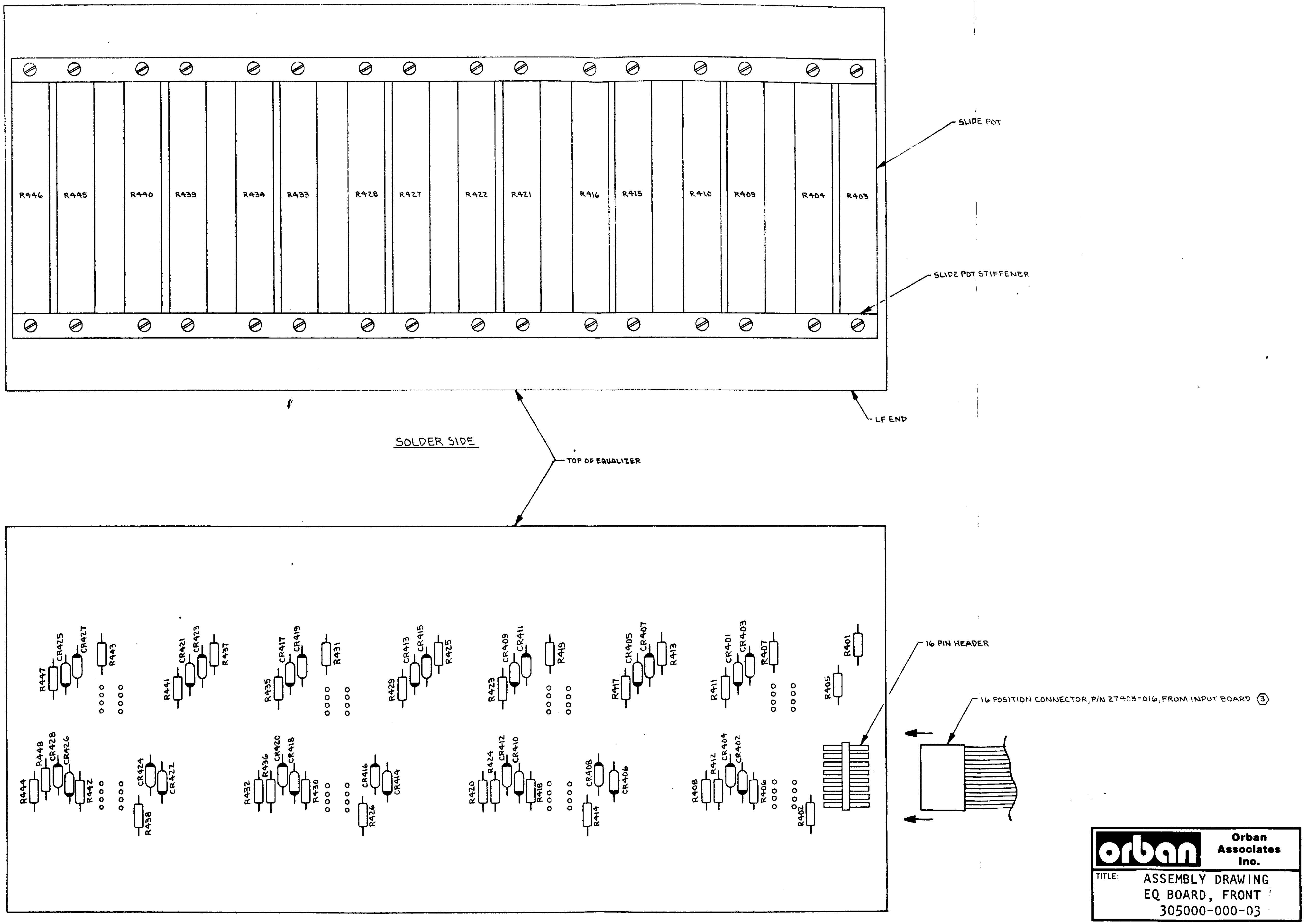

orban Orban Associates Inc.

TITLE: ASSEMBLY DRAWING
EQ BOARD, FRONT
305000-000-03

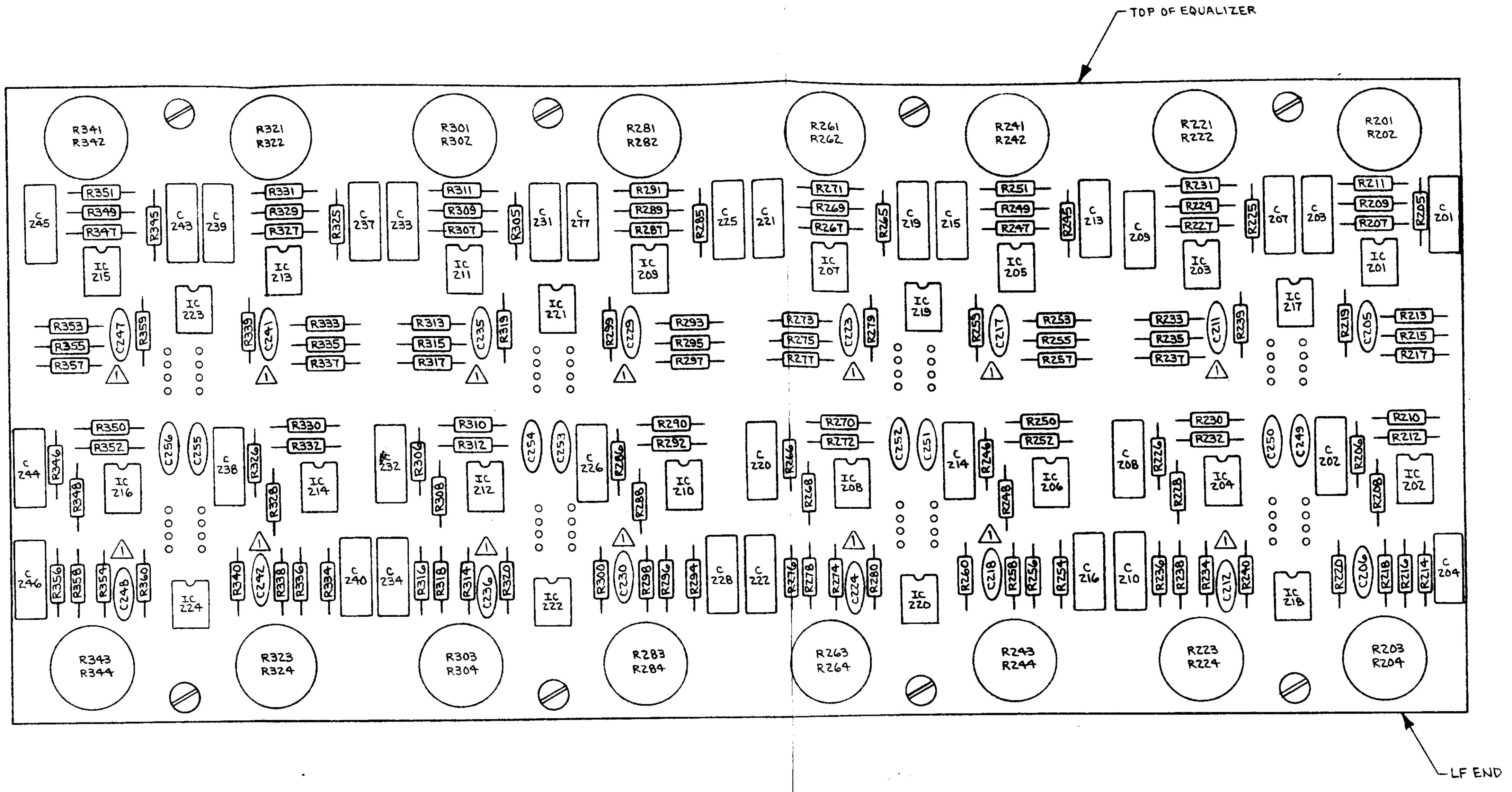

⚠ USED AS NEEDED BY TEST

NOTES: UNLESS OTHERWISE SPECIFIED

orban Orban Associates Inc.

TITLE: ASSEMBLY DRAWING
EQ BOARD, REAR
30505-000-03

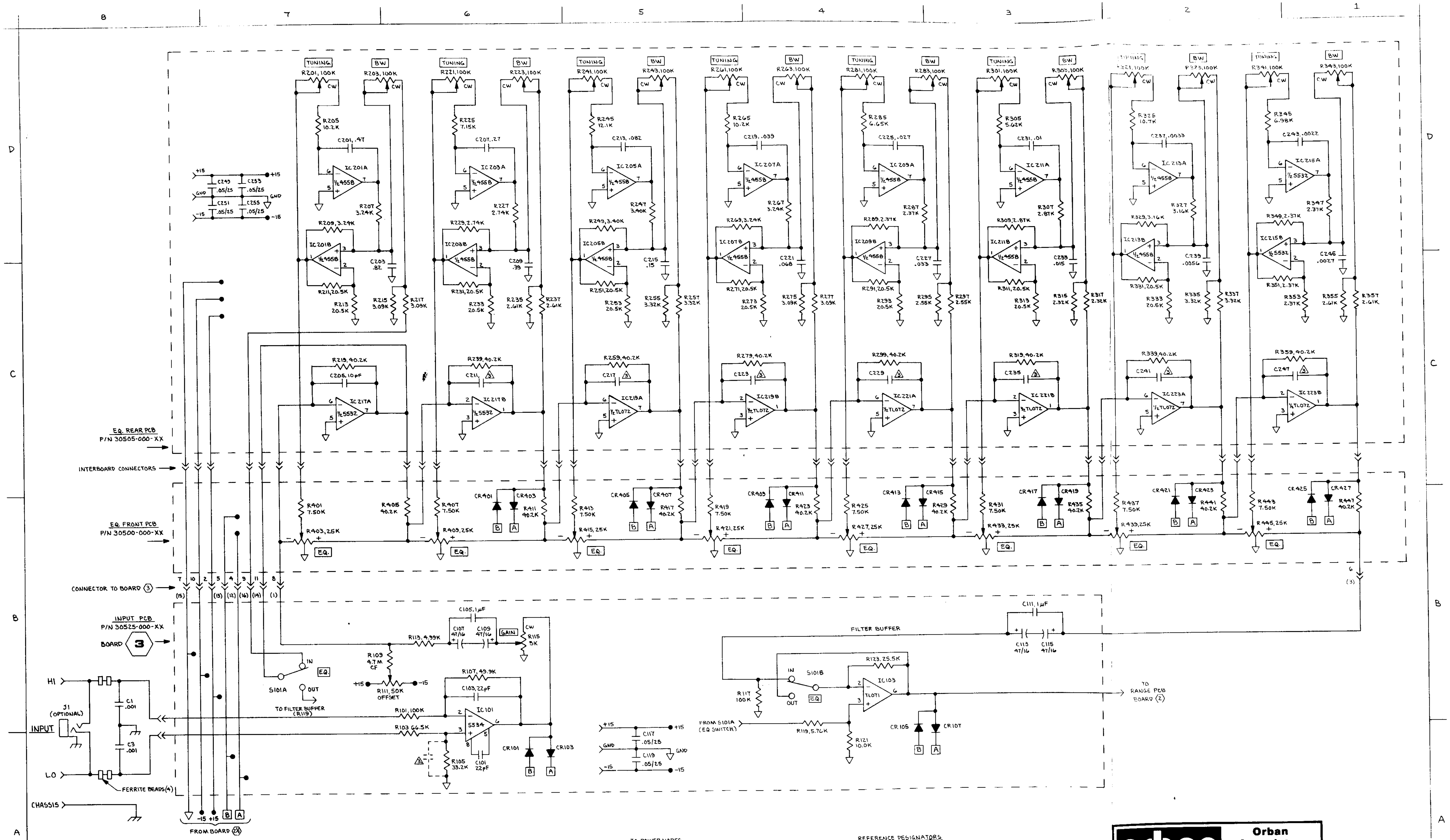

6. CONNECTOR PINOUTS SHOWN IN PARENTHESIS ARE FOR RIGHT CHANNEL.
5. LEFT CHANNEL SHOWN; RIGHT CHANNEL IS IDENTICAL. TO OBTAIN REFERENCE DESIGNATORS FOR RIGHT CHANNEL, ADD ONE.
(RIGHT CHANNEL IC PINOUTS MAY VARY FROM LEFT CHANNEL.)
4. ALL DIODES ARE IN4148
3 USED AS NEEDED BY TEST
2. ALL CAP'S ARE IN MICROFARADS
1. ALL RESISTORS ARE 1/8 W, 1%, MF (RN55D)
NOTES: UNLESS OTHERWISE SPECIFIED

PAGE 1 of 2

IC POWER NODES

	V+	V-	G
TL-071	7	4	–
TL-072	8	4	–
4558	8	4	–
5532	8	4	–
5534	7	4	–
741C	7	4	–

REFERENCE DESIGNATORS

ITEM	LAST USED							
IC	103	223	–	–	501	601	701	–
Q	–	–	–	–	–	615	703	
CR	107	–	–	427	511	607	–	806
C	119	255	–	–	523	611	709	804
R	123	299	359	447	523	619	721	–
VR	–	–	–	–	–	–	–	802
S	103	–	–	–	503	603	–	–

orban

Orban Associates Inc.

TITLE:
SCHEMATIC
60041-000-01

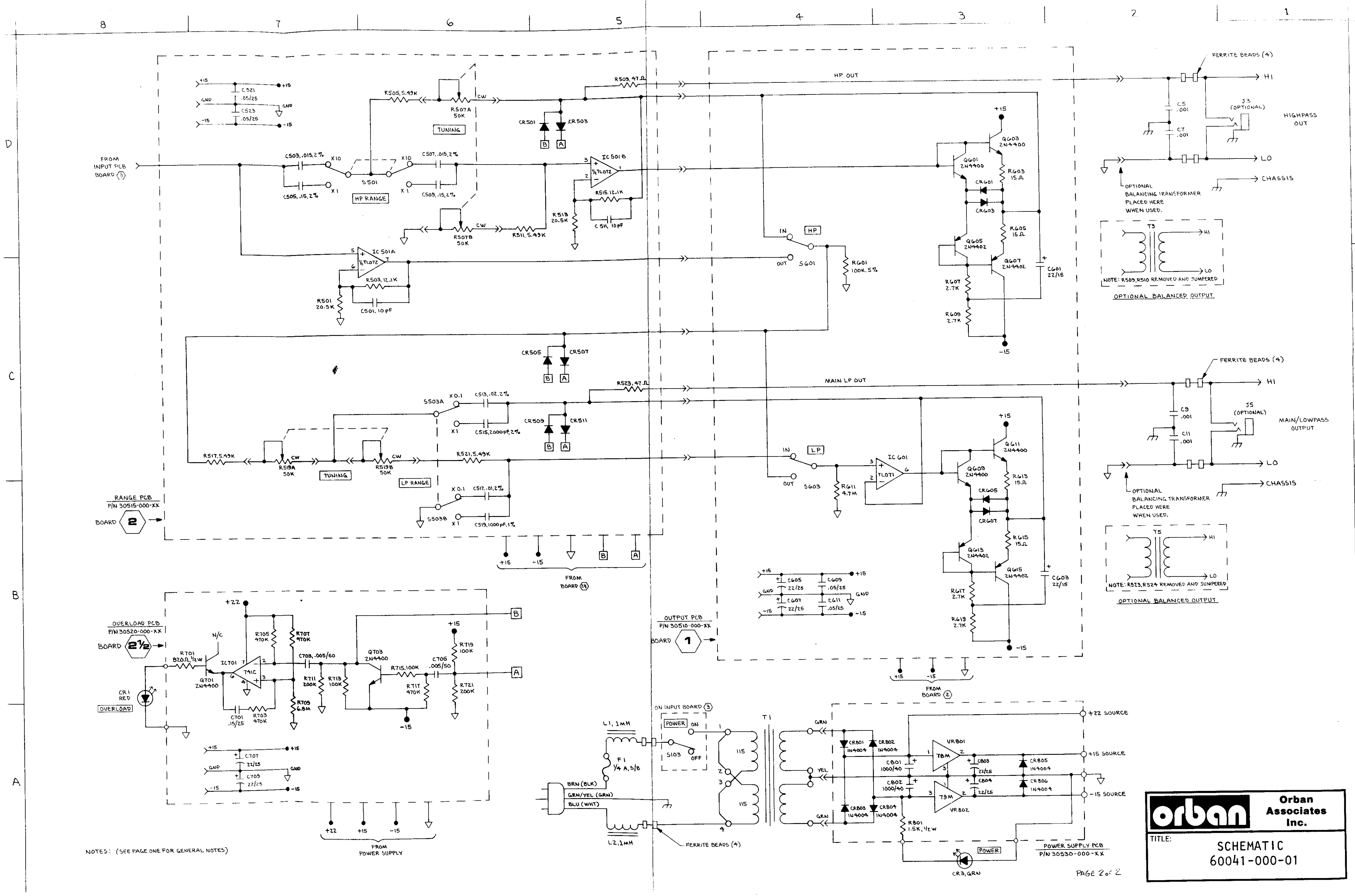

NOTES: (SEE PAGE ONE FOR GENERAL NOTES)

PAGE 2 of 2

Orban Associates Inc.

TITLE:
SCHEMATIC
60041-000-01