Pioneer *sound.vision.soul*

Service Manual

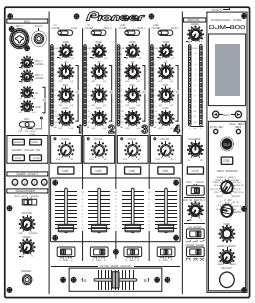

DJM-800

ORDER NO.
RRV3340

DJ MIXER

DJM-800

ROTARY VOLUME KIT

DJC-800RV

THIS MANUAL IS APPLICABLE TO THE FOLLOWING MODEL(S) AND TYPE(S).

Model	Type	Power Requirement	Remarks
DJM-800	KUCXJ	AC120V	
DJM-800	WYXJ5	AC220 - 240V	
DJM-800	TLXJ	AC110 - 120V / 220 - 240V	
DJC-800RV	ZXJ/WL5	—	

For details, refer to "Important Check Points for good servicing".

PIONEER CORPORATION 4-1, Meguro 1-chome, Meguro-ku, Tokyo 153-8654, Japan
PIONEER ELECTRONICS (USA) INC. P.O. Box 1760, Long Beach, CA 90801-1760, U.S.A.
PIONEER EUROPE NV Haven 1087, Keetberglaan 1, 9120 Melsele, Belgium
PIONEER ELECTRONICS ASIACENTRE PTE. LTD. 253 Alexandra Road, #04-01, Singapore 159936
ⓒ**PIONEER CORPORATION 2006**

T-IZR MAR. 2006 printed in Japan

SAFETY INFORMATION

This service manual is intended for qualified service technicians ; it is not meant for the casual do-it-yourselfer. Qualified technicians have the necessary test equipment and tools, and have been trained to properly and safely repair complex products such as those covered by this manual.
Improperly performed repairs can adversely affect the safety and reliability of the product and may void the warranty. If you are not qualified to perform the repair of this product properly and safely, you should not risk trying to do so and refer the repair to a qualified service technician.

WARNING
This product contains lead in solder and certain electrical parts contain chemicals which are known to the state of California to causecancer, birth defects or other reproductive harm.

Health & Safety Code Section 25249.6 – Proposition 65

NOTICE
(FOR CANADIAN MODEL ONLY)
Fuse symbols (fast operating fuse) and/or (slow operating fuse) on PCB indicate that replacement parts must be of identical designation.

REMARQUE
(POUR MODÈLE CANADIEN SEULEMENT)
Les symboles de fusible (fusible de type rapide) et/ou (fusible de type lent) sur CCI indiquent que les pièces de remplacement doivent avoir la même désignation.

(FOR USA MODEL ONLY)

1. SAFETY PRECAUTIONS

The following check should be performed for the continued protection of the customer and service technician.

LEAKAGE CURRENT CHECK

Measure leakage current to a known earth ground (waterpipe , conduit, etc.) by connecting a leakage current tester such as Simpson Model 229-2 or equivalent between the earth ground and all exposed metal parts of the appliance (input/output terminals, screwheads, metal overlays, control shaft, etc.). Plug the AC line cord of the appliance directly into a 120V AC 60Hz outlet and turn the AC power switch on. Any current measured must not exceed 0.5mA.

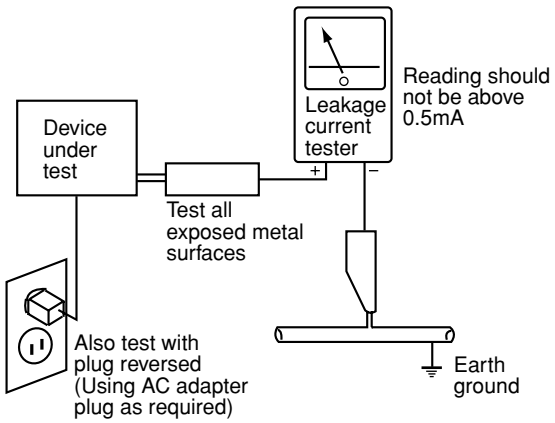

AC Leakage Test

ANY MEASUREMENTS NOT WITHIN THE LIMITS OUTLINED ABOVE ARE INDICATIVE OF A POTENTIAL SHOCK HAZARD AND MUST BE CORRECTED BEFORE RETURNING THE APPLIANCE TO THE CUSTOMER.

2. PRODUCT SAFETY NOTICE

Many electrical and mechanical parts in the appliance have special safety related characteristics. These are often not evident from visual inspection nor the protection afforded by them necessarily can be obtained by using replacement components rated for voltage, wattage, etc. Replacement parts which have these special safety characteristics are identified in this Service Manual.

Electrical components having such features are identified by marking with a ⚠ on the schematics and on the parts list in this Service Manual.

The use of a substitute replacement component which does not have the same safety characteristics as the PIONEER recommended replacement one, shown in the parts list in this Service Manual, may create shock, fire, or other hazards.

Product Safety is continuously under review and new instructions are issued from time to time. For the latest information, always consult the current PIONEER Service Manual. A subscription to, or additional copies of, PIONEER Service Manual may be obtained at a nominal charge from PIONEER.

[Important Check Points for Good Servicing]

In this manual, procedures that must be performed during repairs are marked with the below symbol.
Please be sure to confirm and follow these procedures.

1. Product safety

Please conform to product regulations (such as safety and radiation regulations), and maintain a safe servicing environment by following the safety instructions described in this manual.

① Use specified parts for repair.

Use genuine parts. Be sure to use important parts for safety.

② Do not perform modifications without proper instructions.

Please follow the specified safety methods when modification(addition/change of parts) is required due to interferences such as radio/TV interference and foreign noise.

③ Make sure the soldering of repaired locations is properly performed.

When you solder while repairing, please be sure that there are no cold solder and other debris.
Soldering should be finished with the proper quantity. (Refer to the example)

④ Make sure the screws are tightly fastened.

Please be sure that all screws are fastened, and that there are no loose screws.

⑤ Make sure each connectors are correctly inserted.

Please be sure that all connectors are inserted, and that there are no imperfect insertion.

⑥ Make sure the wiring cables are set to their original state.

Please replace the wiring and cables to the original state after repairs.
In addition, be sure that there are no pinched wires, etc.

⑦ Make sure screws and soldering scraps do not remain inside the product.

Please check that neither solder debris nor screws remain inside the product.

⑧ There should be no semi-broken wires, scratches, melting, etc. on the coating of the power cord.

Damaged power cords may lead to fire accidents, so please be sure that there are no damages.
If you find a damaged power cord, please exchange it with a suitable one.

⑨ There should be no spark traces or similar marks on the power plug.

When spark traces or similar marks are found on the power supply plug, please check the connection and advise on secure connections and suitable usage. Please exchange the power cord if necessary.

⑩ Safe environment should be secured during servicing.

When you perform repairs, please pay attention to static electricity, furniture, household articles, etc. in order to prevent injuries.
Please pay attention to your surroundings and repair safely.

2. Adjustments

To keep the original performance of the products, optimum adjustments and confirmation of characteristics within specification.
Adjustments should be performed in accordance with the procedures/instructions described in this manual.

3. Lubricants, Glues, and Replacement parts

Use grease and adhesives that are equal to the specified substance.
Make sure the proper amount is applied.

4. Cleaning

For parts that require cleaning, such as optical pickups, tape deck heads, lenses and mirrors used in projection monitors, proper cleaning should be performed to restore their performances.

5. Shipping mode and Shipping screws

To protect products from damages or failures during transit, the shipping mode should be set or the shipping screws should be installed before shipment. Please be sure to follow this method especially if it is specified in this manual.

CONTENTS

1. SPECIFICATIONS 5
2. EXPLODED VIEWS AND PARTS LIST 6
2.1 PACKING SECTION 6
2.2 EXTERIOR SECTION 8
2.3 CONTROL PANEL SECTION 10
3. BLOCK DIAGRAM AND SCHEMATIC DIAGRAM 12
3.1 OVERALL BLOCK DIAGRAM_1 12
3.2 OVERALL BLOCK DIAGRAM_2 14
3.3 OVERALL WIRING DIAGRAM 16
3.4 INPUT ASSY (1/6) 18
3.5 INPUT ASSY (2/6) 20
3.6 INPUT ASSY (3/6) 22
3.7 INPUT ASSY (4/6) 24
3.8 INPUT ASSY (5/6) 26
3.9 INPUT ASSY (6/6) 28
3.10 MIC 1 ASSY 30
3.11 PANEL 1 ASSY 32
3.12 TRIM1 to TRIM 4 ASSYS 36
3.13 MAIC 2 ASSY 37
3.14 PANEL 2 ASSY 38
3.15 CHFD 1 to CHFD 4 and CRSFD ASSYS 40
3.16 DIGIA ASSY 41
3.17 DSP ASSY (1/3) 42
3.18 DSP ASSY (2/3) 46
3.19 DSP ASSY (3/3) 50
3.20 OUTPUT ASSY (1/3) 54
3.21 OUTPUT ASSY (2/3) 56
3.22 OUTPUT ASSY (3/3) 58
3.23 DIGIC ASSY 60
3.24 DIGIB ASSY 64
3.25 HPAMP ASSY 66
3.26 HPJACK ASSYS 68
3.27 ACSW ASSY 69
3.28 SW POWER SUPPLY UNIT 70
3.29 VOLTAGES 72
3.30 WAVEFORMS 78
4. PCB CONNECTION DIAGRAM 84
4.1 INPUT ASSY 84
4.2 PANEL 1 ASSY 88
4.3 TRIM 1 to TRIM 4 and ACSW ASSYS 92
4.4 MIC1 and MIC2 ASSYS 94
4.5 CHFD1, CHFD2, CHFD3 and CHFD4 ASSYS 95
4.6 PANEL 2 and DIGIA ASSYS 96
4.7 DSP ASSY 100
4.8 OUTPUT ASSY 104
4.9 CRSFD, DIGIC and SLSW ASSYS 108
4.10 DIGIB ASSY 112
4.11 HPAMP and HPJACK ASSYS 114
5. PCB PARTS LIST 116
6. ADJUSTMENT 123
7. GENARAL INFORMATION 124
7.1 DIAGNOSIS 124
7.1.1 TEST MODE 124
7.1.2 REWRITING THE FIRMWARE 133
7.2 POWER ON SEQUENCE 146
7.3 DISASSEMBLY 147
7.4 IC INFORMATION 152
8. PANEL FACILITES 167
9. ROTARY VOLUME KIT (DJC-800RV) 172
9.1 PACKING SECTION 172
9.2 EXTERIOR SECTION 173
9.3 SCHEMATIC DIAGAM 174
9.4 DISASSEMBLY 175

1. SPECIFICATIONS

SPECIFICATIONS

1. General

Power source (/KUCXJ) ..... AC 120 V, 60 Hz
Power source (/WYXJ5) ..... AC 220–240V, 50/60 Hz
Power source (/TLXJ) ..... AC 110–120/220–240V, 50/60 Hz

Power consumption 32W
Operating temperature ..... +5 ˚C to +35 ˚C (+41 ˚F to +95 ˚F)
Operating humidity ..... 5 % to 85 % (without condensation)
Weight ..... 8.0 kg (16.54 lb)
Maximum dimensions ..... 320 (W) x 381 (D) x 108 (H) mm
12-5/8 (W) x 15 (D) x 4-1/4 (H) in

2. Audio section

Sampling rate ..... 96 kHz
A/D, D/A converter ..... 24 bits
Frequency response
LINE ..... 20 Hz to 20 kHz
MIC ..... 20 Hz to 20 kHz
PHONO ..... 20 Hz to 20 kHz (RIAA)
S/N ratio (at rated output)
LINE ..... 105 dB
PHONO ..... 88 dB
MIC ..... 84 dB
Distortion (LINE-MASTER 1) ..... 0.005 %
Standard input level/Input impedance
PHONO 2 to 4 ..... –52 dBu/47 kΩ
MIC 1, MIC 2 ..... –52 dBu/3 kΩ
LINE, LINE/CD 1 to 4 ..... –12 dBu/22 kΩ
RETURN ..... –12 dBu/22 kΩ
Standard output level/Load impedance/Output impedance
MASTER 1 ..... +2 dBu/10kΩ /10Ω or less
MASTER 2 ..... +2 dBu/10 k Ω/1 kΩ
REC ..... –8 dBu/10 kΩ /1 kΩ
BOOTH ..... +2 dBu/600Ω /600Ω
SEND ..... –12dBu/10 kΩ /1 kΩ
PHONES ..... +8.5 dBu/32Ω /22Ω or less
Rated output level/Load impedance
MASTER 1 ..... +22 dBu/10kΩ
MASTER 2 ..... +20 dBu/10 kΩ
Crosstalk (LINE) ..... 88 dB
Channel equalizer response
HI ..... –26 dB to +6 dB (13 kHz)
MID ..... –26 dB to +6 dB (1 kHz)
LOW ..... –26 dB to +6 dB (70 Hz)
Microphone equalizer response
HI ..... –12 dB to +6 dB (10 kHz)
LOW ..... –12 dB to +6 dB (100 Hz)

3. Input/output connector systems

PHONO input connectors
RCA pin jacks 3
LINE/CD input connectors
RCA pin jacks 4
LINE input connectors
RCA pin jacks 1
MIC input connectors
XLR connector/phone jack (Ø6.3 mm) 1
Phone jack (Ø6.3 mm) 1
DIGITAL coaxial input connectors
RCA pin jacks 4
RETURN input connectors
Phone jacks (Ø6.3 mm) 1
MASTER output connectors
XLR connectors 1
RCA pin jacks 1
BOOTH output connectors
Phone jacks (Ø6.3 mm) 1
REC output connectors
RCA pin jacks 1
SEND output connectors
Phone jacks (Ø6.3 mm) 1
DIGITAL coaxial output connector
RCA pin jack 1
MIDI OUT connector
5P DIN 1
PHONES output connector
Stereo phone jack (Ø6.3 mm) 1
CONTROL connector
Mini phone jacks (Ø3.5 mm) 4

4. Accessories

Operating Instructions 1
Power cord 1
Warranty card 1

Specifications and appearance are subject to change without notice.

● Accessories

Power cord
(KUCXJ : DDG1028)

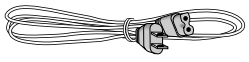

(WYXJ5,TLXJ : ADG7062)

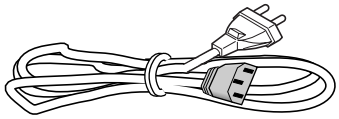

Operating instrucions
Warranty card (KUCXJ only)

2. EXPLODED VIEWS AND PARTS LIST

NOTES:
- *Parts marked by "NSP" are generally unavailable because they are not in our Master Spare Parts List.*
- *The ⚠ mark found on some component parts indicates the importance of the safety factor of the part. Therefore, when replacing, be sure to use parts of identical designation.*
- *Screws adjacent to ▼ mark on product are used for disassembly.*
- *For the applying amount of lubricants or glue, follow the instructions in this manual. (In the case of no amount instructions, apply as you think it appropriate.)*

2.1 PACKING SECTION

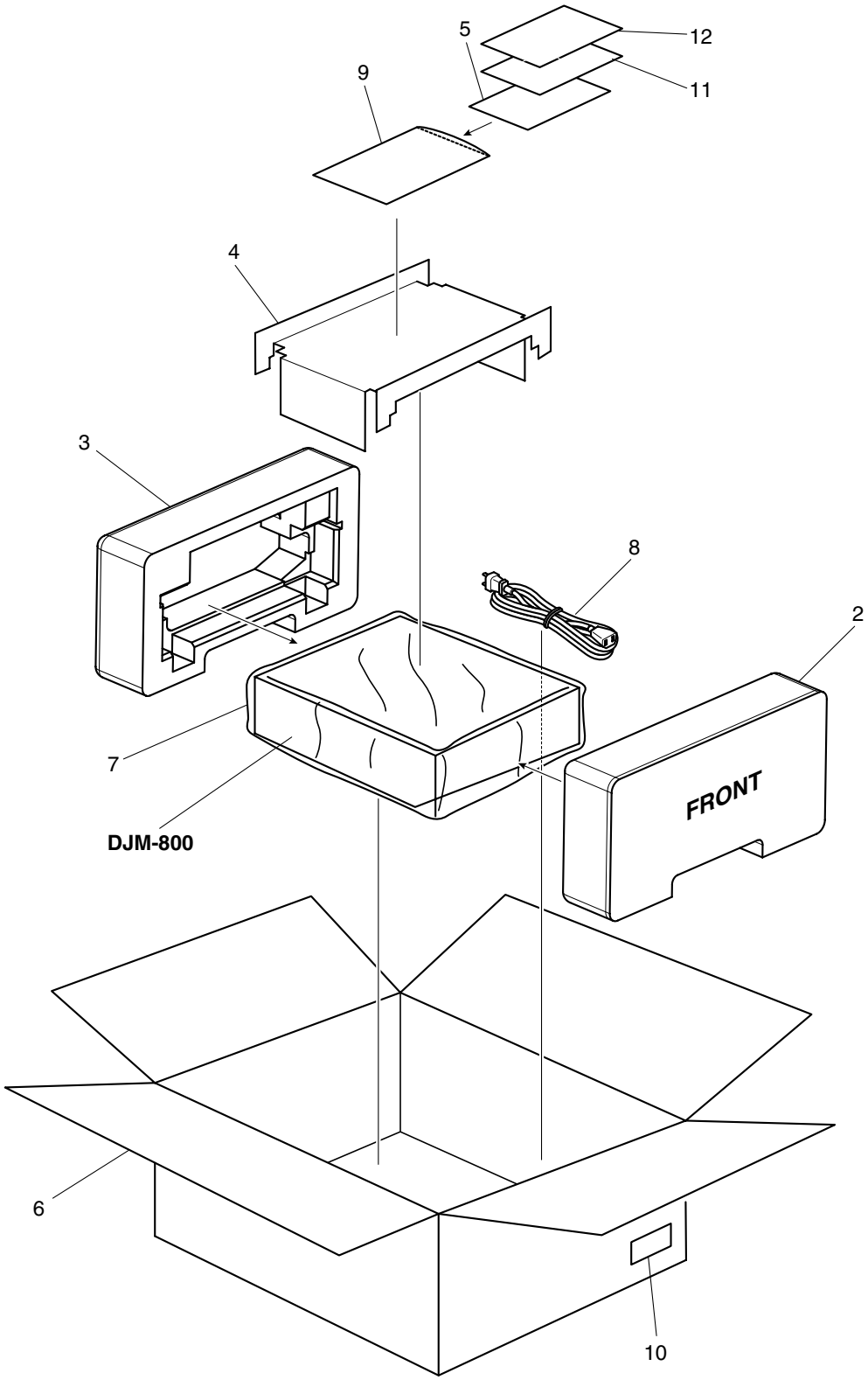

(1) PACKING SECTION PARTS LIST

Mark	No.	Description	Part No.
	1	• • • •	
	2	Pad Front	DHA1698
	3	Pad Rear	DHA1699
	4	Pad Top	DHA1705
	5	Instruction Manual(M800)	See Contrast table (2)
	6	Packing Case	See Contrast table (2)
	7	Sheet	RHX1006
⚠	8	Power Cord	See Contrast table (2)
NSP	9	Polyethylene Bag	AHG7117
NSP	10	Label	See Contrast table (2)
NSP	11	Warranty Card	See Contrast table (2)
NSP	12	User Registration Sheet	DRM1262

(2) CONTRAST TABLE

DJM-800/WYXJ5, DJM-800/TLXJ and DJM-800/KUCXJ are constructed the same except for the fHollowing

Mark	No.	Symbol and Description	DJM-800 /KUCXJ	DJM-800 /WYXJ5	DJM-800 /TLXJ
	5	Instruction Manual (English)	DRB1393	Not used	Not used
	5	Instruction Manual (English, French German, Italian, Dutch, Spanish)	Not used	DRB1392	Not used
	5	Instruction Manual (English, Spanish, Chinese)	Not used	Not used	DRB1394
	6	Packing Case	DHG2559	DHG2558	DHG2560
⚠	8	Power Cord	DDG1028	ADG7062	ADG7062
NSP	10	Label	DRW2311	VRW1629	VRW1629
NSP	11	Warranty Card	ARY7043	Not used	Not used

2.2 EXTERIOR SECTION

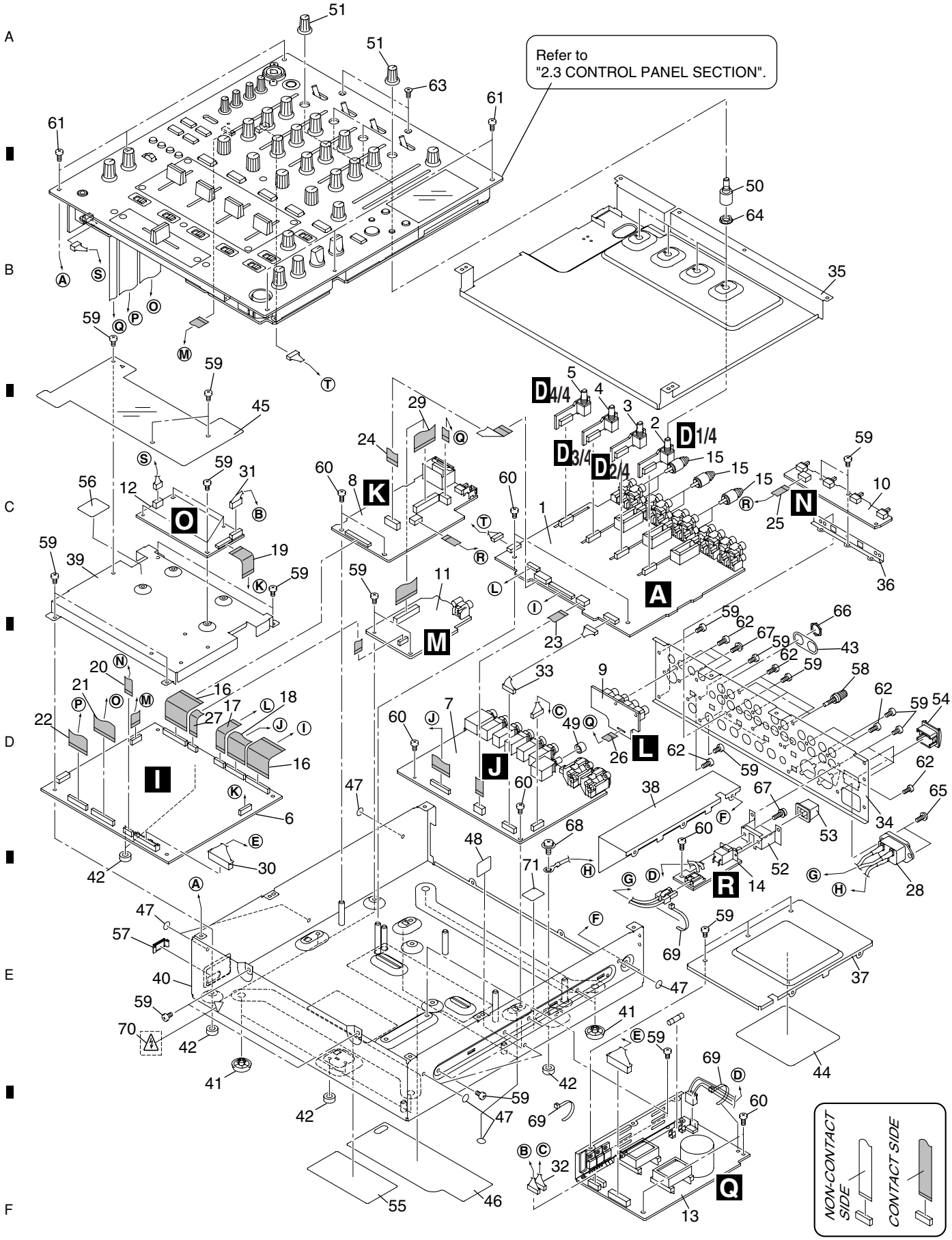

EXTERIOR SECTION PARTS LIST

Mark	No.	Description	Part No.
	1	INPUT Assy	DWX2535
	2	TRIM 4 Assy	DWX2551
	3	TRIM 3 Assy	DWX2550
	4	TRIM 2 Assy	DWX2549
	5	TRIM 1 Assy	DWX2548
	6	DSP Assy	DWX2534
	7	OUTPUT Assy	DWX2544
	8	DIGIC Assy	DWX2547
	9	DIGIA Assy	DWX2555
	10	SLSW Assy	DWX2536
	11	DIGIB Assy	DWX2546
	12	HPAMP Assy	DWX2556
⚠	13	POWER SUPPLY Unit	DWR1433
	14	ACSW Assy	DWX2545
	15	Short Pin Plug	AKM7008
	16	Flexible Cable (31P)	DDD1316
	17	Flexible Cable (12P)	DDD1317
	18	Flexible Cable (25P)	DDD1318
	19	Flexible Cable (16P)	DDD1319
	20	Flexible Cable (10P)	DDD1321
	21	Flexible Cable (30P)	DDD1322
	22	Flexible Cable (25P)	DDD1323
	23	Flexible Cable (7P)	DDD1326
	24	Flexible Cable (12P)	DDD1327
	25	Flexible Cable (6P)	DDD1328
	26	Flexible Cable (7P)	DDD1329
	27	Flexible Cable (10P)	DDD1333
⚠	28	AC Inlet Assy	See Contrast table (2)
	29	Flexible Cable (24P)	DDD1330
	30	Connector Assy(10P-12P)	DKP3763
	31	Connector Assy	PF05EE-S22
	32	Connector Assy	PF05EE4S32
	33	Connector Assy	PF06EE-D12
NSP	34	Rear Panel	See Contrast table (2)
	35	Bracket TRIM	DNF1728
	36	Bracket SSW	DNF1729
	37	Shield Case	DNH2697
	38	Shield Case AC	DNH2698
	39	Shield Case DSP	DNH2699
	40	Chassis Assy	DXB1881
	41	Leg Assy	REC-434
NSP	42	Spacer	AEB7092
	43	PHONE Spacer	DEC2914
	44	Barrier A	DEC2915
	45	Styling Sheet	DEC2917
	46	Bottom Cover	DEC2918
	47	Blind Label	DEC2928
	48	Barrier B	DEC2944
	49	Select Knob (S)	DAA1166
	50	Extension Shaft	DNK4691
	51	Rotary SW Knob S	DAA1204
	52	Bracket PSW	DNF1730
	53	POWER Knob	DAC2306
	54	POWER Knob Guard	DNK4534
NSP	55	LABEL	See Contrast table (2)
	56	CAUTION Label	DRW2312
	57	Blind Cap	DNK4218
	58	Terminal Screw	AKE-031-0
	59	Screw	BBZ30P060FTB
	60	Screw	BBZ30P080FTC
	61	Screw	BCZ30P080FTB
	62	Screw	BPZ30P080FTB
	63	Screw	CCZ30P060FTB
	64	Flange Nut M7	DBN1011
	65	Screw	IBZ30P080FTB
	66	Nut	NKX2FTC
	67	Screw	PMH30P100FTB
	68	Screw	PMH40P080FTC
	69	Binder (SKB-90BK)	ZCA-SKB90BK
NSP	70	Caution LABEL	See Contrast table (2)
NSP	71	Earth LABEL	See Contrast table (2)

(2) CONTRAST TABLE

DJM-800/WYXJ5, /TLXJ and DJM-800/KUCXJ are constructed the same except for the fHollowing :

Mark	No.	Symbol and Description	DJM-800 /KUCXJ	DJM-800 /WYXJ5	DJM-800 /TLXJ
⚠	28	AC Inlet Assy	DKP3761	DKP3762	DKP3762
NSP	34	Rear Panel	DNC1800	DNC1789	DNC1791
NSP	55	LABEL	DRW2294	DRW2293	DRW2319
NSP	70	Caution LABEL	DRW1975	Not used	Not used
NSP	71	Earth LABEL	DRW2276	Not used	Not used

2.3 CONTROL PANEL SECTION

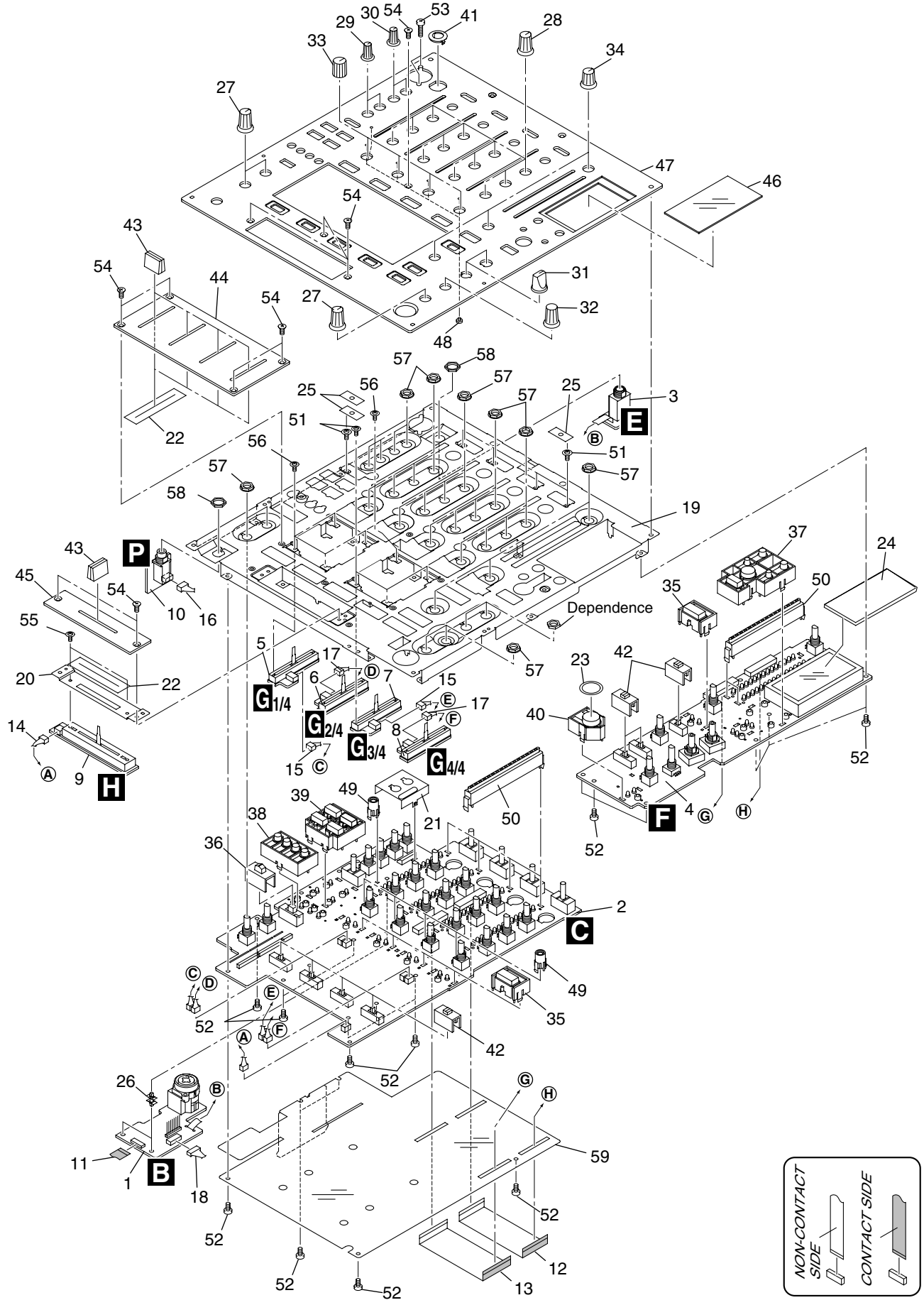

CONTROL PANEL SECTION PARTS LIST

Mark	No.	Description	Part No.
	1	MIC 1 Assy	DWX2542
	2	PANEL 1 Assy	DWX2552
	3	MIC 2 Assy	DWX2543
	4	PANEL 2 Assy	DWX2554
	5	CHFD 1 Assy	DWX2537
	6	CHFD 2 Assy	DWX2538
	7	CHFD 3 Assy	DWX2539
	8	CHFD 4 Assy	DWX2540
	9	CRSFD Assy	DWX2541
	10	HP JACK Assy	DWX2553
	11	Flexible Cable (12P)	DDD1320
	12	Flexible Cable (27P)	DDD1324
	13	Flexible Cable (30P)	DDD1325
	14	Housing Wire Assy	PF03PP-D12
	15	Housing Wire Assy	PF04PP-D05
	16	Housing Wire Assy	PF04PP-D20
	17	Housing Wire Assy	PF04PP4D05
	18	Housing Wire Assy	PF05FF-D25
NSP	19	Panel Stay	DND1254
	20	CRF Stay	DNF1726
	21	MIC Stay	DNF1727
	22	Fader Packing	DEC2903
	23	SW Packing	DEC2929
	24	Barrier (FL)	DEC2943
	25	SW Packing	DED1177
NSP	26	PC Support	VEC1508
	27	Rotary SW Knob (A)	DAA1175
	28	Rotary SW Knob (B)	DAA1176
	29	Rotary SW Knob S (A)	DAA1177
	30	Rotary SW Knob S (B)	DAA1178
	31	Select Knob	DAA1205
	32	Rotary SW Knob (C)	DAA1180
	33	Rotary SW Knob (HM)	DAA1197
	34	Rotary SW Knob (MA)	DAA1198
	35	CUE Knob	DAC2215
	36	Slide SW Cap (A)	DAC2219
	37	SET Knob (TAP)	DAC2300
	38	SET Knob (FS)	DAC2301
	39	SET Knob (HM)	DAC2302
	40	EFFECT Knob	DAC2304
	41	MIC Cap	DAC2309
	42	Slide SW Cap	DAC2310
	43	Slider Knob (L2)	DAC2371
	44	CHF Panel	DAH2426
	45	CRF Panel	DAH2427
	46	Disply Panel	DAH2428
	47	Control Panel	DNB1144
	48	LENS	DNK4532
	49	LENS Holder	DNK4533
	50	LEVEL Meter Assy	DXB1882
	51	Screw	AMZ26P040FTC
	52	Screw	BBZ30P060FTB
	53	Screw	BPZ30P120FTB
	54	Screw	CCZ30P060FTB
	55	Screw	DBA1262
	56	Screw	DBA1298
	57	Flange Nut M9	DBN1008
	58	Nut	NKX2FTC

3. BLOCK DIAGRAM AND SCHEMATIC DIAGRAM

3.1 OVERALL BLOCK DIAGRAM_1

BLOCK DIAGRAM

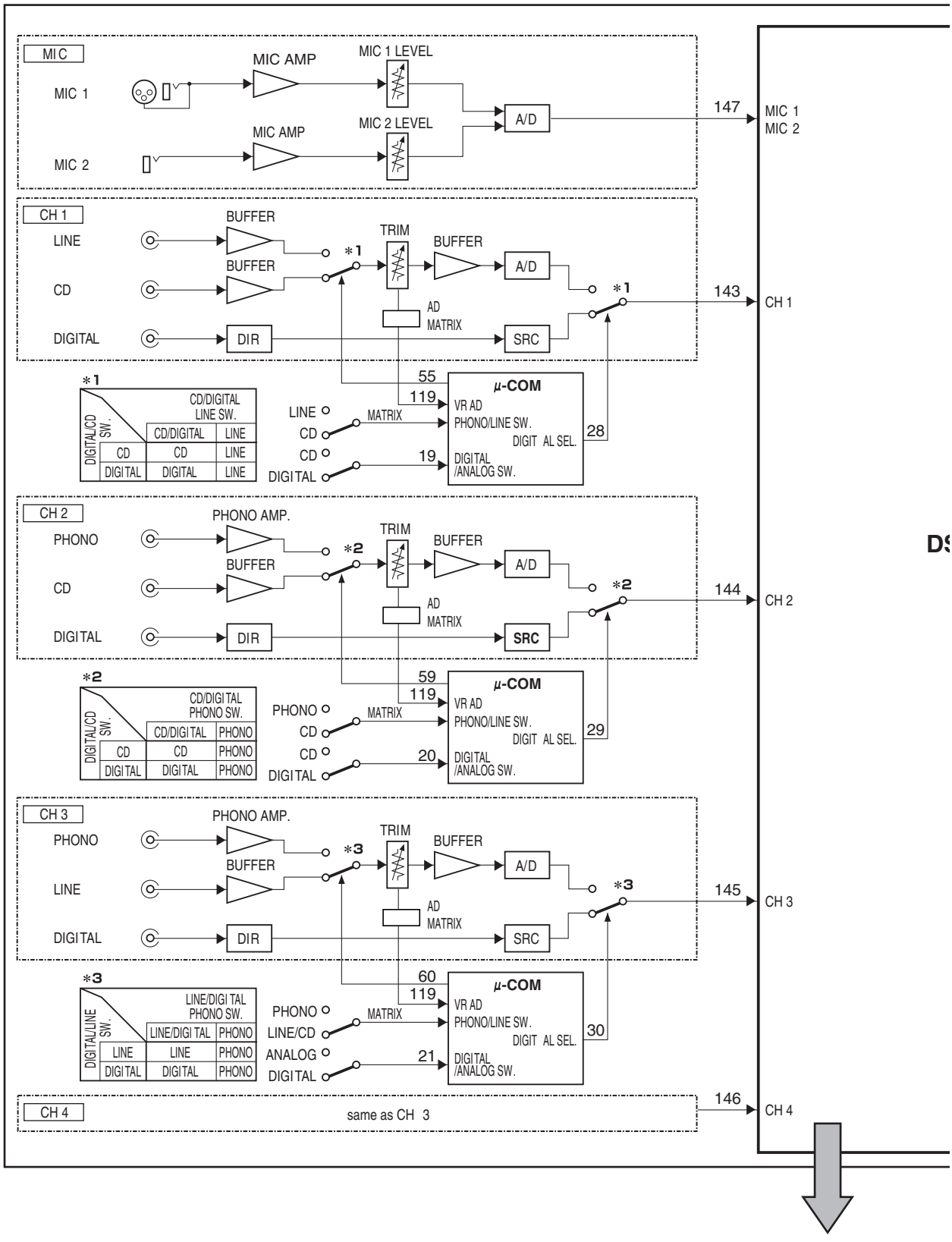

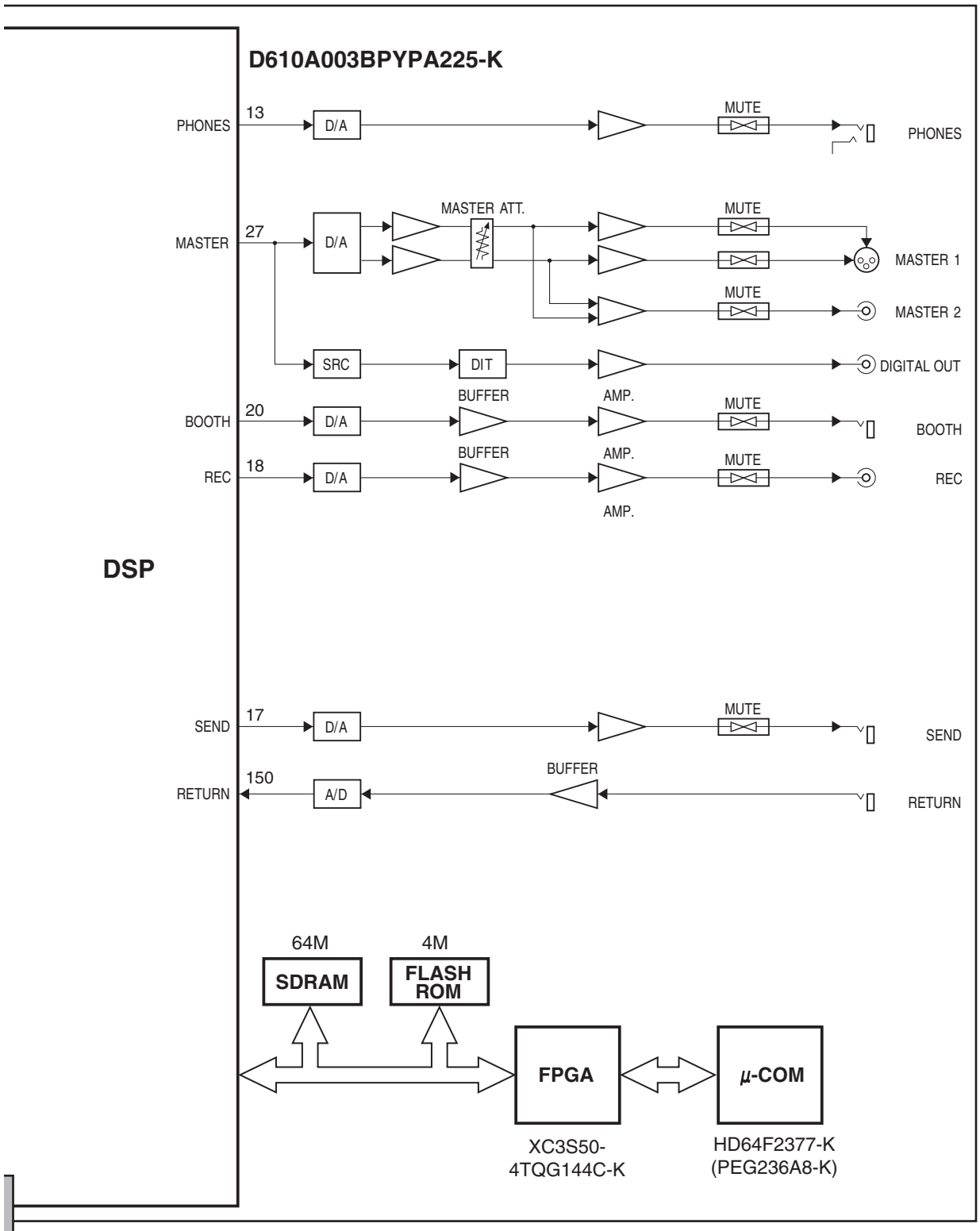

- When ordering service parts, be sure to refer to "EXPLODED VIEWS and PARTS LIST" or "PCB PARTS LIST".
- The ⚠ mark found on some component parts indicates the importance of the safety factor of the part. Therefore, when replacing, be sure to use parts of identical designation.
- : The power supply is shown with the marked box.

5 6 7 8

3.2 OVERALL BLOCK DIAGRAM_2

I DSP BLOCK DIAGRAM

■DJM-800 Audio DSP

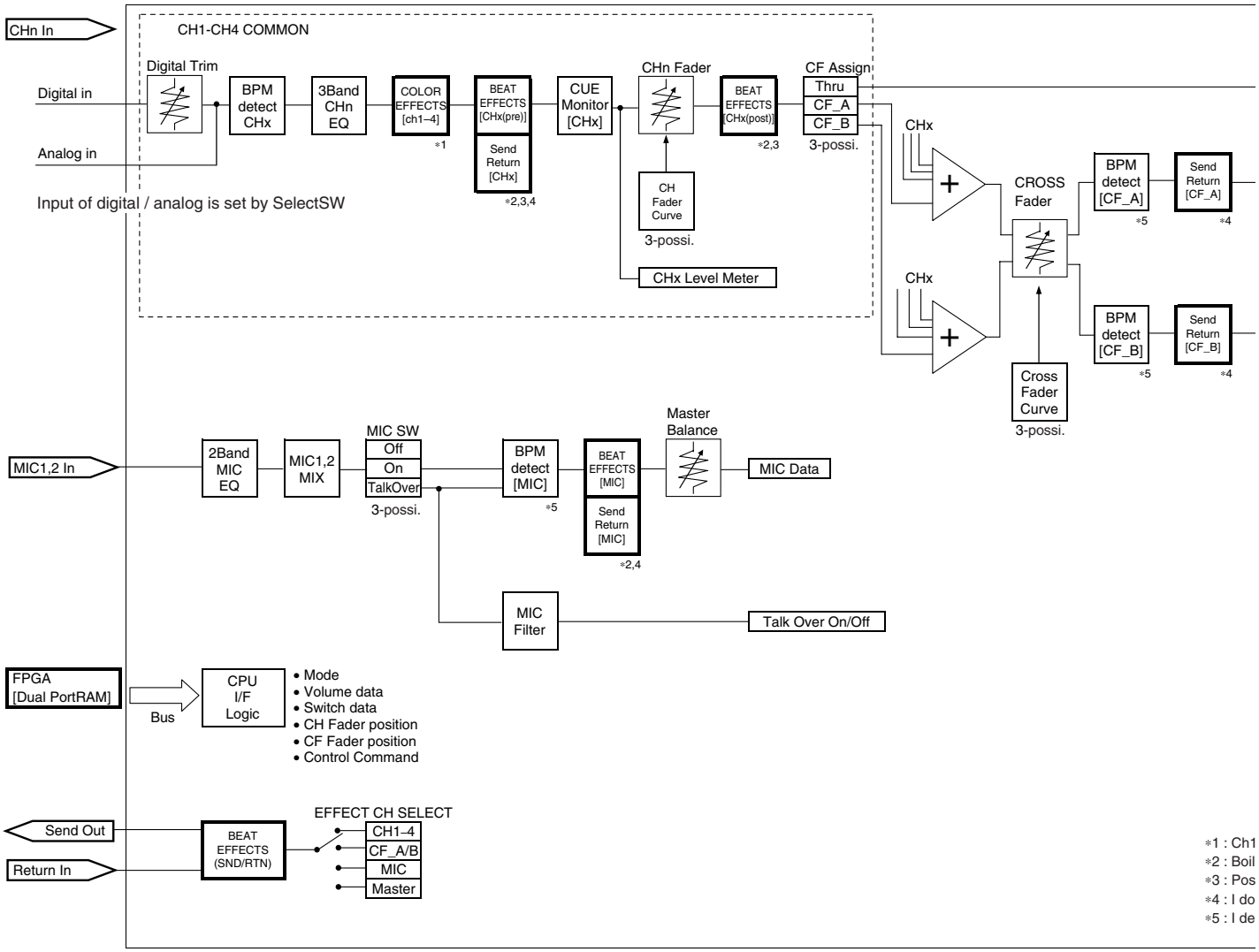

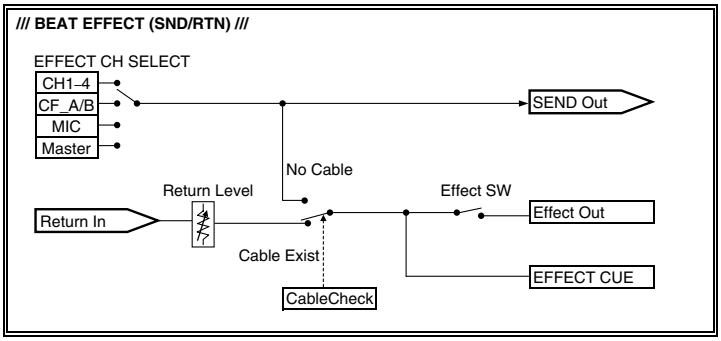

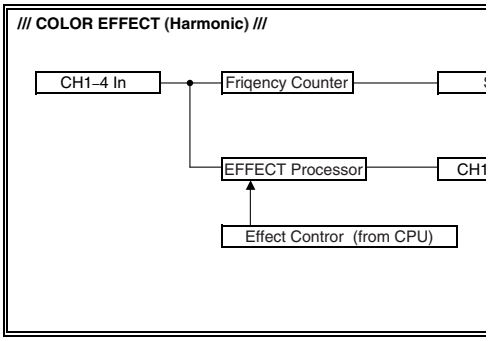

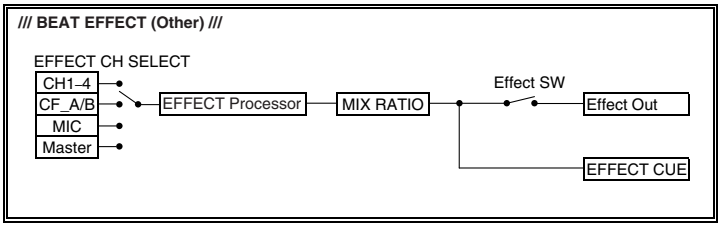

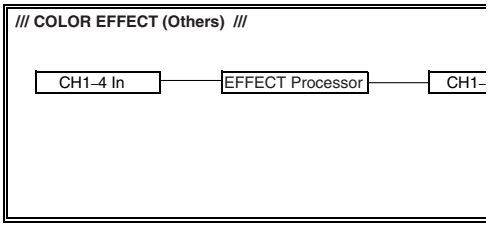

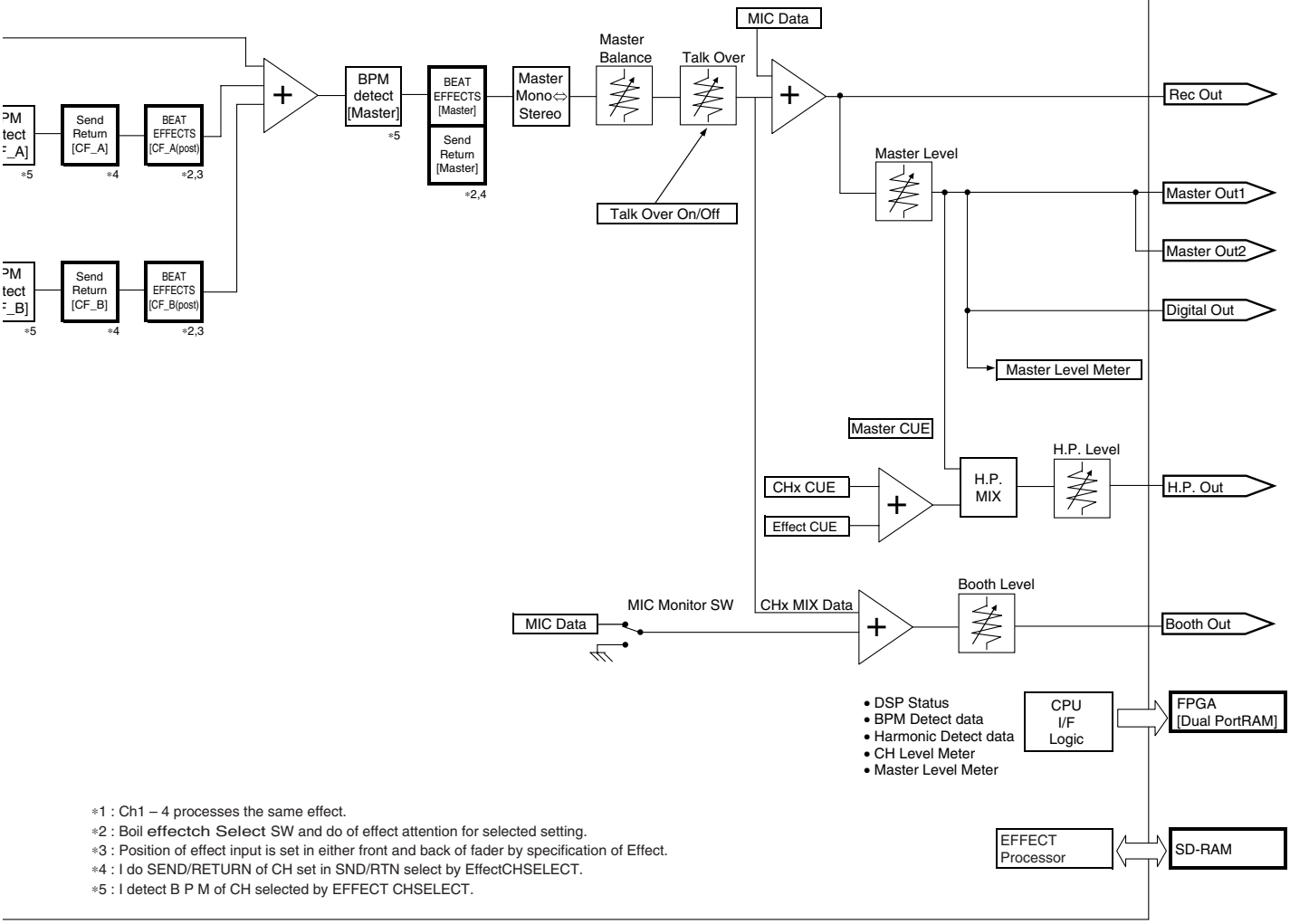

*1 : Ch1 – 4 processes the same effect.
*2 : Boil effectch Select SW and do of effect attention for selected setting.
*3 : Position of effect input is set in either front and back of fader by specification of Effect.
*4 : I do SEND/RETURN of CH set in SND/RTN select by EffectCHSELECT.
*5 : I detect B P M of CH selected by EFFECT CHSELECT.

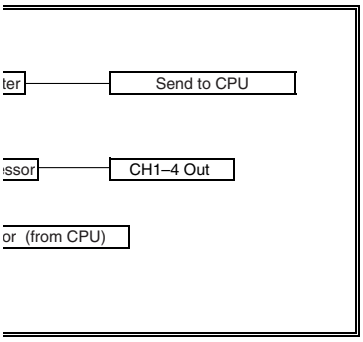

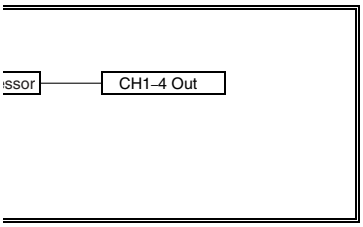

/// BPM DET. ///

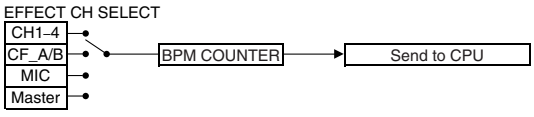

* I detect B P M only for CH which EFFECT CH SELECT appears, and was Counter.

/// H.P. MIX ///

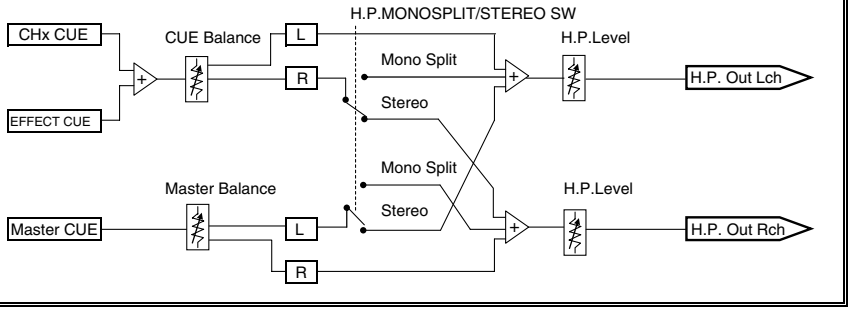

3.3 OVERALL WIRING DIAGRAM

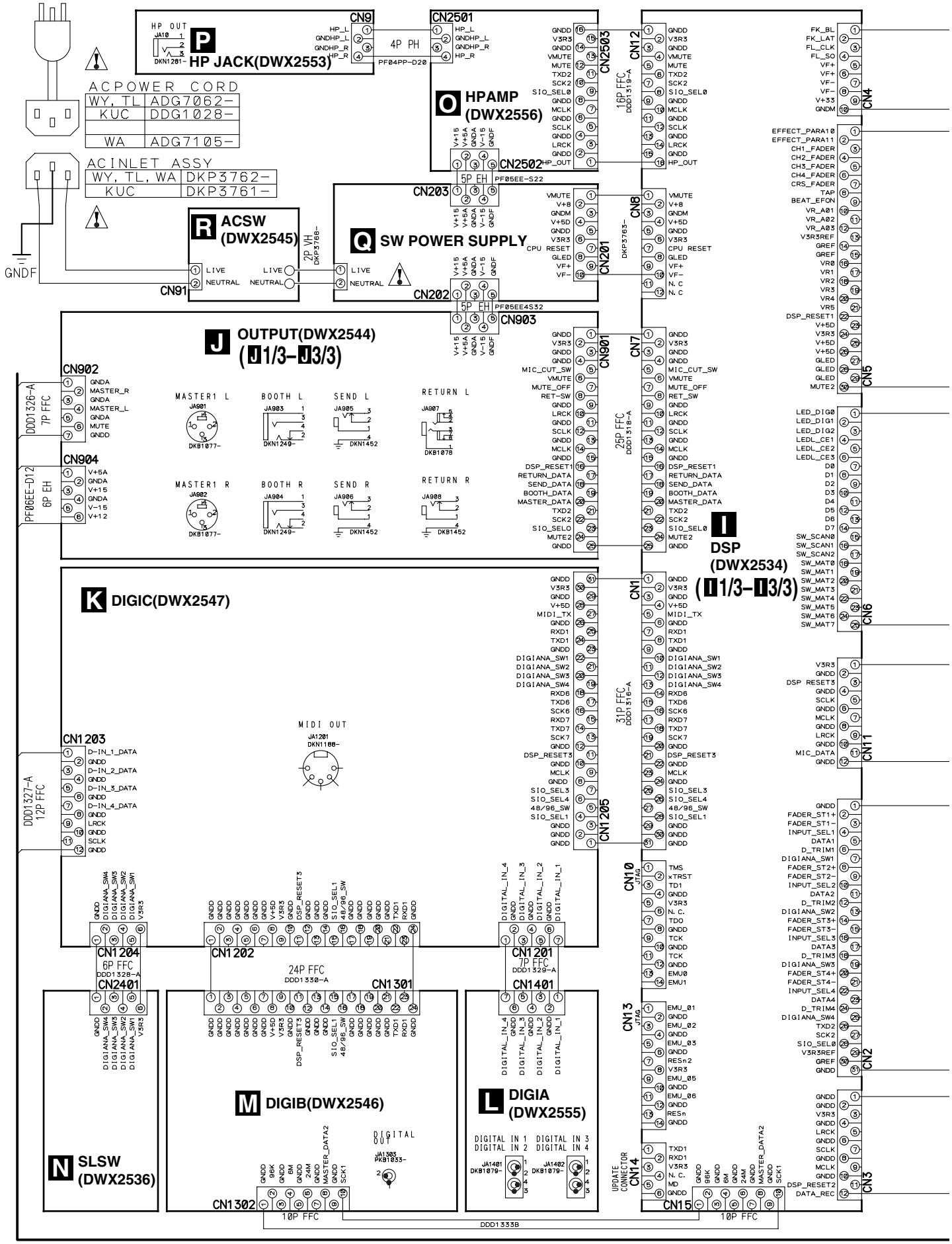

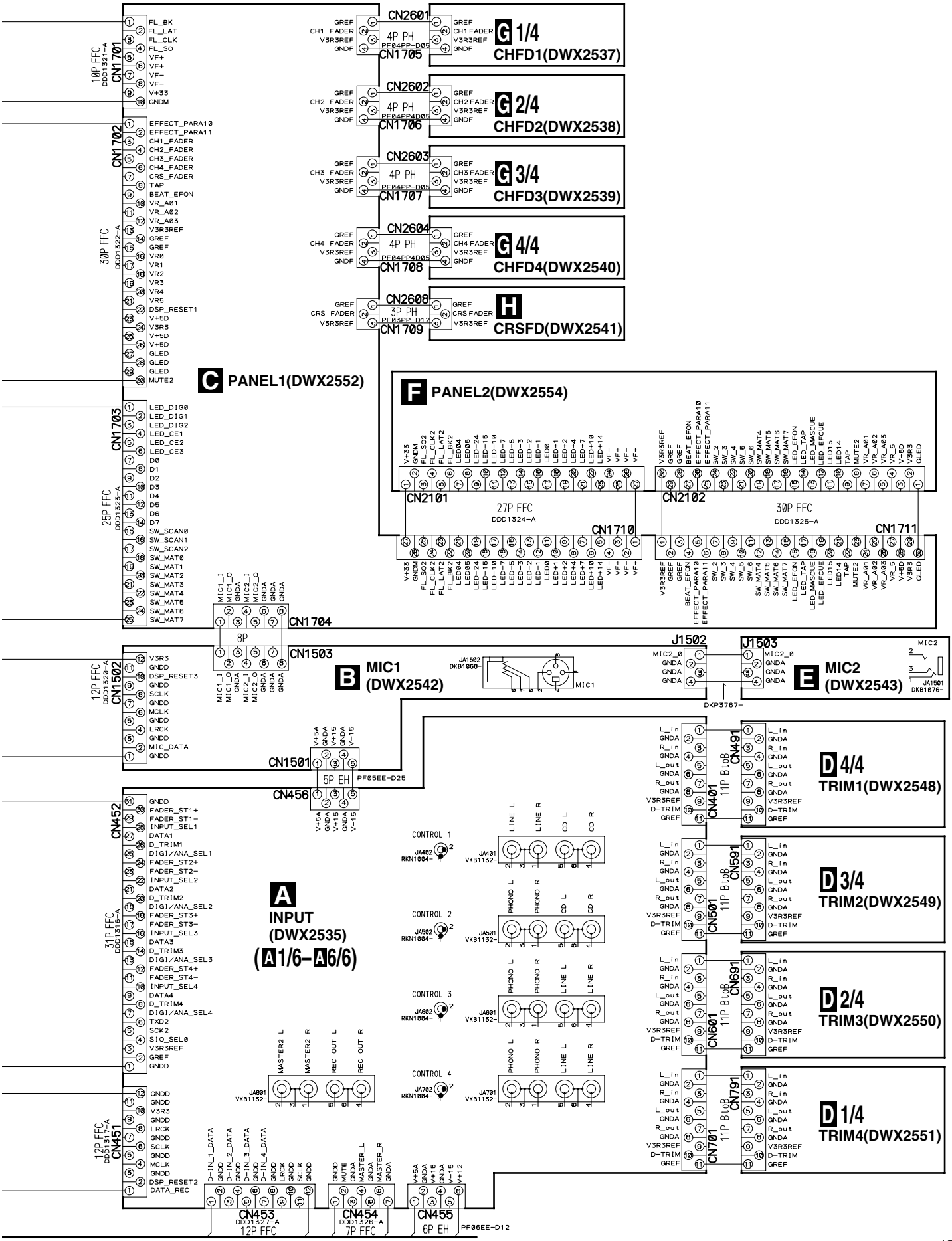
C PANEL1(DWX2552)
F PANEL2(DWX2554)
G 1/4 CHFD1(DWX2537)
G 2/4 CHFD2(DWX2538)
G 3/4 CHFD3(DWX2539)
G 4/4 CHFD4(DWX2540)
H CRSFD(DWX2541)
B MIC1 (DWX2542)
E MIC2 (DWX2543)
A INPUT (DWX2535) (A1/6–A6/6)
D 4/4 TRIM1(DWX2548)
D 3/4 TRIM2(DWX2549)
D 2/4 TRIM3(DWX2550)
D 1/4 TRIM4(DWX2551)
CN1701
CN1702
CN1703
CN1704
CN1705
CN1706
CN1707
CN1708
CN1709
CN1710
CN1711
CN2101
CN2102
CN2601
CN2602
CN2603
CN2604
CN2608
CN1501
CN1502
CN1503
CN451
CN452
CN453
CN454
CN455
CN456
CN491
CN501
CN591
CN601
CN691
CN701
CN791
J1502
J1503
DJM-800
17

A 1/6 INPUT ASSY(DWX2535)

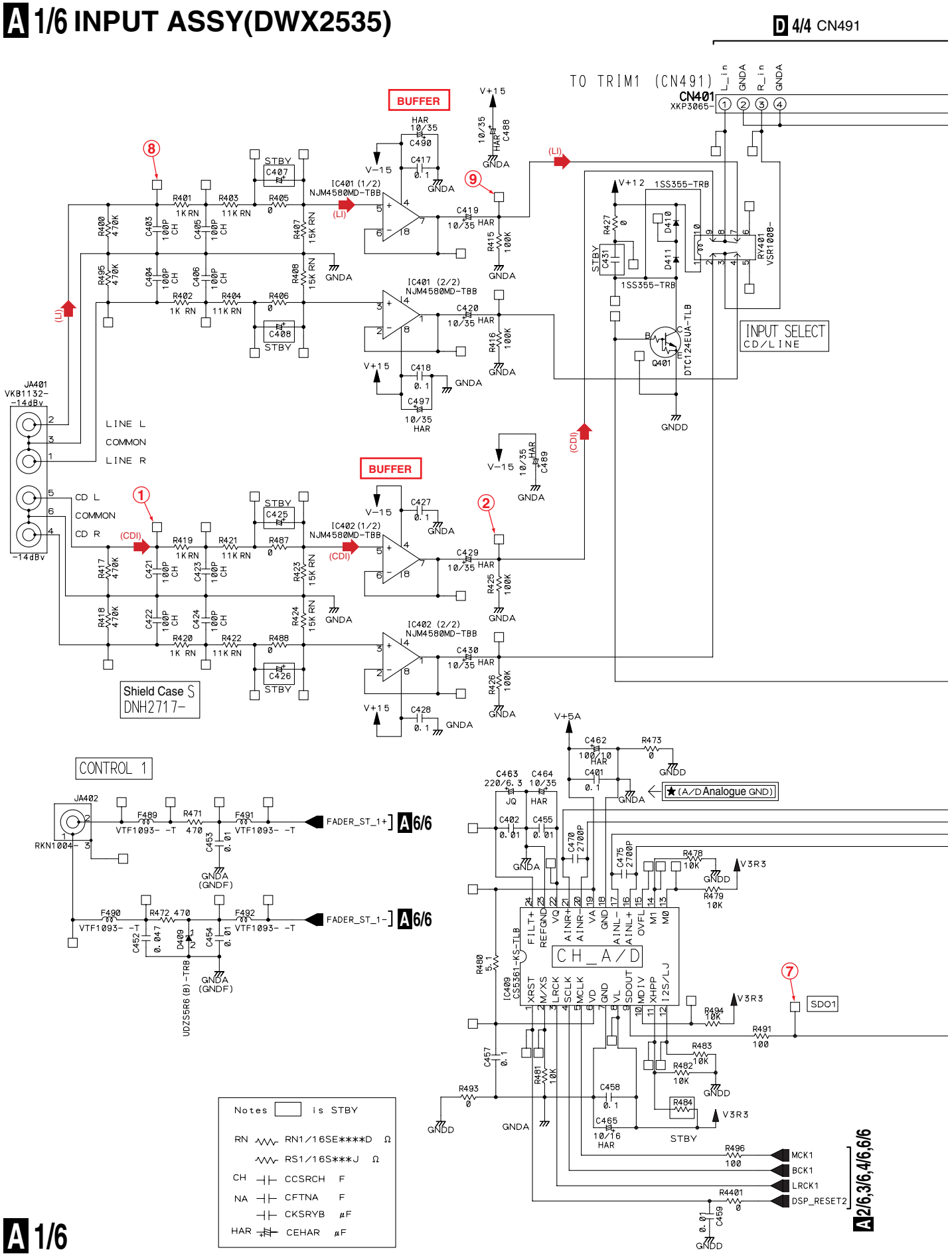

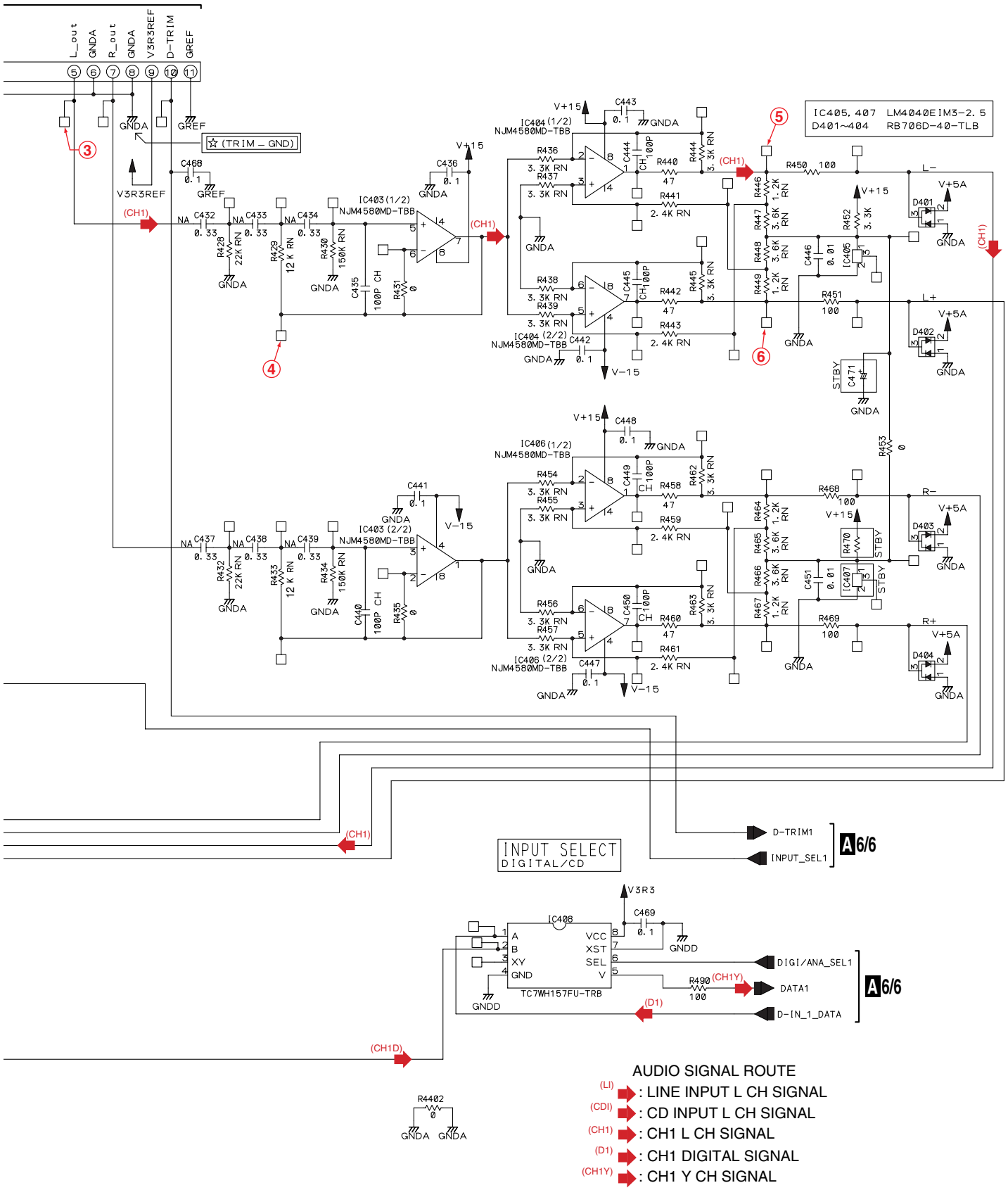
L_out
GNDA
R_out
GNDA
V3R3REF
D-TRIM
GREF
(TRIM – GND)
IC405, 407 LM4040EIM3-2.5
D401~404 RB706D-40-TLB
IC404 (1/2) NJM4580MD-TBB
IC404 (2/2) NJM4580MD-TBB
IC403 (1/2) NJM4580MD-TBB
IC403 (2/2) NJM4580MD-TBB
IC406 (1/2) NJM4580MD-TBB
IC406 (2/2) NJM4580MD-TBB
(CH1)
V+15
V-15
V+5A
L–
L+
R–
R+
STBY
D-TRIM1
INPUT_SEL1
A6/6
INPUT SELECT
DIGITAL/CD
V3R3
IC408
TC7WH157FU-TRB
DIGI/ANA_SEL1
DATA1
D-IN_1_DATA
(CH1Y)
(D1)
(CH1D)
R4402
AUDIO SIGNAL ROUTE
(LI) : LINE INPUT L CH SIGNAL
(CDI) : CD INPUT L CH SIGNAL
(CH1) : CH1 L CH SIGNAL
(D1) : CH1 DIGITAL SIGNAL
(CH1Y) : CH1 Y CH SIGNAL

A 2/6 INPUT ASSY(DWX2535)

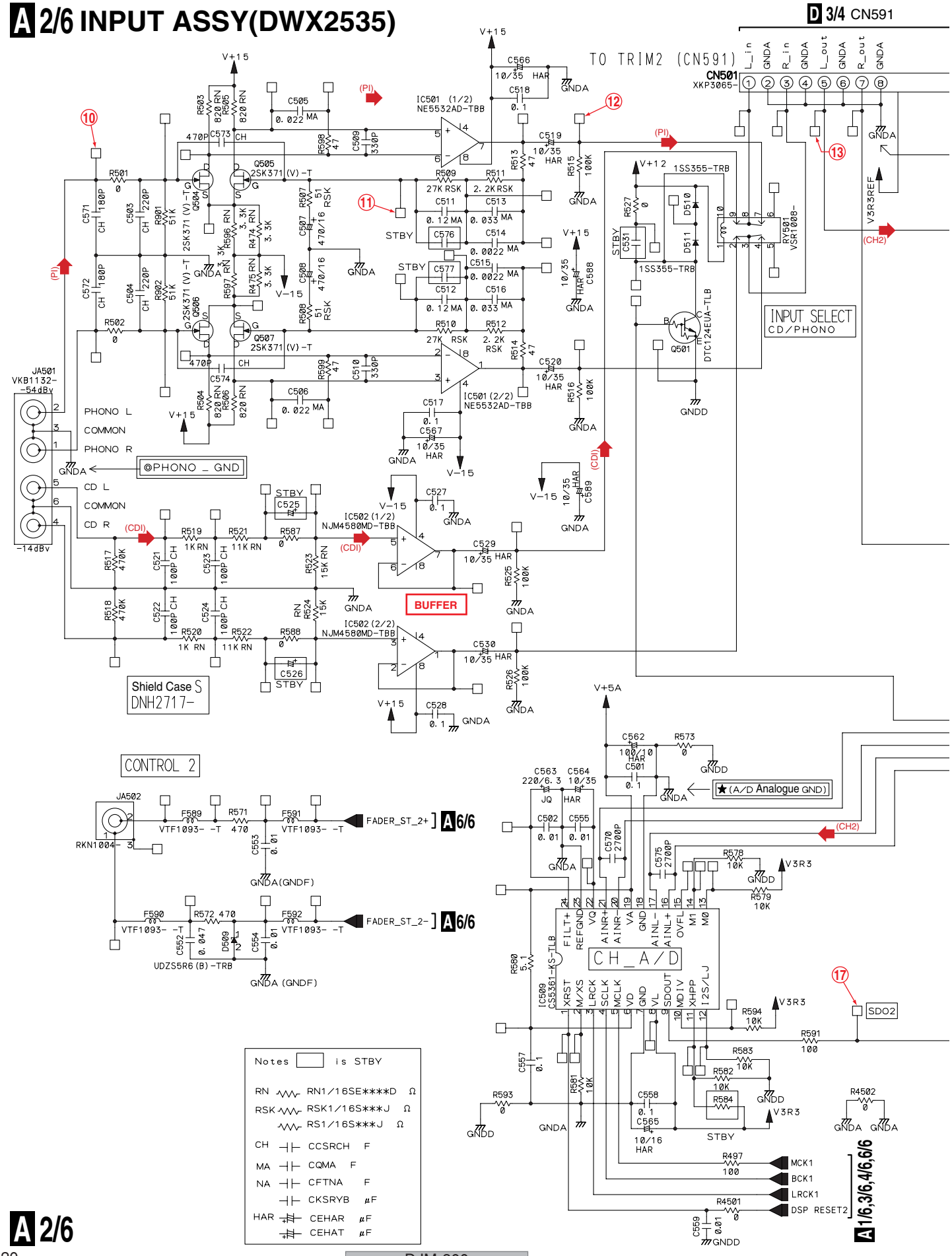

A 2/6

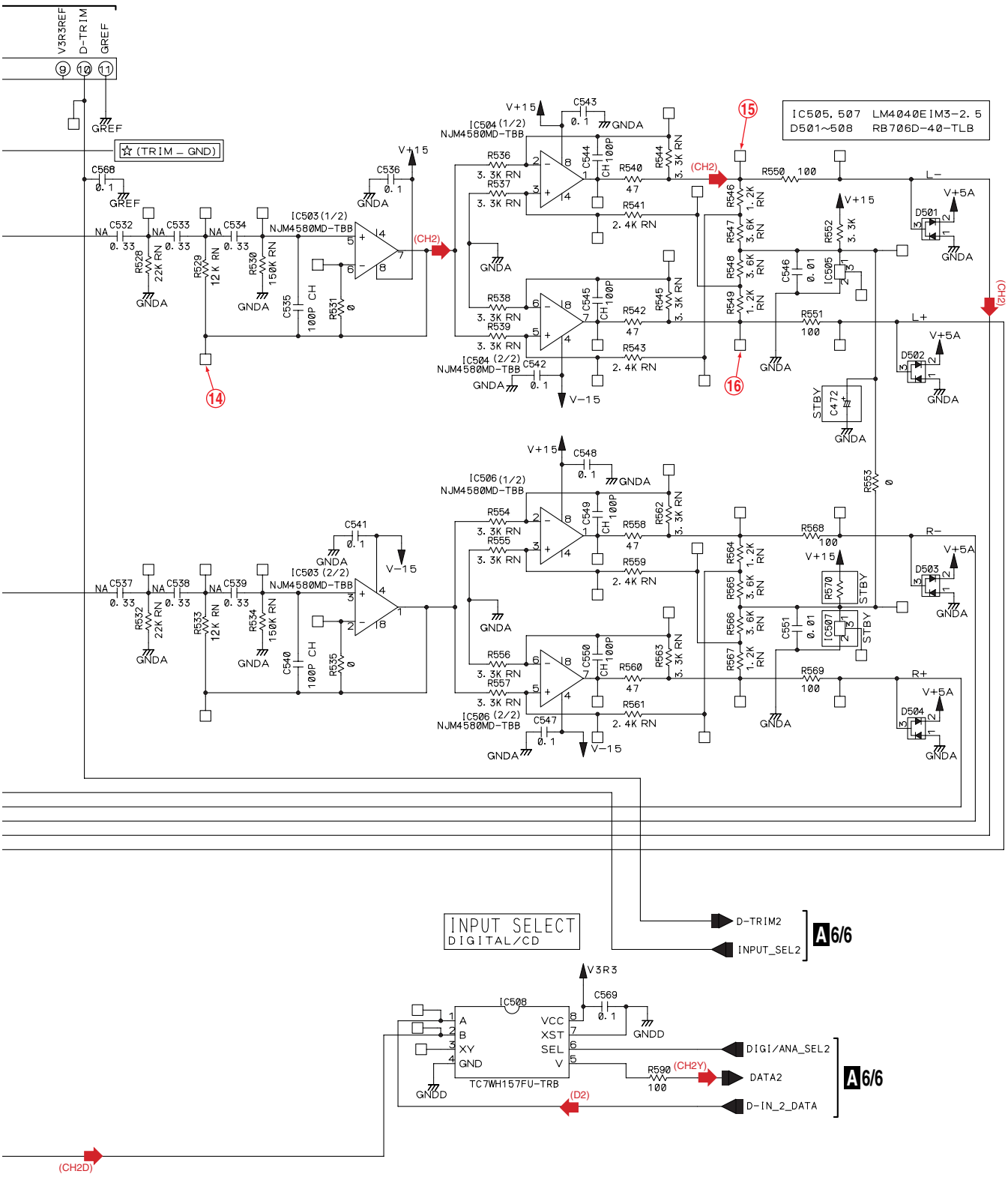

AUDIO SIGNAL ROUTE

(PI) : PHONO INPUT L CH SIGNAL
(CDI) : CD INPUT L CH SIGNAL
(CH2) : CH2 L CH SIGNAL
(D2) : CH2 DIGITAL SIGNAL
(CH2Y) : CH2 Y CH SIGNAL

A 2/6

A 3/6 INPUT ASSY(DWX2535)

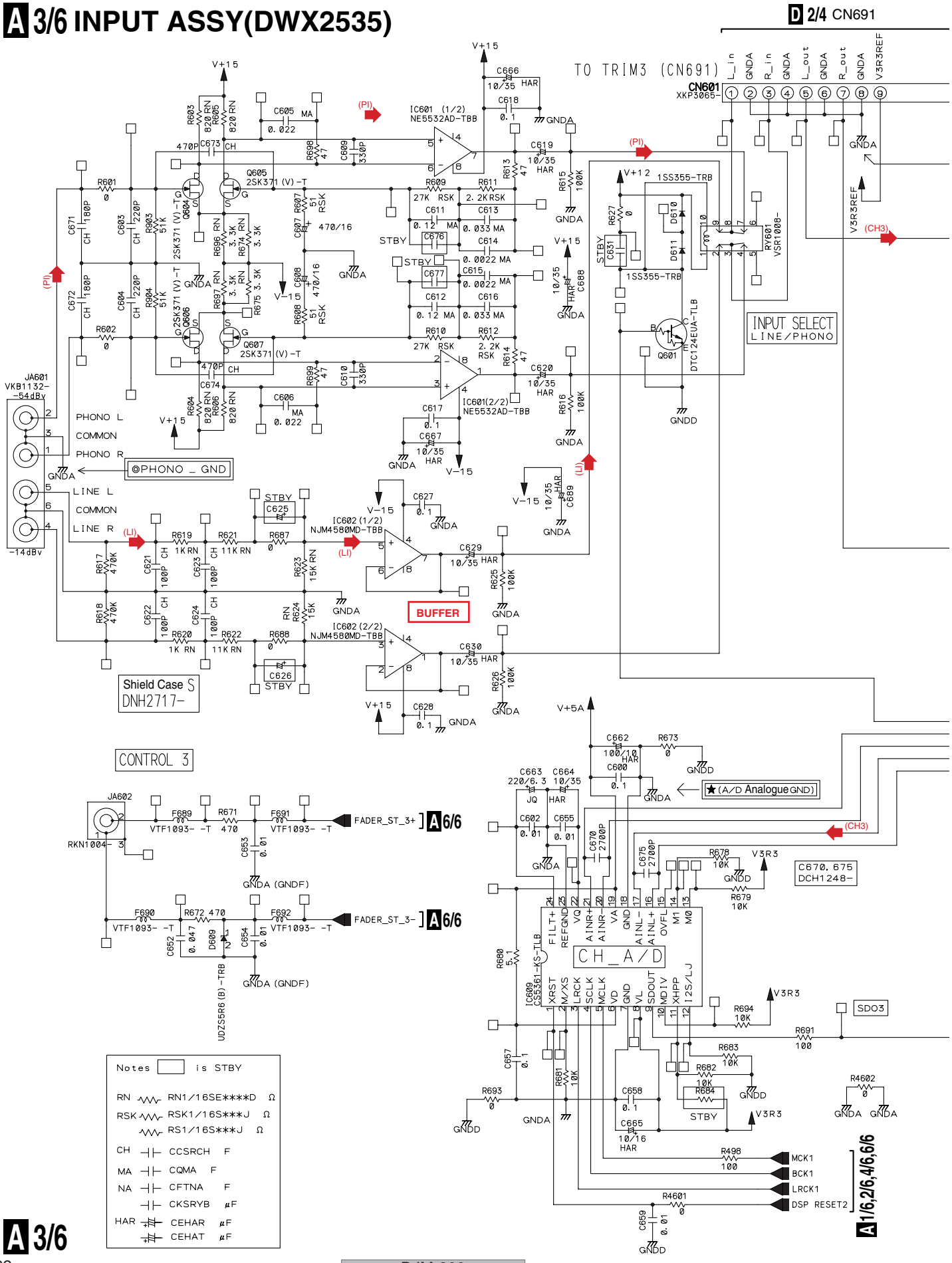

Notes ▭ is STBY

RN	RN1/16SE****D	Ω
RSK	RSK1/16S***J	Ω
	RS1/16S***J	Ω
CH	CCSRCH	F
MA	CQMA	F
NA	CFTNA	F
	CKSRYB	μF
HAR	CEHAR	μF
	CEHAT	μF

A 3/6

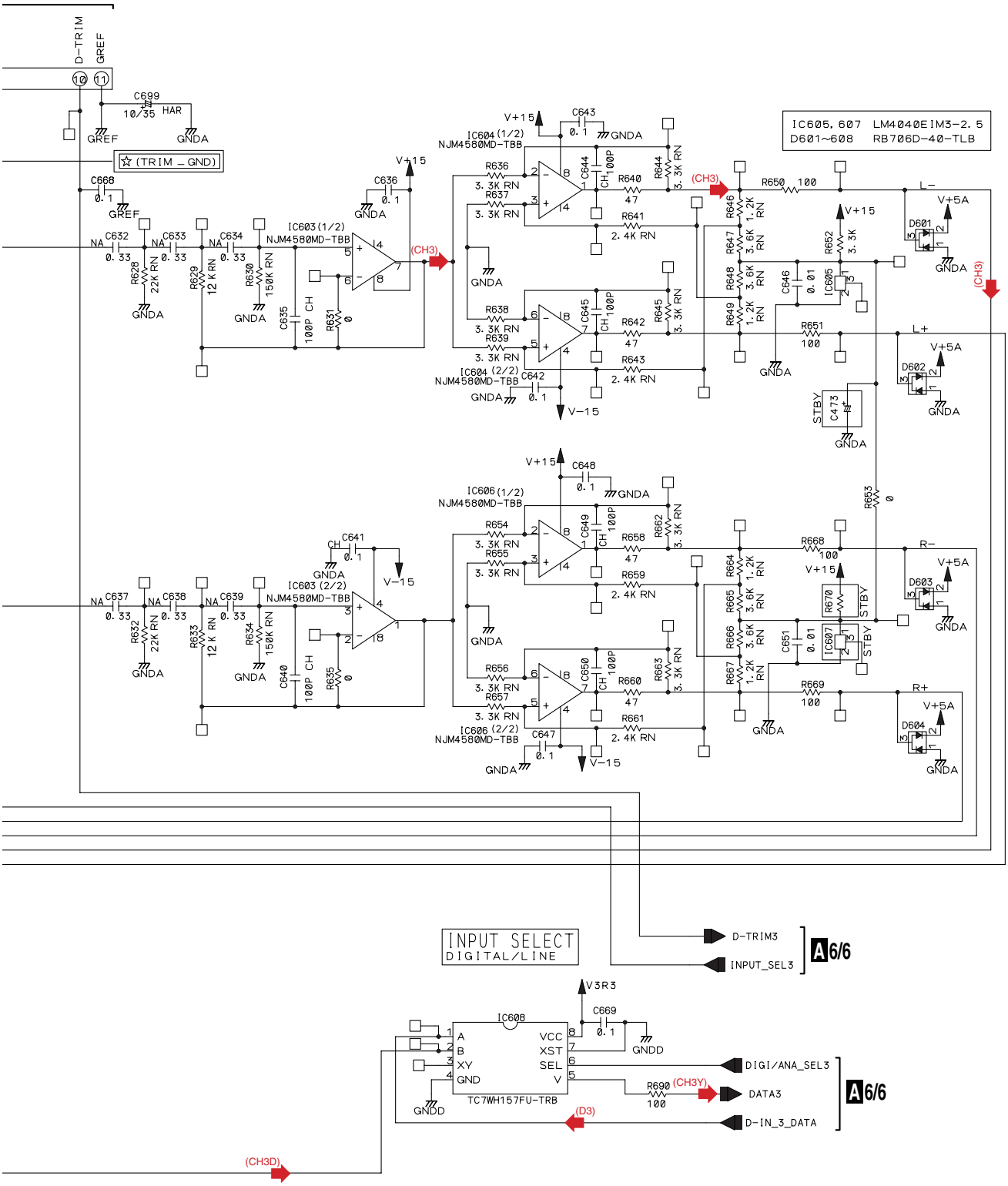

AUDIO SIGNAL ROUTE

(PI) : PHONO INPUT L CH SIGNAL
(LI) : LINE INPUT L CH SIGNAL
(CH3) : CH3 L CH SIGNAL
(D3) : CH3 DIGITAL SIGNAL
(CH3Y) : CH3 Y CH SIGNAL

3.7 INPUT ASSY (4/6)

A 4/6 INPUT ASSY (DWX2535)

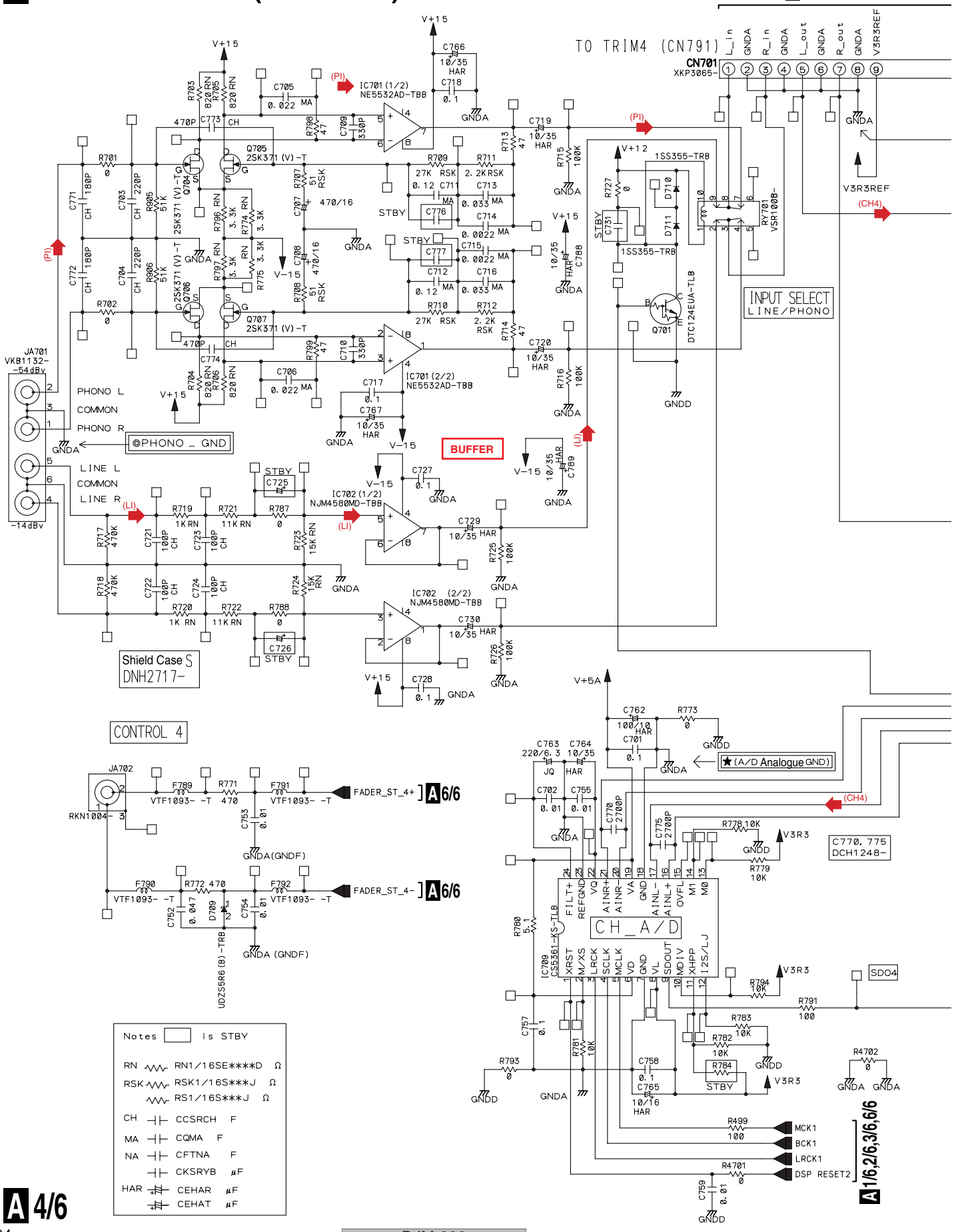

A 4/6

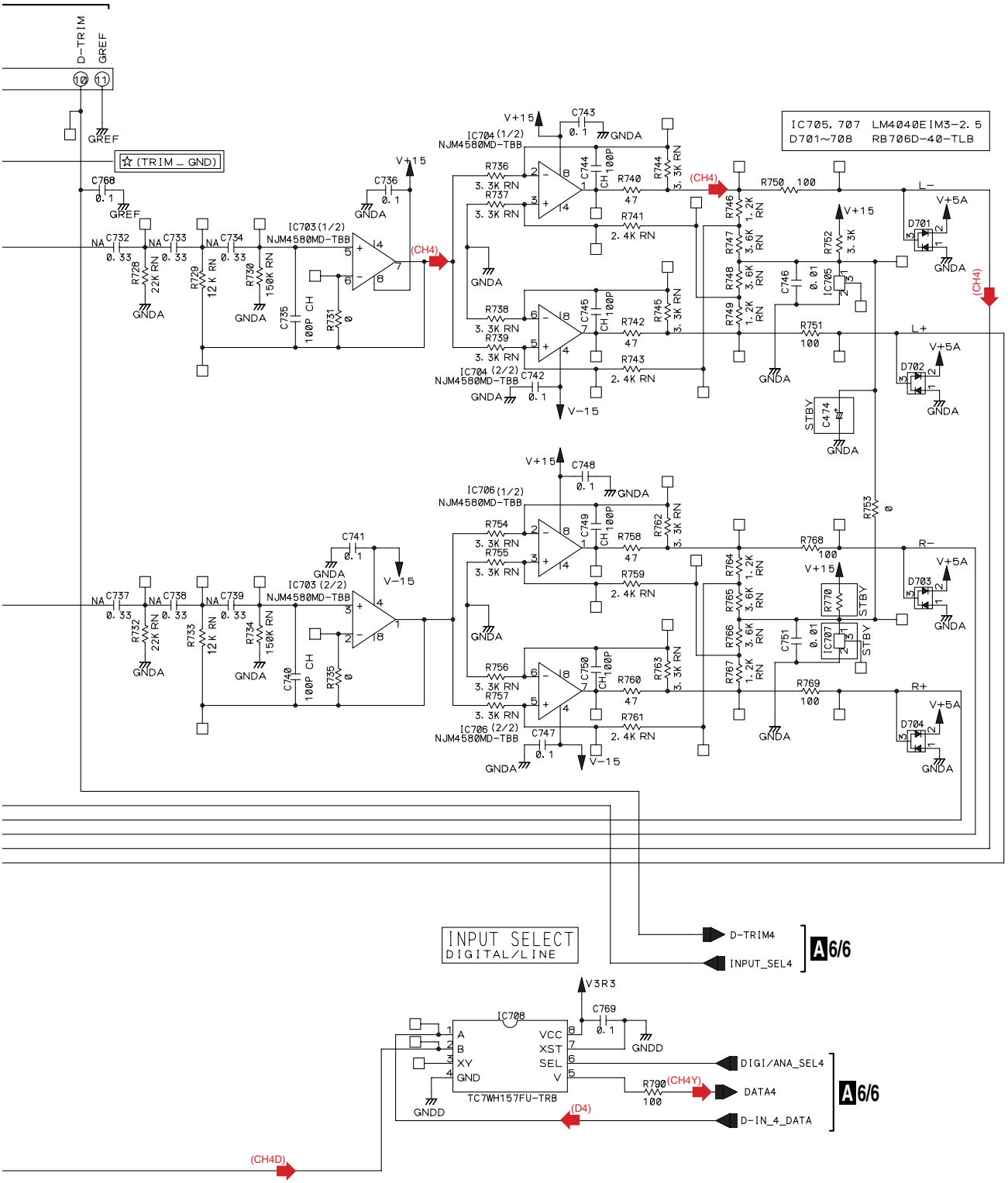

AUDIO SIGNAL ROUTE

(PI) : PHONO INPUT L CH SIGNAL
(LI) : LINE INPUT L CH SIGNAL
(CH4) : CH4 L CH SIGNAL
(D4) : CH4 DIGITAL SIGNAL
(CH4Y) : CH4 Y CH SIGNAL

A 5/6 INPUT ASSY (DWX2535)

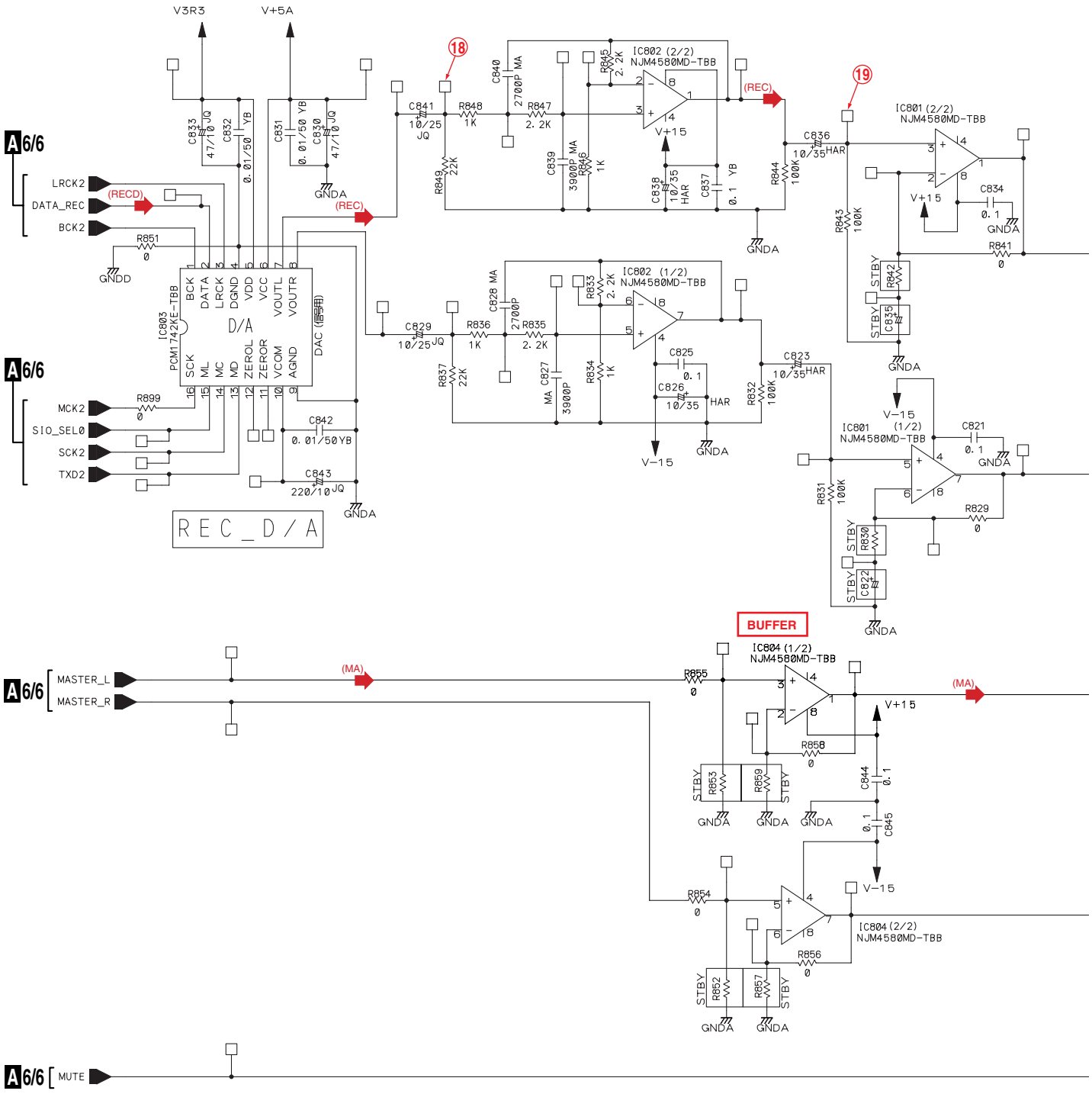

Notes ⬚ is STBY

RN RN1/16SE****D Ω
RS1/16S***J Ω
CH CCSRCH F
MA CQMA F
CKSRYB µF
HAR CEHAR µF
JQ CEJQ µF

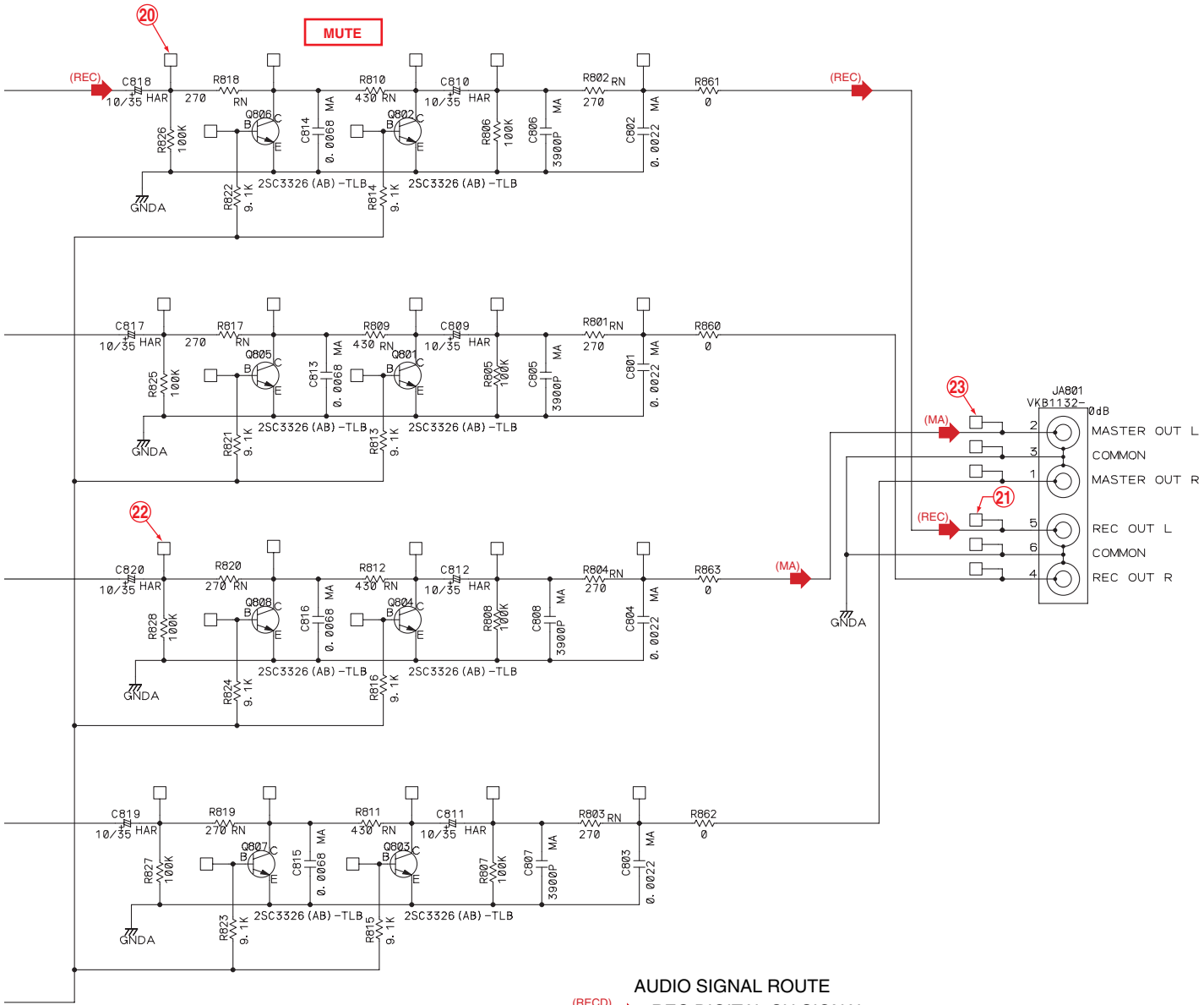

AUDIO SIGNAL ROUTE

(RECD) : REC DIGITAL CH SIGNAL
(REC) : REC L CH SIGNAL
(MA) : MASTER L CH SIGNAL

A 6/6 INPUT ASSY (DWX2535)

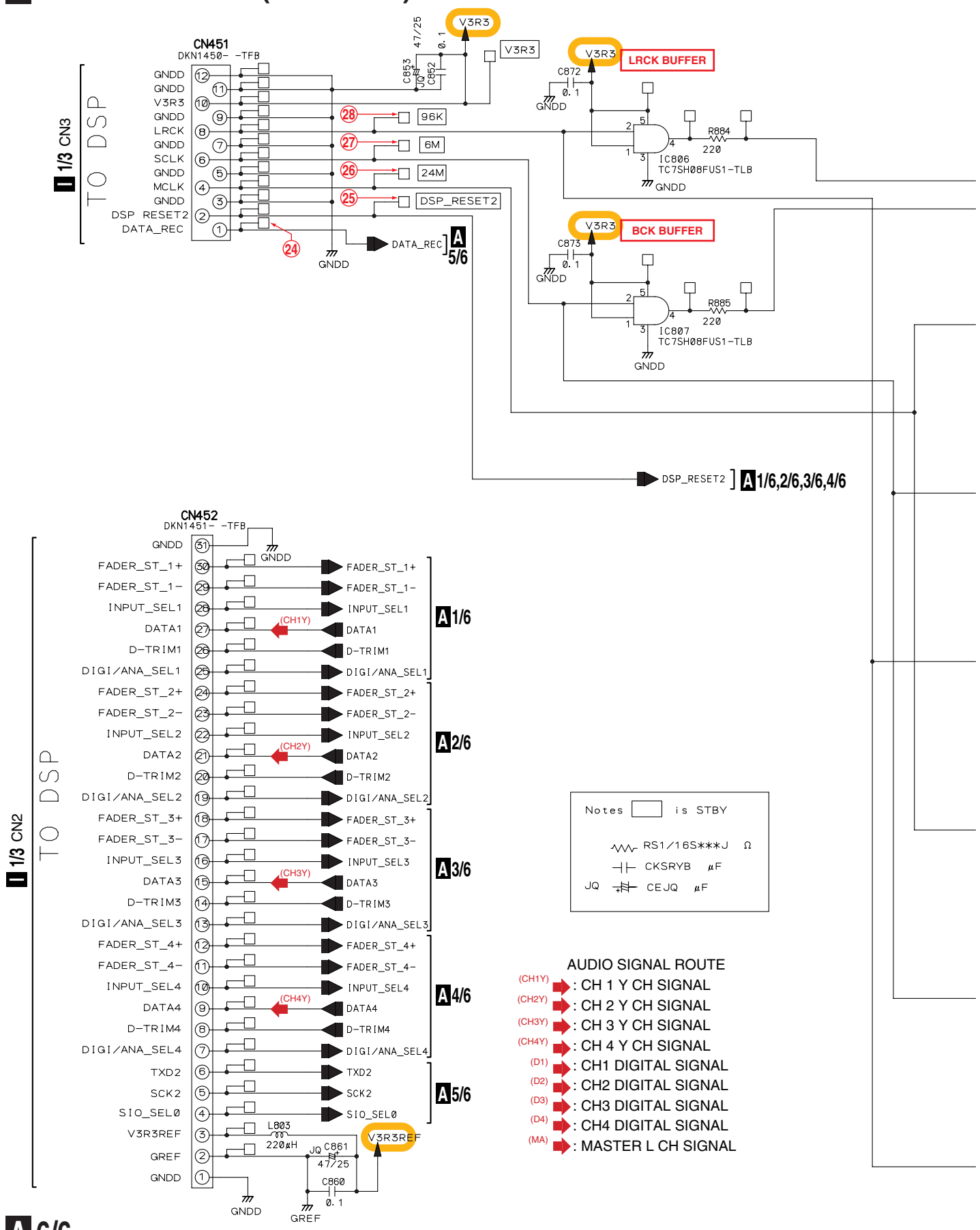

A 6/6

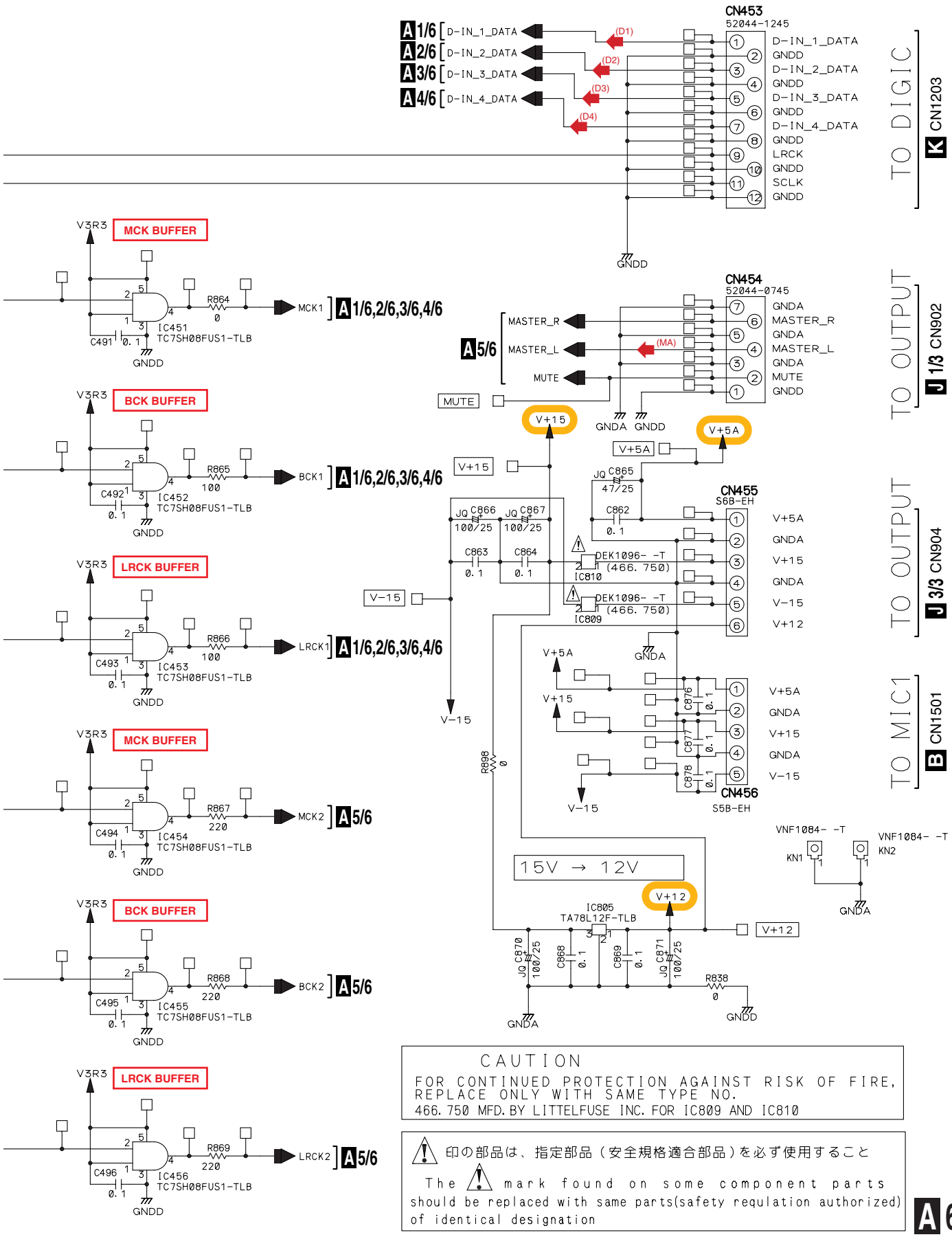

CAUTION

FOR CONTINUED PROTECTION AGAINST RISK OF FIRE, REPLACE ONLY WITH SAME TYPE NO.
466.750 MFD. BY LITTELFUSE INC. FOR IC809 AND IC810

⚠ 印の部品は、指定部品（安全規格適合部品）を必ず使用すること

The ⚠ mark found on some component parts should be replaced with same parts(safety requlation authorized) of identical designation

A 6/6

3.10 MIC 1 ASSY

B MIC1 (DWX2542)

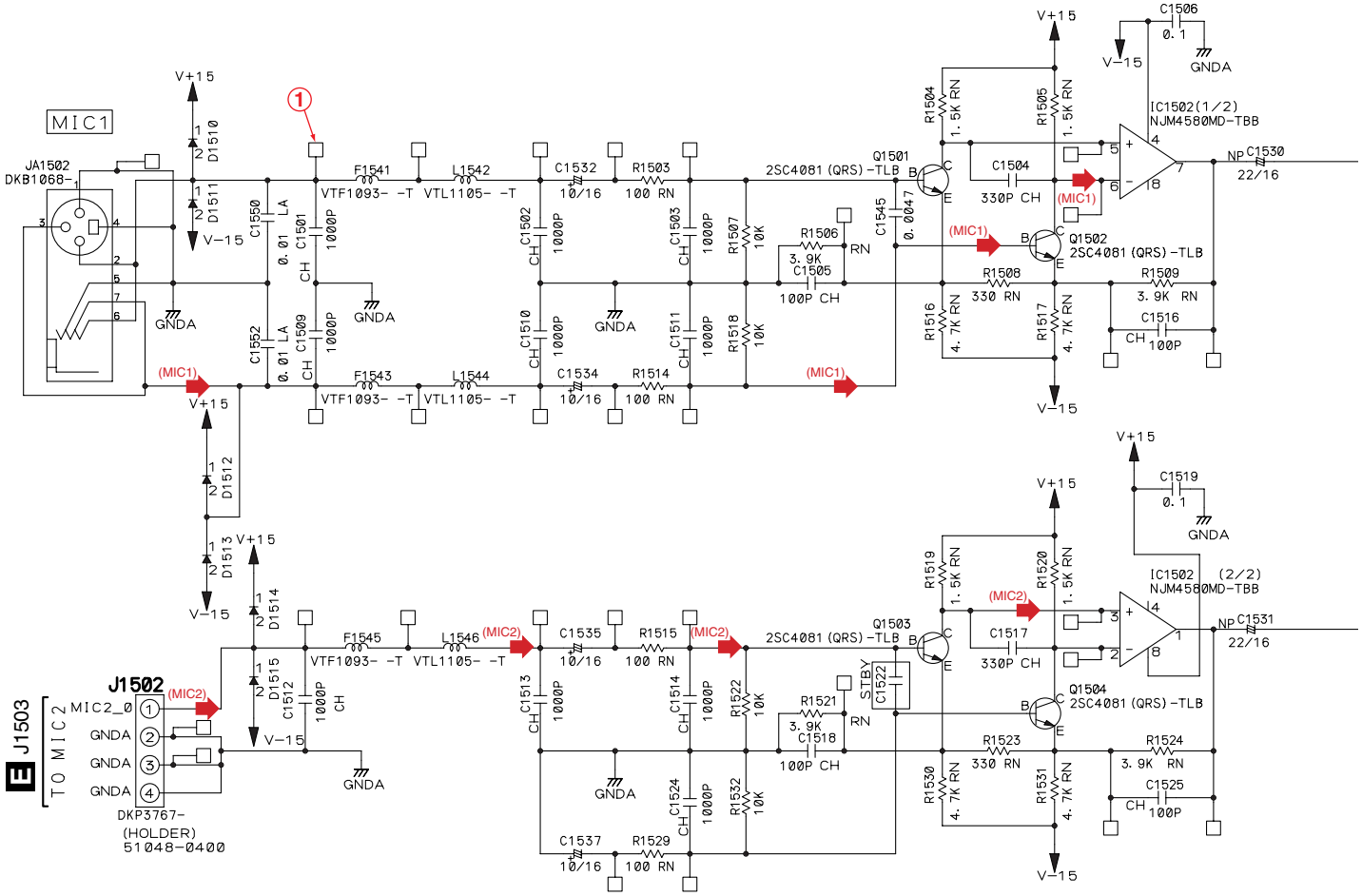

Notes ☐ is STBY

VM	RD1/2VM***	Ω	
RN	RN1/16SE****D	Ω	
	RS1/16S***J	Ω	
CH	CCSRCH	F	
LA	CFTLA	F	
	CKSRYB	μF	
NP	CEALNP	μF	
	CEAL	μF	

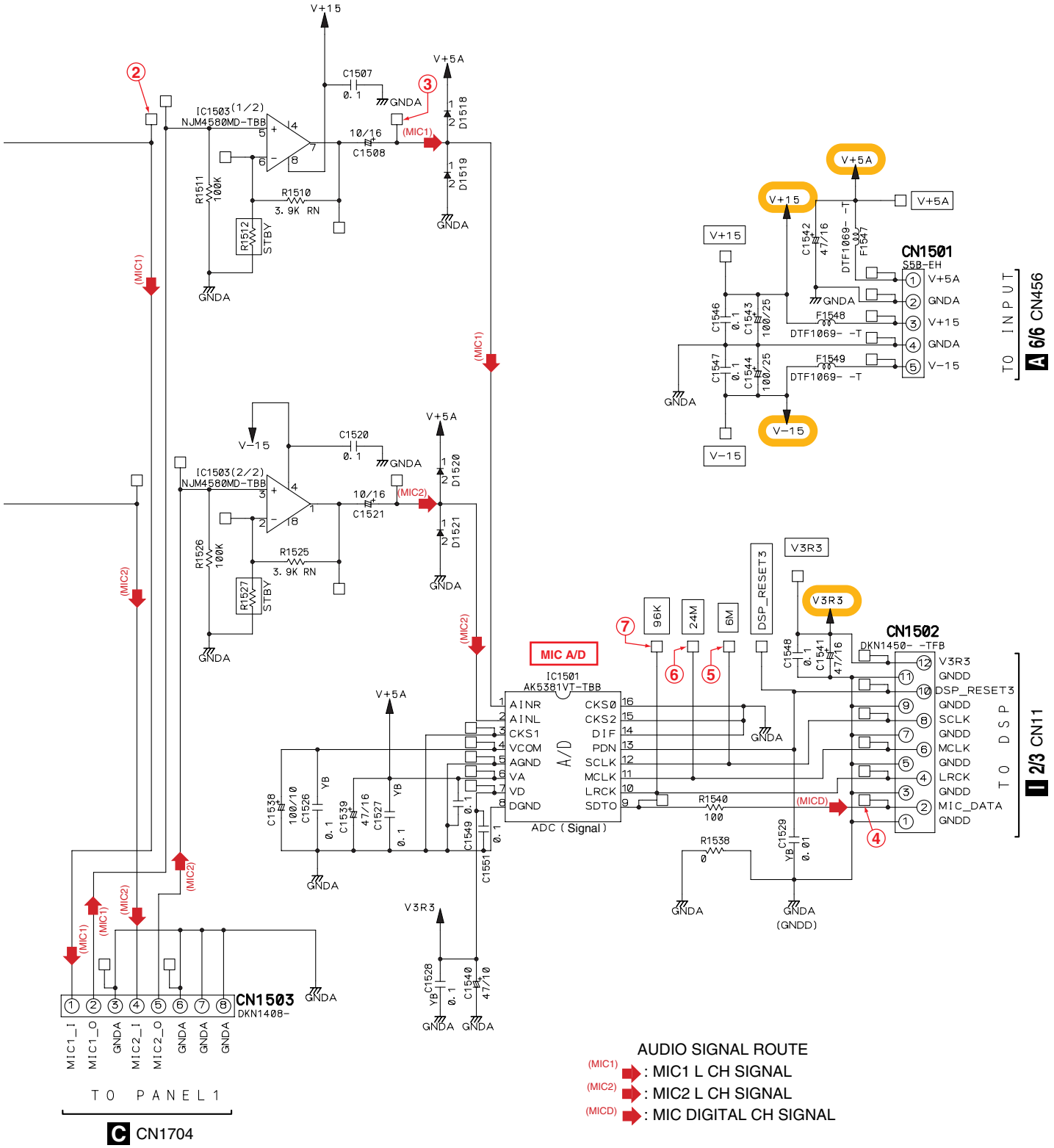
IC1503(1/2)
NJM4580MD-TBB
IC1503(2/2)
NJM4580MD-TBB
C1507
C1508
C1520
C1521
R1511
R1510
R1512
R1526
R1525
R1527
D1518
D1519
D1520
D1521
V+15
V+5A
V-15
GNDA
(MIC1)
(MIC2)
MIC A/D
IC1501
AK5381VT-TBB
AINR
AINL
CKS1
VCOM
AGND
VA
VD
DGND
CKS0
CKS2
DIF
PDN
SCLK
MCLK
LRCK
SDTO
A/D
ADC (Signal)
96K
24M
6M
DSP_RESET3
V3R3
R1540
R1538
(MICD)
CN1502
DKN1450- -TFB
V3R3
GNDD
DSP_RESET3
SCLK
MCLK
LRCK
MIC_DATA
TO DSP
I 2/3 CN11
CN1501
S5B-EH
V+5A
GNDA
V+15
GNDA
V-15
DTF1069- -T
TO INPUT
A 6/6 CN456
CN1503
DKN1408-
M1C1_I
M1C1_O
M1C2_I
M1C2_O
TO PANEL1
C CN1704
AUDIO SIGNAL ROUTE
(MIC1) : MIC1 L CH SIGNAL
(MIC2) : MIC2 L CH SIGNAL
(MICD) : MIC DIGITAL CH SIGNAL

3.11 PANEL 1 ASSY

C PANEL1 ASSY (DWX2552)(1/2)

A

Large size SCH diagram

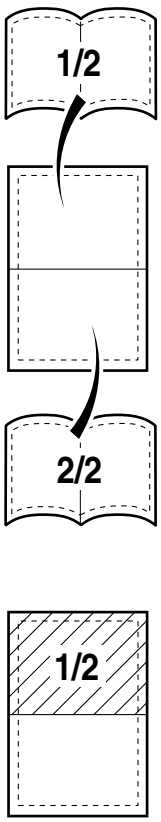

B

C

D

E

F

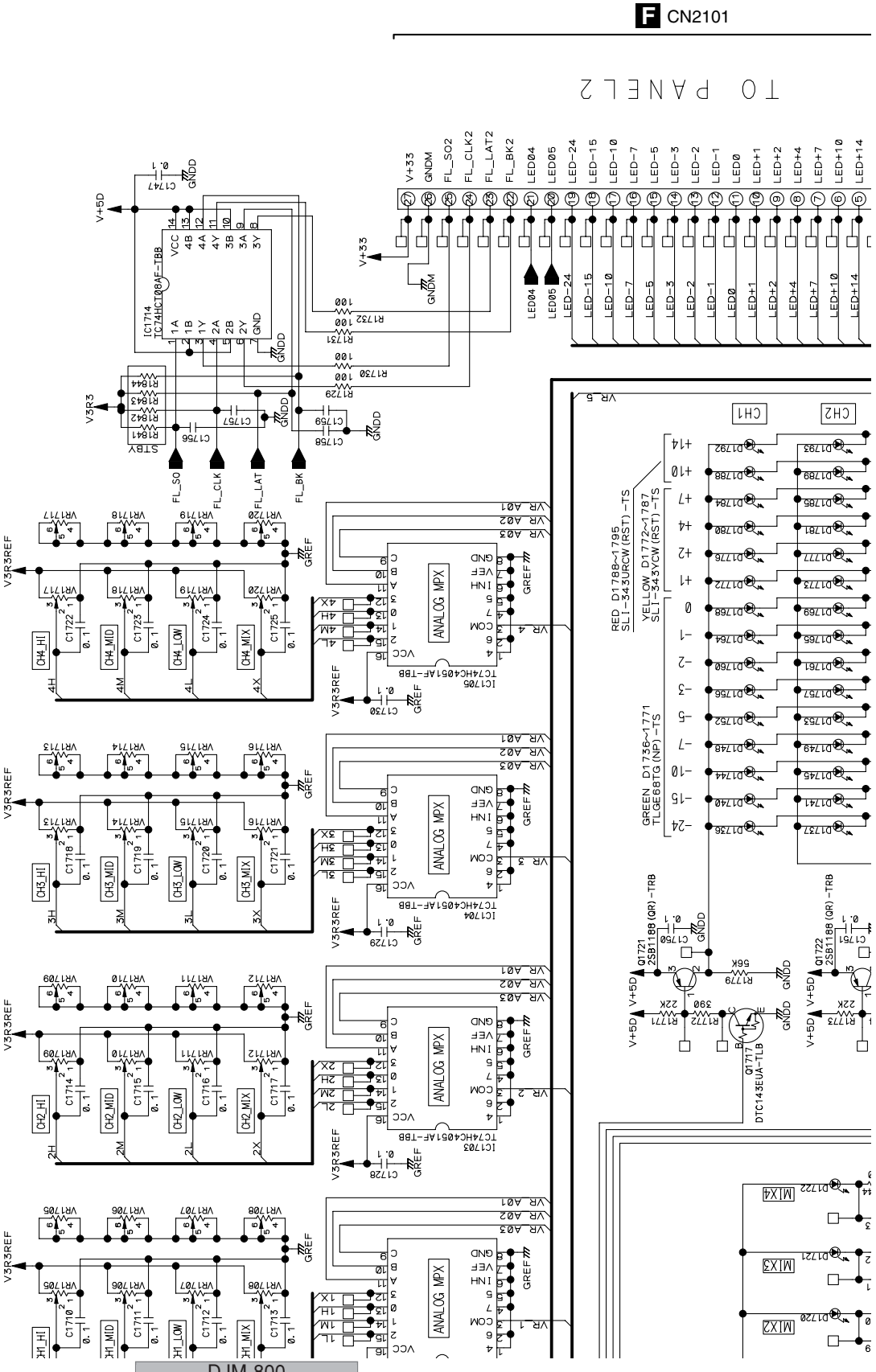

	CURVE CHRST	CLICK Exist/Noexist
DCS1072	A Curve	No exist
DCS1095	Special Curve	Exist
DCS1065	B Curve	Exist
DCS1086	B Curve	No exist

F CN2102

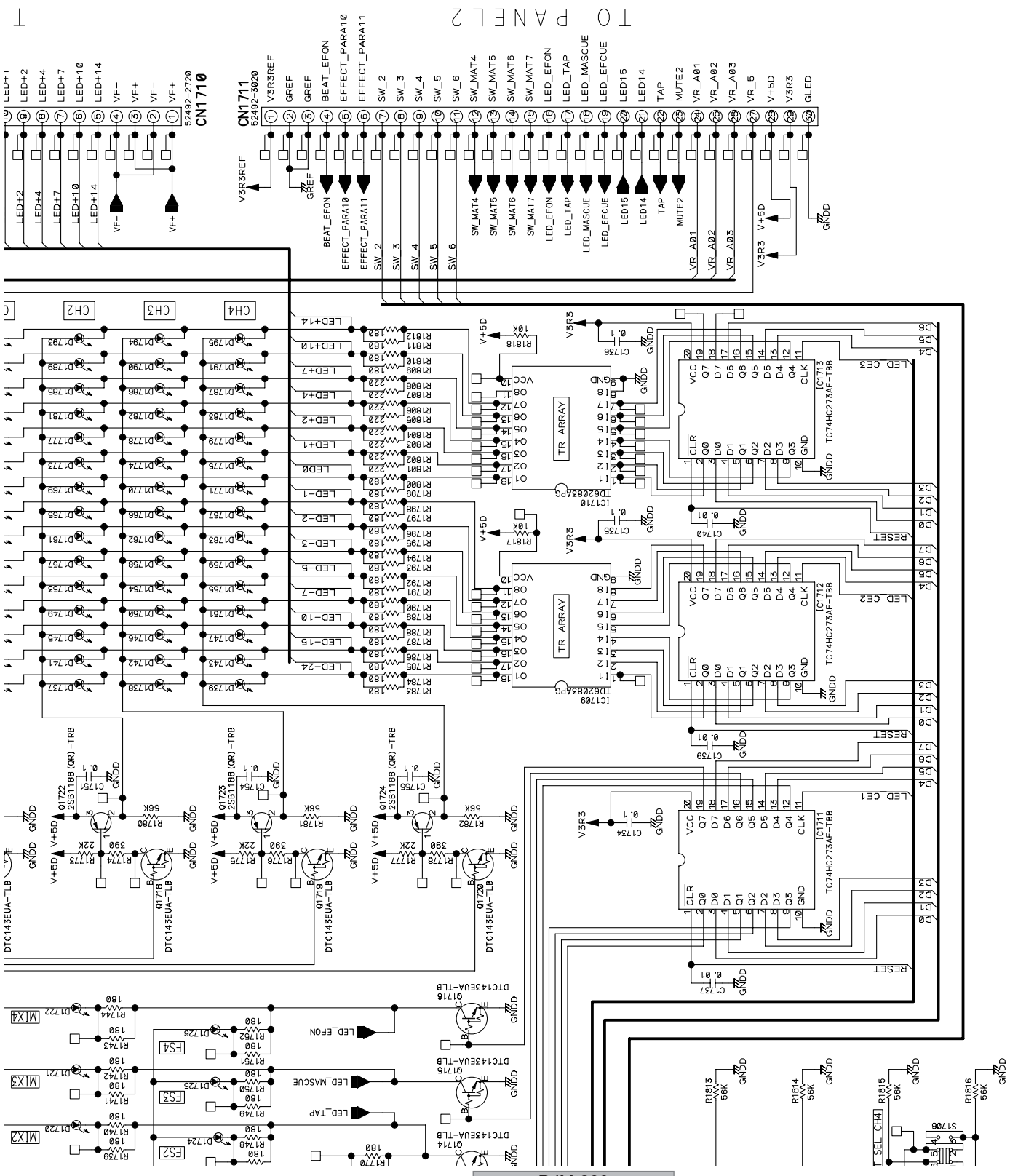

C
PANEL1 ASSY (DWX2552)(2/2)

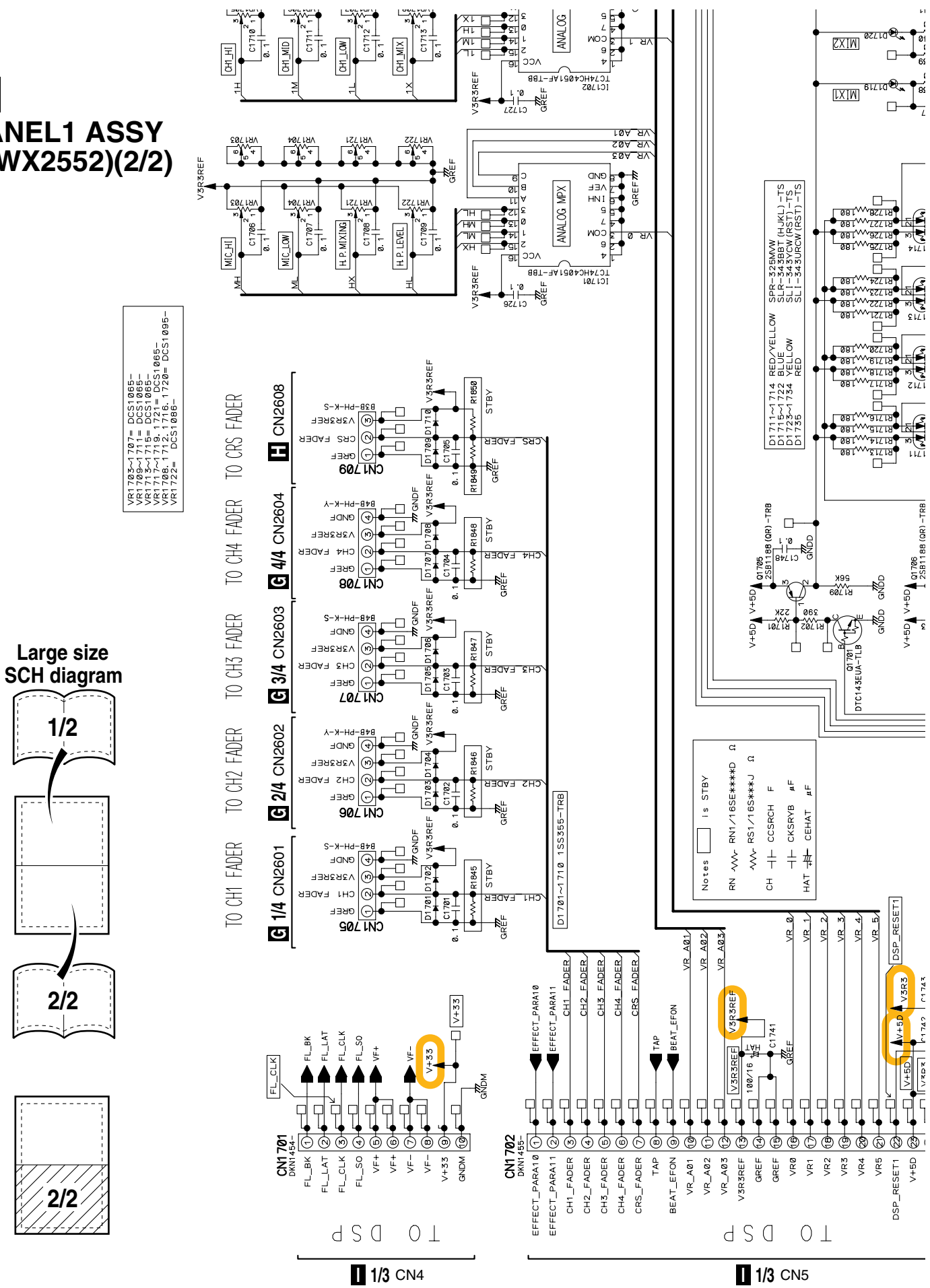

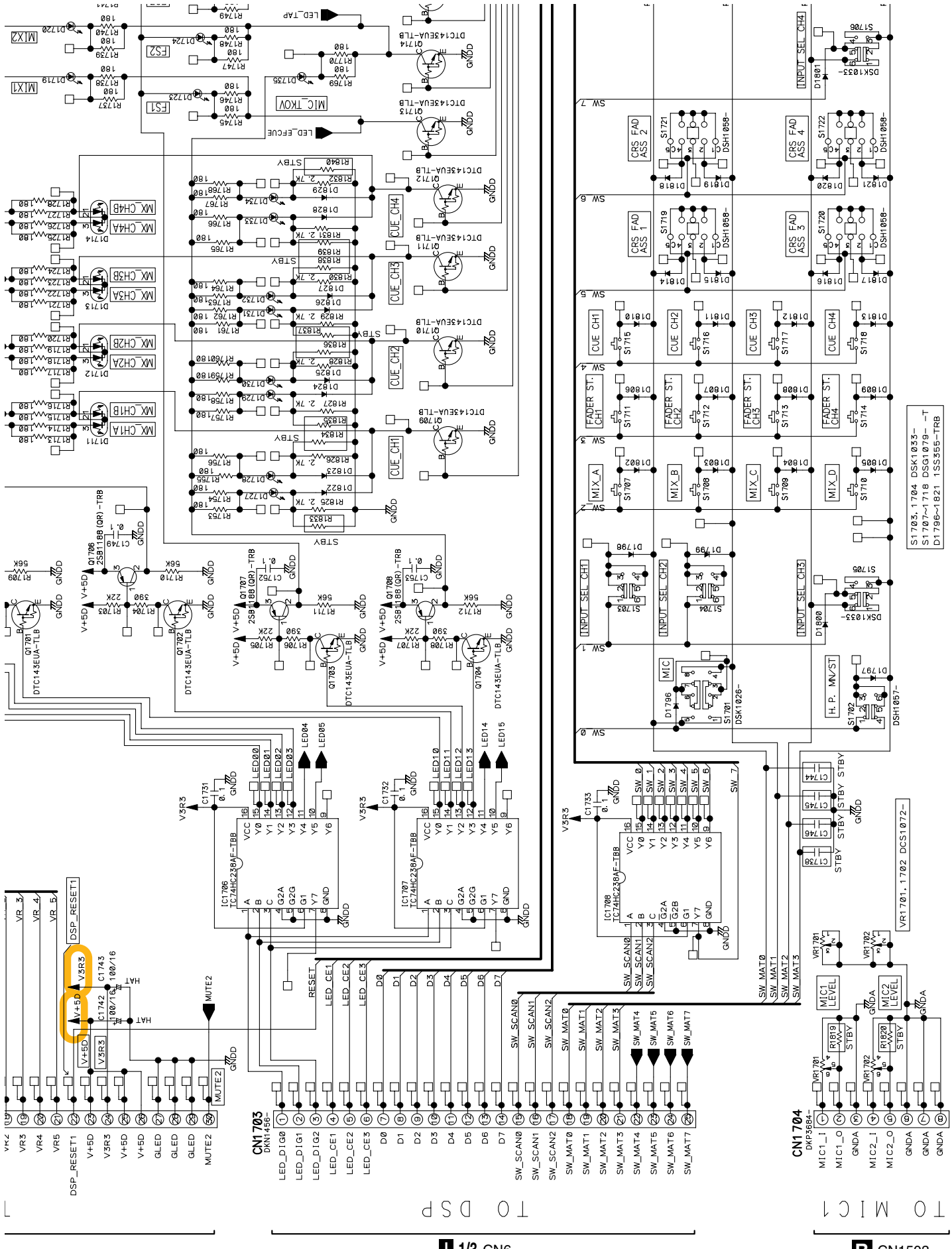
TO DSP
TO MIC1
1/3 CN6
B CN1503
CN1703
CN1704
DJM-800
35

3.12 TRIM1 to TRIM 4 ASSYS

D 4/4 TRIM1 ASSY (DWX2548)

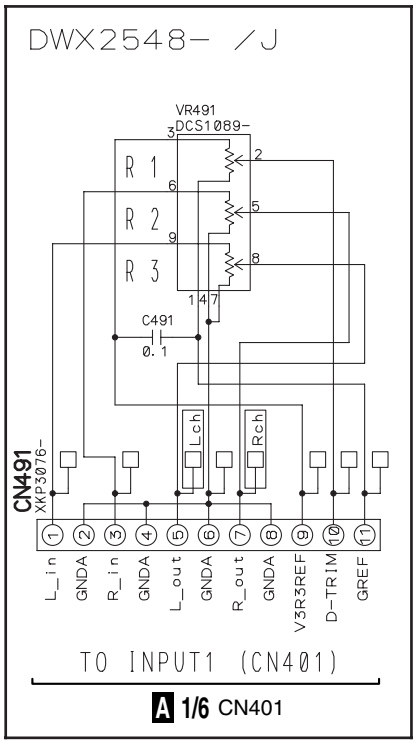

D 3/4 TRIM2 ASSY (DWX2549)

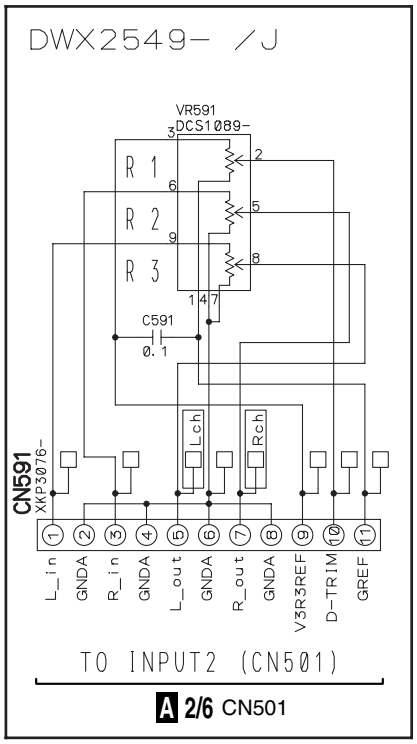

D 2/4 TRIM3 ASSY (DWX2550)

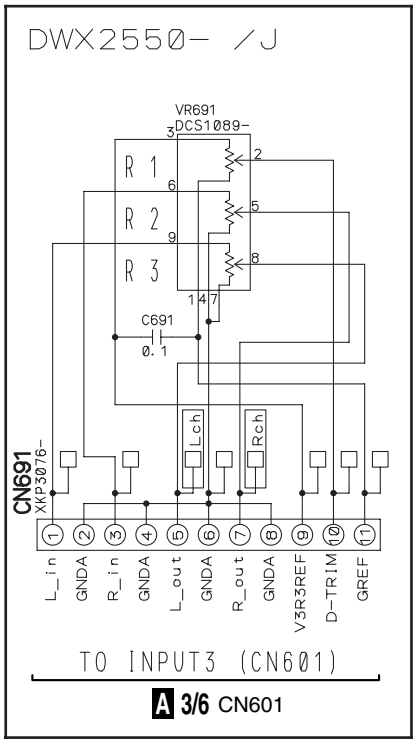

CKSRYB μF

D 1/4 TRIM4 ASSY (DWX2551)

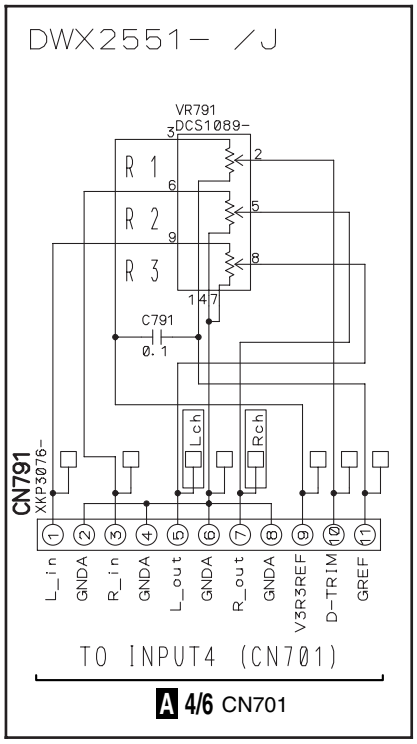

D 1/4–4/4

D 1/4–4/4

3.13 MAIC 2 ASSY

E MIC2 (DWX2543)

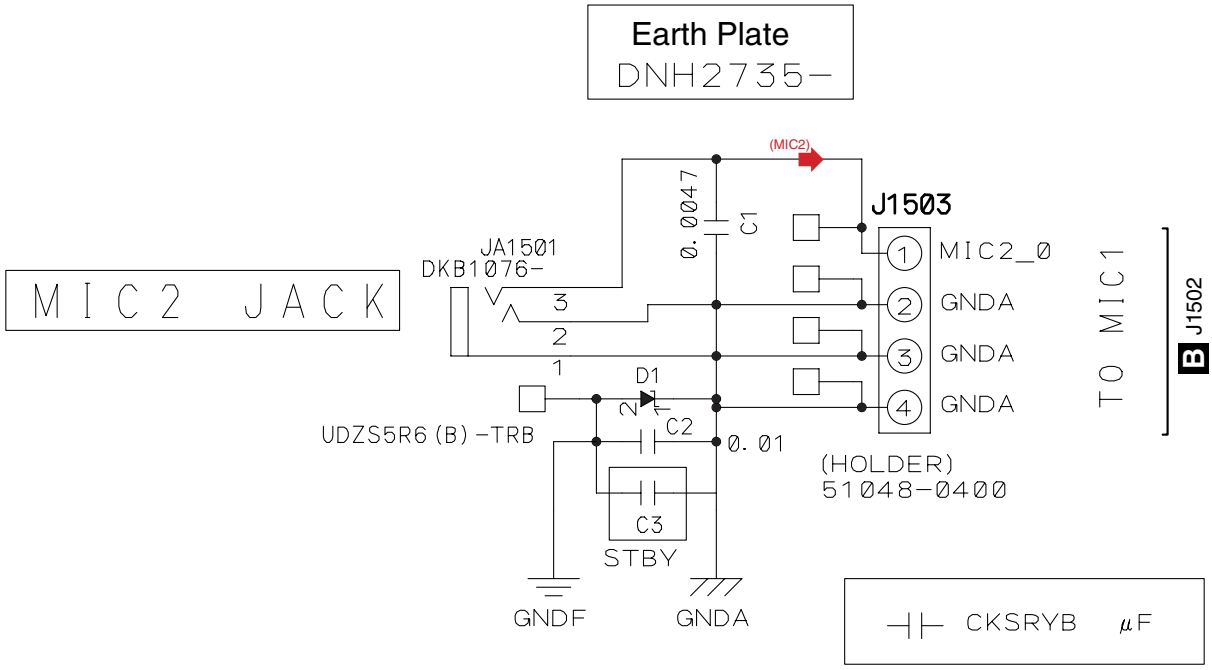

AUDIO SIGNAL ROUTE

(MIC2) : MIC2 L CH SIGNAL

F PANEL2 ASSY (DWX2554)

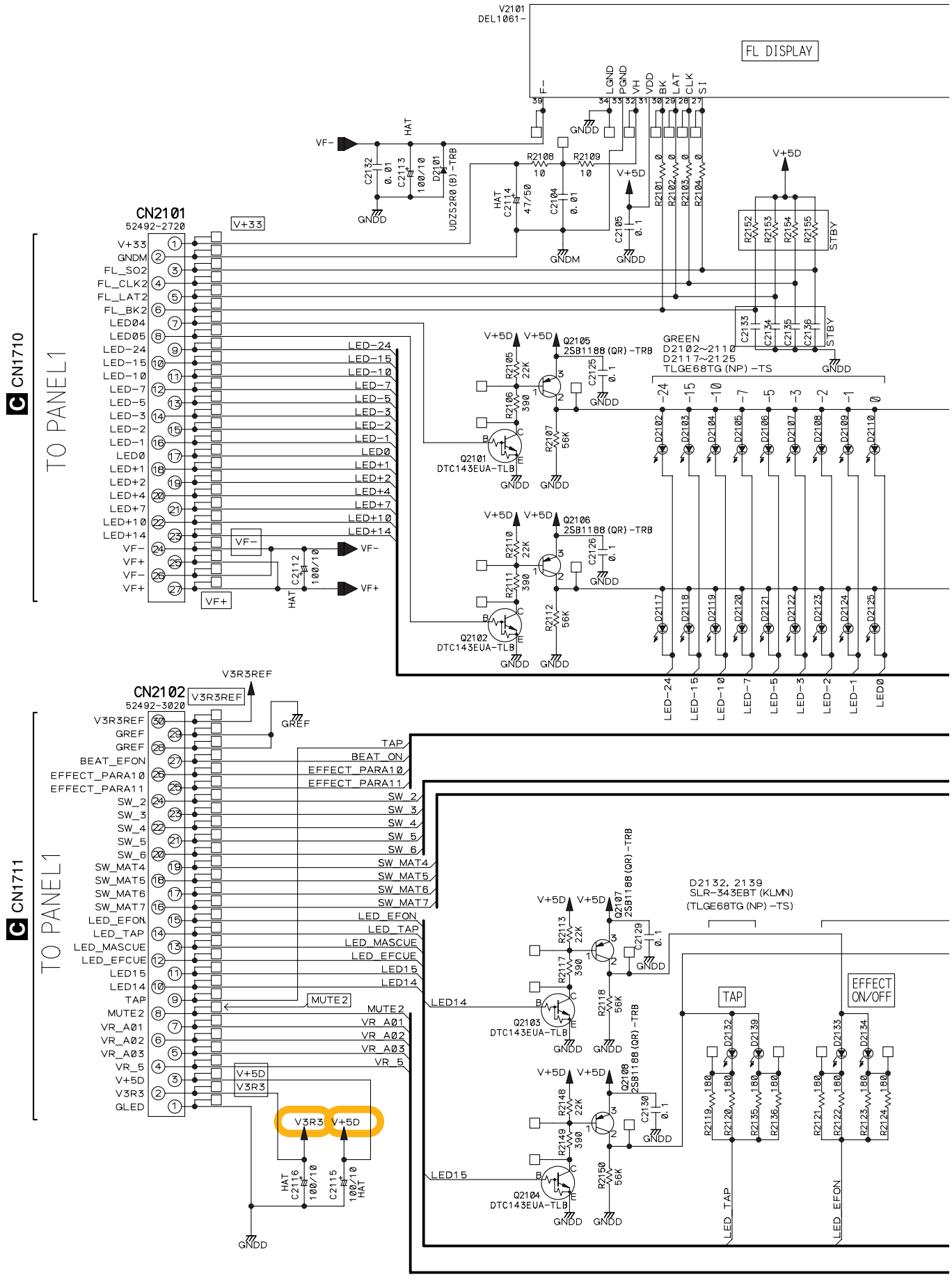

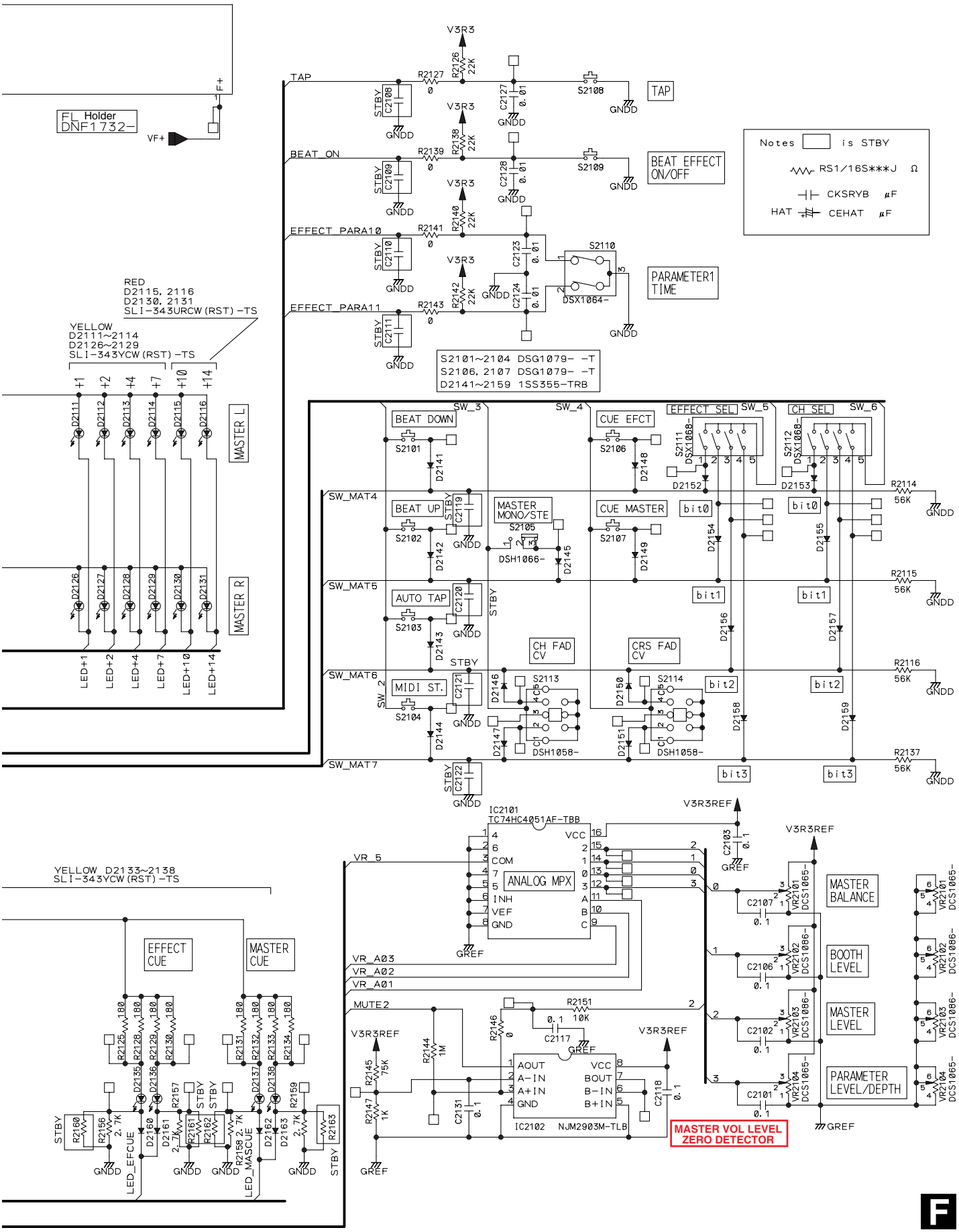

FL Holder
DNF1732-
VF+
F+
TAP
BEAT ON
EFFECT PARA10
EFFECT PARA11
V3R3
R2126 22K
R2127 0
R2138 22K
R2139 0
R2140 22K
R2141 0
R2142 22K
R2143 0
C2108
C2109
C2110
C2111
C2127 0.01
C2128 0.01
C2123 0.01
C2124 0.01
S2108
S2109
S2110
DSX1064-
TAP
BEAT EFFECT ON/OFF
PARAMETER1 TIME
GNDD
Notes is STBY
RS1/16S***J Ω
CKSRYB μF
HAT CEHAT μF
RED
D2115, 2116
D2130, 2131
SLI-343URCW(RST)-TS
YELLOW
D2111~2114
D2126~2129
SLI-343YCW(RST)-TS
MASTER L
MASTER R
LED+1
LED+2
LED+4
LED+7
LED+10
LED+14
S2101~2104 DSG1079- -T
S2106, 2107 DSG1079- -T
D2141~2159 1SS355-TRB
SW_3
SW_4
SW_5
SW_6
BEAT DOWN
CUE EFCT
EFFECT SEL
CH SEL
S2101
S2106
S2111 DSX1068-
S2112 DSX1068-
D2152
D2153
SW_MAT4
BEAT UP
MASTER MONO/STE
CUE MASTER
S2102
S2105
S2107
DSH1066-
bit0
R2114 56K
SW_MAT5
AUTO TAP
bit1
R2115 56K
CH FAD CV
CRS FAD CV
SW_MAT6
MIDI ST.
bit2
R2116 56K
S2104
S2113
S2114
DSH1058-
SW_MAT7
bit3
R2137 56K
STBY
IC2101
TC74HC4051AF-TBB
ANALOG MPX
VCC
COM
INH
VEF
GND
VR_5
VR_A03
VR_A02
VR_A01
MUTE2
V3R3REF
GREF
C2103 0.1
MASTER BALANCE
BOOTH LEVEL
MASTER LEVEL
PARAMETER LEVEL/DEPTH
VR2101 DCS1065-
VR2102 DCS1086-
VR2103 DCS1086-
VR2104 DCS1065-
C2107 0.1
C2106 0.1
C2102 0.1
C2101 0.1
R2151 10K
C2117 0.1
R2146 0
R2144 1M
R2145 75K
R2147 1K
C2131 0.1
C2118 0.1
AOUT
A-IN
A+IN
GND
VCC
BOUT
B-IN
B+IN
IC2102 NJM2903M-TLB
MASTER VOL LEVEL ZERO DETECTOR
YELLOW D2133~2138
SLI-343YCW(RST)-TS
EFFECT CUE
MASTER CUE
R2125 180
R2128 180
R2129 180
R2130 180
R2131 180
R2132 180
R2133 180
R2134 180
D2135
D2136
D2137
D2138
R2157
R2159
R2160
R2156 2.7K
D2160
D2161 2.7K
R2161
R2162
R2158 2.7K
D2162
D2163 2.7K
R2163
LED_EFCUE
LED_MASCUE

3.15 CHFD 1 to CHFD 4 and CRSFD ASSYS

G 1/4 CHFD1(DWX2537)

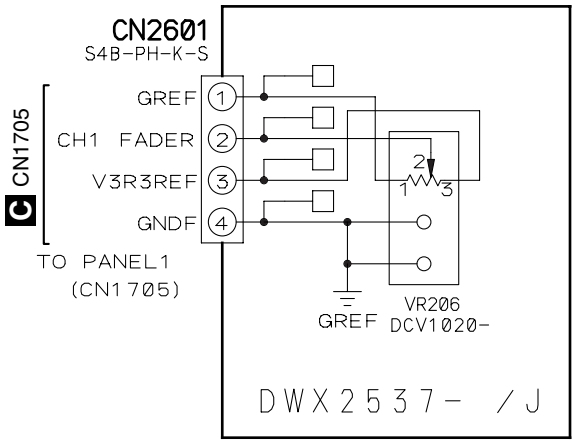

G 3/4 CHFD3(DWX2539)

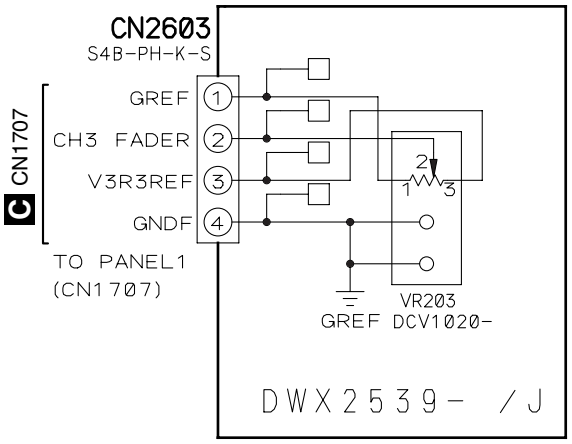

G 2/4 CHFD2(DWX2538)

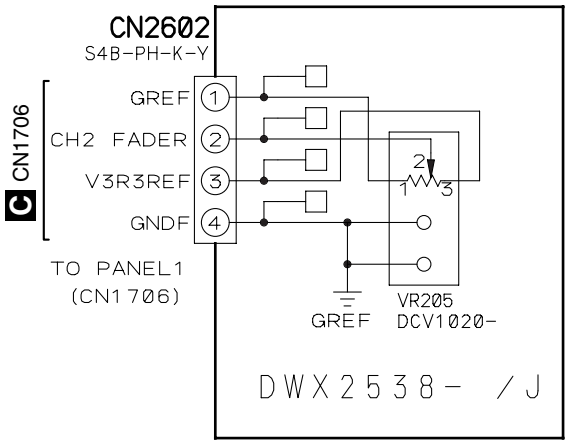

G 4/4 CHFD4(DWX2540)

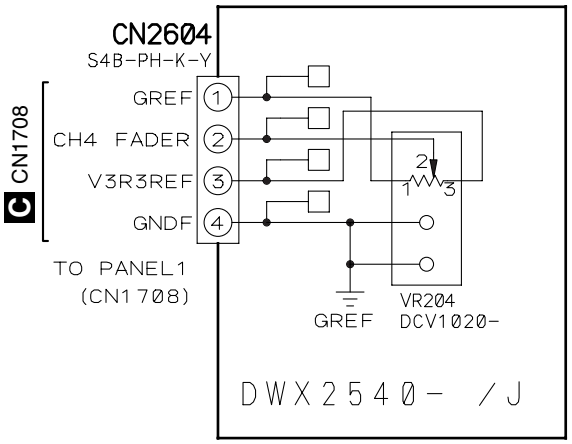

H CRSFD(DWX2541)

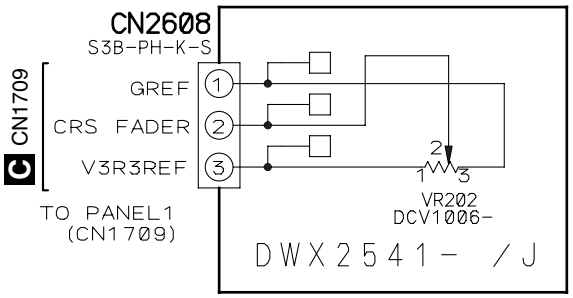

G 1/4–4/4 H

L DIGIA ASSY (DWX2555)

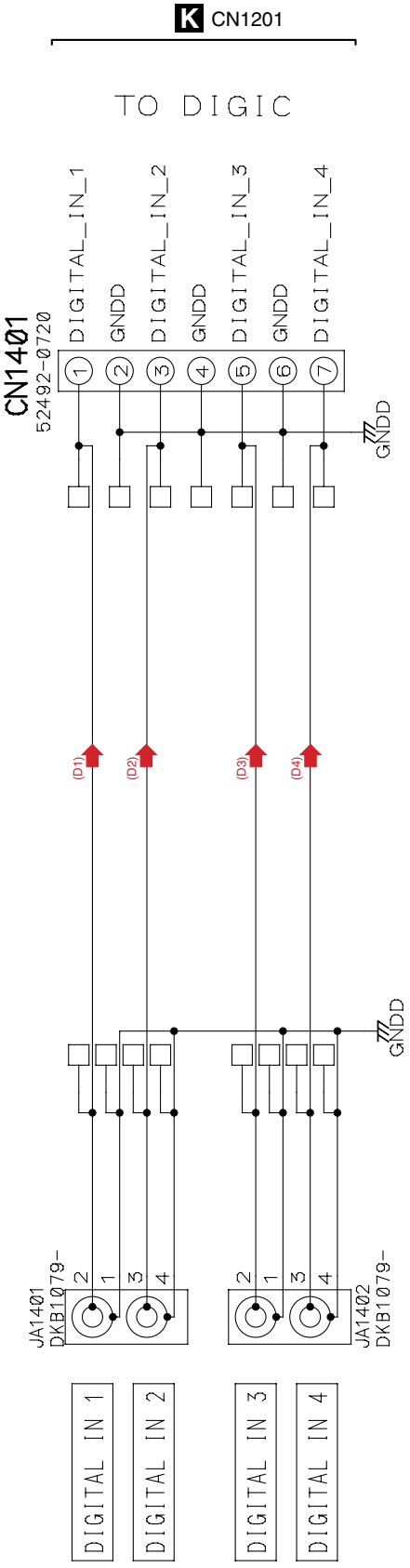

AUDIO SIGNAL ROUTE
(D1) : CH1 DIGITAL SIGNAL
(D2) : CH2 DIGITAL SIGNAL
(D3) : CH3 DIGITAL SIGNAL
(D5) : CH4 DIGITAL SIGNAL

3.17 DSP ASSY (1/3)

1/3 DSP ASSY (DWX2534)(1/2)

A

B

C

D

E

F

Large size SCH diagram

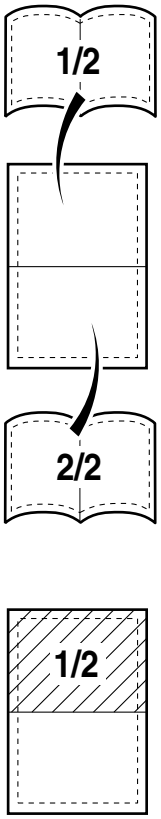

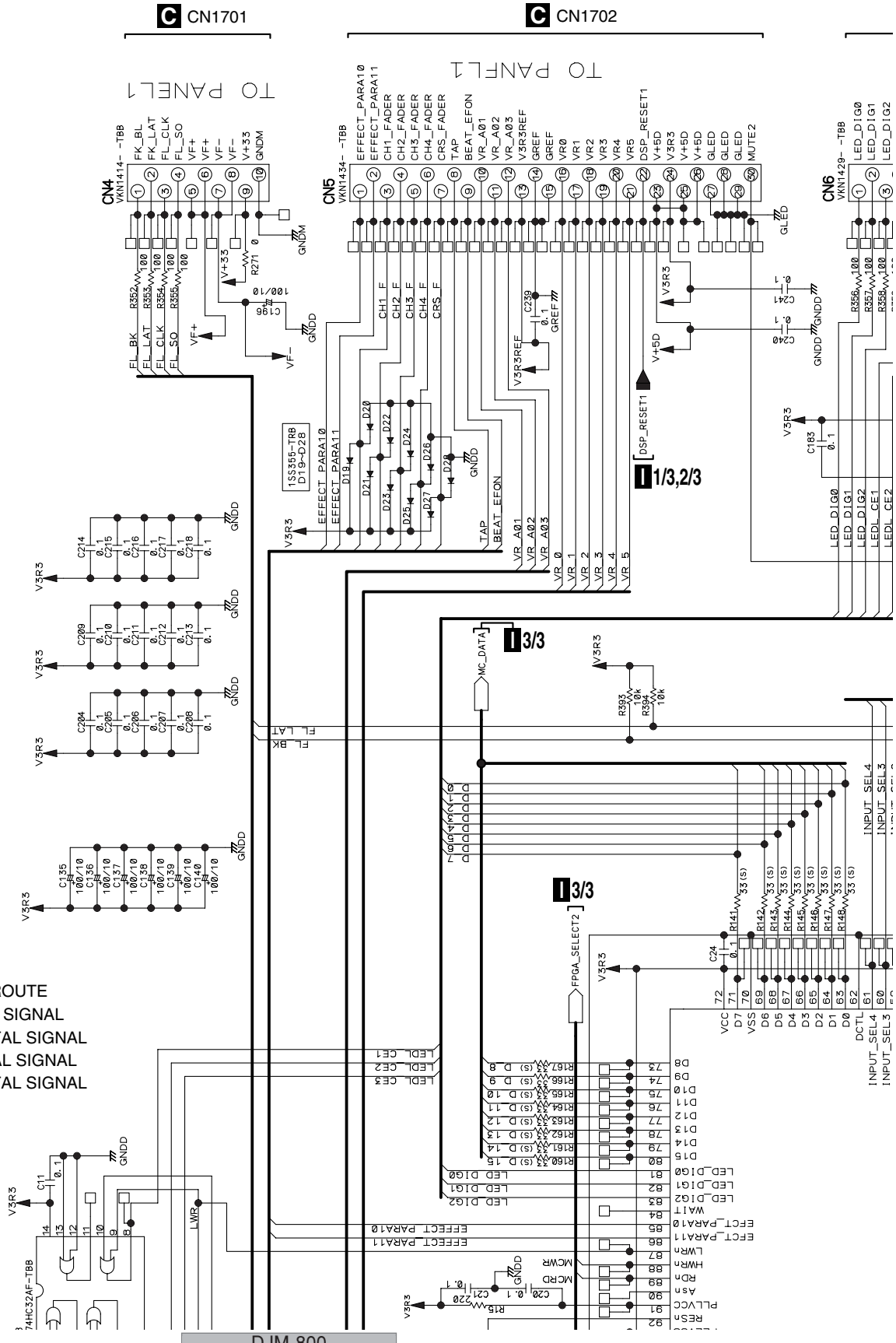

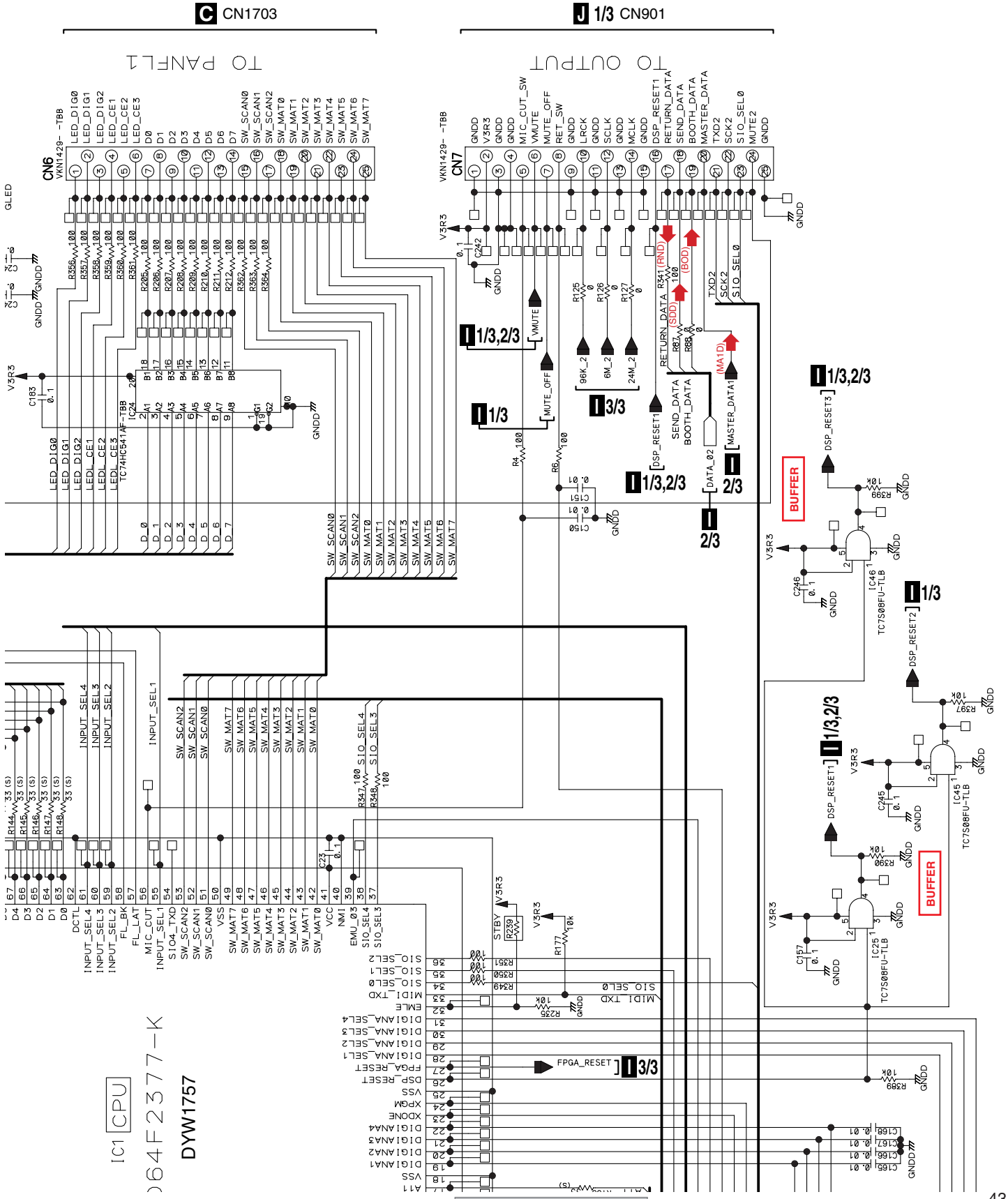
C CN1703
J 1/3 CN901
TO PANEL1
TO OUTPUT
CN6
CN7
VKN1429- -TBB
IC24
TC74HC541AF-TBB
IC1 CPU
DYW1757
BUFFER
BUFFER
IC46
TC7S08FU-TLB
IC45
TC7S08FU-TLB
IC25
TC7S08FU-TLB
FPGA_RESET
I 1/3,2/3
I 1/3
I 3/3
I 2/3
I 1/3,2/3
I 2/3
I 1/3,2/3
I 1/3
I 1/3,2/3
I 3/3

1/3
DSP ASSY (DWX2534)(2/2)

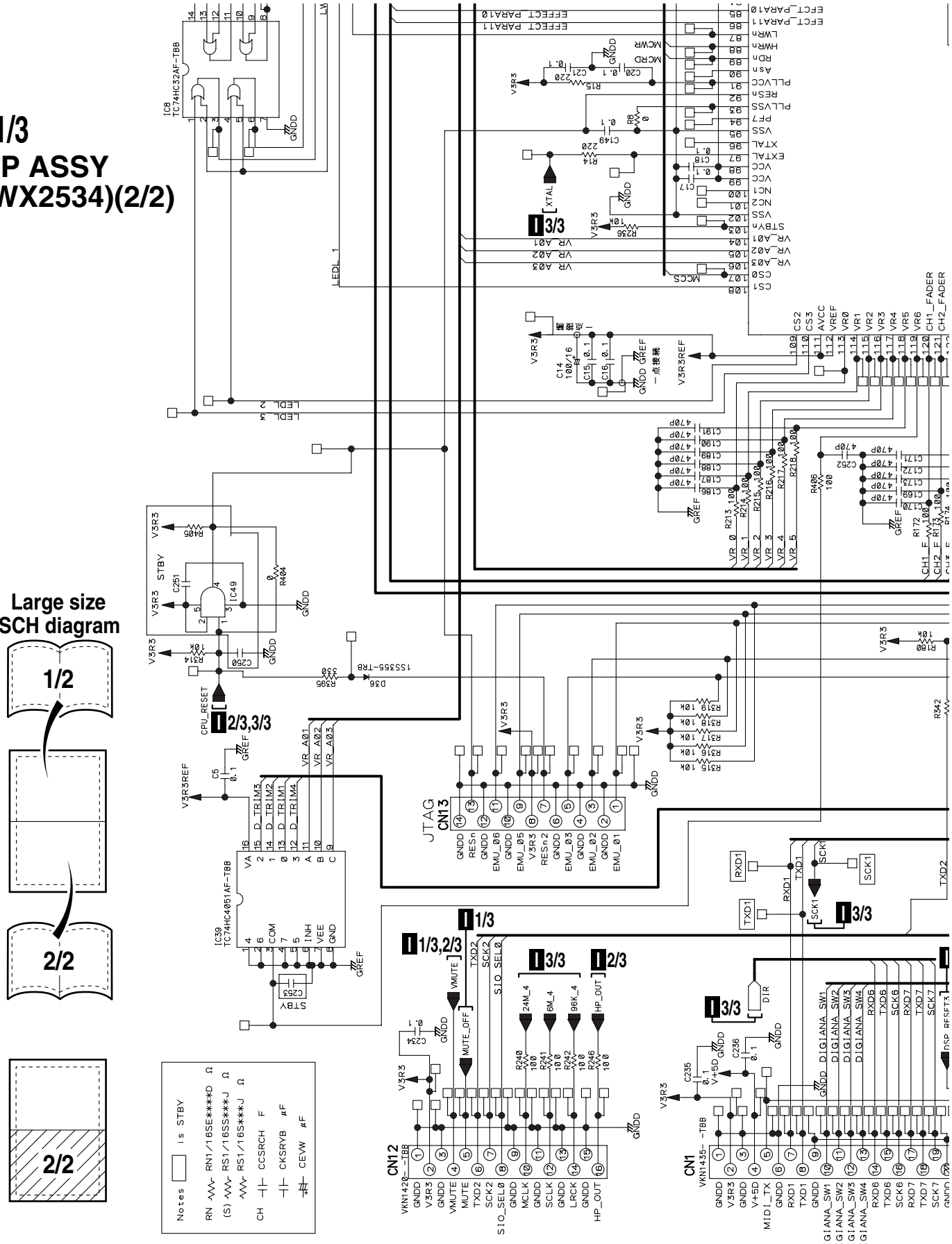

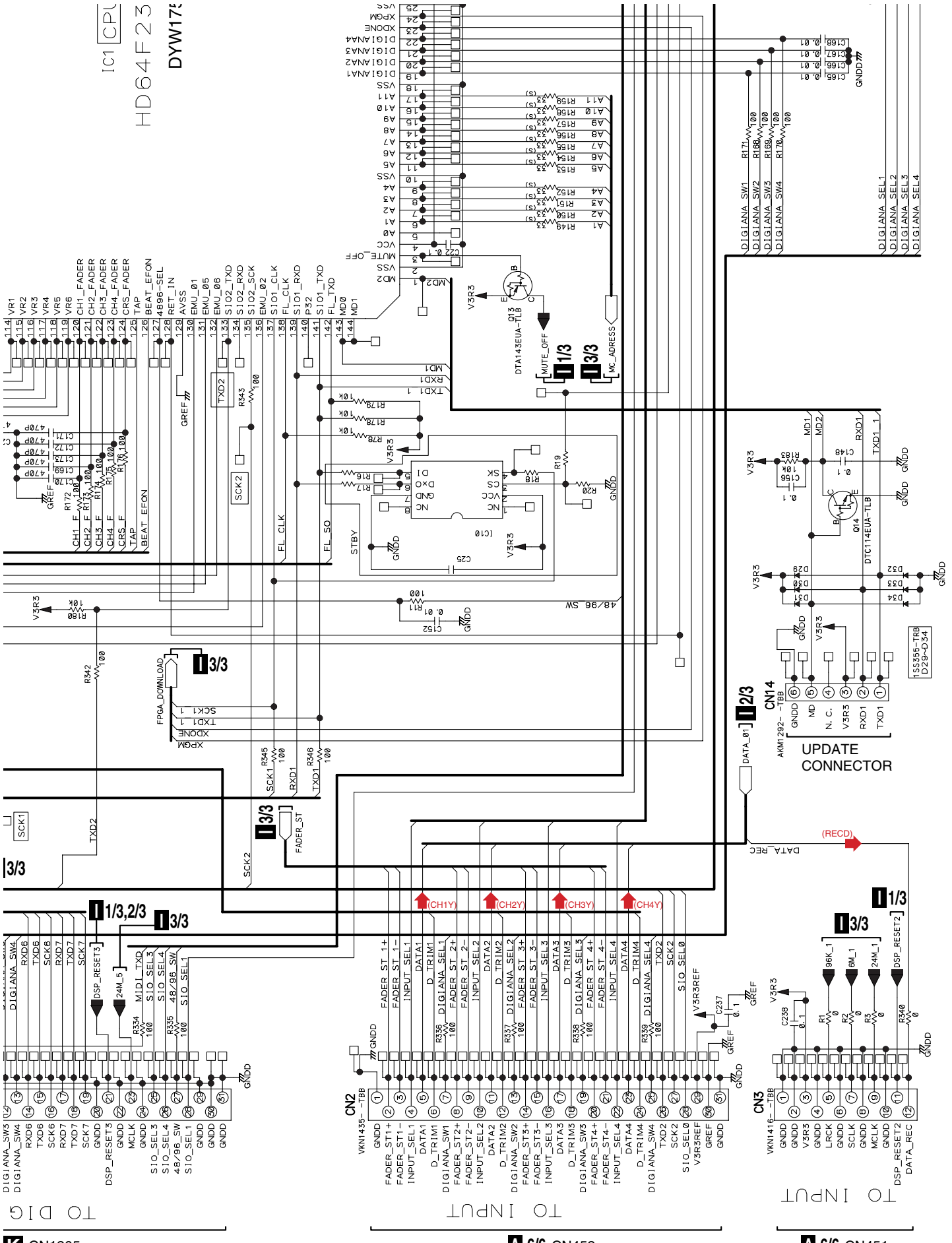
IC1 CPU
HD64F23
DYW17
UPDATE CONNECTOR
AKM1292-TBB
1SS355-TRB D29-D34
DTA143EUA-TLB
DTC114EUA-TLB
FPGA_DOWNLOAD
TO DIG
TO INPUT
TO INPUT
K CN1205
A 6/6 CN452
A 6/6 CN451
DJM-800
45

3.18 DSP ASSY (2/3)

I 2/3 DSP ASSY (DWX2534)(1/2)

Large size SCH diagram

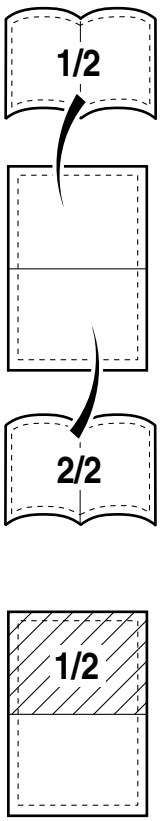

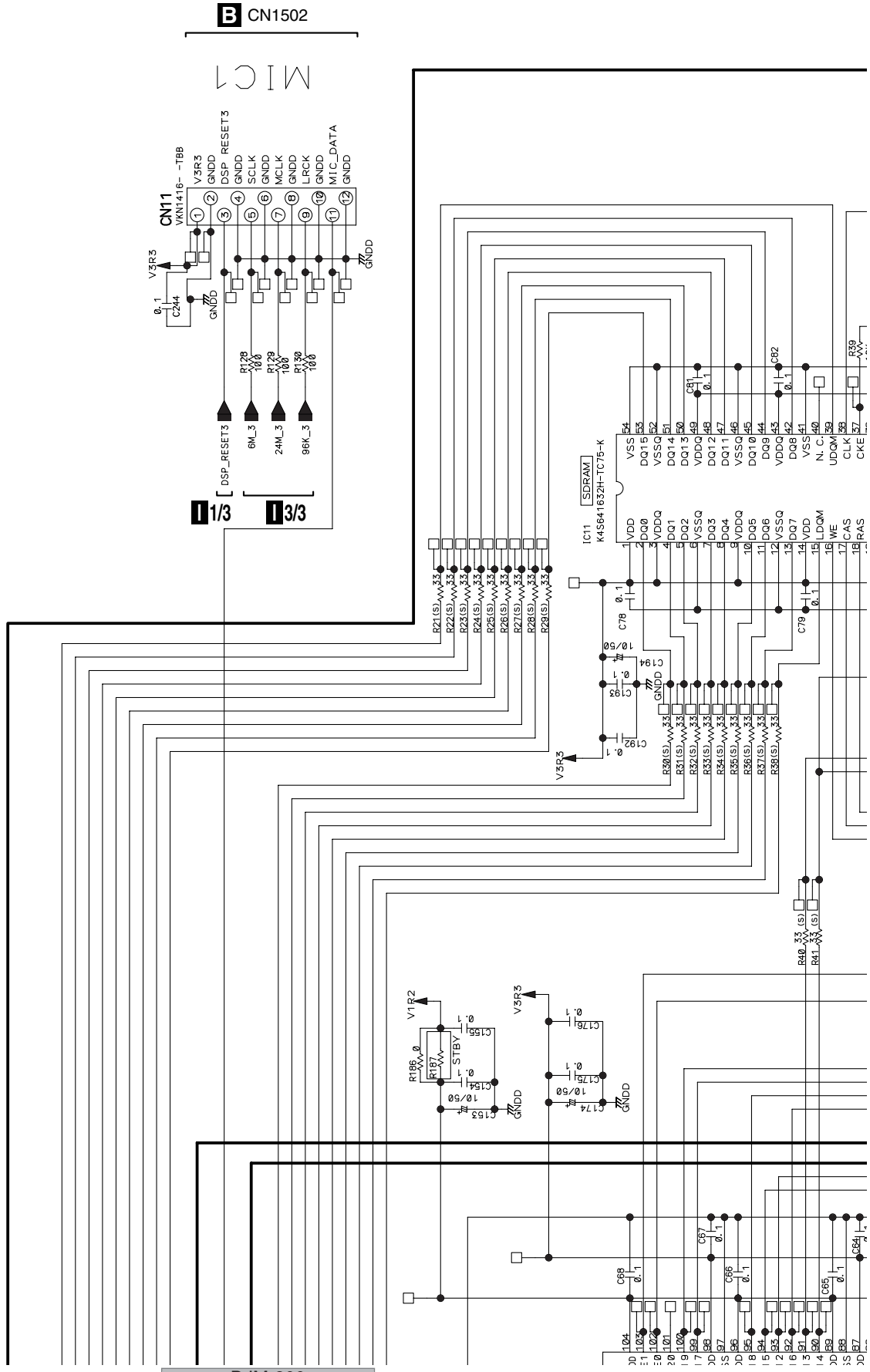

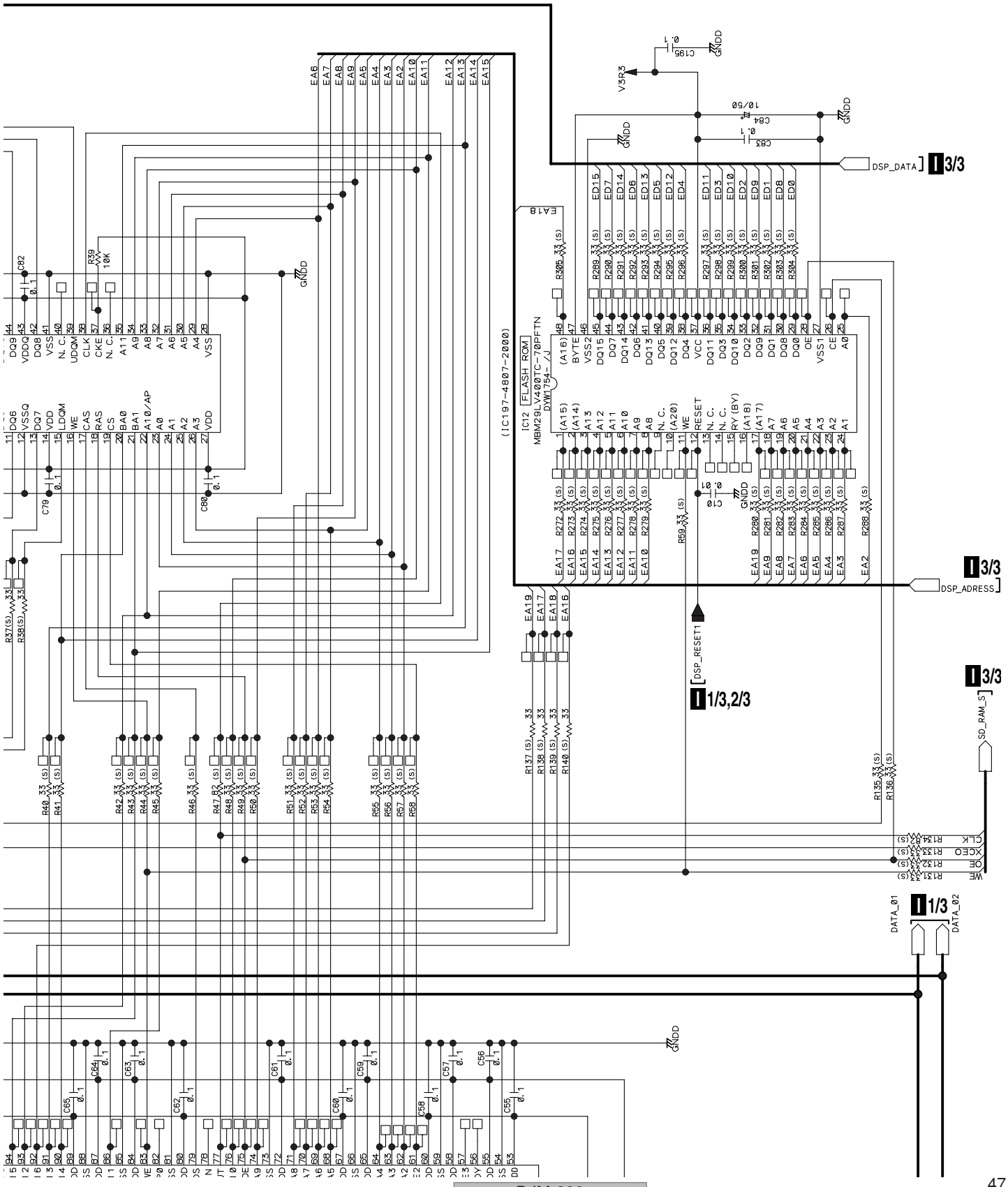
DSP_DATA
3/3
DSP_ADRESS
3/3
DSP_RESET1
1/3,2/3
SD_RAM_S
3/3
DATA_01
1/3
DATA_02
IC12 FLASH ROM
MBM29LV400TC-70PFTN
(IC197-4807-2000)
V3R3
GNDD

I 2/3 DSP ASSY (DWX2534) (2/2)

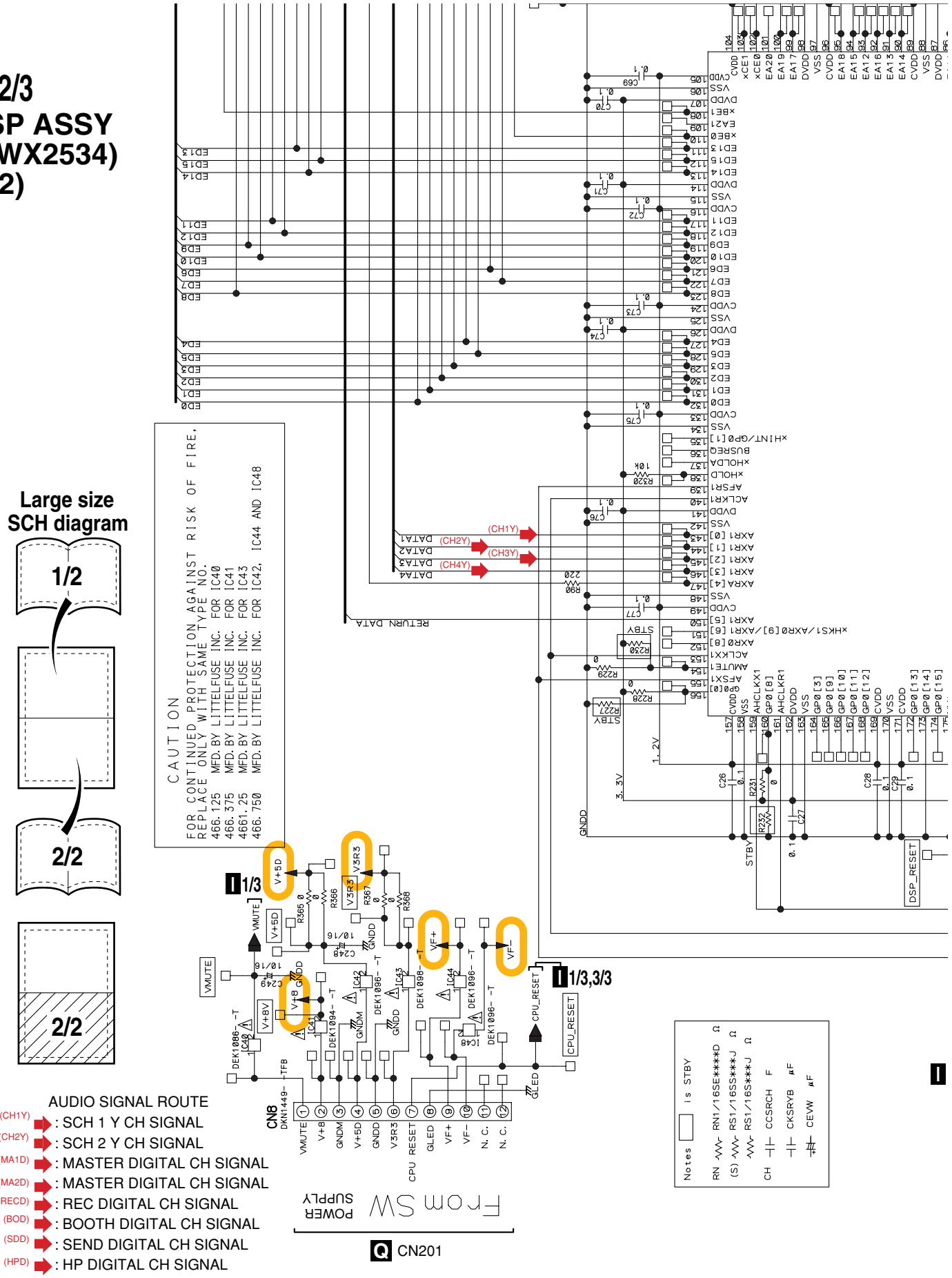

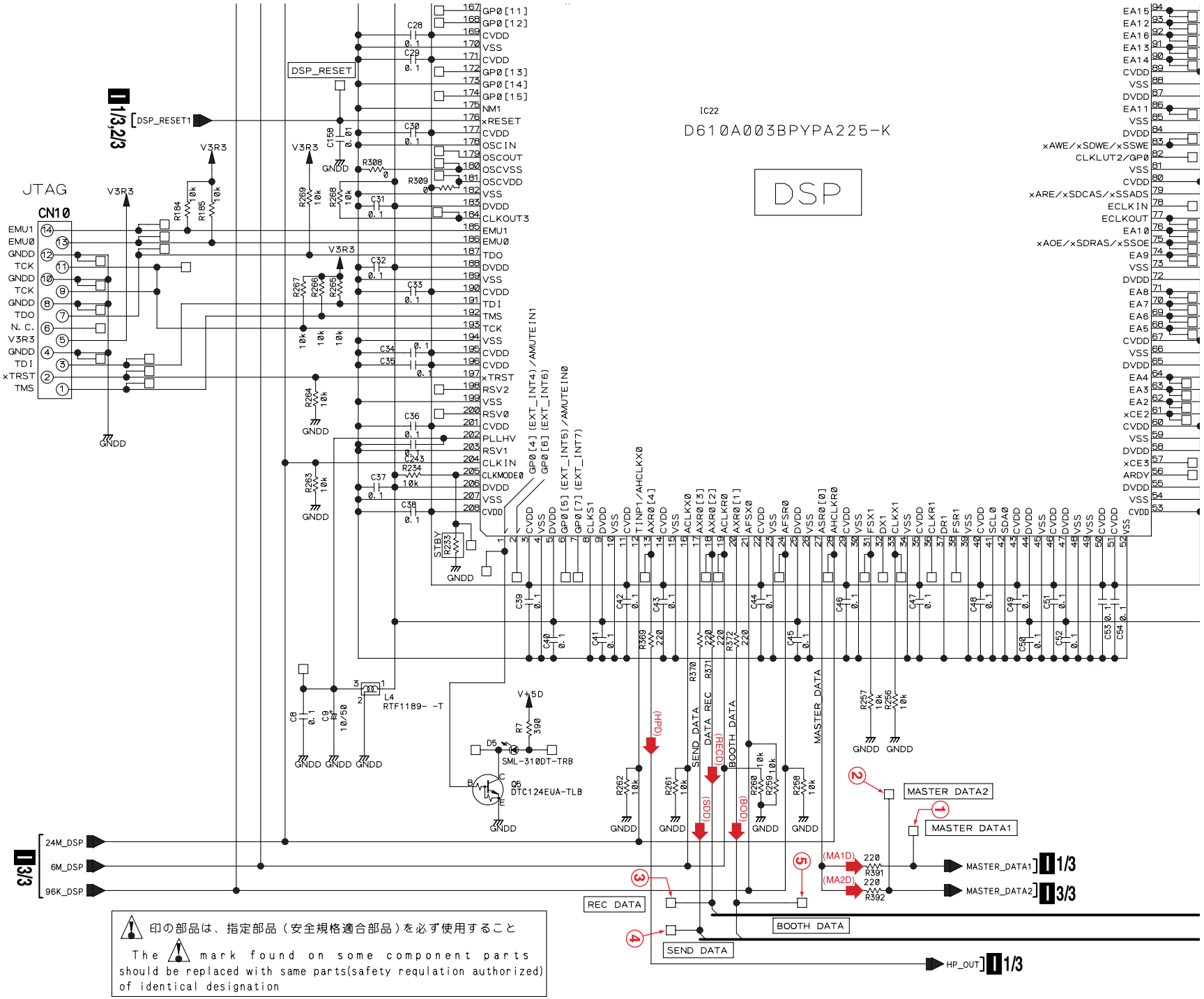
DSP
IC22
D610A003BPYPA225-K
JTAG
CN10
DSP_RESET
DSP_RESET1
V3R3
GNDD
24M_DSP
6M_DSP
96K_DSP
REC DATA
SEND DATA
BOOTH DATA
MASTER_DATA1
MASTER_DATA2
HP_OUT
MASTER DATA1
MASTER DATA2
SML-310DT-TRB
DTC124EUA-TLB
RTF1189- -T
印の部品は、指定部品（安全規格適合部品）を必ず使用すること
The mark found on some component parts should be replaced with same parts(safety regulation authorized) of identical designation

3/3 DSP ASSY (DWX2534)(1/2)

Large size SCH diagram

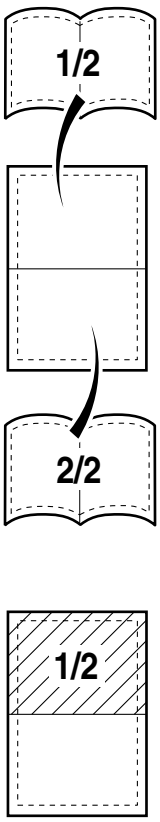

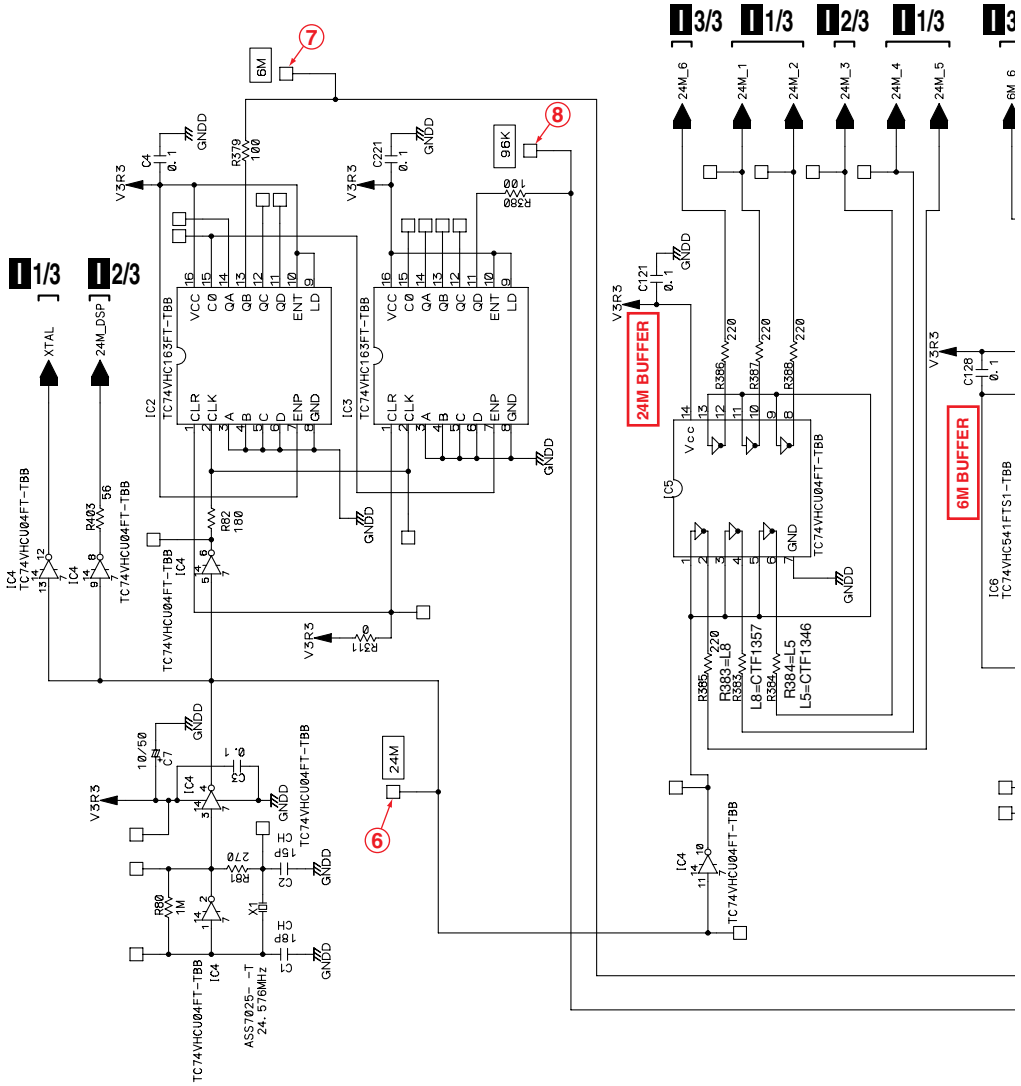

AUDIO SIGNAL ROUTE
(MA2D) : MASTER DIGITAL CH SIGNAL

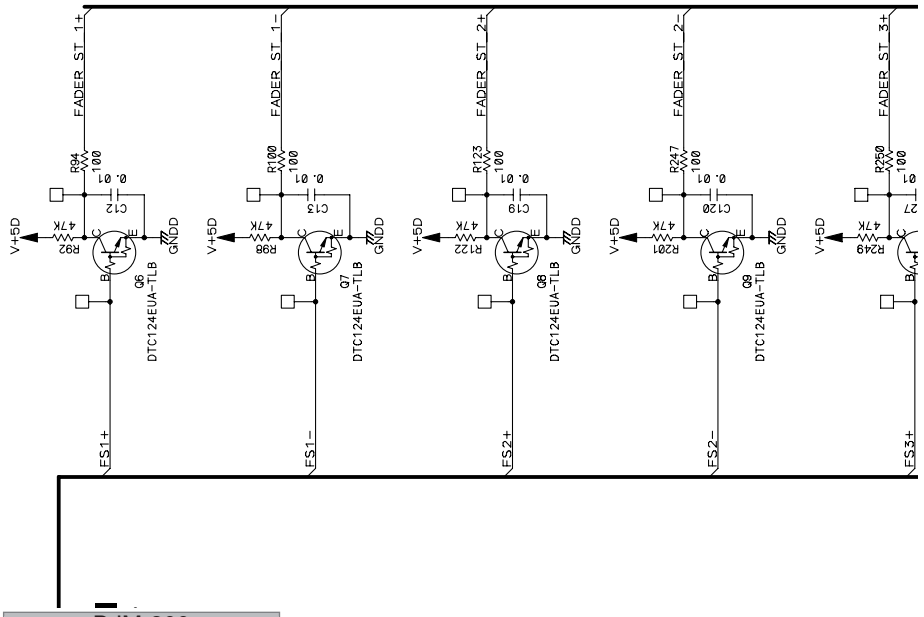

M CN1302
CN15
VKN1414- -TBB
TO DIGIB
GNDD
96K
6M
24M
MASTER_DATA2
SCK1
(MA2D)
6M BUFFER
96k BUFFER
IC6
IC7
TC74VHC541FTS1-TBB
L6, L9=CTF1357
L7, L10=CTF1357
FADER_ST
3.3V → 2.5V
S-1200B25-M5-TRB
2SC4081 (QRS)-TLB
DTC124EUA-TLB
2K (RS)-TLB

3/3
DSP ASSY (DWX2534)(2/2)

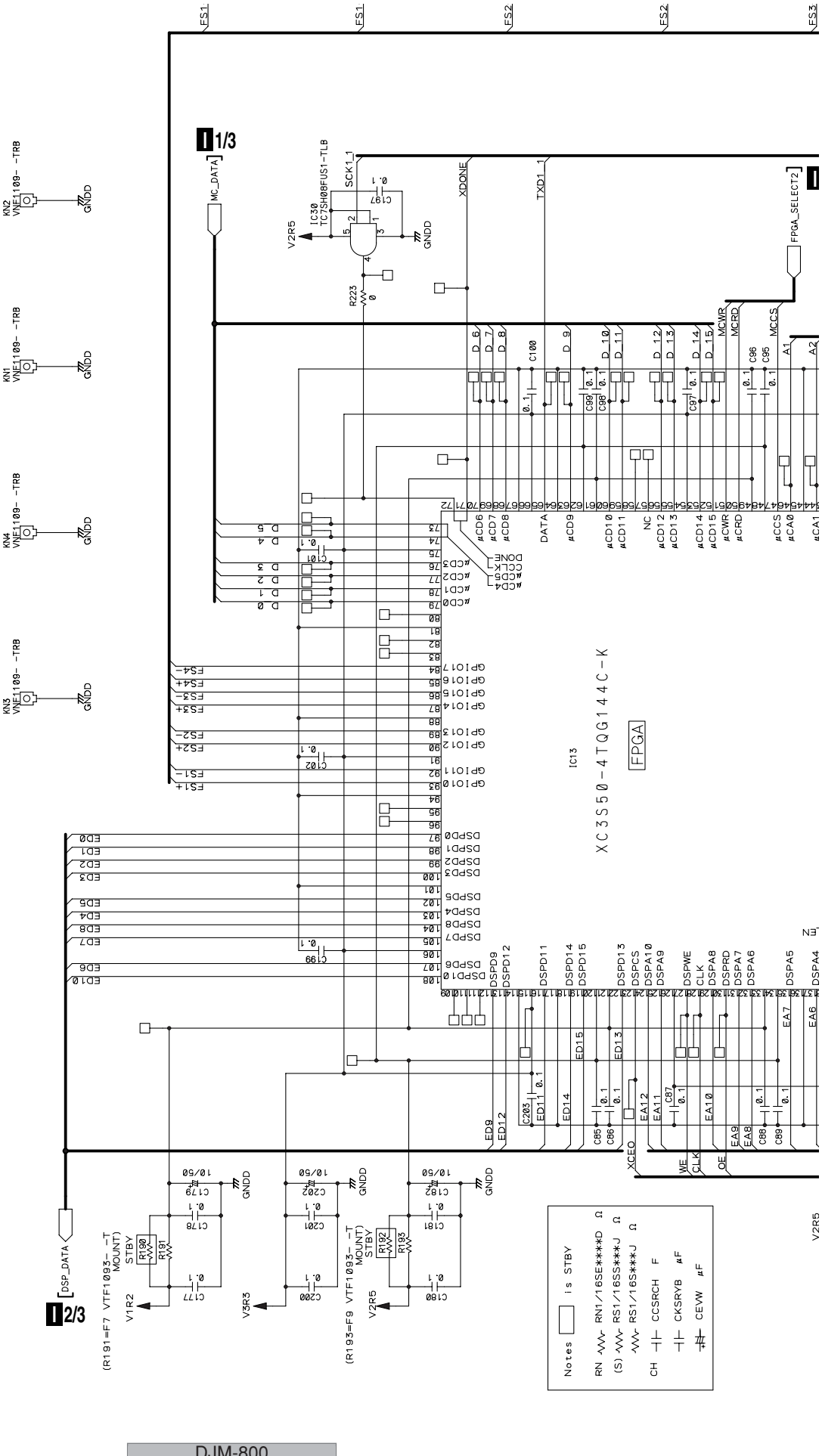

Large size SCH diagram

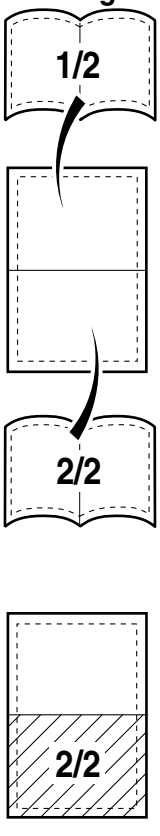

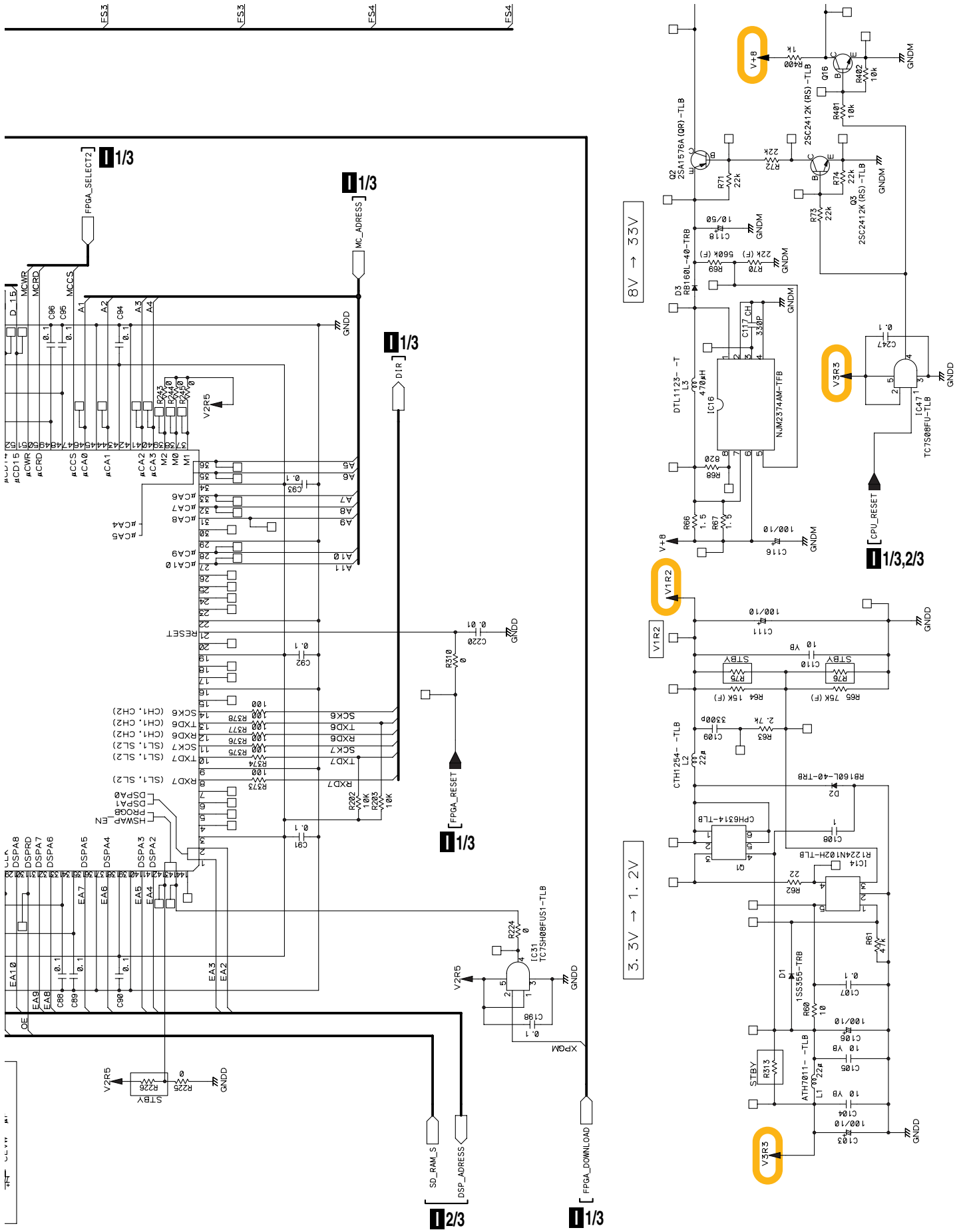
8V → 33V
3.3V → 1.2V
1/3
2/3
1/3,2/3
FPGA_SELECT2
MC_ADRESS
DIR
FPGA_RESET
CPU_RESET
SD_RAM_S
DSP_ADRESS
FPGA_DOWNLOAD
V+8
V3R3
V2R5
V1R2
GNDD
GNDM
XPGM
STBY

J 1/3 OUTPUT ASSY (DWX2544)

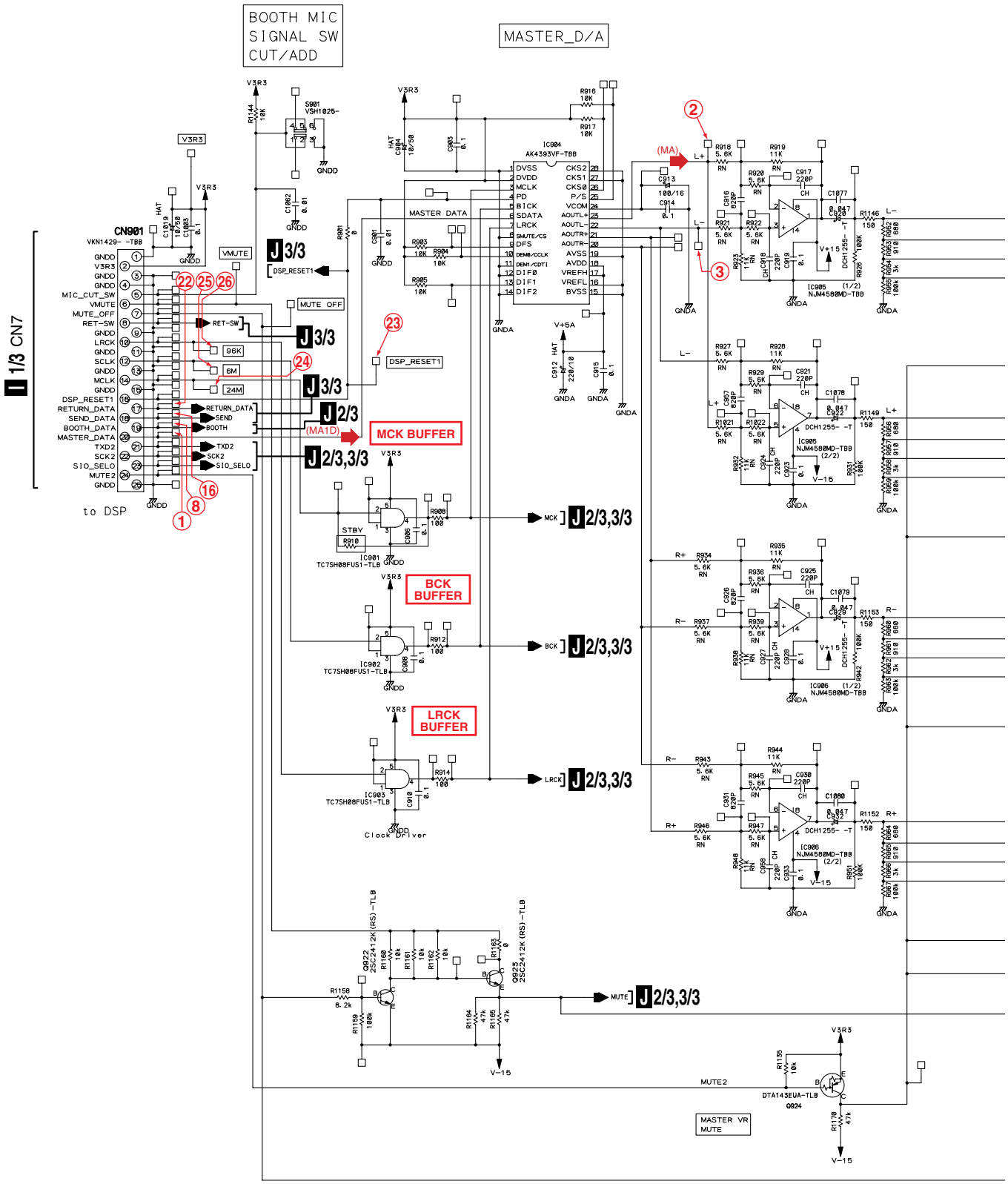

J 1/3

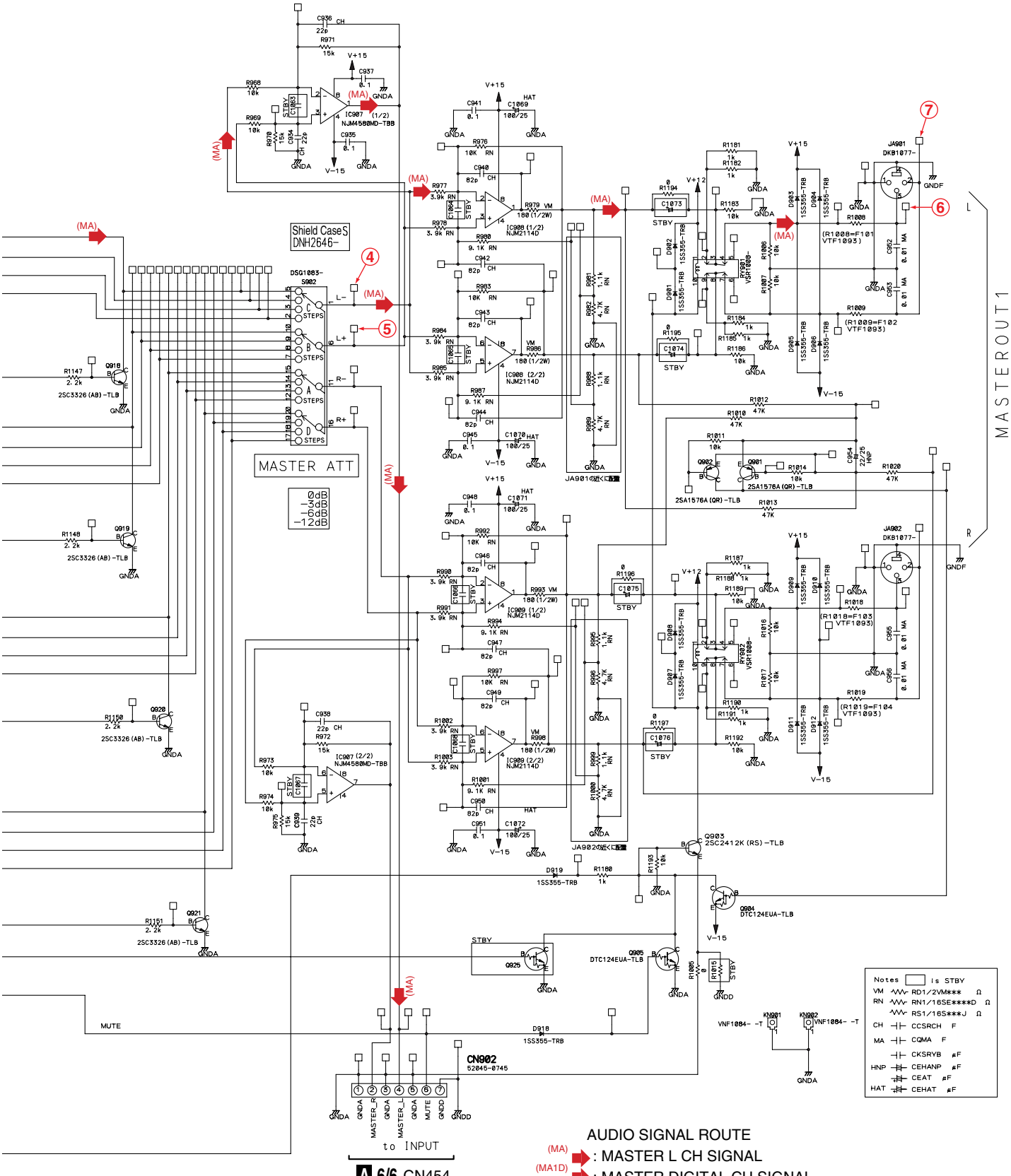
MASTER ATT
0dB
−3dB
−6dB
−12dB
Shield Case S
DNH2646−
MASTEROUT1
MUTE
CN902
52045−0745
to INPUT
A 6/6 CN454
AUDIO SIGNAL ROUTE
(MA) : MASTER L CH SIGNAL
(MA1D) : MASTER DIGITAL CH SIGNAL
Notes is STBY
VM RD1/2VM*** Ω
RN RN1/16SE****D Ω
RS1/16S***J Ω
CH CCSRCH F
MA CQMA F
CKSRYB µF
HNP CEHANP µF
CEAT µF
HAT CEHAT µF

3.21 OUTPUT ASSY (2/3)

J 2/3 OUTPUT ASSY (DWX2544)

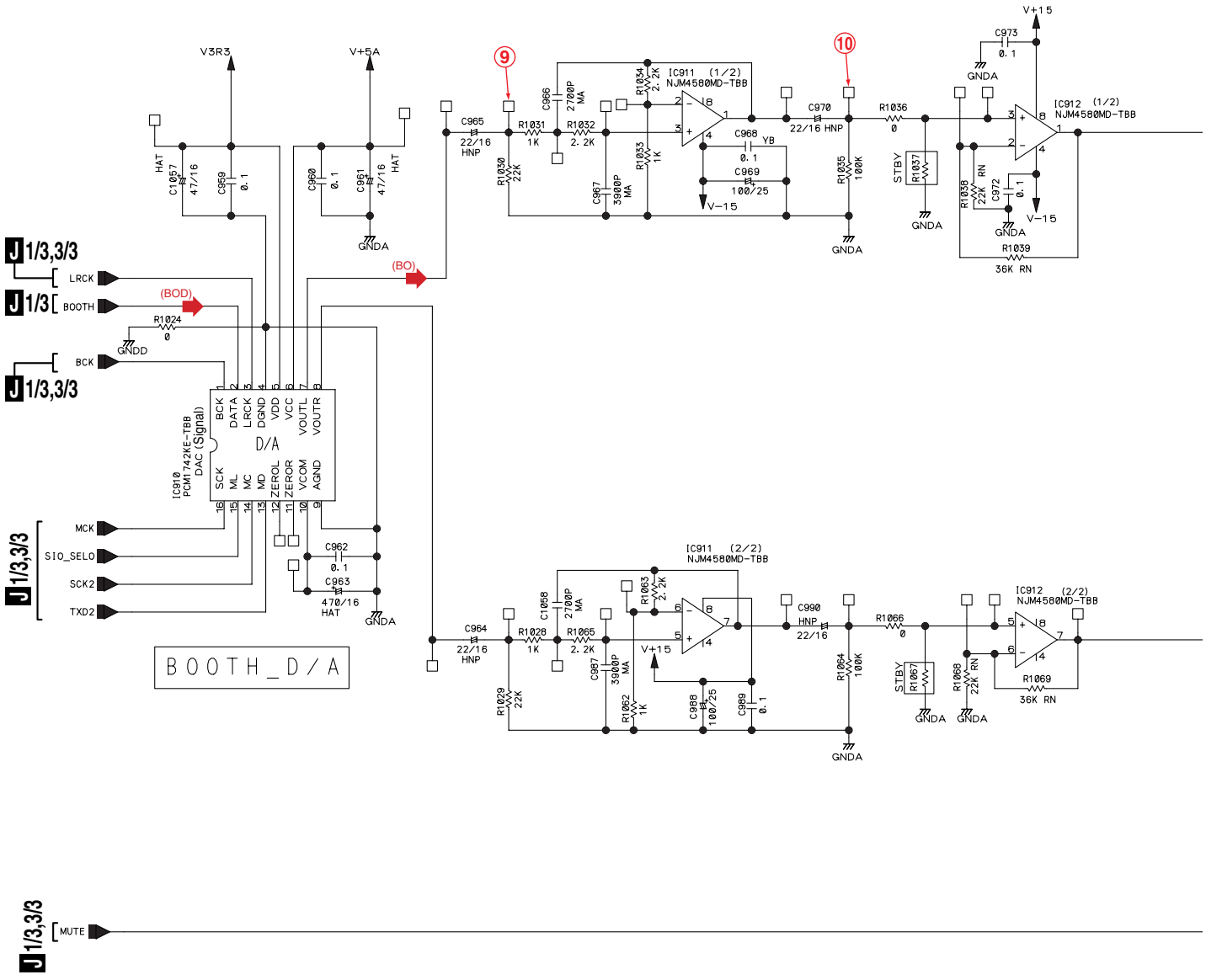

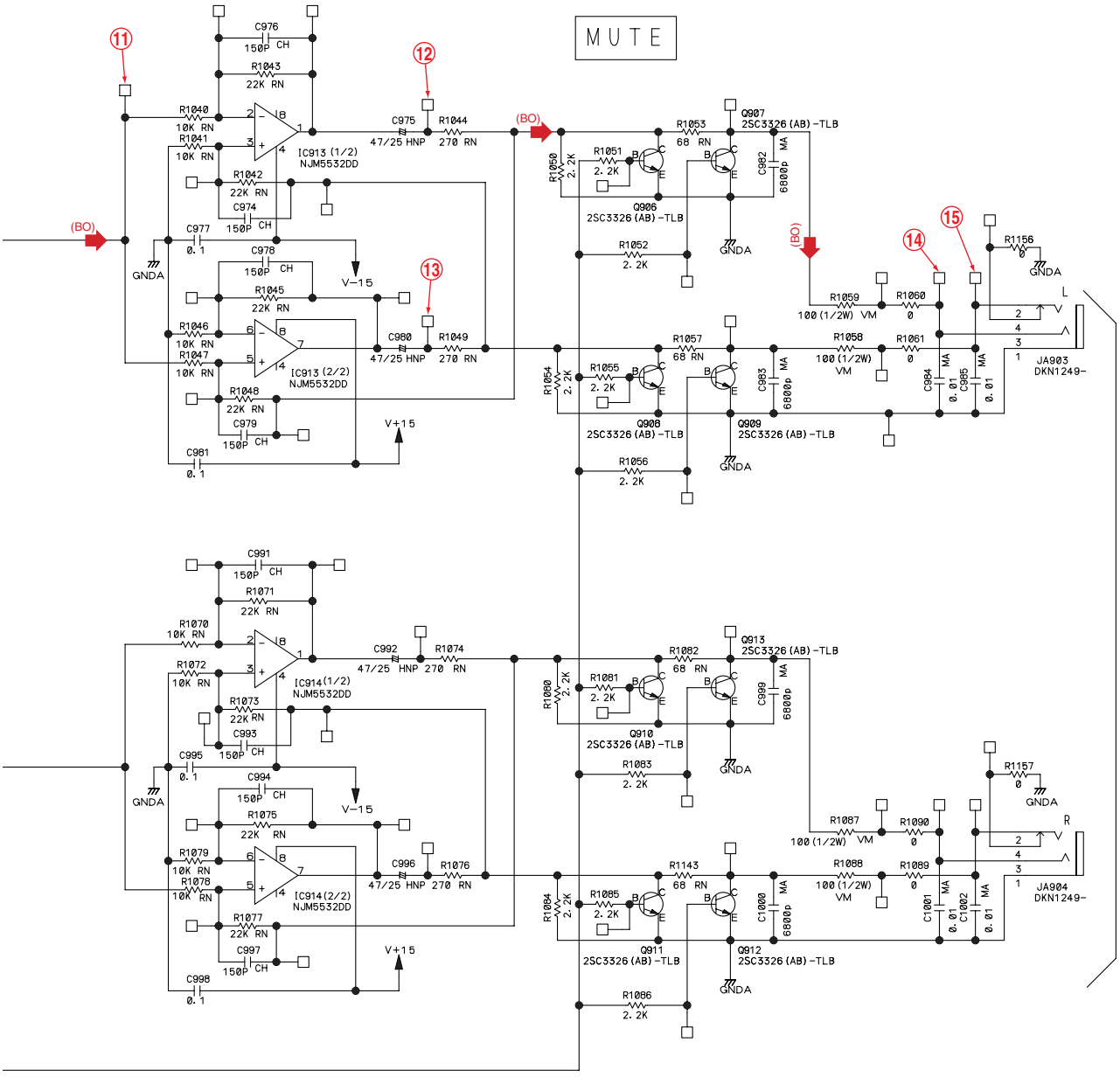

AUDIO SIGNAL ROUTE

(BO) : BOOTH L CH SIGNAL

(BOD) : BOOTH DIGITAL CH SIGNAL

Notes ☐ is STBY

VM RD1/2VM*** Ω

RN RN1/16SE****D Ω

RS1/16S***J Ω

CH CCSRCH F

MA CQMA F

CKSRYB µF

HAT CEHAT µF

CEAT µF

HNP CEHANP µF

J 2/3

J 3/3 OUTPUT ASSY (DWX2544)

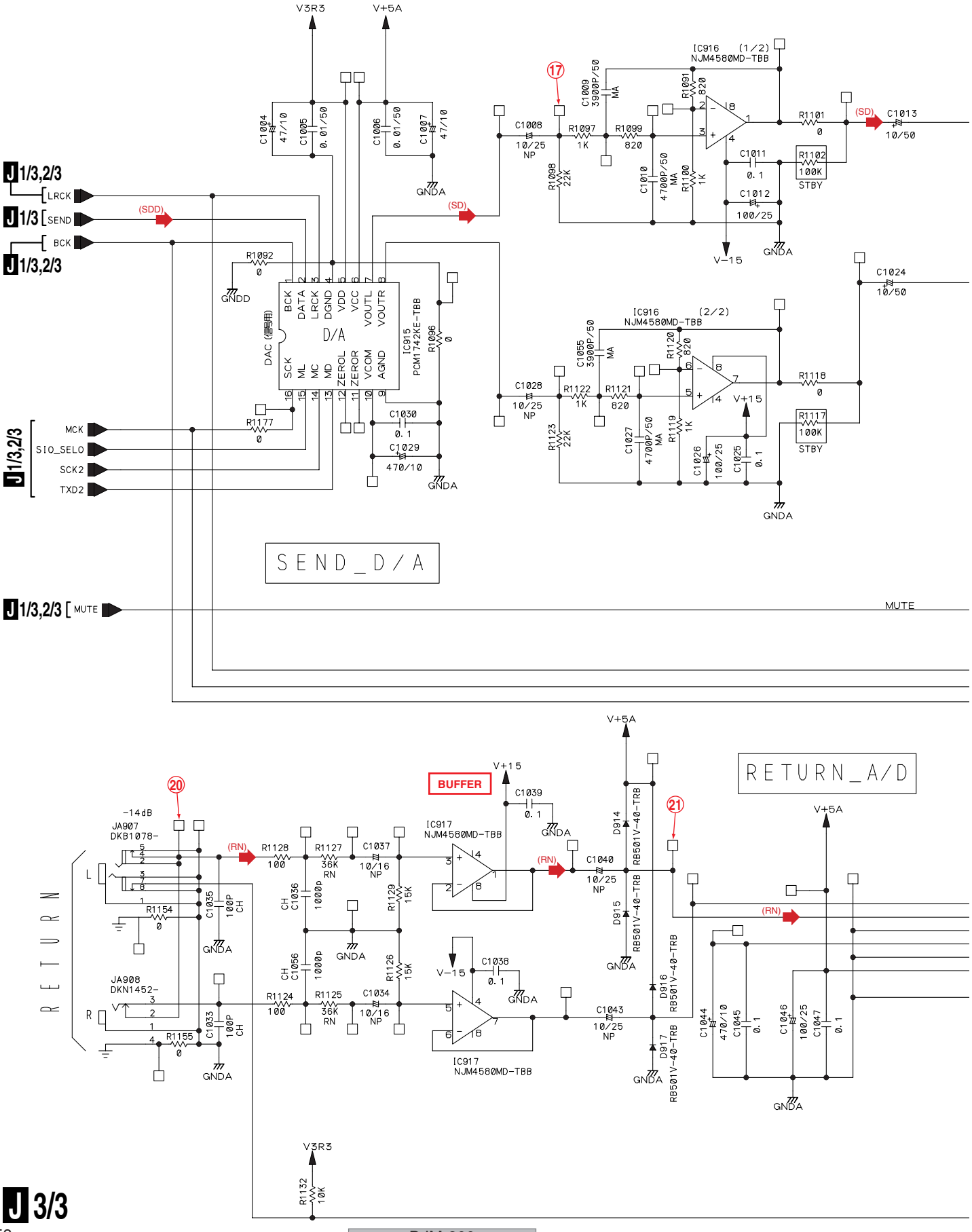

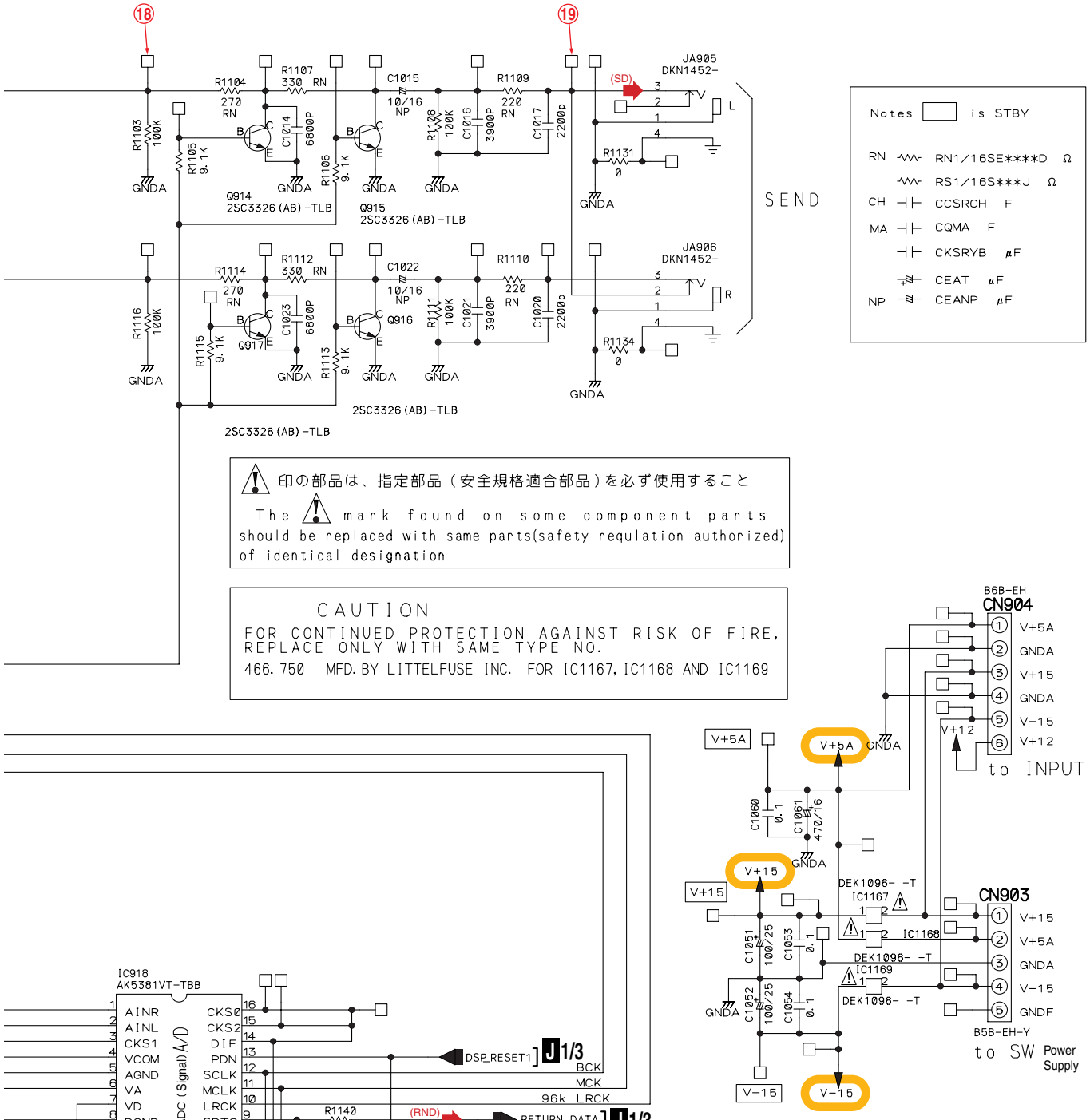
18
19
R1104 270 RN
R1107 330 RN
C1015 10/16 NP
R1109 220 RN
R1103 100K
R1105 9.1K
C1014 6800P
R1106 9.1K
R1108 100K
C1016 3900P
C1017 2200P
Q914 2SC3326(AB)-TLB
Q915 2SC3326(AB)-TLB
JA905 DKN1452-
(SD)
R1131 0
GNDA
SEND
R1114 270 RN
R1112 330 RN
C1022 10/16 NP
R1110 220 RN
R1116 100K
R1115 9.1K
C1023 6800P
Q917
Q916
R1111 100K
C1021 3900P
C1020 2200P
JA906 DKN1452-
R1134 0
2SC3326(AB)-TLB
2SC3326(AB)-TLB
Notes is STBY
RN RN1/16SE****D Ω
RS1/16S***J Ω
CH CCSRCH F
MA CQMA F
CKSRYB μF
CEAT μF
NP CEANP μF
印の部品は、指定部品（安全規格適合部品）を必ず使用すること
The mark found on some component parts should be replaced with same parts(safety regulation authorized) of identical designation
CAUTION
FOR CONTINUED PROTECTION AGAINST RISK OF FIRE, REPLACE ONLY WITH SAME TYPE NO.
466.750 MFD. BY LITTELFUSE INC. FOR IC1167, IC1168 AND IC1169
B6B-EH
CN904
V+5A
GNDA
V+15
GNDA
V-15
V+12
to INPUT
A 6/6 CN455
V+5A
GNDA
C1060 0.1
C1061 470/16
V+15
V+15
DEK1096- -T
IC1167
IC1168
DEK1096- -T
IC1169
DEK1096- -T
CN903
V+15
V+5A
GNDA
V-15
GNDF
B5B-EH-Y
to SW Power Supply
Q CN202
C1051 100/25
C1053 0.1
C1052 100/25
C1054 0.1
GNDA
V-15
V-15
IC918
AK5381VT-TBB
AINR
AINL
CKS1
VCOM
AGND
VA
VD
DGND
ADC (Signal) A/D
CKS0
CKS2
DIF
PDN
SCLK
MCLK
LRCK
SDTO
DSP_RESET1
J 1/3
BCK
MCK
96k LRCK
R1140 100
(RND)
RETURN_DATA
J 1/3
C1050 0.01
GNDD
V3R3
R1137 0
GNDA
GNDD
C1048 0.1
C1049 47/10
GNDA
RET-SW
J 1/3
AUDIO SIGNAL ROUTE
(SD) : SEND L CH SIGNAL
(SDD) : SEND DIGITAL CH SIGNAL
(RN) : RETURN L CH SIGNAL
(RND) : RETURN DIGITAL CH SIGNAL

J 3/3

K DIGIC ASSY (DWX2547)(1/2)

Large size SCH diagram

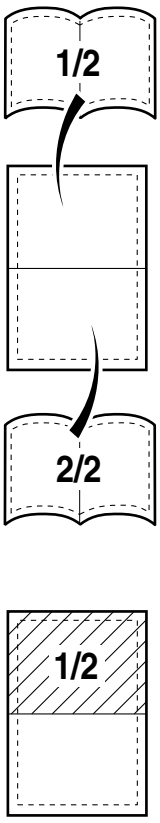

AUDIO SIGNAL ROUTE

(D1) : CH 1 DIGITAL SIGNAL
(D2) : CH 2 DIGITAL SIGNAL
(D3) : CH 3 DIGITAL SIGNAL
(D4) : CH 4 DIGITAL SIGNAL

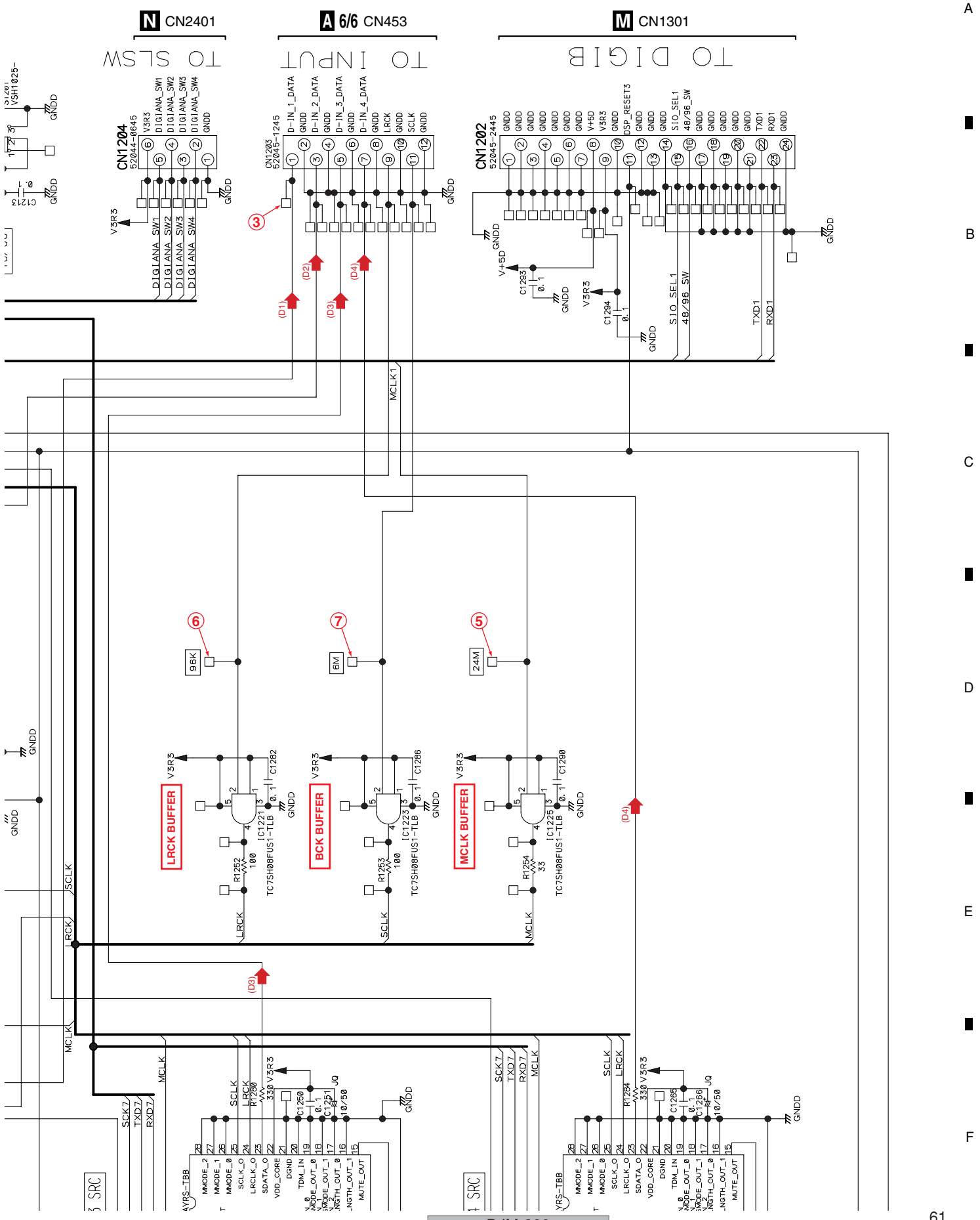
N CN2401
A 6/6 CN453
M CN1301
TO SLSW
TO INPUT
TO DIGIB
CN1204
CN1203
CN1202
LRCK BUFFER
BCK BUFFER
MCLK BUFFER
TC7SH08FUS1-TLB
96K
6M
24M
SCLK
LRCK
MCLK
SCK7
TXD7
RXD7
SIO_SEL1
48/96_SW
TXD1
RXD1
DJM-800

K
DIGIC ASSY (DWX2547)(2/2)

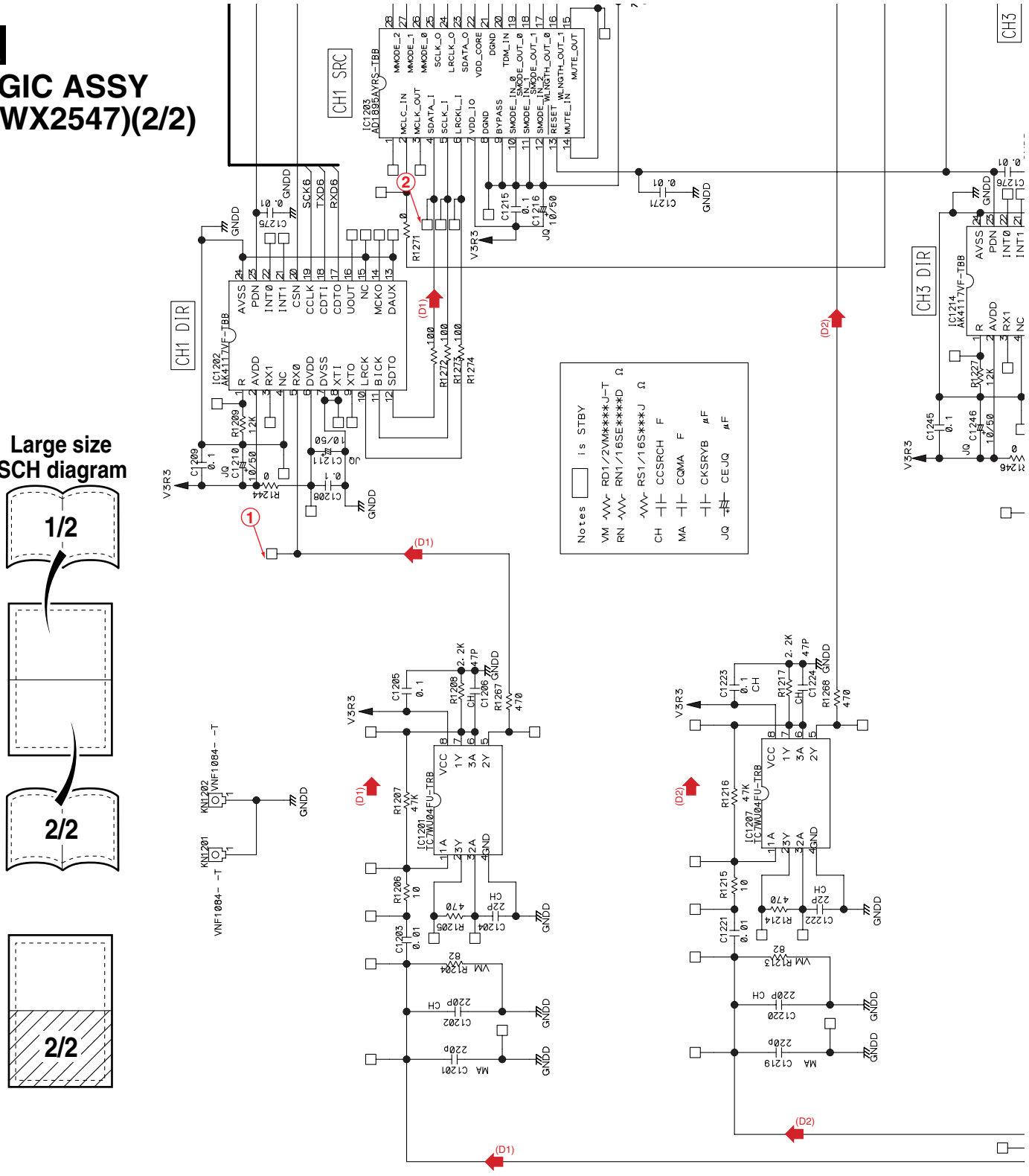

Large size SCH diagram

CH3

CH3 DIR

IC1214 AK4117VF-TBB

IC1215 AD1895AYR

CH4

CH4 DIR

IC1217 AK4117VF-TBB

IC1218 AD1895AYR

IC1213 TC7WU04FU-TRB

IC1216 TC7WU04FU-TRB

IC1219 TC7S04FU-TLB

Q1201 DTC124EUA-TLB

D1205 2MF-TLB

D1206 1SS355-TRB

D1207 1SS355-TRB

JA1201 DKN1188-

CN1201 52045-0745

DIGITAL_IN_1 GNDD DIGITAL_IN_2 GNDD DIGITAL_IN_3 GNDD DIGITAL_IN_4

TO DIGIA

L CN1401

KN1203 VNE1948-

MIDI OUT

M DIGIB ASSY (DWX2546)

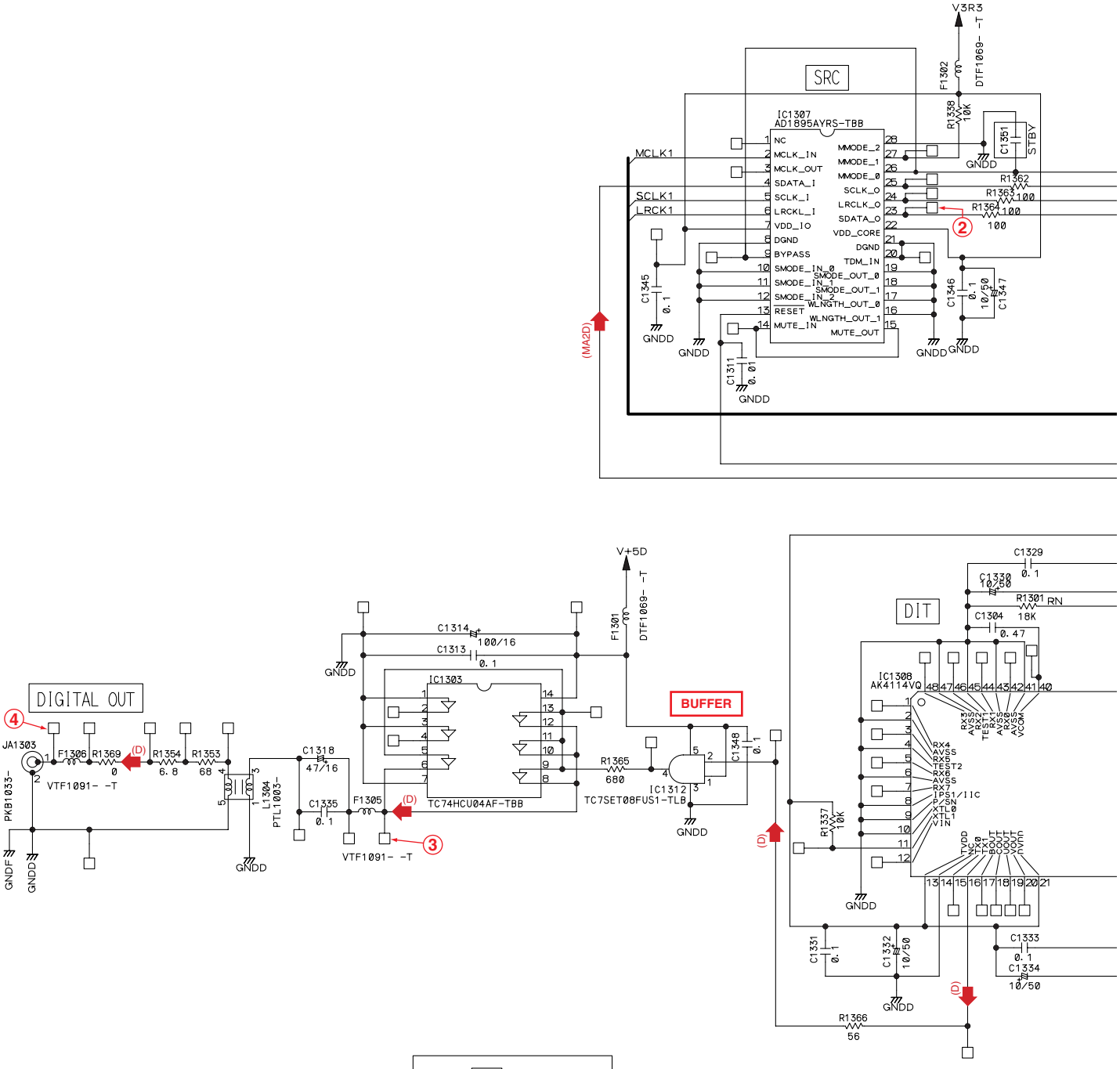

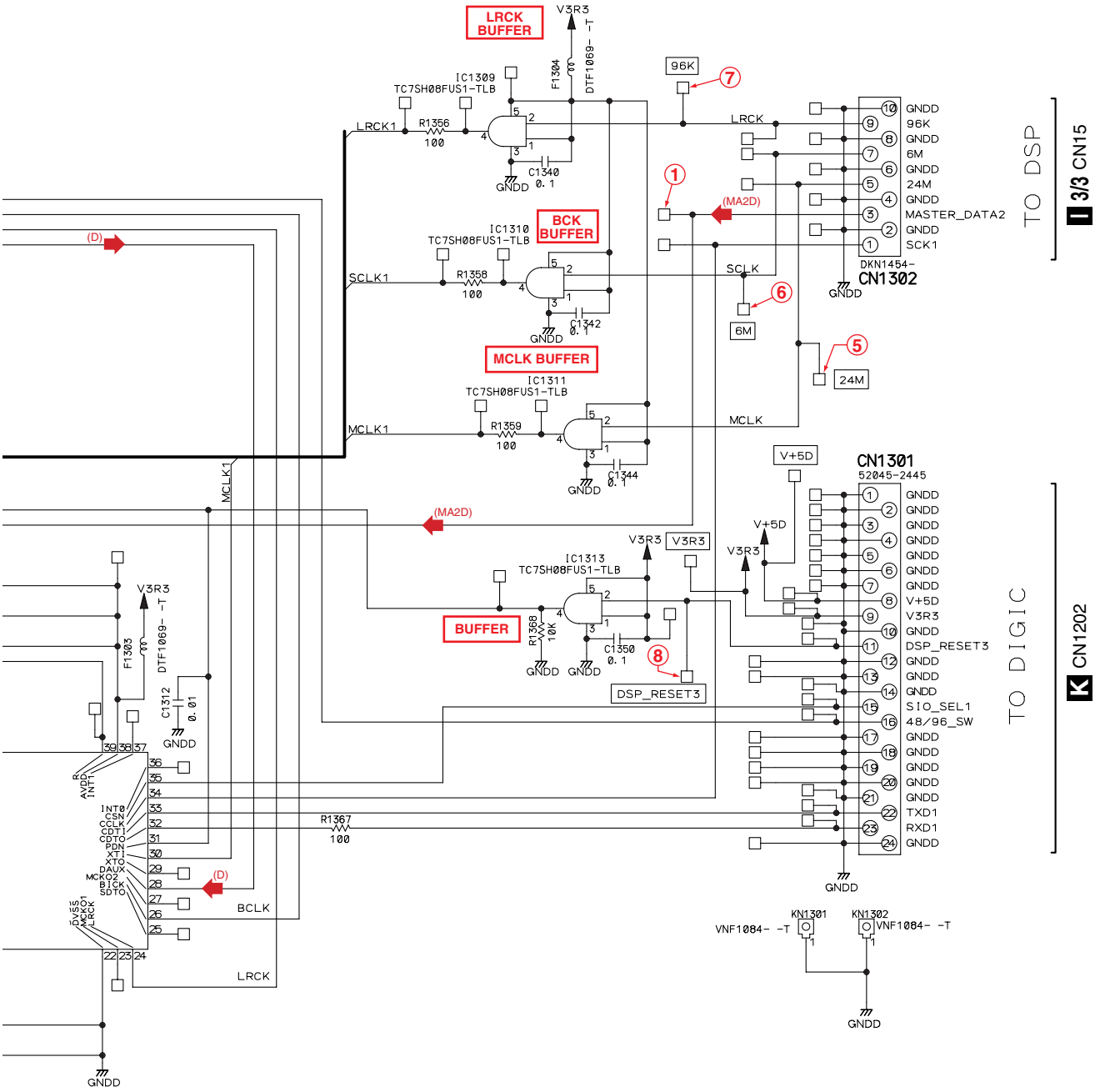

AUDIO SIGNAL ROUTE

(D) : DIGITAL CH SIGNAL

(MA2D) : MASTER DIGITAL CH SIGNAL

3.25 HPAMP ASSY

HPAMP ASSY (DWX2556)

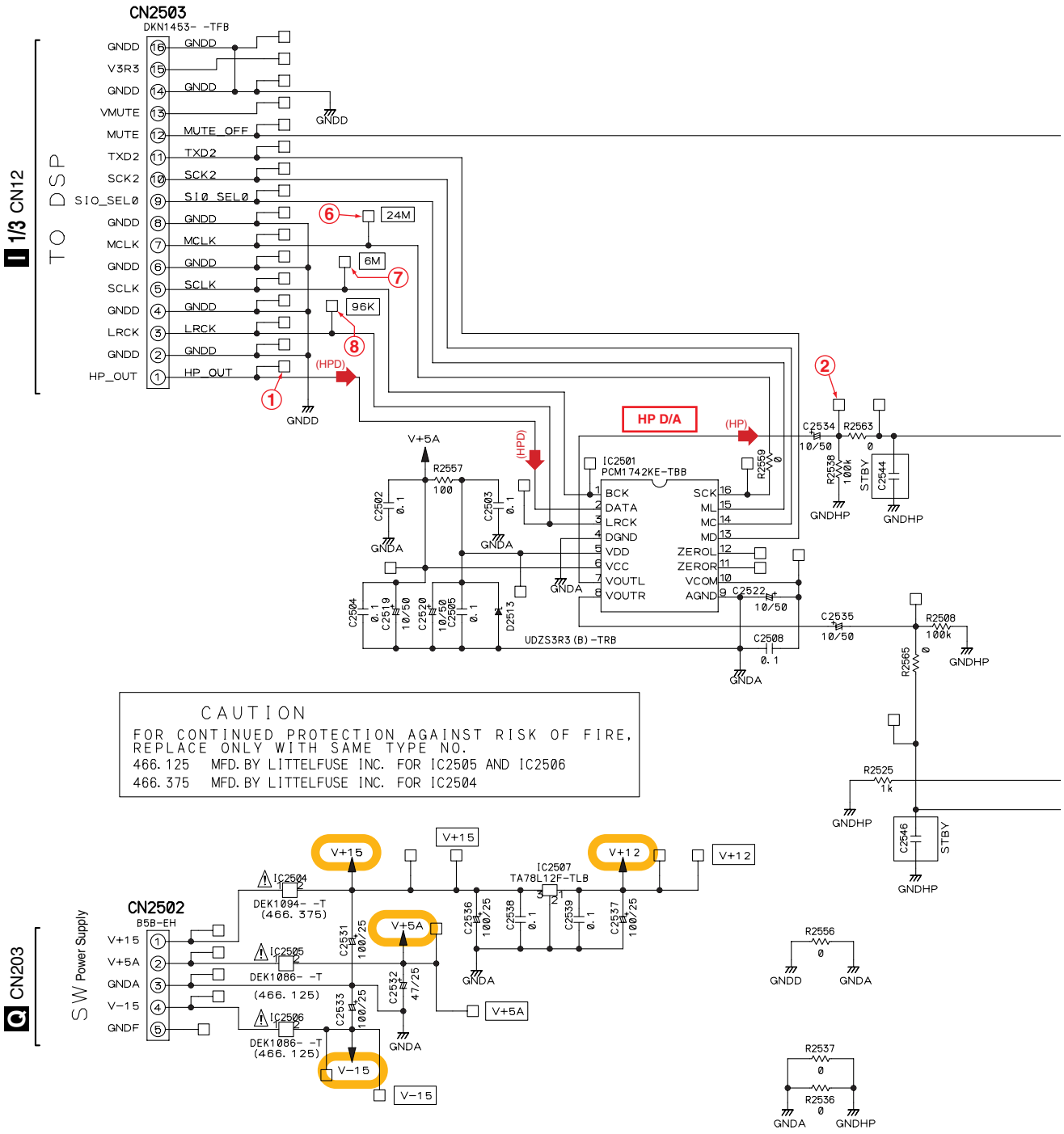

⚠ 印の部品は、指定部品（安全規格適合部品）を必ず使用すること

The ⚠ mark found on some component parts should be replaced with same parts(safety regulation authorized) of identical designation

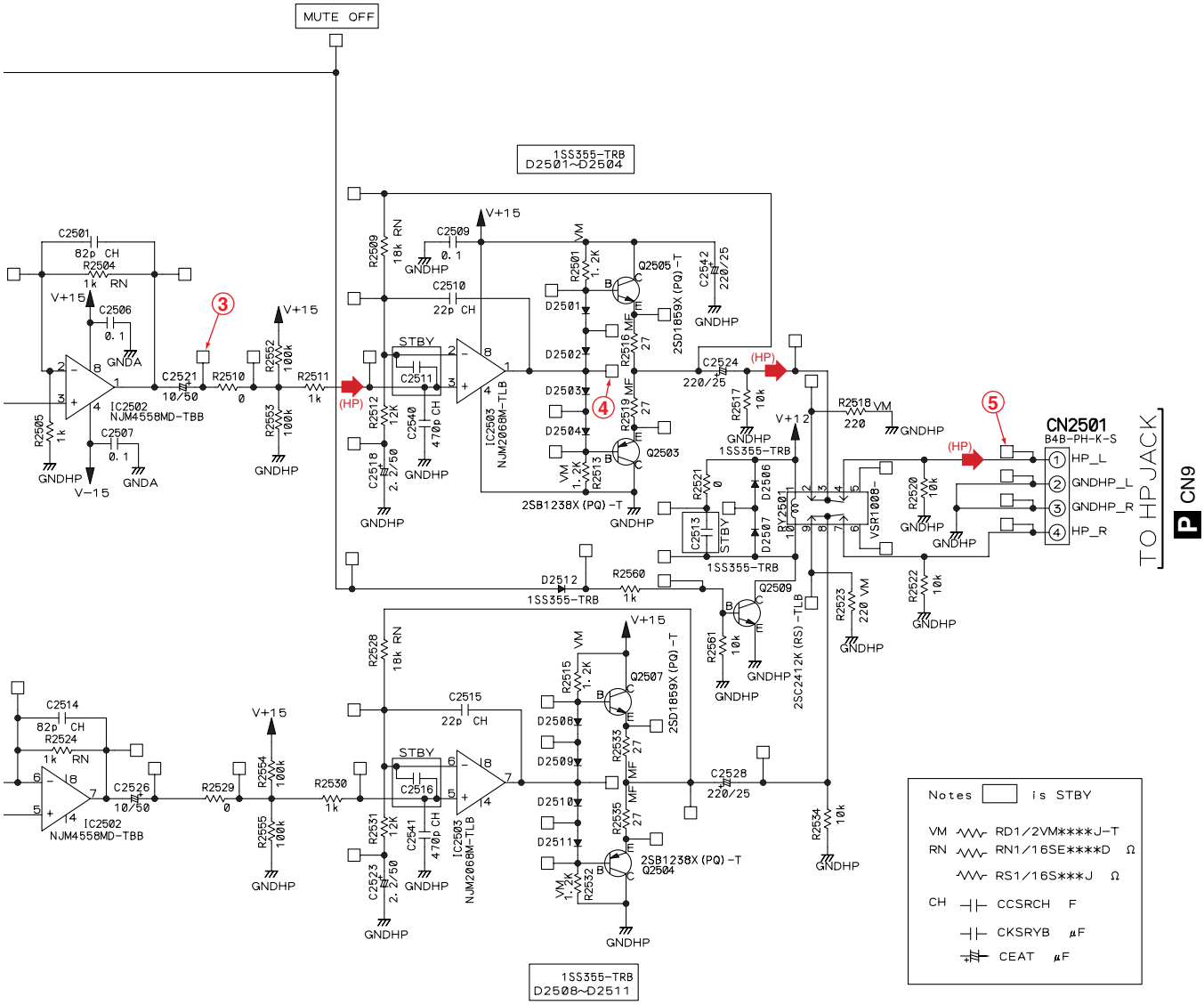

AUDIO SIGNAL ROUTE

(HP) : HP L CH SIGNAL

(HPD) : HP DIGITAL CH SIGNAL

P HPJACK ASSY (DWX2553)

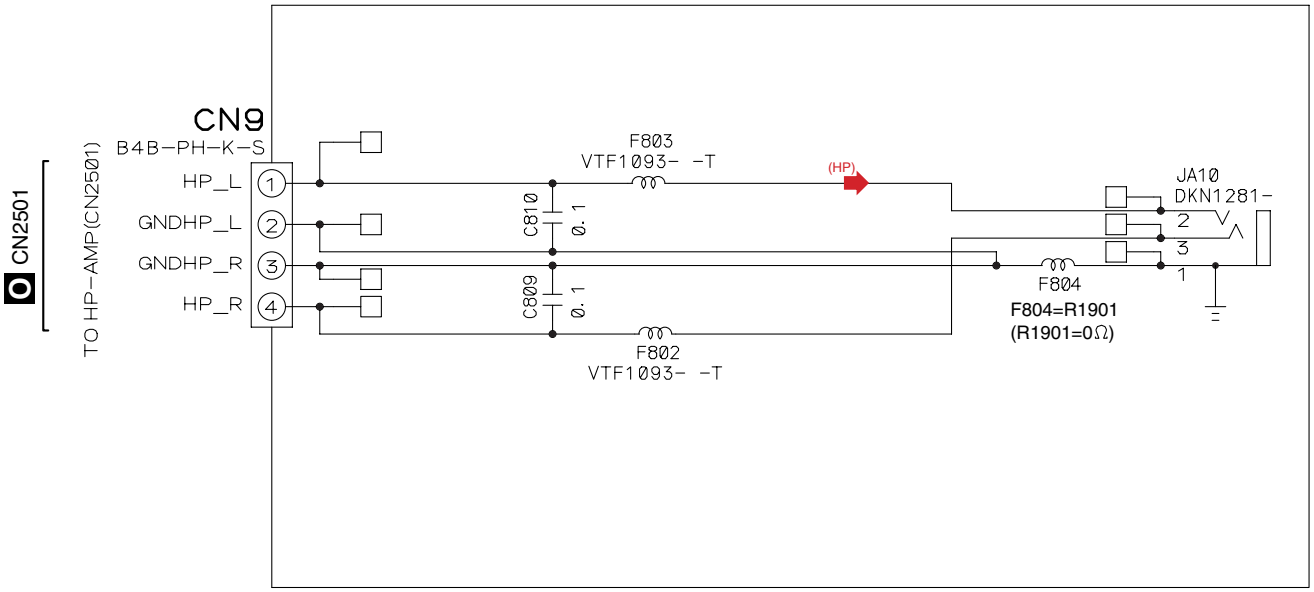

AUDIO SIGNAL ROUTE

(HP) : HP L CH SIGNAL

Notes ☐ is STBY

RS1/16S***J Ω

CKSRYB μF

3.27 ACSW ASSY

R ACSW (DWX2545)

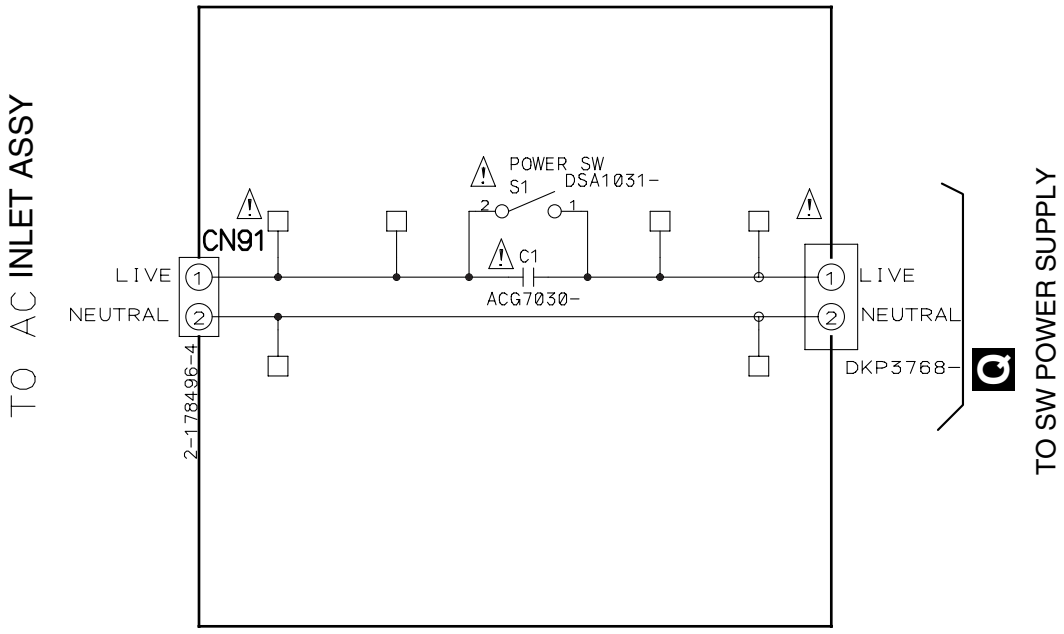

The ⚠ mark found on some component parts should be replaced with same parts(safety regulation authorized) of identical designation

3.28 SW POWER SUPPLY UNIT

Q SW POWER SUPPLY UNIT (DWR1433)

《 NOTE OF SPARE PARTS IN POWER SUPPLY (SYPS) UNIT 》

- In case of repairing, use the described parts only to prevent an accident.
- Please write the red √ mark on the board when the primary section of POWER SUPPLY (SYPS) Unit is repaired.
- Please take care to keep the space, not touching other parts when replacing the parts.

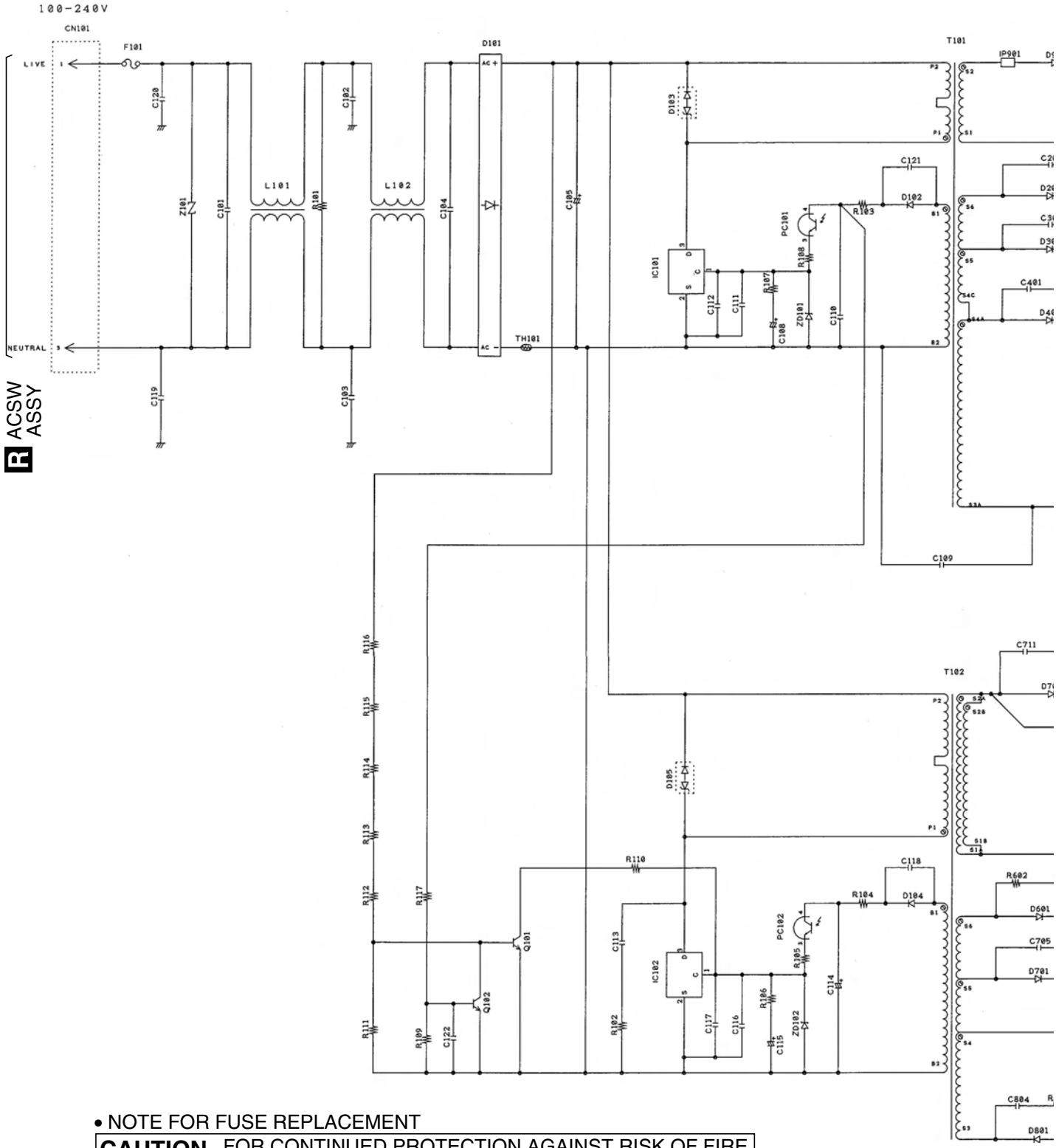

- NOTE FOR FUSE REPLACEMENT

CAUTION - FOR CONTINUED PROTECTION AGAINST RISK OF FIRE. REPLACE WITH SAME TYPE AND RATINGS ONLY.

Q

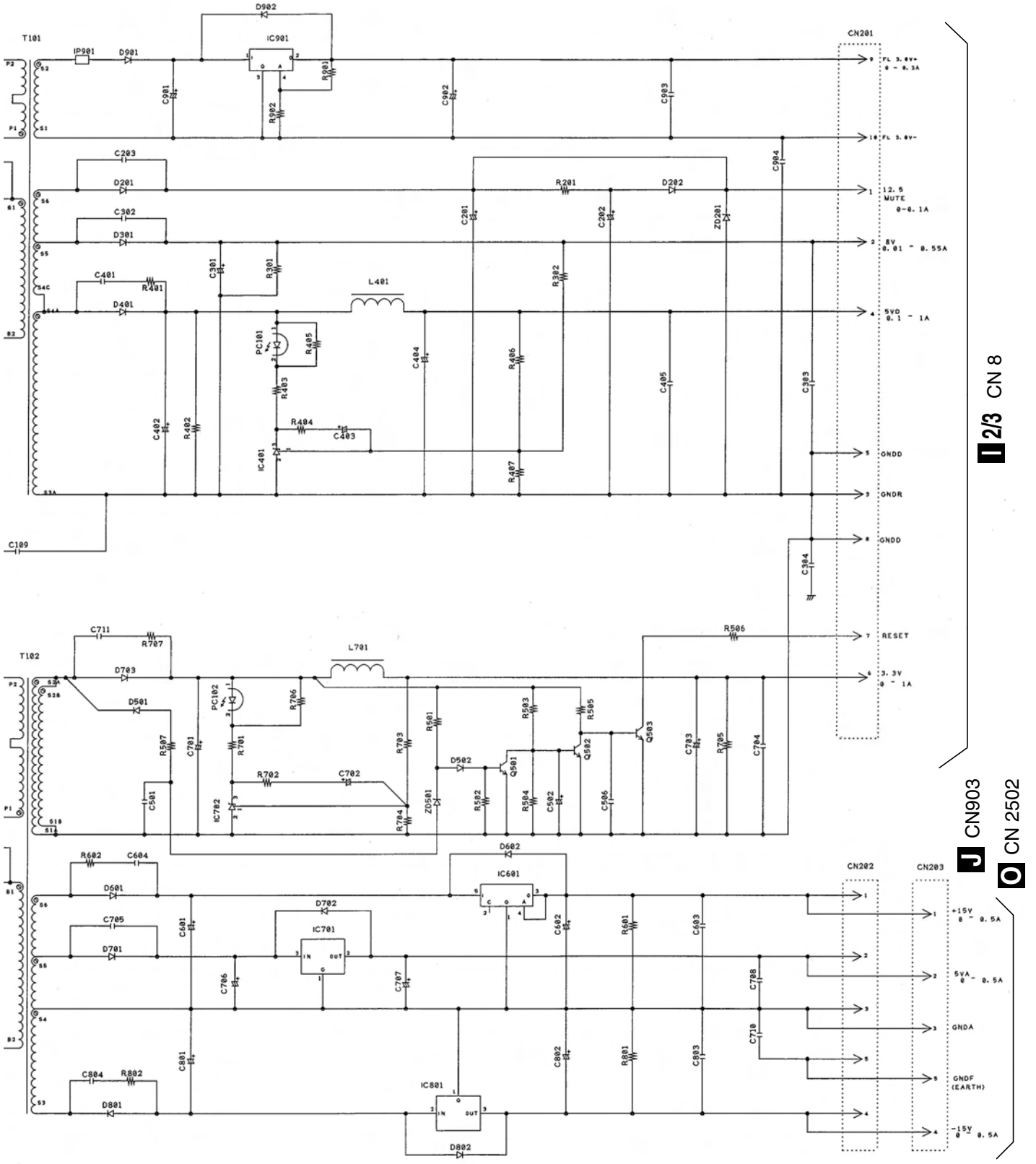

I 2/3 CN 8

J CN903

O CN 2502

Q

3.29 VOLTAGES

■ Measurement Condition

Input connectors	CD/LINE	Nothing
	PHONO	Nothing
	DIGITAL IN	Nothing
	RETURN	Nothing
	MIC1	Nothing
	MIC2	Nothing
Output connectors	MASTER1	Non connction
	MASTER2	Non connction
	REC	Non connction
	BOOTH	Non connction
	SEND	Non connction
	DIGITAL OUT	Non connction
	HP	Non connction
MIC	MIC LEVEL 1	Max
	MIC LEVEL 2	Max
	MIC EQ HI	Center
	MIC EQ LOW	Center
	MIC TKOV.	OFF
CFX		OFF(Lighting)
FADER ST.		All Ch OFF
HP	HP MONO/STEREO	STEREO
	MIXING	Center
	LEVEL	Max
CH	INPUT SELECT	All Fully counter clock wise direction
	TRIM	Max
	EQ HI	Center
	EQ MID	Center
	EQ LOW	Center
	COLOR	Center
	CUE	ALL OFF
	FADER	ALL Max
	CROSS FADER ASSIGN	All Ch THRU
CRS FADER		Center
MASTER	LEVEL	Max
	BALANCE	Center
	CUE	OFF
	MONO/STEREO	STEREO
BOOTH MONITOR		Max
CH FADER CURVE		Center
CRS FADER CURVE		Center
EFFECT	AUTO/TAP	AUTO
	MIDI START/STOP	START
	CUE	OFF
	EFFECT	DERAY
	CHANNEL	1
	TIME	–
	LEVEL/DEPTH	Max
	ON/OFF	OFF(Lighting)
REAR	DIGI/ANA SEL	ALL DIGI
	MASTER ATT.	0dB
	MIC SIGNAL ADD/CUT	ADD
	fs	96K

■ Voltages

A 1/6 INPUT ASSY

IC409 (CS5361-KS-TLB)

Pin No	Voltage (V)	Pin No	Voltage (V)
1	3.186	13	3.192
2	0	14	0
3	1.557	15	0.725
4	1.539	16	2.502
5	1.71	17	2.408
6	4.851	18	0
7	0	19	4.962
8	3.223	20	2.493
9	1.036–1.134	21	2.507
10	3.178	22	2.48
11	0	23	0
12	0	24	4.192

A 2/6 INPUT ASSY

IC509 (CS5361-KS-TLB)

Pin No	Voltage (V)	Pin No	Voltage (V)
1	3.188	13	3.188
2	0	14	0
3	1.559	15	0.783
4	1.541	16	2.511
5	1.709	17	2.497
6	4.848	18	0
7	0	19	4.964
8	3.224	20	2.498
9	1.032–1.166	21	2.512
10	3.221	22	2.476
11	0	23	0
12	0	24	4.724

A 3/6 INPUT ASSY

IC609 (CS5361-KS-TLB)

Pin No	Voltage (V)	Pin No	Voltage (V)
1	3.189	13	3.221
2	0	14	0
3	1.609	15	0.668
4	1.541	16	2.514
5	1.541	17	2.5
6	4.852	18	0
7	0	19	4.964
8	3.225	20	2.505
9	1.011–1.196	21	2.522
10	3.221	22	2.48
11	0	23	0
12	0	24	4.931

A 4/6 INPUT ASSY

IC709 (CS5361-KS-TLB)

Pin No	Voltage (V)	Pin No	Voltage (V)
1	3.187	13	3.215
2	0	14	0
3	1.608	15	0.616
4	1.541	16	2.515
5	1.715	17	2.499
6	4.859	18	0
7	0	19	4.967
8	3.223	20	2.499
9	1.065–1.193	21	2.514
10	3.22	22	2.48
11	0	23	0
12	0	24	4.933

A 5/6 INPUT ASSY

IC803 (PCM1742KE-TBB)

Pin No	Voltage (V)	Pin No	Voltage (V)
1	1.596	9	0
2	1.611	10	2.412
3	1.56	11	–
4	0	12	–
5	3.223	13	0.015
6	4.972	14	3.19
7	2.505	15	0.002
8	2.468	16	1.733

A 6/6 INPUT ASSY

IC805 (TA78L12F-TLB)

Pin No	Voltage (V)
1	11.896
2	0
3	15

B MIC1 ASSY

IC1501 (AK5381VT-TBB)

Pin No	Voltage (V)
1	2.530
2	2.534
3	0.000
4	2.499
5	0.000
6	5.008
7	0.230
8	0.000
9	0.295
10	0.274
11	0.264
12	0.270
13	0.072
14	0.000
15	0.000
16	0.000

C PANEL1 ASSY

IC1706 (TC74HC238AF-TBB)

Pin No	Voltage (V)	Pin No	Voltage (V)
1	1.624	9	–
2	1.086	10	0.533
3	1.086	11	0.533
4	0	12	0.534
5	0	13	0.534
6	3.243	14	0.534
7	0	15	0.533
8	0	16	3.242

C PANEL1 ASSY

IC1707 (TC74HC238AF-TBB)

Pin No	Voltage (V)	Pin No	Voltage (V)
1	1.624	9	–
2	1.085	10	0.533
3	1.086	11	0.533
4	0	12	0.533
5	0	13	0.533
6	3.242	14	0.533
7	–	15	0.532
8	0	16	3.242

C PANEL1 ASSY

IC1708 (TC74HC238AF-TBB)

Pin No	Voltage (V)	Pin No	Voltage (V)
1	1.622	9	0.402
2	1.622	10	0.403
3	1.622	11	0.403
4	0	12	0.403
5	0	13	0.403
6	3.24	14	0.403
7	0.406	15	0.405
8	0	16	3.24

C PANEL1 ASSY

IC1711 (TC74HC273AF-TBB)

Pin No	Voltage (V)	Pin No	Voltage (V)
1	3.204	11	3.242
2	0	12	0.442
3	0.175	13	0.158
4	0.156	14	0.159
5	0	15	0.886
6	0	16	0.442
7	0.17	17	0.158
8	0.16	18	0.165
9	0	19	0.886
10	0	20	3.24

C PANEL1 ASSY

IC1712 (TC74HC273AF-TBB)

Pin No	Voltage (V)	Pin No	Voltage (V)
1	3.204	11	3.241
2	0	12	0
3	0.167	13	0.151
4	0.155	14	0.159
5	0	15	0
6	0	16	0
7	0.17	17	0.157
8	0.159	18	0.164
9	0	19	0
10	0	20	3.24

C PANEL1 ASSY

IC1713 (TC74HC273AF-TBB)

Pin No	Voltage (V)	Pin No	Voltage (V)
1	3.203	11	3.241
2	0	12	0
3	0.166	13	0.157
4	0.155	14	0.152
5	0	15	0
6	0	16	0
7	0.168	17	0.157
8	0.158	18	0
9	0	19	3.239
10	0	20	3.239

F PANEL2 ASSY

IC2102 (NJM2903M-TLB)

Pin No	Voltage (V)
1	3.24
2	0.005
3	3.238
4	0
5	0
6	–
7	–
8	3.242

A

1/3 DSP ASSY

IC1 (PEG236A)

Pin No	Voltage (V)	Pin No	Voltage (V)	Pin No	Voltage (V)
1	3.188	61	0.026	121	3.170
2	0.000	62	0.000	122	3.167
3	0.036	63	0.443	123	3.168
4	3.203	64	0.357	124	1.842
5	–	65	0.562	125	3.060
6	1.003–1.478	66	0.555	126	3.056
7	1.568–1.913	67	0.551	127	3.064
8	2.698	68	0.358	128	0.021
9	1.377	69	0.689	129	0.000
10	0.000	70	0.000	130	3.067
11	1.202	71	0.567	131	3.050
12	0.422	72	3.171	132	3.043
13	1.025	73	0.551	133	0.035
14	0.029	74	0.680	134	–
15	2.817	75	0.293	135	3.057
16	2.679	76	0.284	136	3.049
17	0.581	77	0.282	137	3.083
18	0.000	78	0.278	138	2.863
19	0.024	79	0.280	139	0.030
20	3.162	80	0.278	140	–
21	0.024	81	2.234	141	0.083
22	0.024	82	1.822	142	1.109
23	2.545	83	1.822	143	0.139
24	3.187	84	–	144	0.139
25	0.000	85	0.007		
26	3.175	86	3.129		
27	3.183	87	3.143		
28	3.183	88	3.143		
29	0.024	89	3.156		
30	3.183	90	–		
31	3.183	91	2.977		
32	0.099	92	3.146		
33	3.173	93	0.519		
34	0.026	94	0.514		
35	3.175	95	0.000		
36	0.026	96	–		
37	2.246	97	1.599		
38	2.246	98	3.161		
39	3.176	99	3.162		
40	0.000	100	–		
41	3.182	101	–		
42	0.970	102	0.000		
43	0.114	103	3.192 *		
44	0.109	104	2.257		
45	1.381	105	2.256		
46	0.978	106	0.024		
47	1.376	107	3.159		
48	0.116	108	3.181		
49	0.114	109	3.180		
50	0.000	110	3.180		
51	2.250	111	3.182		
52	2.247	112	3.183		
53	2.247	113	1.390		
54	–	114	1.576		
55	0.026	115	1.596		
56	0.024	116	1.603		
57	0.549	117	1.581		
58	0.705	118	2.501		
59	0.026	119	3.146		
60	0.026	120	2.988		

* Hang-up assumes that I touch it.

2/3 DSP ASSY

IC22 (D610A003BPYPA225-K)

Pin No	Voltage (V)	Pin No	Voltage (V)	Pin No	Voltage (V)	Pin No	Voltage (V)
1	3.234–3.695	61	3.214	121	3.264	181	1.048
2	–	62	0.013	122	3.264	182	0.000
3	1.140	63	2.948	123	3.267	183	3.241
4	0.000	64	3.080	124	1.187	184	0.010
5	3.238	65	3.239	125	0.000	185	3.239
6	–	66	0.000	126	3.266	186	3.239
7	–	67	1.038	127	3.267	187	3.238
8	0.000	68	0.378	128	3.267	188	3.241
9	3.270	69	3.073	129	3.267	189	0.000
10	0.000	70	3.082	130	3.267	190	1.054
11	1.160	71	3.080	131	3.267	191	3.238
12	1.590	72	3.239	132	3.267	192	3.238
13	0.001	73	0.000	133	1.187	193	3.238
14	1.040	74	3.062	134	0.000	194	0.000
15	0.000	75	0.010	135	–	195	1.187
16	1.488	76	1.642	136	–	196	1.187
17	0.001	77	0.940	137	–	197	0.000
18	0.001	78	–	138	3.233	198	–
19	1.488	79	3.209	139	1.520	199	0.000
20	3.265	80	1.037	140	1.488	200	–
21	1.538	81	0.000	141	3.237	201	1.186
22	1.187	82	–	142	0.000	202	3.241
23	0.000	83	3.219	143	1.026	203	0.000
24	1.538	84	3.239	144	1.032	204	2.337
25	3.270	85	0.000	145	1.065	205	3.261
26	0.000	86	0.006	146	1.062	206	3.264
27	3.266	87	3.240	147	1.013	207	0.000
28	1.603	88	0.000	148	0.000	208	1.185
29	1.187	89	1.038	149	1.049		
30	0.000	90	0.569–3.225	150	1.281		
31	0.001	91	0.011	151	–		
32	–	92	0.011	152	–		
33	0.000	93	0.011	153	1.489		
34	0.000	94	0.354–3.014	154	0.000		
35	1.187	95	0.004	155	1.522		
36	–	96	1.187	156	3.240		
37	0.000	97	0.000	157	1.049		
38	–	98	3.266	158	0.000		
39	0.001	99	0.002	159	1.587		
40	1.042	100	0.002	160	3.240		
41	0.000	101	–	161	1.587		
42	0.000	102	2.686	162	3.240		
43	1.041	103	3.266	163	0.000		
44	3.238	104	1.187	164	–		
45	0.000	105	1.187	165	–		
46	1.040	106	0.000	166	–		
47	3.238	107	3.266	167	–		
48	0.000	108	3.266	168	–		
49	0.000	109	–	169	1.490		
50	1.040	110	3.266	170	0.000		
51	1.039	111	3.266	171	1.049		
52	0.000	112	3.266	172	–		
53	1.039	113	3.266	173	0.000		
54	0.000	114	3.266	174	–		
55	3.239	115	0.000	175	0.000		
56	–	116	1.187	176	3.202		
57	–	117	3.266	177	1.049		
58	3.239	118	3.266	178	0.000		
59	0.000	119	3.263	179	–		
60	1.038	120	3.264	180	0.000		

B C D E F

I 2/3 DSP ASSY

IC11 (K4S641632H-TC75-K)

Pin No	Voltage (V)	Pin No	Voltage (V)
1	3.253	28	0.000
2	3.113	29	3.180
3	3.253	30	3.167
4	3.100	31	3.168
5	3.109	32	3.143
6	0.000	33	0.129
7	3.105	34	0.125
8	3.098	35	0.165
9	3.253	36	–
10	3.092	37	3.237
11	3.089	38	1.669
12	0.000	39	3.174
13	3.092	40	–
14	3.252	41	0.000
15	3.175	42	3.077
16	3.230	43	3.253
17	3.206	44	3.108
18	3.224	45	3.138
19	3.219	46	0.000
20	1.012–3.024	47	3.034
21	1.010–3.084	48	3.142
22	0.139	49	3.253
23	0.119	50	3.151
24	3.058	51	3.029
25	3.139	52	0.000
26	3.245	53	3.064
27	3.253	54	0.000

I 2/3 DSP ASSY

IC12 (MBM29LV400TC-70PFTN)

Pin No	Voltage (V)	Pin No	Voltage (V)
1	0.146	25	0.128
2	0.158	26	3.238
3	1.013–3.112	27	0.000
4	0.984–3.103	28	3.225
5	0.164	29	3.103
6	0.138	30	3.076
7	0.131	31	3.090
8	0.111	32	3.107
9	–	33	3.103
10	–	34	3.141
11	3.229	35	3.102
12	0.557	36	3.035
13	–	37	3.251
14	–	38	3.085
15	–	39	3.145
16	–	40	3.087
17	0.185	41	3.151
18	0.517	42	3.079
19	3.169	43	0.266
20	3.169	44	0.264
21	3.182	45	3.059
22	3.246	46	0.000
23	3.139	47	3.253
24	3.063	48	0.025

I 3/3 DSP ASSY

IC13 (XC3S50-4TQG144C-K)

Pin No	Voltage (V)	Pin No	Voltage (V)	Pin No	Voltage (V)
1	2.994	61	1.215	121	0.604
2	0.126	62	2.514	122	0.661
3	3.183	63	0.706	123	0.610
4	–	64	0.021	124	0.614
5	–	65	0.084	125	0.604
6	–	66	3.179	126	0.595
7	–	67	0.000	127	1.216
8	1.579	68	0.361	128	1.240
9	0.020	69	0.585	129	1.251
10	0.052	70	0.713	130	1.233
11	3.176	71	2.541	131	1.706
12	1.577	72	2.521	132	1.745
13	0.053	73	0.381	133	1.676
14	3.175	74	0.562	134	1.701
15	–	75	3.181	135	1.771
16	0.000	76	0.583	136	0.000
17	–	77	0.587	137	1.801
18	–	78	0.557	138	1.712
19	3.182	79	0.467	139	0.000
20	–	80	–	140	1.851
21	3.176	81	0.000	141	1.784
22	0.000	82	–	142	1.720
23	–	83	–	143	1.725
24	–	84	0.359	144	–
25	–	85	0.021		
26	–	86	0.021		
27	1.047	87	0.021		
28	2.665	88	0.000		
29	0.020	89	0.021		
30	–	90	0.022		
31	2.803	91	3.181		
32	0.025	92	0.021		
33	1.029	93	0.021		
34	3.182	94	0.000		
35	0.435	95	–		
36	1.196	96	–		
37	2.524	97	3.028		
38	2.525	98	3.018		
39	2.525	99	3.030		
40	1.412	100	3.019		
41	2.646	101	0.000		
42	0.000	102	3.016		
43	3.181	103	3.028		
44	1.595–1.927	104	3.003		
45	0.000	105	3.021		
46	1.048–1.458	106	3.182		
47	3.153	107	3.018		
48	2.514	108	3.070		
49	1.215	109	–		
50	3.174	110	–		
51	3.161	111	–		
52	0.329	112	3.040		
53	0.334	113	3.082		
54	3.182	114	0.000		
55	0.332	115	0.604		
56	0.334	116	0.856		
57	–	117	0.000		
58	–	118	0.880		
59	0.335	119	0.793		
60	0.336	120	0.605		

I 3/3 DSP ASSY

IC14 (R1224N102H-TLB)

Pin No	Voltage (V)
1	2.783
2	0.020
3	1.020
4	2.002
5	3.201

I 3/3 DSP ASSY

IC16 (NJM2374AM-TFB)

Pin No	Voltage (V)	Pin No	Voltage (V)
1	13.862	5	1.268
2	0.000	6	8.813
3	0.792	7	8.767
4	0.000	8	6.840

I 3/3 DSP ASSY

IC15 (S-1200B25-M5-TRB)

Pin No	Voltage (V)
1	3.237
2	0.000
3	3.236
4	–
5	2.510

J 1/3 OUTPUT ASSY

IC904 (AK4393VF-TBB)

Pin No	Voltage (V)	Pin No	Voltage (V)
1	0.000	15	0.000
2	3.221	16	0.000
3	1.698	17	4.977
4	3.188	18	4.977
5	1.529	19	0.000
6	0.004	20	2.621
7	1.558	21	2.620
8	0.000	22	2.623
9	2.940	23	2.623
10	3.202	24	2.629
11	0.000	25	3.217
12	0.000	26	3.219
13	3.219	27	0.000
14	0.000	28	0.000

J 2/3 OUTPUT ASSY

IC910 (PCM1742KE-TBB)

Pin No	Voltage (V)	Pin No	Voltage (V)
1	1.529	9	0.000
2	0.003	10	2.481
3	1.560	11	–
4	0.000	12	–
5	3.223	13	0.016
6	4.976	14	3.192
7	2.505	15	0.002
8	2.462	16	1.705

J 3/3 OUTPUT ASSY

IC915 (PCM1742KE-TBB)

Pin No	Voltage (V)	Pin No	Voltage (V)
1	1.530	9	0.000
2	0.002	10	2.470
3	1.559	11	0.000
4	0.000	12	2.470
5	3.224	13	0.016
6	4.975	14	3.192
7	2.509	15	0.002
8	2.467	16	1.701

J 3/3 OUTPUT ASSY

IC918 (AK5381VT-TBB)

Pin No	Voltage (V)	Pin No	Voltage (V)
1	2.482	9	0.167
2	0.741	10	0.359
3	0.000	11	0.150
4	2.481	12	0.352
5	0.000	13	0.003
6	4.974	14	0.000
7	3.225	15	0.000
8	0.000	16	0.000

K DIGIC ASSY

IC1202 (AK4117VF-TBB)

Pin No	Voltage (V)	Pin No	Voltage (V)
1	1.195	13	0.000
2	3.181	14	-
3	1.566	15	0.000
4	0.000	16	-
5	0.074	17	1.583
6	3.180	18	0.062
7	0.000	19	3.189
8	0.000	20	2.254
9	-	21	-
10	2.232	22	-
11	1.741	23	3.158
12	0.005	24	0.000

K DIGIC ASSY

IC1208 (AK4117VF-TBB)

Pin No	Voltage (V)	Pin No	Voltage (V)
1	1.188	13	0.000
2	3.182	14	-
3	1.572	15	0.000
4	0.000	16	-
5	0.075	17	1.593
6	3.183	18	0.063
7	0.000	19	3.270
8	0.000	20	2.267
9	-	21	-
10	2.245	22	-
11	1.800	23	3.177
12	0.005	24	0.000

K DIGIC ASSY

IC1214 (AK4117VF-TBB)

Pin No	Voltage (V)	Pin No	Voltage (V)
1	1.193	13	0.000
2	3.202	14	-
3	1.576	15	0.000
4	0.000	16	-
5	0.075	17	1.593
6	3.202	18	0.063
7	0.000	19	3.206
8	0.000	20	2.266
9	-	21	-
10	2.248	22	-
11	1.805	23	3.176
12	0.004	24	0.000

K DIGIC ASSY

IC1217 (AK4117VF-TBB)

Pin No	Voltage (V)	Pin No	Voltage (V)
1	1.186	13	0.000
2	3.191	14	–
3	1.568	15	0.000
4	0.000	16	–
5	0.075	17	1.593
6	3.199	18	0.063
7	0.000	19	3.206
8	0.000	20	2.266
9	–	21	–
10	2.246	22	–
11	1.759	23	3.176
12	0.004	24	0.000

K DIGIC ASSY

IC1203 (AD1895AYRS-TBB)

Pin No	Voltage (V)	Pin No	Voltage (V)
1	–	15	0.004
2	1.599	16	0.000
3	–	17	0.000
4	0.004	18	0.000
5	1.739	19	0.000
6	2.245	20	0.000
7	3.197	21	0.000
8	0.000	22	3.196
9	0.000	23	1.890
10	0.000	24	2.248
11	0.000	25	1.624
12	0.000	26	0.000
13	3.176	27	0.000
14	0.004	28	0.000

K DIGIC ASSY

IC1209 (AD1895AYRS-TBB)

Pin No	Voltage (V)	Pin No	Voltage (V)
1	–	15	0.004
2	1.602	16	0.000
3	–	17	0.000
4	0.004	18	0.000
5	1.800	19	0.000
6	2.246	20	0.000
7	3.200	21	0.000
8	0.000	22	3.199
9	0.000	23	1.893
10	0.000	24	2.249
11	0.000	25	1.631
12	0.000	26	0.000
13	3.177	27	0.000
14	0.004	28	0.000

K DIGIC ASSY

IC1215 (AD1895AYRS-TBB)

Pin No	Voltage (V)	Pin No	Voltage (V)
1	–	15	0.004
2	1.586	16	0.000
3	–	17	0.000
4	0.004	18	0.000
5	1.805	19	0.000
6	2.247	20	0.000
7	3.203	21	0.000
8	0.000	22	3.202
9	0.000	23	1.894
10	0.000	24	2.248
11	0.000	25	1.629
12	0.000	26	0.000
13	3.175	27	0.000
14	0.005	28	0.000

K DIGIC ASSY

IC1218 (AD1895AYRS-TBB)

Pin No	Voltage (V)	Pin No	Voltage (V)
1	–	15	0.004
2	1.592	16	0.000
3	–	17	0.000
4	0.004	18	0.000
5	1.756	19	0.000
6	2.235	20	0.000
7	3.184	21	0.000
8	0.000	22	3.183
9	0.000	23	1.886
10	0.000	24	2.239
11	0.000	25	1.624
12	0.000	26	0.000
13	3.161	27	0.000
14	0.004	28	0.000

M DIGIB ASSY

IC1308 (AK4114VQ)

Pin No	Voltage (V)	Pin No	Voltage (V)
1	–	25	–
2	0.000	26	1.599
3	–	27	–
4	0.000	28	1.779
5	–	29	–
6	0.000	30	1.644
7	–	31	3.164
8	0.000	32	0.172
9	0.000	33	0.073
10	0.000	34	3.191
11	3.167	35	3.189
12	–	36	–
13	3.182	37	–
14	0.000	38	3.182
15	–	39	1.203
16	1.612	40	1.200
17	–	41	0.000
18	–	42	–
19	–	43	0.000
20	–	44	–
21	3.182	45	0.000
22	0.000	46	–
23	–	47	0.000
24	2.237	48	–

M DIGIB ASSY

IC1307 (AD1895AYRS-TBB)

Pin No	Voltage (V)	Pin No	Voltage (V)
1	–	15	0.172
2	0.250	16	0.000
3	–	17	0.000
4	0.209	18	0.000
5	1.591	19	0.000
6	2.243	20	0.000
7	3.178	21	0.000
8	0.000	22	0.004
9	0.000	23	0.192
10	0.000	24	0.161
11	0.000	25	0.160
12	0.000	26	0.004
13	0.004	27	0.005
14	0.004	28	0.004

O HPAMP ASSY

IC2501 (PCM1742KE-TBB)

Pin No	Voltage (V)
1	1.556
2	0.002
3	1.563
4	0
5	3.2
6	4.928
7	2.481
8	2.441
9	0
10	2.456
11	-
12	-
13	0.015
14	3.191
15	0.001
16	1.602

3.30 WAVEFORMS

Measuring Conditions (Analog)

Measure CH	IN CH	IN LEVEL(TRIM MAX)	IN FREQ	RL	
PHONO	CH1	-46dBv	1KHz		
LINE	CH1	-6dBv	1KHz		
CD	CH1	-6dBv	1KHz		
RETURN	CH1SELECT	-6dBv	1KHz		SEND LEVEL MAX
SEND	CH1SELECT	-6dBv(CH1)	1KHz		SEND LEVEL MAX
BOOTH	CH1	-6dBv(CH1)	1KHz	600ohm	BOOTH LEVEL MAX,EQ FLAT
REC	CH1	-6dBv(CH1)	1KHz	10Kohm	
MIC 1,2	MIC 1,2	-44.8dBv	1KHz		
HP	CH1	-6dBv	1KHz	32ohm	HP LEVEL 4

Set as follows except for designation;
- CH1 FADER: MAX
- C.F ASSIGN: Nothing
- CH FADER CURVE: Center.

A INPUT ASSY

NOTE: The following waveforms were measured at the point of the corresponding balloon number in the schematic diagram and PCB diagram.

1 JA401-pin 5 (CD L)
V: 0.2V/div. H: 500µsec/div.

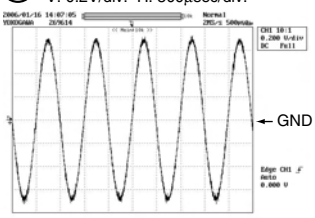

5 R440 and R450 (AINL-)
V: 1.00V/div. H: 500µsec/div.

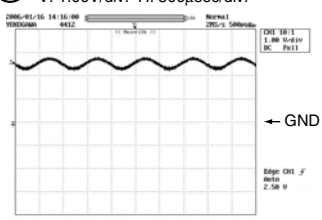

9 RY401 - pin7
V: 0.2V/div. H: 500µsec/div.

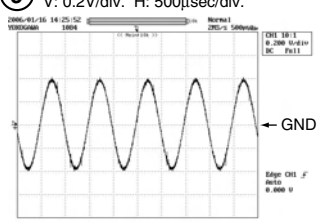

13 CN501 - pin5 (L_OUT)
V: 0.2V/div. H: 500µsec/div.

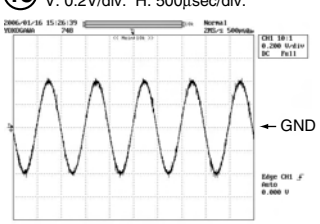

2 RY401-pin 9
V: 0.2V/div. H: 500µsec/div.

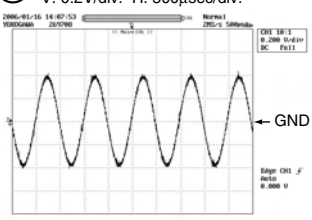

6 R442 and R451 (AINL+)
V: 1.00V/div. H: 500µsec/div.

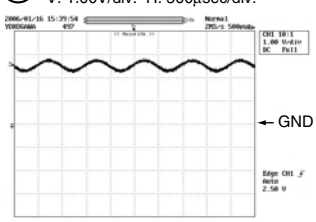

10 JA501 - pin2 (PHONO L)
V: 50mV/div. H: 500µsec/div.

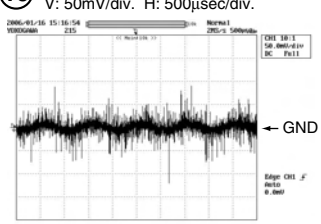

14 IC503 - pin7
V: 0.2V/div. H: 500µsec/div.

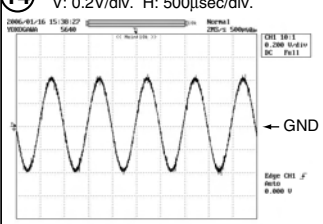

3 CN401-pin 5 (L_OUT)
V: 0.2V/div. H: 500µsec/div.

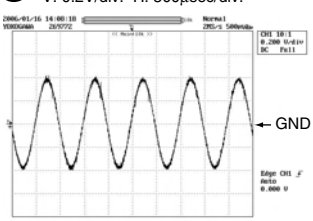

7 IC408 - pin 2 (SDO1)
V: 1V/div. H: 200nsec/div.

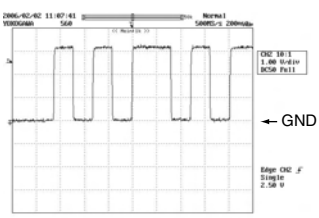

11 Q505 -Gate
V: 50mV/div. H: 500µsec/div.

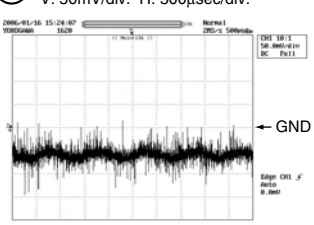

15 R540 and R550 (AINL-)
V: 1.0V/div. H: 500µsec/div.

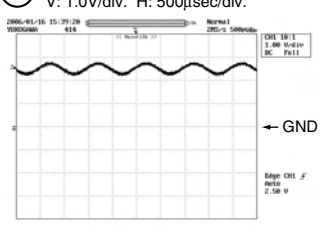

4 IC403-pin 7
V: 0.2V/div. H: 500µsec/div.

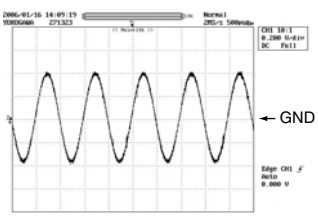

8 JA401 - pin 2 (LINE L)
V: 0.5V/div. H: 500µsec/div.

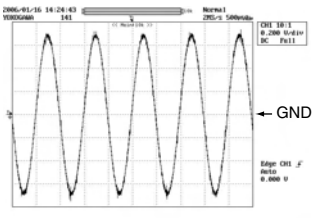

12 RY501 - pin7
V: 0.2V/div. H: 500µsec/div.

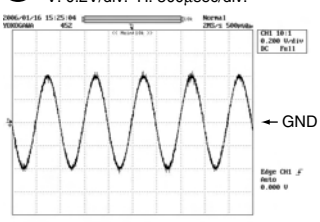

16 R542 and R551 (AINL+)
V: 1.0V/div. H: 500µsec/div.

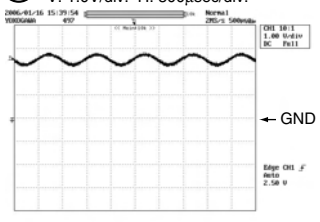

NOTE: The following waveforms were measured at the point of the corresponding balloon number in the schematic diagram and PCB diagram.

A INPUT ASSY

17 **IC508 - pin2 (SDO2)**
V: 1.0V/div. H: 200nsec/div.

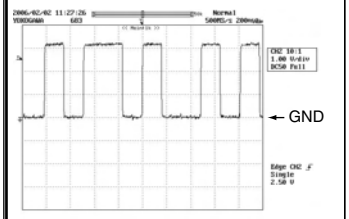

21 **JA801 - pin5 (RECOUT L)**
V: 0.5V/div. H: 500µsec/div.

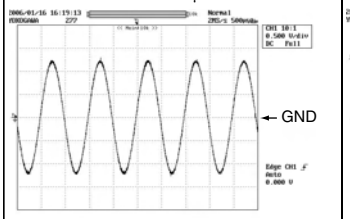

25 **CN451-pin 2 (DSP_RESET2)**
V: 1V/div. H: 200nsec/div.

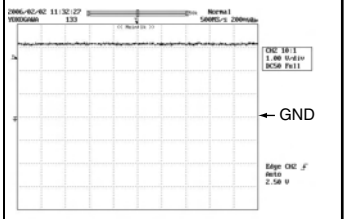

18 **C841 - Side (VOUTL)**
V: 0.2V/div. H: 500µsec/div.

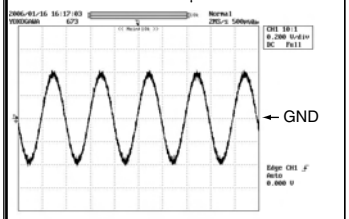

22 **C820 - –Side (MASTER_OUT L)**
V: 1.0V/div. H: 500µsec/div.

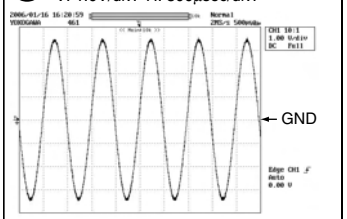

26 **CN451-pin 4 (24M)**
V: 1V/div. H: 50nsec/div.

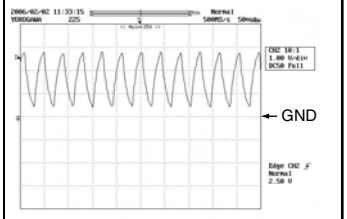

19 **IC801 - pin3**
V: 0.5V/div. H: 500µsec/div.

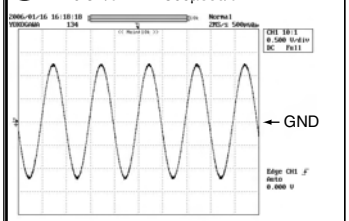

23 **JA801 - pin2 (MASTER_OUT L)**
V: 1.0V/div. H: 500µsec/div.

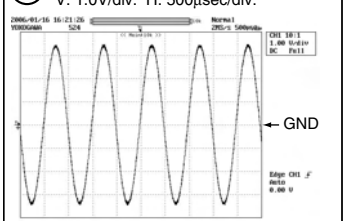

27 **CN451-pin 6 (6M)**
V: 1V/div. H: 50nsec/div.

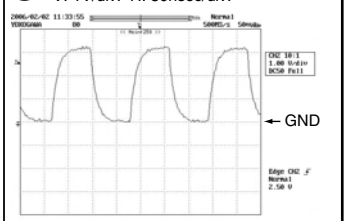

20 **C818 - –Side (REC OUT L)**
V: 0.5V/div. H: 500µsec/div.

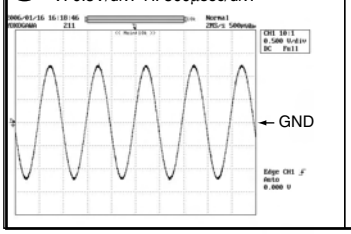

24 **CN451 - Pin1 (DATA_REC)**
V: 1.0V/div. H: 200nsec/div.

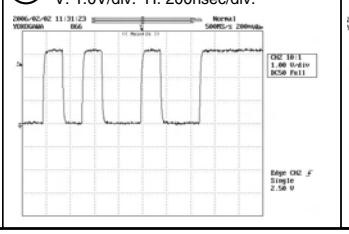

28 **CN451-pin 8 (96k)**
V: 1V/div. H: 2µsec/div.

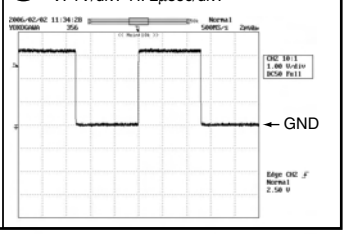

NOTE: The following waveforms were measured at the point of the corresponding balloon number in the schematic diagram and PCB diagram.

L DSP ASSY

1 IC22-pin 27 (MASTER_DATA1)
V: 1.00V/div. H: 200nsec/div.

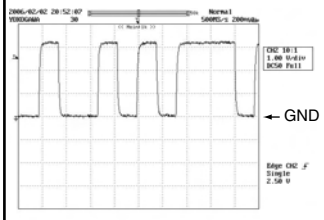

2 IC22-pin 27 (MASTER_DATA2)
V: 1.00V/div. H: 200nsec/div.

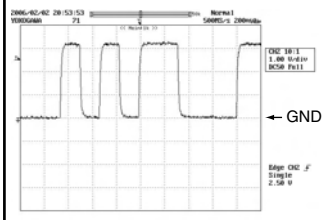

3 IC22-pin 18(REC DATA)
V: 1.00V/div. H: 200nsec/div.

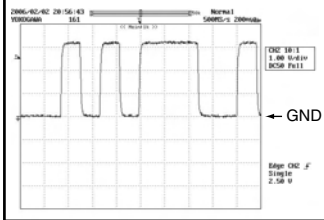

4 IC22-pin 17(SEND DATA)
V: 1.00V/div. H: 200nsec/div.

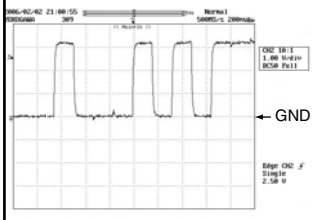

5 IC22 - pin 20(BOOTH DATA)
V: 1.00V/div. H: 200nsec/div.

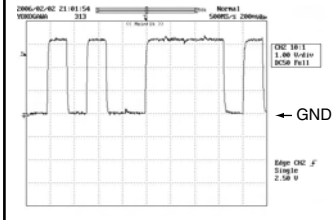

6 IC4 - pin 4 (24M)
V: 1V/div. H: 50nsec/div.

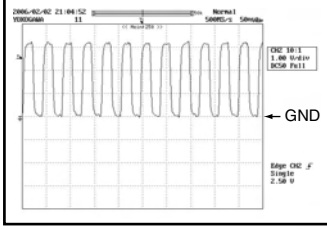

7 IC6 - pin 8 (6M)
V: 1V/div. H: 50nsec/div.

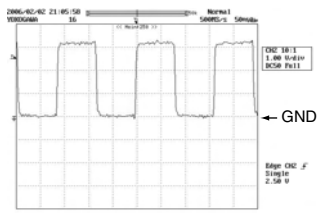

8 IC7 - pin 8 (96k)
V: 1V/div. H: 2µsec/div.

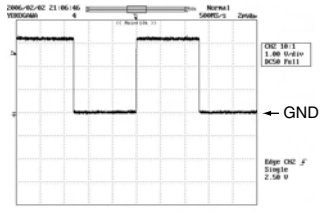

B MIC 1 ASSY

1 JA1502 - pin2 (MIC IN)
V: 50mV/div. H: 500µsec/div.

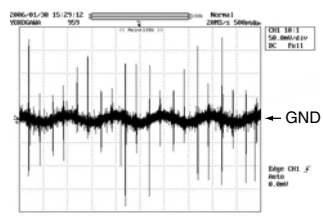

2 CN1503 pin1(MIC1_I)
V: 0.2V/div. H: 500µsec/div.

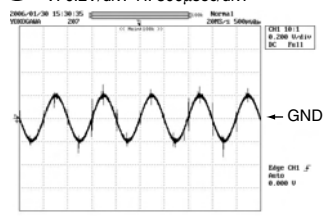

3 IC1501 - pin 1 (AINR)
V: 1V/div. H: 500µsec/div.

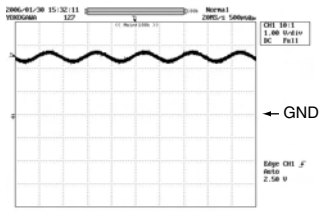

4 CN1502 - pin2 (MIC_DATA)
V: 1.0V/div. H: 200nsec/div.

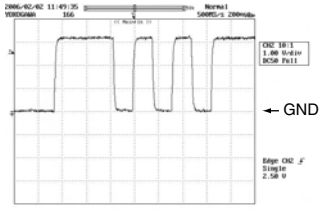

5 CN1502 - pin8 (6M)
V: 1.0V/div. H: 50nsec/div.

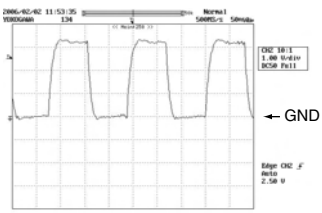

6 CN1502 - pin6 (24M)
V: 1.0V/div. H: 50nsec/div.

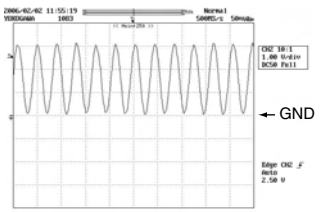

7 CN1502 - Pin4 (96k)
V: 1.0V/div. H: 2µsec/div.

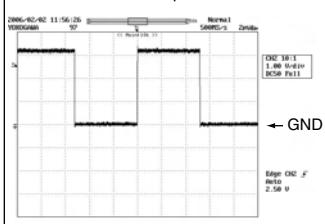

NOTE: The following waveforms were measured at the point of the corresponding balloon number in the schematic diagram and PCB diagram.

N DIGIC ASSY

1 **IC1202-pin 4 (PNG)**
V: 1.00V/div. H: 200nsec/div.

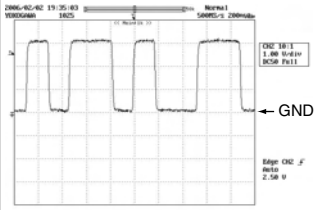

7 **CN1203 - pin 11 (6M)**
V: 1V/div. H: 50nsec/div.

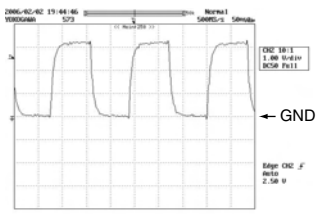

2 **IC1203-pin 4 (PNG)**
V: 1.00V/div. H: 500nsec/div.

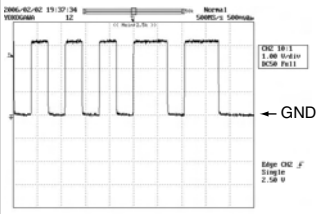

3 **CN1203-pin 1(D-IN_1_DATA)**
V: 1.00V/div. H: 200nsec/div.

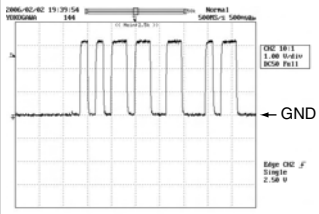

4 **CN1205-pin 11(DSP_RESET3)**
V: 1.00V/div. H: 200nsec/div.

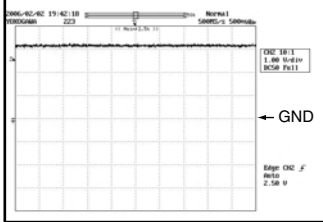

5 **CN1205 - pin 9(24M)**
V: 1.00V/div. H: 200nsec/div.

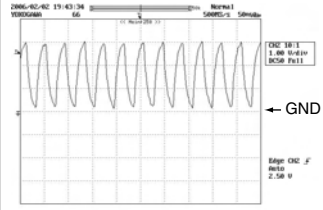

6 **CN1203 - pin 9 (96k)**
V: 1V/div. H: 50nsec/div.

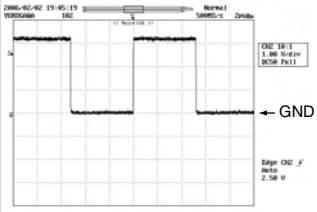

M OUTPUT ASSY

NOTE: The following waveforms were measured at the point of the corresponding balloon number in the schematic diagram and PCB diagram.

A

1 **CN901-pin 20 (MASTER_DATA)**
V: 1.0V/div. H: 200nsec/div.

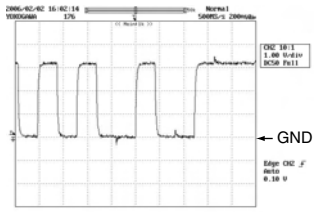

7 **JA901 - pin 2 (MASTER OUT L COLD)**
V: 1V/div. H: 500µsec/div.

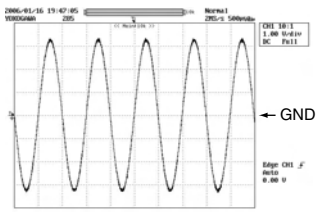

13 **C980 & R1049**
V: 2.0V/div. H: 500µsec/div.

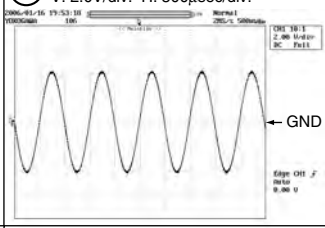

19 **JA905 - Output (SEND L)**
V: 0.2V/div. H: 500µsec/div.

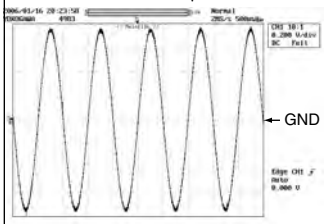

B

2 **IC904 -pin 23 (L +)**
V: 1.0V/div. H: 500µsec/div.

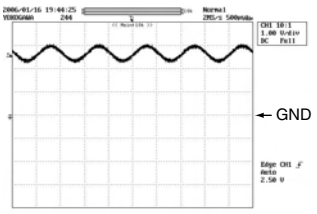

8 **CN901 - pin19 (BOOTH_DATA)**
V: 1.0V/div. H: 200nsec/div.

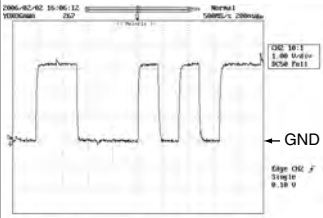

14 **JA903 - OUTPUT PIN(BOOTH L COLD)**
V: 1.0V/div. H: 500µsec/div.

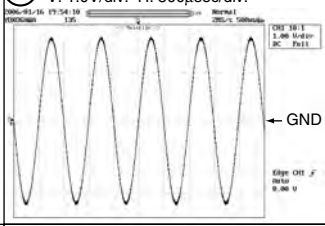

20 **JA907 - Input pin (RETURN L)**
V: 0.2V/div. H: 500µsec/div.

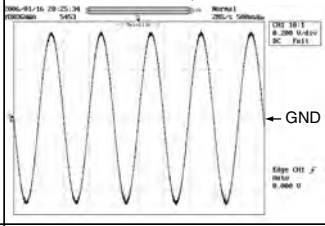

C

3 **IC904 -pin 22 (L –)**
V: 1.0V/div. H: 500µsec/div.

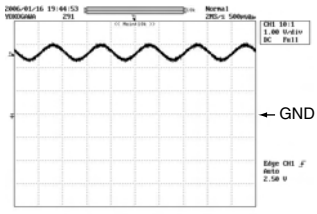

9 **C965 & R1031 (VOUTL)**
V: 1.0V/div. H: 500µsec/div.

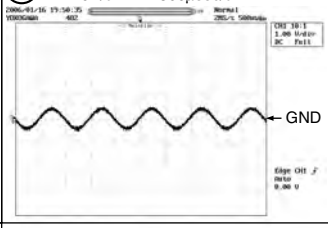

15 **JA903 - Output Pin(BOOTH L HOT)**
V: 1.0V/div. H: 500µsec/div.

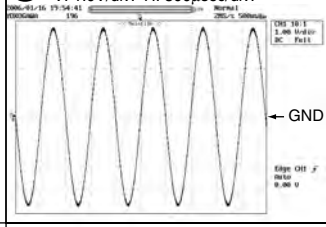

21 **IC918 - pin2 (RETURN_A/D)**
V: 1.0V/div. H: 500µsec/div.

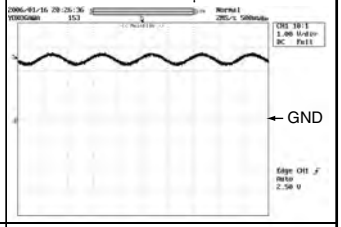

D

4 **L902 -pin 1 (L –)**
V: 1.0V/div. H: 500µsec/div.

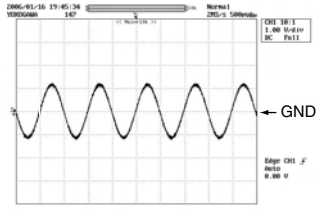

10 **C970 & R1036**
V: 1.0V/div. H: 500µsec/div.

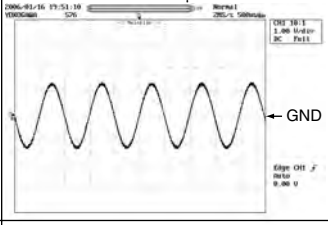

16 **CN901 - Pin18 (SEND_DATA)**
V: 1.0V/div. H: 200nsec/div.

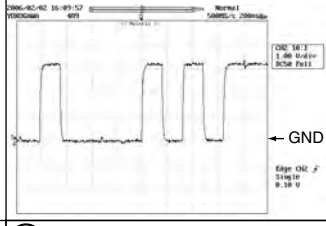

22 **CN901 - pin17 (RETURN_DATA)**
V: 1.0V/div. H: 200nsec/div.

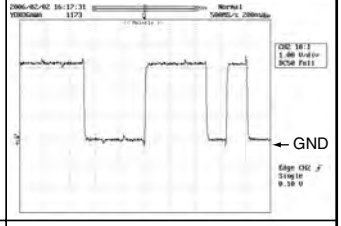

E

5 **L902 - pin 6 (L +)**
V: 1.0V/div. H: 500µsec/div.

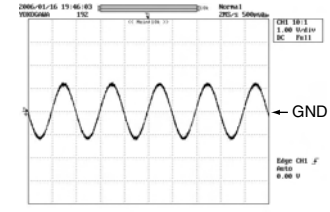

11 **IC912 - pin1**
V: 1.0V/div. H: 500µsec/div.

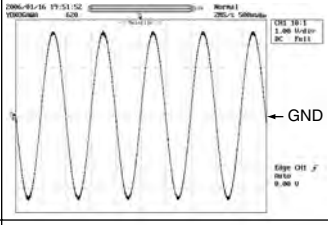

17 **C1008 & R1097**
V: 2.0V/div. H: 500µsec/div.

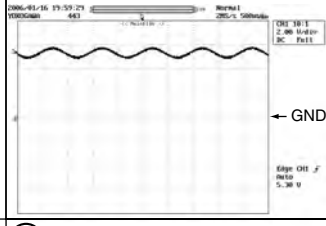

23 **CN901 - pin16 (DSP_RESET1)**
V: 1.0V/div. H: 200nsec/div.

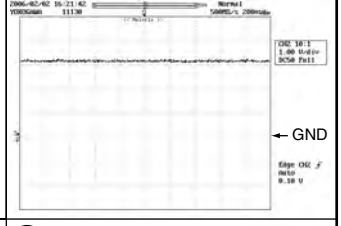

6 **JA901 - pin 3 (MASTER_OUT L Hot)**
V: 1.0V/div. H: 500µsec/div.

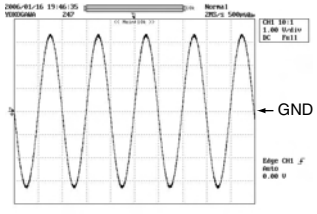

12 **C975 & R1044**
V: 2.0V/div. H: 500µsec/div.

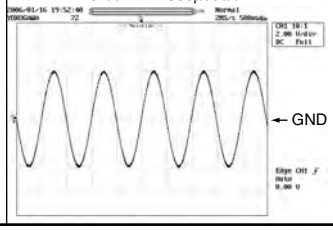

18 **C1013 – Side**
V: 0.2V/div. H: 500µsec/div.

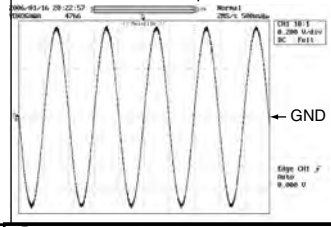

24 **CN901 - pin14 (24M)**
V: 1.0V/div. H: 50nsec/div.

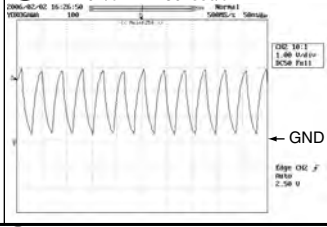

F

25 **CN901-pin12 (6M)**
V: 1V/div. H: 50nsec/div.

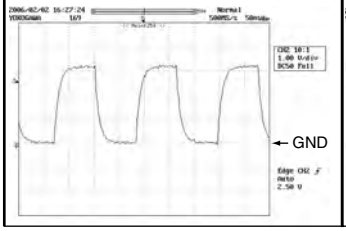

26 **CN901-pin10 (96k)**
V: 1V/div. H: 2µsec/div.

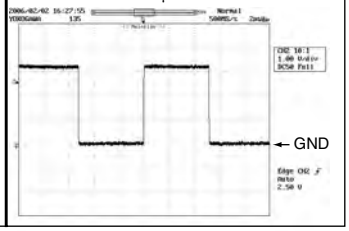

NOTE: The following waveforms were measured at the point of the corresponding balloon number in the schematic diagram and PCB diagram.

P DIGIB ASSY

1 CN1302-pin3 (MASTER_DATA2)
V: 1.0V/div. H: 500nsec/div.

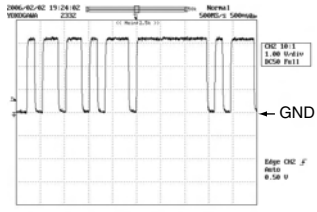

2 IC1307-pin23 (fs=48k)
V: 1.0V/div. H: 500nsec/div.

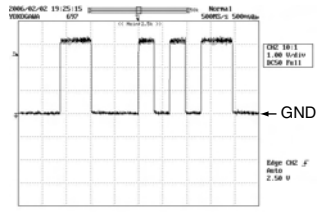

2 IC1307-pin23 (fs=96k)
V: 1.0V/div. H: 500nsec/div.

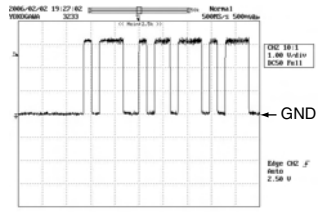

3 IC1303-pin 6(fs=48k)
V: 1.0V/div. H: 200nsec/div.

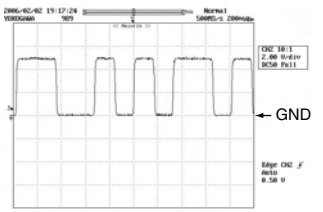

3 IC1303 - pin 6(fs=96k)
V: 2.0V/div. H: 200nsec/div.

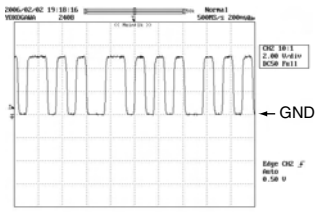

4 JA13034 - Input pin (fs=48k)
V: 0.5V/div. H: 200nsec/div.

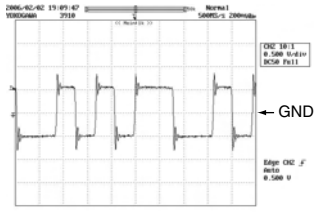

4 JA1303 - Input pin (fs=96k)
V: 0.5V/div. H: 200nsec/div.

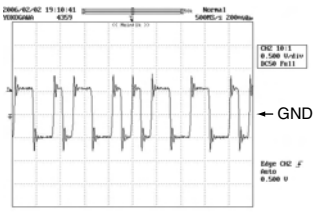

5 CN1302 - pin 5 (24M)
V: 1V/div. H: 50nsec/div.

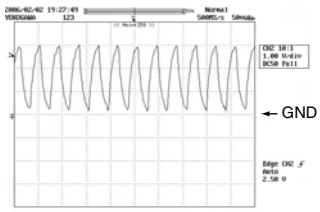

6 CN1302 - pin7 (6M)
V: 1V/div. H: 50nsec/div.

7 CN1302 - pin3 (96K)
V: 1.0V/div. H: 2µsec/div.

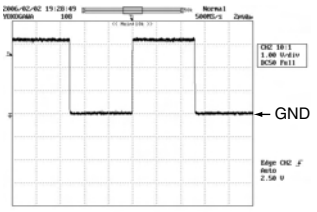

8 CN1301 - pin11 (DSP_RESET3)
V: 1.0V/div. H: 2µsec/div.

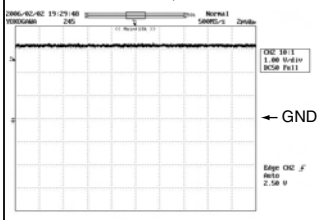

S HP JACK ASSY

1 CN2503-pin1 (HP OUT)
V: 1.0V/div. H: 500µsec/div.

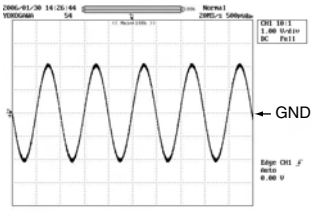

2 CN2534 - – Side
V: 0.2V/div. H: 500µsec/div.

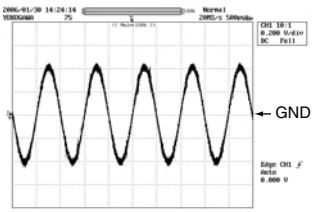

3 C2521 - + Side
V: 2.0V/div. H: 200µsec/div.

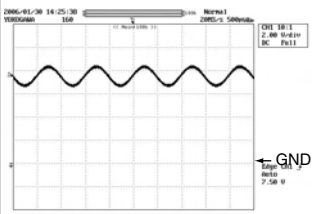

4 IC2503 - pin 1
V: 2.0V/div. H: 500µsec/div.

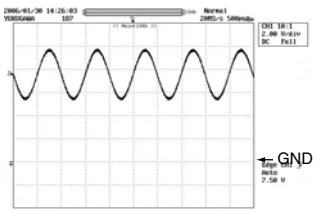

5 CN2501 - pin 1 (HP_L)
V: 1V/div. H: 200nsec/div.

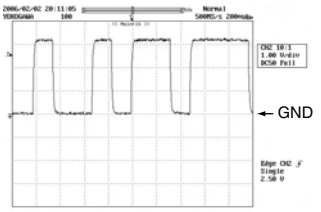

6 CN2503 - pin7 (24M)
V: 1V/div. H: 50nsec/div.

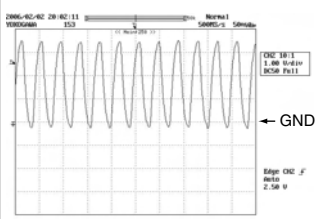

7 CN2503 - pin5 (6M)
V: 1.0V/div. H: 50nsec/div.

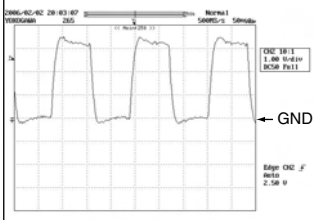

8 CN2503 - pin3 (96k)
V: 1.0V/div. H: 2µsec/div.

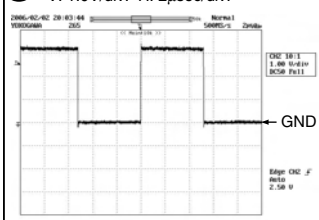

4. PCB CONNECTION DIAGRAM
4.1 INPUT ASSY

SIDE A

A INPUT ASSY

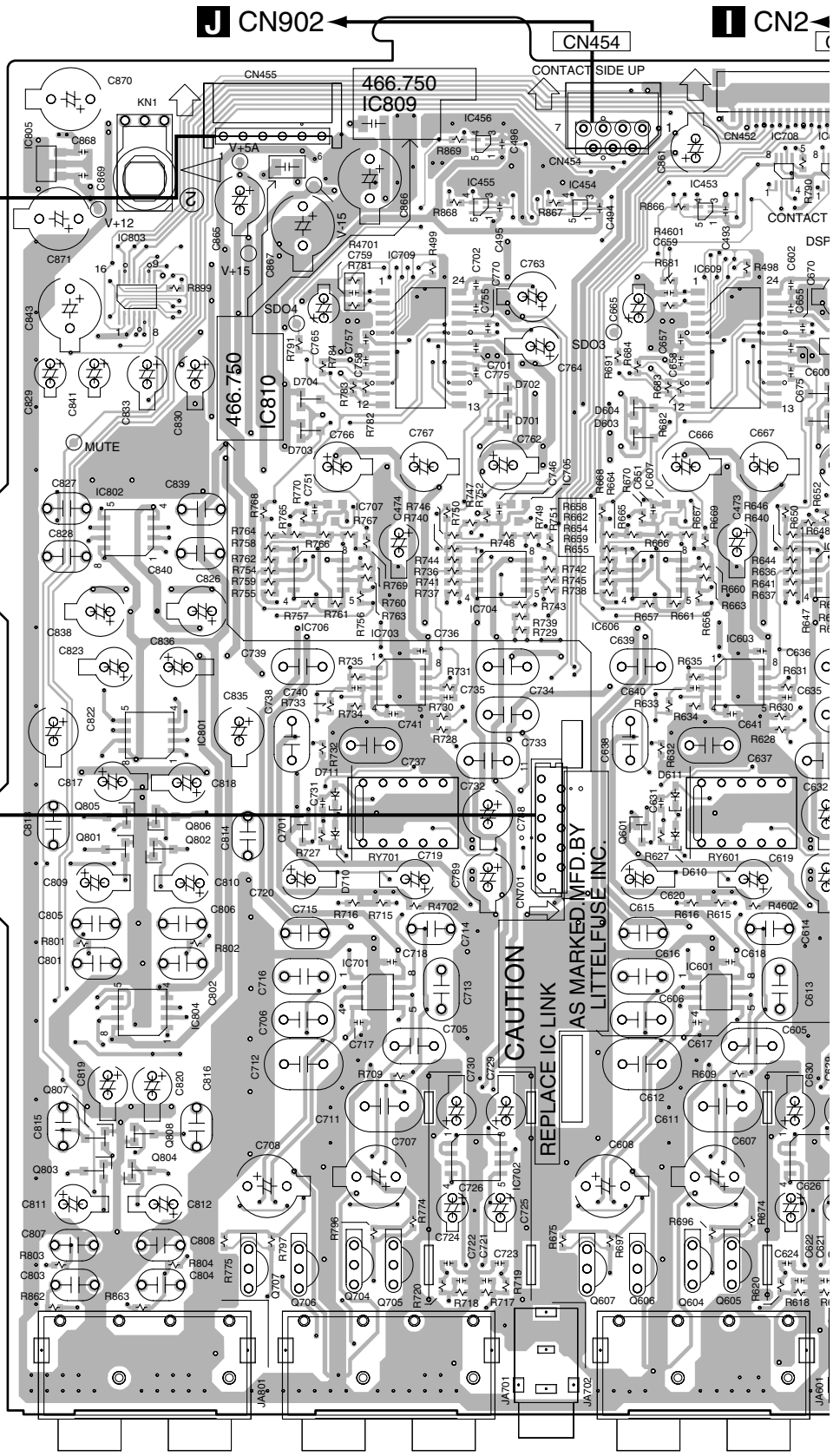

NOTE FOR PCB DIAGRAMS :

1. Part numbers in PCB diagrams match those in the schematic diagrams.
2. A comparison between the main parts of PCB and schematic diagrams is shown below.

Symbol In PCB Diagrams	Symbol In Schematic Diagrams	Part Name
B C E	B C E	Transistor
B C E	B C E	Transistor with resistor
D G S	D G S	Field effect transistor
		Resistor array
		3-terminal regulator

3. The parts mounted on this PCB include all necessary parts for several destinations.
   For further information for respective destinations, be sure to check with the schematic diagram.
4. View point of PCB diagrams.

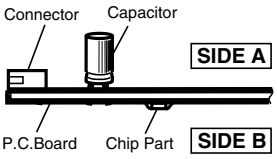

IC805 IC803 IC802 IC804 IC801 IC810 IC809 IC707 IC706 IC703 IC701 IC709 IC456 IC704 IC455 IC454 IC705 IC702 IC606 IC453 IC601 IC607 IC609 IC603 IC708

Q803 Q805 Q807 Q801 Q804 Q806 Q808 Q802 Q701 Q707 Q706 Q704 Q705 Q607 Q601 Q606 Q604 Q605

SIDE A

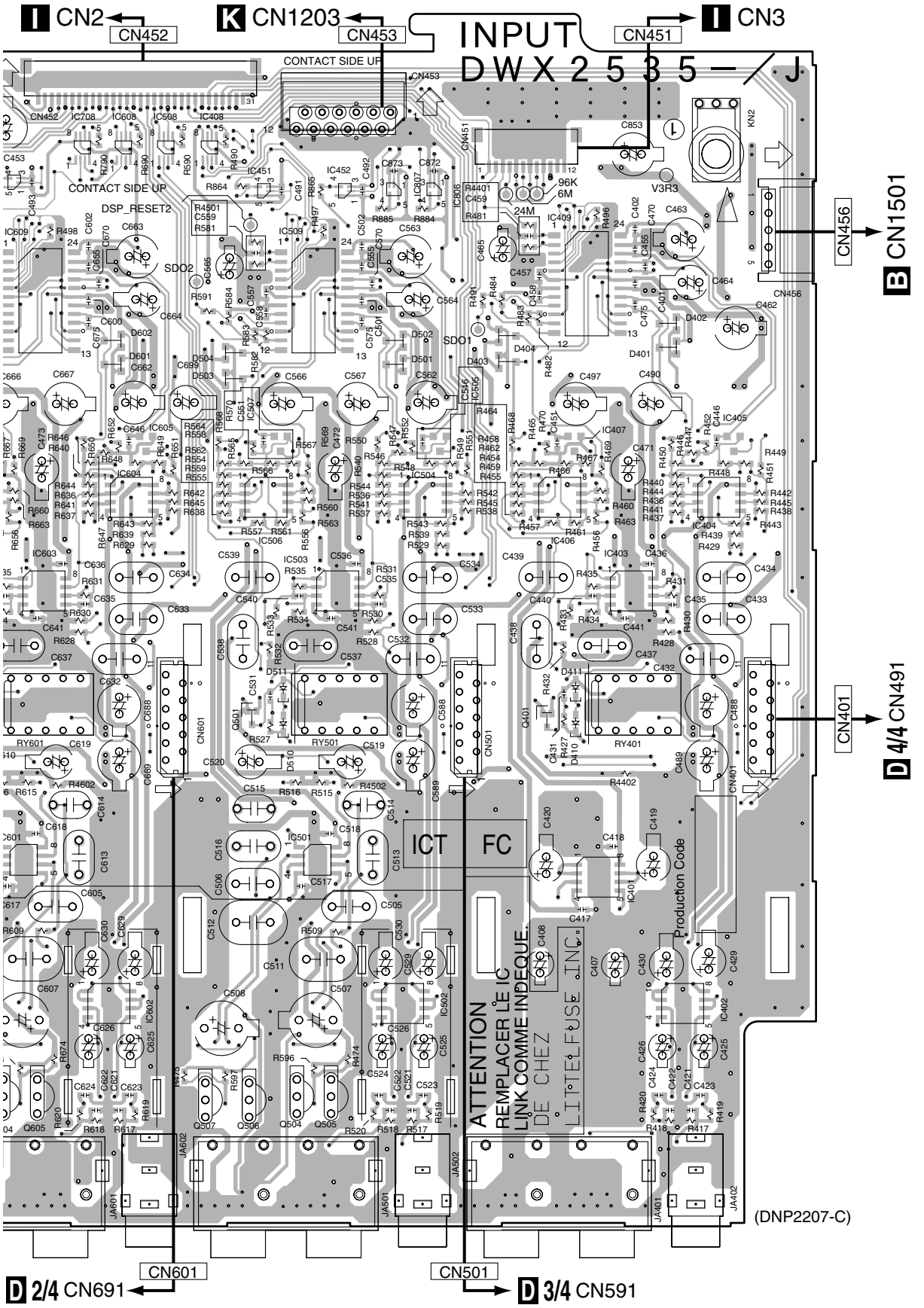
I CN2
CN452
K CN1203
CN453
INPUT
DWX2535-/J
CN451
I CN3
CONTACT SIDE UP
DSP_RESET2
SDO2
SDO1
V3R3
96K
6M
24M
CN456
B CN1501
CN401
D 4/4 CN491
ICT
FC
ATTENTION
REMPLACER LE IC
LINK COMME INDEQUE.
DE CHEZ
LITTELFUSE INC.
Production Code
(DNP2207-C)
CN601
CN501
D 2/4 CN691
D 3/4 CN591

SIDE B

A INPUT ASSY

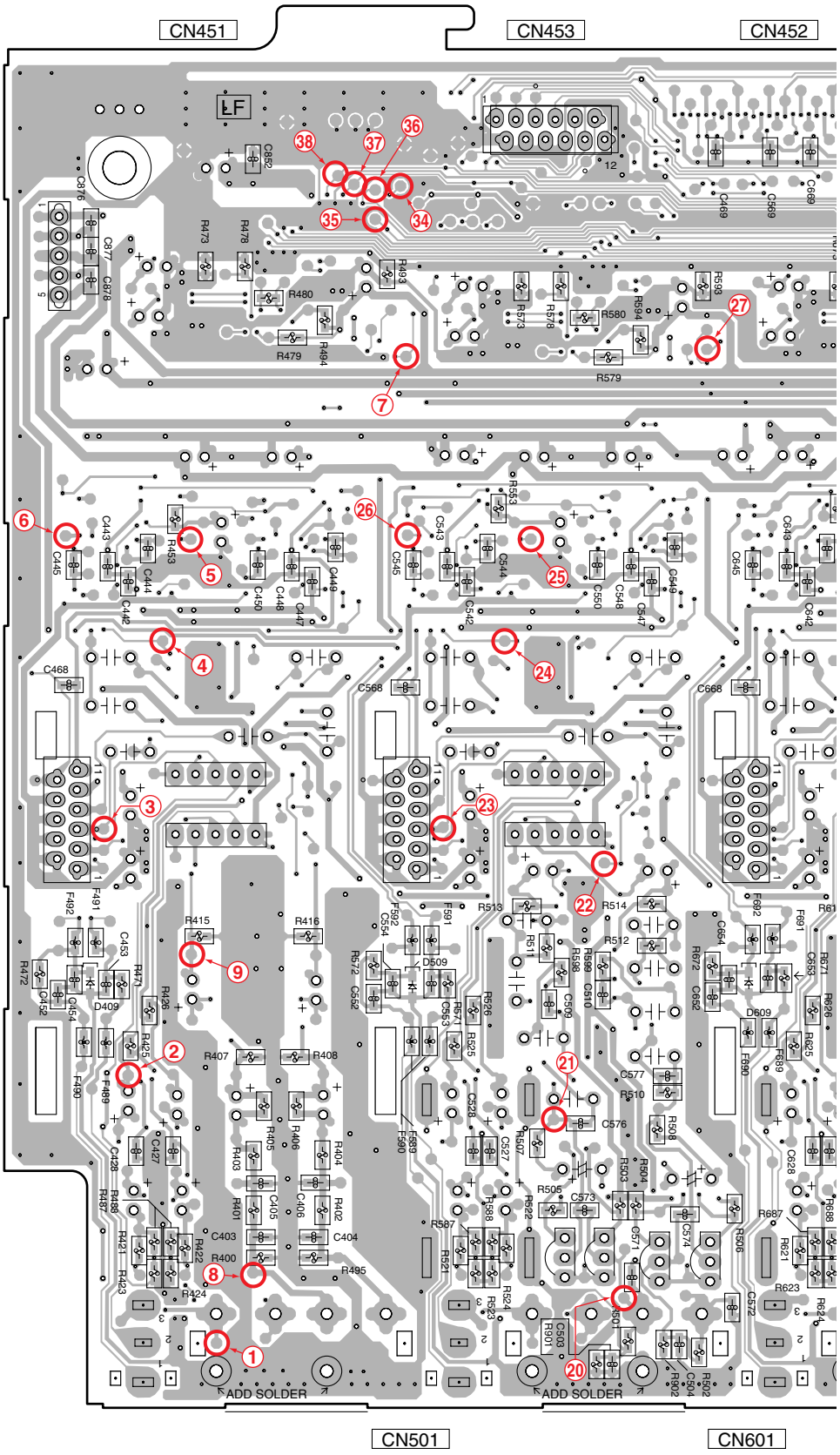

Q1504 Q1502
Q1503
Q1501

SIDE B

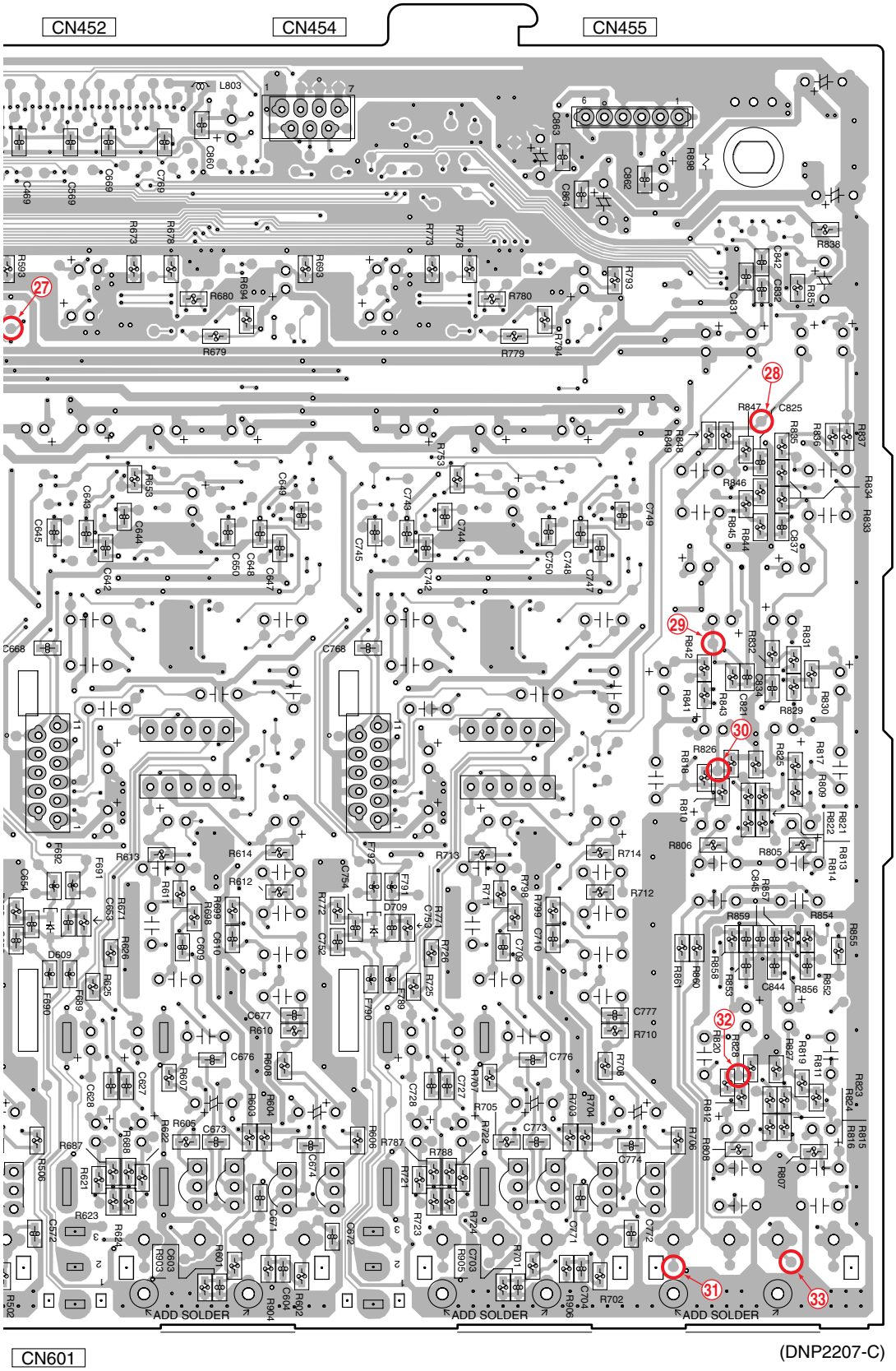

NOTE : The encircled numbers denote measuring point.

4.2 PANEL 1 ASSY

SIDE A

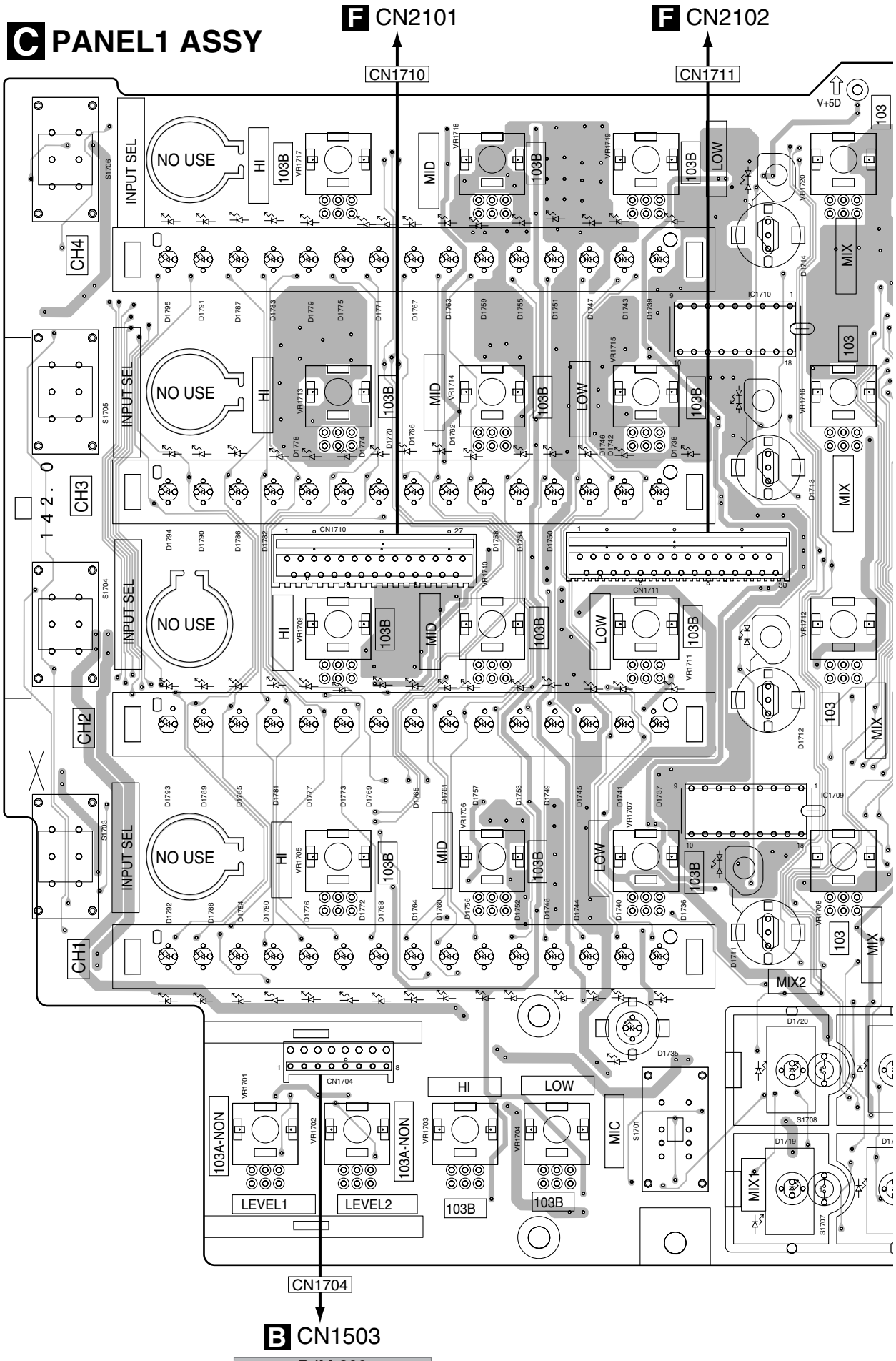

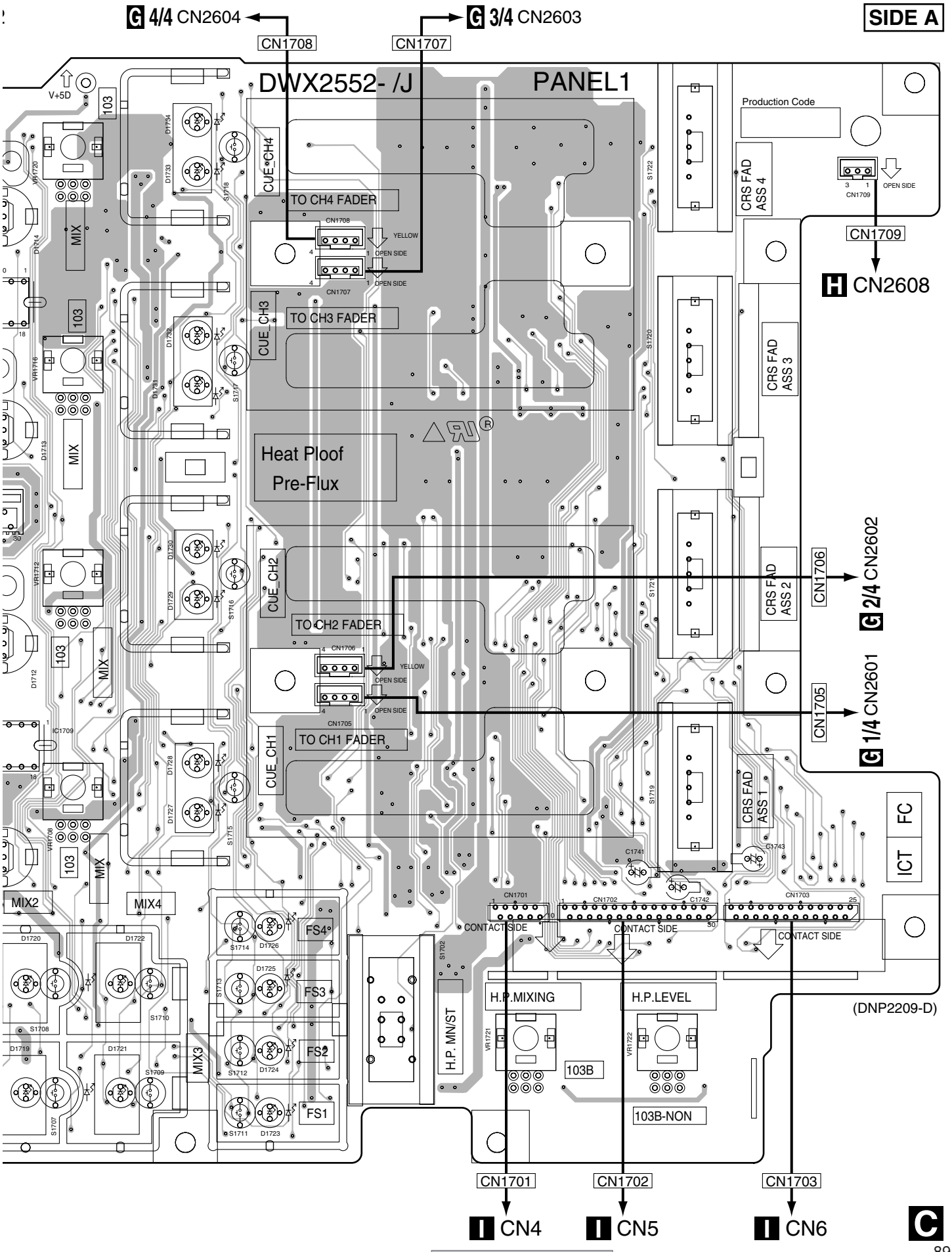
SIDE A
G 4/4 CN2604
G 3/4 CN2603
CN1708
CN1707
DWX2552- /J
PANEL1
Production Code
CRS FAD ASS 4
CRS FAD ASS 3
CRS FAD ASS 2
CRS FAD ASS 1
CN1709
OPEN SIDE
H CN2608
CUE_CH4
TO CH4 FADER
YELLOW
CUE_CH3
TO CH3 FADER
Heat Ploof
Pre-Flux
CUE_CH2
TO CH2 FADER
CN1706
G 2/4 CN2602
CUE_CH1
TO CH1 FADER
CN1705
G 1/4 CN2601
FC
ICT
MIX2
MIX4
MIX3
FS4
FS3
FS2
FS1
H.P.MIXING
H.P.LEVEL
H.P. MN/ST
103B
103B-NON
CONTACT SIDE
CN1701
CN1702
CN1703
(DNP2209-D)
I CN4
I CN5
I CN6
C
DJM-800
89

SIDE B

C PANEL1 ASSY

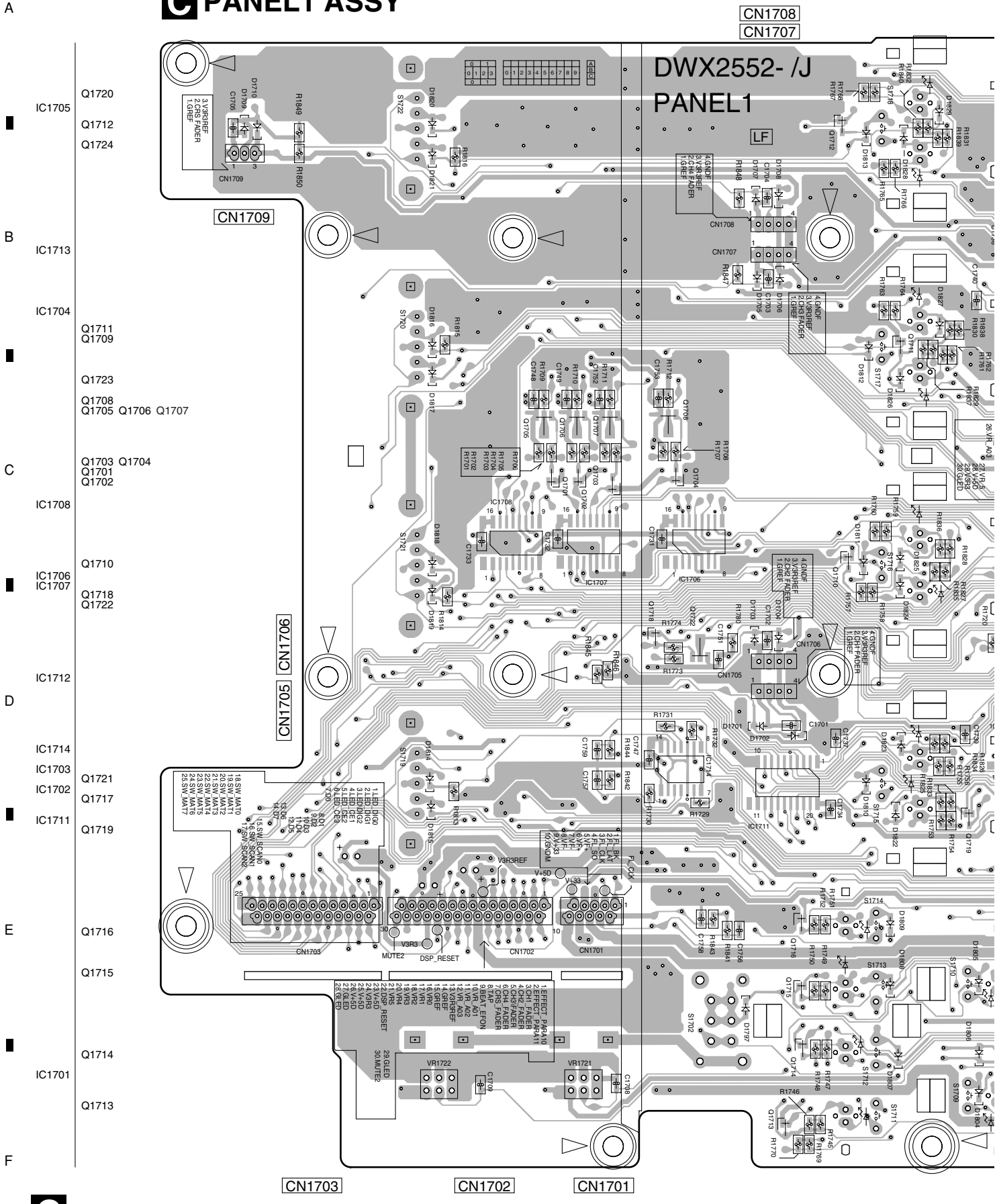

SIDE B

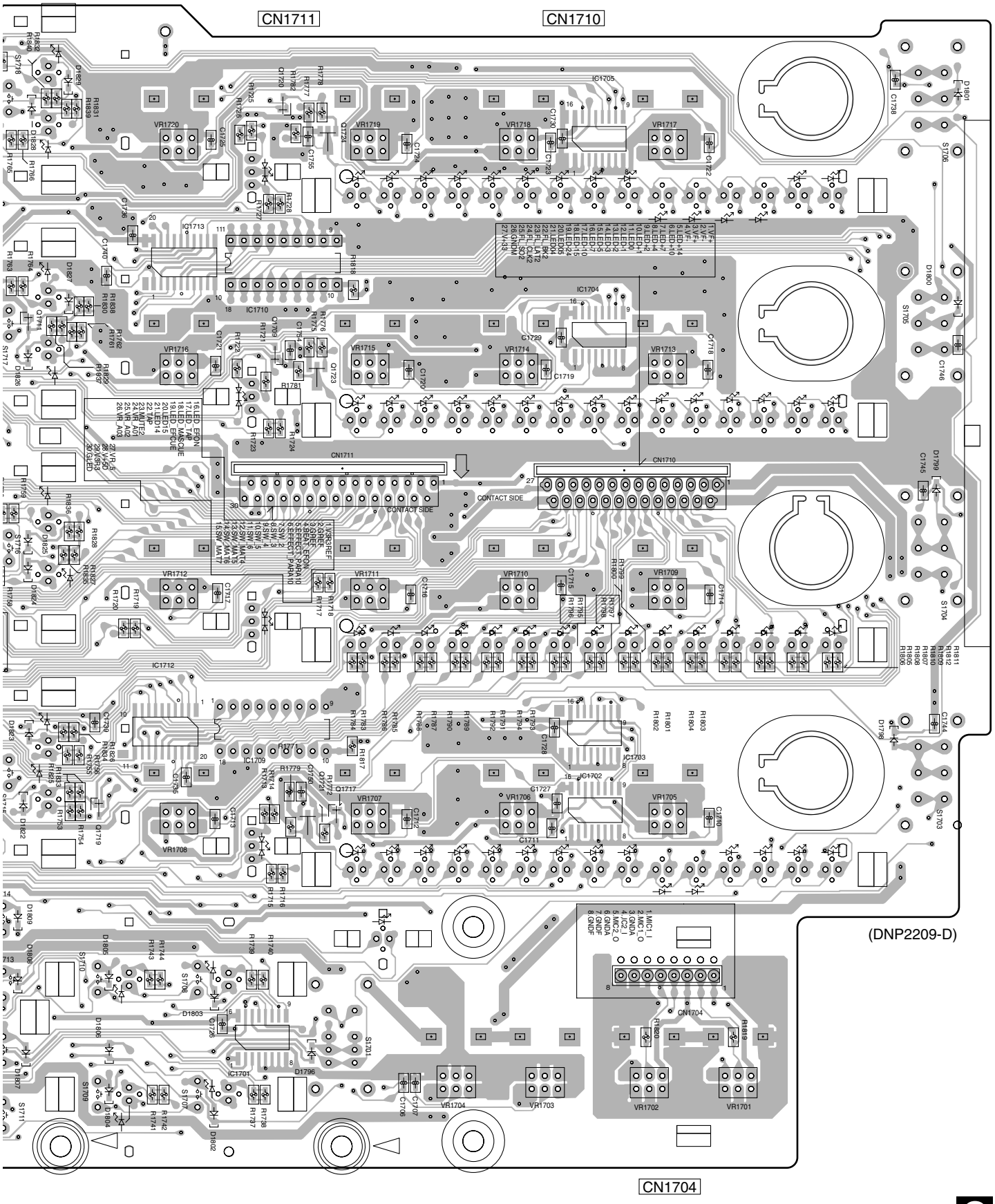

4.3 TRIM 1 to TRIM 4 and ACSW ASSYS

SIDE A

D 2/4 TRIM3 ASSY

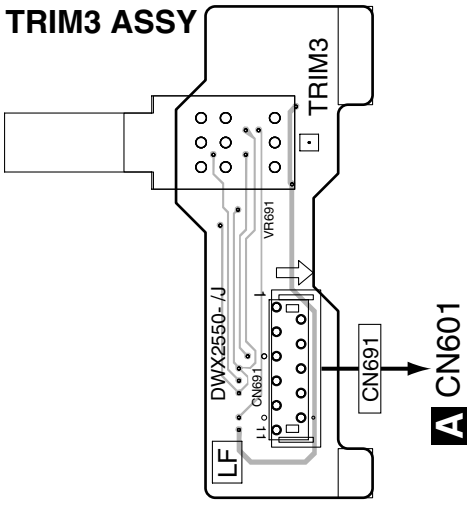

D 3/4 TRIM2 ASSY

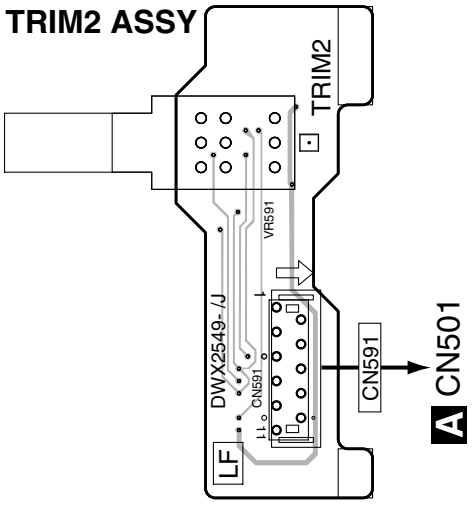

D 4/4 TRIM1 ASSY

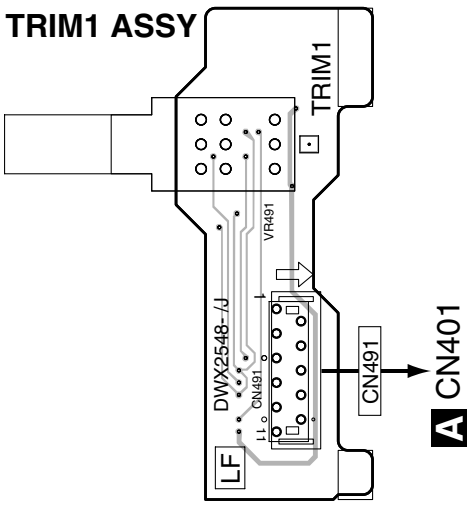

D 1/4–4/4 R

SIDE A

R ACSW ASSY

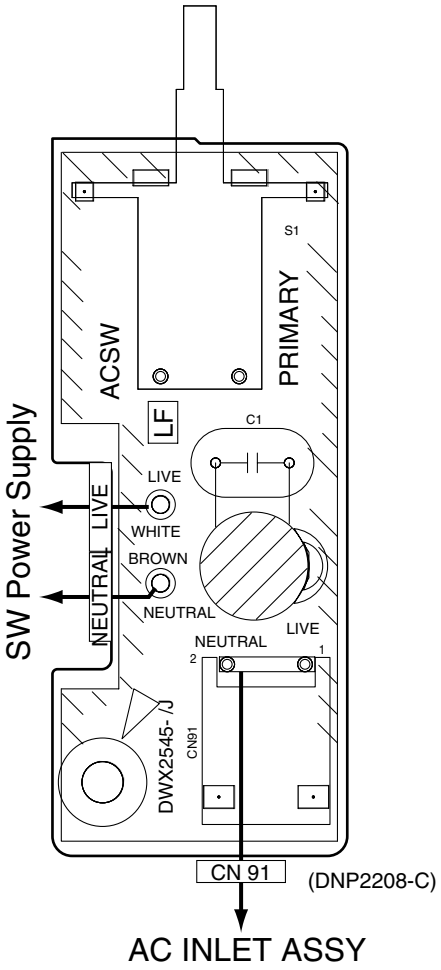

D 1/4 TRIM4 ASSY

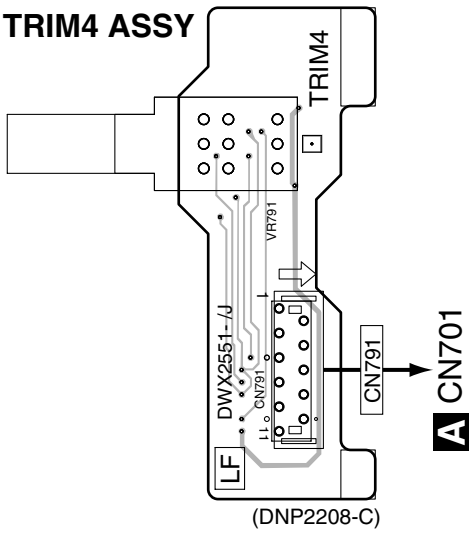

D 1/4–4/4 R

SIDE B

SIDE B

D 2/4 TRIM3 ASSY

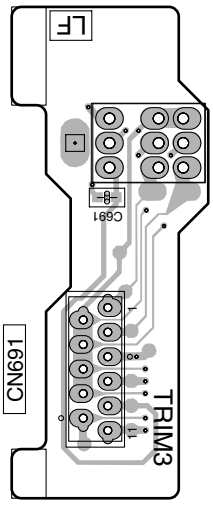

(DNP2208-C)

D 3/4 TRIM2 ASSY

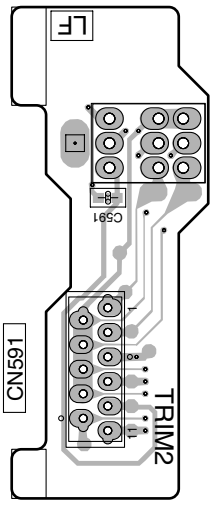

(DNP2208-C)

D 4/4 TRIM1 ASSY

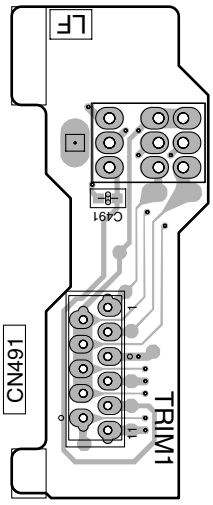

(DNP2208-C)

R ACSW ASSY

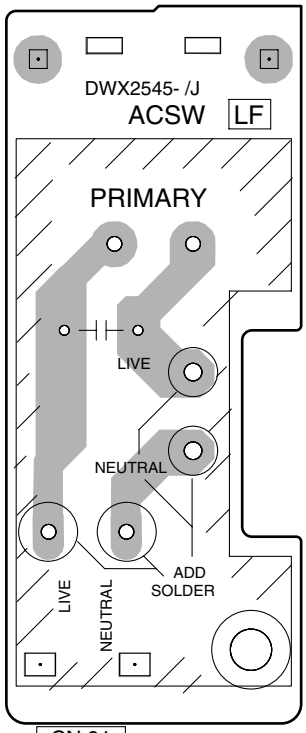

(DNP2208-C)

D 1/4 TRIM4 ASSY

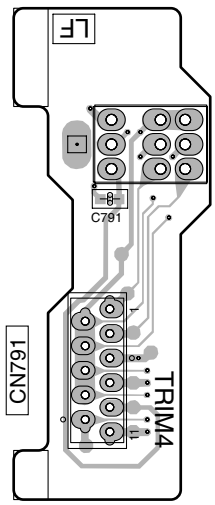

(DNP2208-C)

D 1/4–4/4 R

D 1/4–4/4 R

4.4 MIC1 and MIC2 ASSYS

SIDE A

SIDE A

E MIC2 ASSY

B MIC1 ASSY

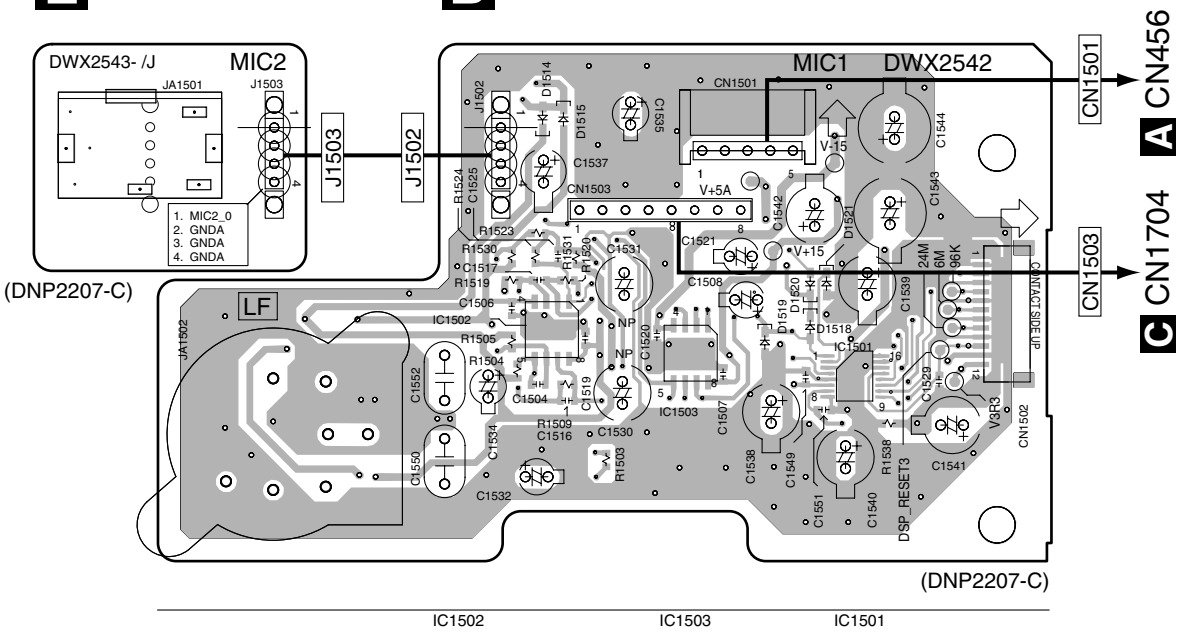

SIDE B

SIDE B

B MIC1 ASSY

E MIC2 ASSY

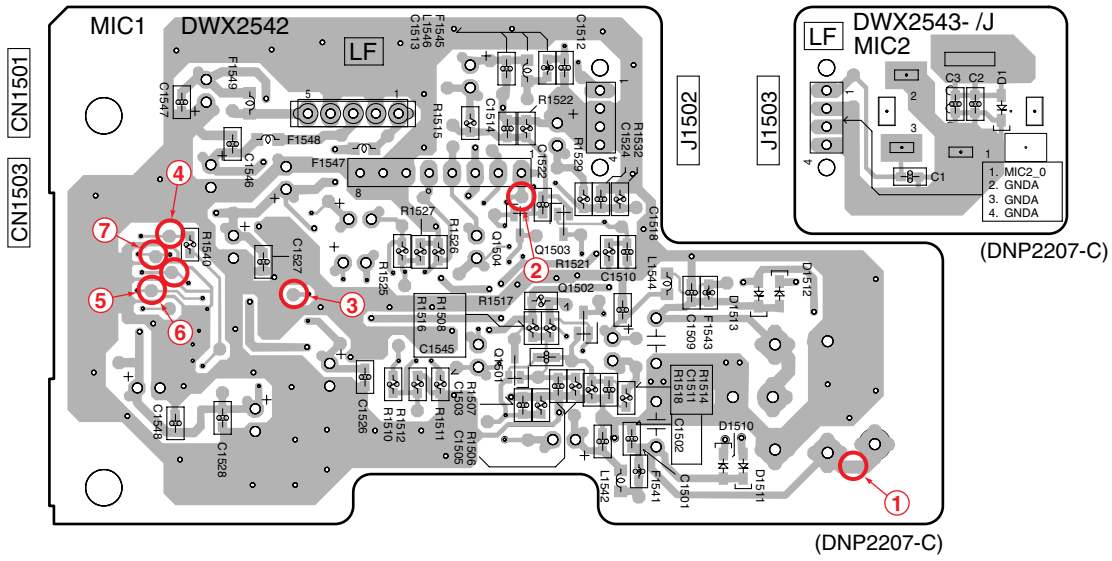

NOTE : The encircled numbers denote measuring point.

B E

B E

4.5 CHFD1, CHFD2, CHFD3 and CHFD4 ASSYS

SIDE A **SIDE B**

G 1/4 CHFD1 ASSY

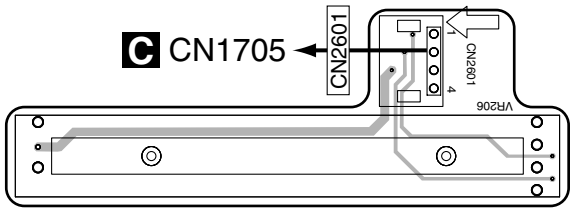

(DNP2207-C)

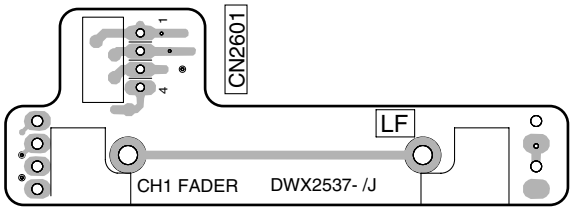

(DNP2207-C)

G 2/4 CHFD2 ASSY

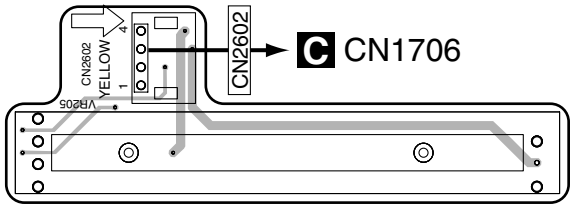

(DNP2207-C)

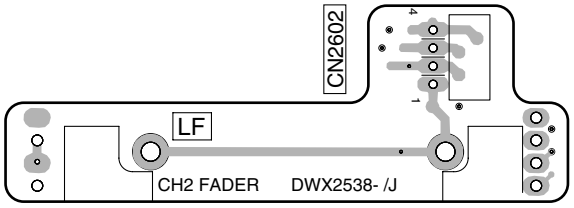

(DNP2207-C)

G 3/4 CHFD3 ASSY

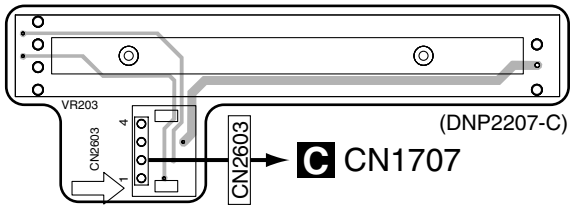

(DNP2207-C)

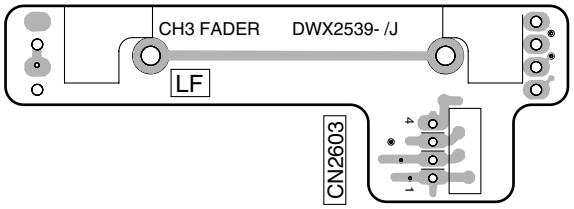

(DNP2207-C)

G 4/4 CHFD4 ASSY

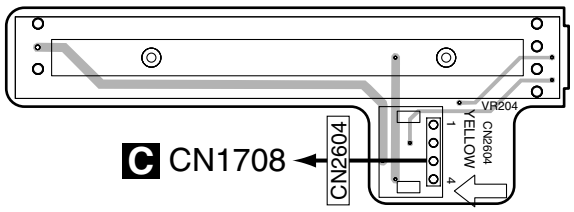

(DNP2207-C)

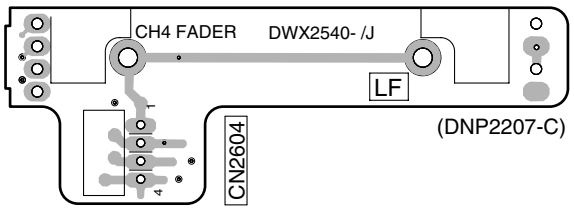

(DNP2207-C)

4.6 PANEL 2 and DIGIA ASSYS

SIDE A

F PANEL2 ASSY

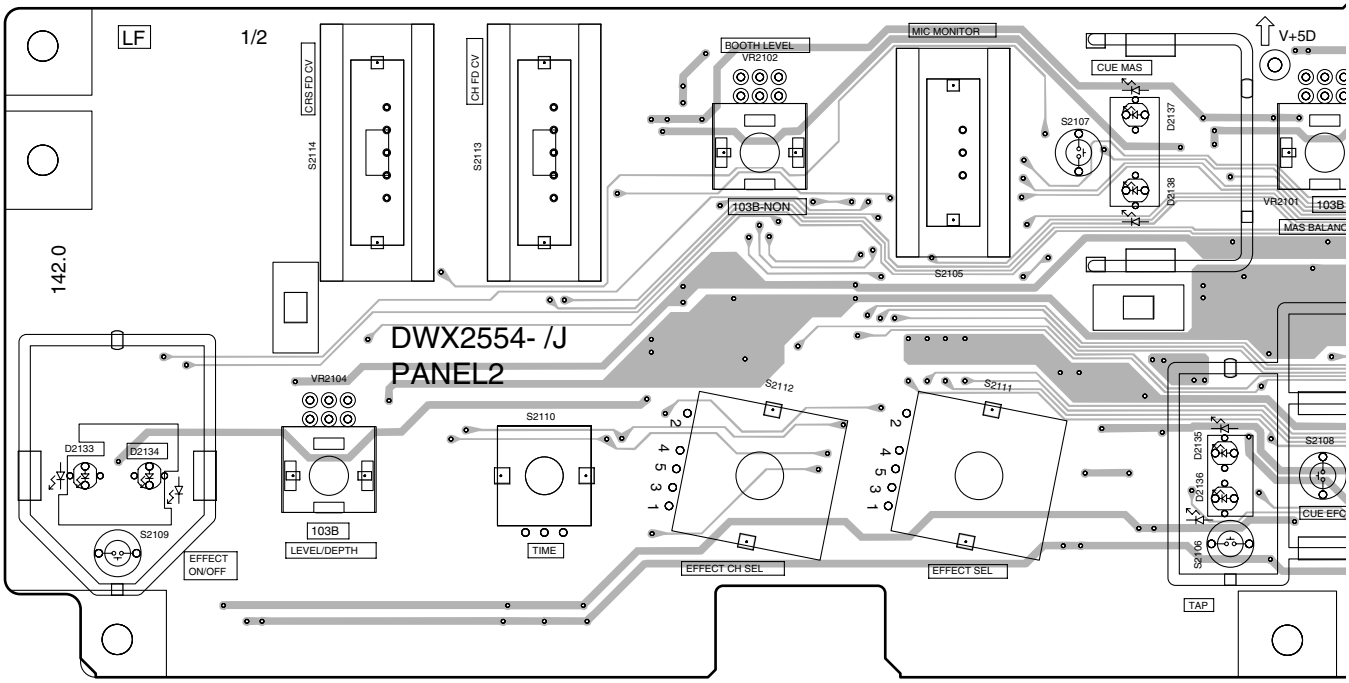

L DIGIA ASSY

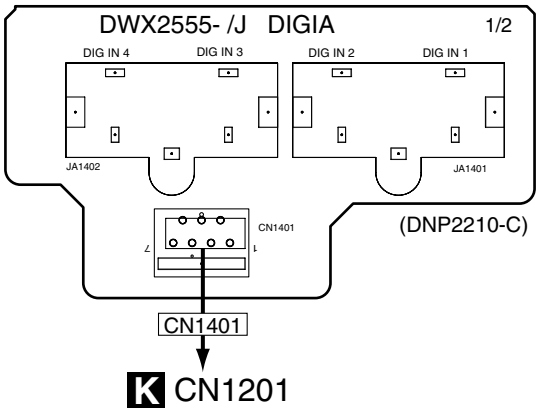

SIDE A

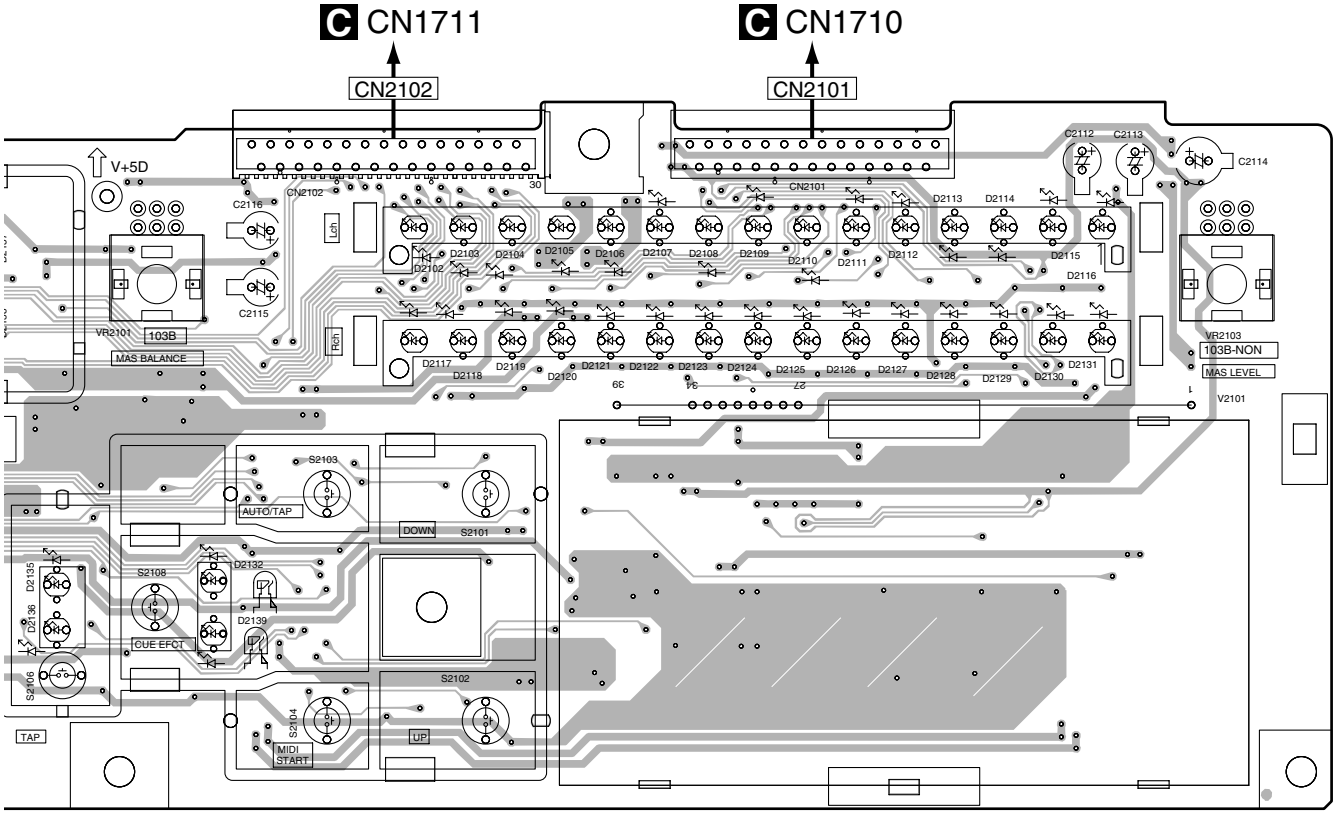

(DNP2210-C)

SIDE B

F PANEL2 ASSY

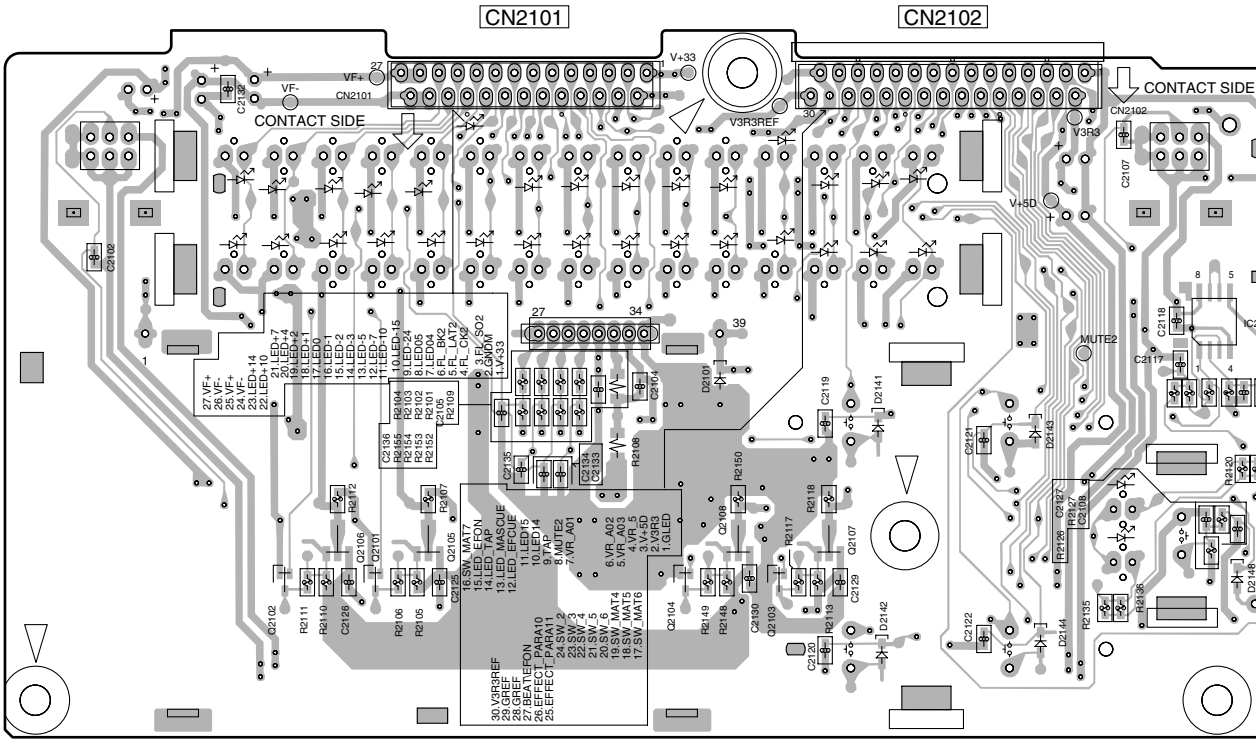

L DIGIA ASSY

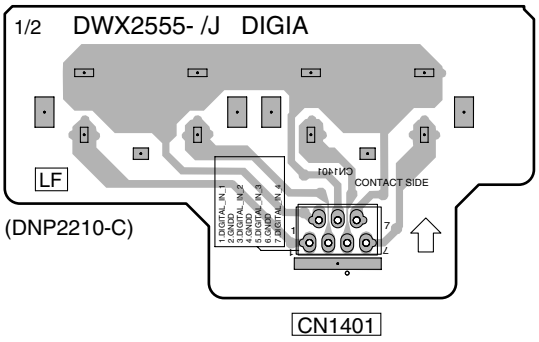

SIDE B

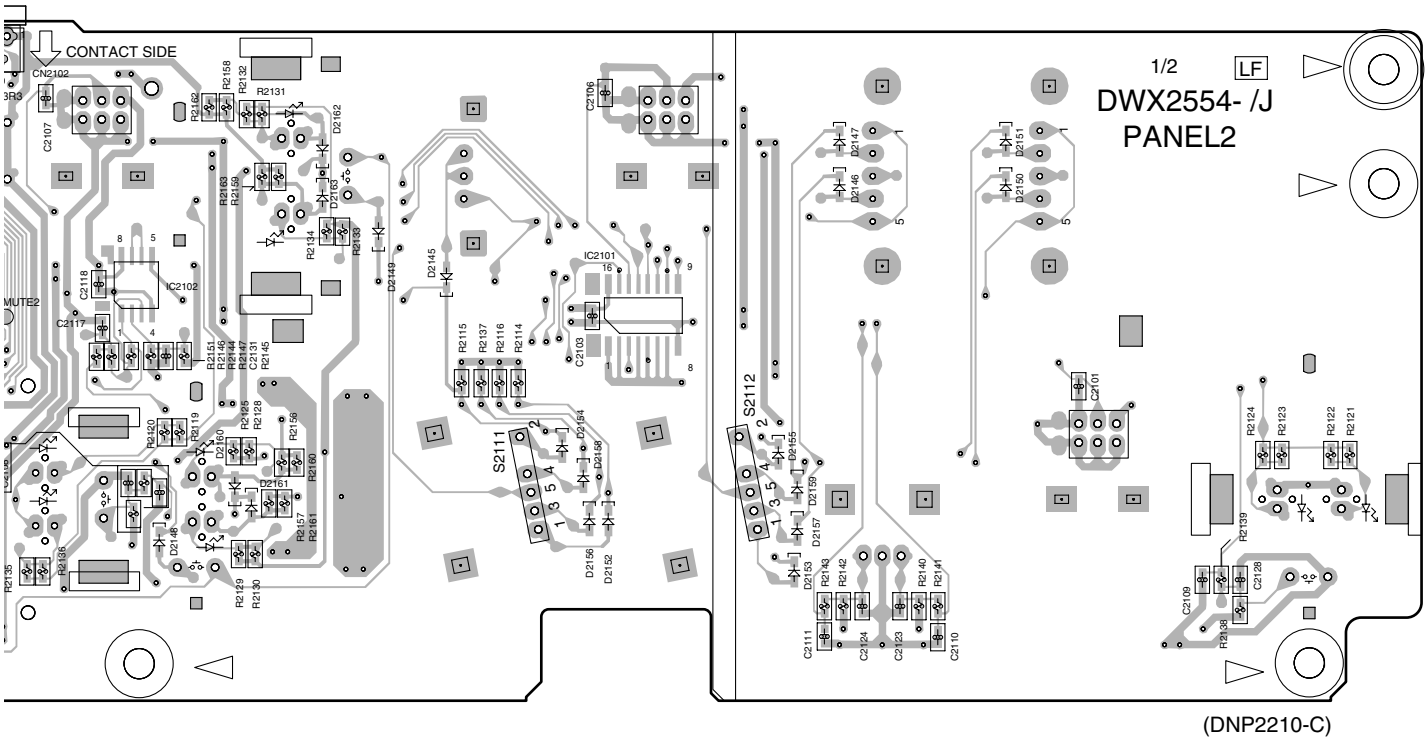

IC2102 IC2101

4.7 DSP ASSY

SIDE A

I DSP ASSY

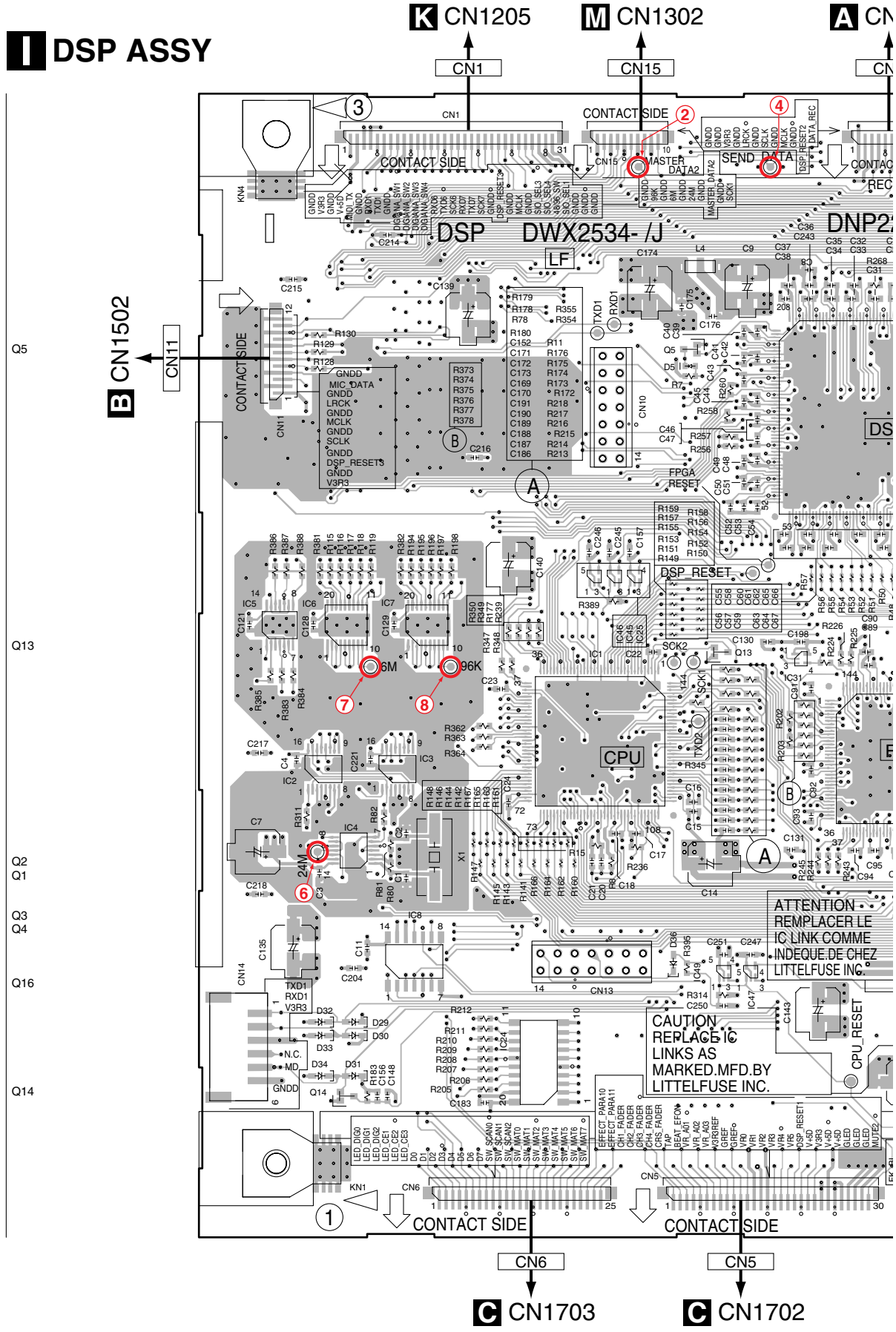

IC39 Q5
IC22 IC12
IC5 IC6 IC7
IC11
IC46 IC45 IC25 Q13
IC1
IC31
IC3
IC2 IC13
IC4
IC15
IC14 Q2
Q1
IC30
IC8 Q3
Q4
IC49 Q16
IC47 IC43 IC44 IC48 IC16
IC40 IC42
IC24 IC41
Q14

SIDE A

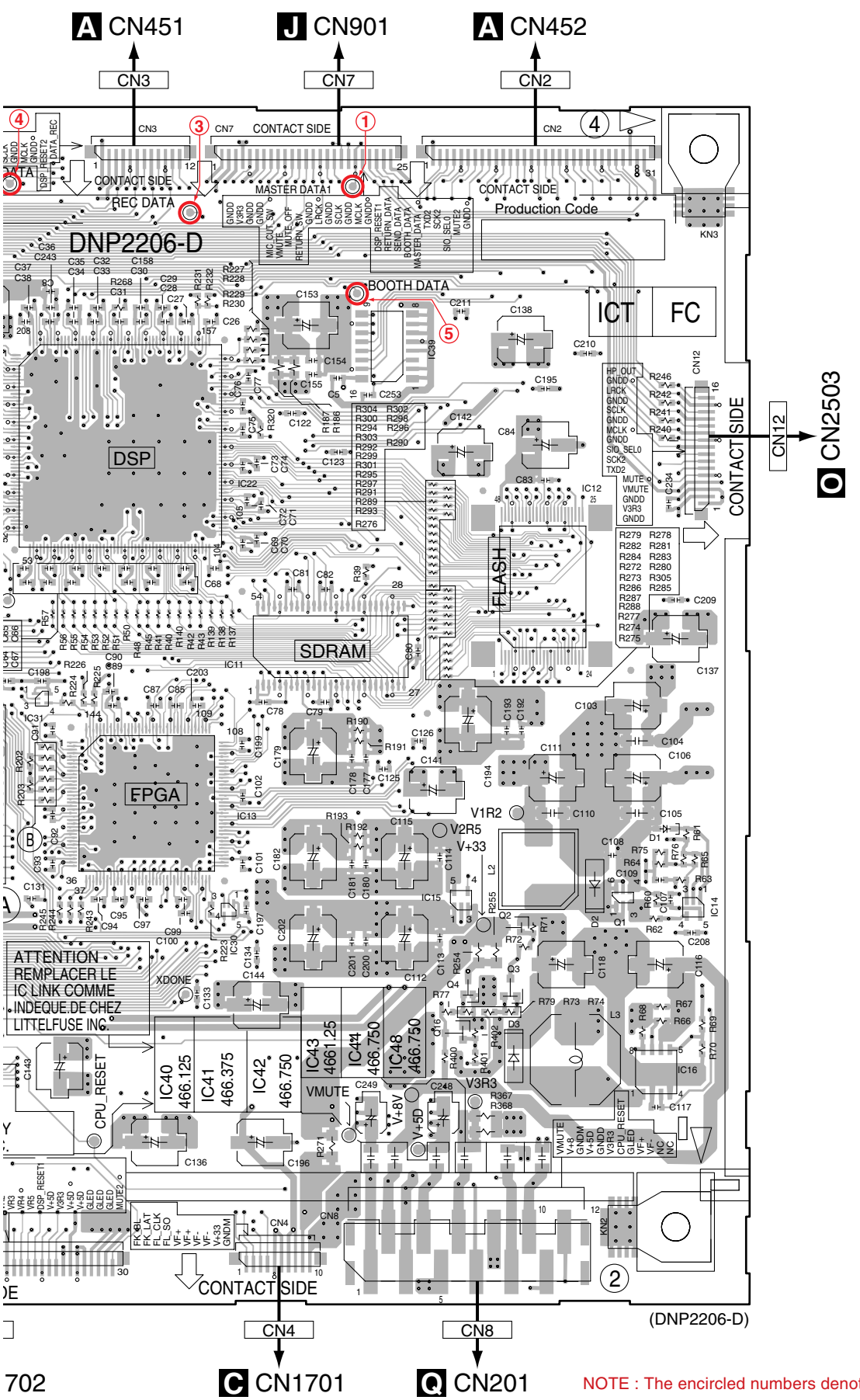

NOTE : The encircled numbers denote measuring point.

SIDE B

DSP ASSY

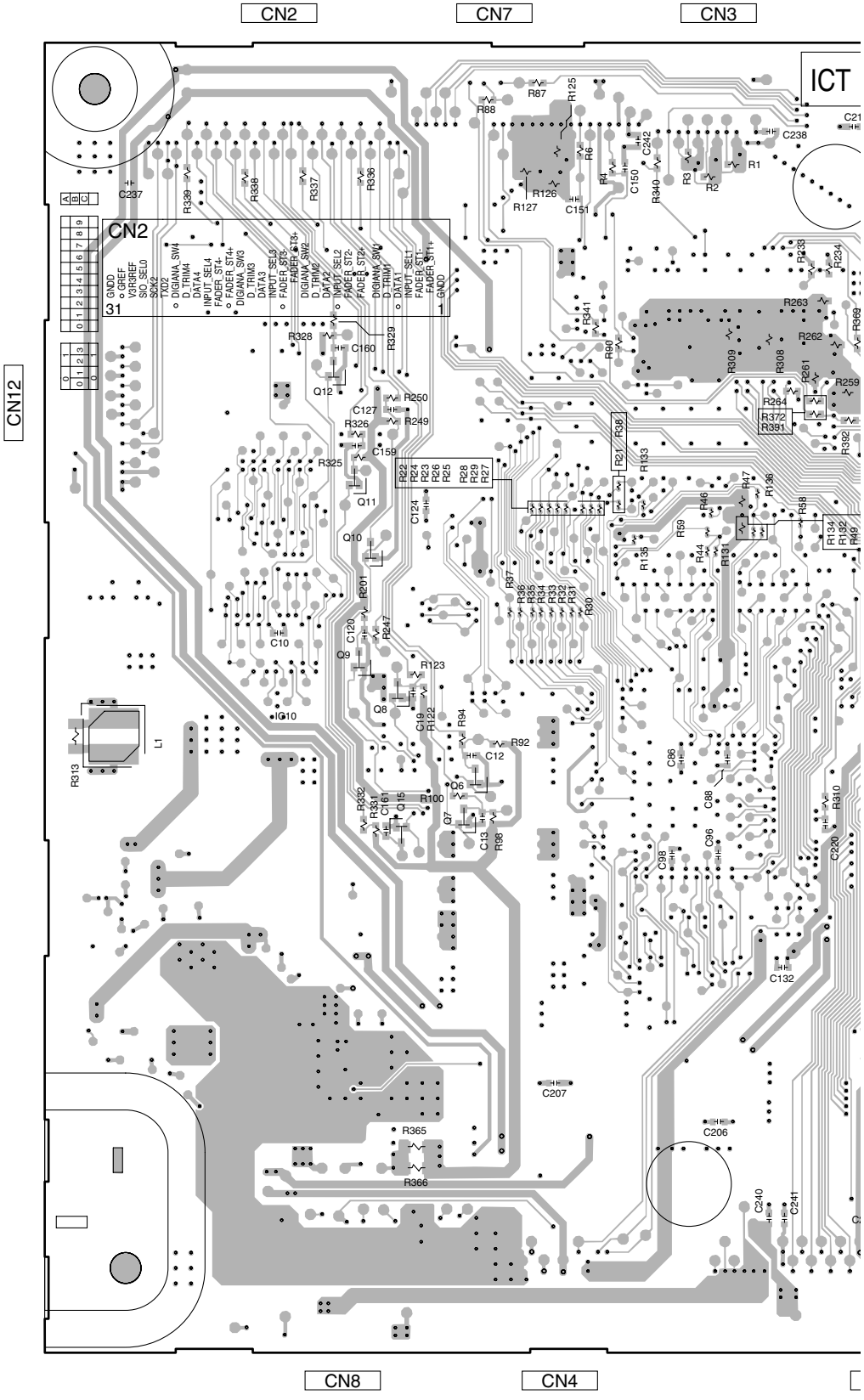

SIDE B

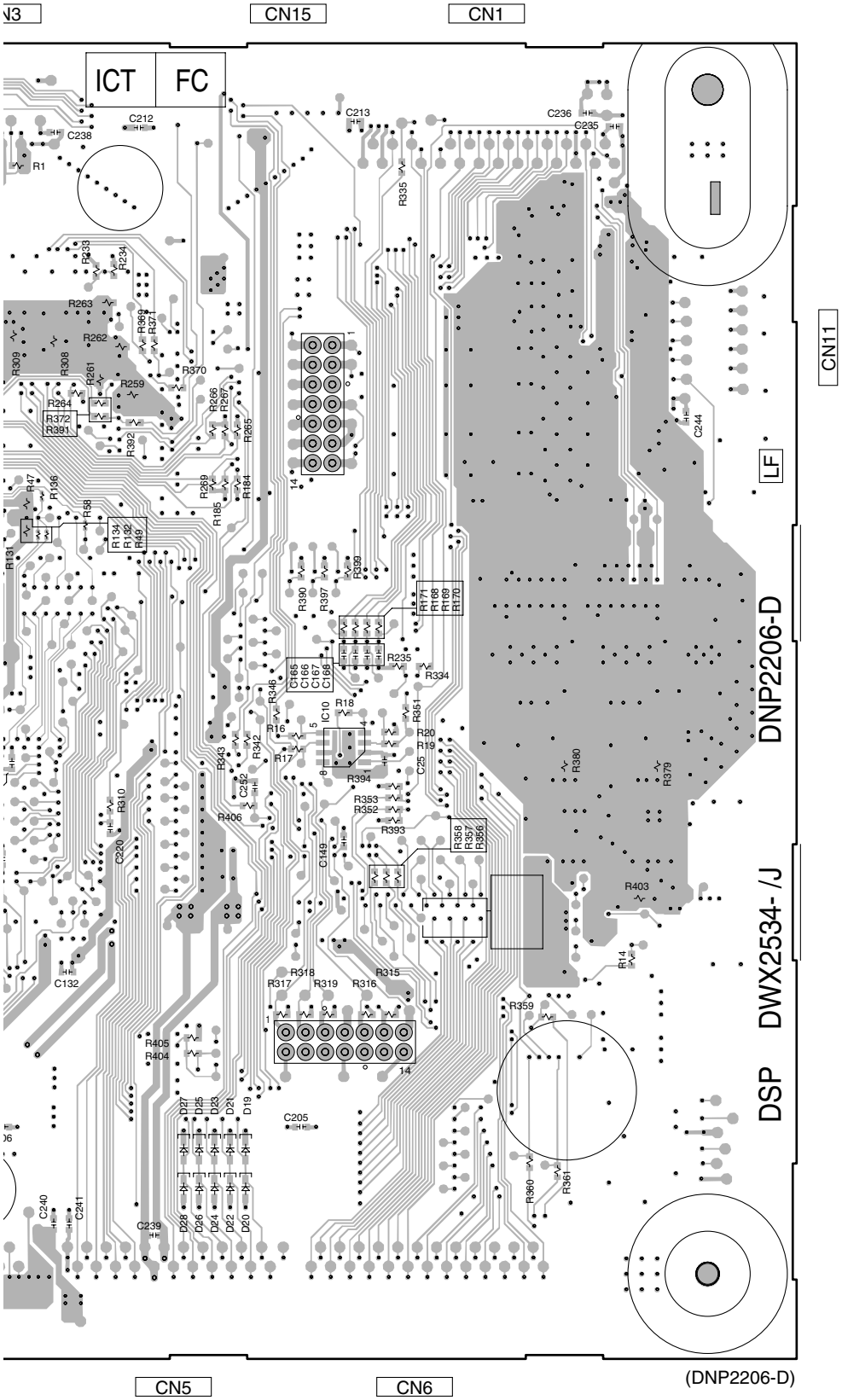
N3
CN15
CN1
ICT
FC
CN11
LF
DNP2206-D
DWX2534- /J
DSP
CN5
CN6
(DNP2206-D)

4.8 OUTPUT ASSY

SIDE A

J OUTPUT ASSY

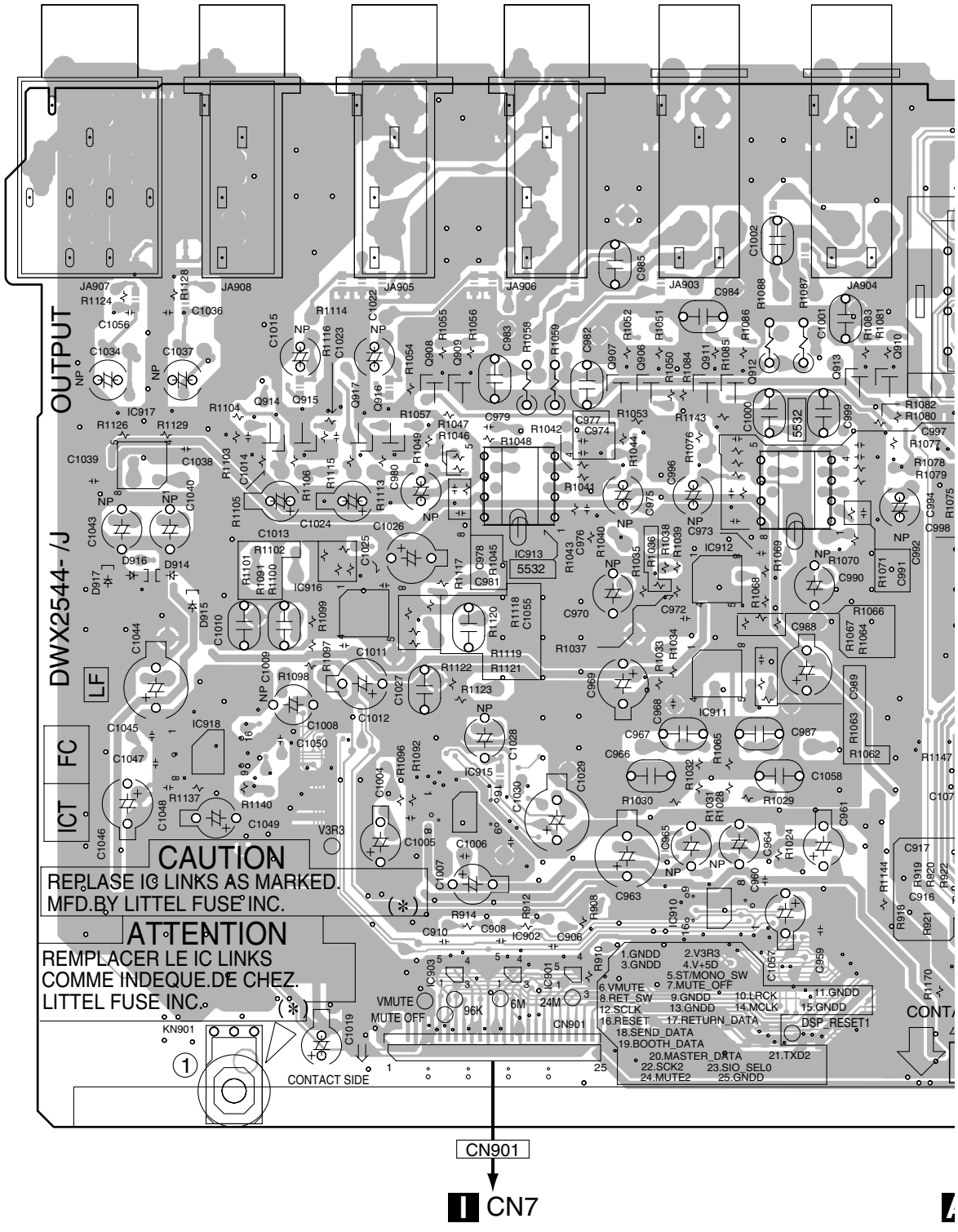

IC913 IC911
IC903 IC902 IC910
IC917 IC918 IC916 IC915 IC901 IC912
Q914 Q917 Q908 Q907 Q911 Q912 Q913 Q910
Q915 Q916 Q909 Q906

SIDE A

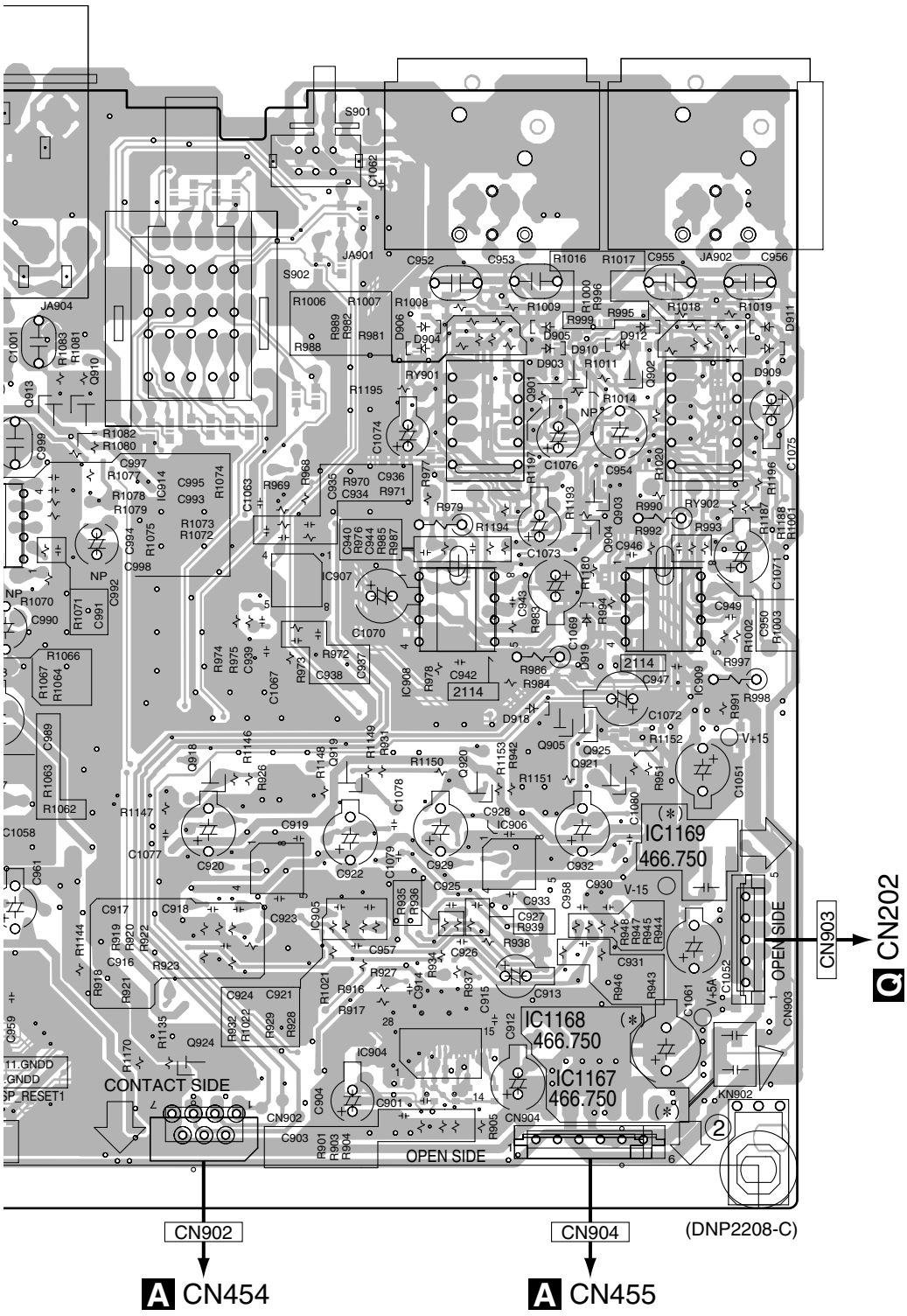

IC907
IC904 IC1168
IC914 IC905 IC908 IC906 IC1167 IC1169 IC909

Q913 Q910 Q918 Q919 Q920 Q901 Q925 Q902
Q924 Q921 Q903
Q905 Q904

SIDE B

J OUTPUT ASSY

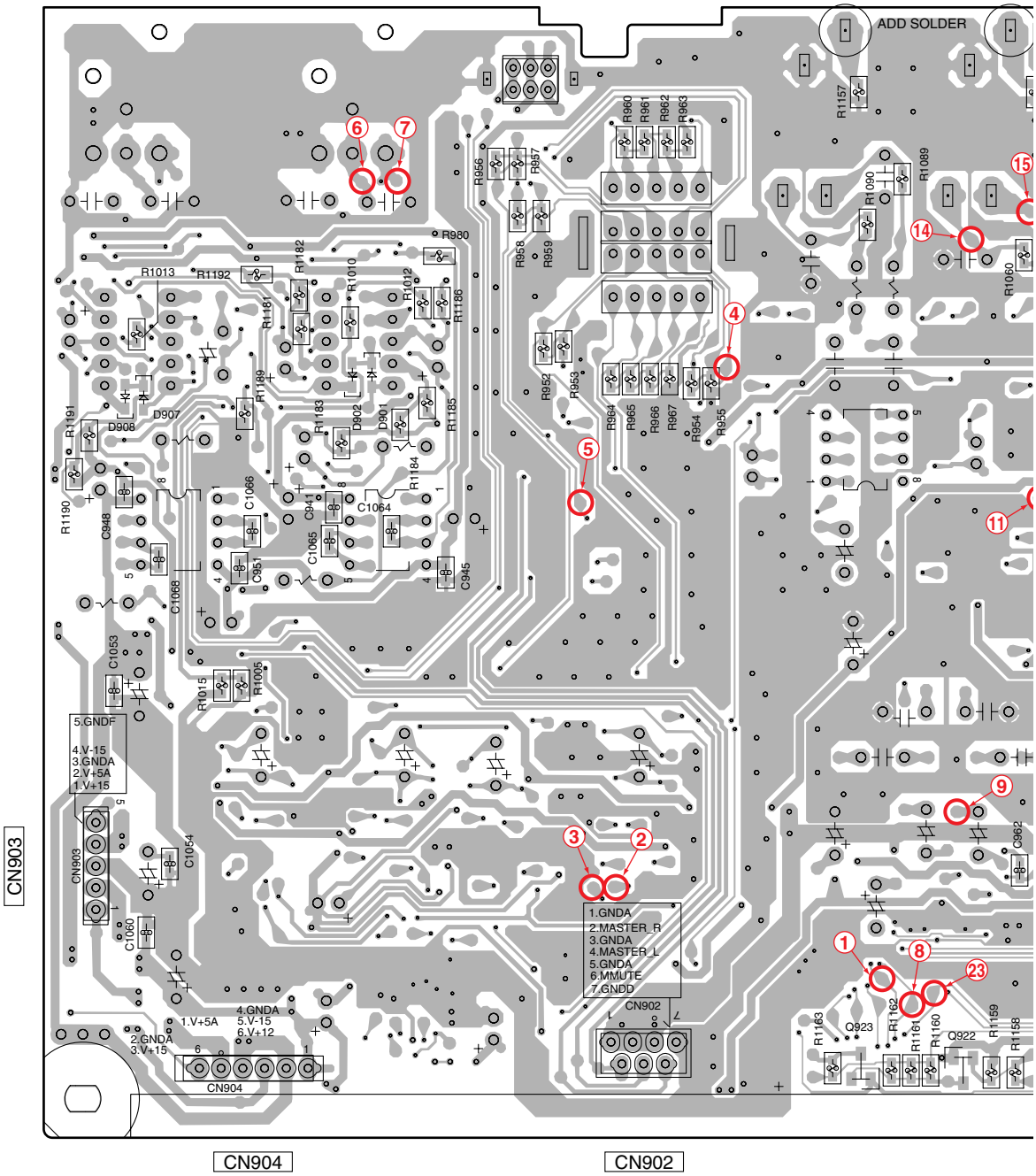

SIDE B

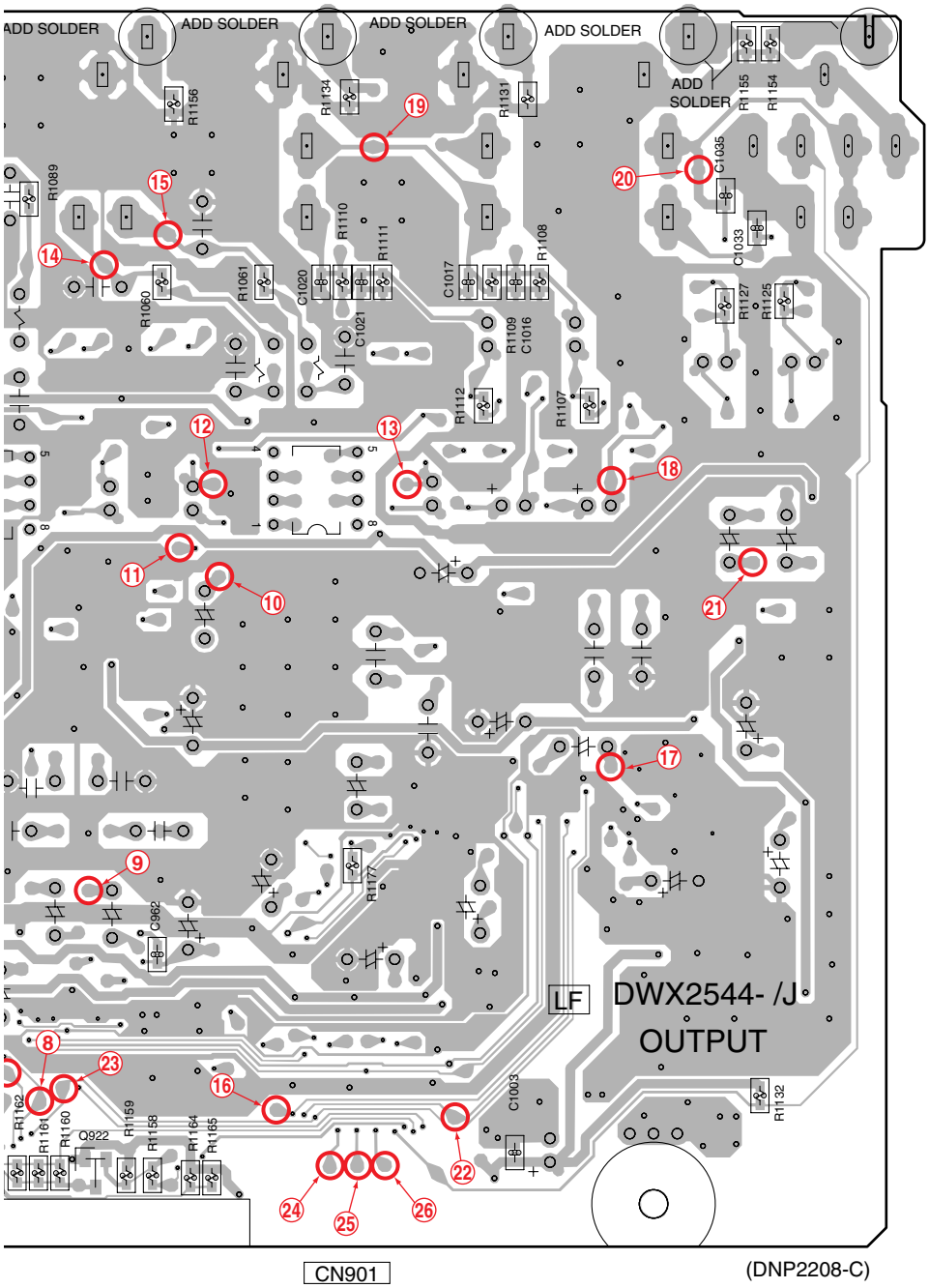

NOTE : The encircled numbers denote measuring point.

Q922

4.9 CRSFD, DIGIC and SLSW ASSYS

SIDE A

H CRSFD ASSY

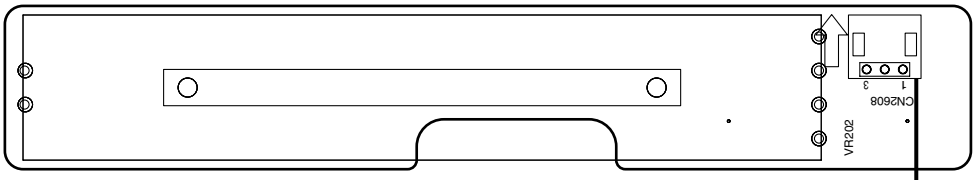

(DNP2207-C)

CN2608

C CN1709

K DIGIC ASSY

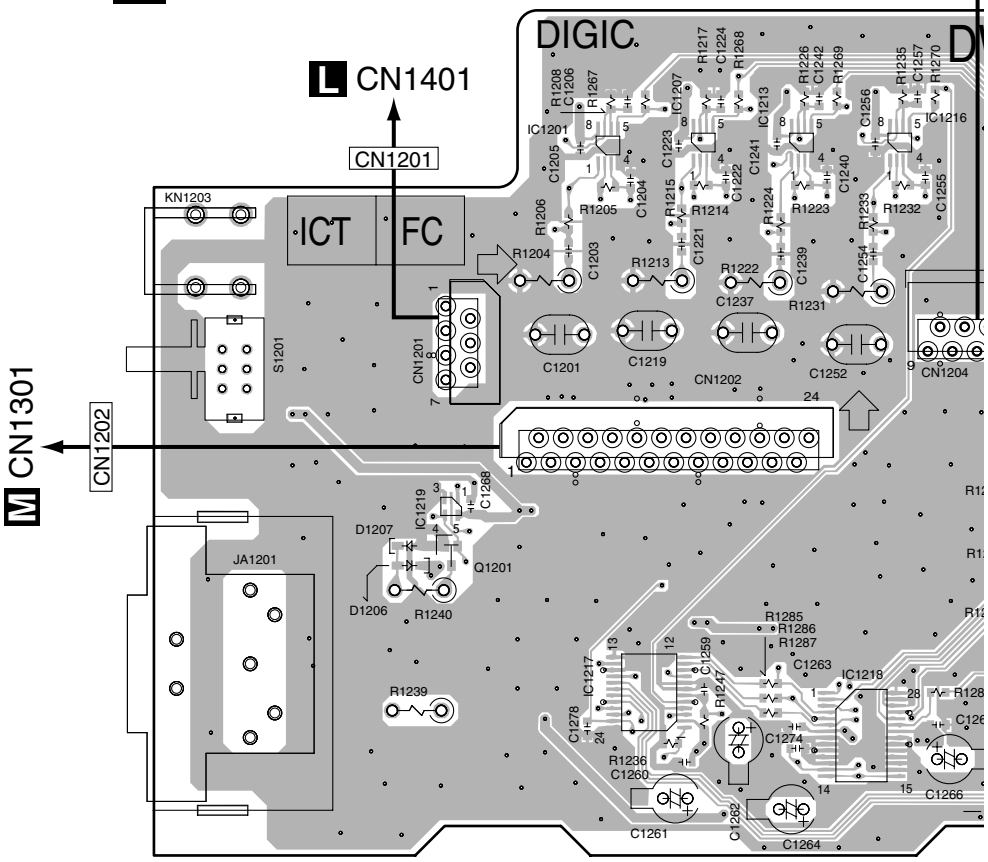

IC1219 IC1201 IC1217 IC1207 IC1213 IC1218 IC1216

Q1201

K H

SIDE A

N SLSW ASSY

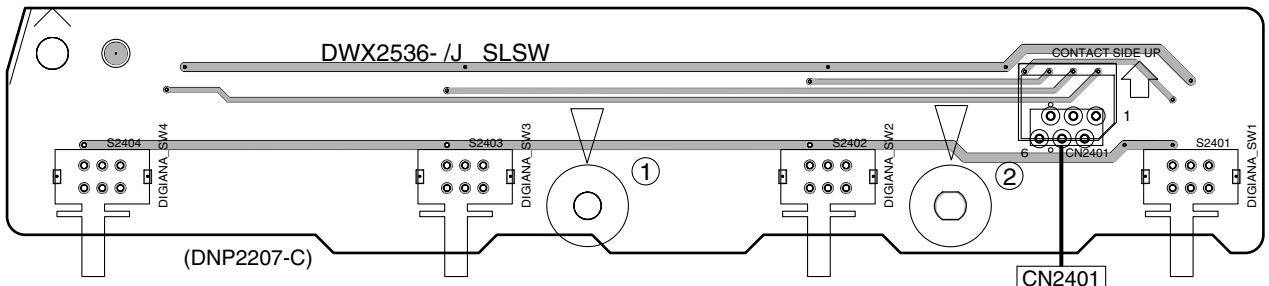

CN1204

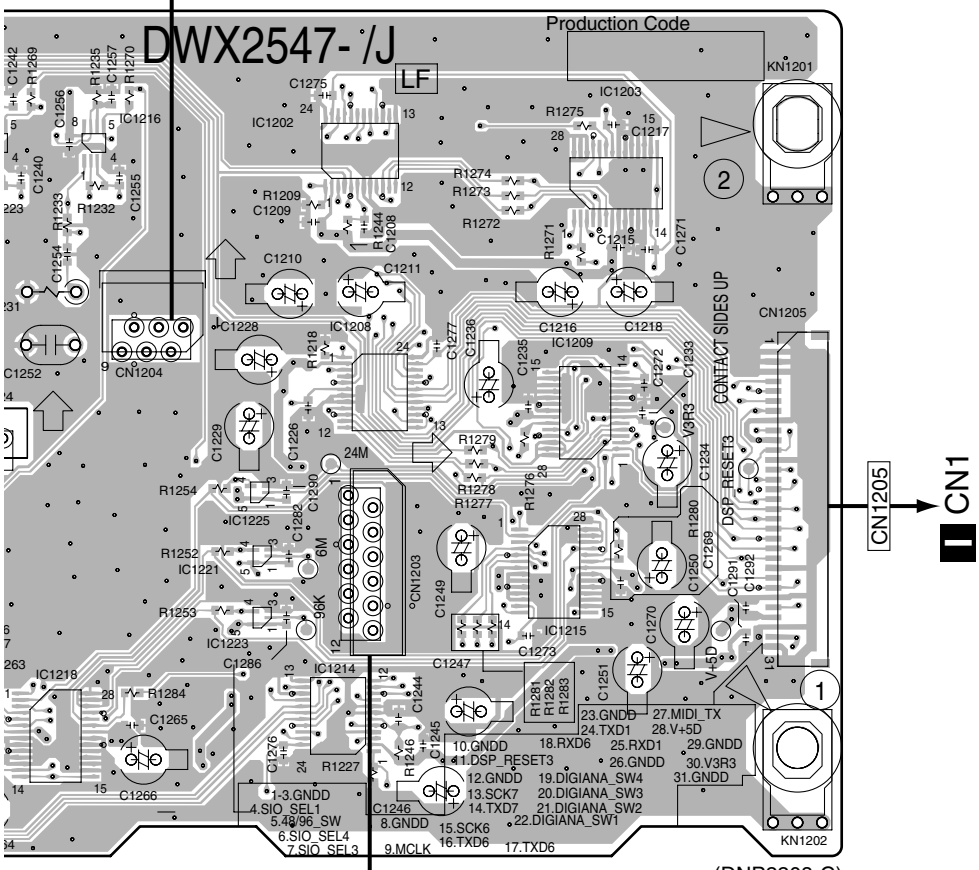

CN1205 → I CN1

CN1203 → A CN453

IC1221 IC1223 IC1225 IC1208 IC1209 IC1218 IC1216 IC1202 IC1214 IC1215 IC1203

SIDE B

H CRSFD ASSY

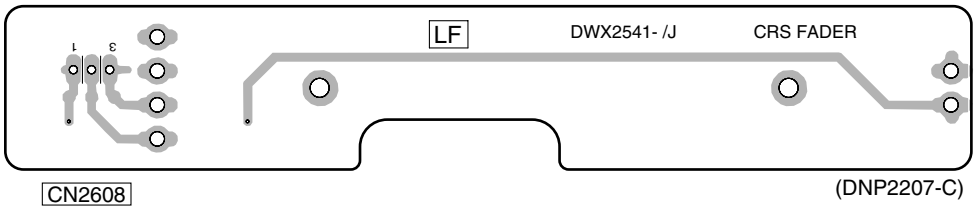

K DIGIC ASSY

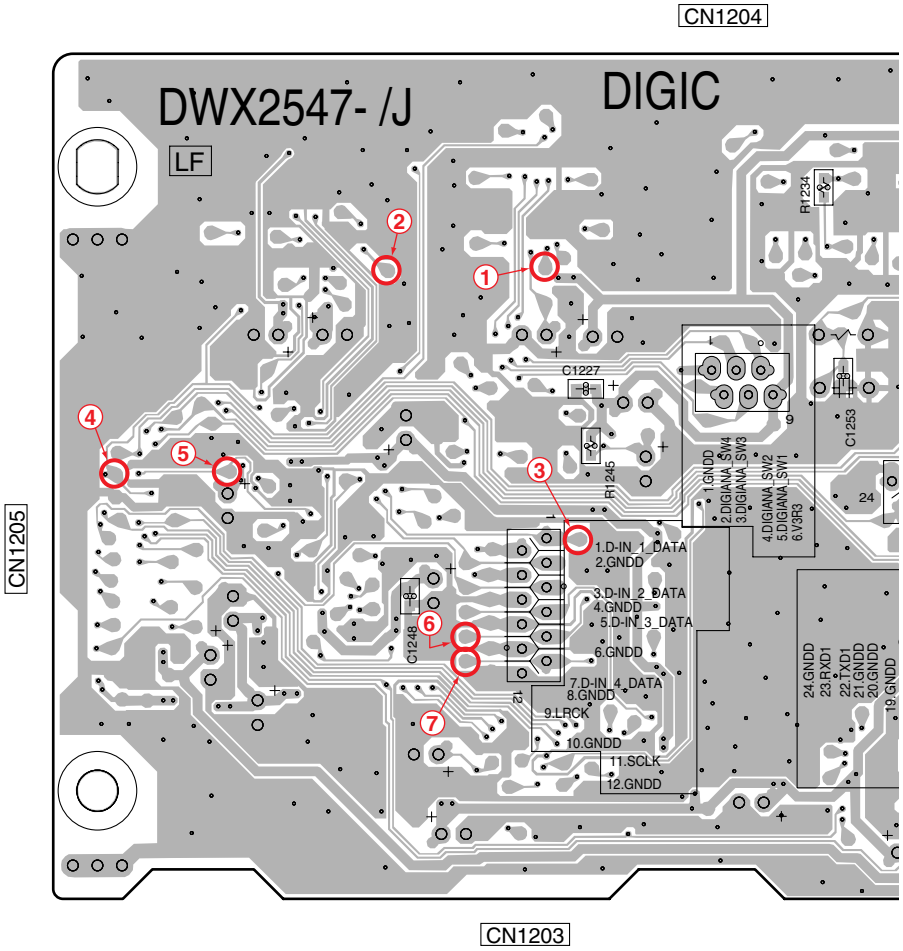

NOTE : The encircled numbers denote measuring point.

SIDE B

A

N SLSW ASSY

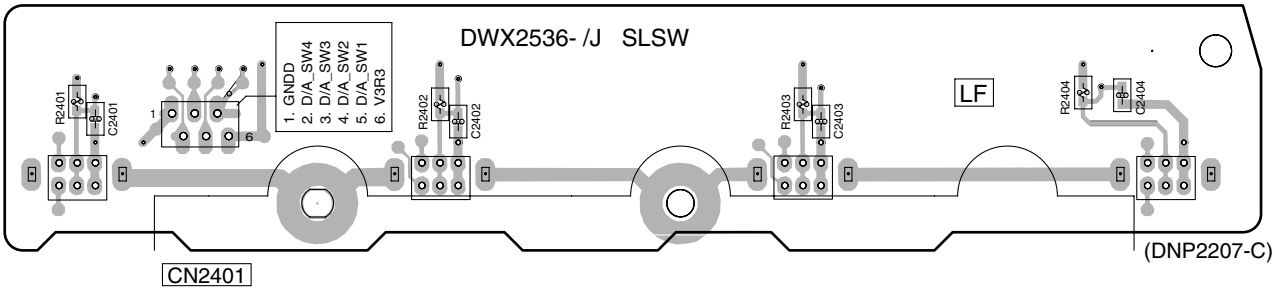

B

204

C

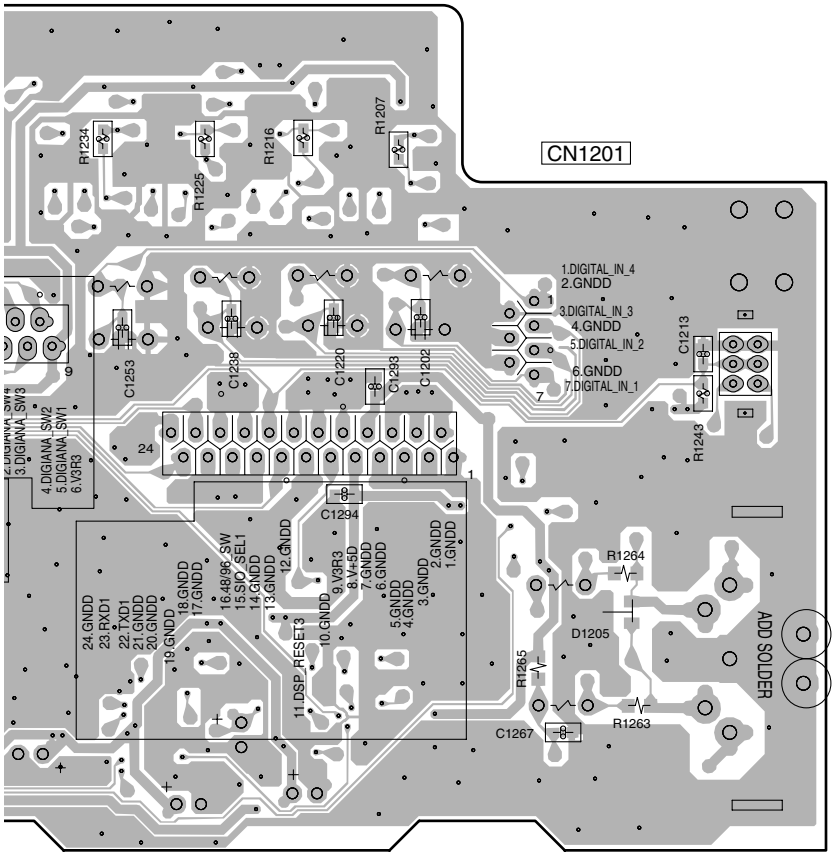

(DNP2208-C)

D

E

F

4.10 DIGIB ASSY

A

SIDE A **SIDE A**

M DIGIB ASSY

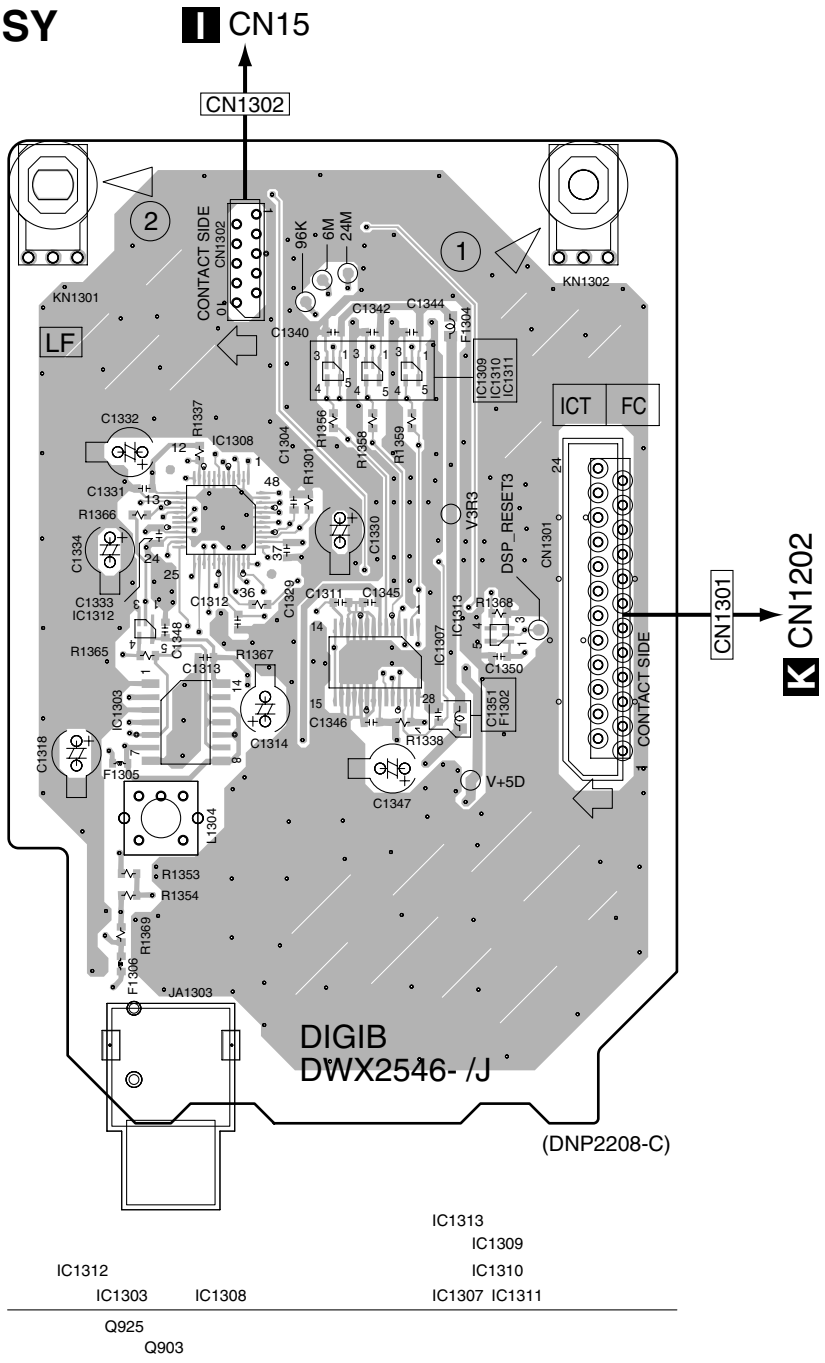

B C D E F

M **M**

SIDE B

SIDE B

M DIGIB ASSY

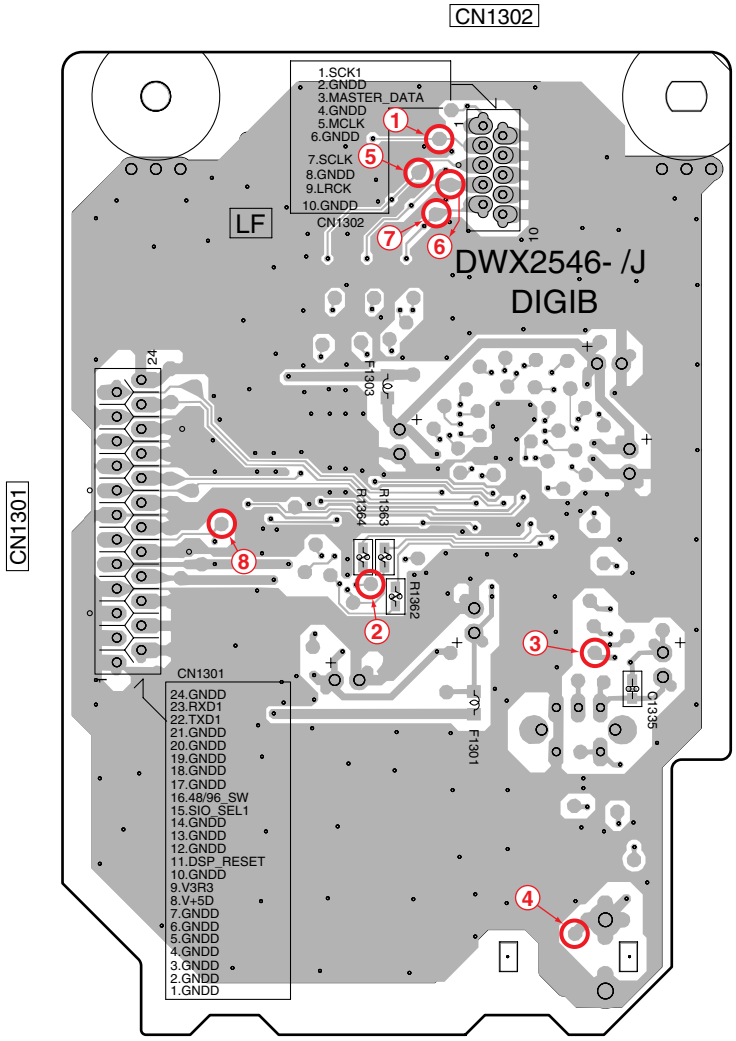

NOTE : The encircled numbers denote measuring point.

4.11 HPAMP and HPJACK ASSYS

A

SIDE A

SIDE A

P HPJACK ASSY

O HPAMP ASSY

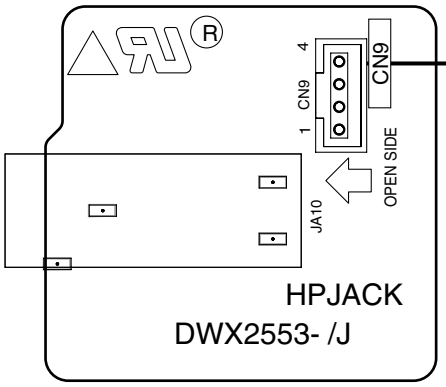

(DNP2209-D)

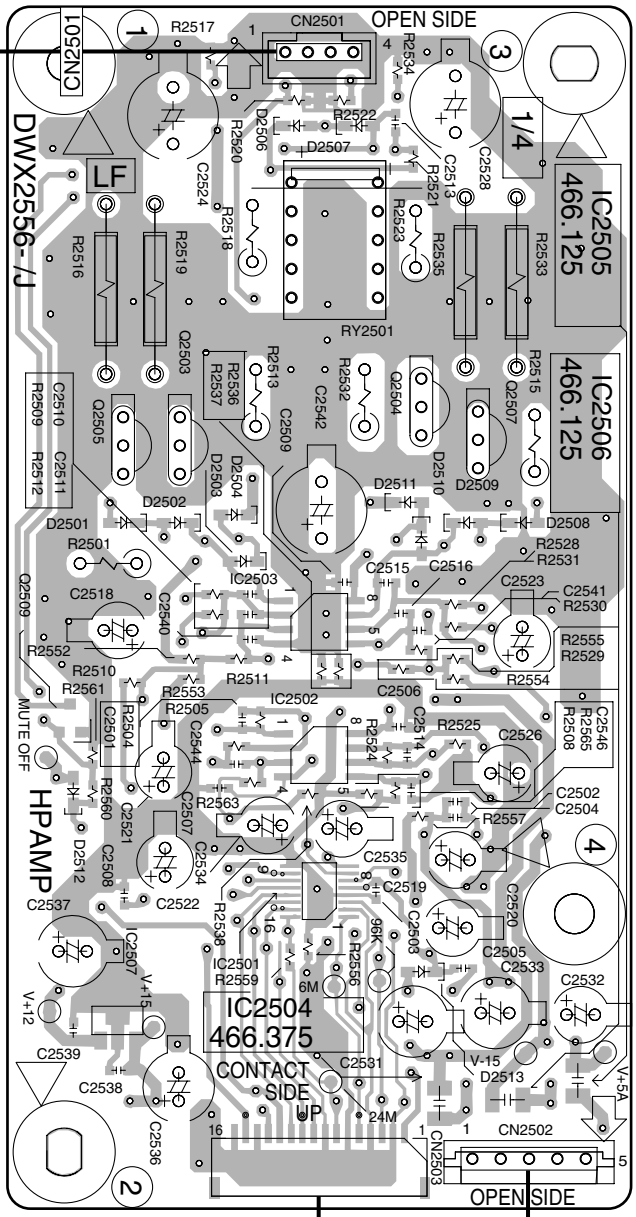

(DNP2211-B)

CN2503 → I CN12

CN2502 → Q CN203

F

O P

O

SIDE B

SIDE B

O HPAMP ASSY

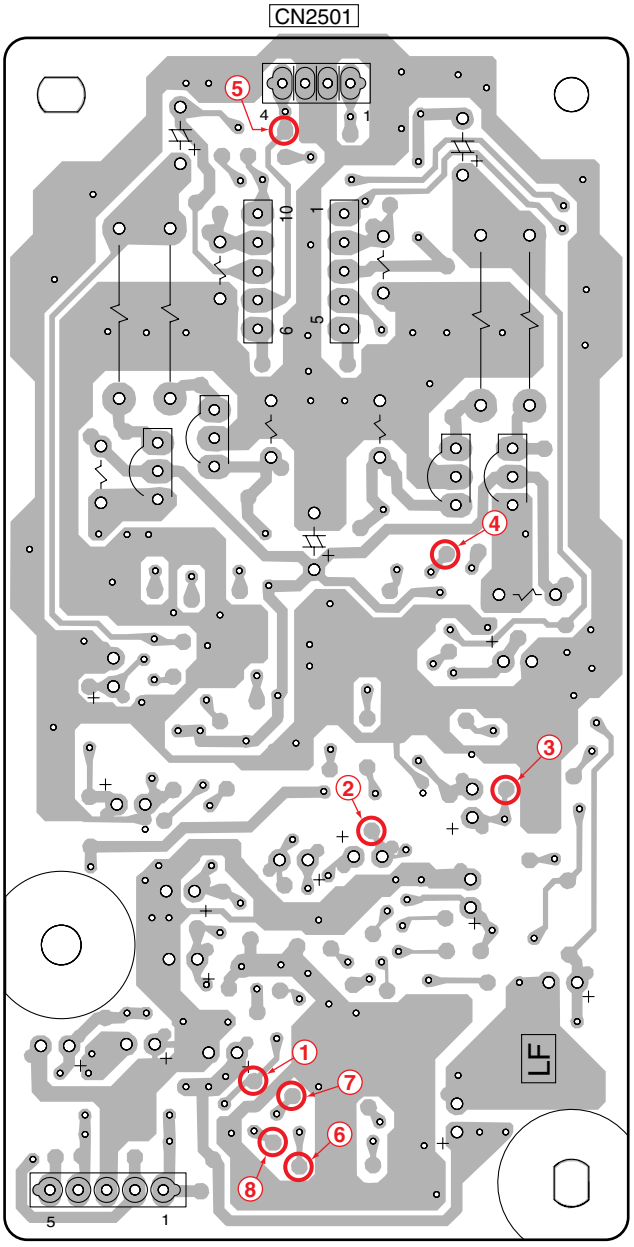

(DNP2211-B)

P HPJACK ASSY

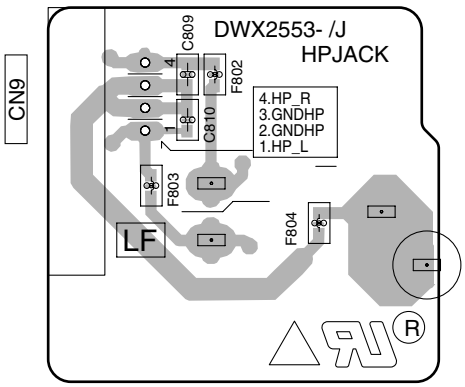

(DNP2209-D)

NOTE : The encircled numbers denote measuring point.

O

P O

5. PCB PARTS LIST

NOTES:
- *Parts marked by "NSP" are generally unavailable because they are not in our Master Spare Parts List.*
- *The ⚠ mark found on some component parts indicates the importance of the safety factor of the part. Therefore, when replacing, be sure to use parts of identical designation.*
- *When ordering resistors, first convert resistance values into code form as shown in the following examples.*

Ex.1 When there are 2 effective digits (any digit apart from 0), such as 560 ohm and 47k ohm (tolerance is shown by J=5%, and K=10%).

560 Ω	→ *56 x 10[1]* →	*561*	*RD1/4PU 5 6 1 J*
47k Ω	→ *47 x 10[3]* →	*473*	*RD1/4PU 4 7 3 J*
0.5 Ω	→	*R50*	*RN2H R 5 0 K*
1 Ω	→	*1R0*	*RS1P 1 R 0 K*

Ex.2 When there are 3 effective digits (such as in high precision metal film resistors).

5.62k Ω	→ *562 x 10[1]* →	*5621*	*RN1/4PC 5 6 2 1 F*

LIST OF ASSEMBLIES

Mark	No.	Description	Part No.
NSP	1	INFD ASSY	DWM2239
	2	INPUT ASSY	DWX2535
	2	MIC 1 ASSY	DWX2542
	2	MIC 2 ASSY	DWX2543
	2	SLSW ASSY	DWX2536
	2	CHFD 1 ASSY	DWX2537
	2	CHFD 2 ASSY	DWX2538
	2	CHFD 3 ASSY	DWX2539
	2	CHFD 4 ASSY	DWX2540
	2	CRSFD ASSY	DWX2541
NSP	1	OUDIG ASSY	DWM2240
	2	OUTPUT ASSY	DWX2544
	2	AC SW ASSY	DWX2545
	2	DIGIB ASSY	DWX2546
	2	DIGIC ASSY	DWX2547
	2	TRIM 1 ASSY	DWX2548
	2	TRIM 2 ASSY	DWX2549
	2	TRIM 3 ASSY	DWX2550
	2	TRIM 4 ASSY	DWX2551
NSP	1	PANEL-A ASSY	DWM2241
	2	PANEL 1 ASSY	DWX2552
	2	HPJACK ASSY	DWX2553
NSP	1	PANEL-B ASSY	DWM2242
	2	PANEL 2 ASSY	DWX2554
	2	DIGI A ASSY	DWX2555
	1	DSP ASSY	DWX2534
	1	HPAMP ASSY	DWX2556
⚠	1	POWER SUPPLY UNIT	DWR1433

Mark	No.	Description	Part No.
A		**INPUT ASSY**	
		SEMICONDUCTORS	
		IC409, IC509, IC609, IC709	CS5361-KS
⚠		IC809, IC810	DEK1096
		IC405, IC505, IC605, IC705	LM4040EIM3-2.5
		IC501, IC601, IC701	NE5532AD
		IC401–IC404, IC406, IC502–IC504	NJM4580MD
		IC506, IC602–IC604, IC606	NJM4580MD
		IC702–IC704, IC706, IC801, IC802	NJM4580MD
		IC804	NJM4580MD
		IC803	PCM1742KE
		IC805	TA78L12F
		IC451–IC456, IC806, IC807	TC7SH08FUS1
		IC408, IC508, IC608, IC708	TC7WH157FU
		Q801–Q808	2SC3326
		Q504–Q507, Q604–Q607	2SK371D1
		Q704–Q707	2SK371D1
		Q401, Q501, Q601, Q701	DTC124EUA
		D410, D411, D510, D511	1SS355
		D610, D611, D710, D711	1SS355
		D401–D404, D501–D504	RB706D-40
		D601–D604, D701–D704	RB706D-40
		D409, D509, D609, D709	UDZS5R6(B)
		COILS AND FILTERS	
		L803	LCKAW221J2520
		F489–F492, F589–F592	VTF1093
		F689–F692, F789–F792	VTF1093
		SWITCHES AND RELAYS	
		RY401, RY501, RY601, RY701	VSR1008
		CAPACITORS	
		C403–C406, C421–C424, C435	CCSRCH101J50
		C440, C444, C445, C449, C450	CCSRCH101J50
		C521–C524, C535, C540	CCSRCH101J50
		C544, C545, C549, C550	CCSRCH101J50
		C621–C624, C635, C640	CCSRCH101J50
		C644, C645, C649, C650	CCSRCH101J50
		C721–C724, C735, C740	CCSRCH101J50
		C744, C745, C749, C750	CCSRCH101J50
		C571, C572, C671, C672	CCSRCH181J50
		C771, C772	CCSRCH181J50
		C503, C504, C603, C604	CCSRCH221J50
		C703, C704	CCSRCH221J50
		C509, C510, C609, C610	CCSRCH331J50
		C709, C710	CCSRCH331J50
		C573, C574, C673, C674	CCSRCH471J50
		C773, C774	CCSRCH471J50
		C465, C565, C665, C765	CEHAR100M16
		C419, C420, C429, C430, C464	CEHAR100M35
		C488–C490, C497, C519, C520	CEHAR100M35
		C529, C530, C564, C566, C567	CEHAR100M35
		C588, C589, C619, C620	CEHAR100M35
		C629, C630, C664, C666, C667	CEHAR100M35
		C688, C689, C699, C719, C720	CEHAR100M35
		C729, C730, C764, C766, C767	CEHAR100M35
		C788, C789, C809–C812	CEHAR100M35
		C817–C820, C823, C826, C836	CEHAR100M35

Mark No.	Description	Part No.
C838		CEHAR100M35
C462, C562, C662, C762		CEHAR101M10
C507, C508, C607, C608		CEHAT471M25
C707, C708		CEHAT471M25
C829, C841		CEJQ100M25
C866, C867, C870, C871		CEJQ101M25
C843		CEJQ221M10
C463, C563, C663, C763		CEJQ221M6R3
C830, C833		CEJQ470M10
C853, C861, C865		CEJQ470M25
C432–C434, C437–C439		CFTNA334J50
C532–C534, C537–C539		CFTNA334J50
C632–C634, C637–C639		CFTNA334J50
C732–C734, C737–C739		CFTNA334J50
C402, C446, C451, C453–C455		CKSRYB103K50
C459, C502, C546, C551		CKSRYB103K50
C553–C555, C559, C602, C646		CKSRYB103K50
C651, C653–C655, C659, C702		CKSRYB103K50
C746, C751, C753–C755, C759		CKSRYB103K50
C831, C832, C842		CKSRYB103K50
C868, C869, C876		CKSRYB104K16
C401, C417, C418, C427, C428		CKSRYB104K25
C436, C441–C443, C447, C448		CKSRYB104K25
C458, C468, C469, C491–C496		CKSRYB104K25
C501, C517, C518, C527, C528		CKSRYB104K25
C536, C541–C543, C547, C548		CKSRYB104K25
C558, C568, C569, C600		CKSRYB104K25
C617, C618, C627, C628, C636		CKSRYB104K25
C641–C643, C647, C648, C658		CKSRYB104K25
C668, C669, C701, C717, C718		CKSRYB104K25
C727, C728, C736, C741–C743		CKSRYB104K25
C747, C748, C758, C768, C769		CKSRYB104K25
C821, C825, C834, C837		CKSRYB104K25
C844, C845, C852, C860		CKSRYB104K25
C862–C864, C872, C873		CKSRYB104K25
C877, C878		CKSRYB104K25
C457, C557, C657, C757		CKSRYB104K50
C470, C475, C570, C575, C670		CKSRYB272K50
C675, C770, C775		CKSRYB272K50
C452, C552, C652, C752		CKSRYB473K50
C511, C512, C611, C612		CQMA124J50
C711, C712		CQMA124J50
C514, C515, C614, C615		CQMA222J50
C714, C715, C801–C804		CQMA222J50
C505, C506, C605, C606		CQMA223J50
C705, C706		CQMA223J50
C828, C840		CQMA272J50
C513, C516, C613, C616, C713		CQMA333J50
C716		CQMA333J50
C805–C808, C827, C839		CQMA392J50
C813–C816		CQMA682J50

RESISTORS

R401, R402, R419, R420		RN1/16SE1001D
R519, R520, R619, R620		RN1/16SE1001D
R719, R720		RN1/16SE1001D
R403, R404, R421, R422		RN1/16SE1102D
R521, R522, R621, R622		RN1/16SE1102D
R721, R722		RN1/16SE1102D
R446, R449, R464, R467, R546		RN1/16SE1201D
R549, R564, R567, R646, R649		RN1/16SE1201D
R664, R667, R746, R749, R764		RN1/16SE1201D
R767		RN1/16SE1201D
R407, R408, R423, R424		RN1/16SE1502D
R523, R524, R623, R624		RN1/16SE1502D
R723, R724		RN1/16SE1502D
R430, R434, R530, R534, R630		RN1/16SE1503D
R634, R730, R734		RN1/16SE1503D
R428, R432, R528, R532, R628		RN1/16SE2202D
R632, R728, R732		RN1/16SE2202D
R441, R443, R459, R461, R541		RN1/16SE2401D
R543, R559, R561, R641, R643		RN1/16SE2401D
R659, R661, R741, R743, R759		RN1/16SE2401D
R761		RN1/16SE2401D
R801–R804, R817–R820		RN1/16SE2700D
R436–R439, R444, R445		RN1/16SE3301D
R454–R457, R462, R463		RN1/16SE3301D
R474, R475, R536–R539		RN1/16SE3301D
R544, R545, R554–R557		RN1/16SE3301D
R562, R563, R596, R597		RN1/16SE3301D
R636–R639, R644, R645		RN1/16SE3301D
R654–R657, R662, R663		RN1/16SE3301D
R674, R675, R696, R697		RN1/16SE3301D
R736–R739, R744, R745		RN1/16SE3301D
R754–R757, R762, R763		RN1/16SE3301D
R774, R775, R796, R797		RN1/16SE3301D
R447, R448, R465, R466		RN1/16SE3601D
R547, R548, R565, R566		RN1/16SE3601D
R647, R648, R665, R666		RN1/16SE3601D
R747, R748, R765, R766		RN1/16SE3601D
R809–R812		RN1/16SE4300D
R503–R506, R603–R606		RN1/16SE8200D
R703–R706		RN1/16SE8200D
R429, R433, R529, R533, R629		RN1/16SE1202D
R633, R729, R733		RN1/16SE1202D
R898		RS1/8S0R0J
R511, R512, R611, R612		RSK1/16S222J
R711, R712		RSK1/16S222J
R509, R510, R609, R610		RSK1/16S273J
R709, R710		RSK1/16S273J
R507, R508, R607, R608		RSK1/16S510J
R707, R708		RSK1/16S510J
Other Resistors		RS1/16S###J

OTHERS

CN454	7P FFC CONNECTOR	52044-0745
CN453	12P FFC CONNECTOR	52044-1245
CN451	12P FFC CONNECTOR	DKN1450
CN452	31P FFC CONNECTOR	DKN1451
SHIELD CASE S		DNH2717
JA402	REMOTE CONTROL JACK	RKN1004
JA502	REMOTE CONTROL JACK	RKN1004
JA602	REMOTE CONTROL JACK	RKN1004
JA702	REMOTE CONTROL JACK	RKN1004
CN455	6P SIDE POST	S6B-EH
JA401, JA501, JA601, JA701, JA801	4P JACK	VKB1132
KN1, KN2	WRAPPING TERMINAL	VNF1084
CN401, CN501, CN601, CN701	11P PLUG	XKP3065

Mark	No.	Description	Part No.

B MIC1 ASSY

SEMICONDUCTORS

	IC1501	AK5381VT
	IC1502, IC1503	NJM4580MD
	Q1501–Q1504	2SC4081
	D1510–D1515	1SS355
	D1518–D1521	RB501V-40

COILS AND FILTERS

	F1547–F1549	DTF1069
	F1541, F1543, F1545	VTF1093
	L1542, L1544, L1546	VTL1105

CAPACITORS

	C1505, C1516, C1518, C1525	CCSRCH101J50
	C1501–C1503, C1509–C1514, C1524	CCSRCH102J50
	C1504, C1517	CCSRCH331J50
	C1508, C1521, C1532, C1534, C1535	CEAL100M16
	C1537	CEAL100M16
	C1538	CEAL101M10
	C1543, C1544	CEAL101M25
	C1540	CEAL470M10
	C1539, C1541, C1542	CEAL470M16
	C1530, C1531	CEALNP220M16
	C1550, C1552	CFTLA103J50
	C1529	CKSRYB103K50
	C1506, C1507, C1519, C1520	CKSRYB104K25
	C1546–C1549, C1551	CKSRYB104K25
	C1526–C1528	CKSRYB104K50
	C1545	CKSRYB472K50

RESISTORS

	R1503, R1514, R1515, R1529	RN1/16SE1000D
	R1504, R1505, R1519, R1520	RN1/16SE1501D
	R1508, R1523	RN1/16SE3300D
	R1506, R1509, R1510, R1521	RN1/16SE3901D
	R1524, R1525	RN1/16SE3901D
	R1516, R1517, R1530, R1531	RN1/16SE4701D
	Other Resistors	RS1/16S###J

OTHERS

	0 4P CABLE HOLDER	51048-0400
	JA1502 CANON CONNECTOR	DKB1068
	CN1503 CONNECTOR	DKN1408
	CN1502 12P FFC CONNECTOR	DKN1450
	J1502 4P JUMPER WIRE	DKP3767
	CN1501 5P SIDE POST	S5B-EH

C PANEL1 ASSY

SEMICONDUCTORS

	IC1706–IC1708	TC74HC238AF
	IC1711–IC1713	TC74HC273AF
	IC1701–IC1705	TC74HC4051AF
	IC1714	TC74HCT08AF
	IC1709, IC1710	TD62083APG
	Q1705–Q1708, Q1721-Q1724	2SB1188
	Q1701–Q1704, Q1709-Q1720	DTC143EUA
	D1701–D1710, D1796-D1829	1SS355
	D1735, D1788-D1795	SLI-343URCW(RST)
	D1723–D1734, D1772–D1787	SLI-343YCW(RST)
	D1719–D1722	SLR-343BBT(HJKL)
	D1711–D1714	SPR-325MVW
	D1736–D1771	TLGE68TG(NP)

SWITCHES AND RELAYS

	S1707–S1718	DSG1079
	S1702	DSH1057
	S1719–S1722	DSH1058
	S1701	DSK1026
	S1703–S1706	DSK1033

CAPACITORS

	C1741–C1743	CEHAT101M16
	C1737, C1739, C1740	CKSRYB103K50
	C1701–C1736, C1747–C1755	CKSRYB104K25

RESISTORS

	VR1703–VR1707, VR1709–VR1711	DCS1065
	VR1713–VR1715, VR1717–VR1719, VR1721	DCS1065
	VR1701, VR1702	DCS1072
	VR1722	DCS1086
	VR1708, VR1712, VR1716, VR1720	DCS1095
	Other Resistors	RS1/16S###J

OTHERS

	CN1710 FFC BOTTOM CONNECTOR 27P	52492-2720
	CN1711 FFC CONNECTOR 30P	52492-3020
	CN1709 KR CONNECTOR 3P	B3B-PH-K
	CN1705, CN1707 KR CONNECTOR	B4B-PH-K
	CN1706, CN1708 KR CONNECTOR	B4B-PH-K-Y
	CN1701 10P FFC CONNECTOR	DKN1454
	CN1702 30P FFC CONNECTOR	DKN1455
	CN1703 25P FFC CONNECTOR	DKN1456
	CN1704 CONNECTOR	DKP3684

D 4/4 TRIM1 ASSY

CAPACITORS

	C491	CKSRYB104K50

RESISTORS

	VR491	DCS1089

OTHERS

	CN491 11P SOCKET	XKP3076

D 3/4 TRIM2 ASSY

CAPACITORS

	C591	CKSRYB104K50

RESISTORS

	VR591	DCS1089

Mark	No.	Description	Part No.
OTHERS			
	CN591	11P SOCKET	XKP3076

D 2/4 TRIM3 ASSY

CAPACITORS		
	C691	CKSRYB104K50
RESISTORS		
	VR691	DCS1089
OTHERS		
	CN691	11P SOCKET XKP3076

D 1/4 TRIM4 ASSY

CAPACITORS		
	C791	CKSRYB104K50
RESISTORS		
	VR791	DCS1089
OTHERS		
	CN791	11P SOCKET XKP3076

E MIC2 ASSY

SEMICONDUCTORS		
	D1	UDZS5R6(B)
CAPACITORS		
	C2	CKSRYB103K50
	C1	CKSRYB472K50
OTHERS		
	0	4P CABLE HOLDER 51048-0400
	JA1501	MIC JACK DKB1076
	EARTH PLATE (MIC)	DNH2735

F PANEL2 ASSY

SEMICONDUCTORS		
	IC2102	NJM2903M
	IC2101	TC74HC4051AF
	Q2105–Q2108	2SB1188
	Q2101–Q2104	DTC143EUA
	D2141–D2163	1SS355
	D2115, D2116, D2130, D2131	SLI-343URCW(RST)
	D2111–D2114, D2126-D2129	SLI-343YCW(RST)
	D2133–D2138	SLI-343YCW(RST)
	D2132, D2139	SLR-343EBT(KLMN)
	D2102–D2110, D2117–D2125	TLGE68TG(NP)
	D2101	UDZS2R0(B)
SWITCHES AND RELAYS		
	S2101–S2104, S2106–S2109	DSG1079
	S2113, S2114	DSH1058
	S2105	DSH1066
	S2110	DSX1064
	S2111, S2112	DSX1068
CAPACITORS		
	C2112, C2113, C2115, C2116	CEHAT101M10
	C2114	CEHAT470M50
	C2104, C2123, C2124, C2127, C2128	CKSRYB103K50
	C2132	CKSRYB103K50
	C2101–C2103, C2105–C2107	CKSRYB104K25
	C2117, C2118, C2125, C2126	CKSRYB104K25
	C2129–C2131	CKSRYB104K25
RESISTORS		
	R2108, R2109	RS1/8S100J
	VR2101, VR2104	DCS1065
	VR2102, VR2103	DCS1086
	Other Resistors	RS1/16S###J
OTHERS		
	CN2101	FFC BOTTOM CONNECTOR 52492-2720
	CN2102	FFC CONNECTOR 30P 52492-3020
	V2101	FL INDICATOR TUBE DEL1061
	0	FL HOLDER DNF1732

G 1/4 CHFD1 ASSY

RESISTORS		
	VR206	DCV1020
OTHERS		
	CN2601	KR CONNECTOR S4B-PH-K

G 2/4 CHFD2 ASSY

RESISTORS		
	VR205	DCV1020
OTHERS		
	CN2602	KR CONNECTOR S4B-PH-K-Y

G 3/4 CHFD3 ASSY

RESISTORS		
	VR203	DCV1020
OTHERS		
	CN2603	KR CONNECTOR S4B-PH-K

G 4/4 CHFD4 ASSY

RESISTORS		
	VR204	DCV1020
OTHERS		
	CN2604	KR CONNECTOR S4B-PH-K-Y

H CRSFD ASSY

RESISTORS		
	VR202	DCV1006

Mark	No.	Description	Part No.
		OTHERS	
	CN2608	KR CONNECTOR	S3B-PH-K

I DSP ASSY

SEMICONDUCTORS

	IC22	D610A003BPYPA225
⚠	IC40	DEK1086
⚠	IC41	DEK1094
⚠	IC42, IC44, IC48	DEK1096
⚠	IC43	DEK1098
	IC12	DYW1754
	IC11	K4S641632H-TC75
	IC16	NJM2374AM
	IC1	DYW1757
	IC14	R1224N102H
	IC15	S-1200B25-M5
	IC8	TC74HC32AF
	IC39	TC74HC4051AF
	IC24	TC74HC541AF
	IC2, IC3	TC74VHC163FT
	IC6, IC7	TC74VHC541FTS1
	IC4, IC5	TC74VHCU04FT
	IC25, IC45–IC47	TC7S08FU
	IC30, IC31	TC7SH08FUS1
	IC13	XC3S50-4TQG144C
	IC0	MBM29LV400TC-70PFTN
	Q2	2SA1576A
	Q16, Q3	2SC2412K
	Q4	2SC4081
	Q1	CPH6314
	Q13	DTA143EUA
	Q14	DTC114EUA
	Q10–Q12, Q15, Q5–Q9	DTC124EUA
	D1, D19–D34, D36	1SS355
	D2, D3	RB160L-40
	D5	SML-310DT

COILS AND FILTERS

L1	ATH7011
L2	CTH1254
L3	DTL1123
L4	RTF1189
L5	CTF1346
L10, L6- L9	CTF1357
F7, F9	VTF1093

CAPACITORS

C2	CCSRCH150J50
C1	CCSRCH180J50
C117	CCSRCH331J50
C248, C249	CEVW100M16
C118, C153, C174, C179, C182	CEVW100M50
C194, C202, C7, C84, C9	CEVW100M50
C103, C106, C111, C112	CEVW101M10
C115, C116, C135–C144, C196	CEVW101M10
C14	CEVW101M16
C10, C12, C120, C127, C13	CKSRYB103K50
C150–C152, C158–C161	CKSRYB103K50
C165–C168, C19, C220	CKSRYB103K50
C186–C189, C190, C191, C252	CKSRYB103K50
C100–C102, C107, C113, C114	CKSRYB104K16
C197–C199, C203, C247	CKSRYB104K16
C85–C99	CKSRYB104K16
C11, C121–C126, C128–C134	CKSRYB104K25
C148, C149, C15, C154–C157	CKSRYB104K25
C16, C17, C175–C178, C18	CKSRYB104K25
C180, C181, C183, C192, C193	CKSRYB104K25
C195, C20, C200, C201	CKSRYB104K25
C204–C209, C21, C210–C218	CKSRYB104K25
C22, C221, C23, C234–C239	CKSRYB104K25
C24, C240–C246, C26–C29	CKSRYB104K25
C3, C30–C39, C4	CKSRYB104K25
C40–C49, C5, C50–C79	CKSRYB104K25
C8, C80–C83	CKSRYB104K25
C108	CKSRYB105K10
C109	CKSRYB332K50
C169–C173	CKSRYB471K50
C104, C105, C110	CKSYB106K10

RESISTORS

R186	RS1/10S0R0J
R64	RS1/16S1502F
R70	RS1/16S2202F
R69	RS1/16S5603F
R65	RS1/16S7502F
R254, R255	RS1/4SA681J
R271, R365–R368	RS1/8S0R0J
Other Resistors	RS1/16S###J

OTHERS

CN14 PH CONNECTOR 6P(SMT)	AKM1292
X1 CRYSTAL RESONATOR	ASS7025
CN8	DKN1449
CN15, CN4 10P FFC CONNECTOR	VKN1414
CN11, CN3 12P FFC CONNECTOR	VKN1416
CN12 16P FFC CONNECTOR	VKN1420
CN6, CN7 25P FFC CONNECTOR	VKN1429
CN5 30P FFC CONNECTOR	VKN1434
CN1, CN2 31P FFC CONNECTOR	VKN1435
KN1–KN4 EARTH METAL FITTING	VNF1109

J OUTPUT ASSY

SEMICONDUCTORS

	IC904	AK4393VF
	IC918	AK5381VT
⚠	IC1167–IC1169	DEK1096
	IC908, IC909	NJM2114D
	IC905–IC907, IC911, IC912	NJM4580MD
	IC916, IC917	NJM4580MD
	IC913, IC914	NJM5532DD
	IC910, IC915	PCM1742KE
	IC901–IC903	TC7SH08FUS1
	Q901, Q902	2SA1576A
	Q903, Q922, Q923	2SC2412K
	Q906–Q921	2SC3326
	Q924	DTA143EUA
	Q904, Q905	DTC124EUA

Mark No.	Description	Part No.
D901–D912, D918, D919		1SS355
D914–D917		RB501V-40

COILS AND FILTERS

F101–F104	VTF1093

SWITCHES AND RELAYS

S902	DSG1083
S901	VSH1025
RY901, RY902	VSR1008

CAPACITORS

C1033, C1035	CCSRCH101J50
C1036, C1056	CCSRCH102J50
C974, C976, C978, C979, C991	CCSRCH151J50
C993, C994, C997	CCSRCH151J50
C934, C936, C938, C939	CCSRCH220J50
C917, C918, C921, C924, C925	CCSRCH221J50
C927, C930, C958	CCSRCH221J50
C940, C942–C944, C946, C947	CCSRCH820J50
C949, C950	CCSRCH820J50
C1015, C1022, C1034, C1037	CEANP100M16
C1008, C1028, C1040, C1043	CEANP100M25
C1013, C1024	CEAT100M50
C913	CEAT101M16
C1012, C1026, C1046, C1051, C1052	CEAT101M25
C1073-C1076, C969, C988	CEAT101M25
C1004, C1007, C1049	CEAT470M10
C1029, C1044, C1061	CEAT471M10
C964, C965, C970, C990	CEHANP220M16
C954	CEHANP220M25
C975, C980, C992, C996	CEHANP470M25
C1019, C904	CEHAT100M50
C1069–C1072	CEHAT101M25
C912	CEHAT221M10
C1057, C961	CEHAT470M16
C963	CEHAT471M16
C1005, C1006, C1050, C1062, C901	CKSRYB103K50
C1003, C1038, C1039, C1060, C903	CKSRYB104K25
C906, C908, C910, C914, C915	CKSRYB104K25
C919, C923, C928, C933	CKSRYB104K25
C972, C973	CKSRYB104K25
C1011, C1025, C1030, C1045	CKSRYB104K50
C1047, C1048, C1053, C1054, C935	CKSRYB104K50
C937, C941, C945, C948, C951	CKSRYB104K50
C959, C960, C962, C968, C977	CKSRYB104K50
C981, C989, C995, C998	CKSRYB104K50
C1017, C1020	CKSRYB222K50
C1016, C1021	CKSRYB392K50
C1077–C1080	CKSRYB473K50
C1014, C1023	CKSRYB682K50
C916, C926, C931, C957	CKSRYB821K50
C1001, C1002, C952, C953	CQMA103J50
C955, C956, C984, C985	CQMA103J50
C1058, C966	CQMA272J50
C1009, C1055, C967, C987	CQMA392J50
C1010, C1027	CQMA472J50
C1000, C982, C983, C999	CQMA682J50
C920, C922, C929, C932	DCH1255

RESISTORS

R1058, R1059, R1087, R1088	RD1/2VM101J
R979, R986, R993, R998	RD1/2VM181J
R1053, R1057, R1082, R1143	RN1/16SC68R0D
R1040, R1041, R1046, R1047, R1070	RN1/16SE1002D
R1072, R1078, R1079, R976, R983	RN1/16SE1002D
R992, R997	RN1/16SE1002D
R981, R988, R995, R999	RN1/16SE1101D
R919, R923, R928, R932, R935	RN1/16SE1102D
R938, R944, R948	RN1/16SE1102D
R1109, R1110	RN1/16SE2200D
R1038, R1042, R1043, R1045, R1048	RN1/16SE2202D
R1068, R1071, R1073, R1075, R1077	RN1/16SE2202D
R1044, R1049, R1074, R1076, R1104	RN1/16SE2700D
R1114	RN1/16SE2700D
R1107, R1112	RN1/16SE3300D
R1039, R1069, R1125, R1127	RN1/16SE3602D
R1002, R1003, R977, R978	RN1/16SE3901D
R984, R985, R990, R991	RN1/16SE3901D
R1000, R982, R989, R996	RN1/16SE4701D
R1021, R1022, R918, R920–R922	RN1/16SE5601D
R927, R929, R934, R936, R937	RN1/16SE5601D
R939, R943, R945–R947	RN1/16SE5601D
R1001, R980, R987, R994	RN1/16SE9101D
Other Resistors	RS1/16S###J

OTHERS

CN902 7P FFC CONNECTOR	52045-0745
CN903 5P TOP POST	B5B-EH-Y
CN904 6P TOP POST	B6B-EH
JA901, JA902 CANON CONNECTOR	DKB1077
JA907 HEADPHONE JACK	DKB1078
JA903, JA904 HEADPHONE JACK	DKN1249
JA905, JA906 HEADPHONE JACK	DKN1452
JA908 HEADPHONE JACK	DKN1452
ROTARY SW STAY	DNH2646
CN901 25P FFC CONNECTOR	VKN1429
KN901, KN902 WRAPPING TERMINAL	VNF1084

K DIGIC ASSY

SEMICONDUCTORS

IC1203, IC1209, IC1215, IC1218	AD1895AYRS
IC1202, IC1208, IC1214, IC1217	AK4117VF
IC1219	TC7S04FU
IC1221, IC1223, IC1225	TC7SH08FUS1
IC1201, IC1207, IC1213, IC1216	TC7WU04FU
Q1201	DTC124EUA
D1206, D1207	1SS355
D1205	NNCD6.2MF

SWITCHES AND RELAYS

S1201	VSH1025

CAPACITORS

C1204, C1222, C1240, C1255	CCSRCH220J50

Mark	No.	Description	Part No.
	C1202, C1220, C1238, C1253		CCSRCH221J50
	C1206, C1224, C1242, C1257		CCSRCH470J50
	C1210, C1211, C1216, C1218		CEJQ100M50
A	C1228, C1229, C1234, C1236		CEJQ100M50
	C1246, C1247, C1249, C1251		CEJQ100M50
	C1261, C1262, C1264, C1266		CEJQ100M50
	C1269, C1270		CEJQ100M50
	C1203, C1221, C1239, C1254, C1267		CKSRYB103K50
	C1271–C1278		CKSRYB103K50
	C1205, C1208, C1209, C1215, C1217		CKSRYB104K25
	C1223, C1226, C1227, C1233, C1235		CKSRYB104K25
	C1241, C1244, C1245, C1248, C1250		CKSRYB104K25
	C1256, C1259, C1260, C1263, C1265		CKSRYB104K25
	C1268, C1282, C1286, C1290-C1294		CKSRYB104K25
B	C1213		CKSRYB104K50
	C1201, C1219, C1237, C1252		CQMA221J50
	RESISTORS		
	R1239, R1240		RD1/2VM221J
	R1204, R1213, R1222, R1231		RD1/2VM820J
	R1263–R1265		RS1/10S0R0J
	Other Resistors		RS1/16S###J
	OTHERS		
C	CN1204	6P FFc CONNECTOR	52044-0645
	CN1201	7P FFC CONNECTOR	52045-0745
	CN1203	12P FFC CONNECTOR	52045-1245
	CN1202	24P FFC CONNECTOR	52045-2445
	JA1201	DIN CONNECTOR 5P	DKN1188
	CN1205	31P FFC CONNECTOR	DKN1451
	SHIELD CASE (MIDI)		DNH2736
	KN1203	SCREW PLATE	VNE1948
	KN1201	WRAPPING TERMINAL	VNF1084
	KN1202	WRAPPING TERMINAL	VNF1084
D	**L DIGIA ASSY**		
	OTHERS		
	CN1401	FFC BOTTOM CONNECTOR 7P	52492-0720
	JA1401, JA1402	2P PIN JACK	DKB1079
	M DIGIB ASSY		
	SEMICONDUCTORS		
	IC1307		AD1895AYRS
E	IC1308		AK4114VQ
	IC1303		TC74HCU04AF
	IC1312		TC7SET08FUS1
	IC1309–IC1311, IC1313		TC7SH08FUS1
	COILS AND FILTERS		
	F1301–F1304		DTF1069
	L1304		PTL1003
	F1305, F1306		VTF1091
	CAPACITORS		
F	C1330, C1332, C1334, C1347		CEAT100M50
	C1314		CEAT101M16
	C1318		CEAT470M16
	C1311, C1312		CKSRYB103K50

Mark	No.	Description	Part No.
	C1313, C1329, C1331, C1333, C1335		CKSRYB104K25
	C1340, C1342, C1344-C1346, C1348		CKSRYB104K25
	C1350		CKSRYB104K25
	C1304		CKSRYB474K10
	RESISTORS		
	R1301		RN1/16SE1802D
	Other Resistors		RS1/16S###J
	OTHERS		
	CN1301	24P FFC CONNECTOR	52045-2445
	CN1302	10P FF CONNECTOR	DKN1454
	JA1303	1P JACK BOARD	PKB1033
	KN1301	WRAPPING TERMINAL	VNF1084
	KN1302	WRAPPING TERMINAL	VNF1084
	N SLSW ASSY		
	SWITCHES AND RELAYS		
	S2401-S2404		VSH1025
	CAPACITORS		
	C2401-C2404		CKSRYB103K50
	RESISTORS		
	Other Resistors		RS1/16S###J
	OTHERS		
	CN2401	6P FFC CONNECTOR	52044-0645
	O HPAMP ASSY		
	SEMICONDUCTORS		
	⚠ IC2505, IC2506		DEK1086
	⚠ IC2504		DEK1094
	IC2503		NJM2068M
	IC2502		NJM4558MD
	IC2501		PCM1742KE
	IC2507		TA78L12F
	Q2503, Q2504		2SB1238X
	Q2509		2SC2412K
	Q2505, Q2507		2SD1859X
	D2501–D2504, D2506–D2512		1SS355
	D2513		UDZS3R3(B)
	SWITCHES AND RELAYS		
	RY2501		VSR1008
	CAPACITORS		
	C2510, C2515		CCSRCH220J50
	C2540, C2541		CCSRCH471J50
	C2501, C2514		CCSRCH820J50
	C2519–C2522, C2526, C2534, C2535		CEAT100M50
	C2531, C2533, C2536, C2537		CEAT101M25
	C2524, C2528, C2542		CEAT221M25
	C2518, C2523		CEAT2R2M50

Mark No.	Description	Part No.
	C2532	CEAT470M25
	C2502–C2505, C2508, C2538, C2539	CKSRYB104K25
	C2506, C2507, C2509	CKSRYB104K50

RESISTORS

	R2501, R2513, R2515, R2532	RD1/2VM122J
	R2518, R2523	RD1/2VM221J
	R2504, R2524	RN1/16SE1001D
	R2509, R2528	RN1/16SE1802D
	R2516, R2519, R2533, R2535	RS2LMF270J
	Other Resistors	RS1/16S###J

OTHERS

	CN2501 KR CONNECTOR	B4B-PH-K
	CN2502 5P TOP POST	B5B-EH
	CN2503 16P FFC CONNECTOR	DKN1453

P HPJACK ASSY

COILS AND FILTERS

	F802–F804	VTF1093

CAPACITORS

	C809, C810	CKSRYB104K25

RESISTORS

	Other Resistors	RS1/16S###J

OTHERS

	CN9 KR CONNECTOR	B4B-PH-K
	JA10 HEADPHONE JACK	DKN1281

R ACSW ASSY

SWITCHES AND RELAYS

	⚠S1	DSA1031

CAPACITORS

	⚠C1	ACG7030

OTHERS

	⚠CN91 AMP U-P CONNECTOR 2P	2-178496-4
	⚠J0 CONNECTOR ASSY	DKP3768

6. ADJUSTMENT

• There is no information to be shown in this chapter.

7. GENARAL INFORMATION

7.1 DIAGNOSIS

7.1.1 TEST MODE

1. Description of Test Modes

The following eight test modes are provided for this unit:

① **mode 1 :** For confirmation of the software version
② **mode 2 :** All LEDs and FL display "OFF" MODE. "ALL CLR"
③ **mode 3 :** All LEDs and FL display "ON" MODE. "ALL SET"
④ **mode 4 :** KEY operating TEST. (KEY TEST)
⑤ **mode 5 :** SELECT SW Operating Test. (SW TEST)
⑥ **mode 6 :** Volume Test 1. (VOLTEST1)
⑦ **mode 7 :** Volume Test 2. (VOLTEST2)
⑧ **mode 8 :** Volume Test 3. (VOLTEST 3)
⑨ **mode 9 :** Volume Test 4. (VOLTEST 4)
⑩ **mode 8 :** Fader Test . (FDRTEST)
⑪ **mode 9 :** Meter LED Test . (METERTEST)

2. Test Mode

Test mode : ON

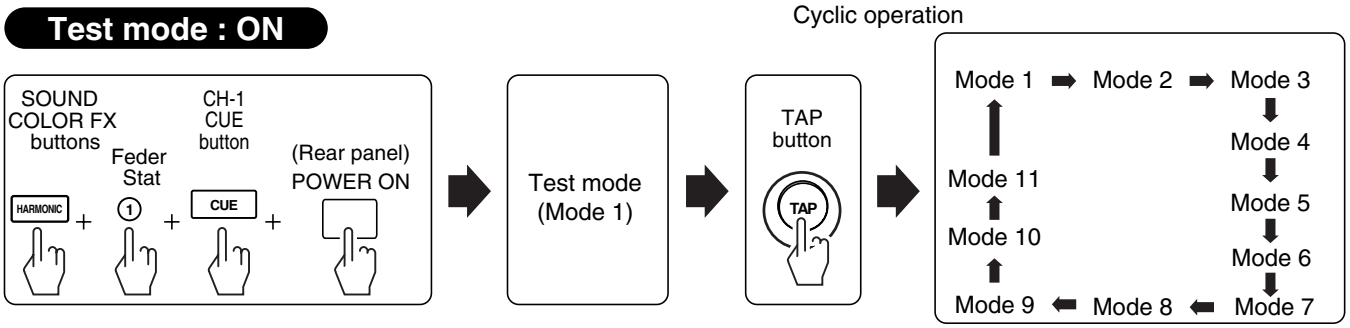

Test mode : CANCEL

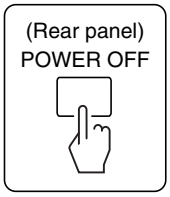

POWER SW

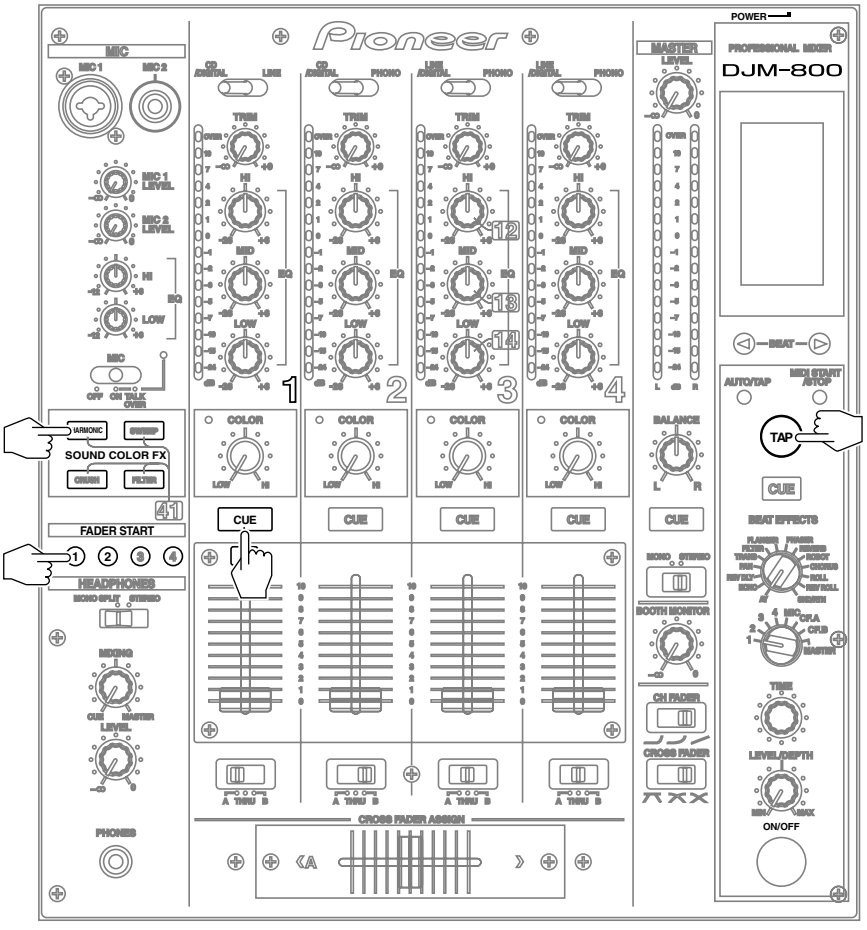

How to start the Test Mode.

To enter test mode, turn the Power button while pressing all of the HARMONIC, FADER START CH1,CUE CH1 buttons.

There are 11 modes in this Test Mode.
If the TAP button is pressed, Mode1 ~ 11 can be selected by selector switch.
When set up mode is started, Mode 1 is selected automatically.

Once Test Mode starts, it keeps the test mode until turning the Power off.

Test mode Contents.

① Mode 1 : Confirmation of software version.

Mode that confirms version of microcomputer, DSP (program), DSP (data), and FPGA.

It is displayed a version of firmware by FL display.

For exsample
Microcomputer : 1.000
DSP (program) : 1.000
DSP (data) : 005
FPGA : 1.0

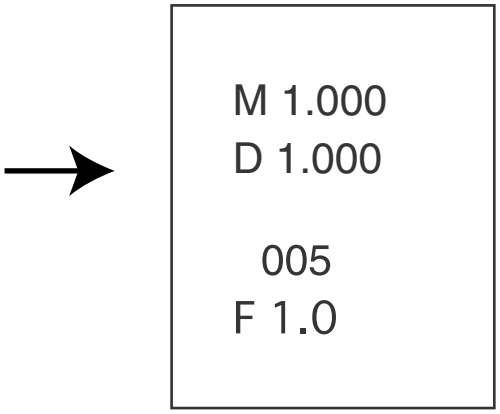

② Mode 2 : ALL LED & FL display "OFF" MODE. "ALL CLR"

It displays "ALL CLR" on the FL display in the first 2 seconds.

③ Mode 3 : ALL LED & FL display "ON" MODE. "ALL SET"

It displays "ALL SET" on the FL display in the first 2 seconds.

④ Mode 4 : KEY OPERATING TEST. "KEY TEST"

• While the self-illumination buttons are being pressed, LEDs lights.

• The abbreviated name of selected key is displyed on the FL display.

LED TABLE

Buttons	Lighting LED	FL Display	Remark
HARMONIC	HARMONIC LED	MIX_A	
SWEEP	SWEEP LED	MIX_B	
CRUSH	CRUSH LED	MIX_C	
FILTER	FILTER LED	MIX_D	
FADER START CH1	FADER START CH1 LED	FS_CH1	
FADER START CH2	FADER START CH2 LED	FS_CH2	
FADER START CH3	FADER START CH3 LED	FS_CH3	
FADER START CH4	FADER START CH4 LED	FS_CH4	
CUE CH1	CUE CH1 LED	CUE_CH1	
CUE CH2	CUE CH2 LED	CUE_CH2	
CUE CH3	CUE CH3 LED	CUE_CH3	
CUE CH4	CUE CH4 LED	CUE_CH4	
CUE MASTER	CUE MASTER LED	CUE_MAS	
CUE EFFECT	CUE EFFECT LED	CUE_EFF	
BEAT DOWN(◄)	COLOR CH1 LED	B_DOWN	Red and green LED light at the same time.
BEAT UP (►)	COLOR CH2 LED	B_UP	
AUTO/TAP	COLOR CH3 LED	AUTO	
MIDI START/STOP	COLOR CH4 LED	MIDI	
EFFECT ON/OFF	EFFECT ON/OFF LED	EFCT_ON	

⑤ Mode 5 : SELECT SW Operating Test. "SW TEST"

• The selected SW can be confirmed by LEDs lights.

Swich		Lighting LED		Remark
CD/DIGITAL SELECT SW CH1		COLOR CH1 LED		"CD" is selected : Lights Red "DIGITAL" is selected : Lights Green
CD/DIGITAL SELECT SW CH2		COLOR CH2 LED		"CD" is selected : Lights Red "DIGITAL" is selected : Lights Green
LINE/DIGITAL SELECT SW CH3		COLOR CH3 LED		"LINE" is selected : Lights Red "DIGITAL" is selected : Lights Green
LINE/DIGITAL SELECT SW CH4		COLOR CH4 LED		"LINE" is selected : Lights Red "DIGITAL" is selected : Lights Green
MIC	: OFF	-		
	: ON	MIC LED		
	: TALK OVER	MIC LED & CH1 Level Meter -24dB LED		
Headphone MONO/STEREO	: MONO SPLIT	CH2 Level Meter LED	-24dB	
	: STEREO		-15dB	

⑤ Mode 5 : SELECT SW Operating Test. "SW TEST"

Swich		Lighting LED		Remark
CH FADER Assign CH1	: Assign A	CH1 Level Meter LED	7dB	
	: THRU		10dB	
	: Assign B		OVER	
CH FADER Assign CH2	: Assign A	CH2 Level Meter LED	7dB	
	: THRU		10dB	
	: Assign B		OVER	
CH FADER Assign CH3	: Assign A	CH3 Level Meter LED	7dB	
	: THRU		10dB	
	: Assign B		OVER	
CH FADER Assign CH4	: Assign A	CH4 Level Meter LED	7dB	
	: THRU		10dB	
	: Assign B		OVER	
CD/DIGITAL LINE Select SW CH1	: CD DIGITAL	-		
	: LINE	CH1 Level Meter LED	0dB	
CD/DIGITAL PHONO Select SW CH2	: CD DIGITAL	-		
	: PHONO	CH2 Level Meter LED	0dB	
LINE/DIGITAL PHONO Select SW CH3	: CD DIGITAL	-		
	: PHONO	CH3 Level Meter LED	0dB	
LINE/DIGITAL PHONO Select SW CH4	: CD DIGITAL	-		
	: PHONO	CH4 Level Meter LED	0dB	
CH FADER CURVE select SW	: Left	CH4 Level Meter LED	-24dB	
	: Center		-15dB	
	: Right		-10dB	
CROSS FADER CURVE select SW	: Left	CH3 Level Meter LED	-24dB	
	: Center		-15dB	
	: Right		-10dB	
Effect Select SW	: DELAY	Master Level Meter R CH LED	-24dB	
	: ECHO		-15dB	
	: REV DLY		-10dB	
	: PAN		-7dB	
	: TRANS		-5dB	
	: FILTER		-3dB	
	: FLANGER		-2dB	
	: PHASER		-1dB	
	: REVERB		0dB	
	: ROBOT		1dB	
	: CHORUS		2dB	
	: ROLL		4dB	
	: REV ROLL		7dB	
	: SND/RTN		10dB	
CH Select SW	1	Master Level Meter L CH LED	-24dB	
	2		-15dB	
	3		-10dB	
	4		-7dB	
	MIC		-5dB	
	CF.A		-3dB	
	CF.B		-2dB	
	MASTER		-1dB	
MONO STEREO Select SW		Master Level Meter L CH LED	10dB	MONO : Lights off STEREO : Lights
MIC SIGNAL Select sw		Master Level Meter L CH LED	OVER	ADD : Lights off CUT : Lights

⑤ Mode 5 :SELECT SW Operating Test. " SW TEST "

• The status is displayed on the FL Display about the following.

Swich	Position of FL Display	FL Display
Digital Out Sampling Rate Select SW	※1	"48k" is selected : Display "48". "96k" is selected : Display "96".
RETURN IN	※2	When the cable is connected up to L side terminal, it displays as "R".
TIME Encoder	※3	• Default "0" • Upper limit "100" • Lower limit "-100"

Example

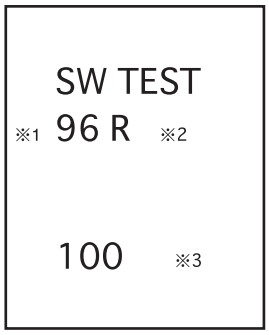

※1. Example of selecting 96k

※3. Example of selecting Upper Limit

⑥ Mode 6 : Volume Test 1. " VOLTEST1 "

• This mode displays a value of volume as shown below on a Level Meter.

• HI of MIC,HI of CH1,CH2,CH3,CH4

• MASTER LEVEL

Volume	Lighting LED	Remark
MIC HI	Master Level Meter L CH LED	"-12" : Lights off "+6" : Full Illuminate
CH1 HI	CH1 Level Meter LED	"-26" : Lights off "+6" : Full Illuminate
CH2 HI	CH2 Level Meter LED	"-26" : Lights off "+6" : Full Illuminate
CH3 HI	CH3 Level Meter LED	"-26" : Lights off "+6" : Full Illuminate
CH4 HI	CH4 Level Meter LED	"-26" : Lights off "+6" : Full Illuminate
MASTER LEVEL	Master Level Meter R CH LED	"-∞ " : Lights off "0" : Full Illuminate

• This mode displays a value of CH1 TRIM volume in the FL Display.

I will turn on from upper left according to value of TRIM in turn, and only lower berth rightmost edge of effect name display lights it that I finish turning it.

It displays "VOLTEST1" on the FL display in the first 2 seconds.
Then it displays "VOL 1" on the bottom of ths FL Display. (in order to let you display TRIM value)

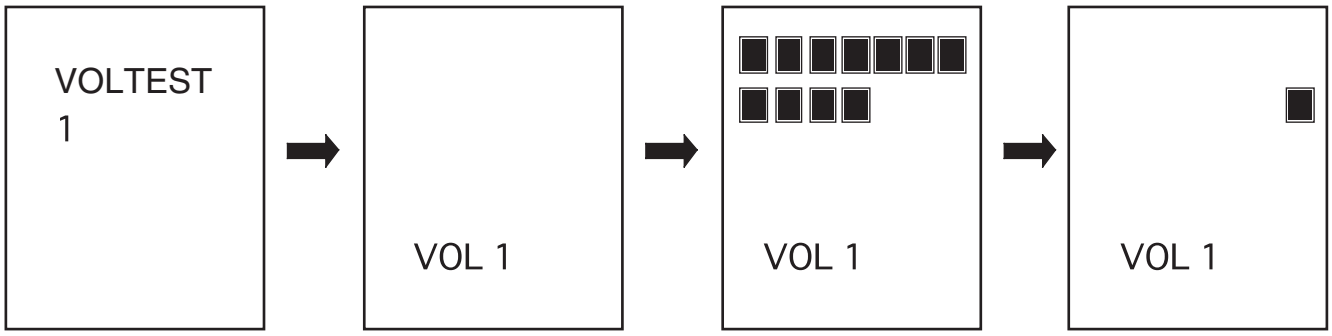

⑦ **Mode 7 :**Volume Test 2. " VOLTEST2 "

• This mode displays a value of volume as shown below on a Level Meter.

• LOW of MIC,MID of CH1,CH2,CH3,CH4

• MASTER BARANCE

Volume	Lighting LED	Remark
MIC LOW	Master Level Meter L CH LED	"-12" : Lights off "+6" : Full Illuminate
CH1 MID	CH1 Level Meter LED	"-26" : Lights off "+6" : Full Illuminate
CH2 MID	CH2 Level Meter LED	"-26" : Lights off "+6" : Full Illuminate
CH3 MID	CH3 Level Meter LED	"-26" : Lights off "+6" : Full Illuminate
CH4 MID	CH4 Level Meter LED	"-26" : Lights off "+6" : Full Illuminate
MASTER BARANCE	Master Level Meter R CH LED	"L" : Lights off "R" : Full Illuminate

• This mode displays a value of CH 2 TRIM volume in the FL Display.

I will turn on from upper left according to value of TRIM in turn, and only lower berth rightmost edge of effect name display lights it that I finish turning it.

It displays "VOLTEST2" on the FL display in the first 2 seconds.
Then it displays "VOL 2" on the bottom of ths FL Display. (in order to let you display TRIM value)

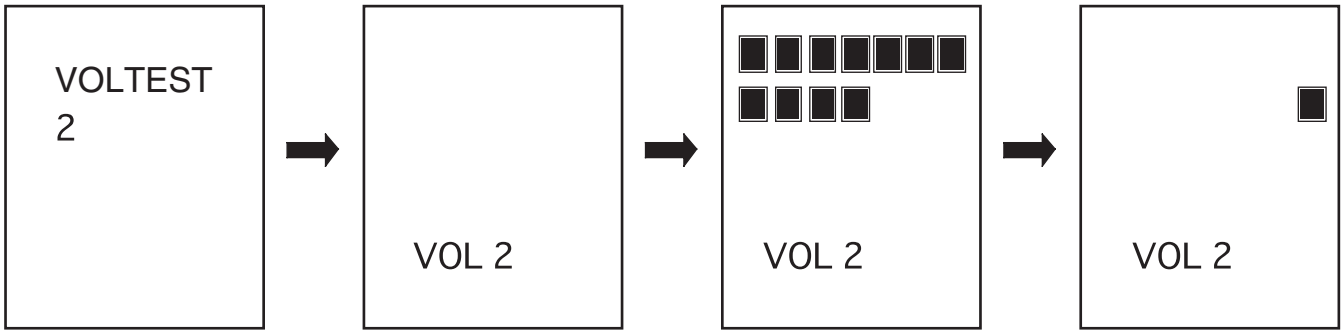

⑧ **Mode 8 :** Volume Test 3. " VOLTEST "

• This mode displays a value of volume as shown below on a Level Meter.
  • H.P. MIXING,LOW of CH1,CH2,CH3,CH4
  • BOOTH MONITOR

Volume	Lighting LED	Remark
H.P. MIXING	Master Level Meter L CH LED	"CUE" : Lights off "MASTER" : Full Illuminate
CH1 LOW	CH1 Level Meter LED	"-26" : Lights off "+6" : Full Illuminate
CH2 LOW	CH2 Level Meter LED	"-26" : Lights off "+6" : Full Illuminate
CH3 LOW	CH3 Level Meter LED	"-26" : Lights off "+6" : Full Illuminate
CH4 LOW	CH4 Level Meter LED	"-26" : Lights off "+6" : Full Illuminate
BOOTH MONITOR	Master Level Meter R CH LED	"-∞ " : Lights off "0" : Full Illuminate

• This mode displays a value of CH3 TRIM volume in the FL Display.

I will turn on from upper left according to value of TRIM in turn, and only lower berth rightmost edge of effect name display lights it that I finish turning it.

It displays "VOLTEST3" on the FL display in the first 2 seconds.
Then it displays "VOL 3" on the bottom of ths FL Display.(in order to let you display TRIM value)

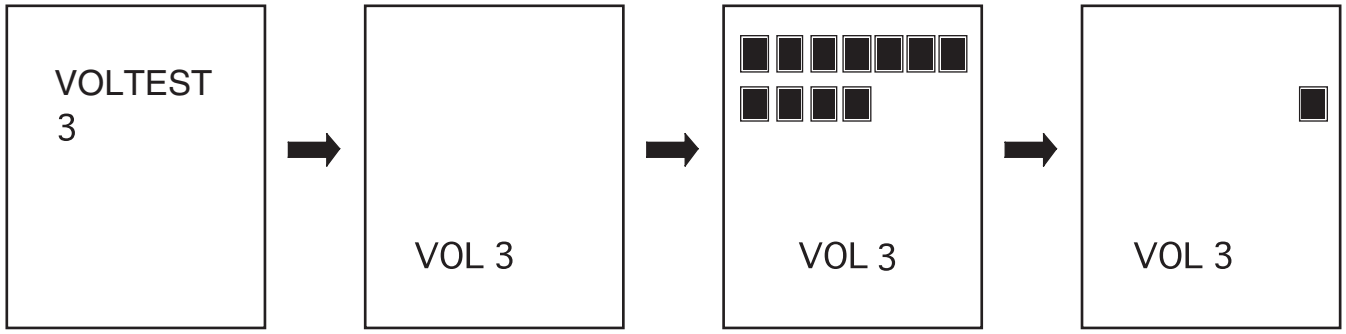

⑨ Mode 9 : Volume Test 4. " VOLTEST "

• This mode displays a value of volume as shown below on a Level Meter.
  • H.P. LEVEL,COLOR of CH1,CH2,CH3,CH4
  • LEVEL/DEPTH

Volume	Lighting LED	Remark
H.P. LEVEL	Master Level Meter L CH LED	"-• " : Lights off "0" : Full Illuminate
CH1 COLOR	CH1 Level Meter LED	"LOW" : Lights off "HI" : Full Illuminate
CH2 COLOR	CH2 Level Meter LED	"LOW" : Lights off "HI" : Full Illuminate
CH3 COLOR	CH3 Level Meter LED	"LOW" : Lights off "HI" : Full Illuminate
CH4 COLOR	CH4 Level Meter LED	"LOW" : Lights off "HI" : Full Illuminate
LEVEL/DEPTH	Master Level Meter R CH LED	"MIN" : Lights off "MAX" : Full Illuminate

• This mode displays a value of CH4 TRIM volume in the FL Display.

I will turn on from upper left according to value of TRIM in turn, and only lower berth rightmost edge of effect name display lights it that I finish turning it.

It displays "VOLTEST4" on the FL display in the first 2 seconds.
Then it displays "VOL 4" on the bottom of ths FL Display. (in order to let you display TRIM value)

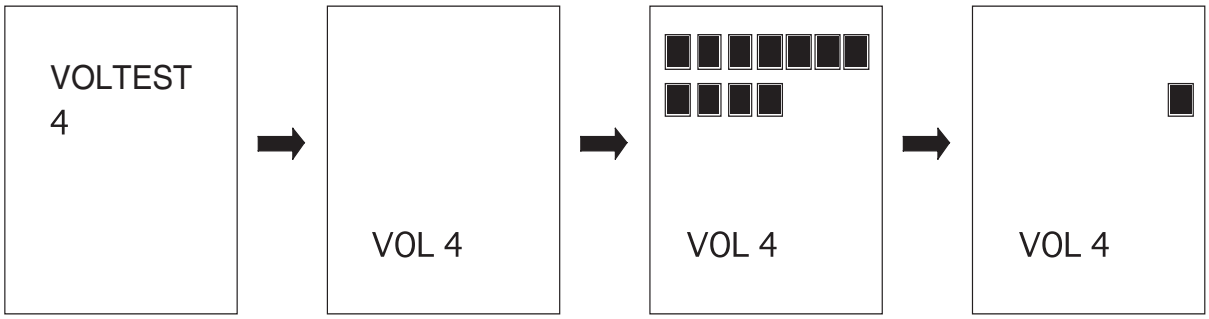

⑩ Mode 10 : Fader Test. " FDRTEST "

• Mode that confirms a value of each CH Fader and Cross Fader.

FADER	Lighting LED	Remark
CH1 FADER	CH1 Level Meter LED	"0" : Lights off "10" : Full Illuminate
CH2 FADER	CH2 Level Meter LED	"0" : Lights off "10" : Full Illuminate
CH3 FADER	CH3 Level Meter LED	"0" : Lights off "10" : Full Illuminate
CH4 FADER	CH4 Level Meter LED	"0" : Lights off "10" : Full Illuminate
CROSS FADER	Master Level Meter L CH LED	"A" : Full Illuminate "B" : Lights off

⑪ Mode 11 : Meter LED Test. " METERTEST "

• Mode that confirms a value of each CH Fader and Cross Fader.
• LED of each CH of Level Meter lights from the bottom one by one when the CUE key is pressed.
The default all Lights off.
It is possible to return to all Lights off when pressing it 15 times
again after it presses it (LED on lights most) and to repeat from the beginning.

7.1.2 REWRITING THE FIRMWARE

Items required

- DJM-800 (This model)
- PC (Windows 98, XP, 2000)
- RS-232C jig (GGF1490)
- Flash Development Tool Kit (ver. 3.3)
- Program Flash File

About these softwares (Flash Development Tool kit and Program Flash Files)
To obtain these software, contact your nearest Pioneer service center.

Connections

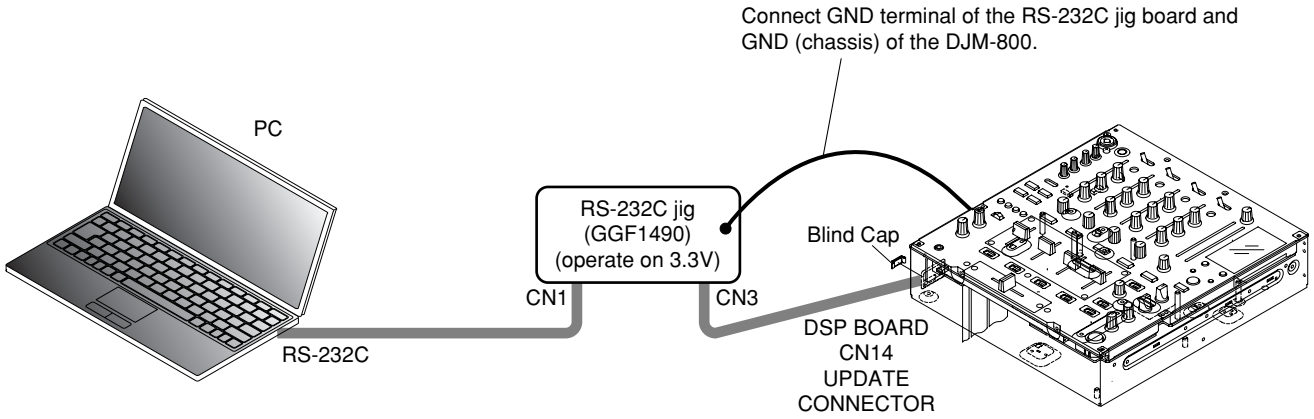

RS-232C jig (GGF1490) Schematic diagram

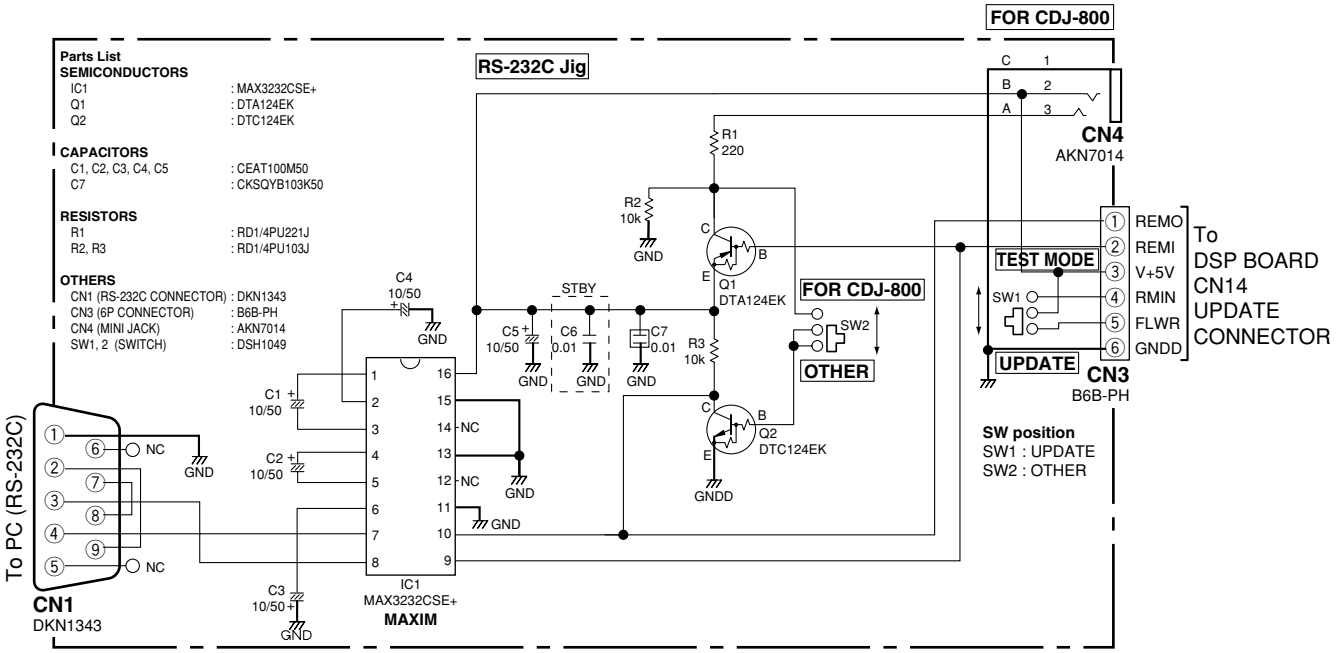

DJM-800

Order of updating

1. Update of the DSP program (if required)
2. Update of DSP data (if required)
3. Update of the microcomputer software

Note: Be sure to update the microcomputer software after updating of the DSP program and /or DSP data is performed.

How to update the microcomputer software

1. For the method for updating the microcomputer software, see "How to use the Flash Development Toolkit." (The updating method is the same as with the EFX-1000.)

Use "djm800_xxxx.mot" as the update file.

Note: If the Flash Development Toolkit is not installed on your PC, see "How to install the Flash Development Toolkit."

How to update the DSP program and DSP data

How to update the DSP program

1. Update the DSP program of the DJM-800, using the "dsp_upp_xxxx.mot" update file, in the same way as with the microcomputer software.
2. After disconnecting the special tool from the DJM-800, turn the DJM-800 on.
3. Once data transmission to and writing on the DSP FLASH starts, wait until the message "UPDATE END" is displayed on the FL display. The LED for the TAP button is unlit while the DJM-800 is starting up, flashes while the DSP program is being updated, then lit after the updating is finished.
4. Updating of the DSP program is completed when "UPDATE END" is displayed on the FL display or the LED for the TAP button lights up.
5. If updating of DSP data is required, go to "How to update DSP data." If it is not required, update the microcomputer software, using the "djm800_xxxx.mot" update file.

How to update DSP data

1. Update DSP data of the DJM-800, using the "dsp_upd_xxxx.mot" update file, in the same way as with the microcomputer software.
2. After disconnecting the special tool from the DJM-800, turn the DJM-800 on.
3. Once data transmission to and writing on the DSP FLASH starts, wait until the message "UPDATE END" is displayed on the FL display. The LED for the TAP button is unlit while the DJM-800 is starting up, flashes while DSP data are being updated, then lit after the updating is finished.
4. Updating of DSP data is completed when "UPDATE END" is displayed on the FL display or the LED for the TAP button lights up.
5. Be sure to update the microcomputer software, using the "djm800_xxxx.mot" update file.

Installing Flash Development Toolkit

1. Installation

1.1 Installation

Double-click on the fdt3_3.exe file icon. The window shown below will open.
Click on Next.

Select International (English), then click on Next.

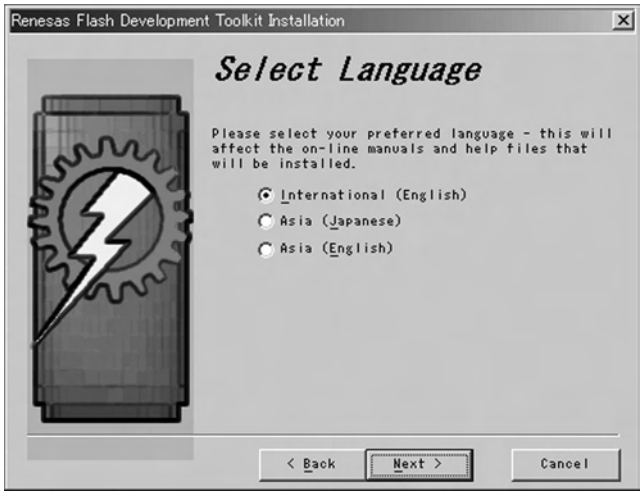

Read the Software License Agreement, and if you accept the conditions, click on Yes.

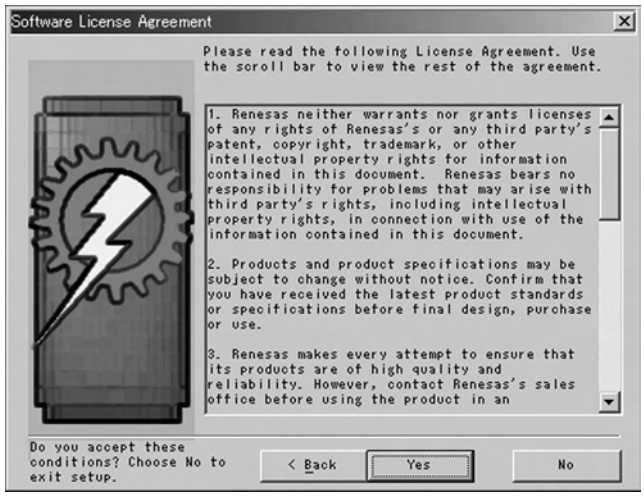

Leave the check boxes as they are and click on Next.

Leave the check boxes as they are and click on Next.

Leave the check boxes as they are and click on Next.

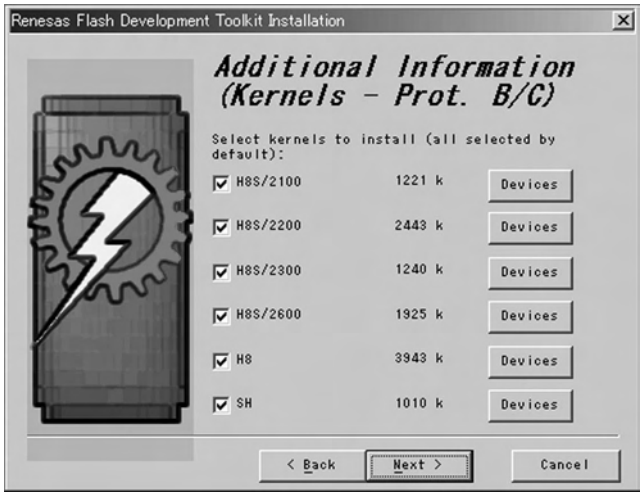

The location where Flash Development Tool Kit 3.3 is to be installed will be displayed.

With the default setting, the program will be installed under Program Files on Drive C. You may change the location. If you do not wish to change the location, skip to Step 1.3.

Leave the check boxes as they are and click on Next.

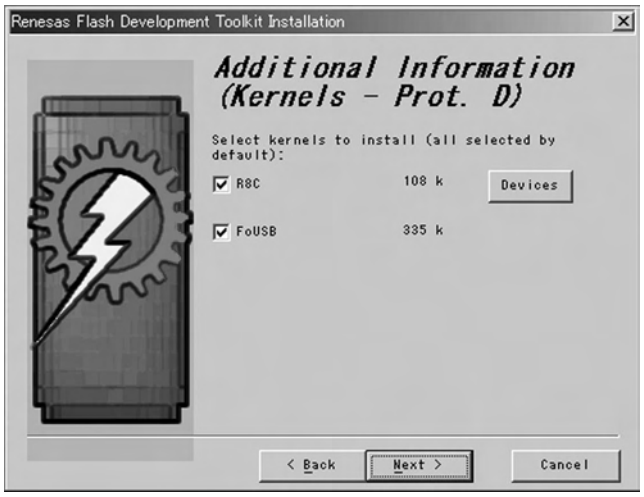

1.2 Changing the location for installation

Click on Browse....

The window shown below will open.

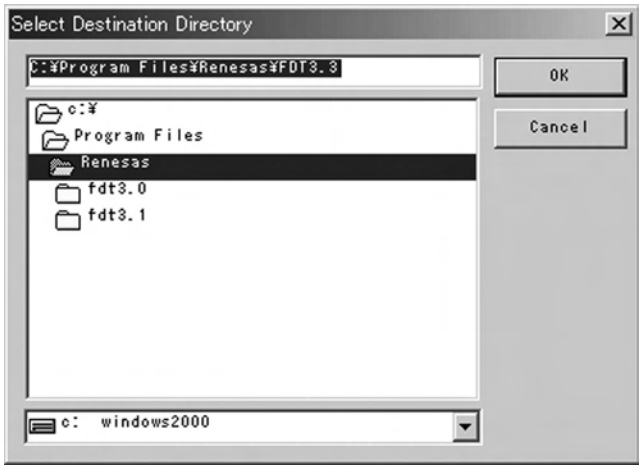

Method ①

You can directly enter the location for installation in the box enclosed in the frame in the illustration below:

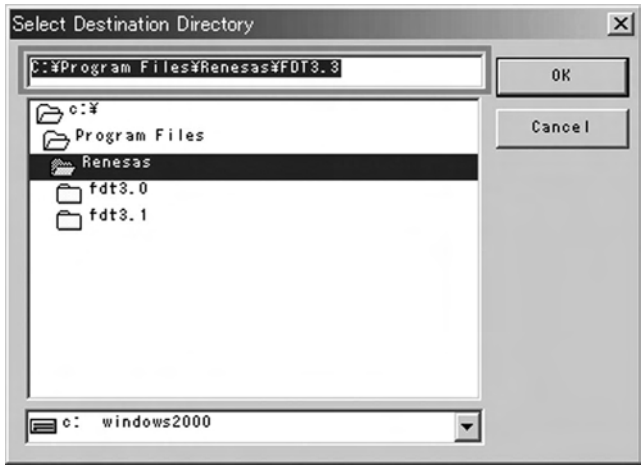

Method ②

You can select the drive in the box enclosed in the lower frame and the folder in the box enclosed in the upper frame in the illustration below:

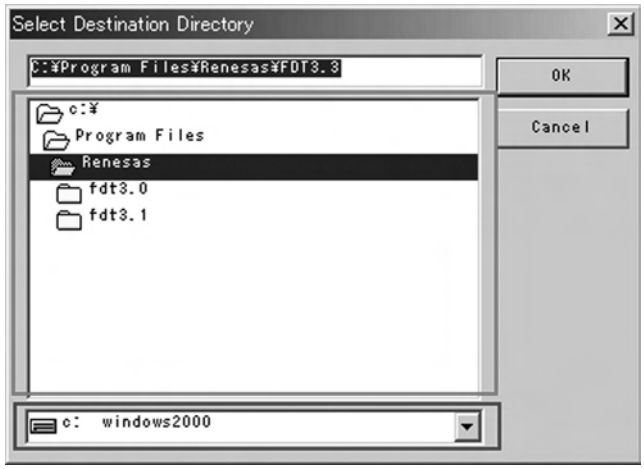

After designating the location for installation, click on OK. Then the Select Destination Directory window will close.

1.3 The location where the backup directory will be created is displayed.

If you wish to change the location, you can change it in the same manner as in Step 1.2.
Normally, leave the location setting as it is and click on Next.

Click on Install. Installation starts.

During installation, the display shown below indicates the progress of installation.

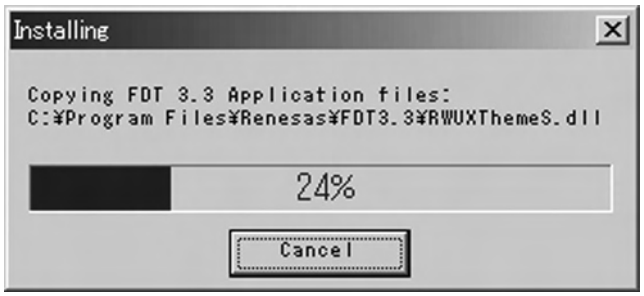

1.4 You can register the program on the Start menu.

Normally, leave the setting as it is and click on Next.

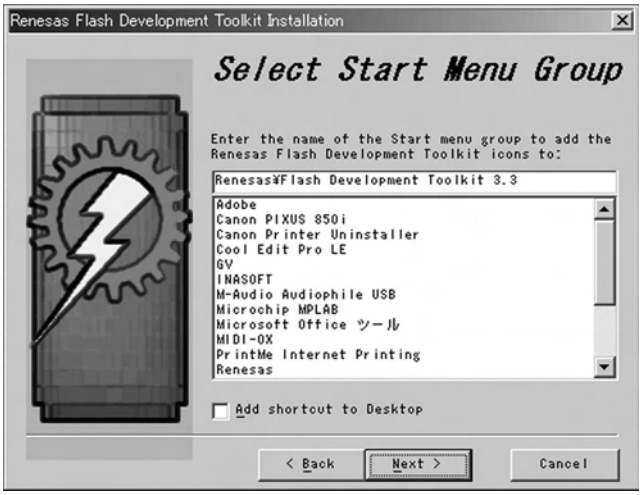

When installation is completed, the message shown below will be displayed. Click on Finish. Installation is completed.

2. Initial settings

Click on Start, and select Program, Renesas, Flash Development Tool Kit 3.3, then Flash Development Tool Kit 3.3 Basic. The program will start up, and the window shown below will open.

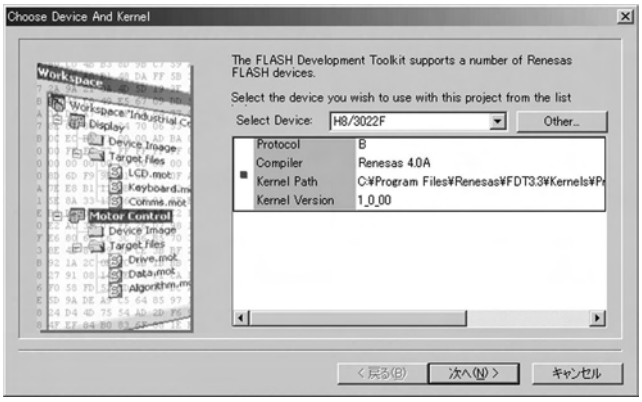

2.1 Selection of the device and kernel

Select H8S/2377F in the Select Device: box then click on Next.

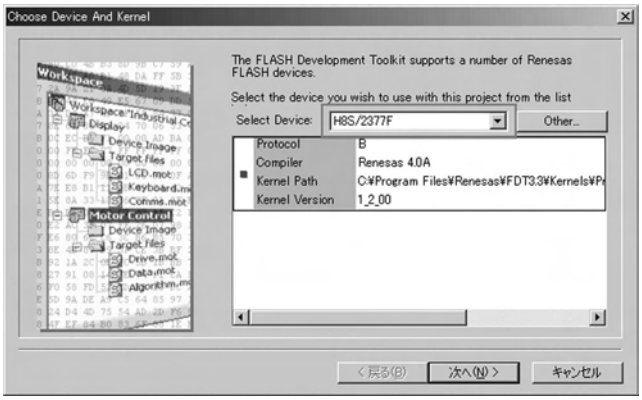

2.2 Selection of the port

Select the port to be used in the Select port: box then click on Next.

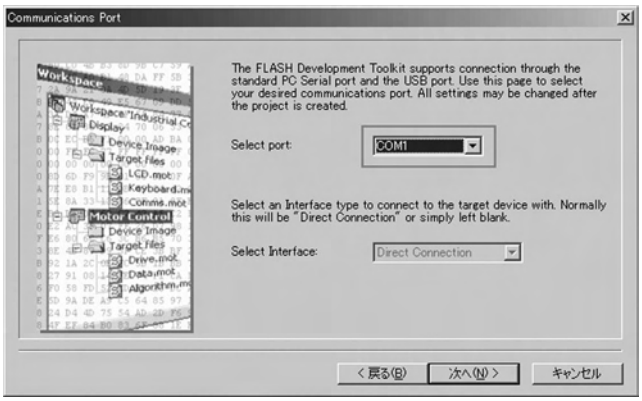

2.3 Device setting

Enter 24.5760 in the Enter the CPU crystal frequency for the selected device: box. Leave other settings as they are. Click on Next.

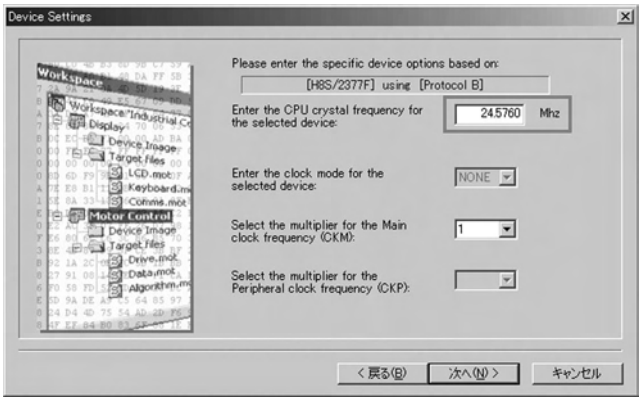

2.4 Connection type

Click on the Use Default check box to remove the check mark for this option. Select 19200 in the Recommended Speeds: box.

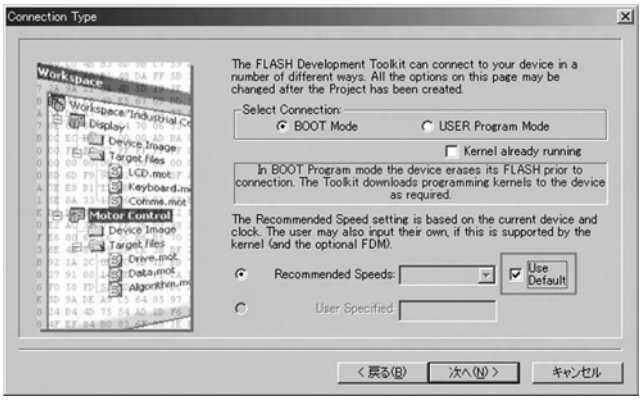

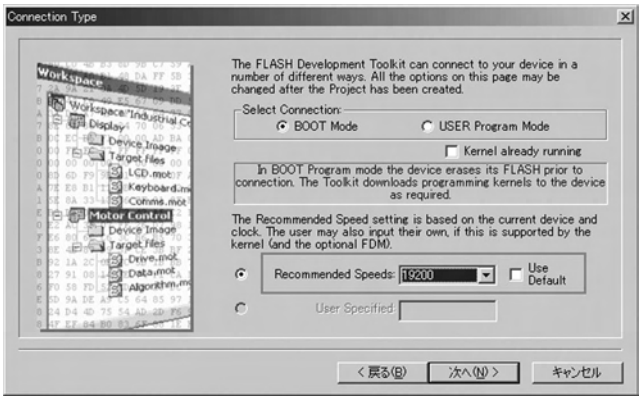

2.5 Registering the initial settings

Click on Finish to register the initial settings.

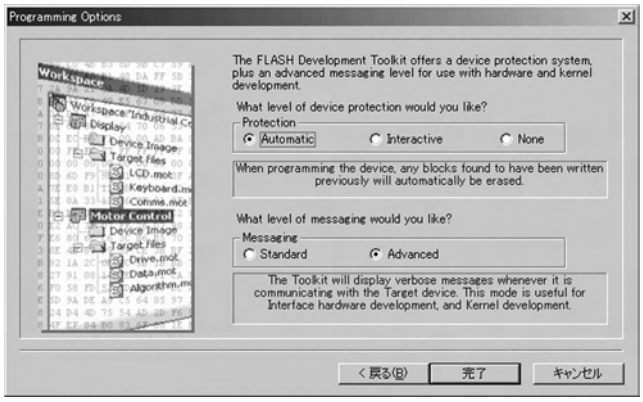

The program starts.

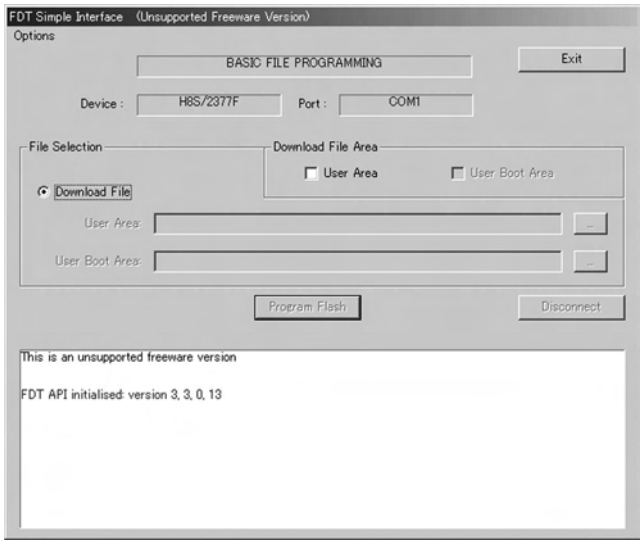

Click on Options then click to place a check mark in the Request Checksum check box.

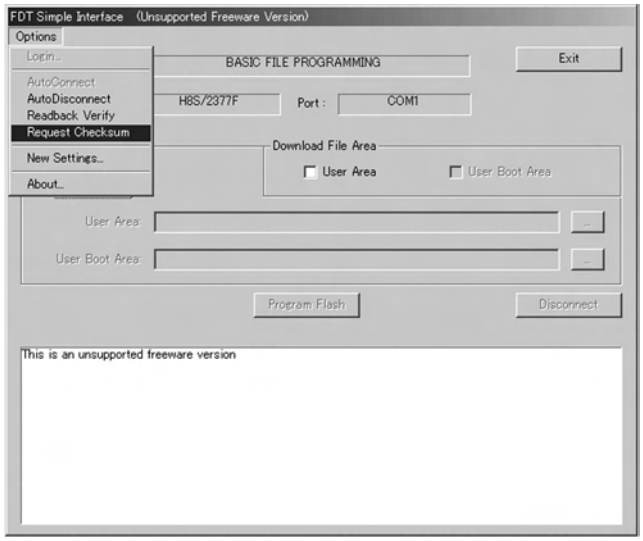

Now installation and registration of the initial settings have been completed.

3. How to use

Click on the User Area check box in Download File Area to place a check mark in the check box.

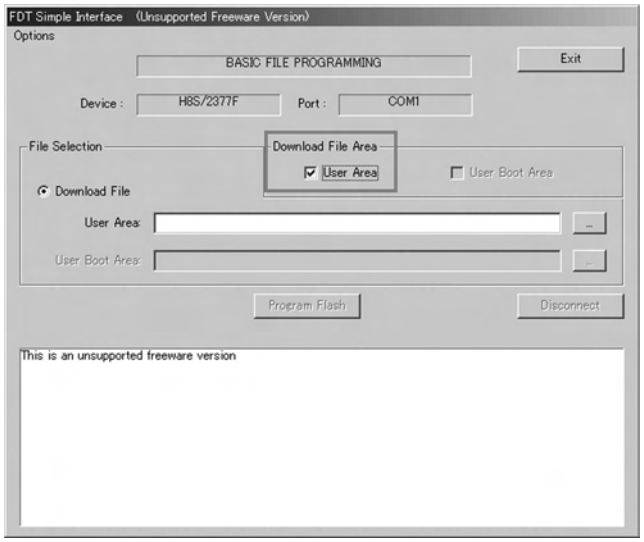

Designate the file in the User Area: box in File Selection.

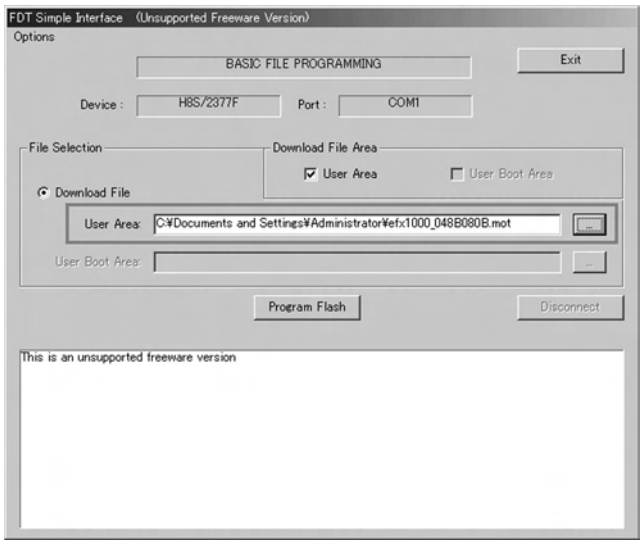

Click on Program Flash.

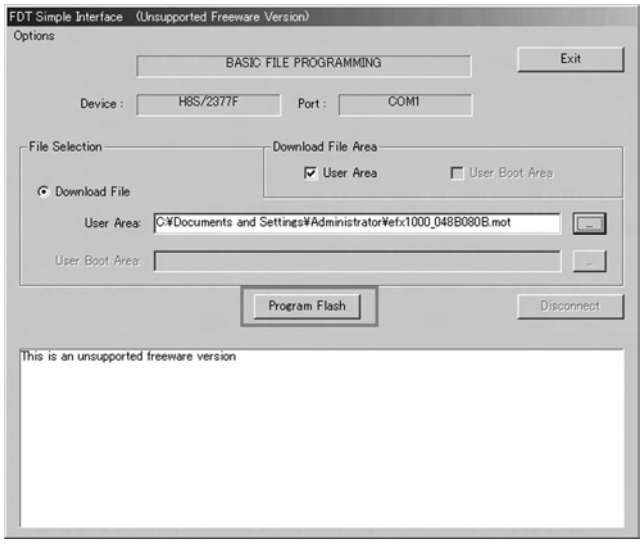

Downloading will start.

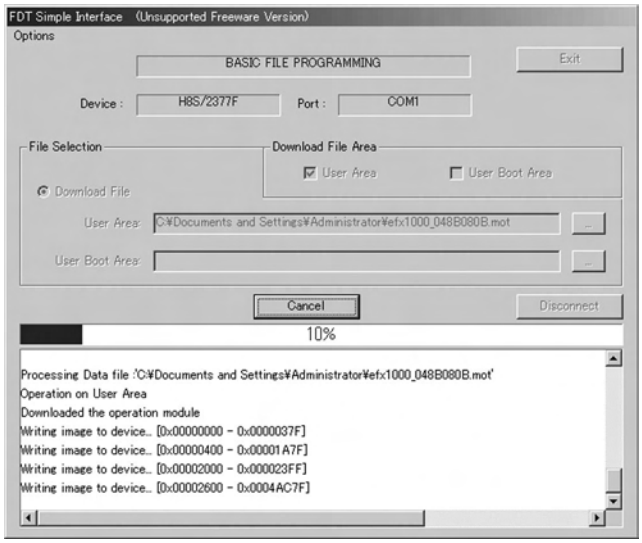

When downloading is finished, click on Disconnect. After confirming that "Disconnected" is displayed in the window, turn off the DJM-800(efx1000).

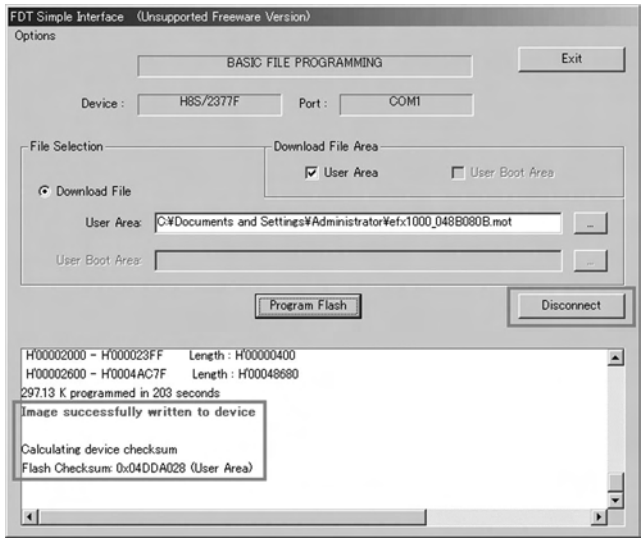

If you wish to change the device or port settings, select Options then New Settings.
Change settings, referring to "2. Initial settings."

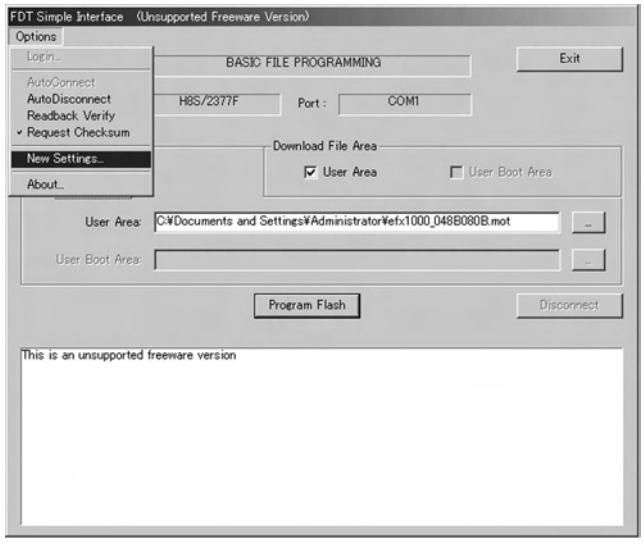

Instruction Manual for Flash Development Tool Kit

Preparation: Connect the DJM-800(efx1000) and your PC, using the RS-232C jig.
Note: After the above connection is made, when the DJM-800 is turned on, it will enter Writing mode. In Writing mode, all the LEDs remain unlit. However, when the DJM-800(efx1000) is turned on or off, it clicks.

• How to confirm the port to be used on your PC

Double-click on System in Control Panel, or right-click on My Computer and select System Properties. Click on the Hardware tab and select Device Manager. You can confirm the port at Port (COM and LPT).

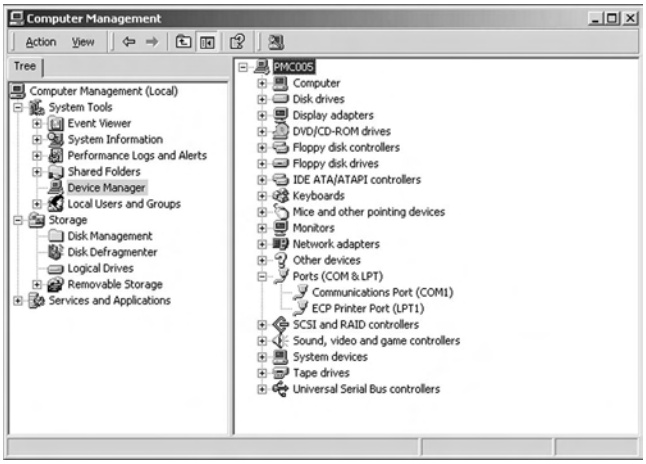

Set the baud rate of the port to be used to 19200.
Example: COM1
Double-click on the port name to be used.

Click on the Port Setting tab and select 19200 in the bps box.

Click on OK. The setting is completed.

1. Starting the program

Click on Start, and select Program, Renesas, Flash Development Tool Kit 3.1, then Flash Development Tool Kit 3.1.

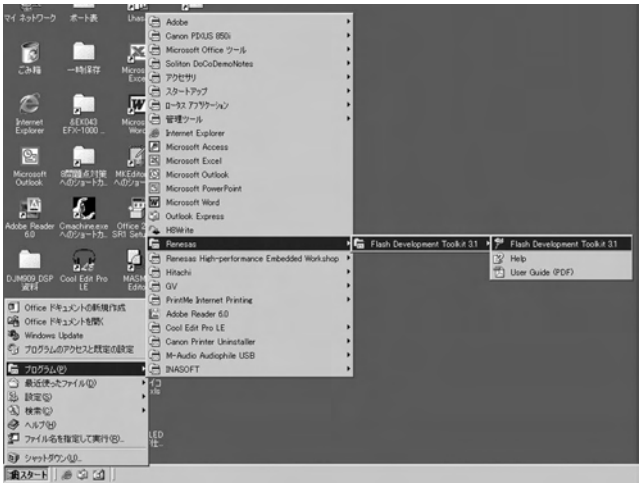

When the program starts, the following message will be displayed.
Click on OK.

Then the window shown below will be displayed.
Select Open a recent project workspace then click on OK.

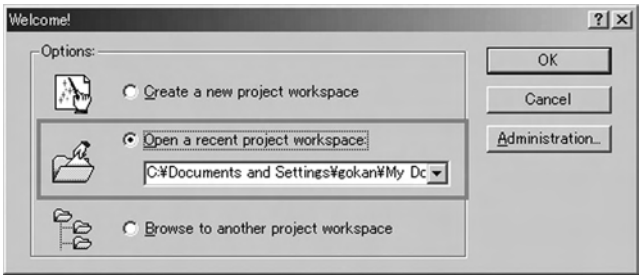

The workspace will open.

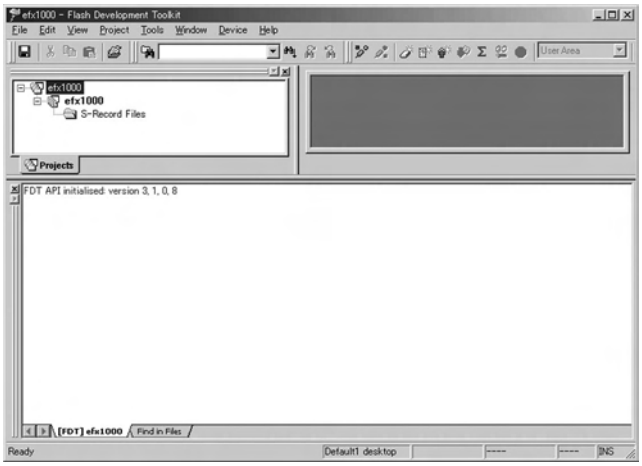

To change the port where the RS-232C jig is to be connected, modify the setting in the following way (if the port does not need to be changed, skip to "2. Selecting the .mot file to be downloaded into the DJM-800(efx1000)"):
Click on the Configure Flash Project icon.

The Flash Properties window will be displayed.

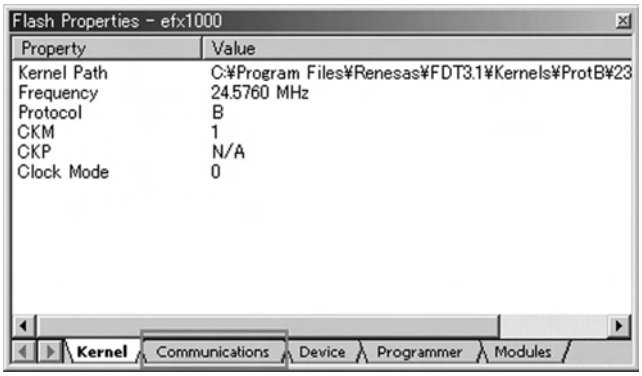

Click on the Communications tab. The screen shown below will be displayed. Click on Port.

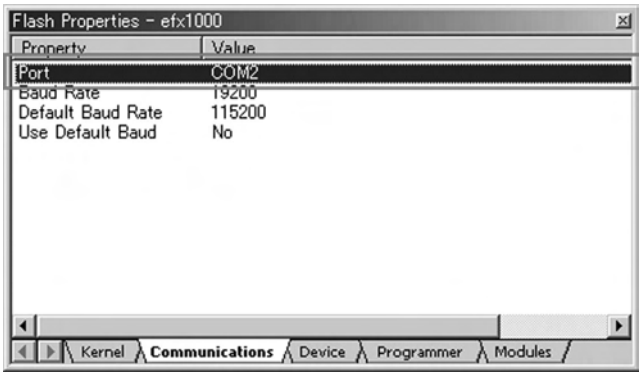

The window shown below will open. Designate the port then click on Finish. The Communications Port window will then close.

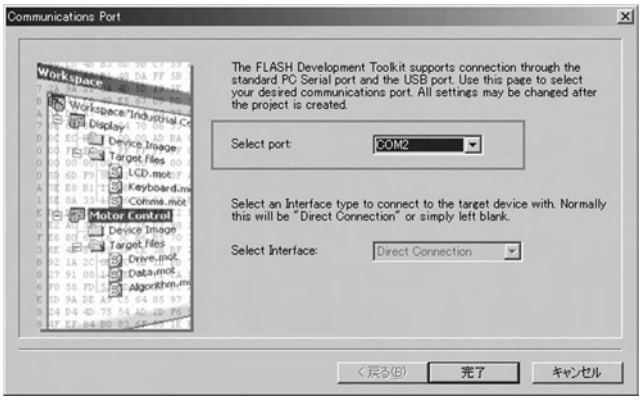

2. Selecting the .mot file to be downloaded into the DJM-800(efx1000)

Right-click on the project name and select Add Files....

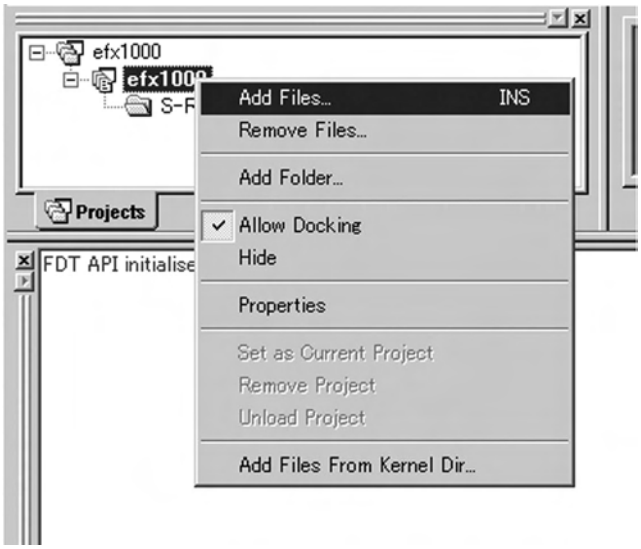

Select a .mot file to be downloaded from the folder then click on Add.

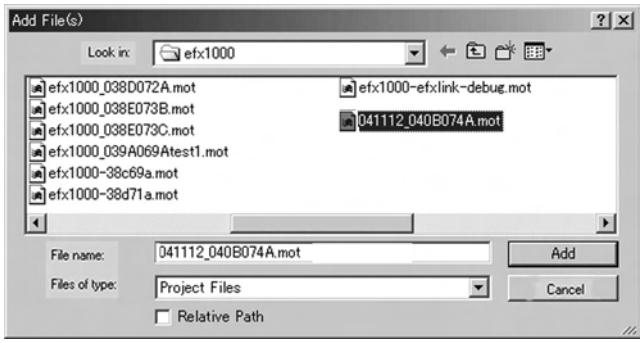

The .mot file to be downloaded will be added.

3. Downloading the .mot file into the DJM-800

Turn on the DJM-800(efx1000). Click on the Connect icon to activate connection of the DJM-800(efx1000) with the PC.

If the display shown below appears, the connection has been successfully made.

Right-click on the .mot file and select Download File.

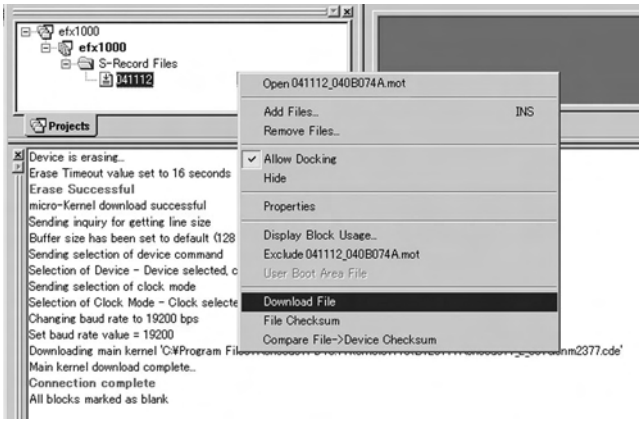

Downloading will start.

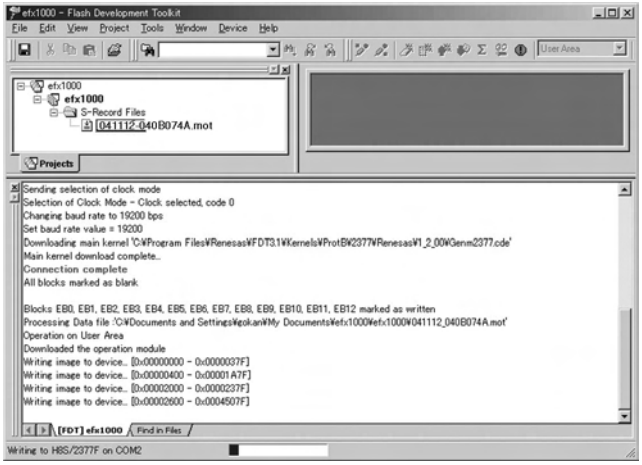

When the message "Image successfully written to device" is displayed, downloading has been finished.

- **Confirming if downloading has been successfully completed**

Right-click on the .mot file, and select Compare File → Device Checksum.

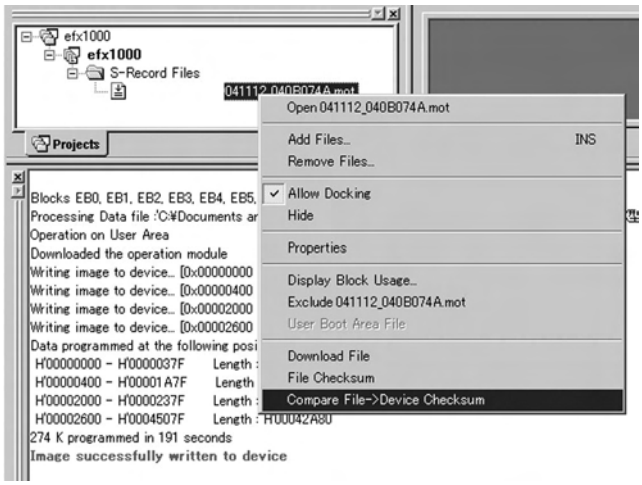

Check the values enclosed in the frames in the illustration below. If these two values are the same, downloading has been successfully completed.

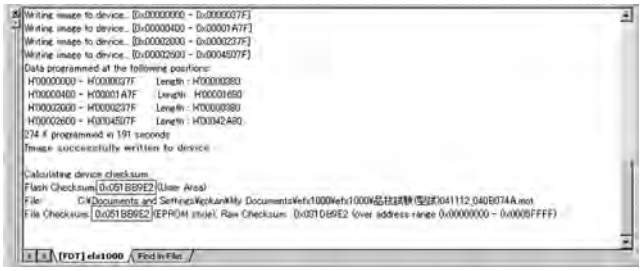

4. Exiting from the program

Click on the Disconnect icon to deactivate connection of the DJM-800(efx1000) with the PC.

Turn off the DJM-800(efx1000), and unplug the cables of the RS-232C jig.

7.2 POWER ON SEQUENCE

● **Power ON Sequence**

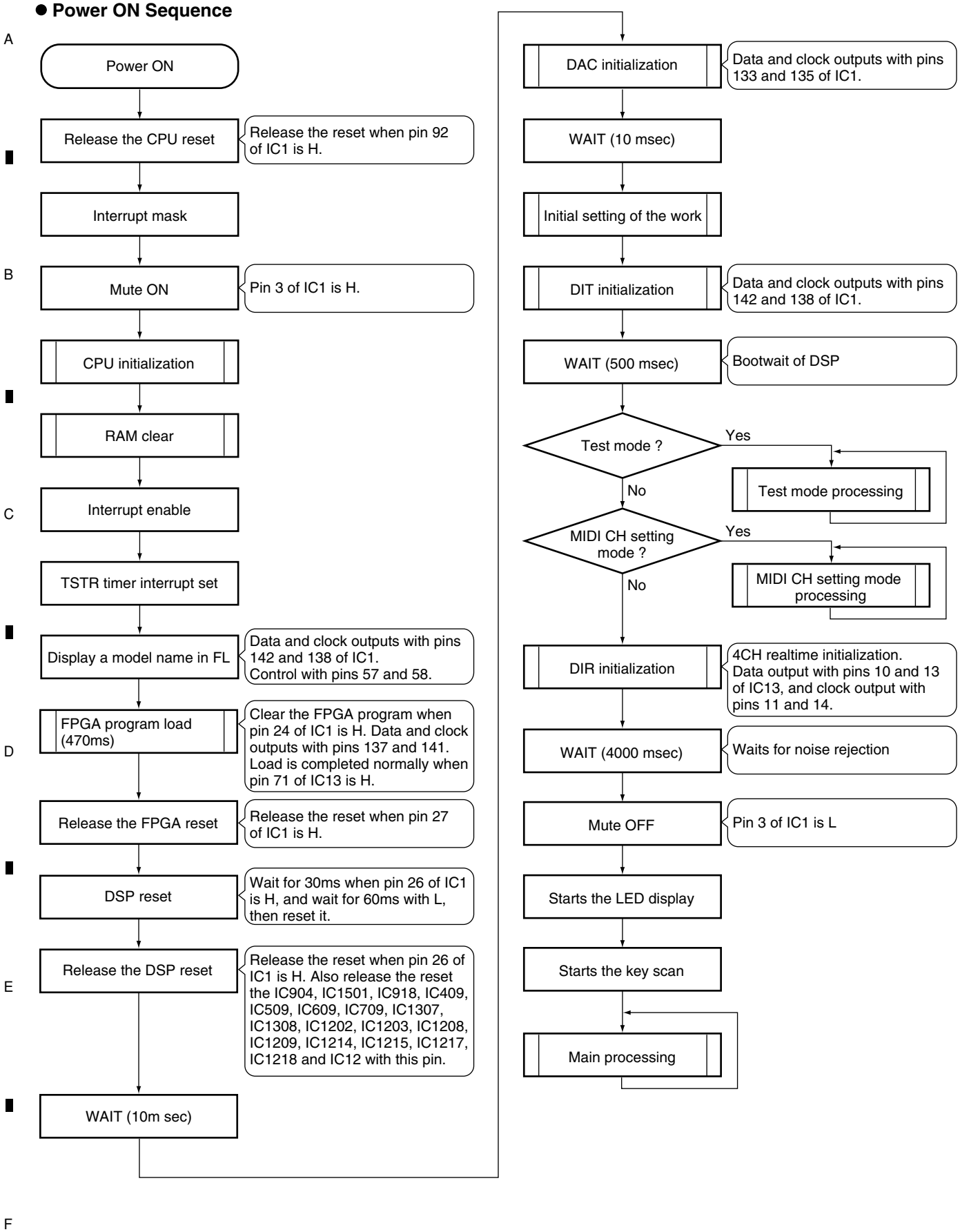

7.3 DISASSEMBLY

Note: Even if the unit shown in the photos and illustrations in this manual may differ from your product, the procedures described here are common.

Knobs and Volumes Location

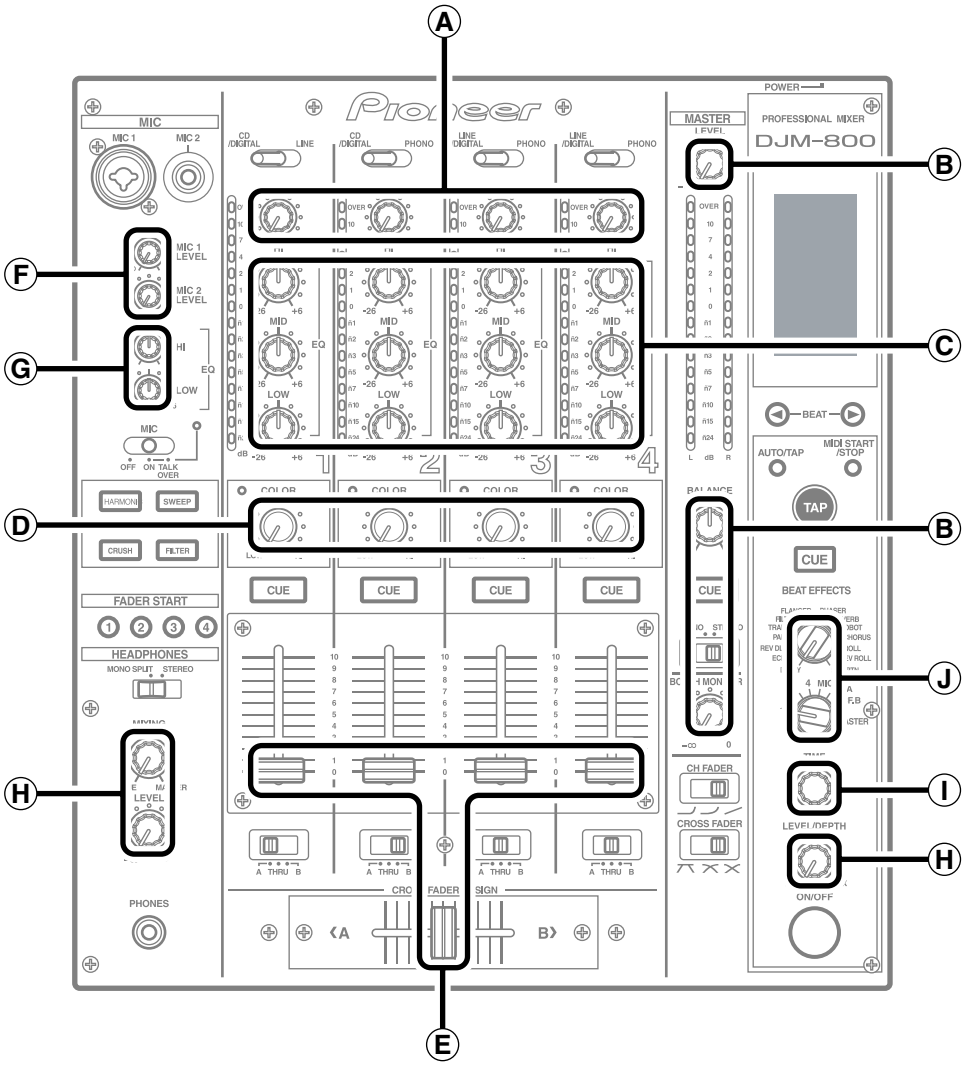

A Rotary SW knob S (C) (DAA1204) ×4

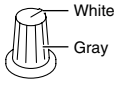

D Rotary SW knob (HM) (DAA1197) ×4

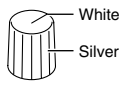

G Rotary SW knob S (A) (DAA1177) ×2

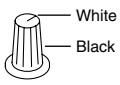

J Select knob (DAA1179) ×2

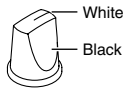

B Rotary SW knob (MA) (DAA1198) ×3

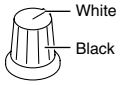

E Slider knob (L2) (DAC2371) ×5

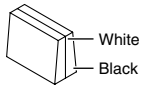

H Rotary SW knob (A) (DAA1175) ×3

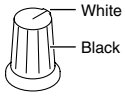

C Rotary SW knob (B) (DAA1176) ×12

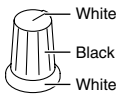

F Rotary SW knob S (B) (DAA1178) ×2

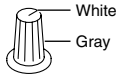

I Rotary SW knob (C) (DAA1180) ×1

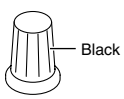

Disassembly

1 Cross Fader Section

① Remove the slider knob (L2).
② Remove the two screws.
③ Remove the CRSFD Assy with CRF panel.

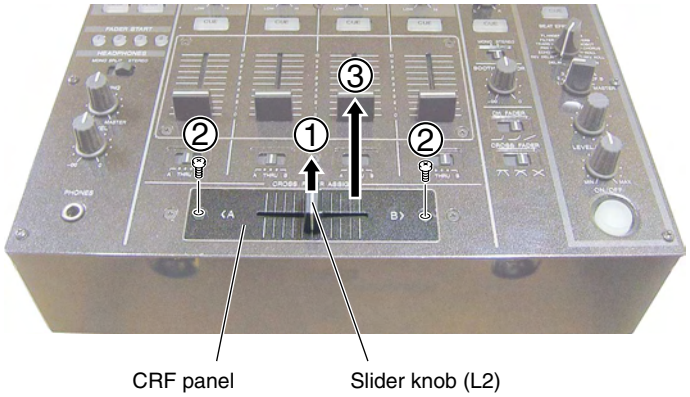

④ Disconnect the connector.

Exchange

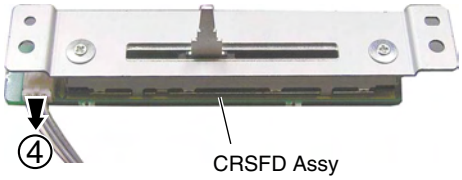

2 CH Fader Section

① Remove the four slider knob (L2)s.
② Remove the four screws.
③ Remove the CHF panel.

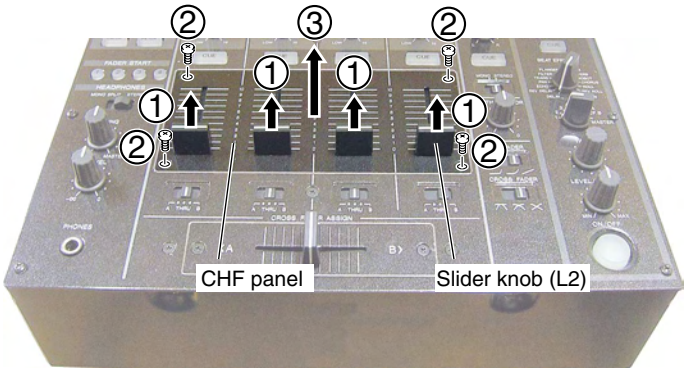

④ Disconnect the four connectors.
⑤ Remove the eight screws.

Exchange

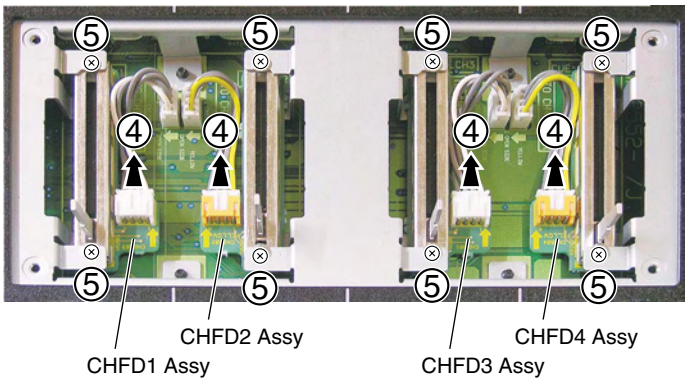

3 Control Panel Section

① Remove the four Rotary SW knob S (HM)s.
② Remove the two screws.
③ Remove the two screws.
④ Remove the six screws.
⑤ Remove the control panel section.

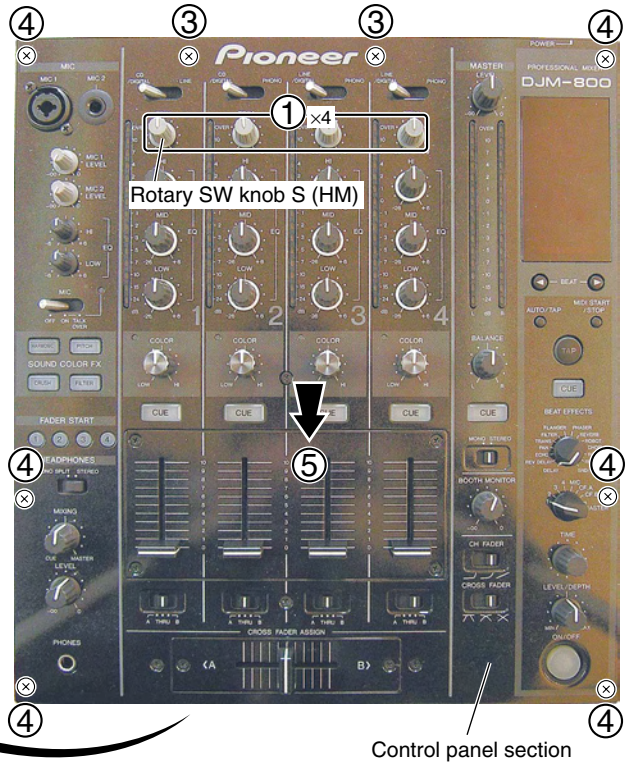

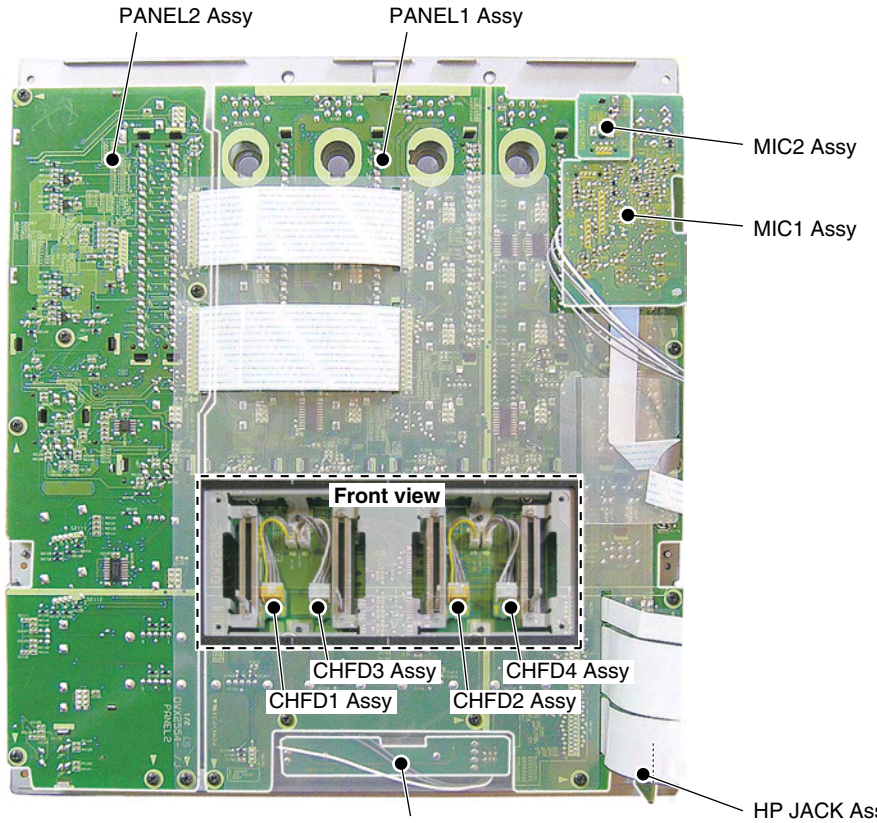

4 Bracket TRIM and Shield Case

● Bracket TRIM

① Remove the four extension shafts.
② Remove the four nuts M7.
③ Remove the bracket TRIM.

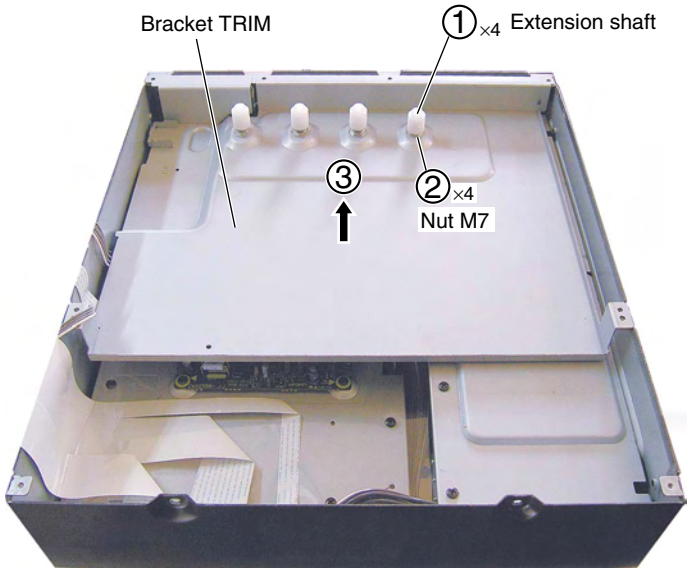

● Shield Case AC and Shield Case

① Remove the three screws.
② Remove the shield case AC.
③ Remove the two screws.
④ Remove the three screws.
⑤ Remove the shield case.

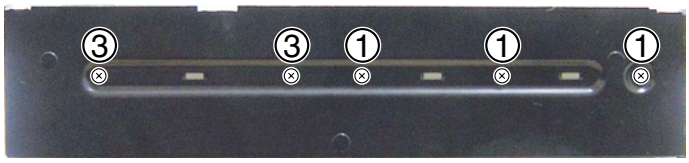

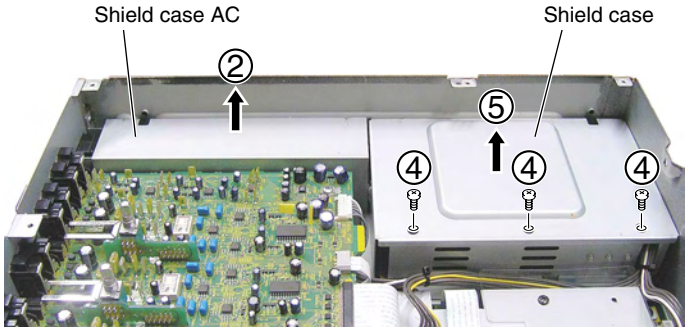

5 INPUT Assy and Shield Case DSP

● **INPUT Assy**

① Remove the six short pin plugs.
② Remove the five screws.

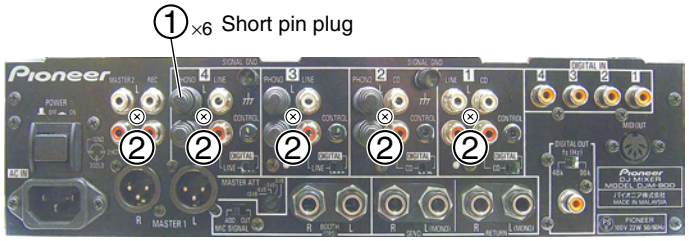

③ Remove the two screws.
④ Disconnect cables, as required.
⑤ Remove the INPUT Assy.

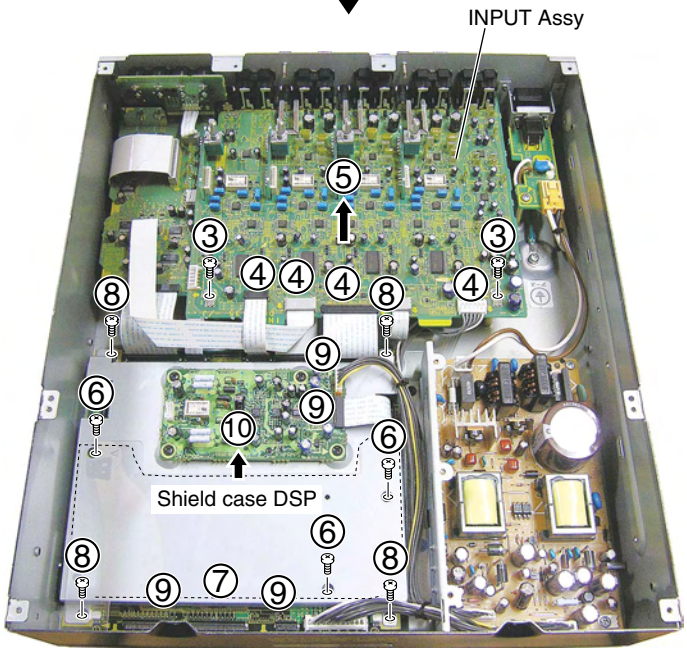

● **Shield Case DSP**

⑥ Remove the three screws.
⑦ Remove the styling sheet.
⑧ Remove the four screws.
⑨ Disconnect cables, as required.
⑩ Remove the shield case DSP.

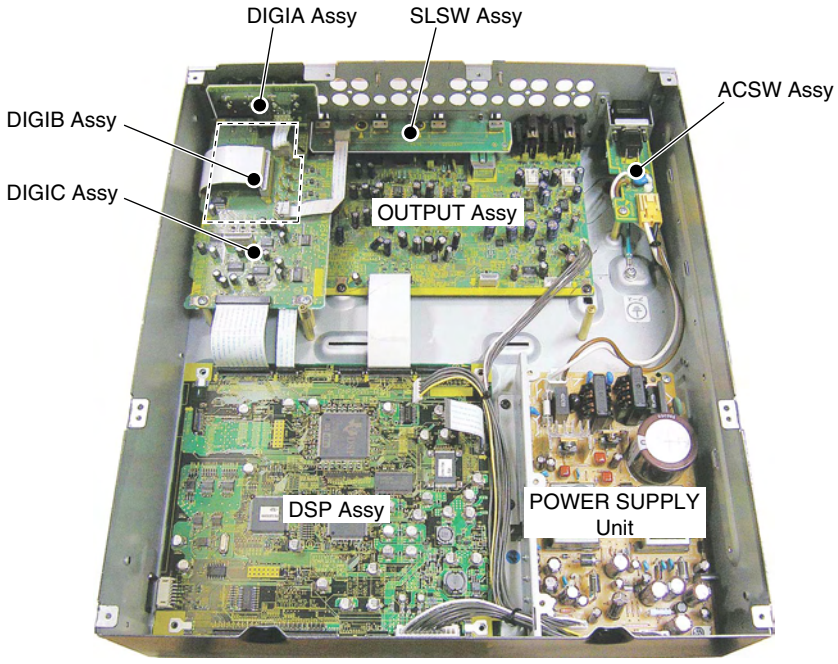

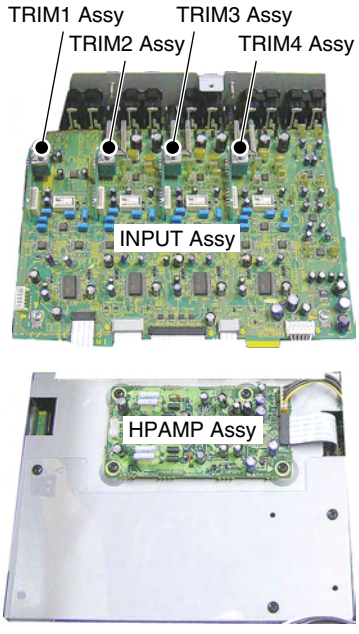

7.4 IC INFORMATION

■ DYW1757(HD64F2377) : (DSP ASSY : IC 1)

• Microcomputer

● Pin Function

No.	Mark	Pin Name	I/O	Pin Function
1	MD2	MD2	I	Mode pin 2 NOR: Mode 4 At rewriting: Mode 3
2	VSS	VSS	I	GND
3	P80	MUTE	O	MUTE signal 0: Mute ON, 1: Mute OFF
4	VCC	VCC	I	Power supply
5	A0	A0	O	Address bus output A0
6	A1	A1	O	Address bus output A1
7	A2	A2	O	Address bus output A2
8	A3	A3	O	Address bus output A3
9	A4	A4	O	Address bus output A4
10	VSS	VSS	I	GND
11	A5	A5	O	Address bus output A5
12	A6	A6	O	Address bus output A6
13	A7	A7	O	Address bus output A7
14	A8	A8	O	Address bus output A8
15	A9	A9	O	Address bus output A9
16	A10	A10	O	Address bus output A10
17	A11	A11	O	Address bus output A11
18	VSS	VSS	I	GND
19	PB4	DIGIANA1	I	CH1 Digital <-> Analog SW
20	PB5	DIGIANA2	I	CH2 Digital <-> Analog SW H : Digital, L : Analog
21	PB6	DIGIANA3	I	CH3 Digital <-> Analog SW H : Digital, L : Analog
22	PB7	DIGIANA4	I	CH4 Digital <-> Analog SW H : Digital, L : Analog
23	PA0	XDONE	I	FPGA program ready H : Digital, L : Analog
24	PA1	XPGM	O	FPGA program clear
25	VSS	VSS	I	GND
26	PA2	DSP_RESET	O	RESET OUT H : Release of RESET, L : RESET
27	PA3	FPGA_RESET	O	RESET OUT H : Release of RESET, L : RESET
28	PA4	DIGIANA_SEL1	O	CH1 input select 0: Analog side 1, 1: Digital side 1
29	PA5	DIGIANA_SEL2	O	CH2 input select 0: Analog side 2, 1: Digital side 2
30	PA6	DIGIANA_SEL3	O	CH3 input select 0: Analog side 3, 1: Digital side 3
31	PA7	DIGIANA_SEL4	O	CH4 input select 0: Analog side 4, 1: Digital side 4
32	EMLE	EMLE	I	Emulator enable pin Set to L level at normal operation. GND by 1k.
33	TXD3	MIDI_TXD	O	MIDI TXD send only
34	P82	SIO_SEL0	O	SIO port select 0 FPGA, DAC, selection (at power on) H : FPGA, L : DAC
35	PH0	SIO_SEL1	O	SIO port select 1 DIT selection L : DIT
36	PH1	SIO_SEL2	O	SIO port select 2 EEPROM selection
37	PH2	SIO_SEL3	O	FPGA_SIO0 DIR (CH1,CH3) selection L : DIR
38	PH3	SIO_SEL4	O	FPGA_SIO1 DIR (CH2,CH4) selection L : DIR
39	WDTOVFn	EMU_03	O	Overflow output of the watch dock timer for H8JTAG emulator
40	NMI	NMI	I	Nonmaskable interrupt L level fixing
41	VCC	VCC	I	Power supply
42	P10	SW_MAT0	I	KEY matrix b0 input
43	P11	SW_MAT1	I	KEY matrix b1 input
44	P12	SW_MAT2	I	KEY matrix b2 input
45	P13	SW_MAT3	I	KEY matrix b3 input
46	P14	SW_MAT4	I	KEY matrix b4 input
47	P15	SW_MAT5	I	KEY matrix b5 input
48	P16	SW_MAT6	I	KEY matrix b6 input

No.	Mark	Pin Name	I/O	Pin Function
49	P17	SW_MAT7	I	KEY matrix b7 input
50	VSS	VSS	I	GND
51	P20	SW_SCAN0	O	KEY SCAN ADDRESS
52	P21	SW_SCAN1	O	KEY SCAN ADDRESS
53	P22	SW_SCAN2	O	KEY SCAN ADDRESS
54	TXD4	SIO4_TXD	O	Vacant, CH1 line select, H : LINE, L : CD/DIGITAL
55	RXD4	INPUT_SEL1	I	
56	P25	MIC_OUT	I	BOOTH MONITOR MIC CUT/ADD H : CUT, L : ADD
57	P26	FL_LAT	O	For FL control
58	P27	FL_BK	O	For FL control
59	P83	INPUT_SEL2	O	H : PHONO, L : CD/DIGITAL
60	P84	INPUT_SEL3	O	H : PHONO, L : LINE/DIGITAL
61	P85	INPUT_SEL4	O	H : PHONO, L : LINE/DIGITAL
62	DCTL	DCTL	I	L fixing
63	D0	D0	I/O	Data bus D0
64	D1	D1	I/O	Data bus D1
65	D2	D2	I/O	Data bus D2
66	D3	D3	I/O	Data bus D3
67	D4	D4	I/O	Data bus D4
68	D5	D5	I/O	Data bus D5
69	D6	D6	I/O	Data bus D6
70	VSS	VSS	I	GND
71	D7	D7	I/O	Data bus D7
72	VCC	VCC	I	Power supply
73	D8	D8	I/O	Data bus D8
74	D9	D9	I/O	Data bus D9
75	D10	D10	I/O	Data bus D10
76	D11	D11	I/O	Data bus D11
77	D12	D12	I/O	Data bus D12
78	D13	D13	I/O	Data bus D13
79	D14	D14	I/O	Data bus D14
80	D15	D15	I/O	Data bus D15
81	P60	LED_DIG0	O	LED display selectio A_0
82	P61	LED_DIG1	O	LED display selectio A_1
83	P62	LED_DIG2	O	LED display selectio A_2
84	WAIT	WAIT	I	For bus control FPGA request
85	PF1	EFCT_PARA10	I	For encoder input detection
86	PF2	EFCT_PARA11	I	For encoder input detection
87	PF3	LWRn	O	For bus control Use for LED control.
88	PF4	HWRn	O	For bus control FPGA
89	PF5	RDn	O	For bus control FPGA
90	PF6	Asn	O	For bus control FPGA
91	PLLVCC	PLLVCC	I	Power supply for internal PLL oscillator VCC
92	RESn	RESn	I	Reset input
93	PLLVSS	PLLVSS	I	GND for internal PLL oscillator
94	PF7		O	TEST Pin
95	VSS	VSS	I	GND
96	XTAL	XTAL	I	Crystal connection pin

No.	Mark	Pin Name	I/O	Pin Function
97	EXTAL	EXTAL	I	Crystal connection/external clock input
98	VCC	VCC	I	Power supply
99	VCC	VCC	I	Power supply
100	NC1	NC1	-	Non connection (open)
101	NC2	NC2	-	Non connection (open)
102	VSS	VSS	I	GND
103	STBYn		I	PULL UP
104	P63	VR_A01	O	A/D input select
105	P64	VR_A02	O	A/D input select
106	P65	VR_A03	O	A/D input select
107	CS0n	CS0	O	Expansion I/O: DP_RAM (FPGA)
108	CS1n	CS1	O	Expansion I/O: LED display DATA3
109	CS2n	CS2	O	Expansion I/O: LED display DATA1
110	CS3n	CS3	O	Expansion I/O: LED display DATA2
111	AVCC	AVCC	I	Power supply for A/D
112	VREF	VREF	I	Reference voltage input for A/D
113	AN0	VR0	I	VRin0 (MIC HIGH, LOW/H.P.MIXING, Volume) input
114	AN1	VR1	I	VRin1 (CH1: HIGH, MID, LOW, EFFECT) input
115	AN2	VR2	I	VRin2 (CH2: HIGH, MID, LOW, EFFECT) input
116	AN3	VR3	I	VRin3 (CH3: HIGH, MID, LOW, EFFECT) input
117	AN4	VR4	I	VRin4 (CH4: HIGH, MID, LOW, EFFECT) input
118	AN5	VR5	I	VRin5 (MASTER: LEVEL, BALANCE, /Booth LEVEL/effect DEPTH) input
119	AN6	VR6	I	VRin6 (TRIM 1-4) input
120	AN7	CH1_FADER	I	CH1 fader input
121	AN8	CH2_FADER	I	CH2 fader input
122	AN9	CH3_FADER	I	CH3 fader input
123	AN10	CH4_FADER	I	CH4 fader input
124	AN11	CRS_FADER	I	Cross fader input
125	AN12	TAP	I	TAP input
126	AN13	BEAT_EFON	I	Beat Effect SW
127	AN14	4896_SEL	I	48K/96K switching input
128	AN15	RET_IN	I	For confirming connection of the return cable
129	AVSS	AVSS	I	GND for A/D
130	PG4	EMU_01	I	For H8JTAG emulator
131	PG5	EMU_05	I	For H8JTAG emulator
132	PG6	EMU_06	I	For H8JTAG emulator
133	TXD2	SIO2_TXD	O	For SIO2gloup (DAC1-4) DAC_data
134	RXD2	SIO2_RXD	I	For SIO2gloup (DAC1-4) DAC_data
135	SCK2	SIO2_SCK	O	For SIO2gloup (DAC1-4) DAC_data
136	P53	EMU_02	I	For H8JTAG emulator
137	SCK1	SIO1_CLK	O	For SIO1gloup USB, FPGA, EEPROM, DIT
138	SCK0	FL_CLK	O	For FL display
139	RXD1	SIO1_RXD	I	For rewriting RXD & SIO1gloup FPGA, DIT
140	P32	P32	O	Vacant
141	TXD1	SIO1_TXD	O	For rewriting TXD & SIO1gloup FPGA, DIT
142	TXD0	FL_TXD	O	For FL display
143	MD0	MD0	I	Mode pin 0 NOR: Mode 4 At rewriting: Mode 3
144	MD1	MD1	I	Mode pin 1 NOR: Mode 4 At rewriting: Mode 3

■ D610A003BPYPA225 (DSP ASSY : IC 22)

• DSP Microcomputer

● Pin Function

No.	Pin Name	I/O	IPD/IPU	Pin Function
1	GP0[4](EXT_INT4)/AMUTEIN1	O	IPU	DSP state display LED After main operation start, light
2	GP0[6](EXT_INT6)	O	IPU	TEST pin for DMA
3	CVDD	–	–	Power supply
4	VSS	–	–	GND
5	DVDD	–	–	Power supply
6	GP0[5](EXT_INT5)/AMUTEIN0	O	IPU	TEST pin for DMA
7	GP0[7](EXT_INT7)	O	IPU	TEST pin for DMA
8	CLKS1/SCL1	–	–	McBSP1 GND
9	DVDD	–	–	Power supply
10	VSS	–	–	GND
11	CVDD	–	–	Power supply
12	TINP1/AHCLKX0	I	IPD	McASP0 McASP High frequency transmit bit clock
13	TOUT1/AXR0[4]/AXR1[11]	O	IPD	McASP0 H.P. Out
14	CVDD	–	–	Power supply
15	VSS	–	–	GND
16	CLKX0/ACLKX0	I	IPD	McASP0 McASP transmit bit clock
17	TINP0/AXR0[3]/AXR1[12]	O	IPD	McASP0 Send Out
18	TOUT0/AXR0[2]/AXR1[13]	O	IPD	McASP0 Rec Out
19	CLKR0/ACLKR0	I	IPD	McASP0 McASP receive bit clock
20	DX0/AXR0[1]/AXR1[14]	O	IPU	McASP0 Booth Out
21	FSX0/AFSX0	I	IPD	McASP0 McASP transmit LRCLK (FS)
22	CVDD	–	–	Power supply
23	VSS	–	–	GND
24	FSR0/AFSR0	I	IPD	McASP0 McASP receive LRCLK (FS)
25	DVDD	–	–	Power supply
26	VSS	–	–	GND
27	DR0/AXR0[0]/AXR1[15]	O	IPU	McASP0 Master Out & Digital Out
28	CLKS0/AHCLKR0	I	IPD	McASP0 McASP High frequency receive bit clock
29	CVDD	–	–	Power supply
30	VSS	–	–	GND
31	FSX1	–	IPD	McBSP1 Vacant
32	DX1/AXR0[5]/AXR1[10]	–	IPU	McBSP1 Vacant
33	CLKX1/AMUTE0	–	IPD	McBSP1 Vacant
34	VSS	–	–	GND
35	CVDD	–	–	Power supply
36	CLKR1/AXR0[6]/AXR1[9]	–	IPD	McBSP1 Vacant
37	DR1/SDA1	–	–	McBSP1 Vacant (GND)
38	FSR1/AXR0[7]/AXR1[8]	–	IPD	McBSP1 Vacant
39	VSS	–	–	GND
40	CVDD	–	–	Power supply
41	SCL0	–	–	I2C0 Vacant (GND)
42	SDA0	–	–	I2C0 Vacant (GND)
43	CVDD	–	–	Power supply
44	DVDD	–	–	Power supply
45	VSS	–	–	GND
46	CVDD	–	–	Power supply
47	DVDD	–	–	Power supply
48	VSS	–	–	GND

IPD = Internal pulldown, IPU = Internal pullup.

No.	Pin Name	I/O	IPD/IPU	Pin Function
49	VSS	–	–	GND
50	CVDD	–	–	Power supply
51	CVDD	–	–	Power supply
52	VSS	–	–	GND
53	CVDD	–	–	Power supply
54	VSS	–	–	GND
55	DVDD	–	–	Power supply
56	ARDY	–	IPU	For SD-RAM access (signal) ARDY
57	xCE3	–	IPU	For SD-RAM access (signal) NO ASSIGN
58	DVDD	–	–	Power supply
59	VSS	–	–	GND
60	CVDD	–	–	Power supply
61	xCE2	O	IPU	For SD-RAM access (signal)
62	EA2	O	IPU	For SD-RAM access (address) External address
63	EA3	O	IPU	For SD-RAM access (address) External address
64	EA4	O	IPU	For SD-RAM access (address) External address
65	DVDD	–	–	Power supply
66	VSS	–	–	GND
67	CVDD	–	–	Power supply
68	EA5	O	IPU	For SD-RAM access (address) External address
69	EA6	O	IPU	For SD-RAM access (address) External address
70	EA7	O	IPU	For SD-RAM access (address) External address
71	EA8	O	IPU	For SD-RAM access (address) External address
72	DVDD	–	–	Power supply
73	VSS	–	–	GND
74	EA9	O	IPU	For SD-RAM access (address) External address
75	xAOE/xSDRAS/xSSOE	O	IPU	For SD-RAM access (signal) xAOE/xSDRAS/xSSOE
76	EA10	O	IPU	For SD-RAM access (address) External address
77	ECLKOUT	O	IPD	For SD-RAM access (signal) ECLKOUT
78	ECLKIN	I	IPD	For SD-RAM access (signal) Vacant (FREE)
79	xARE/xSDCAS/xSSADS	I	IPU	For SD-RAM access (signal) xARE/xSDCAS/xSSADS
80	CVDD	–	–	Power supply
81	VSS	–	–	GND
82	CLKOUT2/GP0[2]	–	IPD	Vacant (FREE)
83	xAWE/xSDWE/xSSWE	O	IPU	For SD-RAM access (signal) xAWE/xSDWE/xSSWE
84	DVDD	–	–	Power supply
85	VSS	–	–	GND
86	EA11	O	IPU	For SD-RAM access (address) External address
87	DVDD	–	–	Power supply
88	VSS	–	–	GND
89	CVDD	–	–	Power supply
90	EA14	O	IPU	For SD-RAM access (address) External address
91	EA13	O	IPU	For SD-RAM access (address) External address
92	EA16	O	IPU	For SD-RAM access (address) External address
93	EA12	O	IPU	For SD-RAM access (address) External address
94	EA15	O	IPU	For SD-RAM access (address) External address
95	EA18	O	IPU	For SD-RAM access (address) External address
96	CVDD	–	–	Power supply

IPD = Internal pulldown, IPU = Internal pullup.

No.	Pin Name	I/O	IPD/IPU	Pin Function
97	VSS	–	–	GND
98	DVDD	–	–	Power supply
99	EA17	O	IPU	For SD-RAM access (address) External address
100	EA19	O	IPU	For SD-RAM access (address) External address
101	EA20	O	IPU	For SD-RAM access (address) Vacant (FREE)
102	xCE0	O	IPU	For SD-RAM access (signal) DPRAM (FPGA) ACCESS
103	xCE1	O	IPU	For SD-RAM access (signal) FLASH ROM ACCESS
104	CVDD	–	–	Power supply
105	CVDD	–	–	Power supply
106	VSS	–	–	GND
107	DVDD	–	–	Power supply
108	xBE1	–	IPU	For SD-RAM access (signal) xBE1
109	EA21	O	IPU	For SD-RAM access (address) Vacant (FREE)
110	xBE0	–	IPU	For SD-RAM access (signal) xBE0
111	ED13/GP1[13]	I/O	IPU	For SD-RAM access (data) External data bus
112	ED15/GP1[15]	I/O	IPU	For SD-RAM access (data) External data bus
113	ED14/GP1[14]	I/O	IPU	For SD-RAM access (data) External data bus
114	DVDD	–	–	Power supply
115	VSS	–	–	GND
116	CVDD	–	–	Power supply
117	ED11/GP1[11]	I/O	IPU	For SD-RAM access (data) External data bus
118	ED12/GP1[12]	I/O	IPU	For SD-RAM access (data) External data bus
119	ED9/GP1[9]	I/O	IPU	For SD-RAM access (data) External data bus
120	ED10/GP1[10]	I/O	IPU	For SD-RAM access (data) External data bus
121	ED6/GP1[6]	I/O	IPU	For SD-RAM access (data) External data bus
122	ED7/GP1[7]	I/O	IPU	For SD-RAM access (data) External data bus
123	ED8/GP1[8]	I/O	IPU	For SD-RAM access (data) External data bus
124	CVDD	–	–	Power supply
125	VSS	–	–	GND
126	DVDD	–	–	Power supply
127	ED4/GP1[4]	I/O	IPU	For SD-RAM access (data) External data bus
128	ED5/GP1[5]	I/O	IPU	For SD-RAM access (data) External data bus
129	ED3/GP1[3]	I/O	IPU	For SD-RAM access (data) External data bus
130	ED2/GP1[2]	I/O	IPU	For SD-RAM access (data) External data bus
131	ED1/GP1[1]	I/O	IPU	For SD-RAM access (data) External data bus
132	ED0/GP1[0]	I/O	IPU	For SD-RAM access (data) External data bus
133	CVDD	–	–	Power supply
134	VSS	–	–	GND
135	xHINT/GP0[1]	–	IPU	Open(FREE)
136	BUSREQ	–	IPU	For SD-RAM access (signal) Vacant (FREE)
137	xHOLDA	–	IPU	For SD-RAM access (signal) Vacant (FREE)
138	xHOLD	–	IPU	For SD-RAM access (signal) Set to "H".
139	HHWIL/AFSR1	I	IPU	McASP1 McASP receive LRCLK(FS)
140	xHRDY/ACLKR1	I	IPD	McASP1 McASP receive bit clock
141	DVDD	–	–	Power supply
142	VSS	–	–	GND
143	HR/W/AXR0[15]/AXR1[0]	I	IPU	McASP1 CH1 IN
144	HCNTL1/AXR0[14]/AXR1[1]	I	IPU	McASP1 CH2 IN

IPD = Internal pulldown, IPU = Internal pullup.

No.	Pin Name	I/O	IPD/IPU	Pin Function
145	xHCS/AXR0[13]/AXR1[2]	I	IPU	McASP1 CH3 IN
146	HCNTL0/AXR0[12]/AXR1[3]	I	IPU	McASP1 CH4 IN
147	HD0/AXR0[11]/AXR1[4]	I	IPU	McASP1 MIC IN
148	VSS	–	–	GND
149	CVDD	–	–	Power supply
150	xHDS2/AXR0[10]/AXR1[5]	I	IPU	McASP1 RETURN IN
151	xHDS1/AXR0[9]/AXR1[6]	–	IPU	Vacant
152	HD1/AXR0[8]/AXR1[7]	O	IPU	McASP0 Vacant
153	xHAS/ACLKX1	I	IPU	McASP1 McASP transmit bit clock
154	HD3/AMUTE1	O	IPU	McASP1 McASP mute output "L"
155	HD2/AFSX1	I	IPU	McASP1 McASP transmit LRCLK (FS)
156	HD4/GP0[0]	–	IPD	MODE "H"
157	CVDD	–	–	Power supply
158	VSS	–	–	GND
159	HD5/AHCLKX1	–	IPU	McASP1 McASP High frequency transmit bit clock
160	HD8/GP0[8]	–	IPU	Set to "H".
161	HD6/AHCLKR1	–	IPU	McASP1 McASP receive high-frequency master clock
162	DVDD	–	–	Power supply
163	VSS	–	–	GND
164	HD7/GP0[3]	–	IPU	TESTPort Vacant (FREE)
165	HD9/GP0[9]	–	IPU	MODE Vacant (FREE)
166	HD10/GP0[10]	–	IPU	MODE Vacant (FREE)
167	HD11/GP0[11]	–	IPU	MODE Vacant (FREE)
168	HD12/GP0[12]	–	IPU	Vacant (FREE)
169	CVDD	–	–	Power supply
170	VSS	–	–	GND
171	CVDD	–	–	Power supply
172	HD13/GP0[13]	–	IPU	MODE Vacant (FREE)
173	HD14/GP0[14]	–	IPU	Vacant (GND)
174	HD15/GP0[15]	–	IPU	Vacant (FREE)
175	NMI	–	IPD	Vacant (GND)
176	xRESET	I	–	Reset signal
177	CVDD	–	–	Power supply
178	OSCIN	–	–	Vacant (GND)
179	OSCOUT	–	–	Vacant (FREE)
180	OSCVSS	–	–	OSC GND
181	OSCVDD	–	–	OSC Power supply
182	VSS	–	–	GND
183	DVDD	–	–	Power supply
184	CLKOUT3	–	IPD	Vacant (FREE)
185	EMU1	I/O	IPU	For JTAG JTAG 14 pin
186	EMU0	I/O	IPU	For JTAG JTAG 13 pin
187	TDO	O	IPU	For JTAG JTAG 7 pin
188	DVDD	–	–	Power supply
189	VSS	–	–	GND
190	CVDD	–	–	Power supply
191	TDI	I	IPU	For JTAG JTAG 3 pin
192	TMS	I	IPU	For JTAG JTAG 1 pin

IPD = Internal pulldown, IPU = Internal pullup.

No.	Pin Name	I/O	IPD/IPU	Pin Function
193	TCK	I	IPU	For JTAG JTAG 9 and 11 pins
194	VSS	–	–	GND
195	CVDD	–	–	Power supply
196	CVDD	–	–	Power supply
197	xTRST	I	IPD	For JTAG JTAG 2 pin
198	RSV2	–	IPU	Vacant (free) non connection
199	VSS	–	–	GND
200	RSV0	–	–	Vacant (free) non connection
201	CVDD	–	–	Power supply
202	PLLHV	–	–	Set to "H".
203	RSV1	–	IPD	GND (VSS)
204	CLKIN	I	IPD	Clock input (24.586MHz)
205	CLKMODE0	–	IPU	Clock mode selection "H"
206	DVDD	–	–	Power supply
207	VSS	–	–	GND
208	CVDD	–	–	Power supply

IPD = Internal pulldown, IPU = Internal pullup.

■ XC3S50-4TQG144C (DSP ASSY : IC 13)

• FPGA

● Pin Function

No.	Mark	Pin Name	I/O	Pin Function
P1	DSPA1	IO_L01P_7/VRN_7	I	Address bus 1 with DSP
P2	DSPA0	IO_L01N_7/VRP_7	I	Address bus 0 with DSP
P3	Vcc	VCCO_7	–	Power supply
P4	NC	IO/VREF_7	–	Not used
P5	NC	IO_L20P_7	–	Not used
P6	NC	IO_L20N_7	–	Not used
P7	NC	IO_L21P_7	–	Not used
P8	RXD7	IO_L21N_7	I	Serial receive port 7
P9	GND	GND	–	GND
P10	TXD7	IO_L22P_7	O	Serial receive port 7
P11	SCK7	IO_L22N_7	O	Serial clock 7
P12	RXD6	IO_L23P_7	I	Serial receive port 6
P13	TXD6	IO_L23N_7	O	Serial receive port 6
P14	SCK6	IO_L24P_7	O	Serial clock 6
P15	NC	IO_L24N_7	–	Not used
P16	GND	GND	–	GND
P17	NC	IO_L40P_7	–	Not used
P18	NC	IO_L40N_7/VREF_7	–	Not used
P19	Vcc	VCCO_7	–	Power supply
P20	NC	IO_L40P_6/VREF_6	–	Not used
P21	RESET	IO_L40N_6	I	Reset input
P22	GND	GND	–	GND
P23	NC	IO_L24P_6	–	Not used
P24	NC	IO_L24N_6/VREF_6	–	Not used
P25	NC	IO_L23P_6	–	Not used
P26	NC	IO_L23N_6	–	Not used
P27	µCA10	IO_L22P_6	I	Address bus 10 with microcomputer
P28	µCA9	IO_L22N_6	I	Address bus 9 with microcomputer
P29	GND	GND	–	GND
P30	NC	IO_L21P_6	–	Not used
P31	µCA8	IO_L21N_6	I	Address bus 8 with microcomputer
P32	µCA7	IO_L20P_6	I	Address bus 7 with microcomputer
P33	µCA6	IO_L20N_6	I	Address bus 6 with microcomputer
P34	Vcc	VCCO_6	–	Power supply
P35	µCA5	IO_L01P_6/VRN_6	I	Address bus 5 with microcomputer
P36	µCA4	IO_L01N_6/VRP_6	I	Address bus 4 with microcomputer
P37	M1	M1	–	M1
P38	M0	M0	–	M0
P39	M2	M2	–	M2
P40	µCA3	IO_L01P_5/CS_B	I	Address bus 3 with microcomputer
P41	µCA2	IO_L01N_5/RDWR_B	I	Address bus 2 with microcomputer
P42	GND	GND	–	GND
P43	Vcc	VCCO_5	–	Power supply
P44	µCA1	IO/VREF_5	I	Address bus 1 with microcomputer
P45	GND	GND	–	GND
P46	µCA0	IO_L28P_5/D7	I	Address bus 0 with microcomputer
P47	µCCS	IO_L28N_5/D6	I	Chip select with microcomputer
P48	Vcc	VCCAUX	–	Power supply

No.	Mark	Pin Name	I/O	Pin Function
P49	Vcc	VCCINT	–	Power supply
P50	µCRD	IO_L31P_5/D5	I	Read signal with microcomputer
P51	µCWR	IO_L31N_5/D4	I	Write signal with microcomputer
P52	µCD15	IO_L32P_5/GCLK2	I/O	Data bus 15 with microcomputer
P53	µCD14	IO_L32N_5/GCLK3	I/O	Data bus 14 with microcomputer
P54	Vcc	VCCO_5	–	Power supply
P55	µCD13	IO_L32P_4/GCLK0	I/O	Data bus 13 with microcomputer
P56	µCD12	IO_L32N_4/GCLK1	I/O	Data bus 12 with microcomputer
P57	NC	IO_L31P_4/DOUT/BUSY	–	Not used
P58	NC	IO_L31N_4/INIT_B	–	Not used
P59	µCD11	IO_L30P_4/D3	I/O	Data bus 11 with microcomputer
P60	µCD10	IO_L30N_4/D2	I/O	Data bus 10 with microcomputer
P61	Vcc	VCCINT	–	Power supply
P62	Vcc	VCCAUX	–	Power supply
P63	µCD9	IO_L27P_4/D1	I/O	Data bus 9 with microcomputer
P64	GND	GND	–	GND
P65	DATA	IO_L27N_4/DIN/D0	–	DATA (for download)
P66	Vcc	VCCO_4	–	Power supply
P67	GND	GND	–	GND
P68	µCD8	IO_L01P_4/VRN_4	I/O	Data bus 8 with microcomputer
P69	µCD7	IO_L01N_4/VRP_4	I/O	Data bus 7 with microcomputer
P70	µCD6	IO/VREF_4	I/O	Data bus 6 with microcomputer
P71	DONE	DONE	–	DONE signal
P72	CCLK	CCLK	–	CCLK signal
P73	µCD5	IO_L01P_3/VRN_3	I/O	Data bus 5 with microcomputer
P74	µCD4	IO_L01N_3/VRP_3	I/O	Data bus 4 with microcomputer
P75	Vcc	VCCO_3	–	Power supply
P76	µCD3	IO	I/O	Data bus 3 with microcomputer
P77	µCD2	IO_L20P_3	I/O	Data bus 2 with microcomputer
P78	µCD1	IO_L20N_3	I/O	Data bus 1 with microcomputer
P79	µCD0	IO_L21P_3	I/O	Data bus 0 with microcomputer
P80	NC	IO_L21N_3	–	NC
P81	GND	GND	–	GND
P82	NC	IO_L22P_3	–	NC
P83	NC	IO_L22N_3	–	NC
P84	GPIO17	IO_L23P_3/VREF_3	O	I/O port 7 (CH4 fader stop)
P85	GPIO16	IO_L23N_3	O	I/O port 6 (CH4 fader start)
P86	GPIO15	IO_L24P_3	O	I/O port 5 (CH3 fader stop)
P87	GPIO14	IO_L24N_3	O	I/O port 4 (CH3 fader start)
P88	GND	GND	–	GND
P89	GPIO13	IO_L40P_3	O	I/O port 3 (CH2 fader stop)
P90	GPIO12	IO_L40N_3/VREF_3	O	I/O port 2 (CH2 fader start)
P91	Vcc	VCCO_3	–	Power supply
P92	GPIO11	IO_L40P_2/VREF_2	O	I/O port 1 (CH1 fader stop)
P93	GPIO10	IO_L40N_2	O	I/O port 0 (CH1 fader start)
P94	GND	GND	–	GND
P95	NC	IO_L24P_2	–	NC
P96	NC	IO_L24N_2	–	NC

No.	Mark	Pin Name	I/O	Pin Function
P97	DSPD0	IO_L23P_2	I/O	Data bus 0 with DSP
P98	DSPD1	IO_L23N_2/VREF_2	I/O	Data bus 1 with DSP
P99	DSPD2	IO_L22P_2	I/O	Data bus 2 with DSP
P100	DSPD3	IO_L22N_2	I/O	Data bus 3 with DSP
P101	GND	GND	–	GND
P102	DSPD5	IO_L21P_2	I/O	Data bus 5 with DSP
P103	DSPD4	IO_L21N_2	I/O	Data bus 4 with DSP
P104	DSPD8	IO_L20P_2	I/O	Data bus 8 with DSP
P105	DSPD7	IO_L20N_2	I/O	Data bus 7 with DSP
P106	Vcc	VCCO_2	–	Power supply
P107	DSPD6	IO_L01P_2/VRN_2	I/O	Data bus 6 with DSP
P108	DSPD10	IO_L01N_2/VRP_2	I/O	Data bus 10 with DSP
P109	NC	TDO	–	NC
P110	NC	TCK	–	NC
P111	NC	TMS	–	NC
P112	DSPD9	IO_L01P_1/VRN_1	I/O	Data bus 9 with DSP
P113	DSPD12	IO_L01N_1/VRP_1	I/O	Data bus 12 with DSP
P114	GND	GND	–	GND
P115	Vcc	VCCO_1	–	Power supply
P116	DSPD11	IO	I/O	Data bus 11 with DSP
P117	GND	GND	–	GND
P118	DSPD14	IO_L28P_1	I/O	Data bus 14 with DSP
P119	DSPD15	IO_L28N_1	I/O	Data bus 15 with DSP
P120	Vcc	VCCAUX	–	Power supply
P121	Vcc	VCCINT	–	Power supply
P122	DSPD13	IO_L31P_1	I/O	Data bus 13 with DSP
P123	DSPCS	IO_L31N_1/VREF_1	I	Chip select from DSP
P124	DSPA10	IO_L32P_1/GCLK4	I	Address bus 10 with DSP
P125	DSPA9	IO_L32N_1/GCLK5	I	Address bus 9 with DSP
P126	Vcc	VCCO_1	–	Power supply
P127	DSPWE	IO_L32P_0/GCLK6	I	DSP write signal
P128	CLK	IO_L32N_0/GCLK7	I	Clock input
P129	DSPA8	IO_L31P_0/VREF_0	I	Address bus 8 with DSP
P130	DSPRD	IO_L31N_0	I	DSP read signal
P131	DSPA7	IO_L30P_0	I	Address bus 7 with DSP
P132	DSPA6	IO_L30N_0	I	Address bus 6 with DSP
P133	Vcc	VCCINT	–	Power supply
P134	Vcc	VCCAUX	–	Power supply
P135	DSPA5	IO_L27P_0	I	Address bus 5 with DSP
P136	GND	GND	–	GND
P137	DSPA4	IO_L27N_0	I	Address bus 4 with DSP
P138	Vcc	VCCO_0	–	Power supply
P139	GND	GND	–	GND
P140	DSPA3	IO_L01P_0/VRN_0	I	Address bus 3 with DSP
P141	DSPA2	IO_L01N_0/VRP_0	I	Address bus 2 with DSP
P142	HSWAP_EN	HSWAP_EN	–	HSWAP_EN
P143	PROG_B	PROG_B	–	PROG_B (XPGM)
P144	NC	TDI	–	Not used

■ CS5361 (INPUT ASSY : IC409, IC509, IC609, IC709)

• Audio A/D Converter

● Pin Arrangement (Top view)

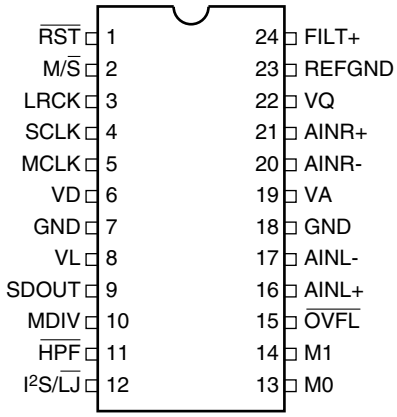

● Block Diagram

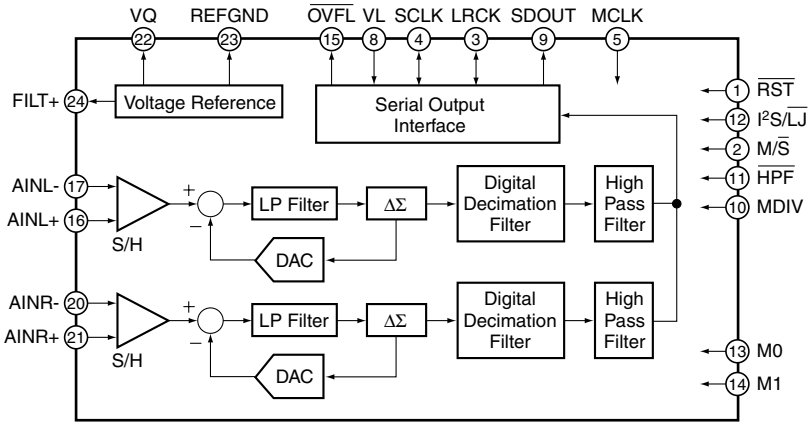

● Pin Function

No.	Pin Name	I/O	Pin Function
1	RST	I	Reset input The device enters a low power mode when low.
2	M/S	I	Master/Slave mode input
3	LRCK	I/O	LR clock input/output
4	SCLK	I/O	Serial clock input/output
5	MCLK	I	Master clock input
6	VD	I	Digital power input
7	GND	I	Ground input Must be connected to analog ground.
8	VL	I	Logic power input
9	SDOUT	O	Serial audio data output
10	MDIV	I	MCLK divider input
11	HPF	I	High-pass filter enable input
12	I²S/LJ	I	Serial audio interface format select input
13	M0	I	Mode selection input
14	M1	I	
15	OVFL	O	Overflow output, open drain
16	AINL+	I	Differential left channel analog input
17	AINL-	I	
18	GND	I	Ground input Must be connected to analog ground.
19	VA	I	Analog power input
20	AINR-	I	Differential right channel analog input
21	AINR+	I	
22	VQ	O	Quiescent voltage output Filter connection for the internal quiescent reference voltage.
23	REF_GND	I	Reference ground input
24	FILT+	O	Positive voltage reference output

■ DEL1061 (PANEL 2 ASSY : V2101)

• FL Display

● Pin Arrangement

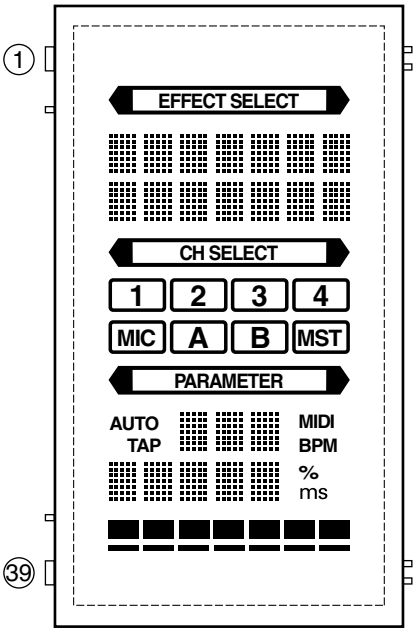

● Pin Connection

Pin No.	39	38	37	36	35	34	33	32	31	30
Connection	F-	NX	NX	NP	NP	LGND	PGND	VH	VDD	BK

Pin No.	29	28	27	26-6	5	4	3	2	1
Connection	LAT	CLK	SI	NX	NP	NP	NX	NX	F+

NOTE:
1) F-, F+ : Filament
2) NP : No pin
3) NX : No extend pin
4) DL : Datum Line
5) LGND : Logic GND pin
6) PGND : Power GND pin
7) VH : High Voltage Supply pin
8) VDD : Logic Voltage Supply pin
9) BK : Driver Output Blanking
10) LAT : Latch Control Input
11) CLK : Shift Register Clock
12) SI : Serial Data Input
13) Solder composition is Sn-3Ag-0.5Cu.

● Grid Assignment

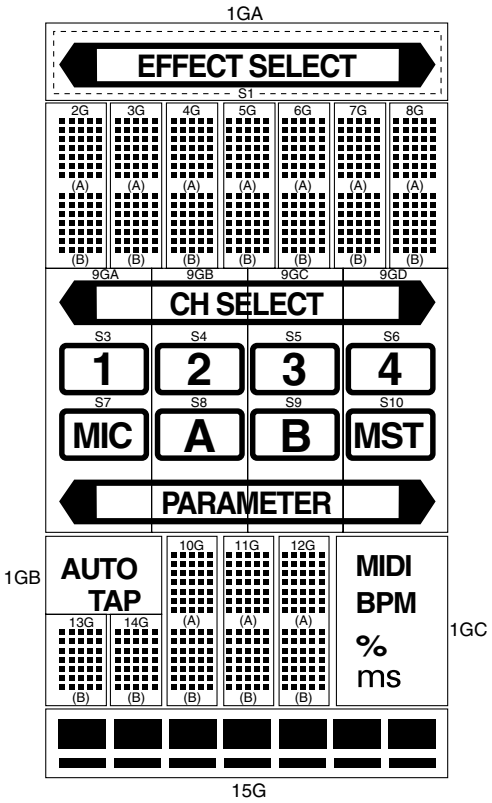

● Segment Designation

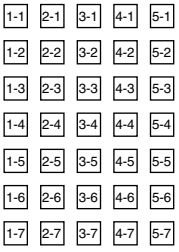

(2G-8G, 10G-14G)

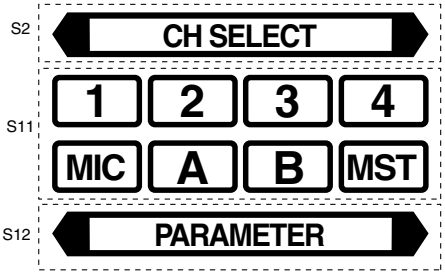

(9GA-9GD)

(15G)

● **Anode Connection**

	1GA-C	2G-8G	9GA-D	10G-12G	13G, 14G	15G
P1	–	5-7B	S2	5-7B	5-7B	B1
P2	–	4-7B	S3	4-7B	4-7B	B2
P3	–	3-7B	S4	3-7B	3-7B	B3
P4	–	2-7B	S5	2-7B	2-7B	B4
P5	–	1-7B	S6	1-7B	1-7B	B5
P6	–	5-6B	S7	5-6B	5-6B	B6
P7	–	4-6B	S8	4-6B	4-6B	B7
P8	–	3-6B	S9	3-6B	3-6B	B8
P9	–	2-6B	S10	2-6B	2-6B	B9
P10	–	1-6B	S11	1-6B	1-6B	B10
P11	–	5-5B	S12	5-5B	5-5B	B11
P12	–	4-5B	–	4-5B	4-5B	B12
P13	–	3-5B	–	3-5B	3-5B	B13
P14	–	2-5B	–	2-5B	2-5B	B14
P15	–	1-5B	–	1-5B	1-5B	–
P16	–	5-4B	–	5-4B	5-4B	–
P17	–	4-4B	–	4-4B	4-4B	–
P18	–	3-4B	–	3-4B	3-4B	–
P19	–	2-4B	–	2-4B	2-4B	–
P20	–	1-4B	–	1-4B	1-4B	–
P21	–	5-3B	–	5-3B	5-3B	–
P22	–	4-3B	–	4-3B	4-3B	–
P23	–	3-3B	–	3-3B	3-3B	–
P24	–	2-3B	–	2-3B	2-3B	–
P25	–	1-3B	–	1-3B	1-3B	–
P26	–	5-2B	–	5-2B	5-2B	–
P27	–	4-2B	–	4-2B	4-2B	–
P28	–	3-2B	–	3-2B	3-2B	–
P29	–	22B	–	22B	22B	–
P30	–	1-2B	–	1-2B	1-2B	–
P31	–	5-1B	–	5-1B	5-1B	–
P32	–	4-1B	–	4-1B	4-1B	–
P33	–	3-1B	–	3-1B	3-1B	–
P34	ms	2-1B	–	2-1B	2-1B	–
P35	%	1-1B	–	1-1B	1-1B	–

● **Anode Connection**

	1GA-C	2G-8G	9GA-D	10G-12G	13G, 14G	15G
P36	–	5-7A	–	5-7A	–	–
P37	–	4-7A	–	4-7A	–	–
P38	–	3-7A	–	3-7A	–	–
P39	–	2-7A	–	2-7A	–	–
P40	–	1-7A	–	1-7A	–	–
P41	–	5-6A	–	5-6A	–	–
P42	–	4-6A	–	4-6A	–	–
P43	–	3-6A	–	3-6A	–	–
P44	–	2-6A	–	2-6A	–	–
P45	–	1-6A	–	1-6A	–	–
P46	–	5-5A	–	5-5A	–	–
P47	–	4-5A	–	4-5A	–	–
P48	–	3-5A	–	3-5A	–	–
P49	–	2-5A	–	2-5A	–	–
P50	–	1-5A	–	1-5A	–	–
P51	–	5-4A	–	5-4A	–	–
P52	–	4-4A	–	4-4A	–	–
P53	–	3-4A	–	3-4A	–	–
P54	–	2-4A	–	2-4A	–	–
P55	–	1-4A	–	1-4A	–	–
P56	–	5-3A	–	5-3A	–	–
P57	–	4-3A	–	4-3A	–	–
P58	–	3-3A	–	3-3A	–	–
P59	–	2-3A	–	2-3A	–	–
P60	–	1-3A	–	1-3A	–	–
P61	–	5-2A	–	5-2A	–	–
P62	–	4-2A	–	4-2A	–	–
P63	–	3-2A	–	3-2A	–	–
P64	–	2-2A	–	2-2A	–	–
P65	–	1-2A	–	1-2A	–	–
P66	BPM	5-1A	–	5-1A	–	–
P67	MIDI	4-1A	–	4-1A	–	–
P68	TAP	3-1A	–	3-1A	–	–
P69	AUTO	2-1A	–	2-1A	–	–
P70	S1	1-1A	–	1-1A	–	–

8. PANEL FACILITES

OPERATION PANEL

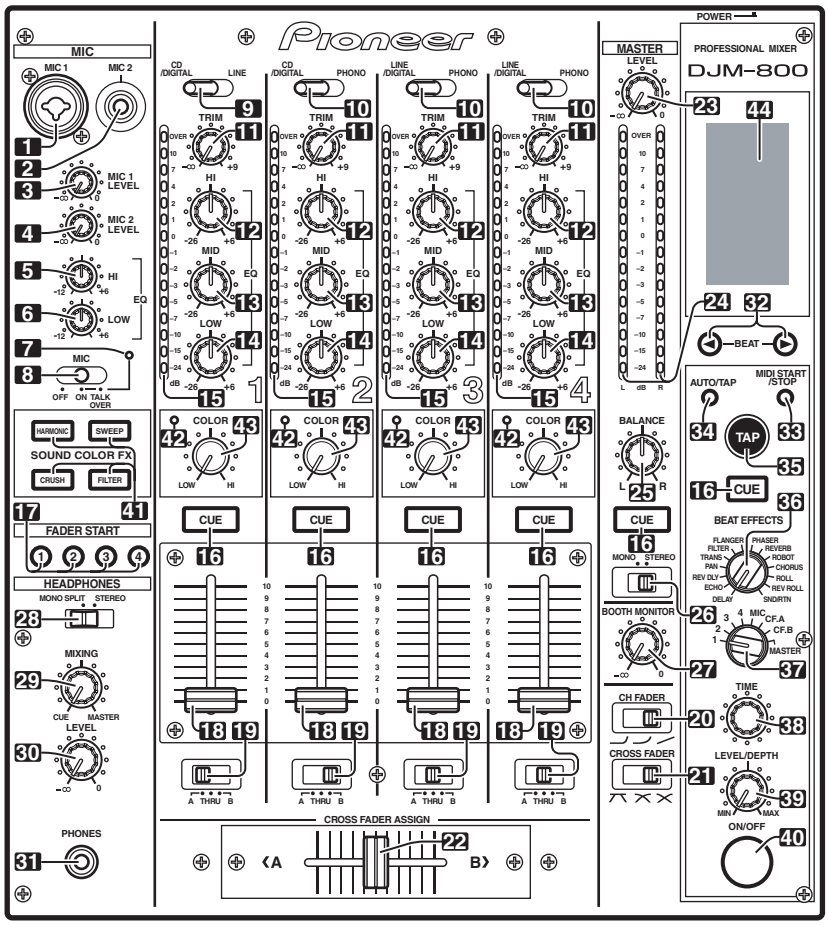

NAMES AND FUNCTIONS OF PARTS (OPERATION PANEL_1)

Microphone input control section

1. Microphone 1 input jack (MIC 1)
Use to connect a microphone with an XLR or phone plug.

2. Microphone 2 input jack (MIC 2)
Use to connect a microphone with a phone plug.

3. Microphone 1 level control dial (MIC 1 LEVEL)
Use to adjust the volume of microphone 1. (adjustable range –∞ to 0 dB)

4. Microphone 2 level control dial (MIC 2 LEVEL)
Use to adjust the volume of microphone 2. (adjustable range –∞ to 0 dB)

5. Microphone equalizer high-range control dial (HI)
Use to adjust the treble (high-range) frequencies of microphones 1 and 2. (adjustable range –12 dB to +6 dB)

6. Microphone equalizer low-range control dial (LOW)
Use to adjust the bass (low-range) frequencies of microphones 1 and 2. (adjustable range –12 dB to +6 dB)

7. Microphone function indicator
Lights when microphone is ON; flashes when TALK OVER is ON.

8. Microphone function selector switch (MIC)
OFF:
No microphone sound is output.
ON:
Microphone sound is output normally.
TALK OVER:
Microphone sound is output; when sound is input to a connected microphone, the TALK OVER function operates and all sound other than that from the microphone is attenuated by 20 dB.

Channel input control section

9. Channel 1 input selector switch
CD/DIGITAL:
Use to select CD input connectors (line level analog input) or DIGITAL input connectors.
LINE:
Use to select LINE input connectors.

10. Channel 2 to 4 input selector switches
CD/DIGITAL (channel 2) :
Use to select CD input connectors (line level analog input) or DIGITAL input connectors.
LINE/DIGITAL (channel 3 to 4):
Use to select LINE input connectors (line level analog input) or DIGITAL input connectors.
PHONO:
Use to select PHONO input connectors (analog turntableinput).

NAMES AND FUNCTIONS OF PARTS (OPERATION PANEL_2)

11. TRIM adjust dial
Use to adjust the input level for each channel. (adjustable range: – ∞ to +9 dB, mid-position is about 0 dB)

12. Channel equalizer high-range adjust dial (HI)
Use to adjust the treble (high-range) frequency sound for each channel. (adjustable range: –26 dB to +6 dB)

13. Channel equalizer mid-range adjust dial (MID)
Use to adjust the mid-range frequency sound for each channel. (adjustable range: –26 dB to +6 dB)

14. Channel equalizer low-range adjust dial (LOW)
Use to adjust the bass (low-range) frequency sound for each channel. (adjustable range: –26 dB to +6 dB)

15. Channel level indicator
Displays the current level for each channel, with two-second peak hold.

16. Headphone CUE buttons/indicators
These buttons are used to select from channel 1 to 4, MASTER, or effector, to allow you to monitor the desired source through headphones. If multiple buttons are pressed simultaneously, the selected audio sources are mixed. Press the button once more to cancel the selected source. Unselected buttons glow darkly, while selected source buttons light brightly.

Fader control section

17. Fader start button/indicator (FADER START 1 to 4)
Enables the fader start/back cue function for the channel to which a DJ CD player is connected. The button lights when set to ON. When enabled, the operation differs depending on the setting of the **CROSS FADER ASSIGN** switch.

- When the **CROSS FADER ASSIGN** switch is set to the [**A**] or [**B**] position, fader start button operation is linked to the operation of the cross fader (and unlinked to channel fader).
- When the **CROSS FADER ASSIGN** switch is set to the [**THRU**] position, fader start button operation is linked to the operation of the channel fader (and unlinked to cross fader).

18. Channel fader lever
Use to adjust sound volumes for each channel. (adjustable range: – ∞ to 0 dB)
Output is in accordance with the channel fader curve selected with the **CH FADER** curve switch.

19. CROSS FADER ASSIGN switch
This switch assigns each channel's output to either right or left side of the cross fader (if multiple channels are assigned to the same side, the result will be the combined sum of the channels).

A:
The selected channel is assigned to the cross fader's A (left) side.

THRU:
The channel fader's output is sent as is to the master output, without being passed through the cross fader.

B:
The selected channel is assigned to the cross fader's B (right) side.

20. Channel fader curve switch (CH FADER)
This switch allows the user to select from three types of channel fader curve response. This setting is applied equally to channels 1 to 4.

- At the left setting, the curve operates to produce a rapid rise as the channel fader approaches its distant position.
- At the right setting, the curve operates to produce an even, neutral rise throughout the channel fader's movement.
- At the middle setting, an intermediate curve is produced, midway between the two curves noted above.

21. Cross fader curve switch (CROSS FADER)
This switch allows the user to select from three types of cross fader curve response.

- At the left setting, the curve produces a rapid signal rise. (As soon as the cross fader lever leaves the [**A**] side, the [**B**] channel sound is produced.)
- At the right setting, the curve operates to produce an even, neutral rise throughout the cross fader's movement.
- At the middle setting, an intermediate curve is produced, midway between the two curves noted above.

22. Cross fader lever
Outputs sound assigned to [**A**] and [**B**] sides in accordance with setting of the **CROSS FADER ASSIGN** switch, and subject to the cross fader curve selected with the **CROSS FADER** curve switch.

Master output control section

23. Master output level dial (MASTER LEVEL)
Use to adjust the master output level. (adjustable range: – ∞to 0 dB)
The master output is the sum combination of the sound from channels set to [**THRU**] with the **CROSS FADER ASSIGN** switch; the signal passed through the cross fader; and the signals from microphone 1 and microphone 2 (if the effect selector is set to [**SND/RTN**], the **RETURN** input is also added).

24. Master level indicator (MASTER L, R)
These segment indicators display the output level from L and R channels. The indicators have a two-second peak hold.

25. Master balance dial (BALANCE)
Use to adjust the L/R channel balance for master output, booth monitor output, recording output, and digital output.

26. Master output STEREO/MONO selector switch
When set to [**MONO**], the master output becomes a monaural combination of L+R.

Booth monitor control section

27. BOOTH MONITOR level control dial
This dial is used to adjust the booth monitor output volume. The volume can be adjusted independently of the master output level. (adjustable range: – ∞to 0 dB)

Headphones output section

28. Headphones output switch (MONO SPLIT/STEREO)
MONO SPLIT:
The audio source selected with the headphone **CUE** button is output to the L channel, and the master audio is output to the R channel (only when headphone **CUE** button is used to select [**MASTER**]).

STEREO:
The audio source selected with the headphone **CUE** button is output in stereo.

29. Headphones mixing dial (MIXING)
When rotated clockwise (toward [**MASTER**]), the master output audio is produced at the headphones (only when [**MASTER**] has been selected with the headphones **CUE** button); when rotated counterclockwise (toward [**CUE**]), the headphones output becomes the mixture of the effect monitor and the channel selected with the headphone **CUE** button.

NAMES AND FUNCTIONS OF PARTS (OPERATION PANEL_3)

30. Headphones level adjust dial (LEVEL)
Adjusts the output level of the headphones jack. (adjustable range: – ∞ to 0 dB)

31. Headphones jack (PHONES)

BPM counter section

32. Beat select buttons (BEAT)
(Beat up): Doubles the calculated BPM.
(Beat down): Halves the calculated BPM.

- Some effects can be set for **"3/4"**.

33. MIDI start/stop button (MIDI START/STOP)
Use to alternate the MIDI control function between start and stop .
When this control is enabled, the [**MIDI START (STOP)**] message appears for two seconds on the display.
MIDI SNAP SHOT:
When the **MIDI START/STOP** button is held depressed, a snapshot is sent to the external MIDI component.

34. BPM measuring mode button (AUTO/TAP)
Each time the button is pressed, the BPM measuring mode alternates between [**AUTO**] and [**TAP**].
AUTO:
The display's [**AUTO**] indicator lights, and the BPM is automatically calculated.
TAP:
The display's [**TAP**] indicator lights, and the BPM is calculated manually by **TAP** button input.

35. TAP button
The BPM is calculated from the intervals at which the **TAP** button is struck. If the **TAP** button is pressed in the AUTO mode, the mode automatically switches to the TAP mode (manual input).

Beat effect section

36. Effect selector (DELAY, ECHO, REV DLY (REVERSE DELAY), PAN, TRANS, FILTER, FLANGER, PHASER, REVERB, ROBOT (ROBOT VOCODER), CHORUS, ROLL, REV ROLL (REVERSE ROLL), SND/RTN (SEND/RETURN))
Use to select desired type of effect.
When using an external effector connected to the **SEND** and **RETURN** connectors, set to the [**SND/RTN**] position.

37. Effect channel selector (1, 2, 3, 4, MIC, CF.A, CF.B, MASTER)
Use to select the channel to which effects are applied.
When [**MIC**] is selected, effects are applied to both microphone 1 and microphone 2.

38. Effect parameter 1 dial [TIME (PARAMETER 1)]
Adjusts time parameter for selected effect .
If the **TIME** dial is rotated while depressing the **TAP** button, direct BPM can be set manually.
If the **TIME** dial is rotated while holding the **TAP** button and **AUTO/TAP** buttons depressed, the BPM can be set in 0.1 units.

39. Effect parameter 2 dial [LEVEL/DEPTH (PARAMETER 2)]
Adjusts quantitative parameters for selected effect .

40. Effect button/indicator (ON/OFF)
Sets selected effect ON/OFF. Whenever power is first turned ON, effects default to OFF and the button is lighted. When effects are enabled (ON), the button flashes.

Sound-color effects section

41. Sound-color effect select buttons/indicators (HARMONIC, SWEEP, FILTER, CRUSH)
Use to select and enable/disable sound-color effects .
The button for the selected function will flash, and the effect will be applied equally to channels 1 to 4. When the flashing button is pressed, it lights steadily and the effect turns OFF. When power is first turned on, all effects default to OFF (indicators are lighted).

42. Harmonic Indicators
When [**HARMONIC**] is turned ON, these indicators light and the color of the indicator changes in accord with the status of the effect .

43. Sound-color effect parameter dial (COLOR)
Used to adjust quantitative parameters for the effect selected with the sound-color effect selector buttons.

44. Display

DISPLAY SECTION

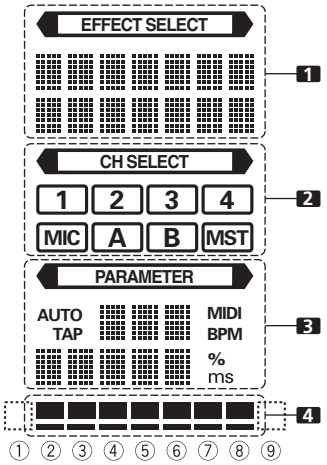

1. Effects display section

The <**EFFECT SELECT**> indicator lights constantly, and the alpha-numeric display (seven characters in two lines) indicates the name of the effect as shown below. Also, when one of the change operations is performed as noted in the table, the corresponding characters are displayed for two seconds, after which the display returns to the original effect name.

Switching Operation	Upper/ Lower Row	Display
At **MIDI** start	Upper	**MIDI**
	Lower	**START**
At **MIDI** stop	Upper	**MIDI**
	Lower	**STOP**
MIDI snapshot	Upper	**SNAP**
	Lower	**SHOT**

2. Channel select display section

The <**CH SELECT**> indicator lights constantly, and a red frame lights around the number position corresponding to the chosen effect channel selector.

3. Parameter display section

<PARAMETER>:
The <**PARAMETER**> indicator lights constantly.
AUTO/TAP:
[**AUTO**] lights when the BPM measuring mode is set to AUTO, and [**TAP**] lights when the BPM measuring mode is set to manual (TAP).
BPM counter display (3 digits):
In AUTO mode, displays the automatically detected BPM value. If the BPM count cannot be detected automatically, the display will flash at the previously detected value. In manual (TAP) mode, displays the BPM value designated by TAP input, etc.
BPM:
Lights constantly.
MIDI:
Displays the MIDI start/stop status.
Indicator lights after MIDI start command has been sent.
Indicator goes out after MIDI stop command has been sent.
Parameter 1 display (5 digits):
Displays parameters designated for each effect. When the beat select buttons (**BEAT ◄, ►**) are pressed, the corresponding beat multiple change is displayed for one second. If the beat select buttons (**BEAT ◄, ►**) are used to designate a value outside the parameter range, the current number will flash but will not change.
Unit Display (%/ms):
Lights in accordance with the unit used for each effect.

4. Beat display section

Displays the location of parameter 1 relative to BPM (1/1 beat). The lower row is lighted constantly. When the parameter 1 location approaches a threshold value, the corresponding indicator is lighted. When the parameter 1 is between threshold values, the indicator flashes. Although the display includes seven actual indicators, the two ends can also be considered to act as indicators, with the result that a theoretical nine positions can be postulated. When the values are at the two ends, no indicators light.

Effect selector	Effect display		Parameter display				Beat display								
	Upper/ Lower	Effect name	Minimum value	Maximum value	Default	Unit									
DELAY	Upper	DELAY	1	4 000	500	ms	1/8	1/4	1/2	3/4	1/1	2/1	4/1	8/1	16/1
	Lower														
ECHO	Upper	ECHO	1	4 000	500	ms	1/8	1/4	1/2	3/4	1/1	2/1	4/1	8/1	16/1
	Lower														
REV DLY	Upper	REVERSE	10	4 000	500	ms	1/8	1/4	1/2	3/4	1/1	2/1	4/1	8/1	16/1
	Lower	DELAY													
PAN	Upper	PAN	10	16 000	500	ms	1/16	1/8	1/4	1/2	1/1	2/1	4/1	8/1	16/1
	Lower														
TRANS	Upper	TRANS	10	16 000	500	ms	1/16	1/8	1/4	1/2	1/1	2/1	4/1	8/1	16/1
	Lower														
FILTER	Upper	FILTER	10	32 000	2 000	ms	1/4	1/2	1/1	2/1	4/1	8/1	16/1	32/1	64/1
	Lower														
FLANGER	Upper	FLANGER	10	32 000	2 000	ms	1/4	1/2	1/1	2/1	4/1	8/1	16/1	32/1	64/1
	Lower														
PHASER	Upper	PHASER	10	32 000	2 000	ms	1/4	1/2	1/1	2/1	4/1	8/1	16/1	32/1	64/1
	Lower														
REVERB	Upper	REVERB	1	100	50	%	10	20	30	40	50	60	70	80	90
	Lower														
ROBOT	Upper	ROBOT	–100	100	0	%	—	–100	–66	–50	0	26	50	100	—
	Lower														
CHORUS	Upper	CHORUS	10	32 000	2 000	ms	1/4	1/2	1/1	2/1	4/1	8/1	16/1	32/1	64/1
	Lower														
ROLL	Upper	ROLL	10	4 000	500	ms	1/16	1/8	1/4	1/2	1/1	2/1	4/1	8/1	16/1
	Lower														
REV ROLL	Upper	REVERSE	10	4 000	500	ms	1/16	1/8	1/4	1/2	1/1	2/1	4/1	8/1	16/1
	Lower	ROLL													
SND/RTN	Upper	SEND/													
	Lower	RETURN													

Shaded items ▭ are not displayed.

CONNECTION PANEL

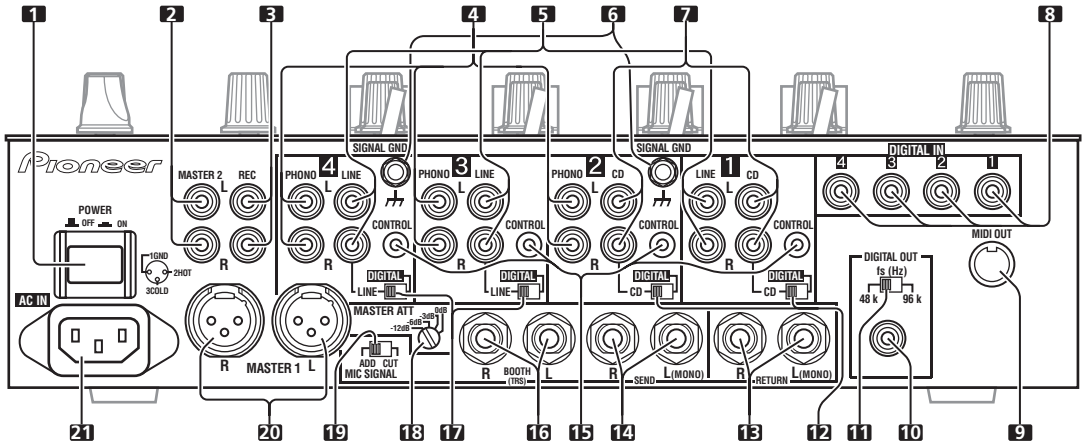

1. POWER switch

2. MASTER 2 output connectors
RCA type unbalanced output.

3. Recording output connectors (REC)
RCA type output connectors for recording.

4. PHONO input connectors
RCA type phono level (MM cartridge) input connectors.
Do not use for inputting line level signals.

5. LINE input connectors
RCA type line level input connectors.
Use to connect a cassette deck or other line level output component.

6. Signal grounding terminals (SIGNAL GND)
Use to connect ground wires from analog players.
This is not a safety grounding terminal.

7. CD input connectors
RCA type line level input connectors.
Use to connect a DJ CD player or other line level output component.

8. DIGITAL IN connectors
RCA type digital coaxial input connectors.
Use to connect to DJ CD player or other digital coaxial output connectors.

9. MIDI OUT connector
DIN type output connector.
Use to connect to other MIDI component .

10. DIGITAL OUT connector
RCA type digital coaxial output connector.
Master audio digital output.

11. Sampling frequency selector switch (fs 48 k/96 k)
Use to set the sampling frequency of the digital output to 96 kHz/24-bit or 48 kHz/24-bit.

12. DIGITAL/CD input selector switches
Use to select either analog input (**CD**) or digital input (**DIGITAL IN**).

13. RETURN connectors
Ø6.3 mm phone-type input connectors.
Use to connect to the output connectors of external effectors or similar components.
When the L channel only is connected, the L channel input is simultaneously input to the R channel.

14. SEND output connectors
Ø6.3 mm phone-type output connectors.
Use to connect to the input connectors of external effectors or other similar components. When the L channel only is connected, a L+R monaural signal is output.

15. CONTROL connectors
Ø3.5 mm mini-connector. Use to connect to the control connector of a Pioneer DJ CD player.
When the connectors are connected, the DJM-800's fader can be used to perform start/stop on the DJ CD player.

16. BOOTH monitor output connectors
Ø6.3 mm phone-type booth monitor output connectors.
The sound level from these connectors is controlled independently by the **BOOTH MONITOR** level dial, regardless of the position of the **MASTER LEVEL** dial. (These connectors are TRS output, so they support both balanced and unbalanced outputs.)

17. DIGITAL/LINE input selector switches
Use to select either analog input (**LINE**) or digital input (**DIGITAL IN**).

18. Master output attenuator switch (MASTER ATT)
Use to attenuate the level of the master 1 and master 2 outputs. Selectable values are 0 dB, –3 dB, –6 dB and –12 dB.

19. Microphone signal switch (MIC SIGNAL ADD/CUT)
When set to the [**ADD**] position, the sounds from microphone 1 and microphone 2 are output to the **BOOTH** monitor output connectors.
When set to the [**CUT**] position, the sounds from microphone 1 and microphone 2 are not output to the **BOOTH** monitor output connectors.

20. MASTER 1 output connectors
XLR type (male) balanced output.
- When using a cord with RCA-type plug, users are recommended to connect the plug directly to the **MASTER 2** connectors without using an XLR/RCA converter plug.

21. Power inlet (AC IN)
Use the accessory power cord to connect to an AC power outlet of the proper voltage.

9. ROTARY VOLUME KIT (DJC-800RV)

9.1 PACKING SECTION

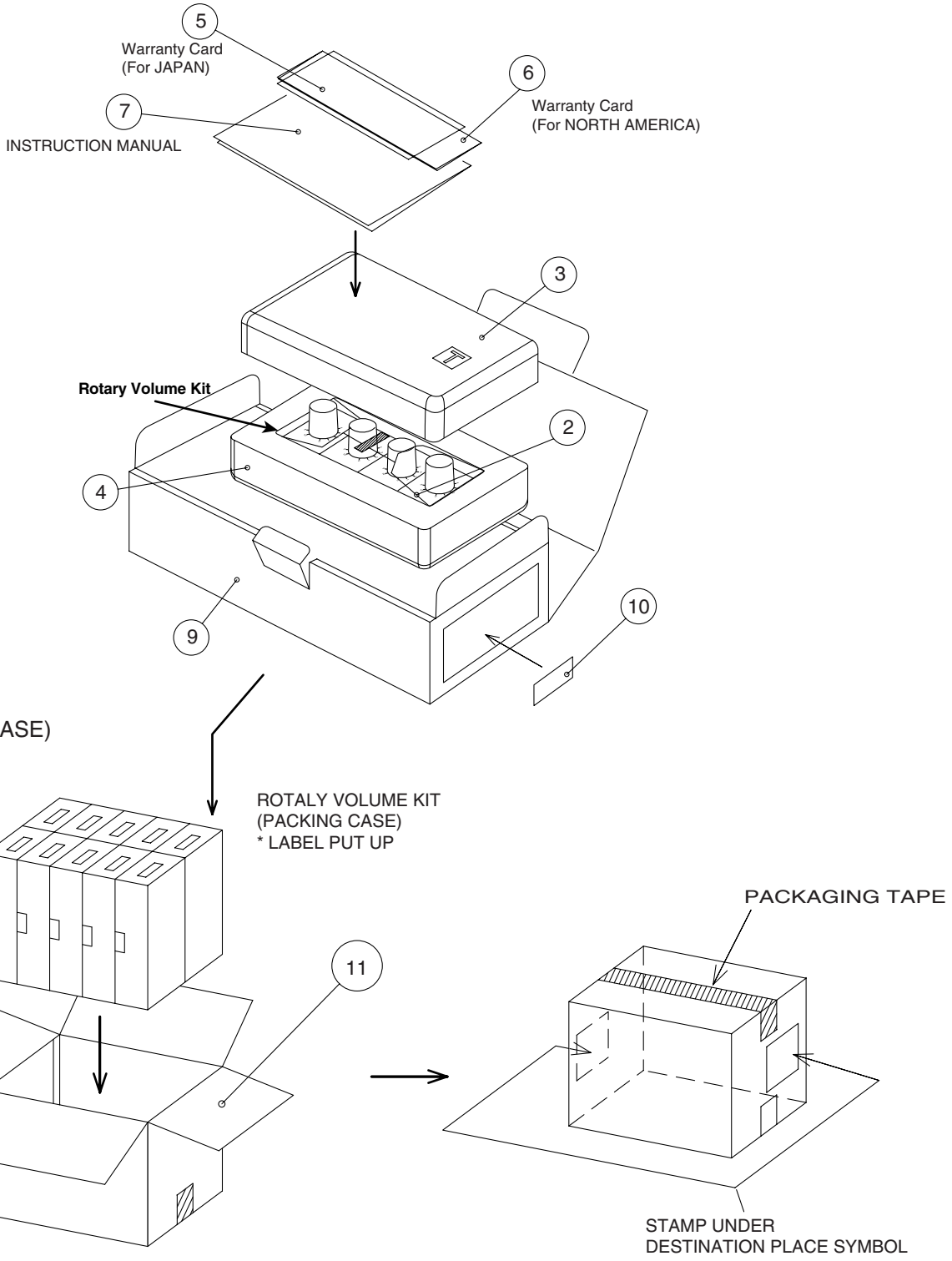

• PACKING SECTION parts List

Mark	No.	Description	Part No.
	1	• • • •	
	2	Mirror Mat (300*230)	DHL1155
	3	TOP Pad	DHA1708
	4	BOTTOM Pad	DHA1709
NSP	5	Warranty Card (Japan)	DRY1235
NSP	6	Warranty Card(North America)	ARY7043
	7	Instruction Manual	DRC1280
	8	• • • •	
	9	Packing Case	DHG2615
NSP	10	Serial Label (UPC)	DRW2311
	11	Master Carton	DHG2616

9.2 EXTERIOR SECTION

(Front)

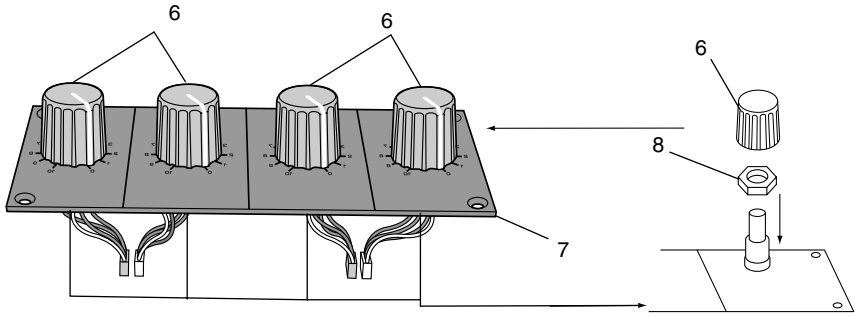

(Back)

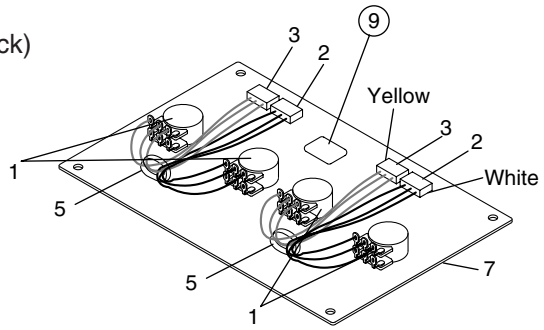

• EXTERIOR SECTION parts List

Mark	No.	Description	Part No.
	1	Potentiometer	DCS1088
	2	Connector Assy (W)	DKP3765
	3	Connector Assy (Y)	DKP3766
	4	• • • •	
	5	Binder (SKB-90BK)	ZCA-SKB90BK
	6	VR Knob (ISO)	DAA1165
	7	CHF Panel (RV)	DAH2432
	8	Flange Nut M7	DBN1011
NSP	9	CE Mark Label (UP)	RRW1221
	10	• • • •	

9.3 SCHEMATIC DIAGAM

DJC-800RV/ZXJ/WL5

Note: Although the ref. numbers for the CH1/CH3 FADER Assys are different, they are identical, and their functions in the circuitry are the same. You can connect to either of them.

Note: Although the ref. numbers for the CH2/CH4 FADER Assys are different, they are identical, and their functions in the circuitry are the same. You can connect to either of them.

CH1/CH3 FADER

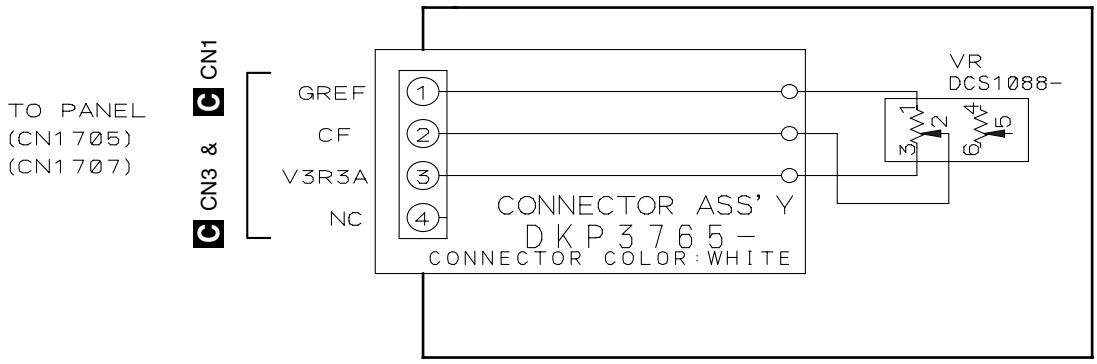

CH2/CH4 FADER

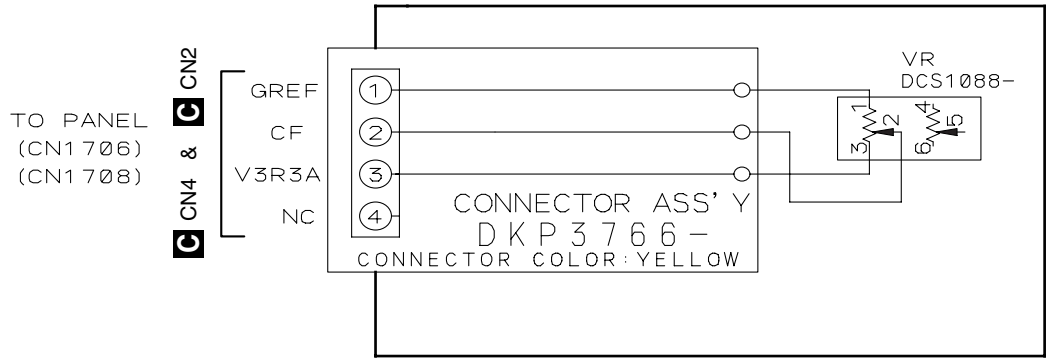

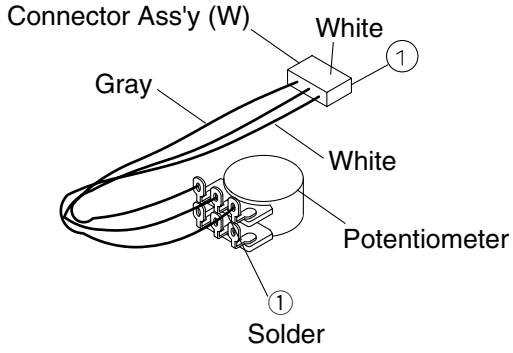

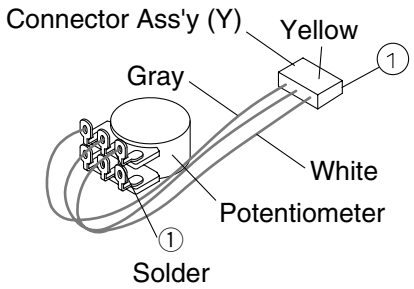

9.4 DISASSEMBLY

⚠WARNING

Do not attempt to install this kit by your-self!

This kit requires professional expertise and must be installed by a specially trained technician. For details, inquire at your nearest authorized Pioneer service center. (Consult your retail dealer for more information regarding authorized Pioneer service centers.)

NOTE:
Installation of this kit requires specialized professional training and expertise. Consult your nearest authorized Pioneer service center for installation(installation fee must be paid by user).
Attempting to install this kit by yourself can be very dangerous, and may result not only in damage to the unit, but fire or electrical shock. Pioneer can accept no liability for injuries or damages resulting from installations or modifications performed by the cus-tomer.

To the Installing Service Personnel

Install this panel unit as depicted in the accompanying illustrations and instructions.

- Before beginning work, be sure to disconnect the power cord from its supply outlet.

1. Pull off the 4 fader slider knobs.

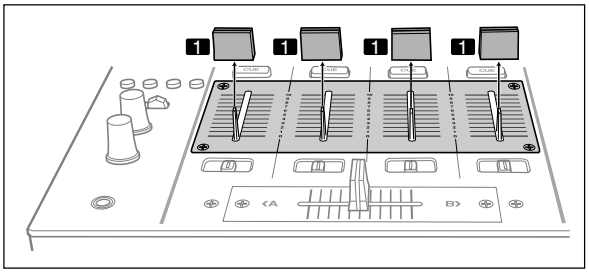

2. Remove the 4 screws at the four corners of the fader panel, and remove the panel.

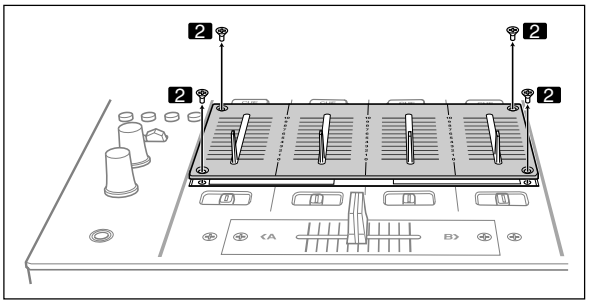

3. Disconnect the 4 cable connectors.

4. Remove the 2 mounting screws for each slide volume (total 8 screws), and remove the 4 slide volumes.

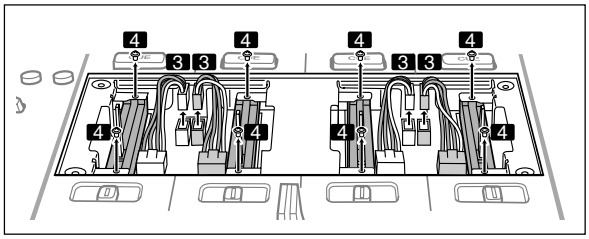

5. Connect the 4 cable connectors for the fader units to be installed (total 4).

- Insert the connectors securely, taking care not to mistake the order in which the connectors are attached (connectors for odd-numbered channels are white, while connectors for even-numbered channels are yellow. Attach connectors of the same color together).

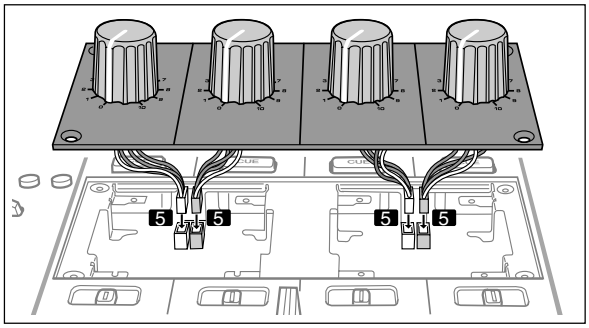

6. Insert the Fader panel and fasten with thelfour corner screws (total 4).

- Take care not to allow any wiring to be caughtunder the panel.

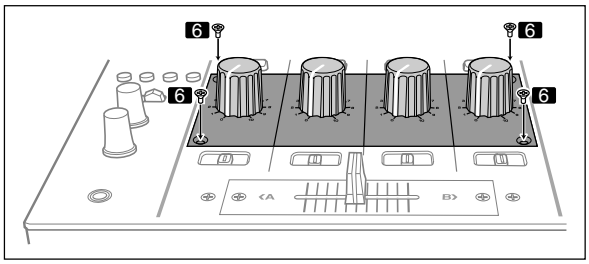

- Carefully store all removed parts (lever knobs (4), panel (1), slide volumes (4), and mounting screws (8)).

■ Jigs list

Jig No.	Jig Name	Remarks
GGF 1490	RS-232C jig	used for firmware download
djm800-xxxx. mot	Program up date file	used for firmware download