THIS DOCUMENT CONTAINS PROPRIETARY INFORMATION WHICH IS THE PROPERTY OF QSC AUDIO PRODUCTS. THAT MAY NOT BE DISCLOSED, REPRODUCED OR USED WITHOUT EXPRESS WRITTEN CONSENT FROM QSC AUDIO PRODUCTS.

REVISION				
REV	DESCRIPTION	EFF. DATE	CHK	APPROVED / DATE
1	PROTOTYPE RELEASE 5-1-96 AC			
2	PROTOTYPE RELEASE 5-15-96 AC			
A	PRODUCTION RELEASE PER ECO 3182 AC	6-21-96		

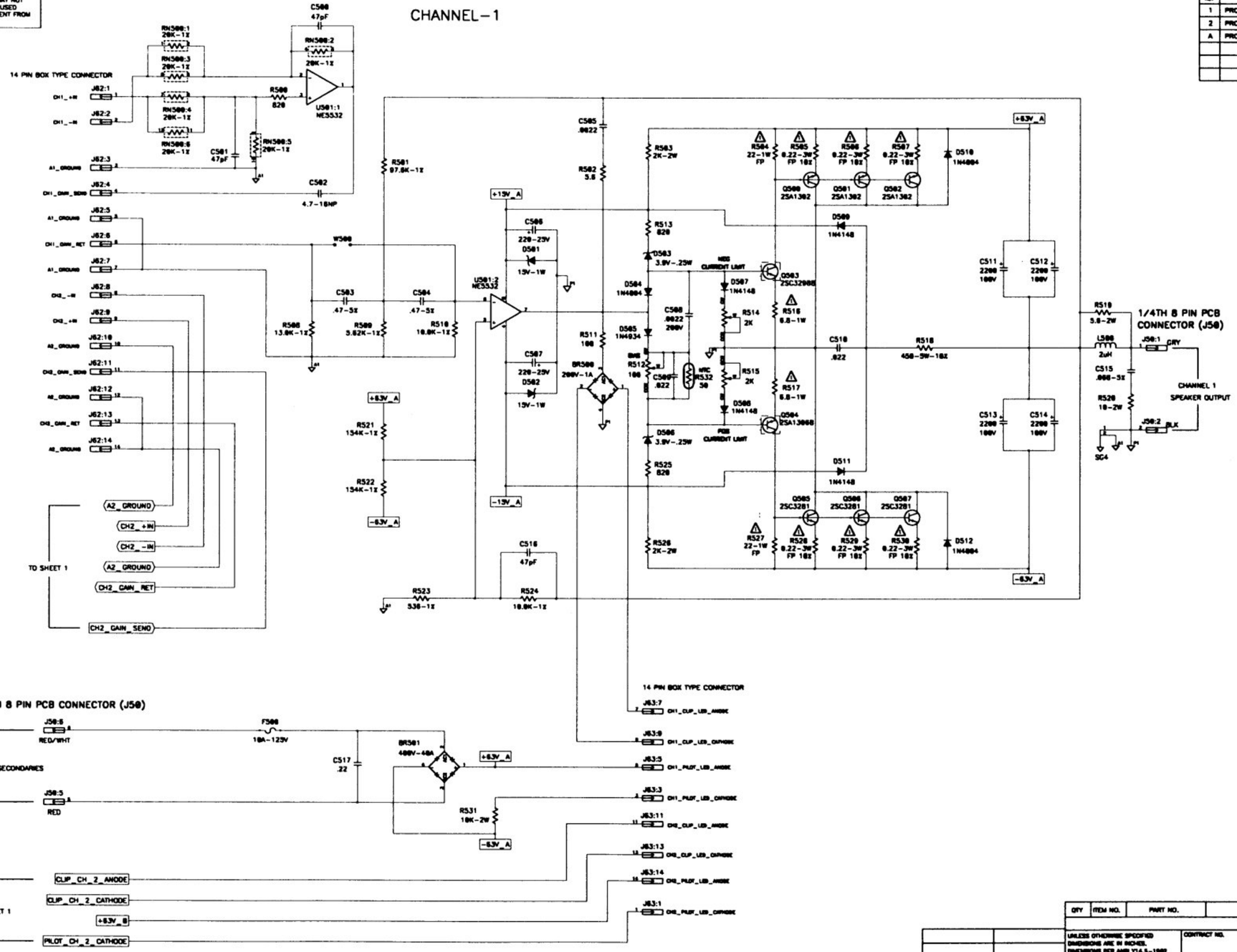

3. USE QSC REPLACEMENT TRANSISTORS ONLY.
2. ALL CAPACITORS IN uF, 100V UNLESS SHOWN.
1. ALL RESISTOR VALUES ARE IN OHM 5%, 1/4W,
NOTES: UNLESS OTHERWISE SPECIFIED

5. ALL RESISTORS MARKED "FP" ARE FLAMEPROOF CONSTRUCTION AND MINIMUM OF 1/2W.
4. REPLACE PARTS MARKED ⚠ AND FP WITH SAME TYPE ONLY FOR CONTINUED SAFETY.

QTY	ITEM NO.	PART NO.	DESCRIPTION	VENDOR

PARTS LIST

MP-000046-XX	CX4/4T
NEXT ASSY	USED ON
APPLICATION	

UNLESS OTHERWISE SPECIFIED DIMENSIONS ARE IN INCHES. DIMENSIONS PER ANSI Y14.5-1982 TOLERANCES ARE: DECIMALS .XX ± .XXX ± ANGLES 0. DEBURR EDGES .XXX R MAX. MATERIAL. FINISH. DO NOT SCALE DRAWING

CONTRACT NO.

APPROVALS	DATE
DRAWN Rodney C. Hume	3/25/96
CHECKED	
ISSUED	
CAD SEED FILE NO.	Fri Aug 02 1996

QSC AUDIO PRODUCTS, INC.
COSTA MESA, CALIFORNIA

SCHEMATIC DIAGRAM
CX4/4T MAIN PCB

SIZE D | FSCM NO. | DWG NO. SH-000046-00 | REV A
SCALE NONE | CAD FILE NO. | SHEET 1 OF 2

SH-000046-00 A 1

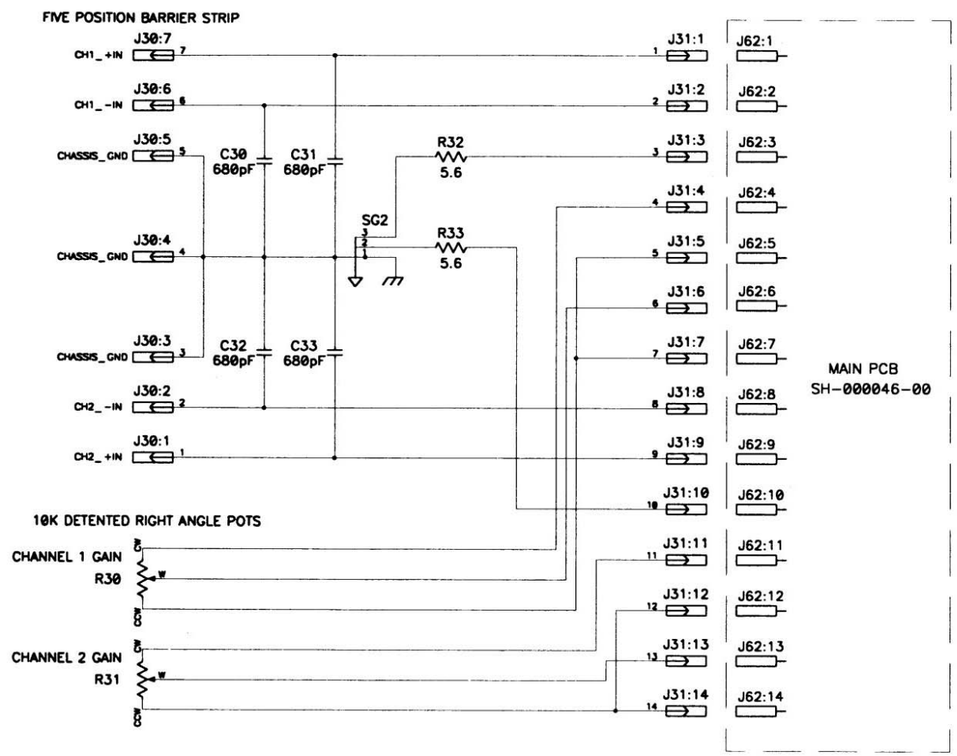

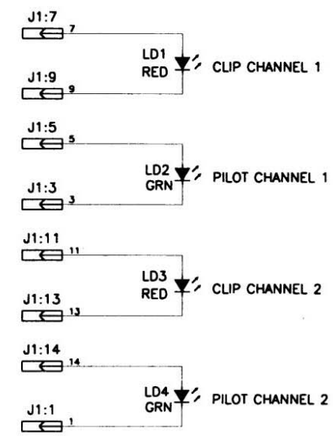

1. ALL RESISTOR VALUES ARE IN OHM 5%, 1/4W,

CX4/4T INPUT PCB

SH-000047-00

CX4/4T DISPLAY PCB

SH-000048-00