STUDER

TLS2000

SERVICEANLEITUNG
SERVICE INSTRUCTIONS

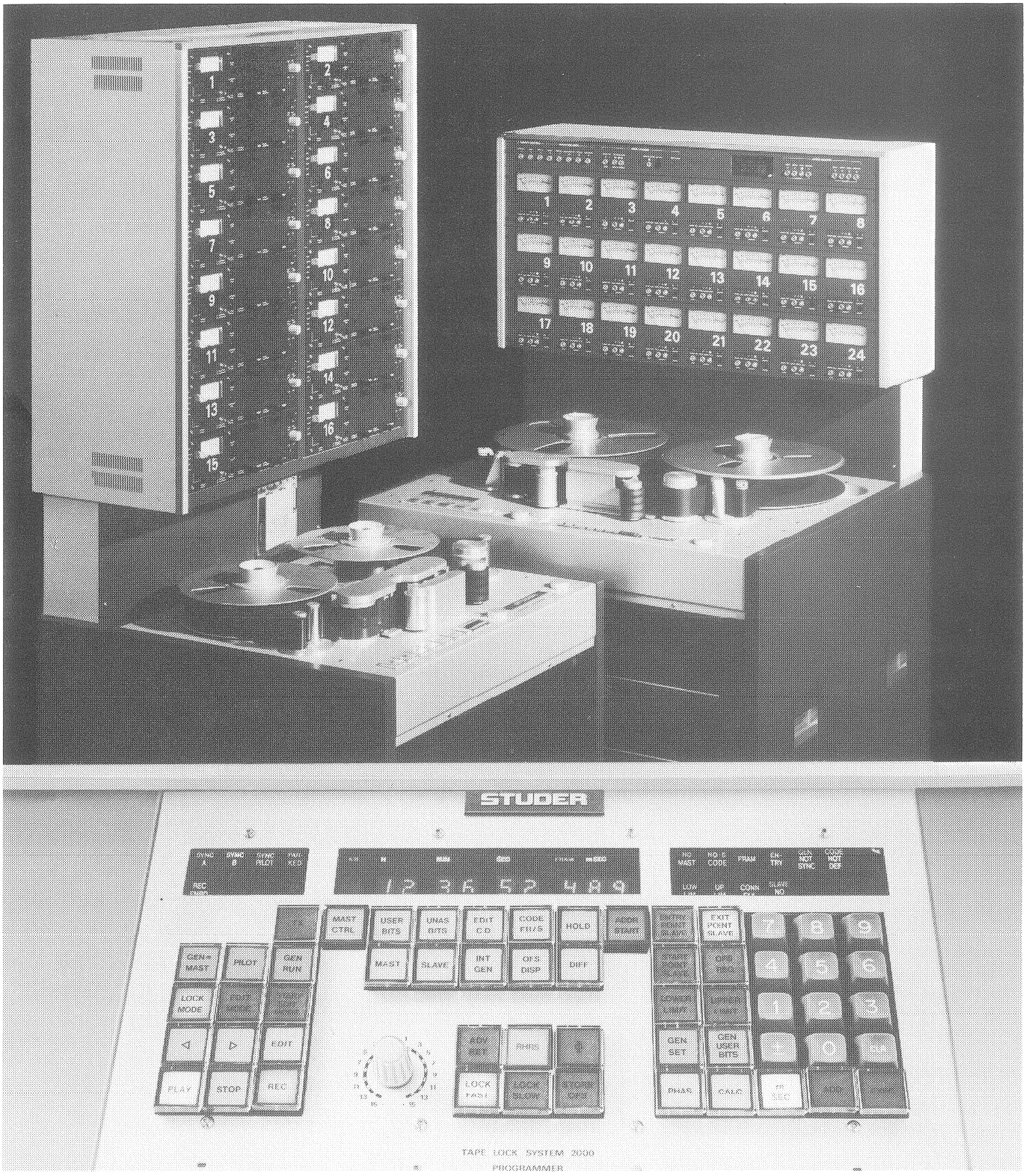

VORWORT

Das vorliegende Buch ist eine Neufassung und ersetzt sämtliche bisherigen Serviceunterlagen, die zum TLS 2000 erschienen sind.

Kapitel 1 enthält Hinweise zum Gebrauch dieser Anleitung.

In den Kapiteln 2–5 ist das Slave Rack dokumentiert mit Schemata, Schaltungsbeschreibungen, Anschlussmöglichkeiten und Verdrahtungslisten.

Kapitel 6 behandelt die Peripheriegeräte zum Slave Prozessor Rack.

Im Kapitel 7 finden sich alle Informationen über die möglichen Mastercodequellen.

Kapitel 8 und 9 enthalten Informationen über die möglichen Slave-Laufwerke A80 und A800.

PREFACE

This book is a new edition and replaces all earlier service informations and sets of schematics concerning the TLS 2000.

Section 1 contains remarks how to use this manual.

In sections 2 to 5 you find all informations concerning the slave processor rack e.g. schematics, descriptions of circuits, connectors and wiring lists.

Section 6 treats the peripheral equipment to the slave processor rack.

In section 7 you find informations about the possible master code sources.

Sections 8 and 9 contain the schematics of the TLS circuits in the slave transports A800 and A80.

Prepared and edited by

STUDER-REVOX
Technical documentation
Althardstrasse 146
CH-8105 Regensdorf-Zurich
Switzerland

We reserve the right to make alterations.

Copyright by Willi Studer
Printed in Switzerland

Order number 23.251.582.ED1

SECTION 1	HINWEISE ZUM GEBRAUCH DIESER ANLEITUNG	HOW TO USE THIS MANUAL
	Aufbau der Anleitung, Blockschemata, Codepfad, Zusatzinformationen auf den Schemata	Presentation of the information, block diagrams, code signal path, additional information on schematics
SECTION 2	SCHEMATA SLAVE RACK PLÄTZE 1 - 20	SCHEMATICS SLAVE RACK LOCATIONS 1 - 20
SECTION 3	SCHALTUNGSBESCHREIBUNGEN SLAVE PLÄTZE 1 - 20	CIRCUIT DESCRIPTIONS SLAVE RACK LOCATIONS 1 - 20
SECTION 4	AUFBAU UND VERDRAHTUNG DES BACK PANELS	BACK PANELS ORGANIZATION AND WIRING
	Varianten, Gruppeneinteilung, Numerierung der Stecker, Signalnamen, Verdrahtungslisten	Versions, classification of groups, numeration of the back panel plugs, signal names, wiring lists
SECTION 5	ANSCHLUSSFELDER DES SLAVE RACK	SLAVE RACK CONNECTION FIELDS
SECTION 6	SLAVE PERIPHERIE	SLAVE PERIPHERAL EQUIPMENTS
	Main Programmer, Code Kanal Fernbedienung Parallel-Serie — Wandler, Netzteile, Basic Programmer	Main programmer unit, code channel remote control, parallel-serial converter, power supply units, basic programmer unit
SECTION 7	MASTER/INTERFACE RACK	MASTER/INTERFACE RACK
	Interface Rack allgemein, Switch Set, verschiedene Master Control Ausrüstungen; TLS - Adress-Start, Ext. Freq. Converter	General/Interface rack, switch set, various master control sets, TLS - Address-Start, External frequency converter
SECTION 8	TLS–KREISE IN A800	TLS–CIRCUITS IN A800
SECTION 9	TLS–KREISE IN A80	TLS–CIRCUITS IN A80
	Die detaillierten Inhaltsverzeichnisse finden Sie zu Beginn der einzelnen Kapitel.	You find the detailed tables of contents at the beginning of every section.

Behandlung von MOS-Bauteilen

MOS-Bausteine sind besonders empfindlich auf elektrostatische Ladungen. Folgendes ist daher zu beachten:

1. Elektrostatisch empfindliche Bauteile werden in Schutzverpackungen gelagert und transportiert. Auf der Schutzverpackung wird untenstehende Etikette angebracht.

2. Jeglicher Kontakt der Elementanschlüsse mit Kunststofftüten und -folien aus Styropor oder ähnlichen elektrostatisch aufladbaren Materialien ist unter allen Umständen zu vermeiden.

3. Beine nicht berühren oder nur dann, wenn das Handgelenk geerdet ist.

4. Als Arbeitsunterlage eine geerdete, leitende Matte verwenden.
5. Printkarten nicht unter Spannung herausziehen oder hineinstecken.

Handling MOS components

MOS components are extremely sensitive to static charges. Please observe therefore the following regulations:

1. Components sensitive to static charges ore stored and shipped in protective packages. On the package you find the subsequent symbol.

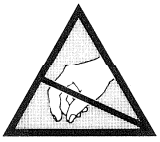

2. Avoid any contact of connector pins with foam packages and -foils made of styropor or similar chargeable package material.

3. Don't touch the connector pins when your wrist is not grounded with a conducting wristlet.

4. Use a grounded conducting mat when working with sensitive components.
5. Never plug or unplug PCBs containing sensitive components when the machine is switched on.

WORLDWIDE DISTRIBUTION

EFFECTIVE MAI 1982

Switzerland:
STUDER INTERNATIONAL AG
Althardstrasse 10
CH–8105 Regensdorf

Phone: (01) 840 29 60
Telex: 58489 stui ch

EUROPE

Germany:
STUDER REVOX GmbH
Studiotechnik
Talstrasse 7
D–7827 Löffingen

Phone: 07654/1021
Telex: 7722118 rvox d

Austria:
STUDER REVOX WIEN GES. M.B.H.
Ludwiggasse 4
A–1180 Wien

Phone: (0200) 47 33 09 / 47 34 65
Telex: 07/5275 studr a

France:
STUDER FRANCE S.A.R.L.
12 - 14, rue Desnouettes
F–75015 Paris

Phone: 533 58 58 +
Telex: studer 204744 f

Italy:
STUDER ITALIANA
Viale Campania 39
I–20133 Milano

Phone: 73 84 751 / 52 / 53
Telex: 335230 audiom
Cables: beppatomil milano

United Kingdom:
F.W.O. BAUCH LIMITED
49 Theobald Street
Boreham Wood, Herts WD6 4 RZ

Phone: 01 - 953 00 91
Telex: 27502 bauch g
Cables: bauch borehamwood

AFRICA

Republic of South Africa:
STUDER REVOX SOUTH AFRICA (PTY.) LTD
P.O. Box 31282
Braamfontein 2017 (Johannesburg)

Phone: 35 - 90 76/77
Telex: 4-22401
Cables: revox hifi johannesburg

FAR EAST

Hong Kong:
STUDER REVOX FAR EAST LTD
5th Floor, Parklane Building
233 - 235 Queen's Road, Central
Hong Kong

Phone: 5 - 45 96 88 / 5 - 44 13 10 / 5 - 45 99 24
Telex: 60185 srfel hx

Japan:
KAWAMURA ELECTRICAL LABORATORY
No. 34, Yarai - cho
Shinjuku - ku
Tokyo 162

Phone: (03) 260 - 0401
Telex: j22748 zigzag
Cables: zigzag tokyo

Australia:
SYNTEC INTERNATIONAL PTY LTD
P.O. Box 165
North Sydney
Australia 2060

Phone: 4064700,4064557,4064627
Telex: 70570 syntec

NORTH AND SOUTH AMERICA

Canada:
STUDER REVOX CANADA LTD
14, Banigan Drive
Toronto 17, Ontario M4H 1F9

Phone: (416) 423 - 2831
Telex: 06-23310 studer tor

USA:
STUDER REVOX AMERICA INC.
1425 Elm Hill Pike
Nashville, Tennessee 37210

Phone: (615) 254 - 5651
Telex: 065230/554453 studer nas

Brazil:
CENTELEC
Equipamentos e Sistemas Electronicos Ltd.
Av. Ataulfo de Paiva 135/1710
22440 Rio de Janeiro - RJ

Phone: (021) 259 36 99
Telex: 2130842 cosl br

SICHERHEIT UND ERSTE HILFE

SICHERHEIT

Durch Entfernen von Gehäuseteilen, Abschirmungen etc. werden stromführende Teile freigelegt. Aus diesem Grunde müssen die folgenden Sicherheitsvorschriften unbedingt beachtet werden:

1. Eingriffe in ein Gerät
dürfen nur von Fachpersonal vorgenommen werden.

2. Vor Entfernen von Gehäuseteilen:
Gerät ausschalten und vom Netz trennen.

3. Bei geöffnetem Gerät:
- Netzteil- oder Motorkondensatoren mit einem passenden Widerstand entladen.
- Bauteile grosser Leistung, wie Leistungstransistoren und -widerstände sowie Magnetspulen und Wickelmotoren erst nach dem Abkühlen berühren.

4. Servicearbeiten bei geöffnetem, unter Spannung stehendem Gerät:
- Keine blanken Schaltungsteile berühren
- Isolierte Werkzeuge verwenden
- Metallene Halbleitergehäuse nicht berühren, da sie hohe Spannungen aufweisen können.

ERSTE HILFE (bei Stromunfällen)

1. Bei einem Stromunfall die betroffene Person raschmöglichst vom Strom trennen:
- Durch Ausschalten des Gerätes
- Ausziehen oder Unterbrechen der Netzzuleitung
- Betroffene Person mit isolierendem Material (Holz, Kunstoff) von der Gefahrenquelle wegstossen
- Nach einem Stromunfall sollte immer ein Arzt aufgesucht werden.

ACHTUNG
EINE UNTER SPANNUNG STEHENDE PERSON DARF NICHT BERÜHRT WERDEN, SIE KÖNNEN DABEI SELBST ELEKTRISIERT WERDEN!

2. Bei Bewusstlosigkeit des Verunfallten:
- Puls kontrollieren,
- bei ausgesetzter Atmung künstlich beatmen,
- Seitenlagerung des Verunfallten und Arzt verständigen.

SAFETY AND FIRST AID

SAFETY

There are no user serviceable components inside the equipment, live parts are laid open when removing protective covers and shieldings. It is essential therefore to ensure that the subsequent safety rules are strictly observed when performing service work or repairs.

1. Servicing of electronic equipment
must be performed by qualified personnel only.

2. Before removing covers:
Switch off the equipment and unplug the mains cable.

3. When the equipment is open:
- Discharge power supply- and motor capacitors through a suitable resistor.
- Components, that carry heavy electrical loads, such as power transistors and resistors as well as solenoid coils and motors should not be touched before a cooling off interval, as a precaution to avoid burns.

4. Servicing unprotected and operating equipment:
- Never touch bare wires or circuitry
- Use insulated tools only
- Never touch metal semiconductor cases because they may carry high voltages.

FIRST AID (in case of electric shock)

1. Separate the person as quickly as possible from the electric power source:
- by switching off the equipment,
- unplugging or disconnecting the mains cable,
- pushing the person away from the power source by using dry insulating material (such as wood or plastic).
- After having sustained an electric shock, always consult a doctor.

WARNING:
DO NOT TOUCH THE PERSON OR HIS CLOTHING BEFORE POWER IS TURNED OFF, OTHERWISE YOU STAND THE RISK OF SUSTAINING AN ELECTRIC SHOCK AS WELL!

2. If the person is unconscious
- Check the pulse,
- reanimate the person if respiration is poor,
- lay the body down and turn it to one side, call for a doctor immediately.

SÉCURITÉ ET PREMIERS SECOURS

SÉCURITÉ

Si les couvercles de protection sont enlevés, les parties de l'appareil qui sont sous tension ne sont plus protégées. Il est donc d'une nécessitée absolue de suivre les instructions suivantes:

1. Les intervensions dans les appareils électriques
doivent être faites uniquement que par du personnel qualifié

2. Avant d'enlever les couvercles de protection:
Couper l'interrupteur principal et débrancher le câble secteur.

3. Après avoir enlevé les couvercles de protection:
- Les condensateurs de l'alimentation et des moteurs doivent être déchargés à l'aide d'une résistance appropriée.
- Il est prudent de laisser refroidir les composants de haute puissance, par ex.: transistors de puissance, résistances de puissances de même que des électro-aimants et les moteurs de bobinage.

4. S'il faut que l'appareil soit sous tension pendent les réglages internes:
- Ne jamais toucher les circuits non isolés
- Travailler seulement avec des outils isolés

PREMIERS SECOURS (en cas d'électrocution)

1. Si la personne est dans l'impossibilité de se libérer:
- Couper l'interrupteur principal
- Couper le courant
- Repousser la personne de l'appareil à l'aide d'un objet en matière non conductrice (matière plastique ou boîs)
- Après une électrocution, consulter un médecin.

ATTENTION
NE JAMAIS TOUCHER UNE PERSONNE QUI EST SOUS TENSION, SOUS PEINE DE SUBIR ÉGALEMENT UNE ÉLECTROCUTION!

2. En cas de perte de connaissance de la personne électrocutée:
- Controller le pouls
- Si nécessaire, pratiquer la respiration artificielle
- Mettre l'accidenté sur le coté latérale et consulter un médecin.

UPDATING LIST OF COMPONENTS (MAY 1982)

2/24, 25	**ARITHEMTIC CONTROL B**			**1.228.405–71**			
	– IC 49	50.05.0215	93 L 34 PC		CHANGE TO	50.06.0259	74 LS 259 PC
2/32, 33	**PERIPHERAL CONTROL B**			**1.228.407–71**			
	– IC 19	50.05.0215	93 L 34 PC		CHANGE TO	50.06.0259	74 LS 259 PC
	– IC 29	"	"		"	"	"
2/36, 37, 38, 39	**TAPE DECK INTERFACE**			**1.228.408–73**			
	– A 26	1.228.590–81	ASS 08–26		CHANGE TO	1.228.589–00	ASS 08–26
	– IC 28	50.05.0215	93 L 34 PC		"	50.06.0259	74 LS 259 PC
	– IC 29	"	"		"	"	"
2/51, 52, 53	**TLS INTERFACE TO A800**			**1.228.487–00**	**CHANGE TO**	**1.228.487–81**	
	– IC 23	50.05.0215	93 L 34 PC		CHANGE TO	50.06.0259	74 LS 259 PC
	– IC 27	"	"		"	"	"
2/56, 57	**PARALLEL CONNECTED PROGRAMMER**			**1.228.409–71**			
	– IC 21	50.05.0215	93 L 34 PC		CHANGE TO	50.06.0259	74 LS 259 PC
	– IC 22	"	"		"	"	"
2/60, 61	**PARALLEL CONNECTED PROGRAMMER TRANSMITTER**			**1.228.410–72**			
	– IC 31...38	50.05.0215	93 L 34 PC		CHANGE TO	50.06.0259	74 LS 259 PC
2/72, 73	**DEMODULATOR**			**1.228.413–71**			
	– IC 431	50.05.0207	TCA 680 B		CHANGE TO	50.05.0243	NE 55 34 P
	– IC 432	"	"		"	"	"
2/85, 86, 87	**BASIC PROGRAMMER INTERFACE**			**1.228.417–72**	**CHANGE TO**	**1.228.417–81**	
	– IC 21	50.05.0215	93 L 34 PC		CHANGE TO	50.06.0259	74 LS 259 PC
	– IC 26	"	"		"	"	"
	– IC 28	"	"		"	"	"
	– IC 27	"	"		"	"	"
2/90, 91	**CODE CHANNEL CONTROL IF A800**			**1.228.489–81**			
	– IC 13	50.05.0215	93 L 34 PC		CHANGE TO	50.06.0259	74 LS 259 PC
	– IC 27	"	"		"	"	"
6/24, 25	**PARALLEL CONNECTED PROGRAMMER**			**1.228.409–71**			
	– IC 21	50.05.0215	93 L 34 PC		CHANGE TO	50.06.0259	74 LS 259 PC
	– IC 22	"	"		"	"	"
6/26, 27	**PARALLEL CONNECTED PROGRAMMER TRANSMITTER**			**1.228.410–72**			
	– IC 31...38	50.05.0215	93 L 34 PC		CHANGE TO	50.06.0259	74 LS 259 PC

INHALTSVERZEICHNIS TABLE OF CONTENTS SECTION 1

1.	HINWEISE ZUM GEBRAUCH DIESER ANLEITUNG	1.	HOW TO USE THIS MANUAL	SEITE PAGE
1.1	AUFBAU DES MANUALS	1.1	PRESENTATION OF THE INFORMATION	1/1
1.1.1	PRINZIP DES SYNCHRONISIERSYSTEMS TLS2000	1.1.1	PRINCIPLE OF THE SYNCHRONIZATION SYSTEM TLS2000	1/1
1.1.2	HILFSSYMBOLE	1.1.2	REFERENCE SYMBOLS	1/1
1.1.3	HARDWAREUBERSICHT	1.1.3	HARDWARE OVERVIEW	1/3
1.1.4	SOFTWAREÜBERSICHT	1.1.4	SOFTWARE OVERVIEW	1/5
1.2	BLOCKSCHEMA UND CODEPFADBESCHREIBUNG	1.2	BLOCK DIAGRAM AND CODE PATH DESCRIPTION	1/7
1.2.1	TLS2000 / A80	1.2.1	TLS2000 / A80	1/8
1.2.2	TLS2000 / A800	1.2.2	TLS2000 / A800	1/12
1.2.3	CODEVERLAUF IN MASTER, SLAVE UND SLAVE PROZESSOR	1.2.3	CODE BEHAVIOUR IN MASTER, SLAVE AND SLAVE PROCESSOR	1/14
1.3	ERLAEUTERUNGEN DER ZUSATZINFORMATIONEN AUF DEN SCHEMATA	1.3	EXPLANATION OF THE SUPPLEMENTARY INFORMATION ON THE DIAGRAMS	1/17
1.3.1	SYMBOLE	1.3.1	SYMBOLS	1/17
1.3.2	REFERENCE DESIGNATORS	1.3.2	REFERENCE DESIGNATORS	1/18
1.3.3	ORGANISATION DER WRAP KARTEN IM SLAVE RACK	1.3.3	LAYOUT OF THE WRAP BOARDS IN THE SLAVE RACK	1/19

1.
HINWEISE ZUM GEBRAUCH DIESER ANLEITUNG

1.1
AUFBAU DES MANUALS

1.1.1
Prinzip des Synchronisiersystems TLS 2000

Das Synchronisiersystem TLS 2000 besteht funktionsmässig aus 3 Komponenten:

- Master
- Slave Processor mit Peripherie
- Slave

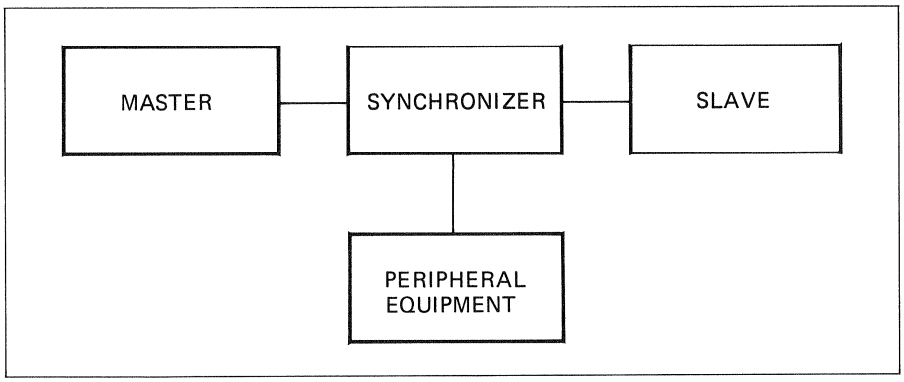

Fig. 1.1 Prinzipschema des TLS 2000

Je nachdem was für Geräte miteinander synchronisiert werden sollen, wird der effektive Aufbau unterschiedlich kompliziert. Um den Überblick zu gewährleisten, findet sich vor jedem Kapitel ein Übersichtsschema, das in seiner räumlichen Gliederung dem Prinzipschema aus Figur 1.1 entspricht. Dieses Übersichtsschema wird im Abschnitt 1.1.3 ausführlich erklärt.

1.1.2
Hilfssymbole

Eine weitere Orientierungshilfe in dieser Service Anleitung sind verschiedene Symbole, die am rechten oberen Seitenrand plaziert sind und angeben, von welcher Funktionseinheit auf der betreffenden Seite oder im betreffenden Abschnitt die Rede ist.

1.
HOW TO USE THIS MANUAL

1.1
PRESENTATION OF THE INFORMATION

1.1.1
Principle of the synchronization system TLS 2000

From a functional point of view, the TLS 2000 synchronization system comprises the following 3 components:

- Master
- Slave processor with peripherals
- Slave

Fig. 1.1 Elementary diagram of the TLS 2000

Depending on the type of machines to be synchronized with each other, the actual arrangements differ in complexity. For easier reference, a general arrangement diagram similar to the elementary diagram shown in Fig. 1.1 is included at the beginning of each section. This general arrangement diagram is described in detail in section 1.1.3.

1.1.2
Reference symbols

To speed up the search for information, various symbols have been placed on the upper right edge of the pages in this maintenance manual. From these symbols the reader can determine at a glance the type of functional unit that is being discussed on the corresponding page.

A800	Information über A800 allgemein	A800	Information concerning the A800 in general
A800 S	Information über A800 mit Serie Programmer (nur Kapitel 4: Wiring Lists)	A800 S	Information concerning the A800 equipped with serial programmer (only in section 4: wiring lists)
A800 P	Information über A800 mit Parallel Programmer (nur Kapitel 4: Wiring Lists)	A800 P	Information concerning the A800 equipped with parallel programmer (only section 4: wiring lists)
A80 MASTER	Information über A80 als Master eingesetzt	A80 MASTER	Information concerning the A80 operating as master
A80 MASTER-CONTROL	Information über A80 mit Master Controlfunktion oder Master Control und Rehearse	A80 MASTER-CONTROL	Information concerning the A80 equipped with master control function or master control + rehearse
A80 MASTER-CONTROL REHEARS	Spezifische Information über A80 mit Master Controlfunktion und Rehearse	A80 MASTER-CONTROL REHEARS	Specific information concerning the A80 equipped with master control function and rehearse
A80 LOCATOR	Information über A80 Locatorversion	A80 LOCATOR	Information concerning A80 locator version
1 SLAVE RACK LOCATION	Ort, wo der gerade behandelte Print im Slave Rack untergebracht ist.	1 SLAVE RACK LOCATION	Location where the corresponding circuit board is mounted in the slave rack
TL5 INTERFACE RACK	Information über das Interface Rack	TL3 INTERFACE RACK	Information concerning the interface rack
PARALLEL SERIAL CONVERTER	Information über den Parallel-Serie Wandler	PARALLEL SERIAL CONVERTER	Information concerning the parallel-serial converter

1.1.3
Hardware overview

A80 LOCATOR | A80 MASTER-CONTROL | A800

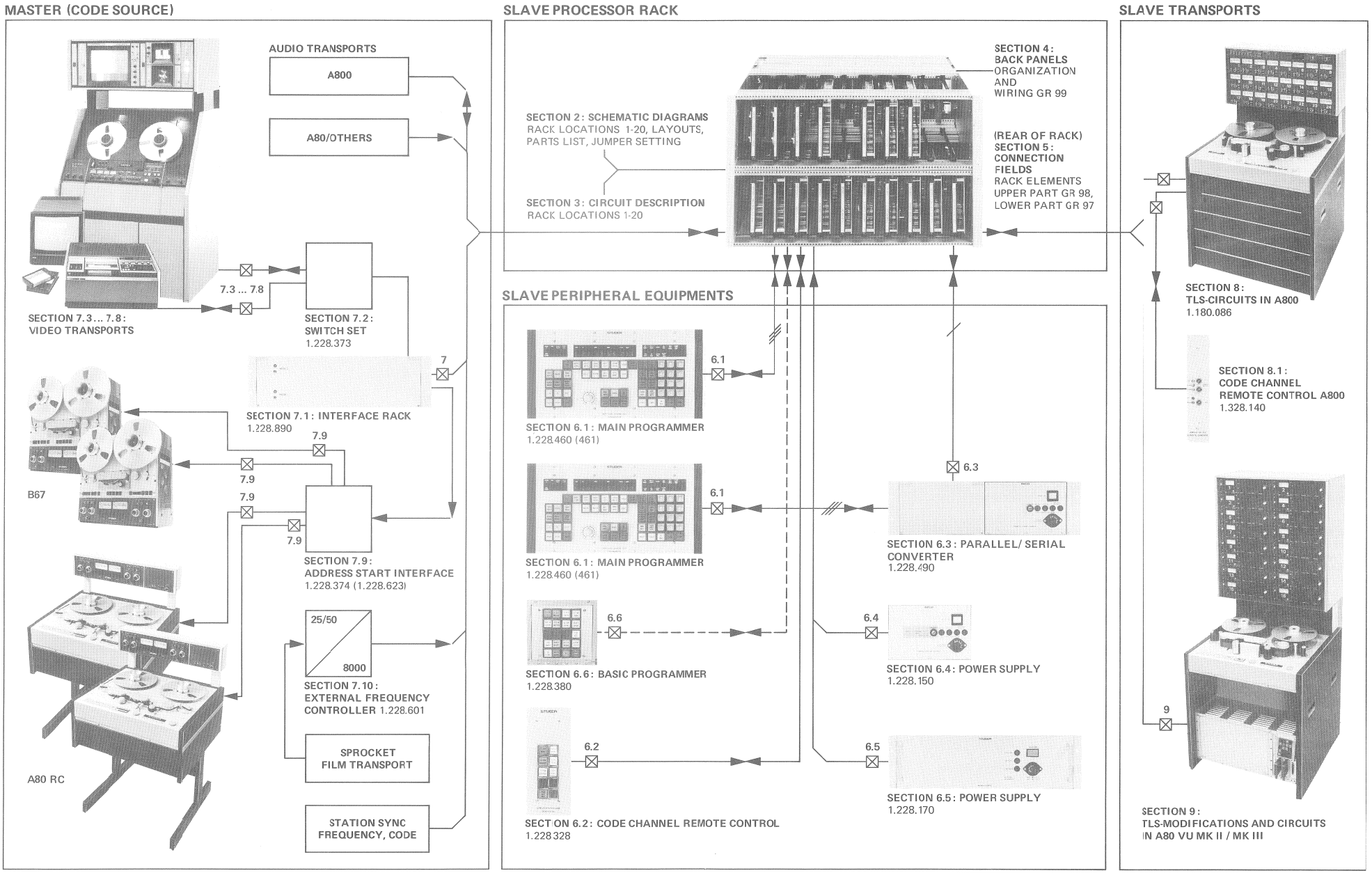

☒ INDICATES PARAGRAPH OF CABLE DESCRIPTION

Fig. 1.2

EXPLANATIONS SEE NEXT PAGE

EXPLANATIONS TO THE HARDWARE OVERVIEW

Die A800 kann ohne Umbau sowohl als Master, wie auch als Slave Maschine eingesetzt werden. Die TLS-Schaltkreise in der A800 werden im Kapitel 8 behandelt. (1)	The A800 can operate without hardware conversion either in master or slave mode. The TLS circuits of the A300 are described in section 8.
Die A80 ist unterschiedlich bestückt, je nachdem ob sie als Master oder als Slave Verwendung findet. Kapitel 9 behandelt die Schaltkreise, welche die A80 für den Betrieb mit dem TLS 2000 benötigt. (2)	The configuration of the A80 differs, depending on whether it operates in master or slave mode. Section 9 describes the circuits which are required by the A80 for operating in conjunction with the TLS 2000.
Das Switchset wird im Interface Rack eingebaut und erlaubt den Anschluss von 2 Maschinen, die abwechslungsweise als Master eingesetzt werden können. (3)	The switchset is mounted in the interface rack. Two masters can be connected which may alternately operate as the master.
Das Interface Rack enthält die Printkarten, welche die Anpassung zwischen Mastermaschine und Slave Processor übernehmen. (4)	The interface rack houses the circuit boards that are responsible for matching the communication between the master and the slave processor.
Das Address Start Interface, welches den Anschluss von bis zu 4 Zuspielmaschinen ermöglicht, ist ebenfalls im Interface Rack eingebaut. (5)	The address start interface which can accomodate up to four effect machines is also located in the interface rack.
Der External Frequency Controller ist im Slave Processor Rack eingebaut und besorgt die Anpassung von Filmmaschinensynchronisationssignalen ans TLS 2000. (6)	The external frequency controller is mounted in the slave processor rack. It is responsible for matching the film machine synchronization signals to the TLS 2000 requirements.
Grundsätzlich kann auch ein Studio-Syncsignal (konstante Frequenz oder SMPTE-Code) als Master dienen. (7)	Basically a studio sync signal (stabilized frequency or SMPTE code) can also take over the master function.
Das Slave Processor Rack enthält die gesamte Synchronisationselektronik. Die Kapitel 2 – 5 befassen sich ausführlich mit dem Processor Rack. (8)	The slave processor rack houses the entire synchronization electronics. Sections 2 through 5 of this manual describe the processor rack in full detail.
Die Peripherie zum Slave Rack umfasst Speisung und Bedienungseinheiten für das TLS 2000. (9)	The peripherals for the slave rack include the power supply and the operator controls for the TLS 2000.
Der Main Programmer wird zur Steuerung von A80 Master Control und A800 verwendet. Sollen Main Programmer und Slave Rack weit von einander entfernt werden (mehrere 100m), muss der Paral el/Serial Converter dazwischen geschaltet werden. (10)	The main programmer is used for controlling the A80 master control and the A800. If a large distance must be bridged between the main programmer and the slave rack (several 100 meters), a parallel/serial converter must be configured for this link.
Bedieneinheit, die für die Steuerung der A80 Locator verwendet wird. (11)	Operating panel for controlling the A80 locator.
Codekanalfernsteuerung, für die Steuerung der A80, wenn sie als Slave Maschine eingesetzt wird. Weil die A80 selbst nicht für den Anschluss der Fernsteuerung vorbereitet ist, wird die Fernsteuerung am Slave Rack angeschlossen. (12)	Code channel remote control used for the control of the A80 slave. Because the A80 is not directly equipped for a remote control, the latter must be connected at the slave rack.
Universalnetzteil, das im Slave Rack der A80 Versionen und im Parallel/Serial Converter zur Anwendung gelangt. (13)	Universal power supply mounted in the slave rack of the A80 versions for use by the parallel/serial converter.
Netzteil, das mit der A800 verwendet wird. (14)	Power supply used in conjunction with the A800.
A800 als Slave, die TLS-Schaltkreise in der A800 sind in Kapitel 8 behandelt. (15)	A800 operating in slave mode; the TLS circuits of the A800 are discussed in section 8.
A80 als Slave, die TLS-Schaltkreise, welche dazu benötigt werden, sind in Kapitel 9 beschrieben. (16)	A80 operating in slave mode; the corresponding TLS circuits are described in section 9.

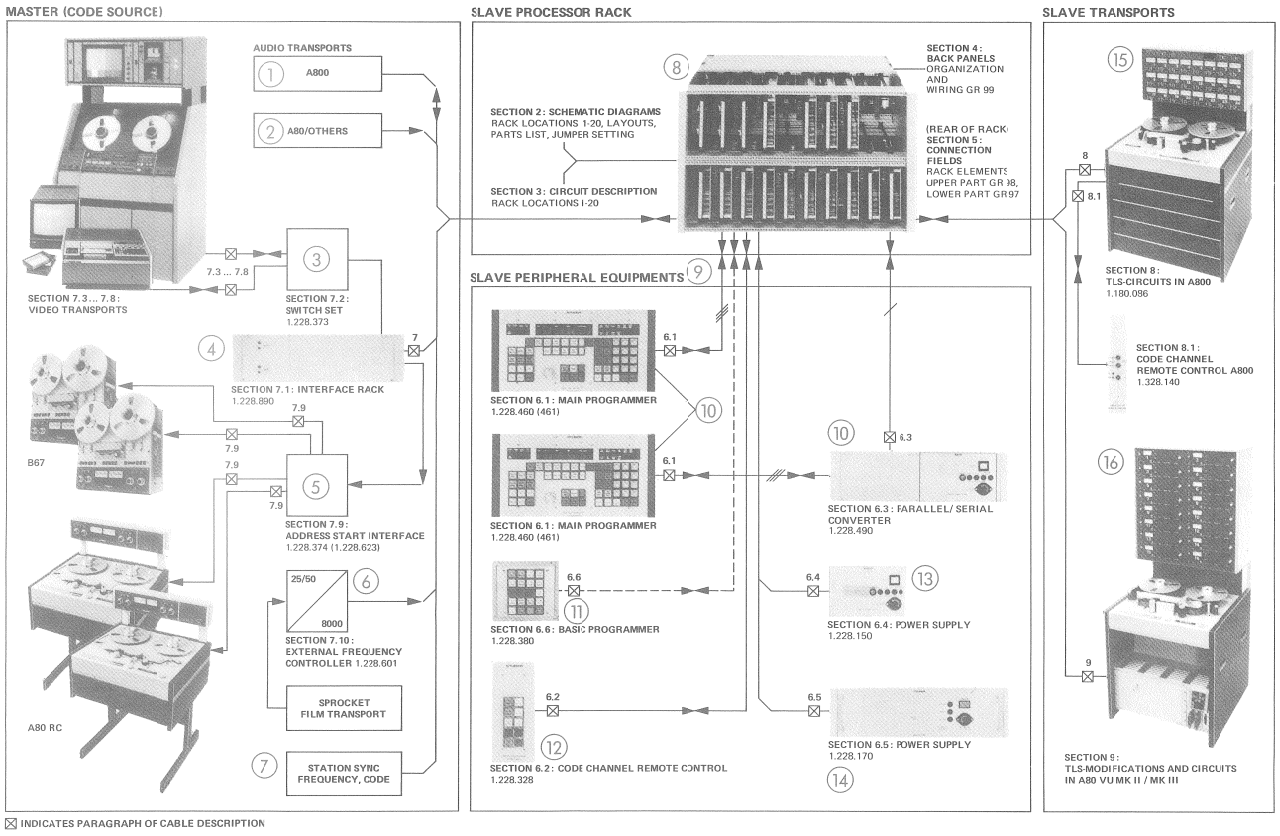

☒ INDICATES PARAGRAPH OF CABLE DESCRIPTION

Fig. 1.3

1.1.4 Softwareübersicht

Die Programmkarten 1.228.480/481/482

In den späteren Schaltungsbeschreibungen wird hauptsächlich der hardwaremässige Aufbau betrachtet. Die folgende Beschreibung versucht den Programmablauf zu zeigen.

1. Hardwaremässige Verteilung

1.228.480	1.228.481	1.228.482
2k x 12 Bit Arithmetic	2k x 12 Bit Peripheral ctrl.	4k x 1 Bit Jump instructions Ari 4k x 1 Bit Jump instructions Peri 1k x 12 Bit Arithmetic ctrl. 1k x 12 Bit Peripheral ctrl.

2. Softwaremässige Aufteilung

Peripheral control ist zuständig für:
- Kommunikation mit dem Bediener
- Anzeigen
- Entgegennahme von Befehlen
- Steuerung der Maschine

Arithmetic ist zuständig für:
- Auswertung der Zeitinformation
- Berechnung der Anzeigen

Peripheral control

Bedienung und Anzeigen laufen unabhängig voneinander ab. Die Prozessorzeit wird auf die verschiedenen Prozesse aufgeteilt. Ein Programmdurchlauf dauert etwa 300 – 400 µsec.

Struktur des Programmes:

1.1.4 Software overview

Program boards 1.228.480/481/482

The circuit description given in a later section of this manual concentrates primarily on hardware-oriented aspects. The present description refers to the program flow.

1. Hardware modules

1.228.480	1.228.481	1.228.482
2k x 12 Bit Arithmetic	2k x 12 Bit Peripheral ctrl.	4k x 1 Bit Jump instructions Ari 4k x 1 Bit Jump instructions Peri 1k x 12 Bit Arithmetic ctrl. 1k x 12 Bit Peripheral ctrl.

2. Software modules

The peripheral control is responsible for:
- Communication with user
- Displays
- Acceptance of commands
- Control of machine

The arithmetic is responsible for:
- Evaluation of time information
- Computing of display values

Peripheral control

The operating functions and the display functions are executed. The various processes share in the available processor time. A program run takes approximately 300 – 400 µs.

Program structure:

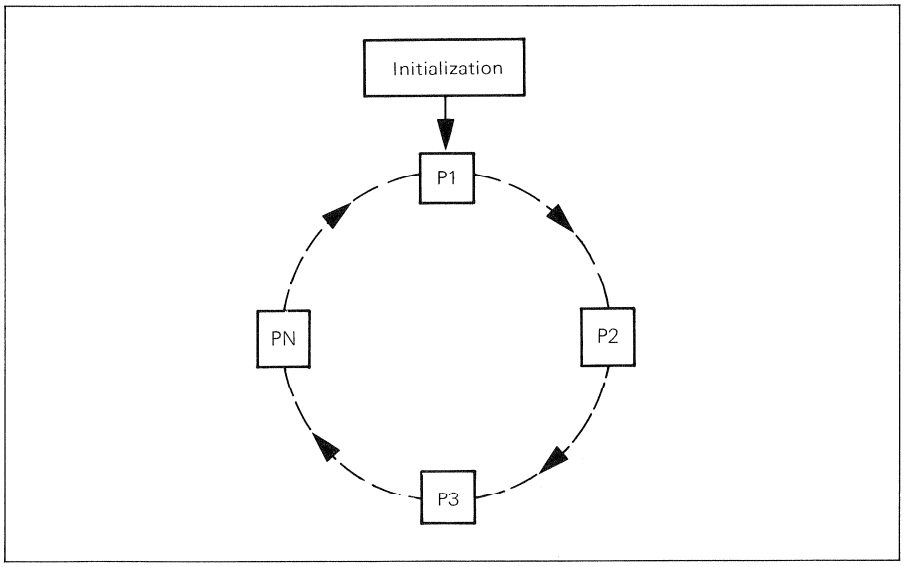

Fig. 1.4

Die Reihenfolge ist fix und immer gleich:

0 Watch dog: Überwachung, Clear nach jedem Programmdurchlauf.
1 Überwachung der Verbindungen. Sind alle Kabel gesteckt ("connector fail").
2 Tastenannahme und Decodierung.

3 Mastercontrol.
4 Statusanzeige des Masters auf dem Main-Programmer.
5 Übermittlung an den Programmer: Tasten, Ziffern, Advance-Retard.
6 Steuerung des Wiedergabeverstärkers für den Code.
7 Überwachung, ob sich ein Band auf dem Slave befindet ("slave no tape").
8 A80: Aktivierung von "external record" für den Slave.
9 Anzeige von Lampen.
10 Treiber (parked, lock-mode, sync B, address-start usw.).
11 A80: Remove tape deck record (auf der A80 wird Record nicht gelöscht, wenn "Play" gedrückt wird.
12 Status des Slave (unabhängig davon, ob Master control gedrückt ist oder nicht).
13 Überwachung von direkten Laufwerksbefehlen. (z.B. Play wird nur kurz gegeben, aber doch solange bis es sicher akzeptiert ist.)

14 Anzeige von h/min/sec/frames/msec.
15 Code Channel Control für Aufnahme (Ein-Aussteigen).
16 Überwachen der Limiten beim schnellen Wickeln.
17 Automatische Funktionen wie: Lock, Edit Mode, Start Edit Mode.

Subroutinen

Auf Grund eines Interrupts kann die Peri in eine Subroutine gebracht werden. Siehe Schaltungsbeschreibung 1.228.481. Während einer Subroutine sind weitere Interrupts blockiert. Es ist somit nur eine einstufige Subroutine möglich (keine Verschachtelungen wie bei Ari).

Arithmetic Control

Der Ablauf einer Programmschleife dauert ca. 15 msec. Die von der Ari berechneten Werte werden der Peri als Referenz zur Verfügung gestellt. Das Programm durchläuft im Wesentlichen folgende 16 Punkte:

1 Watch dog.
2 Abstoppen der aktuellen Master resp. Slavezeit. Einlesen der demodulierten Bit aus der RAM-Karte.
3 Umrechnen des Wertes in Binärform. Alles wird in Frames und Bruchteilen von Frames dargestellt.

The program is always executed in the same sequence:

0 Watch dog: Monitoring, resetting after each program execution.
1 Monitoring of the connections. Are all cables plugged in ("connector fail")?
2 Acceptance and decoding of keyboard entries.
3 Master control
4 Indication of the master status on the main programmer.
5 Transmission to the programmer: key signal, digits, advance-retard.
6 Control of the code reproduce amplifier.

7 Monitoring the presence of tape on the slave ("slave no tape").
8 A80: activation of "external record" for slave.
9 Lamps control.
10 Drivers (parked, lock mode, sync B, address start, etc.)
11 A80 Cancel RECORD function (on the A80 the record function is not cancelled when the PLAY key is pressed).
12 Slave status (regardless whether master control is pressed or not).
13 Monitoring of direct tape transport commands. (e.g. PLAY is only briefly emitted, however, long enough so that it will be safely accepted).
14 Display of h/min/sec/frames/ms.
15 Code channel control for record (drop-in/drop-out).
16 Monitoring of the limits during spooling.

17 Automatic functions such as: lock, edit mode, start edit mode.

Subroutines

The peripheral control can be switched to a subroutine with the aid of an interrupt. During the execution of a subroutine, further interrupts are disabled which means that only one-level subroutines are possible (no nesting as in the arithmetic control).

Arithmetic control

The execution of a program loop takes approximately 15 ms. The values computed by the arithmetic control are supplied to the peripheral control as reference values. Basically, the program runs through the following 16 functions:

1 Watch dog.
2 Monitoring the current master or slave time. Reading in the demodulated bit from the Ram board.
3 Converting the value to the binary format. All values are represented in frames and fractions of frames.

4 Berechnen von Offset, Differenz und Edit-Count Down. (z.B. Ermittlung der Differenz ⩾ 3 Frames und Einschreiben auf die Capstan Motor Control Karte 1.228.484 IC 61).

5 Referenz für Geschwindigkeitsmessung.

6 Kann ich Code-lesen unterbrechen, oder muss das Andruckaggregat konstant eingefahren bleiben?

7 Berechnung des Synchronisations-Bits:
Hat z.B. der Slave 1 msec. Verschiebung zum Master, so wird zur Phasenmessung
beim M : 8, 16, 24..... Bit
beim S : 10, 18, 26..... Bit ausgelesen.

8 Zeitpunkt für die Interrupts der Peri-Control berechnen. Wenn die Zeit für irgend ein Ereignis näher als ein Frame herangerückt ist, wird ein Interrupt ausgelöst. Die hardwaremässige Auszählung der einzelnen Bit erfolgt dann auf 1.228.484.
Bsp. Entry-Points, Exit Points, Parkpunkt.

9 Positionsmeldungen an die Peri: Ist der Slave noch vor oder schon nach dem Entry-point.

10 Überwachung der Limiten.

11 Berechnung der Verstimmung für Advance-Retard.

12 Phasing.

13 Überwachung und Erkennung der Code-Typen.

14 Berechnung der Bitfolge für das nächste Frame des Code-Generators.

15 Übernahme eines Tastendruckes von der Peri: Zahlen, Displayselector, Add, Execute.

16 Berechnung der Anzeigen: Alle Informationen sind binär vorhanden und müssen für die Anzeigen umgerechnet werden, damit sie von der Peri angezeigt werden können: Ziffern, Unterdrückung von Nullstellen usw.

1.2 BLOCKSCHEMA UND CODEPFADBESCHREIBUNG

Es existieren zu beiden Systemen (TLS/A800 und TLS/A80) zwei verschiedene Blockschemata:

1. Die erste Version zeigt die Blöcke so, wie sie auch auf den Printkarten angeordnet sind. Die Zahl in der rechten oberen Ecke jedes Blockes steht für die Stelle, an der die entsprechende Printkarte im Slave Rack untergebracht ist (siehe auch Kapitel 4).
2. Das zweite Blockschema versucht die funktionsmässigen Zusammenhänge zu zeigen, ohne Rücksicht auf die Anordnung der Baugruppen zu nehmen.

Da blockschemamässig kein wesentlicher Unterschied zwischen TLS mit A80 und TLS mit A800 besteht, wird für die A80 das Blockschema vom Typ 1 und für die A800 das Blockschema vom Typ 2 beschrieben.

4 Computing the offset, difference, and edit count down.
(e.g. determining the difference ⩾ 3 frames and writing to the capstan motor control board 1.228.484 IC 61).

5 Reference for speed measurement.

6 Can I interrupt code read or does the pressure unit have to remain pushed in?

7 Computing the synchronization bit:
If, e.g., the deviation of the slave from the master is 1 ms, the following bits are read for measuring the phase
for M : 8, 16, 24 ...
for S : 10, 18, 26 ...

8 Compute timing for the peripheral control interrupts. When the time for an event to take place is closer than one frame, an interrupt is triggered. The hardware-oriented count-down of the individual bits takes place on 1.228.484.
Example: entry points, exit points, park point.

9 Position feedback to the peripheral control: is the slave still positioned before or already after the entry point?

10 Monitoring the address limits

11 Computing the speed deviation for the advance-retard function.

12 Phasing

13 Monitoring and recognizing the code types.

14 Computing the bit sequence for the next frame of the code generator.

15 Accepting a key signal from the peripheral control: digits, display selector, add, execute.

16 Computing the display values: all information is stored in binary format and must, therefore, be converted so that it can be displayed by the peripheral control: digits, suppression of leading zeros, etc.

1.2 BLOCK DIAGRAM AND CODE PATH DESCRIPTION

For each system type (TLS/A800 and TLS/A80) there are two separate block diagrams:

1. The first version shows the blocks in the same manner that they are arranged on the circuit boards. The number in the upper right corner of each block represents the slot of the slave rack in which the corresponding circuit board is mounted (also refer to section 4).
2. The second block diagram aims to illustrate the functional interrelation without regard to the physical arrangement of the modules.

Since there is no major difference between the TLS for the A80 and the TLS of the A800 as far as the block diagram is concerned, only the block diagram type 1 is described for the A80 and the block diagram type 2 for the A800.

1.2.1 TLS 2000/A80

Der gerasterte Teil links zeigt diejenigen Teile, welche in der Maschine A80 VU angeordnet sind.
Es sind dies:

(A) zwei oder drei Netzteile vom Typ 1.228.150, welche die Speisung für den Synchronizer liefern.

(B) Die 12V-Speisung für die Code-Verstärker und den Demodulator.

(C) Die Umschaltbox Audio/code-Kanal.

1.2.1 TLS 2000/A80

The area bounded by the broken lines on the far left illustrates those items which are physically located within the A80 VU.
These are:

(A) Two or three power supplies type 1.228.150 for the synchronizer.

(B) The 12V supply for the code amplifiers and the demodulator.

(C) The change-over box audio/code channel

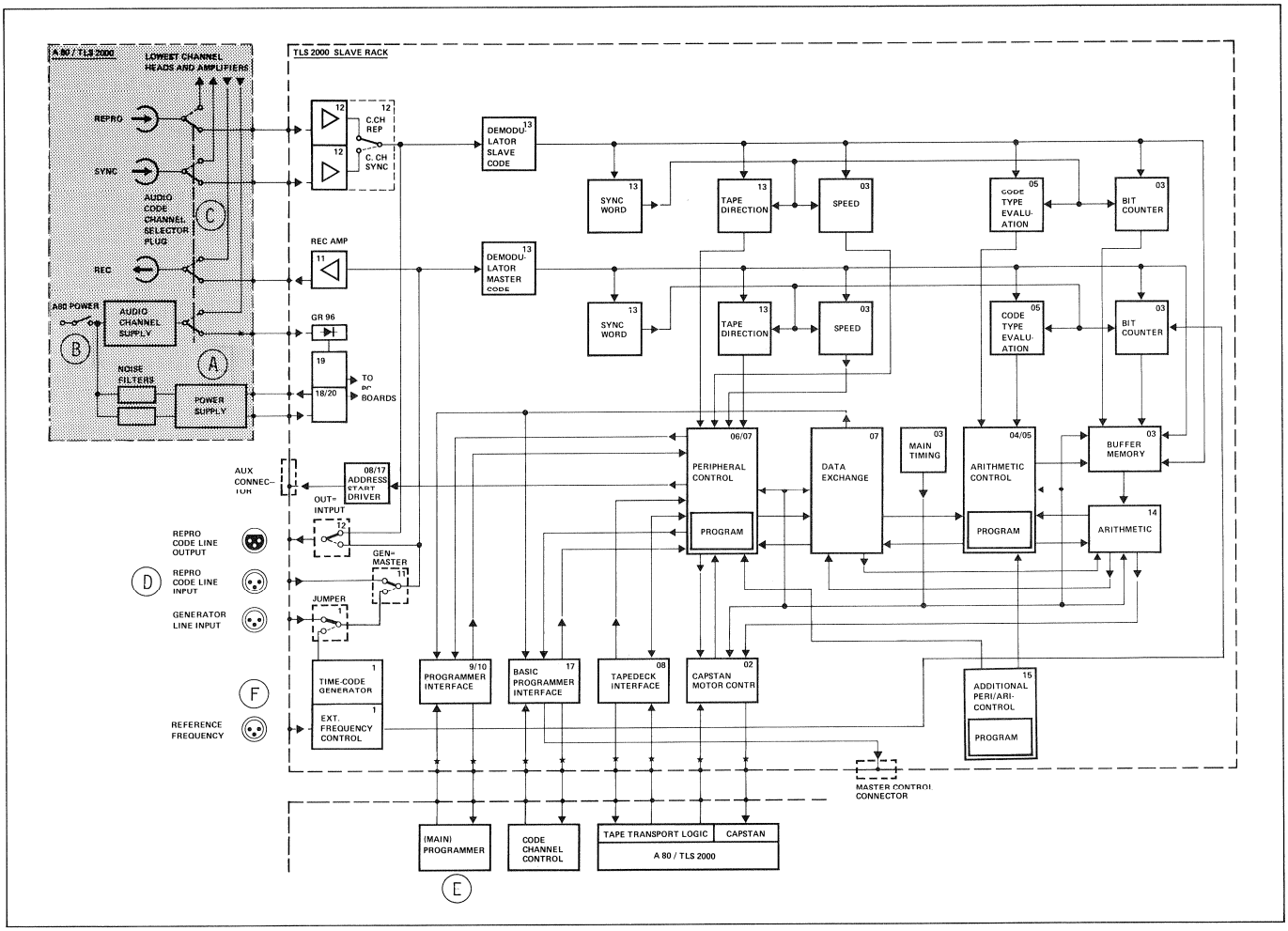

Fig. 1.5

In der Standardversion kann immer der unterste Audiokanal als Codekanal verwendet werden. Spezialversionen beinhalten die Verdrahtung für einen weiteren Kanal.

Das TLS Slave Rack in die Konsole der A80 VU eingebaut. Der Codekanal der Slave Maschine ist daher über ein fest eingebautes Kabel steckbar mit dem Slave Rack verbunden, wahrenddem der Code der Master Maschine über eine gewöhnliche Audio-Leitung dem Slave zugeführt wird (Buchse (D)).

In the standard version, only the lowest audio channel can be used as the code channel. Special versions contain the circuitry for an additional channel.

The TLS slave rack is built into the console of the A80 VU. The code channel of the slave machine is, therefore, connected to the slave rack with the aid of a permanently attached cable and a connector. In contrast, the code of the master machine is input to the slave over an ordinary audio line (socket (D)).

Die Umschaltung, welches Signal am Ausgang "Repro Code Line out" erscheint und welches Signal verarbeitet wird, wenn am Main Programmer (E) die Taste GEN=MAST gedrückt wird, geschieht auf den beiden Code Verstärker Karten (11) und (12). Der Code-Wiedergabeverstärker unterscheidet sich von einem Audioverstärker hauptsächlich durch seine grosse Bandbreite von ca. 200kHz.

Code-Generator (1)

Der Code-Generator kann Code von 24, 25, 30 oder Drop Frame erzeugen und lässt sich extern über die Buchse (F) mit 8kHz resp. 9.6kHz synchronisieren. Der Code von Master und Slave gelangt nun auf den Demodulator

Demodulator (13)

Auf dieser Karte sind zwei für Master und Slave jeweils identische Schaltkreise aufgebaut:
Der Code wird zuerst demoduliert, d.h. aus dem flankenorientierten Code, wie er aufs Band geschrieben wurde, wird eine serielle Folge von 0 und 1 gewonnen. Eine PLL-Schaltung sorgt dafür, dass im Bandgeschwindigkeitsbereich von 1/4 Play bis ca. 20xPlay die 16 Bit des Synchronisationswortes sowie die Bandlaufrichtung einwandfrei erkannt werden können.
Der so verarbeitete Code wird einerseits der Arithmetic Control B (5) sowie der Karte Ram Timing (3) zugeführt.

Arithmetic Control B (5)

Auf dieser Karte wird der Codetyp bestimmt und es werden Master- und Slave Codetyp miteinander verglichen. Ausserdem werden die Bitcounter von Master und Slave abgespeichert und die Steuerimpulse für das Ram auf der Karte (3) generiert.

Ram Timing (3)

Diese Karte ist einerseits die Steuerzentrale des TLS, wo alle Clock Frequenzen aufbereitet werden, anderseits werden wichtige Einzelfunktionen aufgeführt:

- Im Ram können je zwei Frames à 64 Bit von Master und Slave gespeichert werden.
- Die Bandgeschwindigkeit wird bestimmt und ein Signal hergeleitet, das besagt, ob die Maschinen in Play sind oder nicht.
  Das "Play Fenster" ist Nominalgeschwindigkeit + 20%.
- Jedes Bit innerhalb eines Frame wird numeriert → Bitcounter. Die Ablaufsteuerung wird durch zwei getrennte Prozessoren geregelt:
  - Peripheral Control und
  - Arithmetic Control

The switch-over that determines the signal available at the output "Repro Code Line Out" and the signal that will be processed when the GEN =MAST button is pressed on the main programmer (E), takes place on the two code amplifier boards 11 and 12. Between an audio amplifier and a code amplifier is the latter's large bandwidth of approximately 200kHz.

Code generator (1)

The code generator in location 1 of the slave rack can produce the code for 24, 25, 30 frames/s or drop frames and can be externally synchronized via socket (F) with 8kHz or 9.6kHz respectively. The code of the master and the slave are now taken to the demodulator, board 13.

Demodulator (13)

This board features two circuits which are identical for the master and the slave:
The code is first demodulated, i.e. a serial sequence of 0 and 1 bits is extracted from the edge-oriented code that was originally recorded on the tape. A PLL circuit ensures that the 16 bits of the synchronization word and the tape direction can be correctly recognized throughout the speed range 1/4 play to approx. 20x play.
The processed code is input to the arithmetic control B (5) as well as the Ram timing card (3).

Arithmetic control B (5)

On this board, the code type is analyzed and the master and slave code types are compared with each other. The current values of the bit counter in the master and the slave are saved and the control pulses for the Ram on board (3) are generated.

Ram timing (3)

This board is the control center of the TLS. It not only generates all the clock frequencies but also performs a number of important individual functions:

- Two 64-bit frames each for the master and the slave can be stored in the Ram.
- The tape speed is analyzed and a signal is fetched which indicates whether the recorders operate in play mode or not.
  The "play window" is the nominal speed ± 20%.
- Each bit within a frame is consecutively numbered → bit counter. The sequence of operations is controlled by two separate processors:
  - Peripheral control and
  - Arithmetic control

Peripheral Control A/B (6), (7), (15)

Die Aufgabe dieses Prozessors ist die Kommunikation nach aussen:
- Tastenbefehle entgegennehmen
- Lampen ansteuern
- Displays ansteuern
- Kabel überwachen etc.

Die Zykluszeit dieses Prozessors beträgt 300–400 µsec.

Arithmetic Control A (4), (15)

Arithmetic Control ist der langsamere Prozessor und steuert den Rechner. Die wesentlichen Funktionen sind:
- Abstoppen von Master- und Slavezeit
- Umrechnen der Zeitangabe in Frames
- Ermittlung der Position des Master gegenüber dem Slave
- Zeitpunkt für Interrupts an die Peripheral Control berechnen
- Referenzwerte liefern
- Berechnung von Anzeigen für den Display

Die Zykluszeit für alle diese Operationen beträgt ca. 15 msec.

Arithmetic (14)

Die Arithmetic führt die Rechenoperationen aus und besteht im wesentlichen aus einem Addier (Subtrahier)-Werk, einem Ram zur Speicherung der Editpunkte sowie einem Prom, das die Codeumwandlungskonstanten enthält. Die Arithmetic macht alle Berechnungen rein binär und in Frames. Da nun aber alle Editierpunkte auf eine Millisekunde genau eingegeben werden können, wird eine zusätzliche Schaltung benötigt, die Capstan Motor Control.

Capstan Motor Control (2)

Diese Karte hat im wesentlichen dreifache Funktion:
- Nachdem die Arithmetic das zutreffende Bit für ein "event" geliefert hat, berechnet die Capstan Motor Control das passende Bit durch Auszählen des Bitcounters.
- Anhand der Differenz zwischen Master und Slave wird der Synchronisationsmodus bestimmt: Wickeln, Capstangrobeinlauf oder Phasenvergleich.
- Aufbereitung der richtigen Referenzfrequenz für den Capstan Motor

Peripheral control A/B (6), (7), (15)

This processor is responsible for the communication with the outside world:
- Accepting keyed commands
- Selecting the lamps
- Controlling the displays
- Monitoring cables, etc.

This processor has a cycle time of 300–400 µs.

Arithmetic control A (4), (15)

The arithmetic control is the slower of the two processors and controls the processor. Its main functions are:
- Monitoring the master and the slave time
- Converting the measured time into frames
- Determining the position of the master in relation to the slave
- Computing the timing for interrupts to the peripheral control
- Supplying reference values
- Computing the values for the display

The execution time for any of these operations is approximately 15 ms.

Arithmetic (14)

The arithmetic performs the actual computing operations. The hardware consists mainly of an adder (subtractor), a Ram for storing the edit points as well as a Prom in which the constants for the code conversion are stored. All computations by the arithmetic control are performed in binary format and in frames. However, since the edit points can be defined with a resolution of one millisecond, an additional circuit is required, the capstan motor control.

Capstan motor control (2)

This board basically fulfills the following three functions:
- After the arithmetic has supplied the corresponding bit for an "event", the capstan motor control computes the matching bit by counting out the bit counter.
- The synchronization mode is determined based on the difference between the master and the slave: spooling, capstan coarse control or phase comparison.
- Preparation of the correct reference frequency for the capstan motor.

Tape Deck Interface (8)

Das Tape Deck Interface wandelt die Befehle des TLS so um, dass die A80 VU angesteuert werden kann. Es steuert ebenso zwei der vier "events" (Address-Start).
Die Karten (9) und (10) sind für die Kommunikation des Synchronizers mit dem Benützer verantwortlich.
Die Karte (9) überträgt die Befehle vom Main Programmer zum TLS währenddem die Karte (10) Daten vom TLS übernimmt und auf dem Programmer die richtige Lampe ansteuert.

Basic Programmer Interface (17)

Diese Karte erfüllt drei Hauptaufgaben:
- Entgegennahme der Befehle von der Codekanalfernbedienung sowie Ansteuern der entsprechenden Lampe.
- Fernsteuerfunktion für den Master
- Ansteuern der restlichen zwei events (Address-Start)

Tape deck interface (8)

The tape deck interface converts the commands of the TLS in a manner suitable for the control of A80 VU. It also controls two of the four "events" (address start).
Boards (9) and (10) are responsible for the communication of the synchronizer with the user.
Board (9) transmits the commands from the main programmer to the TLS. In contrast, board (10) accepts data from the TLS and selects the corresponding lamp on the programmer.

Basic programmer interface (17)

This board fulfills three main functions:
- Accepting commands from the code channel remote control as well as selecting the corresponding lamp
- Remote control function for the master
- Controlling the remaining two events (address start)

1.2.2 TLS2000/A800

Die unterste Spur der A800 kann wahlweise als Code- oder Audio-Spur verwendet werden. (1) Je nach Maschinentyp kann dies demnach Spur 8, 16 oder 24 sein.

Die zugehörigen Codeverstärker befinden sich im Expansion Rack der A800. (2)
Arbeitet die Maschine als Slave, so werden Zeitcode und Laufwerksbefehle via command line vom TLS übermittelt. Arbeitet sie als Master, so wird der Code über eine gewöhnliche Audio Leitung der Buchse "Code line out" entnommen und der Slave-Maschine am Anschluss "Master code line in" eingespiesen.

Die beiden Interfaces "Master Interface" und "Transmission Receiver" sitzen ebenfalls im Expansion Rack. (3)
Der eigentliche Datatransfer erfolgt über eine bidirektionale Leitung und umfasst Befehle an die Maschine wie auch Rückmeldungen ans TLS. Die beiden Codes gelangen zur Demodulator Schaltung. (4) Dort wird der Code wieder so umgewandelt, dass 0 und 1 Zustände sowie Beginn und Ende jeder Information erkannt werden. In einer weiteren Stufe wird die Zeitinformation von User Bits und Synchroworten getrennt. Eine PLL-Schaltung sorgt für korrektes Codelesen im Bereich von 1/4 play bis mindestens 20x play Geschwindigkeit. Der demodulierte Zeitcode gelangt zur Karte "RAM Timing" wo je zwei Frames Master und Slave Code abgespeichert werden können (5) und wo auch die Bandgeschwindigkeit berechnet wird. (7)

Gleichzeitig wird auf der Karte "Arithmetic control B" (6) der Zeitcode analysiert: Es wird festgestellt, welche Art von Code [24, 25, 30 oder Dropframe] verwendet wird und ob Master und Slave Code vom gleichen Typ sind. Die so verarbeitete Information wird nun in den Rechner (8) gespeist. Der Main Programmer (9) besteht im wesentlichen aus einer Tastenmatrix und einer Anzeigeeinheit. Die Tastendrücke werden in paralleler Form zum Programmerinterface (10) im TLS Rack übermittelt. Im Interface wird aus der parallelen eine serielle Information gewonnen, die von der peripheral control (8) zyklisch abgefragt wird.

13-Bit Prozessoren gesteuert:

a) Arithmetic control (ARI)
b) Peripheral control (PERI)

Die Rechnereinheit Arithmetic ist das eigentliche Hirn des TLS. Die peripheral control, der schnellere der beiden Prozessoren, ist für Abfragen und Anzeigen nach aussen zuständig, während die arithmetic control mit dem Rechner kommuniziert. Die Speichereinheiten werden nach Bedarf der Ari oder der Peri zugeordnet.

1.2.2 TLS2000/A800

The lowest track of the A800 can alternately serve as a code or an audio track (1). Depending on the model, this can either be channel 8, 16 or 24.

The corresponding code amplifier is mounted in the expansion rack of the A800 (2).
When the recorder operates in slave mode, the time code and the tape transport commands are transmitted from the TLS via command line. When the recorder operates in master mode, the code is picked up at the "Code line out" socket via an ordinary audio line and supplied to the slave recorder at the "Master code line in" terminal.

The two interfaces "Master interface" and Transmission receiver" are also mounted in the expansion rack (3).
Data such as commands to the recorder and feedback to the TLS is transmitted over a bidirectional line. The two codes are taken to the demodulator circuit (4). The code is reconverted in such a manner that 0 and 1 conditions as well as the beginning and the end of each information can be recognized. In a second stage, the time information is separated from the user bits and the synchro words. A PLL circuit ensures that the code is correctly read within the speed range 1/4 play to at least 20x play. The demodulated time code is taken to the "Ram timing" board where two frames each for the master and the slave can be stored (5) and where the tape speed is computed (7).

At the same time the time code is analyzed on the board "Arithmetic control B" (6): This PCB determines the type of code [24, 25, 30 or drop frame] that is being used and whether the master and the slave code are of the same type. The processed information is subsequently input to the processor (8). The main programmer (9) consists mainly of a push-button matrix and a display. The push-button signals are transmitted in parallel format to a programmer interface (10) in the TLS rack. In the interface, the parallel information is converted to serial format so that it can be cyclically called off by the peripheral control (8).

All program sequences are controlled by two 13-bit processors:
a) Arithmetic control (ARI)
b) Peripheral control (PERI)

The arithmetic processor is the brain of the TLS. The peripheral control, the faster of the two processors is responsible for interrogations and external indications while the arithmetic control is responsible for the communication with the processor. The storage areas are allocated to the ARI or the PERI as required.

Die Information betreffend Zeitcode und Tastendrücke wird vom Rechner abgefragt und ausgewertet. Einerseits zeigt die Peripheral Control die Zeit auf dem Display an, andererseits wird aus den beiden Zeiten vom Rechner die Differenz gebildet.

Anhand der von der Ari berechneten Differenz entscheidet die Peri nun, wie synchronisiert werden soll: Ist die Differenz grösser als einige Minuten, so wird während dem Umspulen "geschnüffelt". Bei kleiner werdender Differenz bleibt das Andruckaggregat in Position "edit" stehen. Wird der Unterschied kleiner als 1 Frame, fährt der Andruck ganz ein und es wird mit dem Capstan nachgesteuert. Bei Differenz ca. 1 msec. wird die Phase vom Master und Slave Code verglichen und so eine maximale Genauigkeit von etwa ± 20 µsec. erreicht.
Die Vergleicherschaltungen befinden sich auf der Karte "Capstan motor control".

The information concerning the time code and the pushbutton signals are scanned and decoded by the processor. The peripheral control indicates the time on the display and also computes the difference between the times supplied by the processor.

Based on the difference computed by the ARI, the PERI now decides how the synchronization is to take place: If the difference is greater than several minutes, periodic "sampling" takes place during spooling. As the difference becomes smaller, the pressure unit remains in the edit position. When the difference is less than 1 frame, the pressure unit travels in all the way and fine resolution is accomplished by the capstan. When the difference is less than 1 ms, the phase of the master and the slave code are compared and a maximum accuracy of approx. ±20 µs is achieved. The resolver circuit is located on the capstan motor control board.

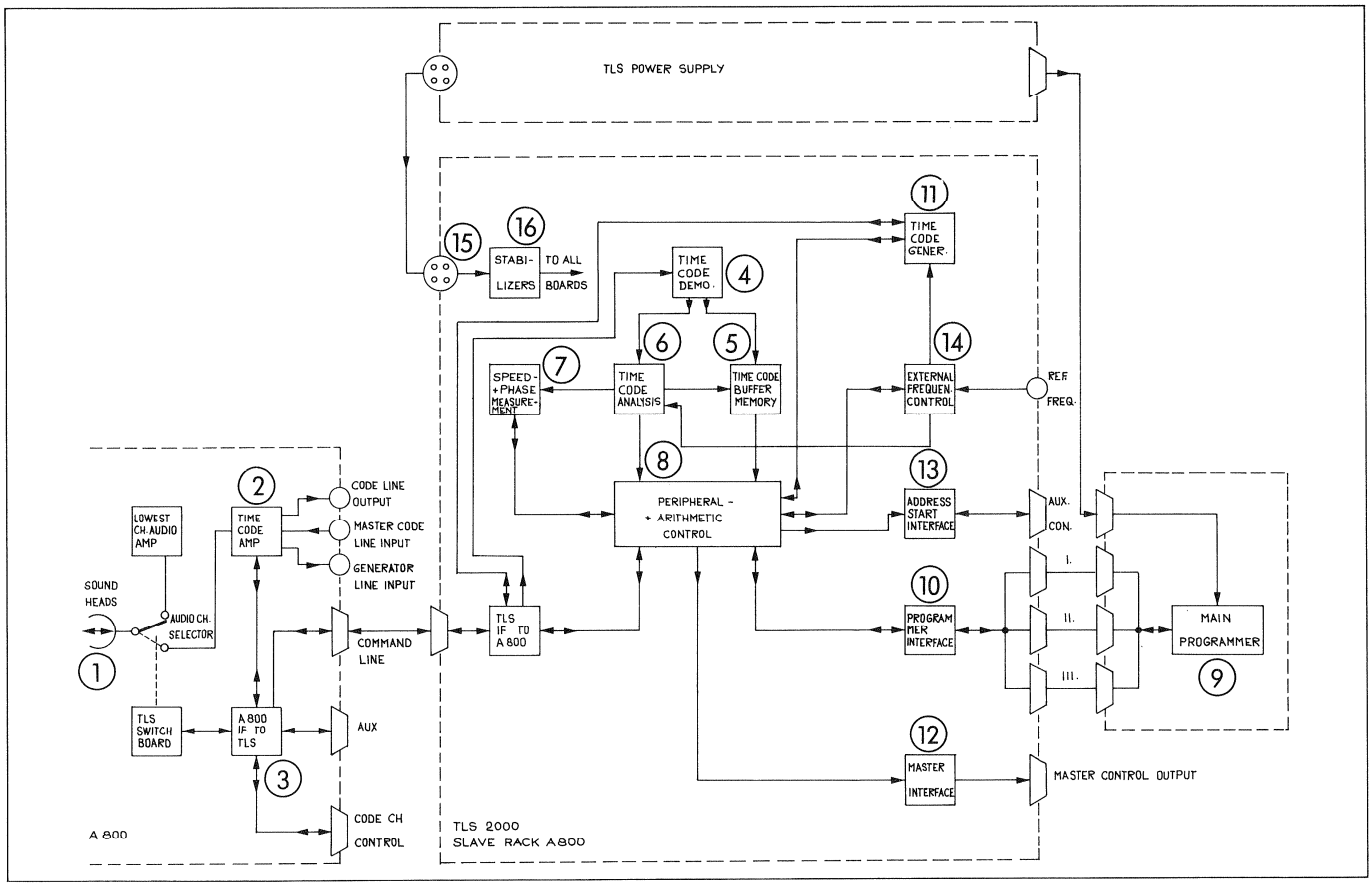

Fig. 1.6

Ein im TLS eingebauter Generator (11) produziert SMPTE-Code. Dieser Generator ist auf 8kHz synchronisierbar (14) oder auch auf 50 resp. 25Hz mit einem als Option erhältlichen Konverter. Der Generator wird mit dem TLS Keyboard gesetzt und kann sogar als "Master" wirken. Das im TLS Rack eingebaute Code Channel Control Interface (12) kommuniziert über das Master Control Kabel mit einer A800

The SMPTE code is produced by a generator (11) built into the TLS. This generator can be synchronized to 8kHz (14) or to 50 or 25Hz with the aid of an optional converter. The start time of the generator is set with the TLS keyboard and can even function as the master. The code channel control interface (12) installed in the TLS rack communicates over the master control cable with an A800 or an external mas-

oder einem externen Master Interface. Die Übertragung erfolgt parallel, wobei die wesentlichen Laufwerkfunktionen mit 3 Bit codiert sind.

Der Aux-Anschluss am TLS wird für Adress-Start und Stop von maximal 4 Zuspielmaschinen verwendet. Das Interface für entsprechende Maschinen wird im Master Interface Rack eingebaut.

Das im TLS eingebaute Adressstart Interface (13) verfügt über vier Relais Kontakte, die bei Adressstart geschlossen, bei Adressstop geöffnet werden

Das TLS Rack wird über den Anschluss (15) mit 10 V DC gespiesen. Jede Printkarte verfügt über einen eigenen Stabilisator (16) der 5 V DC für die Logik liefert.

ter interface. The information is transmitted in parallel format. The main tape transport functions are coded with 3 bits.

The Aux terminal at the TLS is used for the address start and stop of up to four effect machines. The interface for the corresponding machines is installed in the master interface rack.

The address start interface (13) built into the TLS is equipped with four relay contacts. The address start closes and the address stop breaks the relay contacts.

The TLS rack is supplied with 10 VDC via terminal (15) . Each circuit board features a stabilizer (16) which supplies the 5 VDC for the logic.

1.2.3 Codeverlauf in Master, Slave und Slave Processor

Das nachstehende Blockschaltbild zeigt den vereinfachten Codeverlauf am Beispiel von zwei A800, die mit TLS 2000 gekoppelt sind. Daraus wird auch ersichtlich, welche Schalter den Codepfad beeinflussen und welche Signale an den Code-Ein- und Ausgängen liegen.

1.2.3 Code behaviour in master, slave, and slave processor

The following block diagram illustrates a simplified code behaviour for a configuration comprising two A800 recorders that have been coupled with a TLS 2000. The diagram shows the switches that influence the code path and the signals that are available at the code inputs and outputs.

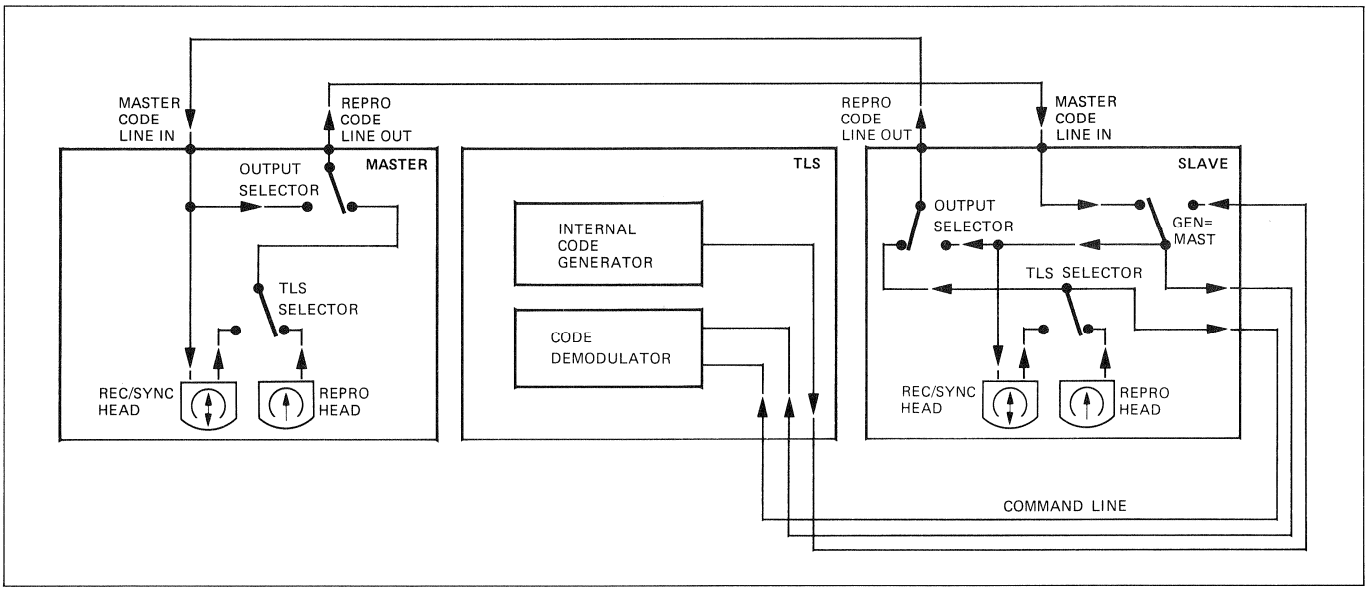

Fig. 1.7

Die beiden folgenden Blockdiagramme zeigen den Codeverlauf etwas detaillierter. Das erste gilt für A800, das zweite für A80.

Both following block diagrams show the code signal path more detailed. The first one is valid for A800, the second for A80.

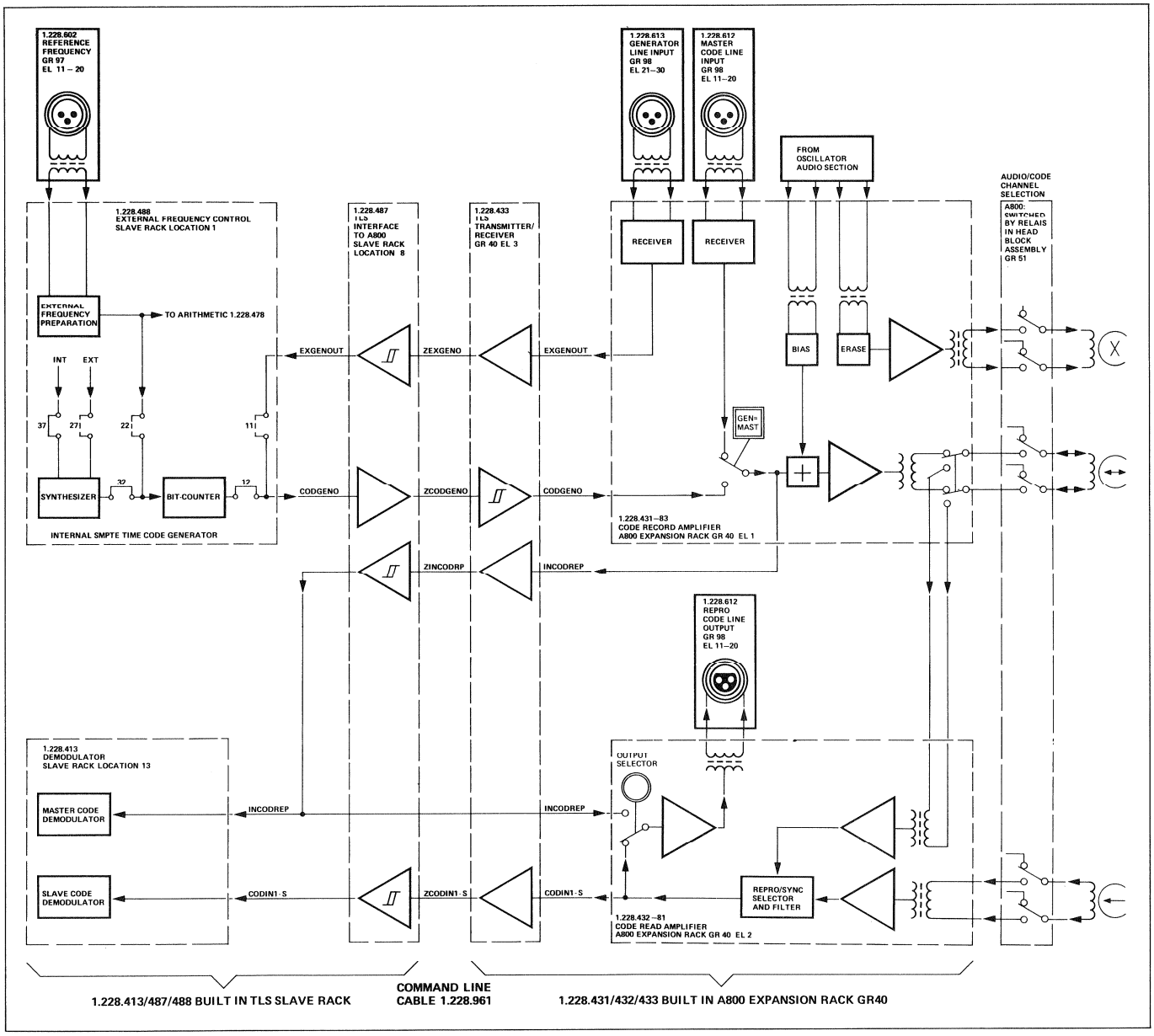

Fig. 1.8

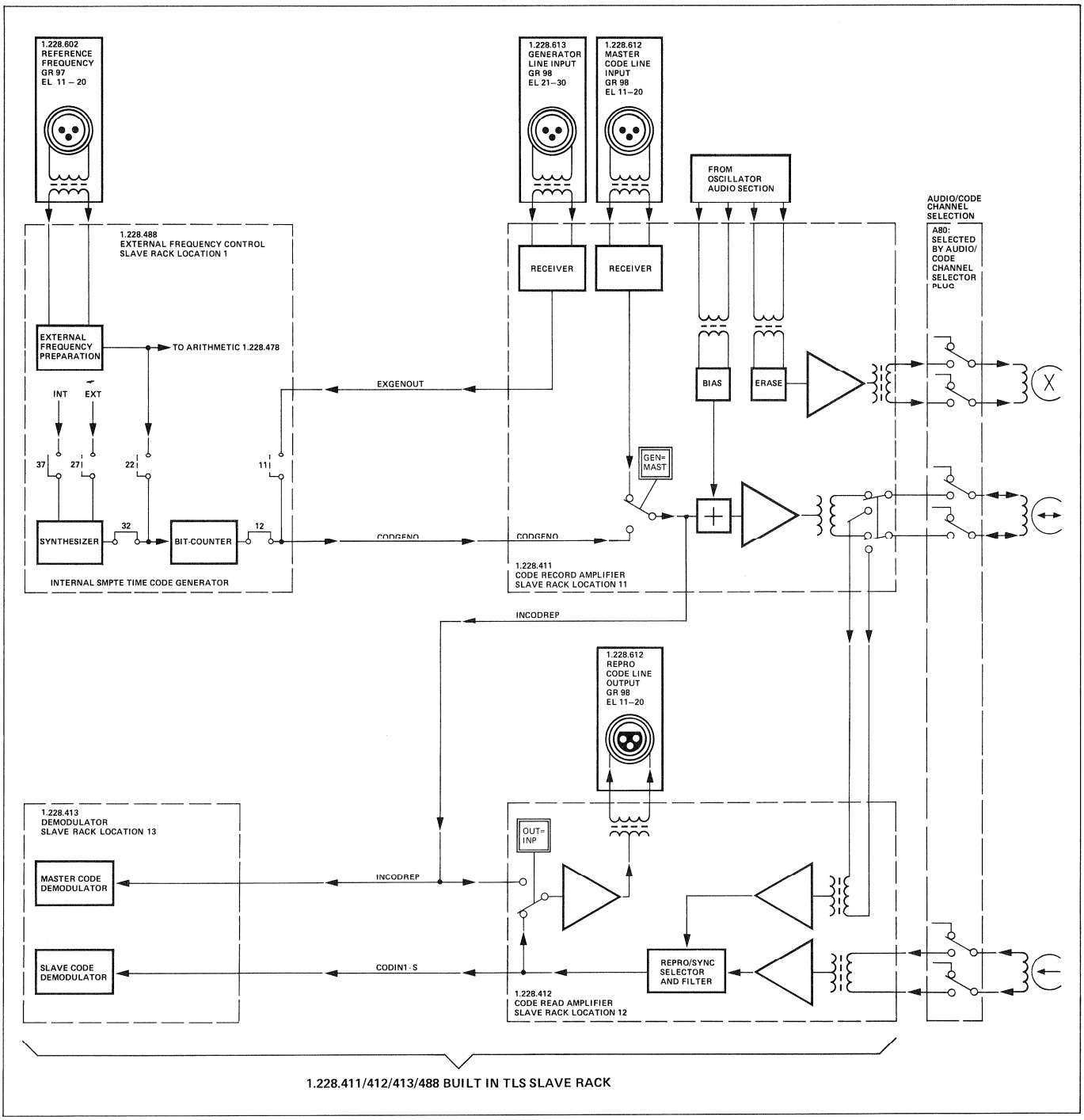
1.228.602
REFERENCE
FREQUENCY
GR 97
EL 11 – 20
1.228.613
GENERATOR
LINE INPUT
GR 98
EL 21–30
1.228.612
MASTER
CODE LINE
INPUT
GR 98
EL 11–20
FROM
OSCILLATOR
AUDIO SECTION
AUDIO/CODE
CHANNEL
SELECTION
A80:
SELECTED
BY AUDIO/
CODE
CHANNEL
SELECTOR
PLUG
1.228.488
EXTERNAL FREQUENCY CONTROL
SLAVE RACK LOCATION 1
RECEIVER
RECEIVER
EXTERNAL
FREQUENCY
PREPARATION
TO ARITHMETIC 1.228.478
EXGENOUT
INT
EXT
BIAS
ERASE
GEN=
MAST
37
27
22
11
SYNTHESIZER
32
BIT-COUNTER
12
CODGENO
CODGENO
1.228.411
CODE RECORD AMPLIFIER
SLAVE RACK LOCATION 11
INTERNAL SMPTE TIME CODE GENERATOR
INCODREP
1.228.612
REPRO
CODE LINE
OUTPUT
GR 98
EL 11–20
1.228.413
DEMODULATOR
SLAVE RACK LOCATION 13
OUT=
INP
MASTER CODE
DEMODULATOR
INCODREP
SLAVE CODE
DEMODULATOR
CODIN1-S
REPRO/SYNC
SELECTOR
AND FILTER
1.228.412
CODE READ AMPLIFIER
SLAVE RACK LOCATION 12
1.228.411/412/413/488 BUILT IN TLS SLAVE RACK

Fig. 1.9

1.3 ERLÄUTERUNGEN DER ZUSATZINFORMATIONEN AUF DEN SCHEMATA

Die Kapitel 2 und 6–9 enthalten vorwiegend Schemata. Auf diesen Schemata sind nebst den üblichen Schaltsymbolen eine ganze Reihe von Spezialzeichen und -symbolen, die in den folgenden Abschnitten kurz erklärt werden.

1.3 EXPLANATION OF THE SUPPLEMENTARY INFORMATION ON THE DIAGRAMS

Sections 2 and 6 through 9 consist primarily of diagrams. In addition to the regular diagrammic symbols, a number of special designators and symbols are used on these diagrams which will be briefly explained in the following paragraphs.

1.3.1 Symbole / Symbols

Ausgang	Output	
Eingang	Input	
Stützpunkt auf Backpanel	Connection point on back panel	
Frontanschlüsse (Ein- oder Ausgang)	Front connections (in or out)	
zu Messzwecken an den Printstecker geführt, auf Backpanel keine Verbindung	Brought to card connector for measuring purposes, no connection on back panel	
zu Messzwecken an den Test-Connector 61 geführt	Brought to test connector 61 for measuring purposes	
Messpunkt für Impulsdiagramm	Measuring point for pulse diagram	19
Jumper, Kurzverbindung	Jumper, short connection	
Pull up-Widerstand	Pull-up resistor	
Pull down-Widerstand	Pull-down resistor	
Pull up and down-Widerstand	Pull-up-and-down resistor	
Lampen-Array (Strombegrenzen, vorheizen)	Lamp array (current-limiting, preheating)	

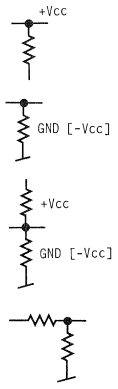

1.3.2
Reference Designators

A	Baugruppe
ANT	Antenne
B	Lampe
BA	Batterie, Akku
BR	Optokoppler mit Glühlampen-Eingang und Widerstands-Ausgang
C	Kondensator
D	Diode
DL	Leucht-Diode
DLQ	Optokoppler mit Leuchtdioden-Eingang und Transistor-Ausgang
DLR	Optokoppler mit Leuchtdioden-Eingang und Widerstands-Ausgang
DLZ	Leuchtdioden Kombination
DP	Foto-Diode
E	div. elektronische Bauelemente
EF	Kopfhörer
F	Sicherung
FL	Filter
H	Tonkopf, Datakopf
HC	Hybrid-Schaltung (Dick-Dünnfilm)
HE	Hall-Element
IC	Integrierte Schaltung
J	Steckbuchse, Klinke (weiblich)
JSJ	Jumper, weibl.
JSP	Jumper, männlich
K	Relais, Schütz
L	Induktivität, Spule
LS	Lautsprecher
M	Motor
ME	Messwerk
MIC	Mikrofon
MP	mechanisches Bauteil
P	Stecker (männlich)
PU	Pickup
Q	Transistor
QP	Foto-Transistor
QPZ	Foto-Transistor Kombination
R	Widerstand
RP	Foto-Widerstand
RT	Thermistor
RZ	Widerstands-Netzwerk
S	Schalter
T	Trafo
TL	Verzögerungsleitung
TP	Testbuchse
W	Draht, Kabel
X	Sockel, Halter
XB	Lampensockel
XBA	Batteriehalter
XF	Sicherungshalter
Y	Piezoelektrisches Element, Quarz
Z	Netzwerk

Designators können kombiniert werden (max. 3 Buchstaben)
z.B.: DZ = Diodennetzwerk, Brücke

1.3.2
Reference Designators

A	assembly
ANT	antenna
B	bulb, lamp
BA	battery
BR	tungsten lamp – photoconductor isolator
C	capacitor
D	diode, DIAC
DL	LED
DLQ	LED-phototransistor isolator
DLR	LED photoconductor isolator
DLZ	LED display array
DP	photo diode
E	misc. electronic part
EF	earphone
F	fuse
FL	filter
H	head
HC	hybrid circuits
HE	hall element
IC	integrated circuits
J	jack (female)
JSJ	jumper jack
JSP	jumper plug
K	relais, contactor
L	inductor, coil
LS	loudspeaker
M	motor
ME	meter
MIC	microphon
MP	mechanical part
P	plug
PU	pic up
Q	transistor, bipol., FET, TRIAC
QP	photo transistor
QPZ	photo transistor array
R	resistor
RP	photo resistor
RT	thermistor
RZ	resistor network
S	switch
T	transformer
TL	delay-line
TP	test point
W	wire, cable
X	socket
XB	lampholder
XBA	batteryholder
XF	fuseholder
Y	piezoelectric device, quartz
Z	network, array

Reference Designators may be combined (max. 3 letters)
Example: DZ = diode array, bridge rectifier

1.3.3
Organisation der Wrap-Karten im Slave Rack

1.3.3
Layout of the wrap boards in the slave rack

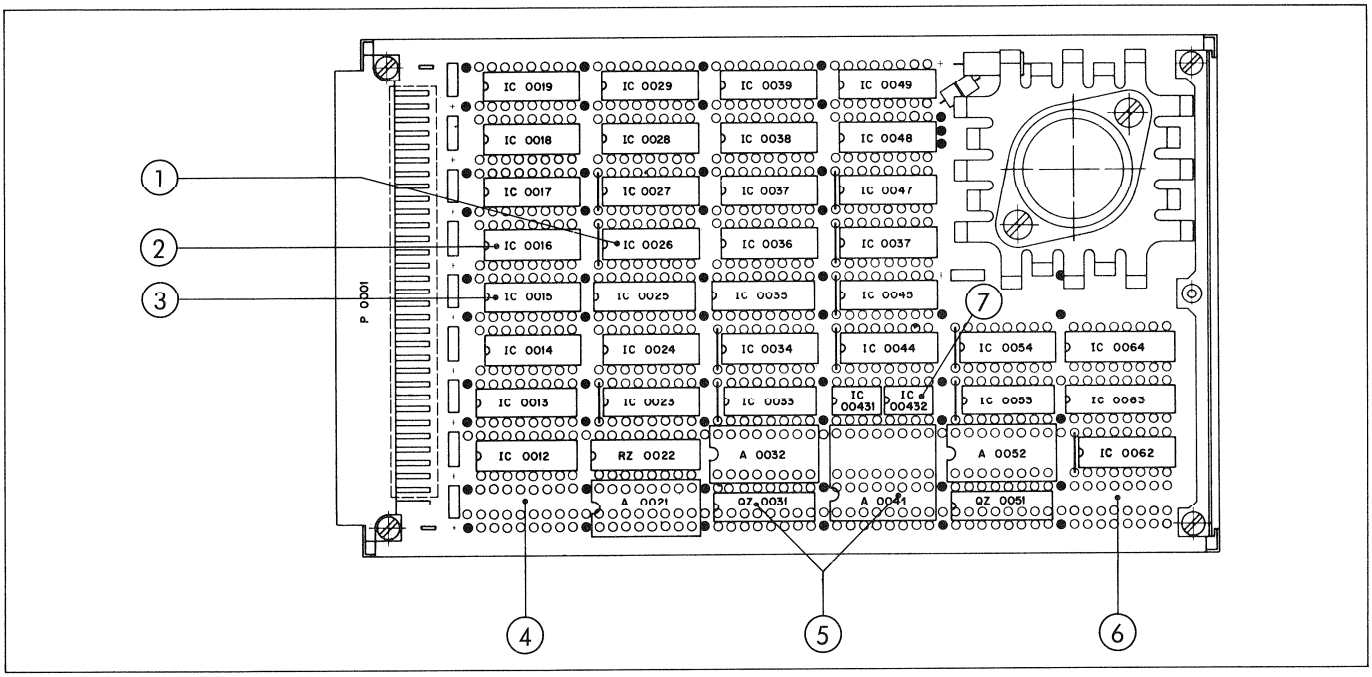

Fig. 1.10

Die Wrap-Karten im TLS Slave Rack sind vorwiegend mit ICs bestückt. Um bei der Fehlersuche den Schritt vom Schema auf die Printkarte zu erleichtern, trägt jeder IC im Schema nebst seiner Herstellerbezeichnung eine zweistellige Zahl. Diese Zahl bildet die Brücke zwischen Schema und Belegungsplan, mit ihrer Hilfe lässt sich der Platz des betreffenden ICs auf der Wrap-Karte finden. die Universalkarte (Fig. 1.10) ist in 6 Kolonnen gegliedert. Jede Kolonne hat maximal 9 Plätze.

Die Kolonnen sind von links nach rechts numeriert, die Plätze innerhalb einer Kolonne von unten nach oben. So hat beispielsweise der viertunterste Platz in der zweiten Kolonne die Nummer 24:

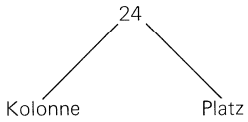

Ein "Normalplatz" auf dem Universalprint weist 16 Anschlusspunkte auf, ist also für ein Dual-In-Line Bauelement mit 16 Pins konzipiert. Da aber nicht jedes Bauelement auf diesen Karten 16 Pins aufweist, sind einige Erläuterungen nötig.

Die Numerierung der folgenden Spezialfälle bezieht sich auf die Indices in Figur 1.10.

The wrap board in the TLS slave rack are primarily equipped with ICs. For easier troubleshooting, each IC of a circuit board is identified in the diagrams by a twodigit number in addition to the manufacturer's designation. This number provides the necessary link between the diagram and the circuit board layout, i.e. this number can be used to locate the corresponding ICs on the wrap board. The universal board (Fig. 1.10) features 6 columns. For each column there are up to 9 IC locations.

The columns are numbered from left to right. The locations within a column are numbered from the bottom to the top. The fourth IC location from the bottom in column two thus carries the number 24:

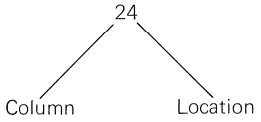

A "standard location" on the universal board features 16 pin contacts, i.e. it is laid out for a dual-in-line package with 16 pins. However, since not all circuit packages on this board have 16 pins, a few additional explanations are necessary.

The numeration of the subsequently treated examples refers to the suffixes in figure 1.10.

(1) Bei ICs mit 14 Pins sind links die Anschlüsse 1 und 16 frei und können mit festen Drahtbrücken oder auch mit Jumpern bestückt werden (siehe dazu die Erklärungen auf Seite 2/107ff).

(1) With 14-pin ICs, pin contacts 1 and 16 on the lefthand side remain vacant. These can be used for inserting fixed wire bridges or jumpers (see explanations starting on page 2/107).

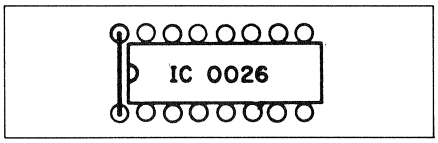

(2) ICs oder andere Bauelemente, die weniger als 16 Anschlüsse aufweisen, sind immer so eingebaut, dass die Printkontakte 8 und 9 belegt sind, also "rechtsbündig".

(2) ICs or other components with less than 16 pins are always mounted in such a manner that contacts 8 and 9 of the board are occupied, i.e. the components are "right justified".

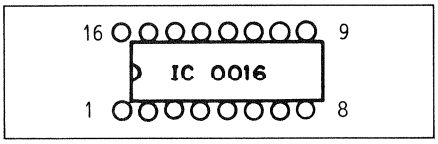

(3) Links von allen ungeraden Plätzen befinden sich zwei Kontakte, die zum Beispiel für Speisungszwecke verwendet werden können. Diese Punkte tragen die Bezeichnungen 90 und 91 sowie die Platznummer auf ihrer rechten Seite, also 15.90 und 15.91.

(3) To the left of all odd-numbered mounting locations there is a pair of contacts which can, e.g., be used for supply purposes. These contacts carry the designation 90 and 91 as well as number of the mounting location to their right, e.g., 15.90 and 15.91.

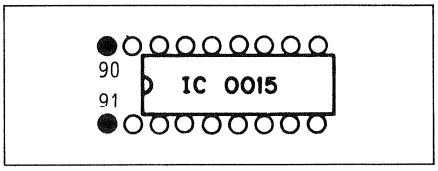

(4) Die gerasterten Anschlüsse auf der nebenstehenden Figur sind zusätzlich angebracht worden, um in diesem Bereich der Printkarte grössere ICs (24, 28 oder 40-polige) einstecken zu können, die in einem anderen Raster liegen. Diese Anschlüsse tragen dieselbe Anschlussnummer wie der Kontakt unmittelbar unter oder über ihnen mit dem Zusatzbuchstaben A.

(4) The pin contacts shown in the hatched section of the figure to the right have been provided to enable mounting of larger ICs (24-, 28, or 40-pin packages). These contacts are identified with the same number as those that are located immediately above or below, however they carry the suffix A.

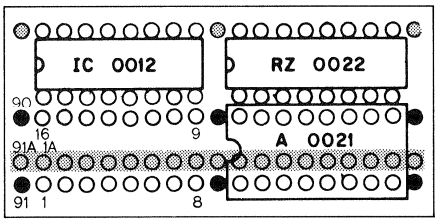

(5) Auf gewissen Prints befinden sich Baugruppen, die diskrete Bauelemente enthalten, sogenannte Assemblies. Solche Assemblies können einen oder auch zwei Plätze beanspruchen. Reicht ein Assembly über zwei Plätze, so trägt es die tiefere Platznummer.

(5) Certain circuit boards contain discrete assemblies. These can occupy either one or two locations. If an assembly occupies two locations, it is identified by the lower of the two numbers.

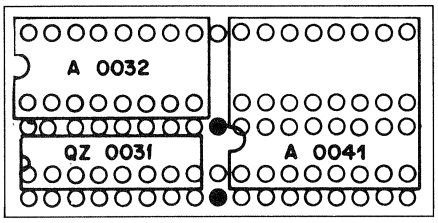

(6) Platz 61 ist auf allen Wrap-Karten leer. Die Anschlüsse sind mit 61.1 bis 61.16 numeriert und sind als Testpunkte für Messzwecke belegt. Auf dem Schema sind diese Testpunkte mit dem Symbol aus Abschnitt 1.3.1 und der Anschlussnummer gekennzeichnet (z.B.: 61.4).

(6) Location 61 is left vacant on all wrap boards. The corresponding pin contacts are identified as 61.1 through 61.16 and serve as testing and measuring points. On the circuit diagram, these test points are identified with the symbols shown in section 1.3.1 and the corresponding contact number (e.g., 61.4)

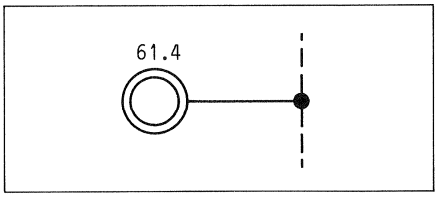

(7) Werden 2 ICs mit je 8 Pins auf einen Platz gesetzt, so erhalten beide ICs die selbe Platznummer mit Index 1 (links) und Index 2 (rechts).

(7) If two 8-pin ICs are mounted in a single location, both ICs have the same location number, however the left-hand package is identified with suffix 1, the right-hand package with suffix 2.

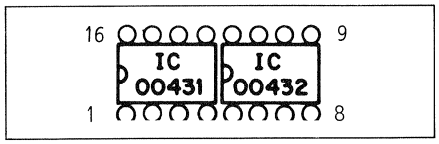

A80 LOCATOR | A80 MASTER-CONTROL | A800

MASTER (CODE SOURCE)

AUDIO TRANSPORTS

A800

A80/OTHERS

7.3 ... 7.8

SECTION 7.3 ... 7.8:
VIDEO TRANSPORTS

SECTION 7.2:
SWITCH SET
1.228.373

7

SECTION 7.1: INTERFACE RACK
1.228.890

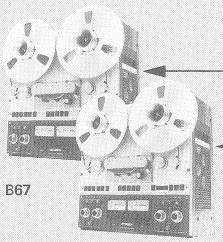

B67

7.9

7.9

7.9

7.9

SECTION 7.9:
ADDRESS START INTERFACE
1.228.374 (1.228.623)

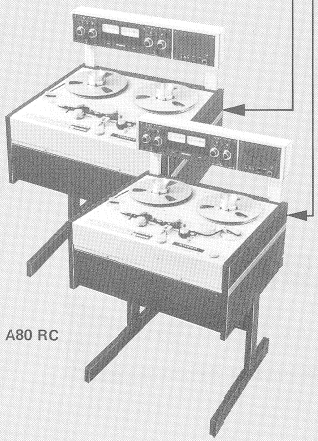

A80 RC

25/50 / 8000

SECTION 7.10:
EXTERNAL FREQUENCY
CONTROLLER 1.228.601

SPROCKET
FILM TRANSPORT

STATION SYNC
FREQUENCY, CODE

SLAVE PROCESSOR RACK

SECTION 2: SCHEMATIC DIAGRAMS
RACK LOCATIONS 1-20, LAYOUTS,
PARTS LIST, JUMPER SETTING

SECTION 3: CIRCUIT DESCRIPTION
RACK LOCATIONS 1-20

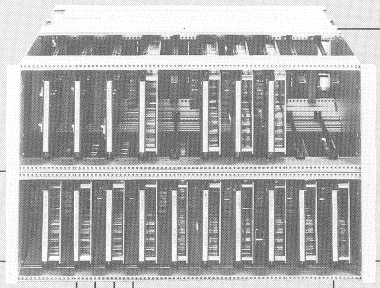

SECTION 4:
BACK PANELS
ORGANIZATION
AND
WIRING GR 99

(REAR OF RACK)
SECTION 5:
CONNECTION
FIELDS
RACK ELEMENTS
UPPER PART GR 98,
LOWER PART GR 97

SLAVE PERIPHERAL EQUIPMENTS

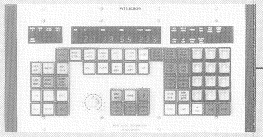

6.1

SECTION 6.1: MAIN PROGRAMMER
1.228.460 (461)

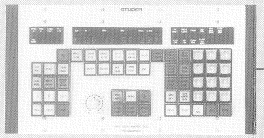

6.1

SECTION 6.1: MAIN PROGRAMMER
1.228.460 (461)

6.3

SECTION 6.3: PARALLEL/ SERIAL
CONVERTER
1.228.490

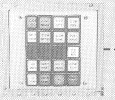

6.6

SECTION 6.6: BASIC PROGRAMMER
1.228.380

6.4

SECTION 6.4: POWER SUPPLY
1.228.450

6.2

SECTION 6.2: CODE CHANNEL REMOTE CONTROL
1.228.328

6.5

SECTION 6.5: POWER SUPPLY
1.228.470

SLAVE TRANSPORTS

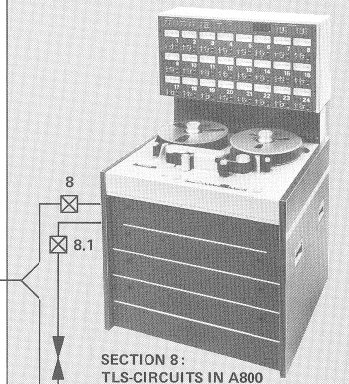

8

8.1

SECTION 8:
TLS-CIRCUITS IN A800
1.180.086

SECTION 8.1:
CODE CHANNEL
REMOTE CONTROL A800
1.328.140

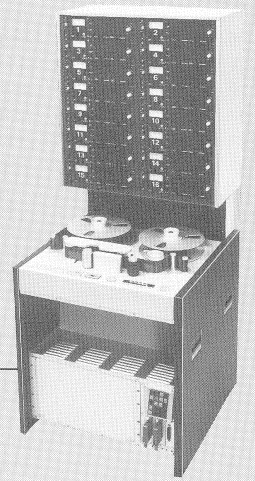

9

SECTION 9:
TLS-MODIFICATIONS AND CIRCUITS
IN A80 VU MK II / MK III

☒ INDICATES PARAGRAPH OF CABLE DESCRIPTION

CONTENTS SECTION 2

SLAVE RACK LOCATION		PC BOARD NUMBER	SECTION PAGE	DESCRIPTION
1		1.228.488-00	2/4	EXTERNAL FREQUENCY CONTROL/TIME CODE GENERATOR
1		1.228.483-00	2/8	EXTERNAL FREQUENCY CONTROL MK II
2		1.228.484-00	2/11	CAPSTAN MOTOR CONTROL MK II
3	▲	1.228.403-71	2/15	MASTER + SLAVE RAM/TIMING
4		1.228.480-00	2/19	ARITHMETIC CONTROL A MK II
5		1.228.405-71	2/23	ARITHMETIC CONTROL B
6		1.228.481-00	2/27	PERIPHERAL CONTROL A MK II
7	▲	1.228.407-71	2/31	PERIPHERAL CONTROL B
8		1.228.408-73	2/35	TAPE DECK INTERFACE
8		1.228.408-72	2/41	TAPE DECK INTERFACE
8		1.228.487-81	2/47	TLS INTERFACE TO A800
8		1.228.487-00	2/51	TLS INTERFACE TO A800
9		1.228.409-71	2/55	PARALLEL CONNECTED PROGRAMMER
10		1.228.410-72	2/59	PARALLEL CONNECTED PROGRAMMER TRANSMITTER
11		1.228.411-85	2/63	CODE RECORD AMPLIFIER A80-S
12	▲	1.228.412-81	2/67	CODE READ AMPLIFIER
13		1.228.413-71	2/71	DEMODULATOR
14		1.228.478-71	2/75	ARITHMETIC CONTROL
15		1.228.482-00	2/79	ADDITIONAL PERIPHERAL/ARITHMETIC CONTROL B
			2/83	LIST OF PROM NUMBERS AND LOCATIONS
17		1.228.417-72	2/85	BASIC PROGRAMMER INTERFACE
17		1.228.489-81	2/89	CODE CHANNEL CONTROL IF A800
17		1.228.489-00	2/93	CODE CHANNEL CONTROL IF A800
18		1.228.418-81	2/99	STAB LIZER + 5 V/+ 5 V
18		1.228.418-00	2/100	STAB LIZER + 5 V/+ 5 V
19		1.228.419.81	2/101	STAB LIZER –12 V/+ 12 V
19		1.228.419-00	2/102	STAB LIZER –12 V/+ 12 V
19		1.228.422-00	2/103	STAB LIZER + 5 V/+ 12 V
20		1.228.420-81	2/105	STAB LIZER –5.2 V/+ 24 V
20		1.228.420-00	2/106	STAB LIZER –5.2 V/+ 24 V
			2/107	EXPLANATION AND SETTING OF JUMPERS AND DUAL-IN-LINE (DIL) SWITCHES
1		1.228.488	2/109	– EXTERNAL FREQUENCY CONTROL / TIME CODE GENERATOR
2		1.228.484	2/109	– CAPSTAN MOTOR CONTROL MKII
3		1.228.405	2/109	– ARITHMETIC CONTROL B
4		1.228.478	2/111	– ARITHMETIC CONTROL
5		1.228.417	2/113	– BASIC PROGRAMMER INTERFACE (A80)
5		1.228.489	2/113	– CODE CHANNEL CONTROL INTERFACE (A800)
			2/116	CORRESPONDANCE TABLE OF TLS SOFTWARE WITH TAPE RECORDER VERSIONS
			2/117...127	LIST OF TLS PROM SETS
4	▲	1.228.428	2/128	ARITHMETIC CONTROL A E-PROM
6	▲	1.228.429	2/130	PERIPHERIAL CONTROL A E-PROM
15	▲	1.228.430	2/132	ADDITIONAL PERI/ARI E-PROM
2		1.228.484–81	2/133	CAPSTAN MOTOR CONTROL PCB MKII
2		1.228.484–82	2/136	CAPSTAN MOTOR CONTROL PCB MKII

ALL PCBs MARKED WITH THIS SIGN ▲
CONTAIN COMPONENTS SENSITIVE TO
STATIC CHARGES.
PLEASE, REFER TO PREFACE BEOFORE
YOU REMOVE THESE BOARDS.

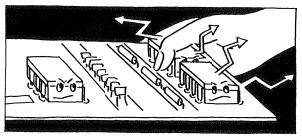

EXTERNAL FREQUENCY CONTROL/TIME CODE GENERATOR 1.228.488-00

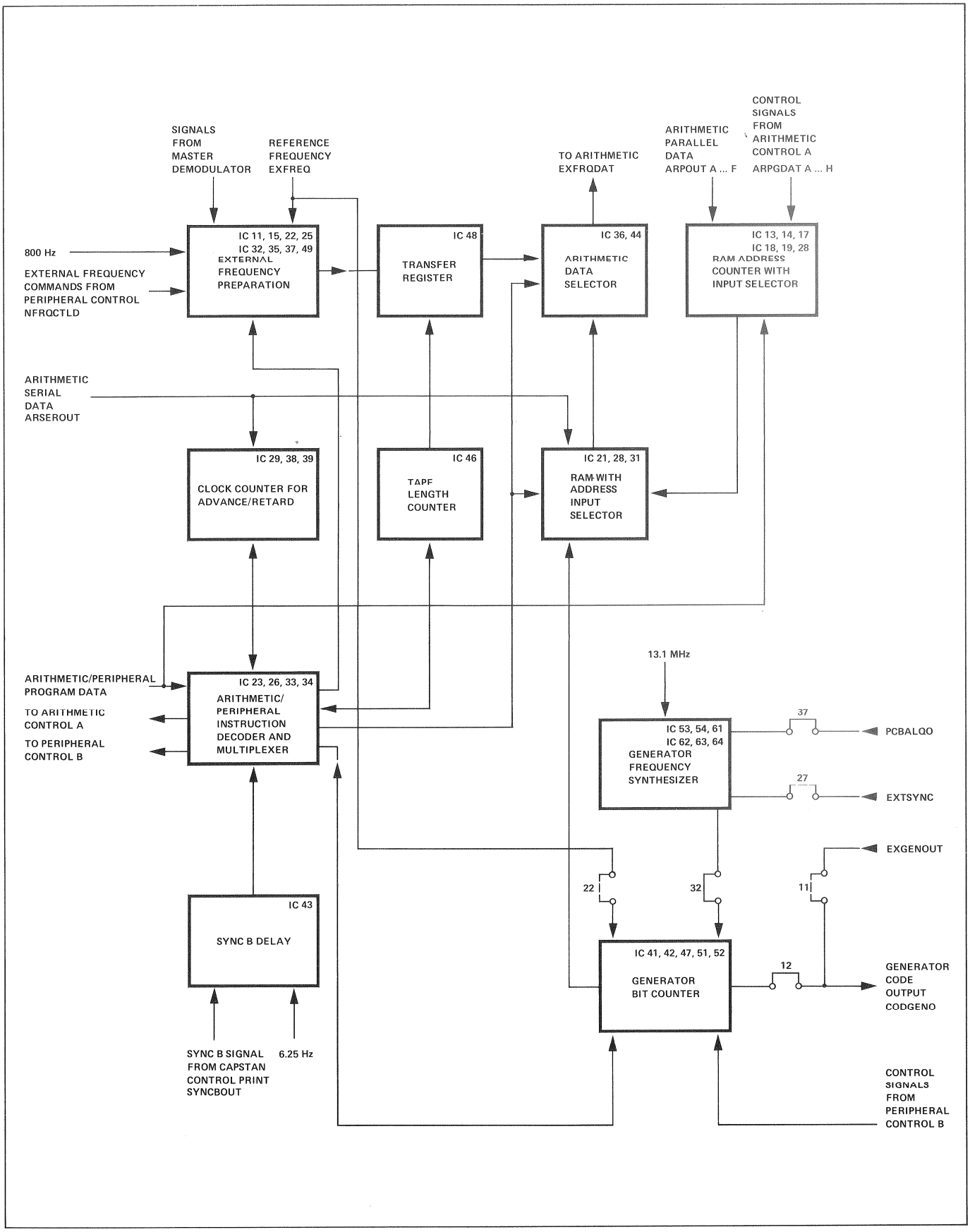

SLAVE RACK LOCATION 1

EXTERNAL FREQUENCY CONTROL/TIME CODE GENERATOR 1.228.488-00

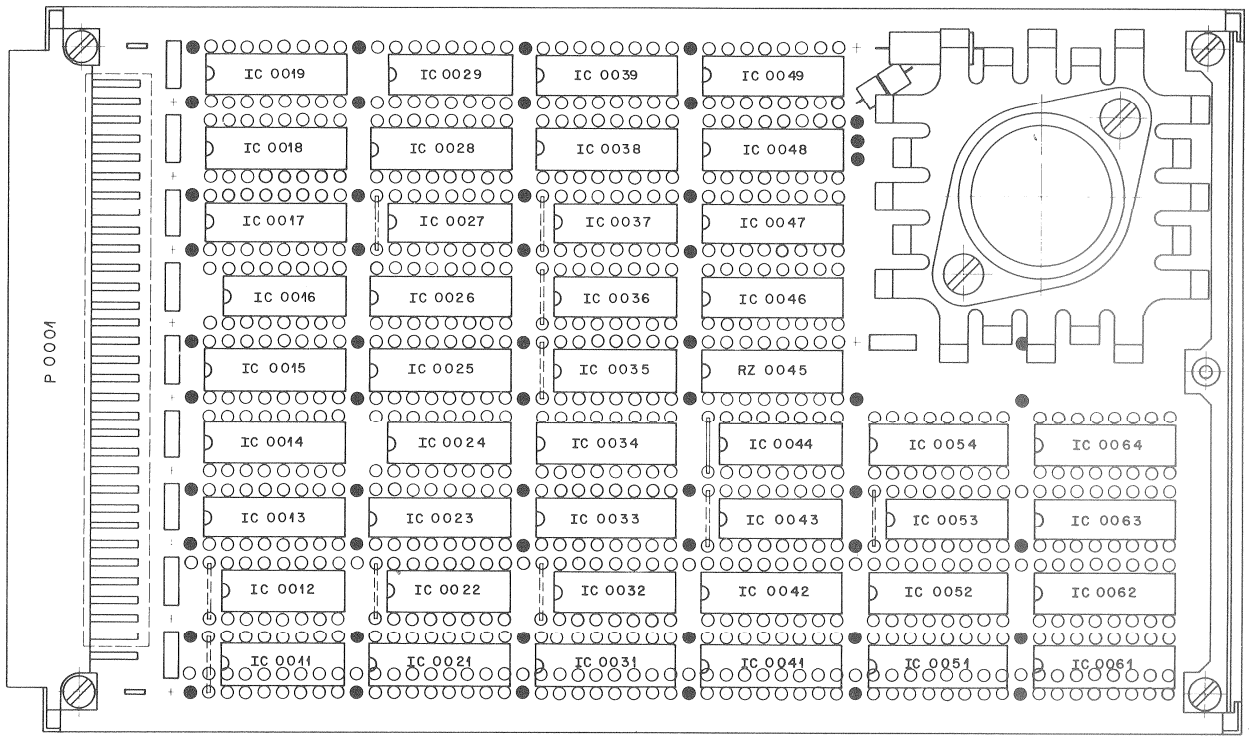

* S T U D E R * POSITION LIST OF PARTS 1.228.488.00 * 78/05/23 * PAGE 1 OF 1 *
* TAPE LOCK SYSTEM 2000 * EXT. FREQ. CTRL. / GENERATOR * 78/05/23-0 *

POSITION RD.	POS.M	PART NO.	DESCRIPTION OF PART
IC	0011	50.05.0173	IC SN 75182N,DM 8820 A ,REC
IC	0012	50.06.0032	IC SN 74 LS 32 N TTL
IC	0013	50.06.0298	IC SN 74 LS 298N , TTL
IC	0014	50.06.0298	IC SN 74 LS 298N , TTL
IC	0015	50.06.0157	IC SN 74 LS 157 N TTL
IC	0016	50.06.0086	IC SN 74 LS 86 N TTL
IC	0017	50.06.0163	IC SN 74 LS 163 N TTL
IC	0018	50.06.0163	IC SN 74 LS 163 N TTL
IC	0019	50.06.0163	IC SN 74 LS 163 N TTL
IC	0021	50.06.0157	IC SN 74 LS 157 N TTL
IC	0022	50.06.0074	IC SN 74 LS 74 N TTL
IC	0023	50.06.0151	IC SN 74 LS 151 N TTL
IC	0024	50.06.0020	IC SN 74 LS 20 N TTL
IC	0025	50.06.0139	IC SN 74 LS 139 N TTL
IC	0026	50.06.0139	IC SN 74 LS 139 N TTL
IC	0027	50.06.0014	IC SN 74 LS 14 N TTL
IC	0028	50.05.0210	IC SN74S209 ,IM55S18CDE TTL-3
IC	0029	50.06.0164	IC SN 74 LS 164 N TTL
IC	0031	50.06.0157	IC SN 74 LS 157 N TTL
IC	0032	50.06.0000	IC SN 74 LS 00 N TTL
IC	0033	50.06.0155	IC SN 74 LS 155 N TTL
IC	0034	50.06.0151	IC SN 74 LS 151 N TTL
IC	0035	50.06.0074	IC SN 74 LS 74 N TTL
IC	0036	50.06.0032	IC SN 74 LS 32 N TTL
IC	0037	50.06.0074	IC SN 74 LS 74 N TTL
IC	0038	50.06.0163	IC SN 74 LS 163 N TTL
IC	0039	50.06.0163	IC SN 74 LS 163 N TTL
IC	0041	50.06.0161	IC SN 74 LS 161 N TTL
IC	0042	1.025.015.20	TIME CODE GENERATOR PROM 2
IC	0043	50.06.0164	IC SN 74 LS 164 N TTL
IC	0044	50.06.0008	IC SN 74 LS 08 N TTL
IC	0046	50.06.0169	IC SN 74 LS 169 N TTL
IC	0047	50.06.0109	IC SN 74 LS 109 N TTL
IC	0048	50.06.0165	IC SN 74 LS 165 N TTL
IC	0049	50.06.0161	IC SN 74 LS 161 N TTL
IC	0051	50.06.0160	IC SN 74 LS 160 N TTL

POSITION RD.	POS.M	PART NO.	DESCRIPTION OF PART
IC	0052	50.06.0161	IC SN 74 LS 161 N TTL
IC	0053	50.06.0074	IC SN 74 LS 74 N TTL
IC	0054	50.05.0209	IC SN 7497N, TTL
IC	0061	1.025.015.10	TIME CODE GENERATOR PROM 1
IC	0062	50.06.0161	IC SN 74 LS 161 N TTL
IC	0063	50.06.0161	IC SN 74 LS 161 N TTL
IC	0064	50.06.0161	IC SN 74 LS 161 N TTL
P	0001	54.01.0354	P LEISTE 3 * 32 POL WRAP
RZ	0045	57.85.3332	RZ 15*3.3K, 2%, DIL16

A80 LOCATOR | A80 MASTER-CONTROL | A800

EXTERNAL FREQUENCY CONTROL/TIME CODE GENERATOR 1.228.488-00

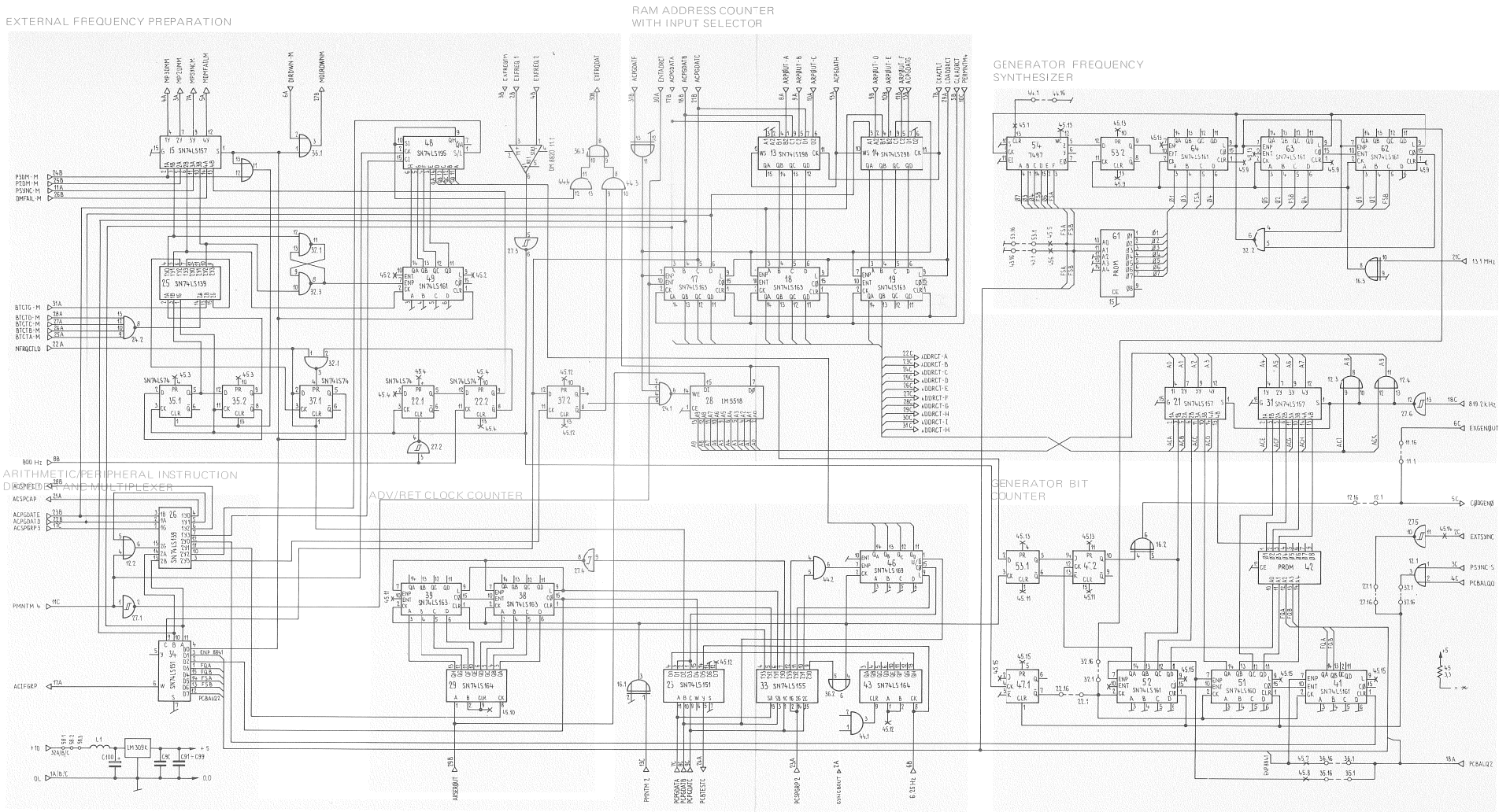

NOTE: FOR EXPLANATION AND SETTING OF JUMPERS (POSITIONS 11/12, 22/32, 27/37, 35/36, AND 43/53) SEE PAGE 2/107.

EXTERNAL FREQUENCY CONTROL MK II 1.228.483-00

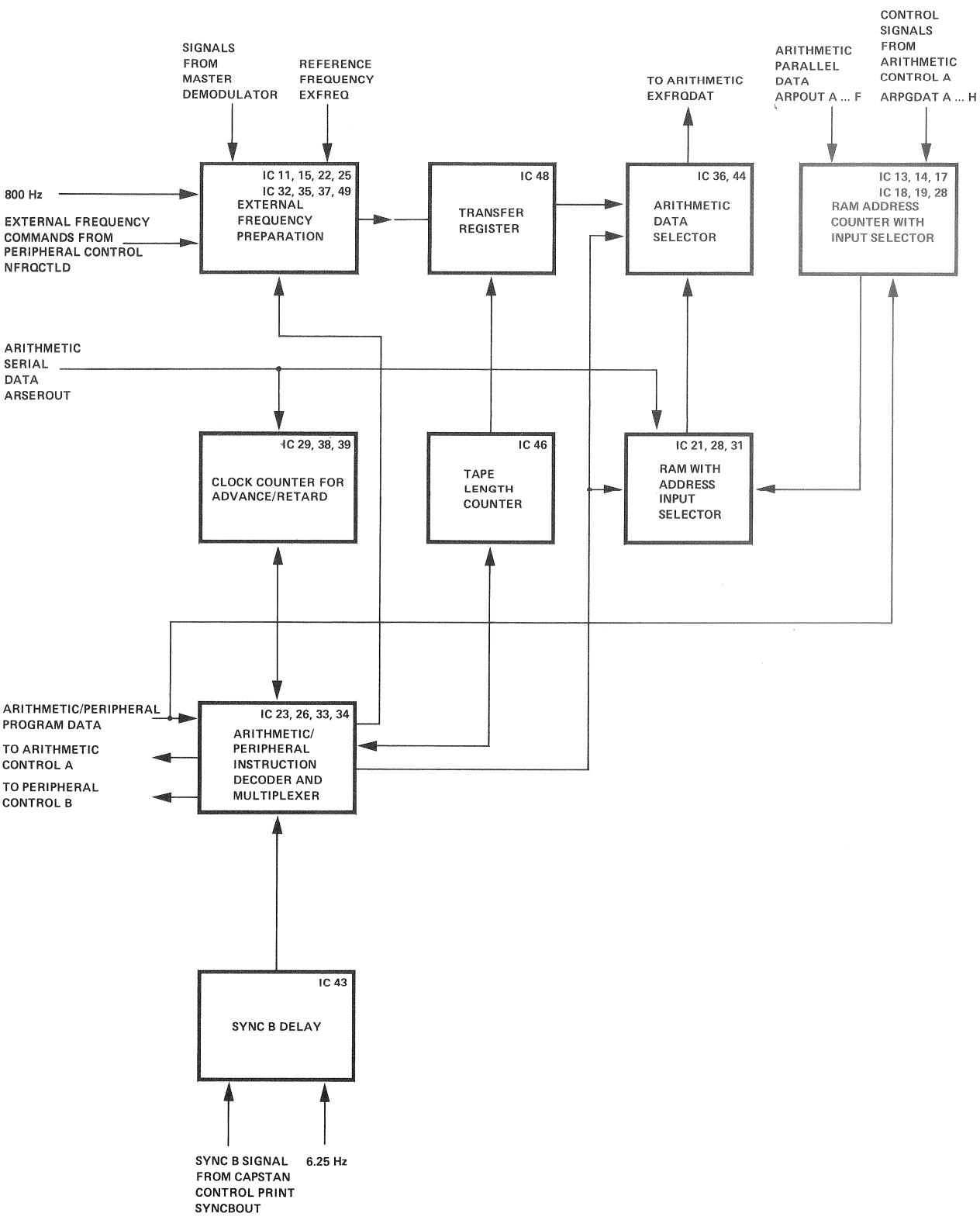

SLAVE RACK LOCATION 1

EXTERNAL FREQUENCY CONTROL MK II 1.228.483-00

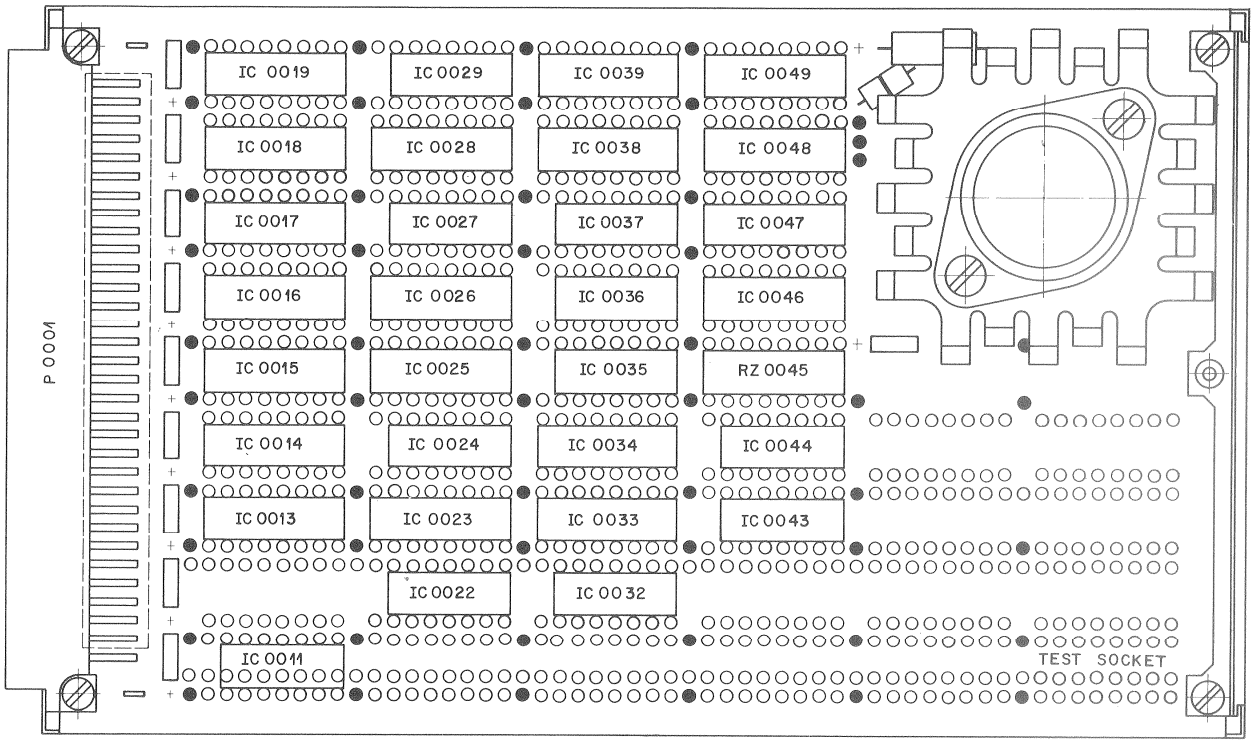

* S T U D E R * POSITION LIST OF PARTS 1.228.483.00 * 77/12/02 * PAGE 1 OF 1 *
* TAPE LOCK SYSTEM 2000 * EXTERNAL FREQUENCY CONTROL MKI * 77/09/01 0 *

POSITION RD.	POS.M	PART NO.	DESCRIPTION OF PART
IC	0011	50.05.0173	IC SN 75182N,DM 8820 A ,REC
IC	0013	50.06.0298	IC SN 74 LS 298N , TTL
IC	0014	50.06.0298	IC SN 74 LS 298N , TTL
IC	0015	50.06.0157	IC SN 74 LS 157 N TTL
IC	0016	50.05.0216	IC N 8 T 95B, ,TTL 3
IC	0017	50.06.0163	IC SN 74 LS 163 N TTL
IC	0018	50.06.0163	IC SN 74 LS 163 N TTL
IC	0019	50.06.0163	IC SN 74 LS 163 N TTL
IC	0022	50.06.0074	IC SN 74 LS 74 N TTL
IC	0023	50.06.0151	IC SN 74 LS 151 N TTL
IC	0024	50.06.0020	IC SN 74 LS 20 N TTL
IC	0025	50.06.0139	IC SN 74 LS 139 N TTL
IC	0026	50.06.0139	IC SN 74 LS 139 N TTL
IC	0027	50.06.0014	IC SN 74 LS 14 N TTL
IC	0028	50.05.0210	IC SN74S209 ,IM55S18CDE TTL 3
IC	0029	50.06.0164	IC SN 74 LS 164 N TTL
IC	0032	50.06.0000	IC SN 74 LS 00 N TTL
IC	0033	50.06.0155	IC SN 74 LS 155 N TTL
IC	0034	50.06.0151	IC SN 74 LS 151 N TTL
IC	0035	50.06.0074	IC SN 74 LS 74 N TTL
IC	0036	50.06.0032	IC SN 74 LS 32 N TTL
IC	0037	50.06.0074	IC SN 74 LS 74 N TTL
IC	0038	50.06.0163	IC SN 74 LS 163 N TTL
IC	0039	50.06.0163	IC SN 74 LS 163 N TTL
IC	0043	50.06.0164	IC SN 74 LS 164 N TTL
IC	0044	50.06.0008	IC SN 74 LS 08 N TTL
IC	0046	50.06.0169	IC SN 74 LS 169 N TTL
IC	0047	50.06.0195	IC SN 74 LS 195 AN TTL
IC	0048	50.06.0195	IC SN 74 LS 195 AN TTL
IC	0049	50.06.0161	IC SN 74 LS 161 N TTL
P	0001	54.01.0354	P LEISTE 3 * 32 POL WRAP
RZ	0045	57.85.3332	RZ 15*3.3K, 2%, DIL16

A80
LOCATOR

EXTERNAL FREQUENCY CONTROL MK II 1.228.483-00

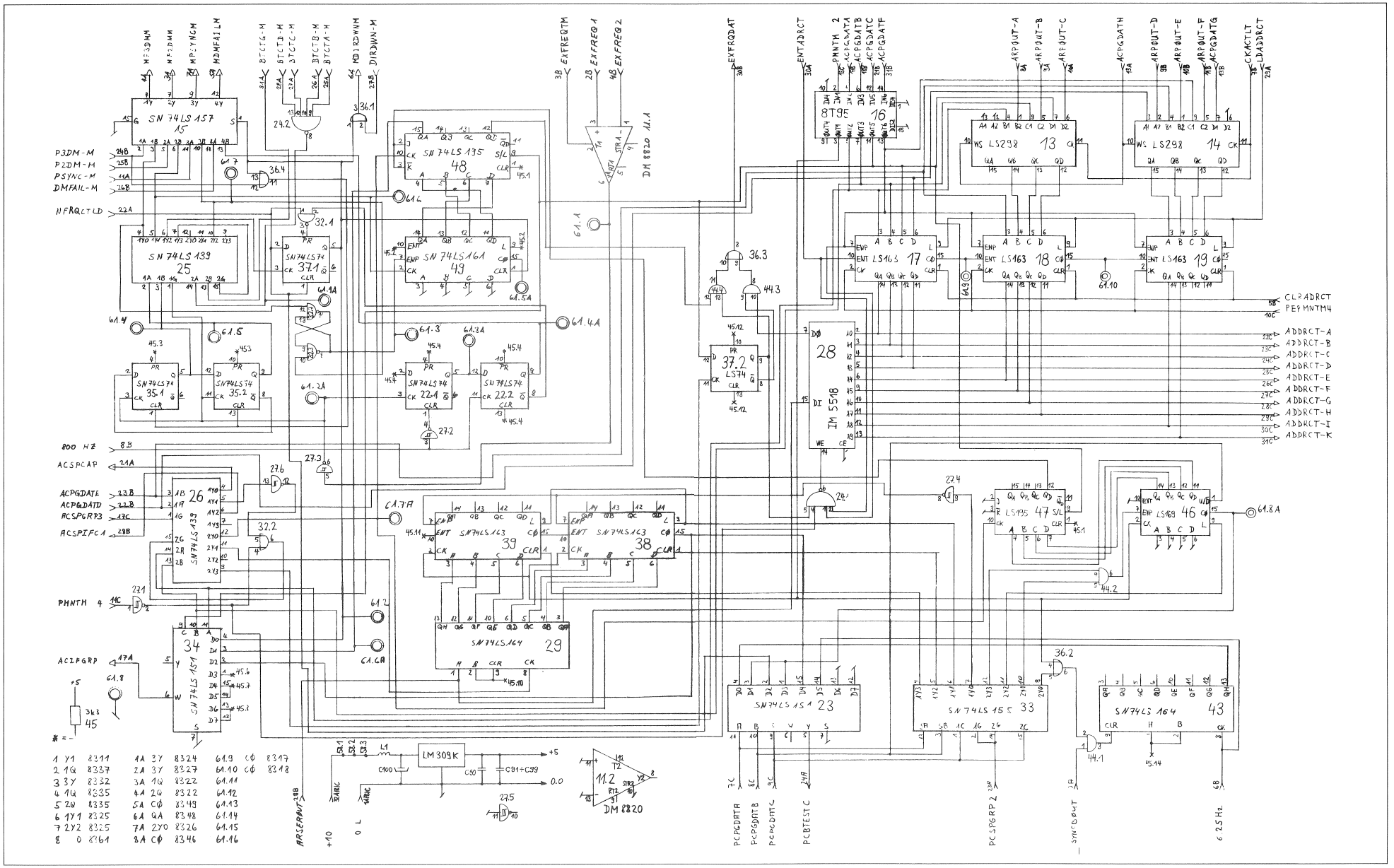

CAPSTAN MOTOR CONTROL MK II 1.228.484-00

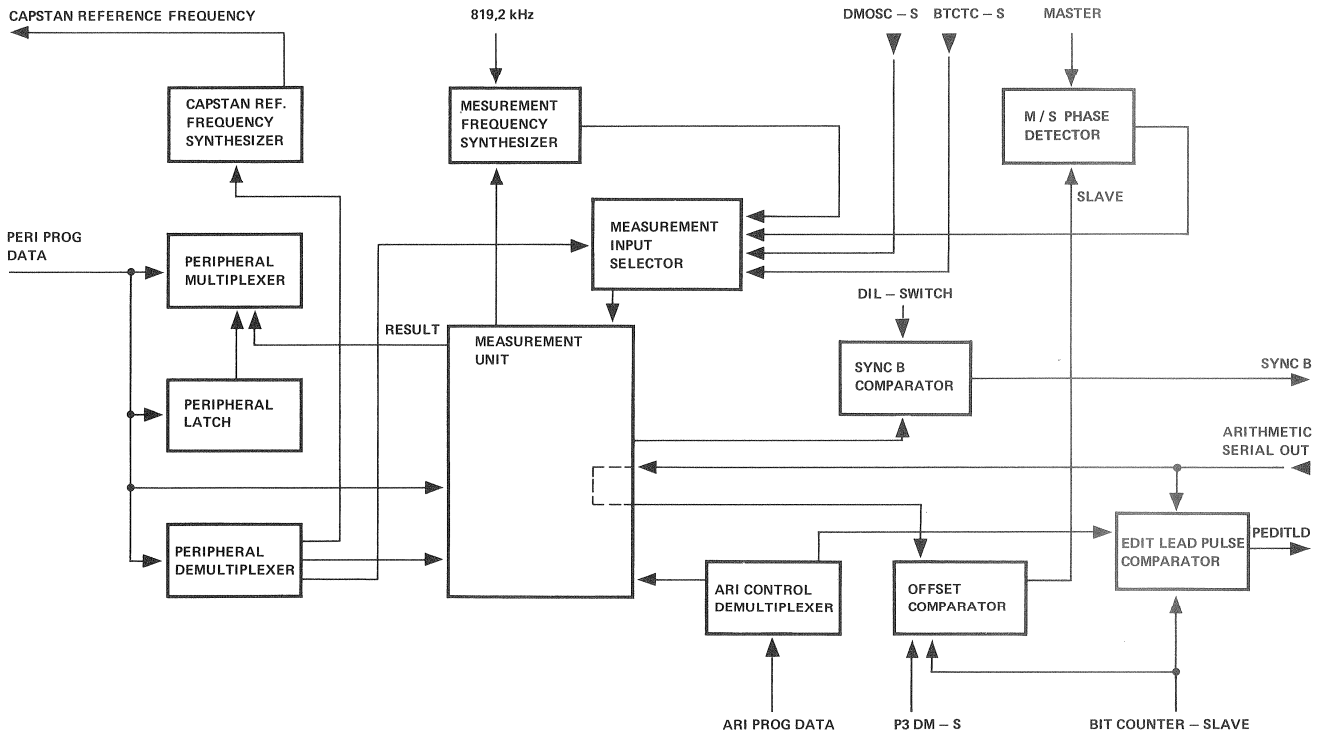

2
SLAVE RACK LOCATION

CAPSTAN MOTOR CONTROL MK II 1.228.484-00

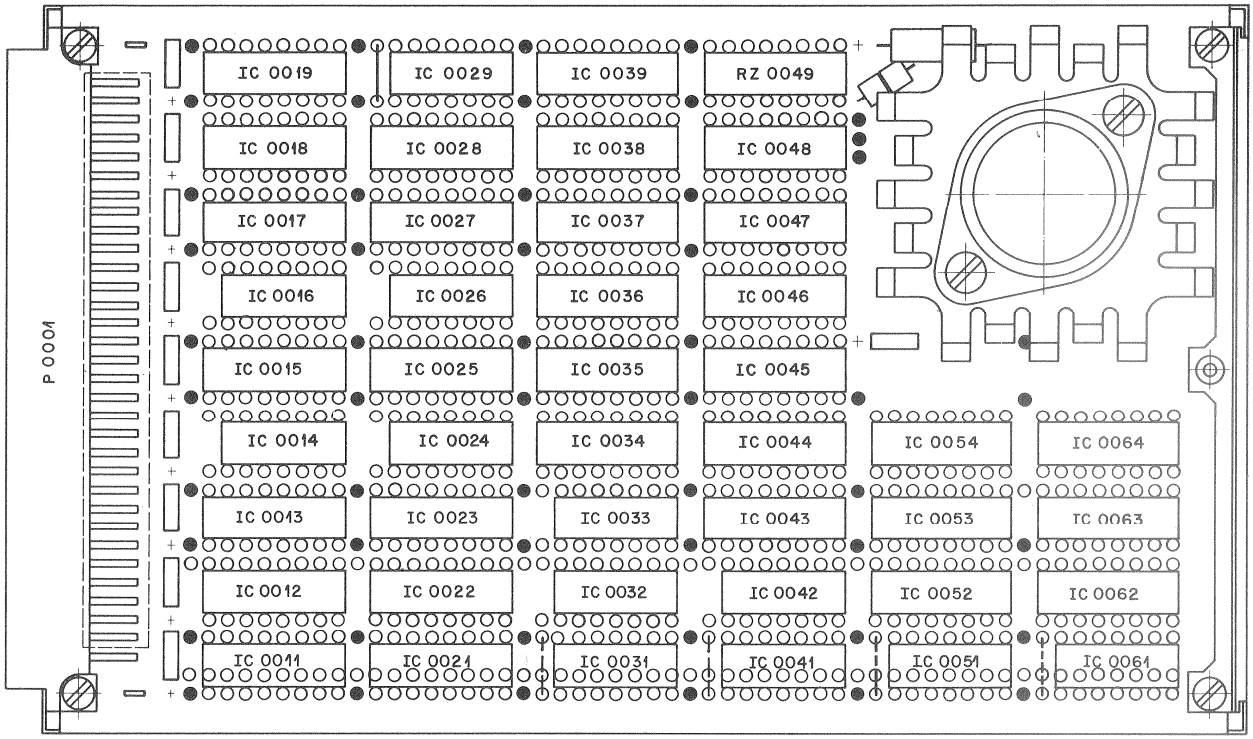

* S T U D E R * POSITION LIST OF PARTS 1.228.484.00 * 77/12/02 * PAGE 1 OF 1 *

* TAPE LOCK SYSTEM 2000 * CAPSTAN MOTOR CONTROL MKII * 77/09/01 0 *

POSITION RD.	POS.M	PART NO.	DESCRIPTION OF PART	
IC	0011	50.06.0169	IC SN 74 LS 169 N	TTL
IC	0012	50.06.0153	IC SN 74 LS 153 N	TTL
IC	0013	50.06.0151	IC SN 74 LS 151 N	TTL
IC	0014	50.06.0032	IC SN 74 LS 32 N	TTL
IC	0015	50.05.0215	IC 93 L 34PC,	TTL
IC	0016	50.06.0086	IC SN 74 LS 86 N	TTL
IC	0017	50.06.0139	IC SN 74 LS 139 N	TTL
IC	0018	50.06.0085	IC SN 74 LS 85 N	TTL
IC	0019	50.06.0085	IC SN 74 LS 85 N	TTL
IC	0021	50.06.0139	IC SN 74 LS 139 N	TTL
IC	0022	50.06.0195	IC SN 74 LS 195 AN	TTL
IC	0023	50.06.0174	IC SN 74 LS 174 N	TTL
IC	0024	50.06.0000	IC SN 74 LS 00 N	TTL
IC	0025	50.06.0161	IC SN 74 LS 161 N	TTL
IC	0026	50.06.0074	IC SN 74 LS 74 N	TTL
IC	0027	50.06.0161	IC SN 74 LS 161 N	TTL
IC	0028	50.06.0085	IC SN 74 LS 85 N	TTL
IC	0029	50.06.0164	IC SN 74 LS 164 N	TTL
IC	0031	50.06.0074	IC SN 74 LS 74 N	TTL
IC	0032	50.06.0004	IC SN 74 LS 04 N	TTL
IC	0033	50.06.0032	IC SN 74 LS 32 N	TTL
IC	0034	50.06.0161	IC SN 74 LS 161 N	TTL
IC	0035	50.06.0161	IC SN 74 LS 161 N	TTL
IC	0036	50.06.0161	IC SN 74 LS 161 N	TTL
IC	0037	50.06.0161	IC SN 74 LS 161 N	TTL
IC	0038	50.05.0209	IC SN 7497N,	TTL
IC	0039	50.06.0169	IC SN 74 LS 169 N	TTL
IC	0041	50.06.0074	IC SN 74 LS 74 N	TTL
IC	0042	50.06.0008	IC SN 74 LS 08 N	TTL
IC	0043	50.06.0085	IC SN 74 LS 85 N	TTL
IC	0044	50.06.0169	IC SN 74 LS 169 N	TTL
IC	0045	50.06.0169	IC SN 74 LS 169 N	TTL
IC	0046	50.06.0169	IC SN 74 LS 169 N	TTL
IC	0047	50.06.0169	IC SN 74 LS 169 N	TTL
IC	0048	50.06.0169	IC SN 74 LS 169 N	TTL
IC	0051	50.06.0074	IC SN 74 LS 74 N	TTL

POSITION RD.	POS.M	PART NO.	DESCRIPTION OF PART	
IC	0052	50.06.0298	IC SN 74 LS 298N ,	TTL
IC	0053	50.06.0085	IC SN 74 LS 85 N	TTL
IC	0054	50.06.0161	IC SN 74 LS 161 N	TTL
IC	0061	50.06.0164	IC SN 74 LS 164 N	TTL
IC	0062	50.06.0298	IC SN 74 LS 298N ,	TTL
IC	0063	50.06.0085	IC SN 74 LS 85 N	TTL
IC	0064	50.06.0161	IC SN 74 LS 161 N	TTL
P	0001	54.01.0354	P LEISTE 3 * 32 POL	WRAP
RZ	0049	57.85.3332	RZ 15*3.3K, 2%,	DIL16

A80 LOCATOR | A80 MASTER-CONTROL | A800

CAPSTAN MOTOR CONTROL MK II 1.228.484

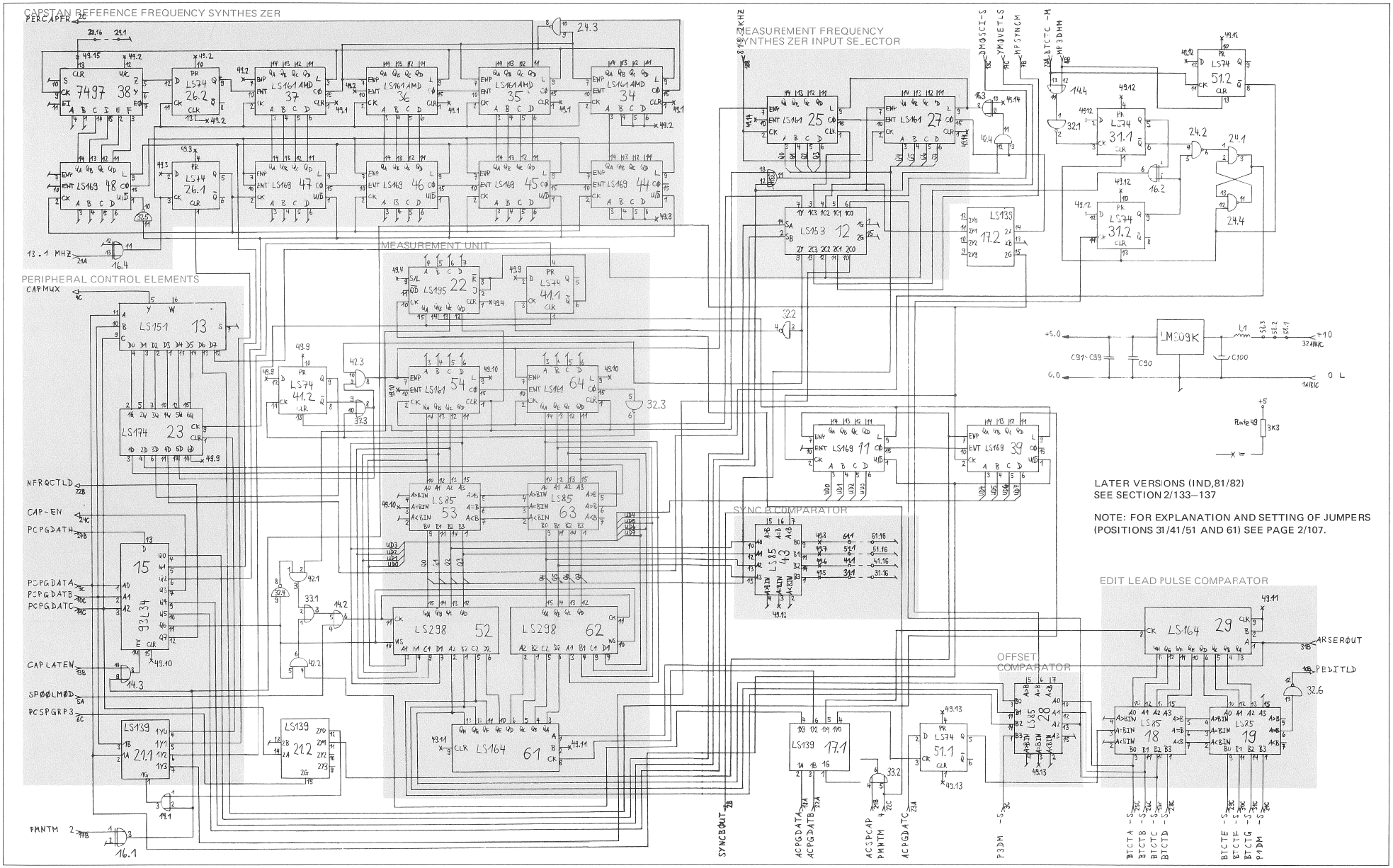

MASTER + SLAVE RAM/TIMING 1.228.403-71

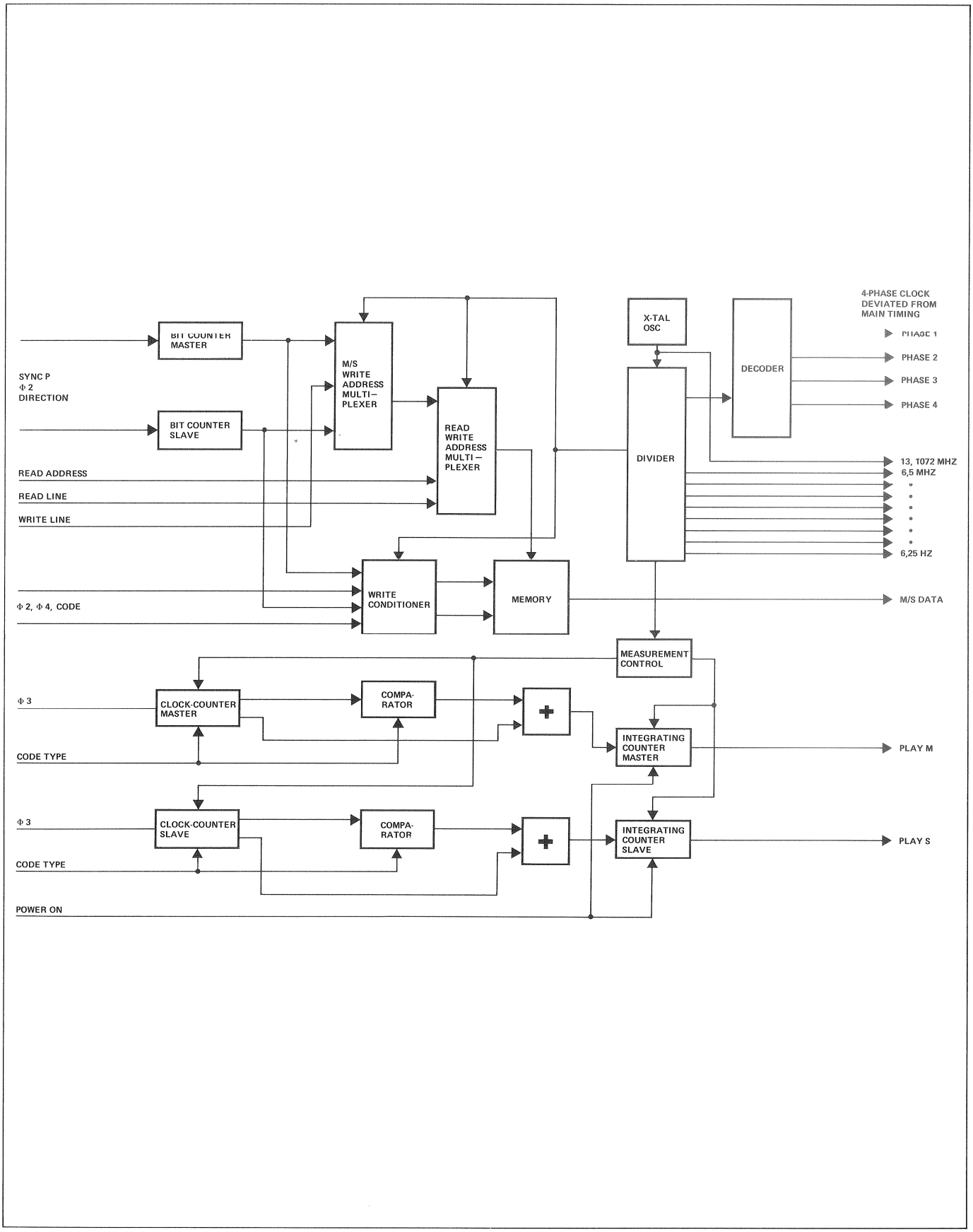

3
SLAVE RACK LOCATION

MASTER + SLAVE RAM/TIMING 1.228.403-71

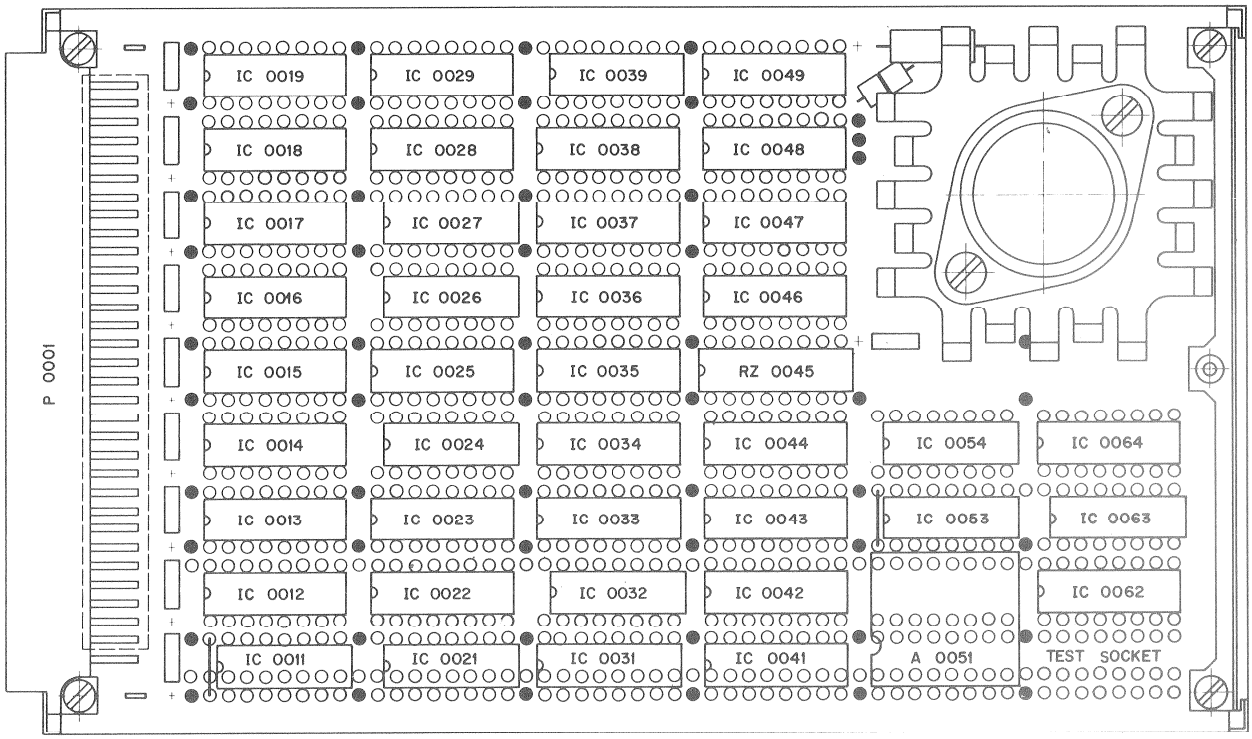

* S T U D E R * POSITION LIST OF PARTS 1.228.403.71 * 76/10/05 * PAGE 1 OF 1 *

* TAPE LOCK SYSTEM 2000 * RAM,TIMING * 76/09/30-A *

POSITION RD. POS.M	PART NO.	DESCRIPTION OF PART
A 0051	1.228.510.00	ASS. 03 - 51
IC 0011	50.06.0032	IC SN 74 LS 32 N TTL
IC 0012	50.06.0161	IC SN 74 LS 161 N TTL
IC 0013	50.06.0161	IC SN 74 LS 161 N TTL
IC 0014	50.06.0161	IC SN 74 LS 161 N TTL
IC 0015	50.06.0161	IC SN 74 LS 161 N TTL
IC 0016	50.06.0161	IC SN 74 LS 161 N TTL
IC 0017	50.06.0161	IC SN 74 LS 161 N TTL
IC 0018	50.06.0155	IC SN 74 LS 155 N TTL
IC 0019	50.05.0216	IC N 8 T 95B, ,TTL-3
IC 0021	50.06.0074	IC SN 74 LS 74 N TTL
IC 0022	50.06.0169	IC SN 74 LS 169 N TTL
IC 0023	50.06.0169	IC SN 74 LS 169 N TTL
IC 0024	50.06.0086	IC SN 74 LS 86 N TTL
IC 0025	50.06.0279	IC SN 74 LS 279 N TTL
IC 0026	50.06.0008	IC SN 74 LS 08 N TTL
IC 0027	50.06.0032	IC SN 74 LS 32 N TTL
IC 0028	50.06.0169	IC SN 74 LS 169 N TTL
IC 0029	50.06.0169	IC SN 74 LS 169 N TTL
IC 0031	50.06.0151	IC SN 74 LS 151 N TTL
IC 0032	50.06.0004	IC SN 74 LS 04 N TTL
IC 0033	50.06.0157	IC SN 74 LS 157 N TTL
IC 0034	50.06.0157	IC SN 74 LS 157 N TTL
IC 0035	50.06.0157	IC SN 74 LS 157 N TTL
IC 0036	50.05.0183	IC IM 5523CDE ,TTL
IC 0037	50.06.0157	IC SN 74 LS 157 N TTL
IC 0038	50.06.0157	IC SN 74 LS 157 N TTL
IC 0039	50.06.0004	IC SN 74 LS 04 N TTL
IC 0041	50.06.0161	IC SN 74 LS 161 N TTL
IC 0042	50.06.0085	IC SN 74 LS 85 N TTL
IC 0043	50.06.0161	IC SN 74 LS 161 N TTL
IC 0044	50.06.0085	IC SN 74 LS 85 N TTL
IC 0046	50.06.0161	IC SN 74 LS 161 N TTL
IC 0047	50.06.0085	IC SN 74 LS 85 N TTL
IC 0048	50.06.0161	IC SN 74 LS 161 N TTL
IC 0049	50.06.0085	IC SN 74 LS 85 N TTL
IC 0053	50.05.0197	IC SN74S04N ,74S04 PC ,TTL
IC 0054	50.06.0032	IC SN 74 LS 32 N TTL
IC 0062	50.06.0169	IC SN 74 LS 169 N TTL
IC 0063	50.06.0074	IC SN 74 LS 74 N TTL
IC 0064	50.06.0169	IC SN 74 LS 169 N TTL
P 0001	54.01.0354	P LEISTE 3 * 32 POL WRAP
RZ 0045	57.85.3102	RZ 15*1 K , 2%, DIL16

A80 LOCATOR | A80 MASTER-CONTROL | A800

MASTER + SLAVE RAM/TIMING 1.228.403-71

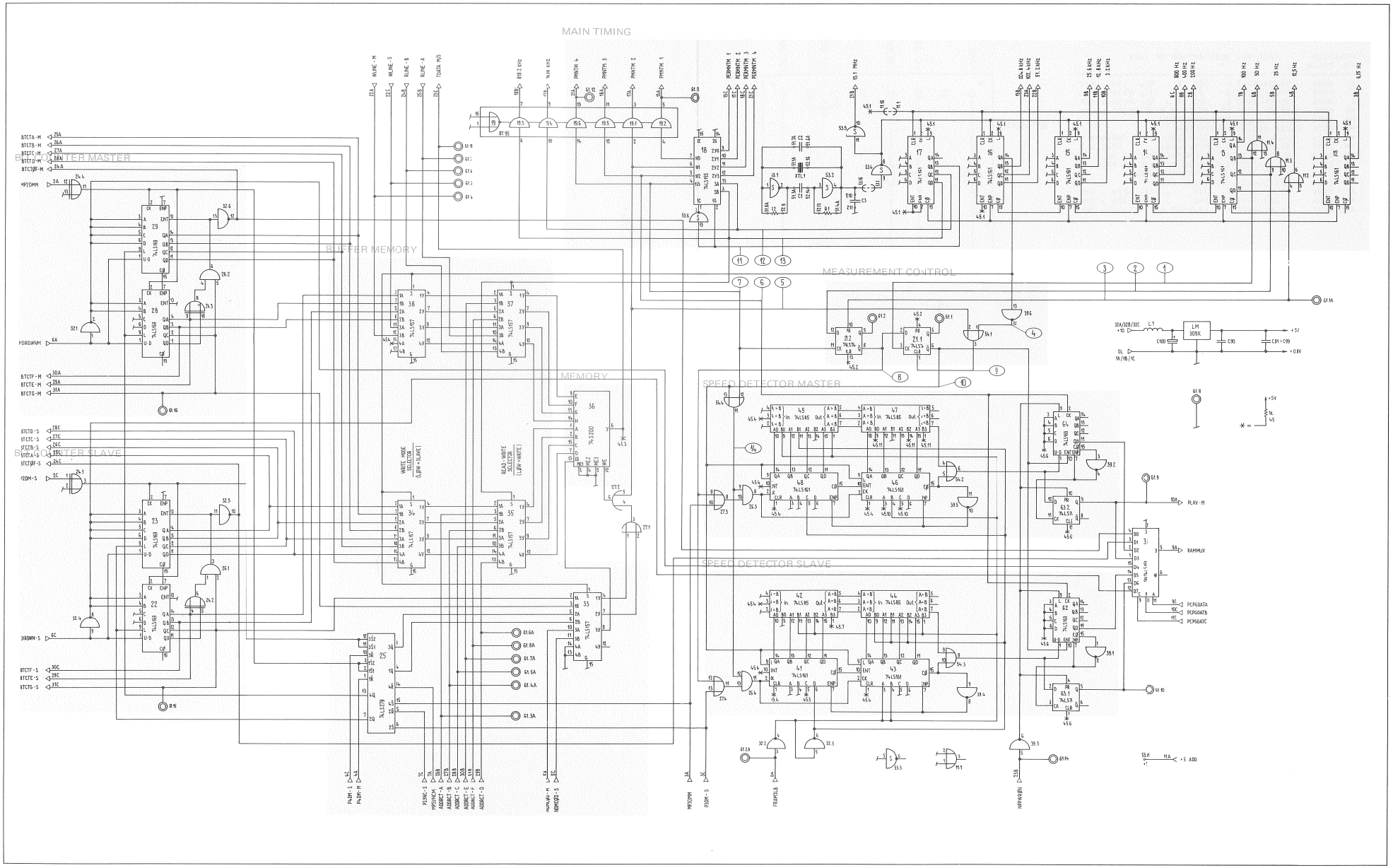

MASTER + SLAVE RAM/TIMING 1.228.403-71

```
*   S T U D E R   *   POSITION LIST OF PARTS 1.228.510.00
*************************************************************
*   TAPE LOCK SYSTEM 2000              *   ASS.03-51

POSITION       PART NO. DESCRIPTION OF PART
RD. POS.M
---------- ------------ ------------------------------
C    0001    59.34.4331 C   330  P ,  5%,  50V , KER
C    0002    59.34.2270 C    27  P ,  5%, N150 , KER
C    0003    59.34.2470 C    47  P ,  5%, N150 , KER
MP   0001    53.03.0171 MP  ADAPTOR PLUG 2*8*0.6 DIL
MP   0002  1.228.510.02 DISTANZBOLZEN
MP   0003  1.228.510.01 HALTEBLECH
MP   0004    21.01.0278 Z - SCHRAUBE,       M2.5 X 5
MP   0005    21.01.0278 Z - SCHRAUBE,       M2.5 X 5
MP   0006    24.16.1025 SICHERUNGSSCHEIBE ZU M2,5
MP   0007    24.16.1025 SICHERUNGSSCHEIBE ZU M2,5
MP   0008    35.03.0109 BEFESTIGUNGSRIEMEN
MP   0009  1.228.510.02 DISTANZBOLZEN
R    0001    57.02.5391 R   390    , 10%, .25W , CMA
R    0002    57.02.5391 R   390    , 10%, .25W , CMA
XTL  0001    89.01.0372 Y   13.1072 MHZ, RS=390, 2E-4
```

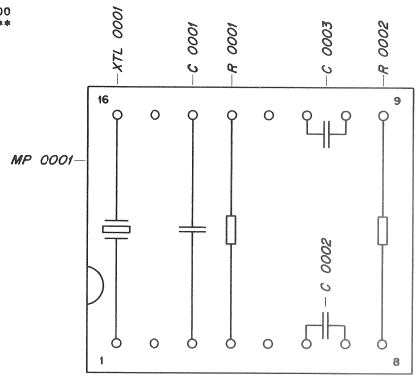

ARITHMETIC CONTROL A MK II 1.228.480-00

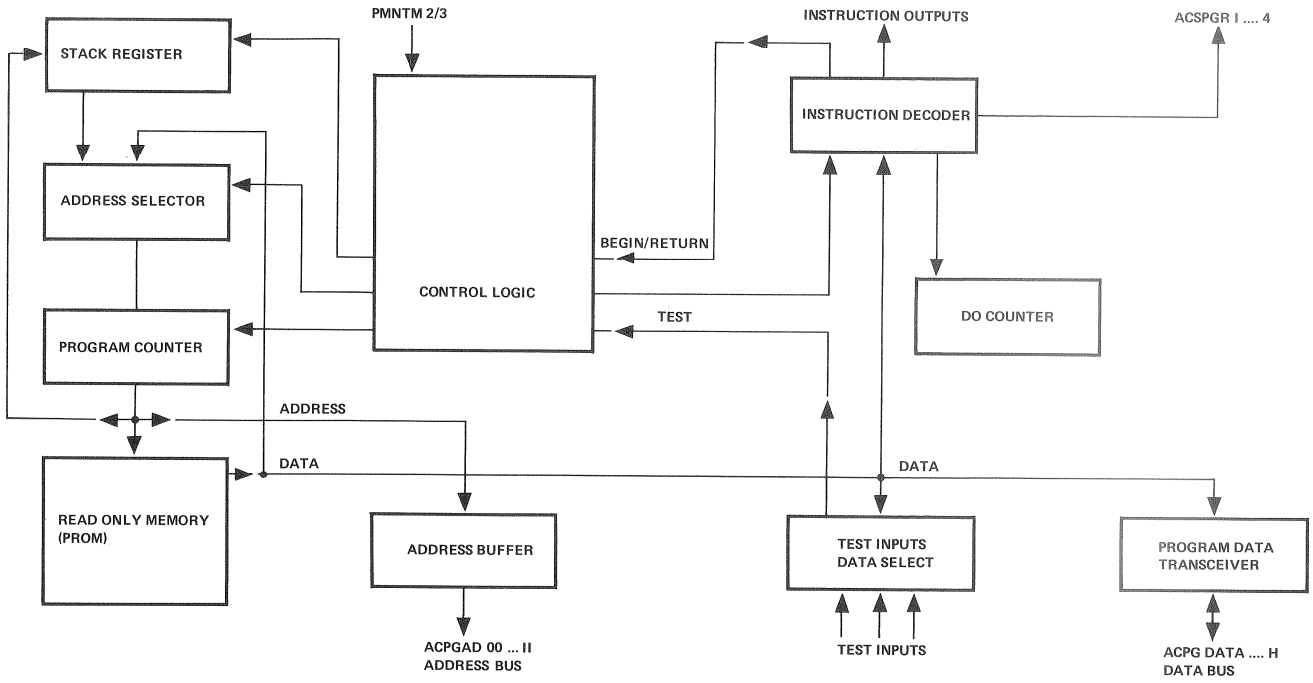

SLAVE RACK LOCATION 4

ARITHMETIC CONTROL A MK II 1.228.480-00

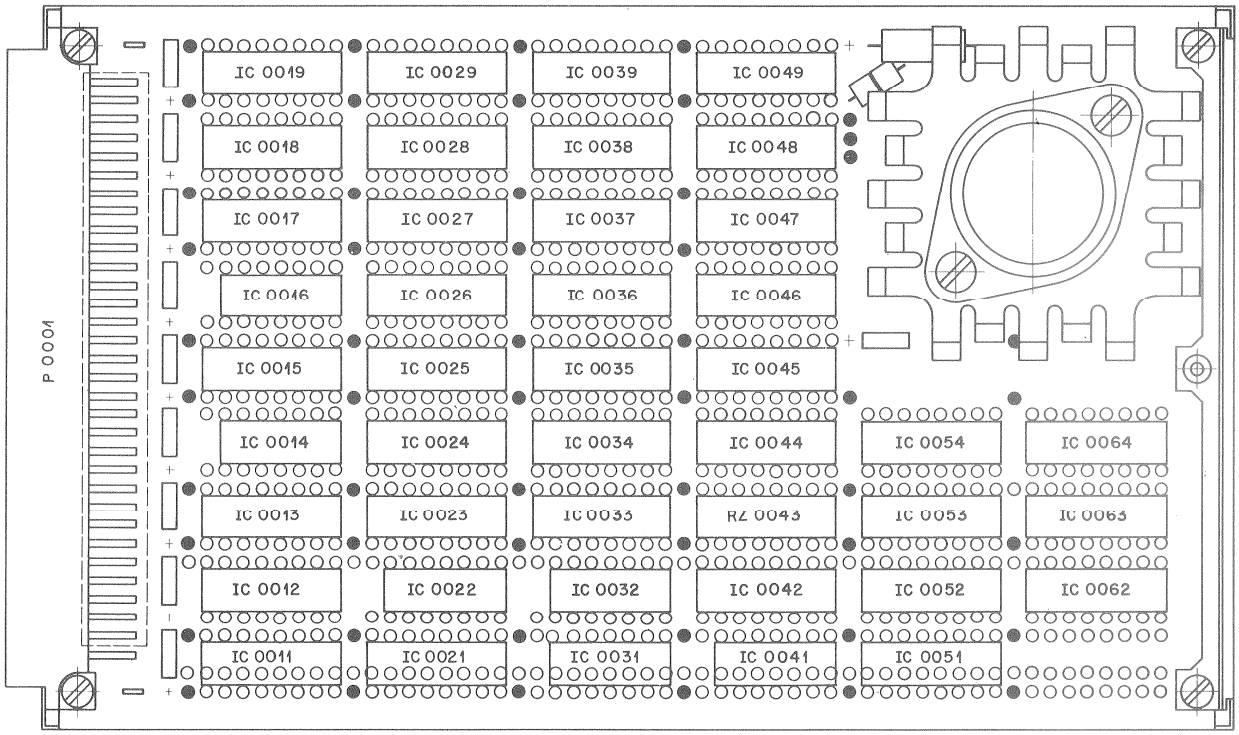

* S T U D E R * POSITION LIST OF PARTS 1.228.480.00 * 78/01/19 * PAGE 1 OF 1 *
* TAPE LOCK SYSTEM 2000 * ARITHMETIC CONTROL A MKII * 77/09/01-0 *

POSITION RD.	POS.M	PART NO.	DESCRIPTION OF PART
IC	0011	50.05.0216	IC N 8 T 95B, ,TTL-3
IC	0012	50.05.0216	IC N 8 T 95B, ,TTL-3
IC	0013	50.06.0155	IC SN 74 LS 155 N TTL
IC	0014	50.06.0004	IC SN 74 LS 04 N TTL
IC	0015	50.06.0151	IC SN 74 LS 151 N TTL
IC	0016	50.06.0008	IC SN 74 LS 08 N TTL
IC	0017	50.05.0260	IC 8T28 , TTL-3
IC	0018	50.05.0260	IC 8T28 , TTL-3
IC	0019	50.05.0260	IC 8T28 , TTL-3
IC	0021	50.06.0155	IC SN 74 LS 155 N TTL
IC	0022	50.06.0008	IC SN 74 LS 08 N TTL
IC	0023	50.06.0155	IC SN 74 LS 155 N TTL
IC	0024	50.06.0139	IC SN 74 LS 139 N TTL
IC	0025	50.05.0188	IC SN 74161N, TTL
IC	0026		PROM
IC	0027		PROM
IC	0028		PROM
IC	0029		PROM
IC	0031	50.06.0004	IC SN 74 LS 04 N TTL
IC	0032	50.06.0011	IC SN 74 LS 11 N TTL
IC	0033	50.05.0214	IC 74 S 189 ,DM74L89AN, TTL
IC	0034	50.05.0216	IC N 8 T 95B, ,TTL-3
IC	0035	50.05.0188	IC SN 74161N, TTL
IC	0036		PROM
IC	0037		PROM
IC	0038		PROM
IC	0039		PROM
IC	0041	50.06.0032	IC SN 74 LS 32 N TTL
IC	0042	50.06.0163	IC SN 74 LS 163 N TTL
IC	0044	50.05.0224	IC N 8T96B, TTL-3
IC	0045	50.05.0188	IC SN 74161N, TTL
IC	0046		PROM
IC	0047		PROM
IC	0048		PROM
IC	0049		PROM
IC	0051	50.06.0174	IC SN 74 LS 174 N TTL

POSITION RD.	POS.M	PART NO.	DESCRIPTION OF PART
IC	0052		PROM R 0020
IC	0053	50.05.0214	IC 74 S 189 ,DM74L 89AN, TTL
IC	0054	50.05.0216	IC N 8 T 95B, ,TTL-3
IC	0062	50.06.0169	IC SN 74 LS 169 N TTL
IC	0063	50.05.0214	IC 74 S 189 ,DM74L 89AN, TTL
IC	0064	50.05.0224	IC N 8T96B, TTL-3
P	0001	54.01.0354	P LEISTE 3 * 32 POL WRAP
RZ	0043	57.85.3332	RZ 15*3.3K, 2%, DIL16

A80 LOCATCR | A80 MASTER-CONTROL | A800

ARITHMETIC CONTROL A MK II 1.228.480-00

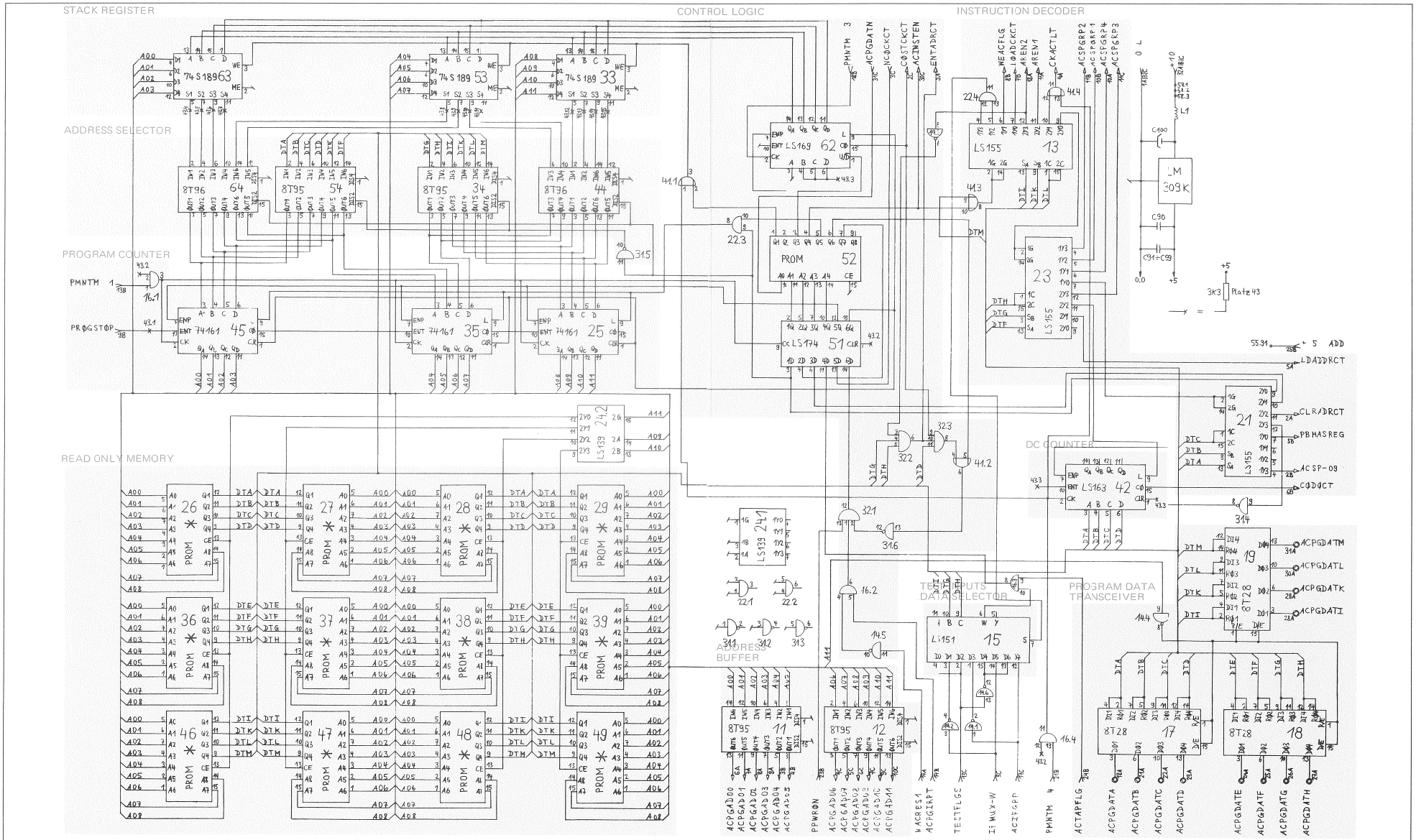

✳ PROM NUMBERS AND LOCATIONS SEE SEPARATE LIST PAGES 2/83 AND 2/84

ARITHMETIC CONTROL B 1.228.405-71

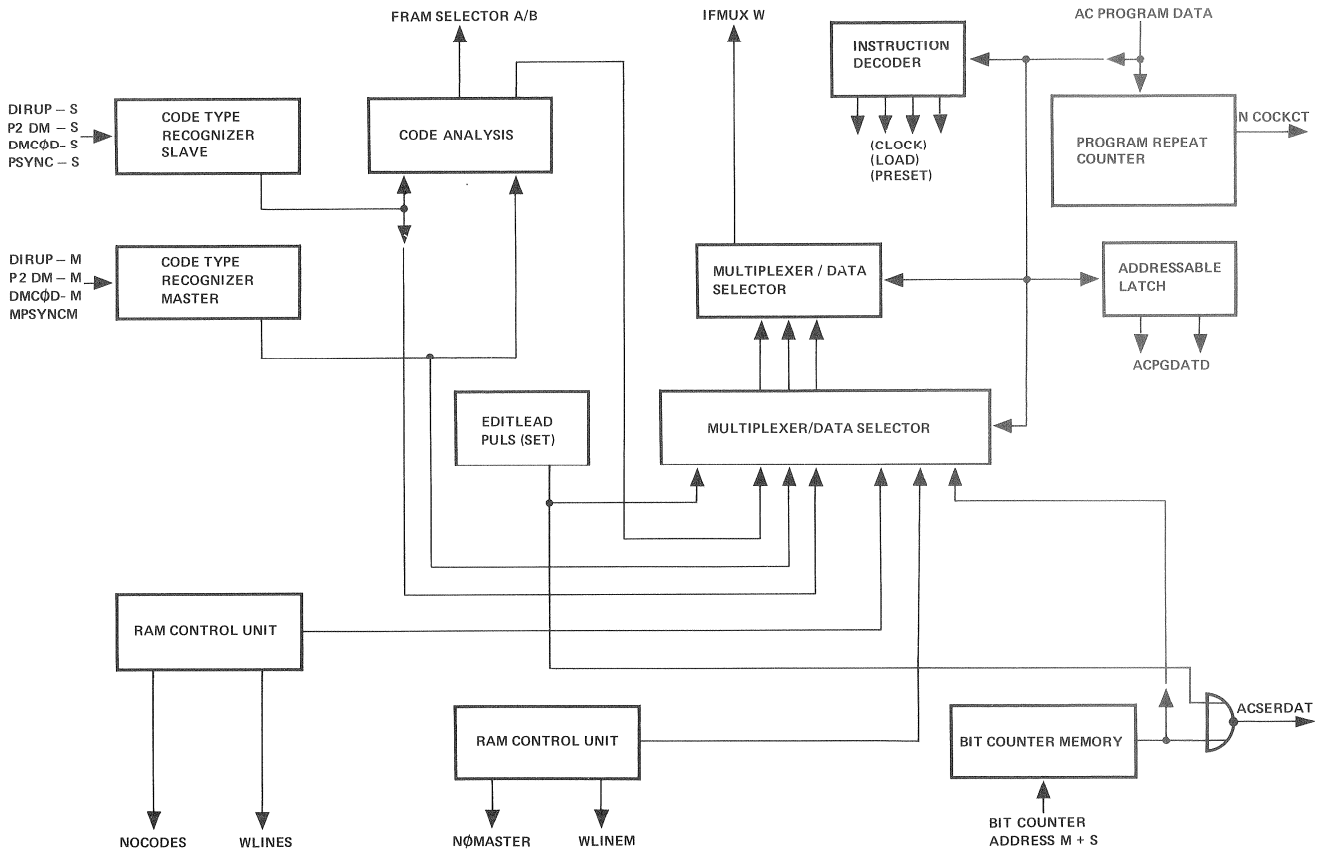

5
SLAVE RACK LOCATION

ARITHMETIC CONTROL B 1.228.405-71

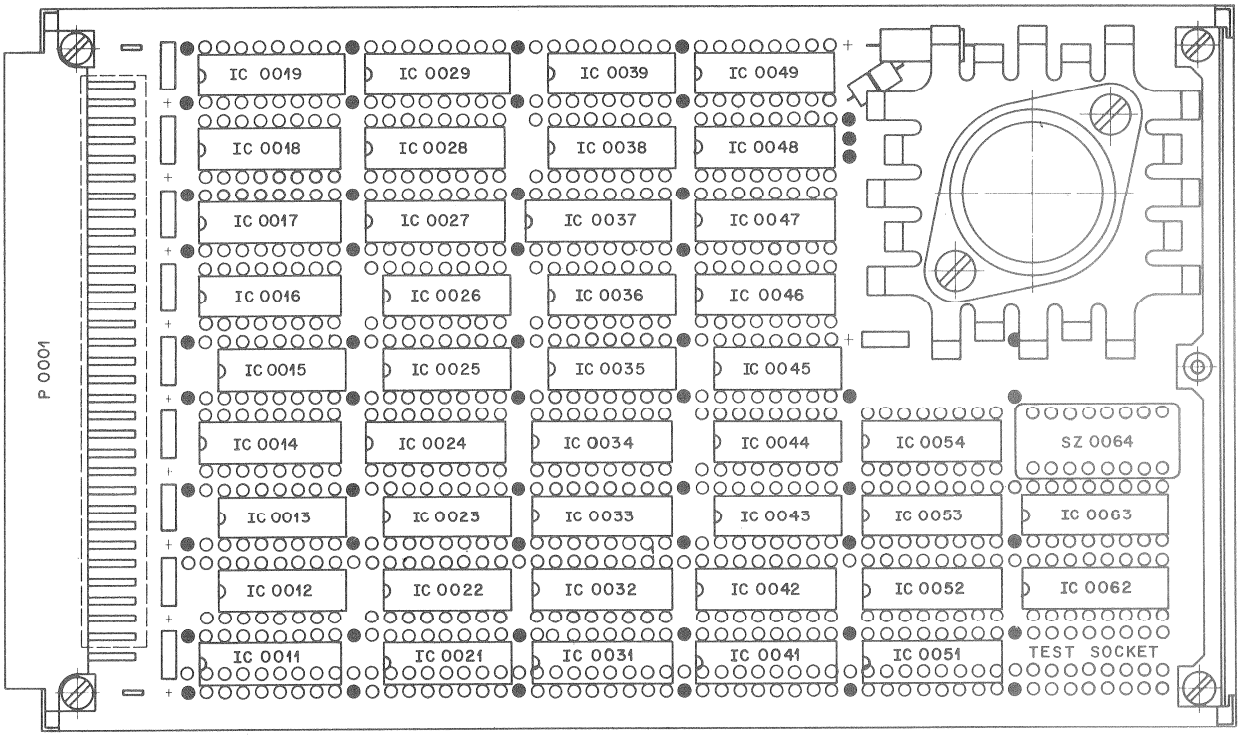

* S T U D E R * POSITION LIST OF PARTS 1.228.405.71 * 76/12/04 * PAGE 1 OF 1 *

* TAPE LOCK SYSTEM 2000 * ARITHMETIC CONTROL B * 76/12/03-A *

POSITION RD.	POS.M	PART NO.	DESCRIPTION OF PART
IC	0011	50.06.0279	IC SN 74 LS 279 N TTL
IC	0012	50.06.0032	IC SN 74 LS 32 N TTL
IC	0013	50.06.0027	IC SN 74 LS 27 N TTL
IC	0014	50.06.0151	IC SN 74 LS 151 N TTL
IC	0015	50.06.0074	IC SN 74 LS 74 N TTL
IC	0016	50.06.0151	IC SN 74 LS 151 N TTL
IC	0017	50.06.0163	IC SN 74 LS 163 N TTL
IC	0018	50.05.0223	IC SN 74165N,93165 PC ,TTL
IC	0019	50.05.0223	IC SN 74165N,93165 PC ,TTL
IC	0021	50.06.0074	IC SN 74 LS 74 N TTL
IC	0022	50.06.0002	IC SN 74 LS 02 N TTL
IC	0023	50.06.0086	IC SN 74 LS 86 N TTL
IC	0024	50.06.0109	IC SN 74 LS 109 N TTL
IC	0025	50.06.0074	IC SN 74 LS 74 N TTL
IC	0026	50.06.0004	IC SN 74 LS 04 N TTL
IC	0027	50.06.0139	IC SN 74 LS 139 N TTL
IC	0028	50.06.0163	IC SN 74 LS 163 N TTL
IC	0029	50.05.0223	IC SN 74165N,93165 PC ,TTL
IC	0031	50.06.0175	IC SN 74 LS 175 N TTL
IC	0032	50.06.0175	IC SN 74 LS 175 N TTL
IC	0033	50.06.0157	IC SN 74 LS 157 N TTL
IC	0034	50.05.0216	IC N 8 T 95B, ,TTL-3
IC	0035	50.06.0051	IC SN 74 LS 51 N TTL
IC	0036	50.06.0074	IC SN 74 LS 74 N TTL
IC	0037	50.06.0155	IC SN 74 LS 155 N TTL
IC	0038	50.06.0008	IC SN 74 LS 08 N TTL
IC	0039	50.06.0008	IC SN 74 LS 08 N TTL
IC	0041	50.06.0157	IC SN 74 LS 157 N TTL
IC	0042	50.06.0157	IC SN 74 LS 157 N TTL
IC	0043	50.06.0010	IC SN 74 LS 10 N TTL
IC	0044	50.06.0074	IC SN 74 LS 74 N TTL
IC	0045	50.06.0032	IC SN 74 LS 32 N TTL
IC	0046	50.06.0151	IC SN 74 LS 151 N TTL
IC	0047	50.06.0075	IC SN 74 LS 75 N TTL
IC	0048	50.06.0151	IC SN 74 LS 151 N TTL
IC	0049	50.05.0215	IC 93 L 34PC, TTL

POSITION RD.	POS.M	PART NO.	DESCRIPTION OF PART
IC	0051		PROM R 0008
IC	0052		PROM R 0008
IC	0053	50.06.0194	IC SN 74 LS 194 AN TTL
IC	0054	50.06.0169	IC SN 74 LS 169 N TTL
IC	0063	50.05.0223	IC SN 74165N,93165 PC ,TTL
P	0001	54.01.0354	P LEISTE 3 * 32 POL WRAP
RZ	0062	57.85.3332	RZ 15*3.3K, 2%, DIL16
SZ	0064	55.01.0168	SZ 8*A , DIL

A80 LOCATOR | A80 MASTER-CONTROL | A800

ARITHMETIC CONTROL B 1.228.405-71

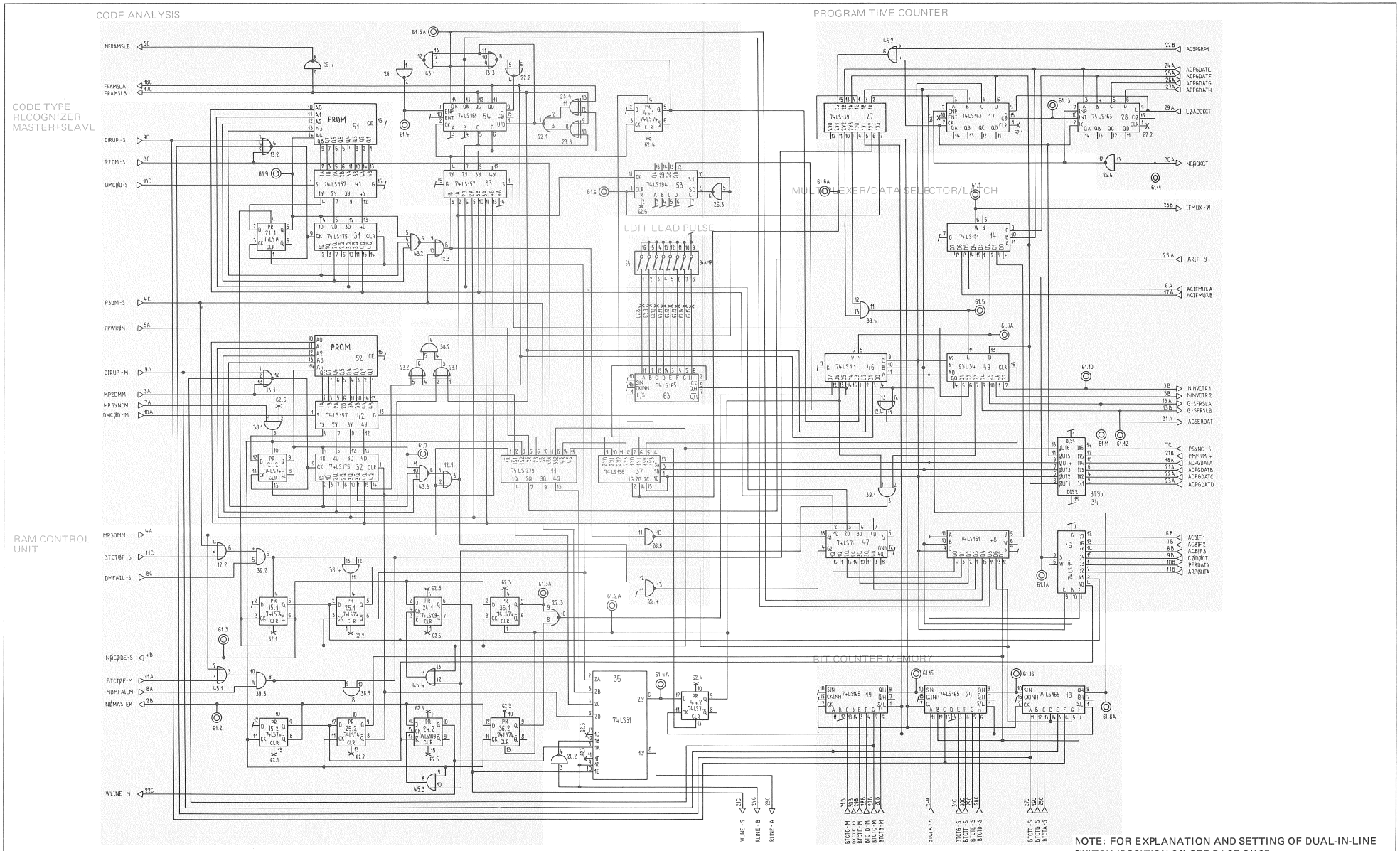

NOTE: FOR EXPLANATION AND SETTING OF DUAL-IN-LINE SWITCH (POSITION 64) SEE PAGE 2/107.

PERIPHERAL CONTROL A MK II 1.228.481-00

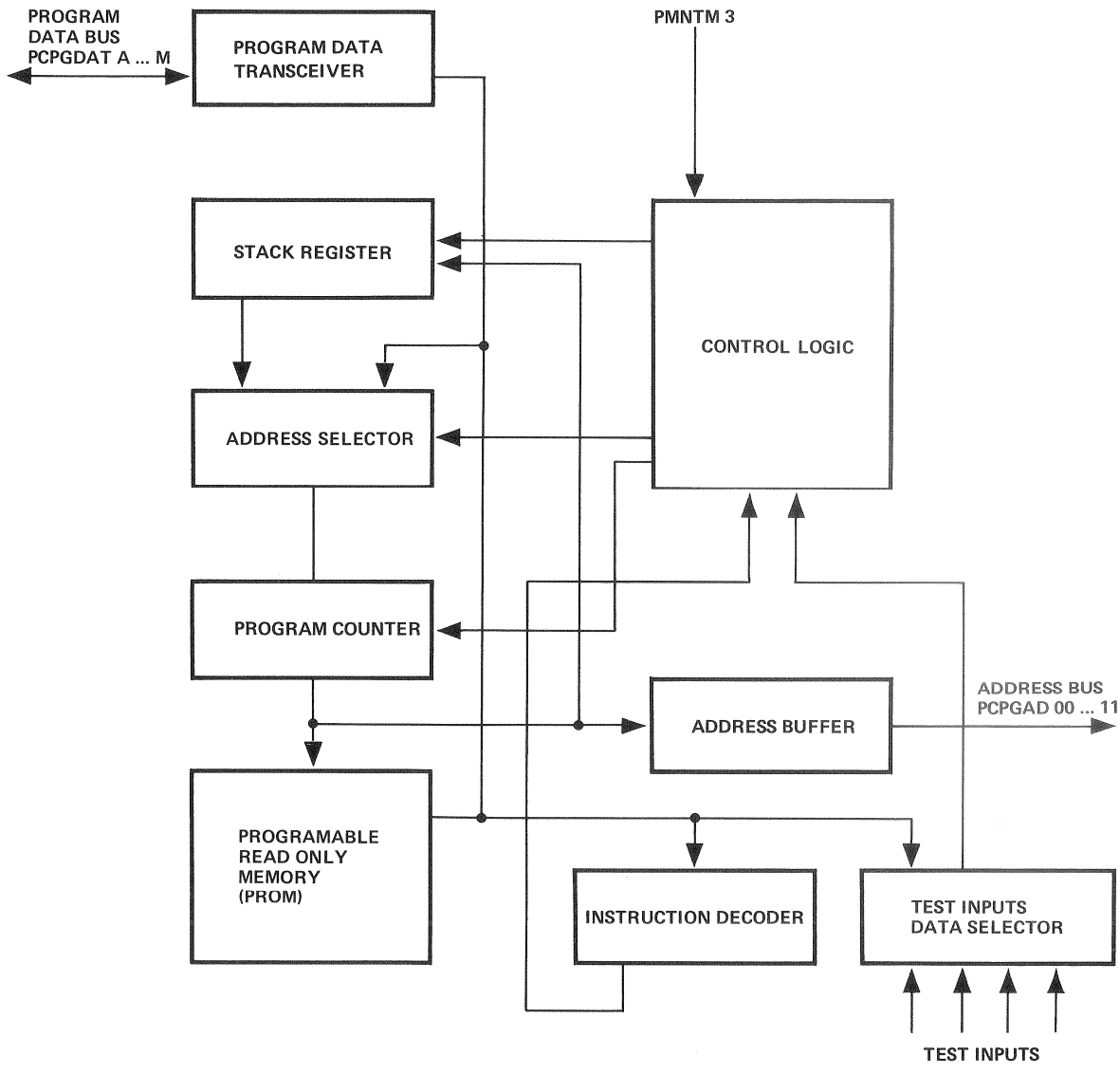

6
SLAVE RACK LOCATION

PERIPHERAL CONTROL A MK II 1.228.481-00

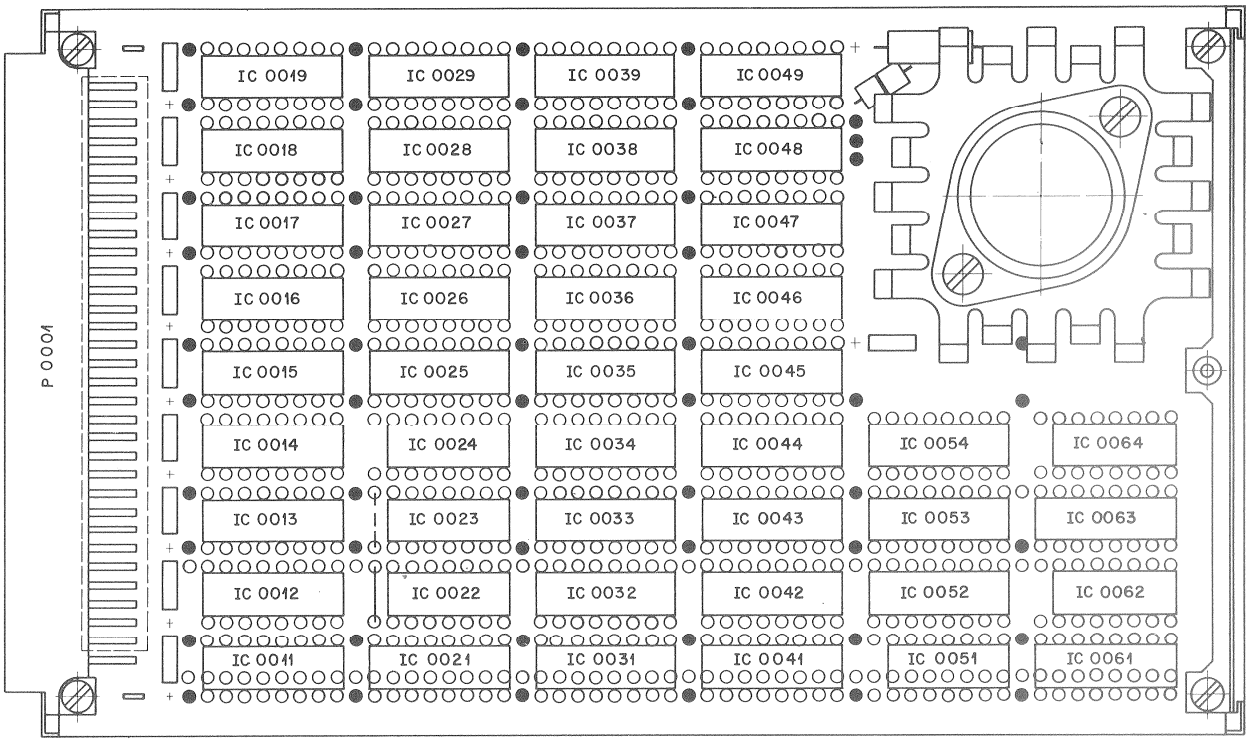

* S T U D E R * POSITION LIST OF PARTS 1.228.481.00 * 77/07/12 * PAGE 1 OF 1 *
* TAPE LOCK SYSTEM 2000 * PERIPHERAL CONTROL A MKII * 77/06/28-0 *

POSITION RD. POS.M	PART NO.	DESCRIPTION OF PART	
IC 0011	50.06.0155	IC SN 74 LS 155 N	TTL
IC 0012	50.06.0139	IC SN 74 LS 139 N	TTL
IC 0013	50.05.0216	IC N 8 T 95B,	,TTL-3
IC 0014	50.06.0151	IC SN 74 LS 151 N	TTL
IC 0015	50.06.0151	IC SN 74 LS 151 N	TTL
IC 0016	50.05.0216	IC N 8 T 95B,	,TTL-3
IC 0017	50.05.0260	IC 8T28 ,	TTL-3
IC 0018	50.05.0260	IC 8T28 ,	TTL-3
IC 0019	50.05.0260	IC 8T28 ,	TTL-3
IC 0021	50.06.0139	IC SN 74 LS 139 N	TTL
IC 0022	50.06.0004	IC SN 74 LS 04 N	TTL
IC 0023	50.06.0086	IC SN 74 LS 86 N	TTL
IC 0024	50.06.0032	IC SN 74 LS 32 N	TTL
IC 0025	50.05.0188	IC SN 74161N,	TTL
IC 0026		PROM	
IC 0027		PROM	
IC 0028		PROM	
IC 0029		PROM	
IC 0031	50.06.0155	IC SN 74 LS 155 N	TTL
IC 0032	50.06.0151	IC SN 74 LS 151 N	TTL
IC 0033	50.06.0151	IC SN 74 LS 151 N	TTL
IC 0034	50.06.0139	IC SN 74 LS 139 N	TTL
IC 0035	50.05.0188	IC SN 74161N,	TTL
IC 0036		PROM	
IC 0037		PROM	
IC 0038		PROM	
IC 0039		PROM	
IC 0041	50.06.0175	IC SN 74 LS 175 N	TTL
IC 0042	50.06.0139	IC SN 74 LS 139 N	TTL
IC 0043	50.06.0174	IC SN 74 LS 174 N	TTL
IC 0044	50.06.0174	IC SN 74 LS 174 N	TTL
IC 0045	50.05.0188	IC SN 74161N,	TTL
IC 0046		PROM	
IC 0047		PROM	
IC 0048		PROM	
IC 0049		PROM	

POSITION RD. POS.M	PART NO.	DESCRIPTION OF PART	
IC 0051	50.06.0008	IC SN 74 LS 08 N	TTL
IC 0052	50.06.0157	IC SN 74 LS 157 N	TTL
IC 0053	50.06.0157	IC SN 74 LS 157 N	TTL
IC 0054	50.06.0157	IC SN 74 LS 157 N	TTL
IC 0061	50.06.0279	IC SN 74 LS 279 N	TTL
IC 0062	50.06.0027	IC SN 74 LS 27 N	TTL
IC 0063	50.06.0161	IC SN 74 LS 161 N	TTL
IC 0064	50.06.0000	IC SN 74 LS 00 N	TTL
P 0001	54.01.0354	P LEISTE 3 * 32 POL	WRAP

A80 LOCATOR | A80 MASTER-CONTROL | A800

PERIPHERAL CONTROL A MK II 1.228.481-00

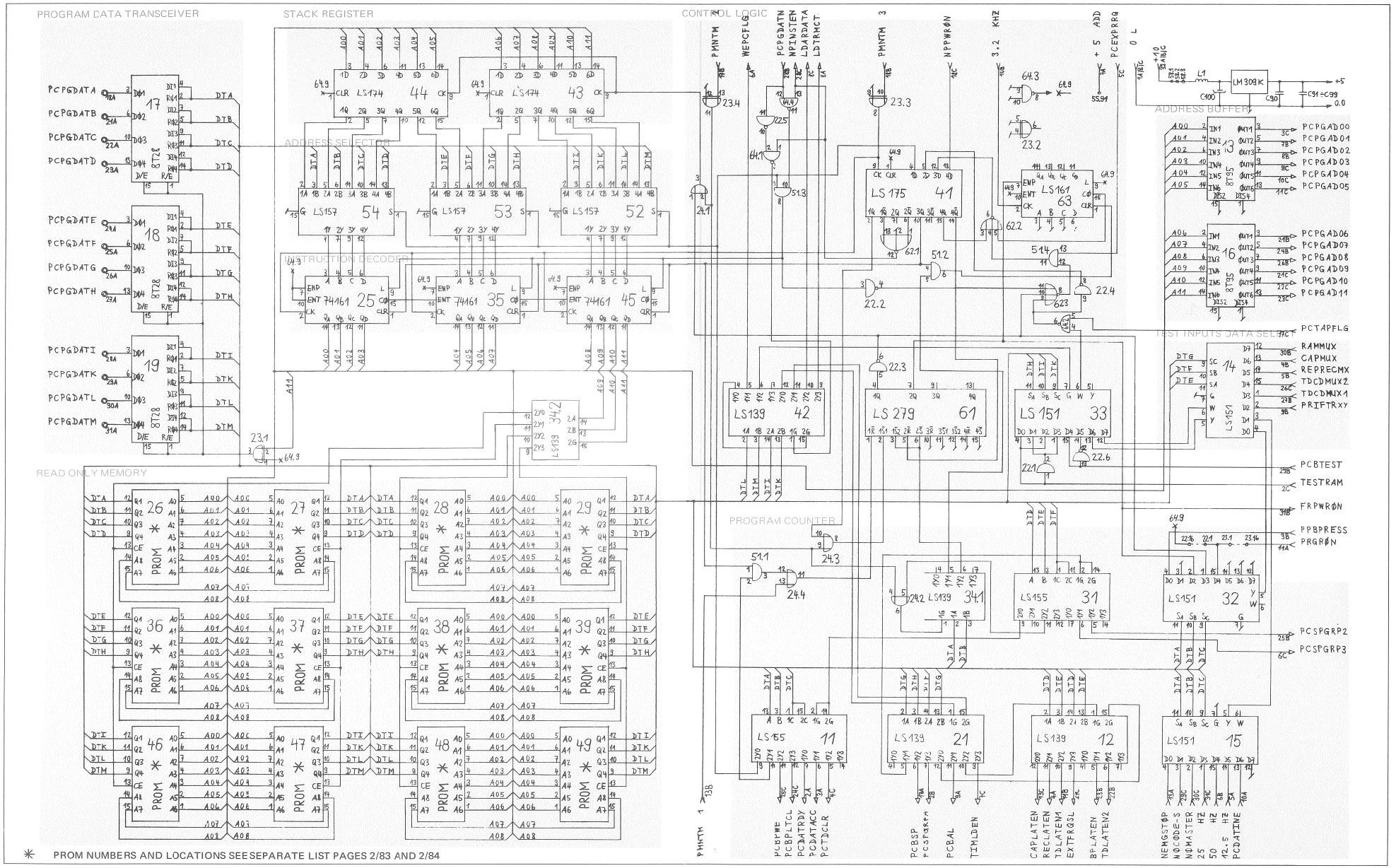

✳ PROM NUMBERS AND LOCATIONS SEE SEPARATE LIST PAGES 2/83 AND 2/84

PERIPHERAL CONTROL B 1.228.407-71

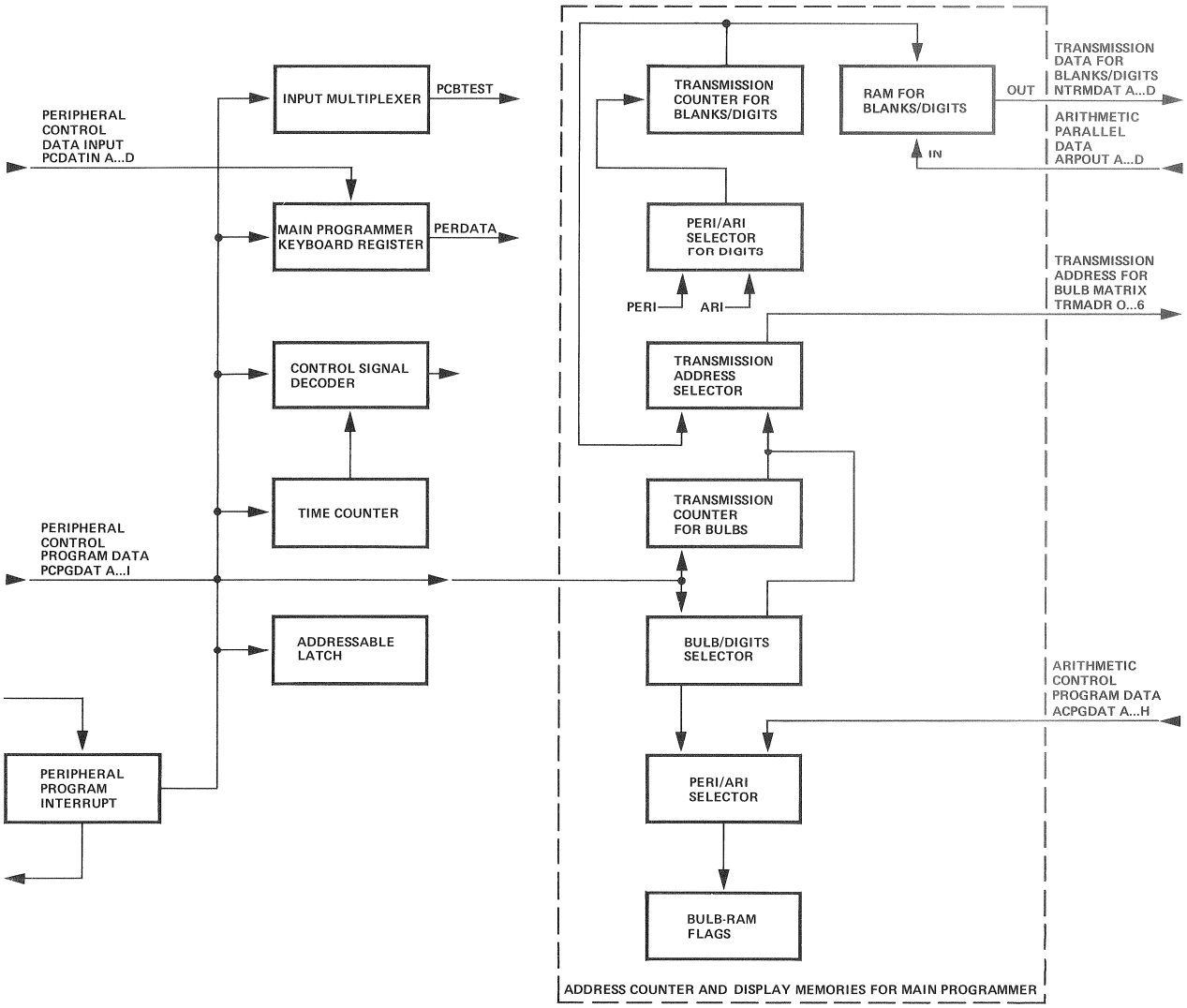

7
SLAVE RACK LOCATION

PERIPHERAL CONTROL B 1.228.407-71

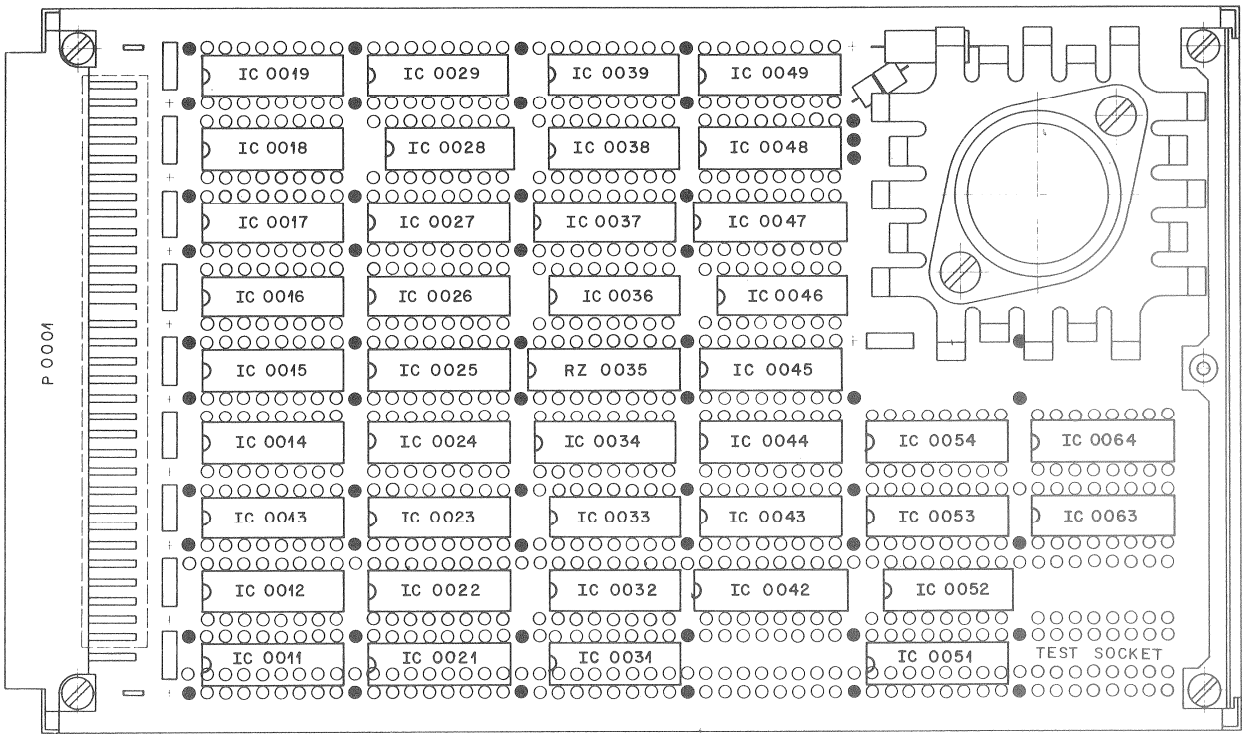

* S T U D E R * POSITION LIST OF PARTS 1.228.407.71 * 76/12/14 * PAGE 1 OF 1 *
* TAPE LOCK SYSTEM 2000 * PERIPHERAL CONTROL B * 76/12/03-A *

POSITION RD. POS.M	PART NO.	DESCRIPTION OF PART
IC 0011	50.06.0151	IC SN 74 LS 151 N TTL
IC 0012	50.06.0151	IC SN 74 LS 151 N TTL
IC 0013	50.06.0157	IC SN 74 LS 157 N TTL
IC 0014	50.06.0157	IC SN 74 LS 157 N TTL
IC 0015	50.06.0157	IC SN 74 LS 157 N TTL
IC 0016	50.06.0157	IC SN 74 LS 157 N TTL
IC 0017	50.05.0216	IC N 8 T 95B, ,TTL-3
IC 0018	50.05.0216	IC N 8 T 95B, ,TTL-3
IC 0019	50.05.0215	IC 93 L 34PC, TTL
IC 0021	50.06.0151	IC SN 74 LS 151 N TTL
IC 0022	50.06.0155	IC SN 74 LS 155 N TTL
IC 0023	50.06.0161	IC SN 74 LS 161 N TTL
IC 0024	50.06.0161	IC SN 74 LS 161 N TTL
IC 0025	50.06.0157	IC SN 74 LS 157 N TTL
IC 0026	50.06.0157	IC SN 74 LS 157 N TTL
IC 0027	50.05.0183	IC IM 5523CDE ,TTL
IC 0028	50.06.0004	IC SN 74 LS 04 N TTL
IC 0029	50.05.0215	IC 93 L 34PC, TTL
IC 0031	50.06.0074	IC SN 74 LS 74 N TTL
IC 0032	50.06.0074	IC SN 74 LS 74 N TTL
IC 0033	50.06.0074	IC SN 74 LS 74 N TTL
IC 0034	50.06.0157	IC SN 74 LS 157 N TTL
IC 0036	50.06.0032	IC SN 74 LS 32 N TTL
IC 0037	50.06.0157	IC SN 74 LS 157 N TTL
IC 0038	50.06.0011	IC SN 74 LS 11 N TTL
IC 0039	50.06.0032	IC SN 74 LS 32 N TTL
IC 0042	50.05.0223	IC SN 74165N,93165 PC ,TTL
IC 0043	50.06.0155	IC SN 74 LS 155 N TTL
IC 0044	50.06.0139	IC SN 74 LS 139 N TTL
IC 0045	50.06.0155	IC SN 74 LS 155 N TTL
IC 0046	50.06.0074	IC SN 74 LS 74 N TTL
IC 0047	50.06.0169	IC SN 74 LS 169 N TTL
IC 0048	50.05.0214	IC 74 S 189 TTL
IC 0049	50.05.0214	IC 74 S 189 TTL
IC 0051		PROM R 0030
IC 0052	50.06.0051	IC SN 74 LS 51 N TTL

POSITION RD. POS.M	PART NO.	DESCRIPTION OF PART
IC 0053	50.06.0161	IC SN 74 LS 161 N TTL
IC 0054	50.06.0161	IC SN 74 LS 161 N TTL
IC 0063	50.06.0161	IC SN 74 LS 161 N TTL
IC 0064	50.06.0161	IC SN 74 LS 161 N TTL
P 0001	54.01.0354	P LEISTE 3 * 32 POL WRAP
RZ 0035	57.85.3332	RZ 15*3.3K, 2%, DIL16

A80 LOCATOR | A80 MASTER-CONTROL | A800

PERIPHERAL CONTROL B 1.228.407-71

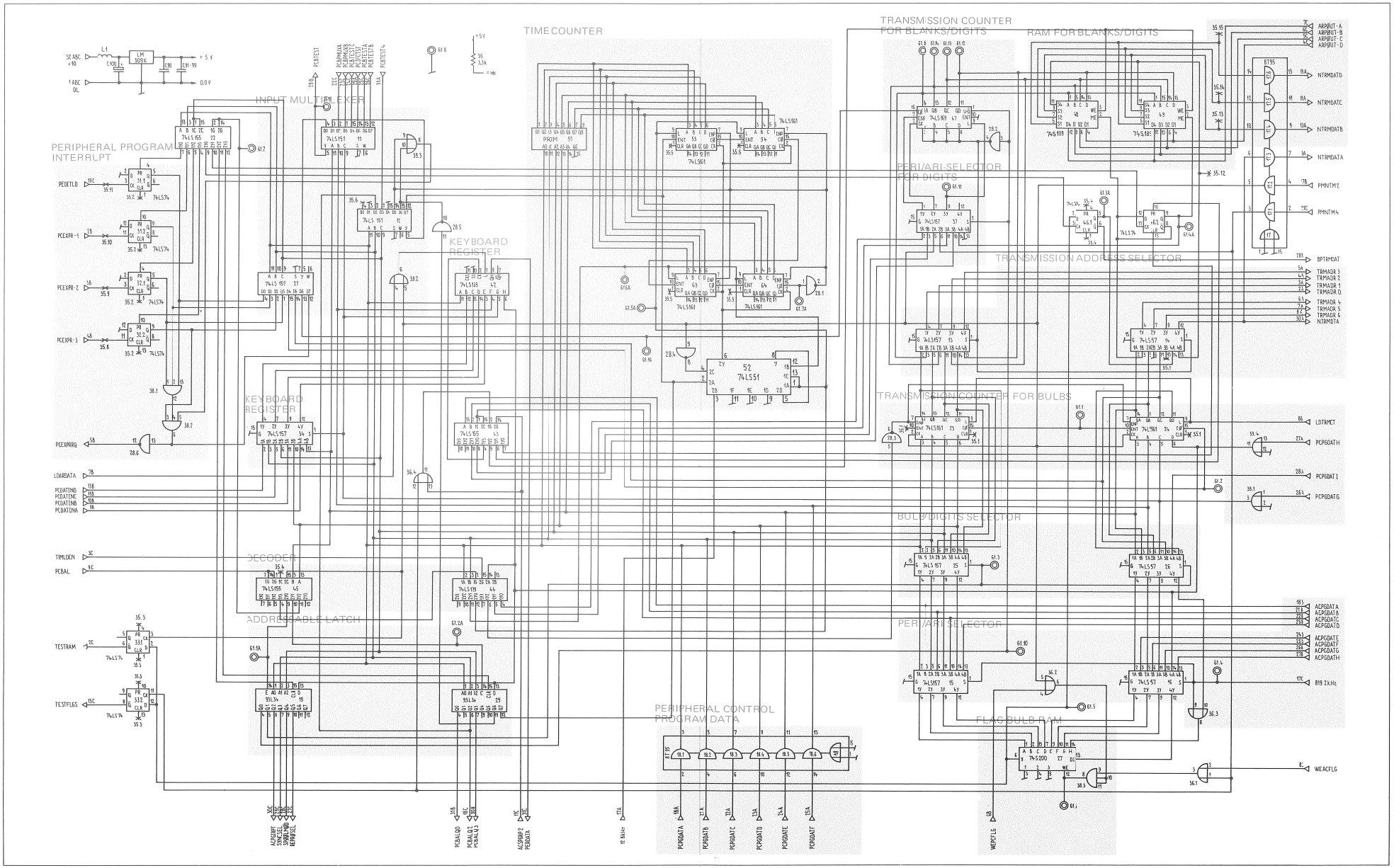

TAPE DECK INTERFACE 1.228.408-73

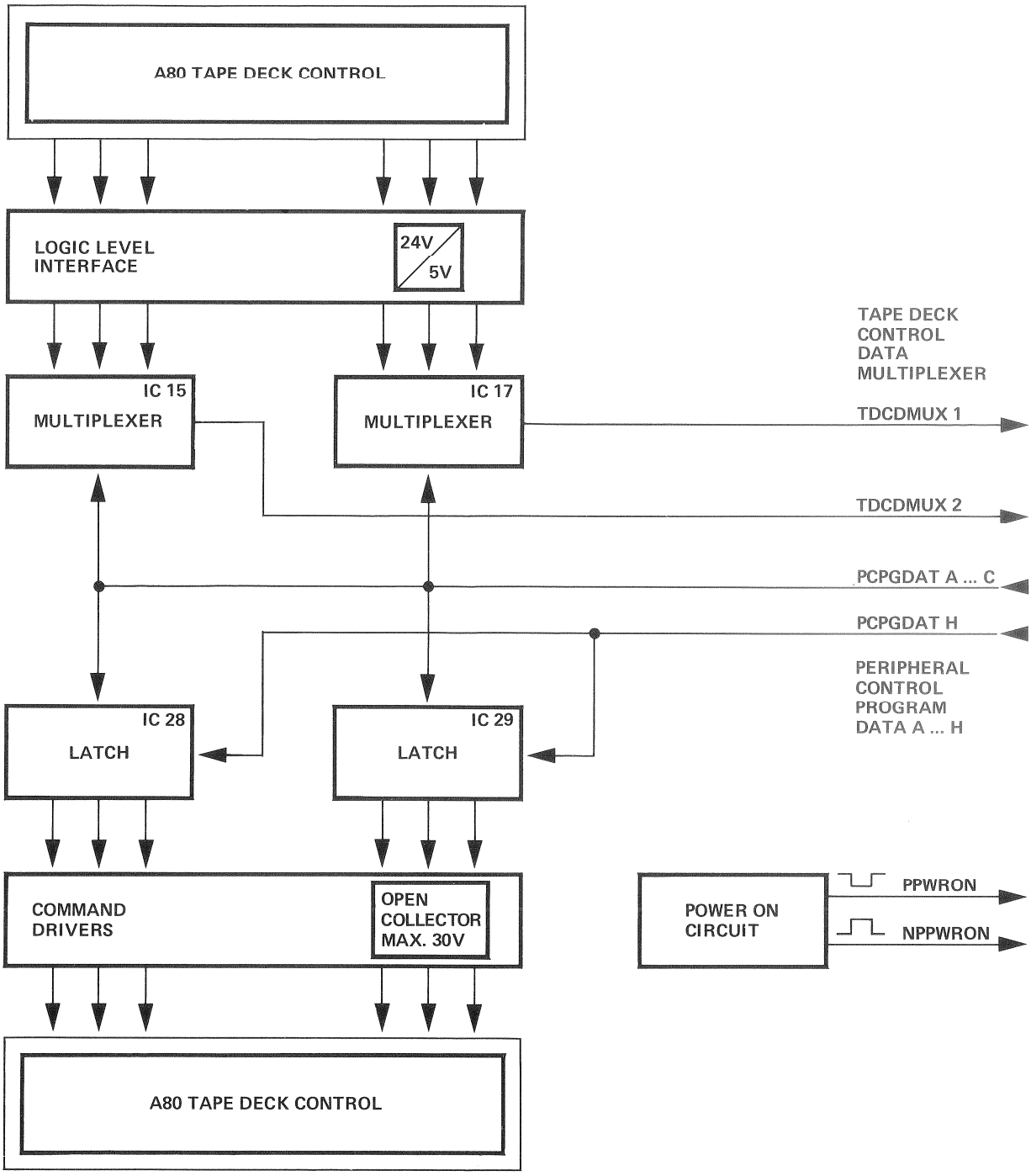

8
SLAVE RACK LOCATION

TAPE DECK INTERFACE 1.228.408-73

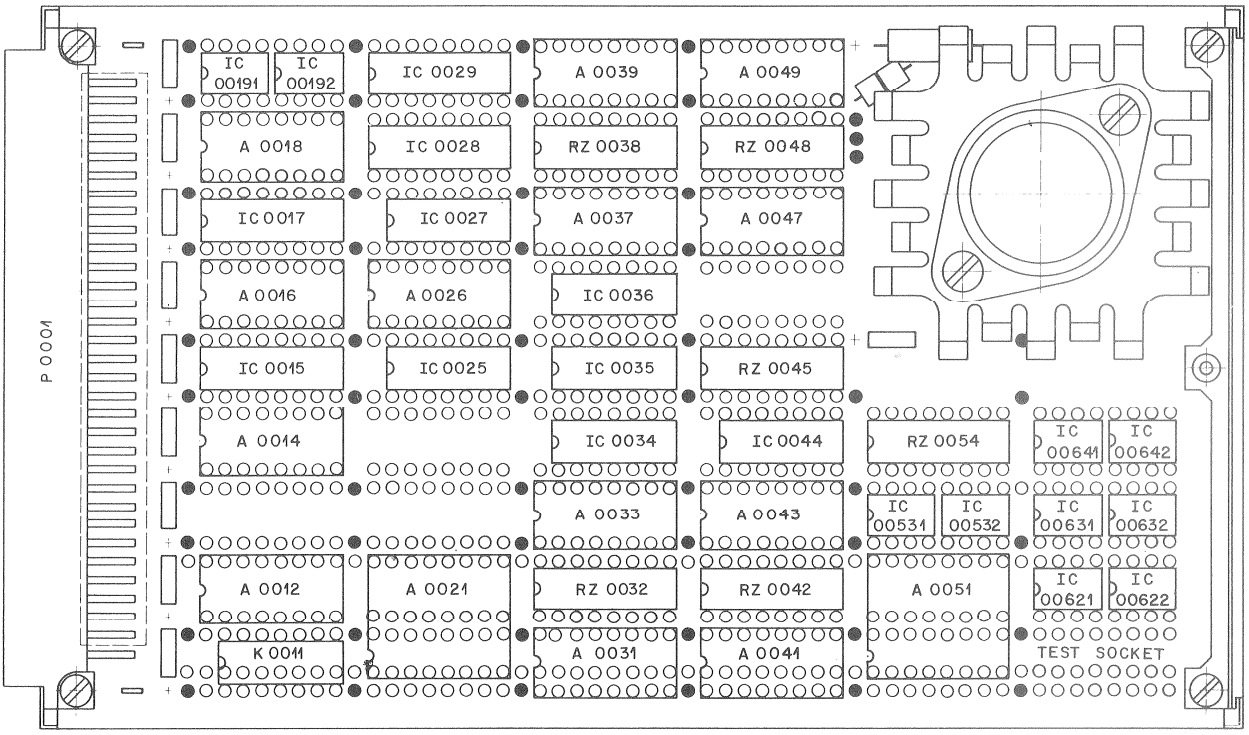


```
*   S T U D E R   *   POSITION LIST OF PARTS 1.228.408.73   *   79/03/30   *                    PAGE  1 OF  1   *
*****************************************************************************************************************
*   TAPE LOCK SYSTEM 2000              *   TAPE DECK INTERFACE                *                          79/05/09-0  *
```

POSITION RD.	POS.M	PART NO.	DESCRIPTION OF PART	
A	0012	1.228.540.00	ASSEMBLY 08-12	
A	0014	1.228.541.00	ASSEMBLY 08-14	
A	0016	1.228.542.00	ASSEMBLY 08-16	
A	0018	1.228.543.00	ASSEMBLY 08-18	
A	0021	1.228.544.00	ASSEMBLY 08-21	
A	0026	1.228.590.01	ASS.08-26	
A	0031	1.228.591.00	ASSEMBLY 08-31	
A	0033	1.228.592.00	ASSEMBLY 08-33	
A	0037	1.228.593.00	ASSEMBLY 08-37	
A	0039	1.228.594.00	ASSEMBLY 08-39	
A	0041	1.228.595.00	ASSEMBLY 08-41	
A	0043	1.228.596.00	ASSEMBLY 08-43	
A	0047	1.228.597.00	ASSEMBLY 08-47	
A	0049	1.228.598.00	ASSEMBLY 08-49	
A	0051	1.228.599.00	ASSEMBLY 08-51	
IC	0015	50.06.0151	IC SN 74 LS 151 N	TTL
IC	0017	50.06.0151	IC SN 74 LS 151 N	TTL
IC	00191	50.05.0227	IC SN75462P ,LM 75462 ,	DRIV
IC	00192	50.05.0227	IC SN75462P ,LM 75462 ,	DRIV
IC	0025	50.06.0002	IC SN 74 LS 02 N	TTL
IC	0027	50.06.0000	IC SN 74 LS 00 N	TTL
IC	0023	50.05.0215	IC 93 L 34PC,	TTL
IC	0029	50.05.0215	IC 93 L 34PC,	TTL
IC	0034	50.06.0014	IC SN 74 LS 14 N	TTL
IC	0035	50.06.0014	IC SN 74 LS 14 N	TTL
IC	0036	50.06.0014	IC SN 74 LS 14 N	TTL
IC	0044	50.06.0032	IC SN 74 LS 32 N	TTL
IC	00531	50.05.0203	IC SN 75463P,LM 3613 N,	DRIV
IC	00532	50.05.0203	IC SN 75463P,LM 3613 N,	DRIV
IC	00621	50.05.0227	IC SN75462P ,LM 75462 ,	DRIV
IC	00622	50.05.0227	IC SN75462P ,LM 75462 ,	DRIV
IC	00631	50.05.0227	IC SN75462P ,LM 75462 ,	DRIV
IC	00632	50.05.0227	IC SN75462P ,LM 75462 ,	DRIV
IC	00641	50.05.0227	IC SN75462P ,LM 75462 ,	DRIV
IC	00642	50.05.0227	IC SN75462P ,LM 75462 ,	DRIV
K	0011	56.02.1005	K 24V=, 10 W, 1*R ,	DIL14

POSITION RD.	POS.M	PART NO.	DESCRIPTION OF PART	
P	0001	54.01.0354	P LEISTE 3 * 32 POL	WRAP
RZ	0032	57.88.3222	RZ 8*2 K2 , 2%,	DIL16
RZ	0038	57.88.3222	RZ 8*2 K2 , 2%,	DIL16
RZ	0042	57.88.3222	RZ 8*2 K2 , 2%,	DIL16
RZ	0045	57.85.3472	RZ 15*4.7K, 2%,	DIL
RZ	0048	57.88.3222	RZ 8*2 K2 , 2%,	DIL16
RZ	0054	57.85.3332	RZ 15*3.3K, 2%,	DIL16

A80 LOCATOR | A80 MASTER-CONTROL

TAPE DECK INTERFACE 1.228.408-73

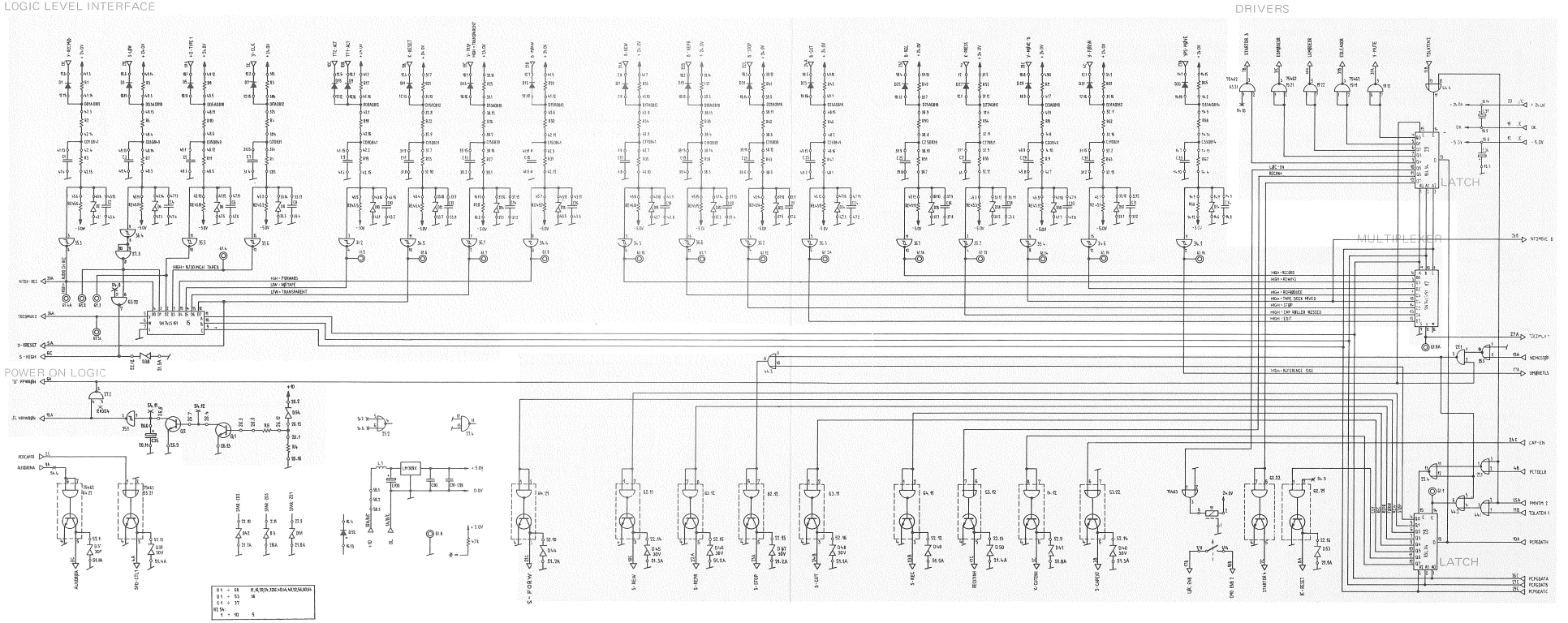

TAPE DECK INTERFACE 1.228.408-73

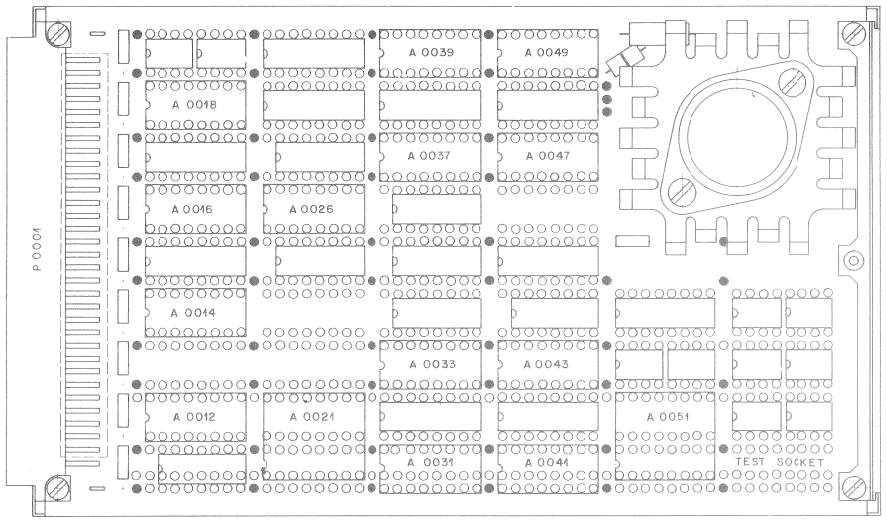

* S T U D E R * POSITION LIST OF PARTS 1.228.408.73 * 79/03/30 * PAGE 1 OF 1 *
* TAPE LOCK SYSTEM 2000 * TAPE DECK INTERFACE * 79/05/09-0 *

POSITION RD. POS.M	PART NO.	DESCRIPTION OF PART
A 0012	1.228.540.00	ASSEMBLY 08-12
A 0014	1.228.541.00	ASSEMBLY 08-14
A 0016	1.228.542.00	ASSEMBLY 08-16
A 0018	1.228.543.00	ASSEMBLY 08-18
A 0021	1.228.544.00	ASSEMBLY 08-21
A 0026	1.228.550.81	ASS.08-26
A 0031	1.228.591.00	ASSEMBLY 08-31
A 0033	1.228.592.00	ASSEMBLY 08-33
A 0037	1.228.593.00	ASSEMBLY 08-37
A 0039	1.228.594.00	ASSEMBLY 08-39
A 0041	1.228.595.00	ASSEMBLY 08-41
A 0043	1.228.596.00	ASSEMBLY 08-43
A 0047	1.228.597.00	ASSEMBLY 08-47
A 0049	1.228.598.00	ASSEMBLY 08-49
A 0051	1.228.599.00	ASSEMBLY 08-51

* S T U D E R * POSITION LIST OF PARTS 1.228.540.00
* TAPE LOCK SYSTEM 2000 * ASS.08-12

POSITION RD. POS.M	PART NO.	DESCRIPTION OF PART
C 0001	50.04.0102	D 1N 914 ,1N 4148 ,
C 0007	50.04.0102	D 1N 914 ,1N 4148 ,
C 0011	50.04.0102	D 1N 914 ,1N 4148 ,
D 0015	50.04.0102	D 1N 914 ,1N 4148 ,
C 0017	50.04.0102	D 1N 914 ,1N 4148 ,
D 0027	50.04.0102	D 1N 914 ,1N 4148 ,
C 0031	50.04.0102	D 1N 914 ,1N 4148 ,
C 0035	50.04.0102	D 1N 914 ,1N 4148 ,
MP 0001	53.03.0170	MP ADAPTOR PLUG 2*8*0.3 DIL

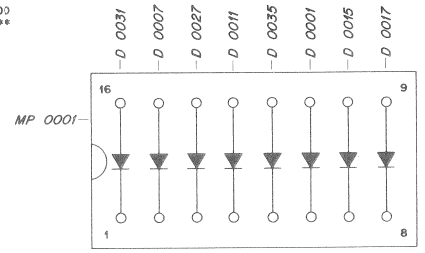

* S T U D E R * POSITION LIST OF PARTS 1.228.541.00
* TAPE LOCK SYSTEM 2000 * ASS.08-14

POSITION RD. POS.M	PART NO.	DESCRIPTION OF PART
C 0033	59.99.0205	C 68 N ,-20%, 63V , KER
C 0034	59.32.3103	C 10 N ,+80% 40=, KER
D 0033	50.04.0102	D 1N 914 ,1N 4148 ,
D 0034	50.04.1107	D 3.3 V, 5%, .40 W,Z,PLANAR
MP 0001	53.03.0170	MP ADAPTOR PLUG 2*8*0.3 DIL
R 0065	57.02.5332	R 3.3 K , 10%, .25W , CMA
R 0066	57.02.5222	R 2.2 K , 10%, .25W , CMA
R 0067	57.02.5222	R 2.2 K , 10%, .25W , CMA
R 0068	57.02.5472	R 4.7 K , 10%, .25W , CMA

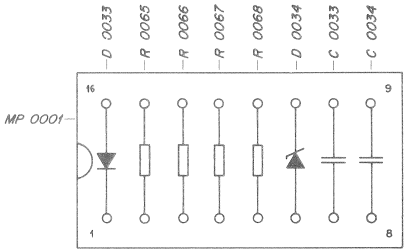

* S T U D E R * POSITION LIST OF PARTS 1.228.542.00
* TAPE LOCK SYSTEM 2000 * ASS.08-16

POSITION RD. POS.M	PART NO.	DESCRIPTION OF PART
C 0036	59.36.3339	C 3.3 U , 20%, 16V-, TA
C 0037	59.99.0201	C 6.8 U , 20%, 35V , TA
D 0009	50.04.0102	D 1N 914 ,1N 4148 ,
D 0052	50.04.0102	D 1N 914 ,1N 4148 ,
MP 0001	53.03.0170	MP ADAPTOR PLUG 2*8*0.3 DIL
R 0028	57.02.5472	R 4.7 K , 10%, .25W , CMA

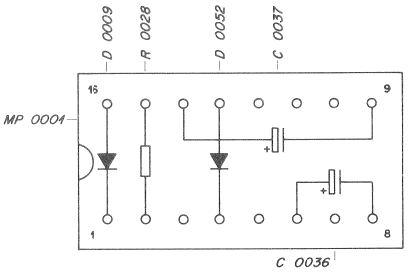

* S T U D E R * POSITION LIST OF PARTS 1.228.543.00
* TAPE LOCK SYSTEM 2000 * ASS.08-18

POSITION RD. POS.M	PART NO.	DESCRIPTION OF PART
D 0003	50.04.0102	D 1N 914 ,1N 4148 ,
D 0005	50.04.0102	D 1N 914 ,1N 4148 ,
D 0013	50.04.0102	D 1N 914 ,1N 4148 ,
D 0019	50.04.0102	D 1N 914 ,1N 4148 ,
D 0021	50.04.0102	D 1N 914 ,1N 4148 ,
D 0023	50.04.0102	D 1N 914 ,1N 4148 ,
D 0025	50.04.0102	D 1N 914 ,1N 4148 ,
D 0029	50.04.0102	D 1N 914 ,1N 4148 ,
MP 0001	53.03.0170	MP ADAPTOR PLUG 2*8*0.3 DIL

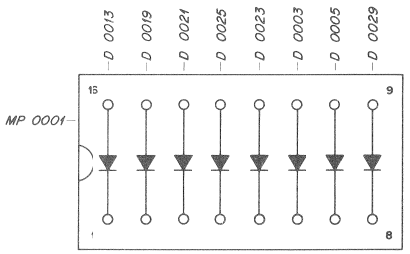

TAPE DECK INTERFACE 1.228.408-73

* S T U D E R * POSITION LIST OF PARTS 1.228.544.00
* TAPE LOCK SYSTEM 2000 * ASS.08-21

POSITION RD.	POS.M	PART NO.	DESCRIPTION OF PART
D	0038	50.04.1506	D 30 V , 5%, 1.3W, Z
D	0042	50.04.1506	D 30 V , 5%, 1.3W, Z
D	0043	50.04.1506	D 30 V , 5%, 1.3W, Z
D	0045	50.04.1506	D 30 V , 5%, 1.3W, Z
D	0047	50.04.1506	D 30 V , 5%, 1.3W, Z
D	0050	50.04.1506	D 30 V , 5%, 1.3W, Z
D	0051	50.04.1506	D 30 V , 5%, 1.3W, Z
D	0053	50.04.1506	D 30 V , 5%, 1.3W, Z
MP	0001	53.03.0171	MP ADAPTOR PLUG 2*8*0.6 DIL

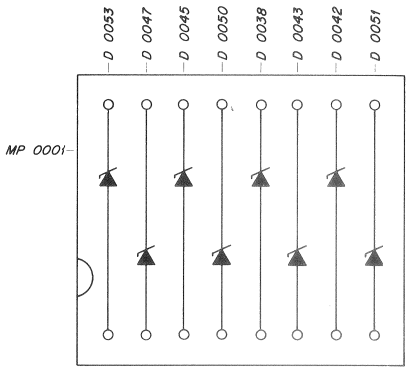

* S T U D E R * POSITION LIST OF PARTS 1.228.592.00
* TAPE LOCK SYSTEM 2000 * ASS.08-33

POSITION RD.	POS.M	PART NO.	DESCRIPTION OF PART
C	0008	59.99.0205	C 68 N ;-20%, 63V , KER
C	0012	59.99.0205	C 68 N ;-20%, 63V , KER
C	0028	59.99.0205	C 68 N ;-20%, 63V , KER
C	0032	59.99.0205	C 68 N ;-20%, 63V , KER
D	0008	50.04.1107	D 3.3 V, 5%, .40 W,Z,PLANAR
D	0012	50.04.1107	D 3.3 V, 5%, .40 W,Z,PLANAR
D	0028	50.04.1107	D 3.3 V, 5%, .40 W,Z,PLANAR
D	0032	50.04.1107	D 3.3 V, 5%, .40 W,Z,PLANAR
MP	0001	53.03.0170	MP ADAPTOR PLUG 2*8*0.3 DIL

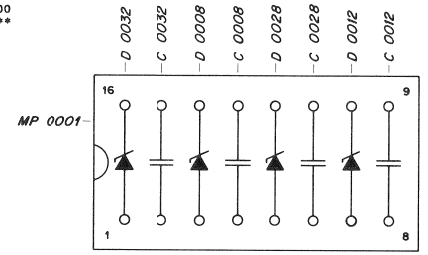

* S T U D E R * POSITION LIST OF PARTS 1.228.593.00
* TAPE LOCK SYSTEM 2000 * ASS.08-37

POSITION RD.	POS.M	PART NO.	DESCRIPTION OF PART
C	0014	59.99.0205	C 68 N ;-20%, 63V , KER
C	0020	59.99.0205	C 68 N ;-20%, 63V , KER
C	0022	59.99.0205	C 68 N ;-20%, 63V , KER
C	0026	59.99.0205	C 68 N ;-20%, 63V , KER
D	0014	50.04.1107	D 3.3 V, 5%, .40 W,Z,PLANAR
D	0020	50.04.1107	D 3.3 V, 5%, .40 W,Z,PLANAR
D	0022	50.04.1107	D 3.3 V, 5%, .40 W,Z,PLANAR
D	0026	50.04.1107	D 3.3 V, 5%, .40 W,Z,PLANAR
MP	0001	53.03.0170	MP ADAPTOR PLUG 2*8*0.3 DIL

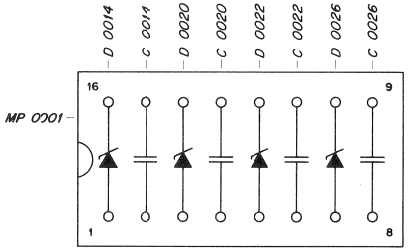

IND	POS NO	PART NO	VALLE	SPECIFICATIONS/EQUIVALENT		MFR
	C 35	59.30.3330	33 U	-20% 10V	TA	
	D 54	50.04.1102	6.8 V	5% .40W	Z	
	MP 1	53.03.0170	2*8*0.3	Adaptor Plug	DIL	
	Q 01	50.03.0407	BC109C		NPN	
	Q 02	50.03.0407	BC109C		NPN	
	R 04	57.02.4101	100	5% .25W	CMA	
	R 08	57.02.4102	1 k	5% .25W	CMA	

STUDER | Ass. 08 - 26 | 1.228.590.81 | PAGE : OF 1

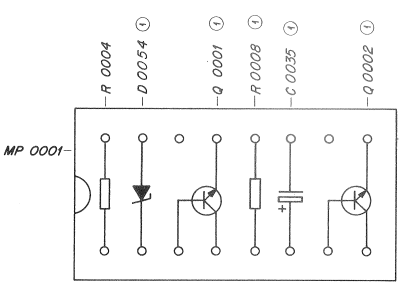

* S T U D E R * POSITION LIST OF PARTS 1.228.594.00
* TAPE LOCK SYSTEM 2000 * ASS.08-39

POSITION RD.	POS.M	PART NO.	DESCRIPTION OF PART
C	0013	59.36.4689	C 6.8 U ; 20%, 25V , TA
C	0019	59.36.4689	C 6.8 U ; 20%, 25V , TA
C	0021	59.36.4689	C 6.8 U ; 20%, 25V , TA
C	0025	59.36.4689	C 6.8 U ; 20%, 25V , TA
MP	0001	53.03.0170	MP ADAPTOR PLUG 2*8*0.3 DIL
R	0025	57.02.5332	R 3.3 K ; 10%, .25W , CMA
R	0037	57.02.5332	R 3.3 K ; 10%, .25W , CMA
R	0041	57.02.5332	R 3.3 K ; 10%, .25W , CMA
R	0049	57.02.5332	R 3.3 K ; 10%, .25W , CMA

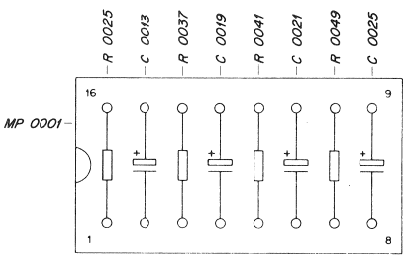

* S T U D E R * POSITION LIST OF PARTS 1.228.591.00
* TAPE LOCK SYSTEM 2000 * ASS.08-31

POSITION RD.	POS.M	PART NO.	DESCRIPTION OF PART
C	0007	59.36.4689	C 6.8 U , 20%, 25V , TA
C	0011	59.36.4689	C 6.8 U , 20%, 25V , TA
C	0027	59.36.4689	C 6.8 U , 20%, 25V , TA
C	0031	59.36.4689	C 6.8 U , 20%, 25V , TA
MP	0001	53.03.0170	MP ADAPTOR PLUG 2*8*0.3 DIL
R	0013	57.02.5332	R 3.3 K , 10%, .25W , CMA
R	0021	57.02.5332	R 3.3 K , 10%, .25W , CMA
R	0053	57.02.5332	R 3.3 K , 10%, .25W , CMA
R	0061	57.02.5332	R 3.3 K , 10%, .25W , CMA

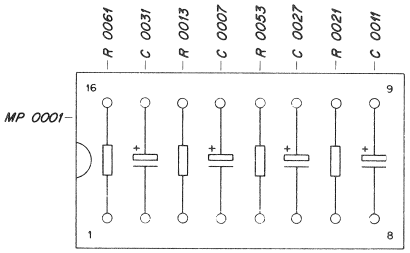

* S T U D E R * POSITION LIST OF PARTS 1.228.595.00
* TAPE LOCK SYSTEM 2000 * ASS.08-41

POSITION RD.	POS.M	PART NO.	DESCRIPTION OF PART
C	0001	59.36.4689	C 6.8 U ; 20%, 25V , TA
C	0009	59.36.4689	C 6.8 U ; 20%, 25V , TA
C	0015	59.36.4689	C 6.8 U ; 20%, 25V , TA
C	0017	59.36.4689	C 6.8 U ; 20%, 25V , TA
MP	0001	53.03.0170	MP ADAPTOR PLUG 2*8*0.3 DIL
R	0001	57.02.5332	R 3.3 K ; 10%, .25W , CMA
R	0017	57.02.5332	R 3.3 K ; 10%, .25W , CMA
R	0029	57.02.5332	R 3.3 K ; 10%, .25W , CMA
R	0033	57.02.5332	R 3.3 K ; 10%, .25W , CMA

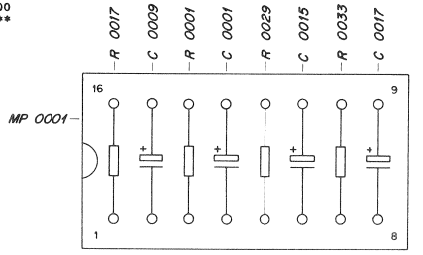

TAPE DECK INTERFACE 1.228.408-73

* S T U D E R * POSITION LIST OF PARTS 1.228.596.00
* TAPE LOCK SYSTEM 2000 * ASS.08-43

POSITION RD.	POS.M	PART NO.	DESCRIPTION OF PART
C	0002	59.99.0205	C 68 N ,-20%, 63V , KER
C	0010	59.99.0205	C 68 N ,-20%, 63V , KER
C	0016	59.99.0205	C 68 N ,-20%, 63V , KER
C	0018	59.99.0205	C 68 N ,-20%, 63V , KER
D	0002	50.04.1107	D 3.3 V, 5%, .40 W,Z,PLANAR
D	0010	50.04.1107	D 3.3 V, 5%, .40 W,Z,PLANAR
D	0016	50.04.1107	D 3.3 V, 5%, .40 W,Z,PLANAR
D	0018	50.04.1107	D 3.3 V, 5%, .40 W,Z,PLANAR
MP	0001	53.03.0170	MP ADAPTOR PLUG 2*8*0.3 DIL

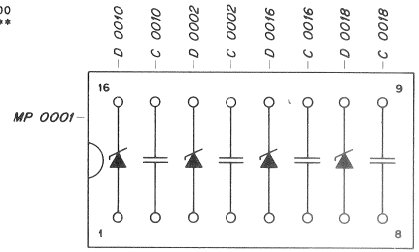

* S T U D E R * POSITION LIST OF PARTS 1.228.597.00
* TAPE LOCK SYSTEM 2000 * ASS.08-47

POSITION RD.	POS.M	PART NO.	DESCRIPTION OF PART
C	0004	59.99.0205	C 68 N ,-20%, 63V , KER
C	0006	59.99.0205	C 68 N ,-20%, 63V , KER
C	0024	59.99.0205	C 68 N ,-20%, 63V , KER
C	0030	59.99.0205	C 68 N ,-20%, 63V , KER
D	0004	50.04.1107	D 3.3 V, 5%, .40 W,Z,PLANAR
D	0006	50.04.1107	D 3.3 V, 5%, .40 W,Z,PLANAR
D	0024	50.04.1107	D 3.3 V, 5%, .40 W,Z,PLANAR
D	0030	50.04.1107	D 3.3 V, 5%, .40 W,Z,PLANAR
MP	0001	53.03.0170	MP ADAPTOR PLUG 2*8*0.3 DIL

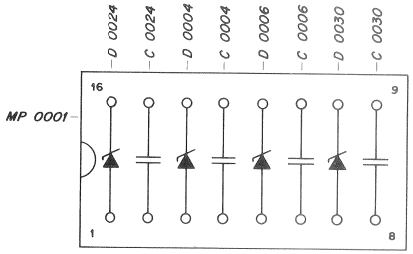

* S T U D E R * POSITION LIST OF PARTS 1.228.598.00
* TAPE LOCK SYSTEM 2000 * ASS.08-49

POSITION RD.	POS.M	PART NO.	DESCRIPTION OF PART
C	0003	59.36.4689	C 6.8 U , 20%, 25V , TA
C	0005	59.36.4689	C 6.8 U , 20%, 25V , TA
C	0023	59.36.4689	C 6.8 U , 20%, 25V , TA
C	0029	59.36.4689	C 6.8 U , 20%, 25V , TA
MP	0001	53.03.0170	MP ADAPTOR PLUG 2*8*0.3 DIL
R	0005	57.02.5332	R 3.3 K , 10%, .25W , CMA
R	0009	57.02.5332	R 3.3 K , 10%, .25W , CMA
R	0045	57.02.5332	R 3.3 K , 10%, .25W , CMA
R	0057	57.02.5332	R 3.3 K , 10%, .25W , CMA

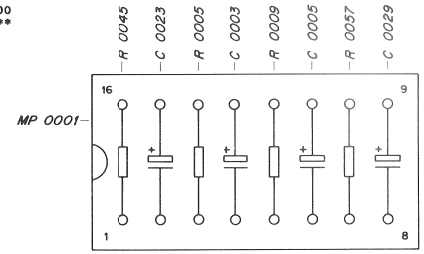

* S T U D E R * POSITION LIST OF PARTS 1.228.599.00
* TAPE LOCK SYSTEM 2000 * ASS.08-51

POSITION RD.	POS.M	PART NO.	DESCRIPTION OF PART
D	0037	50.04.1506	D 30 V , 5%, 1.3W, Z
D	0039	50.04.1506	D 30 V , 5%, 1.3W, Z
D	0040	50.04.1506	D 30 V , 5%, 1.3W, Z
D	0041	50.04.1506	D 30 V , 5%, 1.3W, Z
D	0044	50.04.1506	D 30 V , 5%, 1.3W, Z
D	0046	50.04.1506	D 30 V , 5%, 1.3W, Z
D	0048	50.04.1506	D 30 V , 5%, 1.3W, Z
D	0049	50.04.1506	D 30 V , 5%, 1.3W, Z
MP	0001	53.03.0171	MP ADAPTOR PLUG 2*8*0.6 DIL

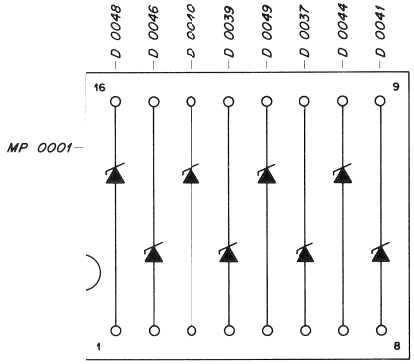

TAPE DECK INTERFACE 1.228.408-72

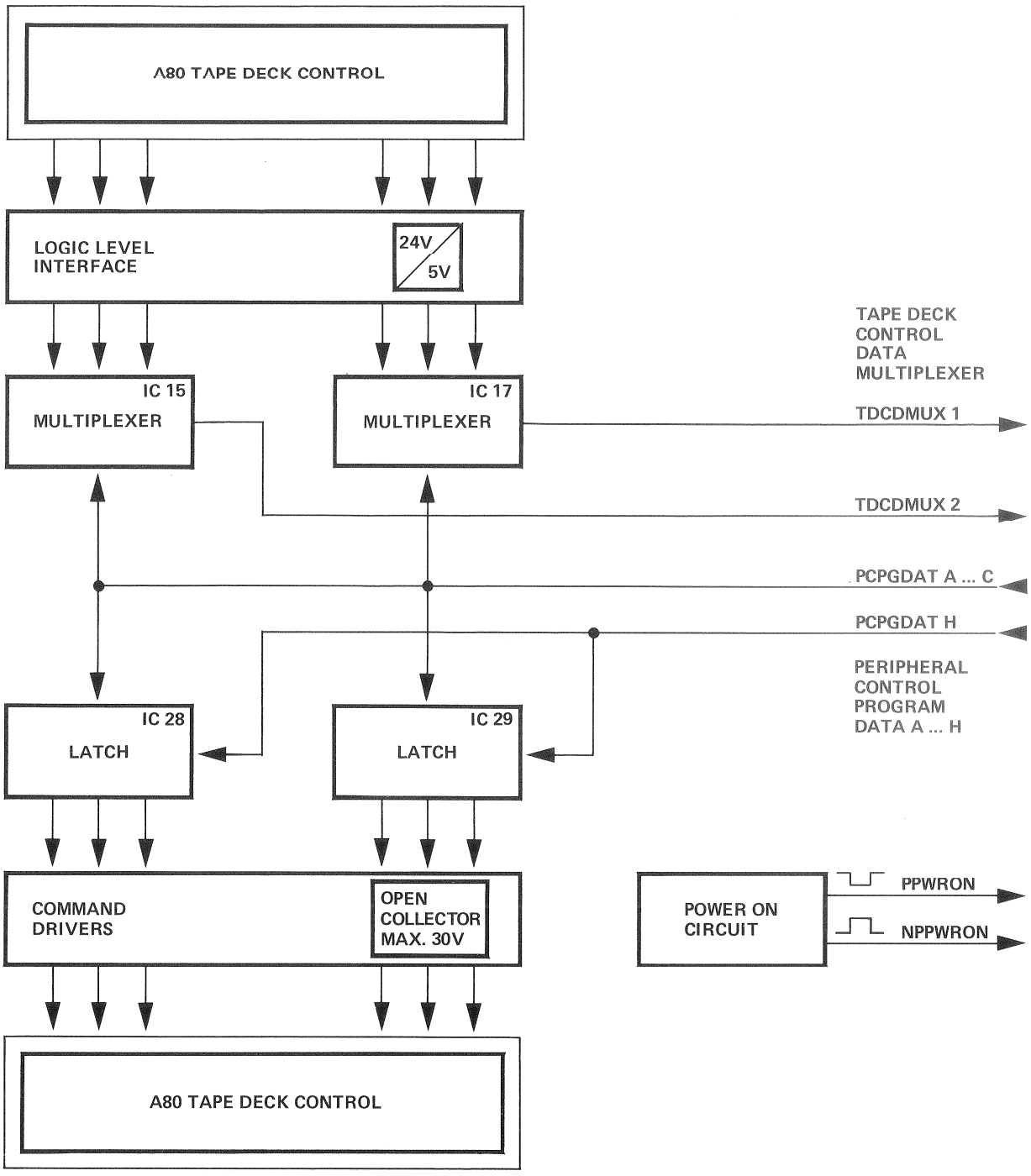

8
SLAVE RACK LOCATION

TAPE DECK INTERFACE 1.228.408-72

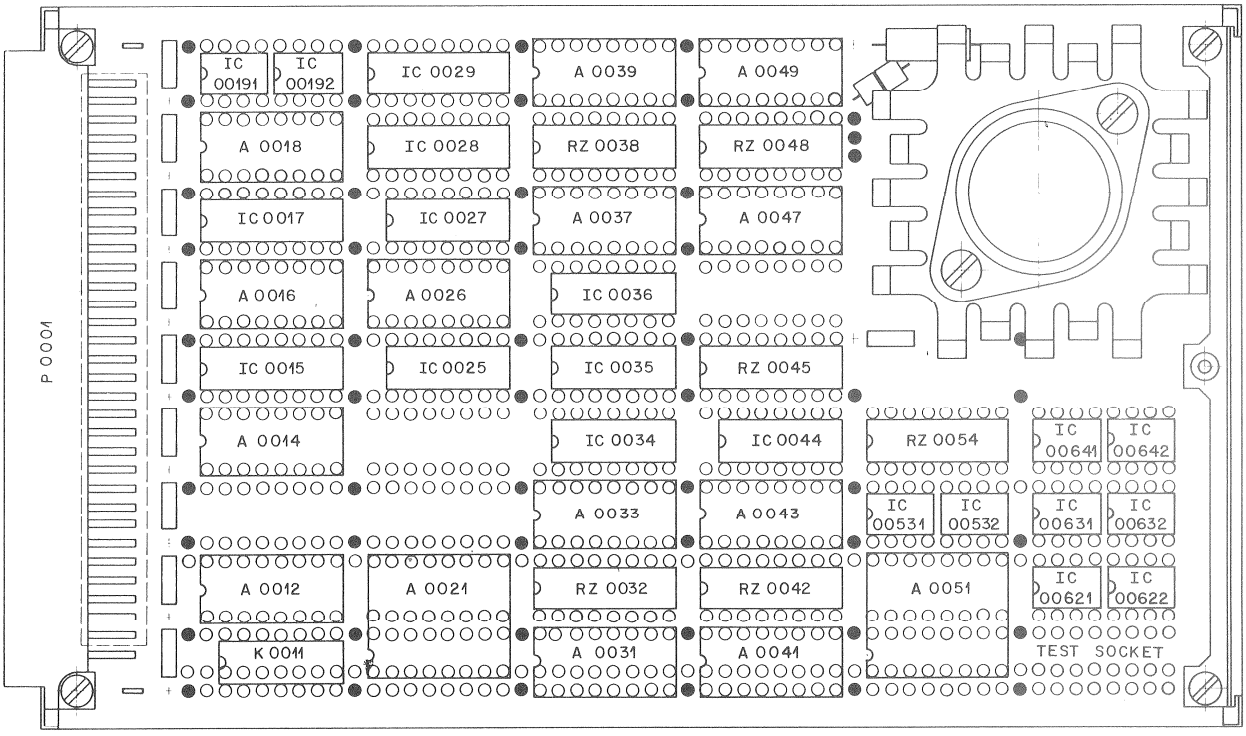


```
*   S T U D E R   *   POSITION LIST OF PARTS 1.228.408.72   *   76/12/14   *                    PAGE  1 OF  1   *
*************************************************************************************************************
*   TAPE LOCK SYSTEM 2000              *   TAPE DECK INTERFACE                *                  78/01/23-B  *
```

POSITION RD.	POS.M	PART NO.	DESCRIPTION OF PART
A	0012	1.228.540.00	ASSEMBLY 08-12
A	0014	1.228.541.00	ASSEMBLY 08-14
A	0016	1.228.542.00	ASSEMBLY 08-16
A	0018	1.228.543.00	ASSEMBLY 08-18
A	0021	1.228.544.00	ASSEMBLY 08-21
A	0026	1.228.590.00	ASSEMBLY 08-26
A	0031	1.228.591.00	ASSEMBLY 08-31
A	0033	1.228.592.00	ASSEMBLY 08-33
A	0037	1.228.593.00	ASSEMBLY 08-37
A	0039	1.228.594.00	ASSEMBLY 08-39
A	0041	1.228.595.00	ASSEMBLY 08-41
A	0043	1.228.596.00	ASSEMBLY 08-43
A	0047	1.228.597.00	ASSEMBLY 08-47
A	0049	1.228.598.00	ASSEMBLY 08-49
A	0051	1.228.599.00	ASSEMBLY 08-51
IC	0015	50.06.0151	IC SN 74 LS 151 N TTL
IC	0017	50.06.0151	IC SN 74 LS 151 N TTL
IC	00191	50.05.0227	IC SN75462P ,LM 75462 , DRIV
IC	00192	50.05.0227	IC SN75462P ,LM 75462 , DRIV
IC	0025	50.06.0002	IC SN 74 LS 02 N TTL
IC	0027	50.06.0000	IC SN 74 LS 00 N TTL
IC	0028	50.05.0215	IC 93 L 34PC, TTL
IC	0029	50.05.0215	IC 93 L 34PC, TTL
IC	0034	50.06.0014	IC SN 74 LS 14 N TTL
IC	0035	50.06.0014	IC SN 74 LS 14 N TTL
IC	0036	50.06.0014	IC SN 74 LS 14 N TTL
IC	0044	50.06.0032	IC SN 74 LS 32 N TTL
IC	00531	50.05.0203	IC SN 75463P,LM 3613 N, DRIV
IC	00532	50.05.0203	IC SN 75463P,LM 3613 N, DRIV
IC	00621	50.05.0227	IC SN75462P ,LM 75462 , DRIV
IC	00622	50.05.0227	IC SN75462P ,LM 75462 , DRIV
IC	00631	50.05.0227	IC SN75462P ,LM 75462 , DRIV
IC	00632	50.05.0227	IC SN75462P ,LM 75462 , DRIV
IC	00641	50.05.0227	IC SN75462P ,LM 75462 , DRIV
IC	00642	50.05.0227	IC SN75462P ,LM 75462 , DRIV
K	0011	56.02.1005	K 24V=, 10 W, 1*R , DIL14

POSITION RD.	POS.M	PART NO.	DESCRIPTION OF PART
P	0001	54.01.0354	P LEISTE 3 * 32 POL WRAP
RZ	0032	57.88.3222	RZ 8*2 K2 , 2%, DIL16
RZ	0038	57.88.3222	RZ 8*2 K2 , 2%, DIL16
RZ	0042	57.88.3222	RZ 8*2 K2 , 2%, DIL16
RZ	0045	57.85.3472	RZ 15*4.7K, 2%, DIL
RZ	0048	57.88.3222	RZ 8*2 K2 , 2%, DIL16
RZ	0054	57.85.3332	RZ 15*3.3K, 2%, DIL16

A80 LOCATOR | A80 MASTER-CONTROL

TAPE DECK INTERFACE 1.228.408-72

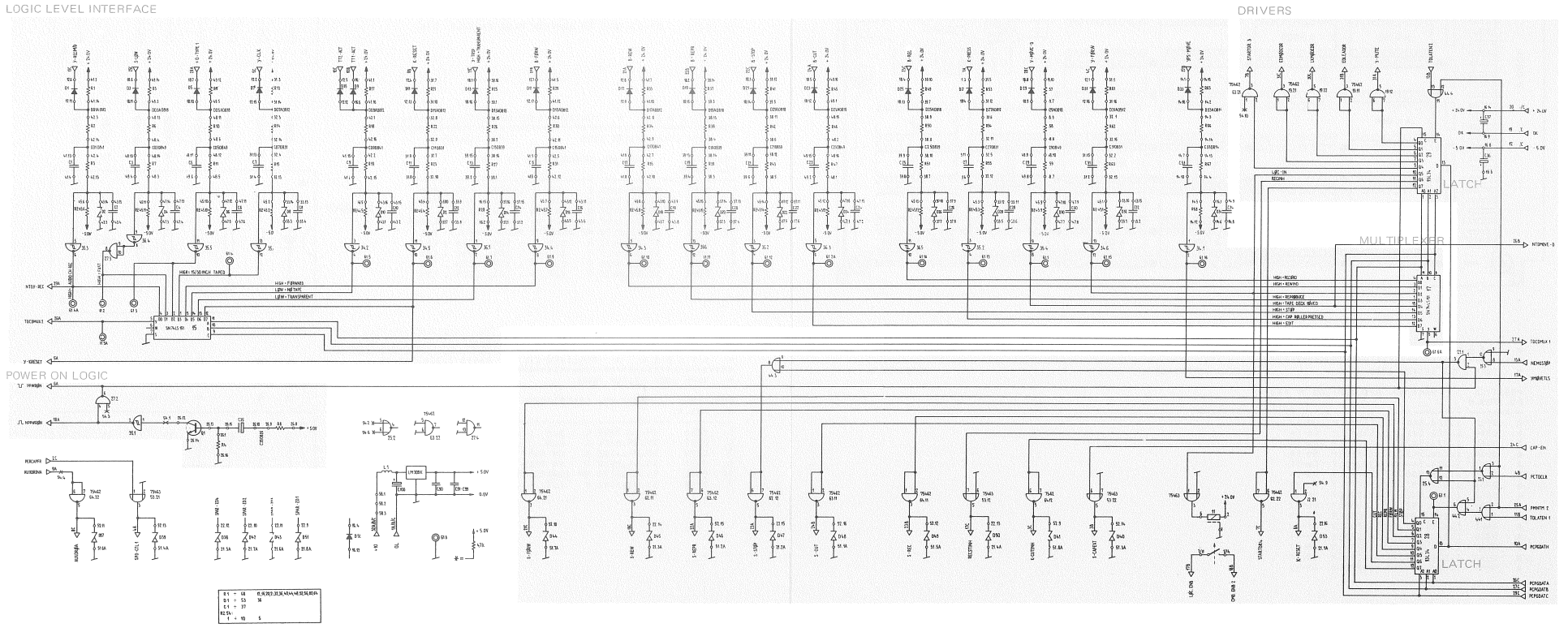

TAPE DECK INTERFACE 1.228.408-72

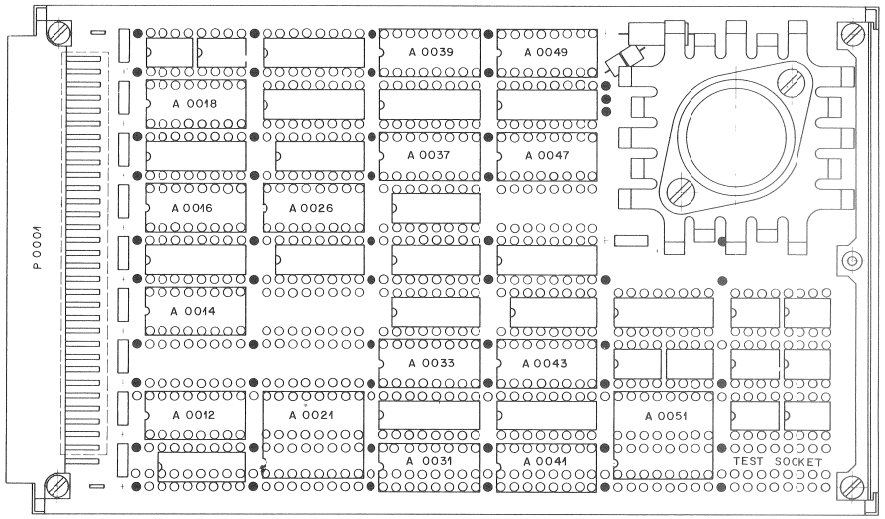

* S T U D E R * POSITION LIST OF PARTS 1.228.408.72 * 76/12/14 * PAGE 1 OF 1 *
* TAPE LOCK SYSTEM 2000 * TAPE DECK INTERFACE * 78/02/23-B *

POSITION RD.	POS.M	PART NO.	DESCRIPTION OF PART
A	0012	1.228.540.00	ASSEMBLY 08-12
A	0014	1.228.541.00	ASSEMBLY 08-14
A	0016	1.228.542.00	ASSEMBLY 08-16
A	0018	1.228.543.00	ASSEMBLY 08-18
A	0021	1.228.544.00	ASSEMBLY 08-21
A	0026	1.228.590.00	ASSEMBLY 08-26
A	0031	1.228.591.00	ASSEMBLY 08-31
A	0033	1.228.592.00	ASSEMBLY 08-33
A	0037	1.228.593.00	ASSEMBLY 08-37
A	0039	1.228.594.00	ASSEMBLY 08-39
A	0041	1.228.595.00	ASSEMBLY 08-41
A	0043	1.228.596.00	ASSEMBLY 08-43
A	0047	1.228.597.00	ASSEMBLY 08-47
A	0049	1.228.598.00	ASSEMBLY 08-49
A	0051	1.228.599.00	ASSEMBLY 08-51

* S T U D E R * POSITION LIST OF PARTS 1.228.540.00
* TAPE LOCK SYSTEM 2000 * AIS.08-12

POSITION RD.	POS.M	PART NO.	DESCRIPTION OF PART
D	0001	50.04.0102	D 1N 914 ,1N 4148 ,
D	0007	50.04.0102	D 1N 914 ,1N 4148 ,
D	0011	50.04.0102	D 1N 914 ,1N 4148 ,
D	0015	50.04.0102	D 1N 914 ,1N 4148 ,
D	0017	50.04.0102	D 1N 914 ,1N 4148 ,
D	0027	50.04.0102	D 1N 914 ,1N 4148 ,
D	0031	50.04.0102	D 1N 914 ,1N 4148 ,
D	0035	50.04.0102	D 1N 914 ,1N 4148 ,
MP	0001	53.03.0170	MP ADAPTOR PLUG 2*8*0.3 DIL

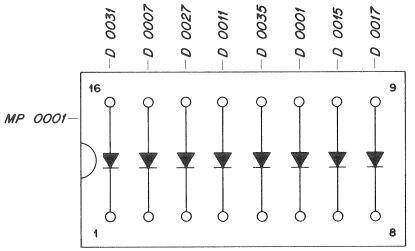

* S T U D E R * POSITION LIST OF PARTS 1.228.541.00
* TAPE LOCK SYSTEM 2000 * AIS.08-14

POSITION RD.	POS.M	PART NO.	DESCRIPTION OF PART
C	0033	59.99.0205	C 68 N ,-20%, 63V , KER
C	0034	59.32.3103	C 10 N ,+80% 40=, KER
D	0033	50.04.0102	D 1N 914 ,1N 4148 ,
D	0034	50.04.1107	D 3.3 V, 5%, .40 W,Z,PLANAR
MP	0001	53.03.0170	MP ADAPTOR PLUG 2*8*0.3 DIL
R	0065	57.02.5332	R 3.3 K , 10%, .25W , CMA
R	0066	57.02.5222	R 2.2 K , 10%, .25W , CMA
R	0067	57.02.5222	R 2.2 K , 10%, .25W , CMA
R	0068	57.02.5472	R 4.7 K , 10%, .25W , CMA

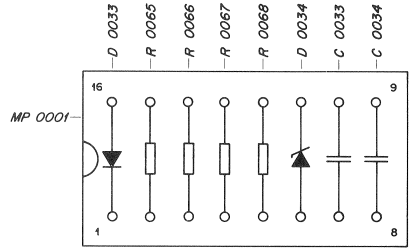

* S T U D E R * POSITION LIST OF PARTS 1.228.542.00
* TAPE LOCK SYSTEM 2000 * AIS.08-16

POSITION RD.	POS.M	PART NO.	DESCRIPTION OF PART
C	0036	59.36.3339	C 3.3 U , 20%, 16V-, TA
C	0037	59.99.0201	C 6.8 U , 20%, 35V , TA
D	0009	50.04.0102	D 1N 914 ,1N 4148 ,
D	0052	50.04.0102	D 1N 914 ,1N 4148 ,
MP	0001	53.03.0170	MP ADAPTOR PLUG 2*8*0.3 DIL
R	0028	57.02.5472	R 4.7 K , 10%, .25W , CMA

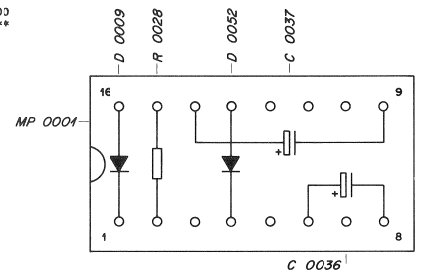

* S T U D E R * POSITION LIST OF PARTS 1.228.543.00
* TAPE LOCK SYSTEM 2000 * AIS.08-18

POSITION RD.	POS.M	PART NO.	DESCRIPTION OF PART
D	0003	50.04.0102	D 1N 914 ,1N 4148 ,
D	0005	50.04.0102	D 1N 914 ,1N 4148 ,
D	0013	50.04.0102	D 1N 914 ,1N 4148 ,
D	0019	50.04.0102	D 1N 914 ,1N 4148 ,
D	0021	50.04.0102	D 1N 914 ,1N 4148 ,
D	0023	50.04.0102	D 1N 914 ,1N 4148 ,
D	0025	50.04.0102	D 1N 914 ,1N 4148 ,
D	0029	50.04.0102	D 1N 914 ,1N 4148 ,
MP	0001	53.03.0170	MP ADAPTOR PLUG 2*8*0.3 DIL

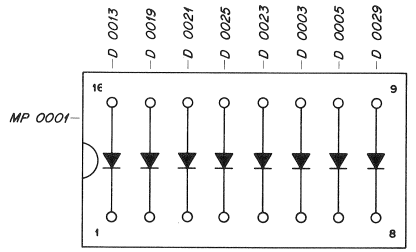

TAPE DECK INTERFACE 1.228.408-72

* S T U D E R * POSITION LIST OF PARTS 1.228.544.00
* TAPE LOCK SYSTEM 2000 * ASS.08-21

POSITION RD.	POS.M	PART NO.	DESCRIPTION OF PART
D	0038	50.04.1506	D 30 V , 5%, 1.3W, Z
D	0042	50.04.1506	D 30 V , 5%, 1.3W, Z
D	0043	50.04.1506	D 30 V , 5%, 1.3W, Z
D	0045	50.04.1506	D 30 V , 5%, 1.3W, Z
D	0047	50.04.1506	D 30 V , 5%, 1.3W, Z
D	0050	50.04.1506	D 30 V , 5%, 1.3W, Z
D	0051	50.04.1506	D 30 V , 5%, 1.3W, Z
D	0053	50.04.1506	D 30 V , 5%, 1.3W, Z
MP	0001	53.03.0171	MP ADAPTOR PLUG 2*8*0.6 DIL

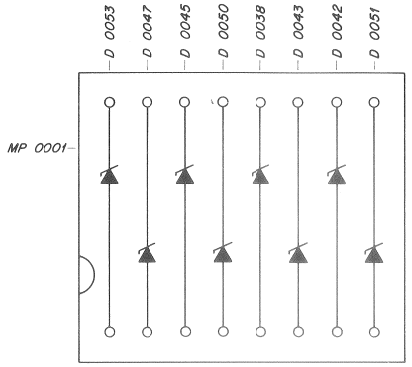

* S T U D E R * POSITION LIST OF PARTS 1.228.592.00
* TAPE LOCK SYSTEM 2000 * ASS.08-33

POSITION RD.	POS.M	PART NO.	DESCRIPTION OF PART
C	0008	59.99.0205	C 68 V ,-20%, 63V , KER
C	0012	59.99.0205	C 68 V ,-20%, 63V , KER
C	0028	59.99.0205	C 68 V ,-20%, 63V , KER
C	0032	59.99.0205	C 68 V ,-20%, 63V , KER
D	0008	50.04.1107	D 3.3 V, 5%, .40 W,Z,PLANAR
D	0012	50.04.1107	D 3.3 V, 5%, .40 W,Z,PLANAR
D	0028	50.04.1107	D 3.3 V, 5%, .40 W,Z,PLANAR
D	0032	50.04.1107	D 3.3 V, 5%, .40 W,Z,PLANAR
MP	0001	53.03.0170	MP ADAPTOR PLUG 2*8*0.3 DIL

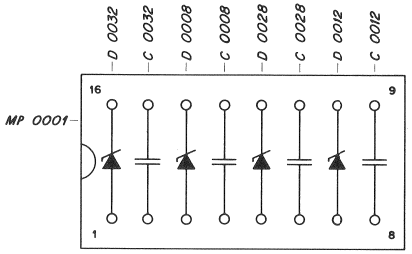

* S T U D E R * POSITION LIST OF PARTS 1.228.593.00
* TAPE LOCK SYSTEM 2000 * ASS.08-37

POSITION RD.	POS.M	PART NO.	DESCRIPTION OF PART
C	0014	59.99.0205	C 68 V ,-20%, 63V , KER
C	0020	59.99.0205	C 68 V ,-20%, 63V , KER
C	0022	59.99.0205	C 68 V ,-20%, 63V , KER
C	0026	59.99.0205	C 68 V ,-20%, 63V , KER
D	0014	50.04.1107	D 3.3 V, 5%, .40 W,Z,PLANAR
D	0020	50.04.1107	D 3.3 V, 5%, .40 W,Z,PLANAR
D	0022	50.04.1107	D 3.3 V, 5%, .40 W,Z,PLANAR
D	0026	50.04.1107	D 3.3 V, 5%, .40 W,Z,PLANAR
MP	0001	53.03.0170	MP ADAPTOR PLUG 2*8*0.3 DIL

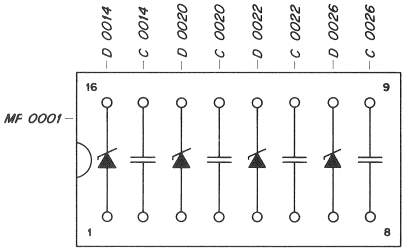

* S T U D E R * POSITION LIST OF PARTS 1.228.590.00
* TAPE LOCK SYSTEM 2000 * ASS.08-26

POSITION RD.	POS.M	PART NO.	DESCRIPTION OF PART
C	0035	59.99.0202	C 39 U , 20%, 10V , TA
MP	0001	53.03.0170	MP ADAPTOR PLUG 2*8*0.3 DIL
Q	0001	50.03.0409	Q BC 108B, NPN
R	0004	57.02.5103	R 10 K , 10%, .25W , CMA
R	0008	57.02.5103	R 10 K , 10%, .25W , CMA

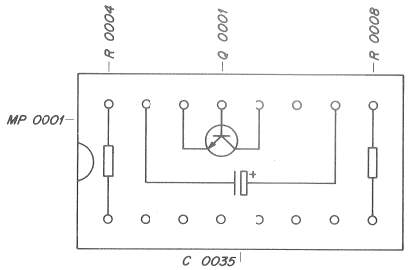

* S T U D E R * POSITION LIST OF PARTS 1.228.594.00
* TAPE LOCK SYSTEM 2000 * ASS.08-39

POSITION RD.	POS.M	PART NO.	DESCRIPTION OF PART
C	0013	59.36.4689	C 6.8 U , 20%, 25V , TA
C	0019	59.36.4689	C 6.8 U , 20%, 25V , TA
C	0021	59.36.4689	C 6.8 U , 20%, 25V , TA
C	0025	59.36.4689	C 6.8 U , 20%, 25V , TA
MP	0001	53.03.0170	MP ADAPTOR PLUG 2*8*0.3 DIL
R	0025	57.02.5332	R 3.3 K , 10%, .25W , CMA
R	0037	57.02.5332	R 3.3 K , 10%, .25W , CMA
R	0041	57.02.5332	R 3.3 K , 10%, .25W , CMA
R	0049	57.02.5332	R 3.3 K , 10%, .25W , CMA

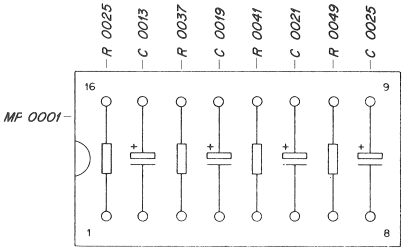

* S T U D E R * POSITION LIST OF PARTS 1.228.591.00
* TAPE LOCK SYSTEM 2000 * ASS.08-31

POSITION RD.	POS.M	PART NO.	DESCRIPTION OF PART
C	0007	59.36.4689	C 6.8 U , 20%, 25V , TA
C	0011	59.36.4689	C 6.8 U , 20%, 25V , TA
C	0027	59.36.4689	C 6.8 U , 20%, 25V , TA
C	0031	59.36.4689	C 6.8 U , 20%, 25V , TA
MP	0001	53.03.0170	MP ADAPTOR PLUG 2*8*0.3 DIL
R	0013	57.02.5332	R 3.3 K , 10%, .25W , CMA
R	0021	57.02.5332	R 3.3 K , 10%, .25W , CMA
R	0053	57.02.5332	R 3.3 K , 10%, .25W , CMA
R	0061	57.02.5332	R 3.3 K , 10%, .25W , CMA

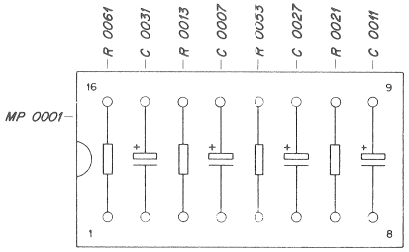

* S T U D E R * POSITION LIST OF PARTS 1.228.595.00
* TAPE LOCK SYSTEM 2000 * ASS.08-41

POSITION RD.	POS.M	PART NO.	DESCRIPTION OF PART
C	0001	59.36.4689	C 6.8 U , 20%, 25V , TA
C	0009	59.36.4689	C 6.8 U , 20%, 25V , TA
C	0015	59.36.4689	C 6.8 U , 20%, 25V , TA
C	0017	59.36.4689	C 6.8 U , 20%, 25V , TA
MP	0001	53.03.0170	MP ADAPTOR PLUG 2*8*0.3 DIL
R	0001	57.02.5332	R 3.3 K , 10%, .25W , CMA
R	0017	57.02.5332	R 3.3 K , 10%, .25W , CMA
R	0029	57.02.5332	R 3.3 K , 10%, .25W , CMA
R	0033	57.02.5332	R 3.3 K , 10%, .25W , CMA

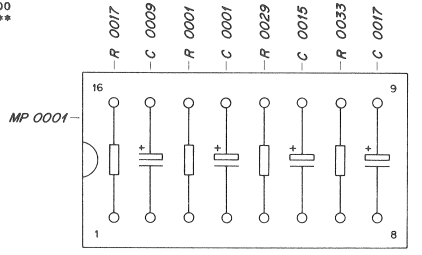

TAPE DECK INTERFACE 1.228.408-72

* S T U D E R * POSITION LIST OF PARTS 1.228.596.00
* TAPE LOCK SYSTEM 2000 * ASS.08-43

POSITION RD. POS.M	PART NO.	DESCRIPTION OF PART
C 0002	59.99.0205	C 68 N ,-20%, 63V , KER
C 0010	59.99.0205	C 68 N ,-20%, 63V , KER
C 0016	59.99.0205	C 68 N ,-20%, 63V , KER
C 0018	59.99.0205	C 68 N ,-20%, 63V , KER
D 0002	50.04.1107	D 3.3 V, 5%, .40 W,Z,PLANAR
D 0010	50.04.1107	D 3.3 V, 5%, .40 W,Z,PLANAR
D 0016	50.04.1107	D 3.3 V, 5%, .40 W,Z,PLANAR
D 0018	50.04.1107	D 3.3 V, 5%, .40 W,Z,PLANAR
MP 0001	53.03.0170	MP ADAPTOR PLUG 2*8*0.3 DIL

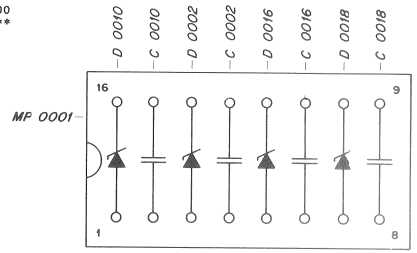

* S T U D E R * POSITION LIST OF PARTS 1.228.597.00
* TAPE LOCK SYSTEM 2000 * ASS.08-47

POSITION RD. POS.M	PART NO.	DESCRIPTION OF PART
C 0004	59.99.0205	C 68 N ,-20%, 63V , KER
C 0006	59.99.0205	C 68 N ,-20%, 63V , KER
C 0024	59.99.0205	C 68 N ,-20%, 63V , KER
C 0030	59.99.0205	C 68 N ,-20%, 63V , KER
D 0004	50.04.1107	D 3.3 V, 5%, .40 W,Z,PLANAR
D 0006	50.04.1107	D 3.3 V, 5%, .40 W,Z,PLANAR
D 0024	50.04.1107	D 3.3 V, 5%, .40 W,Z,PLANAR
D 0030	50.04.1107	D 3.3 V, 5%, .40 W,Z,PLANAR
MP 0001	53.03.0170	MP ADAPTOR PLUG 2*8*0.3 DIL

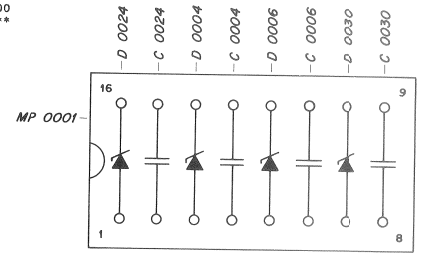

* S T U D E R * POSITION LIST OF PARTS 1.228.598.00
* TAPE LOCK SYSTEM 2000 * ASS.08-49

POSITION RD. POS.M	PART NO.	DESCRIPTION OF PART
C 0003	59.36.4689	C 6.8 U , 20%, 25V , TA
C 0005	59.36.4689	C 6.8 U , 20%, 25V , TA
C 0023	59.36.4689	C 6.8 U , 20%, 25V , TA
C 0029	59.36.4689	C 6.8 U , 20%, 25V , TA
MP 0001	53.03.0170	MP ADAPTOR PLUG 2*8*0.3 DIL
R 0005	57.02.5332	R 3.3 K , 10%, .25W , CMA
R 0009	57.02.5332	R 3.3 K , 10%, .25W , CMA
R 0045	57.02.5332	R 3.3 K , 10%, .25W , CMA
R 0057	57.02.5332	R 3.3 K , 10%, .25W , CMA

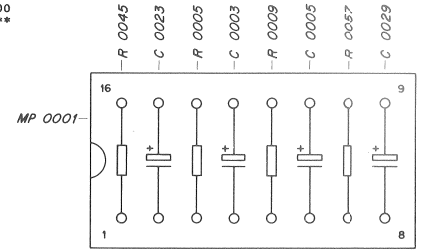

* S T U D E R * POSITION LIST OF PARTS 1.228.599.00
* TAPE LOCK SYSTEM 2000 * ASS.08-51

POSITION RD. POS.M	PART NO.	DESCRIPTION OF PART
D 0037	50.C4.1506	D 30 V , 5%, 1.3W, Z
D 0039	50.C4.1506	D 30 V , 5%, 1.3W, Z
D 0040	50.C4.1506	D 30 V , 5%, 1.3W, Z
D 0041	50.C4.1506	D 30 V , 5%, 1.3W, Z
D 0044	50.C4.1506	D 30 V , 5%, 1.3W, Z
D 0046	50.C4.1506	D 30 V , 5%, 1.3W, Z
D 0048	50.C4.1506	D 30 V , 5%, 1.3W, Z
D 0049	50.C4.1506	D 30 V , 5%, 1.3W, Z
MP 0001	53.C3.0171	MP ADAPTOR PLUG 2*8*0.6 DIL

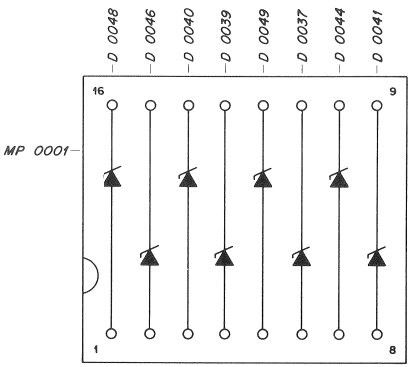

TLS INTERFACE TO A800 1.228.487-81

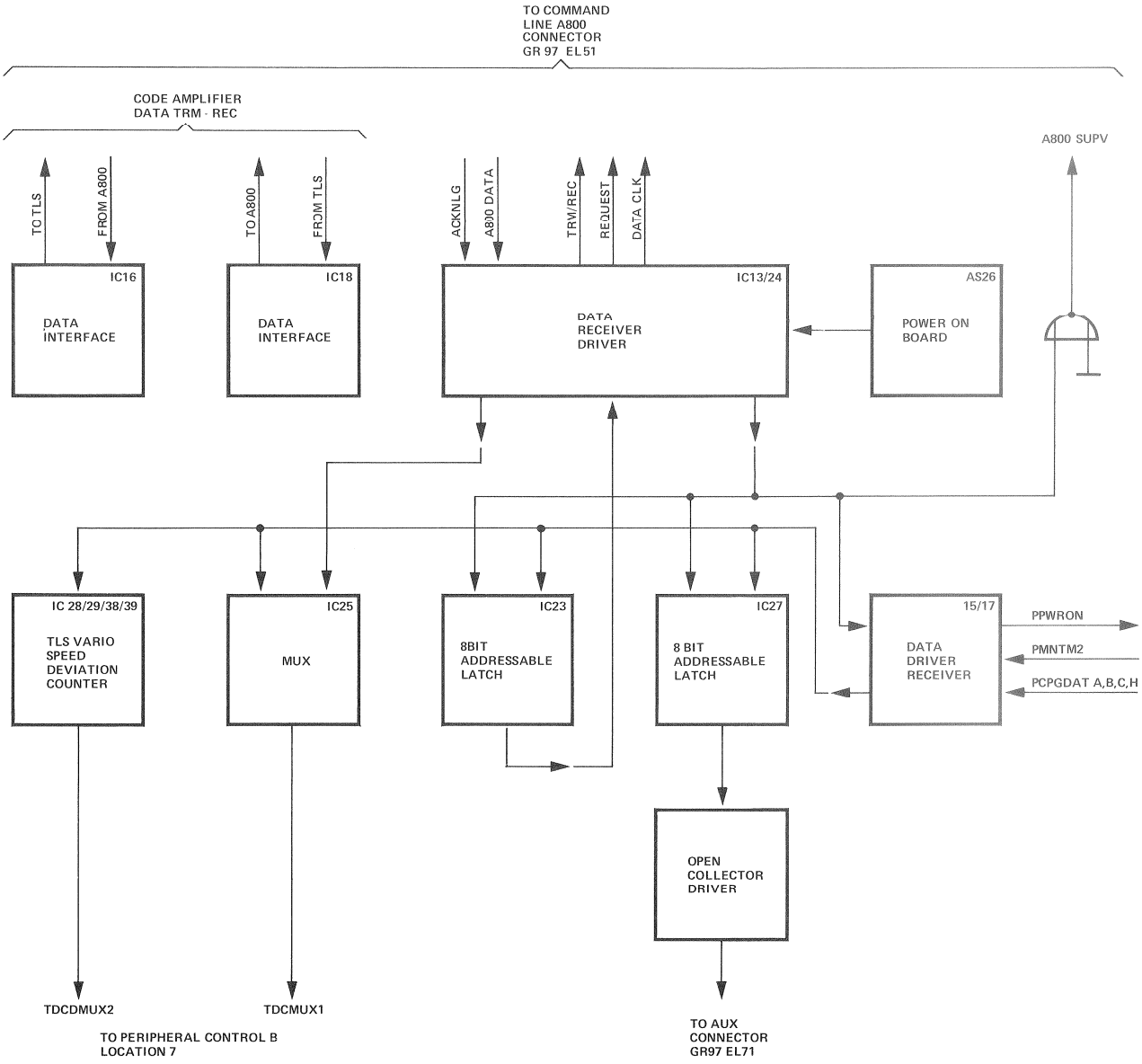

8 SLAVE RACK LOCATION

TLS INTERFACE TO A800 1.228.487-81

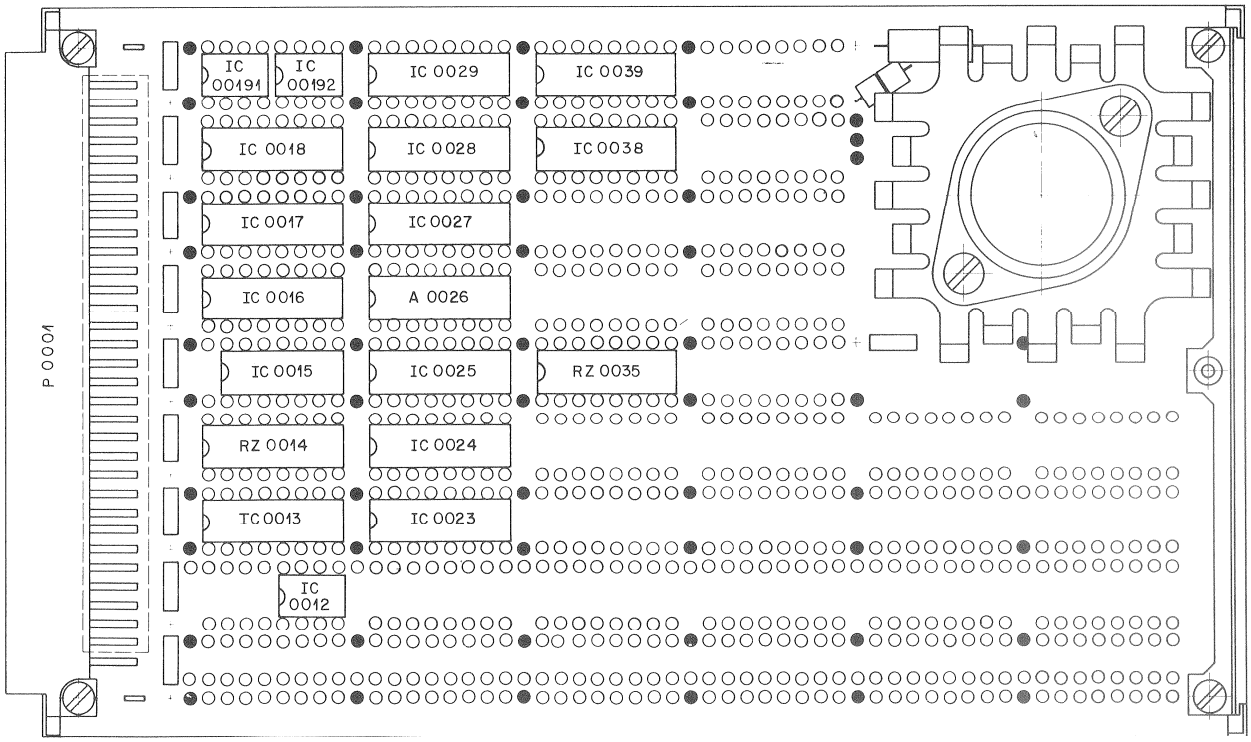


```
*   S T U D E R   *   POSITION LIST OF PARTS 1.228.487.81   *   79/03/29   *                PAGE  1 OF  1   *
*********************************************************************************************************
*   TAPE LOCK SYSTEM 2000              *   TLS INTERFACE TO A800                                  79/05/09-0   *
```

POSITION RD. POS.M	PART NO.	DESCRIPTION OF PART
A 0076	1.228.590.81	ASS.09-26
IC 0012	50.05.0204	IC SN 75464P,LM 3614 N, DRIV
IC 0013	50.05.0236	IC N 8T97B ., ,TTL-3
IC 0015	50.06.0032	IC SN 74 LS 32 N TTL
IC 0016	50.05.0217	IC N 8T37B, TTL
IC 0017	50.05.0216	IC N 8 T 95B, ,TTL-3
IC 0018	50.05.0224	IC N 8T96B, TTL-3
IC 00191	50.05.0204	IC SN 75464P,LM 3614 N, DRIV
IC 00192	50.05.0204	IC SN 75464P,LM 3614 N, DRIV
IC 0023	50.05.0215	IC 93 L 34PC, TTL
IC 0024	50.05.0217	IC N 8T37B, TTL
IC 0025	50.06.0151	IC SN 74 LS 151 N TTL
IC 0027	50.05.0215	IC 93 L 34PC, TTL
IC 0028	50.06.0138	IC SN74LS138N ,TTL
IC 0029	50.06.0151	IC SN 74 LS 151 N TTL
IC 0038	50.06.0169	IC SN 74 LS 169 N TTL
IC 0039	50.06.0169	IC SN 74 LS 169 N TTL
P 0001	54.01.0354	P LEISTE 3 * 32 POL WRAP
RZ 0014	57.80.0101	RZ 14*33C/220,2%, DIL16
RZ 0035	57.85.3332	RZ 15*3.3K, 2%, DIL16

A

POS NO	PART NO	VALUE	SPECIFICATIONS/EQUIVALENT		
C 35	59.30.3330	33 U	-20%	10V	TA
D 54	50.04.1102	6.8 V	5%	.40W	Z
MP 1	53.03.0170	2*8*0.3	Adaptor Plug		DIL
Q 01	50.03.0407	BC109C			NPN
Q 02	50.03.0407	BC109C			NPN
R 04	57.02.4101	100	5%	.25W	CMA
R 08	57.02.4102	1 k	5%	.25W	CMA

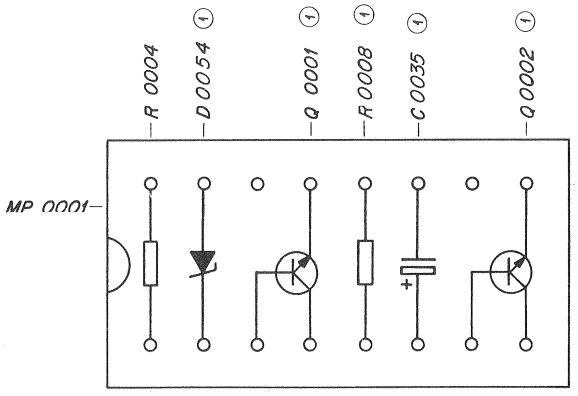

A800

TLS INTERFACE TO A800 1.228.487-81

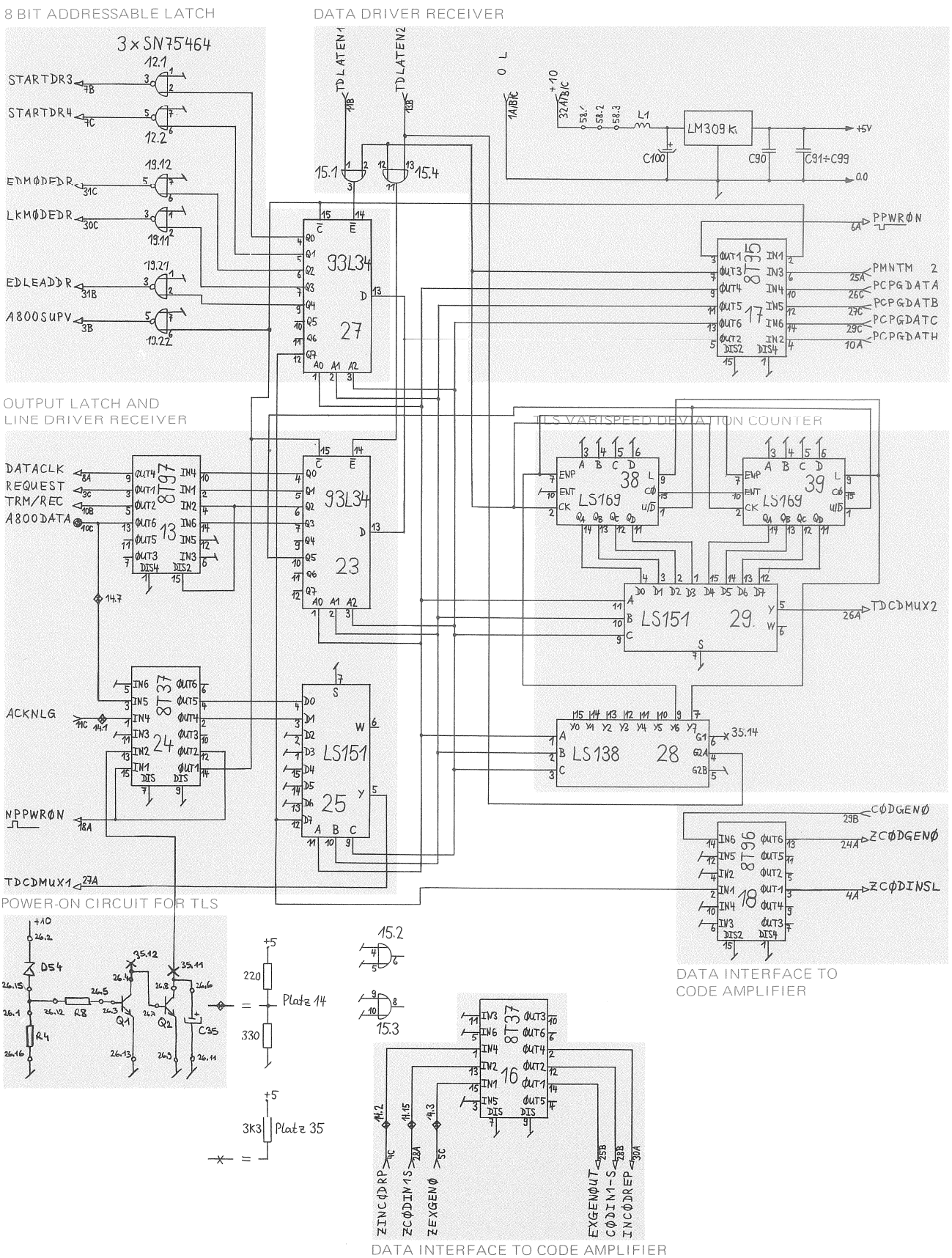

TLS INTERFACE TO A800 1.228.487-00

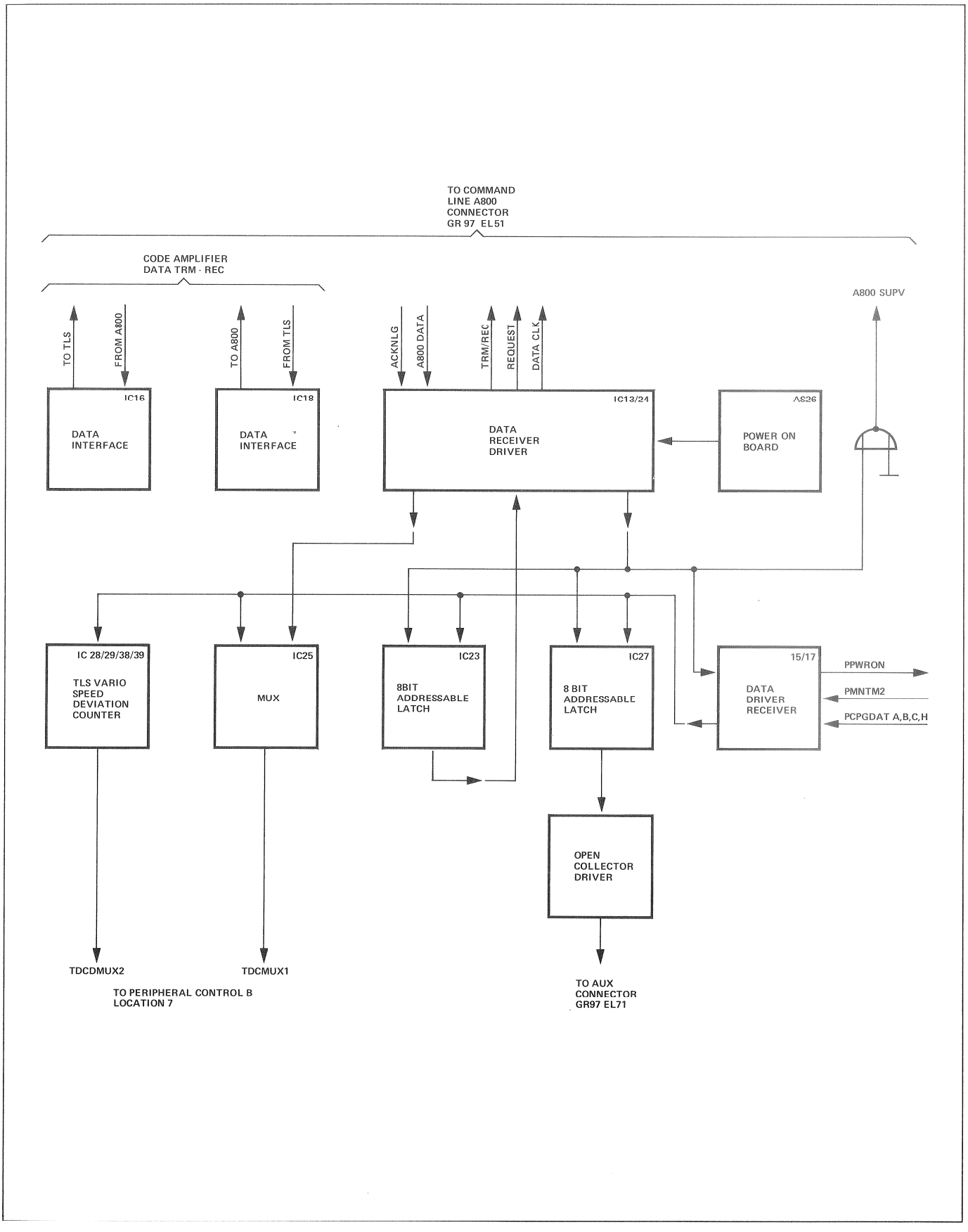

8
SLAVE RACK LOCATION

TLS INTERFACE TO A800 1.228.487-00

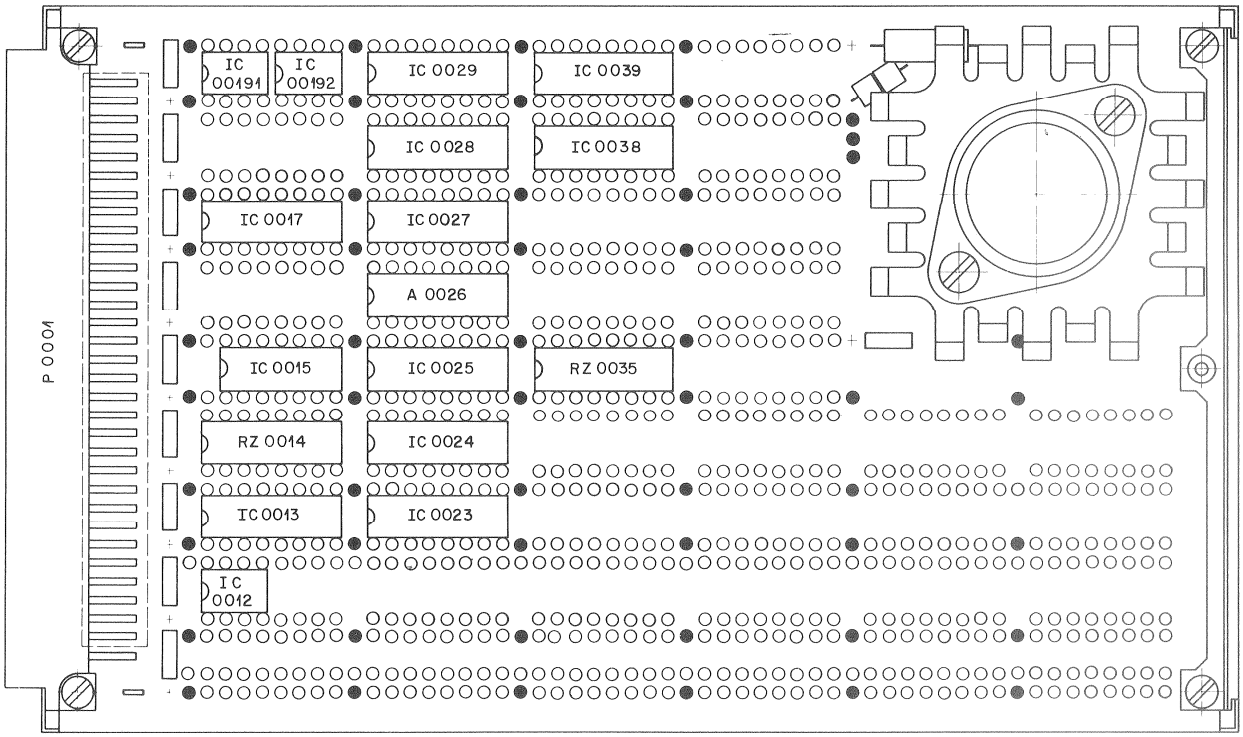

* S T U D E R * POSITION LIST OF PARTS 1.228.487.00 * 78/01/19 * PAGE 1 OF 1 *
* TAPE LOCK SYSTEM 2000 * TLS INTERFACE TO A800 * 77/12/13-1 *

POSITION RD.	POS.M	PART NO.	DESCRIPTION OF PART
A	0026	1.228.590.00	ASSEMBLY 08-26
IC	0011	50.05.0224	IC N 8T96B, TTL-3
IC	0012	50.05.0204	IC SN 75464P,LM 3614 N, DRIV
IC	0013	50.05.0236	IC N 8T97B .,,TTL-3
IC	0015	50.06.0032	IC SN 74 LS 32 N TTL
IC	0016	50.05.0217	IC N 8T37B, TTL
IC	0017	50.05.0216	IC N 8 T 95B,,TTL-3
IC	0018	50.05.0224	IC N 8T96B, TTL-3
IC	00191	50.05.0204	IC SN 75464P,LM 3614 N, DRIV
IC	00192	50.05.0204	IC SN 75464P,LM 3614 N, DRIV
IC	0023	50.05.0215	IC 93 L 34PC, TTL
IC	0024	50.05.0217	IC N 8T37B, TTL
IC	0025	50.06.0151	IC SN 74 LS 151 N TTL
IC	0027	50.05.0215	IC 93 L 34PC, TTL
IC	0028	50.06.0138	IC SN74LS138N ,TTL
IC	0029	50.06.0151	IC SN 74 LS 151 N TTL
IC	0038	50.06.0169	IC SN 74 LS 169 N TTL
IC	0039	50.06.0169	IC SN 74 LS 169 N TTL
P	0001	54.01.0354	P LEISTE 3 * 32 POL WRAP
RZ	0014	57.80.0101	RZ 14*330/220,2%, DIL16
RZ	0035	57.85.3332	RZ 15*3.3K, 2%, DIL16

* S T U D E R * POSITION LIST OF PARTS 1.228.590.00
* TAPE LOCK SYSTEM 2000 * ASS.08-26

POSITION RD.	POS.M	PART NO.	DESCRIPTION OF PART
C	0035	59.99.0202	C 39 U , 20%, 10V , TA
MP	0001	53.03.0170	MP ADAPTOR PLUG 2*8*0.3 DIL
Q	0001	50.03.0409	Q BC 108B, NPN
R	0004	57.02.5103	R 10 K , 10%, .25W , CMA
R	0008	57.02.5103	R 10 K , 10%, .25W , CMA

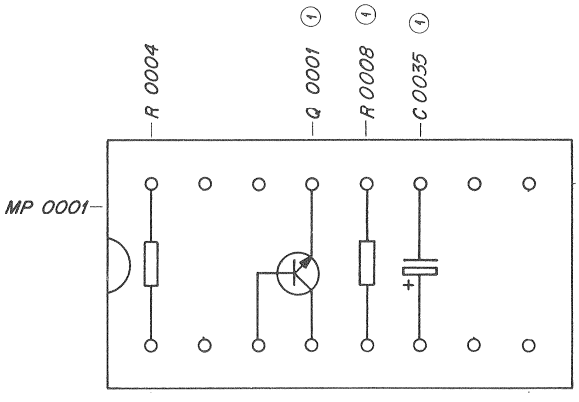

A800

TLS INTERFACE TO A800 1.228.487-00

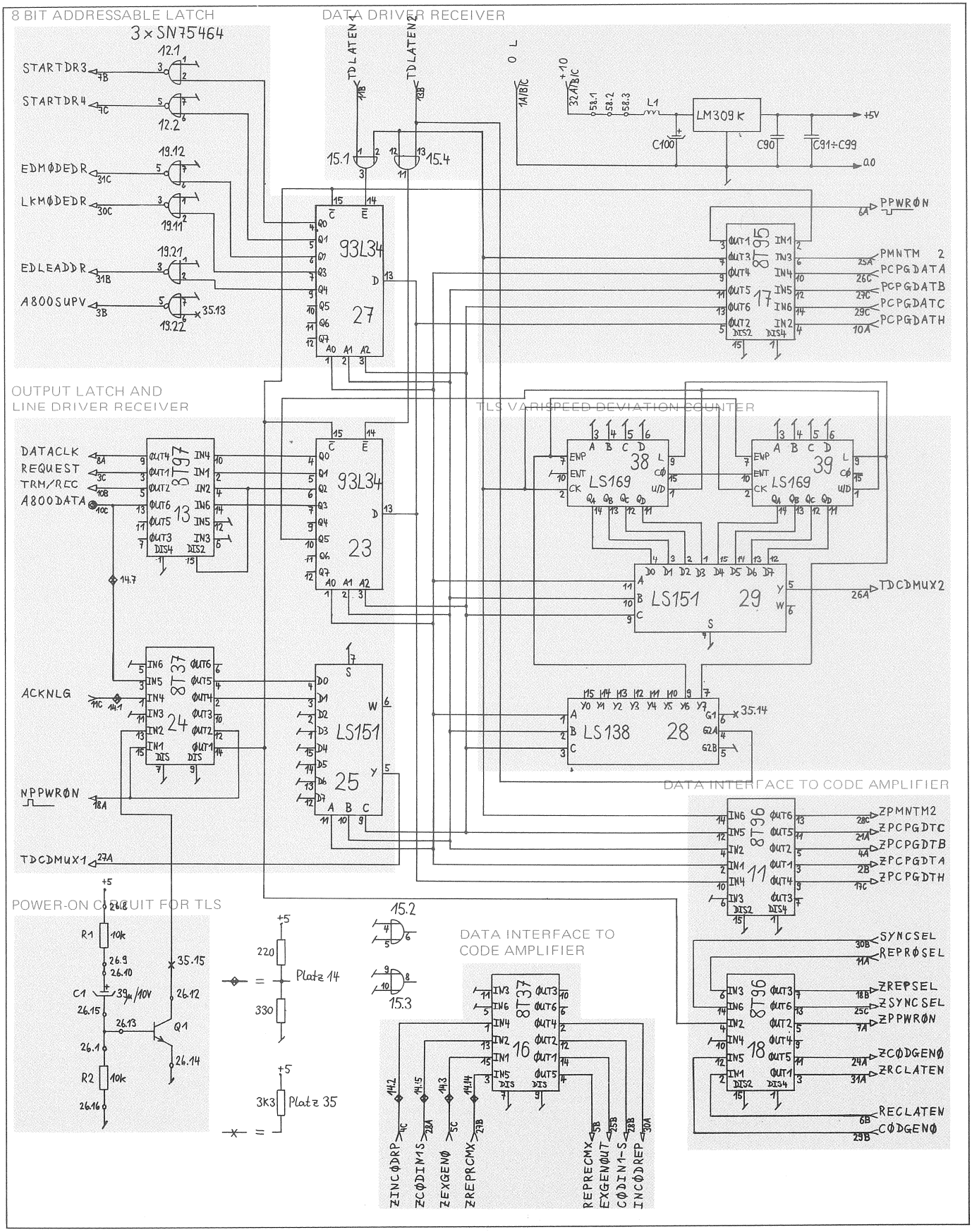

PARALLEL CONNECTED PROGRAMMER 1.228.409-71

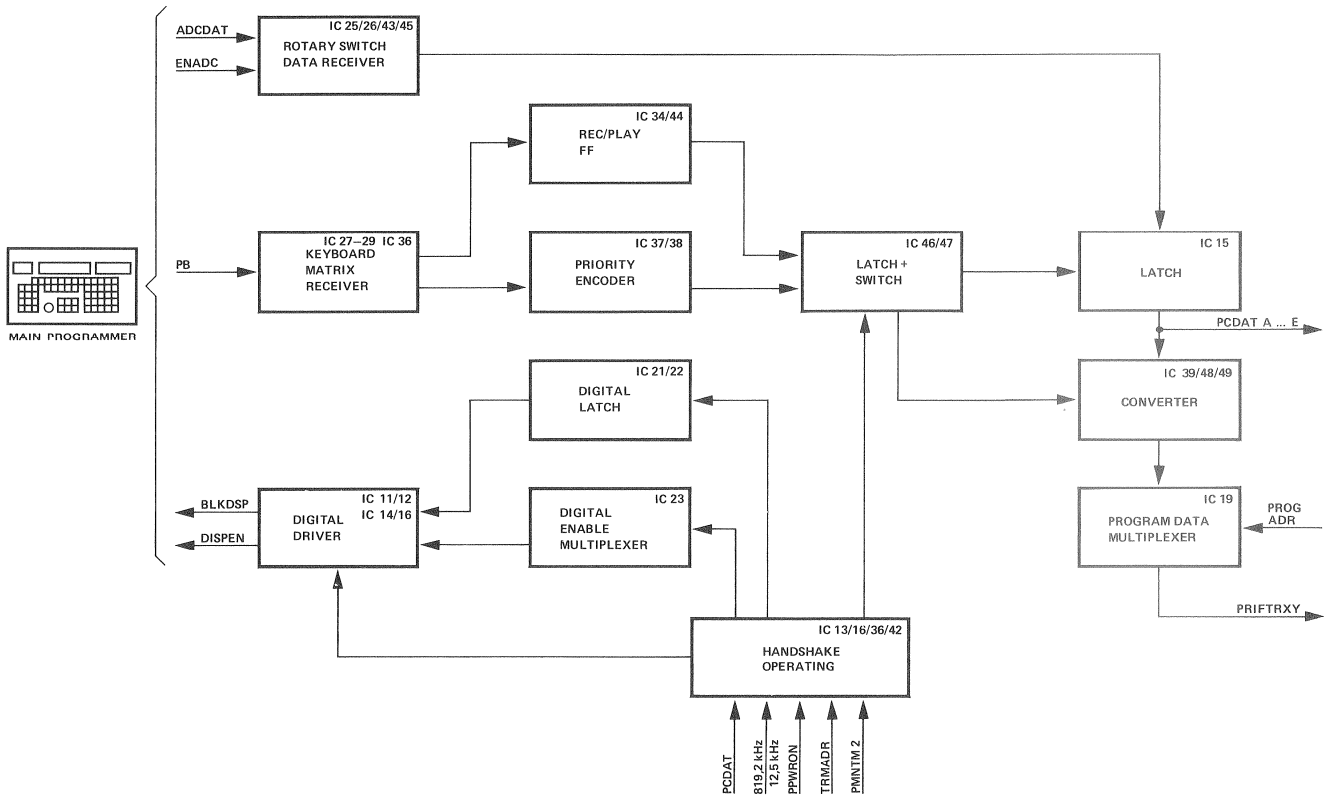

9
SLAVE RACK LOCATION

PARALLEL CONNECTED PROGRAMMER 1.228.409-71

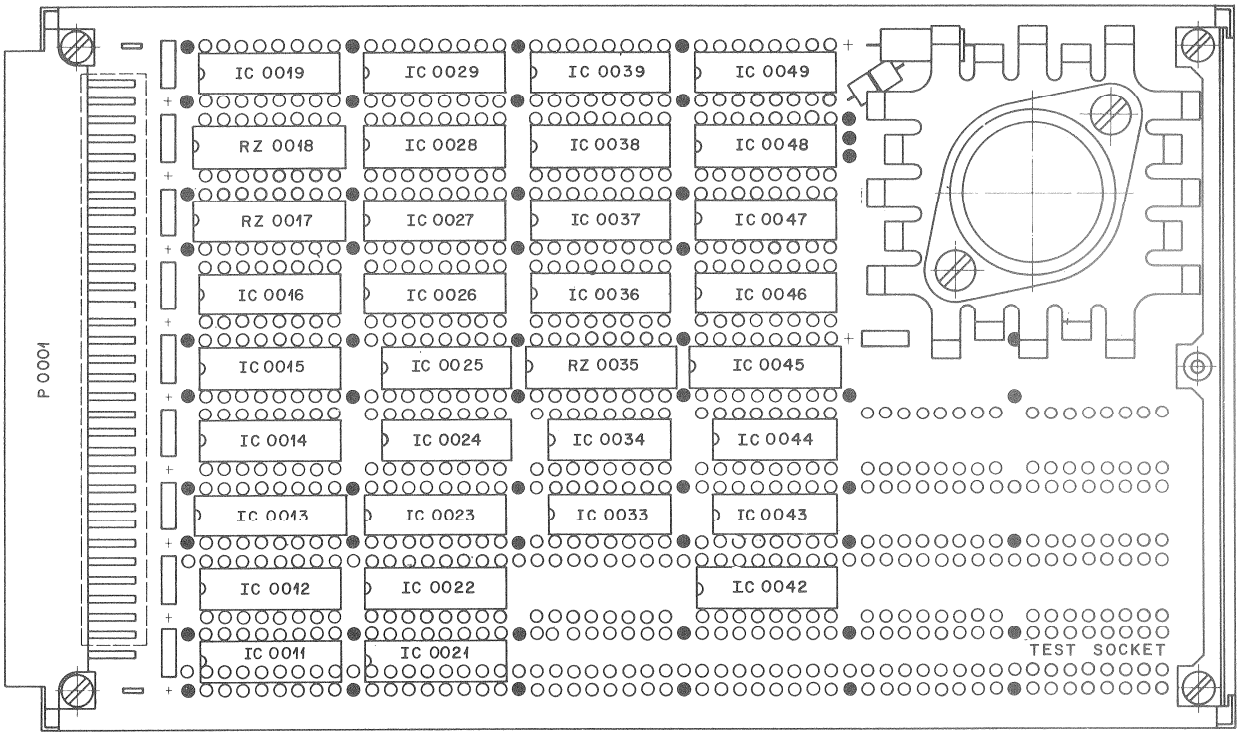


```
*   S T U D E R   *   POSITION LIST OF PARTS 1.228.409./1   *   77/01/31   *                    PAGE  1 OF  1   *
*****************************************************************************************************************
*   TAPE LOCK SYSTEM 2000              *   PARALLEL CONN. PROGR. RECEIVER   *                          76/12/03-A   *

POSITION       PART NO. DESCRIPTION OF PART
RD. POS.M
---------  ------------ --------------------------------
IC  0011    50.05.0224 IC  N 8T96B,                TTL-3
IC  0012    50.05.0224 IC  N 8T96B,                TTL-3
IC  0013    50.06.0138 IC  SN74LS138N             ,TTL
IC  0014    50.05.0224 IC  N 8T96B,                TTL-3
IC  0015    50.06.0298 IC  SN 74 LS 298N ,         TTL
IC  0016    50.05.0216 IC  N 8 T 95B,             ,TTL-3
IC  0019    50.06.0151 IC  SN 74 LS 151 N          TTL
IC  0021    50.05.0215 IC  93 L 34PC,              TTL
IC  0022    50.05.0215 IC  93 L 34PC,              TTL
IC  0023    50.06.0155 IC  SN 74 LS 155 N         TTL
IC  0024    50.06.0008 IC  SN 74 LS  08 N          TTL
IC  0025    50.06.0086 IC  SN 74 LS  86 N          TTL
IC  0026    50.05.0217 IC  N 8T37B,                TTL
IC  0027    50.05.0217 IC  N 8T37B,                TTL
IC  0028    50.05.0217 IC  N 8T37B,                TTL
IC  0029    50.05.0217 IC  N 8T37B,                TTL
IC  0033    50.06.0000 IC  SN 74 LS  00 N          TTL
IC  0034    50.06.0002 IC  SN 74 LS  02 N          TTL
IC  0036    50.05.0217 IC  N 8T37B,                TTL
IC  0037    50.06.0148 IC  SN 74 LS 148 N          TTL
IC  0038    50.06.0148 IC  SN 74 LS 148 N          TTL
IC  0039               PROM R 0009
IC  0042    50.06.0161 IC  SN 74 LS 161 N          TTL
IC  0043    50.06.0074 IC  SN 74 LS  74 N          TTL
IC  0044    50.06.0074 IC  SN 74 LS  74 N          TTL
IC  0045    50.05.0131 IC  SN 74111N,FLJ 351      ,TTL
IC  0046    50.06.0175 IC  SN 74 LS 175 N          TTL
IC  0047    50.06.0157 IC  SN 74 LS 157 N          TTL
IC  0048    50.06.0157 IC  SN 74 LS 157 N          TTL
IC  0049               PROM R0010
P   0001    54.01.0354 P   LEISTE  3 * 32 POL   WRAP
RZ  0017    57.80.0101 RZ  14*330/220,2%,         DIL16
RZ  0018    57.80.0101 RZ  14*330/220,2%,         DIL16
RZ  0035    57.85.3103 RZ  15*10K ,  2%,          DIL
```

A80 LOCATCR | A80 MASTER-CONTROL | A800

PARALLEL CONNECTED PROGRAMMER 1.228.409-71

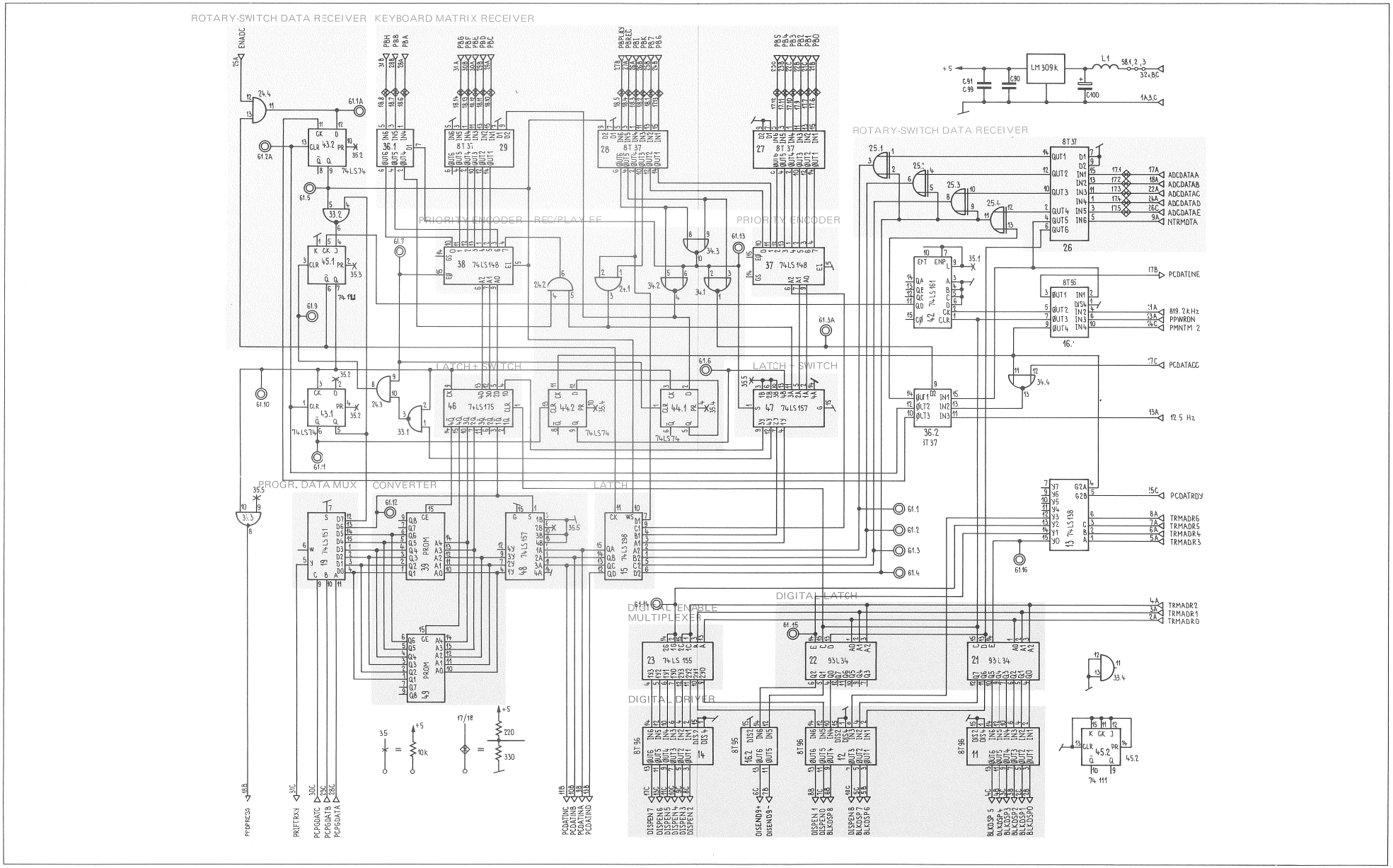

PARALLEL CONNECTED PROGRAMMER TRANSMITTER 1.228.410-72

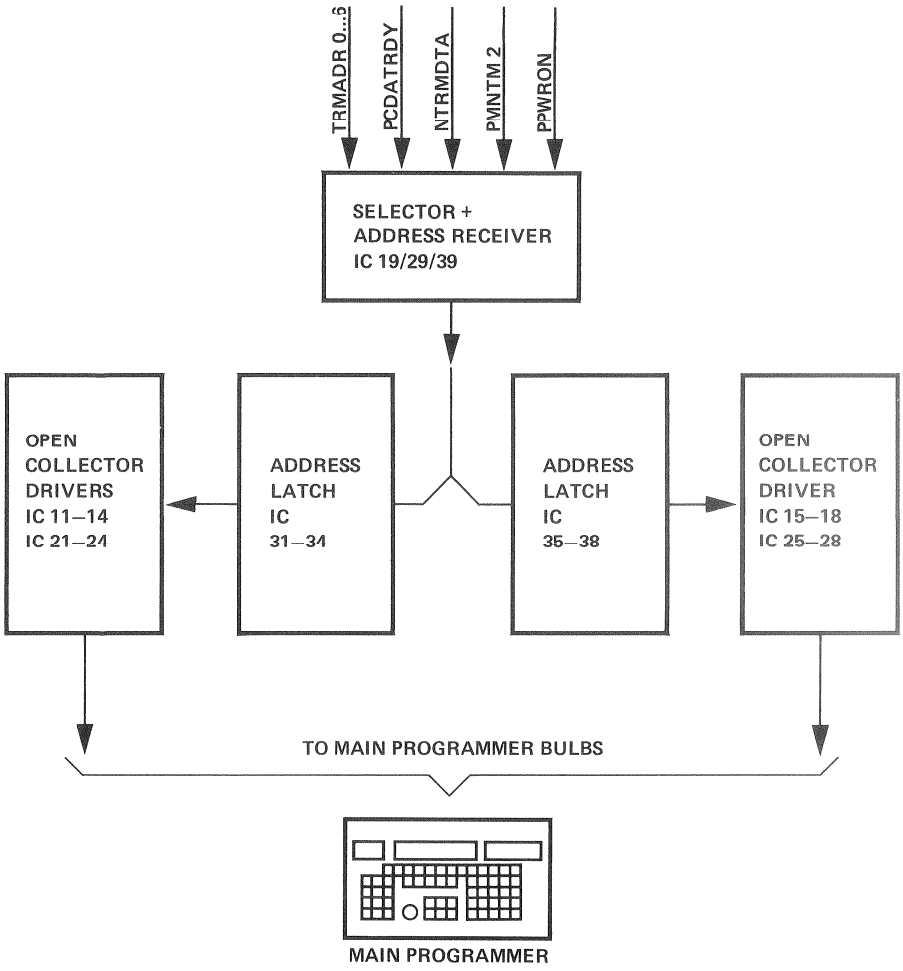

10
SLAVE RACK LOCATION

PARALLEL CONNECTED PROGRAMMER TRANSMITTER 1.228.410-72

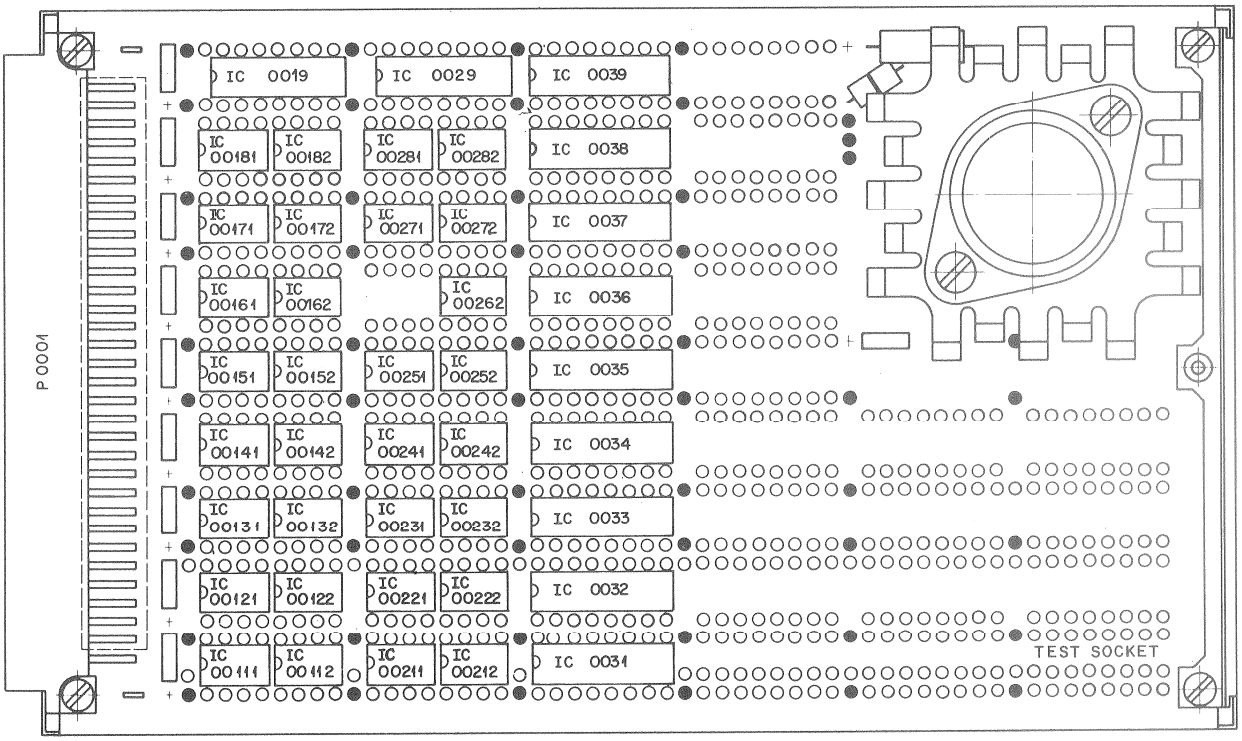

* S T U D E R * POSITION LIST OF PARTS 1.228.410.72 * 77/01/25 * PAGE 1 OF 1 *
* TAPE LOCK SYSTEM 2000 * PARALLEL CONN. PROGR. TRANSM. * 78/01/23-B *

POSITION RD. POS.M	PART NO.	DESCRIPTION OF PART	
IC 00111	50.05.0204	IC SN 75464P,LM 3614 N,	DRIV
IC 00112	50.05.0204	IC SN 75464P,LM 3614 N,	DRIV
IC 00121	50.05.0204	IC SN 75464P,LM 3614 N,	DRIV
IC 00122	50.05.0204	IC SN 75464P,LM 3614 N,	DRIV
IC 00131	50.05.0204	IC SN 75464P,LM 3614 N,	DRIV
IC 00132	50.05.0204	IC SN 75464P,LM 3614 N,	DRIV
IC 00141	50.05.0204	IC SN 75464P,LM 3614 N,	DRIV
IC 00142	50.05.0204	IC SN 75464P,LM 3614 N,	DRIV
IC 00151	50.05.0204	IC SN 75464P,LM 3614 N,	DRIV
IC 00152	50.05.0204	IC SN 75464P,LM 3614 N,	DRIV
IC 00161	50.05.0204	IC SN 75464P,LM 3614 N,	DRIV
IC 00162	50.05.0204	IC SN 75464P,LM 3614 N,	DRIV
IC 00171	50.05.0204	IC SN 75464P,LM 3614 N,	DRIV
IC 00172	50.05.0204	IC SN 75464P,LM 3614 N,	DRIV
IC 00181	50.05.0204	IC SN 75464P,LM 3614 N,	DRIV
IC 00182	50.05.0204	IC SN 75464P,LM 3614 N,	DRIV
IC 0019	50.06.0032	IC SN 74 LS 32 N	TTL
IC 00211	50.05.0204	IC SN 75464P,LM 3614 N,	DRIV
IC 00212	50.05.0204	IC SN 75464P,LM 3614 N,	DRIV
IC 00221	50.05.0204	IC SN 75464P,LM 3614 N,	DRIV
IC 00222	50.05.0204	IC SN 75464P,LM 3614 N,	DRIV
IC 00231	50.05.0204	IC SN 75464P,LM 3614 N,	DRIV
IC 00232	50.05.0204	IC SN 75464P,LM 3614 N,	DRIV
IC 00241	50.05.0204	IC SN 75464P,LM 3614 N,	DRIV
IC 00242	50.05.0204	IC SN 75464P,LM 3614 N,	DRIV
IC 00251	50.05.0204	IC SN 75464P,LM 3614 N,	DRIV
IC 00252	50.05.0204	IC SN 75464P,LM 3614 N,	DRIV
IC 0026	50.05.0204	IC SN 75464P,LM 3614 N,	DRIV
IC 00271	50.05.0204	IC SN 75464P,LM 3614 N,	DRIV
IC 00272	50.05.0204	IC SN 75464P,LM 3614 N,	DRIV
IC 00281	50.05.0204	IC SN 75464P,LM 3614 N,	DRIV
IC 00282	50.05.0204	IC SN 75464P,LM 3614 N,	DRIV
IC 0029	50.06.0086	IC SN 74 LS 86 N	TTL
IC 0031	50.05.0215	IC 93 L 34PC,	TTL
IC 0032	50.05.0215	IC 93 L 34PC,	TTL
IC 0033	50.05.0215	IC 93 L 34PC,	TTL
IC 0034	50.05.0215	IC 93 L 34PC,	TTL
IC 0035	50.05.0215	IC 93 L 34PC,	TTL
IC 0036	50.05.0215	IC 93 L 34PC,	TTL
IC 0037	50.05.0215	IC 93 L 34PC,	TTL
IC 0038	50.05.0215	IC 93 L 34PC,	TTL
IC 0039	50.06.0155	IC SN 74 LS 155 N	TTL
P 0001	54.01.0354	P LEISTE 3 * 32 POL	WRAP

PARALLEL CONNECTED PROGRAMMER TRANSMITTER 1.228.410-72

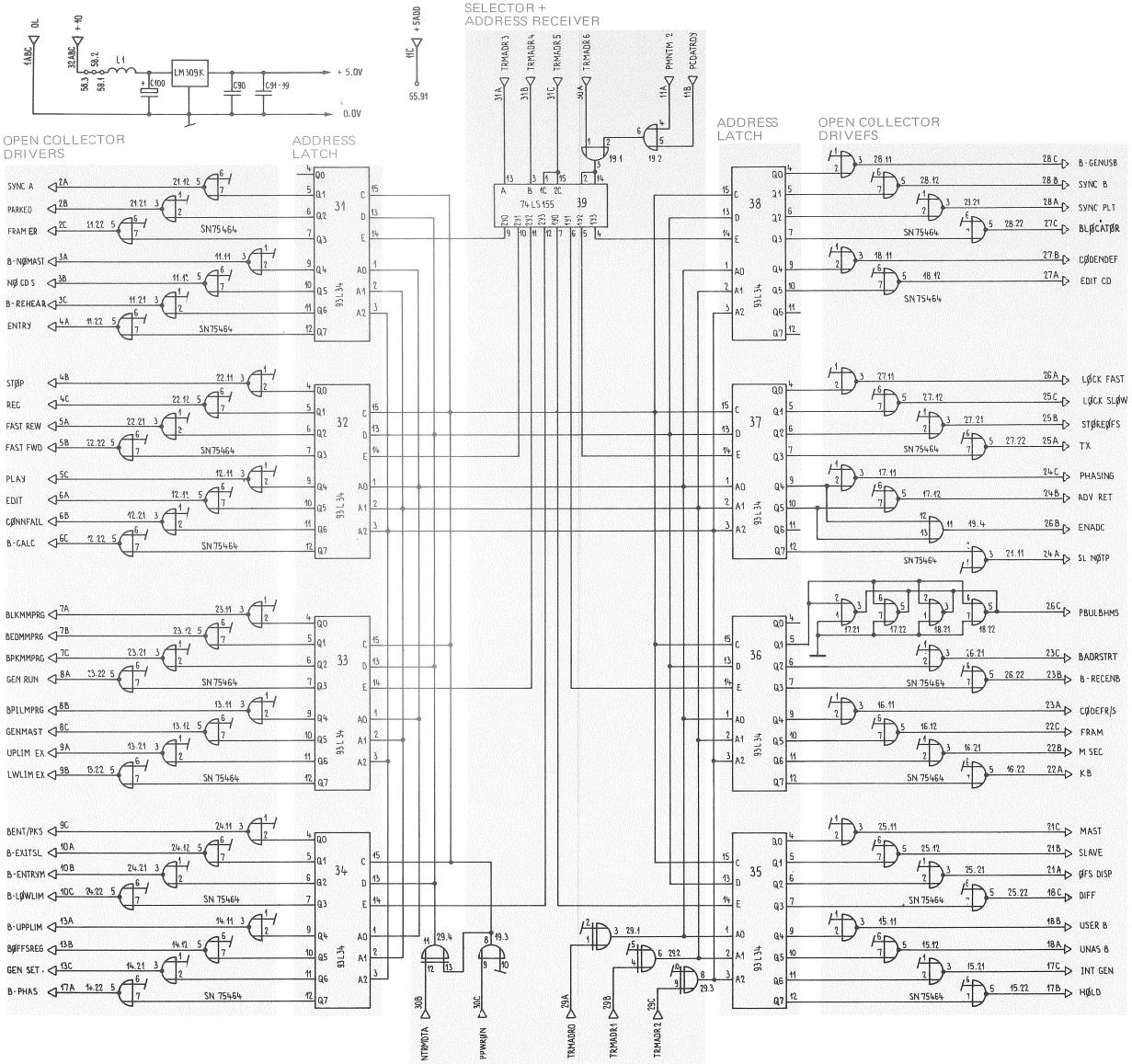

CODE RECORD AMPLIFIER A80S 1.228.411–86/85

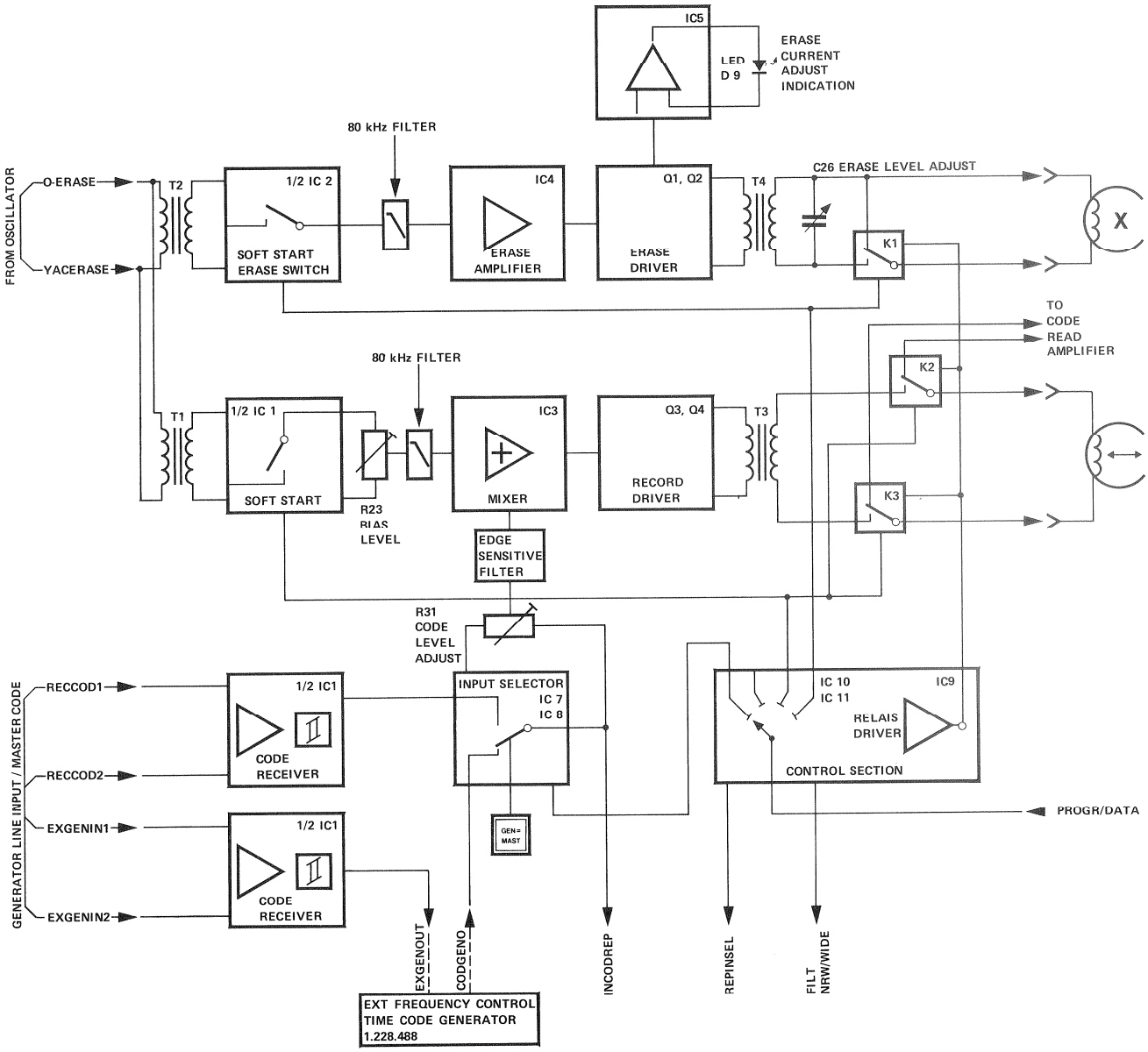

SLAVE RACK LOCATION 11

CODE RECORD AMPLIFIER A80-S 1.228.411–86/85

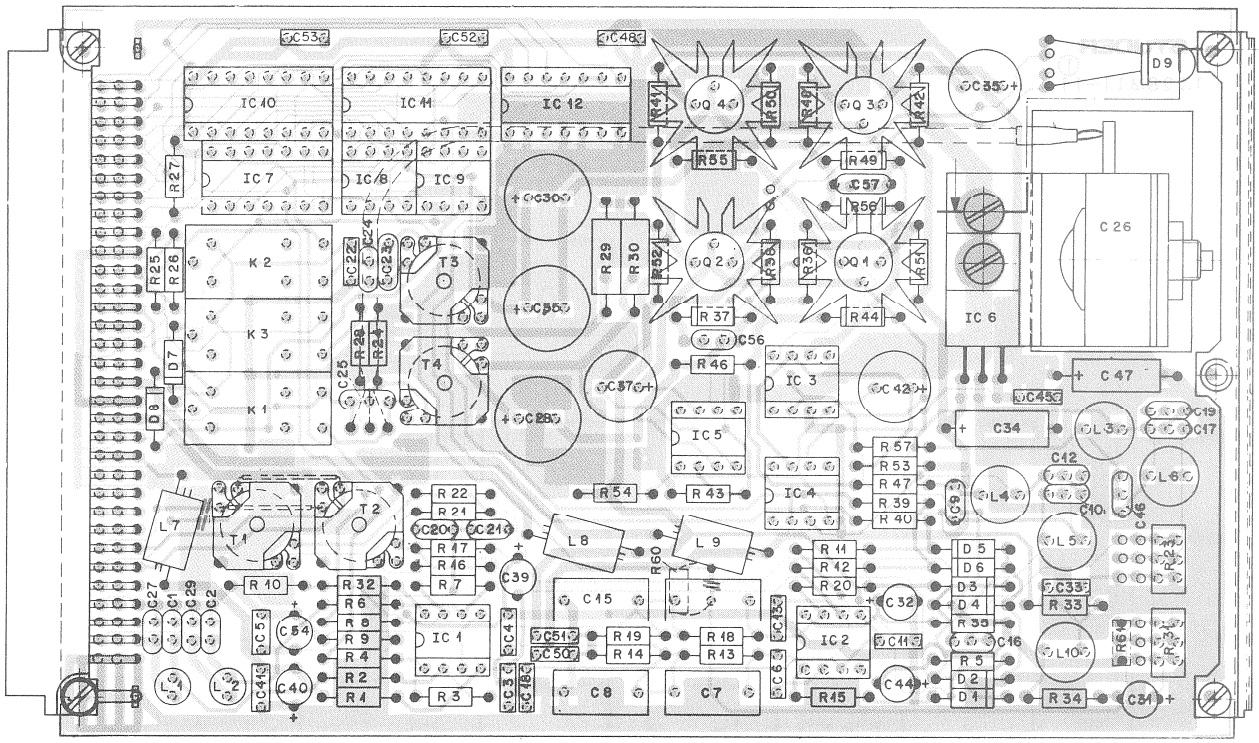

// PRINTED CONDUCTOR INTERRUPTED

POS NO	PART NO	VALUE	SPECIFICATIONS	EQUIVALENT	MFR
C 01	59.32.4152	1.5 N	20% 63V KER		
C 02	59.32.4152	1.5 N			
C 03	59.99.0205	68 N	-20% 63V KER		
C 04	59.99.0205	68 N			
C 05	59.99.0205	68 N			
C 06	59.99.0205	68 N			
C 07	59.02.0684	680 N	5% 63V MPC		
C 08	59.02.0684	680 N			
C 09	59.32.0561	560 P	20% 500V KER		
C 10	59.32.0561	560 P			
C 11	59.34.4560	56 P	2% N750 KER		
C 12	59.32.0561	560 P	20% 500V KER		
C 13	59.99.0205	68 N	-20% 63V KER		
C 14	59.02.0684	680 N	5% 63V MPC		
C 15	59.02.0684	680 N			
C 16	59.32.4152	1.5 N	20% 63V KER		
3) C 17	59.32.0561	560 P	20% 500V KER		
C 18	59.34.4121	120 P	5% N750 KER		
3) C 19	59.32.0561	560 P	20% 500V KER		
C 20	59.32.0561	560 P	20% 500V KER		
C 21	59.34.2181	180 P	5% 50V KER		
C 22	59.99.0205	68 N	-20% 63V KER		
C 23	59.34.4331	330 P	5% 50V KER		
C 24	59.34.2470	47 P	5% N150 KER		
C 25	59.32.1122	1.2 N	10% 500V KER		
C 26	59.19.0103	780P-2.1N	500V TRI		
C 27	59.32.4152	1.5 N	20% 63V KER		
C 28	59.30.4470	47 U	-20% 16V TA		
C 29	59.32.4152	1.5 N	20% 63V KER		
C 30	59.22.2471	470 U	-10% 6 V EL		
C 31	59.30.2220	22 U	-20% 6.3V TA		
C 32	59.30.4470	47 U	-20% 16V TA		
C 33	59.99.0205	68 N	-20% 63V KER		
C 34	59.99.0201	6.8 U	20% 35V TA		
C 35	59.22.5101	100 U	-10% 25V EL		
C 36					
C 37	59.22.5101	100 U	-10% 25V EL		
C 38					
(1) C 39	59.30.4101	100 U	-10% 16V TA		
(1) C 40	59.30.4101	100 U			
C 41	59.99.0205	68 N	-20% 63V KER		
C 42	59.22.5101	100 U	-10% 25V EL		
C 43					
C 44	59.30.4470	47 U	-20% 16V TA		
C 45	59.99.0205	68 N	-20% 63V KER		
3) C 46	59.32.0561	560 P	20% 500V KER		

IND	DATE	NAME
④	10.6.81	Vo.
③	4.11.80	Vo .86
②	16.6.80	Vo
①	13.4.78	85
○	25.1.78	MS/gv

STUDER CODE REC. AMP. A 80-S 1.228.411-86 PAGE 1 of 4

POS NO	PART NO	VALUE	SPECIFICATIONS	EQUIVALENT	MFR
C 47	59.99.0202	39 U	20% 10V TA		
C 48	59.99.0205	68 N	-20% 63V KER		
C 49					
C 50	59.99.0205	68 N	-20% 63V KER		
C 51	59.99.0205	68 N			
C 52	59.99.0205	68 N			
C 53	59.99.0205	68 N			
C 54	59.30.1221	220 U	-20% 3V TA		
C 55	59.22.2471	470 U	-10% 6.3V EL		
C 56	59.32.4152	1.5 N	20% 63V KER		
C 57	59.34.5471	470 P	5% N1500 KER		
D 01	50.04.0125	1 N 4448			
D 02	50.04.0125	1 N 4448			
D 03	50.04.0125	1 N 4448			
D 04	50.04.0125	1 N 4448			
D 05	50.04.1106	2.7 V	5% .40W Z		
D 06	50.04.1106	2.7 V	5% .40W Z		
D 07	50.04.0122	1 N 4001	SI		
D 08	50.04.0122	1 N 4001	SI		
D 09	50.04.2111	MV5753RT	LED		
IC01	50.05.0245	RC4558P	LIN	RC4558DN	
IC02	50.05.0245	RC4558P	LIN	RC4558DN	
2) IC03	50.09.0102	LF 357 P	LIN		
2) IC04	50.09.0102	LF 357 P	LIN		
4) 2) IC05	50.09.0103	TL 071 CP	DIP 8 Bi-JFET	LF 351 N	
IC06	50.05.0221	LM340T-5	V.REG	1C7805CP	
IC07	50.06.0014	SN74LS14N	TTL		
IC08	50.05.0227	SN75462P	DRIV	LM75462	
IC09	50.05.0227	SN75462P	DRIV	LM75462	
IC10	50.06.0259	SN74LS259	TTL		
IC11	50.06.0151	SN74LS151N	TTL		
IC12	50.06.0032	SN74LS32N	TTL		
K 01	56.02.1001	24 V-	.1A 1U Au		
K 02	56.02.1001	24 V-			
K 03	56.02.1001	24 V-			

IND	DATE	NAME
④	10.6.81	Vo.
③	4.11.80	Vo .86
②	16.6.80	Vo
①	13.4.78	AC
○	25.1.78	MS/gv

STUDER CODE REC. AMP. A 80-S 1.228.411-86 PAGE 2 of 4

CODE RECORD AMPLIFIER A80-S 1.228.411–86/85

POS NO	PART NO	VALUE	SPECIFICATIONS	EQUIVALENT	MFR
L 01	62.02.1101	100 U	10% D6		
L 02	62.02.1101	100 U	10% D6		
3) L 03	62.02.1822	8.2 M	5% D8		
L 04	62.02.1822	8.2 M	5% D8		
L 05	62.02.1822	8.2 M	5% D8		
3) L 06	62.02.1822	8.2 M	5% D8		
L 07	62.01.0115		Breitbanddrossel		
L 08	62.01.0115		Breitbanddrossel		
L 09	62.01.0115		Breitbanddrossel		
L 10	62.02.1822	8.2 M	5% D8		
Q 01	50.03.0316	BC 140-16		NPN	
Q 02	50.03.0315	BC 160-16		PNP	
Q 03	50.03.0316	BC 140-16		NPN	
Q 04	50.03.0315	BC 160-16		PNP	
R 01	57.02.5101	100	10% .25W CMA		
R 02	57.02.5271	270			
R 03	57.02.5472	4.7 k			
R 04	57.02.5152	1.5 k			
R 05	57.02.5100	10			
R 06	57.02.5271	270			
R 07	57.02.5472	4.7 k			
R 08	57.02.5152	1.5 k			
R 09	57.02.5101	100			
R 10	57.02.5271	270			
R 11	57.02.5473	47 k			
R 12	57.02.5473	47 k			
R 13	57.02.5221	220			
R 14	57.02.5221	220			
R 15	57.02.5271	270			
R 16	57.02.5272	2.7 k			
R 17	57.02.5222	2.2 k			
R 18	57.02.5221	220			
R 19	57.02.5221	220			
R 20	57.02.5271	270			
R 21	57.02.5272	2.7 k			
R 22	57.02.5222	2.2 k			
R 23	58.01.7502	5 k	10% .5W PMG		
R 24	57.02.5104	100 k	10% .25W CMA		
R 25	57.02.5104	100 k			
R 26	57.02.5104	100 k			
R 27	57.02.5103	10 k			
R 28	57.02.5104	100 k			

IND	DATE	NAME	
@	10-6-81		Vo:
@	4.11.80		Vo: .86
@	16.6.80		Vo
○	13.4.78		Vo .85
○	25.1.78	MS/gv	

STUDER CODE REC. AMP. A 80-S 1.228.411-86 PAGE 3 of 4

POS NO	PART NO	VALUE	SPECIFICATIONS	EQUIVALENT	MFR
(1) R 29	57.03.5479	4.7	1% .5W CMA		
(1) R 30	57.03.5479	4.7			
R 31	58.01.7501	500	10% .5W PMG		
R 32	57.02.5101	100	10% .25W CMA		
3) R 33	57.02.5273	27 k			
R 34	57.02.5391	390			
R 35	57.02.5100	10			
R 36	57.02.5479	4.7			
R 37	57.02.5102	1 k			
R 38	57.02.5479	4.7			
R 39	57.02.5471	470			
R 40	57.02.5471	470			
R 41	57.02.5100	10			
R 42	57.02.5100	10			
R 43	57.02.5101	100			
R 44	57.02.5224	220 k			
R 45					
R 46	57.02.5183	18 k			
R 47	57.02.5472	4.7 k			
R 48	57.02.5479	4.7			
R 49	57.02.5102	1 k			
R 50	57.02.5479	4.7			
R 51	57.02.5100	10			
R 52	57.02.5100	10			
R 53	57.02.5100	10			
R 54	57.02.5100	10			
R 55	57.02.5224	220 k			
R 56	57.02.5223	22 k			
R 57	57.02.5472	4.7 k			
R60	57.02.5102	1 k			
R61	57.02.5470	47			
S 01	54.01.0353	Leiste	3 * 32 Pol.	LÖT	
T 01	1.022.165		Eingangstrafo 1:1		
T 02	1.022.165		Eingangstrafo 1:1		
T 03	1.022.166		Ausgangstrafo 1:15		
T 04	1.022.167		Ausgangstrafo 1:8		
TP	29.21.6002		Lötöse		
XIC	53.03.0165	8 - Pol.		DIL	
XIC	53.03.0167	14 - Pol.		DIL	
XIC	53.03.0163	16 - Pol.		DIL	

IND	DATE	NAME	
@	10.6.81		Vn.
@	4.11.80		Vo: .86
@	16.6.80		Vo
○	13.4.78		Vo .85
○	25.1.78	MS/gv	

STUDER CODE REC. AMP. A 80-S 1.228.411-86 PAGE 4 of 4

VALID FOR PCB 1.228.411–85:

C17,19,46	=	59.34.2181	180p
L3,6	=	62.02.1222	2.2M
R33	=	57.02.5103	10k

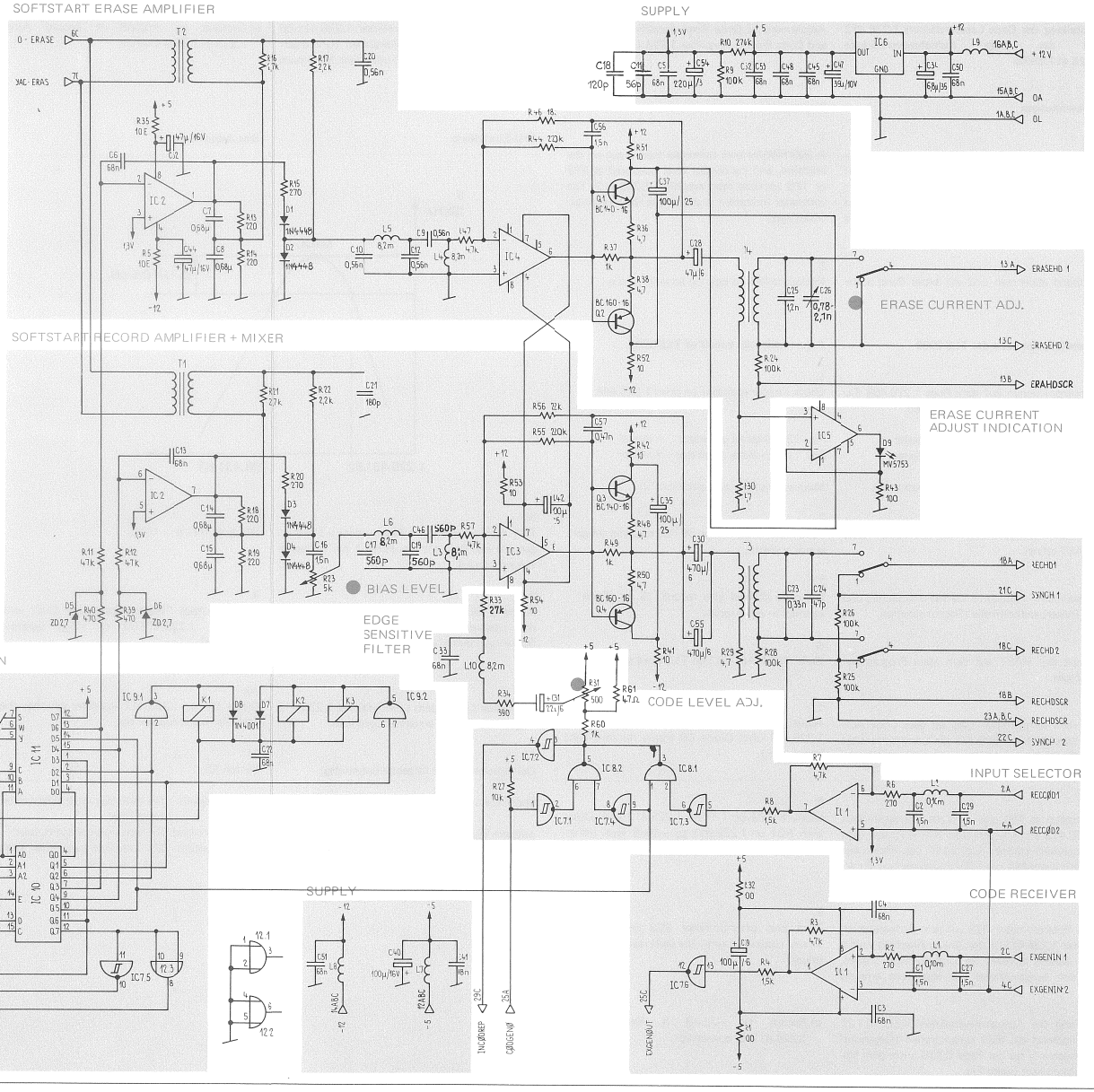

ADJUSTMENT OF CODE READ AMPLIFIER 1.228.412 AND CODE RECORD AMPLIFIER 1.228.411–85/86

Einstellung des Code Leseverstärkers 1.228.412 und des Code Aufnahmeverstärkers 1.228.411.85/86

Vorbereitungen

1.
Referenzband (200 nWb/m) auflegen und Maschine in Wiedergabe starten. Ausgangspegel auf TP2 oder TP3 des Code Leseverstärkers 1.228.412 messen. Die Voltmeteranzeige wird als Referenzpegel 0dB angenommen und sollte ca. 500mV_{eff} betragen.

2.
Testband abnehmen und ein leeres Band auflegen.

Einstellung mit Hilfe des TLS 2000

1.
Jumperpositionen auf dem Print 1.228.483 External Frequency Control überprüfen:

Platz 12: Interner Generator = Master
Platz 11: Externer Generator = Master

Der Jumper muss auf Platz 12 gesteckt sein.

2.
Internen Codegenerator starten und GEN =MAST setzen.

3.
Codekanal in Aufnahme starten mit 38cm/s und auf Hinterbandkontrolle (Repro) schalten.

4.
Lampe NO MAST auf dem Main Programmer verlöscht.

5.
Mit dem Kondensator C26 auf dem Code Aufnahmeverstärker 1.228.411 die Leuchtintensität der Diode D9 aufs Minimum abstimmen (Löschpegel).

6.
Voltmeter an TP2 oder TP3 des Leseverstärkers 1.228.412 anschliessen und mit R31 auf dem Aufnahmeverstärker 1.228.411 den Pegel auf –10dB gegenüber dem Referenzpegel aus Punkt 1 der Vorbereitungen einstellen.

7.
Bias Potentiometer R23 auf dem Aufnahmeverstärker 1.228.411 an den linken Anschlag stellen und danach langsam im Uhrzeigersinn drehen, bis der Ausgangspegel das Maximum erreicht hat.

a) Wenn der Aufnahmeverstärker 1.228.411-85 eingesetzt ist, R23 zurückdrehen (Gegenuhrzeigersinn) bis der Pegel 0,5dB unter dem Maximum liegt (siehe Fig.

Adjustment of Code Read Amplifier 1.228.412 and Code Record Amplifier 1.228.411.85/86

Preparations

1.
A 200 nWb/m level reference tape is put on the machine, and the output level measured at TP2 or TP3 on code read amplifier 1.228.412. The voltmeter indication is defined as 0dB. (approx. 500mV_{eff})

2.
Replace reference tape by an empty tape.

Adjustment with behalf of TLS 2000

1.
Check jumper positions on print 1.228.488:

Pos. 12: internal generator = master
Pos. 11: external generator = master

Make sure jumper is in position 12.

2.
Have internal generator of TLS run, and set generator = master.

3.
Put code channel into record, 15 ips, Code channel in repro mode.

4.
Bulb "NO MASTER" on TLS must go off.

5.
Adjust capacitor C26 on code record amplifier 1.228.411 until Diode D9 shows minimal light (erase level).

6.
Measure TP2 or TP3 on 1.228.412 and adjust with R31 on 1.228.411 to –10dB level (reference para. 1).

7.
Turn bias potentiometer R23 on 1.228.411 slowly clockwise, until the level reaches its maximum.

a) Return to –0,5dB if Record Amp. 1.228.411.85 is inserted

b) Wenn der Aufnahmeverstärker 1.228.411-86 eingesetzt ist, R23 weiterdrehen (Uhrzeigersinn) bis der Pegel 0,5dB unter dem Maximum liegt (siehe Fig.

Bias-Einstellung:

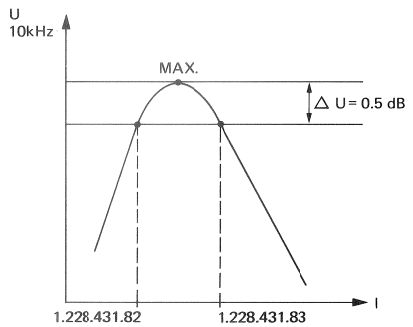

8.
R31 nachstellen bis der Pegel wieder –10dB gegenüber der Referenz aus Punkt 1 der Vorbereitungen beträgt.

9.
Ausgang REPRO CODE LINE OUT mit R59 auf dem Leseverstärker 1.228.412.00 auf 1V_{pp} (ca. 500mV_{eff}) einstellen.

10.
Die Diode D4 auf dem Leseverstärker 1.228.412 zeigt an, dass der Verstärker Code liest.

11.
Der Schalter S3 hat folgende Bedeutung:

obere Stellung: D4 zeigt Code nach dem Breitbandfilter
mittlere Stellung: D4 zeigt Code am Ausgang
untere Stellung: D4 zeigt Code nach dem Schmalbandfilter

b) Overbias by +0,5dB if Record Amp. 1.228.411.86 is inserted

Bias Adjustment:

8.
Readjust R31 to –10dB.

9.
Adjust output "Repro Code Line Out" with R59 on 1.228.412.00 to 1V_{pp} (approx. 500mV_{eff})

10.
Diode D4 on 1.228.412 indicates whether the amplifier reads code or not.

11.
Switch S3:

Upper position: D4 indicates code after (wide) band filter
Normal position: D4 indicates code at output
Lower position: D4 indicates code after (narrow) band filter

Einstellung mit Hilfe eines Sinusgenerators oder eines externen Codegenerators

1.
Generator an der Buchse MASTER CODE LINE IN anschliessen. Frequenz auf 4kHz und Fegel auf 1V_{pp} einstellen.

2.
Voltmeter an TP2 oder TP3 des Leseverstärkers 1.228.412 anschliessen.

3.
Codekanal in Aufnahme starten mit 38cm/s und auf Hinterbandkontrolle (Repro) schalten.

4.
Die Leuchtintensität der Diode D9 auf dem Aufnahmeverstärker 1.228.411 mit Hilfe des Kondensators C26 aufs Minimum abgleichen.

5.
Voltmeter ablesen und mit R31 auf dem Aufnahmeverstärker 1.228.411 den Pegel auf –10dB gegenüber der Referenz aus Punkt 1 der Vorbereitungen stellen.

6.
Bias Potentiometer R23 auf dem Aufnahmeverstärker 1.228.411 an den linken Anschlag stellen und danach langsam im Uhrzeigersinn drehen, bis der Ausgangspegel das Maximum erreicht hat.

a) Wenn der Aufnahmeverstärker 1.228.411-85 eingesetzt ist, R23 zurückdrehen (Gegenuhrzeigersinn) bis der Pegel 0,5dB unter dem Maximum liegt (siehe Fig.

b) Wenn der Aufnahmeverstärker 1.228.411-86 eingesetzt ist, R23 weiterdrehen (Uhrzeigersinn) bis der Pegel 0,5dB unter dem Maximum liegt (siehe Fig.

7.
Ausgang REPRO CODE LINE OUT mit R59 auf dem Leseverstärker 1.228.412.00 auf 1V_{pp} (ca. 500mV_{eff}) einstellen.

Adjustment with behalf of a sine wave generator or an external time code generator

1.
Connect generator to the socket master "code line in". Adjust for a frequency of 4kHz and a level of 1V_{pp}.

2.
Connect voltmeter to TP2 or TP3 on code read amplifier 1.228.412.

3.
Put code channel into Record, Repro, 15 ips.

4.
Adjust capacitor C26 on code record amplifier until Diode D9 shows minimal light.

5.
Measure TP2 or TP3 on code record amplifier 1.228.412 and adjust with R31 on 1.228.411 to –10dB level (reference paragraph 1).

6.
Turn Bias Potentiometer R23 on 1.228.411 slowly clockwise, until the level reaches its maximum:

a) Return to –0,5dB under maximum level if Record Amp. 1.228.411.85 is inserted. (see figure

b) Overbias to –0,5dB uncer maximum level if Record Amp. 1.228.411.86 is inserted. (see figure

7.
Adjust output "Repro code line out" with R59 on code read amplifier 1.228.412.00 to 1V_{pp}. (approx. 500mV_{eff})

CODE READ AMPLIFIER 1.228.412-81

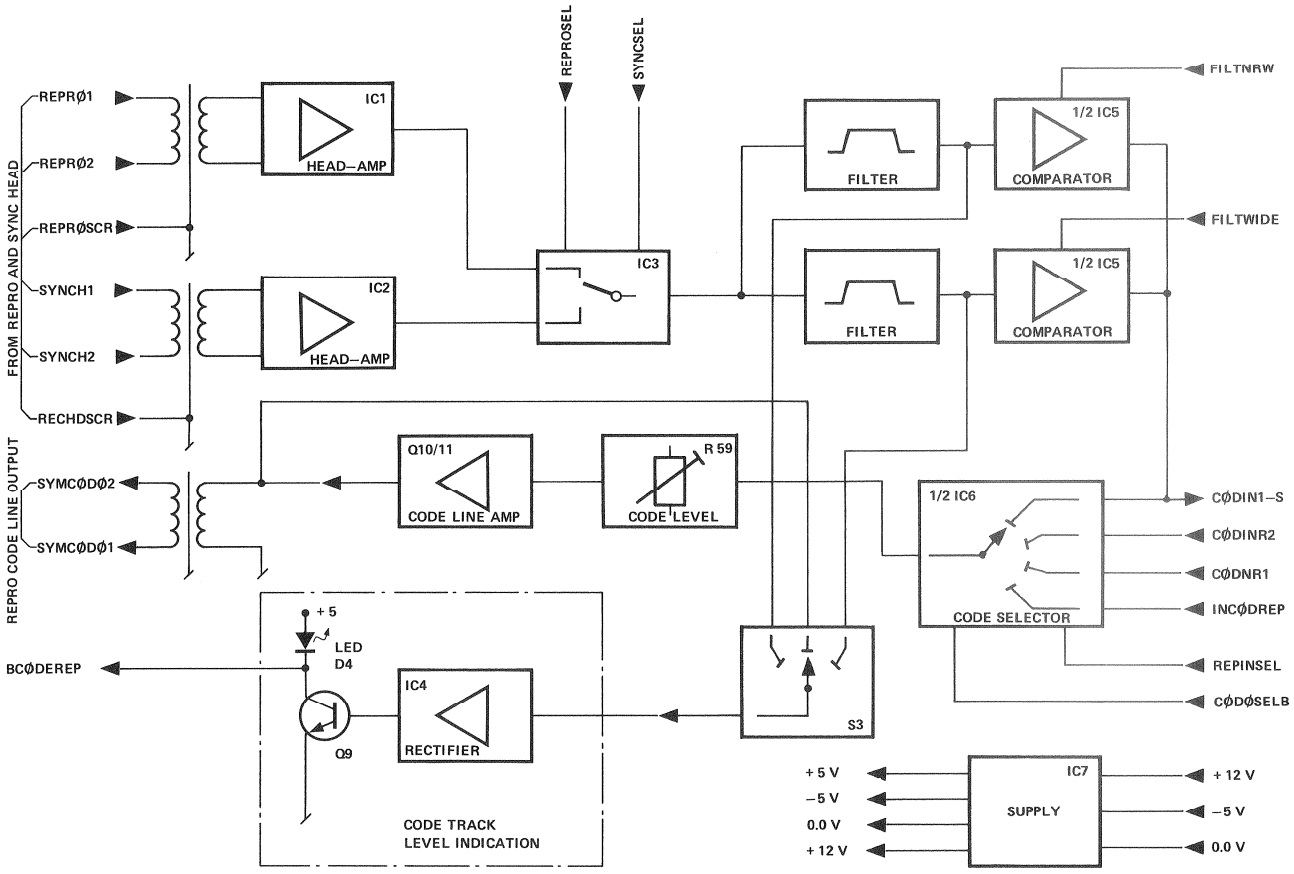

12
SLAVE RACK LOCATION

CODE READ AMPLIFIER 1.228.412-81

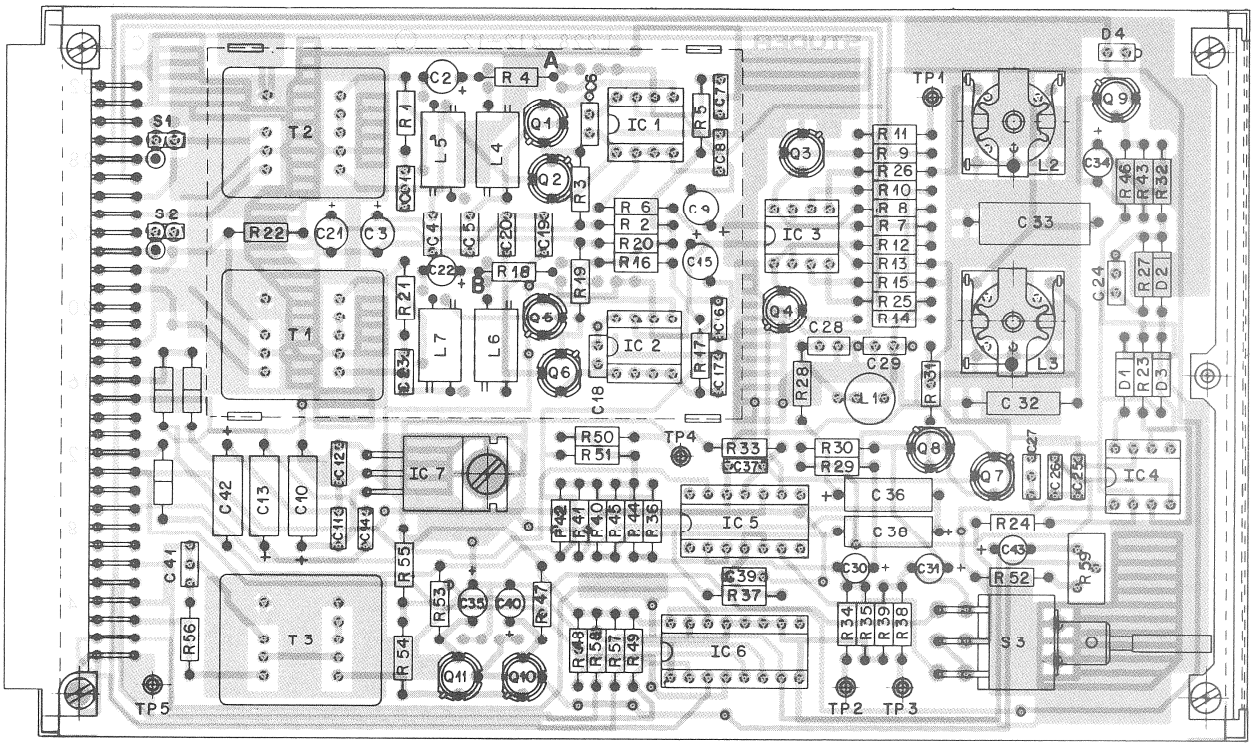

A80 LOCATOR | A80 MASTER-CONTROL

CODE READ AMPLIFIER 1.228.412-81

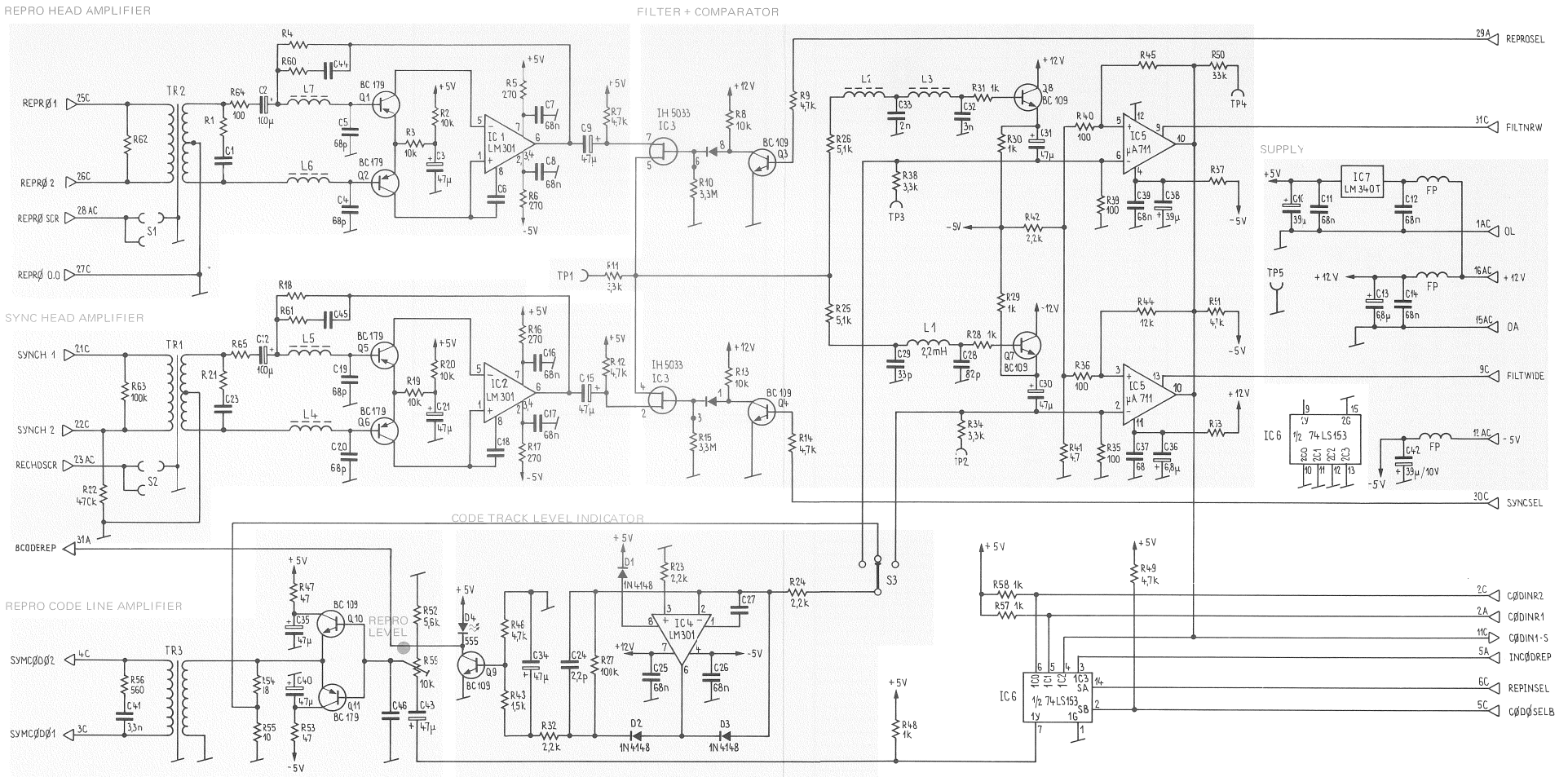

CODE READ AMPLIFIER 1.228.412-81

	Pos.	Bauteil No.	Bezeichnung	Stk.	Bemerkung
	C 01	59.32.1122	C 1.2N, 20% 50V, KER	1	
	C 02	59.30.4101	C 100U, 10% 16V TA	1	
	C 03	59.30.4470	C 47U,	1	
	C 04	59.99.0205	C 68N, 63V KER	1	
	C 05	59.99.0205	C 68N,	1	
(1)	C 06	59.34.1689	C 6,8P, ± 5% 50V	1	
	C 07	59.99.0205	C 68N, 63V	1	
	C 08	59.99.0205	C 68N,	1	
	C 09	59.30.4470	C 47U, 16V TA	1	
	C 10	59.99.0202	C 39U, 20% 10V	1	
	C 11	59.99.0205	C 68N, 63V KER	1	
	C 12	59.99.0205	C 68N,	1	
	C 13	59.99.0201	C 6.8U, 20% 35V TA	1	
	C 14	59.99.0205	C 68N, 63V KER	1	
	C 15	59.30.4470	C 47U, 16V TA	1	
	C 16	59.99.0205	C 68N, 63V KER	1	
	C 17	59.99.0205	C 68N,	1	
(1)	C 18	59.34.1150	C 15P, ± 5% 50V	1	
	C 19	59.99.0205	C 68N, 63V	1	
	C 20	59.99.0205	C 68N,	1	
	C 21	59.30.4470	C 47U, 16V TA	1	
	C 22	59.30.4101	C 100U,	1	
	C 23	59.32.1122	C 1.2N, 20% 50V KER	1	
	C 24	59.34.0229	C 2.2P, ± 5%	1	
	C 25	59.99.0205	C 68N, 63V	1	
	C 26	59.99.0205	C 68N,	1	
	C 27	59.34.4151	C 150P, ± 5% 50V	1	
	C 28	59.34.4820	C 82P,	1	
	C 29	59.34.2330	C 33P,	1	
	C 30	59.30.4470	C 47N, 16V TA	1	
	C 31	59.30.4470	C 47N,	1	
	C 32	59.12.7302	C 3N, 1% 63V PS	1	
	C 33	59.12.7202	C 2N,	1	
	C 34	59.30.4470	C 47U, 16V TA	1	
	C 35	59.30.4470	C 47U,	1	
	C 36	59.99.0201	C 6.8U, 20%, 35V, TA	1	
	C 37	59.99.0205	C 68N, 63V, KER	1	
	C 38	59.99.0202	C 39U, 20% 10V TA	1	
	C 39	59.99.0205	C 68N, 63V KER	1	
	C 40	59.30.4470	C 47U, 16V TA	1	
	C 41	59.32.2332	C 3.3N, 20%, 50V KER	1	
	C 42	59.99.0202	C 39U, 20% 10V TA	1	
	C 43	59.30.4470	C 47U, 16V TA	1	
(1)	C 44	59.32.1122	C 1.2N, 50V KER	1	
(1)	C 45	59.32.1122	C 1.2N,	1	
	D 01	50.04.0125	D 1N 4448 SI	1	
	D 02	50.04.0125	D	1	
	D 03	50.04.0125	D	1	
	D 04	50.04.2107	D 555-2007 LED, rot	1	
	FP1-6	61.99.0124	FP Ferritperle D 3.5x3	6	
	IC 1	50.05.0144	IC LM 301 AN 8P DIP	1	
	IC 2	50.05.0144	IC LM 301 AN 8P DIP	1	
	IC 3	50.05.0222	IC IH 5033 C, Dualswitch, LIN	1	
	IC 4	50.05.0144	IC LM 301 AN 8P DIP	1	
	IC 5	50.05.0220	IC 711 DC, Dual Comp. LIN	1	
	IC 6	50.06.0153	IC SN 74 LS 153 N, TTL	1	
	IC 7	50.05.0221	IC MC 7805 C, LIN	1	
	L 01	62.02.1222	L 2.2M, 5% D8	1	
	L 02	1.022.122.00	L 19.3M, 3% 100 SCHKE	1	
	L 03	1.022.124.00	L 80M	1	
	L 04	62.01.0115	L Breitbanddrossel	1	
	L 05	62.01.0115	L Breitbanddrossel	1	

Aenderungen	① 23.8.78	②	③	④	⑤

	Pos.	Bauteil No.	Bezeichnung	Stk.	Bemerkung
	L 06	62.01.0115	L Breitbanddrossel	1	
	L 07	62.01.0115	L Breitbanddrossel	1	
	Q 01	50.03.0305	Q BC 179 B	1	
	Q 02	50.03.0305	Q BC 179 B	1	
	Q 03	50.03.0407	Q BC 109 C	1	
	Q 04	50.03.0407	Q BC 109 C	1	
	Q 05	50.03.0305	Q BC 179 B	1	
	Q 06	50.03.0305	Q BC 179 B	1	
	Q 07	50.03.0407	Q BC 109 C	1	
	Q 08	50.03.0407	Q BC 109 C	1	
	Q 09	50.03.0407	Q BC 109 C	1	
	Q 10	50.03.0407	Q BC 109 C	1	
	Q 11	50.03.0305	Q BC 179 B	1	
	R 01	57.02.5222	R 2.2K, 10%, .25W CMA	1	
	R 02	57.02.5103	R 10K,	1	
	R 03	57.02.5103	R 10K,	1	
(1)	R 04	57.02.5225	R 2,2M,	1	
	R 05	57.02.5271	R 270 ,	1	
	R 06	57.02.5271	R 270 ,	1	
	R 07	57.02.5472	R 4.7K,	1	
	R 08	57.02.5103	R 10K,	1	
	R 09	57.02.5472	R 4.7K,	1	
	R 10	57.02.5335	R 3.3M,	1	
	R 11	57.02.5332	R 3.3K,	1	
	R 12	57.02.5472	R 4.7K,	1	
	R 13	57.02.5103	R 10K,	1	
	R 14	57.02.5472	R 4.7K,	1	
	R 15	57.02.5335	R 3.3M,	1	
	R 16	57.02.5271	R 270	1	
	R 17	57.02.5271	R 270	1	
(1)	R 18	57.02.5225	R 2,2M,	1	
	R 19	57.02.5103	R 10K, 10%, .25W CMA	1	
	R 20	57.02.5103	R 10K,	1	
	R 21	57.02.5222	R 2.2K,	1	
	R 22	57.02.5474	R 470K,	1	
	R 23	57.02.5222	R 2.2K,	1	
	R 24	57.02.5222	R 2.2K,	1	
	R 25	57.39.5111	R 5.1K, 1%, .25W MF	1	
	R 26	57.39.5111	R 5.1K,	1	
	R 27	57.02.5104	R 100K, 10% CMA	1	
	R 28	57.02.5102	R 1K,	1	
	R 29	57.02.5102	R 1K,	1	
	R 30	57.02.5102	R 1K,	1	
	R 31	57.02.5102	R 1K,	1	
	R 32	57.02.5222	R 2.2K,	1	
	R 33	57.02.5680	R 68E ,	1	
	R 34	57.02.5332	R 3.3K,	1	
	R 35	57.02.4101	R 100E, 5%	1	
	R 36	57.02.4101	R 100E,	1	
	R 37	57.02.5121	R 120 , 10%	1	
	R 38	57.02.5332	R 3.3K,	1	
	R 39	57.02.4101	R 100E, 5%	1	
	R 40	57.02.4101	R 100E'	1	
	R 41	57.02.4479	R 4.7E,	1	
	R 42	57.02.4222	R 2.2K,	1	
	R 43	57.02.5152	R 1.5K, 10%	1	
	R 44	57.02.4123	R 12K, 5%	1	
	R 45	57.02.4183	R 18K,	1	
	R 46	57.02.5472	R 4.7K, 10%	1	
	R 47	57.02.5470	R 47E,	1	
	R 48	57.02.5102	R 1K,	1	
	R 49	57.02.5472	R 4.7K,	1	
	R 50	57.02.5332	R 3.3K,	1	
	R 51	57.02.5472	R 4.7K,	1	
	R 52	57.02.5562	R 5.6K,	1	
	R 53	57.02.5470	R 47E ,	1	

Aenderungen	① 23.8.78	②	③	④	⑤

	Pos.	Bauteil No.	Bezeichnung	Stk.	Bemerkung
	R 54	57.02.5180	R 18E , 10%, .25W, CMA	1	
	R 55	57.02.5100	R 10E ,	1	
	R 56	57.02.5561	R 560 ,	1	
	R 57	57.02.5102	R 1K,	1	
	R 58	57.02.5102	R 1K,	1	
	R 59	58.01.7103	R 10K, Trimmer	1	
(1)	R 60	57.02.5334	R 330K, 10% .25W, CMA	1	
(1)	R 61	57.02.5334	R 330K,	1	
	S 01	54.01.0020	S 1 + 2 Kontaktstift	6	
	S 02	54.01.0021	S 1 + 2 Brückenstecker	2	
	S 03	55.01.0154	S 1 Kippschalter	1	
	TP1-5	54.01.0471	Test - Punkt	5	
	TR 1	1.022.410.00	Eingangstrafo 1:6	1	
	TR 2	1.022.410.00	Eingangstrafo 1:6	1	
	TR 3	1.022.408.00	Ausgangstrafo 1 : 1	1	
	XIC	53.03.0166	XIC DIP 8-Pol.	4	
	XIC	53.03.0167	XIC DIP 14-Pol.	1	
	XIC	53.03.0168	XIC DIP 16-Pol	1	
	XQ	50.03.9921	XQ Unterlage	11	

Aenderungen	① 23.8.78	②	③	④	⑤

DEMODULATOR 1.228.413-71

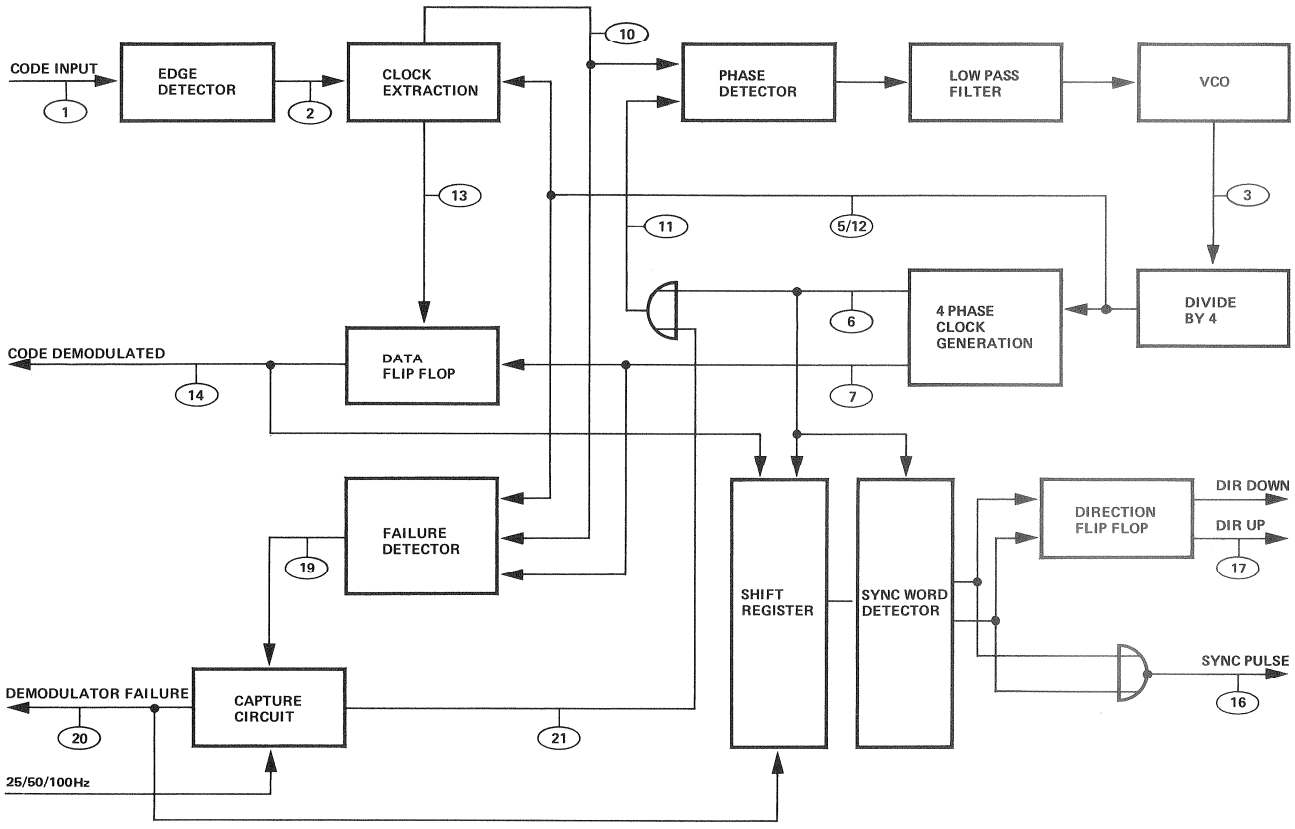

13
SLAVE RACK LOCATION

DEMODULATOR 1.228.413-71

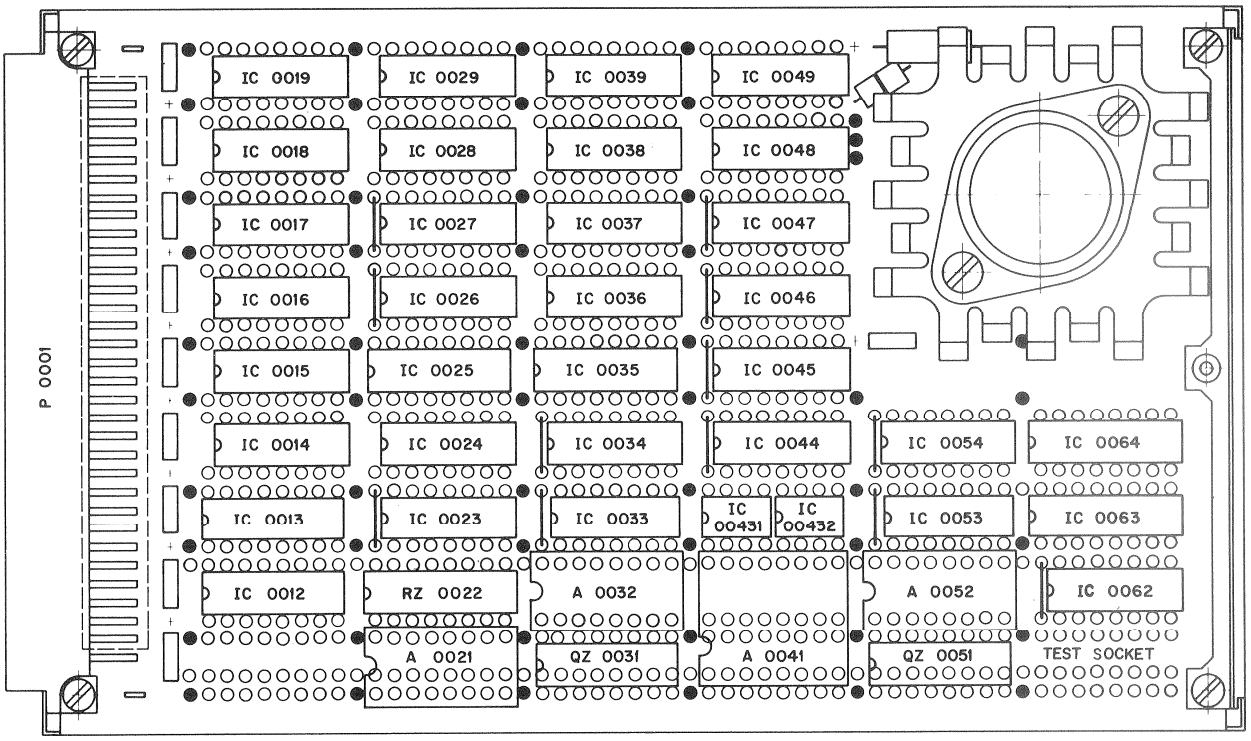

* S T U D E R * POSITION LIST OF PARTS 1.228.413.71 * 76/10/05 * PAGE 1 OF 1 *

* TAPE LOCK SYSTEM 2000 * DEMOD.& SYNC PATTERN RECOGN. * 76/09/27-A *

POSITION RD.	POS.M	PART NO.	DESCRIPTION OF PART
A	0021	1.228.560.00	ASSEMBLY 13-21
A	0032	1.228.561.00	ASSEMBLY 13-32
A	0041	1.228.562.00	ASSEMBLY 13-41
A	0052	1.228.563.00	ASSEMBLY 13-52
IC	0012	50.06.0221	IC SN 74 LS 221 N TTL
IC	0013	50.06.0221	IC SN 74 LS 221 N TTL
IC	0014	50.06.0032	IC SN 74 LS 32 N TTL
IC	0015	50.06.0027	IC SN 74 LS 27 N TTL
IC	0016	50.06.0032	IC SN 74 LS 32 N TTL
IC	0017	50.06.0027	IC SN 74 LS 27 N TTL
IC	0018	50.06.0002	IC SN 74 LS 02 N TTL
IC	0019	50.06.0027	IC SN 74 LS 27 N TTL
IC	0023	50.05.0161	IC SN 7414N, TTL
IC	0024	50.06.0086	IC SN 74 LS 86 N TTL
IC	0025	50.06.0155	IC SN 74 LS 155 N TTL
IC	0026	50.06.0074	IC SN 74 LS 74 N TTL
IC	0027	50.06.0164	IC SN 74 LS 164 N TTL
IC	0028	50.06.0030	IC SN 74 LS 30 N TTL
IC	0029	50.06.0004	IC SN 74 LS 04 N TTL
IC	0033	50.05.0149	IC MC 4044 P, ,TTL
IC	0034	50.06.0032	IC SN 74 LS 32 N TTL
IC	0035	50.05.0131	IC SN 74111N,FLJ 351 ,TTL
IC	0036	50.06.0074	IC SN 74 LS 74 N TTL
IC	0037	50.06.0164	IC SN 74 LS 164 N TTL
IC	0038	50.06.0030	IC SN 74 LS 30 N TTL
IC	0039	50.06.0004	IC SN 74 LS 04 N TTL
IC	00431	50.05.0207	IC TCA 680 B, ,LIN
IC	00432	50.05.0207	IC TCA 680 B, ,LIN
IC	0044	50.06.0074	IC SN 74 LS 74 N TTL
IC	0045	50.06.0074	IC SN 74 LS 74 N TTL
IC	0046	50.06.0164	IC SN 74 LS 164 N TTL
IC	0047	50.06.0164	IC SN 74 LS 164 N TTL
IC	0048	50.06.0030	IC SN 74 LS 30 N TTL
IC	0049	50.06.0030	IC SN 74 LS 30 N TTL
IC	0053	50.05.0149	IC MC 4044 P, ,TTL
IC	0054	50.06.0032	IC SN 74 LS 32 N TTL

POSITION RD.	POS.M	PART NO.	DESCRIPTION OF PART
IC	0062	50.05.0161	IC SN 7414N, TTL
IC	0063	50.05.0131	IC SN 74111N,FLJ 351 ,TTL
IC	0064	50.06.0155	IC SN 74 LS 155 N TTL
P	0001	54.01.0354	P LEISTE 3 * 32 POL WRAP
QZ	0031	50.05.0205	QZ CA 3096AE, ,5*Q
QZ	0051	50.05.0205	QZ CA 3096AE, ,5*Q
RZ	0022	57.85.3222	RZ 15*2.2K , 2%, DIP16

DEMODULATOR 1.228.413-71

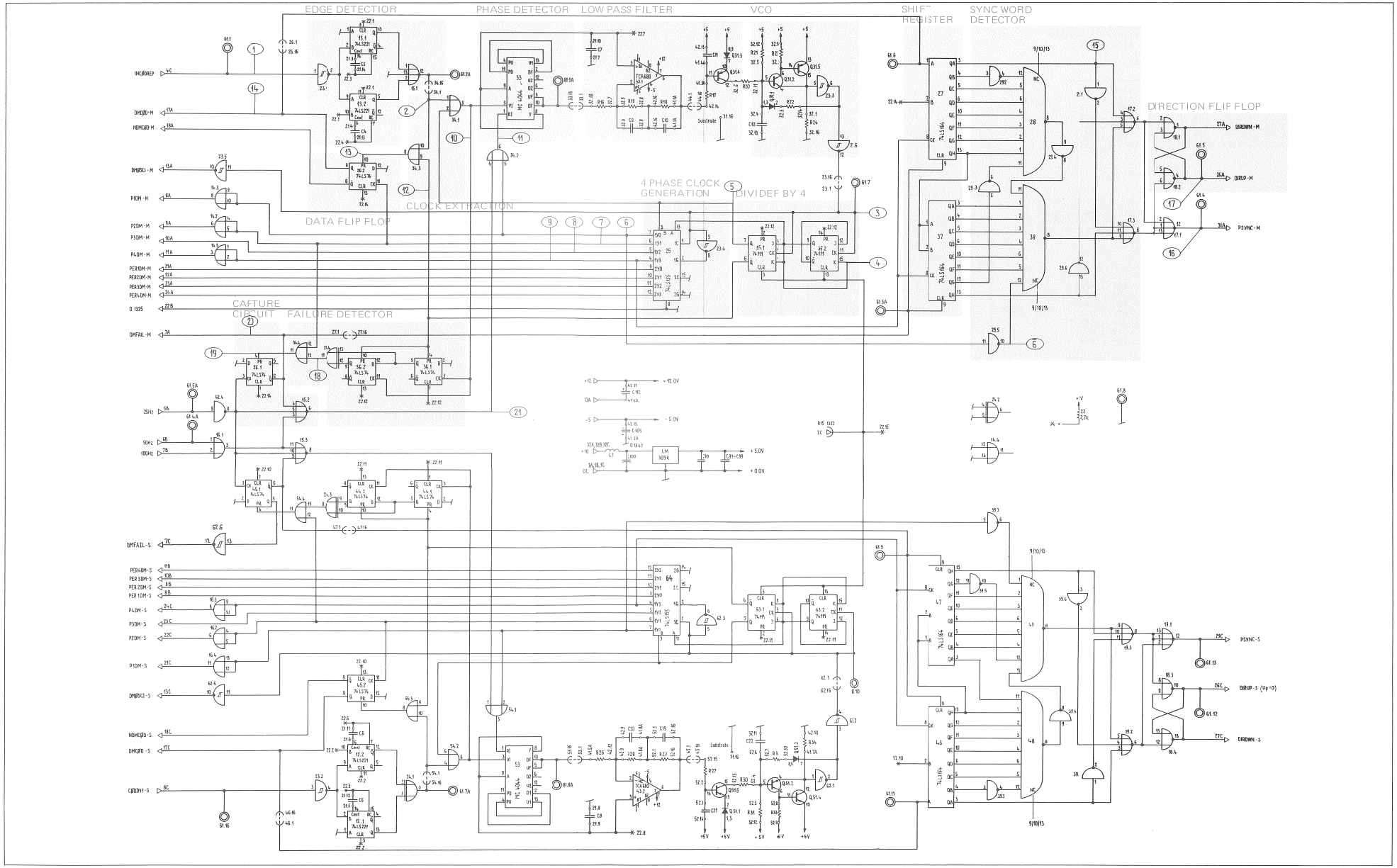

DEMODULATOR 1.228.413-71

```
*   S T U D E R   *   POSITION LIST OF PARTS 1.228.560.00
*************************************************************
*   TAPE LOCK SYSTEM 2000            *   ASS. 13-21

POSITION       PART NO. DESCRIPTION OF PART
RD. POS.M
---------  ------------ ---------------------------------
C    0003    59.34.4101 C   100  P ,  5%  N750 , KER
C    0004    59.34.4101 C   100  P ,  5%  N750 , KER
C    0005    59.34.4101 C   100  P ,  5%  N750 , KER
C    0006    59.34.4101 C   100  P ,  5%  N750 , KER
C    0007    59.99.0203 C   3.3  U , 20%,  10V , TA
C    0008    59.99.0203 C   3.3  U , 20%,  10V , TA
MP   0001    53.03.0170 MP ADAPTOR PLUG 2*8*0.3  DIL
```

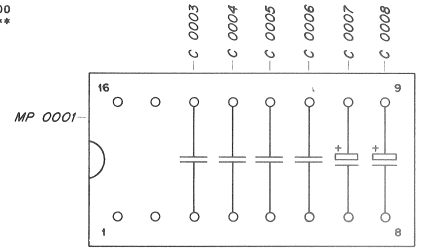


```
*   S T U D E R   *   POSITION LIST OF PARTS 1.228.562.00
*************************************************************
*   TAPE LOCK SYSTEM 2000            *   ASS. 13-41

POSITION       PART NO. DESCRIPTION OF PART
RD. POS.M
---------  ------------ ---------------------------------
C    0010    59.05.1684 C   680  N , 10%,  63V , MPC
C    0020    59.05.1684 C   680  N , 10%,  63V , MPC
C    0105    59.99.0203 C   3.3  U , 20%,  10V , TA
C    0112    59.99.0201 C   6.8  U , 20%,  35V , TA
MP   0001    53.03.0171 MP  ADAPTOR PLUG 2*8*0.6 DIL
R    0017    57.02.5472 R   4.7  K , 10%, .25W , CMA
R    0026    57.02.5103 R    10  K , 10%, .25W , CMA
R    0034    57.02.5102 R   1.0  K , 10%, .25W , CMA
```

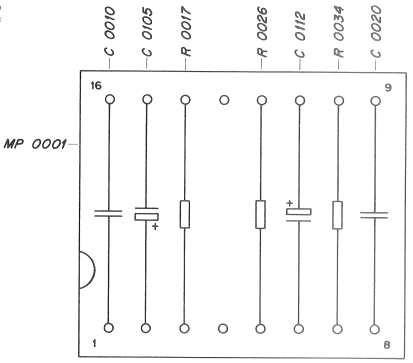


```
*   S T U D E R   *   POSITION LIST OF PARTS 1.228.563.00
*************************************************************
*   TAPE LOCK SYSTEM 2000            *   ASS. 13-52

POSITION       PART NO. DESCRIPTION OF PART
RD. POS.M
---------  ------------ ---------------------------------
C    0019    59.32.2471 C   470  P , 10%,  50V , KER
C    0022    59.32.2222 C   2.2  N , 10%,  63V , KER
MP   0001    53.03.0170 MP ADAPTOR PLUG 2*8*0.3  DIL
R    0027    57.02.5472 R   4.7  K , 10%, .25W , CMA
R    0029    57.02.5222 R   2.2  K , 10%, .25W , CMA
R    0030    57.02.5331 R   330    , 10%, .25W , CMA
R    0031    57.02.5155 R   1.5  M , 10%, .25W , CMA
R    0032    57.02.5270 R    27    , 10%, .25W   CMA
R    0033    57.02.5332 R   3.3  K , 10%, .25W , CMA
```

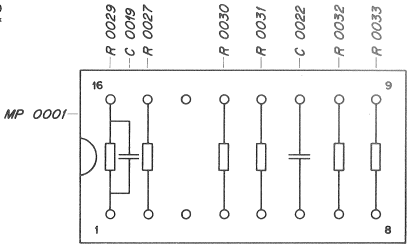


```
*   S T U D E R   *   POSITION LIST OF PARTS 1.228.561.00
*************************************************************
*   TAPE LOCK SYSTEM 2000            *   ASS. 13-32

POSITION       PART NO. DESCRIPTION OF PART
RD. POS.M
---------  ------------ ---------------------------------
C    0009    59.32.2471 C   470  P , 10%,  50V , KER
C    0012    59.32.2222 C   2.2  N , 10%,  63V , KER
MP   0001    53.03.0170 MP ADAPTOR PLUG 2*8*0.3  DIL
R    0016    57.02.5103 R    10  K , 10%, .25W , CMA
R    0019    57.02.5222 R   2.2  K , 10%, .25W , CMA
R    0020    57.02.5331 R   330    , 10%, .25W , CMA
R    0021    57.02.5155 R   1.5  M , 10%, .25W , CMA
R    0022    57.02.5270 R    27    , 10%, .25W   CMA
R    0023    57.02.5332 R   3.3  K , 10%, .25W , CMA
R    0024    57.02.5102 R   1.0  K , 10%, .25W , CMA
```

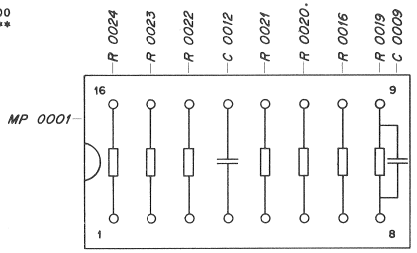

ARITHMETIC CONTROL 1.228.478-71

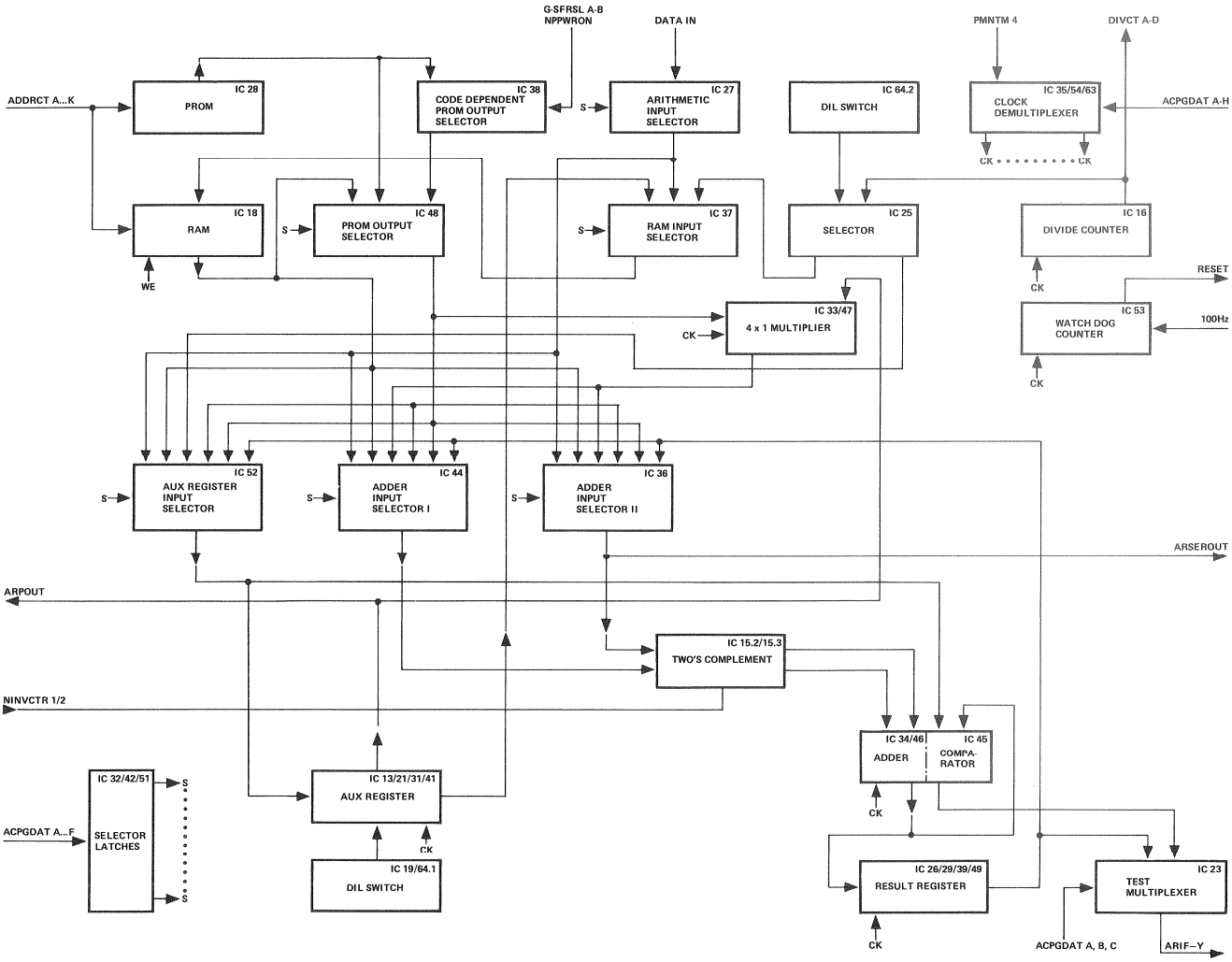

14
SLAVE RACK LOCATION

ARITHMETIC CONTROL 1.228.478-71

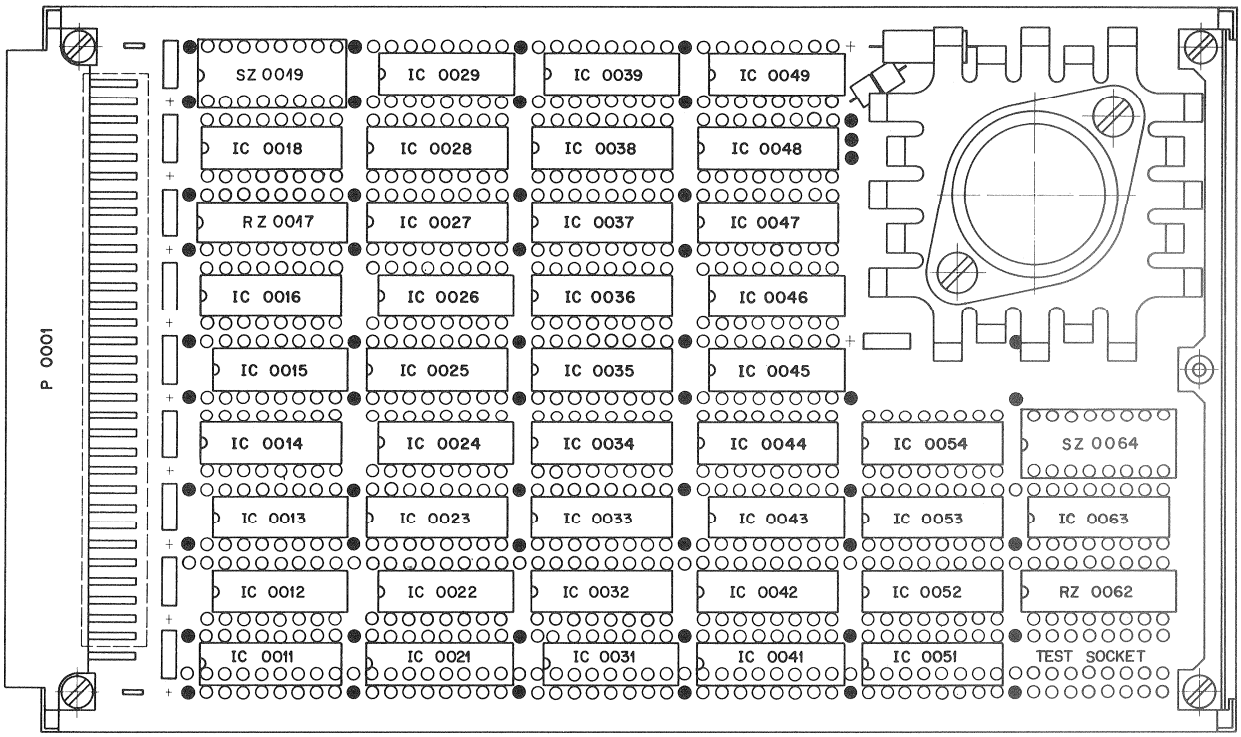

* S T U D E R * POSITION LIST OF PARTS 1.228.478.71 * 77/01/25 * PAGE 1 OF 1 *

* TAPE LOCK SYSTEM 2000 * ARITHMETIC * 76/10/25-A *

POSITION RD. POS.M	PART NO.	DESCRIPTION OF PART
IC 0011	50.06.0195	IC SN 74 LS 195 AN TTL
IC 0012	50.06.0004	IC SN 74 LS 04 N TTL
IC 0013	50.06.0164	IC SN 74 LS 164 N TTL
IC 0014	50.06.0195	IC SN 74 LS 195 AN TTL
IC 0015	50.06.0086	IC SN 74 LS 86 N TTL
IC 0016	50.06.0161	IC SN 74 LS 161 N TTL
IC 0018	50.05.0210	IC SN74S209 ,IM55S18CDETTL-3
IC 0021	50.06.0195	IC SN 74 LS 195 AN TTL
IC 0022	50.06.0008	IC SN 74 LS 08 N TTL
IC 0023	50.06.0151	IC SN 74 LS 151 N TTL
IC 0024	50.06.0032	IC SN 74 LS 32 N TTL
IC 0025	50.06.0153	IC SN 74 LS 153 N TTL
IC 0026	50.06.0164	IC SN 74 LS 164 N TTL
IC 0027	50.06.0151	IC SN 74 LS 151 N TTL
IC 0028		PROM R 0005
IC 0029	50.06.0164	IC SN 74 LS 164 N TTL
IC 0031	50.06.0164	IC SN 74 LS 164 N TTL
IC 0032	50.06.0174	IC SN 74 LS 174 N TTL
IC 0033	50.06.0283	IC SN 74 LS 283 N TTL
IC 0034	50.06.0283	IC SN 74 LS 283 N TTL
IC 0035	50.06.0155	IC SN 74 LS 155 N TTL
IC 0036	50.06.0151	IC SN 74 LS 151 N TTL
IC 0037	50.06.0151	IC SN 74 LS 151 N TTL
IC 0038	50.06.0153	IC SN 74 LS 153 N TTL
IC 0039	50.06.0164	IC SN 74 LS 164 N TTL
IC 0041	50.06.0195	IC SN 74 LS 195 AN TTL
IC 0042	50.06.0174	IC SN 74 LS 174 N TTL
IC 0043	50.06.0002	IC SN 74 LS 02 N TTL
IC 0044	50.06.0151	IC SN 74 LS 151 N TTL
IC 0045	50.06.0074	IC SN 74 LS 74 N TTL
IC 0046	50.06.0074	IC SN 74 LS 74 N TTL
IC 0047	50.06.0195	IC SN 74 LS 195 AN TTL
IC 0048	50.06.0151	IC SN 74 LS 151 N TTL
IC 0049	50.06.0164	IC SN 74 LS 164 N TTL
IC 0051	50.06.0174	IC SN 74 LS 174 N TTL
IC 0052	50.06.0151	IC SN 74 LS 151 N TTL

POSITION RD. POS.M	PART NO.	DESCRIPTION OF PART
IC 0053	50.06.0161	IC SN 74 LS 161 N TTL
IC 0054	50.06.0155	IC SN 74 LS 155 N TTL
IC 0063	50.06.0155	IC SN 74 LS 155 N TTL
P 0001	54.01.0354	P LEISTE 3 * 32 POL WRAP
RZ 0017	57.85.3332	RZ 15*3.3K, 2%, DIL16
RZ 0062	57.85.3332	RZ 15*3.3K, 2%, DIL16
SZ 0019	55.01.0168	SZ 8*A , DIL
SZ 0064	55.01.0168	SZ 8*A , DIL

A80 LOCATOR | A80 MASTER-CONTROL | A800

ARITHMETIC CONTROL 1.228.478-71

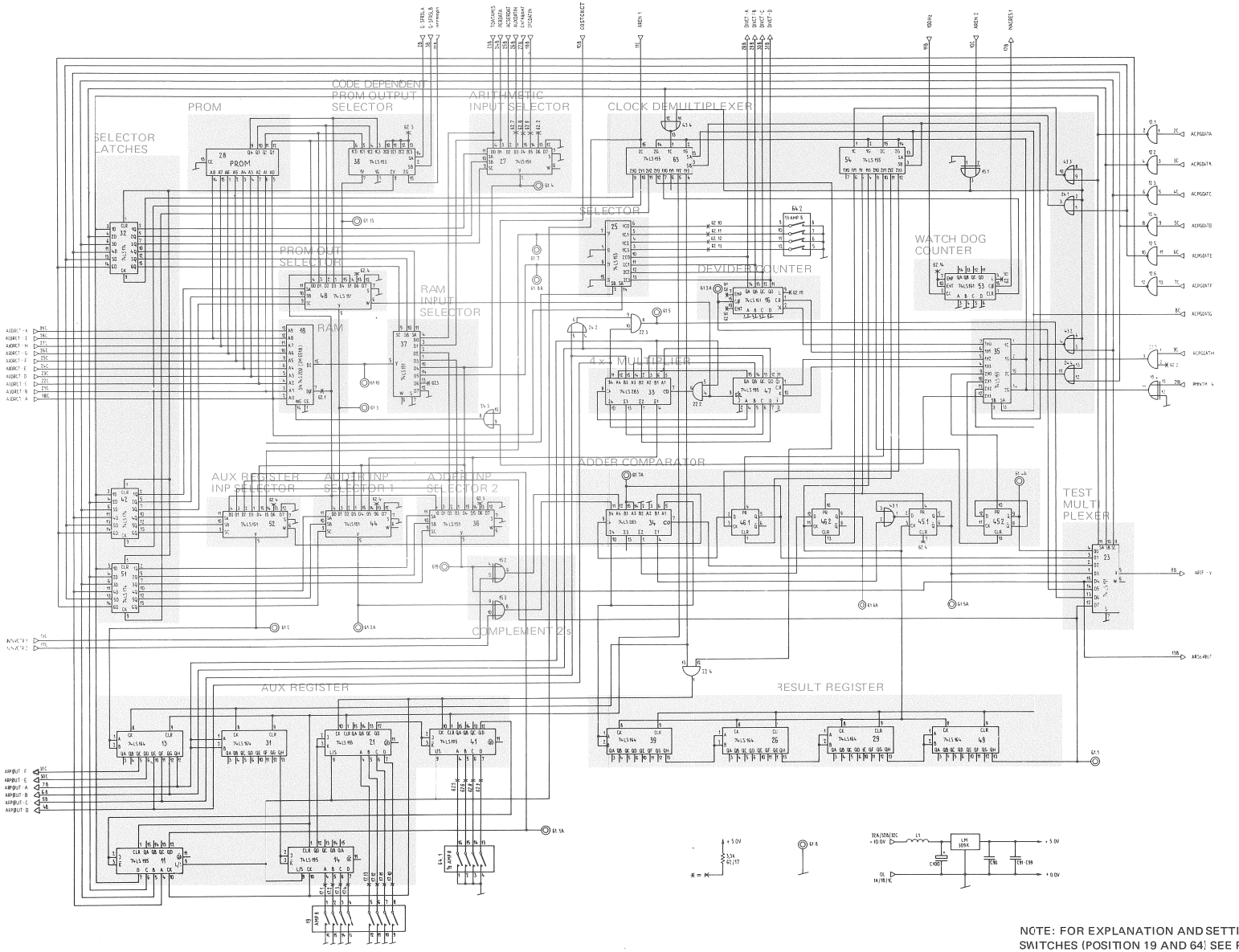

NOTE: FOR EXPLANATION AND SETTING OF DUAL-IN-LINE SWITCHES (POSITION 19 AND 64) SEE PAGE 2/107.

ADDITIONAL PERIPHERAL/ARITHMETIC CONTROL B 1.228.482-00

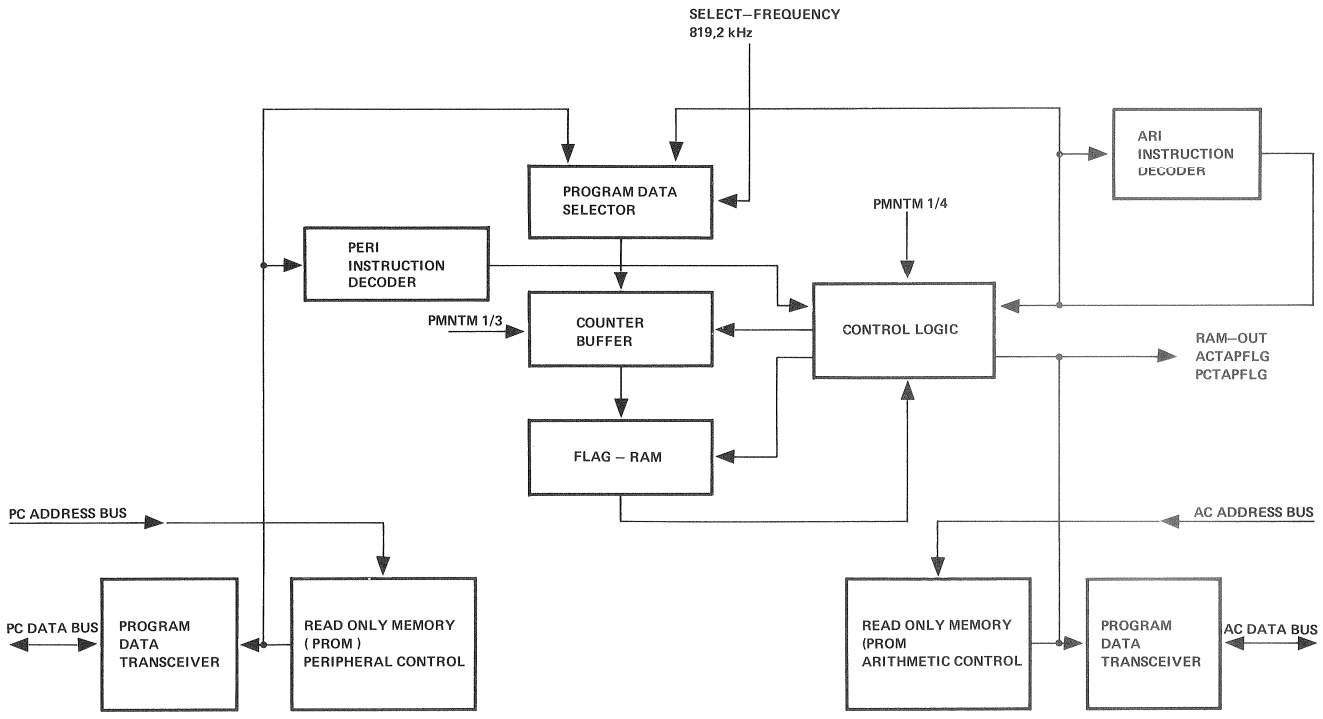

15
SLAVE RACK LOCATION

ADDITIONAL PERIPHERAL/ARITHMETIC CONTROL B 1.228.482-00

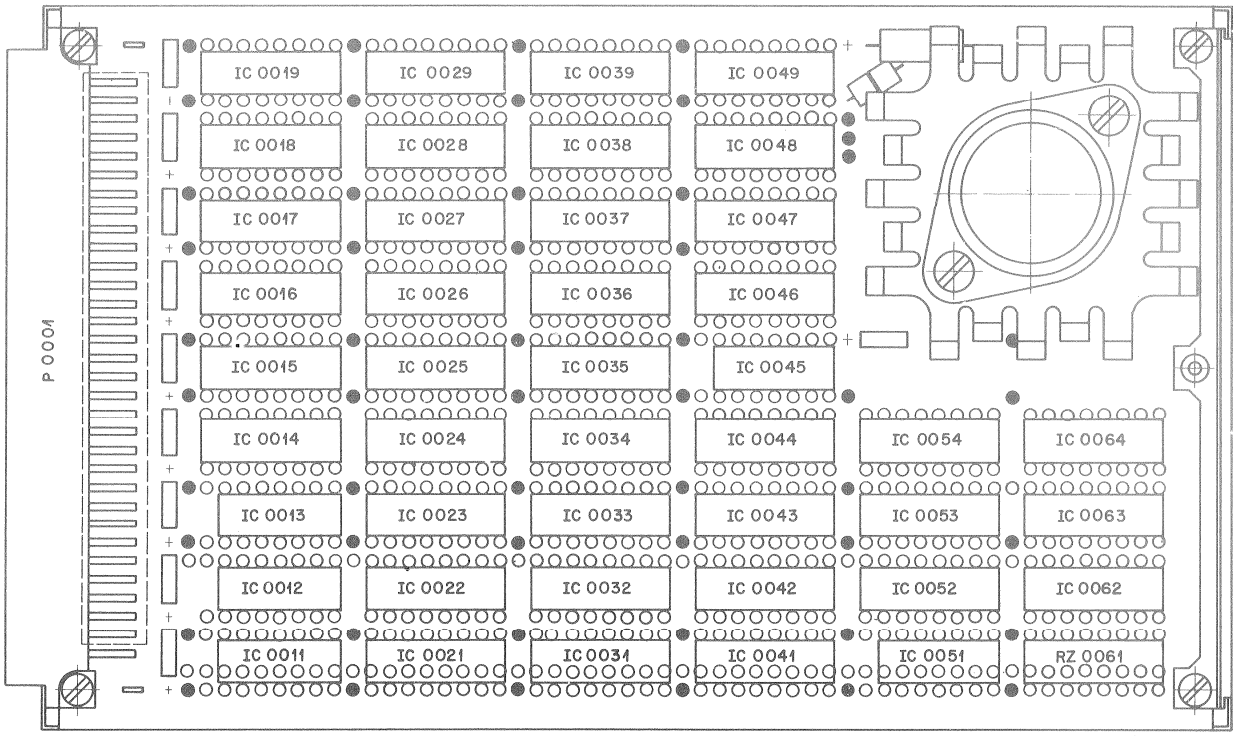

* S T U D E R * POSITION LIST OF PARTS 1.228.482.00 * 78/01/19 * PAGE 1 OF 1 *

* TAPE LOCK SYSTEM 2000 * ADDITIONAL PERIPH/ARITHM CONTR * 77/09/01-0 *

POSITION RD.	POS.M	PART NO.	DESCRIPTION OF PART	
IC	0011	50.06.0086	IC SN 74 LS 86 N	TTL
IC	0012	50.06.0008	IC SN 74 LS 08 N	TTL
IC	0013	50.06.0032	IC SN 74 LS 32 N	TTL
IC	0014	50.05.0260	IC 8T28 ,	TTL-3
IC	0015	50.05.0260	IC 8T28 ,	TTL-3
IC	0016	50.05.0260	IC 8T28 ,	TTL-3
IC	0017	50.05.0260	IC 8T28 ,	TTL-3
IC	0018	50.05.0260	IC 8T28 ,	TTL-3
IC	0019	50.05.0260	IC 8T28 ,	TTL-3
IC	0021	50.06.0151	IC SN 74 LS 151 N	TTL
IC	0022		PROM	
IC	0023		PROM	
IC	0024		PROM	
IC	0025	50.06.0139	IC SN 74 LS 139 N	TTL
IC	0026	50.06.0151	IC SN 74 LS 151 N	TTL
IC	0027		PROM	
IC	0028		PROM	
IC	0029		PROM	
IC	0031		PROM	
IC	0032		PROM	
IC	0033		PROM	
IC	0034		PROM	
IC	0035	50.06.0139	IC SN 74 LS 139 N	TTL
IC	0036		PROM	
IC	0037		PROM	
IC	0038		PROM	
IC	0039		PROM	
IC	0041		PROM	
IC	0042		PROM	
IC	0043		PROM	
IC	0044		PROM	
IC	0045	50.06.0000	IC SN 74 LS 00 N	TTL
IC	0046		PROM	
IC	0047		PROM	
IC	0048		PROM	
IC	0049		PROM	

POSITION RD.	POS.M	PART NO.	DESCRIPTION OF PART	
IC	0051	50.06.0074	IC SN 74 LS 74 N	TTL
IC	0052	50.06.0157	IC SN 74 LS 157 N	TTL
IC	0053	50.06.0157	IC SN 74 LS 157 N	TTL
IC	0054	50.06.0157	IC SN 74 LS 157 N	TTL
IC	0062	50.05.0183	IC IM 5523CDE	,TTL
IC	0063	50.06.0161	IC SN 74 LS 161 N	TTL
IC	0064	50.06.0161	IC SN 74 LS 161 N	TTL
P	0001	54.01.0354	P LEISTE 3 * 32 POL	WRAP
RZ	0061	57.85.3222	RZ 15*2.2K , 2%,	DIP16

A80 LOCATOR | A80 MASTER-CONTROL | A800

ADDITIONAL PERIPHERAL/ARITHMETIC CONTROL B 1.228.482-00

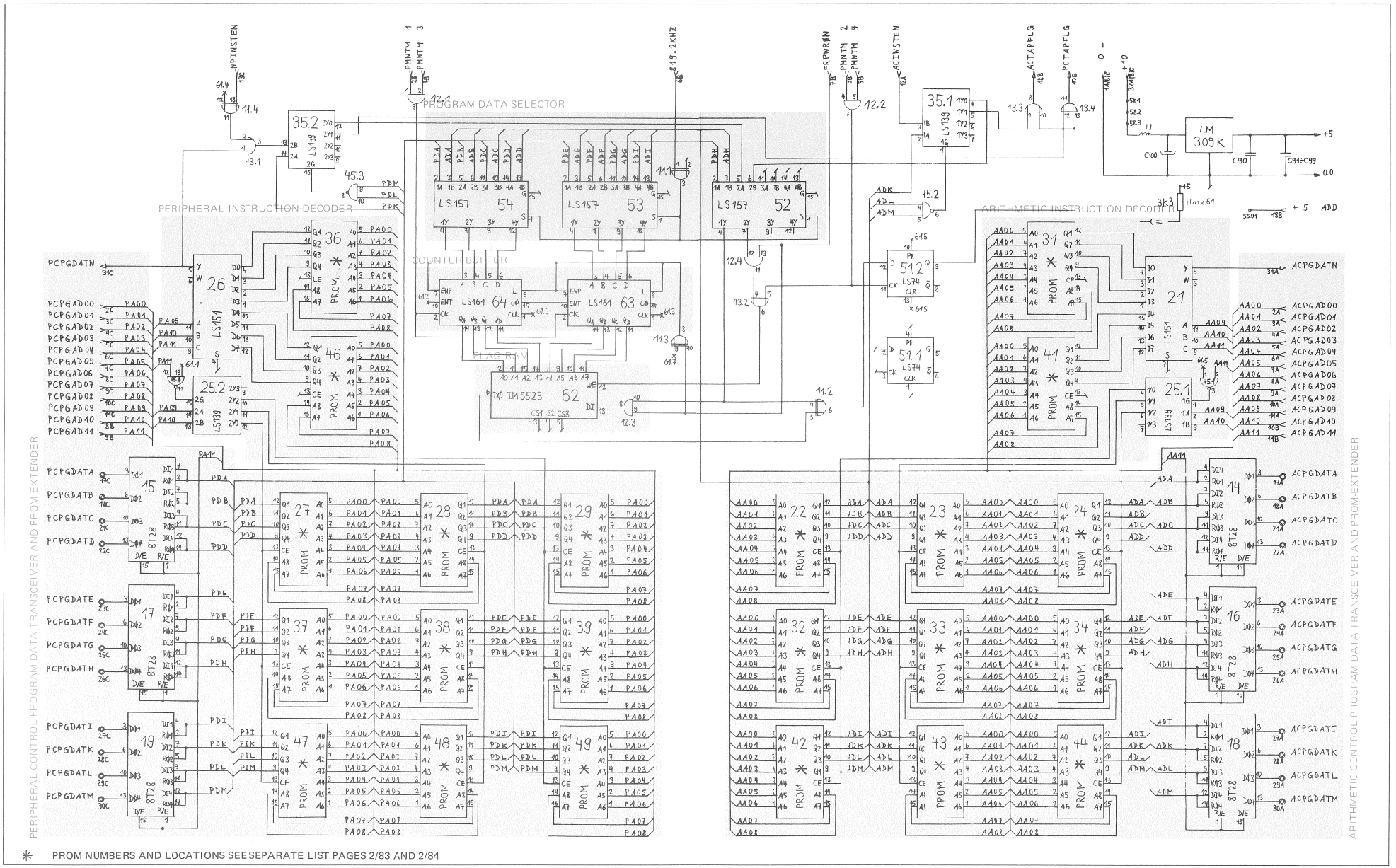

✳ PROM NUMBERS AND LOCATIONS SEE SEPARATE LIST PAGES 2/83 AND 2/84

LIST OF PROMS FOR A80 LOCATOR AND MASTER CONTROL

A80 LOCATOR
1.100.005.00 19.12.78 VIOLETTE
SET OF PROMS FOR TLS / A80 MKII LOCATOR

PROM	DRAWING	PC BOARD NR.	IC LOCATION
R 0101-7	1.025.010.17	1.228.480.00	IC 26
R 0102-7	1.025.010.27	1.228.480.00	IC 36
R 0103-7	1.025.010.37	1.228.480.00	IC 46
R 0104-7	1.025.010.47	1.228.480.00	IC 27
R 0105-7	1.025.010.57	1.228.480.00	IC 37
R 0106-7	1.025.010.67	1.228.480.00	IC 47
R 0107-7	1.025.010.77	1.228.480.00	IC 28
R 0108-7	1.025.010.87	1.228.480.00	IC 38
R 0109-7	1.025.010.97	1.228.480.00	IC 48
R 0110-7	1.025.011.07	1.228.480.00	IC 29
R 0111-7	1.025.011.17	1.228.480.00	IC 39
R 0112-7	1.025.011.27	1.228.480.00	IC 49
R 0113-7	1.025.011.37	1.228.482.00	IC 31
R 0114-7	1.025.011.47	1.228.482.00	IC 41
R 0115-7	1.025.011.57	1.228.482.00	IC 22
R 0116-7	1.025.011.67	1.228.482.00	IC 32
R 0117-7	1.025.011.77	1.228.482.00	IC 42
R 0118-7	1.025.011.87	1.228.482.00	IC 23
R 0119-7	1.025.011.97	1.228.482.00	IC 33
R 0120-7	1.025.012.07	1.228.482.00	IC 43
R 0124-7	1.025.012.47	1.228.481.00	IC 26
R 0125-7	1.025.012.57	1.228.481.00	IC 36
R 0126-7	1.025.012.67	1.228.481.00	IC 46
R 0127-7	1.025.012.77	1.228.481.00	IC 27
R 0128-7	1.025.012.87	1.228.481.00	IC 37
R 0129-7	1.025.012.97	1.228.481.00	IC 47
R 0130-7	1.025.013.07	1.228.481.00	IC 28
R 0131-7	1.025.013.17	1.228.481.00	IC 38
R 0132-7	1.025.013.27	1.228.481.00	IC 48
R 0133-7	1.025.013.37	1.228.481.00	IC 29
R 0134-7	1.025.013.47	1.228.481.00	IC 39
R 0135-7	1.025.013.57	1.228.481.00	IC 49
R 0136-7	1.025.013.67	1.228.482.00	IC 36
R 0137-7	1.025.013.77	1.228.482.00	IC 46
R 0138-7	1.025.013.87	1.228.482.00	IC 27
R 0139-7	1.025.013.97	1.228.482.00	IC 37
R 0140-7	1.025.014.07	1.228.482.00	IC 47
R 0141-7	1.025.014.17	1.228.482.00	IC 28
R 0142-7	1.025.014.27	1.228.482.00	IC 38
R 0143-7	1.025.014.37	1.228.482.00	IC 48

FOR EARLIER AND FURTHER VERSIONS SEE PAGE 2/116

A80 MASTER-CONTROL
1.100.006.00 19.12.78 WHITE/BLUE
SET OF PROMS FOR TLS / A80 MKII MASTER CONTROL

PROM	DRAWING	PC BOAFD NR	IC LOCATION
R 0101-6	1.025.010.16	1.228.480.00	IC 26
R 0102-6	1.025.010.26	1.228.480.00	IC 36
R 0103-6	1.025.010.36	1.228.480.00	IC 46
R 0104-6	1.025.010.46	1.228.480.00	IC 27
R 0105-6	1.025.010.56	1.228.480.00	IC 37
R 0106-6	1.025.010.66	1.228.480.00	IC 47
R 0107-6	1.025.010.76	1.228.480.00	IC 28
R 0108-6	1.025.010.86	1.228.480.00	IC 38
R 0109-6	1.025.010.96	1.228.480.00	IC 48
R 0110-6	1.025.011.06	1.228.480.00	IC 29
R 0111-6	1.025.011.16	1.228.480.00	IC 39
R 0112-6	1.025.011.26	1.228.480.00	IC 49
R 0113-6	1.025.011.36	1.228.482.00	IC 31
R 0114-6	1.025.011.46	1.228.482.00	IC 41
R 0115-6	1.025.011.56	1.228.482.00	IC 22
R 0116-6	1.025.011.66	1.228.482.00	IC 32
R 0117-6	1.025.011.76	1.228.482.00	IC 42
R 0118-6	1.025.011.86	1.228.482.00	IC 23
R 0119-6	1.025.011.96	1.228.482.00	IC 33
R 0120-6	1.025.012.06	1.228.482.00	IC 43
R 0124-9	1.025.012.49	1.228.481.00	IC 26
R 0125-9	1.025.012.59	1.228.481.00	IC 36
R 0126-9	1.025.012.69	1.228.481.00	IC 46
R 0127-9	1.025.012.79	1.228.481.00	IC 27
R 0128-9	1.025.012.89	1.228.481.00	IC 37
R 0129-9	1.025.012.99	1.228.481.00	IC 47
R 0130-9	1.025.013.09	1.228.481.00	IC 28
R 0131-9	1.025.013.19	1.228.481.00	IC 38
R 0132-9	1.025.013.29	1.228.481.00	IC 48
R 0133-9	1.025.013.39	1.228.481.00	IC 29
R 0134-9	1.025.013.49	1.228.481.00	IC 39
R 0135-9	1.025.013.59	1.228.481.00	IC 49
R 0136-9	1.025.013.69	1.228.482.00	IC 36
R 0137-9	1.025.013.79	1.228.482.00	IC 46
R 0138-9	1.025.013.89	1.228.482.00	IC 27
R 0139-9	1.025.013.99	1.228.482.00	IC 37
R 0140-9	1.025.014.09	1.228.482.00	IC 47
R 0141-9	1.025.014.19	1.228.482.00	IC 28
R 0142-9	1.025.014.29	1.228.482.00	IC 38
R 0143-9	1.025.014.39	1.228.482.00	IC 48

FOR EARLIER AND FURTHER VERSIONS SEE PAGE 2/116

LIST OF PROMS FOR A800

A800

1.100.008.81 12.1.80 YELLOW SET OF PROMS FOR TLS A800 1"

PROM	DRAWING	PC BOARD NR	IC LOCATION
R 0201-4	1.025.020.14	1.228.480.00	IC 26
R 0202-4	1.025.020.24	1.228.480.00	IC 36
R 0203-4	1.025.020.34	1.228.480.00	IC 46
R 0204-4	1.025.020.44	1.228.480.00	IC 27
R 0205-4	1.025.020.54	1.228.480.00	IC 37
R 0206-4	1.025.020.64	1.228.480.00	IC 47
R 0207-4	1.025.020.74	1.228.480.00	IC 28
R 0208-4	1.025.020.84	1.228.480.00	IC 38
R 0209-4	1.025.020.94	1.228.480.00	IC 48
R 0210-4	1.025.021.04	1.228.480.00	IC 29
R 0211-4	1.025.021.14	1.228.480.00	IC 39
R 0212-4	1.025.021.24	1.228.480.00	IC 49
R 0213-4	1.025.021.34	1.228.482.00	IC 31
R 0214-4	1.025.021.44	1.228.482.00	IC 41
R 0215-4	1.025.021.54	1.228.482.00	IC 22
R 0216-4	1.025.021.64	1.228.482.00	IC 32
R 0217-4	1.025.021.74	1.228.482.00	IC 42
R 0218-4	1.025.021.84	1.228.482.00	IC 23
R 0219-4	1.025.021.94	1.228.482.00	IC 33
R 0220-4	1.025.022.04	1.228.482.00	IC 43
R 0224-4	1.025.022.44	1.228.481.00	IC 26
R 0225-4	1.025.022.54	1.228.481.00	IC 36
R 0226-4	1.025.022.64	1.228.481.00	IC 46
R 0227-4	1.025.022.74	1.228.481.00	IC 27
R 0228-4	1.025.022.84	1.228.481.00	IC 37
R 0229-4	1.025.022.94	1.228.481.00	IC 47
R 0230-4	1.025.023.04	1.228.481.00	IC 28
R 0231-4	1.025.023.14	1.228.481.00	IC 38
R 0232-4	1.025.023.24	1.228.481.00	IC 48
R 0233-4	1.025.023.34	1.228.481.00	IC 29
R 0234-4	1.025.023.44	1.228.481.00	IC 39
R 0235-4	1.025.023.54	1.228.481.00	IC 49
R 0236-4	1.025.023.64	1.228.482.00	IC 36
R 0237-4	1.025.023.74	1.228.482.00	IC 46
R 0238-4	1.025.023.84	1.228.482.00	IC 27
R 0239-4	1.025.023.94	1.228.482.00	IC 37
R 0240-4	1.025.024.04	1.228.482.00	IC 47
R 0241-4	1.025.024.14	1.228.482.00	IC 28
R 0242-4	1.025.024.24	1.228.482.00	IC 38
R 0243-4	1.025.024.34	1.228.482.00	IC 48

FOR EARLIER AND FURTHER VERSIONS SEE PAGE 2/116

A800

1.100.008 12.7.79 ORANGE SET OF PROMS FOR TLS A800 2"

FROM	DRAWING	PC BOARD NR	IC LOCATION
R 0201-3	1.025.020.13	1.228.480.00	IC 26
R 0202-3	1.025.020.23	1.228.480.00	IC 36
R 0203-3	1.025.020.33	1.228.480.00	IC 46
R 0204-3	1.025.020.43	1.228.480.00	IC 27
R 0205-3	1.025.020.53	1.228.480.00	IC 37
R 0206-3	1.025.020.63	1.228.480.00	IC 47
R 0207-3	1.025.020.73	1.228.480.00	IC 28
R 0208-3	1.025.020.83	1.228.480.00	IC 38
R 0209-3	1.025.020.93	1.228.480.00	IC 48
R 0210-3	1.025.021.03	1.228.480.00	IC 29
R 0211-3	1.025.021.13	1.228.480.00	IC 39
R 0212-3	1.025.021.23	1.228.480.00	IC 49
R 0213-3	1.025.021.33	1.228.482.00	IC 31
R 0214-3	1.025.021.43	1.228.482.00	IC 41
R 0215-3	1.025.021.53	1.228.482.00	IC 22
R 0216-3	1.025.021.63	1.228.482.00	IC 32
R 0217-3	1.025.021.73	1.228.482.00	IC 42
R 0218-3	1.025.021.83	1.228.482.00	IC 23
R 0219-3	1.025.021.93	1.228.482.00	IC 33
R 0220-3	1.025.022.03	1.228.482.00	IC 43
R 0224-3	1.025.022.43	1.228.481.00	IC 26
R 0225-3	1.025.022.53	1.228.481.00	IC 36
R 0226-3	1.025.022.63	1.228.481.00	IC 46
R 0227-3	1.025.022.73	1.228.481.00	IC 27
R 0228-3	1.025.022.83	1.228.481.00	IC 37
R 0229-3	1.025.022.93	1.228.481.00	IC 47
R 0230-3	1.025.023.03	1.228.481.00	IC 28
R 0231-3	1.025.023.13	1.228.481.00	IC 38
R 0232-3	1.025.023.23	1.228.481.00	IC 48
R 0233-3	1.025.023.33	1.228.481.00	IC 29
R 0234-3	1.025.023.43	1.228.481.00	IC 39
R 0235-3	1.025.023.53	1.228.481.00	IC 49
R 0236-3	1.025.023.63	1.228.482.00	IC 36
R 0237-3	1.025.023.73	1.228.482.00	IC 46
R 0238-3	1.025.023.83	1.228.482.00	IC 27
R 0239-3	1.025.023.93	1.228.482.00	IC 37
R 0240-3	1.025.024.03	1.228.482.00	IC 47
R 0241-3	1.025.024.13	1.228.482.00	IC 28
R 0242-3	1.025.024.23	1.228.482.00	IC 38
R 0243-3	1.025.024.33	1.228.482.00	IC 48

FOR EARLIER AND FURTHER VERSIONS SEE PAGE 2/116

BASIC PROGRAMMER INTERFACE 1.228.417-72

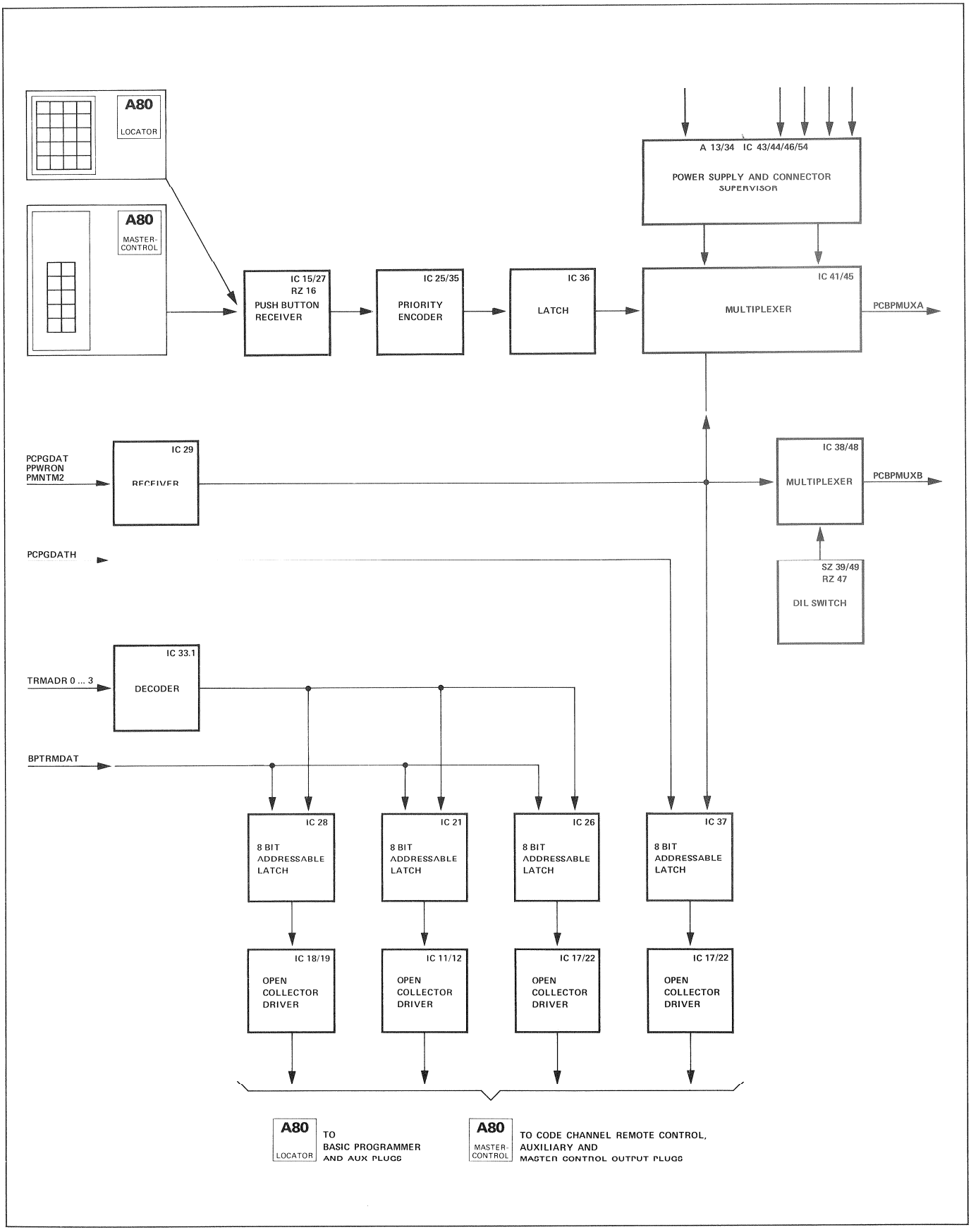

17 SLAVE RACK LOCATION

BASIC PROGRAMMER INTERFACE 1.228.417-72

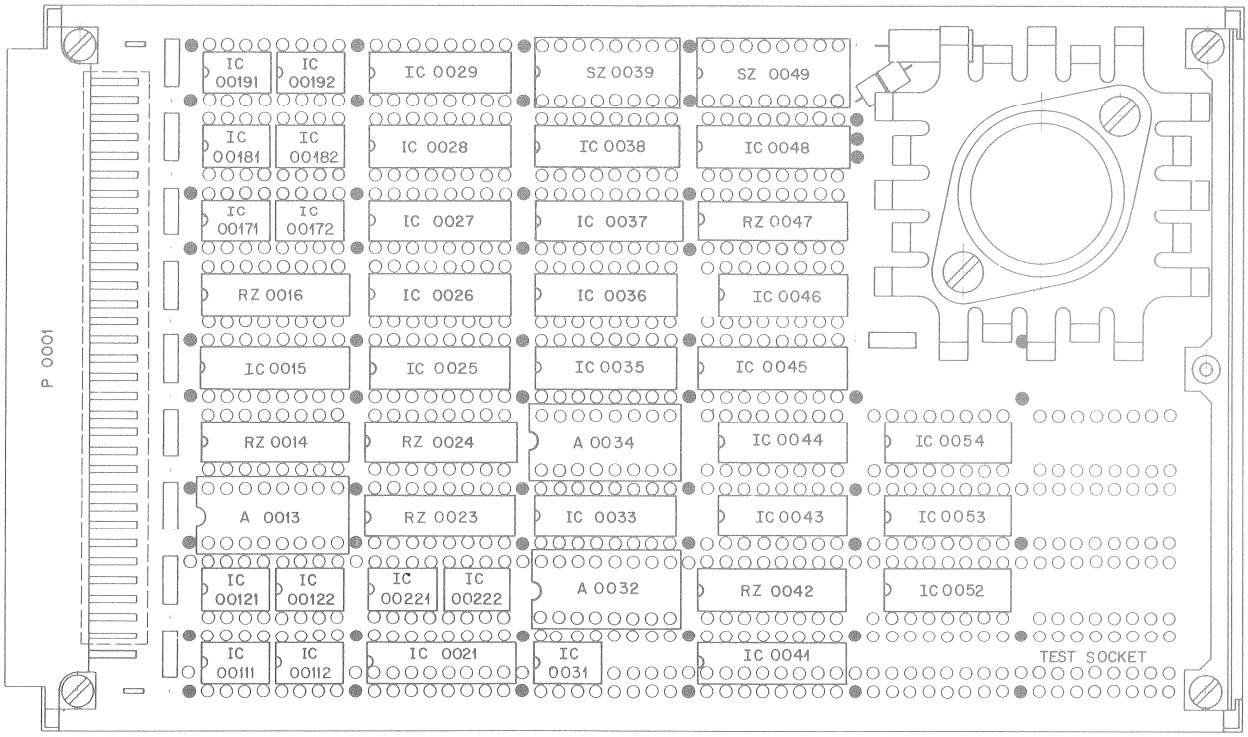

* S T U D E R * POSITION LIST OF PARTS 1.228.417.72 * 78/01/19 * PAGE 1 OF 1 *

* TAPE LOCK SYSTEM 2000 * BASIC PROGR INTERFACE * 77/09/02-B *

POSITION RD.	POS.M	PART NO.	DESCRIPTION OF PART
A	0013	1.228.575.00	ASSEMBLY 17-13
A	0032	1.228.576.00	ASSEMBLY 17-32
A	0034	1.228.577.00	ASSEMBLY 17-34
IC	00111	50.05.0227	IC SN75462P ,LM 75462 , DRIV
IC	00112	50.05.0227	IC SN75462P ,LM 75462 , DRIV
IC	00121	50.05.0227	IC SN75462P ,LM 75462 , DRIV
IC	00122	50.05.0227	IC SN75462P ,LM 75462 , DRIV
IC	0015	50.05.0217	IC N 8T37B, TTL
IC	00171	50.05.0227	IC SN75462P ,LM 75462 , DRIV
IC	00172	50.05.0227	IC SN75462P ,LM 75462 , DRIV
IC	00181	50.05.0227	IC SN75462P ,LM 75462 , DRIV
IC	00182	50.05.0227	IC SN75462P ,LM 75462 , DRIV
IC	00191	50.05.0227	IC SN75462P ,LM 75462 , DRIV
IC	00192	50.05.0227	IC SN75462P ,LM 75462 , DRIV
IC	0021	50.05.0215	IC 93 L 34PC, TTL
IC	00221	50.05.0227	IC SN75462P ,LM 75462 , DRIV
IC	00222	50.05.0227	IC SN75462P ,LM 75462 , DRIV
IC	0025	50.06.0148	IC SN 74 LS 148 N TTL
IC	0026	50.05.0215	IC 93 L 34PC, TTL
IC	0027	50.05.0217	IC N 8T37B, TTL
IC	0028	50.05.0215	IC 93 L 34PC, TTL
IC	0029	50.05.0216	IC N 8 T 95B, ,TTL-3
IC	0031	50.05.0204	IC SN 75464P,LM 3614 N, DRIV
IC	0033	50.06.0139	IC SN 74 LS 139 N TTL
IC	0035	50.06.0148	IC SN 74 LS 148 N TTL
IC	0036	50.06.0174	IC SN 74 LS 174 N TTL
IC	0037	50.05.0215	IC 93 L 34PC, TTL
IC	0038	50.06.0251	IC SN74LS251N ,TTL-3
IC	0041	50.06.0251	IC SN74LS251N ,TTL-3
IC	0043	50.06.0014	IC SN 74 LS 14 N TTL
IC	0044	50.06.0014	IC SN 74 LS 14 N TTL
IC	0045	50.06.0251	IC SN74LS251N ,TTL-3
IC	0046	50.06.0002	IC SN 74 LS 02 N TTL
IC	0048	50.06.0251	IC SN74LS251N ,TTL-3
IC	0052	50.06.0074	IC SN 74 LS 74 N TTL
IC	0053	50.06.0032	IC SN 74 LS 32 N TTL
IC	0054	50.06.0011	IC SN 74 LS 11 N TTL
P	0001	54.01.0354	P LEISTE 3 * 32 POL WRAP
RZ	0014	57.85.3332	RZ 15*3.3K, 2%, DIL16
RZ	0016	57.80.0101	RZ 14*330/220,2%, DIL16
RZ	0023	57.88.3101	RZ 8*100 2% DIL
RZ	0024	57.88.3101	RZ 8*100 2% DIL
RZ	0042	57.85.3222	RZ 15*2.2K , 2%, DIP16
RZ	0047	57.85.3332	RZ 15*3.3K, 2%, DIL16
SZ	0039	55.01.0168	SZ 8*A , DIL
SZ	0049	55.01.0168	SZ 8*A , DIL

A80 LOCATOR | A80 MASTER-CONTROL

BASIC PROGRAMMER INTERFACE 1.228.417-72

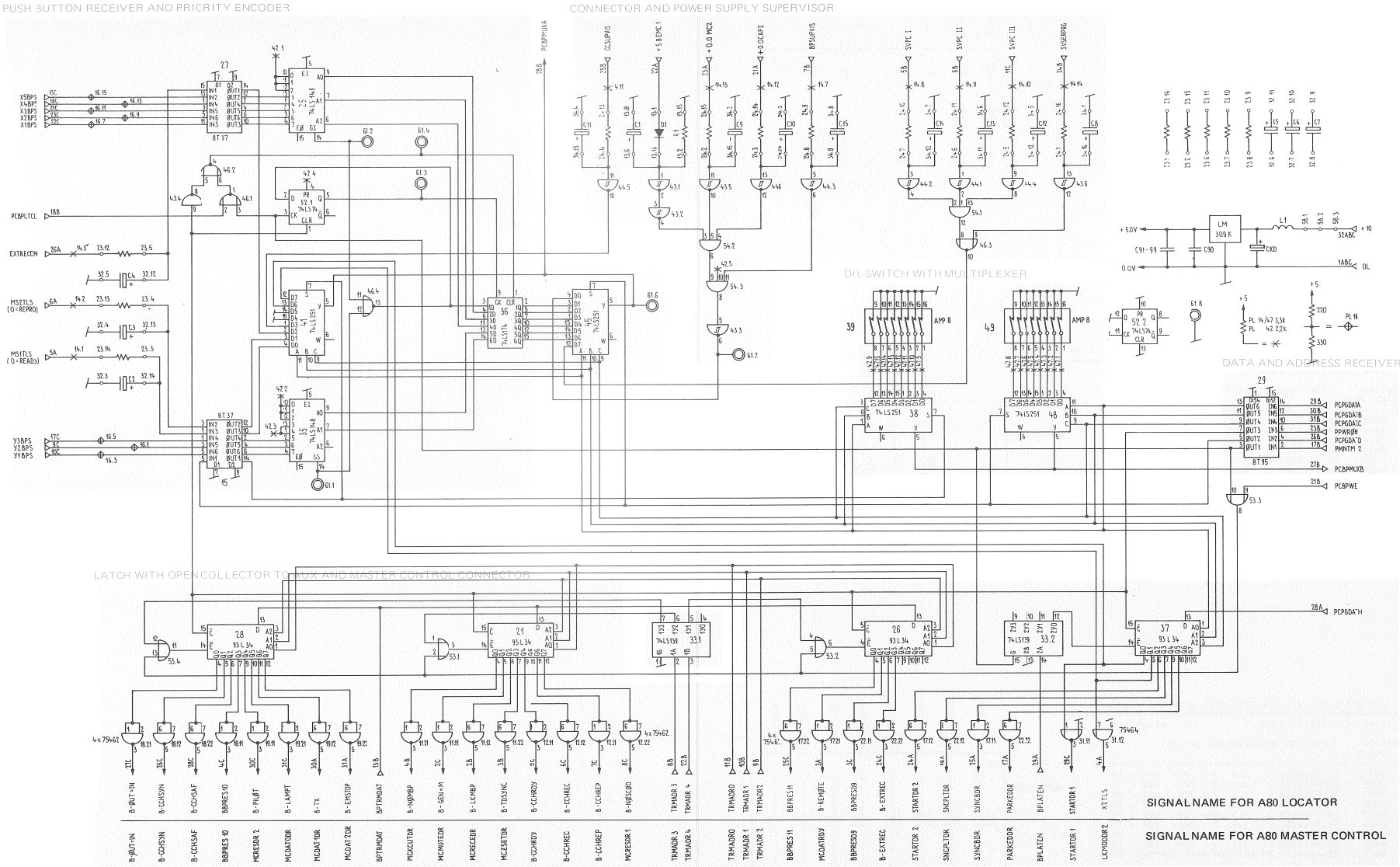

NOTE: FOR EXPLANATION AND SETTING OF DUAL-IN-LINE SWITCHES (POSITION 39 AND 49) SEE PAGE 2/107.

BASIC PROGRAMMER INTERFACE 1.228.417-72

```
*   S T U D E R   *   POSITION LIST OF PARTS 1.228.575.00
*************************************************************
*   TAPE LOCK SYSTEM 2000              *   ASS.17-13

POSITION       PART NO. DESCRIPTION OF PART
RD. POS.M
---------- ------------ ------------------------------
C    0001    59.36.5100 C    10  U , 20%,  35V-, TA
D    0001    50.04.0102 D   1N 914   ,1N 4148  ,
MP   0001    53.03.0170 MP ADAPTOR PLUG 2*8*0.3  DIL
R    0001    57.02.5471 R   470    , 10%, .25W , CMA
```

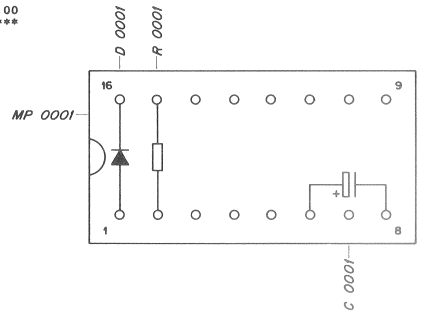


```
*   S T U D E R   *   POSITION LIST OF PARTS 1.228.576.00
*************************************************************
*   TAPE LOCK SYSTEM 2000              *   ASS.17-32

POSITION       PART NO. DESCRIPTION OF PART
RD. POS.M
---------- ------------ ------------------------------
C    0002    59.99.0203 C   3.3  U , 20%,  10V , TA
C    0003    59.99.0203 C   3.3  U , 20%,  10V , TA
C    0004    59.99.0203 C   3.3  U , 20%,  10V , TA
C    0005    59.99.0203 C   3.3  U , 20%,  10V , TA
C    0006    59.99.0203 C   3.3  U , 20%,  10V , TA
C    0007    59.99.0203 C   3.3  U , 20%,  10V , TA
MP   0001    53.03.0170 MP ADAPTOR PLUG 2*8*0.3  DIL
```

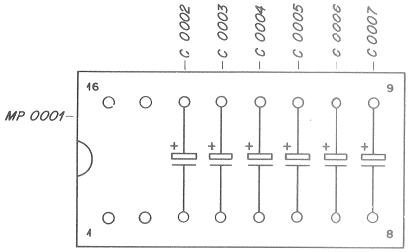


```
*   S T U D E R   *   POSITION LIST OF PARTS 1.228.577.00
*************************************************************
*   TAPE LOCK SYSTEM 2000              *   ASS.17-34

POSITION       PART NO. DESCRIPTION OF PART
RD. POS.M
---------- ------------ ------------------------------
C    0008    59.99.0203 C   3.3  U , 20%,  10V , TA
C    0009    59.99.0203 C   3.3  U , 20%,  10V , TA
C    0010    59.99.0203 C   3.3  U , 20%,  10V , TA
C    0011    59.99.0203 C   3.3  U , 20%,  10V , TA
C    0012    59.99.0203 C   3.3  U , 20%,  10V , TA
C    0013    59.99.0203 C   3.3  U , 20%,  10V , TA
C    0014    59.99.0203 C   3.3  U , 20%,  10V , TA
C    0015    59.99.0203 C   3.3  U , 20%,  10V , TA
MP   0001    53.03.0170 MP ADAPTOR PLUG 2*8*0.3  DIL
```

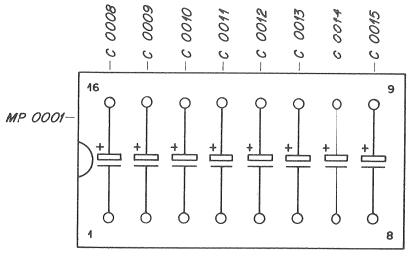

CODE CHANNEL CONTROL INTERFACE 1.228.489-81

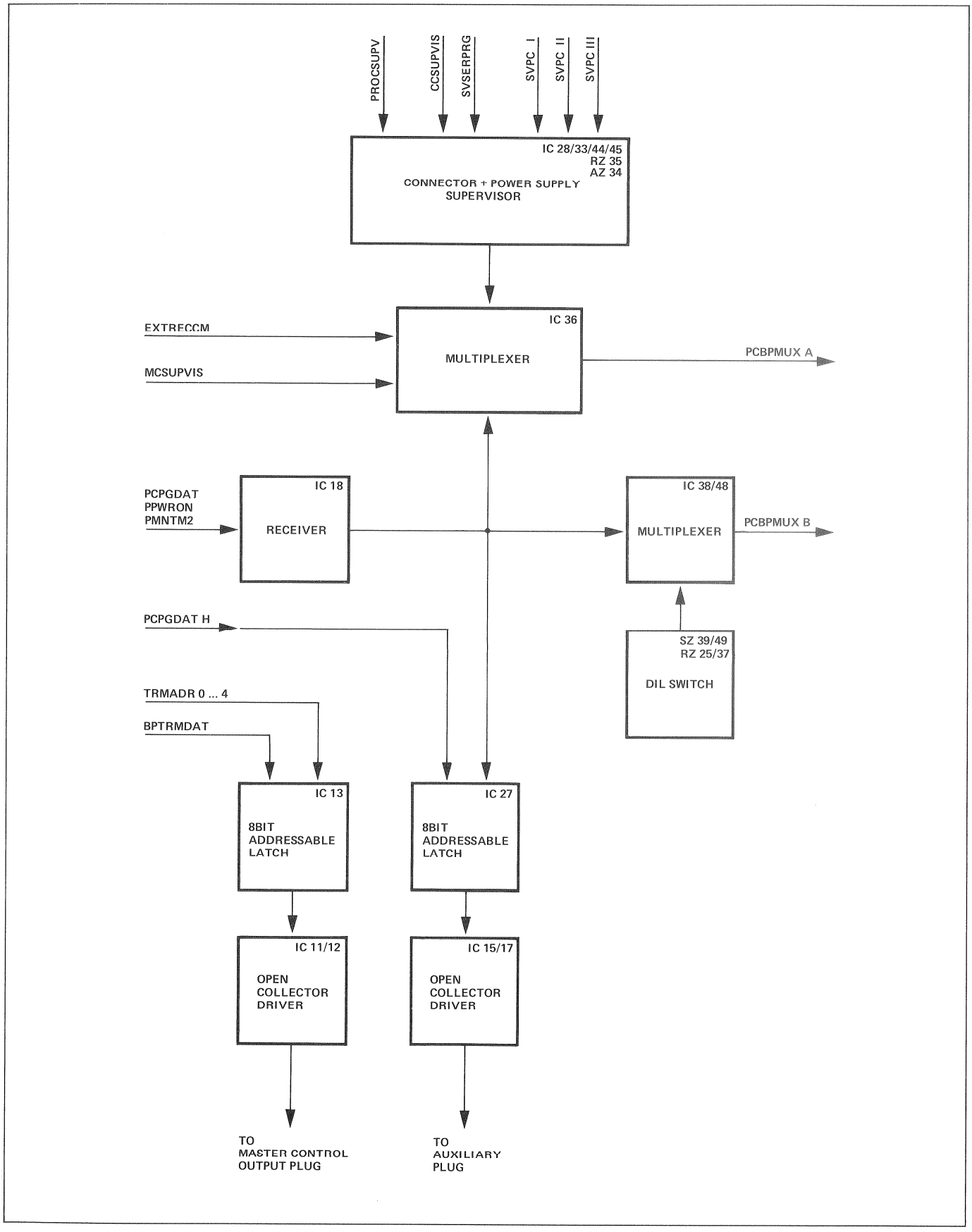

17
SLAVE RACK LOCATION

CODE CHANNEL CONTROL IF A800 1.228.489-81

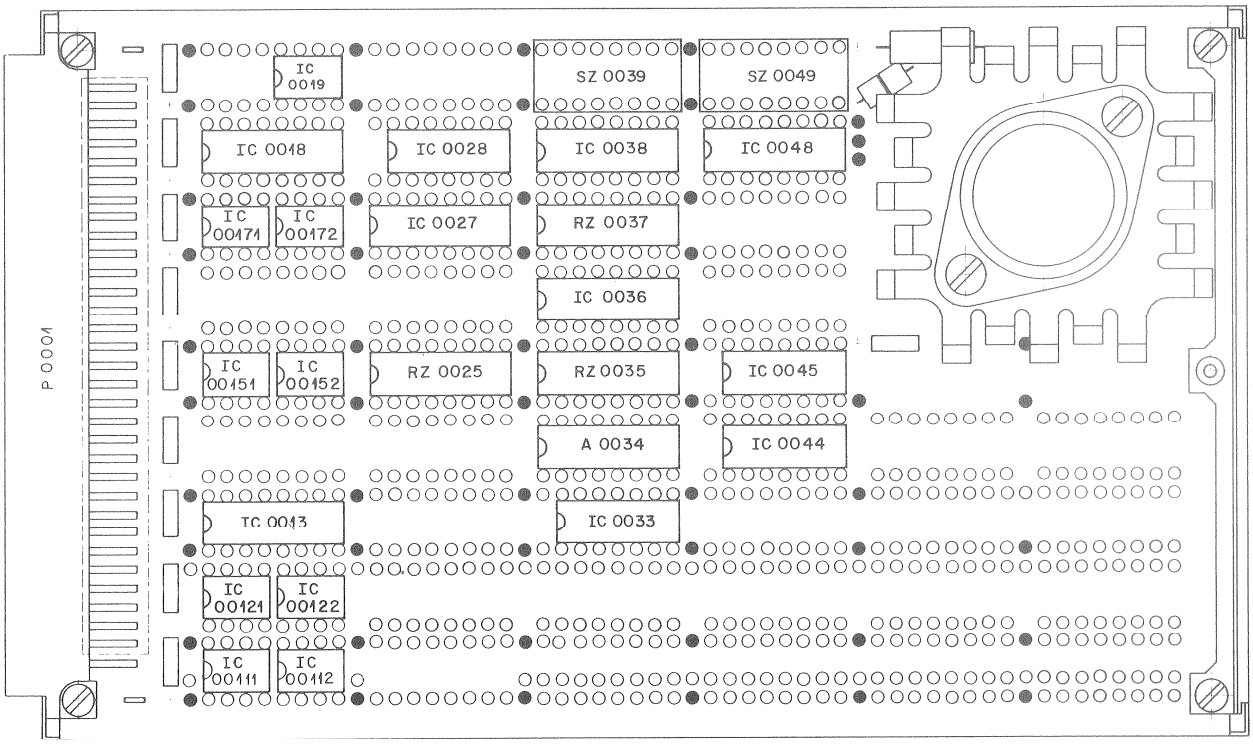


```
*   S T U D E R   *   POSITION LIST OF PARTS 1.228.489.81   *                *                    PAGE  1 OF  1   *
*************************************************************************************************************************
*   TAPE LOCK SYSTEM 2000              *   CODE CHANNEL CONTROL INTERFACE   *                                          *
                                                                                                      79.05.09-1

POSITION      PART NO. DESCRIPTION OF PART
RD. POS.M
--------- ------------ ------------------------------
A    0034  1.228.577.00 ASSEMBLY  17-34
IC   00111   50.05.0204 IC  SN 75464P,LM 3614 N, DRIV
IC   00112   50.05.0204 IC  SN 75464P,LM 3614 N, DRIV
IC   00121   50.05.0204 IC  SN 75464P,LM 3614 N, DRIV
IC   00122   50.05.0204 IC  SN 75464P,LM 3614 N, DRIV
IC   0013    50.05.0215 IC  93 L 34PC,           TTL
IC   00151   50.05.0204 IC  SN 75464P,LM 3614 N, DRIV
IC   00152   50.05.0204 IC  SN 75464P,LM 3614 N, DRIV
IC   00171   50.05.0204 IC  SN 75464P,LM 3614 N, DRIV
IC   00172   50.05.0204 IC  SN 75464P,LM 3614 N, DRIV
IC   0018    50.05.0216 IC  N 8 T 95B,          ,TTL-3
IC   0027    50.05.0215 IC  93 L 34PC,           TTL
IC   0028    50.06.0032 IC  SN 74 LS  32 N       TTL
IC   0033    50.06.0008 IC  SN 74 LS  08 N       TTL
IC   0036    50.06.0151 IC  SN 74 LS 151 N       TTL
IC   0038    50.06.0251 IC  SN74LS251N          ,TTL-3
IC   0044    50.06.0014 IC  SN 74 LS  14 N       TTL
IC   0045    50.06.0014 IC  SN 74 LS  14 N       TTL
IC   0048    50.06.0251 IC  SN74LS251N          ,TTL-3
P    0001    54.01.0354 P   LEISTE  3 * 32 POL  WRAP
RZ   0025    57.85.3332 RZ  15*3.3K,  2%,         DIL16
RZ   0035    57.88.3101 RZ  8*100      2%         DIL
RZ   0037    57.85.3332 RZ  15*3.3K,  2%,         DIL16
SZ   0039    55.01.0168 SZ  8*A                 , DIL
SZ   0049    55.01.0168 SZ  8*A                 , DIL
IC   0019    50.05.0203 IC  SN 75463,LM 75463    DRIV

*   S T U D E R   *   POSITION LIST OF PARTS 1.228.577.00
*************************************************************
*   TAPE LOCK SYSTEM 2000              *   ASS.17-34

POSITION      PART NO. DESCRIPTION OF PART
RD. POS.M
--------- ------------ ------------------------------
C    0008    59.99.0203 C   3.3  U , 20%,  10V , TA
C    0009    59.99.0203 C   3.3  U , 20%,  10V , TA
C    0010    59.99.0203 C   3.3  U , 20%,  10V , TA
C    0011    59.99.0203 C   3.3  U , 20%,  10V , TA
C    0012    59.99.0203 C   3.3  U , 20%,  10V , TA
C    0013    59.99.0203 C   3.3  U , 20%,  10V , TA
C    0014    59.99.0203 C   3.3  U , 20%,  10V , TA
C    0015    59.99.0203 C   3.3  U , 20%,  10V , TA
MP   0001    53.03.0170 MP ADAPTOR PLUG 2*8*0.3  DIL
```

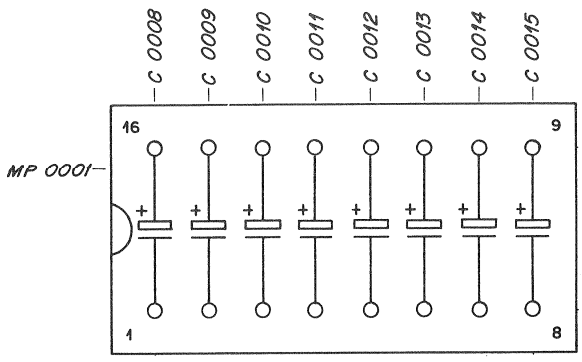

A800

CODE CHANNEL CONTROL IF A800 1.228.489-81

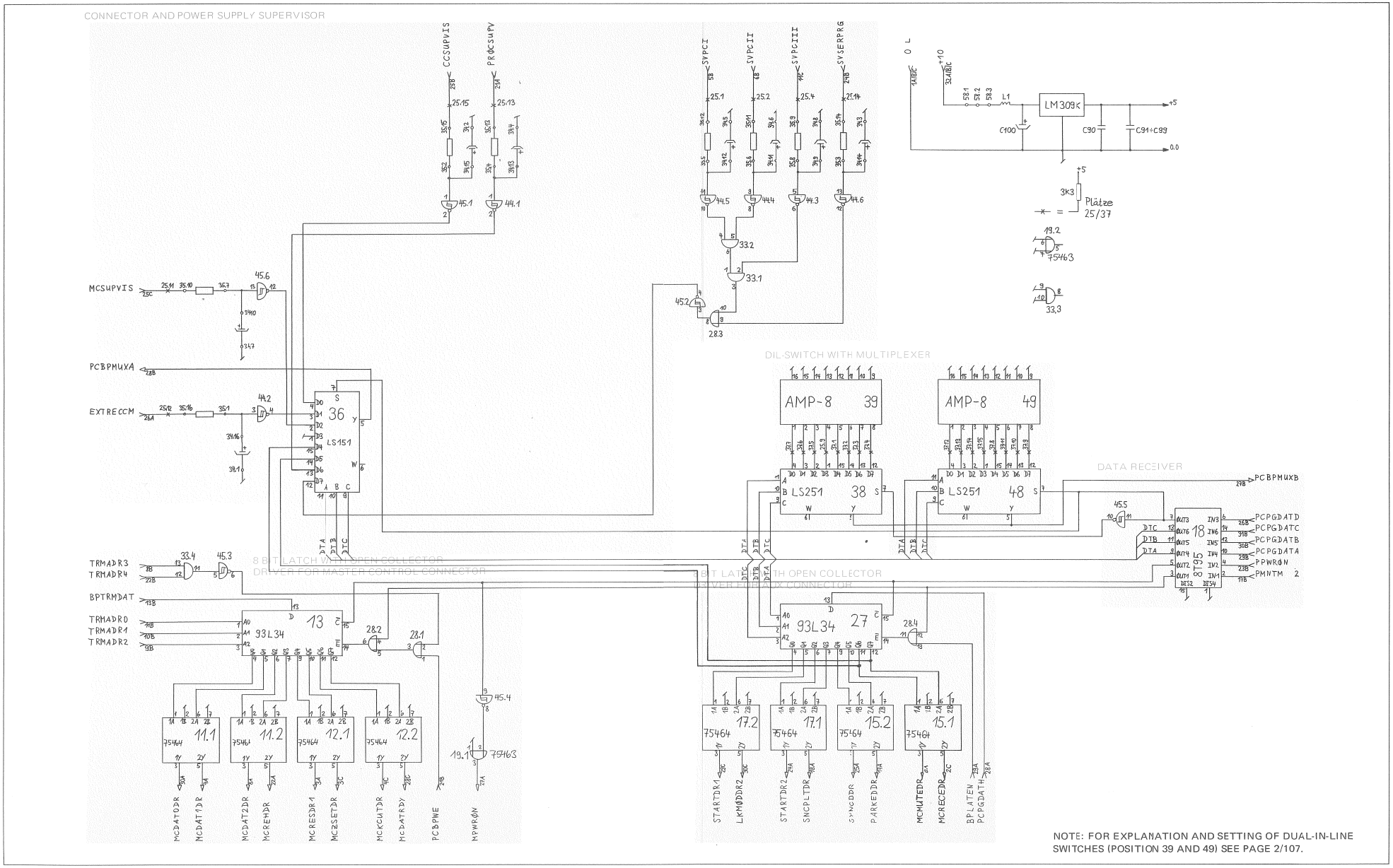

CODE CHANNEL CONTROL IF A800 1.228.489-00

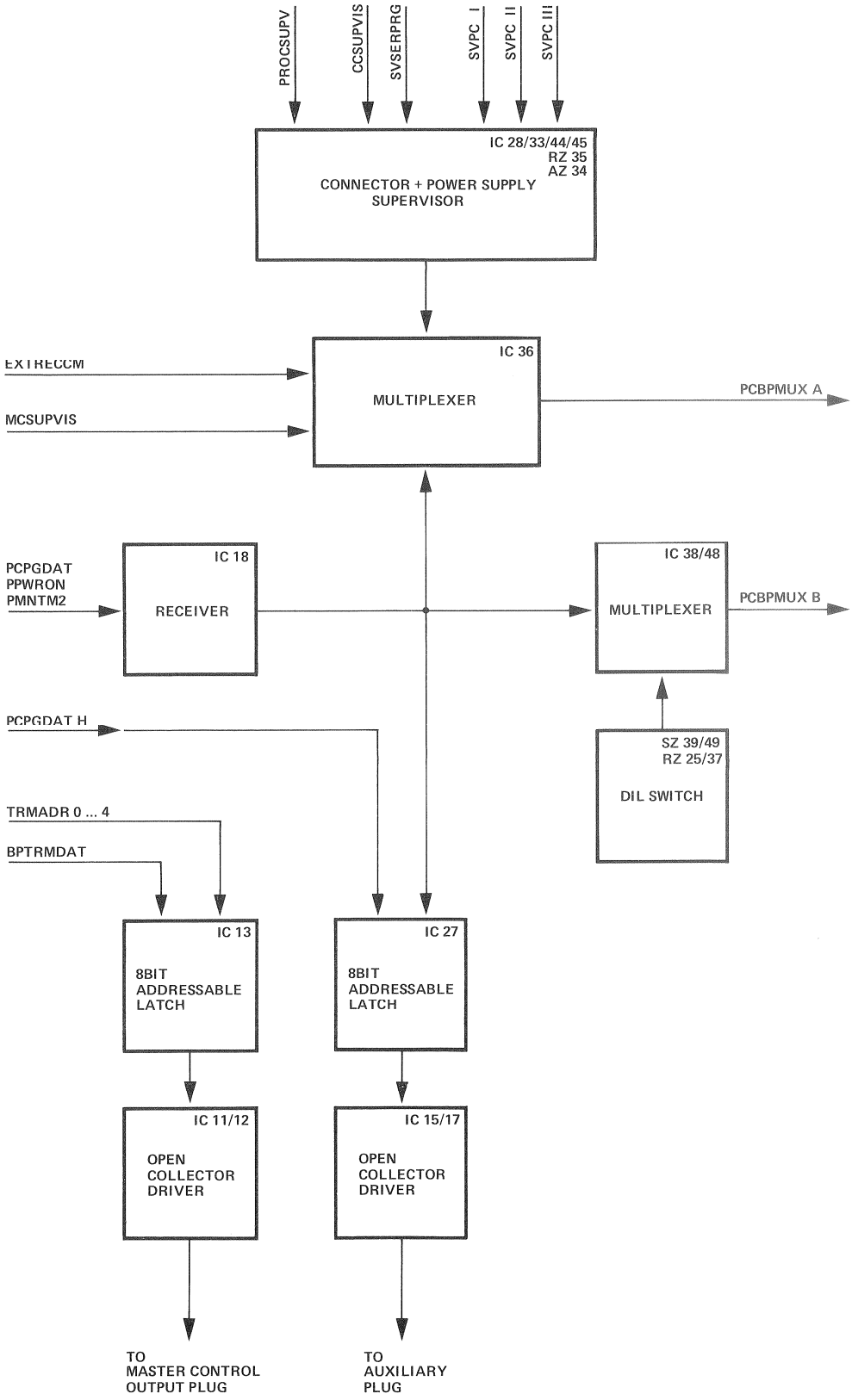

17
SLAVE RACK LOCATION

CODE CHANNEL CONTROL IF A800 1.228.489.00

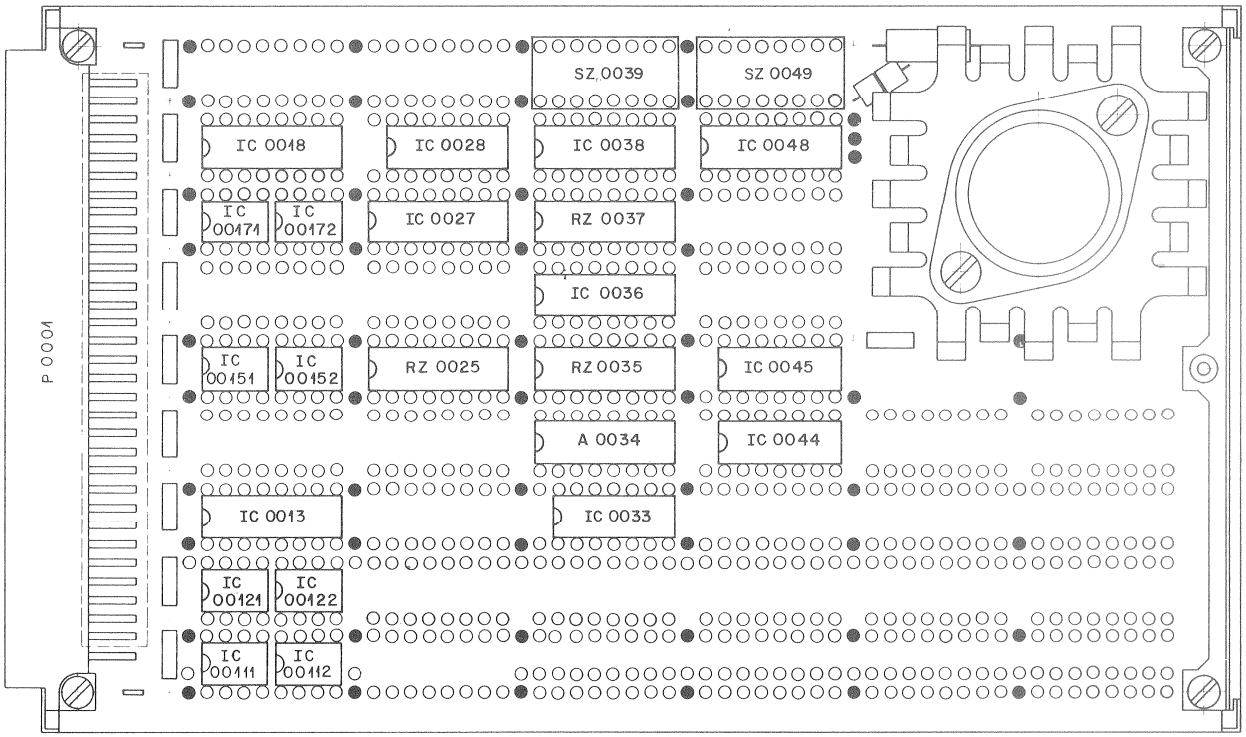


```
*   S T U D E R   *   POSITION LIST OF PARTS 1.228.489.00   *   78/12/07   *                PAGE  1 OF  1   *
*****************************************************************************************************************************
*   TAPE LOCK SYSTEM 2000            *  CODE CHANNEL CONTROL INTERFACE   *                                78/12/C6-C   *

POSITION      PART NO. DESCRIPTION OF PART
RD. POS.M
--------- ------------ --------------------------------
A    0034  1.228.577.00 ASSEMBLY  17-34
IC   00111   50.05.0204 IC  SN 75464P,LM 3614 N, DRIV
IC   00112   50.05.0204 IC  SN 75464P,LM 3614 N, DRIV
IC   00121   50.05.0204 IC  SN 75464P,LM 3614 N, DRIV
IC   00122   50.05.0204 IC  SN 75464P,LM 3614 N, DRIV
IC   0013    50.05.0215 IC  93 L 34PC,           TTL
IC   00151   50.05.0204 IC  SN 75464P,LM 3614 N, DRIV
IC   00152   50.05.0204 IC  SN 75464P,LM 3614 N, DRIV
IC   00171   50.05.0204 IC  SN 75464P,LM 3614 N, DRIV
IC   00172   50.05.0204 IC  SN 75464P,LM 3614 N, DRIV
IC   0018    50.05.0216 IC  N 8 T 95B,          ,TTL-3
IC   0027    50.05.0215 IC  93 L 34PC,           TTL
IC   0028    50.06.0032 IC  SN 74 LS  32 N       TTL
IC   0033    50.06.0008 IC  SN 74 LS  08 N       TTL
IC   0036    50.06.0151 IC  SN 74 LS 151 N       TTL
IC   0038    50.06.0251 IC  SN74LS251N          ,TTL-3
IC   0044    50.06.0014 IC  SN 74 LS  14 N       TTL
IC   0045    50.06.0014 IC  SN 74 LS  14 N       TTL
IC   0048    50.06.0251 IC  SN74LS251N          ,TTL-3
P    0001    54.01.0354 P   LEISTE  3 * 32 POL  WRAP
RZ   0025    57.85.3332 RZ  15*3.3K,  2%,        DIL16
RZ   0035    57.88.3101 RZ  8*100     2%         DIL
RZ   0037    57.85.3332 RZ  15*3.3K,  2%,        DIL16
SZ   0039    55.01.0168 SZ  8*A                , DIL
SZ   0049    55.01.0168 SZ  8*A                , DIL


*   S T U D E R   *   POSITION LIST OF PARTS 1.228.577.00
*************************************************************
*   TAPE LOCK SYSTEM 2000            *   ASS.17-34

POSITION      PART NO. DESCRIPTION OF PART
RD. POS.M
--------- ------------ --------------------------------
C    0008    59.99.0203 C   3.3  U , 20%,  10V , TA
C    0009    59.99.0203 C   3.3  U , 20%,  10V , TA
C    0010    59.99.0203 C   3.3  U , 20%,  10V , TA
C    0011    59.99.0203 C   3.3  U , 20%,  10V , TA
C    0012    59.99.0203 C   3.3  U , 20%,  10V , TA
C    0013    59.99.0203 C   3.3  U , 20%,  10V , TA
C    0014    59.99.0203 C   3.3  U , 20%,  10V , TA
C    0015    59.99.0203 C   3.3  U , 20%,  10V , TA
MP   0001    53.03.0170 MP ADAPTOR PLUG 2*8*0.3  DIL
```

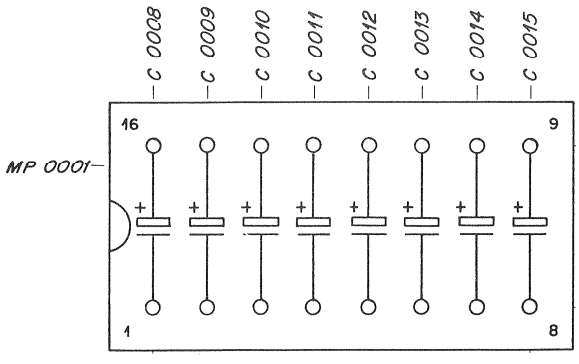

A800

CODE CHANNEL CONTROL IF A800 1.228.489.00

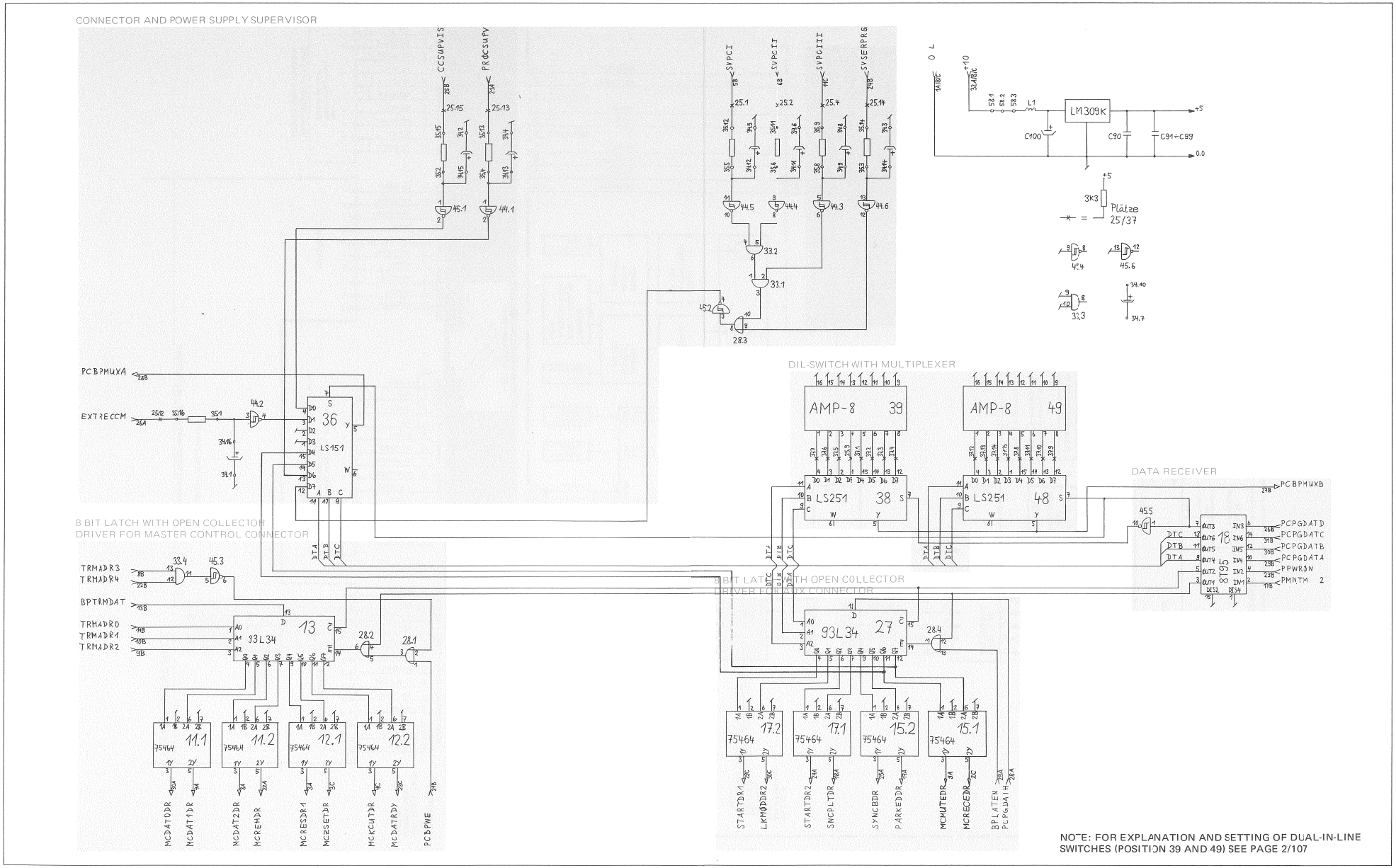

NOTE: FOR EXPLANATION AND SETTING OF DUAL-IN-LINE SWITCHES (POSITION 39 AND 49) SEE PAGE 2/107

CODE CHANNEL CONTROL IF A800 1.228.489.00

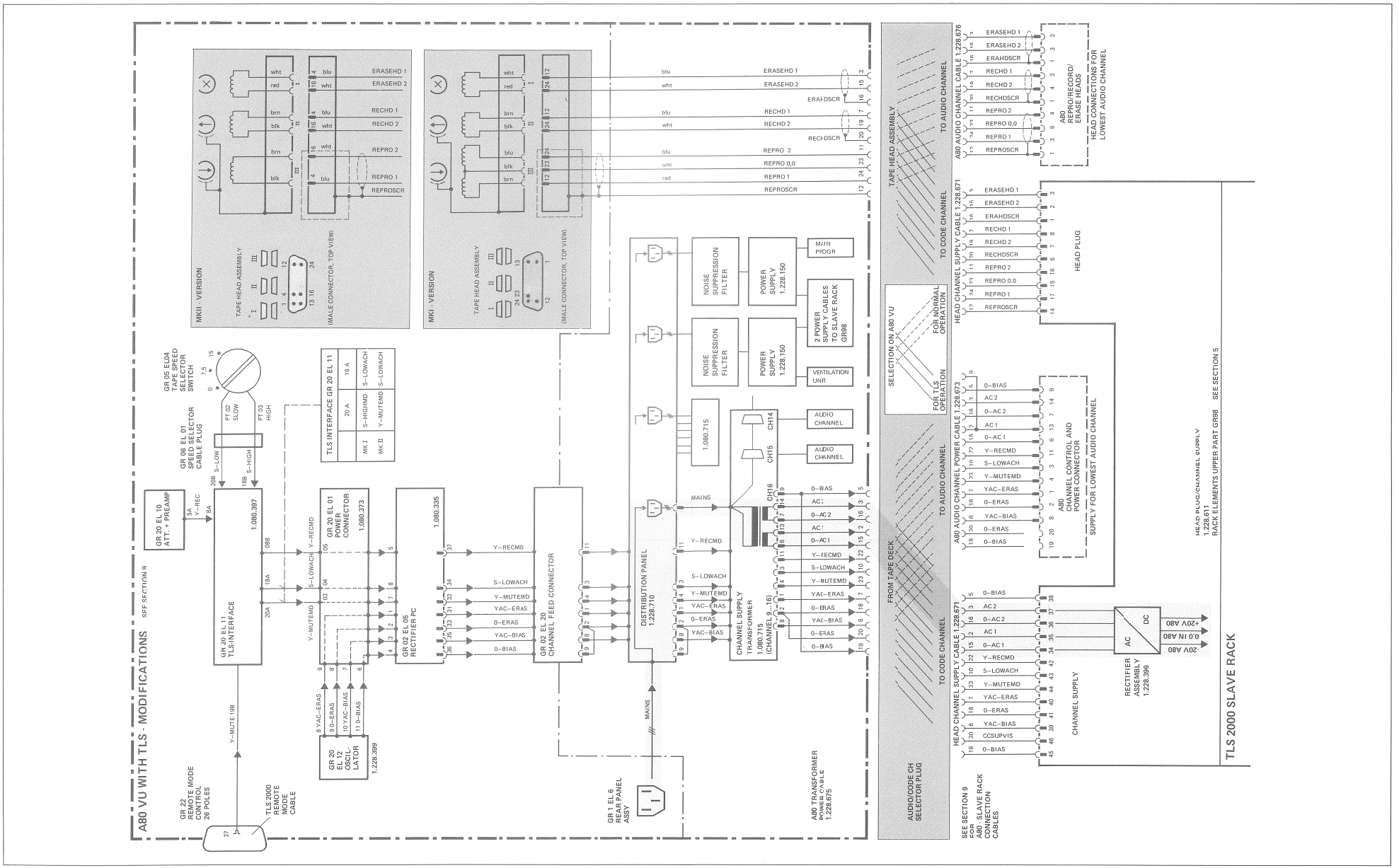

ORGANIZATION OF POWER DISTRIBUTION

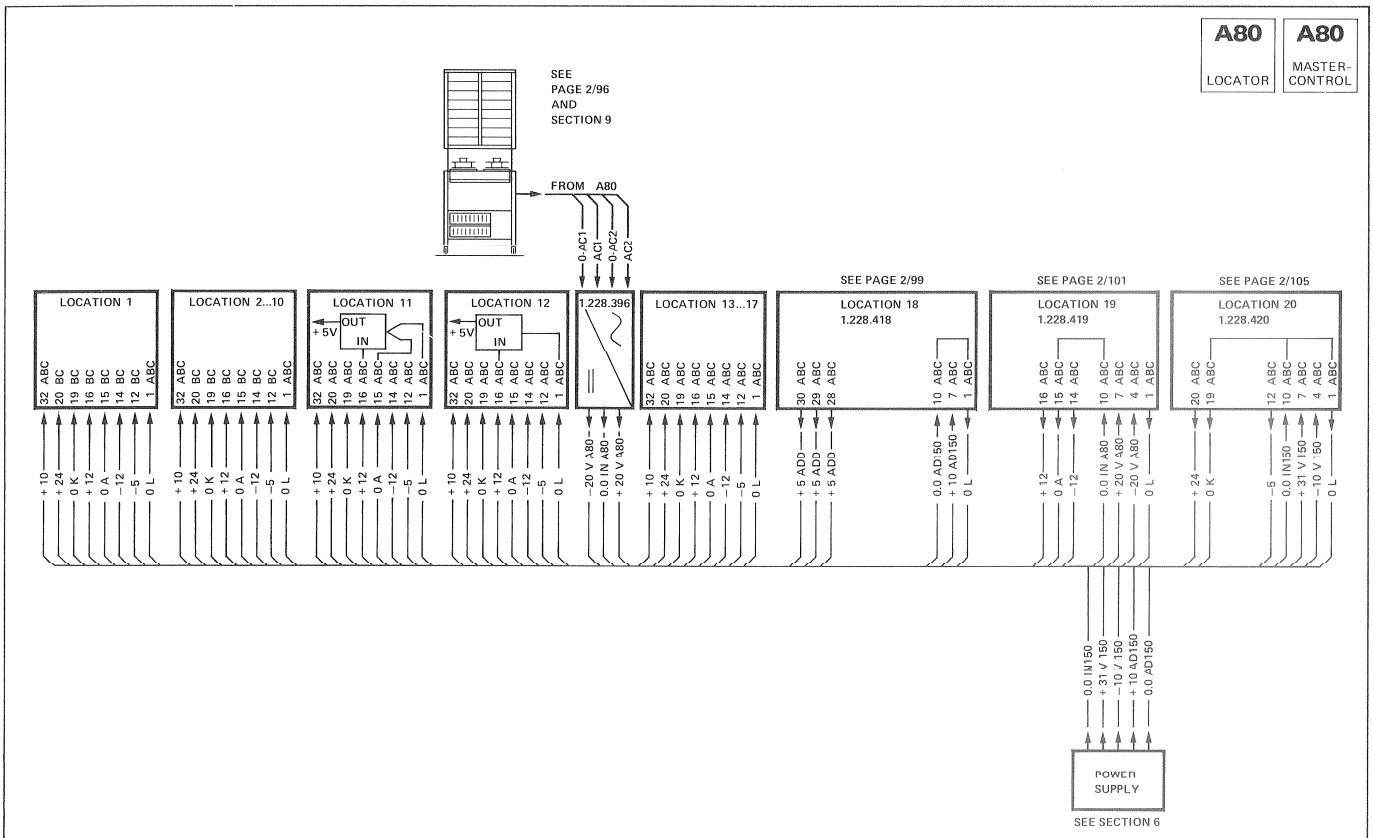

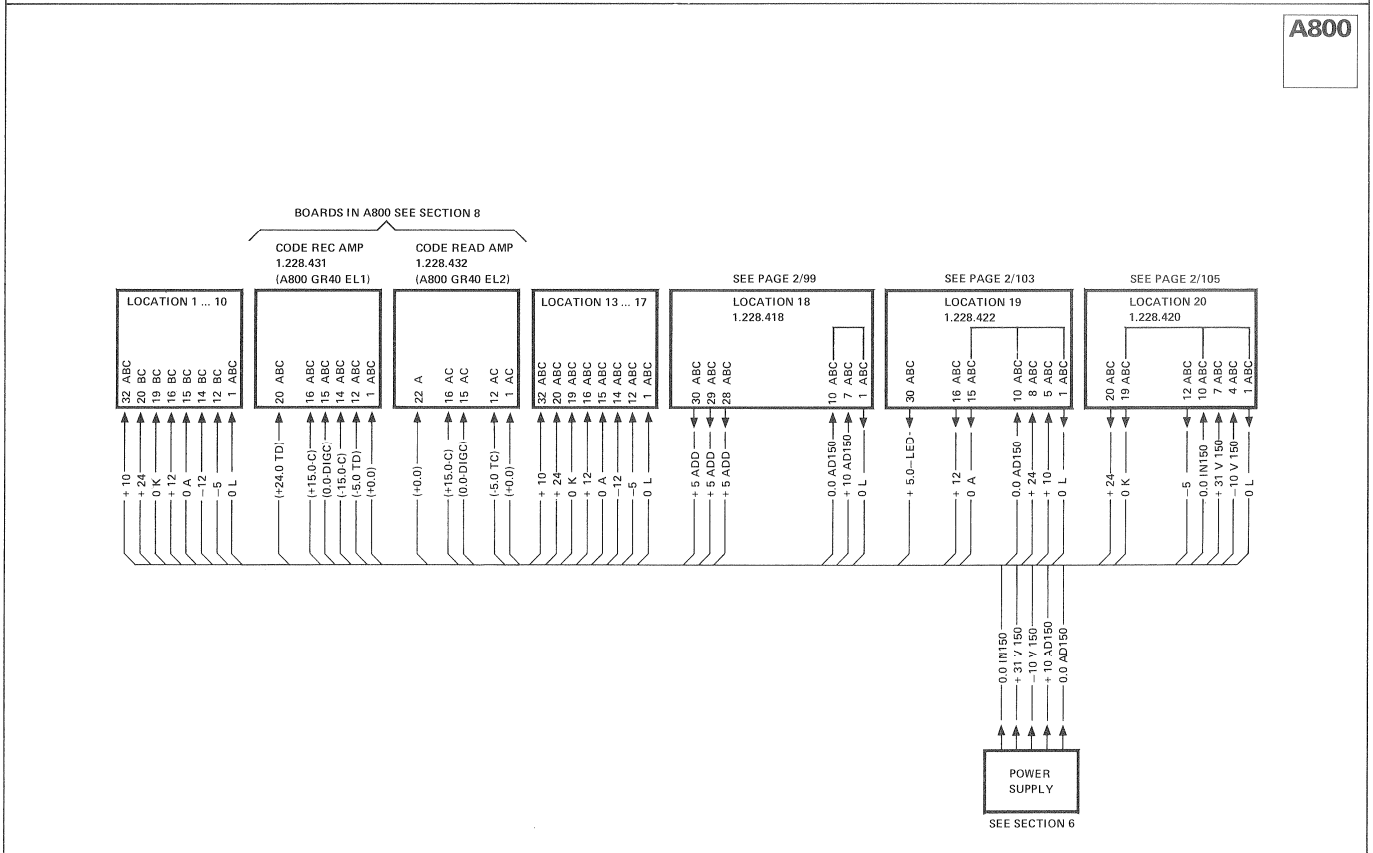

A80 LOCATOR	A80 MASTER-CONTROL	A800	18 SLAVE RACK LOCATION

STABILIZER +5V/+5V 1.228.418-81

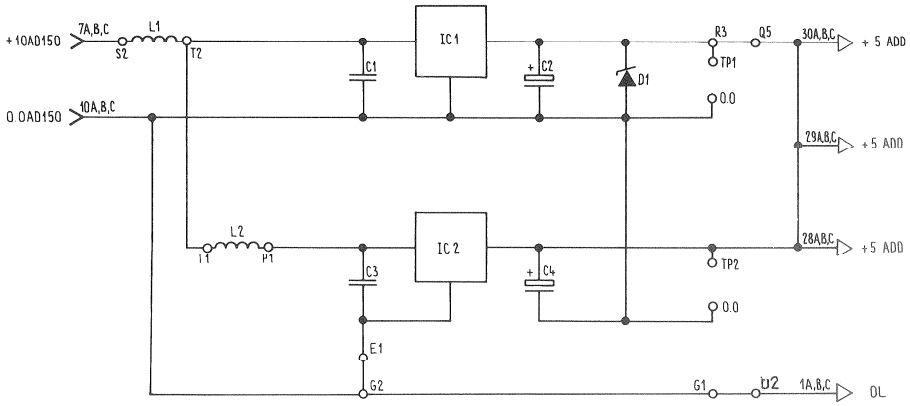

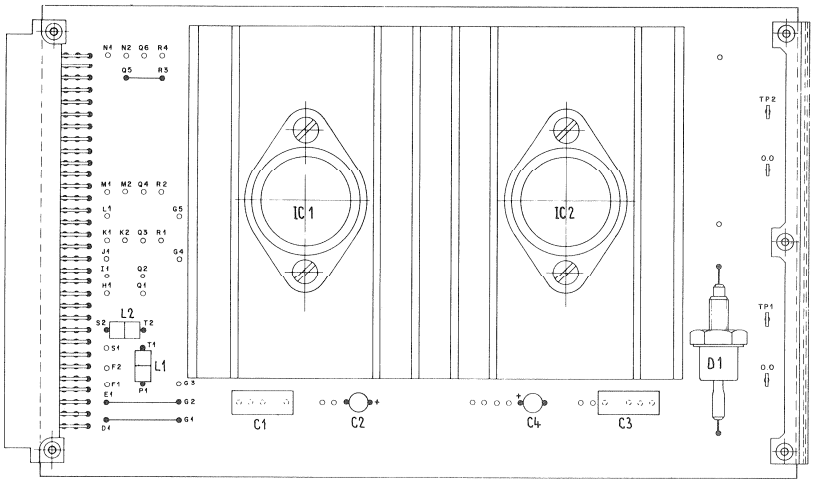

POS NO	PART NO	VALUE	SPECIFICATIONS	EQUIVALENT MFR
C 01	59.31.1224	0,22µ	20% 100V MPETP	
C 02	59.36.5100	10µ	20% 35V- TA	
C 03	59.36.5100	10µ		
C 04	59.31.1224	0,22µ	20% 100V MPETP	
D 01	50.04.1502	6,2V	5% 1,3W Z	
IC 01	50.05.0133	LM309K	TO3 5V LIN	MLM309K
IC 02	50.05.0133	LM309K		
L 01	61.99.0124	D3,5x3	2x Ferritperle	
L 02	61.99.0124	D3,5x3		
S 01	54.01.0358	3 x 32	Leiste Burndy	
TP1-4	29.21.6002		4x Lötöse	

	IND	DATE	NAME
	④③②①○	17.5.78	Spe/gv

A80 LOCATOR | A80 MASTER-CONTROL | A800 | 18 SLAVE RACK LOCATION

STABILIZER +5V/+5V 1.228.418-00

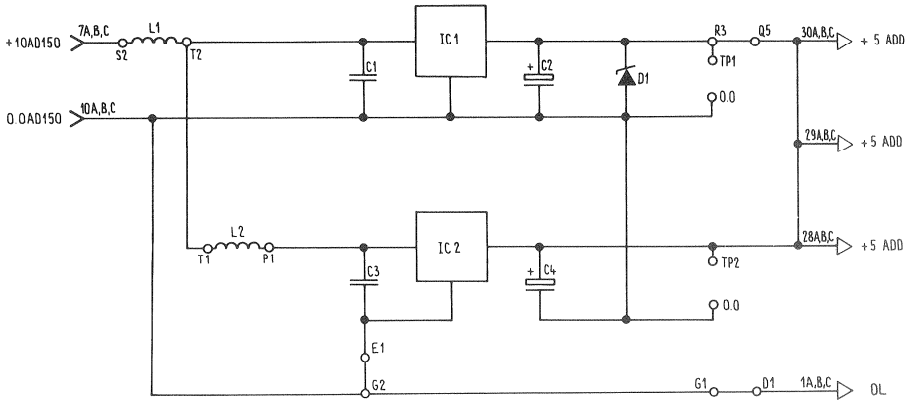

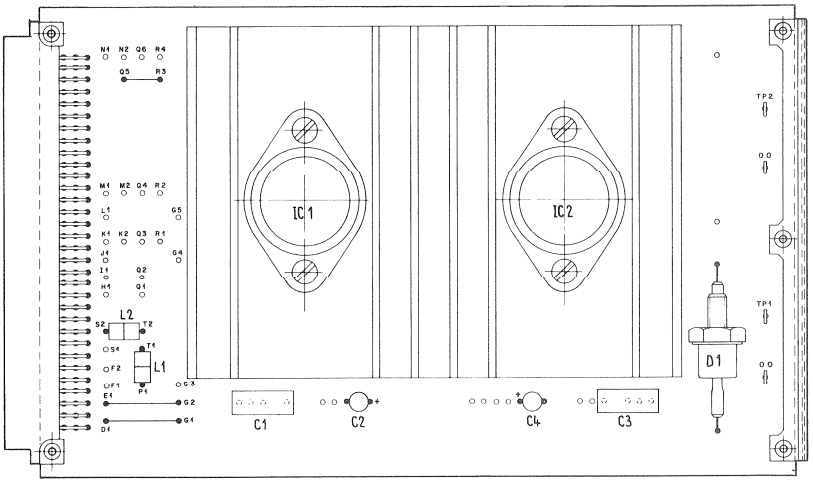

POS NO	PART NO	VALUE	SPECIFICATIONS	EQUIVALENT MFR
C 01	59.31.1224	0,22µ	20% 100V MPETP	
C 02	59.36.5100	10µ	20% 35V- TA	
C 03	59.36.5100	10µ		
C 04	59.31.1224	0,22µ	20% 100V MPETP	
D 01	50.04.1502	6,2V	5% 1,3W Z	
IC 01	50.05.0133	LM309K	TO3 5V LIN	MLM309K
IC 02	50.05.0133	LM309K		
L 01	61.99.0124	D3,5x3	2x Ferritperle	
L 02	61.99.0124	D3,5x3		
S 01	54.01.0358	3 x 32	Leiste Burndy	
TP1-4	29.21.6002		4x Lötöse	

IND	DATE	NAME
④ ③ ② ① ○	17.5.78	Spe/gv

A80 LOCATOR | A80 MASTER-CONTROL | 19 SLAVE RACK LOCATION

STABILIZER –12V/+12V 1.228.419-81

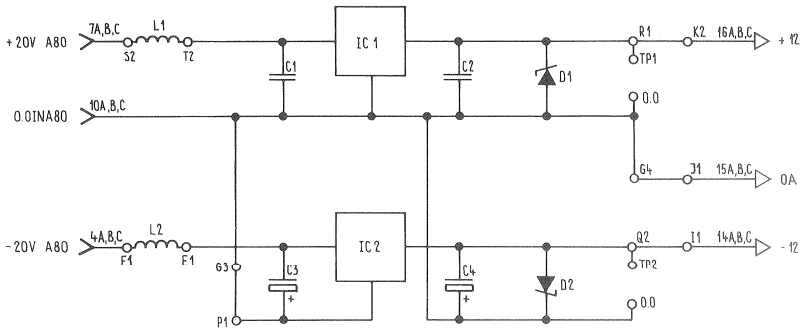

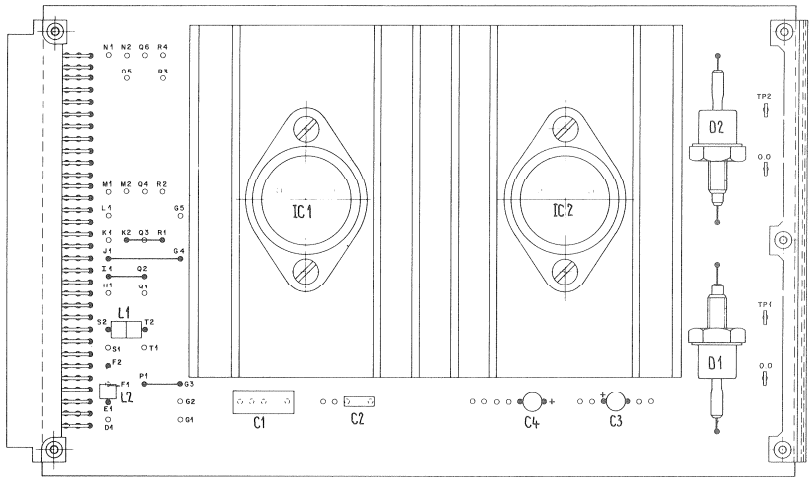

POS NO	PART NO	VALUE	SPECIFICATIONS	EQUIVALENT MFR
C 01	59.31.1224	0,22µ	20% 100V MPETP	
C 02	59.99.0205	68n	-20% 63V KER	
C 03	59.30.8109	1,0µ	-20% 50V TA	
C 04	59.36.4229	2,2µ	20% 25V- TA	
D 01	50.04.1508	15 V	ZX15 5% 1,3W Z	
D 02	50.04.1508	15 V		
IC 01	50.05.0213	VA7812CKA	12V	VA7812KA
IC 02	50.05.0225	VA7812CK	-12V	
L 01	61.99.0124	D3,5 x 3	2x Ferritperle	
L 02	61.99.0124	D3,5 x 3		
S 01	54.01.0358	3 x 32	Leiste Burndy	
TP1-4	29.21.6002		4x Lötöse	

IND	DATE	NAME
④ ③ ② ① ○	17.5.78	Spe/gv

A80 LOCATOR | A80 MASTER-CONTROL | 19 SLAVE RACK LOCATION

STABILIZER –12V/+12V 1.228.419-00

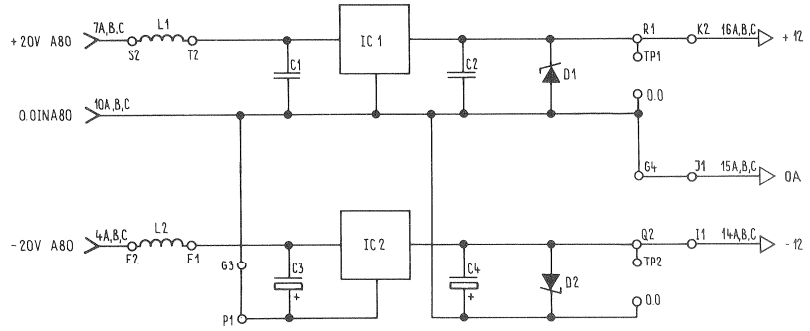

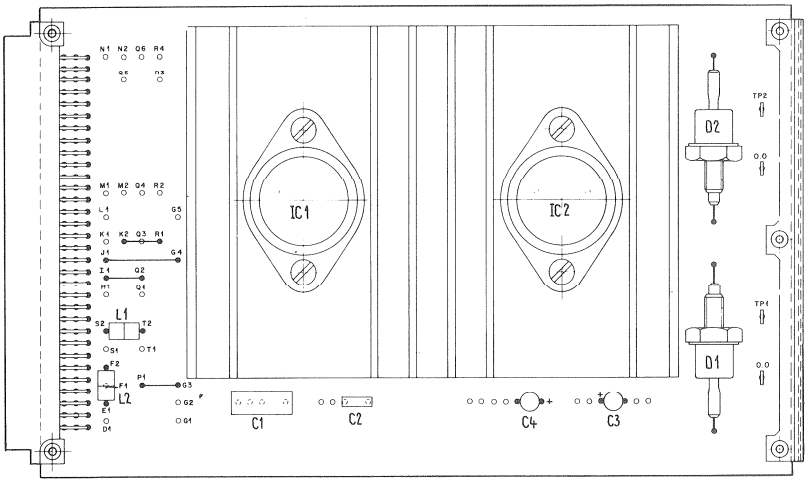

POS NO	PART NO	VALUE	SPECIFICATIONS	EQUIVALENT MFR
C 01	59.31.1224	0,22µ	20% 100V MPETP	
C 02	59.99.0205	68n	-20% 63V KER	
C 03	59.30.8109	1,0µ	-20% 50V TA	
C 04	59.36.4229	2,2µ	20% 25V- TA	
D 01	50.04.1508	15 V	ZX15 5% 1,3W Z	
D 02	50.04.1508	15 V		
IC 01	50.05.0213	VA7812CKA	12V	VA7812KA
IC 02	50.05.0225	VA7812CK	-12V	
L 01	61.99.0124	D3,5 x 3	2x Ferritperle	
L 02	61.99.0124	D3,5 x 3		
S 01	54.01.0358	3 x 32	Leiste Burndy	
TP1-4	29.21.6002		4x Lötöse	

IND	DATE	NAME
④ ③ ② ① ○	17.5.78	Spe/gv

SLAVE RACK LOCATION 19 A800

STABILIZER +5V/+12V 1.228.422-00

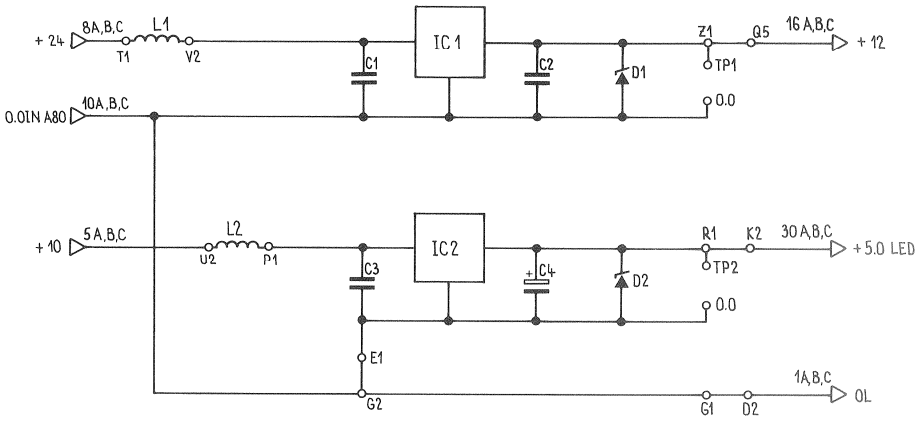

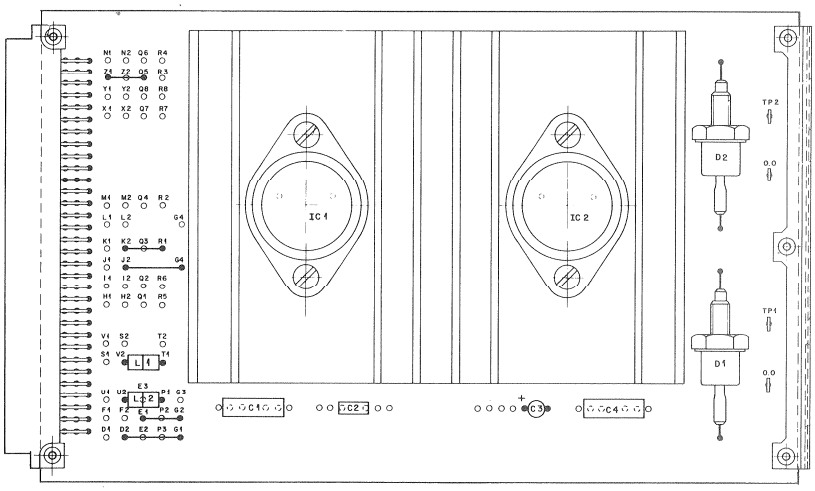

POS NO	PART NO	VALUE	SPECIFICATIONS	EQUIVALENT MFR
C 01	59.31.1124	0,22 µ	20% 100V MPETP	
C 02	59.99.0205	68 n	-20% 63V KER	
C 03	59.36.5100	10 µ	20% 35V- TA	
C 04	59.31.1124	0,22 µ	20% 100V MPETP	
D 01	50.04.1508	15 V	ZX 15 5% 1,3W Z	
D 02	50.04.1502	6,2 V	6,2 V 5% 1,3W Z	
IC 01	50.05.0213	VA7812CKA	12V	VA7812KA
IC 02	50.05.0133	LM 309 K	TO3 5V LIN	MLM 309 K
L 01	61.99.0124	D 3,5 x 3	2x Ferritperle	
L 02	61.99.0124	D 3,5 x 3	2x Ferritperle	
S 01	54.01.0358	3 x 32	Leiste Burndy	
TP1-4	29.21.6002		4x Lötöse	

IND	DATE	NAME
④ ③ ② ① ○	17.5.78	Spe/gv

A80 LOCATOR | A80 MASTER-CONTROL | A800 | SLAVE RACK LOCATION 20

STABILIZER –5.2V/+24V 1.228.420-81

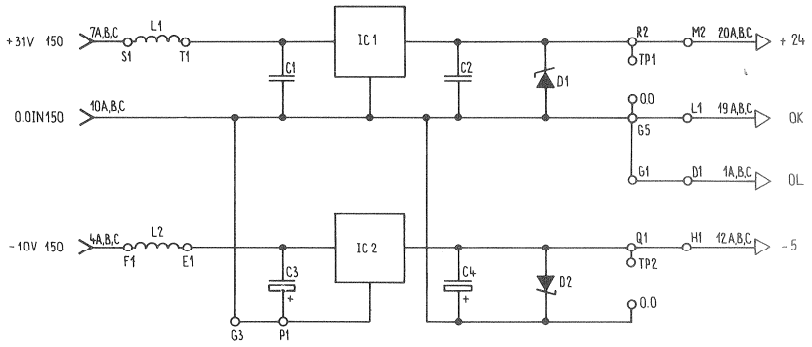

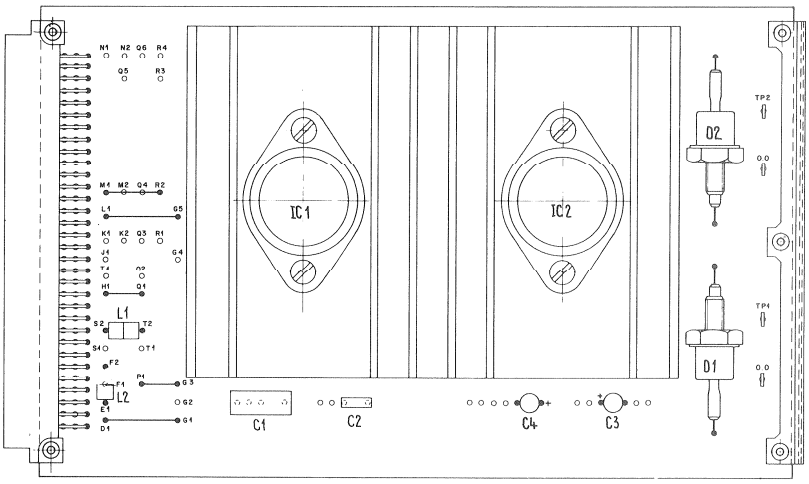

POS NO	PART NO	VALUE	SPECIFICATIONS	EQUIVALENT MFR
C 01	59.31.1224	0,22µ	20% 100V MPETP	
C 02	59.99.0205	68n	-20% 63V KER	
C 03	59.30.8109	1,0µ	-20% 50V TA	
C 04	59.36.4229	2,2µ	20% 25V- TA	
D 01	50.04.1509	27 V	ZX27 5% 1,3W Z	
D 02	50.04.1502	6,2V	5% 1,3W Z	
IC 01	50.05.0175	LM340-24K	24V LIN	
IC 02	50.05.0212	LM320-5,2	-5,2V	
L 01	61.99.0124	D3,5 x 3	2x Ferritperle	
L 02	61.99.0124	D3,5 x 3	2x Ferritperle	
S 01	54.01.0358	3 x 32	Leiste Burndy	
TP1-4	29.21.6002		4x Lötöse	

IND	DATE	NAME
④③②①○	17.5.78	Spe/gv

A80 LOCATOR | A80 MASTER-CONTROL | A800 | 20 SLAVE RACK LOCATION

STABILIZER –5.2V/+24V 1.228.420-00

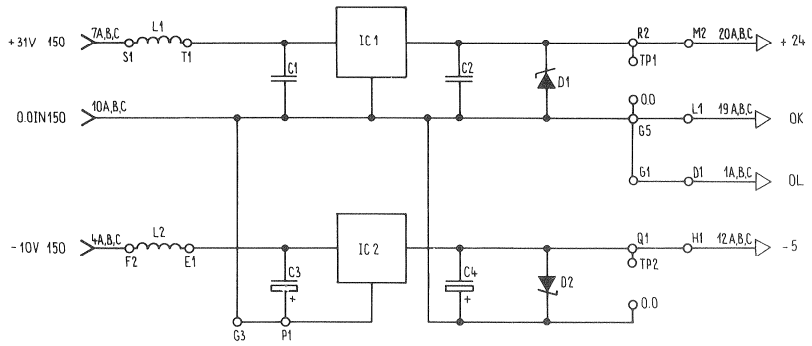

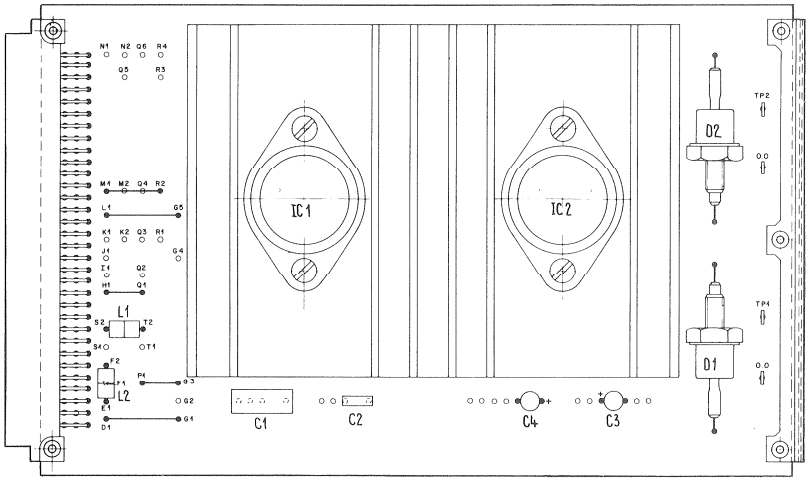

POS NO	PART NO	VALUE	SPECIFICATIONS	EQUIVALENT MFR
C 01	59.31.1224	0,22µ	20% 100V MPETP	
C 02	59.99.0205	68n	-20% 63V KER	
C 03	59.30.8109	1,0µ	-20% 50V TA	
C 04	59.36.4229	2,2µ	20% 25V- TA	
D 01	50.04.1509	27 V	ZX27 5% 1,3W Z	
D 02	50.04.1502	6,2V	5% 1,3W Z	
IC 01	50.05.0175	LM340-24K	24V LIN	
IC 02	50.05.0212	LM320-5,2	-5,2V	
L 01	61.99.0124	D3,5 x 3	2x Ferritperle	
L 02	61.99.0124	D3,5 x 3	2x Ferritperle	
S 01	54.01.0358	3 x 32	Leiste Burndy	
TP1-4	29.21.6002		4x Lötöse	

IND	DATE	NAME
④ ③ ② ① ○	17.5.78	Spe/gv

ERKLÄRUNG UND EINSTELLUNG DER JUMPER UND DUAL-IN-LINE (DIL)-SCHALTER

Im Tape Lock System 2000 können einige der verwendeten Schaltungen auf einfache Art den individuellen Einsatzwünschen, Maschinentypen oder -parametern angepasst werden.
Es handelt sich dabei einerseits um Miniaturschalter mit IC-Abmessungen und andererseits um steckbare Drahtbrücken (Jumpers) auf den Prints des Slave-Racks.

Übersicht
Schalter oder Jumper stehen auf Karten der folgenden Karten-Plätze zur Verfügung:

1. SLAVE RACK PLATZ 1 → **Seite 2/109**
External Frequency Control/
Time Code Generator
1.228.488

Jumper auf den Plätzen 11, 12, 22, 27, 32, 35, 36, 37, 43, 53

2. SLAVE RACK PLATZ 2 → **Seite 2/109**
Capstan Motor Control MK II
1.228.484

Jumper auf den Plätzen 31, 41, 51, 61

3. SLAVE RACK PLATZ 5 → **Seite 2/109**
Arithmetic Control B
1.228.405

Schalter auf Platz 64

4. SLAVE RACK PLATZ 14 → **Seite 2/111**
Arithmetic
1.228.478

Schalter auf den Plätzen 19, 64

5. SLAVE RACK PLATZ 17 → **Seite 2/113**
Basic Programmer Interface (A80)
1.228.417
Code Channel Control Interface (A800)
1.228.489

Schalter bei beiden Karten auf den Plätzen 39, 49

Wichtig:

Damit für die TLS-Systeme zur A80 nicht zwei verschiedene Software-Versionen unterhalten werden müssen (A80 Standard, A80 Delay), wurde eine kombinierte Software erstellt, die für alle A80 Versionen tauglich ist. Aus diesem Grund haben die folgenden DIL-Schalter eine neue Bedeutung:

- Arithmetic 1.228.478, IC-Platz 19/Schalter 4
- Arithmetic control B 1.228.405, IC-Platz 64/ganzer Schalter

EXPLANATION AND SETTING OF JUMPERS DUAL-IN-LINE (DIL) SWITCHES

Some of the circuits used in the Tape Lock System 2000 can be adapted in a simple manner to match individual application requirements, machine-types or -parameters.
This is accomplished with miniature switches of IC dimensions and with pluggable jumpers on the prints of the slave rack.

Summary
Prints equipped with switches or jumpers are mounted in the following print locations:

1. SLAVE RACK LOCATION 1 → **Page 2/109**
External frequency control/
Time code generator
1.228.488

Jumpers in locations 11, 12, 22, 27, 32, 35, 36, 37, 43, 53

2. SLAVE RACK LOCATION 2 → **Page 2/109**
Capstan motor control MK II
1.228.484

Jumpers in locations 31, 41, 51, 61

3. SLAVE RACK LOCATION 5 → **Page 2/109**
Arithmetic control B
1.228.405

Switch in location 64

4. SLAVE RACK LOCATION 14 → **Page 2/111**
Arithmetic
1.228.478

Switches in locations 19, 64

5. SLAVE RACK LOCATION 17 → **Page 2/113**
Basic programmer interface (A80)
1.228.417
Code channel control interface (A800)
1.228.489

Switches on both cards in locations 39, 49

Important:

To avoid having to maintain two different software versions for the A80 TLS systems (A80 Standard, A80 Delay), a combined software has been developed which is suitable for all A80 versions. To accomplish this, the function of the following DIL switches have had to be changed:

- Arithmetic 1.228.478, IC location 19/switch 4
- Arithmetic control B 1.228.405, IC location 64/switch array

Die Schalter werden auf den Wire-Wrap-Karten wie IC's eingesteckt und erhalten so die entsprechende IC-Platznummer.

Schalter
Es werden Kombinationen (Arrays) von 8 Schaltern in einem Gehäuse eingesetzt. Sie werden Dual-In-Line (DIL) Switch Arrays genannt und tragen auf dem Belegungsplan die Bezeichnung SZ.

Die Schalter sind numeriert und mit ON/OFF bezeichnet. Die nach unten gedrückte Schalterhälfte bestimmt die Stellung.

Sollen mit der Schalterkombination binäre Zahlenwerte eingegeben werden, entspricht:
0 = Schalter in Stellung EIN/ON
1 = Schalter in Stellung AUS/OFF

On wire wrap cards, switches are mounted like ICs and therefore are assigned the corresponding IC location number.

Switches
Arrays of 8 switches are mounted in a single housing. These consist of so-called Dual-In-Line (DIL) arrays and are identified on the PCB layout with the symbol SZ.

The switches are numbered and labelled as ON/OFF. The status is determined by that half of the switch which is pushed down.

When these switches are used for entering binary values, the following conventions apply:
0 = Switch in ON position
1 = Switch in OFF position

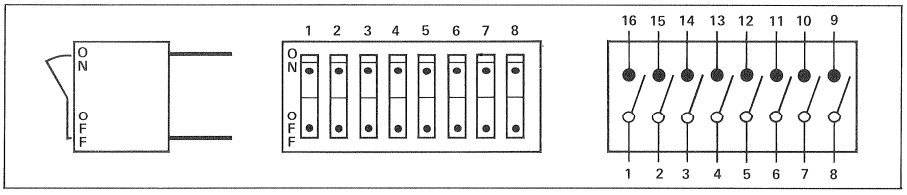

Fig. 2
Die Schalter in Stellung AUS

Fig. 2
Switches in OFF position

Der Schalter mit der kleinsten Nummer innerhalb einer zusammengehörenden Gruppe entspricht dem höchstwertigen Schalter oder Bit.

Beispiel:
Mit den Schaltern 5 bis 8 eines Arrays soll eine vierstellige binäre Zahl 0111 (dezimal 7) eingestellt werden.

Die höchstwertige Stelle einer binären Zahl ist die zuerst geschriebene, in diesem Fall = 0. Am Schalter 5 muss also die ON-Seite des Kipphebels gedrückt werden.

Die Schalter 6, 7, 8 müssen entsprechend auf der OFF-Seite betätigt werden. Die Reihenfolge lautet nun X-X-X-X-ON-OFF-OFF-OFF.

Jumper
Die Jumper bestehen aus einer stabilen Drahtbrücke, welche in die Anschlüsse 1 und 16 eines IC-Platzes gesteckt wird. Obwohl der Platz meistens durch einen IC mit 14 Anschlüssen belegt ist, erhält der Jumper dieselbe Platznummer.
Ist er eingesetzt, entspricht das der Position = ON. Fehlt er, so bedeutet das OFF.
Im Belegungsplan sind diese Jumper-Möglichkeiten durch unterbrochene Linien zwischen den IC-Anschlüssen 1 und 16 gekennzeichnet.
Ein durchgehend ausgezogener Jumper bedeutet eine fixe, vom Hersteller vorgenommene Verbindung. Sie darf nicht entfernt werden.

Within a correlated group, the switch with the lowest number corresponds to the most significant switch or bit (MSB).

Example
Using switches 5 through 8 in an array, a four-digit binary number 0111 (= decimal 7) is to be entered.

The most significant position of a binary number is entered first, in this case = 0. Therefore, the ON section of the toggle switch 5 must be depressed.

Correspondingly, the OFF side of switches 6, 7, and 8 must be actuated. The resulting sequence is X-X-X-X-ON-OFF-OFF-OFF.

Jumpers
The jumpers consist of a stable bridging wire which is plugged into terminals 1 and 16 of an IC location. Although this location is normally occupied by an IC with 14 terminals, the jumper is assigned the same location number.
For a given position, a plugged in jumper signifies ON while its absence signifies OFF.
In the PCB layout, the jumper facilities are indicated with a dashed line between IC terminals 1 and 16.
A jumper represented by a solid line signifies a permanent connection made by the manufacturer which may not be removed.

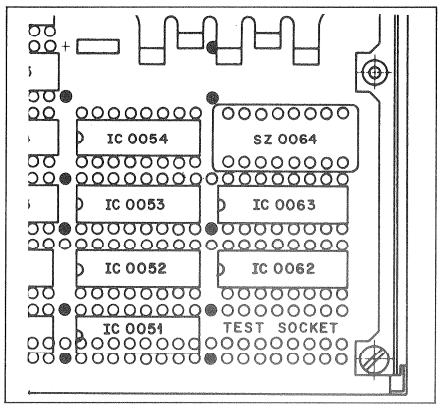

Fig. 1
Schalternumerierung durch IC-Platznummer (64)
Switch numbering by IC location (64)

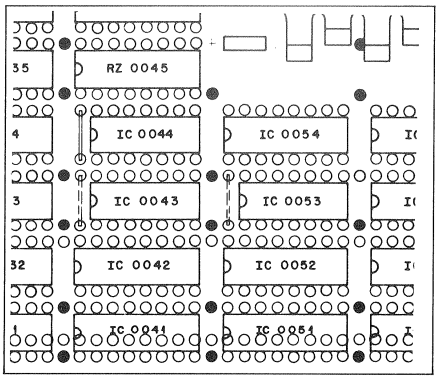

Fig. 3
Jumpers auf den Plätzen 43 und 53, fixe Verbindung auf Platz 44
Jumpers in locations 43 and 53, fixed connection in location 54.

1. SLAVE RACK PLÄTZ 1
External Frequency Control/ Time Code Generator 1.228.488

1.1
IC-Platz 11 oder 12, Jumper

Es darf nur ein Jumper eingesetzt sein!
Diese bestimmen, ob bei GEN = MAST der interne oder externe Generator an den Eingang geschaltet wird.

Jumper auf IC Platz 11:
Externer Generator ist durchgeschaltet.

Jumper auf IC Platz 12:
Interner Generator ist durchgeschaltet.

1.2
IC-Platz 22 oder 32, Jumper

Es darf nur ein Jumper eingesetzt sein!

Jumper auf IC-Platz 22:
Generator läuft ab externem Takt.
(Reference Frequency GR 97 EL 14.)
Es müssen die gleichen Frequenzen angelegt werden wie für den Pilot-Betrieb:

Code Typ				
24	25	29,97	30	Frames/sec
7680	8000	9590,4	9600	Hz

Frequenz für nominelle Bandgeschwindigkeit

Jumper auf IC-Platz 32:
Generator läuft ab internem Quarz.

1.3
IC-Platz 27 oder 37, Jumper

Es darf nur ein Jumper eingesetzt sein!
Er bestimmt die Quelle für den Rückstelleingang (Clear) des Generator-Bitcounters.
Jumper auf IC-Platz 27:
Der Bitcounter kann von einem externen Signal gesteuert werden.
Jumper auf IC-Platz 37:
Der Bitcounter wird vom TLS-Programm gesteuert.

1.4
IC-Platz 35 und 36, Jumper

Diese bestimmen den STOP MODE des Generators.

35	36	STOP MODE
–	–	Frames laufen
–	x	Frames stoppen, Bit laufen
x	–	Bit stoppen
x	x	Bit stoppen

1. SLAVE RACK LOCATION 1
External frequency control/ time code generator 1.228.488

1.1
IC location 11 or 12, jumper

Only one jumper may be plugged in!
This one determines whether the internal or external generator is to be connected to the input when GEN=MAST.

Jumper in IC location 11:
External generator is interconnected.

Jumper in IC location 12:
Internal generator is interconnected.

1.2
IC location 22 or 32, jumper

Only one jumper may be plugged in!

Jumper in IC location 22:
Generator runs with external clock signal.
(Reference frequency GR 97 EL 14).
The same frequencies must be applied as for the pilot operation:

Code Type				
24	25	29,97	30	Frames/sec
7680	8000	9590,4	9600	Hz

Frequency for nominal tape speed

Jumper in IC location 32:
Generator runs with internal quartz clock.

1.3
IC location 27 or 37, jumper

Only one jumper may be plugged in!
Defines the clear input source for the generator bit counter.
Jumper in IC location 27:
The bit counter can be controlled with an external signal.
Jumper in IC location 37:
The bit counter is controlled by the TLS program.

1.4
IC locations 35 and 36, jumper

They select the STOP MODE of the generator:

35	36	STOP MODE
–	–	frames running
–	x	stop frames bits running
x	–	stop bits
x	x	stop bits

1.5
IC-Platz 43 und 53, Jumper

Sie dienen zur Code-Typ-Einstellung des SMPTE Code-Generators. Kein Jumper (leer) entspricht –, Jumper eingesetzt entspricht x.

43	53	Code Typ
–	–	30 Frames/sec
–	x	30 Drop Frame
x	–	25 Frames/sec
x	x	24 Frames/sec

1.5
IC locations 43 and 53, jumper

For entering the code type of the SMPTE code generator.
No jumper (vacant) corresponds to –, jumper mounted corresponds to x.

43	53	Code Type
–	–	30 frames/sec
–	x	30 Drop frame
x	–	25 frames/sec
x	x	24 frames/sec

2. SLAVE RACK PLATZ 2
Capstan Motor Control MK II 1.228.484

2.1
IC-Plätze 31, 41, 51 und 61, Jumpers

Diese Jumper bestimmen die Genauigkeit der SYNC B-Aussage. Das SYNC B-Fenster kann damit in 80 µs-Schritten eingestellt werden. Die Anzahl dieser Schritte wird durch eine 4-stellige Binärzahl dargestellt.
Höchstwertige Binärstelle ist: Jumper 31 (MSB), niedrigste Jumper 61 (LSB)
Ein gesteckter Jumper bedeutet binär = 0, ein fehlender binär = 1.

Standardeinstellung:
Binär 1100 = 12
12 x 80 µs = 960 µs
Jumper auf den IC-Plätzen 51 und 61.

2. SLAVE RACK LOCATION 2
Capstan motor control MK II 1.228.484

2.1
IC locations 31, 41, 51 and 61, jumpers

These jumpers determine the accuracy of the SYNC B decision. It allows adjustment of the SYNC B window in increments of 80 µs. The number of increments is represented by a 4-bit binary number.
Jumper 31 represents the most significant bit location (MSB), while the least significant bit (LSB) is represented by jumper 61.
A mounted jumper is equivalent to a binary 0, the absence of a jumper is interpreted as binary 1.

Standard factory setting:
Binary 1100 = 12
12 x 80 µs = 960 µs
Jumpers in IC locations 51 and 61.

3. SLAVE RACK PLATZ 5
Arithmetic Control B 1.228.405

3.1
IC-Platz 64, DIL-Schalter Array

Mit den 8 Schaltern kann der zeitliche Vorhalt des Edit-Impulses in 1 ms-Schritten eingestellt werden. Man kann also den ENTRY- resp. EXIT POINT vorverschieben.

Bei der A800-Version sind diese Schalter nicht aktiv.

Einstellung gemäss Auslieferungsprotokoll.

3. SLAVE RACK LOCATION 5
Arithmetic control B 1.228.405

3.1
IC location 64, DIL switch array

With these 8 switches, the lockup period of the edit pulse can be adjusted in increments of 1 ms, i.e. the ENTRY or the EXIT point can be advanced.

In the A800 version, these switches are disabled.

Factory switch settings according to test report supplied with equipment.

A80-Rehearse-Version
Die Funktion der acht Schalter ist unterschiedlich, je nach dem, ob die Delay-Funktion vorgewählt wurde (Arithmetic 1.228.478. IC-Platz 19/Schalter 4)

Delay-Schalter OFF:
Wie oben beschrieben

Einstellung: Binär, in Schritten von 1msec
Bereich: 0 bis 255msec

Die Vorhaltezeit ist unabhängig von der Bandgeschwindigkeit.

Delay-Schalter ON:
Ist die Funktion Rehearse aktiv, leuchtet die Taste Rehearse auf der Programmiereinheit.
Die Vorhaltezeit für den Entry- und Exitpoint ist immer 10msec.

Ist die Funktion Rehearse nicht aktiv (Aufnahme), wird die Vorhaltezeit gemäss den nachstehenden Formeln berechnet:

$$\Delta T \text{ ENTRY} = \frac{334 + A}{B} + 55 + C \text{ [ms]}$$

$$\Delta T \text{ EXIT} = \frac{346 + A}{B} + 87 + D \text{ [ms]}$$

Die Konstante C wird mit den Schaltern 1, 2 und 3 eingestellt.
Einstellung: Binär, in Schritter von 2msec
Schalter 1 hat die höchste, Schalter 3 die niedrigste Wertung.
Bereich: 0 bis 14msec

Die Konstante D wird mit den Schaltern 4, 5 und 6 eingestellt.
Einstellung: Binär, in Schritter von 2msec
Schalter 4 hat die höchste, Schalter 6 die niedrigste Wertung.
Bereich: 0 bis 14msec

Mit den beiden Schaltern 7 und 8 kann die Konstante A binär in 2ms Stufen eingestellt werden.
Schalter 7 ist die höchstwertige Stelle.
Einstellbereich 0 bis 6ms.

Die Konstante B ist geschwindigkeitsabhängig und wird durch das Programm, gemäss folgender Tabelle, bestimmt:

V	B
7,5 Zoll/s	1
15 Zoll/s	2
30 Zoll/s	4

A80-rehearse-version
The meaning of the 8 switches is dependent, wheter delay has been selected or not (Arithmetic 1.228.478, IC location 19/switch 4).

Delay switch OFF:
As described above

Adjustment binary, steps of 1msec
Range: 0 to 255msec

The lead time is independent of the tape speed.

Delay switch ON:
If 'rehearse' is active, pushbutton rehearse on programmer does lit.
The lead time for entry and exit point is 10msec fix.

If "rehearse" is off (record mode), the delay is calculated according to the following formulas:

$$\Delta T \text{ entry} = \frac{334 + A}{B} + 55 + C \text{ [msec]}$$

$$\Delta T \text{ exit} = \frac{346 + A}{B} + 87 + D \text{ [msec]}$$

With switch 1, 2 and 3, the constant C can be adjusted.
Adjustment binary in 2msec steps.
Switch 1 has the highest value, switch 3 the lowest.
Range: is between 0 and 14msec.

The switches 4, 5 and 6 affect the constant D, binary, in steps of 2msec.
Switch 4 has the highest value, switch 6 the lowest.
Range: between 0 and 14msec.

The switches 7 and 8 affect the constant A, binary, in 2msec steps. Switch 7 has the higher value.
Range: 0 to 6msec.

The constant B is dependent upon the tape speed, defined by program and selected according to the following table:

V	B
7.5 ips	1
15 ips	2
30 ips	4

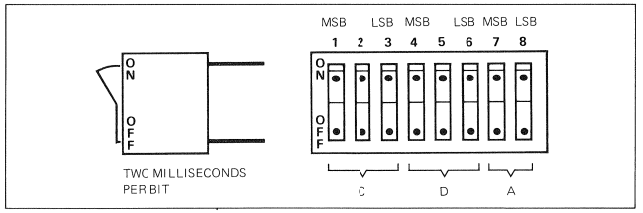

Fig. 4

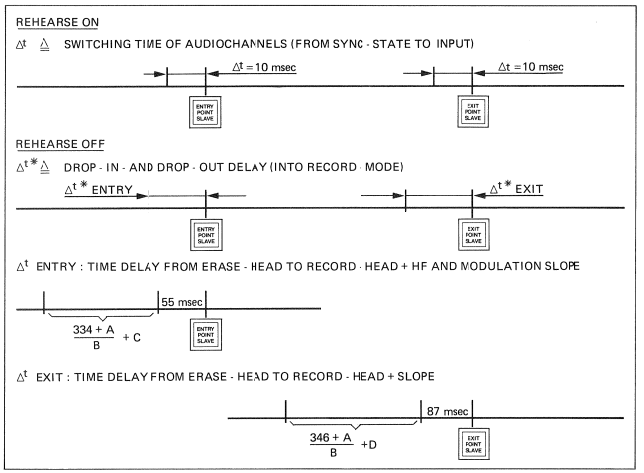

Fig. 5

Beispiel:
Maschinengeschwindigkeit 15 Zoll/s
Schaltereinstellung (1 bis 8)

ON OFF ON | OFF OFF ON | OFF ON
C D A

Konstante A: 10 [bin] : 4ms
Konstante B: : 2ms
Konstante C: 010 [bin] : 4ms
Konstante D: 110 [bin] : 12ms

Daraus ergeben sich folgende Vorhaltezeiten:

$$\Delta T \text{ ENTRY} = \frac{334 + 4}{2} + 55 + 4 = 228\text{ms}$$

$$\Delta T \text{ EXIT} = \frac{346 + 4}{2} + 87 + 12 = 274\text{ms}$$

Example:
tape speed 15 ips switch positions:

on off on | off off on | off on
C D A

consant A: 10 [bin] : 4msec
consant B: : 2msec
consant C: 010 [bin] : 4msec
consant D: 110 [bin] : 12msec

The lead times will be the following:

$$\Delta T \text{ entry} = \frac{334 + 4}{2} + 55 + 4 = 228\text{msec}$$

$$\Delta T \text{ exit} = \frac{346 + 4}{2} + 87 + 12 = 274\text{msec}$$

4. SLAVE RACK PLATZ 14
Arithmetic
1.228.478

4.1
IC-Platz 19, DIL-Schalter Array

Schalter 1, 2 und 3 bestimmen den Maschinentyp.

Schalter 1: Netzfrequenz
ON = 50 Hz Maschine
OFF = 60 Hz Maschine

Schalter 2 und 3: Bandtyp

Schalter 2	Schalter 3	Bandtyp
OFF	OFF	1/4"
ON	OFF	1/2"
OFF	ON	1"
ON	ON	2"

Einstellung gemäss Auslieferungsprotokoll.

Schalter 4, 5, 6, 7 und 8 bestimmen das Parkfenster.
Schalter 4: Abstufung für Schalter 5, 6, 7 und 8 in 5- oder 10-ms-Schritten.
ON = 10 ms-Schritte
OFF = 5 ms-Schritte

Schalter 5, 6, 7 und 8: Anzahl Schritte.
Die Anzahl der Schritte wird als 4-stellige Binärzahl eingestellt.

Beispiel:
Gewünschtes Parkfenster 35 ms
35 ms = 7 x 5 ms,
7 (dezimal) = 0111 (binär)
Schalter 4 = OFF
Schalter 5 bis 8 = ON-OFF-OFF-OFF

Gewünschtes Parkfenster 50 ms
5 (dezimal) = 0101 (binär)
Schalter 4 = ON
Schalter 5 bis 8 = ON-OFF-ON-OFF

Einstellung gemäss Auslieferungsprotokoll.

4.2
IC-Platz 64, DIL-Schalter Array

Schalter 1, 2, 3 und 4 Wickelgeschwindigkeits-Kennlinie.
Die Schalterpositionen stellen eine 4-stellige Binärzahl dar. Sie bestimmen die maximale Wickelgeschwindigkeit in Abhängigkeit der Differenz.
Eine grössere Zahl bewirkt einen schnelleren Einlauf.
Einstellung gemäss Auslieferungsprotokoll.

4. SLAVE RACK LOCATION 14
Arithmetic
1.228.478

4.1
IC location 19, DIL switch array

Switches 1, 2, and 3 define the machine type.

Switch 1: line frequency
ON = 50 Hz machine
OFF = 60 Hz machine

Switches 2 and 3: tape width

Switch 2	Switch 3	Tape Width
OFF	OFF	1/4"
ON	OFF	1/2"
OFF	ON	1"
ON	ON	2"

Factory switch settings according to test report supplied with equipment.

Switches 4, 5, 6, 7 and 8 define the park window.
Switch 4: Defines the increment size for switches 5, 6, 7 and 8 as 5 or 10 ms.
ON = 10 ms increments
OFF = 5 ms increments

Switches 5, 6, 7 and 8: number of increments.
The number of increments is entered as a 4-digit binary number.

Example:
Desired park window 35 ms
35 ms = 7 x 5 ms,
7 (decimal) = 0111 (binary)
Switch 4 = OFF
Switches 5 through 8 = ON-OFF-OFF-OFF

Desired park window 50 ms
5 (decimal) = 0101 (binary)
Switch 4 = ON
Switches 5 through 8 = ON-OFF-ON-OFF

Factory switch settings according to test report supplied with equipment.

4.2
IC location 64, DIL switch array

Switches 1, 2, 3 and 4 winding speed characteristic.
The switch positions represent a 4-digit binary number. They determine the maximum winding speed as a function of the tape time difference.
A higher number results in faster run-in.

Factory switch settings according to test report supplied with equipment.

A80-Rehearse-Version
Schalter 4: Wahl der Software-Funktion
Switch 4: selects software-mode

ON = A80 Delay (Rehearse)
OFF = A80 Standard

Die Abstufung für das Parkfenster bleibt konstant 10msec.
The steps for the parking window remain 10msec.

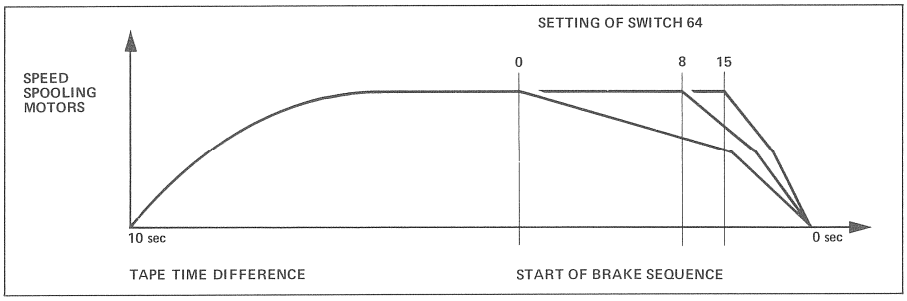

Fig. 7
Beeinflussung der Einlaufkurve

Fig. 7
Influencing the run-in characteristic curve

Schalter 5, 6, 7 und 8 Vorhalt (Lock up periode). Werden der EDIT MODE und der START EDIT MODE in LOCK-Betrieb gefahren, kann der Vorhalt in 1 sec-Schritten verändert werden. Die Anzahl der Schritte wird als 4-stellige Binärzahl eingestellt.

Einstellung gemäss Auslieferungsprotokoll.

Switches 5, 6, 7 and 8 lockup period. When selecting EDIT MODE and START EDIT MODE together with the LOCK mode, the lockup period can be changed in 1 ms increments. The number of increments is entered as a 4-digit binary number.

Factory switch settings according to test report supplied with equipment.

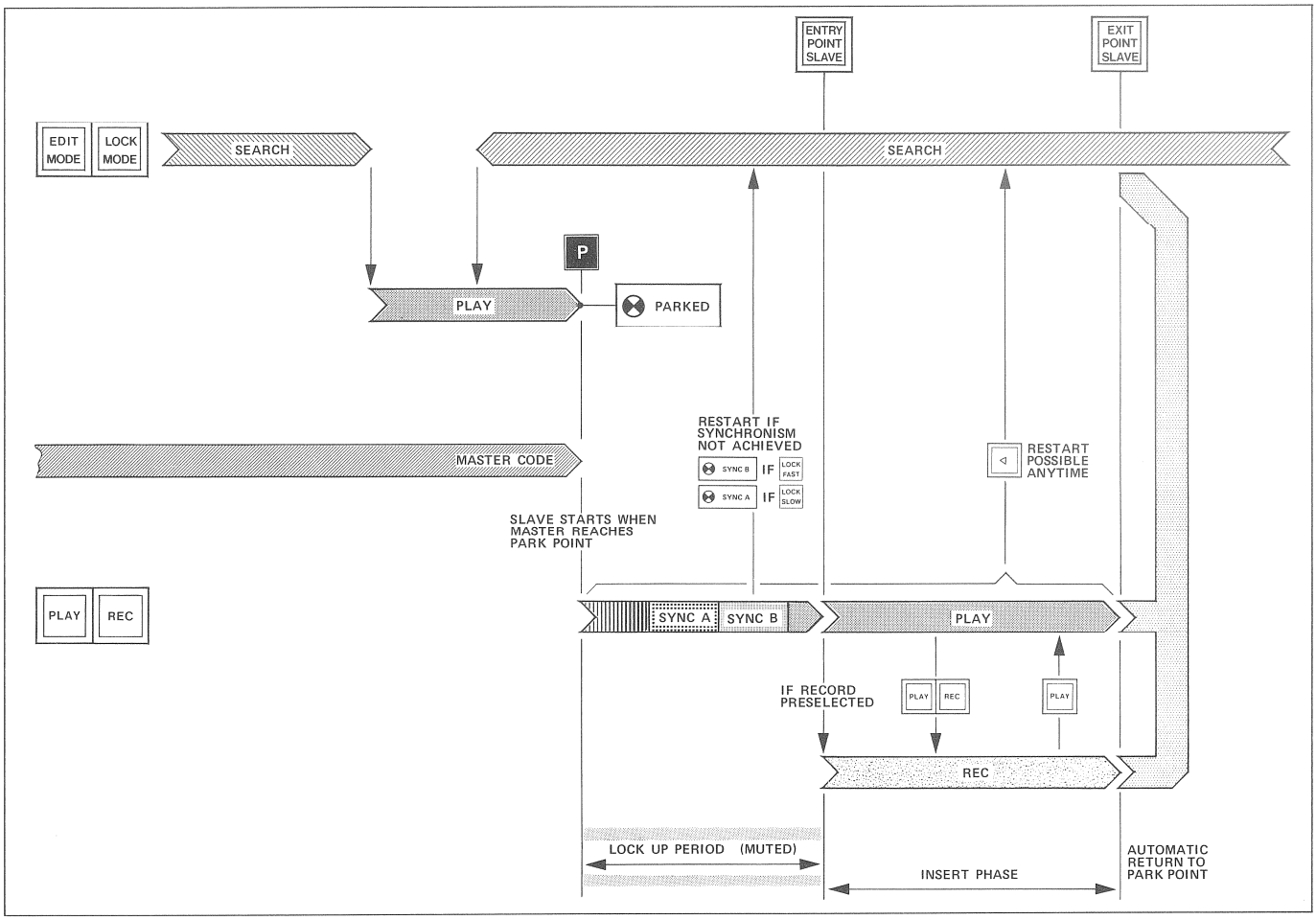

Fig. 8
Beeinflussung der Vorhaltzeit

Fig. 8
Influencing the lockup period

5. SLAVE RACK PLATZ 17
Basic Programmer Interface (A80)
1.228.417
Code Channel Control Interface (A800)
1.228.489

5.1
IC-Platz 39, DIL-Schalter Array

Einstellung des Hochlaufes beim Synchronisationsvorgang für kleinere Geschwindigkeiten = Schalter 1, 2 und 3 sowie für grössere Geschwindigkeiten = Schalter 4, 5 und 6.
Der Hochlauf des Slave wird bis zu einer Synchronisationsdifferenz von 1 Frame ausgeführt. Dies geschieht durch Vor- Rückwärtsschalten der Wickelmotoren.
Hat sich der Slave dem Synchronisationspunkt so genähert, dass die für Wickelmotoren vorgeschriebene Geschwindigkeit kleiner als 1,6 x Playgeschwindigkeit ist, werden die Wickelmotoren im 6,25 Hz-Rhythmus geschaltet; je nach Messergebnis in die entsprechende Richtung.
Da sich nicht alle Wickelmotoren exakt gleich verhalten, kann dieses Umschalten zerhackt (moduliert) werden.
Diese Massnahme erzielt einen ruhigeren Hochlauf.

Schalter	Modulationsart
1 , 4	Ein-/Ausschalten von kleiner Modulation
2 , 5	Ein-/Ausschalten von grosser Modulation (schliesst kleine Modulation mit ein)
3 , 6	Ein-/Ausschalten der Modulation während der Messphase

Schalter 7
bestimmt, ob der Slave (in LOCK MODE mit RECORD) beim Stoppen des Masters auf den letzten Masterwert parkieren oder in STOP gehen soll.

ON = Slave stoppt
OFF = Slave parkiert

Schalter 8 (nur A80 Master Control und A800) bestimmt die Funktion der EDIT-Taste bei Master Control.
Wenn der Master in schnellem Vor- oder Rückspulen ist und die EDIT-Taste gedrückt wird, erfolgt bei

Schalter ON:
Nur das Signal für den Andruckmagneten wird an den Master gegeben
Schalter OFF:
Umschalten von schnellem Vor- oder Rückspulen auf EDIT.

Einstellung gemäss Auslieferungsprotokoll.

5. SLAVE RACK LOCATION 17
Basic programmer interface (A80)
1.228.417
Code channel control interface (A800)
1.228.489

5.1
IC location 39, DIL switch array

Adjustment of the acceleration when synchronizing: low speeds = switches 1, 2 and 3; high speeds = switches 4, 5 and 6.
The acceleration of the slave, up to a synchronization difference of 1 frame, is performed by switching the spooling motors between forward and rewind.
When the slave approaches the synchronization point in such a fashion, that the designated speed of the spooling motors is less than 1.6 times the play speed, the spooling motors are switched into the corresponding direction with a rhythm of 6.25 Hz, depending on the measuring result.
Since the performance characteristics of individual spooling motors are not absolutely uniform, this switching time can be chopped (modulated). This method is designed to produce a smoother acceleration.

Switch	Type of Modulation
1 , 4	On/Off switching of smaller modulation
2 , 5	On/Off switching of larger modulation (also includes small modulation)
3 , 6	On/Off switching of the modulation during the measuring phase

Switch 7
determines, whether the slave (in LOCK MODE with RECORD) must park at the last master value when stopping the master, or whether it should enter the STOP mode.

ON = slave stops
OFF = slave parks

Switch 8 (only A80 Master Control and A800) defines the function of the EDIT key in Master Control mode.
When the master performs a fast forward or rewind while the EDIT key is depressed, the result is as follows:

Switch ON:
Only the signal for the pinch magnet is supplied to the master.
Switch OFF:
Change from fast forward or rewind to EDIT.

Factory switch settings according to test report supplied with equipment.

5.2
IC-Platz 49, DIL-Schalter Array

Schalter 1: Mute Schalter
ON:
Wiedergabekanäle werden während Suchvorgängen des SLAVE stummgeschaltet
OFF:
Stummschaltung ist inaktiv.

Schalter 2: Code Kanal Schalter
A80 Locator:
Geht der Code Kanal in der Stellung CODE CHANNEL SYNC in RECORD, wird bei:

ON:
der Code Kanal stummgeschaltet oder bei
OFF:
nur während der RECORD-Phase automatisch auf CODE CHANNEL REPRO umgeschaltet.

A80 Master Control /A800:
Code-Überwachung des Master.
Code-Überwachung durch periodische Code-Lesefunktion (kurzes "schnüffeln", Einschwenken des Andruckaggregates in EDIT-Position).

ON:
Lesefunktion aktiv
OFF:
Lesefunktion inaktiv

Schalter 3: Code Bestimmung
ON:
Codetyp kann nur vom SLAVE definiert werden
OFF:
Codetyp kann vom SLAVE oder vom MASTER definiert werden

Schalter 4: Externe Referenz
ON:
Externe Referenz ist ein Zeitcode (SMPTE)
OFF:
Externe Referenz ist eine Frequenz

Schalter 5: Prioritätsschalter (nur A80)
Im STOP Betrieb sind generell immer alle Bedienungseinheiten gleichberechtigt. Bei Schalterstellung

ON:
übernimmt der Mainprogrammer beim Betätigen einer der gemeinsamen Tasten die Priorität, d.h. die andern Tasten (sowohl Laufwerktasten am A80 wie auch die gemeinsamen des Basic-Programmer) werden damit inaktiv
OFF:
sind die gemeinsamen Tasten soweit dies möglich ist, parallel bedienbar.

5.2
IC location 49, DIL switch array

Switch 1: Mute switch
ON:
The audio channel is muted when the slave is performing search functions.
OFF:
Muting is disabled.

Switch 2: Code channel switch
A80 Locator:
If the code channel enters the CODE CHANNEL SYNC position in RECORD, the following takes place:
ON:
Code channel is muted or
OFF:
only during the RECORD phase, it is automatically switched to CODE CHANNEL REPRO.

A80 Master Control/A800:
Code control of master.
Code control through periodic code reading (brief "sampling", drop-in of the pinch roller assembly to EDIT position).

ON:
Read function enabled
OFF:
Read function disabled

Switch 3: Code definition
ON:
Code type can only be defined by SLAVE
OFF:
Code type can be defined by SLAVE or MASTER

Switch 4: External reference
ON:
External reference is a time code (SMPTE)
OFF:
External reference is a frequency

Switch 5: Priority switch (A80 only)
In STOP mode, all operating elements have equal priority. In switch position:

ON:
the main programmer takes over priority when depressing a common key, i.e. the other keys (tape deck keys at A80 as well as the common keys of the basic programmer) become inactive.
OFF:
the common keys can be operated in parallel, as far as feasible.

Beispiel:
Wird bei Schalterstellung OFF am Main- oder Basic-Programmer die Taste LOCK MODE gedrückt, wird der Laufwerktastensatz des A80 inaktiviert (mit Ausnahme der REC Taste).
Die gemeinsamen Tasten am Basic-Programmer sind aber immer noch bedienbar.

Schalter 6:
A80 Locator:
Code Kanal Remote Schalter

ON:
Der Code Kanal steht nach dem Einschalten auf CODE CHANNEL REMOTE
OFF:
Der Code Kanal steht nach dem Einschalten auf Basic-Programmer-Betrieb.

A80 Master Control / A800:
Schalter für Master-Maschinentyp

ON:
Master ist keine High-speed-Maschine
OFF:
Master ist eine High-speed-Maschine (schnellwickelnd)

Schalter 7: (Nur A80 Master Control und A800)
Dieser Schalter bestimmt, ob bei Master Control der Master mit Rewind/Fast Forward oder mit Hilfe seines eigenen Locators gesteuert wird.

ON:
Master wird mit Locator gesteuert
OFF:
Master wird nicht mit Locator gesteuert

Schalter 8: ENTRY-Schalter
ON:
Zusätzlich zu ENTRY im Feld F erscheint bei Fehlbedienung im Display an der Zehnerstelle der Sekunden ein E
OFF:
Bei Fehlbedienungen nur Anzeige ENTRY im Feld F.

Standardeinstellung:

Schalter	1	2	3	4	5	6	7	8
Position	ON	OFF	OFF	ON	ON	OFF	OFF	ON

Example:
By depressing the LOCK MODE key when the switch of the main or basic programmer is in the OFF position, the operating keys of the A80 tape deck are disabled (except for the REC key). However, the common keys at the basic programmer are still operable.

Switch 6:
A80 Locator:
Code channel remote switch

ON:
After switching on, the code channel is in CODE CHANNEL REMOTE
OFF:
In this position, the code channel is in basic programmer mode.

A80 Master Control / A800:
Switch for master machine type

ON:
Master is not a high-speed machine
OFF:
Master is a high-speed machine (fast spooling)

Switch 7: (Only A80 Master Control and A800)
In master control mode this switch determines whether the master is to be controlled with Rewind/Fast Forward or with the aid of its own locator.
ON:
The master is controlled with its locator
OFF:
The master is not controlled by its locator

Switch 8: ENTRY switch
ON:
In addition to ENTRY in field F, an E appears in the tens position of the seconds display in case of incorrect operating.
OFF:
Only ENTRY is displayed in field F in case of incorrect operating.

Standard factory setting:

Switch	1	2	3	4	5	6	7	8
Position	ON	OFF	OFF	ON	ON	OFF	OFF	ON

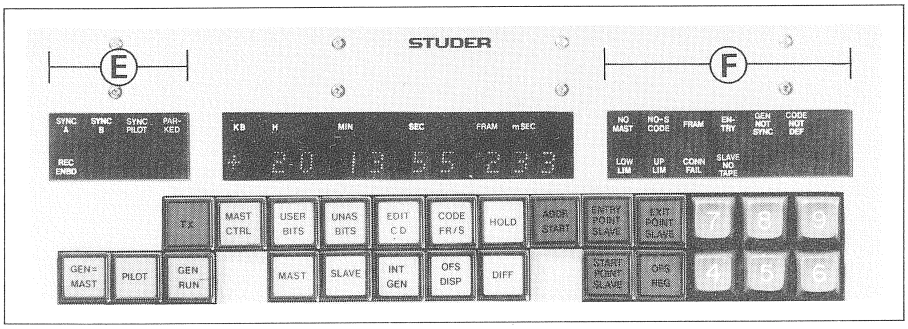

Fig. 9
Aufteilung der Bedienungs und Anzeigefelder

Fig. 9
Layout of operating and display fields

CORRESPONDANCE TABLE OF TLS SOFTWARE WITH TAPE RECORDER VERSIONS

TYPE OF TAPE RECORDER	SPOOLING MOTOR CONTROL	MASTER PROCESSOR UNIT 2 (GR35 EL3)	SOFTWARE WITH BIPOLAR PROMS ON TLS PCB' 1.228.480/481/482	SOFTWARE WITH E-PROMS ON TLS PCB' 1.228.428/429/430
A800	1.180.455	1.180.482.00/482.81/ 482.82 SEE NOTE a)	1.100.008.84 violet	1.100.511.00
		1.180.482.83/482.84/ SEE NOTE b)	1.100.008.86	1.100.511.81
	1.180.457	1.180.484.00/484.81/ 484.82 SEE NOTE a)	1.100.008.83 blue	1.100.512.81
		1.180.484.83/484.84/ 484.85 SEE NOTE b)	1.100.008.85	1.100.512.82
A80 LOCATOR			1.100.005.00 violet	1.100.503.00
A80 MASTER CONTROL			1.100.006.00 blue/white	1.100.501.82
A80 MASTER CONTROL REHEARSE				1.100.501.82

a) SOFTWARE INDEX UP TO 82 :
DROP IN / DROP AUT DELAY 5 5/8"

b) SOFTWARE INDEX 83 AND LATER :
DROP IN / DROP AUT DELAY CORRESPONDS TO THE DISTANCE BETWEEN ERASE HEAD AND RECORD HEAD

PROMSET 1.100.008–84

PROM	PART NR	PCB	IC POSITION
R 0201-7	1.025.020.17	1.228.480.00	IC 26
R 0202-7	1.025.020.27	1.228.480.00	IC 36
R 0203-7	1.025.020.37	1.228.480.00	IC 46
R 0204-7	1.025.020.47	1.228.480.00	IC 27
R 0205-7	1.025.020.57	1.228.480.00	IC 37
R 0206-7	1.025.020.67	1.228.480.00	IC 47
R 0207-7	1.025.020.77	1.228.480.00	IC 28
R 0208-7	1.025.020.87	1.228.480.00	IC 38
R 0209-7	1.025.020.97	1.228.480.00	IC 48
R 0210-7	1.025.021.07	1.228.480.00	IC 29
R 0211-7	1.025.021.17	1.228.480.00	IC 39
R 0212-7	1.025.021.27	1.228.480.00	IC 49
R 0213-7	1.025.021.37	1.228.482.00	IC 31
R 0214-7	1.025.021.47	1.228.482.00	IC 41
R 0215-7	1.025.021.57	1.228.482.00	IC 22
R 0216-7	1.025.021.67	1.228.482.00	IC 32
R 0217-7	1.025.021.77	1.228.482.00	IC 42
R 0218-7	1.025.021.87	1.228.482.00	IC 23
R 0219-7	1.025.021.97	1.228.482.00	IC 33
R 0220-7	1.025.022.07	1.228.482.00	IC 43
R 0224-7	1.025.022.47	1.228.481.00	IC 26
R 0225-7	1.025.022.57	1.228.481.00	IC 36
R 0226-7	1.025.022.67	1.228.481.00	IC 46
R 0227-7	1.025.022.77	1.228.481.00	IC 27
R 0228-7	1.025.022.87	1.228.481.00	IC 37
R 0229-7	1.025.022.97	1.228.481.00	IC 47
R 0230-7	1.025.023.07	1.228.481.00	IC 28
R 0231-7	1.025.023.17	1.228.481.00	IC 38
R 0232-7	1.025.023.27	1.228.481.00	IC 48
R 0233-7	1.025.023.37	1.228.481.00	IC 29
R 0234-7	1.025.023.47	1.228.481.00	IC 39
R 0235-7	1.025.023.57	1.228.481.00	IC 49
R 0236-7	1.025.023.67	1.228.482.00	IC 36
R 0237-7	1.025.023.77	1.228.482.00	IC 46
R 0238-7	1.025.023.87	1.228.482.00	IC 27
R 0239-7	1.025.023.97	1.228.482.00	IC 37
R 0240-7	1.025.024.07	1.228.482.00	IC 47
R 0241-7	1.025.024.17	1.228.482.00	IC 28
R 0242-7	1.025.024.27	1.228.482.00	IC 38
R 0243-7	1.025.024.37	1.228.482.00	IC 48

E–PROMSET 1.100.511–00

PROM	PART NR	PCB	IC POSITION
R 5111-0	1.025.511.10	1.228.428.00	IC 11
R 5112-0	.20	428.00	IC 21
R 5113-0	.30	428.00	IC 41
R 5114-0	.40	428.00	IC 51
R 5115-0	.50	429.00	IC 11
R 5116-0	.60	429.00	IC 21
R 5117-0	.70	429.00	IC 41
R 5118-0	.80	429.00	IC 51

PROMSET 1.100.008–86

PROM	PART NR	PCB	IC POSITION
R 0201-9	1.025.020.19	1.228.480.00	IC 26
R 0202-9	1.025.020.29	1.228.480.00	IC 36
R 0203-9	1.025.020.39	1.228.480.00	IC 46
R 0204-9	1.025.020.49	1.228.480.00	IC 27
R 0205-9	1.025.020.59	1.228.480.00	IC 37
R 0206-9	1.025.020.69	1.228.480.00	IC 47
R 0207-9	1.025.020.79	1.228.480.00	IC 28
R 0208-9	1.025.020.89	1.228.480.00	IC 38
R 0209-9	1.025.020.99	1.228.480.00	IC 48
R 0210-9	1.025.021.09	1.228.480.00	IC 29
R 0211-9	1.025.021.19	1.228.480.00	IC 39
R 0212-9	1.025.021.29	1.228.480.00	IC 49
R 0213-9	1.025.021.39	1.228.482.00	IC 31
R 0214-9	1.025.021.49	1.228.482.00	IC 41
R 0215-9	1.025.021.59	1.228.482.00	IC 22
R 0216-9	1.025.021.69	1.228.482.00	IC 32
R 0217-9	1.025.021.79	1.228.482.00	IC 42
R 0218-9	1.025.021.89	1.228.482.00	IC 23
R 0219-9	1.025.021.99	1.228.482.00	IC 33
R 0220-9	1.025.022.09	1.228.482.00	IC 43
R 0224-9	1.025.022.49	1.228.481.00	IC 26
R 0225-9	1.025.022.59	1.228.481.00	IC 36
R 0226-9	1.025.022.69	1.228.481.00	IC 46
R 0227-9	1.025.022.79	1.228.481.00	IC 27
R 0228-9	1.025.022.89	1.228.481.00	IC 37
R 0229-9	1.025.022.99	1.228.481.00	IC 47
R 0230-9	1.025.023.09	1.228.481.00	IC 28
R 0231-9	1.025.023.19	1.228.481.00	IC 38
R 0232-9	1.025.023.29	1.228.481.00	IC 48
R 0233-9	1.025.023.39	1.228.481.00	IC 29
R 0234-9	1.025.023.49	1.228.481.00	IC 39
R 0235-9	1.025.023.59	1.228.481.00	IC 49
R 0236-9	1.025.023.69	1.228.482.00	IC 36
R 0237-9	1.025.023.79	1.228.482.00	IC 46
R 0238-9	1.025.023.89	1.228.482.00	IC 27
R 0239-9	1.025.023.99	1.228.482.00	IC 37
R 0240-9	1.025.024.09	1.228.482.00	IC 47
R 0241-9	1.025.024.19	1.228.482.00	IC 28
R 0242-9	1.025.024.29	1.228.482.00	IC 38
R 0243-9	1.025.024.39	1.228.482.00	IC 48

E–PROMSET 1.100.511–81

PROM	PART NR	PCB	IC POSITION
R 5111-1	1.025.511.11	1.228.428.00	IC 11
R 5112-1	.21	428.00	IC 21
R 5113-1	.31	428.00	IC 41
R 5114-1	.41	428.00	IC 51
R 5115-1	.51	429.00	IC 11
R 5116-1	.61	429.00	IC 21
R 5117-1	.71	429.00	IC 41
R 5118-1	.81	429.00	IC 51

PROMSET 1.100.008–83

PROM	PART NR	PCB	IC POSITION
R 0201-6	1.025.020.16	1.228.480.00	IC 26
R 0202-6	1.025.020.26	1.228.480.00	IC 36
R 0203-6	1.025.020.36	1.228.480.00	IC 46
R 0204-6	1.025.020.46	1.228.480.00	IC 27
R 0205-6	1.025.020.56	1.228.480.00	IC 37
R 0206-6	1.025.020.66	1.228.480.00	IC 47
R 0207-6	1.025.020.76	1.228.480.00	IC 28
R 0208-6	1.025.020.86	1.228.480.00	IC 38
R 0209-6	1.025.020.96	1.228.480.00	IC 48
R 0210-6	1.025.021.06	1.228.480.00	IC 29
R 0211-6	1.025.021.16	1.228.480.00	IC 39
R 0212-6	1.025.021.26	1.228.480.00	IC 49
R 0213-6	1.025.021.36	1.228.482.00	IC 31
R 0214-6	1.025.021.46	1.228.482.00	IC 41
R 0215-6	1.025.021.56	1.228.482.00	IC 22
R 0216-6	1.025.021.66	1.228.482.00	IC 32
R 0217-6	1.025.021.76	1.228.482.00	IC 42
R 0218-6	1.025.021.86	1.228.482.00	IC 23
R 0219-6	1.025.021.96	1.228.482.00	IC 33
R 0220-6	1.025.022.06	1.228.482.00	IC 43
R 0224-6	1.025.022.46	1.228.481.00	IC 26
R 0225-6	1.025.022.56	1.228.481.00	IC 36
R 0226-6	1.025.022.66	1.228.481.00	IC 46
R 0227-6	1.025.022.76	1.228.481.00	IC 27
R 0228-6	1.025.022.86	1.228.481.00	IC 37
R 0229-6	1.025.022.96	1.228.481.00	IC 47
R 0230-6	1.025.023.06	1.228.481.00	IC 28
R 0231-6	1.025.023.16	1.228.481.00	IC 38
R 0232-6	1.025.023.26	1.228.481.00	IC 48
R 0233-6	1.025.023.36	1.228.481.00	IC 29
R 0234-6	1.025.023.46	1.228.481.00	IC 39
R 0235-6	1.025.023.56	1.228.481.00	IC 49
R 0236-6	1.025.023.66	1.228.482.00	IC 36
R 0237-6	1.025.023.76	1.228.482.00	IC 46
R 0238-6	1.025.023.86	1.228.482.00	IC 27
R 0239-6	1.025.023.96	1.228.482.00	IC 37
R 0240-6	1.025.024.06	1.228.482.00	IC 47
R 0241-6	1.025.024.16	1.228.482.00	IC 28
R 0242-6	1.025.024.26	1.228.482.00	IC 38
R 0243-6	1.025.024.36	1.228.482.00	IC 48

E–PROMSET 1.100.512–81

PROM	PART NR	PCB	IC POSITION
R 5121-1	1.025.512.11	1.228.428.00	IC 11
R 5122-1	.21	428.00	IC 21
R 5123-1	.31	428.00	IC 41
R 5124-1	.41	428.00	IC 51
R 5125-1	.51	429.00	IC 11
R 5126-1	.61	429.00	IC 21
R 5127-1	.71	429.00	IC 41
R 5128-1	.81	429.00	IC 51

PROMSET 1.100.008–85

PROM	PART NR	PCB	IC POSITION
R 0201-7	1.025.020.17	1.228.480.00	IC 26
R 0202-7	1.025.020.27	1.228.480.00	IC 36
R 0203-7	1.025.020.37	1.228.480.00	IC 46
R 0204-7	1.025.020.47	1.228.480.00	IC 27
R 0205-7	1.025.020.57	1.228.480.00	IC 37
R 0206-7	1.025.020.67	1.228.480.00	IC 47
R 0207-7	1.025.020.77	1.228.480.00	IC 28
R 0208-7	1.025.020.87	1.228.480.00	IC 38
R 0209-7	1.025.020.97	1.228.480.00	IC 48
R 0210-7	1.025.021.07	1.228.480.00	IC 29
R 0211-7	1.025.021.17	1.228.480.00	IC 39
R 0212-7	1.025.021.27	1.228.480.00	IC 49
R 0213-7	1.025.021.37	1.228.482.00	IC 31
R 0214-7	1.025.021.47	1.228.482.00	IC 41
R 0215-7	1.025.021.57	1.228.482.00	IC 22
R 0216-7	1.025.021.67	1.228.482.00	IC 32
R 0217-7	1.025.021.77	1.228.482.00	IC 42
R 0218-7	1.025.021.87	1.228.482.00	IC 23
R 0219-7	1.025.021.97	1.228.482.00	IC 33
R 0220-7	1.025.022.07	1.228.482.00	IC 43
R 0224-7	1.025.022.47	1.228.481.00	IC 26
R 0225-7	1.025.022.57	1.228.481.00	IC 36
R 0226-7	1.025.022.67	1.228.481.00	IC 46
R 0227-7	1.025.022.77	1.228.481.00	IC 27
R 0228-7	1.025.022.87	1.228.481.00	IC 37
R 0229-7	1.025.022.97	1.228.481.00	IC 47
R 0230-7	1.025.023.07	1.228.481.00	IC 28
R 0231-7	1.025.023.17	1.228.481.00	IC 38
R 0232-7	1.025.023.27	1.228.481.00	IC 48
R 0233-7	1.025.023.37	1.228.481.00	IC 29
R 0234-7	1.025.023.47	1.228.481.00	IC 39
R 0235-7	1.025.023.57	1.228.481.00	IC 49
R 0236-7	1.025.023.67	1.228.482.00	IC 36
R 0237-7	1.025.023.77	1.228.482.00	IC 46
R 0238-7	1.025.023.87	1.228.482.00	IC 27
R 0239-7	1.025.023.97	1.228.482.00	IC 37
R 0240-7	1.025.024.07	1.228.482.00	IC 47
R 0241-7	1.025.024.17	1.228.482.00	IC 28
R 0242-7	1.025.024.27	1.228.482.00	IC 38
R 0243-7	1.025.024.37	1.228.482.00	IC 48

E–PROMSET 1.100.512–82

PROM	PART NR	PCB	IC POSITION
R 5121-2	1.025.512.12	1.228.428.00	IC 11
R 5122-2	.22	428.00	IC 21
R 5123-2	.32	428.00	IC 41
R 5124-2	.42	428.00	IC 51
R 5125-2	.52	429.00	IC 11
R 5126-2	.62	429.00	IC 21
R 5127-2	.72	429.00	IC 41
R 5128-2	.82	429.00	IC 51

PROMSET 1.100.005–00

PROM	PART NR	PCB	IC POSITION
R 0101-7	1.025.010.17	1.228.480.00	IC 26
R 0102-7	1.025.010.27	1.228.480.00	IC 36
R 0103-7	1.025.010.37	1.228.480.00	IC 46
R 0104-7	1.025.010.47	1.228.480.00	IC 27
R 0105-7	1.025.010.57	1.228.480.00	IC 37
R 0106-7	1.025.010.67	1.228.480.00	IC 47
R 0107-7	1.025.010.77	1.228.480.00	IC 28
R 0108-7	1.025.010.87	1.228.480.00	IC 38
R 0109-7	1.025.010.97	1.228.480.00	IC 48
R 0110-7	1.025.011.07	1.228.480.00	IC 29
R 0111-7	1.025.011.17	1.228.480.00	IC 39
R 0112-7	1.025.011.27	1.228.480.00	IC 49
R 0113-7	1.025.011.37	1.228.482.00	IC 31
R 0114-7	1.025.011.47	1.228.482.00	IC 41
R 0115-7	1.025.011.57	1.228.482.00	IC 22
R 0116-7	1.025.011.67	1.228.482.00	IC 32
R 0117-7	1.025.011.77	1.228.482.00	IC 42
R 0118-7	1.025.011.87	1.228.482.00	IC 23
R 0119-7	1.025.011.97	1.228.482.00	IC 33
R 0120-7	1.025.012.07	1.228.482.00	IC 43
R 0124-7	1.025.012.47	1.228.481.00	IC 26
R 0125-7	1.025.012.57	1.228.481.00	IC 36
R 0126-7	1.025.012.67	1.228.481.00	IC 46
R 0127-7	1.025.012.77	1.228.481.00	IC 27
R 0128-7	1.025.012.87	1.228.481.00	IC 37
R 0129-7	1.025.012.97	1.228.481.00	IC 47
R 0130-7	1.025.013.07	1.228.481.00	IC 28
R 0131-7	1.025.013.17	1.228.481.00	IC 38
R 0132-7	1.025.013.27	1.228.481.00	IC 48
R 0133-7	1.025.013.37	1.228.481.00	IC 29
R 0134-7	1.025.013.47	1.228.481.00	IC 39
R 0135-7	1.025.013.57	1.228.481.00	IC 49
R 0136-7	1.025.013.67	1.228.482.00	IC 36
R 0137-7	1.025.013.77	1.228.482.00	IC 46
R 0138-7	1.025.013.87	1.228.482.00	IC 27
R 0139-7	1.025.013.97	1.228.482.00	IC 37
R 0140-7	1.025.014.07	1.228.482.00	IC 47
R 0141-7	1.025.014.17	1.228.482.00	IC 28
R 0142-7	1.025.014.27	1.228.482.00	IC 38
R 0143-7	1.025.014.37	1.228.482.00	IC 48

E–PROMSET 1.100.503–00

PROM	PART NR	PCB	IC POSITION
R 5031-0	1.025.503.10	1.228.428.00	IC 11
R 5032-0	.20	428.00	IC 21
R 5033-0	.30	428.00	IC 41
R 5034-0	.40	428.00	IC 51
R 5035-0	.50	429.00	IC 11
R 5036-0	.60	429.00	IC 21
R 5037-0	.70	429.00	IC 41
R 5038-0	.80	429.00	IC 51

PROMSET 1.100.006–00

PROM	PART NR	PCB	IC POSITION
R 0101-6	1.025.010.16	1.228.480.00	IC 26
R 0102-6	1.025.010.26	1.228.480.00	IC 36
R 0103-6	1.025.010.36	1.228.480.00	IC 46
R 0104-6	1.025.010.46	1.228.480.00	IC 27
R 0105-6	1.025.010.56	1.228.480.00	IC 37
R 0106-6	1.025.010.66	1.228.480.00	IC 47
R 0107-6	1.025.010.76	1.228.480.00	IC 28
R 0108-6	1.025.010.86	1.228.480.00	IC 38
R 0109-6	1.025.010.96	1.228.480.00	IC 48
R 0110-6	1.025.011.06	1.228.480.00	IC 29
R 0111-6	1.025.011.16	1.228.480.00	IC 39
R 0112-6	1.025.011.26	1.228.480.00	IC 49
R 0113-6	1.025.011.36	1.228.482.00	IC 31
R 0114-6	1.025.011.46	1.228.482.00	IC 41
R 0115-6	1.025.011.56	1.228.482.00	IC 22
R 0116-6	1.025.011.66	1.228.482.00	IC 32
R 0117-6	1.025.011.76	1.228.482.00	IC 42
R 0118-6	1.025.011.86	1.228.482.00	IC 23
R 0119-6	1.025.011.96	1.228.482.00	IC 33
R 0120-6	1.025.012.06	1.228.482.00	IC 43
R 0124-9	1.025.012.49	1.228.481.00	IC 26
R 0125-9	1.025.012.59	1.228.481.00	IC 36
R 0126-9	1.025.012.69	1.228.481.00	IC 46
R 0127-9	1.025.012.79	1.228.481.00	IC 27
R 0128-9	1.025.012.89	1.228.481.00	IC 37
R 0129-9	1.025.012.99	1.228.481.00	IC 47
R 0130-9	1.025.013.09	1.228.481.00	IC 28
R 0131-9	1.025.013.19	1.228.481.00	IC 38
R 0132-9	1.025.013.29	1.228.481.00	IC 48
R 0133-9	1.025.013.39	1.228.481.00	IC 29
R 0134-9	1.025.013.49	1.228.481.00	IC 39
R 0135-9	1.025.013.59	1.228.481.00	IC 49
R 0136-9	1.025.013.69	1.228.482.00	IC 35
R 0137-9	1.025.013.79	1.228.482.00	IC 46
R 0138-9	1.025.013.89	1.228.482.00	IC 27
R 0139-9	1.025.013.99	1.228.482.00	IC 37
R 0140-9	1.025.014.09	1.228.482.00	IC 47
R 0141-9	1.025.014.19	1.228.482.00	IC 28
R 0142-9	1.025.014.29	1.228.482.00	IC 38
R 0143-9	1.025.014.39	1.228.482.00	IC 48

E–PROMSET 1.100.501–82

PROM	PART NR	PCB	IC POSITION
R 5011- 2	1.025.501.12	1.228.428.00	IC 11
R 5012- 2	.22	428.00	IC 21
R 5013- 2	.32	428.00	IC 41
R 5014- 2	.42	428.00	IC 51
R 5015- 2	.52	429.00	IC 11
R 5016- 2	.62	429.00	IC 21
R 5017- 2	.72	429.00	IC 41
R 5018- 2	.82	429.00	IC 51

SLAVE RACK LOCATION 4

ARITHMETIC CONTROL A E-PROM 1.228.428

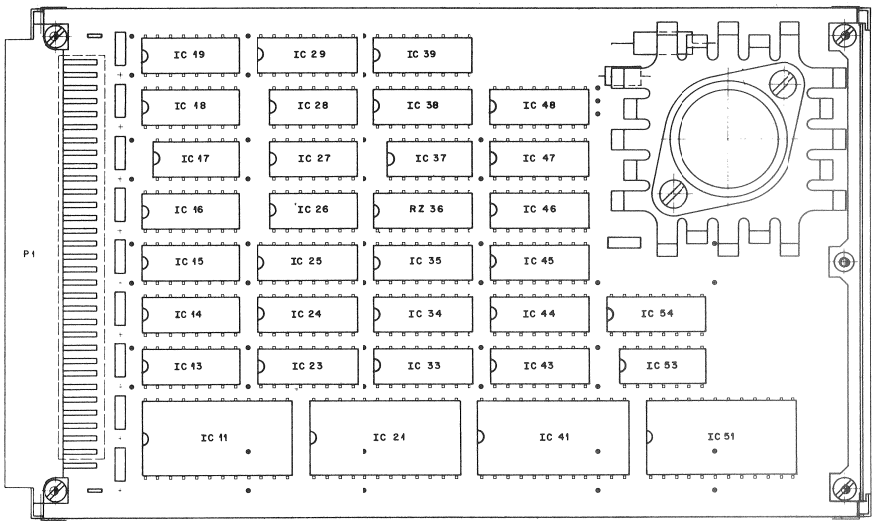

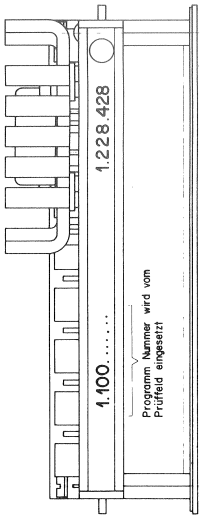

IND	POS NO	PART NO	VALUE	SPECIFICATIONS/EQUIVALENT	MFR
	IC11	50.14.0101	PROM		
	IC21	50.14.0101	PROM	see PROM 1.1 BL	
	IC41	50.14.0101	PROM	1.100.....	
	IC51	50.14.0101	PROM		
	IC13	50.06.0155	SN74LS155		
	IC14	50.06.0155	SN74LS155		
	IC15	50.06.0155	SN74LS155		
	IC16	50.06.0154	SN74LS154		
	IC17	50.06.0004	SN74LS04		
	IC18	50.05.0216	V8T95B	MC8T95	
	IC19	50.05.0216	V8T95B	MC8T95	
	IC23	50.06.0161	SN74LS161		
	IC24	50.05.0224	V8T96B	MC8T96	
	IC25	50.05.0277	SN74S189		
	IC26	50.06.0008	SN74LS08		
	IC27	50.06.0032	SN74LS32		
	IC28	50.06.0011	SN74LS11		
	IC29	50.06.0163	SN74LS163		
	IC33	50.06.0161	SN74LS161		
	IC34	50.05.0216	V8T95B	MC8T95	
	IC35	50.05.0277	SN74S189		
	IC37	50.06.0008	SN74LS08		
	IC38	50.05.0216	V8T95B	MC8T95	
	IC39	50.05.0216	V8T95B	MC8T95	
	IC43	50.06.0164	SN74LS164		
	IC44	50.05.0224	V8T96B	MC8T96	
	IC45	50.05.0277	SN74S189		
	IC46	50.06.0163	SN74LS163		
	IC47	1.015.002.02	R0020.2	512*4 BIT PROM	
	IC48	50.06.0174	SN74LS174		

IND	DATE	NAME
④		
③		
②		
①		
○	21.11.79	Sc

STUDER ARI CTRL A E-PROM 1.228.428.00 PAGE 1 OF 3

13.046.578

IND	POS NO	PART NO	VALUE	SPECIFICATIONS/EQUIVALENT	MFR
	IC53	50.06.0004	SN74LS04		
	IC54	50.05.0216	V8T95B	MC8T95	
	IC01	50.05.0133	LM309K	POS VOLTAGE REGULATOR, 5V	

IND	DATE	NAME
④		
③		
②		
①		
○	21.11.79	Sc

STUDER ARI CTRL A E-PROM 1.228.428.00 PAGE 2 OF 3

13.046.578

IND	POS NO	PART NO	VALUE	SPECIFICATIONS/EQUIVALENT	MFR
	C90	59.99.0205	68nF	20%, 63V, CER	
	C91				
	C92				
	C93				
	C94				
	C95				
	C96				
	C97				
	C98				
	C99				
	C100	59.99.0201	6,8µF	20%, 35V, TANTAL	
	LA	61.99.0124		FERRIT PEARLS	
	R230	57.85.3332	15*3k3	RESISTOR ARRAY, 2%, DIL	

IND	DATE	NAME
④		
③		
②		
①		
○	21.11.79	Sc

STUDER ARI CTRL A E-PROM 1.228.428.00 PAGE 3 OF 3

13.046.578

4
SLAVE RACK LOCATION

ARITHMETIC CONTROL A E-PROM 1.228.428

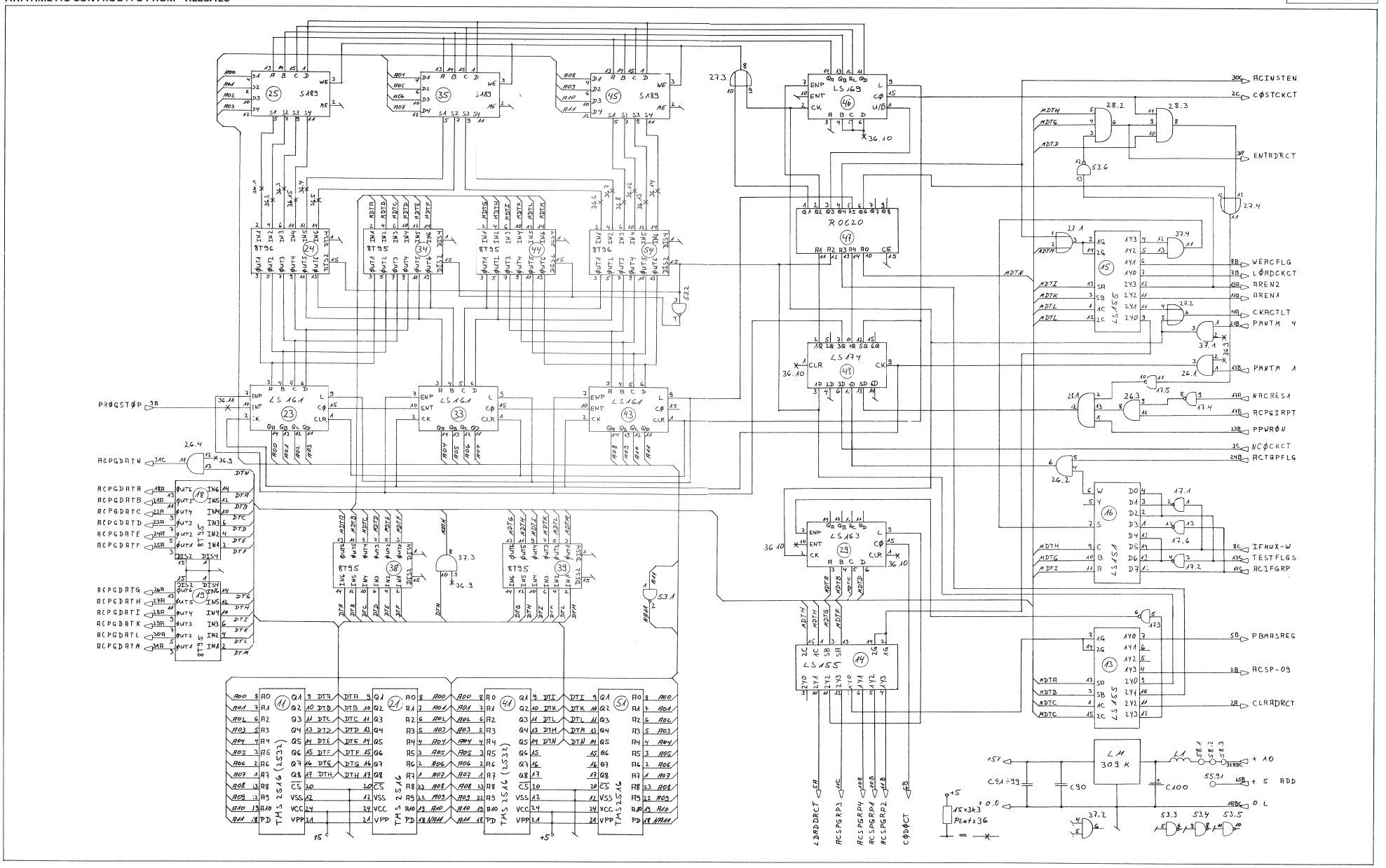

6
SLAVE RACK LOCATION

PERIPHERAL CONTROL A E-PROM 1.228.429

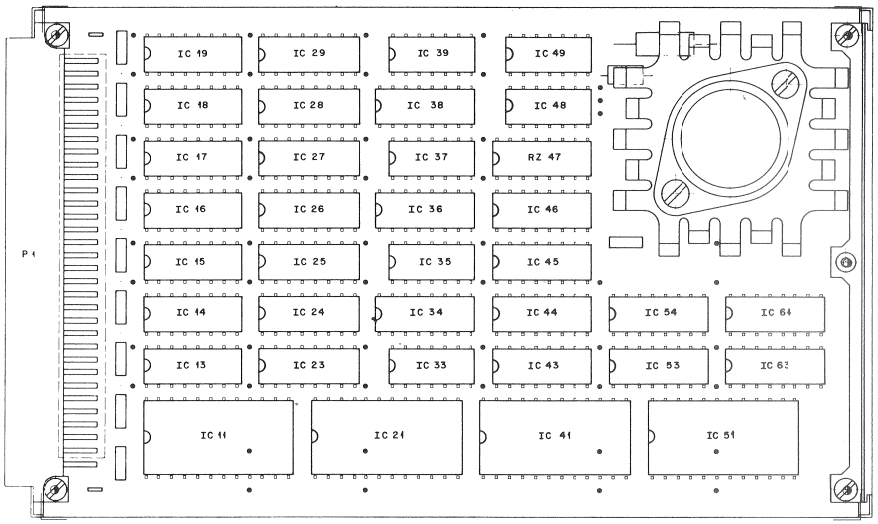

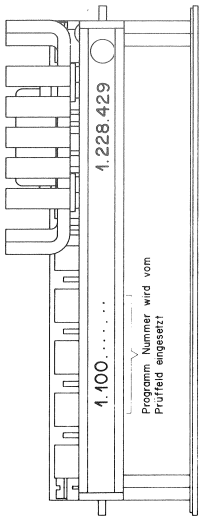

IND	POS NO	PART NO	VALUE	SPECIFICATIONS/EQUIVALENT	MFR
	IC11	50.14.0104	PROM		
	IC21	50.14.0104	PROM	> see PROM 1.21 BL	
	IC41	50.14.0104	PROM	1.100.....	
	IC51	50.14.0104	PROM		
	IC13	50.06.0155	SN74LS155		
	IC14	50.06.0139	SN74LS139		
	IC15	50.06.0151	SN74LS151		
	IC16	50.06.0151	SN74LS151		
	IC17	50.06.0154	SN74LS154		
	IC18	50.05.0216	N8T95B	MC 8T95	
	IC19	50.05.0216	N8T95B	MC 8T95	
	IC23	50.06.0155	SN74LS155		
	IC24	50.06.0139	SN74LS139		
	IC25	50.06.0139	SN74LS139		
	IC26	50.06.0139	SN74LS139		
	IC27	50.06.0151	SN74LS151		
	IC28	50.05.0216	N8T95B	MC 8T95	
	IC29	50.05.0216	N8T95B	MC 8T95	
	IC33	50.06.0086	SN74LS86		
	IC34	50.06.0279	SN74LS279		
	IC35	50.06.0032	SN74LS32		
	IC36	50.06.0161	SN74LS161		
	IC37	50.06.0008	SN74LS08		
	IC38	50.06.0175	SN74LS175		
	IC39	50.06.0000	SN74LS00		
	IC43	50.06.0161	SN74LS161		
	IC44	50.06.0157	SN74LS157		
	IC45	50.06.0174	SN74LS174		
	IC46	50.06.0174	SN74LS174		
	IC48	50.06.0027	SN74LS27		

IND	DATE	NAME
④		
③		
②		
①		
○	21.11.79	Sc

STUDER | PERI CTRL A E-PROM | 1.228.429.00 | PAGE 1 OF 3

13.046.578

IND	POS NO	PART NO	VALUE	SPECIFICATIONS/EQUIVALENT	MFR
	IC43	50.06.0004	SN74LS04		
	IC53	50.06.0161	SN74LS161		
	IC54	50.06.0157	SN74LS157		
	IC63	50.06.0161	SN74LS161		
	IC64	50.06.0157	SN74LS157		
	IC01	50.05.0133	LM309K	POS. VOLTAGE REGULATER, 5V	

IND	DATE	NAME
④		
③		
②		
①		
○	21.11.79	Sc

STUDER | PERI CTRL A E-PROM | 1.228.429.00 | PAGE 2 OF 3

13.046.578

IND	POS NO	PART NO	VALUE	SPECIFICATIONS/EQUIVALENT	MFR
	C90	59.99.0205	68µF	20%, 63V, CER	
	C91				
	C92				
	C93				
	C94				
	C95				
	C96				
	C97				
	C98				
	C99				
	C100	59.99.0204	6,8µF	20%, 35V, TANTAL	
	L1	61.99.0124		FERRIT PEARLS	
	R247	57.85.3332	15*3k3	RESISTOR ARRAY, 2%, DIL	

IND	DATE	NAME
④		
③		
②		
①		
○	21.11.79	Sc

STUDER | PERI CTRL A E-PROM | 1.228.429.00 | PAGE 3 OF 3

13.046.578

6
SLAVE RACK LOCATION

PERIPHERAL CONTROL A E-PROM 1.228.429

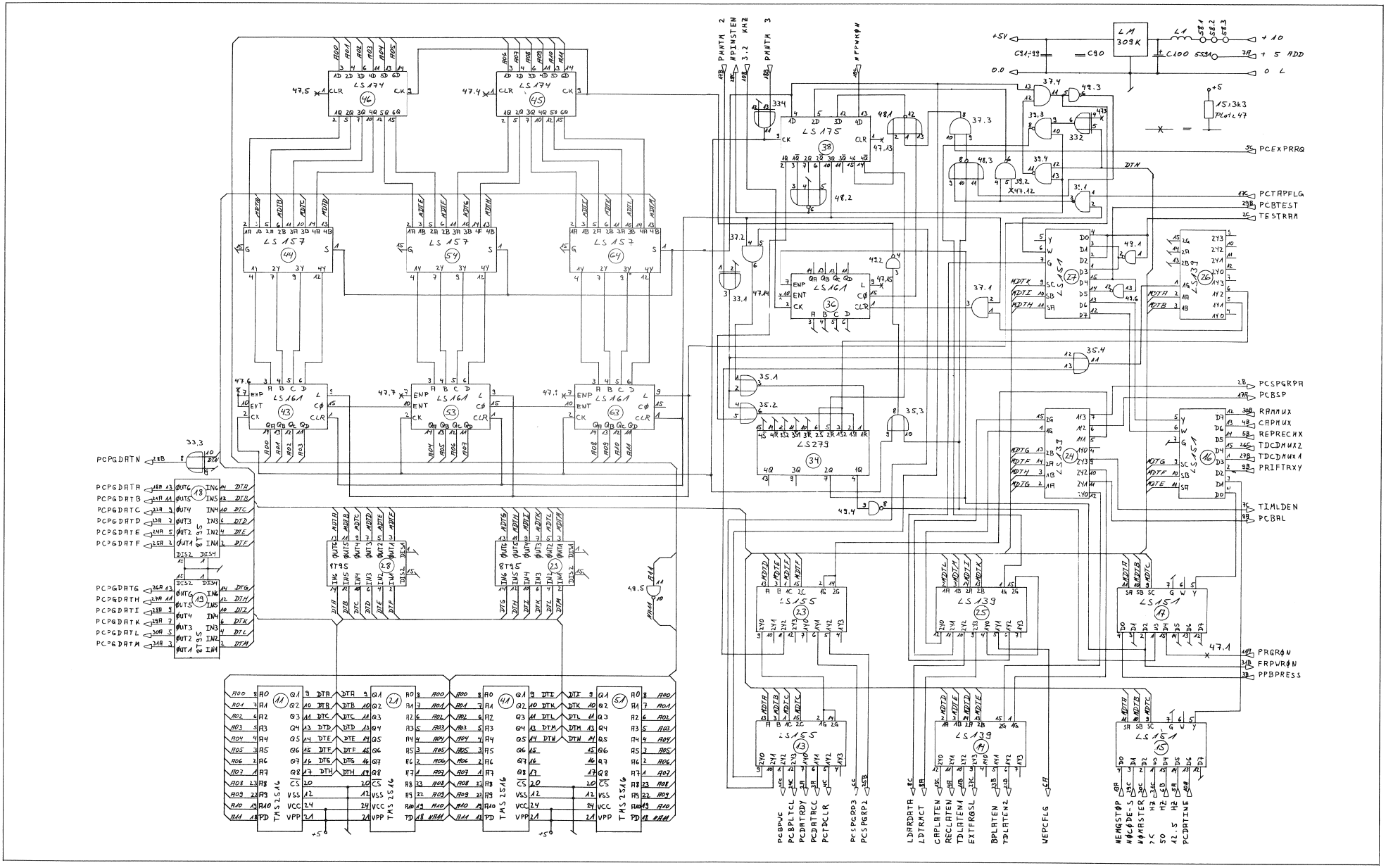

15
SLAVE RACK LOCATION

ADDITIONAL PERI/ARI E-PROM 1.228.430

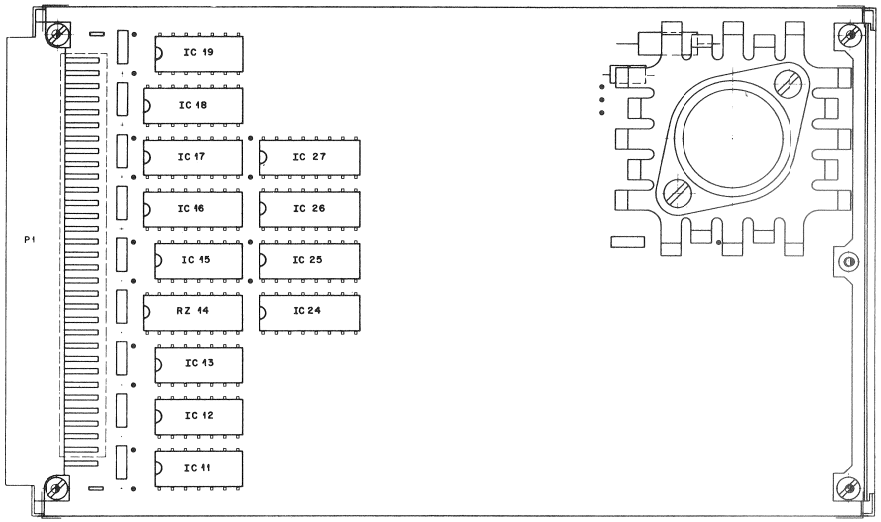

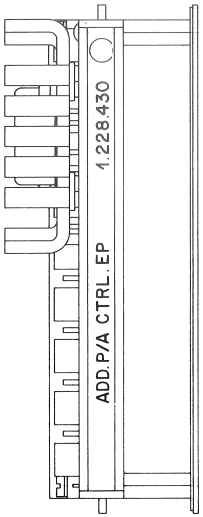

IND	POS NO	PART NO	VALUE	SPECIFICATIONS/EQUIVALENT	MFR
	IC11	50.06.0008	74LS08		
	IC12	50.06.0086	74LS86		
	IC13	50.06.0074	74LS74		
	IC15	50.06.0032	74LS32		
	IC16	50.06.0157	74LS157		
	IC17	50.06.0157	74LS157		
	IC18	50.06.0157	74LS157		
	IC19	50.06.0000	74LS00		
	IC24	50.06.0139	74LS139		
	IC25	50.05.0183	IMS5523	256 BIT PIPOLAR RAM	
	IC26	50.06.0161	74LS161		
	IC27	50.06.0161	74LS161		
	IC01	50.05.0133	LM309K	POS. VOLTAGE REGULATOR, 5V	
	RZ14	57.85.3332	15*3k3	RESISTOR ARRAY, 2%, 2IL	
	C90	53.53.0265	68n7	20%, 63V, CER	
	C91				
	C92				
	C93				
	C94				
	C95				
	C96				
	C97				
	C98				
	C99				
	C100	53.95.0201	6.8µF	20%, 35V, TANTAL	
	L1	61.93.0124		FERRIT PEARL	

IND	DATE	NAME
4		
3		
2		
1		
0	10.11.93	SC

STUDER | ADDITIONAL PERI/ARI E-PROM 1.228.430.00 | PAGE 1 OF 1

13.046.578

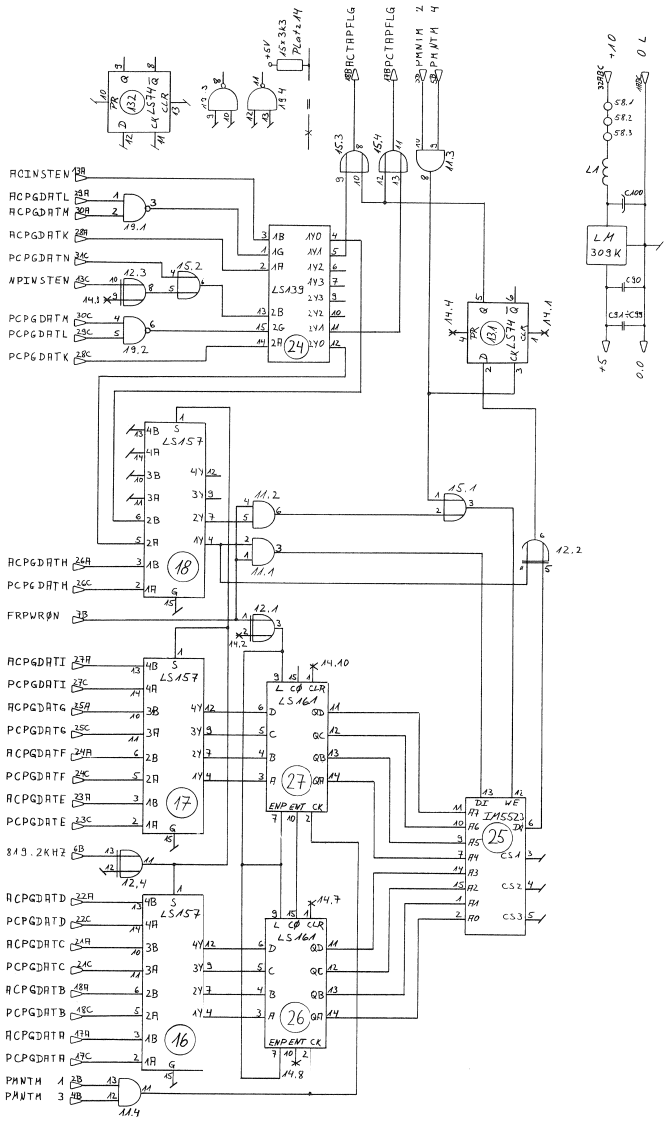

CAPSTAN MOTOR CONTROL PCB MKII 1.228.484–81

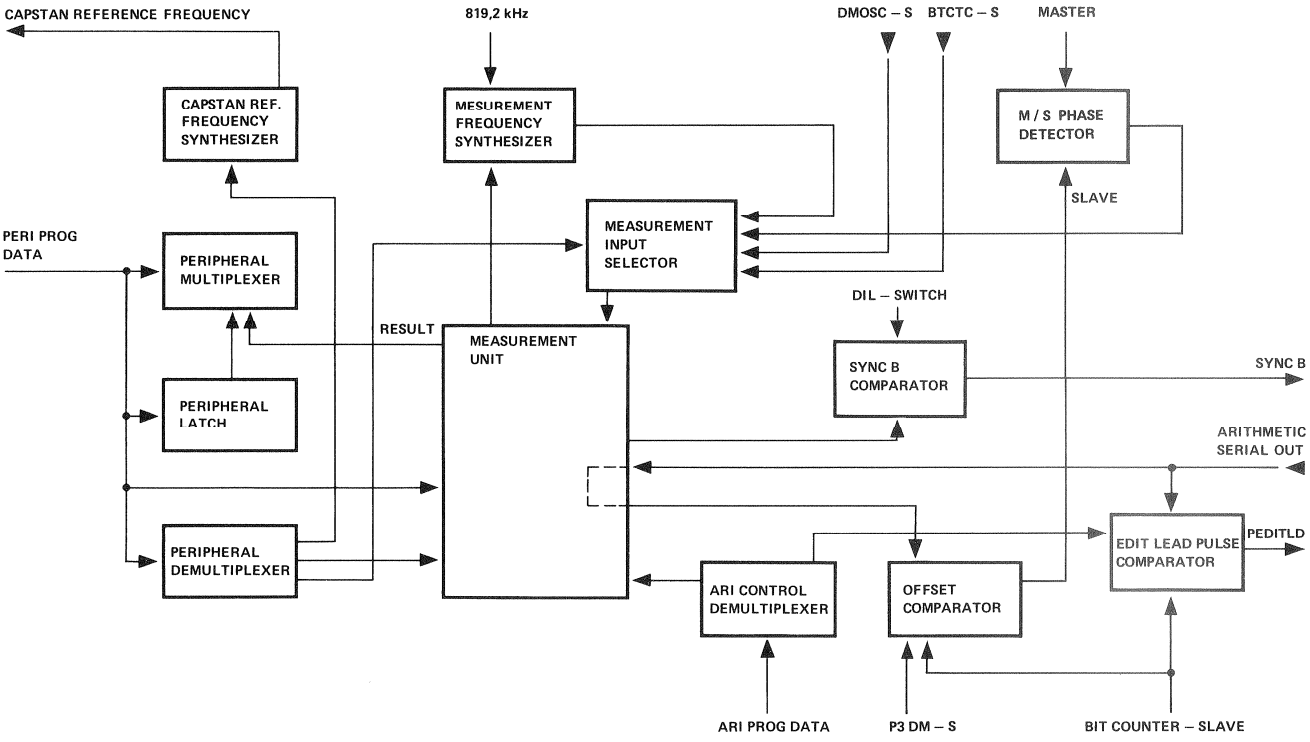

CAPSTAN MOTOR CONTROL PCB MKII 1.228.484–81

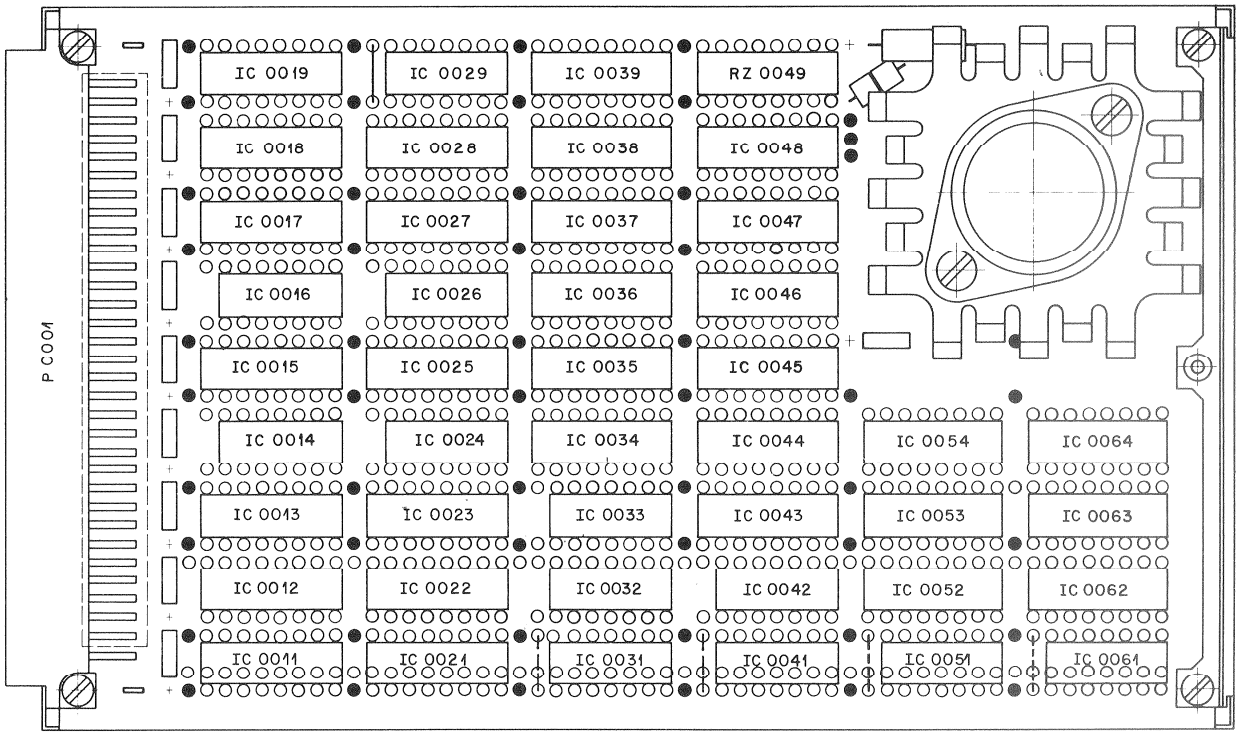

* S T U D E R * POSITION LIST OF PARTS 1.228.484.81 * PAGE 1 OF 1 *

* TAPE LOCK SYSTEM 2000 * CAPSTAN MOTOR CONTROL MKII * 77/09/01 1 *
80/05/30 1

POSITION RD. POS.M	PART NO.	DESCRIPTION OF PART		POSITION RD. POS.M	PART NO.	DESCRIPTION OF PART	
IC 0011	50.06.0169	IC SN 74 LS 169 N	TTL	IC 0052	50.06.0298	IC SN 74 LS 298N ,	TTL
IC 0012	50.06.0153	IC SN 74 LS 153 N	TTL	IC 0053	50.06.0085	IC SN 74 LS 85 N	TTL
IC 0013	50.06.0151	IC SN 74 LS 151 N	TTL	IC 0054	50.06.0161	IC SN 74 LS 161 N	TTL
IC 0014	50.06.0032	IC SN 74 LS 32 N	TTL	IC 0061	50.06.0164	IC SN 74 LS 164 N	TTL
IC 0015	50.05.0215	IC 93 L 34PC,	TTL	IC 0062	50.06.0298	IC SN 74 LS 298N ,	TTL
IC 0016	50.06.0086	IC SN 74 LS 86 N	TTL	IC 0063	50.06.0085	IC SN 74 LS 85 N	TTL
IC 0017	50.06.0139	IC SN 74 LS 139 N	TTL	IC 0064	50.06.0161	IC SN 74 LS 161 N	TTL
IC 0018	50.06.0085	IC SN 74 LS 85 N	TTL	P 0001	54.01.0354	P LEISTE 3 * 32 POL	WRAP
IC 0019	50.06.0085	IC SN 74 LS 85 N	TTL	RZ 0049	57.85.3332	RZ 15*3.3K, 2%,	DIL16
IC 0021	50.06.0139	IC SN 74 LS 139 N	TTL				
IC 0022	50.06.0195	IC SN 74 LS 195 AN	TTL				
IC 0023	50.06.0174	IC SN 74 LS 174 N	TTL				
IC 0024	50.06.0000	IC SN 74 LS 00 N	TTL				
IC 0025	50.06.0161	IC SN 74 LS 161 N	TTL				
IC 0026	50.06.0074	IC SN 74 LS 74 N	TTL				
IC 0027	50.06.0161	IC SN 74 LS 161 N	TTL				
IC 0028	50.06.0085	IC SN 74 LS 85 N	TTL				
IC 0029	50.06.0164	IC SN 74 LS 164 N	TTL				
IC 0031	50.06.0074	IC SN 74 LS 74 N	TTL				
IC 0032	50.06.0004	IC SN 74 LS 04 N	TTL				
IC 0033	50.06.0032	IC SN 74 LS 32 N	TTL				
IC 0034	50.06.0161	IC SN 74 LS 161 N	TTL				
IC 0035	50.06.0161	IC SN 74 LS 161 N	TTL				
IC 0036	50.06.0161	IC SN 74 LS 161 N	TTL				
IC 0037	50.06.0161	IC SN 74 LS 161 N	TTL				
IC 0038	50.05.0209	IC SN 7497N,	TTL				
IC 0039	50.06.0169	IC SN 74 LS 169 N	TTL				
IC 0041	50.06.0074	IC SN 74 LS 74 N	TTL				
IC 0042	50.06.0008	IC SN 74 LS 08 N	TTL				
IC 0043	50.06.0085	IC SN 74 LS 85 N	TTL				
IC 0044	50.06.0169	IC SN 74 LS 169 N	TTL				
IC 0045	50.06.0169	IC SN 74 LS 169 N	TTL				
IC 0046	50.06.0169	IC SN 74 LS 169 N	TTL				
IC 0047	50.06.0169	IC SN 74 LS 169 N	TTL				
IC 0048	50.06.0169	IC SN 74 LS 169 N	TTL				
IC 0051	50.06.0074	IC SN 74 LS 74 N	TTL				

CAPSTAN MOTOR CONTROL PCB MKII 1.228.484–81

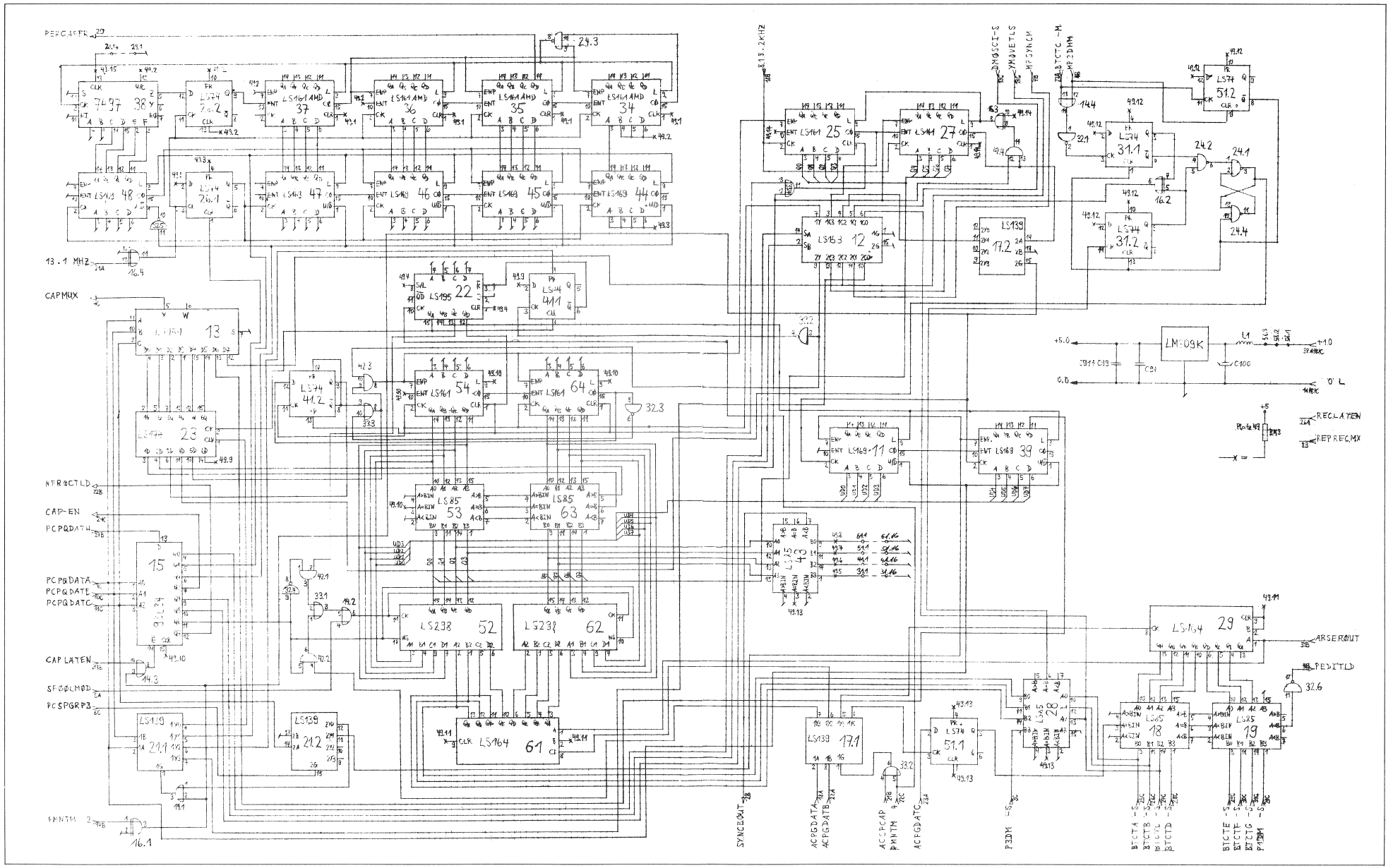

CAPSTAN MOTOR CONTROL PCB MKII 1.228.484–82

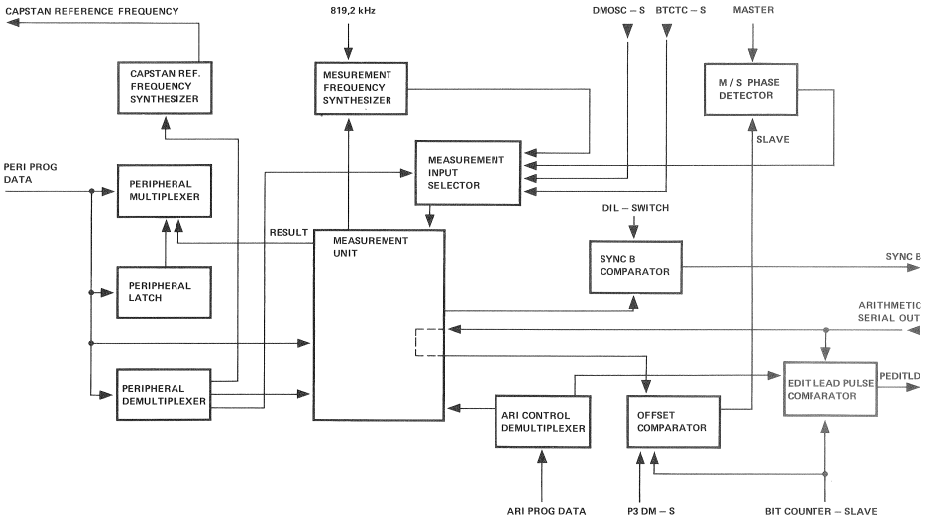

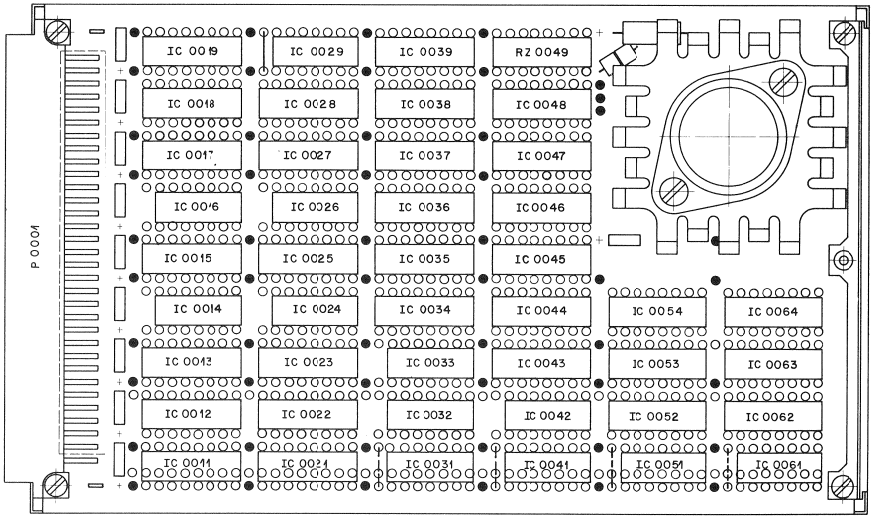

* S T U D E R * POSITION LIST OF ARTS 1.228.484.82 * 77/12/02 * PAGE 1 OF 1 *
* TAPE LOOK SYSTEM 2000 * CAPSTAN MOTOR CONTROL MKII * 80/06/20 2 *

POSITION RD. POS.M	PART NO.	DESCRIPTION OF PART		POSITION RD. POS.M	PART NO.	DESCRIPTION OF PART	
IC 0011	50.06.0169	IC SN 74 LS 169 N	TTL	IC 0052	50.06.0298	IC SN 74 LS 298N ,	TTL
IC 0012	50.06.0153	IC SN 74 LS 153 N	TTL	IC 0053	50.06.0085	IC SN 74 LS 85 N	TTL
IC 0013	50.06.0151	IC SN 74 LS 151 N	TTL	IC 0054	50.06.0161	IC SN 74 LS 161 N	TTL
IC 0014	50.06.0032	IC SN 74 LS 32 N	TTL	IC 0061	50.06.0164	IC SN 74 LS 164 N	TTL
IC 0015	50.05.0215	IC 93 L 34PC,	TTL	IC 0062	50.06.0298	IC SN 74 LS 298N ,	TTL
IC 0016	50.06.0086	IC SN 74 LS 86 N	TTL	IC 0063	50.06.0085	IC SN 74 LS 85 N	TTL
IC 0017	50.06.0139	IC SN 74 LS 139 N	TTL	IC 0064	50.06.0161	IC SN 74 LS 161 N	TTL
IC 0018	50.06.0085	IC SN 74 LS 85 N	TTL	P 0001	54.01.0354	F LEISTE 3 * 32 POL	WRAP
IC 0019	50.06.0085	IC SN 74 LS 85 N	TTL	RZ 0049	57.85.3332	RZ 1543.3K, 28,	DIL16
IC 0021	50.06.0139	IC SN 74 LS 139 N	TTL				
IC 0022	50.06.0195	IC SN 74 LS 195 AN	TTL				
IC 0023	50.06.0174	IC SN 74 LS 174 N	TTL				
IC 0024	50.06.0000	IC SN 74 LS 00 N	TTL				
IC 0025	50.06.0161	IC SN 74 LS 161 N	TTL				
IC 0026	50.06.0074	IC SN 74 LS 74 N	TTL				
IC 0027	50.06.0161	IC SN 74 LS 161 N	TTL				
IC 0028	50.06.0085	IC SN 74 LS 85 N	TTL				
IC 0029	50.06.0164	IC SN 74 LS 164 N	TTL				
IC 0031	50.06.0074	IC SN 74 LS 74 N	TTL				
IC 0032	50.06.0004	IC SN 74 LS 04 N	TTL				
IC 0033	50.06.0032	IC SN 74 LS 32 N	TTL				
IC 0034	50.06.0109	IC SN 74 LS 109 N	TTL				
IC 0035	50.06.0161	IC SN 74 LS 161 N	TTL				
IC 0036	50.06.0161	IC SN 74 LS 161 N	TTL				
IC 0037	50.06.0161	IC SN 74 LS 161 N	TTL				
IC 0038	50.05.0209	IC SN 7497N,	TTL				
IC 0039	50.06.0169	IC SN 74 LS 169 N	TTL				
IC 0041	50.06.0074	IC SN 74 LS 74 N	TTL				
IC 0042	50.06.0008	IC SN 74 LS 08 N	TTL				
IC 0043	50.06.0085	IC SN 74 LS 85 N	TTL				
IC 0044	50.06.0109	IC SN 74 LS 109 N	TTL				
IC 0045	50.06.0169	IC SN 74 LS 169 N	TTL				
IC 0046	50.06.0169	IC SN 74 LS 169 N	TTL				
IC 0047	50.06.0169	IC SN 74 LS 169 N	TTL				
IC 0048	50.06.0169	IC SN 74 LS 169 N	TTL				
IC 0051	50.06.0074	IC SN 74 LS 74 N	TTL				

CAPSTAN MOTOR CONTROL PCB MKII 1.228.484–82

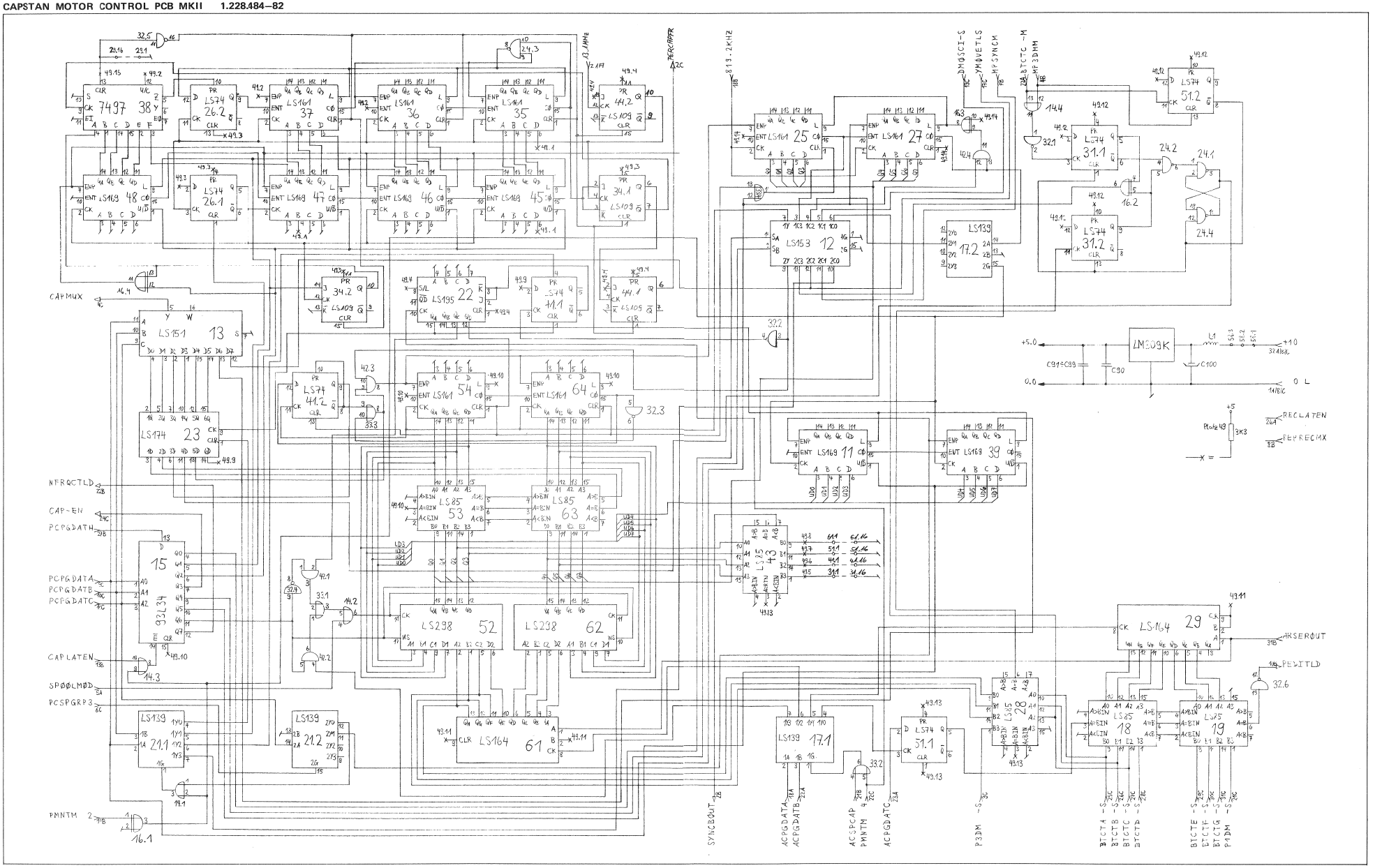

A80 LOCATOR | A80 MASTER-CONTROL | A800

MASTER (CODE SOURCE)

AUDIO TRANSPORTS

A800

A80/OTHERS

7.3 ... 7.8

SECTION 7.3 ... 7.8:
VIDEO TRANSPORTS

SECTION 7.2:
SWITCH SET
1.228.373

7

SECTION 7.1: INTERFACE RACK
1.228.890

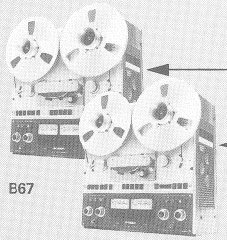

B67

7.9

7.9

7.9

7.9

SECTION 7.9:
ADDRESS START INTERFACE
1.228.374 (1.228.623)

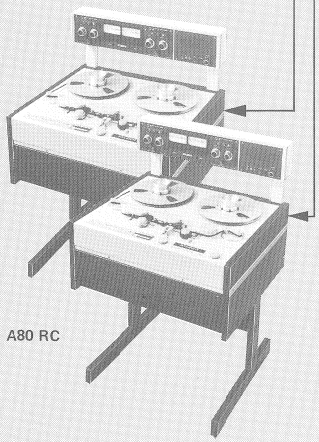

A80 RC

25/50

8000

SECTION 7.10:
EXTERNAL FREQUENCY
CONTROLLER 1.228.601

SPROCKET
FILM TRANSPORT

STATION SYNC
FREQUENCY, CODE

SLAVE PROCESSOR RACK

SECTION 2: SCHEMATIC DIAGRAMS
RACK LOCATIONS 1-20, LAYOUTS,
PARTS LIST, JUMPER SETTING

SECTION 3: CIRCUIT DESCRIPTION
RACK LOCATIONS 1-20

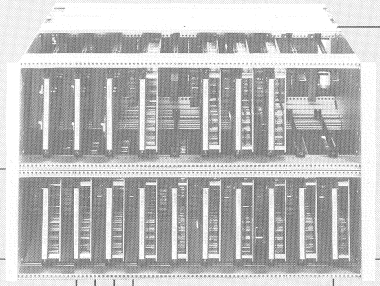

SECTION 4:
BACK PANELS
ORGANIZATION
AND
WIRING GR 99

(REAR OF RACK)
SECTION 5:
CONNECTION
FIELDS
RACK ELEMENTS
UPPER PART GR 98,
LOWER PART GR 97

SLAVE PERIPHERAL EQUIPMENTS

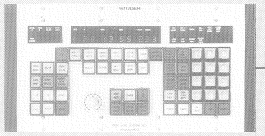

6.1

SECTION 6.1: MAIN PROGRAMMER
1.228.460 (461)

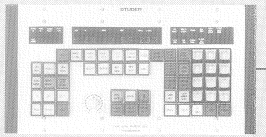

6.1

SECTION 6.1: MAIN PROGRAMMER
1.228.460 (461)

6.3

SECTION 6.3: PARALLEL/ SERIAL
CONVERTER
1.228.490

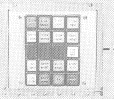

6.6

SECTION 6.6: BASIC PROGRAMMER
1.228.380

6.4

SECTION 6.4: POWER SUPPLY
1.228.150

6.2

SECTION 6.2: CODE CHANNEL REMOTE CONTROL
1.228.328

6.5

SECTION 6.5: POWER SUPPLY
1.228.170

SLAVE TRANSPORTS

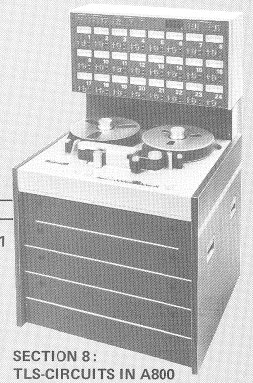

8

8.1

SECTION 8:
TLS-CIRCUITS IN A800
1.180.086

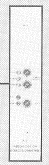

SECTION 8.1:
CODE CHANNEL
REMOTE CONTROL A800
1.328.140

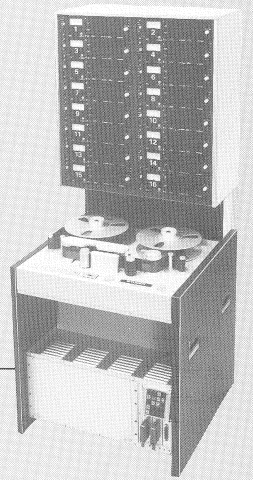

9

SECTION 9:
TLS-MODIFICATIONS AND CIRCUITS
IN A80 VU MK II / MK III

☒ INDICATES PARAGRAPH OF CABLE DESCRIPTION

CONTENTS SECTION 3

CIRCUIT DESCRIPTION

LOCATION		PAGE	PART NUMBER	DESCRIPTION
1		3/3	1.228.488(483)	EXTERNAL FREQUENCY CONTROL/TIME CODE GENERATOR
2		3/9	1.228.484	CAPSTAN MOTOR CONTROL MK II
3	▲	3/17	1.228.403	M + S RAM, TIMING
4		3/23	1.228.480	ARITHMETIC CONTROL A MK II
5		3/29	1.228.405	ARITHMETIC CONTROL B
6		3/35	1.228.481	PERIPHERAL CONTROL A MK II
7	▲	3/41	1.228.407	PERIPHERAL CONTROL B
8		3/47	1.228.408	TAPE DECK INTERFACE
		3/49	1.228.487	TLS INTERFACE TO A 800
9		3/53	1.228.409	PARALLEL CONNECTED PROGRAMMER RECEIVER
10		3/55	1.228.410	PARALLEL CONNECTED PROGRAMMER TRANSCEIVER
11		3/57	1.228.411	CODE RECORD AMPLIFIER
12	▲	3/61	1.228.412	CODE READ AMPLIFIER
13		3/65	1.228.413	DEMODULATOR
14		3/71	1.228.478	ARITHMETIC
15		3/75	1.228.482	ADDITIONAL PERI/ARI CONTROL
17		3/79	1.228.417	BASIC PROGRAMMER INTERFACE
		3/83	1.228.489	CODE CHANNEL CONTROL INTERFACE A 800
18		3/87	1.228.418	STABILIZER
19		3/87	1.228.419/422	STABILIZER
20		3/87	1.228.420	STABILIZER

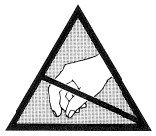

ALL PCBs MARKED WITH THIS SIGN ▲
CONTAIN SENSITIVE TO STATIC CHARGES.
PLEASE, FEFER TO PREFACE BEFORE
YOU REMOVE THESE BOARDS.

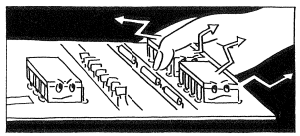

3.1
EXTERNAL FREQUENCY CONTROL/ TIME CODE GENERATOR
1.228.488 (1.228.483)

Slave Rack Platz 1

Die beiden Prints 1.228.483 und 1.228.488 dienen der Aufbereitung der am "Reference Frequency"-Eingang angelegten Frequenz zum Signal EXFRQDAT für die Arithmetik.
Zusätzlich enthält der Print 1.228.488 einen SMPTE-Code Generator. Er wird über die Main Programmer-Tasten bedient.

Der Print ist in folgenden Funktionsgruppen beschrieben:

3.1.1 Aufbereitung der externen Referenzfrequenz
3.1.2 Befehlsdecoder und Abfragemultiplexer der Arithmetic- und Peripheral-Control
3.1.3 Der Taktzähler für die Funktion Advance/ Retard und Phasing
3.1.4 RAM mit Adresszähler
3.1.5 Der SMPTE-Zeitcode-Generator

3.1
EXTERNAL FREQUENCY CONTROL/ TIME CODE GENERATOR
1.228.488 (1.228.483)

Slave Rack Location 1

Both prints 1.228.483 and 1.228.488 are used to process the frequency available at the "Reference Frequency Input" into the signal EXFRQDAT for the arithmetic.
In addition, print 1.228.488 contains an SMPTE code generator. It is operated via the main programmer keys.

The print is described in the following function groups:

3.1.1 Preparation of external reference frequency
3.1.2 Instruction decoder and interrogation multiplexer of the arithmetic and peripheral control
3.1.3 Clock counter for ADVANCE/RETARD, and PHASING
3.1.4 RAM with address counter
3.1.5 SMPTE time code generator

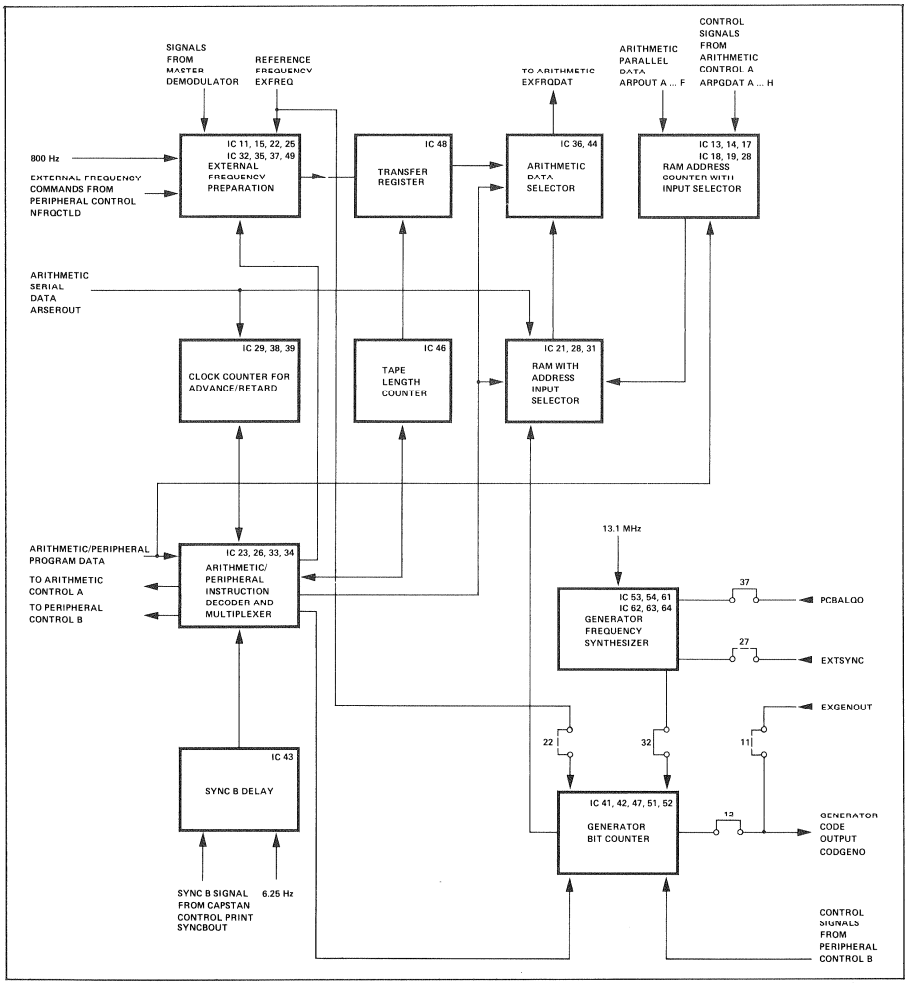

Fig. 3.1.1
Blockschaltbild

Fig. 3.1.1
PCB block diagram

3.1.1
Aufbereitung der externen Referenzfrequenz

Die beiden Figuren 3.1.2 und 3.1.3 zeigen die verschiedenen Quellen und den Verlauf der SMPTE-Codesignale.

3.1.1
Preparation of external reference frequency

The two figures 3.1.2 and 3.1.3 illustrate the various sources and the flow of the SMPTE code signals.

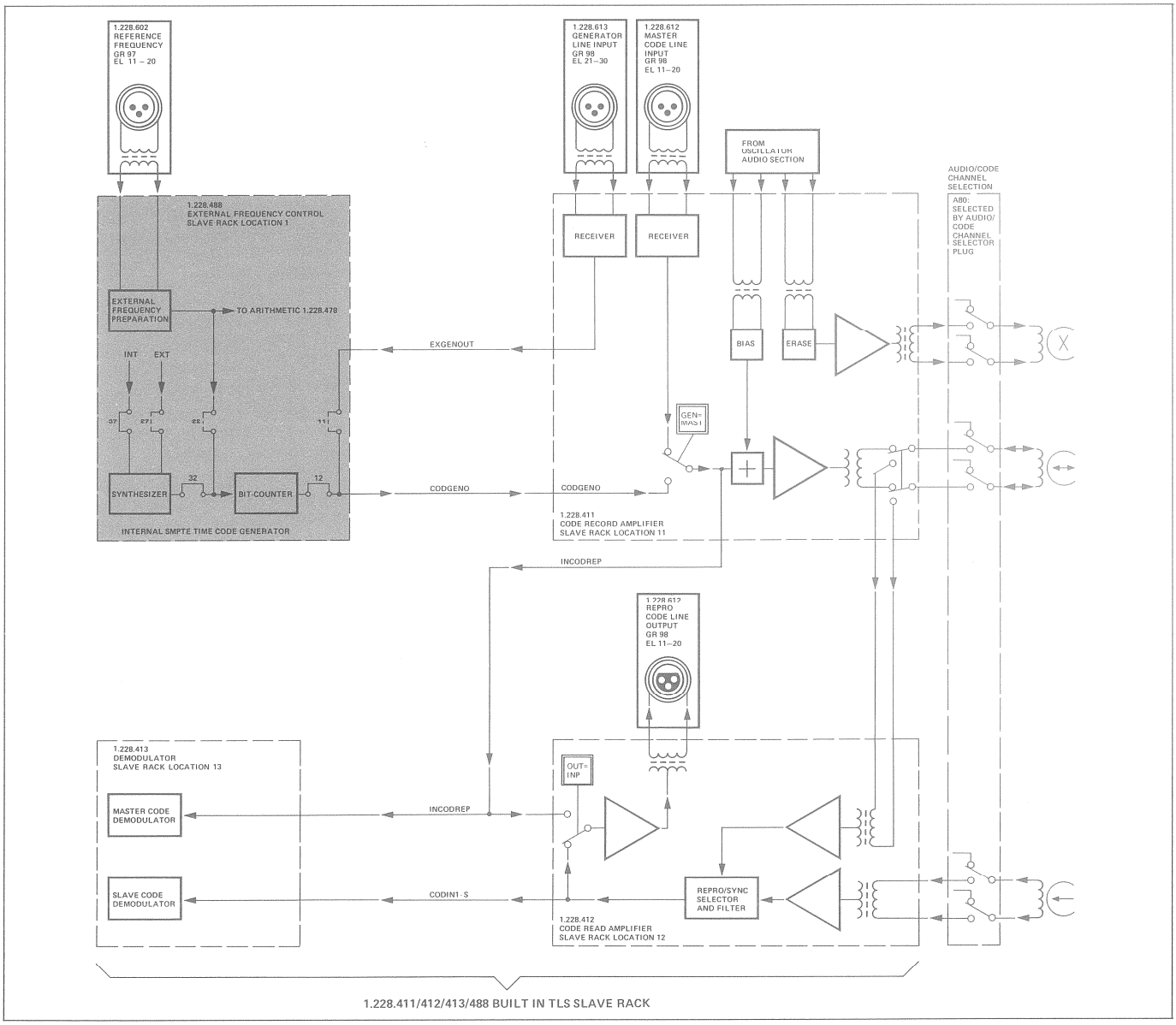

Fig. 3.1.2
Codesignalübersicht TLS-Slave A80

Fig. 3.1.2
Code signal overview TLS slave A80

Hier interessiert die externe Referenzfrequenz. Zweck der Aufbereitungsschaltung ist es, die Mastercodeimpulse zu simulieren. Eine angelegte Frequenz hat eine bestimmte Bandgeschwindigkeit zur Folge. Sie hängt von der Frequenz und vom Codetyp ab.
Die nominelle Slave-Bandgeschwindigkeit kann wie folgt berechnet werden:
4 x Anzahl Bits pro Frame x gewünschter Code (in Frames/sec) – 4 x 80 x Frame/sec.

In this diagram, the external reference frequency is of interest.
The purpose of the preparation circuit is the simulation of the master code impulses. The application of a frequency will result in a specific tape speed, depending on the frequency and code type.
The nominal speed of the slave tape can be calculated as follows:
4 x number of bits per frame x desired code (in frames/sec) – 4 x 80 x frames/sec.

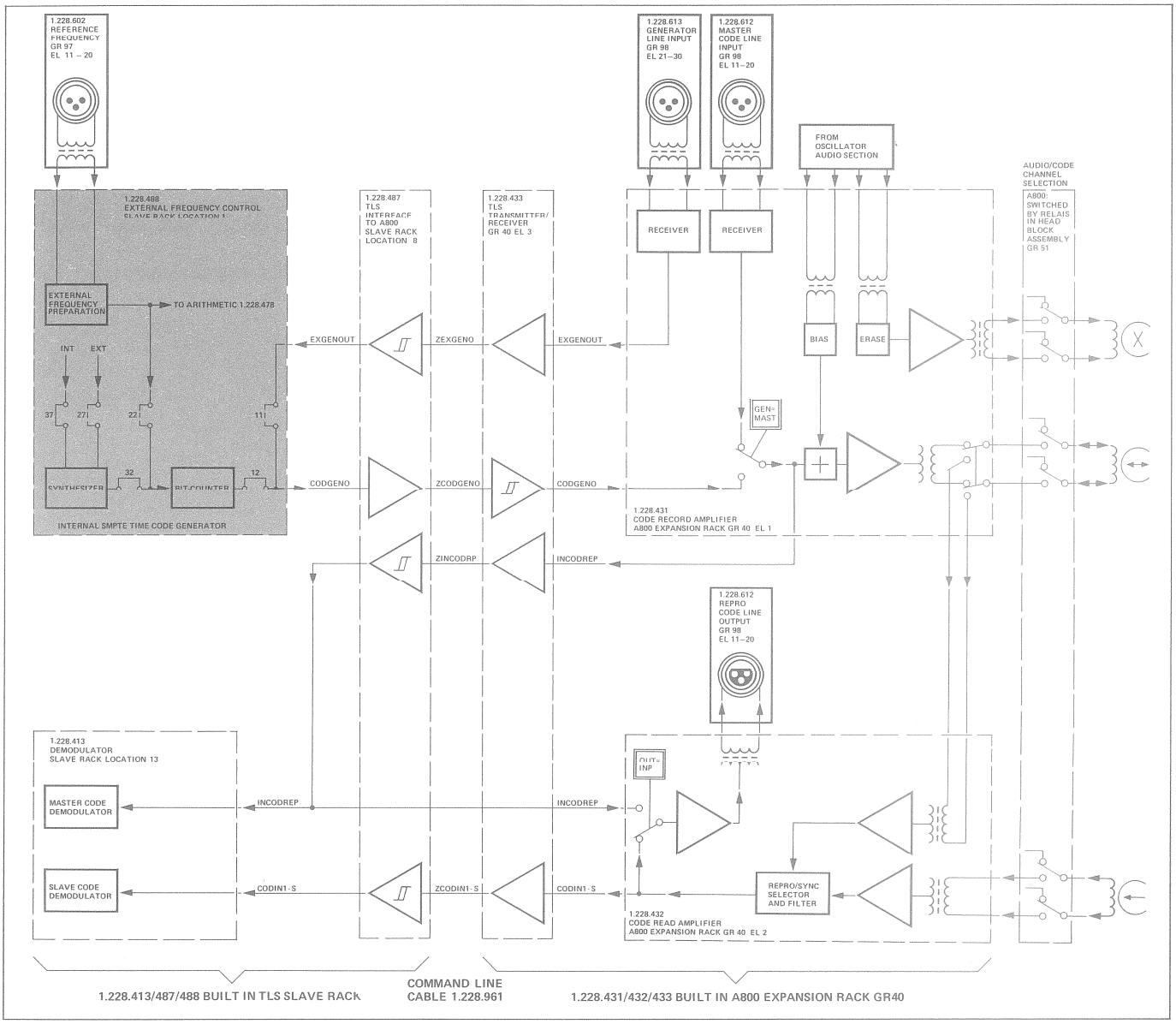

Fig. 3.1.3
Codesignalübersicht TLS-Slave A800

Fig. 3.1.3
Code signal overview TLS slave A800

Die beiden Flip Flop's (FF) 22.1 und 22.2 dienen zur Frequenzüberwachung. Sobald die externe Frequenz weniger als 1,6 kHz beträgt, wird der Ausgang Q des FF 22.2 tief. Damit wird über den Selector IC 15 auch MDMFAIL-M tief. Das Signal zum Umschalten auf die Referenzfrequenz (NFRQCTLD) kommt aus einem Zwischenspeicher der Peripheral Control. Mit den beiden FF IC 35.1 und 35.2 wird die externe Frequenz durch 2 resp. durch 4 geteilt. Mit den Ausgängen Q dieser beiden FF wird der Decoder IC 25 angesteuert.
Dieser Decoder simuliert Mastercode-Impulse und gibt sie über den Selector IC 15 frei.

The two flip-flops (FF) 22.1 and 22.2 are used for monitoring the frequency. As soon as the external frequency drops below 1.6 kHz, output Q of FF 22.2 goes low. Via selector IC 15, also MDMFAIL-M goes low. The signal for switching to reference frequency (NFRQCTLD) originates from a buffer in the peripheral control. With the two flip-flops IC 35.1 and 35.2, the external frequency is divided by 2 or 4 respectively. The outputs Q of the two flip-flops are used to trigger decoder IC 25.
This decoder simulates master code impulses and releases them via selector IC 15.

Der Framezähler IC 49 ist ein dekadischer 4Bit-Binärzähler. Seine Ausgänge gehen zum Transferregister IC 48.
Dieses ist ein 8Bit-Parallel Input/Serial Output-Register und wird von der Arithmetic Control gesteuert.
Der Ausgang mit dem nun aufbereiteten Signal EXFRQDAT geht über den Selector IC 37.2, 36.3, 44.3, 44.4 zur Arithmetic.

The frame counter IC 49 is implemented by a decadic 4-bit binary counter. Its outputs are connected to the transfer register IC 48.
It is an 8-bit parallel input/serial output register which is driven by the arithmetic control.
The output containing the prepared signal EXFRQDAT is input to the arithmetic via selectors IC 37.2, 36.3, 44.3, 44.4.

Code Typ in frames/sec			
24	25	29,97	30
7680	8000	9590,4	9600
Frequency (Hz) for nominal tapespeed			

Fig. 3.1.4
Play-Sollfrequenz am "Reference Frequency Input"
Nominal play frequency at "Reference Frequency Input"

3.1.2
Befehlsdecoder und Abfragemultiplexer der Arithmetic- und Peripheral-Control

Dieser Schaltungsteil enthält für die Arithmetic- und Peripheral Control je einen Befehlsdecoder (IC 26 resp. IC 33) und einen Abfragemultiplexer (IC 34 resp. IC 23).
Die Verzögerung des Signals SYNC B wird durch das 8Bit-Serial Input-Register IC 43 erreicht.
Das Signal SYNC B liegt am Clear-Eingang dieses Registers. Die Clock-Frequenz beträgt 6.25 Hz.
Das Register kann auch durch die Peripheral-Control über den Befehlsdecoder IC 33 zurückgesetzt werden. Die Verzögerung beträgt maximal:
8 x 0,16 = 1,28 sec.
Bei der TLS MK II Locator-Version dient der binäre 4Bit-Up/Down-Zähler IC 46 als Bandlangezahler. Er wird von der Peripheral Control gesteuert. Seine Ausgänge gehen zum Transferregister IC 48.

3.1.2
Instruction decoder and interrogation multiplexer of the arithmetic and peripheral control

This circuit contains a separate instruction decoder (IC 26 and IC 33 respectively) for the arithmetic and peripheral control as well as separate interrogation multiplexers (IC 34 and IC 23 respectively).
The delay of the SYNC B signal is accomplished by the 8-bit serial input register IC 43.
The SYNC B signal is available at the clear input of this register. The clock frequency is 6.25 Hz.
The register can also be cleared by the peripheral control via instruction decoder IC 33. The maximum delay is
8 x 0.16 = 1.28 sec.
In the TLS MK II locator version, the binary 4-bit up/down counter IC 46 serves as tape length counter. It is driven by the peripheral control. Its outputs are connected to the transfer register IC 48.

3.1.3
Der Taktzähler für die Funktion Advance/ Retard und Phasing

Um bei ADV/RET oder PHASING die Capstanmotorfrequenz richtig verändern zu können, wird ein Taktzähler benötigt.
Dieser besteht aus den beiden binären 4Bit-Zählern IC 38 und IC 39. An den Dateneingängen liegt ein 8Bit-Serial In/Parallel Out-Register. Die Arithmetic berechnet die Anzahl der benötigten Taktpulse und schreibt das Resultat in dieses Register.
Die Peripheral Control kann den Zähler (auf den Wert im Register) laden, takten und zurücksetzen. Sowohl die Arithmetic- wie die Peripheral Control können den Carry Out des Zählers IC 38 abfragen.

3.1.3
Clock counter for advance/ retard and phasing

To allow proper change of the capstan motor frequency for the ADV/RET and PHASING functions, a clock counter is implemented.
This counter consists of the two binary 4-bit counters IC 38 and IC 39. An 8-bit serial in/parallel out register is coupled to the inputs. The arithmetic computes the number of required clock pulses and writes the result into this register.
The peripheral control can strobe, reset, or load the counter (with the value contained in the register). The arithmetic as well as the peripheral control can interrogate the carry out of the counter IC 38.

3.1.4
RAM mit Adresszähler

Die Adresseingänge des RAM IC 28 sind mit dem Umschalter IC 21 und 31 verbunden. Dieser wird mit 819.2 kHz umgeschaltet. In der einen Phase liegt der Adresszähler IC 17, 18 und 19 an den Eingängen des RAM.
In der andern ist es der Generator-Bitzähler IC 52, 51, 41 und 42.
Der Adresszähler wird von der Arithmetic Con-

3.1.4
RAM with address counter

The address inputs of the RAM IC 28 are connected to the selector IC 21 and 31. It is switched with a frequency of 819.2 kHz. At the one phase, address counter IC 17, 18 and 19 is available at the inputs of the RAM.
At the other phase it is generator – bit counter IC 52, 51, 41 and 42.
The address counter is driven by the arithmetic

trol gesteuert. An den fünf niedrigwertigeren Dateneingängen liegen Arithmeticprogramm-Daten.
Die höherwertigen Dateneingänge kommen vom Eingangsumschalter IC 13 und IC 14. Auch dieser Umschalter mit Ausgangslatch wird von der Arithmetic Control gesteuert. Mit ihm können entweder Arithmeticprogramm-Daten oder Daten aus der Arithmetic an den Adresszähler gelegt werden.
Der Dateneingang des RAM ist das serielle Ausgangssignal ARSEROUT der Arithmetic. Sein Ausgang führt über den Arithmetic Data Selector zur Arithmetic zurück.

control. At the five low-order data inputs, arithmetic program data is available.
The high-order data inputs are derived from the input selector IC 13 and IC 14. This selector, which features an output latch, is also driven by the arithmetic control. It can be used for applying either arithmetic program data or data from the arithmetic to the address counter.
The serial output signal ARSEROUT of the arithmetic is the data input for the RAM. Its output is returned to the arithmetic via the arithmetic data selector.

3.1.5 Der SMPTE-Zeitcode-Generator

Der SMPTE-Codegenerator besteht im wesentlichen aus den beiden Teilen Frequenz Synthesizer und Bitzähler.

Der Frequenz Synthesizer
(IC 54, 53.2, 64, 63, 62) ist gleich aufgebaut wie der des Capstan Control Printes.
Das PROM IC 61 bestimmt den Wert, auf den die Zählerkette geladen werden muss. Er ist abhängig vom eingestellten Code Typ. Dieser wird durch die beiden Jumper 43 und 53 bestimmt, deren Stellung von der Arithmetic Control via Multiplexer IX 34 abgefragt werden kann.

Der Bitzähler
wird durch die beiden IC 51 und IC 52, der Framezähler durch IC 41 gebildet.
Im RAM steht der Inhalt von insgesamt 4 Frames. Sobald ein Frame vom Generator abgearbeitet worden ist, wird dieses im RAM von der Arithmetic wieder mit einem neuen Wert überschrieben.
Die Ausgänge des Framezählers gehen zum PROM 42, das eingesetzt wurde, um aufwendige Verknüpfungsschaltungen mit Gattern zu ersetzen.
Seine Ausgänge sind mit dem Address Input Selector des RAM verbunden.
Der momentane Stand des Framezählers kann jederzeit von der Arithmetic getestet werden. Dazu dienen die Framezähler-Ausgänge FQA und FQB, welche an den Multiplexer IC 34 geführt sind.
Die Ausgänge des Bitzählers gehen ebenfalls (z.T. über PROM 42) zum Address Input Selector des RAM.

Als Taktfrequenz kommen zwei Quellen in Frage:
1. Interner Synthesizer über Jumper 32
2. Externer Takt über den Reference Frequency Eingang, via Jumper 22 und IC 47.1. Dieser halbiert die Frequenz, um die nominellen Werte am Reference Frequency Anschluss beizubehalten (siehe Tabelle Fig. 3.1.2).

3.1.5 SMPTE time code generator

The SMPTE code generator basically consists of the frequency synthesizer and bit counter components.

Frequency synthesizer
Its design (IC 54, 53.2, 64, 63, 62) is identical to the one on the capstan control print.
PROM IC 61 defines the value with which the counting chain is to be loaded. It is dependent on the code type setting as determined by jumpers 43 and 53 whose position can be interrogated by the arithmetic control via multiplexer IC 34.

Bit counter
It is implemented by the two ICs 51 and 52 while the frame counter is implemented by IC 41.
The RAM holds the contents of 4 frames. As soon as a frame has been processed by the generator, the contents of the RAM are overwritten with a new value.
The outputs of the frame counter are connected to PROM 42 which has been implemented to eliminate elaborate combinatorial circuits with gates.
Its outputs are connected with the address input selector of the RAM.
The momentary status of the frame counter can be interrogated by the arithmetic at any time by means of the frame counter outputs FQA and FQB which are connected to multiplexer IC 34.
The outputs of the bit counter are also connected (partially via PROM 42) to the address input selector of the RAM.

The following two sources are suitable as clock frequency:
1. Internal synthesizer via jumper 32
2. External clock through reference frequency input, via jumper 22 and IC 47.1. It divides the frequency in half in order to retain the nominal value at the reference frequency terminal (see table, Fig. 3.1.2).

Der Ausgang des RAM IC 28 liegt auch am Dateneingang des FF 53.1, welches als Buffer des momentanen Bit-Inhalts dient.
Die beiden IC 47.2 und 16.2 bilden den Modulator.
Mit den beiden Jumpern 11 und 12 kann der Code-Ausgang des internen Generators unterbrochen und auf eine externe, am Stecker "Generator Line Input" angeschlossene, Codequelle umgestellt werden.

The output of RAM IC 28 is also available at the data input of FF 53.1 which serves as buffer for the momentary bit content.
The two ICs 47.2 and 16.2 make up the modulator.
With the two jumpers 11 and 12, the code output of the internal generator can be tapped and switched to an external code source connected to the "Generator Line Input" terminal.

3.2
CAPSTAN MOTOR CONTROL MK II
1.228.484
Slave Rack Platz 2

Der Print verarbeitet verschiedene Mess-Signale zur Steuerung des Capstan- und der Wickelmotoren der Slavemaschine.

Er besteht aus folgenden Schaltkreisen:
- Synthesizer für die Capstan-Referenzfrequenz
- Messeinheit für die Bandgeschwindigkeit
- Edit Lead Pulse-Comparator
- Elementen der Peripheral-Control

Die Funktionen sind wie folgt beschrieben:
3.2.1 Synthesizer für Capstan-Referenzfrequenz
3.2.2 Messeinheit für die Bandgeschwindigkeit
3.2.3 Mess-Selector
3.2.4 Messen der Wickelgeschwindigkeit mit Code
3.2.5 Messen der Wickelgeschwindigkeit mit Movesensor
3.2.6 Messen der Geschwindigkeit beim Synchronisationsvorgang
3.2.7 Messen der Phasendifferenz Master und Slave
3.2.8 Steuerung der Messeinheit
3.2.9 Ermitteln des Edit Lead Pulses

Das Print-Blockschaltbild zeigt die wesentlichen Schaltungsteile.

3.2
CAPSTAN MOTOR CONTROL MK II
1.228.484
Slave Rack Location 2

This print processes the various measuring signals for controlling the capstan and spooling motors of the slave machine.

It comprises the following circuits:
- Synthesizer for capstan reference frequency
- Measuring unit for tape speed
- Edit lead pulse comparator
- Elements of the peripheral control

The functions are described in the following sections:
3.2.1 Synthesizer for capstan reference frequency
3.2.2 Tape speed measuring unit
3.2.3 Measurement input selector
3.2.4 Measuring the winding speed by code reading
3.2.5 Measuring the winding speed with move sensor
3.2.6 Measuring the speed during synchronisation
3.2.7 Measuring the phase difference between master and slave
3.2.8 Control of the measuring unit
3.2.9 Definition of the edit lead pulse

The PCB block diagram shows the primary components of the circuit

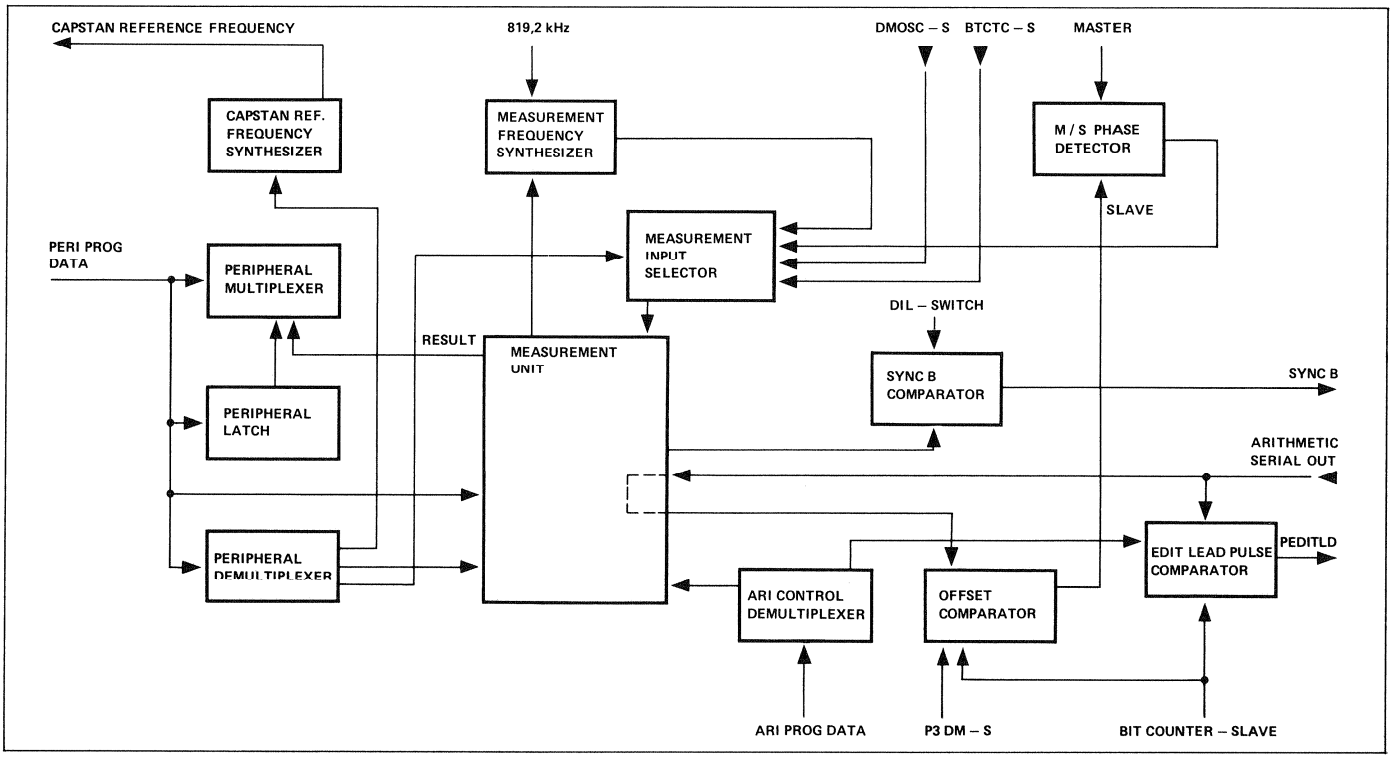

Fig. 3.2.1
Print-Blockschaltbild

Fig. 3.2.1
PCB block diagram

3.2.1
Synthesizer für Capstan-Referenzfrequenz

Um die Geschwindigkeit des Slave Capstanmotores steuern zu können, muss an die Maschine eine variable Frequenz angelegt werden. Dabei entsprechen 3200 Hz der nominellen Referenzfrequenz für die Play-Geschwindigkeit.
Zur Herstellung dieser Frequenz (PERCAPFR) werden zwei Zählerketten benützt.
Die Hauptzählkette bestehend aus den IC's 34, 35, 36, 37, 38 und 26.2 teilt die Eingangsfrequenz von 13,1072 MHz. Sie ist über das Gatter 24.3 rückgekoppelt, d.h. wenn der maximale Zählerstand erreicht ist, wird der Stand der Hilfszählkette (IC 44, 45, 46 und 47) in die Hauptzählkette übernommen. Dadurch entsteht eine Ausgangsfrequenz (PERCAPFT), welche vom Zählerstand der Hilfszählkette abhängt.
Eine Veränderung dieses Zählerstandes bewirkt demnach eine Veränderung der Geschwindigkeit des Capstanmotores. Sie wird beim Synchronisieren je nach Bedarf von der Peripheral-Control vorgenommen.
Die IC's 26.2, 38 und 48 erlauben eine Verfeinerung der Frequenzabstufung.
Der IC 26.1 dient als Zähleingang der Hilfszählkette (26.1.1). Mit ihm wird verhindert, dass sich der Zählerstand der Hilfszählkette in dem Moment verändert, in dem die Hauptzählkette geladen wird.

3.2.1
Synthesizer for Capstan Reference Frequency

To control the speed of the slave's capstan motor, a variable frequency must be input to the machine. The nominal reference frequency for the PLAY function is defined as 3200 Hz.
Two counting chains are used to generate this frequency (PERCAPFR).
The primary counting chain comprises ICs 34, 35, 36, 37 and 38, while 26.2 is used to divide the input frequency of 13,1072 MHz. The feedback occurs via gate 24.3, i.e. when the maximum count is reached, the contents of the subsidiary counting chain (IC 44, 45, 46 and 47) is loaded into the primary counting chain. Thus, an output frequency (PERCAPFT) is generated which depends on the content of the subsidiary counting chain.
A change of this counter content therefore effects a change in the capstan motor speed. This change is performed as required by the peripheral control during synchronization.
ICs 26.2, 38 and 48 permit a finer frequency graduation.
IC 26.1 serves as counter input of the subsidiary counting chain (26.1.1). It prevents a change in content of the subsidiary counter at the precise moment the primary counting chain is being loaded.

3.2.2
Messeinheit für die Bandgeschwindigkeit

Um eine genaue und rasche Synchronität zu erhalten, muss die Bandgeschwindigkeit während der PLAY- (RECORD)-Funktion und auch während des Wickelns gemessen und dementsprechend der Capstan- bzw. die Wickelmotoren gesteuert werden.

Es werden drei verschiedene Geschwindigkeitsarten unterschieden:
- Wickeln
- Wickeln (3.2.4/5)
- Capstan Grobeinlauf beim Synchronisationsvorgang (3.2.6)
- Phasenmessung zur Capstan-Feinsteuerung (3,2.7)

Beim Wickeln muss noch unterschieden werden, ob als Referenz der auf dem Band aufgezeichnete SMPTE-Code oder das Signal des Movesensor ausgewertet werden soll:
- Wickeln mit Code (3.2.4)
- Wickeln mit Movesensor (3.2.5)

3.2.2
Tape speed measuring unit

In order to reach accurate and rapid synchronism, the tape speed must be measured during the PLAY (RECORD) as well as winding functions for which a corresponding control of the capstan or the spooling motors becomes necessary.

We distinguish four different types of speeds:
- Winding (3.2.4)
- Winding (3.2.5)
- Capstan coarse run-in during synchronization (3.2.6)
- Phase measurement for capstan fine control (3.2.7)

For the winding function we differentiate, whether the SMPTE code recorded on the tape or the signal of the move sensor is to be evaluated:
- Winding with code (3.2.4)
- Winding with move sensor (3.2.5)

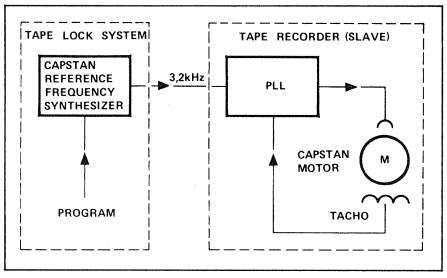

Fig. 3.2.2
Prinzip-Blockschaltbild
Elementary circuit diagram

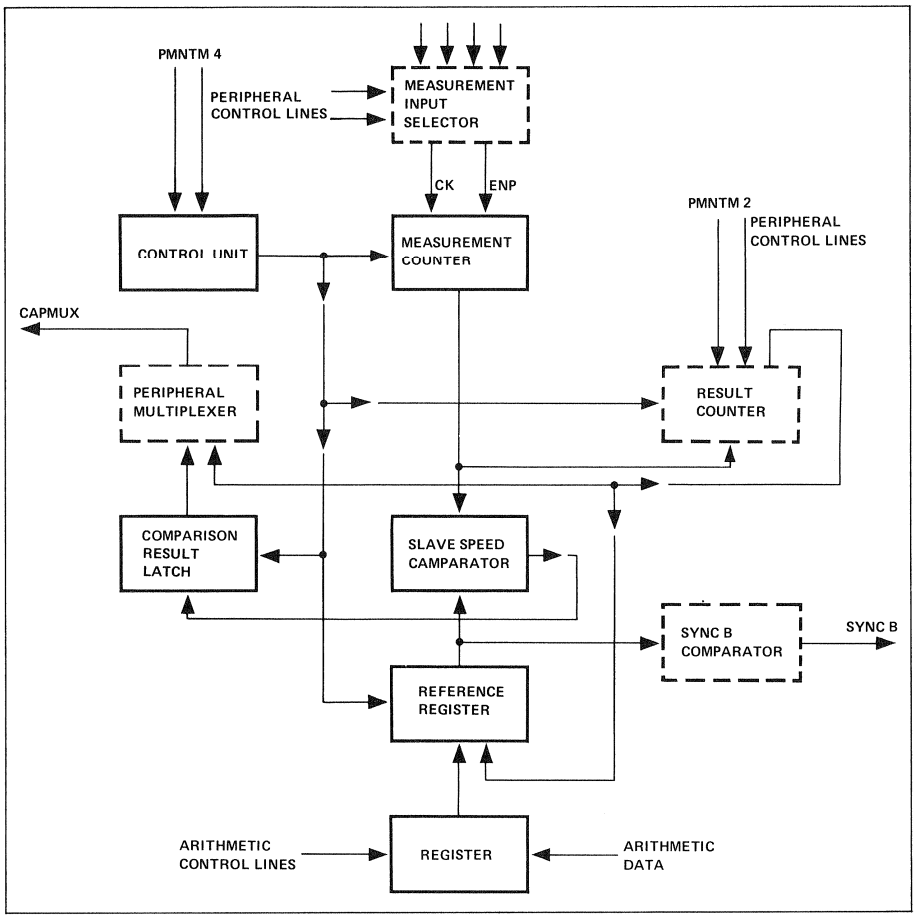

Fig. 3.2.3
Blockschaltbild der Messeinheit

Fig. 3.2.3
Block diagram of the measuring unit

Das Prinzip der Messung:
In der Messeinheit werden alle vier Geschwindigkeitsarten gleich gemessen. Während einer Messperiode wird eine Messfrequenz mit der Zählerkette IC 64, 54 und 41.2 ausgezählt.
Nach dem Messen wird je nach Zustand dieses Zählers die effektive Geschwindigkeit daraus abgeleitet.
Die nötigen Befehle werden via Programm dem Capstan- bzw. den Wickelmotoren weitergegeben.

Die Funktionsweise:
Die Messperiodenimpulse und die Taktimpulse zum Hochzählen sind von der Peripheral-Control vorgegeben. Die zu messenden Grössen werden von der Peripheral-Control via Mess-Selector IC 12 an die Messeinheit gelegt.
Mit den Zählern IC 54 und 64 wird die Geschwindigkeit gemessen. IC 41.2 dient zur Erweiterung des Counters um eine Stelle. Es kann also maximal bis 512 gezählt werden. Über die Komperatoren IC 53 und 63 wird die Ist-Geschwindigkeit mit dem in den Speichern IC 52 und 62 gespeicherten Sollwert (Referenz) verglichen.
Das Resultat des Vergleichs wird in IC 23 (Peripheral Latch) abgespeichert und kann durch das Peripherie-Kontrollprogramm abgefragt werden.
Die von der Arithmetik stammenden Referenz-

Measuring principle:
The same principle is employed by the measuring unit for measuring all four speed types. During a measuring period, a measuring frequency is counted out by the counting chain IC 64, 54 and 41.2.
After measuring, the status of this counter determines the actual speed.
The necessary instructions are supplied to the capstan or spooling motors through the program.

Principles of operation:
The measuring period pulses and the clock pulses for incremental counting are predefined by the peripheral control. The variables to be measured are input to the measuring unit by the peripheral control via IC 12.
The speed is measured with counters IC 54 and 64. IC 41.2 expands the counter by an additional position, allowing for a maximum count of 512.
Via comparators IC 53 and 63, the actual speed is compared with the reference value stored in memories IC 52 and 62.
The result of this comparison is stored in IC 23 (peripheral latch) where it can be interrogated by the peripheral control program.
The reference data originating from the arithmetic are serially written into IC 61, where they

daten werden seriell in IC 61 eingeschrieben. Sie stehen dann für das Referenzregister parallel zur Verfügung.
Das Resultat der Messung wird vom Zähler IC 11 und 30 weitergeleitet. Somit steht immer das Resultat der letzten Messung im Result Counter, der durch das Peripherie Programm abgefragt werden kann.
Der spezifische Ablauf des Messvorganges soll im Folgenden ausführlich beschrieben werden.

are subsequently available as parallel data for the reference register.
The result of this measurement is passed on by counter IC 11 and 30. In this manner, the result of the most recent measurement is always stored in the counter which can be interrogated by the peripheral program.
The specific sequencing of the measuring operation is described in the following section.

3.2.3 Mess-Selector

Er wird aus IC 12 gebildet und dient als Selector der zu messenden Geschwindigkeiten (siehe 3.2.2). Der Selector wird durch das Peripheral Programm via Demultiplexer IC 15 angesteuert.

3.2.3 Measurement input selector

It is implemented by IC 12 and serves as selector for the speeds to be measured (see 3.2.2). The selector is accessed by the peripheral program via demultiplexer IC 15.

Eingänge IC 12	Zahlpulse	Zahlperiode	Messung
1C0, 2C0	aus Slave-Code 10 Pulse pro Frame	aus Programm 40 ms	Slave-Bandgeschwindigkeit absolut (beim Wickeln)
1C1, 2C1	aus Slave-Code 320 Pulse pro Frame	aus Master-Code 1 Frame	Slave-Bandgeschwindikeit relativ zu Master (bei Play; Differenz > 2ms)
1C2, 2C2	ab Quarz, variabel 3,2 bis 812,2 kHz	ab Movesensor bei 7 1/2 ips: 30 ms	Slave-Bandgeschwindikeit absolut (beim Wickeln ohne Code; nur A80 Locator Version)
1C3, 2C3	ab Quarz 51,2 kHz	Phasendifferenz zwischen Master und Slave-Code 10 Messungen pro Frame	Differenz zwischen Master und Slave (bei Play; Differenz > 2ms)

Fig. 3.2.4
Auswahlmöglichkeiten des Mess-Selectors

Inputs IC 12	Counting pulses	Counting period	Measurement
1C0, 2C0	from slave code 10 pulses per frame	from program 40 ms	absolute slave tape speed (during winding)
1C1, 2C1	from slave code 320 pulses per frame	from master code 1 frame	slave tape speed relative to master (during PLAY; diff. > 2 ms)
1C2, 2C2	from quartz, variable 3.2 to 812.2 kHz	from move sensor at 7 1/2 ips: 30 ms	absolute slave tape speed (during winding without code; only A80 locator version)
1C3, 2C3	from quartz 51.2 kHz	phase difference between master and slave code 10 measurements per frame	difference between master and slave (during PLAY; difference < 2 ms)

Fig. 3.2.5
Selection possibilities for measurement input selector

3.2.4
Messen der Wickelgeschwindigkeit mit Code

Um eine genaue und rasche Synchronität zu erhalten, muss die Bandgeschwindigkeit auch während des Wickelns geregelt werden konnen. Dazu muss die Bandgeschwindigkeit gemessen und dementsprechend die Wickelmotoren gesteuert werden.

Prinzip:
Für die Messung wird der Code während des Wikkelns gelesen. Die Messperiode von 40 ms wird vom Programm der Peripheral-Control bestimmt. In dieser Periode wird die Anzahl der BTCTC-S Pulse gemessen und mit einer Sollzahl verglichen. Anhand dieses Vergleiches werden die Wickelmotoren gesteuert.

3.2.5
Messen der Wickelgeschwindigkeit mit Movesensor

Diese Messmethode ist nur bei der A80 LOCATOR-Version möglich.

Prinzip:
Die Messperiode wird vom Movesensor des Slave-Laufwerkes abgeleitet. Die Scheibe mit den Löchern dreht sich entsprechend der Geschwindigkeit des Bandes. Während der Dunkelphase zwischen den Löchern wird der Measurement Counter hochgezählt und so die Geschwindigkeit bestimmt.
Der Umfang der Sensorrolle beträgt 7 1/2". Die Lochscheibe ist mit 16 Löchern versehen.
Die Messperiode entspricht demnach:

7 1/2" : 32 = 0,234"

Die Messfrequenz wird mit den Zählern IC 25 und 27 aufbereitet. Sie wird so ausgerechnet, dass pro Messphase 128 Pulse gezählt werden, falls die Bandgeschwindigkeit der Sollgeschwindigkeit entspricht.

Beispiel:
Sollgeschwindigkeit = 30 ips

$$\text{Messzeit} = \frac{0{,}234 \text{ inches}}{30 \text{ ips}} = 7{,}8 \text{ ms}$$

Frequenz = 128 Pulse / 7,8 ms = 16,4 kHz

$$\text{Teilung} = \frac{819{,}2 \text{ kHz}}{16{,}4 \text{ kHz}} = 50$$

Damit die Zähler IC 25 und 27 durch 50 teilen, muss an ihren Ladeeingängen, der Wert 206 (256 - 50 = 206) anliegen.
Diese Messung hat den Vorteil, dass sie um so genauer wird, je langsamer gewickelt wird, d.h. je näher wir auf die Play-Geschwindigkeit zusteuern. Gerade in diesem Moment ist es äusserst wichtig, die Wickelmotoren genau steuern zu können, um möglichst schnell Play-Geschwindigkeit zu erhalten.

3.2.4
Measuring the winding speed by code reading

To obtain rapid synchronism, the system must feature a method for measuring the tape speed during winding. This is accomplished by measureing the tape speed and controlling the spooling motors according to the measuring result.

Principle:
To obtain the winding speed, the code is measured during winding. The measuring period of 40 ms is defined by the program of the peripheral control. During this period, the number of BTCTC-S pulses is measured and compared with a reference count. The spooling motors are controlled based on the result of the comparison.

3.2.5
Measuring the winding speed with move sensor

This measuring method is only available with the A80 LOCATOR version.

Principle:
The measuring period is derived from the move sensor of the slave machine. The rotation speed of the disk with the holes corresponds to the tape speed. During the dark interval between holes, the measurement counter is incremented, thus determining the speed.
The circumference of the sensor roller is 7 1/2".
The disk features 16 holes.
The measuring period is calculated as follows:

7 1/2" : 32 = 0.234"

The measuring frequency is prepared with counters IC 25 and 27. For each measuring phase, 128 pulses are counted out when the actual tape speed matches the nominal speed.

Example:
Nominal speed = 30 ips

$$\text{Measuring time} = \frac{0.234 \text{ inches}}{30 \text{ ips}} = 7.8 \text{ ms}$$

Frequency = 128 pulses / 7.8 ms = 16.4 kHz

$$\text{Division} = \frac{819.2 \text{ kHz}}{16.4 \text{ kHz}} = 50$$

To obtain a division of 50 at the counters IC 25 and 27, the value 206 (256 - 50) must be applied to their loading input.
This measuring method results in the advantageous fact that the accuracy of measurement increases with decreasing winding speeds, i.e. when approaching the PLAY speed. Especially at this moment, accurate control of the spooling motors is of crucial importance in order to reach PLAY speed as rapidly as possible.

Die zu ladenden Werte entstammen der Arithmetic und werden über IC 61, 52 und 62 an den Zähler IC 25 und 27 geführt. Die Steuerung erfolgt durch das Programm.

The values to be loaded originate from the arithmetic and are input to the counter IC 25 and 27 via ICs 61, 52 and 62. The control is performed by the program.

3.2.6
Messen der Geschwindigkeit beim Synchronisations-Vorgang

Es handelt sich um den Abbau einer Differenz grösser als 2 ms durch Steuerung des Capstanmotors, also bevor die Phasenmessung eingeleitet werden kann.
Gemessen wird die Slave-Geschwindigkeit relativ zur Master-Geschwindigkeit.

Prinzip:
Die Messperiode wird aus dem Synchronisationswort des Master-Codes abgeleitet, d.h. sie entspricht der Dauer eines Master-Frames.
Die Zählfrequenz wird aus dem Slave-Code abgeleitet. Sie entspricht der vierfachen Bitfrequenz (= 320 Pulse pro Slave-Frame).

Die während der Messperiode gezählten Pulse werden mit einem Sollwert (von der Arithmetic-Control berechnet) verglichen und dementsprechend der Capstanmotor gesteuert.

3.2.6
Measuring the speed during synchronization

Its purpose is to reduce a difference of >2 ms by controlling the capstan motor, i.e. before the phase measurement can be started.
It measures the speed of the slave relative to the speed of the master.

Principle:
The measuring period is derived from the synchronization word of the master code, i.e. it corresponds to the period of a master frame. The counting frequency is derived from the slave code. It corresponds to the four-fold bit frequency (320 pulses per slave frame).

The pulses counted during the measuring period are compared to a reference value (calculated by the arithmetic control) and the capstan motor is controlled accordingly.

3.2.7
Messen der Phasendifferenz Master und Slave

Wenn beim Synchronisationsvorgang die Differenz kleiner wird als 2 ms, ist die Geschwindigkeitsmessung nach Abschnitt 3.2.6 zu ungenau. Deshalb wird die Feinsynchronisation anhand eines Phasenvergleichs zwischen Master- und Slave-Code vorgenommen.

Prinzip:
Als Messperiode wird das Ausgangssignal des Phasendetectors (siehe Abschnitt 3.2.8) verwendet.
Die Zählfrequenz beträgt 51,2 kHz.
Das Messresultat wird von der Peripheral-Control ausgewertet.

Funktion der Schaltung:
Im Sequenzdiagramm ist ein Beispiel aufgeführt, in dem der Slave voreilt.
In der Zeit zwischen den beiden positiven Flanken von Master und Slave wird in der Messeinheit ein Zähler mit 52 kHz Messgenauigkeit hochgezählt.

Messgenauigkeit : 1/52000 sec = 20 µs

Für präzise Synchronität ist eine genaue Phasenmessung notwendig, um eine entsprechende Feinkorrektur der Capstan-Geschwindigkeit vorzunehmen.
Über IC 14.4 und 32.1 erhält das Flip-Flop IC 31.1 den Messpuls abhängig vom Master-Code.
Über Flip-Flop 51.2 wird die ganze Schaltung

3.2.7
Measuring the phase difference between master and slave

When the difference during synchronization becomes less than 2 ms, the accuracy of the speed measurement as described in 3.2.6 is too low. Therefore, fine-synchronization based on phase comparison between master and slave code is employed.

Principle:
The output signal of the phase detector is used as measuring period (see section 3.2.8).
The counting frequency is 51.2 kHz.
The result of this measurement is evaluated by the peripheral control.

Circuit function:
The sequence diagram illustrates an example, in which the slave is leading.
In the time between the two positive slopes of master and slave, a counter in the measuring unit is incremented with a measuring accuracy of 52 kHz.

Measuring accuracy: 1/52000 sec = 20 µs

For accurate synchronism, an accurate phase measurement is required to allow corresponding fine-adjustment of the capstan speed.
Flip-flop IC 31.1 receives the measuring pulse via IC 14.4 and 32.1, depending on the master code.

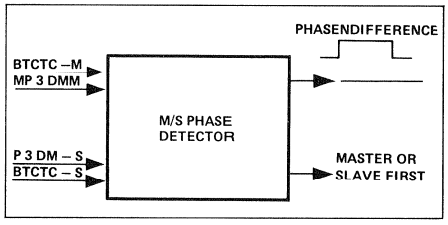

Fig. 3.2.6
Prinzip der Messeinheit
Principle of the measuring unit

zurückgestellt (Clear). Ebenso erhält IC 31.2 die Slave-Information.

The entire circuit is cleared via flip-flop 51.2. IC 31.2 receives the slave information.

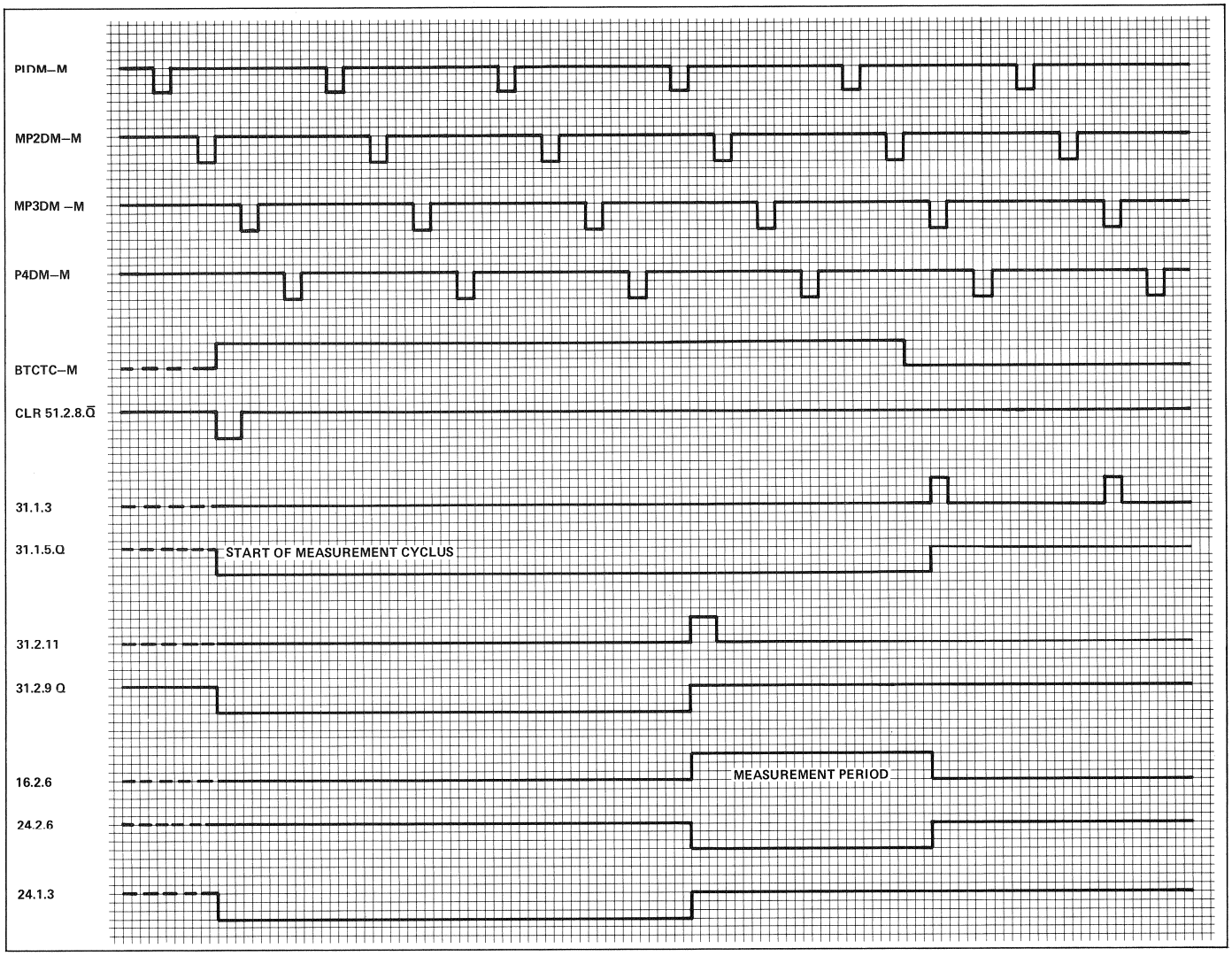

Fig. 3.2.7
Sequenzdiagramm

Fig. 3.2.7
Sequence diagram

Die Länge des Messpulses am Ausgang des Exklusiv-Oder-Tors IC 16.2 entspricht der Phasendifferenz.
Das Flip-Flop, gebildet aus IC 24.1 und 24.4, sagt aus, ob Master oder Slave voreilt.
Ist der Ausgang 24.1.3 tief, eilt der Master voraus und umgekehrt. Das FF ist durch den CLEAR zurückgestellt (Ausgang = tief).

Ist nun tatsächlich die positive Flanke des Masters früher, dann wird Q von IC 31.1 tief. Jetzt kann FF 24.1/4 nicht wechseln, weil der Ausgang des NAND-Gates IC 24.2 unverändert bleibt.

Eilt jedoch der Slave voraus, wechselt IC 24.1.3 auf hoch, weil beide Eingänge 4 und 5 hoch sind und dadurch 24.2.6 auf tief wechselt.

The duration of the measuring pulse at the output of the exclusive OR gate IC 16.2 corresponds to the phase difference.
The status of the flip-flop, implemented by ICs 24.1 and 24.4, defines whether the master or the slave is leading.
If the output of 24.1.3 is low, the master is leading and vice versa. The FF is cleared by the CLEAR signal (output = low).

When the positive slope of the master is actually leading, Q of IC 31.1 goes low. Now, FF 24.1/4 cannot change because the output of the NAND gate IC 24.2 remains unchanged.

However, when the slave is leading, IC 24.1.3 changes to high because both inputs 4 and 5 are high, causing 24.2.6 to change to low.

3.2.8
Steuerung der Messeinheit

Die Messeinheit enthält eine interne Steuerung um die Abläufe zeitlich richtig steuern zu können.

Sie besteht aus IC 22 und IC 41.1. Am Ende einer jeden Messung wird vom Mess-Selector IC 12 über Inverter IC 32.2 der serielle Ablauf eingeleitet. Über Flip-Flop 41.1 wird in das Schieberegister 22 eine Null eingelesen. Diese wird mit jedem Takt (CLOCK, PMNTM4) um eine Stelle weitergeschoben.

3.2.8
Control of the measuring unit

The measuring unit features an internal control for proper sequencing of the processes.

It comprises ICs 22 and 41.1. At the end of each measuring operation, the processing sequence is initiated by the measurement selector IC 12 via inverter IC 32.2. A zero is read in by the shift register via flip-flop 41.1. The zero is shifted by one position with every cycle (CLOCK, PMNTM-4).

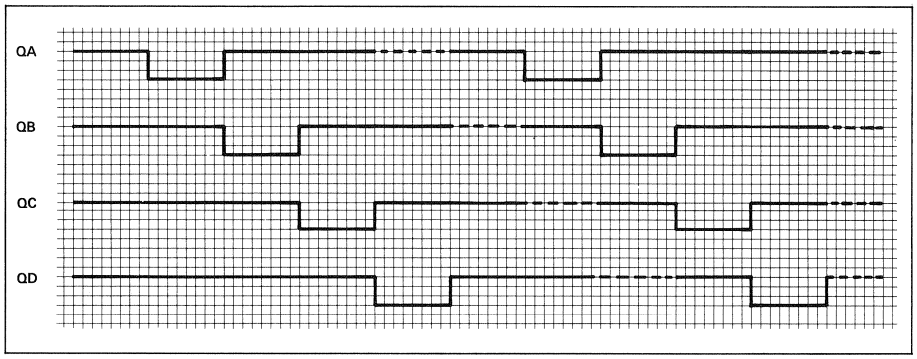

Fig. 3.2.8
Steuersignale der Messeinheit

Fig. 3.2.8
Control signals of the measuring unit

Mit dem Durchlauf werden folgende Befehle ausgeführt:

QA Takten des Comparison Result Latch und Rückstellen des FF 41.1
QB Laden des Result Counters
QC Takten des Referenz Registers
QD Zurücksetzen des Messzählers

During the process, the following instructions are executed:

QA Clocking of comparison result latch and clearing of FF 41.1
QB Loading of result counter
QC Clocking of reference register
QD Clearing of measurement counter

3.2.9
Ermitteln des Edit-Lead-Pulses

Damit beim elektronischen Schneiden (Edit Mode, Start Edit Mode) die Drop In/Drop Out-Zeitpunkte genau eingehalten werden können, werden sie direkt aus dem Slave-Code abgeleitet.
Dazu berechnet die Arithmetic-Control, welchen Wert der Bitzähler Slave (Abschnitt 3.3.2) zum eingegebenen Zeitpunkt (Entry- bzw. Exitpoint) aufweisen wird.
Dieser Wert wird in das Schieberegister IC 29 geschrieben und mit Hilfe der Komperatoren IC 18/19 mit dem Bitzähler Slave verglichen.
Das Flip-Flop IC 51.1 dient zum Sperren der Komperatoren solange sich der Slave nicht innerhalb des dem Zeitpunkt entsprechenden Frames befindet.

3.2.9
Determination of edit lead pulse

To permit exact timing of the drop in/drop out during electronic editing (edit mode, start edit mode), the timing is derived directly from the slave code.
To accomplish this, the arithmetic control calculates the value which the bit counter for the slave (section 3.3.2) will contain at the defined point in time (entry or exit point).
This value is written to the shift register IC 29 and compared with the bit counter for the slave with the aid of comparators IC 18/19.
Flip-flop IC 51.1 disables the comparators as long as the slave is not positioned within the frame corresponding to the specific point in time.

3.3
M + S RAM, TIMING
1.228.403
Slave Rack Platz 3

Auf diesem Print sind die Schaltungen zur Auswertung der M + S "Play-Fensteraussage", der Zwischenspeicherung asynchroner Informationsbits und deren synchrones Auslesen sowie die Taktherstellung für das gesamte System zusammengefasst.

Der Print ist aufgeteilt in:
3.3.1 Speed Detector (M + S)
3.3.2 Bitzähler (M + S)
3.3.3 Main Timing
3.3.4 Zwischenspeicher
3.3.5 Abfragemultiplexer

3.3
M + S RAM, TIMING
1.228.403
Slave rack location 3

This print contains the circuits for evaluating the M + S "play window" variable, for buffering of asynchronous information bits and their synchronous read out as well as the clock pulse generation for the entire system.

The print is subbdivided into the following function groups:
3.3.1 Speed detector (M + S)
3.3.2 Bit counter (M + S)
3.3.3 Main timing
3.3.4 Buffer memory
3.3.5 Interrogation multiplexer

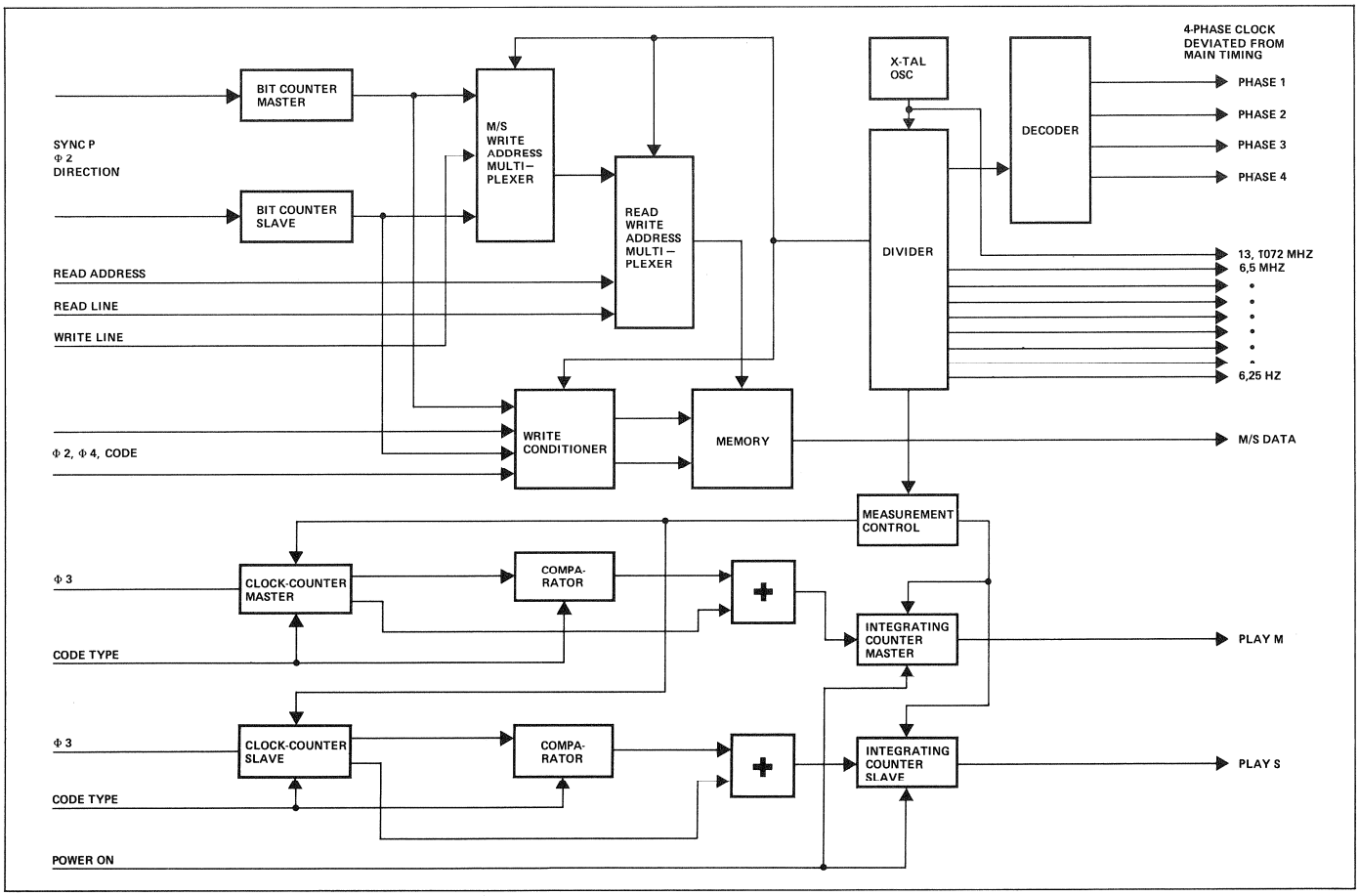

Fig. 3.3.1
Print Blockschaltbild

Fig. 3.3.1
PCB block diagram

Hinweis:
Die Nummern in Klammern stimmen mit Schema und Impulsdiagramm Fig.3.3.12 überein.

Note:
The numbers in brackets correspond with schematic diagram and impulse diagram Fig. 3.3.12.

3.3.1
Speed Detector

Sowohl für den Master als auch für den Slave wird

3.3.1
Speed detector

For the master as well as the slave, an analysis is

untersucht, ob die Taktfrequenz des Codes der Taktfrequenz bei Play-Geschwindigkeit entspricht.
Der Taktzähler besteht aus IC 41.43 resp. 48.46 und zählt während 60 ms die eintreffenden Demodulatorpulse Φ 3. Bei genauer Play-Geschwindigkeit sind es bei 25 Frames/sec 120 und bei 30 Frames/sec 144 Pulse.

Das Toleranzfeld für die Play-Aussage (Play-Fenster) ist für Master und Slave verschieden.
Zur Messung wird die ganze Skala (siehe Fig. 3.3.2) verschoben und so gelegt, dass die obere Grenze des Play-Fensters dem Zählerstand 254 entspricht. Dadurch verschiebt sich der Startpunkt des Zählers und die untere Grenze.
Der Ausgang des Comparators (IC 42.22 resp. 49.47) bleibt hoch bis der Taktzähler die untere Grenze erreicht. Überschreitet er die obere Grenze, geht der Carry-out auf hoch und blockiert sich über den Inverter (IC 39.4 resp. 39.5). Das Messresultat ist Nicht-Play, falls der Comparator- oder Zählerausgang hoch ist.

Die Startpunkte und die unteren Grenzen sind vom Code abhängig. Dabei werden die Codetypen 24 Frames/sec und 25 Frames/sec gleich behandelt. Dasselbe gilt auch für die Codetypen 29,97 und 30 Frames/sec. Zu deren Unterscheidung wird das Frameselector-Signal (FRAMSL-B) verwendet.
Nach jeder Messperiode wertet der Integrating Counter (IC 62, 63.1 resp. IC 64, 63.2) das Ergebnis Play oder Nicht-Play aus resp. der Zählerstand verringert sich um eins für Play.
Der Zählerstand des Integrating Counter kann sich nur zwischen Null und 15 bewegen.
Hat er einen der beiden Extremwerte erreicht, wird er durch den Inverter 39.1 resp. 39.2 am Weiterzählen gehindert und speichert das letzte Messergebnis im zugehörigen FF (63.1 resp. 63.2) ab (Play ≙ tief).

Ist einmal Play oder Nicht-Play abgespeichert, bedarf es mindestens 15 Messzyklen um den anderen Zustand herzustellen. Da ein Messzyklus 80 ms dauert, 60 ms zählen und 20 ms auswerten, ändert sich die Aussage frühestens nach 1,2 sec. Dies unterdrückt Code-Drop-Outs und eine falsche Aussage beim Hochlaufen zum Schnellwickeln.

Um beim Einschalten des Gerätes definierte Verhältnisse zu schaffen, wird mit dem NPPWRON-Puls der Zustand Nicht-Play geladen.

Die Messkontrollschaltung kontrolliert den Ablauf der Messung. Sie besteht im wesentlichen aus den FF's 21.1 und 21.2. Letzteres liefert ein Signal (8), dessen Periode von 80 ms während 60 ms tief und 20 ms hoch ist.
In der Tief-Phase werden die Demodulator-Pulse

performed to verify whether the clock frequency of the code corresponds to the clock frequency for play speed.
The clock counter consists of IC 41/43 or 48/46 respectively. During a period of 60 ms it counts the incoming demodulator pulses Φ 3. At exact play speed, 120 pulses are counted when operating at 25 frames sec and 144 pulses for 30 frames/sec.

The tolerance zone for the play indication (play window) differs for master and slave.
For measuring purposes, the complete scale (see Fig. 3.3.2) is shifted and positioned in such a manner, that the upper limit of the play window corresponds to a counter reading of 254. In this manner, the start position of the counter and the lower limit are shifted.
The output of the comparator (IC 42/22 and 49/47 respectively) remains high until the clock counter reaches the lower limit. When the upper limit is exceeded, the carry-out goes high and blocks itself through the inverter (IC 39.4 and 39.5 respectively). The result of the measurement indicates NOT PLAY if the output of the comparator or the counter is high.

The starting points and the lower limits are code-dependent. The code types for 24 frames/sec and 25 frames/sec are processed in the same manner. This also applies to code types 29.97 and 30 frames/sec. The frame selector signal (FRAMSL-B) is used to distinguish them.
After each measuring period, the integrating counter (IC 62, 63.1 or IC 64, 63.2 respectively) evaluates the play or not play result, i.e. the counter content is reduced by one for play.
The content of the integrating counter can only range between 0 and 15.
When one of the two limits is reached, further counting is inhibited by inverter 39.1 and 39.2 respectively and the last measurement is stored in the associated flip-flop (63.1 or 63.2 respectively) (play ≙ low).

After play or not play has been stored, at least 15 measuring cycles will be required to switch to the opposite status. Since the duration of a measuring cycle is 80 ms (60 ms counting and 20 ms evaluation), the indication changes after 1.2 seconds, at the earliest. In this manner, code drop-outs and incorrect indications are suppressed when accelerating to fast wind.

To create a defined state when switching the machine on, the not play status is loaded with the NPPWRON pulse.

The measuring control circuit monitors the measuring process. It mainly consists of FFs 21.1 and 21.2. The latter supplies a signal (8), whose total duration of 80 ms is low for 60 ms and high for 20 ms.
During the low phase, the demodulator pulses

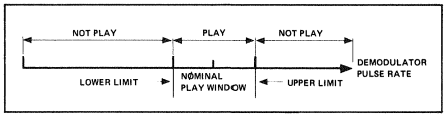

Fig. 3.3.2
Play-Fenster
Play window

	NOMINAL	LOWER LIMIT	UPPER LIMIT
MASTER 25 Frames/sec	120	105	142
30 Frames/sec	144	126	170
SLAVE 25 Frames/sec	120	90	202
30 Frames/sec	144	108	242

Fig. 3.3.3
Toleranzfeld der Play-Aussage
Tolerance zone for play indication

	START	LOWER LIMIT	UPPER LIMIT
MASTER 25 Frames/sec	112	217	254
30 Frames/sec	84	210	254
SLAVE 25 Frames/sec	52	142	254
30 Frames/sec	12	120	254

Fig. 3.3.4
Der Startpunkt des Zählers und das Play-Fenster
Starting point of the counter and play window

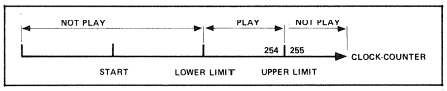

Fig. 3.3.5
Das Play-Fenster des Taktzählers
Play window of clock counter

FRAMSL A	B	FRAMES/SEC
0	0	24
1	0	25
0	1	29, 97
1	1	30

Fig. 3.3.6
Unterscheidung der Code-Typen im Frame-Selector
Differentiation of code types in frame selector

Φ 3 vom Taktzähler gezählt. In der Hoch-Phase sind die Gatter 27.3 und 27.4 gesperrt. FF 21.1 liefert in dieser Phase einen Tief-Puls (10).
Mit (6) zählt der Integrating-Counter je nach Messergebnis einen Wert auf- oder abwärts. Anschliessend wird mit (14) der Startpunkt des Taktzählers geladen.

Φ 3 are registered by the clock counter. During the high phase, gates 27.3 and 27.4 are blocked. FF 21.1 supplies a low pulse (10) during this phase.
With (6), the integrating counter counts either up or down, depending of the result of the measurement. Subsequently, the starting point of the clock counter is loaded with (14).

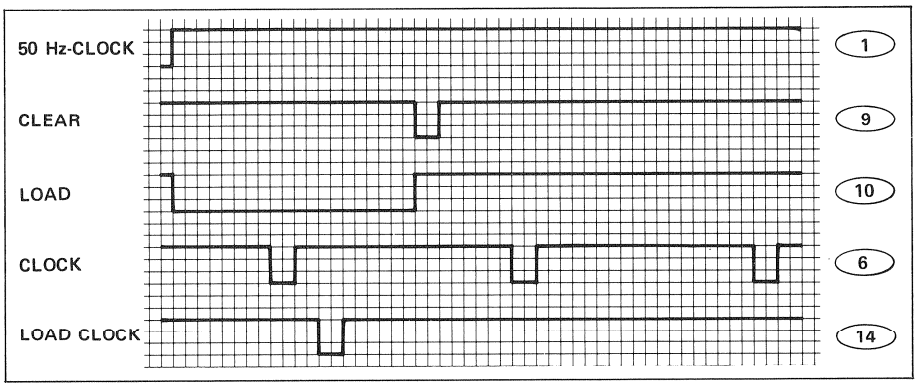

Fig. 3.3.7
Sequenzdiagramm der Messkontrollschaltung

Fig. 3.3.7
Sequence diagram of the measuring control circuit

3.3.2 Bitzähler

Der Bitzähler IC 29.28 resp. 23.22 soll die Code-Bits numerieren. Dabei müssen die Informationsbits 0...63 immer richtig numeriert sein, da sie nur so ausgewertet werden können. Die 16 Bits des Sync-Wortes müssen nur im Vorwärtslauf richtig numeriert werden, da nur dann Synchronlauf gefordert wird.

Vorwärtslauf:
PSYNC (siehe Fig. 3.3.12) tritt während Bit 79 auf. Das nächste Bit ist das Informationsbit Null. Deshalb muss der Bitzähler die Bits von 0...79 numerieren.

Rückwärtslauf:
PSYNC tritt während Bit 64 auf. Das nächste Bit ist Informationsbit 63. Der Bitzähler wird auf 63 geladen und zählt abwärts. Nach Überschreiten von Null wird mit 255 weitergezählt.
Das Gatter 24.3 resp. 24.2 erzeugt eine Overflow-Anzeige, wenn zwischen zwei PSYNC mehr als 80 Demodulatorpulse auftreten.
Das Signal BTCTG ist nur bei einem Zählerstand von 0...63 tief. Es kann deshalb zur Unterscheidung von Informationsbits (tief) und SYNC-Das Signal BTCTG ist nur bei einem Zählerstand von 0...63 tief. Es kann deshalb zur Unterscheidung von Informationsbits (tief) und SYNC-Wortbits (hoch) verwendet werden.
Der Ladevorgang des Zählers ist aus dem Impulsdiagramm Fig. 3.3.3 ersichtlich. Das LOAD-Signal wird erzeugt, indem PSYNC die FF 25.4 resp. 25.2 zurücksetzt (tief), bis sie durch Φ 3 wieder gesetzt werden (hoch).

3.3.2 Bit counter

The bit counter IC 29/28 and 23/22 respectively numbers the code bits. To allow proper evaluation, the information bits 0...63 must always be numbered correctly. The 16 bits of the sync word only need to be numbered correctly during the forward transport because synchronization is only required in this tape direction.

Sync pulse forward:
PSYNC (see Fig. 3.3.12) occurs with bit 79. The text bit is the information bit zero. For this reason, the bit counter must number the bits from 0...79.

Sync pulse rewind:
PSYNC occurs with bit 64. The next bit is information bit 63. The bit counter is loaded with the value 63 and counts down. When reaching zero, counting continues with the value 255.
Gates 24.3 and 24.2 respectively generate an overflow indication if more than 80 demodulation pulses occur between two PSYNC.
The signal BTCTG is only low when the counter contents range between 0 and 63. Hence, it can be used to differentiate between information bits (low) and SYNC word bits (high).
The loading procedure for the counter can be seen r
The loading procedure for the counter can be seen from the impulse diagram Fig. 3.3.3. The LOAD signal is generated by clearing FF 25.4 and 25.2 respectively (low) with PSYNC, until they are set again (high) by Φ 3.

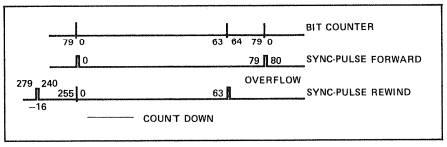

Fig. 3.3.8
Sequenzdiagramm des Bitzählers
Sequence diagram of the bit counter

3.3.3
Main Timing

Das Main Timing soll dem ganzen System Frequenzen von 13,1072 MHz bis 6,25 Hz sowie einen festen Vier-Phasen-Takt (IC 18) von 819,2 kHz zur Verfügung stellen.
Dazu wird die Ausgangsfrequenz des Quarzoszillators IC 53.1 und 53.2 von 13,1072 MHz mit Hilfe von sechs synchronen Binärzählern untersetzt.

3.3.4
Zwischenspeicher

Die Aufgabe des Zwischenspeichers besteht darin, die mit ändernder Frequenz anliegenden M/S Code-Informationsbits einzulesen, zu speichern und mit einem festen, vom Main Timing abgeleiteten Clock unabhängig auszulesen.

Der Zwischenspeicher besteht aus dem Master/Slave Write Address Multiplexer (IC 34, 38), dem Read/Write Multiplexer (IC 35, 37), dem Write Conditioner (IC 33) und dem Memory (IC 35).

Das Random Access Memory (RAM) kann vier Informations-Worte à 64 Bit aufnehmen, d.h. zwei vom Master und zwei vom Slave.
Von den beiden Master- sowie den beiden Slave-Zeilen ist jeweils eine Zeile für die Aufnahme eines neuen Informationswortes reserviert, während die andere der Auswertung zur Verfügung steht.
Ist ein Informationswort vollständig eingelesen sorgt eine externe Schaltung dafür, dass die Zeilen ihre Funktionen vertauschen.
Sollte während dem Einlesen ein Fehler entstanden sein (BTCTOF oder DMFAIL), wird die Zeile nicht umgeschaltet, damit die letzte gültige Information erhalten bleibt.

3.3.3
Main timing

The main timing supplies the complete system with frequencies of 13.1072 MHz to 6.25 Hz as well as a fixed four-phase clock (IC 18) of 819.2 kHz.
For this purpose, the output frequency of the quartz oscillator IC 53.1 and 53.2 of 13.1072 MHz is stepped down with the aid of six synchronous binary counters.

3.3.4
Buffer memory

The buffer memory is implemented to read and store the M/S code information bits available in varying frequencies, and to read them out independently with a fixed clock derived from the main timing.

The buffer comprises the master/slave write address multiplexer (IC 34, 38), the read/write multiplexer (IC 35, 37), the write conditioner (IC 33) and the memory (IC 35).

The random access memory (RAM) can store 4 information words of 64 bits each, i.e. two from the slave.
From the two master and the two slave lines, one is reserved for receiving the new information word while the other is available for evaluation.
After an information word has been read in completely, an external circuit causes an interchange of the line functions.
If an error occurs, during the read operation (BTCTOF or DMFAIL), the lines are not interchanged and the last valid information is retained.

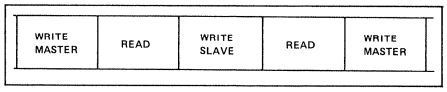

Fig. 3.3.9
M / S RAM Timing Lesen/Schreiben Sequenz
M / S RAM timing for read/write sequence

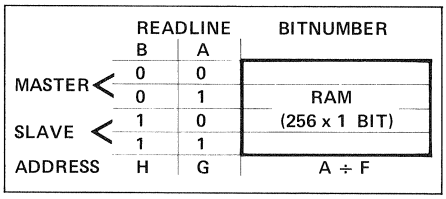

Fig. 3.3.10
Frame Selector Tabelle
Frame selector table

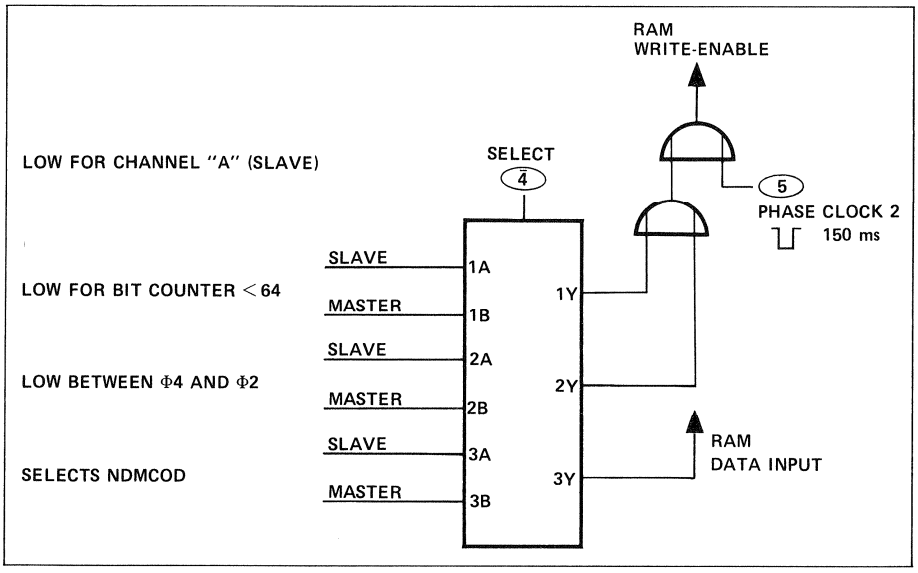

Fig. 3.3.11
Prinzip des M / S Schreib-Multiplexer

Fig. 3.3.11
Operating principle of the M / S write multiplexer

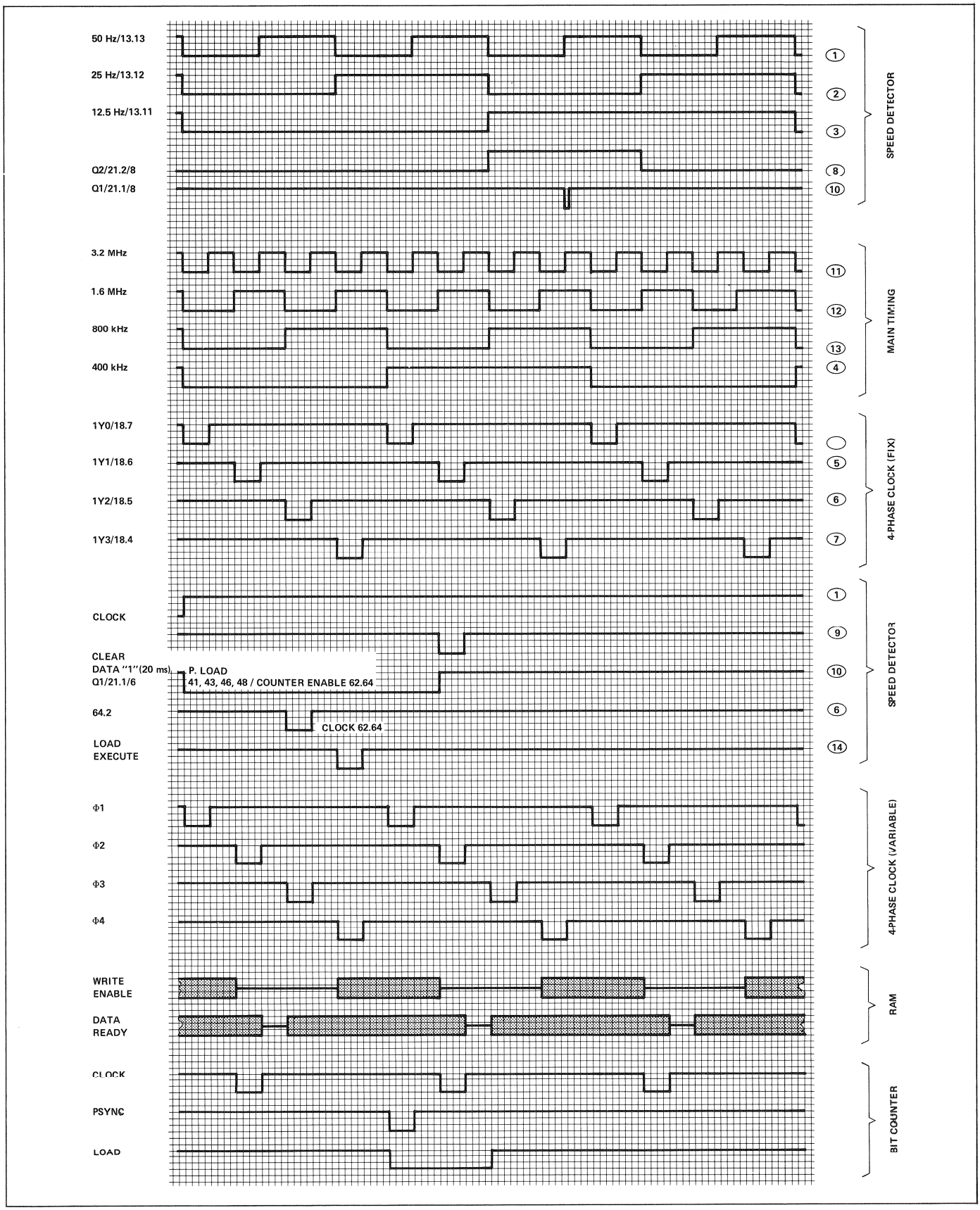

Fig. 3.3.12
Prinzip der Schreib-Überwachungsschaltung

Fig. 3.3.12
RAM and timing impulse diagram

Das Schreiben des Master- und des Slave-Informationswortes sowie das Lesen eines abgespeicherten gültigen Informationswortes kann nicht gleichzeitig durchgeführt werden. Diese Vorgänge laufen deshalb zeitlich gestaffelt ab.
Dementsprechend muss an den Adresseingängen des Zwischenspeichers in jeder Phase die richtige Adresse anliegen.
Der Read-Write Multiplexer IC 35/37 wählt zwischen der Write-Adresse (Select tief) und der Read-Adresse (Select hoch) und verbindet diese mit den Address Inputs A ÷ H. Die beiden Adressen G und H bestimmen die Lesezeile.

Die beiden IC's 34 und 38 bilden den M/S Write Address Multiplexer. Seine Aufgabe besteht darin, dem RAM den Zählerstand des entsprechenden Bitzählers und die Write-Line Signale als Adressen zum Einlesen des Codes anzulegen.

Damit beim Schreibvorgang die Information richtig abgespeichert wird, müssen die folgenden Bedingungen erfüllt sein:
1. Das anliegende Code-Bit muss ein Informationsbit sein (Bitzähler < 64)
2. Das Informationsbit darf sich in der Schreibphase nicht ändern (erfüllt zwischen Φ 4 und Φ 2).

Diese Bedingungen werden vom Write Conditioner IC 25.1, 25.3, 27.1, 27.3 und 33 überwacht.

3.3.5
Abfragemultiplexer (RAMMUX)

Über diesen Multiplexer kann mit 3 Adressleitungen der Zustand verschiedener Schaltungsteile abgefragt und über eine einzige Signalleitung ausgewertet werden.

Writing of the master and the slave information word as well as reading of the stored valid information word can not be performed simultaneously. These processes, therefore, occur with a time offset.
Correspondingly, the correct address must be available at the address inputs of the buffer during each phase.
The read/write multiplexer IC 35/37 selects between write address (select low) and read address (select high) and connects these with the address inputs A ÷ H. The two addresses G and H define the line to be read.

The two ICs 34 and 38 constitute the M + S write address multiplexer. It supplies the RAM with the counter status of the corresponding bit counter and the write line signal as address for code reading.

To allow correct storage of the information during the write operation, the following conditions must be met:
1. The available code bit must be an information bit (bit-counter < 64)
2. The information bit may not change during the write phase (condition met between Φ 4 and Φ 2).

The conditions are monitored by the write conditioner IC 25.1, 25.3, 27.1, 27.3 and 33.

3.3.5
Interrogation multiplexer (RAMMUX)

The multiplexer allows status interrogation of various circuit components over 3 address lines for evaluation via a single signal line.

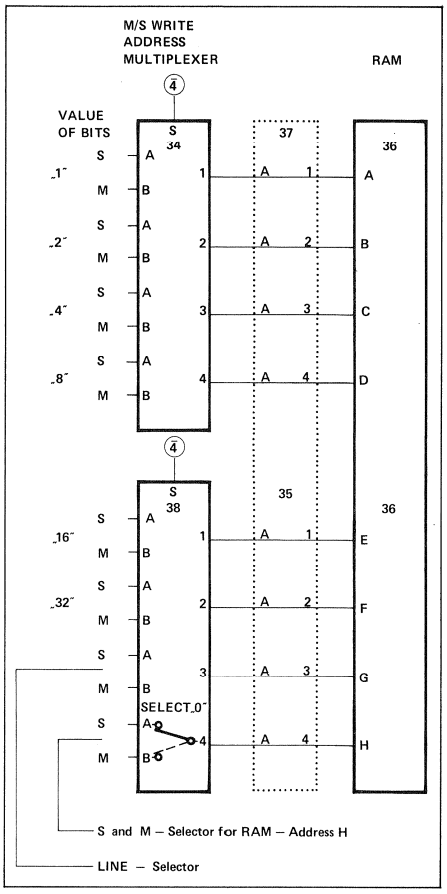

Fig. 3.3.13
Prinzip der Schreib-Überwachungsschaltung
Operating principle of the write monitor circuit

3.4
ARITHMETIC CONTROL A MK II
1.228.480
Slave Rack Platz 4

Dieser Print enthält einen grossen Teil der TLS-PROM-Kapazität und die zur Bewältigung von verschachtelten Subroutinen erforderlichen Hilfsschaltungen.

Die Beschreibung ist aufgeteilt in:
3.4.1 Programmzähler
3.4.2 Address Selector
3.4.3 Stackregister
3.4.4 Control Logic
3.4.5 Testinputs Data Selector
3.4.6 Program Data Transceiver
3.4.7 Address Buffer
3.4.8 DO-Counter
3.4.9 Befehlsdecoder
3.4.10 PROM
3.4.11 Der Programmablauf

3.4
ARITHMETIC CONTROL A MK II
1.228.480
Slave rack location 4

This print comprises a significant share of the TLS PROM capacity and the auxiliary circuits required for managing nested subroutines.

The description is subdivided into the following sections:
3.4.1 Program counter
3.4.2 Address selector
3.4.3 Stack register
3.4.4 Control logic
3.4.5 Test input data selector
3.4.6 Program data transceiver
3.4.7 Address buffer
3.4.8 DO counter
3.4.9 Instruction decoder
3.4.10 PROM
3.4.11 Program flow

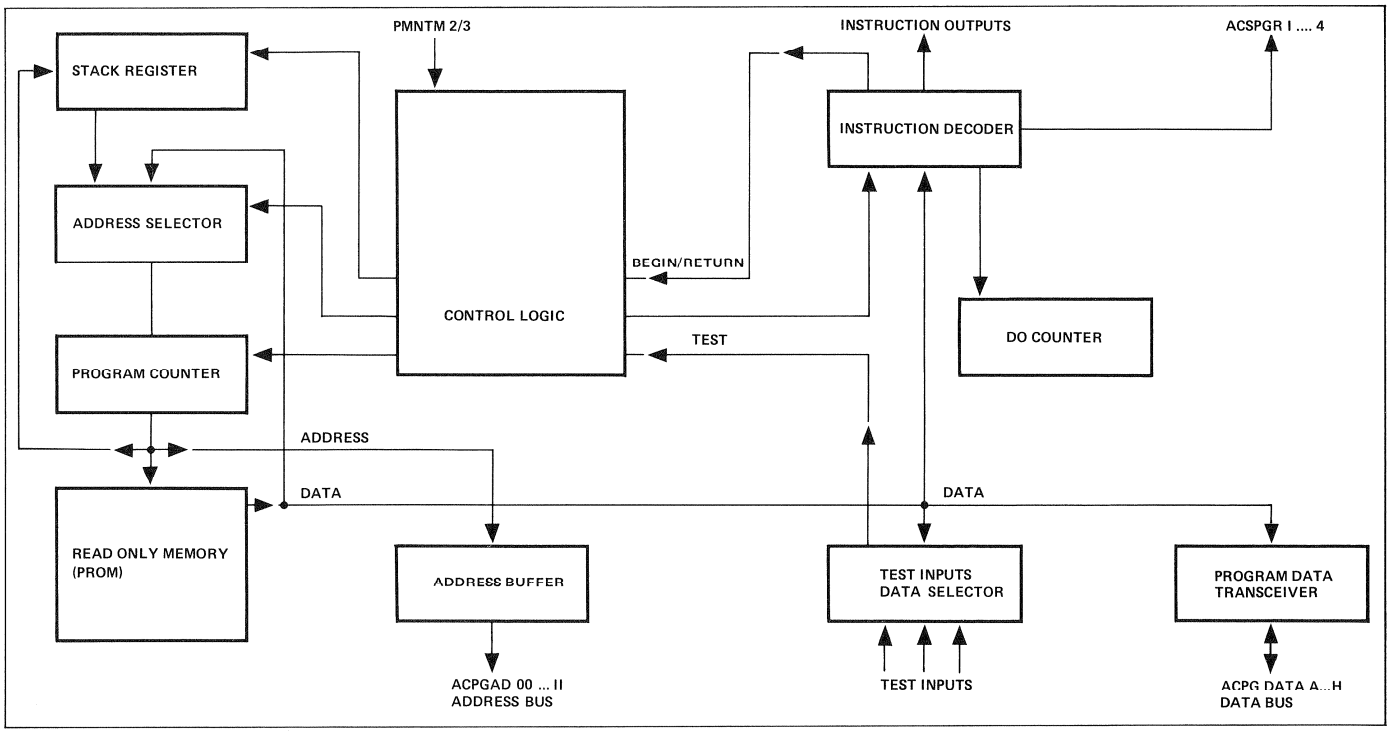

Fig. 3.4.1
Print-Blockschaltbild

Fig. 3.4.1
Block diagram

3.4.1
Programmzähler

Der Programmzähler IC 25, 35, 45 liefert die Adresse für die Programmspeicher (PROM) und wird von der Control Logic IC 51 und 52 gesteuert. Über diese erhält der Programmzähler ebenfalls die Informationen von Clear-Power-On und Programmfehler (siehe Beschreibung Arithmetic, Section 3.14).

3.4.1
Program counter

The program counter IC 25, 35, 45 supplies the address for the program memory (PROM) and is driven by the control logic IC 51 and 52. From the latter, the program counter also receives information regarding clear-power-on and programming errors (see also description of arithmetic, section 3.14).

3.4.2
Address Selector

Der Address Selector IC 34, 44, 54 und 64 selektiert die Adressen und schaltet den Inhalt des Stackregisters oder eine vom Programm anliegende Adresse auf den Addressbus. Er wird von der Control Logic gesteuert.

3.4.3
Stackregister

IC 33, 53 und 63 bilden das Stackregister mit 16 Adressen à 12 Bit, welches durch die Control Logic gesteuert wird. Es dient zur Abspeicherung von Rücksprungadressen beim Subroutineaufruf.

3.4.4
Control Logic

Die Control Logic wird gebildet aus IC 51, PROM IC 52 und Stack Counter IC 62.

Die Logik steuert:
- den Programmzähler
- den Address Selector
- das Stackregister
- den Instruction Decoder

Flip-Flop IC 51 arbeitet als Buffer.
Die Eingänge sind:
- die Programmdaten RETURN und BEGIN
- die oberste Stufe der Multiplexschaltung TEST
- der Netzeinschaltpuls PPWRON
- die Arithmetic Control Signale NCOCKCT (Clock Counter), NACRESI (Reset 1), ACPGIRPT (Program Data Interrupt) und AREN 2 (Enable 2).

Mit der Phase Φ 1 (PMNTM 1) vom Main Timing wird die angelegte Information aus PROM IC 52 weitergegeben. Entsprechend der Programmierung werden die angesteuerten Blöcke aktiviert.
Der Stack Counter IC 62 gibt die Adresse für das Stackregister vor. Er erhält den U/D-Befehl via PROM IC 52 und den Clock von Phase Φ 3 (PMNTM 3). Nach dem Einschalten steht der Zähler auf 1110.

Springt das Programm in eine Subroutine, dann erhöht sich die Counter-Adresse auf 1111 und die Rücksprungadresse des Programmes wird unter dieser Nummer abgespeichert.
Verlässt das Programm die erste Ebene der Subroutinen, handelt es sich also um ineinandergeschachtelte Subroutinen, dann erscheint ein "Carry" am Stack Counter (10000).
Der "Carry" wird zur Programmsicherung in der Arithmetik verwendet (RAM einschreiben). Es können bis zu 16 Verschachtelungen verarbeitet werden.

3.4.2
Address selector

The address selector IC 34, 44, 54 and 64 selects the addresses and switches the content of the stack register or an address supplied by the program to the address bus. It is driven by the control logic.

3.4.3
Stack register

IC 33, 53 and 63 constitute the stack register with 16 12-bit addresses. It is driven by the control logic and functions as a memory for storing the return addresses in a subroutine call.

3.4.4
Control logic

The control logic comprises IC 51, PROM IC 52 and stack counter IC 62.

The logic controls the following elements:
- program counter
- address selector
- stack register
- instruction decoder

Flip-flop IC 51 functions as buffer.
Its inputs are as follows:
- program data RETURN and BEGIN
- uppermost level of the multiplex circuit TEST
- main power on pulse PPWRON
- arithmetic control signals NCOCKCT (clock counter), NACRESI (reset 1) ACPGIRPT (Program Data Interrupt) and AREN 2 (enable 2).

The information available from PROM IC 52 is transmitted with phase Φ 1 (PMNTM 1) of the main timing. The selected blocks are activated according to the program.
Stack counter IC 62 defines the address for the stack register. It receives the U/D instruction via PROM IC 52 and the clock through phase Φ 3 (PMNTM 3). After power on, the counter contains the value 1110.

When the program branches to a subroutine, the counter address is incremented to 1111 and the return address of the program is stored with this value.
When the program leaves the first level of the subroutine, i.e. the subroutines are nested, the "carry" appears at the stack counter (10000).
The "carry" is used for saving the program in the arithmetic (writing to RAM). Up to 16 nesting levels can be processed.

A0 A1	A2	A3 A4	GOTO
RETURN	Q7	BEGIN	TEST

Fig. 3.4.2
Bezeichnung der PROM-Eingänge IC 52
Designation of PROM inputs IC 52

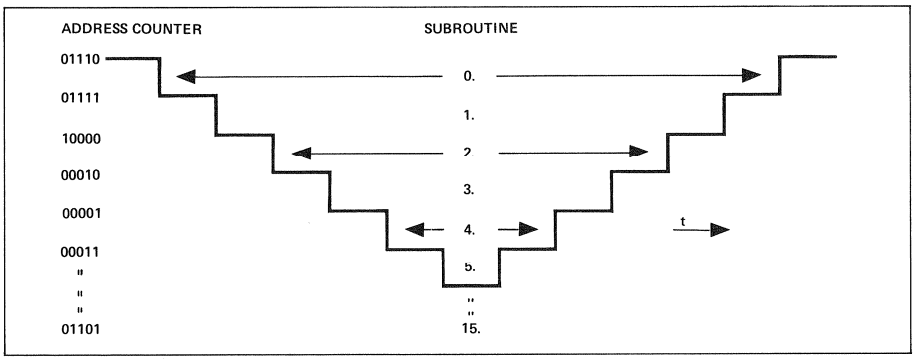

Fig. 3.4.3
Prinzip der Subroutine-Verschachtelung

Fig. 3.4.3
Principle of subroutine nesting

3.4.5
Testinputs Data Selector

Der Multiplexer IC 15 stellt das letzte Glied einer Reihe von Multiplexerschaltungen dar. Damit können verschiedene Zustände auf den beteiligten Prints abgefragt werden.

3.4.5
Test inputs for data selector

The multiplexer IC 15 represents the last element in a series of multiplexer circuits. It permits status interrogation of various prints associated with it.

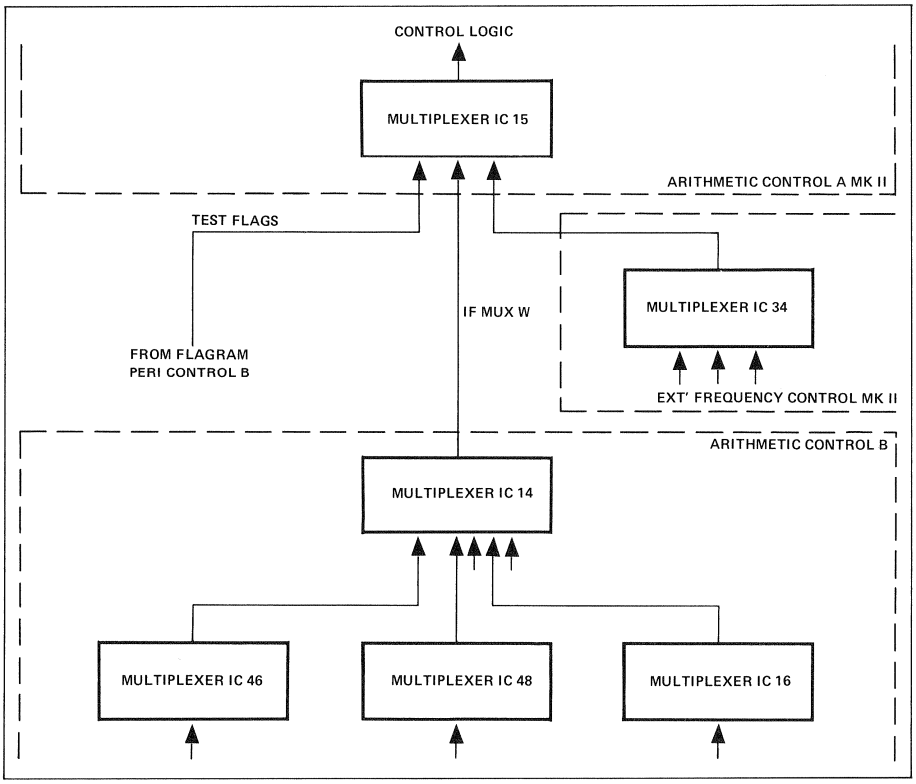

Fig. 3.4.4
Das Multiplexersystem des Data Selectors

Fig. 3.4.4
Multiplexer system of the data selector

Die Information kann auch invers über IC 14.1, 14.2 und 14.6 abgefragt werden.

The information can also be inversely interrogated via IC 14.1, 14.2 and 14.6.

3.4.6
Program Data Transceiver

Gebildet aus IC 17, 18 und 19 empfängt oder schaltet der Transceiver die Programmdaten vom

3.4.6
Program data transceiver

It comprises ICs 17, 18 and 19 and receives or transmits program data from or to the data bus.

bzw. auf den Bus. Dieser kann die Information von 12 Bit übermitteln.
Ob gesendet oder empfangen wird, hängt vom Addressbit A11 ab.

It can transfer data made up of 12 bits.
Address bit A11 defines whether the transmission or receiving function is to be performed.

3.4.7 Address Buffer

Der Address Buffer IC 11 und 12 dient zur Übermittlung der Adresse an die Additional Peri/Ari Control, welche ebenfalls Programmspeicher enthalten.

3.4.7 Address buffer

The address butter IC 11 and 12 transfers the address to the additional Peri/Ari control which is also equipped with program memory.

3.4.8 DO-Counter

Der DO-Counter IC 42 ist ein Programmierhilfsmittel. Er kann geladen werden und von 0 bis 15 hochzählen. Mit ihm werden die DO-Schlauten programmiert.

3.4.8 DO counter

The DO counter IC 42 is a programming aid. It can be loaded and counts up from 0 to 15. It is used for programming the DO loops.

3.4.9 Befehlsdecoder

Der Befehlsdecoder besteht aus IC 13, 21 und 23. Die Befehle werden gemäss Programmdaten decodiert und an die entsprechenden Stellen weitergegeben.

3.4.9 Instruction decoder

The instruction decoder comprises ICs 13, 21 and 23. The instructions are decoded according to the program data and transferred to the appropriate elements.

3.4.10 PROM

Die PROM's IC 26 bis 29, 36 bis 39 und 46 bis 49 enthalten die Programmdaten.
Diese werden vom Adresszähler und über IC 24.2 angewählt.
Der Programminhalt beträgt 2048 x 12 Bit.

3.4.10 PROM

PROMs IC 26 through 29, 36 through 39 and 46 through 49 hold the program data.
These are selected by the address counter and via IC 24.2.
The program size is 2048 x 12 bits.

3.4.11 Der Programmablauf

Das Timing erfolgt durch die 4 Phasen PMNTM 1 bis 4, die vom Main Timing zur Verfügung gestellt werden.
Das Signal Instruct Enable ist immer dann aktiv, wenn das Programmdatenbit "N" aktiv ist. Mit diesem Bit werden die Funktionen GOTO und CALL SUB umschrieben und gleichzeitig die Instruktionen unterdrückt. Load Program Counter erfolgt bei CALL SUB, GOTO und RETURN.
Die Adresse der Subroutine bzw. der neue Programmschritt muss in den Programmadressenspeicher geladen werden. Bei RETURN erfolgt die Ladung aus dem Stackregister.
Das Sequenzdiagramm zeigt, wie die einzelnen Blöcke zusammenarbeiten.
Es sind die Zusammenhänge rund um die Control Logic dargestellt.

3.4.11 Program flow

Timing is performed by the 4 phases PMNTM 1 through 4 which are supplied by the main timing.
The instruct enable signal is always active when the program data bit "N" is active. This bit describes the GOTO and CALL SUB functions and simultaneously suppresses the instructions. Load program counter occurs with CALL SUB, GOTO and RETURN. The address of the subroutine or the new program step must be loaded into the program address memory. In case of RETURN, loading occurs from the stack register.
The sequence diagram Fig. 3.4.5 illustrates address steps and program data in hexadecimal form. It illustrates the interrelation of the individual blocks.
The interrelation centering arround the control logic is shown.

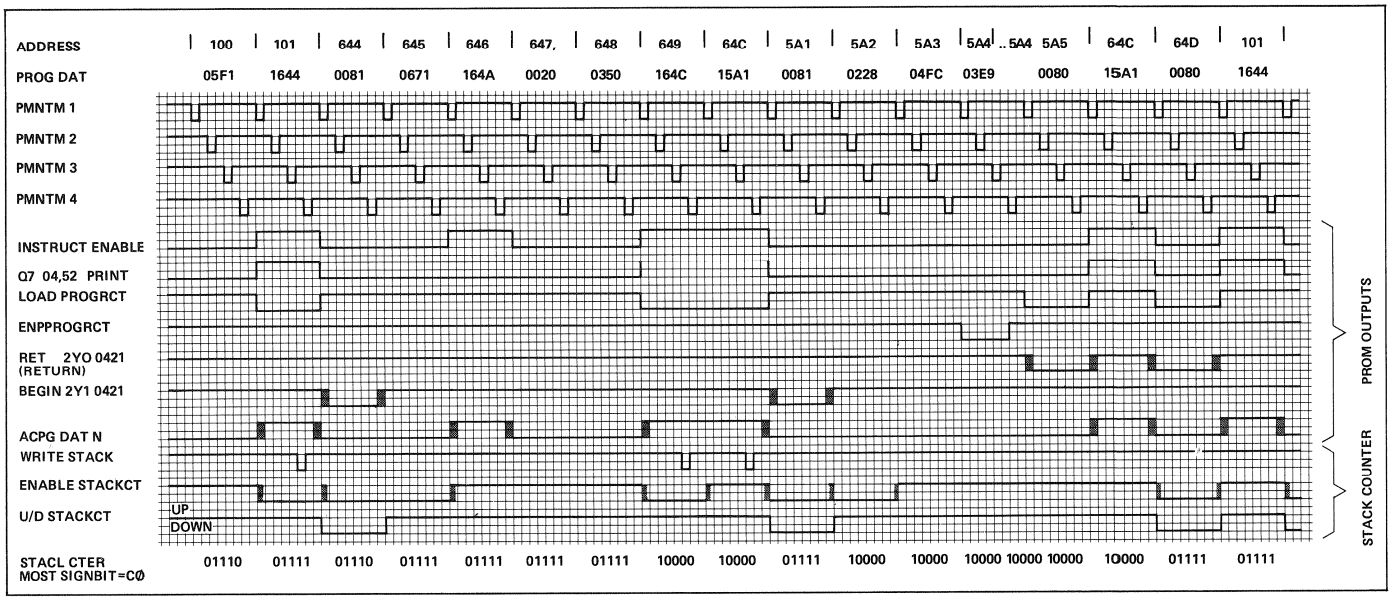

Fig. 3.4.5
Sequenzdiagramm

Fig. 3.4.5
Sequence diagram

3.5
ARITHMETIC CONTROL B
1.228.405
Slave Rack Platz 5

Auf diesem Print werden die M + S Codearten erkannt, verglichen und die RAM-Steuersignale für die Zwischenspeicherung der Informationsbits (siehe auch Abschnitt 3.13) hergestellt.

Der Print besteht aus:
3.5.1 M + S Codeart-Erkennungsschaltung
3.5.2 Codeauswertung und Kontrolle
3.5.3 Program Repeat Counter
3.5.4 Befehlsdecoder
3.5.5 Multiplexer, Data Selector, Latch
3.5.6 Bitzähler-Register
3.5.7 Vorhaltezeit-Impuls
3.5.8 RAM-Steuereinheit

3.5.
ARITHMETIC CONTROL B
1.228.405
Slave rack location 5

On this print, the M + S code types are recognized and compared, and the RAM control signals for buffering the information bits are generated (also see section 3.13).

The print comprises:
3.5.1 M + S code type recognition circuit
3.5.2 Code analysis and control
3.5.3 Program repeat counter
3.5.4 Instruction decoder
3.5.5 Multiplexer, data selector, latch
3.5.6 Bit counter register
3.5.7 Edit lead pulse
3.5.8 RAM control unit

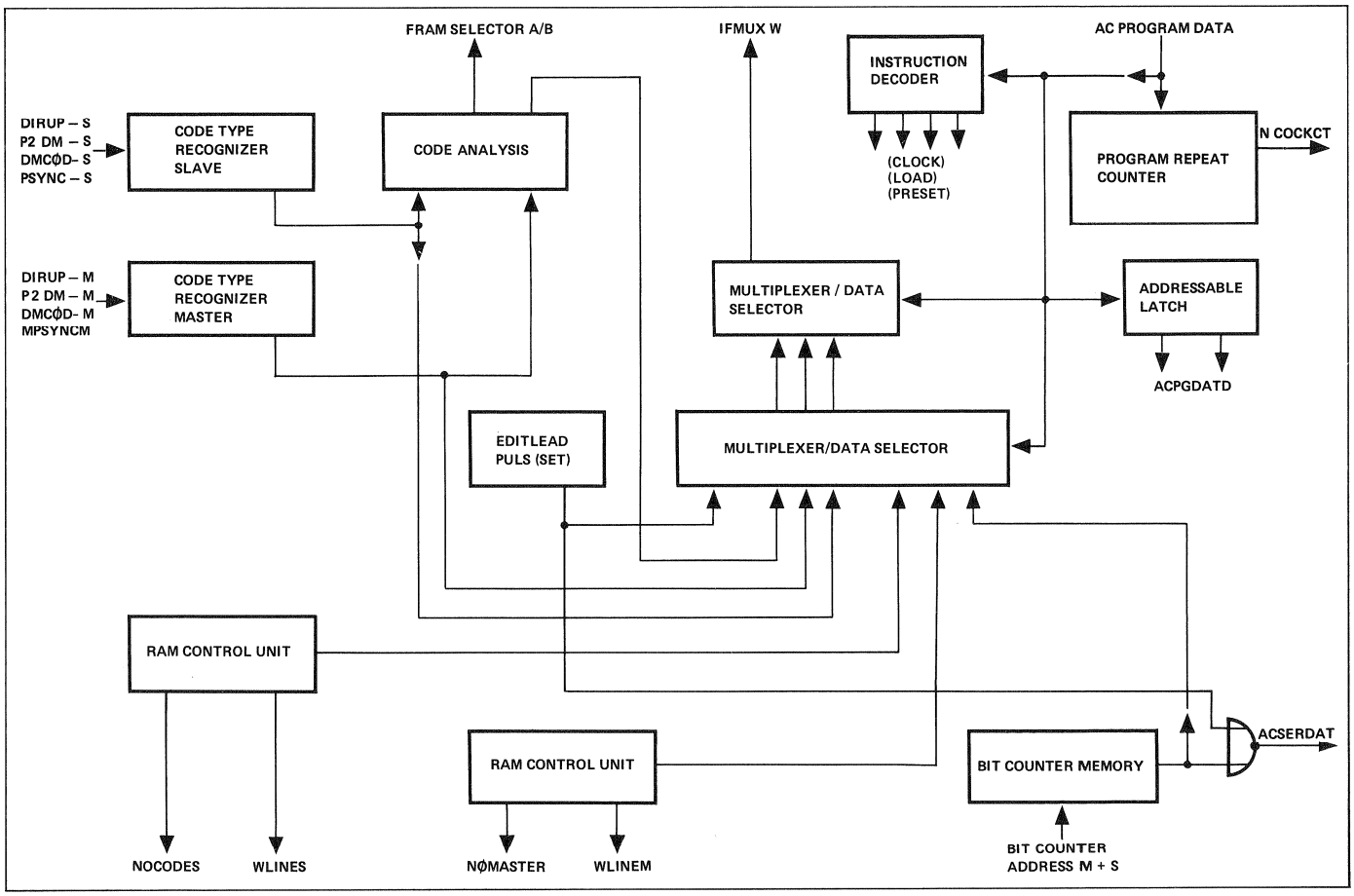

Fig. 3.5.1
Print-Blockschaltbild

Fig. 3.5.1
Block diagram

3.5.1
M / S Codeart-Erkennungsschaltung

Der Code
Der SMPTE-Code weist pro Frame (Vollbild) ein starres 80 Bit-Wortmuster auf. Dieses beginnt mit der Taktflanke vor dem ersten Bit (Null-Bit) und

3.5.1
M / S code type recognition circuit

Code layout
For each frame (full image), the SMPTE code contains a fixed 80-bit word pattern. It begins with a clock slope before the first bit (zero bit)

weist die gleiche einheitliche Länge wie die folgenden 79 Bits auf.

Bei der hier verwendeten "Bi-Phase-Mark"-Modulationsart erfolgt auf jeden Bit-Anfang ein Pegelsprung hoch - tief oder umgekehrt.
Wechselt der Pegel innerhalb des Bits nochmals, entspricht das der Aussage "1", nicht der Aussage "0".

Die Grundfrequenz ist also bei einem Code von 25 Frames/sec:
80 Wechsel pro Bit + 80 Wechsel pro Aussage "1" (theoretisch) = 160 Halbperioden x 25 = 2000 Hz.

Die letzten Bits jedes 80 Bit-Wortes, Bit 64 bis und mit 79, bilden das Synchronisations-Wort. Es wird im Demodulator ausgewertet und erzeugt nach jedem vollständigen Frame den Sync-Puls.
Die Anzahl dieser in der Sekunde auftretenden Sync-Pulse bestimmt einen der folgenden Code-Typen:
– 24 Frames/sec
– 25 Frames/sec
Wenn nach Frame 23 nicht Frame 24 folgt, ist der Code 24 Frames/sec. Andernfalls wird geprüft, ob nach Frame 24 Frame 25 folgt. Falls dies nicht zutrifft, ist der Code 25 Frames/sec.
Für die Erkennung der beiden anderen Code-Typen 29.27 Frames/sec (Droped Frame Code beim NTSC-Farbsignal) und 30 Frames/sec ist zusätzlich das zehnte Bit jedes 80 Bit-Wortes massgebend.
Die Frame-Erkennung erfolgt mit den ersten 11 Bits nach dem Sync-Puls mit DIRUP. Mit der Bitzähler-C-Phase werden die zweiten 4 Bits (erstes Binärwort) unterdrückt, weil dies nicht für die Frame-Darstellung zuständig ist.

Die Erkennungsschaltung
Sie besteht aus PROM IC 51, 41, 31, 21.1, 13.2, 43.2 und 12.3 für den Slave, bzw. PROM IC 52, 42, 32, 21.2, 13.1, 43.3 und 12.1 für den Master.

Im folgenden wird nur der Master beschrieben, da die Master- und die Slaveschaltungen identisch sind.

Funktion
Im PROM ist eine Tabelle gespeichert. Diese wird je nach anliegendem Code durchlaufen. Stimmt die Reihenfolge der Bits nicht mit dem abgespeicherten Muster überein, wird in der Tabelle wieder auf den Anfang gesprungen und der Vergleich erneut begonnen.
Der DMCODE selektiert die A oder B Eingänge. Die Signale werden dementsprechend an FF IC 32 und 21.2 angelegt und beim nächsten bzw. übernächsten Clock (Q1) ans PROM angelegt.
Die Ausgänge 3Q und 4Q des IC's 32 zeigen den Code-Typen an.

and has the same uniform length as the 79 bits that follow.

With the "Bi-Phase-Mark" modulation a level jump from high to low or vice versa occurs with every bit start.
If the level within a bit changes again, this jump indicates a "1" as contrasted to "0".

For a code of 25 frames/sec the basic frequency, therefore, is as follows:
80 changes per bit + 80 changes for each signal "1" (theoretic) = 160 half-cycles x 25 = 2000 Hz.

The trailing bits of each 80 bit word, i.e. bits 64 through 79, make up the synchronizing word. It is analyzed by the demodulator which generates the sync pulse after each complete frame.
The number of sync pulses occuring per second is defined by one of the following code types:
– 24 frames/sec
– 25 frames/sec
If frame 23 is not followed by frame 24, the code is interpreted as 24 frames/sec. Otherwise a test is made whether frame 24 is followed by frame 25. If this is not the case, the code is 25 frames/sec.
To recognize the other two code types 29.27 frames/sec (dropped frame code with NTSC color signal) and 30 frames/sec, every 10th bit of the 80-bit word is also of significance.
Frame recognition occurs with the first 11 bits following the sync pulse with DIRUP. In the bit counter C phase, the second 4 bits (first binary word) are suppressed because they are superfluous for frame representation.

Recognition circuit
It comprises PROM IC 51, 41, 31, 21.1, 13.2, 43.2 and 12.3 for the slave and PROM IC 52, 42, 32, 21.2, 13.1, 43,3 and 12.1 for the master.

In the following, we shall only describe the master since the master and slave circuits are identical.

Function principles
The PROM contains a table which is processed depending on the input code. If the sequence of the bits does not match the stored bit pattern, processing branches to the beginning of the table and a new comparison is made.
The DMCODE selects the A or B inputs. Correspondingly, the signals are applied to FF IC 32 and 21.2 and in the first or second clock cycle which follow (Q1) they are input to the PROM.
Outputs 3Q and 4Q of IC 32 indicate the code type.

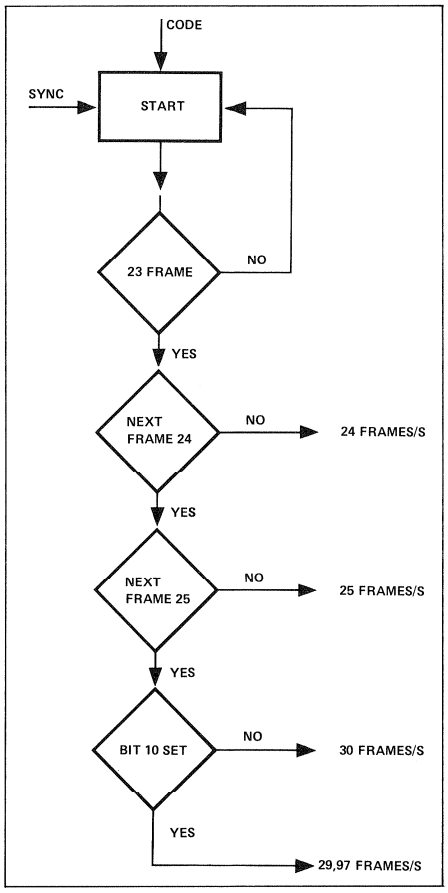

Fig. 3.5.2
Prinzip der M / S Codeart-Erkennung
Principle of the M / S code type recognition

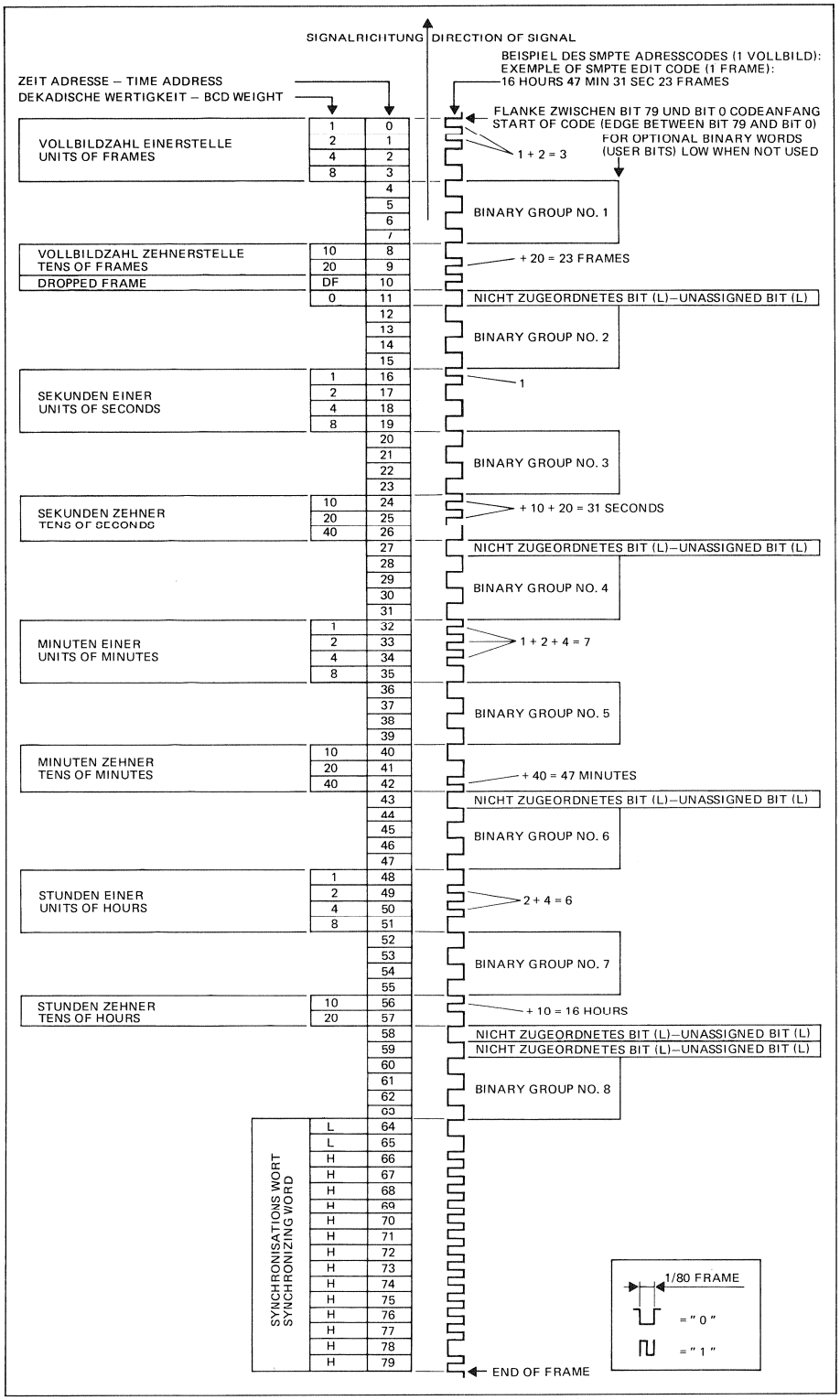

Fig. 3.5.3
SMPTE-Addresscode

Fig. 3.5.3
SMPTE address code

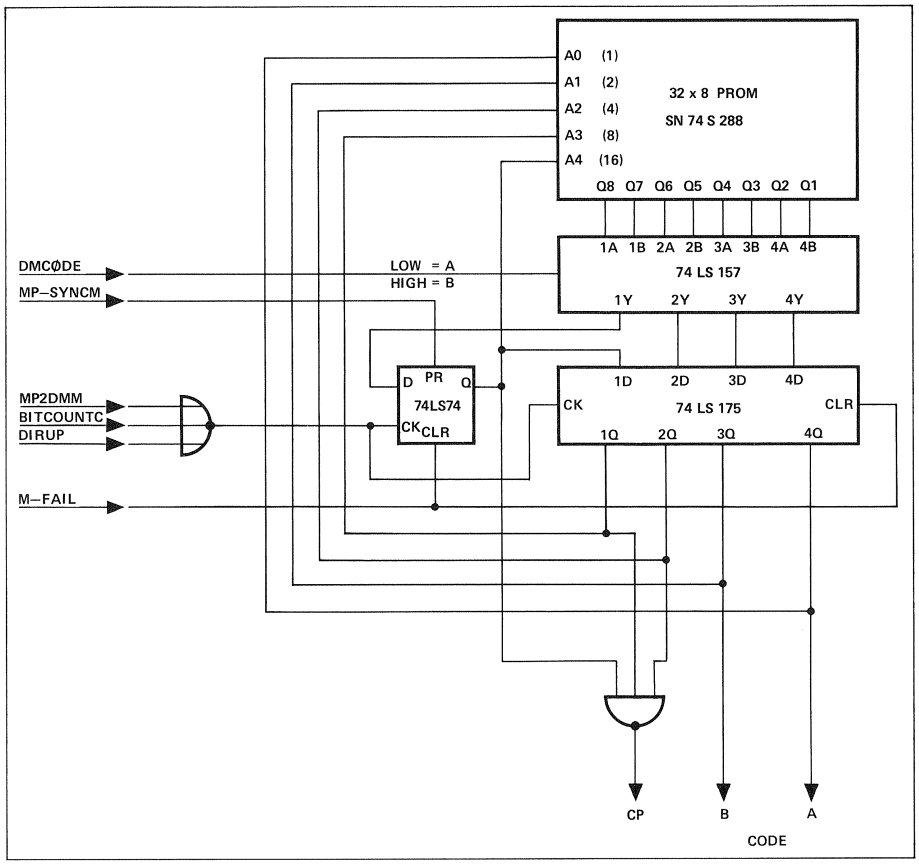

Fig. 3.5.4
Auto Frame Selector, Diagramm

Fig. 3.5.4
Auto frame selector diagram

3.5.2
Codeauswertung und Kontrolle

Bei jeder Bilderkennung wird über IC 43.3 und 12.1 ein Puls übertragen. Mittels IC 33 kann die Code-Erkennung zwischen Master und Slave umgeschaltet werden.
Die Bilderkennung muss viermal ausgeführt werden. Diese Kontrolle geschieht mit den ersten zwei Stufen des Zählers IC 54. Sobald dieser auf 4 gezählt hat, stoppt er sich selbst über IC 43.1 mit dem U/D-Befehl auf hoch.

Der zweite Teil des Zählers wird als Speicher benützt für die letzte Code-Type-Darstellung. Sollte der Code-Type zwischen Master und Slave unterschiedlich sein, wird über die EX-OR-Verknüpfung IC 23.3/4 der Zähler auf rückwärts gestellt und über IC 13.3 bei QA=QB=0 neu geladen.
IC 44.1 kann vom Programm gesetzt werden und dient zum Laden des Zählers IC 54.
Über IC 23.1/2 werden der erkannte Code-Type und der Code-Type des Masters miteinander verglichen.
Sollten diese Code-Typen nicht übereinstimmen, dann wird eine "1" ins Schieberegister eingeschrieben. Nach vier Ungleichheiten erscheint diese "1" am Ausgang QD und meldet den Status via Programm (Code Not Defined).

3.5.2
Code analysis and control

For each frame recognized, a pulse is transmitted via IC 43.3 and 12.1. The code recognition can be switched between master and slave via IC 33.
Frame recognition must be performed four times. This control occurs with the first two bit positions of counter IC 54. As soon as the count reaches 4, it stops itself via IC 43.1 with the U/D instruction being high.

The second portion of the counter is used as memory to store the previous code type recognized. If the code type differs between master and slave the counter is set to decrement via the EXOR combination IC 23.3/4 and reloaded via IC 13.3 when QA=QB=0.
IC 44.1 can be set by the program and is used for loading the counter IC 54.
The recognized code type and the code type of the master are compared via IC 23.1/2.
If the two code types do not match, a "1" is written into the shift register. After four unequal comparisons, the "1" appears at the output QD and signals the status via program (code not defined).

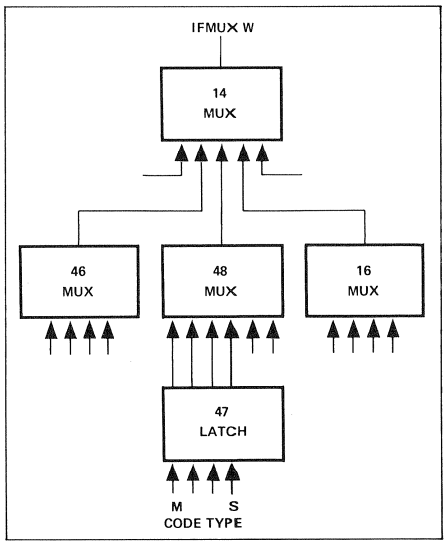

Fig. 3.5.5
Multiplexer, Data Selector, Latch
Multiplexer, data selector, latch

Die Codeart und Code Not Defined können vom Programm via IFMUX-W abgefragt werden.

3.5.3
Program Repeat Counter

IC 17 und 28 bilden den Timer, der vom Programm geladen werden kann. Je nach dem geladenen Wert verändert sich die Zeit, bis am Ausgang der Carryout entsteht.

3.5.4
Befehlsdecoder

Der Befehlsdecoder besteht aus IC 27 und 37. Die Befehle werden gemäss Programmdaten decodiert und an die entsprechenden Stellen weitergegeben.

3.5.5
Multiplexer, Data Selector, Latch

Er besteht aus IC 14, 16, 46, 47 und 48. Die Multiplexer und Data Selectors werden in Übereinstimmung mit dem Programm gesetzt.
IC 47 dient als Latch für die Codeart.
IC 49 ist ein adressierbares Latch und wird vom Arithmetic Control-Programm adressiert.

3.5.6
Bitzähler-Register

IC 18, 19 und 29 bilden ein Schieberegister mit parallelen Eingängen und einem seriellen Ausgang.
Um eine genaue Stelle auf dem Band zu beschreiben, reicht die Frame-Unterteilung nicht aus. Dazu wird der Bitzähler-Inhalt benutzt, dessen Unterteilung 80 mal feiner ist, als die der Frames.
Es werden also die Inhalte von Master- und Slave-Bitzähler im gleichen Moment abgespeichert.
Die Daten stehen dann der Arithmetic seriell zur Verfügung (z.B. zur Differenzauswertung).

3.5.7
Vorhaltezeit-Impuls

Mittels DIL-Switch auf Platz 64 und über IC 63 kann die Vorhaltezeit in 1 ms Schritte eingeteilt werden.
In einer Edit Mode Betriebsart kann somit ein Treiberausgang aktiviert werden, bevor der Slave den Entry Point überschritten hat.

3.5.8
RAM-Steuereinheit

Diese besteht aus IC 15, 24, 25, 35 und 36.
Sie generiert im wesentlichen die Steuersignale für das Buffer Memory auf dem Print M + S

The code type and code not defined can be interrogated by the program via IFMUX-W.

3.5.3
Program repeat counter

ICs 17 and 28 constitute a timer which can be loaded by the program. Depending on the value loaded, the time varies before the carry out appears at the output.

3.5.4
Instruction decoder

The instruction decoder comprises ICs 27 and 37. The instructions are decoded according to the program data and transferred to the corresponding elements.

3.5.5
Multiplexer, data selector, latch

It comprises ICs 14, 16, 46, 47 and 48. The multiplexers and data selectors are set according to the program.
IC 47 serves as latch for the code type.
IC 49 is an addressable latch which is addressed by the arithmetic control program.

3.5.6
Bit counter register

ICs 18, 19 and 29 constitute a shift register with parallel inputs and a serial output.
To define a precise location on tape, a subdivision by frame is not adequate. For this purpose, the content of the bit counter is used which allows for a graduation that is 80 times finer than provided by the frames, i.e. the contents of master and slave bit counter are stored at the same moment. The data are subsequently available to the arithmetic in serial form (e.g. to analyze the difference).

3.5.7
Edit lead pulse

The edit lead time can be set in increments of 1 ms with the DIL switch in location 64 and with IC 63.
For a given edit mode, a driver output can be activated before the slave has passed the entry point.

3.5.8
RAM control unit

It comprises ICs 15, 24, 25, 35 and 36. Its main function is the generation of control signals for the buffer memory on the M + S RAM timing

FRAMSL	A	B	FRAMES/SEC
	0	0	24
	1	0	25
	0	1	29, 97
	1	1	30

Fig. 3.5.6
Unterscheidung der Code-Typen im Frame-Selector
Code type differentiation in the frame selector

RAM, Timing.
Aus den Signalen Bitcounter-Off, DM-FAIL und dem Phasenclock Φ 3 entstehen über FF IC 15.1/2 die Signale NOCODE-S und NOMASTER.
IC 25 übernimmt diesen Zustand, um die entsprechende Code-Erkennungsschaltung zu löschen.
IC 25 kann auch vom Programm zurückgesetzt werden.

From the signals bitcounter off, DM fail and the phase clock Φ 3, the signals NOCODE-S and NOMASTER are generated via FF IC 15.1/2.
IC 25 evaluates this status to clear the corresponding code recognition circuit.
IC 25 can also be cleared by the program.

Zeilenwechsel Schreiben
IC 24 dient zum Wechseln der zu schreibenden Zeile.
Sind Master- bzw. Slavecode vorhanden, wechselt das FF seinen Zustand mit jedem Sync-Puls. Sobald ein Code ausfällt, behält das entsprechende FF seinen Zustand und die zuletzt vollständig im M + S RAM eingeschriebene Zeile kann nicht überschrieben werden.
Sobald der Code wieder vorhanden ist, wechselt FF 15 und nach dem zweiten Sync-Puls kann wieder die Zeile gewechselt werden.

Line change, write
IC 24 changes the line when writing.
If the master or slave code is available, the FF changes its status with every sync pulse. As soon as the code is absent, the corresponding FF retains its status and the last full line written into the M + S RAM cannot be overwritten.
When the code reappears, FF 15 changes and the line can be changed after the second sync pulse.

Zeilenwechsel Lesen
Dazu dient der 2. Teil des IC 35.
Vom Programm wird via IC 37 und 11 (4Q) gewählt, ob Master oder Slave gelesen werden muss. Je nach dem wird dann WLINE-M oder WLINE-S angewählt und an das RAM via RLINE-A weitergeschaltet.

Line change, read
The second half of IC 35 is used for this purpose. The program determines via ICs 37 and 11 (4Q), whether the master or slave is to be read. Accordingly, either WLINE-M or WLINE-S is selected and switched to the RAM via RLINE-A.

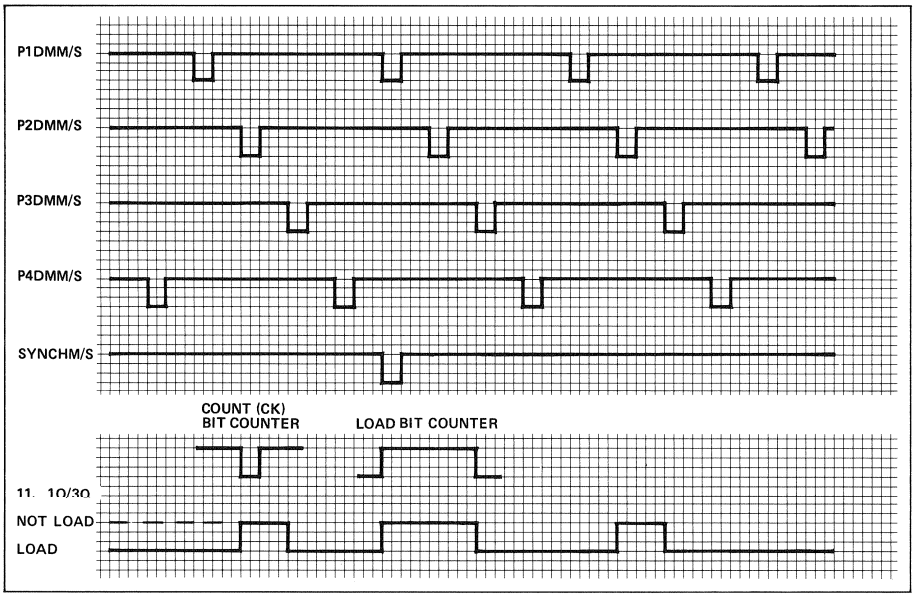

Fig. 3.5.7
Ladeunterdrückung des Bitzähler-Registers

Fig. 3.5.7
Load inhibition of the bit counter register

Ladeunterdrückung des Bitzähler-Registers
Während des Wechselns des Bitzählers darf natürlich der Inhalt nicht ins Bitzähler-Register eingeschrieben werden.
Der erste Teil des IC's 35 und der nachfolgende IC 44.2 bilden die Unterdrückungsschaltung.
Über IC 11 und IC 25 erfolgt die Ansteuerung dieser Schaltung.
Das Laden ist nur erlaubt, wenn Master- und Slavecode erkannt sind.

Load suppression of the bit counter register
Of course, the content of the bit counter may not be written into the bit counter register while the counter is changing.
The first half of IC 35 and the subsequent IC 44.2 constitute an inhibition circuit.
This circuit is selected via IC 11 and IC 25.
Loading is only permitted after master and slave codes have been recognized.

3.6
PERIPHERAL CONTROL A MK II
1.228.481
Slave Rack Platz 6

Der Print enthält:
- die Programmdaten für das Peripherie-Programm, abgespeichert in PROM's
- Register und Zähler für die Ansteuerung des Programmspeichers
- In-/Output-Buffer, Speicher, Selector und Decoder
- eine Kontrollogik, die alle Einheiten steuert

Die Beschreibung ist aufgeteilt in:
3.6.1 Programmzähler
3.6.2 Address-Selector
3.6.3 Stack-Register
3.6.4 PROM
3.6.5 Auswahl der Testdaten
3.6.6 Programmdaten - Sender/Empfänger
3.6.7 Addressbuffer
3.6.8 Befehlsdecoder
3.6.9 Control-Logik

3.6
PERIPHERAL CONTROL A MK II
1.228.481
Slave rack location 6

The print comprises:
- Program data for the peripheral program, stored in PROMs
- Registers and counters for selecting the programm memory
- Input/output buffer, memory, selector and decoder
- Control logic for driving these elements

The description is subdivided into the following sections:
3.6.1 Program counter
3.6.2 Address selector
3.6.3 Stack register
3.6.4 PROM
3.6.5 Selection of test data
3.6.6 Program data transceiver
3.6.7 Address buffer
3.6.8 Instruction decoder
3.6.9 Control logic

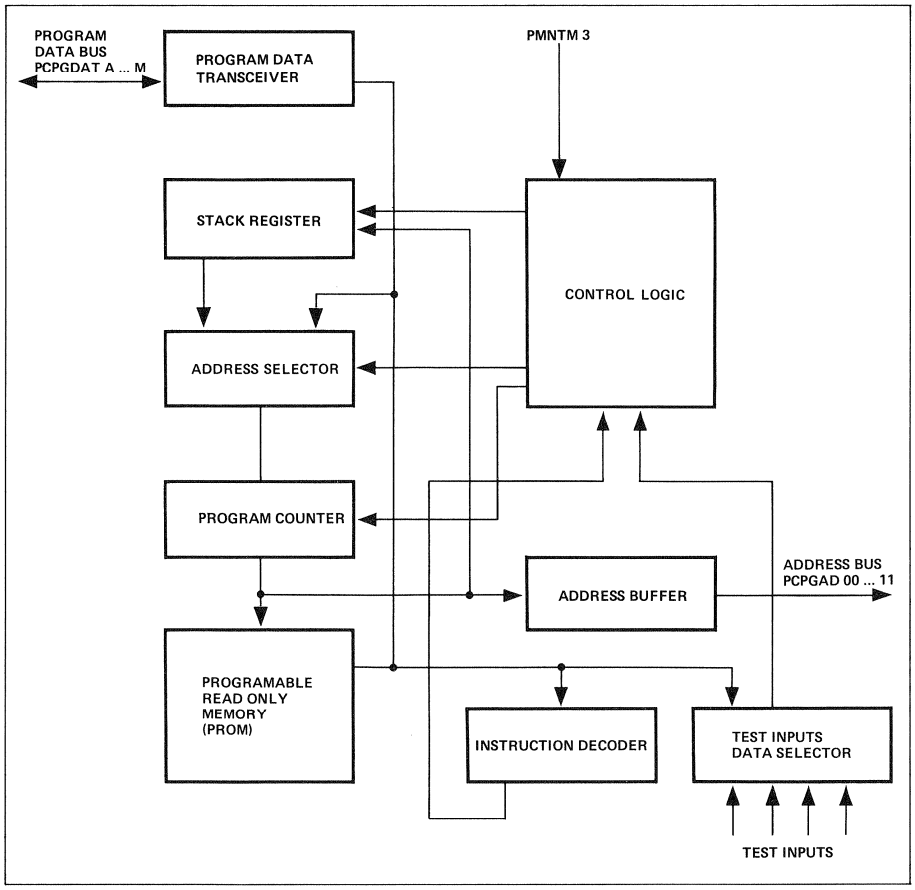

Fig. 3.6.1
Blockschaltbild

Fig. 3.6.1
Block diagram

3.6.1
Programmzähler

Der Programmzähler, bestehend aus IC 25, 35 und 45, liefert die Adresse für die Programmspeicher (PROM) und wird von der Control-Logik gesteuert. Der Zähler läuft synchron zu PMNTM 3.

3.6.2
Address-Selector

Der Address-Selector IC 52, 53 und 54 wählt die Adressen für den Programmzähler. Er schaltet den Inhalt des Stack-Registers oder eine vom Programm anliegende Adresse auf die Eingänge des Programmzählers.
Er wird von den Programmdaten über IC 11 angesteuert.

3.6.3
Stack-Register

IC 43 und 44 bilden das Stack-Register. Es kann nur eine Adresse vom Programmzähler abgespeichert werden. Somit ist im Programmablauf nur eine Subroutine möglich.

3.6.4
PROM

Die PROM-IC's 26 bis 29, 36 bis 39 und 46 bis 49 enthalten die Programmdaten. Sie werden vom Adresszähler über IC 34.2 angewählt.
Programminhalt: 2048 x 12 Bit.

3.6.5
Auswahl der Testdaten

Der Data Selector Multiplexer IC 33 ist das letzte und wichtigste Glied einer Reihe von Multiplexerschaltungen. Zusammen mit IC 14 (zweitletztes) und IC 15/32 (drittletztes Glied) dient er der Auswahl einer ganzen Reihe von interessierenden Signalen für das TEST-Flip Flop der Control-Logik.

3.6.6
Programmdaten-Sender/Empfänger

Der Transceiver, gebildet aus IC 17, 18 und 19 empfängt oder sendet die Daten vom bzw. auf den Programmdaten-Bus. Dieser kann die Information von 12 Bits übermitteln.
Das Adressbit A11 bestimmt, ob gesendet oder empfangen wird.

3.6.1
Program counter

The program counter comprises ICs 25, 35 and 45 and supplies the address for the program memory (PROM). It is driven by the control logic. The counter runs synchronously to PMNTM 3.

3.6.2
Address selector

The address selector consisting of ICs 52, 53 and 54, selects the address for the program counter. It switches the content of the stack register or an address supplied by the program to the inputs of the program counter.
It is selected by the program data via IC 11.

3.6.3
Stack register

ICs 43 and 44 form the stack register. Only one address from the program counter can be stored. Hence, only one subroutine is possible during program execution.

3.6.4
PROM

The PROM ICs 26 through 29, 36 through 39 and 46 through 49 hold the program data. They are selected by the address counter via IC 34.2.
Program size: 2048 x 12 bits.

3.6.5
Selection of test data

The test data selector multiplexer IC 33 is the last and most important member in a series of multiplexer circuits. Together with IC 14 (second last) and IC 15/32 (third last member), it is used for selecting a series of interesting signals for the TEST flip-flop or the control logic.

3.6.6
Program data transceiver

The transceiver, implemented by ICs 17, 18 and 19, receives or transmits the data from or to the program data bus. It can transmit 12-bit data.
The status of address bit A11 defines, whether data is to be transmitted or received.

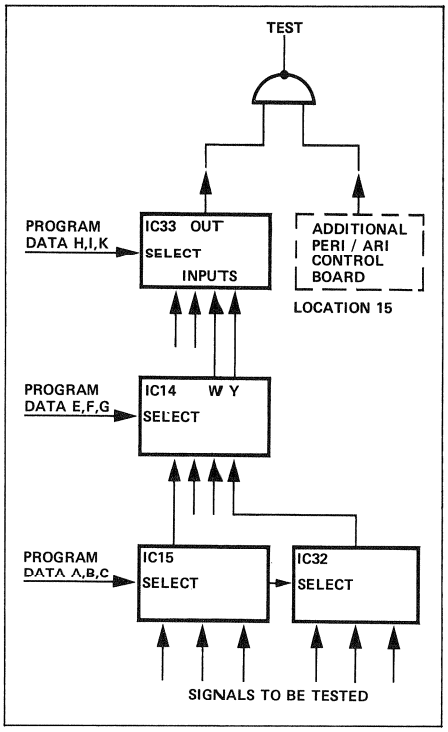

Fig. 3.6.2
Test Inputs Data Selector
Test input data selector

3.6.7 Addressbuffer

Der Addressbuffer IC 13/16 dient zur Übermittlung der 12 Bit-Adressen an die Additional Peri/Ari Control, die weitere Programmspeicher enthält.

3.6.8 Befehlsdecoder

Der Befehlsdecoder besteht aus IC 11, 21, 12, 34.1 und 42.
Die Befehle werden gemäss Programmdaten decodiert und an die entsprechenden Stellen der Control-Logik weitergegeben.

3.6.9 Control-Logik

Die Control-Logik steuert die folgenden Einheiten auf dem Print:
- Programmzähler
- Address-Selector
- Stack-Register
- Instruction-Decoder (teilweise)

Sie besteht im wesentlichen aus den drei IC's 41, 63 und 61 sowie aus den Gattern von IC 24, 51, 62 und 64.
Die R/S Flip Flop's IC 61 dienen als Subroutine- (1Q) und Power ON-Indicator (2Q).

Subroutine-Indicator 61.1
Solange das Hauptprogramm abläuft, wird bei jedem Programmschritt der Wert des Programmzählers im Stack-Register abgespeichert.
Sobald eine Instruktion zu Beginn der Subroutine oder ein Programmunterbruch (PCEXPRRQ) ausgeführt wird, wird das R/S FF 61.1 zurückgesetzt.
Dadurch wird ein weiteres Überschreiben des Stack-Registers verhindert und die Adresse der zuletzt ausgeführten Instruktion bleibt erhalten.
Nach der Ausführung der Subroutine oder des Unterbruchprogramms wird der abgespeicherte Wert (Rücksprungadresse) mit der Return-Instruktion in den Programmzähler geladen, d.h. das Hauptprogramm wird an der Stelle fortgesetzt, wo es unterbrochen wurde.
Nach diesem Rücksprung wird das R/S FF 61.1 wieder gesetzt, damit der Wert des Programmzählers wieder bei jedem Programmschritt im Stack-Register abgespeichert wird.

Power ON-Indicator 61.2
Beim Einschalten des Gerätes wird das R/S FF 61.2 zurückgesetzt.
Das bewirkt, zusammen mit dem Zurücksetzen des Programmzahlers, die Ausführung des Initialisierungsprogramms. Sobald alles initialisiert ist, wird das FF gesetzt. Damit wird eine weitere Initialisierung verhindert.

3.6.7 Address buffer

The address buffer IC 13/16 is used for transmitting the 12-bit addresses to the additional Peri/Ari control equipped with further program memory.

3.6.8 Instruction decoder

The instruction decoder comprises ICs 11, 21, 12, 34.1 and 42.
The instructions are decoded according to the program data and transmitted to the corresponding sections of the control logic.

3.6.9 Control logic

The control logic drives the following elements on the print:
- Program counter
- Address selector
- Stack register
- Instruction decoder (partially)

It is mainly implemented by the three ICs 41, 63 and 61 as well as gates of ICs 24, 51, 62 and 64.
The R/S flip-flops IC 61 are used as subroutine (1Q) and Power ON indicator (2Q).

Subroutine indicator 61.1
As long as the main program is running, the value of the program counter is stored in the stack register after each step.
As soon as an instruction at the beginning of a subroutine or an interrupt (PCEXPRRQ) is processed, R/S FF 61.1 is cleared.
In this manner, overwriting of the stack register is prevented and the address of the last instruction processed is saved. After the subroutine or the program interrupt is processed, the stored value (return address) is loaded into the program counter with the return instruction, i.e. the main program resumes at the point where it was interrupted.
After the return, R/S FF 61.1 is set again, causing the value of the program counter to be stored in the stack register with every program step processed.

Power ON indicator 61.2
When the machine is powered on, R/S FF 61.2 is cleared.
Together with the clearing of the program counter, it causes the initialization program to be executed. As soon as initialization is completed, the FF is set. In this manner, re-initialization is inhibited.

RETURN Flip Flop 41.1
Die Delay-FF's im IC 41 dienen den folgenden Signalen: RETURN, TEST, CLEAR und POWER ON.
Nach einem RETURN-Befehl muss die nächste Instruktion unterdrückt werden, damit der Subroutineaufruf nicht nochmals ausgeführt wird.
Deshalb wird das RETURN-Signal mit FF 1 um einen Takt verzögert.

TEST Flip Flop 41.2
Im Programmablauf werden Tests ausgeführt. Verläuft ein Test negativ, wird der darauffolgende Programmschritt unterdrückt. Deshalb wird das negative Ergebnis eines Tests mit dem FF 2 um einen Takt verzögert.

CLEAR Flip Flop 41.3
Um einen zeitlich sauberen CLEAR-Impuls zu erhalten, wird dieser über FF 3 geschaltet.

Der CLEAR-Impuls tritt auf bei:
- POWER ON
- PROGRAM FAIL
- INTERRUPT (Programmunterbruch, PCEXPRRQ)

Bemerkung:
Wenn sich der Programmablauf in einer Subroutine befindet oder gerade ein JUMP- oder TEST-Programmschritt durchgeführt wird, kann die INTERRUPT-Funktion bis zum Ende des Ablaufes bzw. Schrittes nicht erfolgen.

POWER ON Flip Flop 41.4
Dieses Signal setzt über das Programm sämtliche Funktionen zurück. Zur Sicherheit gegen Störimpulse wird es deshalb mit FF 4 getaktet.

Watch Dog-Zähler IC 63
Er dient zur Zeitüberwachung des Programms. Dieses muss alle 15x1/3200 sec = 4,6 ms den Zähler zurücksetzen, sonst bewirkt der Carryout des Zählers einen neuen Start des Programmes (PROGRAM FAIL).

RETURN flip-flop 41.1
The delay flip-flops in IC 41 are used with the following signals: RETURN, TEST, CLEAR and POWER ON.
The instruction following a RETURN instruction subroutine call. For this reason, the RETURN signal is delayed with FF 1 by one clock pulse.

TEST flip-flop 41.2
Certain tests are performed during program execution. If the result of a test is negative, the program step following the test is suppressed. To accomplish this, the negative test result is delayed with FF 2 by one clock pulse.

CLEAR flip-flop 41.3
To obtain a precisely timed CLEAR impulse, it is switched via FF 3.

The CLEAR pulse occurs for:
- POWER ON
- PROGRAM FAIL
- INTERRUPT (PCEXPRRQ)

Note:
When the program is performing a subroutine, a JUMP or TEST instruction, the INTERRUPT function cannot be performed until the subroutine or the program step has been completed.

POWER ON flip-flop 41.4
All functions are cleared by this signal via program. For protection against noise signals, it is clocked by FF 4.

Watch dog counter IC 63
It monitors the running time of the program which must clear the counter every 15x13200 sec = 4,6 ms, otherwise the carry out of the counter initiates a restart of the program (PROGRAM FAIL).

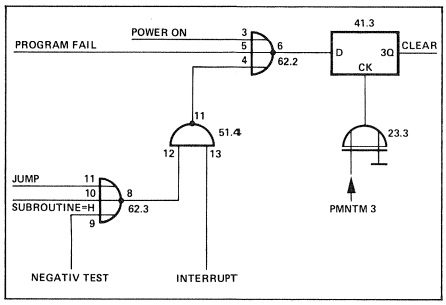

Fig. 3.6.3
CLEAR-Circuit
CLEAR circuit

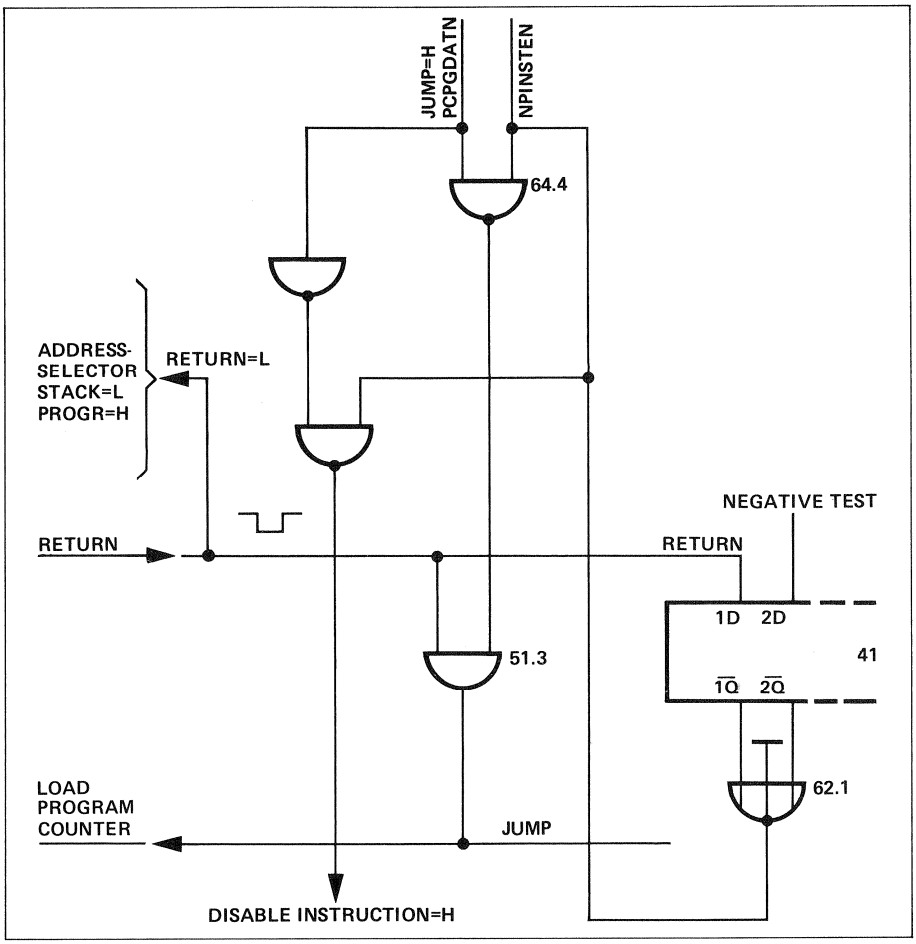

Fig. 3.6.4
Control-Logic Section

Fig. 3.6.4
Control logic section

JUMP

Ein Sprung im Programmablauf tritt auf bei:
– JUMP (PCPGDATN)
– RETURN (IC 51.3.9)

Bei beiden Funktionen muss der Programmzähler geladen werden. Dies wird über IC 51.3 ausgeführt. Ebenso werden die Instruktionen über IC 64.1 unterdrückt. Bei RETURN erfolgt die Unterdrückung erst beim nächsten Programmschritt via IC 41.

JUMP

A jump is performed during program execution for:
– JUMP (PCPDATN)
– RETURN (IC 51.3.9)

The program counter must be loaded for both functions. Loading is accomplished via IC 51.3. The instructions will be suppressed via IC 64.1. For RETURN, suppression occurs only in the next program step via IC 41.

3.7
PERIPHERAL CONTROL B
1.228.407
Slave Rack Platz 7

Aus den in Fig. 3.7.1 gezeigten Eingangssignalen werden zur Aufbereitung und Speicherung der Mainprogrammeranzeigen verschiedene Steuersignale gewonnen. Diese werden durch die Treiberschaltungen der Prints auf den Plätzen 9 und 10 übernommen und bedienen auf dem Mainprogrammer die Display- und Tastenlampen.

3.7
PERIPHERAL CONTROL B
1.228.407
Slave rack location 7

From the input signals shown in Fig. 3.7.1, various control signals are extracted for preparation and storage of main programmer indications. These are accepted by driver circuits on the prints in locations 9 and 10 and actuate the display and test lamps on the main programmer panel.

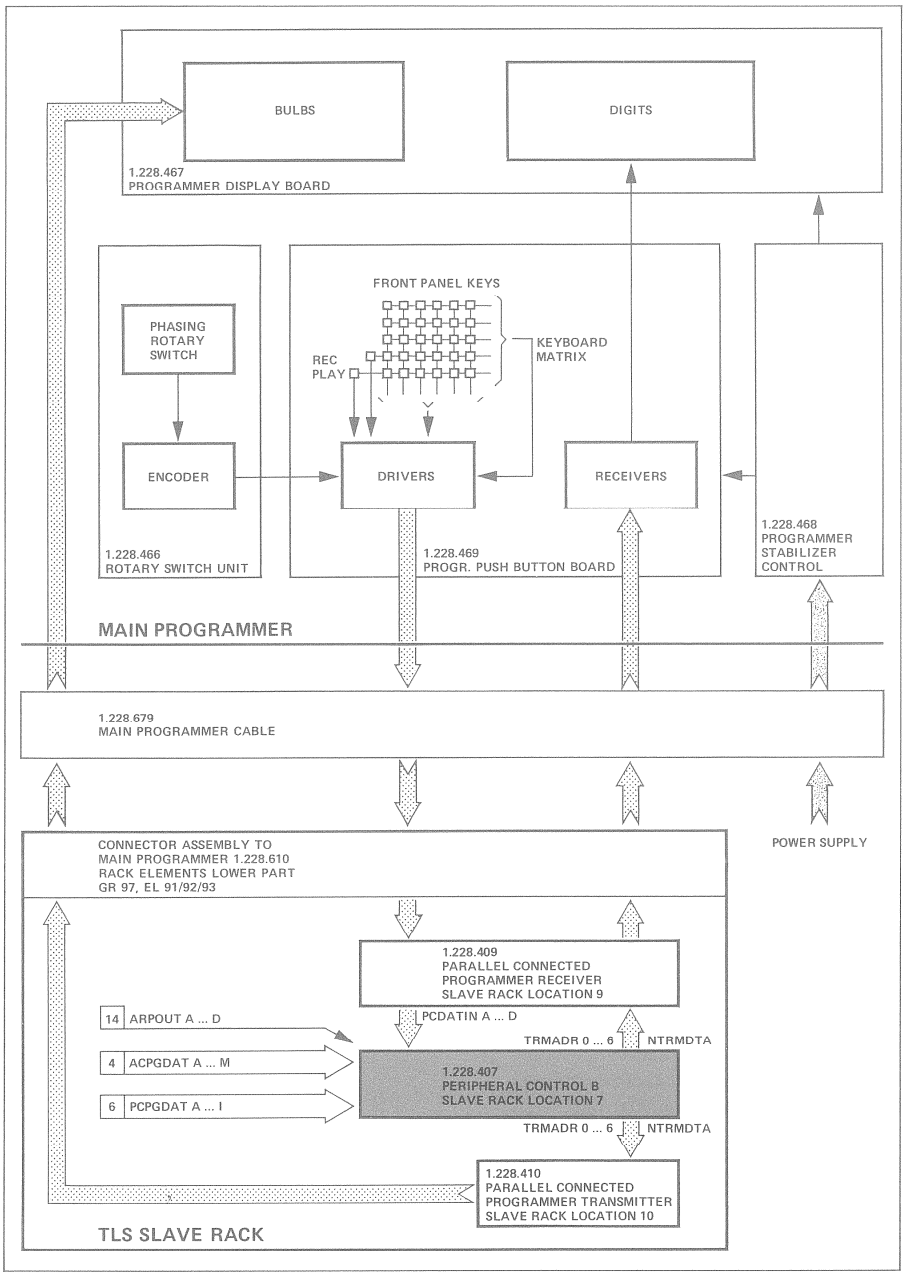

Fig. 3.7.1
Blockdiagramm

Fig. 3.7.1
Signal diagram

Die Peripheral Control B verarbeitet hauptsächlich die folgenden Signalquellen:
- von Platz 4, via Bus, die AC-Programmdaten
- von Platz 6, via Bus, die PC-Programmdaten
- von Platz 9 die PC-Inputdaten
- von Platz 14 die Arithmetic Parallel Daten

The peripheral control B processes mainly the following signals:
- from location 4, via bus, the AC program data
- from location 6, via bus, the PC program data
- from location 9 the PC input data
- from location 14 the arithmetic parallel data

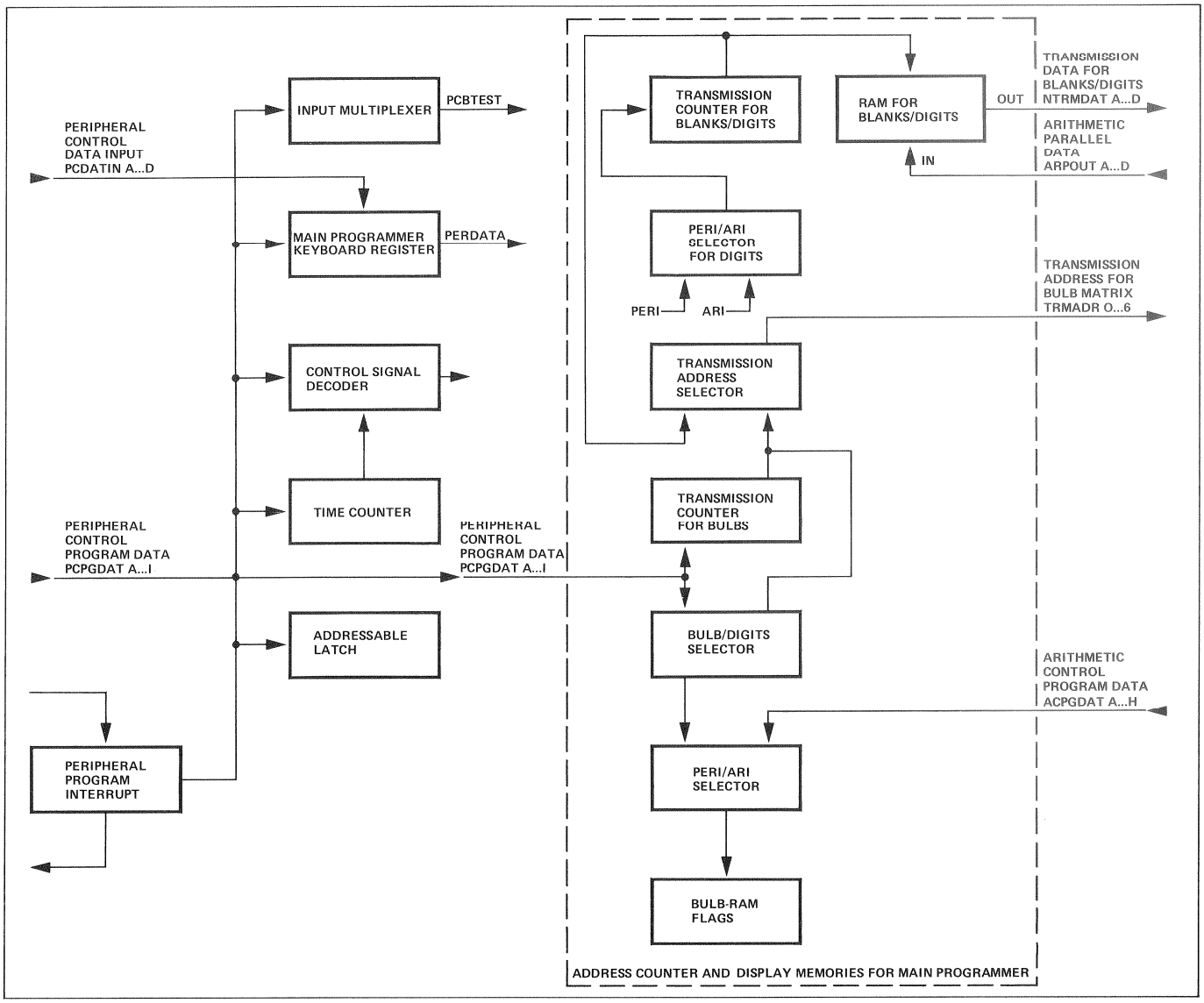

Fig. 3.7.2
Blockschaltbild

Fig. 3.7.2
Block diagram

Es sind folgende Schaltungsblöcke beschrieben:
- 3.7.1 Peripherieprogramm-Unterbruch
- 3.7.2 Zeitzähler
- 3.7.3 Eingangs-Multiplexer
- 3.7.4 Register für das Mainprogrammer-Keyboard
- 3.7.5 Kontrollsignal-Decoder
- 3.7.6 Adressierbares Latch
- 3.7.7 Zähler, Umschalter und Speicher für den Mainprogrammer

The following circuit blocks are described:
- 3.7.1 Peripheral program interrupt
- 3.7.2 Time counter
- 3.7.3 Input multiplexer
- 3.7.4 Main programmer keyboard register
- 3.7.5 Control signal decoder
- 3.7.6 Addressable latch
- 3.7.7 Counter, selector and memory for the main programmer

3.7.1
Peripherieprogramm-Unterbruch

An den IC's 31, 32, 38.1/2 und 28.6 könnten vier verschiedene Interrupts angelegt werden. Es wird hier nur der Edit Lead Puls an IC 31.1 angelegt. Über IC 38.1 und 38.2 wird der Interrupt (PCEXPRRQ) mit dem Programm verknüpft.

3.7.2
Zeitzähler

Dieser besteht aus den IC's 52, 53, 54, 63, 64 und aus dem PROM 51.
Der Zeitzähler dient zu relativ langen Zeitmessungen, eventuell mit Interrupt. Über das PROM kann der Zähler vom Programm mit verschiedenen Werten geladen werden. Je nach Wert erscheint der Carryout am Zähler früher oder später.
Die Umschaltung des Zählerclocks zum Laden (PMNTM2) und Zählen (12,8 kHz) geschieht mit IC 52.

3.7.3
Eingangs-Multiplexer

Er besteht aus den IC's 11, 12, 21.
Das Peripherieprogramm ist für die Adressierung dieser Auswahlschaltung zuständig. Der Ausgang PCBTEST führt auf die Peripheral Control A.

3.7.4
Register für das Mainprogrammer-Keyboard

Es besteht aus den IC's 34 und 42 und dient zur Übermittlung von Zahlenwerten (z.B. von den Zahlentasten des Mainprogrammers) an die Arithmetic Control.
IC 34 selektiert zwischen Programmdaten und Keyboarddaten.
Der Ausgang von IC 42 führt an die Arithmetic (PERDATA).

3.7.5
Kontrollsignal-Decoder

Mit den IC's 44 und 45 werden die Steuersignale für alle Teile des Prints aus den Programmdaten decodiert.

3.7.6
Adressierbares Latch

Dieses besteht aus IC 19 und 29.
Durch das Programm werden die je 8 Flip Flops angesteuert.

3.7.1
Peripheral program interrupt

Four different interrupts can be applied to ICs 31, 32, 38.1/2 and 28.6. In this instance, only the edit lead pulse is applied. Via ICs 38.1 and 38.2, the interrupt (PCEXPRRQ) is linked to the program.

3.7.2
Time counter

The counter comprises ICs 52, 53, 54, 63, 64 and PROM 51.
The time counter is used for measuring relatively long time intervals possibly with interrupt. The counter can be initialized with different values via PROM. Depending on the value, the carry out on the timer appears earlier or later.
The switching of the counter clock between loading (PMNTM 2) and counting (12.8 kHz) is performed by IC 52.

3.7.3
Input multiplexer

It comprises ICs 11, 12, 21.
The peripheral program is responsible for addressing this selection circuit. The output PCBTEST is connected to peripheral control A.

3.7.4
Main programmer keyboard register

It comprises ICs 34 and 42. Its function is the transmission of numerical values (e.g. from the numerical keys of the main programmer) to the arithmetic control.
IC 34 selects between program data and keyboard data.
The output of IC 42 is connected with the arithmetic (PERDATA).

3.7.5
Control signal decoder

With ICs 44 and 45, the control signals are decoded from the program data for all sections of the print.

3.7.6
Addressable latch

It consists of ICs 19 and 29.
The two groups of 8 flip-flops are selected by the program.

3.7.7
Zähler, Umschalter und Speicher für den Mainprogrammer

Dieser Schaltungsteil umfasst die auf dem Schema zwischen IC 27 und IC 47, 48 und 49 gezeichneten IC's und kann in folgende Funktionsgruppen aufgeteilt werden:

- Speicher für Anzeigelampen, Flag's
- Peri/Ari-Umschalter
- Lampen/Zahlen-Umschalter
- Transmission Zähler für die Tastenlampen
- Transmission Address-Selector
- Transmission Zähler für Blanks/Digits
- RAM für die Zeitanzeige

3.7.7
Counter, selector and memory for the main programmer

This circuit element comprises the ICs shown on the diagram between IC 27 and IC 47, 48 and 49. It can be broken down into the following function grups:

- Memory for display lamps, flags
- Peri/Ari selector
- Bulb/digits selector
- Transmission counter for bulbs
- Transmission address selector
- Transmission counter for blanks/digits
- RAM for time display

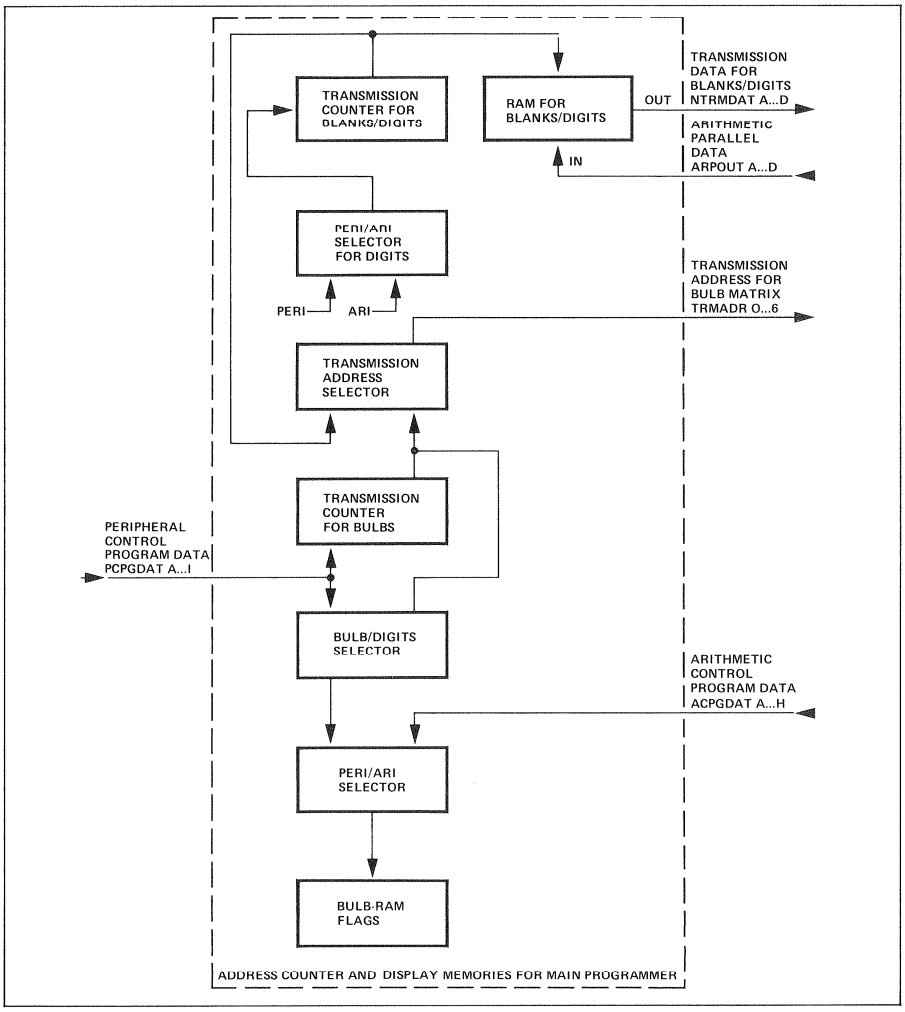

Fig. 3.7.3

Speicher für Anzeigelampen, Flag's

In diesem Speicher (IC 27) ist der Zustand aller Anzeigelampen des Main- und Basicprogrammers abgespeichert. Ungefähr alle 30 ms wird dieser Zustand den Programmer-Interfaces (Prints auf den Plätzen 9 und 17) übermittelt.

Daneben beinhaltet dieser Speicher "Flags" zum Datenaustausch zwischen Peripheral und Arithmetic Control.

Memory for display lamps, flags

The status of all bulbs of the main and basic programmer is stored in the memory (IC 27). This status is transmitted to the programmer interface (prints in locations 9 and 17) in intervals of approx. 30 ms.

In addition, this memory also contains flags for exchanging data between peripheral and arithmetic control.

Peri/Ari-Umschalter
Der Peri/Ari-Umschalter besteht aus den IC's 15 und 16.
Er schaltet im Takt von 819,2 kHz entweder die Peripheral oder die Arithmetic Control Daten ans RAM.
Der Dateneingang DI wird ebenfalls im Takt von 819,2 kHz vom Peripheral Program Data H/I auf Arithmetic Program Data H umgeschaltet.

Peri/Ari selector
The Peri/Ari selector consists of ICs 15 and 16.
With a clock frequency of 819.2 kHz it switches either the peripheral or the arithmetic control data to the RAM.
The data input DI is also switched with a clock frequency of 819.2 kHz from the peripheral program data H/I to the arithmetic program data H.

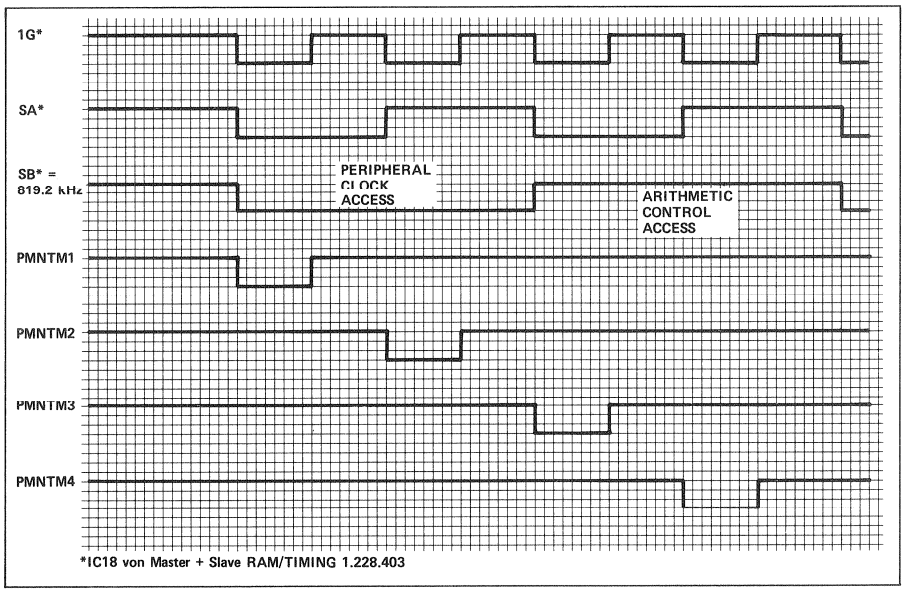

Fig. 3.7.4
Sequenzdiagramm des Vierphasentaktes Φ (PMNTM 1...4)

Fig. 3.7.4
Sequence diagram of the 4-phase clock pulse Φ (PMNTM 1...4)

Bulb/Digit-Umschalter
Dieser ist gebildet aus den IC's 25 und 26.
Er schaltet um zwischen den direkten Peripheral Program Data und den Adressen des Transmission-Zählers für Anzeigelampen.

Bulb/Digit selector
It is implemented by ICs 25 and 26. It switches between direct peripheral program data and the addresses of the transmission counter for the display lamps.

Transmission-Zähler für die Anzeigelampen
IC 23 und 24 bilden einen Zähler. Er wird vom Programm gesteuert.
Der Ausgang führt einerseits via Lampen/Zahlen- und Peri/Ari-Umschalter zum RAM und andererseits via Transmission Address-Selector zur Lampen-Matrix.
Es wird also gleichzeitig das RAM gelesen und die zugehörige Adresse ans RAM und an die Anzeigelampen-Matrix angelegt.

Transmission counter for display lamps
ICs 23 and 24 constitute a counter which is controlled by the program.
The output is connected via bulb/digits and Peri/Ari selector to the RAM and via transmission address selector to the bulb matrix.
In this manner, the RAM is read and the corresponding address is simultaneously input to the bulb matrix.

Transmission-Address-Selector
Mit PMNTM 2 wird der Zähler getaktet, um die Adressen zu durchlaufen.
Er besteht aus den IC's 13 und 14 und selektiert die beiden Transmission-Zähler:
– für die Tastenlampen und
– für Blanks/Digits
Die Umschaltung wird vom Peripheral Program vorgenommen.

Transmission address selector
The counter is clocked by PMNTM 2 to sweep the addresses.
It comprises ICs 13 and 14 and selects the two transmission counters:
– for the key bulbs and
– for blanks/digits
The changeover is performed by the program.

Transmission-Zähler für Blanks/Digits
Er besteht aus IC 47 und liefert dem Transmission-Address-Selector die Adresse. Parallel dazu adressiert er das RAM IC 48 und 49.

RAM für die Zeitanzeige IC 48 und 49
In diesem Speicher ist die Information für die Zeitanzeige des Mainprogrammers (Blanks/Digit) abgespeichert. Die Arithmetic Control bereitet die Information auf und schreibt sie in den Speicher.
Die Peripheral Control übermittelt die gespeicherten Daten dem Programmer-Interface (Print auf Platz 9).

Transmission counter for blanks/digits
It is implemented by IC 47 and supplies the address to the transmission address selector. In parallel, it addresses the RAM IC 48 and 49.

RAM for time diaplay IC 48 and 49
The information for the time display of the main programmer (blanks/digits) is stored in this memory. The arithmetic control prepares this information and writes it into the memory.
The peripheral control transmits the stored data to the programmer interface (print in location 9).

3.8.
TAPE DECK INTERFACE
1.228.408 (SEE 3.8.1)

A80 LOCATOR | A80 MASTER-CONTROL

TLS INTERFACE TO A800
1.228.487 (SEE 3.8.2)
Slave Rack Platz 8

A800

3.8.1
Allgemeines

Dieser Print bildet die Schnittstelle zwischen der Slavemaschine und dem TLS 2000. Er hat die Aufgabe, die parallel anliegenden Steuersignale der A80 mit 24V-Pegel in serielle 5V-Signale für die Peripheral Control A (Platz 6) umzuwandeln. Ebenso müssen die Steuersignale aus dem TLS wieder auf den A80 Logikpegel zurückgewandelt werden.
Zusätzlich ist eine Schaltung untergebracht, die für definierte Anfangszustände nach dem Einschalten des Systems sorgt.

3.8
TAPE DECK INTERFACE
1.228.408 (SEE 3.8.1)

A80 LOCATOR | A80 MASTER-CONTROL

TLS INTERFACE TO A800
1.228.487 (SEE 3.8.2)
Slave rack location 8

A800

3.8.1
General

This print provides a logic level interface between the slave machine and the TLS 2000. It is designed to convert the parallel control signals of the A80 having a 24 V level to serial 5 V signals for the peripheral control A (location 6). Correspondingly, the control signals from the TLS must be reconverted to the logic level of the A80. In addition, a circuit has been included which creates a defined initial status after the system is powered on.

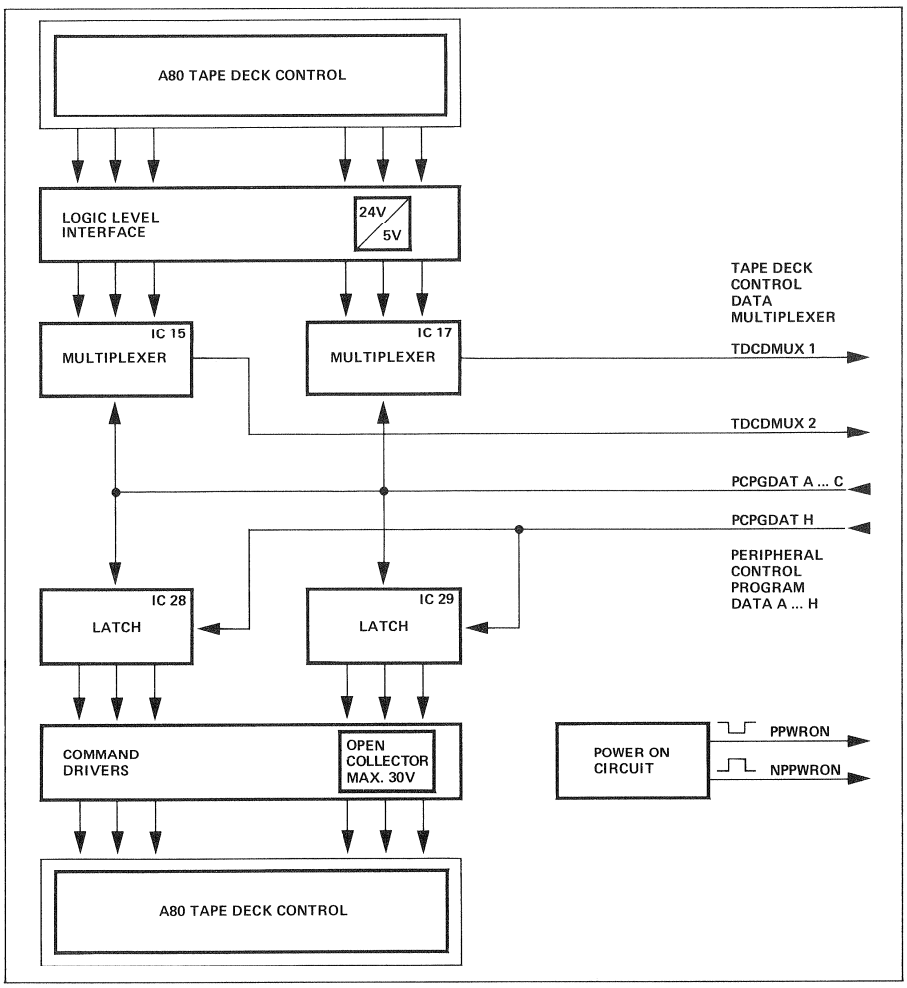

Fig. 3.8.1.1
Blockschaltbild 1.228.408

Fig. 3.8.1.1
Block diagram 1.228.408

3.8.1.1 Logikpegel-Umwandlung

Die Steuer- und Kontrollsignale der A80 VU-Slavemaschine haben einen internen Logikpegel von +24V (Signal aktiv entspricht 0 Volt). Sie müssen in die 5-Volt-TLS-Logik umgewandelt werden.

Das Schaltungsprinzip der Pegelumwandlung eines Signals ist aus Fig. 3.8.1.2 ersichtlich: Die 24 V-Spannung wird durch Widerstände geteilt. Durch eine Zenerdiode wird die maximale Eingangsspannung an jedem Schmitt-Trigger-Eingang begrenzt.

3.8.1.2 Multiplexer

Die beiden Multiplexer IC 15 und 17 übernehmen parallel die Signale nach der Pegelumwandlung. Gesteuert durch die PC-Programmdaten A...C werden die Informationen seriell ausgelesen und durch die Peripheral Control auf Platz 6 weiterverarbeitet.

3.8.1.3 Zwischenspeicher

IC 28 und 29 bilden die beiden adressierbaren Zwischenspeicher. Sie werden durch die gleichen Programmdaten wie die Multiplexer angesteuert. Die Laufwerk-Steuersignale stehen dadurch wieder parallel zur Verfügung.

3.8.1.4 Steuersignal-Treiber

Alle Befehle des TLS 2000 werden über Drivers an die A80 geführt. Die an den Zwischenspeicherausgängen erzielten Pegel werden zu einer Open-Collector-Schaltung (siehe Fig. 3.8.1.3) geführt. Die Ausgänge sind vor Überspannung geschützt.

3.8.1.5 Power-On-Schaltung

Beim Einschalten eines Gerätes oder bei Netzunterbrüchen muss das System auf einen definierten Ausgangszustand gebracht werden. Dies entspricht dem Zustand, wie er nach einem normalen Einschalten herrscht.
Diese Schaltung ist auf Assembly 26 untergebracht.

3.8.1.1 Logic level conversion

The control and monitoring signals of the A80 VU slave machine have an internal logic level of +24 V (Signal active = 0 V). They must be converted to the 5 V level of the TLS logic.

The circuit layout for converting the level of a signal is illustrated in Fig. 3.8.1.2. The 24 V signal voltage is divided by resistors. The maximum input voltage at each Schmitt trigger input is limited by a Zener diode.

3.8.1.2 Multiplexer

The two multiplexers IC 15 and 17 accept the signals as parallel data after level conversion. Driven by the PC program data A...C, the information is read out serially and further processed by the peripheral control in location 6.

3.8.1.3 Buffer

ICs 28 and 29 constitute two addressable buffers. They are driven by the same program data used for the multiplexers. Therefore, the tape deck control signals are again available as parallel data.

3.8.1.4 Control signal driver

All instructions of the TLS 2000 are input to the A80 via drivers. The levels available at the buffer outputs are connected to an open-collector circuit (see Fig. 3.8.1.3). The outputs are protected against over voltages.

3.8.1.5 Power ON circuit

When a machine is powered on or after a power failure, the system must be returned to a defined initial status corresponding to the status prevailing after a normal power up sequence.
This circuit is located in assembly 26.

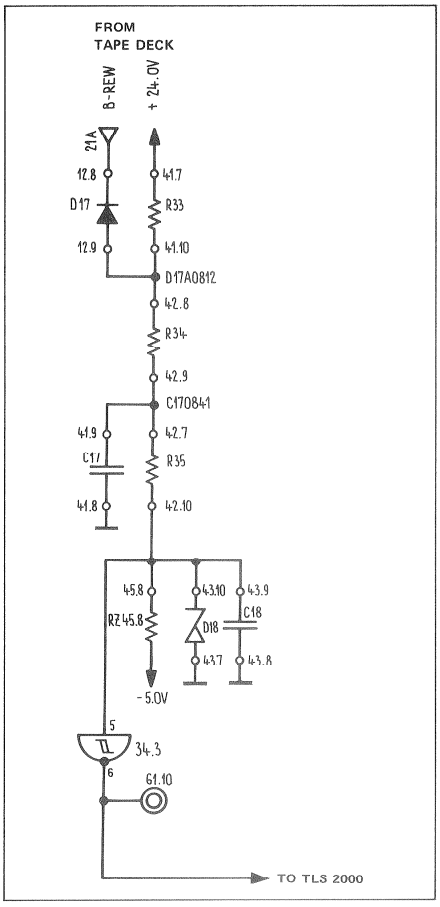

Fig. 3.8.1.2
24 zu 5 V-Logikpegel-Umwandlung
Logic level conversion, 24 V to 5 V

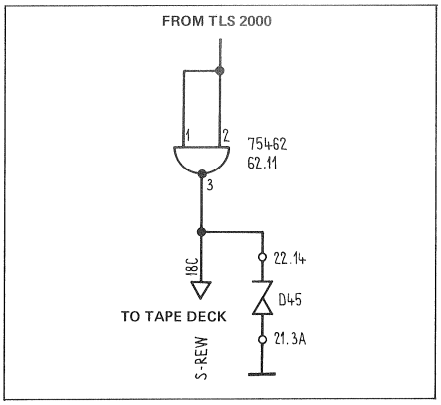

Fig. 3.8.1.3
Steuersignal-Treiberschaltung
Control signal driver circuit

3.8.2
General

The communication between TLS slave rack and the A800 slave machine is implemented by a command line cable.

Two grups of signals are interchanged:

- Serial data packets (see 3.8.2.1)
- SMPTE code information (see 3.8.2.2)

3.8.2
Allgemeines

Die Kommunikation zwischen dem TLS Slave-Rack und der A800-Slavemaschine findet über das Command Line-Kabel statt.

Es werden zwei Gruppen von Signalen ausgetauscht:

- Serielle Datenpakete (siehe 3.8.2.1)
- SMPTE Code-Informationen (siehe 3.8.2.2)

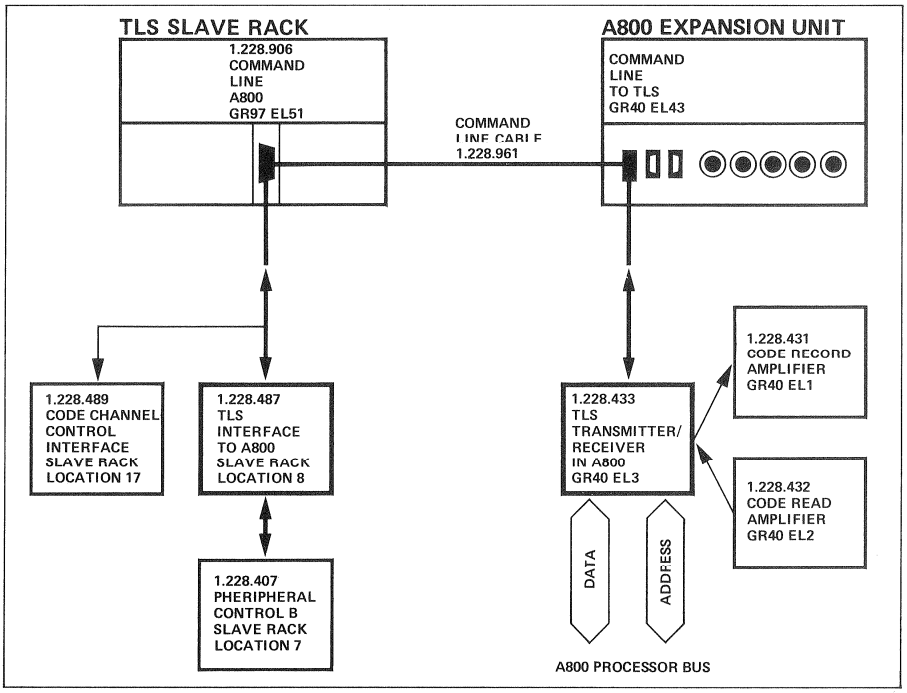

Fig. 3.8.2.1
Datenaustausch zwischen TLS Slave-Rack und Slave-A800

Fig. 3.8.2.1
Data interchange between TLS slave rack and slave A800

3.8.2.1
Serieller Datenaustausch über das Command Line-Kabel

Der serielle Datenaustausch findet zwischen dem Print "TLS-Interface to A800" 1.228.433 (GR 40 EL 3) statt.

Die Signale und ihre Funktion:

A800 DATA
Diese Leitung transportiert serielle 8 Bit-Datenpakete zwischen TLS und A800 in beiden Richtungen hin und her.

DATA CLK
Dieses Signal kommt aus dem TLS und bestimmt den Takt (Ausführungsclock) des Datenaustausches uber die A800 DATA-Leitung.

3.8.2.1
Serial data interchange via command line cable

The interchange of serial data occurs with the print "TLS interface to A800" 1.228.433 (GR 40 EL 3).

Signals and their functions:

A800 DATA
This line transmits serial 8-bit data packets between the TLS and the A800 in either direction.

DATA CLK
This signal originates from the TLS and defines the clock (execution clock) of the data interchange via the A800 DATA line.

ACKNLG
Damit meldet die A800 dem TLS, dass Daten zum Abholen im Schieberegister bereit sind.

REQUEST
Wird im TLS erzeugt und besagt, wann eine Übermittlung abgeschlossen ist. Es wirkt auf das RS-Flip Flop IC 56 des A800-Printes 1.228.433. Das Signal teilt dem A800-Processor mit, dass im TLS weitere Daten zum Abholen bereit sind.
Nachdem der Processor diese gelesen und seinerseits neue Daten ins Register geschrieben hat, setzt er Flip Flop IC 56 zurück. Damit hat das TLS wieder die Kontrolle über den Zugriff.

ACKNLG
With this signal, the A800 notifies the TLS that the shift register is loaded with data to be picked up.

REQUEST
This signal is generated in the TLS and indicates that a transmission has been completed. It acts on the RS flip-flop IC 56 of the A800 print 1.228.433. The signal notifies the A800 processor that additional data is available in the TLS for pick up.
After the processor has read the data and in turn has written new data into the register, flip-flop IC 56 is cleared. In this manner, the TLS regains access control.

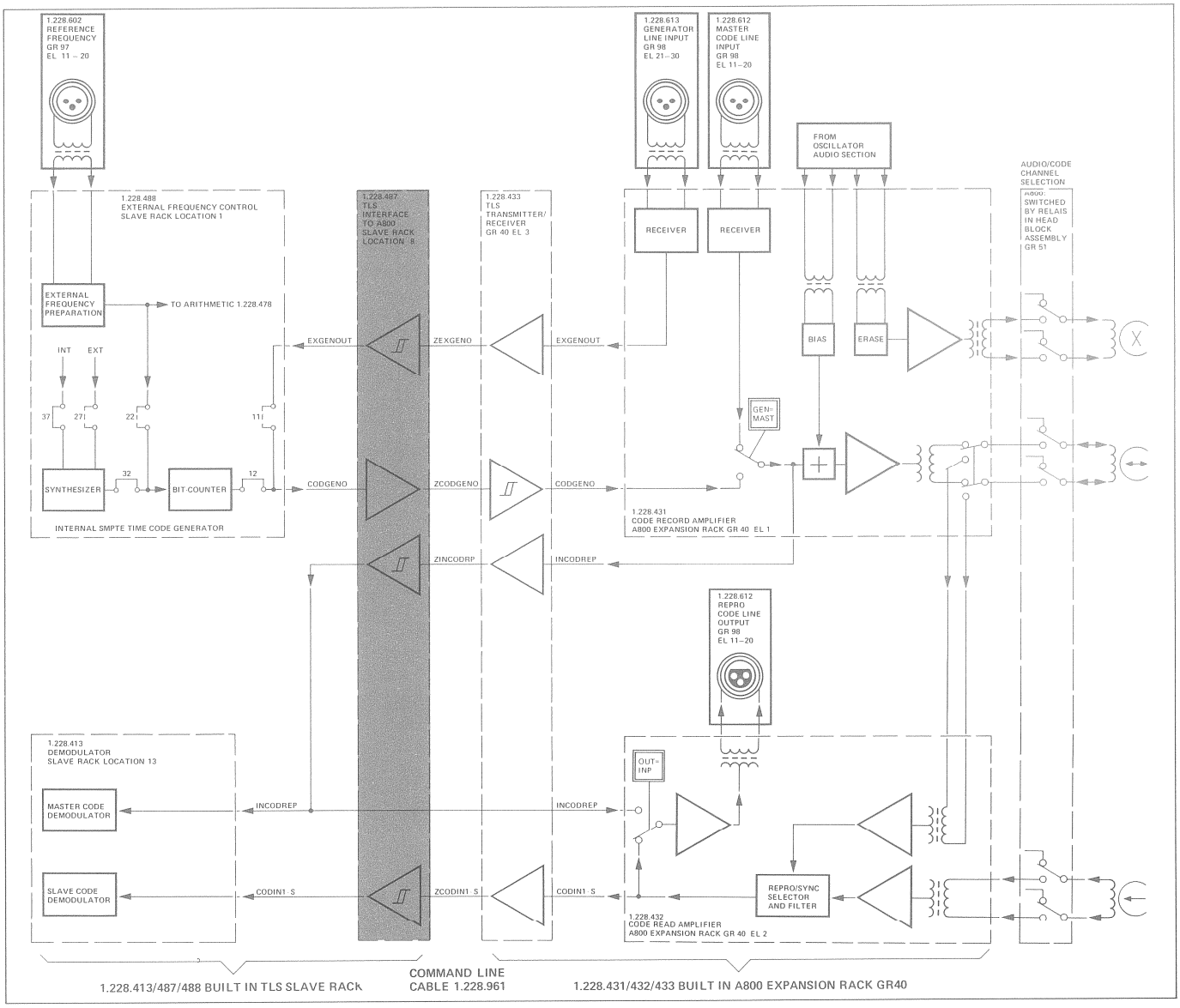

Fig. 3.8.2.2
Codesignalübersicht TLS-Slave A800

Fig. 3.8.2.2
Code signal overview TLS slave A800

TRM/REC

Dieses vom TLS kontrollierte Signal bestimmt im A800-Slave die Richtung des Datenflusses in der Leitung A800 DATA.
Die 5 x 8 Bit-Schieberegister auf Print 1.228.433 sind so aufgebaut, dass die vom A800-Processor-Databus parallel übernommenen Daten seriell ans TLS ausgelesen werden können.

Umgekehrt werden die Daten seriell vom TLS übernommen und parallel für den A800-Databus aufbereitet.

TRM/REC

This signal which is controlled by the TLS defines to the A800 slave the direction of the data flow in the A800 DATA command line.
The 5 x 8 bit shift registers on print 1.228.433 are designed in such a fashion that the data accepted from the A800 processor data bus is serially output to the TLS.

In the reverse direction, data is accepted serially from the TLS and prepared for parallel output to the A800 data bus.

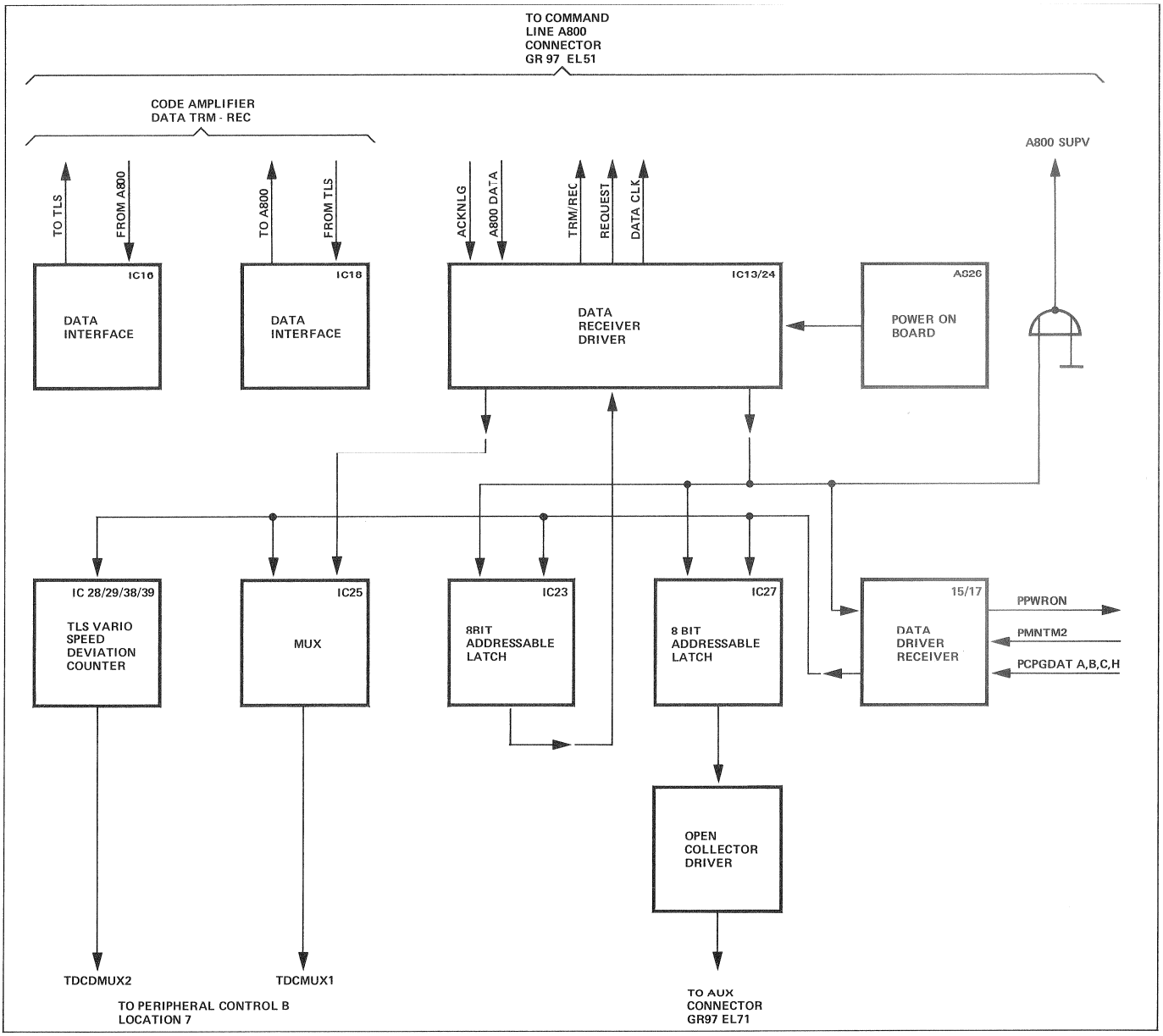

Fig. 3.8.2.3
Blockschaltbild

Fig. 3.8.2.3
Block diagram 1.228.487

A800 SUPV
Dieses Signal kommt vom TLS und meldet dem A800 Processor, dass es eingeschaltet und aktiv ist, d.h. eine Kommunikation erfolgen kann.

A800 SUPV
This signal originates from the TLS and signals to the A800 processor that it is powered on and active, i.e. that it is ready for communication.

3.8.2.2
Austausch von SMPTE-Zeitcode-Signalen über das Command Line-Kabel

Die Code-Aufnahme- und Wiedergabeverstärker sind im A800 Expansion Rack untergebracht, ebenfalls die Code-Ein- und Ausgangsschaltungen. Um grössere Kabellängen überbrücken zu können, werden sowohl Treiberschaltungen als auch Eingangs-Schmitt-Trigger eingesetzt.
Den Zusammenhang der SMPTE-Codequellen und -pfade zeigt Fig. 3.8.2.2.

3.8.2.2
Exchange of SMPTE time code signals via command line cable

The code record and code read amplifiers are housed in the A800 expansion rack. The same applies to the transmitter and receiver circuits. To accomodate longer cables, driver circuits as well as input Schmitt triggers are employed.
The correlation between SMPTE code sources and paths is illustrated in Fig. 3.8.2.2.

3.8.2.3
Zähler für die Varispeed-Abweichung

Dieser Zähler liefert die Werte über die Drehzahländerung des Capstan Motors der Slavemaschine an die Peri Control B. Er besteht aus IC 28, 29, 38 und 39.

3.8.2.3
Vario speed deviation counter

This counter supplies data to the peri control B regarding speed changes in the slave's capstan motor. It comprises ICs 28, 29, 38 and 39.

3.8.2.4
Steuerung, Erzeugung des Power On-Pulses

Die Peripheral Control-Daten werden über IC 15 und 17 empfangen und auf dem Print verteilt.
Der vom Assembly 26 erzeugte Power On-Puls hat die Aufgabe beim Einschalten des Netzes oder bei einem Netzunterbruch das TLS in einen definierten Ausgangszustand zurückzustellen.

3.8.2.4
Control and generation of the Power ON pulse

The peripheral control data is received via ICs 15 and 17 and distributed on the print. The Power ON pulse generated by assembly 26 is used to reset the TLS into a defined initial status when power is applied to the machine or after a power failure.

3.8.2.5
Treiber für den Auxiliary Stecker GR 97 EL 1

An diesen Stecker sind Signale für den Adress-Start von vier Zuspielmaschinen geführt.
Ein Teil davon stammt vom TLS-Interface. Der Zwischenspeicher IC 27 liefert einen Teil der auf dem Print erzeugten Signale über die Open Collector-Treiber IC 12 und 19 zum AUX-Stecker.

3.8.2.5
Driver for auxiliary plug GR 97 EL 1

The signals for the address start of four peripheral machines are connected to this plug.
Some of these originate from the TLS interface. The buffer IC 27 supplies some of the signals, generated on the print via open collector drivers IC 12 and 19, to the AUX plug.

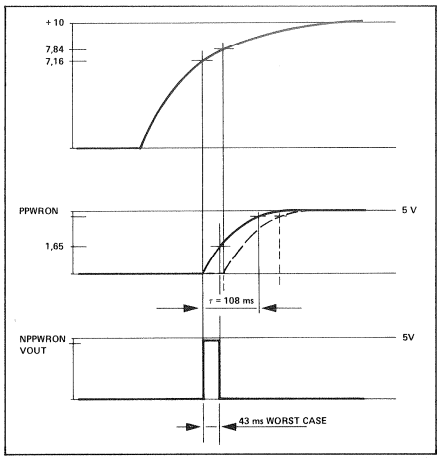

Fig. 3.8.2.4
Netzeinschalt-Puls NPPWRON
Power ON pulse NPPWRON

3.9
PARALLEL CONNECTED PROGRAMMER RECEIVER
1.228.409
Slave Rack Platz 9

Dieser Print verarbeitet die Tastenfeld- und Phasing-Informationen des Mainprogrammers und leitet diese an die Peripheral Control B weiter.
Er erzeugt auch die Signale für den Display im Mainprogrammer. Sie werden durch Treiberstufen über das Programmerkabel an die Receiverschaltungen geführt, welche die Digits ansteuern.

3.9
PARALLEL CONNECTED PROGRAMMER RECEIVER
1.228.409
Slave rack location 9

This print processes the keyboard and phasing information of the main programmer and transmits these to the peripheral control B.
It also generates signals for the display of the main programmer. Via programmer cable, they are connected to the receiver circuit through driver stages which select the digits.

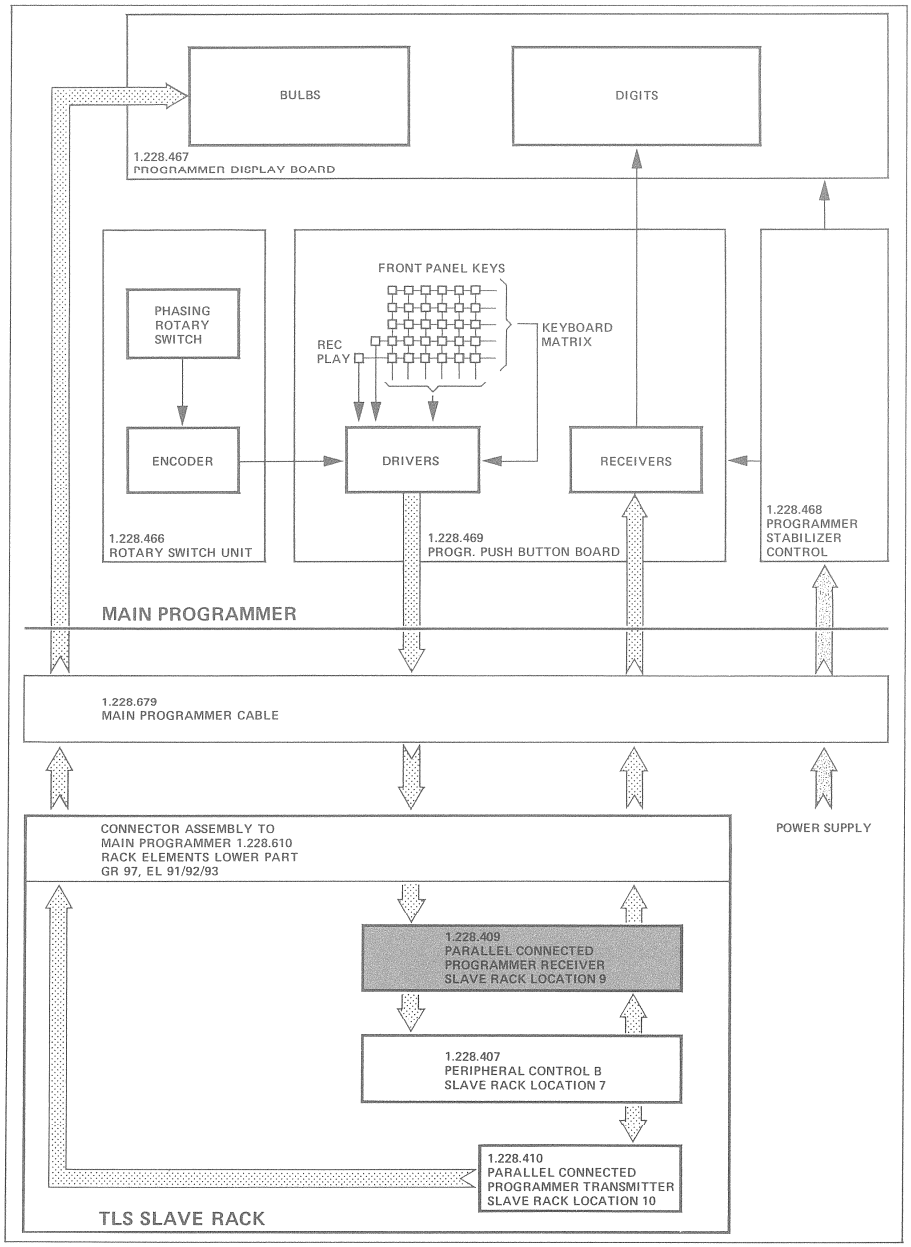

Fig. 3.9.1
Signalpfad zum/vom Mainprogrammer

Fig. 3.9.1
Signal path to/from main programmer

Der Receiverteil mit IC 27, 28, 29 und 36 ist für den Empfang der Tastenmatrix-Informationen zuständig.
Die Tasten REC und PLAY werden speziell behandelt, da sie als einzige gemeinsam gedrückt werden können. Der Encoder IC 37 und 38 übernimmt die Auswertung, welche Taste gedrückt wird.

The receiver section, comprising ICs 27, 28, 29 and 36, is responsible for the reception of the keyboard matrix data.
The REC and PLAY keys receive special treatment since they are the only ones which may be depressed simultaneously. The encoder IC 37 and 38 performs the evaluation to determine which key has been depressed.

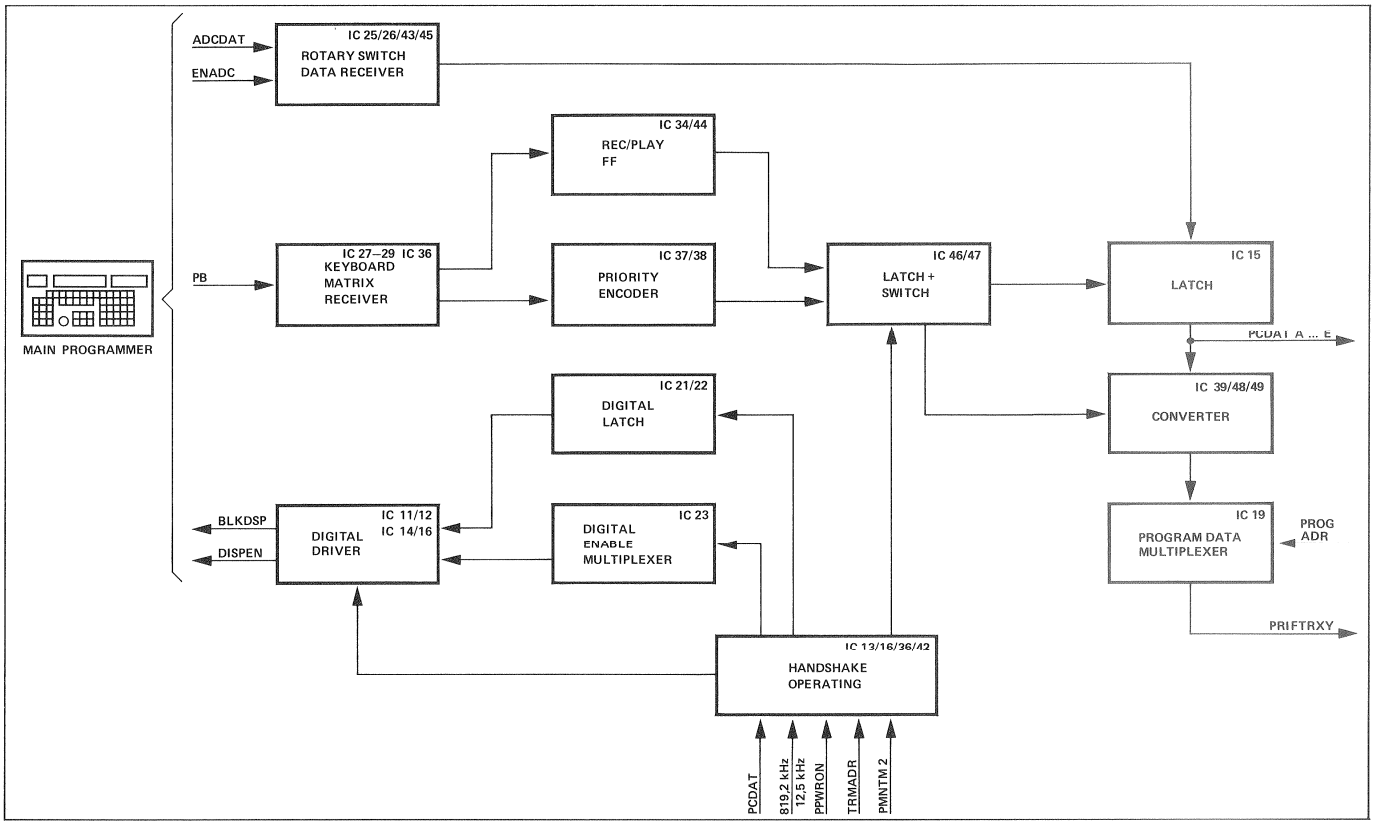

Fig. 3.9.2
Blockschaltbild

Fig. 3.9.2
Block diagram

Die Daten vom Phasing-Drehschalter werden von den IC's 25, 26, 43 und 45 empfangen.
Für den zeitlich richtigen Ablauf der Datenübermittlung ist die aus IC 13, 16, 36 und 46 gebildete Schaltung zuständig.
Sie steuert auch IC 21, 22 und 23, welche über Treiberschaltungen die Digits auf dem Mainprogrammer bedienen.
Die Tastenfeld-Informationen werden in IC 46 und 47 zwischengespeichert. Sie gelangen zusammen mit den Phasing-Drehschalterdaten zum IC 15. Hier werden die PC-Inputdaten A...D erzeugt.
Diese enthalten die Wertungs-Information des numerischen Tastenfeldes und des Phasing-Drehschalters.
Über IC 39, 48 und 49 und dem Program Data Multiplexer entsteht am Ausgang des IC 19 das Signal PRIFTRXY. Dieses vermittelt die XY-Koordinate der gedrückten Mainprogrammertaste.
Beide Signale werden von der Peripheral Control B auf Platz 7 weiterverarbeitet.

The data from the phasing rotary switch is received by ICs 25, 26, 43 and 45.
The correct data transmission timing is monitored by the circuit comprising ICs 13, 16, 36 and 46.
This circuit also controls ICs 21, 22 and 23 which control the digits on the main programmer via driver circuits.
The keyboard data is buffered in ICs 46 and 47. Together with the phasing rotary switch data, they are input to IC 15 in which the PC input data A...D is generated.
These contain the valuation data of the numeric keyboard and of the phasing rotary switch.
The signal PRIFTRXY is generated at the output of IC 19 via ICs 39, 48, 49 and the program data multiplexer. It supplies the XY coordinate of the main programmer key depressed.
Both signals are processed by the peripheral control B in location 7.

3.10
PARALLEL CONNECTED PROGRAMMER TRANSMITTER
1.228.410
Slave Rack Platz 10

Der Print hat die Aufgabe, die ankommenden Befehle von der Peripheral Control B (Slave Rack Platz 7) abzuspeichern und die entsprechenden Anzeigen auf dem Mainprogrammer ein- oder auszuschalten.

3.10
PARALLEL CONNECTED PROGRAMMER TRANSMITTER
1.228.410
Slave rack location 10

Print function: storing the commands arriving from the peripheral control B (slave rack location 7) and switching the corresponding displays on the main programmer on or off.

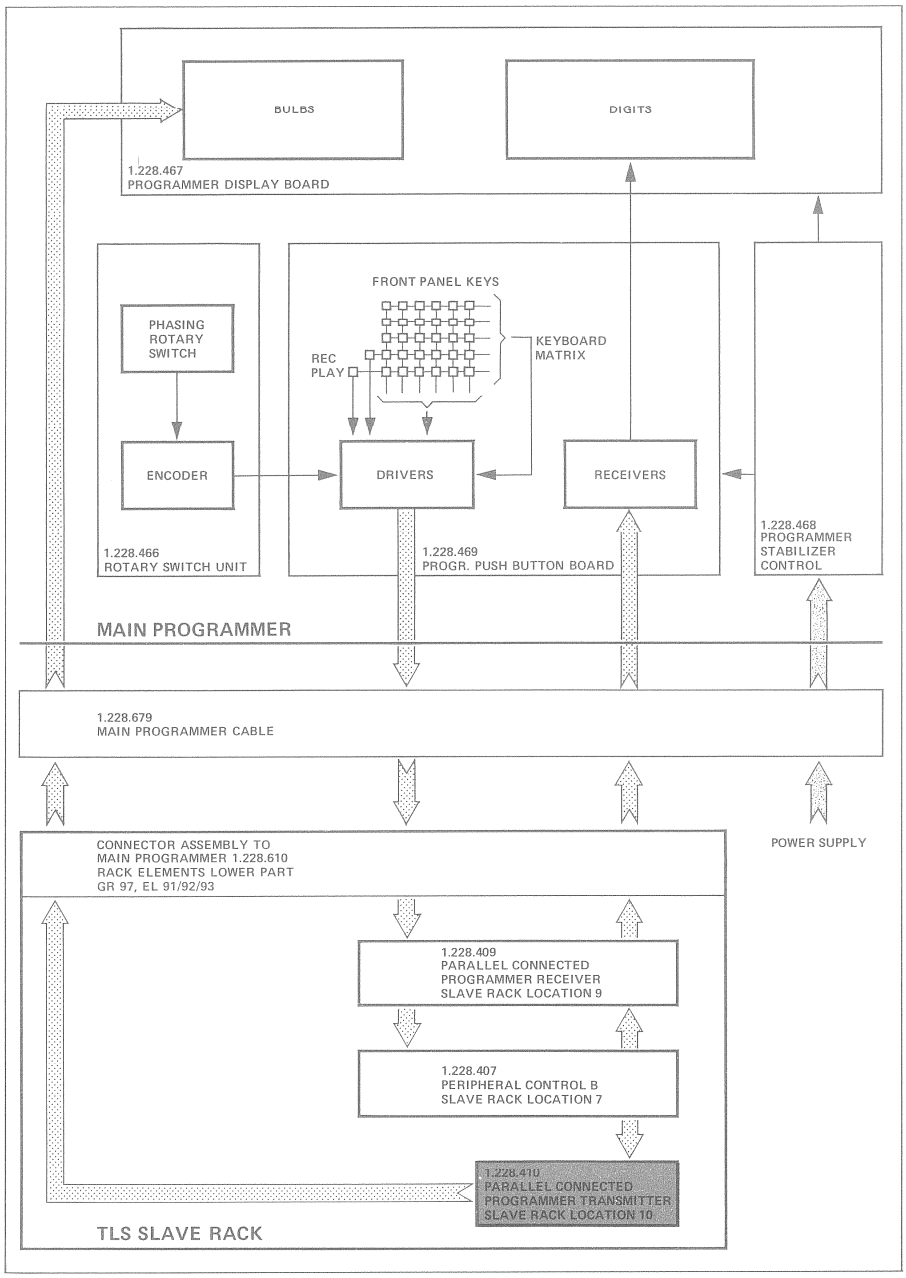

Fig. 3.10.1
Signalpfad zum Mainprogrammer

Fig. 3.10.1
Signal path to main programmer

Der Print besteht aus:
- Selector und Adressen-Empfänger
- Address Latch
- Open Collector-Treiber

PPWRON setzt die Speicher IC 31...38 beim Einschalten zurück.
Mit den Signalen TRMADR 0 bis 2 wird in den Address Latches IC 31...38 die benötigte Speicherstelle adressiert.
Mit den Signalen TRMADR 3 und 4 wird bestimmt, welche der beiden Gruppen (IC 31...34 oder IC 35...38) aktiv sein soll.
TRMADR 6, PMNTM 2 und PCDATRDY wirken als Printselector und sind für das Timing zuständig.
Über die Leitung NTRMDTA liefert die Peripheral Control B die Daten, welche bestimmen, ob die entsprechende Lampe brennt oder nicht, resp. die Lampenzustände geändert haben oder nicht.
Der Programmabschnitt, welcher diesen Print bedient, dauert ca. 300 µs.

The print comprises:
- Selector and address receiver
- Address latch
- Open collector driver

The PPWRON signal clears the memory IC 31...38 when power is turned on.
The required address location is stored in the address latches IC 31...38 with the signals TRMADR 0 through 2.
The signals TRMADR 3 and 4 define which of the two groups (IC 31...34 or IC 35...38) is to be activated.
TRMADR 6, PMNTM 2 and PCDATRDY act as print selector and are responsible for the timing.
Via the NTRMDTA line, the peripheral control B supplies data which defines whether the corresponding lamp is on or not, or whether the status of the lamps has changed. The program section servicing this print has an execution time of approx. 300 µs.

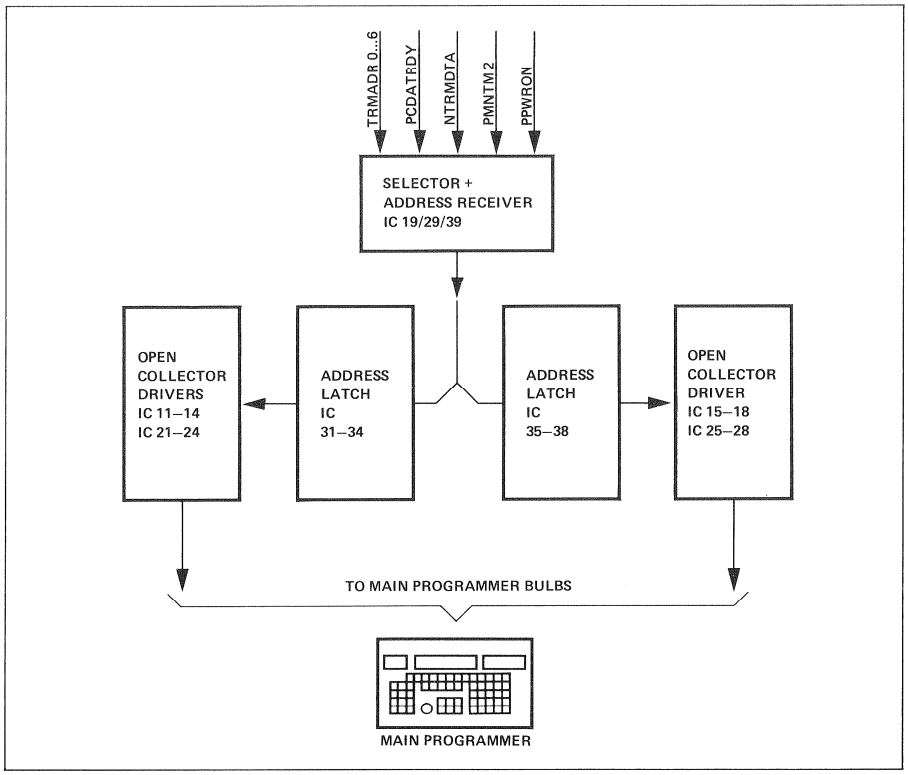

Fig. 3.10.2
Blockdiagramm

Fig. 3.10.2
Block diagram

3.11
CODE RECORD AMPLIFIER
1.228.411
Slave Rack Platz 11

Dieser Print vereint alle für das Aufsprechen des SMPTE-Codes benötigten Verstärker- und Steuerelemente.
Er gelangt nur bei A80-Slavemaschinen zur Anwendung.
Der Aufnahmeverstärker bei einem A800-Slave befindet sich im Expansionrack der A800 und ist im Kapitel 8 beschrieben.
Der Print besteht aus:
3.11.1 Codeempfänger und Umschaltteil
3.11.2 Flankenfilter
3.11.3 Steuerteil
3.11.4 Aufnahme- und Löschverstärker mit Softstart, Mischstufe
3.11.5 Speise-Spannungs-Aufbereitung

3.11
CODE RECORD AMPLIFIER
1.228.411
Slave rack location 11

This print combines all amplification and control elements necessary for recording the SMPTE code. It is only applicable to the A80 slave machine. In the A800 slave, the code record amplifier is housed in the A800 expansion rack and is described in section 8.

The print comprises:
3.11.1 Code receiver and selector section
3.11.2 Edge sensitivity filter
3.11.3 Control section
3.11.4 Record and erase amplifier with soft start. Mixer stage.
3.11.5 Supply voltage preparation

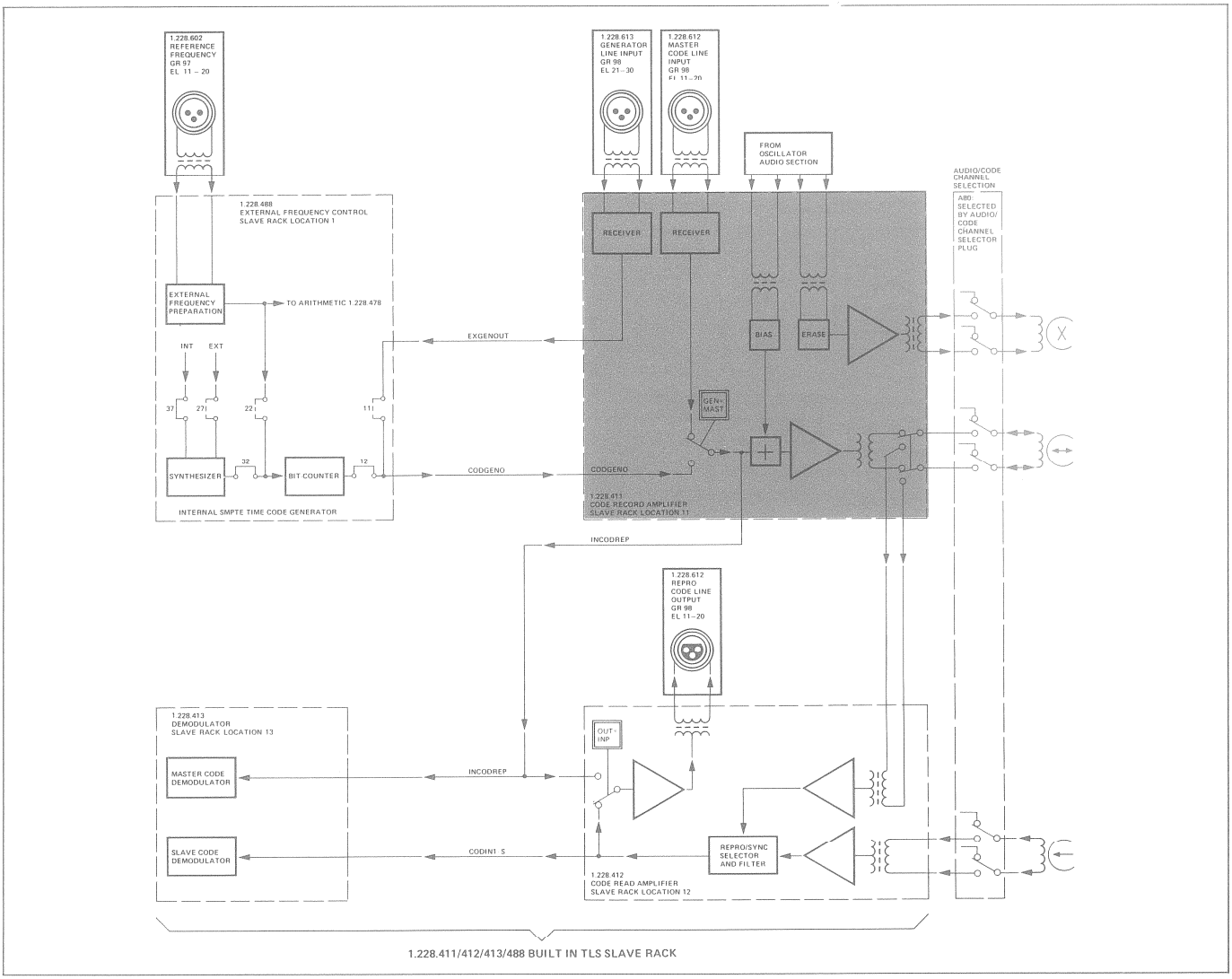

Fig. 3.11.1
Übersichts-Blockschaltbild

Fig. 3.11.1
General block diagram

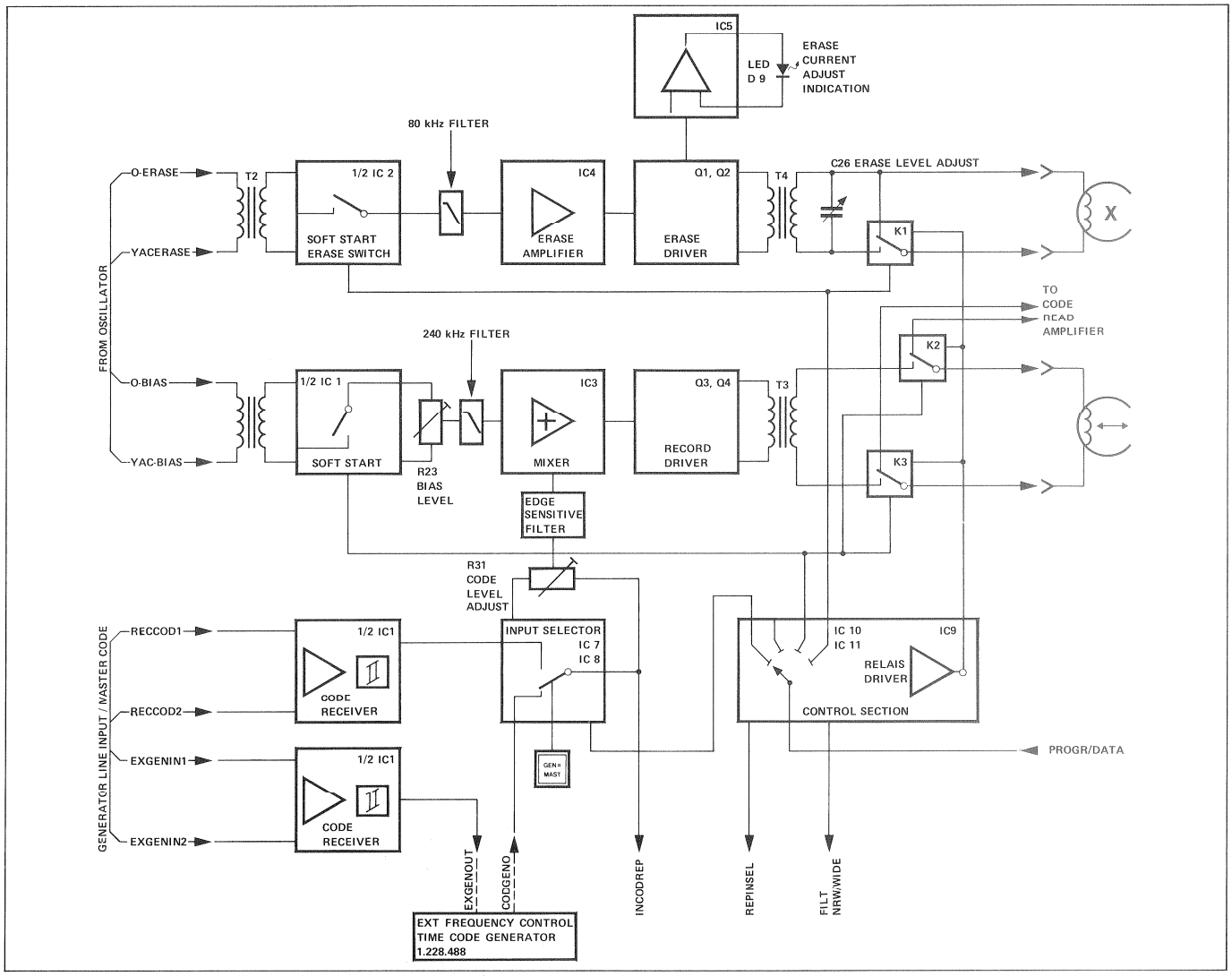

Fig. 3.11.2
Print-Blockschaltbild

Fig. 3.11.2
PCB Block diagram

3.11.1
Codeempfänger und Umschaltteil

Der Receiverteil besteht aus dem Dual-Op-Amp MC 1458. Aus Gründen der Störsicherheit ist eine Seite des Verstärkers auf 1,3 V angehoben. Deshalb muss der minimale Signalpegel nach dem Eingangstrafo > 1,3 V sein.
Der Anschlussstecker mit Eingangstrafo ist auf der zugehörigen Rack-Rückwand 1.228.612 zu finden.
Der Umschaltteil, gesteuert von IC 10 und 11, besteht aus den IC's 7 und 8.
Ist Pin 10 von IC 10 hoch, wird das Signal vom RECCOD Pfad durchgeschaltet. Ist er aber tief, wird CODGENO freigegeben. IC 10 steuert ebenfalls die Filterumschaltung auf dem Code Read Amplifier 1.228.412 (Platz 12).
Mit R 31 wird der Codepegel eingestellt. Bezogen auf 0 dBm VU kann ein Pegelbereich von 0 dBm bis −20 dBm überstrichen werden.

3.11.1
Code receiver and selector section

The receiver consists of a Dual-Op-Amp MC 1458. For reliability reasons, one side of the amplifier is raised to 1.3 V. For this reason, the minimum signal level after the input transformer must be > 1.3 V.
The connecting plug with the input transformer is located at the associated rack back panel 1.228.612.
The selector section, driven by ICs 10 and 11, comprises ICs 7 and 8.
If pin 10 of IC 10 is high, the signal from the RECCOD path is switched through. However, when it is low, CODGENO is enabled. IC 10 also controls the filter switching at the code read amplifier 1.228.412 (location 12).
The code level is set by R 31. Relative to 0 dBm VU, a level ranging from 0 dBm to −20 dBm can be swept.

3.11.2
Flankenfilter

Das nachgeschaltete Flankenfilter gibt dem Code die vorgeschriebene Form.

3.11.2
Edge sensitivity filter

The edge sensitivity filter, serially connected to the output, gives the code the required shape.

3.11.3
Steuerteil

Der Steuerteil besteht aus den IC's 10 und 11, wobei IC 10 ein adressierbarer Zwischenspeicher ist
Das Programm hat die Möglichkeit, über IC 11 den Status des Aufnahmeverstärkers abzufragen.

3.11.3
Control section

The control section comprises ICs 10 and 11. IC 10 constitutes an addressable buffer.
The program is capable of interrogating the status of the record amplifier via IC 11.

3.11.4
Aufnahme und Löschverstärker mit Softstart, Mischstufe

Die identisch aufgebaute Aufnahme- und Löschschaltung besteht aus der Softstartschaltung mit IC 2, einem Bandpass-Filter sowie Vor- und Endstufe.

Ausgekoppelt wird das Signal über Trafos, die gleichzeitig die Anpassung an die Köpfe übernehmen. Aus Sicherheitsgründen werden die beiden Signale, Löschstrom und Aufnahmestrom, zusätzlich noch von Relais geschaltet, die ebenfalls vom Programm bedient werden.
Die Mischung des Codeanteiles mit der Vormagnetisierung (240 kHz) geschieht an IC 3.
Mit Potentiometer R 23 wird der Bias Level eingestellt.

3.11.4
Record and erase amplifier with softstart, Mixer stage

The record and erase amplifiers, which feature an identical design, comprise the soft start circuit with IC 2, a band-pass filter, as well as a preamp and a power stage.

The signal is coupled out via transformers which also perform the adaptation to the heads. For safety reasons, the erase and record currents are switched by relays under control of the program.
Mixing of the code content with the bias (240 kHz) is performed by IC 3.
The bias level is adjusted with potentiometer R 23.

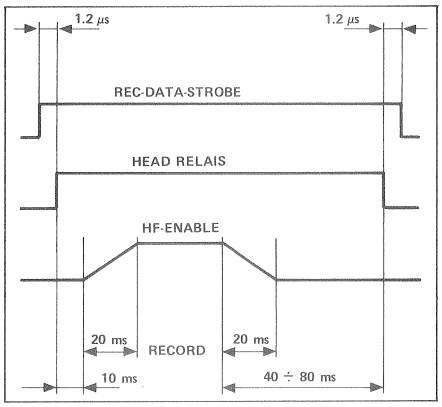

Fig. 3.11.3
Impulsdiagramm des Flankenfilters
Impulse diagram for edge sensitivity filter

3.11.5
Speise-Spannungs-Aufbereitung

Der Print wird mit +24V/+12V/−5V gespiesen.
Die zusätzlich benötigten +5V werden mit dem Stabilisator IC 6 erzeugt.

Die +1,3V-Referenzspannung wird an einem Spannungsteiler abgegriffen. Zur Störspitzenunterdrückung sind die Speisespannungseingänge mit Ferritperlen versehen.

3.11.5
Supply voltage preparation

The print is supplied with +24 V/+12 V/−5 V.
The +5 V supply is generated with stabilizer IC 6.

The +1.3 V reference voltage is picked off from a voltage divider. To suppress pulse spikes, the supply voltage inputs are equipped with ferrite beads.

3.12
CODE READ AMPLIFIER
1.228.412
Slave Rack Platz 12

Dieser Print verfügt über Verstärker mit umschaltbaren Bandbreiten zum Lesen des Codesignals der Repro- und Sync-Köpfe bei Play oder Wickelgeschwindigkeiten.
Über eine Wahlschaltung wird der gewünschte Code für den "Repro Code Line Output" verstärkt und durch eine Indikatorschaltung angezeigt.
Der Verstärker wird nur bei den A80-Varianten im Slave-Rack eingebaut.
Bei der A800 ist er im Expansionrack eingebaut.

3.12
CODE READ AMPLIFIER
1.228.412
Slave rack location 12

This print features amplifiers with switchable band widths for reading the code signals of the Repro and Sync heads at play or winding speeds.
Via selector, the code for the "Repro Code Line Output" is amplified and indicated by an indicator circuit.
The amplifier is only built into the slave rack of the A80 versions.
For the A800, it is housed in the expansion rack.

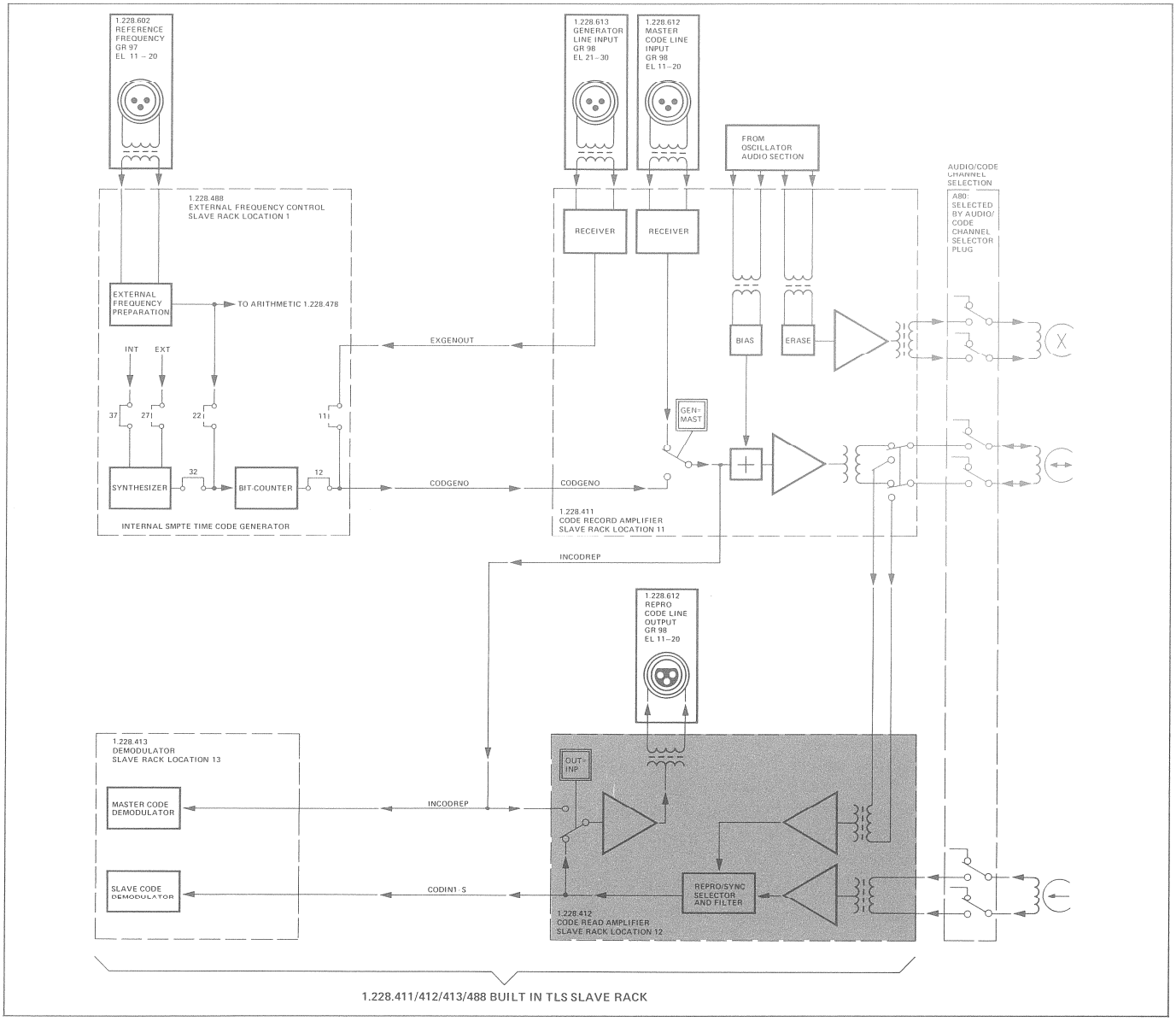

Fig. 3.12.1
Übersichts-Blockschaltbild

Fig. 3.12.1
General block diagram

Er besteht aus:
3.12.1 Repro- und Sync-Kopfverstärker
3.12.2 Filter und Komparatorteil
3.12.3 Codeselektor mit Indikatorschaltung
3.12.4 Ausgangsverstärker
3.12.5 Speisespannungsaufbereitung

It comprises:
3.12.1 Repro and Sync head amplifiers
3.12.2 Filter and comparator section
3.12.3 Code selector with indicator circuit
3.12.4 Output amplifier
3.12.5 Supply voltage preparation

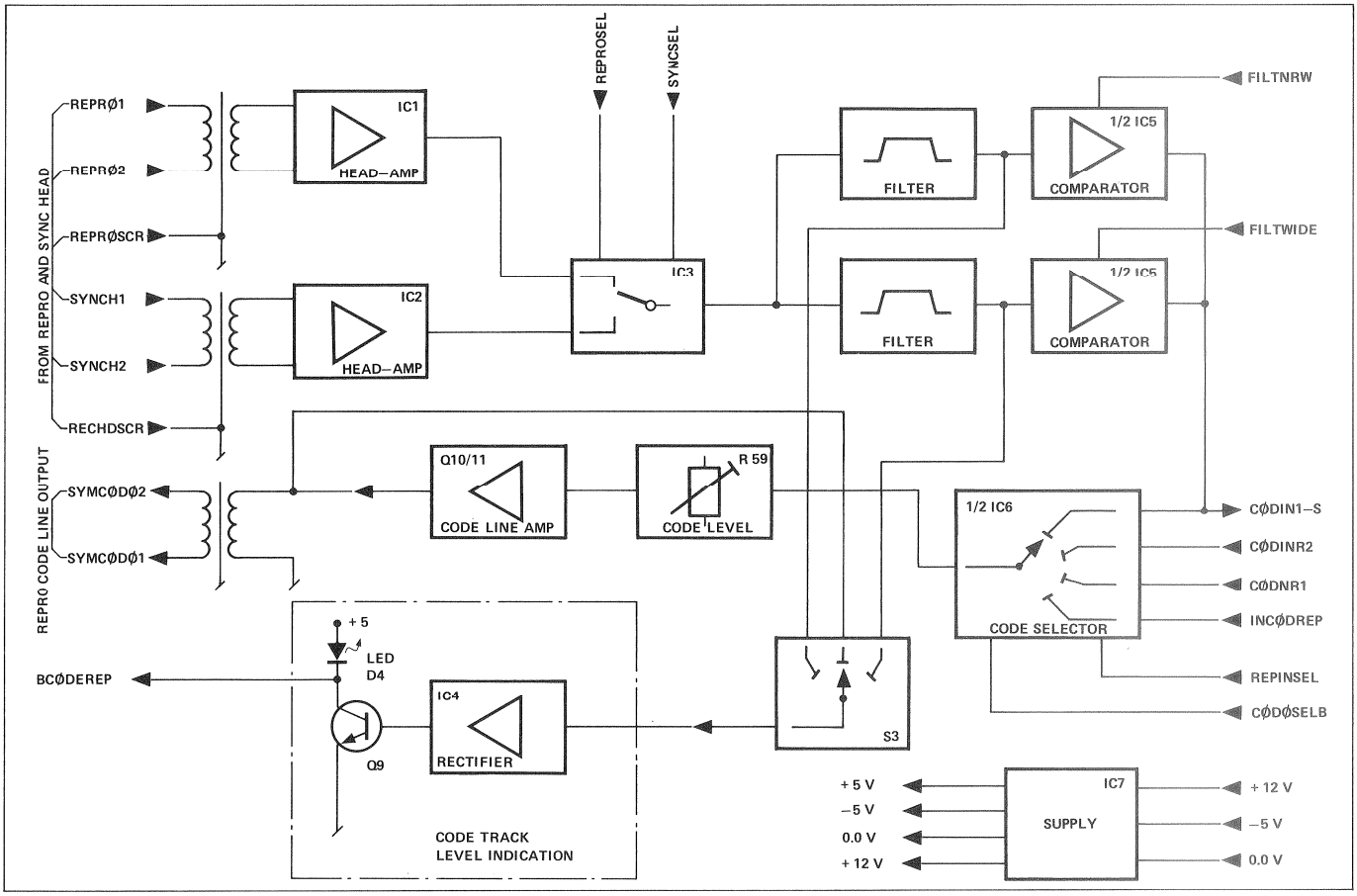

Fig. 3.12.2
Print-Blockschaltbild

Fig. 3.12.2
PCB block diagram

3.12.1
Repro- und Sync-Kopfverstärker

Die Impedanzen der beiden Repro- und Sync-Köpfe werden über die Trafos TR 1 und TR 2 angepasst und an die Breitbandverstärker gekoppelt. Mit S 1 und S 2 können die Leitungen der Kopfabschirmungen geerdet werden.
Um dem Rauschen der Operationsverstärker IC 1 und IC 2 zu begegnen, wird das Signal erst nach der Vorstufe, durch die rauscharmen Transistoren Q 1/Q 2 oder Q 5/Q 6 gebildet, an die Eingänge geführt.

3.12.1
Repro and Sync head amplifiers

The impedances of the two Repro and Sync amplifiers are matched via transformers TR 1 and TR 2 and coupled to the broad-band amplifiers. The lines of the head shielding can be grounded with S 1 and S 2.
To cope with the noise of the Op Amps IC 1 and IC 2, the signal, formed by the low-noise transistors Q 1/Q 2 or Q 5/Q 6, is connected to the inputs after the preliminary stage.

3.12.2
Filter und Komparatorteil

Der FET-Schalter IC 3 ist für die Wahl des Repro- oder Sync-Signals zuständig.
Das angewählte Signal wird über ein Schmal- oder

3.12.2
Filter and comparator section

The FET switch IC 3 is responsible for selecting the Repro or Sync signal.
The selected signal is connected to a comparator

Breitbandfilter zu je einem Komparator 1/2 IC 5 geführt. Diese werden abhängig von der Bandgeschwindigkeit durch die beiden Signale FILTNRW oder FILTWIDE durchgeschaltet und vom Demodulator 1.228.413 weiterverarbeitet.

1/2 IC 5 via a narrow- or broad-band filter. These are switched through by the two signals FILTNRW or FILTWIDE, depending on the tape speed and are further processed by the demodulator 1.228.413.

3.12.3 Codeselektor mit Indikatorschaltung

Mit dem Codeselektor IC 6 werden die möglichen Codesignale ausgewählt und durch den Code Line Amplifier verstärkt.
Dieses und die beiden Komparatorsignale können durch den Schalter S 3 angewählt und durch die Code-Indikatorschaltung IC 4/Q9/LED 4 ausgewertet werden.

Ist Signal vorhanden, leuchtet die Diode D 4.

3.12.3 Code selector with indicator circuit

The possible code signals are selected by the code selector IC 6 and amplified by the code line amplifier.
Together with the two comparator signals, they can be selected by switch S 3 and analyzed by the code indicator circuit IC 4/Q 9/LED 4.

When a signal is available, LED 4 lights up.

3.12.4 Ausgangsverstärker

Potentiometer R 59 bestimmt den Ausgangspegel des Code Line Amplifier, welcher über den Symmetriertransformator TR 3 zum "Repro Code Line Output" geführt wird.

3.12.4 Output amplifier

The output of the code line amplifier, whose level is determined by potentiometer R 59, is connected to the "Repro Code Line Output" via symmetry transformer TR 3.

3.12.5 Speisespannungsaufbereitung

Der Print wird mit +12 V und −5 V gespiesen. Die zusätzlich benötigten +5 V werden mit dem Stabilisator IC 7 erzeugt.
Zur Störspitzenunterdrückung sind die Speisespannungseingänge mit Ferritperlen versehen.

3.12.5 Supply voltage preparation

This print is supplied with +12 V and −5 V. The +5 V, also required for this print, are generated via stabilizer IC 7.
To suppress pulse spikes, the supply voltage inputs are equipped with ferrite beads.

3.13 DEMODULATOR 1.228.413

Slave Rack Platz 13

Dieser Print enthält die kompletten Schaltungen zur Demodulation des SMPTE-80 Bit/Frame-Codes, die dazugehörende Fangschaltung sowie die Erkennung und Auswertung der Coderichtung und des Synchronisationswortes.

Er wertet das Codesignal des Masters und des Slave durch zwei verschiedene, schaltungstechnisch jedoch identische Kreise aus.
In der Folge wird nur die Schaltung für das Master-Codesignal in folgenden Abschnitten beschrieben:

3.13.1 Eingangssignale
3.13.2 Flanken- und Phasendetektor
3.13.3 Erzeugung des Vierphasentaktes
3.13.4 Datendemodulator
3.13.5 Auswertung des Synchronisationswortes und der Drehrichtung
3.13.6 Fangschaltung

3.13 DEMODULATOR 1.228.413

Slave rack location 13

This print contains the complete circuits for demodulating the SMPTE 80bit/frame-code, the associated capture circuit as well as for recognition and evaluation of the code direction and the sync word.

It evaluates the code signal of the master and the slave by two different circuits of identical function.
In the following sections, only the code signal of the master will be described:

3.13.1 Input signals
3.13.2 Edge and phase detector
3.13.3 Generation of 4-phase clock
3.13.4 Data demodulator
3.13.5 Evaluation of the sync word and the rotation direction
3.13.6 Capture circuit

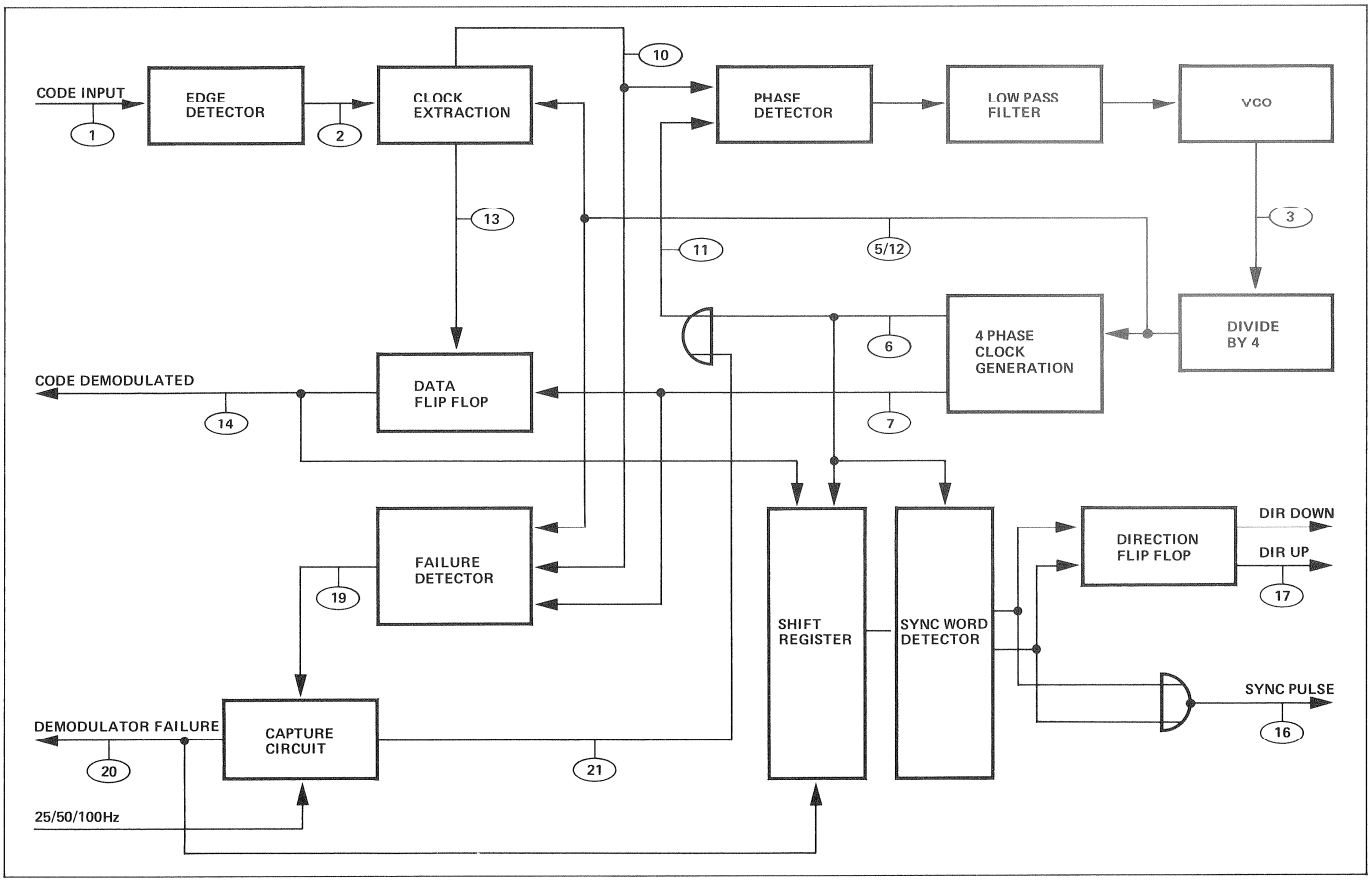

Fig. 3.13.1
Blockdiagramm Masterteil

Fig. 3.13.1
Block diagram, master section

3.13.1
Eingangssignale

Die verschiedenen Quellen der möglichen Code-Eingangssignale sind aus den Fig. 3.13.2 und 3.13.3 ersichtlich.

3.13.1
Input signals

The various sources of the possible code signals can be seen from Fig. 3.13.2 and 3.13.3.

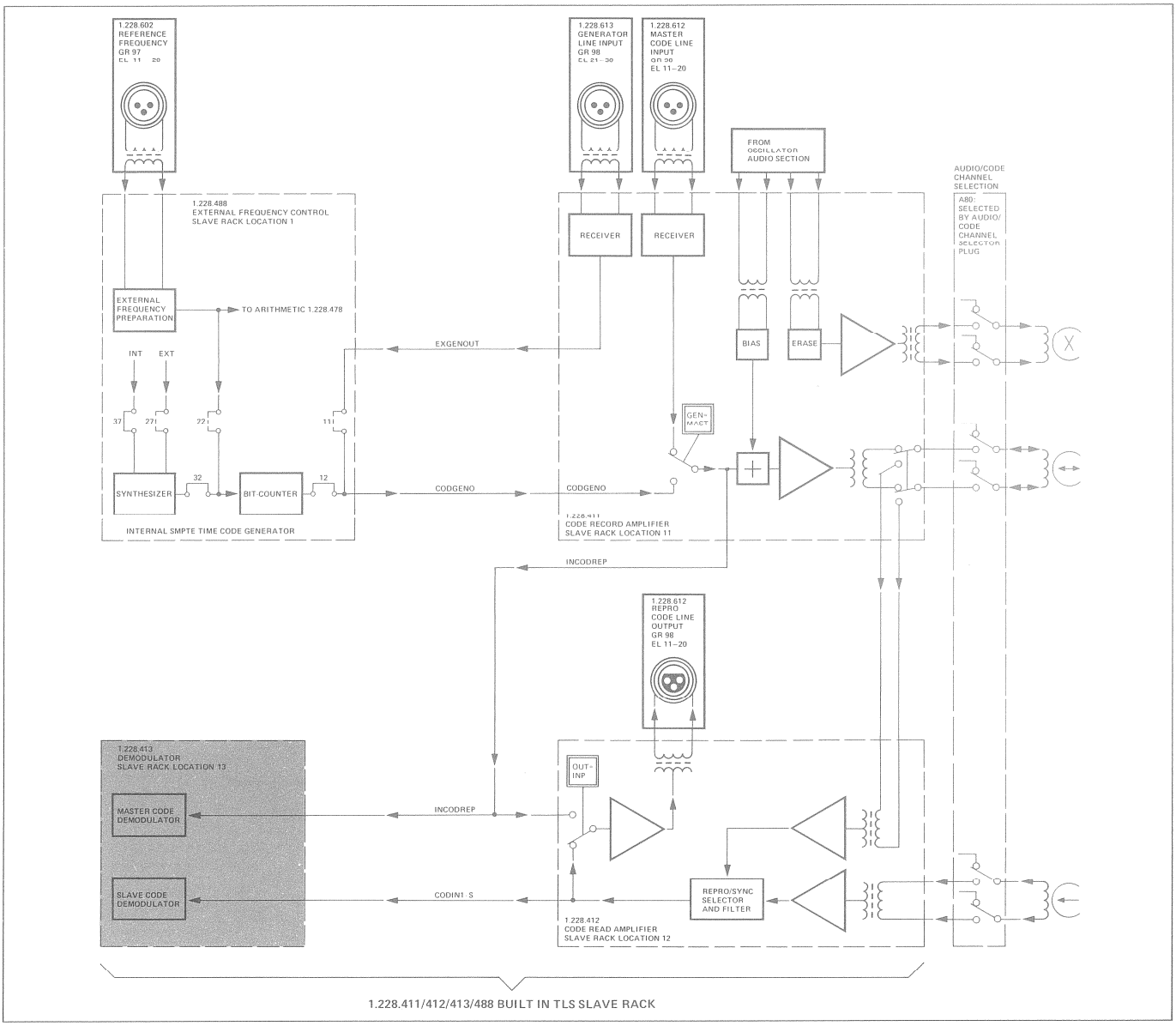

Fig. 3.13.2
Übersichts-Blockschaltbild TLS/A80

Fig. 3.13.2
General block diagram TLS/A80

3.13.2
Flanken- und Phasendetektor

Die beiden monostabilen Multivibratoren IC 13.1 und 13.2 erzeugen aus jeder Flanke des Codesignals einen Impuls.
Der eine Multivibrator ist durch die positive, der andere durch die negative Flanke getriggert. Die Ausgänge werden dann über IC 15.1 zusammengeführt.

3.13.2
Edge and phase detector

The two monostable multivibrators IC 13.1 and 13.2 generate a pulse from each edge of the code signal.
One multivibrator is triggered by the positive edge, while the second one is triggered by the negative edge. The outputs are subsequently combined via IC 15.1.

Über IC 34.1 werden die dem Codeinhalt "1" entsprechenden Impulse eliminiert und dem Phasendetektor IC 33 zugeführt. Dieser wiederum steuert den nachgeschalteten Oszillator, der mit vierfacher Bitfrequenz des Codesignales arbeitet.

The impulses corresponding to the code content "1" are eliminated via IC 34.1 and input to the phase detector IC 33 which in turn controls the oscillator, serially connected to the output, which operates with the four-fold bit frequency of the code signal.

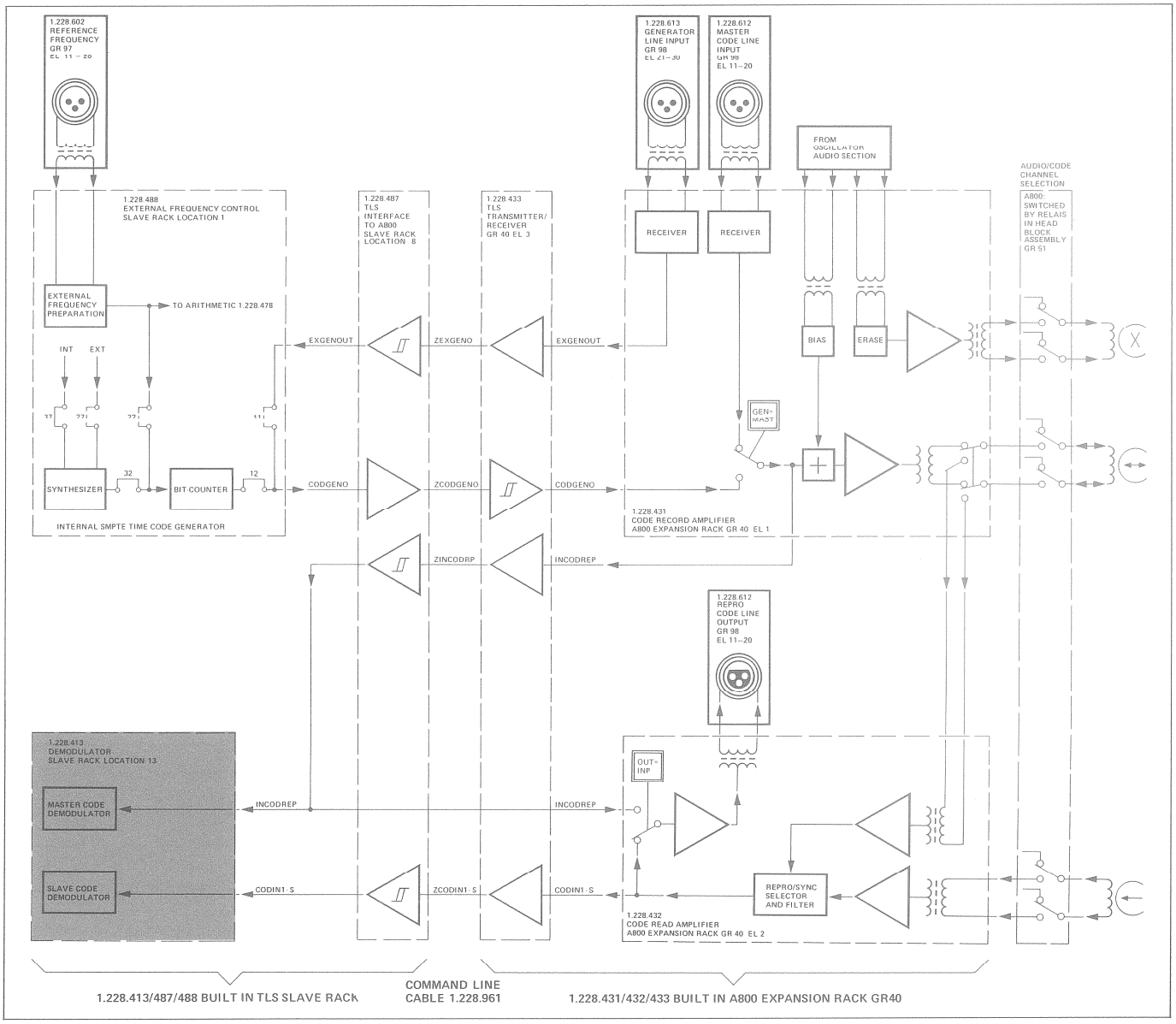

Fig. 3.13.3
Übersichts-Blockschaltbild TLS/A800

Fig. 3.13.3
General block diagram TLS/A800

3.13.3 Erzeugung des Vierphasentaktes

Flip-Flop IC 35.2 und 35.1 teilen die Oszillatorfrequenz durch vier.
Gesteuert durch die Oszillatorfrequenz erzeugt der Decoder/Demultiplexer IC 25 eine Vierphasentakt-Sequenz.
Phase 1 wird an Eingang RI des Phasendetektors via IC 34.2 angelegt und schliesst somit den Kreis des PLL(Phase Locked Loop).

3.13.3 Generation of the 4-phase clock

Flip-flops IC 35.2 and 35.1 divide the oscillator frequency by 4.
Driven by the oscillator frequency, the decoder/demultiplexer IC 25 generates a 4-phase clock sequence.
Phase 1 is applied to the input RI of the phase detector via IC 34.2, thereby closing the circuit of the PLL (Phase Locked Loop).

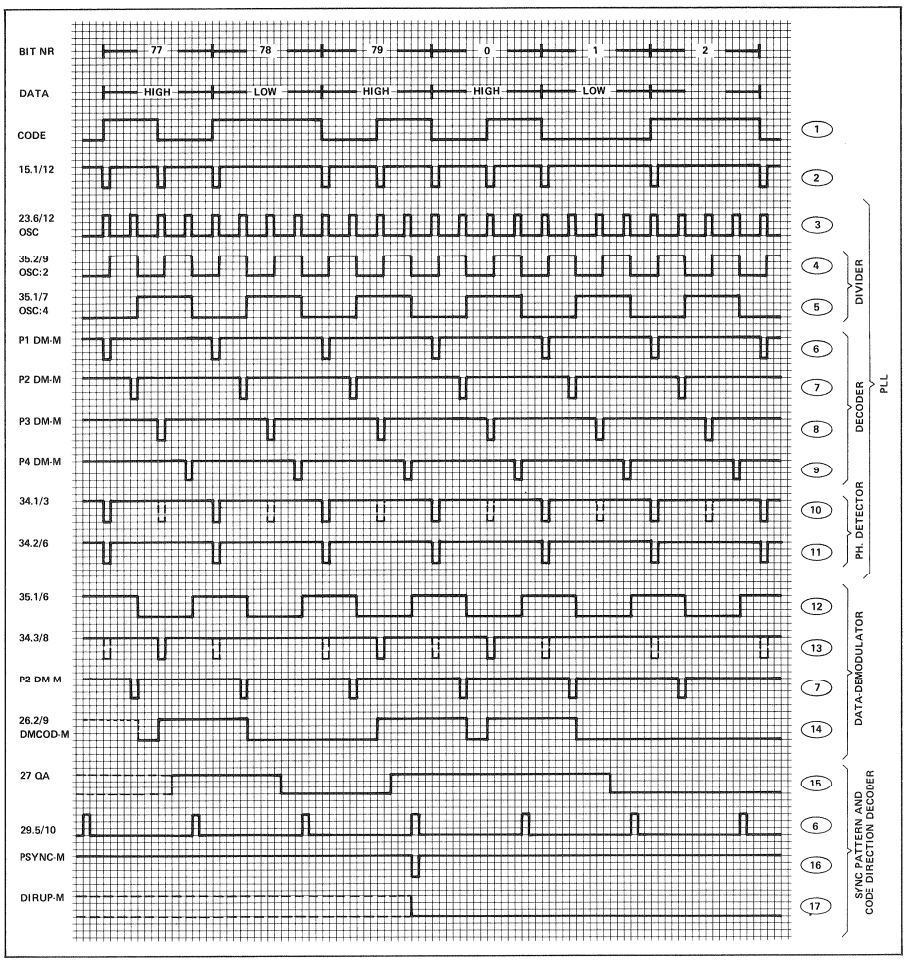

Fig. 3.13.4
Synchronisationsimpuls PSYNC–M

Fig. 3.13.4
Synchronizing pulse PSYNC-M

3.13.4
Datendemodulator

Aus dem Sequenzdiagramm Fig. 3.13.5 ist ersichtlich, wie die Grundfrequenz des Codes und der eigentliche Codeinhalt separiert werden.

Durch die Oderverknüpfung IC 34.1 wird aus A + B auf dem Sequenzdiagramm die Impulskette C. Nur wenn beide A + B null sind, erhalten wir null und somit die Grundfrequenz des Codes.
Zu beachten ist ferner, wie die Phasenlage von FOSC/4 mit der negativen Triggerung der Flip-Flops entstanden ist.
Genau gleich wie die Grundfrequenz erhalten wir nun die Codeinformation ebenfalls mit einer Oderverknüpfung.
Dazu benötigen wir das inverse Signal von FOSC/4. Somit erhalten wir aus A und dem inversen Signal von B die Codeinformation D.
Mit dieser Codeinformation und dem Phasentakt 2 (P2DM-M) wird mit Flip-Flop 26.2 das demodulierte Codesignal gebildet.
Dieses wird an die Schaltung zur Synchronisationsauswertung und an den Stecker 17 A geführt.

3.13.4
Data demodulator

The sequence diagram Fig. 3.13.5 shows how the fundamental frequency of the code and the actual code content are separated.

Through the OR operation of IC 34.1, A + B in the sequence diagram result in the pulse chain C. Only if both A + B are zero, will a zero be obtained and with it the fundamental frequency of the code.
Please observe how the phase position of FOSC/4 was established by the negative triggering of the flip-flops.
The code information is extracted with an OR operation in the same manner described for the fundamental frequency.
To accomplish this, we require the inverse signal of FOSC/4. Thus we obtain the code information D from A and the inverse signal of B.
The demodulated code signal is formed from this code information and the phase clock 2 (P2DM-M) by flip-flop 26.2.
It is connected to the synchronization evaluation circuit and to plug 17 A.

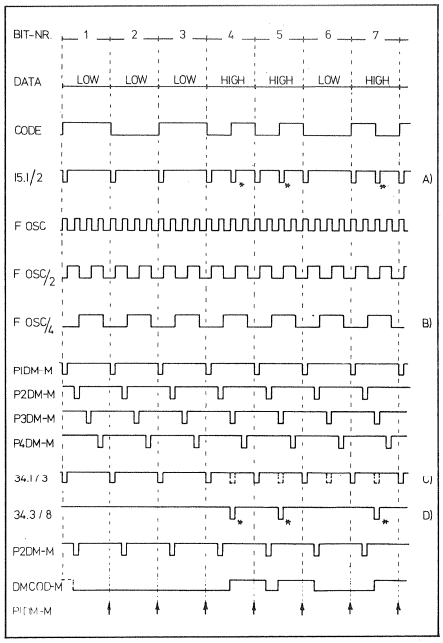

Fig. 3.13.5

3.13.5
Auswertung des Synchronisationswortes und der Drehrichtung

Das Synchronisationswort belegt im Code die Bit Plätze 64...79. Es enthält die Drehrichtungsinformation und dient zur Erzeugung des Sync-Impulses. Von den 16 Bits werden 14, unabhängig von der Drehrichtung, immer gleich gelesen.
Dreht das Band vorwärts, wird zuerst tief gelesen (Bit 64).
Um das Synchronisationswort zu erkennen, werden zwei 8 Bit-Schieberegister hintereinander geschaltet und mit dem decodierten Signal angesteuert.

3.13.5
Evaluation of the sync word and the rotation direction

In the code, the sync word occupies bit locations 64...79. It contains the rotation direction data and is used for generating the sync pulses. Of these 16 bits, 14 are always read in the same manner, regardless of the rotation direction.
When the tape moves in the forward direction, low is read first (64).
To recognize the sync word, two 8-bit shift registers are serially connected and selected by the decoded signal.

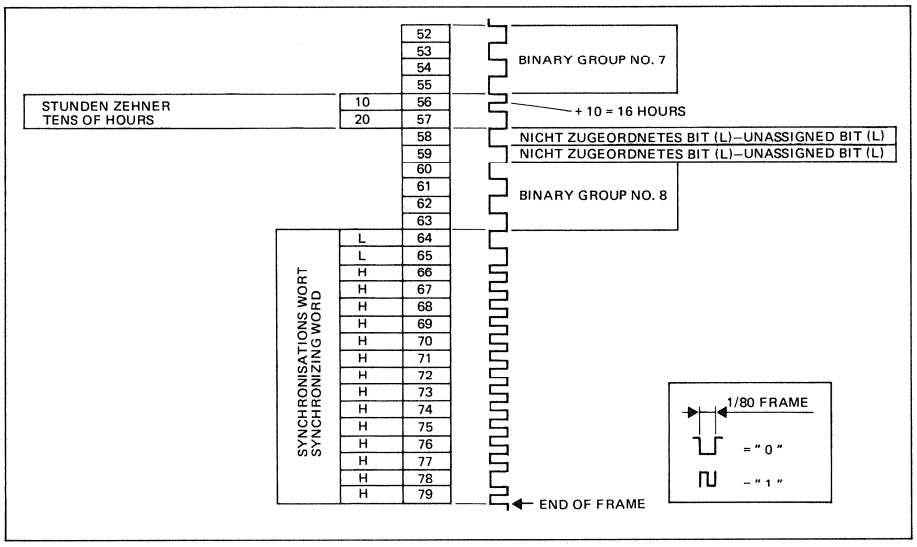

Fig. 3.13.6
SMPTE-Code, Synchronisationswort

Fig. 3.13.6
SMPTE code, synchronizing word

Dieses wird im Takt des Signals P4DM-M eingelesen und weitergeschoben.
Sobald an den beiden IC's 28 und 38 alle Eingänge auf hoch liegen, ist ein Synchronisationswort bis auf die Drehrichtung eingelesen.
Der Ausgang 38.8 schaltet genau dann auf tief, wenn das Signal am Eingang 12 auf hoch wechselt.
Das ist beim Übergang von Bit 79 auf Bit 0 der Fall.
Es wird mit IC 17.1 der Impuls PSYNC-M erzeugt. Gleichzeitig wird abhängig von den Ausgängen 27.3 und 37.13 das Drehrichtungs-Flip-Flop gesetzt.

The register is read and shifted with the clock frequency of the P4DM-M signal.
As soon as all inputs of ICs 28 and 38 are high, a synchronizing word has been read in except for the rotation direction.
The output 38.8 goes low at the precise moment when the signal at input 12 changes to high. This occurs when stepping from bit 79 to bit 0.
The PSYNC-M pulse is generated by IC 17.1. Depending on the outputs 27.3 and 37.13, the rotation direction flip-flop is simultaneously set.

3.13.6
Fangschaltung

Die fehlenden Informationen (siehe Impulsdiagramm der Fangschaltung, Fig. 3.13.6, Signalverlauf 10) ist unterbrochen eingezeichnet. Hervorgerufen durch Störungen (z.B. Band-Dropouts) würden diese im PLL-Kreis Unstabilitäten hervorrufen.
Diese Fehlpulse werden mit der Schaltung IC

3.13.6
Capture circuit

The missing data (see impulse diagram of the capture circuit, Fig. 3.13.7, signal flow 10) is shown with dashes. It would cause instability in the PLL circuit due to malfunctions (e.g. tape drop-outs).
The error pulses are evaluated by the circuit IC 36.1, 36.2, 24.4 and 34.4. They appear as preset

36.1, 36.2, 24.4 und 34.4 ausgewertet. Sie erscheinen als Preset-Pulse (19) am Ausgang 34.4/11. Das FF 26.1 bleibt jeweils bis zur Flanke des 25 Hz-Taktimpulses gesetzt.
Das Ausgangssignal DMFAIL-M (20) wird als Clearbefehl ans 2 x 8 Bit Schieberegister gegeben. Signal DMFAIL-M ist auch an den Stecker 7 A und an IC 15.2 geführt, welche der Verknüpfung zum Korrektursignal (21) dient. Ist dessen Ausgang hoch, wird der Rückführungszweig des PLL mit IC 34.2 unterbrochen und der Eingang 33.1 blockiert.

pulses (19) at the output 34.4./11. FF 26.1 remains set up to the edge of the 25 Hz clock pulse.
The output signal DMFAIL-M (20) is transmitted to the 2 x 8 bit shift register in the form of a clear command. Signal DMFAIL-M is also connected to plug 7 A and IC 15.2 which combines it to the correction signal (21). If its output is high, the feedback branch of the PLL is interrupted by IC 34.2 and the input 33.1 is blocked.

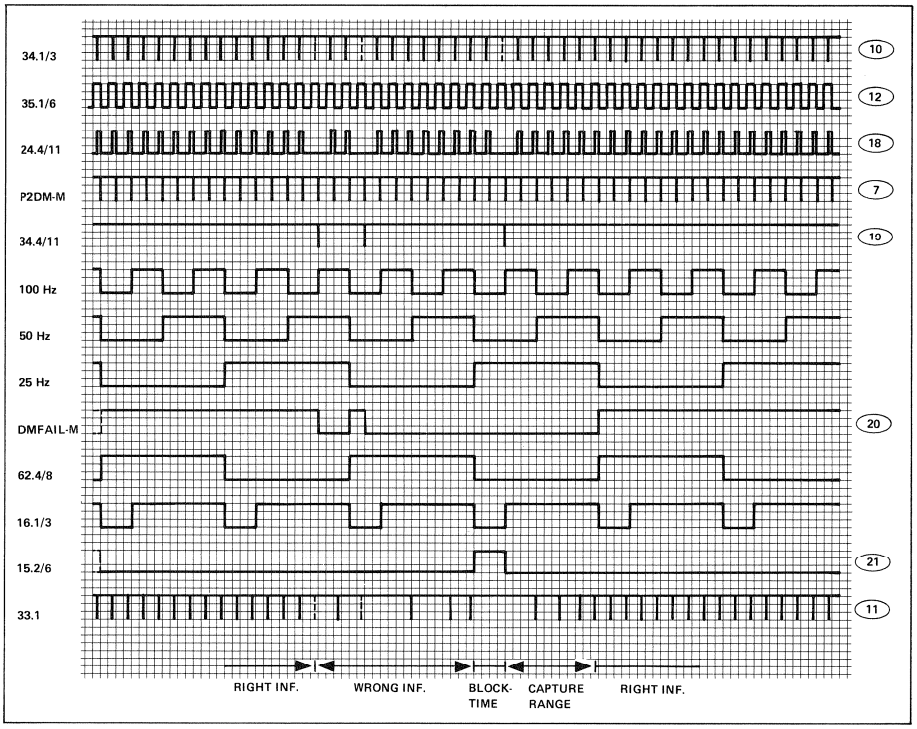

Fig. 3.13.7
Impulsdiagramm der Fangschaltung

Fig. 3.13.7
Impulse diagram of the capture circuit

Die Ladungspumpe des Phasendetektors zwingt dadurch den Oszillator auf eine tiefere Frequenz. Wird nun das Korrektursignal aufgehoben, erzeugt der Oszillator Pulse (11) in relativ grossen zeitlichen Abständen.
Der PLL gleicht nun sein Signal durch die Phasendifferenz immer mehr den Steuerpulsen (10) an. Der Kreis "fängt" sich so sehr schnell.

The "chargepump" of the phase detector forces the oscillator into a lower frequency. When the correction signal is cancelled, the oscillator generates pulses (11) in relatively long time intervals. Through the phase difference, the PLL now begins to adjust its signal more and more towards the control pulses (10). In this manner, the circuit "captures" itself quickly.

3.14 ARITHMETIC 1.228.478

Slave Rack Platz 14

Der Arithmetic-Print ist die zentrale Recheneinheit für die vier Grundoperationen, Addition, Subtraktion, Multiplikation sowie Division und verfügt über die notwendigen Speicher, Register und Hilfskreise.

Der Print besteht aus:
3.14.1 Register
3.14.2 Recheneinheiten
3.14.3 Speichereinheiten
3.14.4 Schaltereinheiten

3.14 ARITHMETIC 1.228.478

Slave rack location 14

The arithmetic PCB provides the central computing facilities for the 4 basic operations: addition, subtraction, multiplication and division. It also contains the necessary memories, registers and auxiliary circuits.

The print comprises:
3.14.1 Registers
3.14.2 Arithmetic units
3.14.3 Memories
3.14.4 Switching units

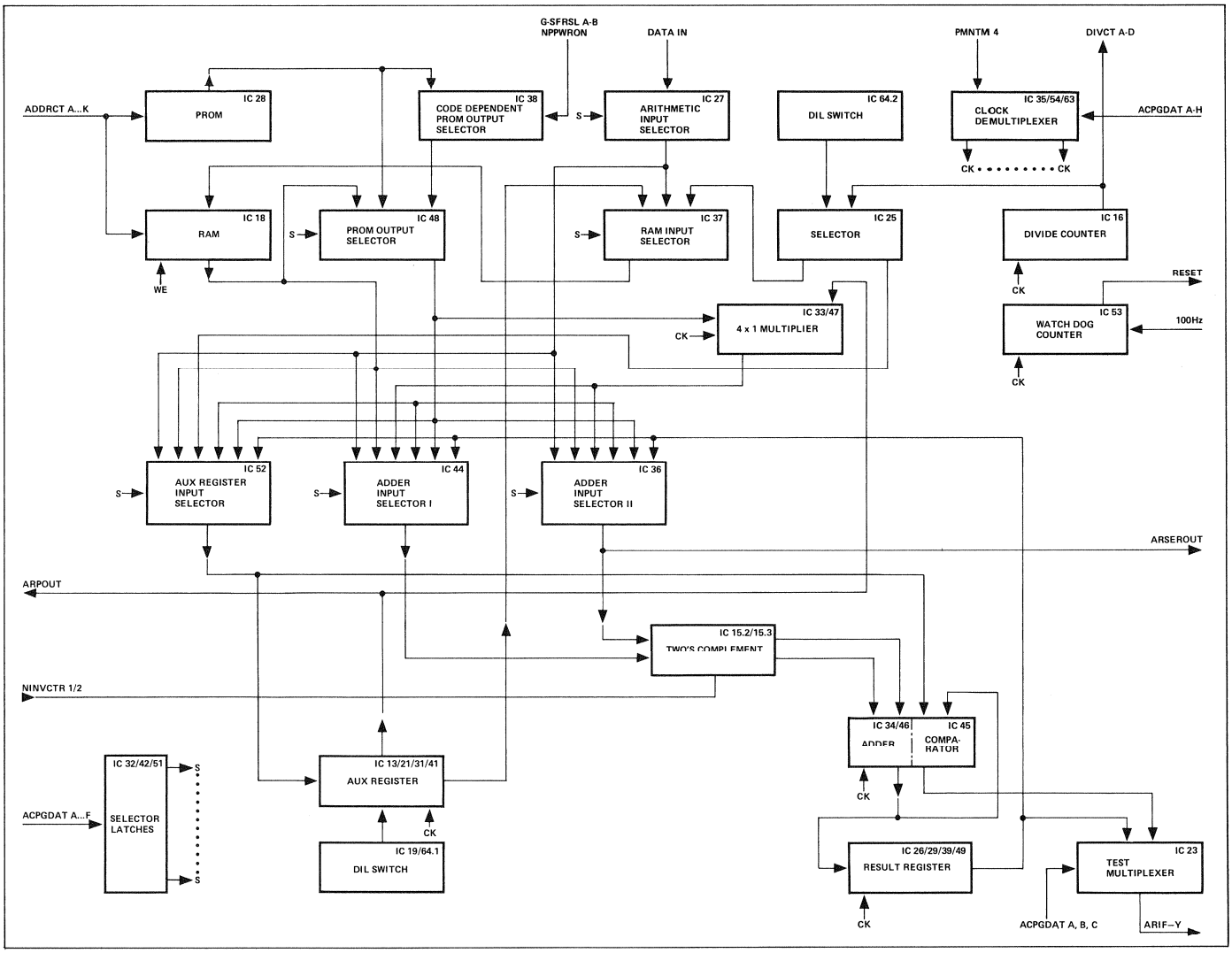

Fig. 3.14.1
Blockschaltbild

Fig. 3.14.1
Block diagram

3.14.1
Register

Die Schaltung besteht aus zwei Registern: aus dem Auxiliaryregister, bestehend aus IC 11, 13, 21, 31 und 41 sowie dem Resultregister (Accumulator), bestehend aus IC 26, 29, 39 und 49.

Beide Register können seriell eingelesen werden. Das Auxiliaryregister kann teilweise (IC 14, 21, 41) auch parallel eingelesen werden.
Die parallelen Eingänge werden von den DIL-Schaltern auf den Plätzen 45.1 und 19 gesetzt (siehe Einstellung der DIL-Schalter, Kapitel 2/107).

Für das parallele bzw. serielle Einschreiben der IC's 21 und 41 ist der Takt am Register über IC 22.4 separat geführt. Dieser wirkt als OR-Gate der vom Clock-Demultiplexer IC 63 kommenden, separat geführten Takte.
Der Clear ist auf alle IC's des Registers parallel geführt.

Das Resultregister ist ein serielles Schieberegister mit gemeinsamem Takt und Clear auf alle 4 IC's.

3.14.2
Recheneinheiten

Die eigentlichen Recheneinheiten führen drei Operationen aus, nämlich: Addieren, Multiplizieren und Dividieren.
Die Subtraktion wird auf eine Addition zurückgeführt, wobei der eine Summand dem negativen Wert des Subtrahenden (Zweierkomplement) entspricht.

Der Summator
Der 1-Bit Summator besteht aus IC 34 (Summator vier und Übertrag drei) und IC 46.1.
Die Summanden werden von IC 44 und 36 entsprechend SA, SB, SC selektiert und über IC 15.2 und 15.3 dem Summator zugeführt. IC 15.2 und 15.3 bilden entsprechend NINVCTR 1 (Not Invert Control 1) und NINVCTR 2 das inverse Signal eines Summanden zur Komplementbildung bzw. Subtraktion. Das Resultat der Addition erscheint an Σ4 von IC 34 und wird ins Resultregister eingeschrieben.

Der Multiplikator
Der Multiplikator besteht aus IC 33 und IC 47. Der 1. Faktor, gebildet aus 32 Bit, wird seriell an IC 47 zum Schieben oder Laden angelegt. Der 2. Faktor, gebildet aus 4 Bit, wird parallel an IC 33 eingelesen.
Σ1 ist der serielle Ausgang der Schaltung.
Im Beispiel Fig. 3.14.3 wird gezeigt, wie eine Multiplikation ausgeführt wird.
Die Rechnung ist zweimal dargestellt, damit die einzelnen Schritte einfacher ersichtlich sind.

Die Multiplikation wird auf eine 4-Bit-Addition zurückgeführt, wobei IC 47 zur Abspeicherung

3.14.1
Registers

The circuit comprises: auxiliary register, implemented by ICs 26, 29, 39 and 49.

Both registers can be loaded serially. The auxiliary registers can also be partially (ICs 14, 21, 41) loaded in parallel.
The parallel inputs are set by the DIL switches in locations 45.1 and 19 (see setting of DIL switches, section 2/107).

For parallel or serial loading of ICs 21 and 41, the clock for the register is applied separately via IC 22.4 which functions as OR gate for the separately transmitted clocks coming from the clock demultiplexer IC 63.
The clear signal is connected in parallel to all ICs of the register.

The result register is a serial shift register with common clock and clear for all 4 ICs.

3.14.2
Arithmetic units

The arithmetic units perform three types of operations: addition, multiplication and division.
The subtract function is reduced to an addition in which one addend corresponds to the negative value of the subtrahend (two's complement).

Adder
The 1-bit adder consists of IC 34 (adder four and carry three) and IC 46.1.
The addends are selected by ICs 44 and 36 corresponding to SA, SB, SC and are input to the adder via ICs 15.2 and 15.3. These two ICs form the inverse signal of an addend corresponding to NINVCTR 1 (Not Invert Control 1) and NINVCTR 2 in order to obtain the complement for subtraction. The result of the addition is available at Σ4 of IC 34 and is written into the result register.

Multiplier
The multiplier consists of ICs 33 and 47. The first factor, formed by 32 bits, is serially applied to IC 47 for shifting or loading. The second factor, formed by 4 bits, is read in parallel into IC 33.
Σ1 represents the serial output of the circuit.
The example illustrated in Fig. 3.14.3 shows how a multiplication is carried out.
The calculation is shown twice to allow for clear illustration of the individual steps.

The multiplication is reduced to 4-bit addition in which IC 47 is used for storing the carry.

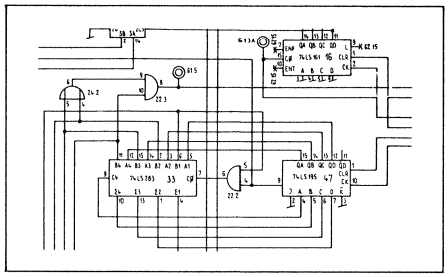

Fig. 3.14.2
Multiplikatorschaltung
Multiplication circuit

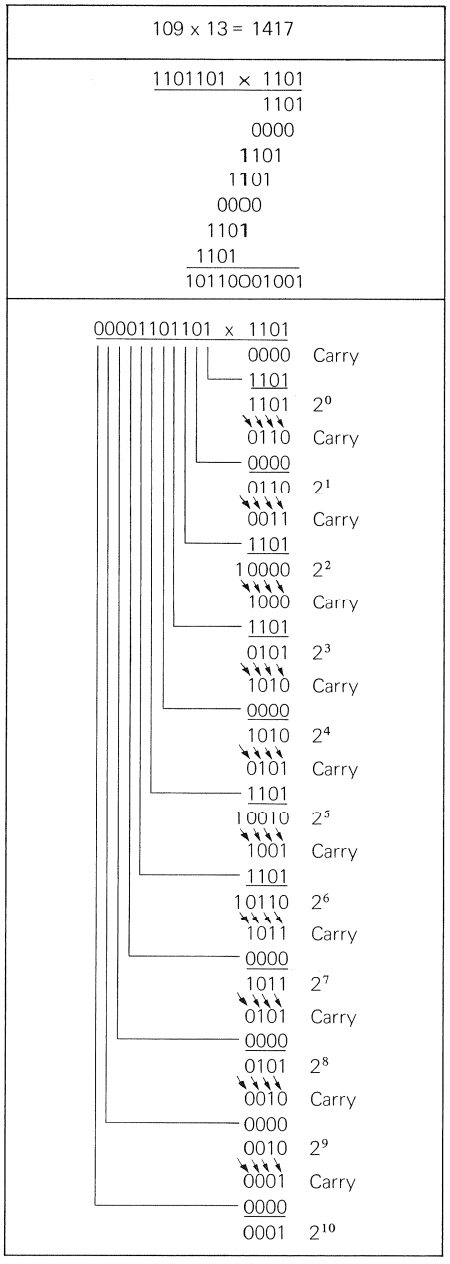

Fig. 3.14.3
Beispiel einer Multiplikation
Example of a multiplication

des letzten Übertrages (Carry) dient.
Liegt vom 1. Faktor ein Bit mit arithmetisch 1 an, wird der 2. Faktor (4-Bit) zum Übertrag addiert und der neue Übertrag abgespeichert.
Liegt vom 1. Faktor eine arithmetische 0 an, ist das niederste Bit des Übertrages das neue Resultat Bit.
Der Übertrag wird nach rechts geschoben und für die nächste Addition neu angelegt (über IC 47).
Zwei Abschnitte der Multiplikation sind in Fig. 3.14.4 gezeigt. Es wurden die Multiplikationen für die Werte 2^3 und 2^4 gewählt.

If the first factor produces a bit with an arithmetic value of 1, the second factor (4 bit) is added to the carry and the new carry is stored.
If the first factor produces an arithmetic 0, the least significant bit of the carry represents the new result bit.
The carry is shifted to the right and is applied for the next addition (via IC 47).
Two sections of the multiplication are illustrated in Fig. 3.14.4. The multiplication for the values 2^3 and 2^4 have been chosen.

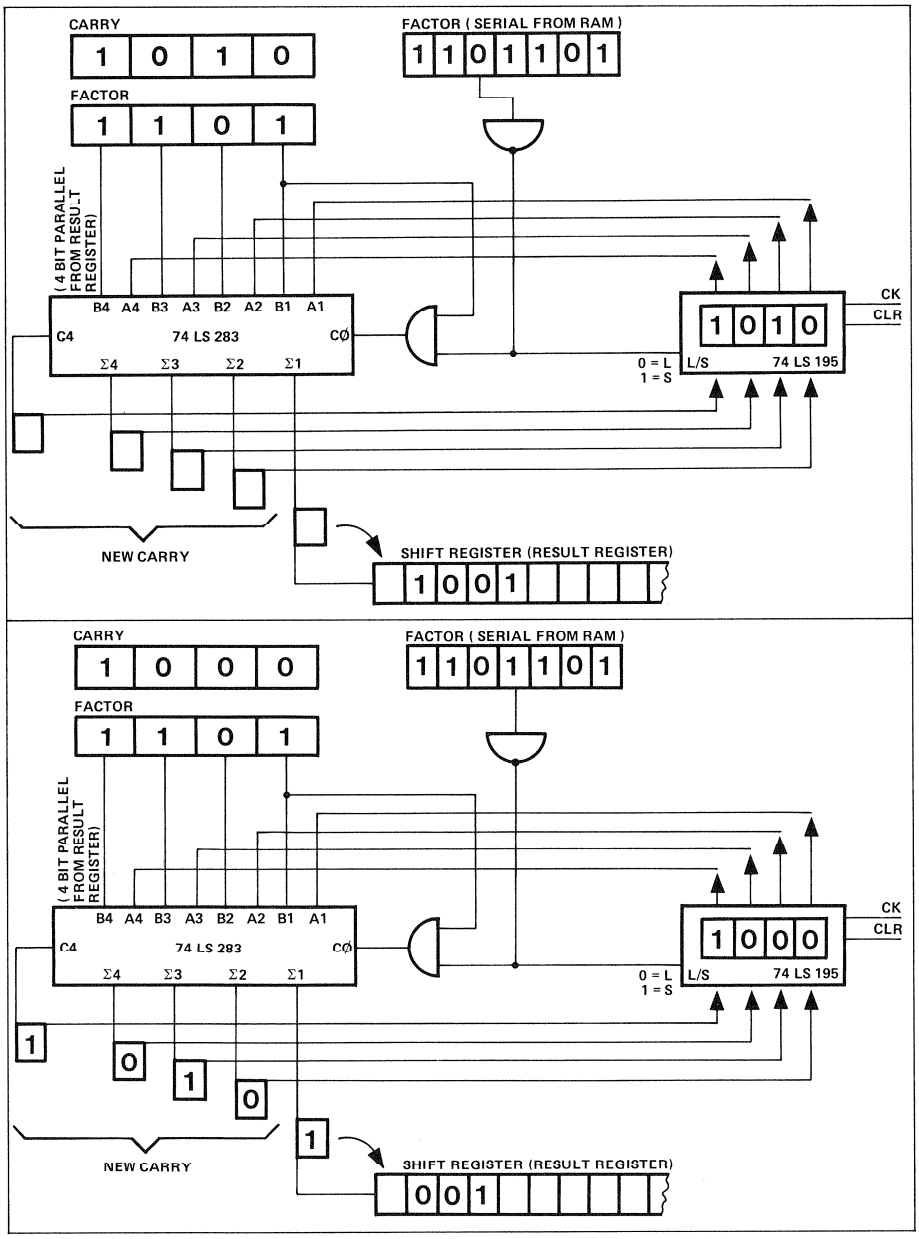

Fig. 3.14.4

Der Divisor
Der Divider wird gebildet aus dem synchronen Binärzähler IC 16, dem Summator und dem PROM IC 28.
Die Division erreicht man mit fortschreitender Subtraktion. Die Subtrahenden sind feste Werte, z.B. 20 Std., 10 St., 1 Std., 10 Min., usw., damit die Anzahl der Subtraktionen verringert werden kann. Die Werte der Subtrahenden sind im PROM IC 28 gespeichert.
Das Zusammenspielen von Zähler, Summator und PROM wird vom Programm gesteuert.
Das Resultat wird über IC 28 und 37 ins RAM eingeschrieben.

Divisor
The divisor is formed by the synchronous bit counter IC 16, the adder and PROM IC 28.
A division is obtained through repetitive subtraction. To reduce the numer of subtractions, the subtrahends are defined as fixed values, e.g. 20 hours, 10 hours, 1 hour, 10 min etc. The values of the subtrahends are stored in PROM IC 28.
The correlation between counter, adder and PROM is controlled by the program.
The result is written into the RAM via ICs 28 and 37.

3.14.3 Speichereinheiten

Nebst den Schieberegistern und Zwischenspeichern besitzt die Schaltung ein RAM (IC 18) und ein PROM (IC 28) als eigentliche Speicher.

Im PROM sind feste Konstanten untergebracht, z.B. Umrechnungsfaktoren für die Codetypen mit 24, 25, 29.97 und 30 Frames pro Sekunde.
Kapazität: 64 x 32 Bits.

Im RAM werden die über IC 37 angelegten Daten gespeichert. Unter anderem können auch die Inhalte der Auxiliary- und Resultregister eingeschrieben werden.
Kapazität: 32 x 32 Bits.

3.14.3 Memories

Besides shift registers and buffers, the circuit is also equipped with a RAM (IC 18) and a PROM (IC 28) as true memory.

The PROM holds fixed constants, e.g. conversion factors for the code types with 24, 25, 29.97 and 30 frames per seconds.
Capacity: 64 x 32 bits

The RAM stores the data applied via IC 37. Among other data, the contents of auxiliary and result registers can also be written into the RAM.
Capacity: 32 x 32 bits.

3.14.4 Schalteinheiten

Die Demultiplexer IC 35, 54, 63 laufen parallel und dienen zur Steuerung der Takte gemäss Programm.
Über Flip-Flop IC 32, 42 und 51 werden die Multiplexer IC 27, 36, 37, 44, 48 und 52 gemäss Programm gesteuert.
IC 45.1 und 46.2 dienen als Comparator für die Werte, die ins Auxiliary- und Resultregister eingeschrieben werden.
IC 38 und 48 dienen als PROM-Ausgangsschalter.
ARSEROUT (Arithmetic Serial Output) ist der Hauptausgang der Arithmetik.

Bemerkung:
IC 53 gehört nicht zur Funktion dieses Printes. Dieser Zähler dient zur Zeitüberwachung des Programms.
Das Programm muss mindestens alle 150 ms den Zähler zurücksetzen, sonst wird ein neuer Programmstart erwirkt.

3.14.4 Switching units

The demultiplexers IC 35, 54, 63 operate in parallel and control the clocks according to the program.
The multiplexers IC 27, 36, 37, 44, 48 and 52 are controlled by the program via flip-flops IC 32, 42 and 51.
ICs 45.1 and 46.2 function as comparators for the values to be written into the auxiliary and result registers.
ICs 38 and 48 function as PROM output selectors.
ARSEROUT (Arithmetic Serial Out) represents the main output of the arithmetic.

Note:
IC 53 does not perform any function associated with this print. It is used to control the program timing.
The program must clear the counter no later than every 150 ms, otherwise a new program start is initiated.

3.15
ADDITIONAL PERI/ARI CONTROL
1.228.482

Slave Rack Platz 15

Der Print dient zur Erweiterung der Programmspeicher für die Peripheral Control und die Arithmetic Control über den entsprechenden Transceiver und Databus.
Die Adressen für die PROM's werden von den zugehörigen Kontrollschaltungen via Addressbus übermittelt.

Der Print besteht aus:
3.15.1 PROM's
3.15.2 Program Data Transceiver
3.15.3 Program Data Selector
3.15.4 Zähler/Buffer und Flag-RAM
3.15.5 ARI/PERI Instruction Decoder
3.15.6 Control-Logic

3.15
ADDITIONAL PERI/ARI CONTROL
1.228.482

Slave rack location 15

This print expands the program memory for the peripheral control and the arithmetic control via corresponding transceiver and data bus.
The addresses for the PROMs are transmitted by the associated control circuits via address bus.

The print comprises:
3.15.1 PROMs
3.15.2 Program data transceiver
3.15.3 Program data selector
3.15.4 Counter/buffer and flag RAM
3.15.5 ARI/PERI instruction decoder
3.15.6 Control logic

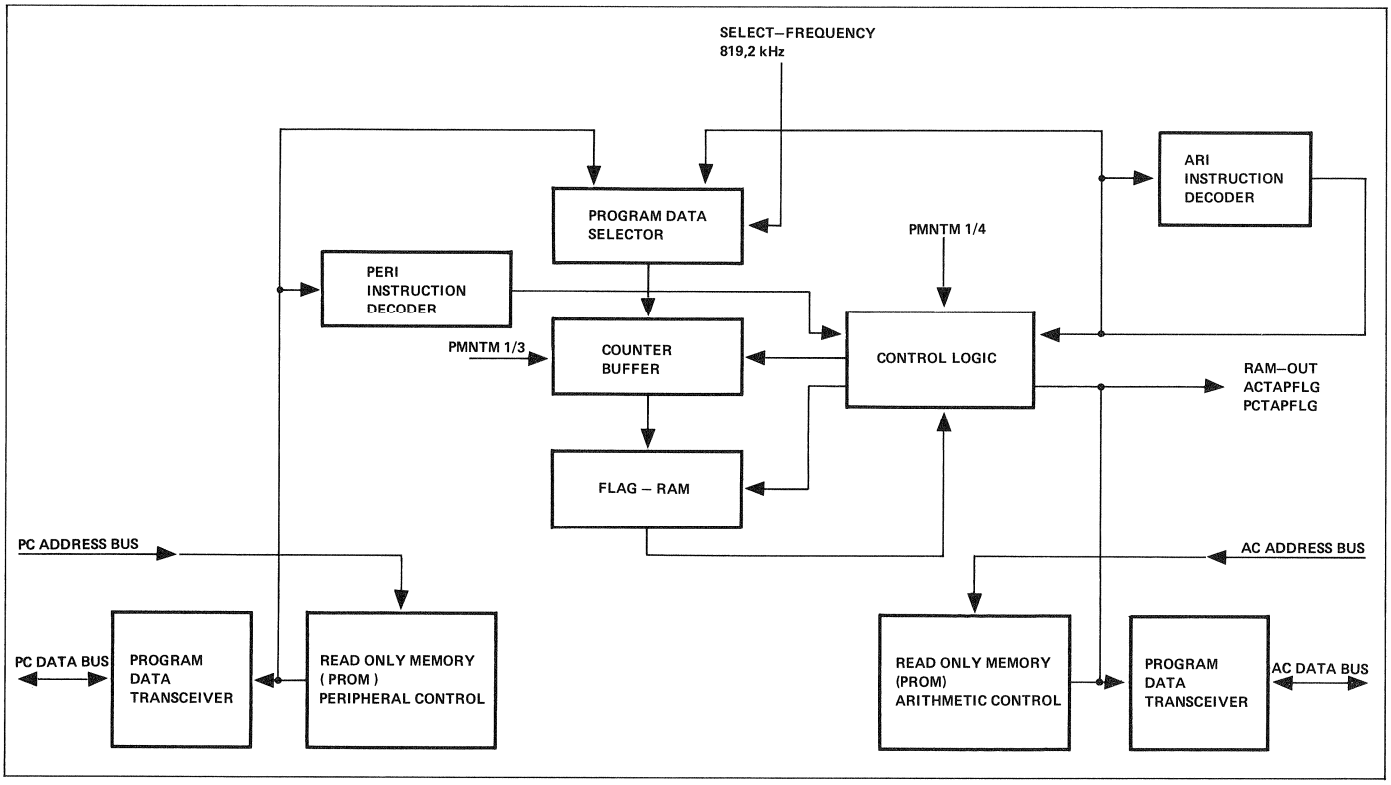

Fig. 3.15.1
Blockschaltbild

Fig. 3.15.1
Block diagram

3.15.1
PROM's

Auf dem Schaltbild sind zwei grössere Blöcke von je 9 PROM-IC's ersichtlich.
Der linke dient zur Erweiterung des Programms der Peripheral Control PCPGDAT A...M) und der rechte zur Erweiterung der Arithmetic Control (ACPGDAT A...M).

3.15.1
PROMs

The two larger blocks in the diagram represent ICs with 9 PROMs each.
The left-hand block expands the peripheral control program (PCPGDAT A...M) and the right-hand block expands the arithmetic control (ACPGDAT A...M).

3.15.2
Program Data Transceiver

Die Transceiver IC 14 bis 19 empfangen oder schalten die Programmdaten vom, bzw. auf den betreffenden Bus.
Ob gesendet oder empfangen wird, hängt vom Addressbit A 11 ab.

3.15.3
Program Data Selector

Der Program Data Selector besteht aus IC 52, 53 und 54.
Er schaltet die Programmdaten von ARI und PERI im Rhythmus der Taktfrequenz von 819,2 kHz um.

3.15.4
Zähler/Buffer und Flag-RAM

Der Zähler (IC 63 und 64) dient hauptsächlich als Buffer zwischen Selector und RAM (IC 62).

Beim Einschalten muss das RAM gelöscht sein. Dies geschieht mit Hilfe des Zählers. Während der Power-On-Phase wird dieser ständig hochgezählt. Dabei werden alle Adressen des RAM durchlaufen und gleichzeitig Nullen eingeschrieben.

Ist die Power-On-Phase beendet, wird der Zähler nur noch als Buffer verwendet. Er überträgt die vom Selector gewählten Adressen im Takt von PMNTM 1 und 3 an das RAM.

3.15.5
ARI/PERI Instruction Decoder

Er besteht aus IC 35.1 und 45.2 bzw. 35.1 und 45.3
Die Programmdaten M und L ermöglichen das Schreiben und Lesen.
Daten K bestimmen, ob gelesen oder geschrieben wird.

3.15.6
Control-Logic

Sie besteht aus IC 11, 12, 13 und FF 51. Sie dient zur Steuerung von Zähler/Buffer und RAM sowie zur phasengerechten Informationsauswertung via IC 51.
Die Programmdaten II enthalten die Bit-Information für Schreiben und Lesen.

Schreiben: SET FLAG oder RESET FLAG Lesen: IF TRUE oder IF FALSE

3.15.2
Program data transceivers

The transceivers IC 14 through 19 receive to transmit the data from or to the corresponding bus.
Address bit A 11 determines whether the data is to be transmitted or received.

3.15.3
Program data selector

The program data selector comprises ICs 52, 53 and 54.
It switches the program data from ARI and PERI in the rhythm of the clock frequency of 819.2 kHz.

3.15.4
Counter/buffer and flag RAM

The counter (ICs 63 and 64) mainly serves as buffer between selector and RAM (IC 62).

The RAM must be cleared when the machine is powered on. This is accomplished with the aid of the counter. During the Power ON phase, all addresses of the RAM are consecutively accessed and a zero is entered by repetitively incrementing the counter.

After the Power ON phase is completed, the counter is only used as buffer. It transfers the addresses requested by the selector to the RAM with the clock of PMNTM 1 and 3.

3.15.5
ARI/PERI instruction decoder

It comprises ICs 35.1 and 45.2 or 35.1 and 45.3 respectively.
The program data M and L enable writing and reading.
K determines whether reading or writing is to be performed.

3.15.6
Control Logic

It comprises ICs 11, 12, 13 and FF 51. It controls the counter/buffer and the RAM and allows correctly phased evaluation of the information via IC 51.
Program data II contains the bit information for writing and reading.

Writing: SET FLAG or RESET FLAG Reading: IF TRUE or IF FALSE

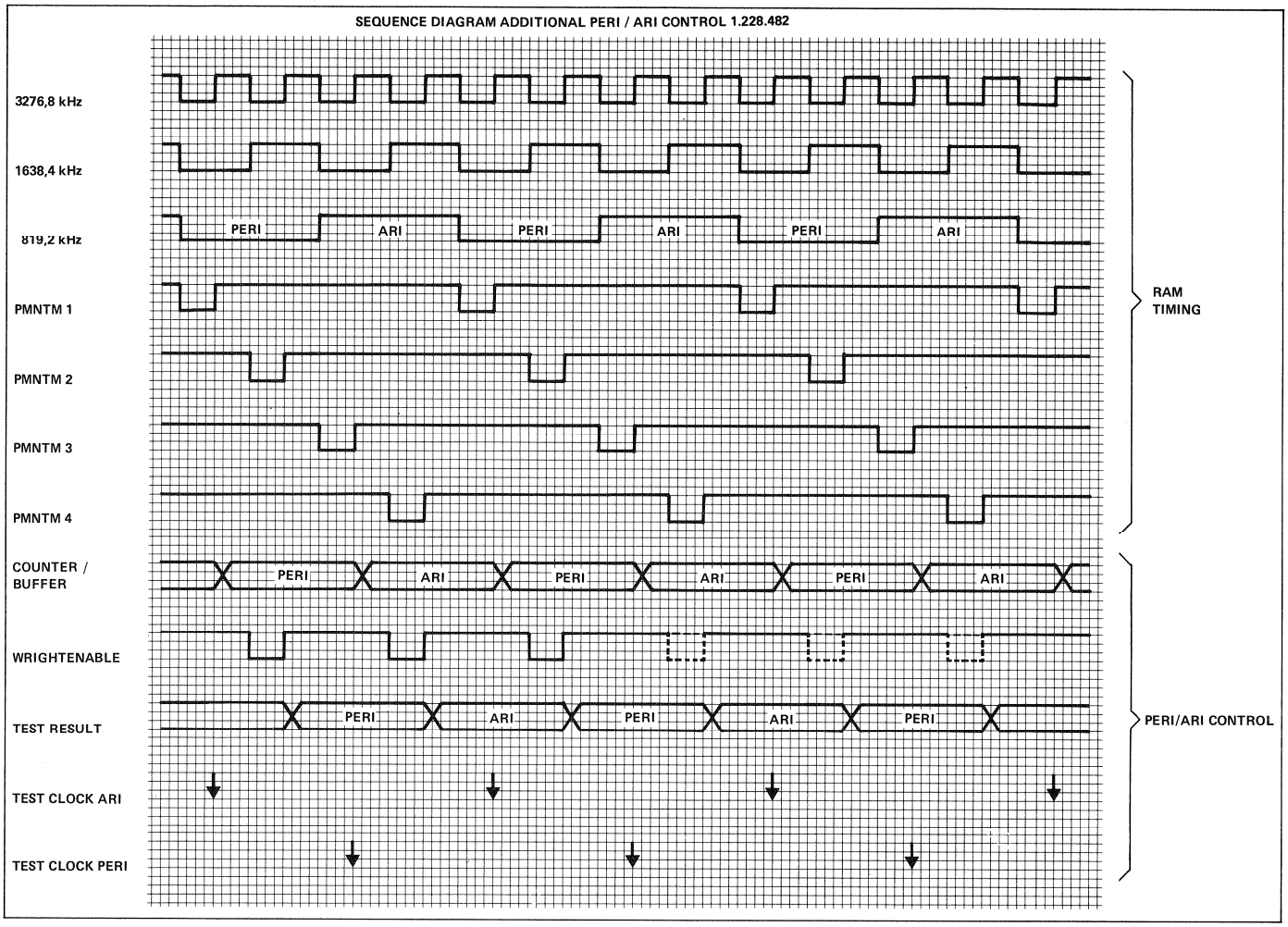

Fig. 3.15.2
Sequenzdiagramm

Fig. 3.15.2
Sequence diagram

Ob gelesen oder geschrieben wird, hängt vom Programm ab. Der Signalweg führt von IC 35 über IC 52, 12.4 und 13.2 an den WE-Eingang des RAM.
Das Resultat des TEST's (NEGATIV TEST) erscheint an IC 11.2. Es wird über IC 52.2 mit den Phasen PMNTM 2/4 synchronisiert.

Um die Zusammenhänge zwischen Arithmetic und Peripheral Control besser zu verstehen, sind die zeitlichen Abläufe im folgenden Sequenzdiagramm aufgeführt.

The program determines whether writing or reading is to be performed. The signal path leads from IC 35 to the WE input of the RAM via ICs 52, 12.4 and 13.2.
The result of the TESTs (NEGATIVE TEST) is available at IC 11.2 and is synchronized with the phases PMNTM 2/4 via IC 52.2.

For easier comprehension of the interrelations between arithmetic and peripheral control, the chronological sequence is illustrated in the sequence diagram Fig. 3.15.2.

3.17 BASIC PROGRAMMER INTERFACE 1.228.417 (SEE 3.17.1)

A80 LOCATOR | A80 MASTER-CONTROL

CODE CHANNLE CONTROL INTERFACE A800 1.228.489 (SEE 3.17.2)

A800

Slave Rack Platz 17

3.17.1 Allgemeines

Der Print 1.228.417-72 wird für die A80 Locator- und die A80 Master Control-Version des TLS Slave Rack eingesetzt.
Die Wirkungsweise ist bei beiden Versionen grundsätzlich die gleiche. Unterschiedliche Funktionen sind durch das Versionensignet gekennzeichnet.

A80 LOCATOR

Verarbeitet über den Stecker "Basic Programmer" GR 98 EL 81 die Tastensignale des Basic Programmers, bedient dessen Tastenlampen und über den "AUX"-Stecker GR 97 EL 71 z.B. das Interface Rack.

A80 MASTER-CONTROL

Verarbeitet über den Stecker "Code Channel Remote" GR 98 EL 61 die Tastensignale der Codekanalfernsteuerung, bedient deren Tastenlampen und über den "AUX"-Stecker GR 97 EL 71 sowie den "Master Control Output"-Stecker GR 98 EL 71 das Interface Rack.

In beiden Versionen sind ferner Überwachungsschaltungen und Einstellelemente vorhanden.

Der Print lässt sich in folgende Funktionsblocke aufteilen:

3.17.1.1 Empfangsschaltung für die Tastensignale
3.17.1.2 Stecker- und Speisespannungsüberwachung
3.17.1.3 Abfragemultiplexer für die Peripheriesignale
3.17.1.4 DIL-Schalter mit Multiplexern
3.17.1.5 PC-Programmdatenempfänger
3.17.1.6 Ausgabeschaltungen

3.17.1.1 Empfangsschaltung für die Tastensignale

Die Tastenfelder der entsprechenden Gerate (Basic Programmer oder Codekanalfernsteuerung) sind in einer XY-Matrix angeordnet und liefern die Signale X1BPS...X5BPS sowie Y1BPS... Y3BPS an die Empfangsschaltung IC 15 und 27.

3.17 BASIC PROGRAMMER INTERFACE 1.228.417 (SEE 3.17.1)

A80 LOCATOR | A80 MASTER-CONTROL

CODE CHANNEL CONTROL INTERFACE A800 1.228.489 (SEE 3.17.2)

A800

Slave rack location 17

3.17.1 General

The print 1.228.417-72 is used in the A80 locator version and the A80 Master Control version of the TLS slave rack.
Basically, both versions function in the same manner. Functional differences are identified by the version symbol.

A80 LOCATOR

Via the "Basic Programmer" connector GR 98 EL 81, it processes the keyboard signals of the basic programmer, controls its keyboard lamps and via "AUX" plug GR 97 EL 71 e.g. the interface rack.

A80 MASTER-CONTROL

Via "Code Channel Remote" GR 98 EL 61, it processes the keyboard signals of the code channel remote control, controls its keyboard lamps and also the interface rack via "AUX" plug GR 97 EL 71 and the "Master Control Output" connector GR 98 EL 71.

In addition, both versions contain monitoring and setting elements.

The print can be subdivided into the following function blocks:

3.17.1.1 Receiver circuit for keyboard signals
3.17.1.2 Power supply and connector supervisor
3.17.1.3 Interrogation multiplexer for peripheral signals
3.17.1.4 DIL switches with multiplexers
3.17.1.5 PC program data receiver
3.17.1.6 Output circuits

3.17.1.1 Receiver circuit for keyboard signals

The keyboards of the corresponding equipment (Basic Programmer or Code Channel Remote Control) are arranged as an XY matrix and supply the signals X1BPS...X5BPS as well as Y1BPS... Y3BPS to the receiver circuit IC 15 and 27.

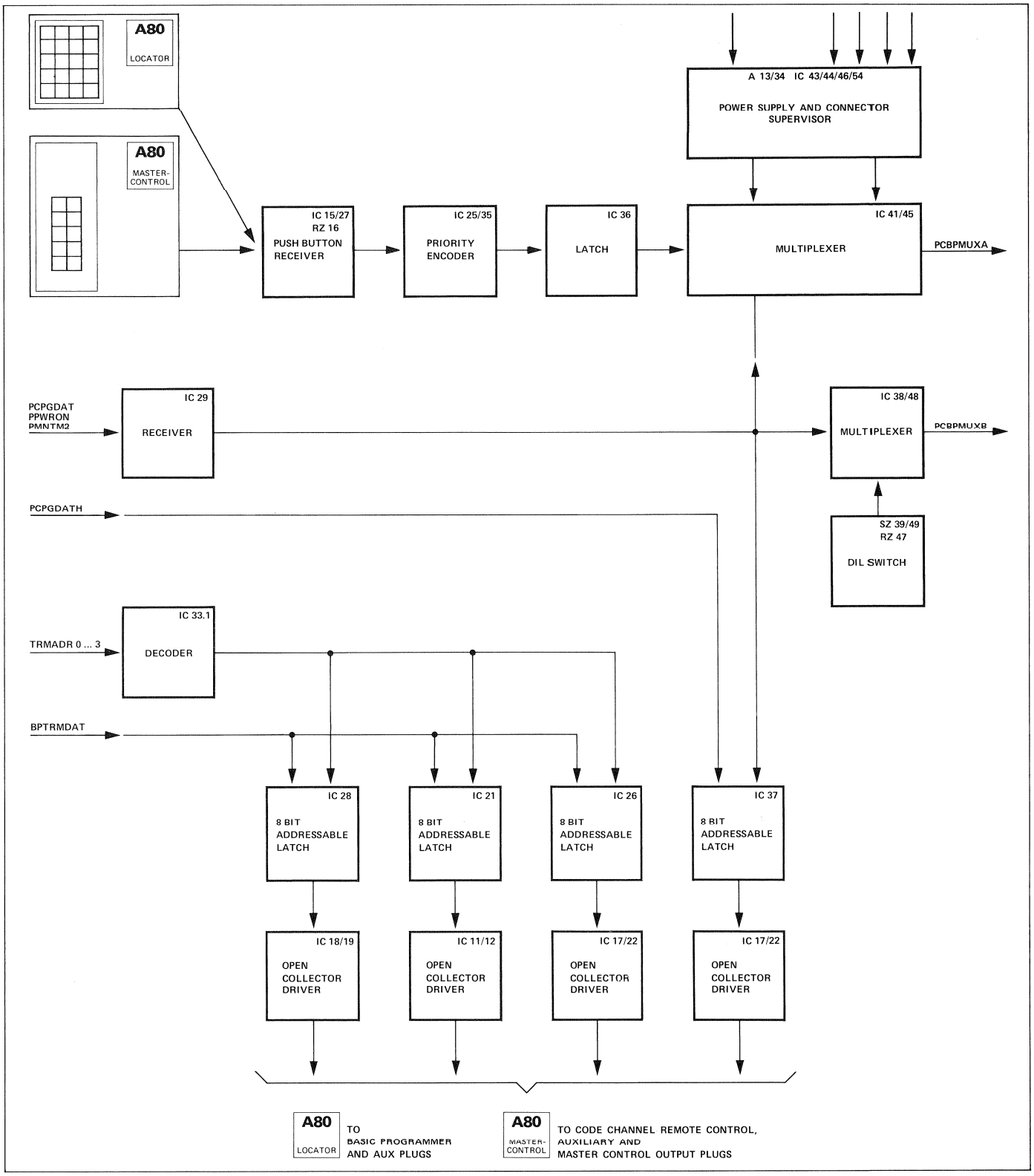

Fig. 3.17.1.1
Print-Blockschaltbild 1.228.417

Fig. 3.17.1.1
PCB block diagram 1.228.417

Die nachfolgende Schaltung mit IC 25 und 35 sorgt dafür, dass gleichzeitig nur ein Tastensignal ausgewertet wird. Diese werden in IC 36 gespei-

The subsequent circuit, comprising ICs 25 and 35, is responsible that only one keyboard signal is analized at a given time. The signals are stored

chert.
Sie werden vom Programm über den Multiplexer IC 45 abgefragt.

by IC 36 and interrogated by the program via multiplexer IC 45.

3.17.1.2
Stecker und Speisespannungsüberwachung

Die Überwachungsschaltung mit den IC's 43, 44, 46 und 54 kontrollieren das Vorhandensein von Speisespannungen und Steckverbindungen.

Es werden folgende Verbindungswege überwacht:

SVPC I, SVPC II, SVPC III
Der Supervisor Programmer lable I, II und III überwacht die drei Kabel des Main Programmer.

SVSERPROG
Der Supervisor Seriel Programmer überwacht die Leitung zum Serie Programmer

BPSUPVIS
Der Basic Programmer Supervisor überwacht das Kabel des Basic Programmer oder der Codekanalfernsteuerung.

CCSUPVIS
Der Code Channel Supervisor überwacht das Verbindungskabel zwischen "Audio/Code Channel Selector Plug" der A80 und dem TLS Slave Rack.

Ist eine dieser Verbindungen nicht gesteckt, erfolgt die Anzeige "Connector Fail" auf dem Main Programmer.

Auch diese Auswertung erfolgt durch das Programm über den Multiplexer IC 45.

Für alle aufgeführten Signale gilt:
"Active low", Kreis aktiv ≙ Pegel tief!

3.17.1.2
Power supply and connector supervisor

The control circuit comprising ICs 43, 44, 46 and 54, monitors the presence of the supply voltage and the plug connections.

The following connections are monitored:

SVPC I, SVPC II, SVPC III
The supervisor programmer I, II and III monitors the three cables of the main programmer.

SVSERPROG
The Supervisor Serial Programmer monitors the line to the serial programmer.

BPSUPVIS
The basic programmer supervisor monitors the cable of the basic programmer or the code channel remote control.

CCSUPVIS
The code channel supervisor monitors the connecting cable between "Audio/Code Channel Selector Plug" of the A80 and the TLS slave rack.

If one of these connections is not plugged in, "Connector Fail" will be displayed on the main programmer.

This evaluation is also performed by the program via multiplexer IC 45.

The following applies to all signals listed:
"Active low", circuit active ≙ level low!

3.17.1.3
Abfragemultiplexer für die Peripheriesignale

Die Multiplexer IC 41 und 45 werden durch den PC-Programmdatenempfänger IC 29 (siehe 3.17.1.5) gesteuert.
Unter anderen können die im Zwischenspeicher IC 36 deponierten Tastensignale sowie die Speisespannungs- und Steckerüberwachungssignale abgefragt werden.
Das Ausgangssignal PCBPMUXA wird zur Auswertung an die Peripheral Control B geführt.

3.17.1.3
Interrogation multiplexer for peripheral signals

The multiplexers IC 41 and 45 are controlled by the PC program data receiver IC 29 (see 3.17.1.5).

Among other functions, the keyboard signals held in the buffer IC 36, as well as the supply voltage and plug monitoring signals can be interrogated.
The output signal PCBPMUXA is connected to the peripheral control B for evaluation.

3.17.1.4
DIL-Schalter mit Multiplexern

Mit den beiden Dual-In-Line (DIL) Schalter-Arrays auf den IC-Plätzen 39 und 49 können in-

3.17.1.4
DIL switches with multiplexers

With the two Dual-In-Line (DIL) switch arrays in IC locations 39 and 49, individual settings for

dividuelle Anpassungen an das Slave-Laufwerk vorgenommen und Prioritätsvorgaben für die Übernahme von Peripheriesignalen gemacht werden.
Die verschiedenen Möglichkeiten sind im Kapitel 2 ab Seite 107 ausführlich beschrieben.
Die an den DIL-Schaltern eingestellten Werte sind an die Eingänge der Multiplexer IC 38 und 48 geführt. Sie werden via PC-Programmdatenempfänger IC 29 abgefragt.
Das gemeinsame Ausgangssignal PCBPMUXB wird von der Peripheral Control B ausgewertet.

the slave tape deck can be made and the priority for the reception of peripheral signals can be established.
The various adjustment facilities are described in detail in section 2, page 107.
The values set with the DIL switches are available at the inputs of multiplexers IC 38 and 48. They are interrogated via PC program data receiver IC 29.
The common output signal PCBPMUXB is evaluated by the peripheral control B.

3.17.1.5
PC-Programmdatenempfänger

Er wird durch IC 29 gebildet. Am Eingang liegen Peripherieprogrammdaten, der Resetpuls PPWRON sowie das Zeitsignal PMNTM2.
Der Ausgang steuert die Multiplexer für die Abfrage der Peripherie- und DIL-Schaltersignale sowie die Ausgabe einiger Signale für den "AUX"-Stecker.

3.17.1.5
PC program data receiver

It is implemented by IC 29. Peripheral program data, the reset pulse PPWRON and the timing signal PMNTM2 are available at its input.
The output controls the multiplexer for the interrogation of peripheral and DIL switch signals as well as the output of certain signals for the "AUX" plug.

3.17.1.6
Ausgabeschaltungen

Die Ausgabeschaltungen bestehen aus adressierbaren Zwischenspeichern und nachfolgenden Treibern mit offenen Kollektoren.
Die Zwischenspeicher IC 21, 26 und 28 werden durch die Transmission-Address aus der Peripheral Control B vorbereitet und durch BPTRMDAT aktiviert.
Der Zwischenspeicher IC 37 wird durch die Peripherie Programm Daten über IC 29 vorbereitet und durch PCPGDATH aktiviert.

3.17.1.6
Output circuits

The output circuit consists of addressable buffers and serially connected driver stages with open collectors.
The buffers IC 21, 26 and 28 are activated by the transmission address from the peripheral control B and by BPTRMDAT.
The buffer IC 37 is prepared by the peripheral program data via IC 29 and activated by PCPGDATH.

A80 LOCATOR

Die Basic Programmerlampen werden über IC 21, 26 und 28 bedient ("Basic Programm"-Stecker GR 98 EL 81).
Der "AUX"-Stecker wird über IC 37 angesteuert ("AUX"-Stecker GR 97 EL 71).

A80 LOCATOR

The Basic Programmer lamps are activated via ICs 21, 26 and 28 ("Basic Programmer" plug GR 98 EL 81).
The "AUX" plug is selected via IC 37 ("AUX" plug GR 97 EL 71).

A80 MASTER-CONTROL

Die Code Channel Remote Box ("Code Channel Remote"-Stecker GR 98 EL 61) und das Inter-

A80 MASTER-CONTROL

The code channel remote box ("Code Channel Remote" plug GR 98 EL 61) and the interface

Befehl/Instructions	MCDAT0DR	MCDAT1DR	MCDAT2DR
Master Control OFF	1	1	1
Play	0	1	1
Pause	1	0	1
Record	0	0	1
Stop	1	1	0
Rückspulen/Rewind	0	1	0
Locate to Zero	1	0	0
Schnelles Vorspulen/Fast forward	0	0	0

Fig. 3.17.1.2

face Rack ("Master Control Output"-Stecker GR 98 EL 71 sowie "AUX"-Stecker GR 97 EL 71) beziehen den grössten Teil der Signale, einige davon an mehreren Steckern parallel, von dieser Ausgabeschaltung mit den IC's 21, 26, 28 und 37.

Die Laufwerkbefehle für die Mastermaschine werden über drei Leitungen wie folgt übermittelt.

3.17.2 Allgemein

Das Code Channel Control Interface A800 (1.228.489) wird dann verwendet, wenn eine A800 als Slave Bandmaschine eingesetzt ist.
Der Print überwacht verschiedene wichtige Kabelverbindungen zwischen dem Slave Rack, der Slave Bandmaschine und den Peripheriegeräten.
Ferner sind Einstellelemente zur Anpassung an die Slave Bandmaschinencharakteristik und Ausgabeschaltungen für die Stecker "AUX" GR 97 EL 71 und "Master Control Output" GR 98 EL 51 untergebracht.

Der Print lässt sich in folgende Funktionsblöcke aufteilen:

3.17.2.1 Stecker- und Speisespannungsüberwachung
3.17.2.2 Abfragemultiplexer für die Peripheriesignale
3.17.2.3 DIL-Schalter mit Multiplexern
3.17.2.4 PC-Programmdatenempfänger
3.17.2.5 Ausgabeschaltungen

3.17.2.1 Stecker und Speisespannungsüberwachung

Die Überwachungsschaltung mit A 34, RZ 35 sowie den IC's 33, 44 und 45 kontrollieren wichtige Steckverbindungen.

Es werden folgende Verbindungswege überwacht:

SVPC I, SVPC II, SVPC III
Der Supervisor Serial Programmer überwacht die Leitung zum Serie Programmer.

MCSUPVIS
Der Master Control Supervisor überwacht das Kabel zur Master Control im Interface Rack.

EXTRECCM
Dieser Anschluss bietet die Möglichkeit, dem TLS ein "Record"-Zustand mitzuteilen.
Dies geschieht durch Herunterziehen des Pegels am EXTRECCM-Anschluss ("AUX"-Stecker GR 97 EL 71) auf Masse.

CCSUPVIS
Der Code Channel Supervisor überwacht das Verbindungskabel zur Code Channel Remote Control.

rack ("Master Control Output" plug GR 98 EL 71 as well as "AUX" plug GR 97 EL 71) receive the major share of the signals from this circuit comprising ICs 21, 26, 28 and 37. Some of these are received in parallel at various plug locations.

The tape deck commands for the master machine are transmitted over three lines as follows.

3.17.2 General

The code channel control interface A800 (1.228.489) is used for configurations in which an A800 is used as slave tape deck.
This print monitors various important channel connections between the slave rack, the slave machine and the peripheral units. It also contains setting devices for adaptation to the characteristics of the slave machine as well as output circuits for the plugs "AUX" GR 97 EL 71 and "Master Control Output" GR 98 EL 51.

The print's functions can be subdivided as follows:

3.17.2.1 Connector and power supply supervisor
3.17.2.2 Interrogation multiplexer for peripheral signals
3.17.2.3 DIL switches with multiplexers
3.17.2.4 PC program data receiver
3.17.2.5 Output circuits

3.17.2.1 Connector and power supply supervisor

The monitor circuit, comprising A 34, RZ 35 and ICs 33, 44 and 45, controls important plug connections.

The following connector lines are monitored:

SVPC I, SVPC II, SVPC III
The supervisor serial program monitors the line to the serial programmer.

MCSUPVIS
The master control supervisor monitors the cable to the master control in the interface rack.

EXTRECCM
This connection allows the TLS to communicate a "RECORD" status.
This is accomplished by pulling the level at the EXTRECCM connection ("AUX" plug GR 97 EL 71) to ground.

CCSUPVIS
The code channel supervisor monitors the connecting cable to the code channel remote control.

PROCSUPV
Dieses Signal meldet dem TLS, dass der A800-Processor aktiv ist, d.h. dass die Maschine eingeschaltet ist und die Verbindung (Command Line lable) vorhanden ist.

Ist eine dieser Verbindungen nicht gesteckt, erfolgt die Anzeige "Connector Fail" auf dem Main Programmer. Das Programm verarbeitet die Informationen über den Multiplexer IC 36 durch das Signal PCBPMUXA.

PROCSUPV
This signal notifies the TLS that the A800 is active, i.e. that the machine is switched on and that the command line cable is plugged in.

If one of these connections is not established, "Connector Fail" is displayed on the main programmer. The program processes the data via multiplexer IC 36 with the signal PCBPMUXA.

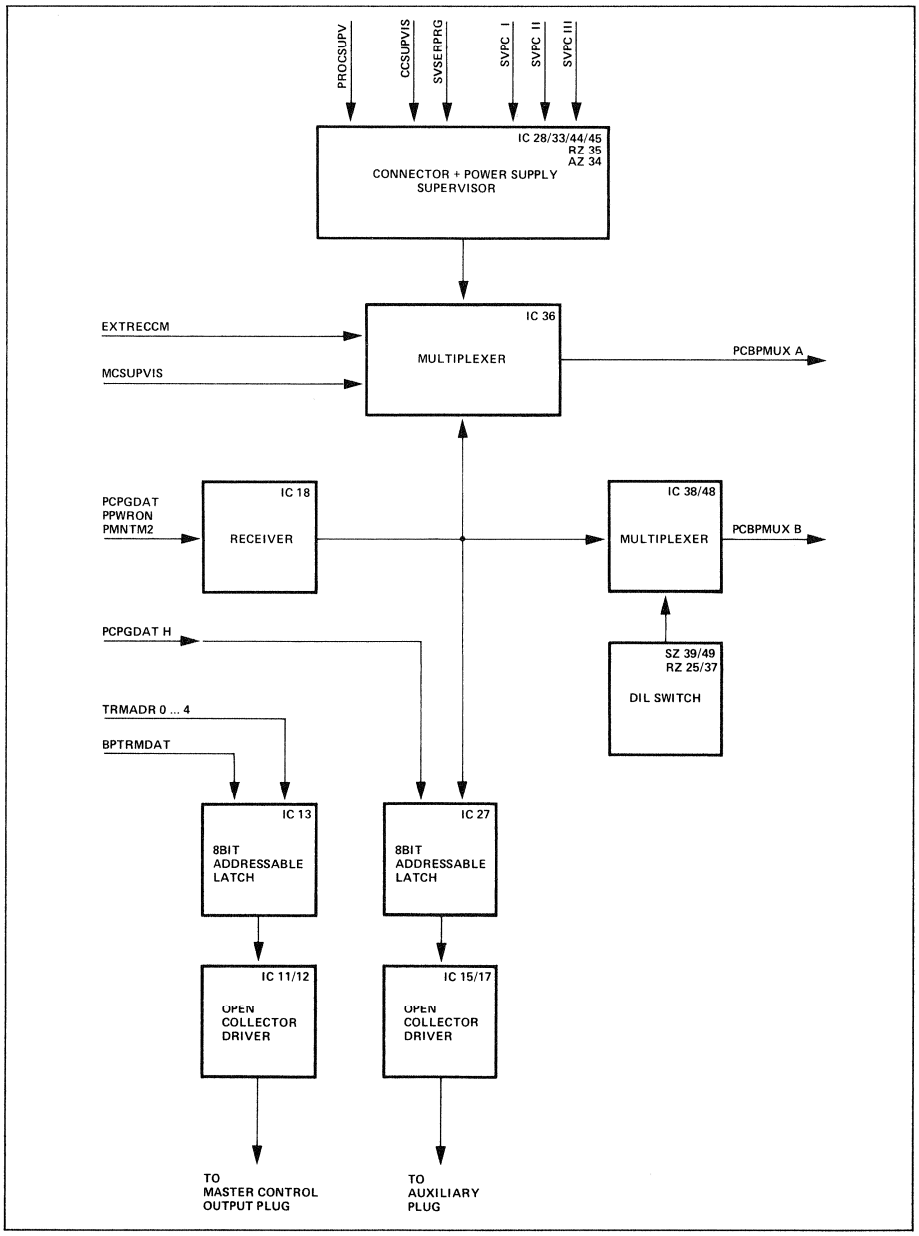

Fig. 3.17.2.1
Print-Blockschaltbild 1.228.489

Fig. 3.17.2.1
PCB block diagram 1.228.489

3.17.2.2
Abfragemultiplexer für die Peripheriesignale

Der Multiplexer IC 36 wird durch den PC-Pro-

3.17.2.2
Interrogation multiplexer for peripheral signals

The multiplexer IC 36 is driven by the PC pro-

grammdatenempfänger IC 18 (siehe 3.17.2.4) gesteuert.
Das Ausgangssignal PCBPMUXA wird zur Auswertung an die Peripheral Control B geführt.

gram data receiver IC 18 (see 3.17.2.4).
The output signal PCBPMUXA is connected to peripheral control B for evaluation.

3.17.2.3 DIL-Schalter mit Multiplexern

Mit den beiden Dual-In-Line (DIL) Schalter-Arrays auf den IC-Plätzen 39 und 49 können individuelle Anpassungen an das Slave-Laufwerk vorgenommen und Prioritätsvorgaben für die Übernahme von Peripheriesignalen gemacht werden.
Die verschiedenen Möglichkeiten sind im Kapitel 2 ab Seite 107 ausführlich beschrieben.
Die an den DIL-Schaltern eingestellten Werte sind an die Eingänge der Multiplexer IC 38 und 48 geführt. Sie werden via PC-Programmdatenempfänger IC 18 abgefragt.
Das gemeinsame Ausgangssignal PCBPMUXB wird von der Peripheral Control B ausgewertet.

3.17.2.3 DIL switches with multiplexers

With the two Dual-In-Line (DIL) switch arrays in IC locations 39 and 49, individual settings for the slave tape deck can be made and the priority for the reception of the peripheral signals can be established.
The various adjustment facilities are described in detail in section 2, page 107.
The values set with the DIL switches are available at the inputs of multiplexers IC 38 and 48. They are interrogated via PC program data receiver IC 18.
The common output signal PCBPMUXB is evaluated by the peripheral control B.

3.17.2.4 PC-Programmdatenempfänger

Er wird durch IC 18 gebildet. Am Eingang liegen Peripherieprogrammdaten, der Resetpuls PPWRON sowie das Zeitsignal PMNTM2.
Der Ausgang steuert die Adresseneingänge der Multiplexer für die Abfrage der Peripherie- und DIL-Schaltersignale IC's 36, 39 und 49 sowie die Ausgabe einiger Signale für die "AUX"- und Master Control Output"-Stecker.

3.17.2.4 PC program data receiver

It is implemented by IC 18. At its input, peripheral program data, the reset pulse PPWRON as well as the timing signal PMNTM2 are available.
The output controls the address inputs of the multiplexers for interrogating the peripheral and DIL switch signals IC 36, 39 and 49 as well as the output of certain signals for the "AUX" and "Master Control Output" plug.

3.17.2.5 Ausgabeschaltungen

Die Ausgabeschaltungen bestehen aus adressierbaren Zwischenspeichern und nachfolgenden Treibern mit offenen Kollektoren.

Die Adressierung des Zwischenspeichers IC 27 erfolgt über IC 18 durch die Peripherie Control B. Die Ausgabe auf die Treiber IC 15 und 17 wird durch das Signal PCPGDATH aktiviert.

Der Zwischenspeicher IC 13 wird durch die Transmissionaddress aus der Peripheral Control vorbereitet und durch BPTRMDAT aktiviert.
Es werden folgende Signale für den "Master Con-

3.17.2.5 Output circuits

The output circuits consist of addressable buffers and serially connected driver stages with open collectors.

The addressing of buffer IC 27 is controlled by peripheral control B via IC 18. The output to drivers IC 15 and 17 is activated by the PCPGDATH signal.

Buffer IC 13 is prepared by the transmission address from the peripheral control and is activated by BPTRMDAT.
The following signals are generated for the "Mas-

Befehl/Instructions	MCDAT0DR	MCDAT1DR	MCDAT2DR
Master Control OFF	1	1	1
Play	0	1	1
Pause	1	0	1
Record	0	0	1
Stop	1	1	0
Rückspulen/Rewind	0	1	0
Locate to Zero	1	0	0
Schnelles Vorspulen/Fast forward	0	0	0

Fig. 3.17.2.2

trol Output"-Stecker GR 98 EL 51 erzeugt:

MCDAT0DR, MCDAT1DR, MCDAT2DR
Diese drei Datenleitungen übertragen die Laufwerkbefehle zur Mastermaschine. Die Fig. 3.17.2.2 zeigt die Zusammensetzung der Signale.

MCDATRDY
Ist der zugehörige Ausführungstakt und wird etwas später als die Datenleitungen übertragen.

MCREHDR
Bedeutet "Master Control Rehearse Driver" und kann bei entsprechender Ausrüstung der Mastermaschine einen Rehearse-Vorgang aktivieren.

MCZSETDR
Bedeutet "Master Control Zero Set Driver" und ermöglicht bei entsprechender Ausrüstung der Mastermaschine das Rückstellen eines Bandzählers.

MCKCUTDR
Bedeutet "Master Control K-Cut Driver" und schaltet eine entsprechend ausgerüstete Mastermaschine in die EDIT-Funktion.

MCRESDR1
Unbenutzter Reserveausgang.

Für alle aufgeführten Signale gilt: "Active low", Kreis aktiv ≙ Pegel tief!

ter Control Output" plug GR 98 EL 51:

MCDAT0DR, MCDAT1DR, MCDAT2DR
These three data lines transmit the tape deck commands to the master machine. Fig. 3.17.2.2 illustrates the signal composition.

MCDATRDY
Represents the associated execution clock and is transferred somewhat later than the data lines.

MCREHDR
Signifies "Master Control Rehearse Driver" and can activate a rehearse operation if the master machine is equipped correspondingly.

MCZSETDR
Signifies "Master Control Zero Set Driver". If the master machine is equipped with the necessary features, it allows resetting of a tape counter.

MCKCUTDR
Signifies "Master Control K-Cut Driver" and switches a correspondingly equipped master machine into the EDIT mode.

MCRESDR1
Unallocated spare output.

The following applies to all signals listed:
"Active low", circuit active ≙ level low!

3.18/19/20
STABILIZER
1.228.418/419/420

A80 LOCATOR | A80 MASTER-CONTROL

STABILIZER
1.228.418/420/422

A800

Slave Rack Plätze 18, 19 und 20

Diese drei Prints dienen der Speisespannungsaufbereitung für das Slave Rack.
Jeder Print ist mit zwei Serieregleren und Filterelementen bestückt. Die Ausgänge sind durch Zenerdioden gegen Längskurzschluss geschützt.

1.228.418
Erzeugt aus +10 V zweimal +5 V.

1.228.419
Erzeugt aus +20 V/–20 V die Spannungen +12 V/–12 V.

1.228.420
Erzeugt aus +31 V/–10 V die Spannungen +24 V/–5 V.

1.228.422
Erzeugt aus +24 V/+10 V die Spannungen +12 V/+5 V.

Die Organisation der Spannungsversorgung ist aus den Figuren 3.18.1 und 2 ersichtlich.

3.18/19/20
STABILIZER
1.228.418/419/420

A80 LOCATOR | A80 MASTER-CONTROL

STABILIZER
1.228.418/420/422

A800

Slave rack locations 18, 19 and 20

These three prints prepare the supply voltage for the slave rack.
Each print is equipped with two series regulators and filters. The outputs are protected against series short circuits by Zener diodes.

1.228.418
Generates twice +5 V from +10 V.

1.228.419
Generates +12 V/–12 V from +20 V/–20 V.

1.228.420
Generates +24 V/–5 V from +31 V/–10 V.

1.228.422
Generates +12 V/+5 V from +24 V/+10 V.

The organization of the power supply is shown in Fig. 3.18.1 and 2.

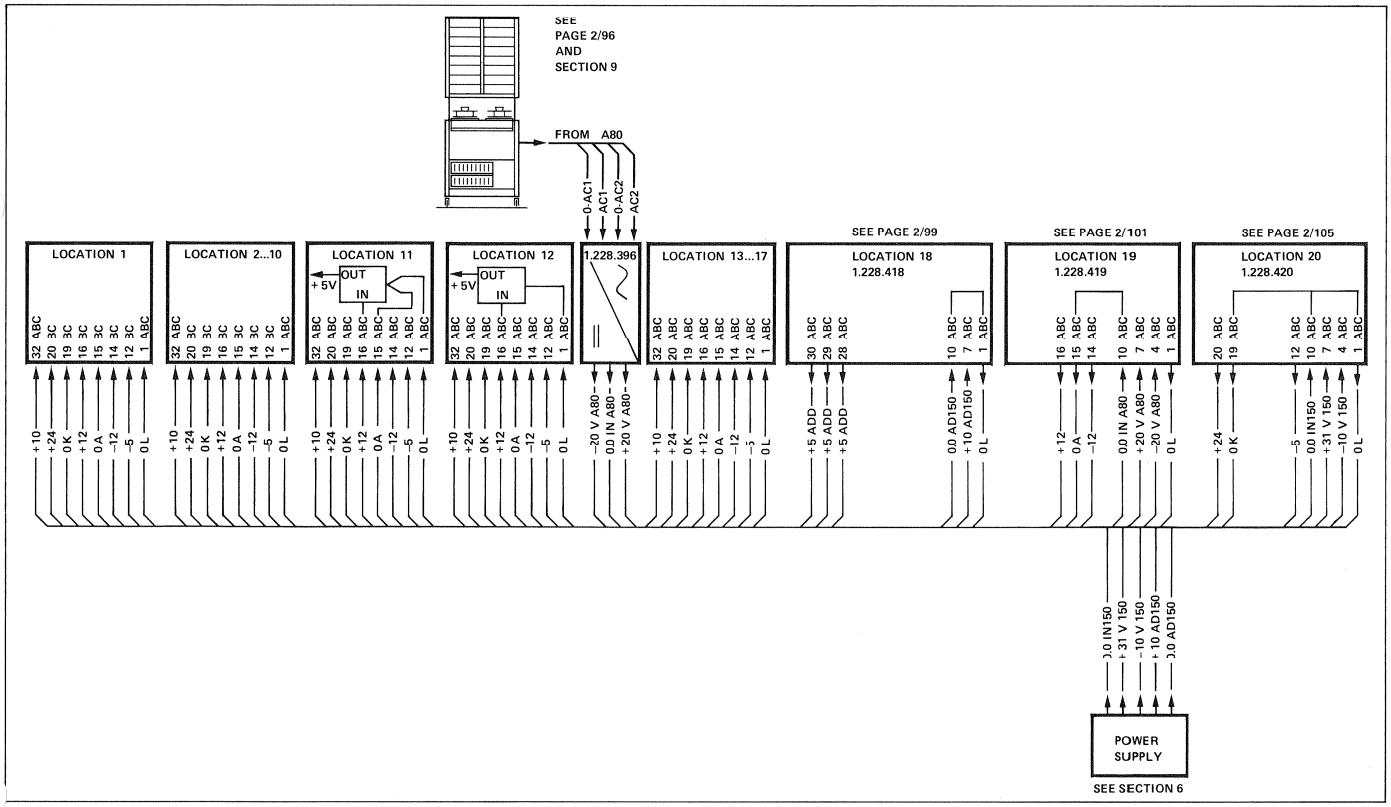

Fig. 3.18.1
Spannungsversorgung A80 Locator- und Master Control-Version

Fig. 3.18.1
Power supply of A80 locator and master control version

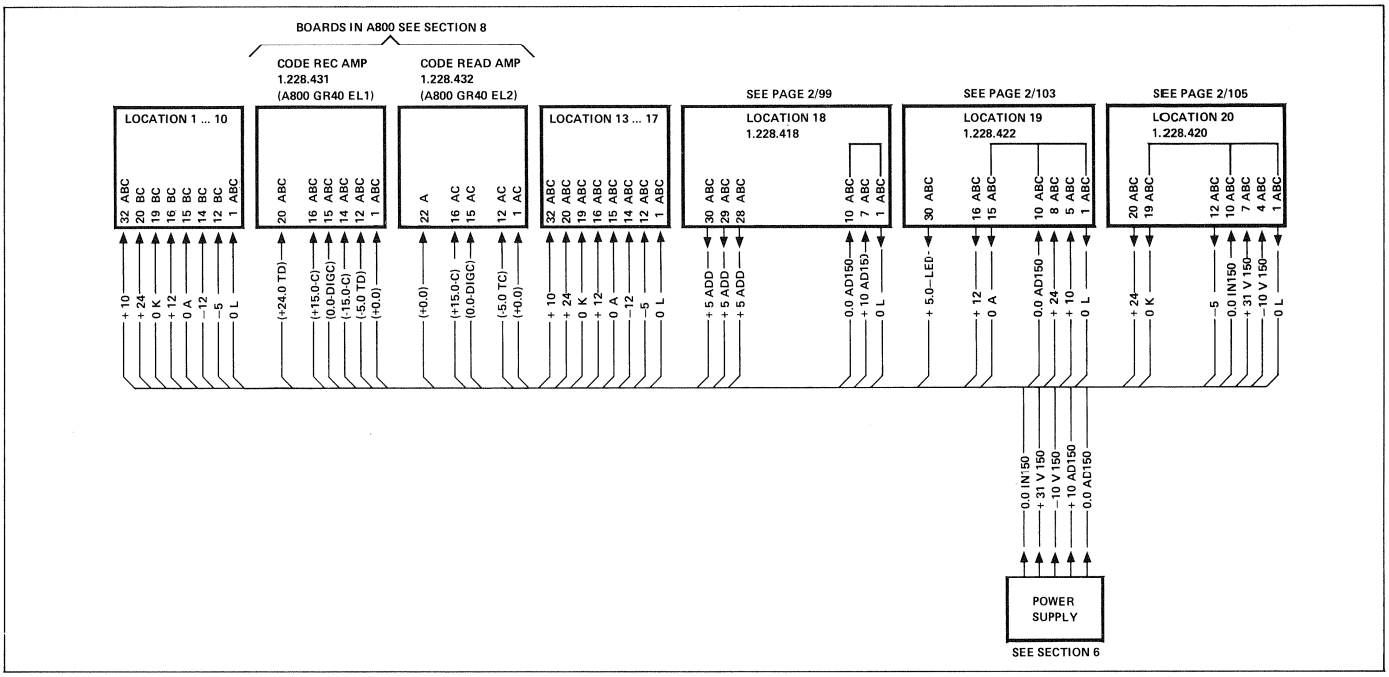

Fig. 3.18.2
Spannungsversorgung A800-Version

Fig. 3.18.2
Power supply of A800 version

A80 LOCATOR | A80 MASTER-CONTROL | A800

MASTER (CODE SOURCE)

AUDIO TRANSPORTS

A800

A80/OTHERS

7.3 ... 7.8

SECTION 7.3 ... 7.8:
VIDEO TRANSPORTS

SECTION 7.2:
SWITCH SET
1.228.373

7

SECTION 7.1: INTERFACE RACK
1.228.890

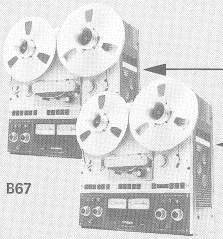

B67

7.9

7.9

7.9

7.9

SECTION 7.9:
ADDRESS START INTERFACE
1.228.374 (1.228.623)

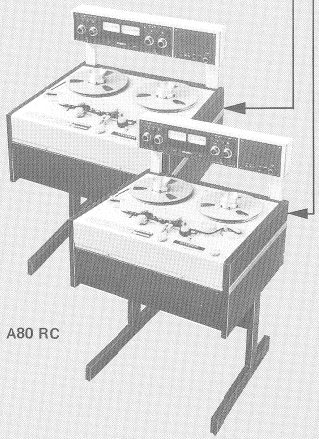

A80 RC

25/50

8000

SECTION 7.10:
EXTERNAL FREQUENCY
CONTROLLER 1.228.601

SPROCKET
FILM TRANSPORT

STATION SYNC
FREQUENCY, CODE

SLAVE PROCESSOR RACK

SECTION 2: SCHEMATIC DIAGRAMS
RACK LOCATIONS 1-20, LAYOUTS,
PARTS LIST, JUMPER SETTING

SECTION 3: CIRCUIT DESCRIPTION
RACK LOCATIONS 1-20

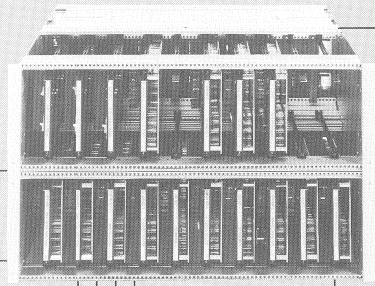

SECTION 4:
BACK PANELS
ORGANIZATION
AND
WIRING GR 99

(REAR OF RACK)
SECTION 5:
CONNECTION
FIELDS
RACK ELEMENTS
UPPER PART GR 98,
LOWER PART GR 97

SLAVE PERIPHERAL EQUIPMENTS

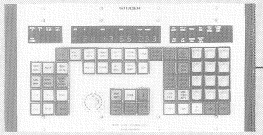

6.1

SECTION 6.1: MAIN PROGRAMMER
1.228.460 (461)

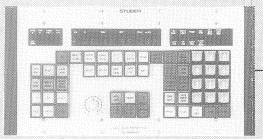

6.1

SECTION 6.1: MAIN PROGRAMMER
1.228.460 (461)

6.3

SECTION 6.3: PARALLEL/ SERIAL
CONVERTER
1.228.490

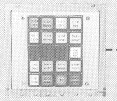

6.6

SECTION 6.6: BASIC PROGRAMMER
1.228.380

6.4

SECTION 6.4: POWER SUPPLY
1.228.150

6.2

SECTION 6.2: CODE CHANNEL REMOTE CONTROL
1.228.328

6.5

SECTION 6.5: POWER SUPPLY
1.228.170

SLAVE TRANSPORTS

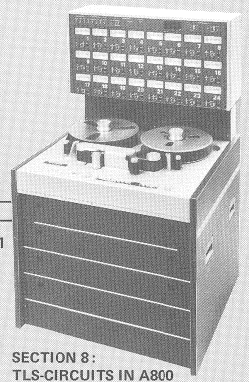

8

8.1

SECTION 8:
TLS-CIRCUITS IN A800
1.180.086

SECTION 8.1:
CODE CHANNEL
REMOTE CONTROL A800
1.328.140

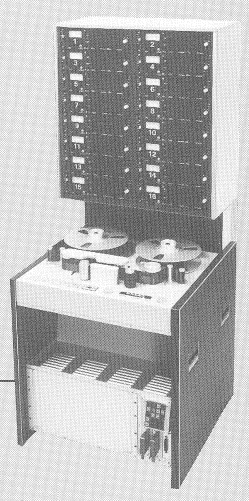

9

SECTION 9:
TLS-MODIFICATIONS AND CIRCUITS
IN A80 VU MK II / MK III

☒ INDICATES PARAGRAPH OF CABLE DESCRIPTION

CONTENTS SECTION 4

BACK PANELS

SECTION	PAGE	DESCRIPTION
4.1	4/3	VERSIONS
4.2	4/5	CLASSIFICATION OF GROUPS
4.3	4/7	NUMERATION OF THE BACK PANEL PLUGS
4.4	4/8	DESCRIPTION OF WIRING LISTS AND TYPES OF CONNECTORS
4.5	4/10	SIGNAL NAMES
4.6	4/16	WIRING LISTS

4.1 VARIANTEN

Das Back Panel des Slave Rack weist je nach der Tonbandmaschinenversion, mit der es betrieben wird, eine andere Verdrahtung auf.
Die 3 gebräuchlichsten Versionen sind im folgenden schematisch gezeigt.

4.1 VERSIONS

The back panel of the slave rack is wired according to the taperecorder version it belongs to.
The 3 most common versions are shown subsequently.

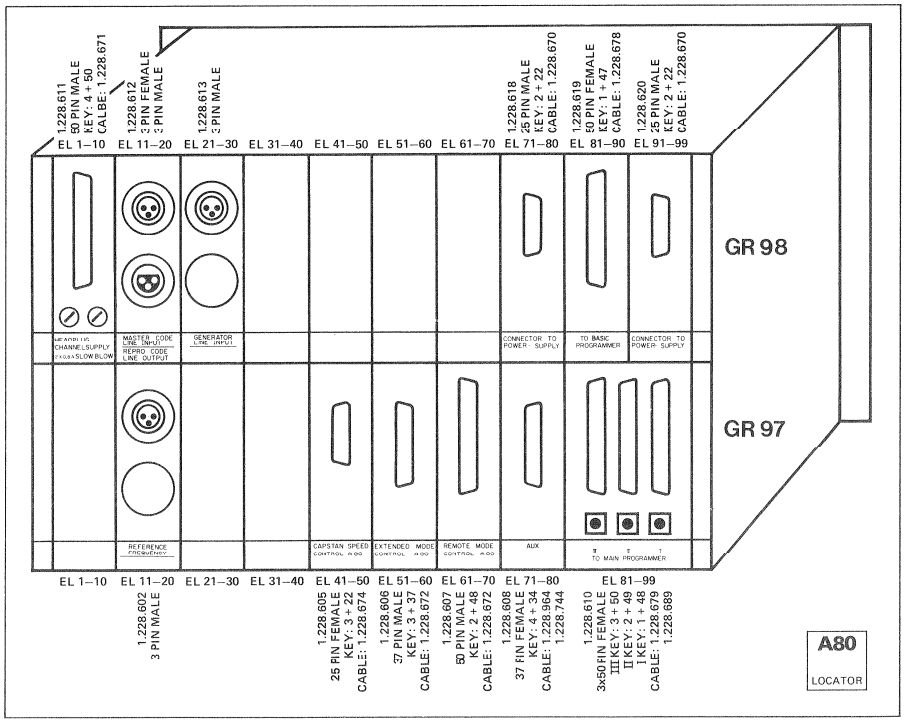

Fig. 4.1

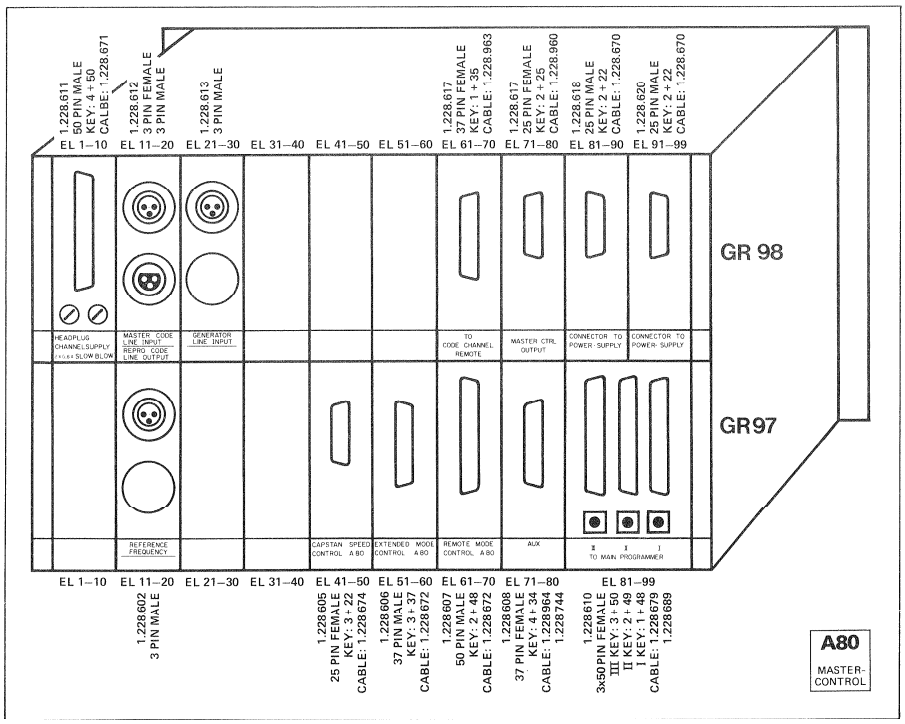

Fig. 4.2

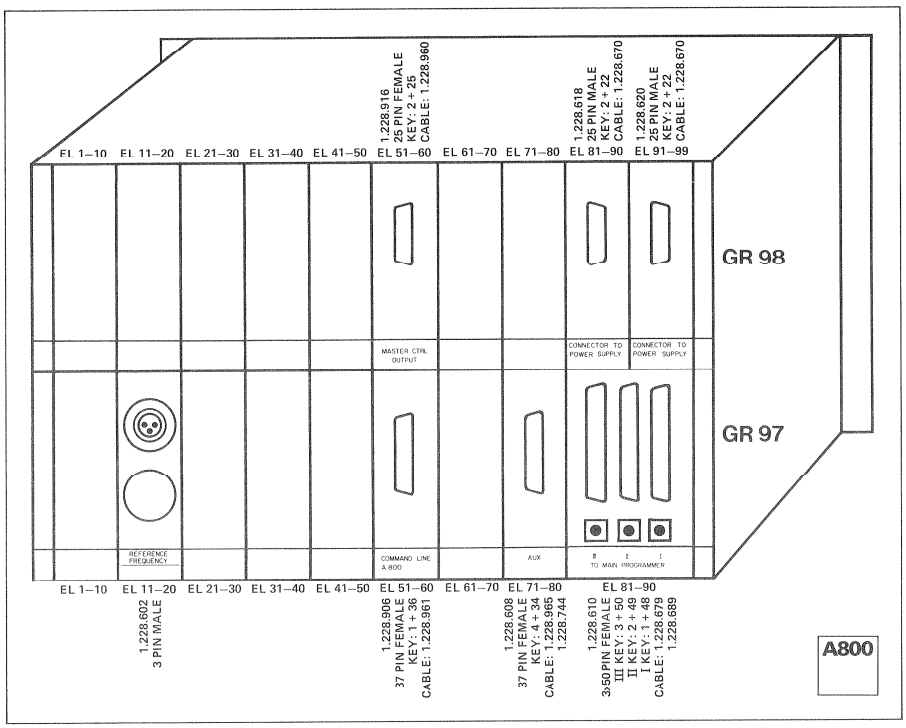
1.228.916
25 PIN FEMALE
KEY: 2 + 25
CABLE: 1.228.960
1.228.618
25 PIN MALE
KEY: 2 + 22
CABLE: 1.228.670
1.228.620
25 PIN MALE
KEY: 2 + 22
CABLE: 1.228.670
EL 1–10
EL 11–20
EL 21–30
EL 31–40
EL 41–50
EL 51–60
EL 61–70
EL 71–80
EL 81–90
EL 91–99
GR 98
GR 97
MASTER CTRL OUTPUT
CONNECTOR TO POWER SUPPLY
CONNECTOR TO POWER SUPPLY
REFERENCE FREQUENCY
COMMAND LINE A 800
AUX
III II I
TO MAIN PROGRAMMER
EL 1–10
EL 11–20
EL 21–30
EL 31–40
EL 41–50
EL 51–60
EL 61–70
EL 71–80
EL 81–90
1.228.602
3 PIN MALE
1.228.906
37 PIN FEMALE
KEY: 1 + 36
CABLE: 1.228.961
1.228.608
37 PIN FEMALE
KEY: 4 + 34
CABLE: 1.228.965
1.228.744
1.228.610
3:50PIN FEMALE
III KEY: 3 + 50
II KEY: 2 + 49
I KEY: 1 + 48
CABLE: 1.228.879
1.228.689
A800

Fig. 4.3

4.2 GRUPPENEINTEILUNG

Bei Geräten mit umfangreicher Elektronik sind Verdrahtungsschaltbilder unübersichtlich und können Anlass zu Fehlinterpretationen geben. Deshalb wurde hier die zuverlässigere Methode mit Computerlisten gewählt. Diese informieren lückenlos über jede Verbindung innerhalb der gesamten Elektronik.

Zur besseren Übersicht ist das TLS 2000 in Gruppen (GR) unterteilt. Da diese Gruppen sehr umfangreich sein können, sind sie in Elemente (EL) gegliedert. Innerhalb eines Elementes ist der Punkt (PT) Träger der Verbindung.

4.2 CLASSIFICATION OF GROUPS

It is impractical to design wiring diagrams for equipment containing extensive electronic circuitry. The cluttered diagrams could lead to misinterpretations. We have therefore opted for the more reliable computergenerated wiring lists which give complete data on all the interconnections within the entire electronics.

The whole electronics of the TLS 2000 has been broken down into various assemblies or component groups (GR) to improve readability. The individual component groups in turn are coded as elements (EL) and points (PT).

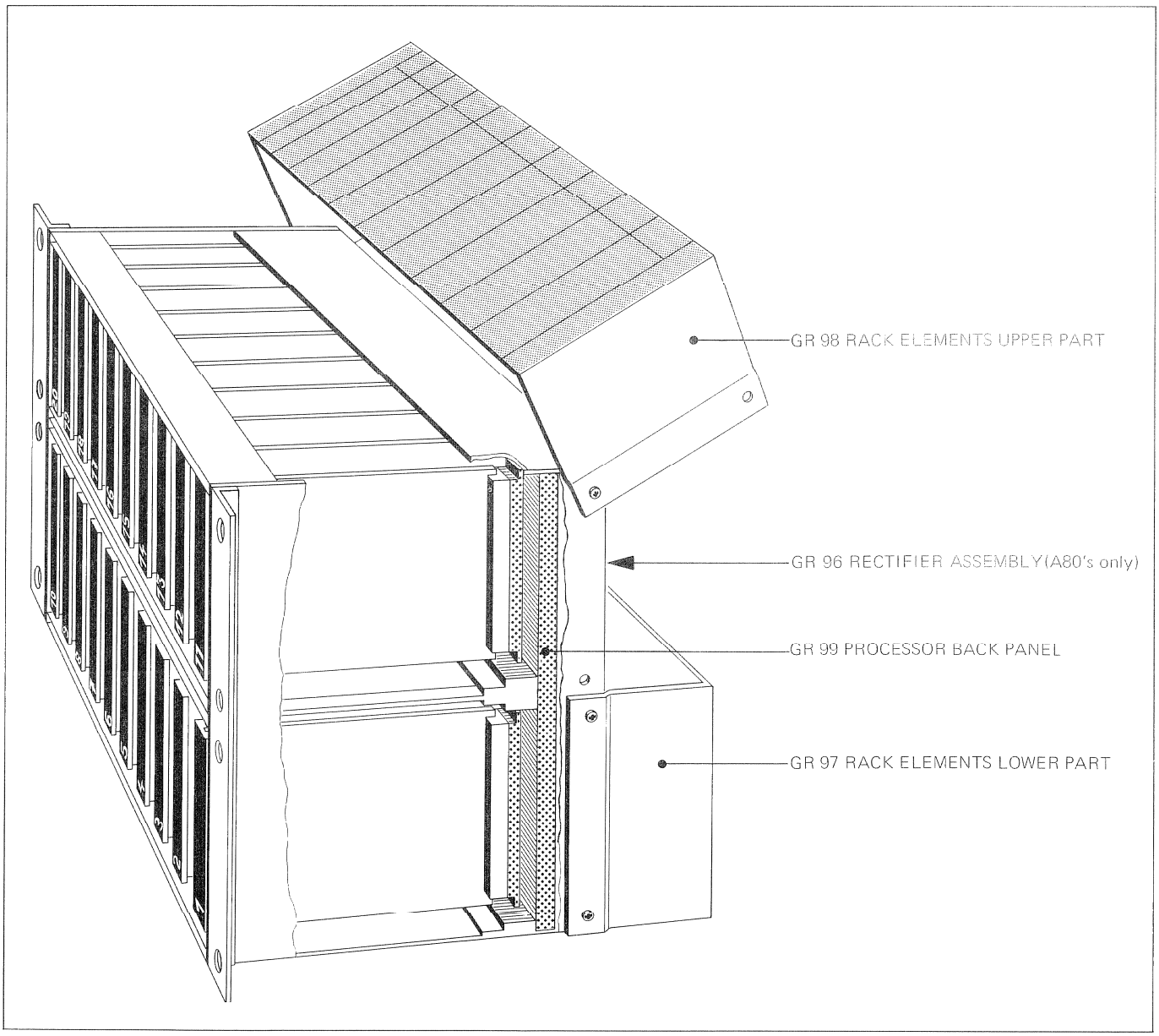

Fig. 4.4

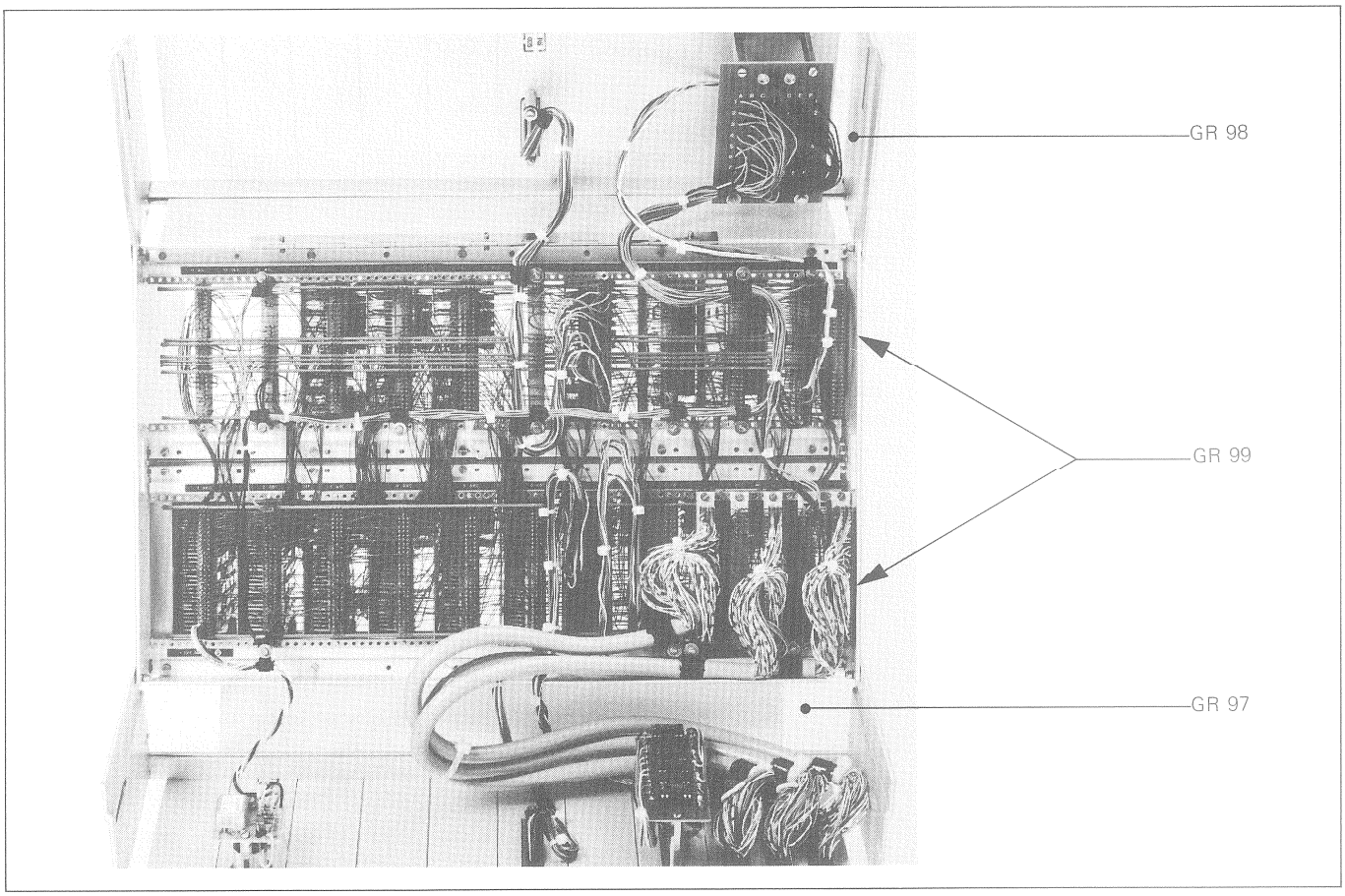

Fig. 4.5

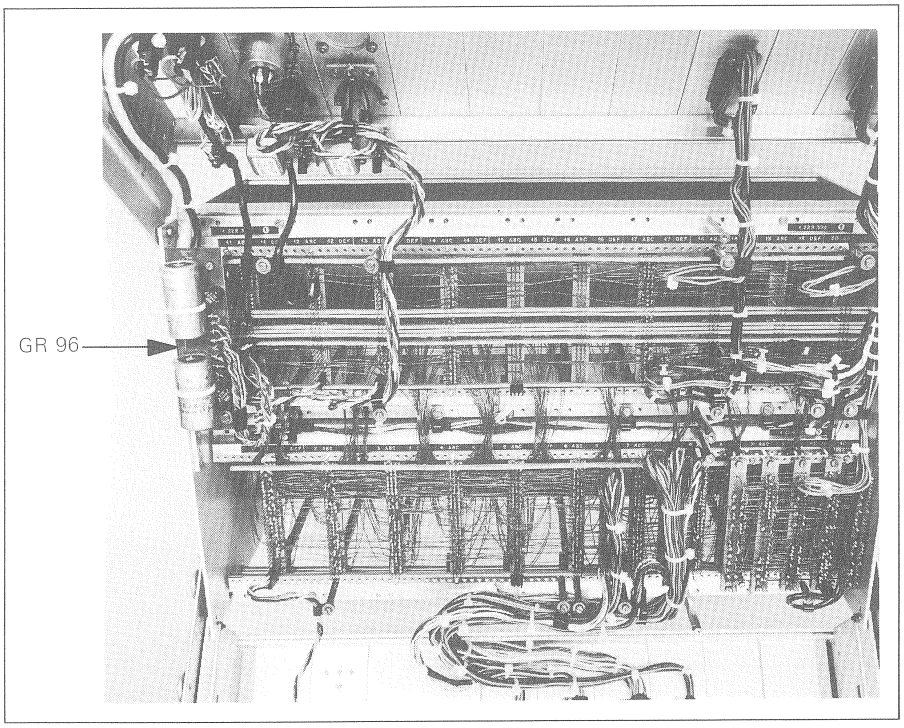

Fig. 4.6

4.3 NUMERIERUNG DER BACK PANEL STEKKER

4.3 NUMERATION OF THE BACK PANEL PLUGS

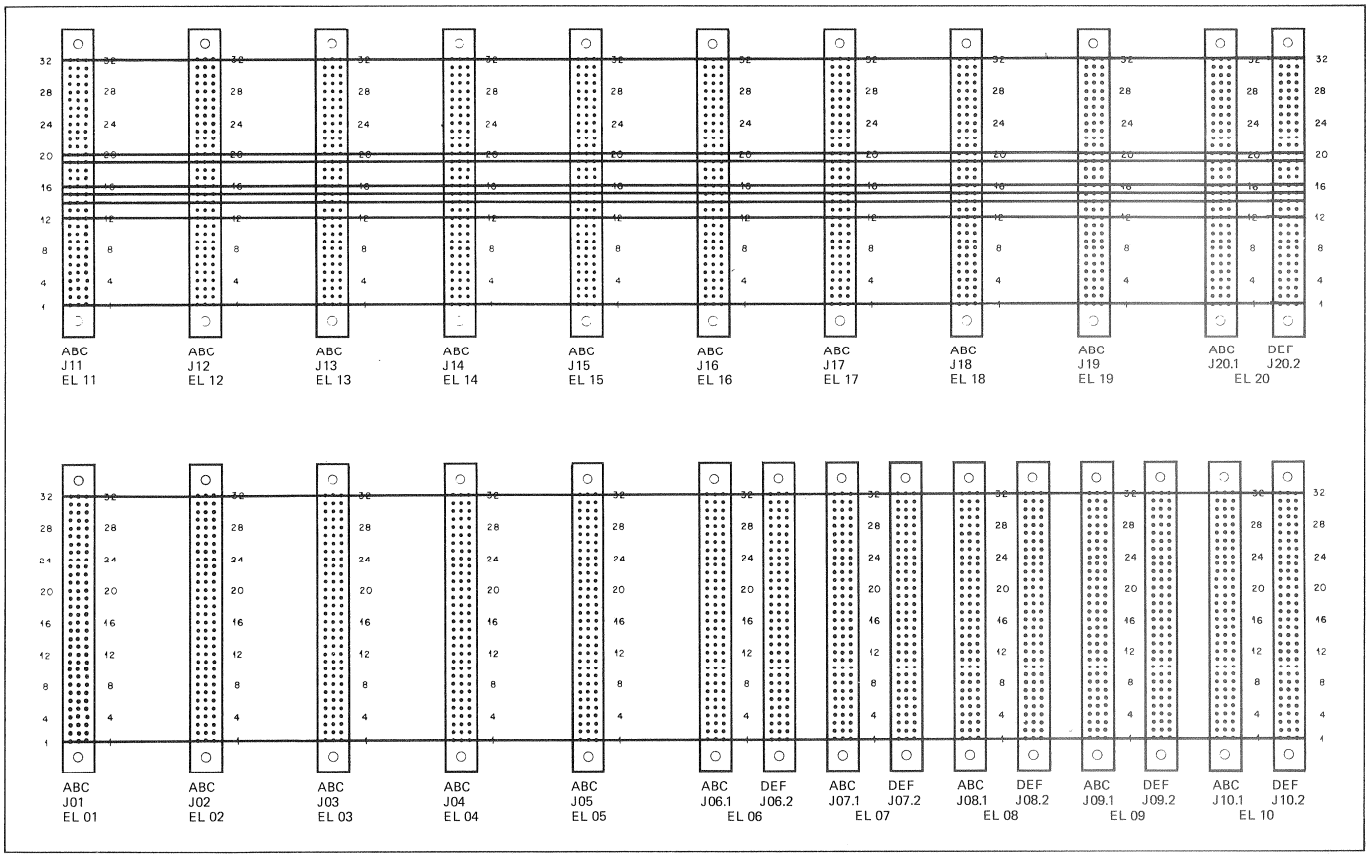

Fig. 4.7

Die Gruppe 99 weist 2 Reihen von Steckern auf. Die untere Reihe ist von links nach rechts mit EL1 bis EL10 numeriert, die obere Reihe mit EL11 bis EL20.
Die Stecker tragen den Buchstaben J und die entsprechende Elementnummer (siehe Fig. 4.8). Bei Elementen, die 2 Stecker aufnehmen (6–10 und 20), tragen die Stecker die Elementnummer mit Index .1 resp. .2 von links nach rechts.

Bsp.: EL06 trägt die Stecker J06.1 und J06.2.

Die Anschlüsse auf den Steckern sind wieder numeriert:
Jeder Stecker enthält 3 Kolonnen, die von links nach rechts mit den Buchstaben A, B und C gekennzeichnet sind. Bei Elementen mit 2 Steckern trägt der rechte Stecker die Kolonnenbezeichnungen D, E und F.
Die Anschlussstifte jeder Kolonne sind von unten nach oben mit den Zahlen 1–32 numeriert. Mit diesem System wird jedem Anschlussstift eine eindeutige Nummer zugeordnet.

Bsp.: GR 99 EL05 B12 oder
GR 99 EL06 E4

Group 99 contains 2 levels of plugs. The lower level consists of the elements 1 to 10 numbered from left to right. The upper level carries the elements 11 to 20.
The plugs are labelled with the letter J and the same number as the element (see fig. 4.8).
If an element contains 2 plugs (6–10 and 20), the plugs are labelled with the number of the element and an index .1 or .2 from left to right.

e.g.: EL06 consists of plugs J06.1 and J06.2.

The connection pins on the plugs are also numbered:
Every plug contains 3 rows of pins which are designated with the letters A, B and C. If an element carries 2 plugs, the rows of the additional plug are labelled with the letters D, E and F. The pins of every row are numbered from the bottom to the top.
With this system every pin is identified definitely.

e.g.: GR 99 EL05 B12 or
GR 99 EL06 E4

Gewisse Anschlüsse auf dem Back Panel sind auf der ganzen Breite miteinander verbunden (siehe Fig. 4.7). Die Signale, die an diesen Stiften anliegen, sind nachstehend aufgeführt:

Pin 1 (EL 1–EL10): Logisch 0
Pin32 (EL 1–EL10): +10Volt
Pin 1 (EL11–EL20): Logisch 0
Pin12 (EL11–EL20): WBPRES03
Pin14 (EL11–EL20): WBPRES04
Pin15 (EL11–EL20): WBPRES05
Pin16 (EL11–EL20): Wire001
Pin19 (EL11–EL20): Chassis 0Volt
Pin20 (EL11–EL20): +24Volt
Pin32 (EL11–EL20): +10Volt

Some pins on the back panel are interconnected by a bar (see fig. 4.7). The signals on these bars are listed subsequently:

Pin 1 (EL 1–EL10): Logic 0
Pin32 (EL 1–EL10): +10Volts
Pin 1 (EL11–EL20): Logic 0
Pin12 (EL11–EL20): WBPRES03
Pin14 (EL11–EL20): WBPRES04
Pin15 (EL11–EL20): WBPRES05
Pin16 (EL11–EL20): Wire001
Pin19 (EL11–EL20): Chassis 0Volts
Pin20 (EL11–EL20): +24Volts
Pin32 (EL11–EL20): +10Volts

4.4 ERKLÄRUNG DER VERDRAHTUNGSLISTEN UND ANSCHLUSSTYPEN

Die Signalnamen sind in den Schaltschemata und Blockdiagrammen meist gekürzt angegeben. Um diese Abkürzungen interpretieren zu können, ist in Abschnitt 4.5 eine vollständige Liste aller im TLS 2000 verwendeten Signale mit ihren Abkürzungen abgedruckt.
Werden zu bestimmten Signalnamen die zugehörigen Verbindungen gesucht, so gibt die SIGNAL WIRE LIST Auskunft.

4.4 DESCRIPTION OF WIRING LISTS AND TYPES OF CONNECTORS

The signals are mostly indicated with their abbreviations in schematics and block diagrams. In section 4.5 you find a complete list of all signals used in the TLS 2000 including their abbreviations.
If you know a signal name and you are looking for the adequate connections please, consult the SIGNAL WIRE LIST.

```
*  S T U D E R  *    S I G N A L    W I R E    L I S T              *   82/01/08 * 15:12     *  P A G E    33   *
TAPE LOCK SYSTEM 2000 A80: LOCATOR, PARALLEL PROGRAMMER       1.228.375.00            79-10-05

SIG.NAME COLOR TYPE GR EL PT  S DESCRIPTICN OF ELEMENT          SIG.NAME COLOR TYPE GR EL PT  S DESCRIPTION OF ELEMENT
-------- ----- ---- -- -- --- - ------------------------------  -------- ----- ---- -- -- --- - ------------------------------
(CONT.)          W    99 15 26A   WRAP CCNNECTOR J15.1, 3*32 PIN (CONT.)  3     L    98 01 01    HEADPLUG/CHANNEL SUPPLY
                                                                          3     WQ + 99 11 08C   WRAP CONNECTOR J11.1, 3*32 PIN
ACPGDATI         W    99 04 28A   WRAP CONNECTOR J04.1, 3*32 PIN          7     WQ + 99 11 10C   WRAP CONNECTOR J11.1, 3*32 PIN
                 W    99 15 27A   WRAP CCNNECTOR J15.1, 3*32 PIN
                                                                   ADCDATAA 2     B    97 93 09    CONN. ASS. TO MAIN PROGR. (JIII)
ACPGDATK         W    99 04 29A   WRAP CONNECTOR J04.1, 3*32 PIN              W    99 09 17A   WRAP CONNECTOR J09.1, 3*32 PIN
                 W    99 15 28A   WRAP CONNECTOR J15.1, 3*32 PIN              2    WQ   99 10 09D   WRAP CONNECTOR J10.2, 3*32 PIN
```

Ist hingegen die Gruppenbezeichnung oder -nummer bekannt, können die ankommenden oder wegführenden Signale anhand der LOCATION PIN LIST identifiziert werden.

If you know the number of the component group, and you want to find a signal name, the LOCATION PIN LIST will help you.

```
*  S T U D E R  *     L O C A T I O N    P I N    L I S T      *   82/01/08 * 15:12     *  P A G E     2   *
TAPE LOCK SYSTEM 2000 A80: LOCATOR, PARALLEL PROGRAMMER       1.228.375.00            79-10-05

GR: 96   1.228.396.00                  GR: 97   1.228.397.00                  GR: 97   (CONTINUATION)
RECTIFIER ASSEMBLY                     RACK ELEMENTS LOWER PART               RACK ELEMENTS LOWER PART
**************************************  **************************************  **************************************

EL: 01  RECTIFIER ASSEMBLY             EL: 13  REFERENCE FREQUENCY INPUT      EL: 51  EXTENDED REMOTE MODE CONTROL
---------------------------------------  ---------------------------------------  ---------------------------------------
TYPE PT  LV SIG.NAME CCLCR F    X     Y  TYPE PT  LV SIG.NAME COLOR F    X     Y  TYPE PT  LV SIG.NAME COLOR F    X     Y
---- --- -- --------- ----- - ----- -----  ---- --- -- --------- ----- - ----- -----  ---- --- -- --------- ----- - ----- -----
L    01  1% 0.0INA80 0,0                  L    01  1  EXFRQSCR 0                    A    01  1  +0.0EMC1 0
L    02  1  -20V A80 1,1                                                                 02  1
L    03  1  +20V A80 3,3                  EL: 14  REFERENCE FREQUENCY INPUT           03  0  KEY
L    04  1% 0.0INA80 0                    ---------------------------------------  A    04  1  Y-MOD1   8
```

Beide Listen sind nach verschiedenen Begriffen geordnet, die nachstehend erklärt werden.

Signal Wire List

SIG. NAME
Name des Signals, alphabetisch geordnet (ein vollständiges Verzeichnis aller Signalnamen befindet sich in Abschnitt 4.5).

COLOR
Drahtfarbe gemäss dem Widerstandsfarbcode:

0 = schwarz
1 = braun
2 = rot
3 = orange
4 = gelb
5 = grün
6 = blau
7 = violett
8 = grau
9 = weiss

TYPE

Both tables are subdivided into several headings which are explained subsequently.

Signal Wire List

SIG. NAME
Name of the signals in alphabetical order (you find a complete list of all signal names in section 4.5).

COLOR
Color of the wire according to the resistor color code:

0 = black
1 = brown
2 = red
3 = orange
4 = yellow
5 = green
6 = blue
7 = violet
8 = grey
9 = white

TYPE

TYPE	BEZEICHNUNG	DESCRIPTION	PART NO.
	Stecker Typ D, Crimp:	Connector, D-type, crimp:	
A	Kontaktstift, für dünne Litzen	contact pin, for thin stranded wires	54.02.0451
AA	Kontaktstift, für dicke Litzen	contact pin, for heavy stranded wires	54.02.0455
B	Kontaktbuchse, für dünne Litzen	contact socket, for thin stranded wires	54.02.0450
BB	Kontaktbuchse, für dicke Litzen	contact socket, for heavy stranded wires	54.02.0454
	CIS-Stecker:	CIS connector:	
C	Kontaktbuchse	contact socket	54.01.0402
D	Kontaktstift	contact pin	54.01.0401
	MOLEX-Stecker:	MOLEX connector:	
F	Kontaktbuchse, für dünne Litzen	contact socket, for thin stranded wires	54.02.0412
FF	Kontaktbuchse, für dicke Litzen	contact socket, for heavy stranded wires	54.02.0413
G	Lötstift	Solder hook	29.21.6002
H	Litze, Draht, verzinnt (6 mm)	Wire, stranded wire, tinned (6 mm)	–
I	Stecker, Typ D, Crimp, Kontaktstift	Connector, D-type, crimp, contact pin	54.02.1112
	Flachstecker (AMP, FASTON), 0,8 x 6,3 mm:	Flat connector (AMP, FASTON), 0.8 x 6.3 mm:	
JM	Steckerhülse, Crimp, für dünne Litzen	contact, female, crimp, for thin stranded wires	54.02.0337
J	Steckerhülse, Crimp, für dicke Litzen	contact, female, crimp, for heavy stranded wires	54.02.0332
JJ	Steckerhülse, Crimp, für sehr dicke Litzen	contact, female, crimp, for very heavy stranded wires	54.02.0338
K	8 mm abisoliert, 1 mm verzinnt	8 mm stripped, 1 mm tinned	–
L	Litze, Draht, verzinnt (4 mm)	Wire, stranded wire, tinned (4 mm)	–
M	Kontaktstift (MOLEX), für dünne Litzen	contact pin (MOLEX), for thin stranded wires	54.02.0411
MM	Kontaktstift (MOLEX), für dicke Litzen	contact pin (MOLEX), for heavy stranded wires	54.02.0410
MY	AMP-Flachstecker (Zunge)	AMP flat connector (blade)	54.02.0344
N	CIS-Stecker, Kontaktstift	CIS connector, contact pin	54.01.0225
O	Kontaktfeder zu Europakartenstecker	Contact spring to EURO card connector strip	54.01.0376
	Print-Federleiste:	P. c. board contact strip:	
P	Kontaktfeder, für dünne Litzen	contact spring, for thin stranded wires	54.06.4512
PP	Kontaktfeder, für dicke Litzen	contact spring, for heavy stranded wires	54.06.4510
Q	Buchsenleiste, Kontaktbuchse	Socket strip, contact socket	54.01.0451
R	Stecker, Typ D, Crimp, Kontaktbuchse	Connector , D-type, crimp, contact socket	54.02.1111
S	4 mm abisoliert, verzinnt	4 mm stripped, tinned	–
T	TERMI-POINT Steckkontakt auf Wire-Wrap-Stift	TERMI-POINT wire-wrap pin for plug connection	–
U	Rast-Lötkontakt, Crimp	Detent-spring solder contact, crimp	54.03.0201
UU	Rast-Lötkontakt, Crimp	detent-spring solder contact, crimp	54.34.6002
V	Steckerhülse für dicke Litzen	Contact, female, for heavy stranded wires	54.02.0432
VV	Steckerhülse für dünne Litzen	contact, female, for thin stranded wires	54.02.0474
W	Wrappen	To wrap	-
	Flachstecker, (AMP, FASTON) 0,6 x 2,8 mm:	Flat connector (AMP, FASTON) 0.6 x 2.8 mm:	
X	Steckerhülse, Crimp, für dünne Litzen	contact, female, crimp, for thin stranded wires	54.02.0325
XX	Steckerhülse, Crimp, für dicke Litzen	contact, female, crimp, for heavy stranded wires	54.02.0329
	Flachstecker, (AMP, FASTON) 0,8 x 2,8 mm:	Flat connector (AMP, FASTON) 0.8 x 2.8 mm:	
Y	Steckerhülse, Crimp, für dünne Litzen	contact, female, crimp, for thin stranded wires	54.02.0326
YY	Steckerhülse, Crimp, für dicke Litzen	contact, female, crimp, for heavy stranded wires	54.02.0327
Z	Nicht verzinnt	Not tinned	–

GR = GRUPPE
Das TLS 2000 ist in mehrere Gruppen unterteilt. Als Gruppen gelten Printkarten, Einschübe oder ein Rack.

EL = ELEMENT
Gruppen, die über mehrere Einheiten verfügen, sind in Elemente aufgeteilt.

PT = PUNKT
Auf den Elementen sind die Träger der elektrischen Verbindung die Anschlusspunkte (PT).

DESCRIPTION OF ELEMENT
Bezeichnung des Bauteils, zu welchem der genannte Anschlusspunkt gehört.

Location Pin List

TYPE
Anschlusstyp (siehe Anschlusstyp bei der SIGNAL WIRE LIST).

PT = PUNKT
Nummer des Anschlusspunktes.

LEVEL
Verdrahtungsebene (vor allem bei Wrapverbindungen). Verbindungen, die nebst der Nummer ein Spezialzeichen tragen, wurden nicht vom Wrapautomaten verdrahtet, sondern spezifisch für die vorliegende Version angebracht.

SIG. NAME
Signalname

COLOR
Drahtfarbe gemäss Widerstandsfarbcode.

4.5 SIGNALNAMEN

Auf den folgenden Seiten finden Sie alle Signale, die im TLS 2000 auftreten mit ihren Abkürzungen. Die Liste ist alphabetisch geordnet.

GR = GROUP
The TLS 2000 is subdivided into several groups. Groups are PCBs, modules or a rack.

EL = ELEMENT
Groups which consist of various modules are subdivided into elements.

PT = POINT
The elements contain the connecting points (PT).

DESCRIPTION OF ELEMENT
Description of the element, the connection terminal belongs to.

Location Pin List

TYPE
Type of connection (see SIGNAL WIRE LIST).

PT = POINT
Number of the connection point

LEVEL
Wiring level (mainly for wrap connections). Connections which contain a special letter additionally have not been wired by the automatical wrapping machine. They are provided specifically for the present version.

SIG. NAME
Name of the signal

COLOR
Color of the wire according to the resistor color code.

4.5 SIGNAL NAMES

You find a complete list of all signals used in the TLS 2000 with their abbreviations on the following pages. The signal names appear in alphabetical order.

Beschreibung der abgekürzten Signalnamen	Description of abbreviated signal names
+ 5 ADD	Additional 5 V
ACBIF1	Arithmetic control B IF 1
ACIFGRP	Arithmetic control test group
ACIFMUXA	Arithmetic control test multiplexer A
ACINSTEN	Arithmetic control instruction enable
ACPGAD 0...11	Arithmetic control program address 0...11
ACPGDATA...N	Arithmetic control program data A...N
ACKNLG	Acknowledge
ACPGIRPT	Arithmetic control program interrupt
ACSERDAT	Arithmetic control serial data
ACSP-09	Arithmetic control single pulse
ACSPCAP	Arithmetic control single pulse capstan
ACSPGRP1...3	Arithmetic control single pulse group 1...3
ACTAPFLG	Arithmetic control test additional program flags
ADCDATAA...E	Analog digital converter data A...E
ADD	Bulb add
ADDRCT-A...K	Addresscounter A...K
ADV RET	Bulb advance-retard
AREN1/AREN2	Arithmetic enable 1/2
ARIF-Y	Arithmetic test output Y
ARPOUT-A...F	Arithmetic parallel output A...F
ARSEROUT	Arithmetic serial output
AUXDATIN	Auxiliary data input
AUXDRINA	Auxiliary driver input A
AUXDROA	Auxiliary driver output A
AUXRCOA	Auxiliary receiver output A
A800DATA	Data from and to A800
A800 SUPV	A800 cable supervisor
B-CALC	Bulb calculate register
B-CCHRDY	Bulb code channel ready
B-ENTRYM	(Bulb entrypoint master) Bulb start point slave
B-EXITSL	Bulb exitpoint slave
B-CCHRDY	Bulb code channel ready
B-CCHREC	Bulb code channel record
B-CCHREP	Bulb code channel reproduce
B-CCHSAF	Bulb code channel safe
B-CCHSYN	Bulb code channel sync
B-GEN=M	Bulb generator = Master
B-GENUSB	Bulb generator user bits
B-LAMPT	Bulb lamp test
B-LKMBP	Bulb lock mode basic programmer
B-LOWLIM	Bulb lower limit
B-NOMAST	Bulb no master
B-NOMBP	Bulb no master basic programmer
B-NOSCOD	Bulb no slave code
B-OUT=N	Bulb output = input
B-PHAS	Bulb phasing
B-PILOT	Bulb pilot
B-RECENB	Bulb record enabled
B-REHEAR	Bulb rehearse
B-REMOTE	Bulb remote
B-TDSYNC	Bulb tape deck synchronous
B-TX	Bulb transmission
B-UPPLIM	Bulb upper limit
BADRSTRT	Bulb address start
BBPRES09	Bulb basic programmer reserve
BEDMMPRG	Bulb edit mode main programmer
BENT/PKS	Bulb entry point slave
BLKDSP 0...8	Blank display 0...8
BLKMMPRG	Bulb lock mode main programmer

BLOCATOR	Bulb locator/master control
BOFFSREG	Bulb offset register
BPILMPRG	Bulb pilot main programmer
BPKMMPRG	Bulb start edit mode main programmer
BPLATEN	Basic programmer latch enable
BPSUPVIS	Basic programmer supervisor
BPTRMDAT	Basic programmer transmission data
BTCTA-M	Bit counter master (A...G)
BTCTA-S	Bit counter slave (A...G)
BTCTOF-M	Bit counter overflow-master
BTCTOF-S	Bit counter overflow-slave
BULBDP..	Unused bulbs
BULBPB..	Unused bulbs
CAP-EN	Capstan enable
CAPLATEN	Capstan latch enable
CCSUPVIS	Code channel supervisor
CAPMUX	Capstan multiplexer
CMD.ENB1	Command enable 1
CKACTLT	Clock arithmetic control latch
CODEFR/S	Bulb code frame/s
CLRADRCT	Clear address counter
CODENDEF	Bulb code not defined
CODGENO	Code generator output
CODINR1	Code input reserve 1
CODIN1-S	Code input slave
CODOCT	Carry out do counter
CODOSELB	Code output selector B
CONNFAIL	Bulb connector fail
COSTCKCT	Carry out stack counter
DATACLK	Data clock
DIFF	Bulb difference
DIRDWN-M (DIRUP-M)	Direction down master (up)
DIRDWN-S (DIRUP-S)	Direction down slave (up)
DISEND9+	Display enable digit sign +9 (vertical line)
DISPEN 0...8	Display enable digit 0...8
DIVCT-A	Divide counter
DMCOD-M	Demodulated code master
DMCOD-S	Demodulated code slave
DMFAIL-M	Demodulator failure master
DMFAIL-S	Demodulator failure slave
DMOSCI-M	Demodulator oscillator master
DMOSCI-S	Demodulator oscillator slave
EDIT	Bulb edit
EDIT CD	Bulb edit count down
EDLEADDR	Edit lead driver
EDMODEDR	Edit mode driver
ENADC	Enable A/D converter (phasing/advance-retard)
ENTADRCT	Enable address counter
ENTRY	Bulb wrong entry
ERAHDSCR	Erase head screen
EXEC	Bulb execute
EXFREQTM	External frequency termination
EXFREQ1/2	External frequency 1/2
EXFRQDAT	External frequency data
EXFRQINA/B	External frequency in A/B
EXFRQSCR	External frequency screen
EXGENIN1	External generator input 1
EXGENOUT	External generator output
EXGENTM	External generator master
EXTFRQSL	External frequency selector
EXTRECCM	External record command

FAST FWD	Bulb fast forward
FAST REW	Bulb fast rewind
FILTNRW	Filter narrow
FILTWIDE	Filter wide
FRAM	Bulb frame
FRAM ER	Bulb frame error
FRAMSL A/B	Frame selector A/B
FRPWRON	Flag-ram power on
G-SFRSLA/B	Actual frame selector
GEN N SC	Bulb generator not synchronous
GEN SET	Bulb generator set
GEN=MAST	Bulb generator = master
GENRUN	Bulb generator run
GROUND	Chassis ground
HOLD	Bulb hold
IFCDATIN	Interface data input
IFMUX-W	Test multiplexer output W
INCODREP	Input code reproduce
INTGEN	Bulb internal generator
K-CUTINH	K cut inhibit (k=coil)
K-PRESS	(k = coil)
KB	Bulb keyboard
LDADDRCT	Load address counter
LDARDATA	Load arithmetic data
LDTRMCT	Load transmission counter
LKMODEDR1	Lock mode driver 1
LKMODEDR2	Lock mode driver 2
LOADCKCT	Load clock counter
LOC.ENB	Local command switch enable
LOCKFAST	Bulb lock fast
LOCKSLOW	Bulb lock slow
LWLIM EX	Bulb lower limit exceeded
MAST	Bulb master
MCDATRDY	Master control data ready
MC DATODR	Master control data bit 0
MCDAT1DR	Master control data bit 1
MCDAT2DR	Master control data bit 2
MCKCUTDR	Master control K cut
MCMUTEDR	Master control mute
MCRECEDR	Master control record enable
MCRESDR1	Master control reserve driver 1
MCRESDR2	Master control reserve driver 2
MCRHRSDR	Master control rehearse driver
MCSUPVIS	Master control supervisor
MCZSETDR	Master control zero set driver
MDIRDWNM	Modified direction down master
MDMFAILM	Modified demodulator failure
MPSYNCM	Modified pulse synch master
MPWRON	Power on
MP2DMM	Modified phase 2 demodulator master
MP3DMM	Modified phase 3 demodulator master
MSEC	Bulb milli second
MS1TLS	From channel remote A80
NACRES1	Not arithmetic control reset
NCOCKCT	Not carryout clock counter
NDMCOD-M	Not demodulated code master
NDMCOD-S	Not demodulated code slave
NEMGSTOP	Not emergency stop
NFRAMSLB	Not frame selector B

NFRQCTLD	Not frequency controlled
NINVCTR1	Not invert control 1
NINVCTR2	Not invert control 2
NO CD S	Bulb no code slave
NOCODE-S	No code slave
NPINSTEN	Not peripheral control instruction enable
NPPWRON	Not pulse power on
NTACHO-D	Not tacho D
NTDMOVED	Not tape deck moved
NTDY-REC	Not tape deck record
NTRMDATA...D	Not transmission data
NTRMDTA	Not transmission data
OFS DISP	Bulb offset display
0 (ZERO)	
PARKED	Bulb parked
PARKEDDR	Parked driver
PBA...PBK	Push button A...K
PBMASREG	Pulse bit masking register
PBPLAY	Push button play
PBREC	Push button record
PBULBHMS	Parallel bulb H.M.S.
PB 0	Push button 0
PCAL-1	Peripheral control addressable latch
PCBAL	Peripheral control B addressable latch
PCBALQ0,2,3	Peripheral control B addressable latch output 0,2,3
PCBPLTCL	Peripheral control basic programmer latch clear
PCBPMUXA/B	Peripheral control basic programmer multiplexer A
PCBPWE	Peripheral control basic programmer write enable
PCBTEST	Peripheral control B test output
PCBSP	Peripheral control B single pulse
PCDATACC	Peripheral control data accepted
PCDATINA (A...E)	Peripheral control data input A
PCDATRDY	Peripheral control data ready
PCEXPR-1	Peripheral control express transmissions
PCEXPRRQ	Peripheral control express request
PCIFCTST	Peripheral control interface test
PCPGAD 00...11	Peripheral control program addresses
PCPGDATA...N	Peripheral control program data A
PCSP-2	Peripheral control single pulse 2
PCSPGRPA	Peripheral control single pulse group A
PCTAPFLG	Peripheral control test additional program flags
PCTDCLR	Peripheral control tape deck clear
PCTEST-1	Peripheral control test 1
PEDITLD	Pulse edit lead
PERCAPFR	Peripheral capstan frequency
PERDATA	Peripheral data
PERMTM1	Period main timing 1
PER1DM-M	Period 1 demodulator master
PHASING	Bulb phasing
PLAY	Bulb play
PMNTM1/2/3/4	Pulse main timing 1
PPBPRESS	Pulse push button pressed
PPWRON	Pulse power on
PRGRON	Programmer on
PRIFTRXY	Programmer interface test multiplexer
PROCSUPV	Processor supervisor
PROGSTOP	Program stop
PSYNC-M	Pulse sync master
PSYNC-S	Pulse sync slave
P1DM-M	Pulse demodulator master
P1DM-S	Pulse demodulator slave

RAMMUX	RAM multiplexer
R-CUT-1	Resistor cut
REC	Bulb record
RECCODTM	Recording code termination
RECHDSCR	Record head screen
RECLATEN	Record latch enable
RECSTINH	Record start inhibit
REPINSEL	Reproduce input selector
REPRECMX	Reproduce record multiplexer
REPROSCR	Reproduce screen
REPROSEL	Reproduce selector
REQUEST	Request for data transfer
RESDR1/8	Reserve driver
RESIN1	Reserve input
RES1023C	Bulb address start
RLINE-A	Read line A
RLINE-B	Read line B
S-CAPEXT	Switch capstan external
S-CUT	Switch cut
S-CUTAUT	Switch cut auto
SLAVE	Bulb slave
SLDECOFF	Bulb slave deck off
SL NOTP	Bulb slave no tape
SNCPLTDR	Sync pilot driver
SPD-CTL1	Speed control 1
SPOOLMOD	Enable storing of the measurement reference
START 1A...4B	Addressstart 1..4
STARTDR	Start driver
STOP	Bulb stop
STOREOFS	Bulb store offset
SVPCI,II,III	Supervisor programmer connector cable I,II,III
SVSERPRG	Supervisor serial programmer
SYMCODO1	Symmetrical code out
SYNC A	Bulb sync A
SYNC B	Bulb sync B
.SYNCBOUT	Synch B out
SYNCCBDR	Sync B driver
SYNC PLT	Bulb sync pilot
TDATAM/S	Time data M/S
TDCDMUX1,2	Tape deck control data multiplex
TDLATEN1,2	TD latch enable
TDRESDR1	TD reserve driver
TESTFLGS	Testflags
TESTRAM	Test ram
TIMLDEN	Time load enable
TRM/REC	Transmit/receive
TRMADRO...TRMADR6	Transmission address 0...6
TRMDAT	Transmission data
TTI-ACT	Tape tension
TX	Bulb transmission
UNAS B	Bulb unassigned bit
UPLIM EX	Bulb upper limit exceeded
USER B	Bulb user bits
WEACFLG	Write enable arithmetic control flag
WEPCFLG	Write enable peripheral control flag
WLINE-M	Write line master
WLINE-S	Write line slave
WIRE 001...060	Unused
WMPRES 01...04	Unused
X1BPS	X1 Basic Programmer switch (Matrix line)

Y1BPS	Y1 basic programmer switch (Matrix columne)
Y-REC-M	Y-record master
YMOVE TLS	Y-moved TLS
ZCODEGENO	Internal generator code (TLS-side)
ZCODEINSL	Low when int.gen.=master (TLS-side)
ZCODEINIS	Signal from code read amplifier
ZEXGENO	Reference frequency out from A800
ZINCODRP	Mastercode from code rec. amp.

4.6 VERDRAHTUNGSLISTEN

Nachstehend finden Sie die Verdrahtungslisten für die 4 gebräuchlichsten Varianten des TLS 2000:

4.6 WIRING LISTS

Subsequently you find a complete list of the 4 most common versions of the TLS 2000:

A80
LOCATOR

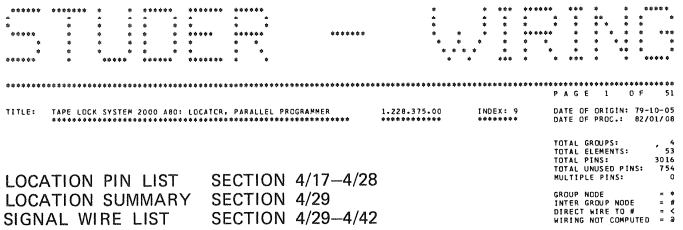

LOCATION PIN LIST SECTION 4/17–4/28
LOCATION SUMMARY SECTION 4/29
SIGNAL WIRE LIST SECTION 4/29–4/42

A80
MASTER-CONTROL

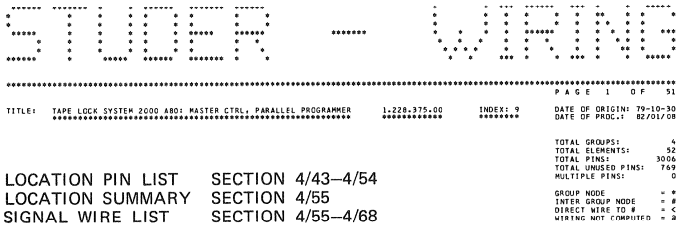

LOCATION PIN LIST SECTION 4/43–4/54
LOCATION SUMMARY SECTION 4/55
SIGNAL WIRE LIST SECTION 4/55–4/68

A800
P

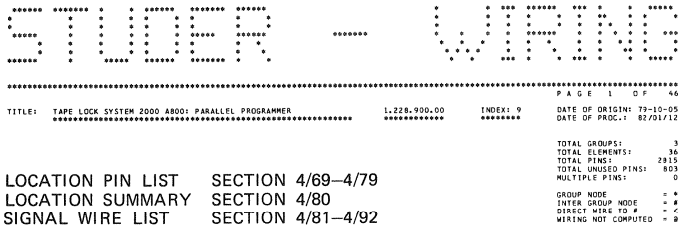

LOCATION PIN LIST SECTION 4/69–4/79
LOCATION SUMMARY SECTION 4/80
SIGNAL WIRE LIST SECTION 4/81–4/92

A800
S

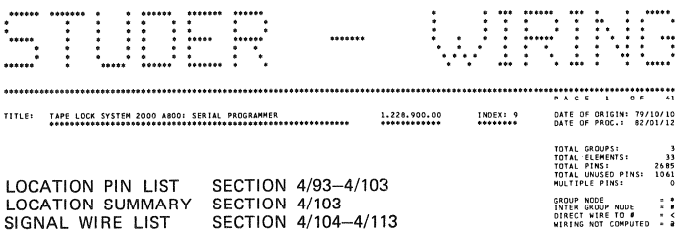

LOCATION PIN LIST SECTION 4/93–4/103
LOCATION SUMMARY SECTION 4/103
SIGNAL WIRE LIST SECTION 4/104–4/113

```
 ******  *******  *     *  ******   ********  ******                          *         *  ***  ******   ***  *     *   *****
*          *     *     *  *     *  *        *     *                          *         *   *  *     *   *   **    *  *     *
*          *     *     *  *     *  *        *     *                          *         *   *  *     *   *   * *   *  *
 *****     *     *     *  *     *  *****    ******           ********         *    *    *   *  ******    *   *  *  *  *   ***
      *    *     *     *  *     *  *        *   *                             *  * *   *   *  *     *   *   *   * *  *     *
      *    *     *     *  *     *  *        *    *                            *   * * *    *  *     *   *   *    **  *     *
******     *      *****   ******   ******** *     *                           *    *   *  ***  *     *  ***  *     *   *****
```


TITLE: TAPE LOCK SYSTEM 2000 A80: LOCATOR, PARALLEL PROGRAMMER — 1.228.375.00 — INDEX: 9

DATE OF ORIGIN: 79-10-05
DATE OF PROC.: 82/01/08

TOTAL GROUPS:	4
TOTAL ELEMENTS:	53
TOTAL PINS:	3016
TOTAL UNUSED PINS:	754
MULTIPLE PINS:	0

GROUP NODE = *
INTER GROUP NODE = #
DIRECT WIRE TO # = <
WIRING NOT COMPUTED = @

GR: 96 1.228.396.00
RECTIFIER ASSEMBLY

EL: 01 RECTIFIER ASSEMBLY

TYPE	PT	LV	SIG.NAME	COLOR	F	X	Y
L	01	1%	0.0INA80	0,0			
L	02	1	-20V A80	1,1			
L	03	1	+20V A80	3,3			
L	04	1%	0.0INA80	0			
L	05	1	AC1MOD	5			
L	06	1	0-AC1	6			
L	07	1	AC2MOD	7			
L	08	1	0-AC2	8			

GR: 97 1.228.397.00
RACK ELEMENTS LOWER PART

EL: 13 REFERENCE FREQUENCY INPUT

TYPE	PT	LV	SIG.NAME	COLOR	F	X	Y
L	01	1	EXFRQSCR	0			

EL: 14 REFERENCE FREQUENCY INPUT

TYPE	PT	LV	SIG.NAME	COLOR	F	X	Y
L	01	1	EXFRQSCR	0			
L	02	1	EXFRQINA	2			
L	03	1	EXFRQINB	3			

EL: 15 REFERENCE FREQUENCY INPUT

TYPE	PT	LV	SIG.NAME	COLOR	F	X	Y
L	01A	1	0 L	0			
L	02	1	EXFRQINA	2			
L	02A	1	EXFREQ1	2			
L	03	1	EXFRQINB	3			
L	03A	1	EXFREQTM	3			
L	04A	1	EXFREQ2	4			

EL: 41 CAPSTAN SPEED CONTROL

TYPE	PT	LV	SIG.NAME	COLOR	F	X	Y
B	01	1	+0.0CAP1	0			
B	02	1	+24CAP1	9			
	03	0	KEY				
B	04	1	Y-OUT 1	3			
B	05	1	Y-TACH-D	4			
	06	1					
	07	1					
	08	1					
	09	1					
	10	1					
B	11	1	Y-SYNC 1	1			
B	12	1	Y-SYNC 2	8			
B	13	1	+0.0CAP2	0			
B	14	1	+5.8CAP1	5			
B	15	1	-5.8CAP1	6			
B	16	1	R-SPLY-0	2			
B	17	1	R-SPLY-1	1			
	18	1					
	19	1					
	20	1					
	21	1					
	22	0	KEY				
B	23	1	S-CAPEXT	8			
B	24	1	SPD-CTL1	1			
B	25	1	SPD-CTL2	2			

GR: 97 (CONTINUATION)
RACK ELEMENTS LOWER PART

EL: 51 EXTENDED REMOTE MODE CONTROL

TYPE	PT	LV	SIG.NAME	COLOR	F	X	Y
A	01	1	+0.0EMC1	0			
	02	1					
	03	0	KEY				
A	04	1	Y-MOD1	8			
A	05	1	Y-MOD2	1			
A	06	1	Y-RES3	2			
	07	1					
	08	1					
	09	1					
	10	1					
	11	1					
	12	1					
	13	1					
	14	1					
	15	1					
A	16	1	Y-STOP	3			
	17	1					
A	18	1	+5.8EMC1	5			
A	19	1	+0.0EMC2	0			
	20	1					
A	21	1	S-CUTAUT	4			
A	22	1	R-CUT- 1	3			
A	23	1	R-CUT- 3	2			
A	24	1	S-RES2	1			
A	25	1	K-CUTINH	3			
	26	1					
	27	1					
	28	1					
	29	1					
	30	1					
	31	1					
	32	1					
A	33	1	Y-RFLX	7			
A	34	1	Y-TRSP	8			
A	35	1	TT1-ACT	1			
A	36	1	TT2-ACT	2			
	37	0	KEY				

EL: 61 REMOTE MODE CONTROL

TYPE	PT	LV	SIG.NAME	COLOR	F	X	Y
A	01	1	+0.0MC1	0			
	02	0	KEY				
A	03	1	B-REW	2			
A	04	1	B-FORW	4			
A	05	1	B-REPR	2			
A	06	1	B-STOP	3			
A	07	1	B-REC	8			
A	08	1	B-CUT	1			
A	09	1	B-MONO	2			

./.

GR: 97 (CONTINUATION)
RACK ELEMENTS LOWER PART

EL: 61 (CONTINUATION)

TYPE	PT	LV	SIG.NAME	COLOR	F	X	Y
A	10	1	B-FAD	3			
A	11	1	+0.0MC2	0			
	12	1					
A	13	1	Y-REVRS	8			
A	14	1	Y-FORW	1			
A	15	1	+24MC1	9			
A	16	1	+5.8MC1	5			
A	17	1	-5.8MC1	6			
A	18	1	CMD.ENB2	4			
A	19	1	CMD.ENB1	3			
A	20	1	S-LOW	1			
A	21	1	Y-LOW	3			
A	22	1	K-PRESS	2			
A	23	1	RECSTINH	7			
A	24	1	Y-MUTE	4			
A	25	1	Y-MCNO	3			
A	26	1	+24MC2	9			
A	27	1	Y-MOVE-1	1			
A	28	1	Y-MOVE-D	8			
A	29	1	YPS-MOVE	7			
	30	1					
	31	1					
A	32	1	+0-TYPE2	2			
A	33	1	+0-TYPE1	1			
A	34	1	+24MC3	9			
A	35	1	LCC.ENB	2			
A	36	1	S-REW	4			
A	37	1	S-FORW	2			
A	38	1	S-REPR	3			
A	39	1	S-STOP	8			
A	40	1	S-REC	1			
A	41	1	S-CUT	2			
A	42	1	S-MONO	3			
A	43	1	FAD-1	4			
A	44	1	FAD-2	7			
A	45	1	K-RESET	8			
A	46	1	Y-CLK	1			
A	47	1	Y-ICLK	2			
	48	0	KEY				
A	49	1	+0.0MC3	0			
A	50	1	+0.0MC4	0			

EL: 71 AUXILIARY CONNECTOR

TYPE	PT	LV	SIG.NAME	COLOR	F	X	Y
B	01	1	0 L	0			
B	02	1	LKMODEDR	1			
B	03	1	EDMODEDR	8			
	04	0	KEY				
B	05	1	Y-REC-M	5			

./.

GR: 97 (CONTINUATION)
RACK ELEMENTS LOWER PART

EL: 71 (CONTINUATION)

TYPE	PT	LV	SIG.NAME	COLOR	F	X	Y
	06	1					
	07	1					
	08	1					
	09	1					
B	10	1	PARKEDDR	2			
	11	1					
	12	1					
	13	1					
	14	1					
	15	1					
	16	1					
	17	1					
	18	1					
	19	1					
B	20	1	0 K	0			
B	21	1	START-1A	1			
B	22	1	START-1B	1			
B	23	1	START-2A	6			
B	24	1	START-2B	6			
B	25	1	START-3A	9			
B	26	1	START-3B	9			
B	27	1	START-4A	4			
B	28	1	START-4B	4			
	29	1					
	30	1					
B	31	1	EDLEADDR	7			
B	32	1	SNCPLTDR	4			
B	33	1	SYNCBDR	3			
	34	0	KEY				
B	35	1	0 L	0			
B	36	1	+24M	3			
B	37	1	+24	2			

EL: 72 RELAIS PRINT

TYPE	PT	LV	SIG.NAME	COLOR	F	X	Y
L	01A	1	START-1A	1			
L	01B	1	START-1B	1			
L	01C	1	STARTDR1	1			
L	02A	1	START-2A	6			
L	02B	1	START-2B	6			
L	02C	1	STARTDR2	6			
L	03A	1	START-3A	9			
L	03B	1	START-3B	9			
L	03C	1	STARTDR3	9			
L	04A	1	START-4A	4			
L	04B	1	START-4B	4			
L	04C	1	STARTDR4	4			
L	05A	1	Y-REC-M	5			
L	05C	1	EXTRECCM	7			

./.

GR: 97 (CONTINUATION)
RACK ELEMENTS LOWER PART

EL: 72 (CONTINUATION)

TYPE	PT	LV	SIG.NAME	COLOR	F	X	Y
L	06A	1	0 L	0			
L	06C	1	0 L	0			
L	07A	1	0 K	0			
L	07C	1	0 K	0			
L	08A	1	+24	2			
L	08C	1	+24	2			
L	09A	1	+24M	3			

EL: 91 CONN. ASS. TO MAIN PROGR. (J I)

TYPE	PT	LV	SIG.NAME	COLOR	F	X	Y
	01	0	KEY				
B	02	1	PB1	9			
B	03	1	BULBDPA2	1			
B	04	1	PBA	5			
B	05	1	PBH	4			
B	06	1	BULBPBI3	8			
B	07	1	EDIT CD	R			
B	08	1	LOCKFAST	6			
B	09	1	ADV RET	2			
B	10	1	MSEC	0			
B	11	1	GEN N SC	7			
B	12	1	B-UPPLIM	8-R			
B	13	1	ENTRY	6-2			
B	14	1	BOFFSREG	9-5			
B	15	1	B-EXITSL	1-5			
B	16	1	B-PHAS	9-4			
B	17	1	FRAM ER	4-1			
B	18	1	GEN SET	9-8			
B	19	1	B-LOWLIM	8-1			
B	20	1	NO CD S	9-R			
B	21	1	B-ENTRYM	1-R			
B	22	1	SVPCI	9-6			
B	23	1	BULBPBF4	1-6			
B	24	1	BULBPBF3	9-2			
B	25	1	BULBPBF2	1-2			
B	26	1	EXEC	9-0			
B	27	1	PBD	1-0			
B	28	1	PBI	8-5			
B	29	1	BULBDPA1	4-8			
B	30	1	INTGEN	5-R			
B	31	1	BULBDPB2	4-R			
B	32	1	CODENDEF	5-6			
B	33	1	ADD	4-6			
B	34	1	B-CALC	5-2			
B	35	1	SLDECOFF	4-2			
B	36	1	B-GENUSB	5-0			
B	37	1	SL NOTP	4-0			
B	38	1	PB7	8-6			
B	39	1	PBG	6-R			

./.

GR: 97 (CONTINUATION)
RACK ELEMENTS LOWER PART

EL: 91 (CONTINUATION)

TYPE	PT	LV	SIG.NAME	COLOR	F	X	Y
B	40	1	PB4	8-2			
B	41	1	PBK	2-R			
B	42	1	PBF	8-0			
B	43	1	LWLIM EX	0-R			
B	44	1	CONNFAIL	6-0			
B	45	1	BENT/PKS	2-0			
B	46	1	UPLIM EX	9-1-0			
B	47	1	B-NOMAST	4-5-0			
	48	0	KEY				
B	49	1	WMPRESO1	8-R-0			
B	50	1	WMPRESO2	6-2-0			

EL: 92 CONN. ASS. TO MAIN PROGR. (J II)

TYPE	PT	LV	SIG.NAME	COLOR	F	X	Y
B	01	1	WMPRESO3	9			
	02	0	KEY				
B	03	1	BLKDSP1	1			
B	04	1	NTRMDATA	5			
B	05	1	BADRSTRT	4			
B	06	1	BULBDPH1	8			
B	07	1	PHASING	R			
B	08	1	BULBPBG3	6			
B	09	1	MSEC	2			
B	10	1	DIFF	0			
B	11	1	FRAM	7			
B	12	1	B-REHEAR	8-R			
B	13	1	BULBPBH3	6-2			
B	14	1	OFS DISP	9-5			
B	15	1	CODEFR/S	1-5			
B	16	1	PBULBHMS	9-4			
B	17	1	ADCDATAE	4-1			
B	18	1	BULBDPN1	9-8			
B	19	1	SLAV	8-1			
B	20	1	UNAS B	9-R			
B	21	1	BULBPBL5	1-R			
B	22	1	BULBDPP1	9-6			
B	23	1	ADCDATAD	1-6			
B	24	1	PBULBHMS	9-2			
B	25	1	DISPEN7	1-2			
B	26	1	DISPEN1	9-0			
B	27	1	WMPRESO4	1-0			
B	28	1	DISPEN0	8-5			
B	29	1	STOREOFS	4-8			
B	30	1	DISPEN2	5-R			
B	31	1	BLKDSP0	4-R			
B	32	1	DISPEN3	5-6			
B	33	1	BLKDSP2	4-6			
B	34	1	HOLD	5-2			
B	35	1	LOCKSLOW	4-2			

./.

GR: 97 (CONTINUATION)
RACK ELEMENTS LOWER PART

EL: 92 (CONTINUATION)

TYPE	PT	LV	SIG.NAME	COLOR	F	X	Y
B	36	1	NTRMDATB	5-0			
B	37	1	BLKDSP3	4-0			
B	38	1	BULBDPL1	8-6			
B	39	1	DISPEN4	6-R			
B	40	1	BULBPBK5	8-2			
B	41	1	BULBDPA0	2-R			
B	42	1	NTRMDATC	8-0			
B	43	1	SVPCII	0-R			
B	44	1	BLKDSP4	6-0			
B	45	1	PBULBHMS	2-0			
B	46	1	BLKDSP5	9-1-0			
B	47	1	DISPEN6	4-5-0			
B	48	1	DISPEN9	8-R-0			
	49	0	KEY				
B	50	1	BLKDSP7	6-2-0			

EL: 93 CONN. ASS. TO MAIN PROGR. (J III)

TYPE	PT	LV	SIG.NAME	COLOR	F	X	Y
B	01	1	NTRMDATD	9			
B	02	1	ADCDATAC	1			
	03	0	KEY				
B	04	1	MAST	5			
B	05	1	USER B	4			
B	06	1	SVPCIII	8			
B	07	1	ADCDATAB	R			
B	08	1	BULBPBM5	6			
B	09	1	ADCDATAA	2			
B	10	1	BLOCATOR	0			
B	11	1	REC	7			
B	12	1	EDIT	8-R			
B	13	1	BPKMMPRG	6-2			
B	14	1	GENRUN	9-5			
B	15	1	TX	1-5			
B	16	1	SYNC PLI	9-4			
B	17	1	FAST FWD	4-1			
B	18	1	BEDMMPRG	9-8			
B	19	1	PBB	8-1			
B	20	1	B-RECENB	9-R			
B	21	1	PBPLAY	1-R			
B	22	1	PBREC	9-6			
B	23	1	GEN=MAST	1-6			
B	24	1	0 SW	9-2			
B	25	1	PLAY	1-2			
B	26	1	BLKDSP6	9-0			
B	27	1	DISPEN8	1-0			
B	28	1	KB	8-5			
B	29	1	BLKDSP8	4-8			
B	30	1	DISEND9+	5-R			
B	31	1	PB3	4-R			

./.

GR: 97 (CONTINUATION)
RACK ELEMENTS LOWER PART

EL: 93 (CONTINUATION)

TYPE	PT	LV	SIG.NAME	COLOR	F	X	Y
B	32	1	PBC	5-6			
B	33	1	DISEND9-	4-6			
B	34	1	PB5	5-2			
B	35	1	PBO	4-2			
B	36	1	PBE	5-0			
B	37	1	BULBDPS2	4-0			
B	38	1	PARKED	8-6			
B	39	1	BULBDPT2	6-R			
B	40	1	STOP	8-2			
B	41	1	+10 SW	2-R			
B	42	1	BULBDPU2	8-0			
B	43	1	SYNC B	0-R			
B	44	1	BPILMPRG	6-0			
B	45	1	FAST REW	2-0			
B	46	1	BLKMMPRG	9-1-0			
B	47	1	SYNC A	4-5-0			
B	48	1	PB6	8-R-0			
B	49	1	PB2	6-2-0			
	50	0	KEY				

EL: 94 CONN. ASS. TO MAIN PROGR. (J I)

TYPE	PT	LV	SIG.NAME	COLOR	F	X	Y
L	01	1	0 L	*			

EL: 95 CONN. ASS. TO MAIN PROGR. (J II)

TYPE	PT	LV	SIG.NAME	COLOR	F	X	Y
L	01	1	0 L	*			

EL: 96 CONN. ASS. TO MAIN PROGR. (J III)

TYPE	PT	LV	SIG.NAME	COLOR	F	X	Y
L	01	1	0 L	*			

```
*****************************************************************************************************************************
*  S T U D E R  *      L O C A T I O N    P I N    L I S T      *   82/01/08 * 15:12     *  P A G E     5   *
*****************************************************************************************************************************
TAPE LOCK SYSTEM 2000 A80: LOCATOR, PARALLEL PROGRAMMER       1.228.375.00            79-10-05
```

GR: 98 1.228.398.00
RACK ELEMENTS UPPER PART

EL: 01 HEADPLUG/CHANNEL SUPPLY

TYPE	PT	LV	SIG.NAME	COLOR	F	X	Y
L	01	1	AC2MOD	3			
L	02	1	AC2	3			

EL: 02 HEADPLUG/CHANNEL SUPPLY

TYPE	PT	LV	SIG.NAME	COLOR	F	X	Y
L	01	1	AC1MOD	6			
L	02	1	AC1	6			

EL: 03 HEADPLUG/CHANNEL SUPPLY

TYPE	PT	LV	SIG.NAME	COLOR	F	X	Y
A	01	1	ERAHDSCR	4			
A	02	1	ERASEHD2	9			
A	03	1	ERASEHD1	6			
	04	0	KEY				
WQ	05	3	GROUND98	4			
A	06	1	RECHDSCR	4			
A	07	1	RECHD2	9			
A	08	1	RECHD1	6			
W	09	3	GROUND98				
W	10	3	GROUND98				
W	11	3	GROUND98				
W	12	3	GROUND98				
W	13	3	GROUND98				
A	14	1	REPROSCR	4			
A	15	1	REPRO0.0	U			
A	16	1	REPRO2	6			
A	17	1	REPRO1	2			
W	18	3	GROUND98				
W	19	3	GROUND98				
W	20	3	GROUND98				
W	21	3	GROUND98				
W	22	3	GROUND98				
W	23	3	GROUND98				
W	24	3	GROUND98				
W	25	3	GROUND98				
W	26	3	GROUND98				
W	27	3	GROUND98				
W	28	3	GROUND98				
W	29	3	GROUND98				
W	30	3	GROUND98				
W	31	3	GROUND98				
W	32	3	GROUND98				
W	33	3	GROUND98				
A	34	1	O-AC1	9			
A	35	1	AC1	6			
A	36	1	O-AC2	9			
A	37	1	AC2	3			

./.

GR: 98 (CONTINUATION)
RACK ELEMENTS UPPER PART

EL: 03 (CONTINUATION)

TYPE	PT	LV	SIG.NAME	COLOR	F	X	Y
A	38	1	O-BIAS	9			
A	39	1	YAC-BIAS	1			
A	40	1	YAC-ERAS	9			
A	41	1	O-ERASE	8			
A	42	1	Y-RECMD	2			
A	43	1	S-LOWACH	9			
A	44	1	Y-MUTEMD	5			
A	45	1	O-ERASE	2			
A	46	1	CCSUPVIS	3			
	47	1					
	48	1					
	49	1					
	50	0	KEY				

EL: 04 CHASSIS, ELEMENT 98

TYPE	PT	LV	SIG.NAME	COLOR	F	X	Y
L	01	1	GROUND98	4			

EL: 11 MASTER INPUT/REPRO OUTPUT

TYPE	PT	LV	SIG.NAME	COLOR	F	X	Y
L	01	1	SYMCODSC	0			

EL: 12 MASTER INPUT/REPRO OUTPUT

TYPE	PT	LV	SIG.NAME	COLOR	F	X	Y
L	01	1	SYMCODSC	0			
L	02	1	SYMCOD01	2			
L	03	1	SYMCOD02	3			

EL: 13 MASTER INPUT/REPRO OUTPUT

TYPE	PT	LV	SIG.NAME	COLOR	F	X	Y
L	01	1	RECINSCR	0			

EL: 14 MASTER INPUT/REPRO OUTPUT

TYPE	PT	LV	SIG.NAME	COLOR	F	X	Y
L	01	1	RECINSCR	0			
L	02	1	RECINPA	2			
L	03	1	RECINPB	3			

GR: 98 (CONTINUATION)
RACK ELEMENTS UPPER PART

EL: 15 MASTER INPUT/REPRO OUTPUT

TYPE	PT	LV	SIG.NAME	COLOR	F	X	Y
L	01A	1	O L	0			
L	02	1	RECINPA	2			
L	02A	1	RECCOD1	2			
L	03	1	RECINPB	3			
L	03A	1	RECCODTM	3			
L	04A	1	RECCOD2	4			

EL: 23 GENERATOR LINE INPUT

TYPE	PT	LV	SIG.NAME	COLOR	F	X	Y
L	01	1	EXGENSCR	0			

EL: 24 GENERATOR LINE INPUT

TYPE	PT	LV	SIG.NAME	COLOR	F	X	Y
L	01	1	EXGENSCR	0			
L	02	1	EXGENINA	2			
L	03	1	EXGENINB	3			

EL: 25 GENERATOR LINE INPUT

TYPE	PT	LV	SIG.NAME	COLOR	F	X	Y
L	01A	1	O L	0			
L	02	1	EXGENINA	2			
L	02A	1	EXGENIN1	2			
L	03	1	EXGENINB	3			
L	03A	1	EXGENTM	3			
L	04A	1	EXGENIN2	4			

EL: 61 CODE CH. REMOTE IF (OPTIONAL)

TYPE	PT	LV	SIG.NAME	COLOR	F	X	Y
L	01	1	MS2CCHRC	4			
L	02	1	MS1CCHRC	4			
L	03	1	X1CCHRC	4			
L	04	1	X2CCHRC	4			
L	05	1	-12	4			
L	06	1	+12	4			

EL: 62 CODE CH. REMOTE IF (OPTIONAL)

TYPE	PT	LV	SIG.NAME	COLOR	F	X	Y
L	01A	1	-12	8			
L	01B	1	MS2CCHRC	4			
L	02A	1	MS1TLS	4			
L	02B	1	MS1CCHRC	4			

./.

```
*****************************************************************************************************************************
*  S T U D E R  *      L O C A T I O N    P I N    L I S T      *   82/01/08 * 15:12     *  P A G E     6   *
*****************************************************************************************************************************
TAPE LOCK SYSTEM 2000 A80: LOCATOR, PARALLEL PROGRAMMER       1.228.375.00            79-10-05
```

GR: 98 (CONTINUATION)
RACK ELEMENTS UPPER PART

EL: 62 (CONTINUATION)

TYPE	PT	LV	SIG.NAME	COLOR	F	X	Y
L	03A	1	MS2TLS	7			
L	03B	1	X1CCHRC	4			
L	04A	1	O L	0			
L	04B	1	X2CCHRC	4			
L	05A	1	+ 5 ADD	1			
L	05B	1	-12	4			
L	06A	1	X2TLS	2			
L	06B	1	+12	4			
L	07A	1	B-REMOTE	3			
L	08A	1	+12	1			

EL: 71 ADDITIONAL POWER CONNECTOR

TYPE	PT	LV	SIG.NAME	COLOR	F	X	Y
	01	1					
	02	0	KEY				
	03	1					
	04	1					
	05	1					
	06	1					
	07	1					
A	08	1	0.0AD150	0			
A	09	1	0.0AD150	0			
A	10	1	0.0AD150	0			
A	11	1	O L	0			
A	12	1	O L	0			
A	13	1	O L	0			
A	14	1					
A	15	1					
A	16	1	+10	5			
A	17	1	+10	5			
A	18	1	+10	5			
A	19	1	+10AD150	5			
A	20	1	+10AD150	5			
A	21	1	+10AD150	5			
	22	0	KEY				
	23	1					
	24	1					
	25	1					

EL: 81 CONN. ASS. TO BASIC PROGRAMMER

TYPE	PT	LV	SIG.NAME	COLOR	F	X	Y
	01	0	KEY				
B	02	1	O L	9			
B	03	1	B-LKMBP	1			
B	04	1	B-TDSYNC	5			
B	05	1	B-NOMBP	4			
B	06	1	O L	8			

./.

GR: 98 (CONTINUATION)
RACK ELEMENTS UPPER PART

EL: 81 (CONTINUATION)

TYPE	PT	LV	SIG.NAME	COLOR	F	X	Y
B	07	1	O L	R			
B	08	1	O L	6			
B	09	1	BPSUPVIS	2			
B	10	1	WBPRES01	0			
B	+ 11	1	B-CCHSYN	7			
B	+ 12	1	B-OUT=IN	8-R			
B	13	1	WBPRES02	6-2			
B	14	1	WIREO01	9-5			
B	15	1	B-TX	1-5			
B	16	1	B-EMSTOP	9-4			
B	17	1	+10	4-1			
B	18	1	O L	9-R			
B	19	1	B-GEN=M	8-1			
B	20	1	BBPRES09	9-R			
B	21	1	BBPRES10	1-R			
B	22	1	B-CCHRDY	9-6			
B	23	1	B-CCHREC	1-6			
B	24	1	B-CCHREP	9-2			
B	25	1	B-NOSCOD	1-2			
B	26	1	Y2BPS	9-0			
B	27	1	Y1BPS	1-0			
B	28	1	NEMGSTOP	8-5			
B	29	1	WBPRES03	4-8			
B	30	1	X5BPS	5-R			
B	31	1	WBPRES04	4-R			
B	32	1	WBPRES05	5-6			
B	33	1	WIREO01	4-6			
B	34	1	Y3BPS	5-2			
B	35	1	X4BPS	4-2			
B	36	1	O K	5-0			
B	37	1	+24	4-0			
B	38	1	X3BPS	8-6			
B	39	1	X1BPS	6-R			
B	40	1	X2BPS	8-2			
B	41	1	B-EXTREF	2-R			
B	42	1	BBPRES11	8-0			
B	43	1	B-CCHSYN	0-R			
B	44	1	B-OUT=IN	6-0			
B	45	1	B-CCHSAF	2-0			
B	46	1	B-REMOTE	9-1-0			
B	47	0	KEY				
B	48	1	B-PILOT	4-5-0			
B	49	1	B-LAMPT	6-R-0			
B	50	1	+10	6-2-0			

EL: 91 CONNECTOR ASS. TO POWER SUPPLY

TYPE	PT	LV	SIG.NAME	COLOR	F	X	Y
A	01	1	-10V 150	6			
	02	0	KEY				

./.

GR: 98 (CONTINUATION)
RACK ELEMENTS UPPER PART

EL: 91 (CONTINUATION)

TYPE	PT	LV	SIG.NAME	COLOR	F	X	Y
A	03	1	-10V 150	6			
A	04	1	-10V 150	6			
A	05	1	0 L	0			
A	06	1	0 L	0			
A	07	1	0 L	0			
A	08	1	0 L	0			
A	09	1	0 L	0			
A	10	1	0 L	0			
A	11	1%	0.0IN150	0			
A	12	1%	0.0IN150	0			
A	13	1%	0.0IN150	0			
	14	1					
	15	1					
A	16	1	+10	5			
A	17	1	+10	5			
A	18	1	+10	5			
A	19	1	+10	5			
A	20	1	+10	5			
A	21	1	+10	5			
	22	0	KEY				
A	23	1	+31V 150	9			
A	24	1	+31V 150	9			
A	25	1	+31V 150	9			

```
*****************************************************************************************************************************
*  S T U D E R  *      L O C A T I O N      P I N      L I S T      *  82/01/08 * 15:12      *    P A G E      7    *
*****************************************************************************************************************************
TAPE LOCK SYSTEM 2000 A80: LOCATOR, PARALLEL PROGRAMMER        1.228.375.00            79-10-05

GR: 99   1.228.399.00       #0019
PROCESSOR BACK PANEL
****************************************

EL: 01  WRAP CONNECTOR J01.1, 3*32 PIN
-------------------------------------------
TYPE PT   LV SIG.NAME CCLOR F    X      Y
---- ---  -- --------- ----- - ----- -----
WP   01A 1     0 L
WPQ  01B 1     0 L     0
WP   01C 1     0 L
W    02A 3  SYNCBOUT
WQ   02B 3  EXFREQ1  2
W    02C 3  EXTSYNC
W    03A 3  MP2DMM
WQ   03B 3  EXFREQTM 3
W    03C 3  PSYNC -S
W    04A 3  MP3DMM
WQ   04B 3  EXFREQ2  4
W    04C 3  PCBALQ0
W    05A 3  MDMFAILM
W    05B 3  CLRADRCT
W    05C 3  CODGENO
W    06A 3  MDIRDWNM
W    06B 3  6.25  HZ
W    06C 3  EXGENOUT
W    07A 3  MPSYNCM
W    07B 3  CKACTLT
W    07C 3  PCPGDATA
W    08A 3  ARPOUT-A
W    08B 3  800   HZ
W    08C 3  PCPGDATB
W    09A 3  ARPOUT-B
W    09B 3  ARPOUT-D
W    09C 3  PCPGDATC
W    10A 3  ARPOUT-C
W    10B 3  ARPOUT-E
W    10C 3  PERMNTM4
W    11A 3  PSYNC -M
W    11B 3  ARPOUT-F
W    11C 3  PMNTM  4
W    12A 3
W    12B 3  - 5
W    12C 3  - 5
W    13A 3  ACPGDATH
W    13B 3  ACPGDATG
W    13C 3  PMNTM  2
W    14A 3
W    14B 3  -12
W    14C 3  -12
W    15A 3
W    15B 3    0 A
W    15C 3    0 A
W    16A 3
W    16B 3  +12
W    16C 3  +12
W    17A 3  ACIFGRP
W    17B 3  ACPGDATA
W    17C 3  ACSPGRP3
                                                                                                                    ./.

GR: 99   (CONTINUATION)
PROCESSOR BACK PANEL
****************************************

EL: 01   (CONTINUATION)
-------------------------------------------
TYPE PT   LV SIG.NAME COLOR F    X      Y
---- ---  -- --------- ----- - ----- -----
W    18A 3  PCBALQ2
W    18B 3  ACPGDATB
W    18C 3  819.2KHZ
W    19A 3
W    19B 3    0 K
W    19C 3    0 K
W    20A 3
W    20B 3  +24
W    20C 3  +24
W    21A 3  ACSPCAP
W    21B 3  ACPGDATC
W    21C 3  13.1 MHZ
W    22A 3  NFRQCTLD
W    22B 3  ACPGDATD
W    22C 3  ADDRCT-A
W    23A 3  PCSPGRP2
W    23B 3  ACPGDATE
W    23C 3  ADDRCT-B
W    24A 3  PCBTESTC
W    24B 3  P3DM  -M
W    24C 3  ADDRCT-C
W    25A 3  BTCTA -M
W    25B 3  P2DM  -M
W    25C 3  ADDRCT-D
W    26A 3  BTCTB -M
W    26B 3  DMFAIL-M
W    26C 3  ADDRCT-E
W    27A 3  BTCTC -M
W    27B 3  DIRDWN-M
W    27C 3  ADDRCT-F
W    28A 3  BTCTD -M
W    28B 3  ACSPIFC1
W    28C 3  ADDRCT-G
W    29A 3  LOADDRCT
W    29B 3  ARSEROUT
W    29C 3  ADDRCT-H
W    30A 3  ENTADRCT
W    30B 3  EXFRQDAT
W    30C 3  ADDRCT-I
W    31A 3  BTCTG -M
W    31B 3  ACPGDATF
W    31C 3  ADDRCT-K
WP   32A 1  +10
WP   32B 1  +10
WP   32C 1  +10

GR: 99   (CONTINUATION)
PROCESSOR BACK PANEL
****************************************

EL: 02  WRAP CONNECTOR J02.1, 3*32 PIN
-------------------------------------------
TYPE PT   LV SIG.NAME COLOR F    X      Y
---- ---  -- --------- ----- - ----- -----
WP   01A 1     0 L
WP   01B 1     0 L
WP   01C 1     0 L
W    02A 3
W    02B 3  SYNCBOUT
W    02C 3  PERCAPFR
W    03A 3
W    03B 3
W    03C 3  P3DM  -S
W    04A 3
W    04B 3  MP3DMM
W    04C 3  CAPMUX
W    05A 3  SPOOLMOD
W    05B 3
W    05C 3
W    06A 3
W    06B 3
W    06C 3  PCSPGRP3
W    07A 3
W    07B 3  MPSYNCM
W    07C 3
W    08A 3
W  + 08B 3  REPRECMX
W    08C 3
W    09A 3
W    09B 3
W    09C 3  PCPGDATA
W    10A 3
W    10B 3  PEDITLD
W    10C 3  PCPGDATB
W    11A 3
W    11B 3
W    11C 3  PCPGDATC
W    12A 3
W    12B 3  - 5
W    12C 3  - 5
W    13A 3
W    13B 3  CAPLATEN
W    13C 3  DMOSCI-S
W    14A 3
W    14B 3  -12
W    14C 3  -12
W    15A 3
W    15B 3    0 A
W    15C 3    0 A
W    16A 3
W    16B 3  +12
W    16C 3  +12
W    17A 3
W    17B 3  PMNTM  2
W    17C 3  YMOVETLS
                                                                                                                    ./.

*****************************************************************************************************************************
*  S T U D E R  *      L O C A T I O N      P I N      L I S T      *  82/01/08 * 15:12      *    P A G E      8    *
*****************************************************************************************************************************
TAPE LOCK SYSTEM 2000 A80: LOCATOR, PARALLEL PROGRAMMER        1.228.375.00            79-10-05

GR: 99   (CONTINUATION)
PROCESSOR BACK PANEL
****************************************

EL: 02   (CONTINUATION)
-------------------------------------------
TYPE PT   LV SIG.NAME COLOR F    X      Y
---- ---  -- --------- ----- - ----- -----
W    18A 3  ACPGDATA
W    18B 3  819.2KHZ
W    18C 3
W    19A 3
W    19B 3    0 K
W    19C 3    0 K
W    20A 3
W    20B 3  +24
W    20C 3  +24
W    21A 3  13.1 MHZ
W    21B 3  ACSPCAP
W    21C 3  P4DM  -S
W    22A 3  ACPGDATB
W    22B 3  NFRQCTLD
W    22C 3  PMNTM  4
W    23A 3  ACPGDATC
W    23B 3
W    23C 3
W    24A 3
W    24B 3
W    24C 3  CAP-EN
W    25A 3
W    25B 3
W    25C 3  BTCTA -S
W  + 26A 3  RECLATEN
W    26B 3
W    26C 3  BTCTB -S
W    27A 3  BTCTC -M
W    27B 3  PCPGDATH
W    27C 3  BTCTC -S
W    28A 3
W    28B 3
W    28C 3  BTCTD -S
W    29A 3
W    29B 3
W    29C 3  BTCTE -S
W    30A 3
W    30B 3
W    30C 3  BTCTF -S
W    31A 3
W    31B 3  ARSEROUT
W    31C 3  BTCTG -S
WP   32A 1  +10
WP   32B 1  +10
WP   32C 1  +10

GR: 99   (CONTINUATION)
PROCESSOR BACK PANEL
****************************************

EL: 03  WRAP CONNECTOR J03.1, 3*32 PIN
-------------------------------------------
TYPE PT   LV SIG.NAME COLOR F    X      Y
---- ---  -- --------- ----- - ----- -----
WP   01A 1     0 L
WP   01B 1     0 L
WP   01C 1     0 L
W    02A 3  MP2DMM
W    02B 3  200   HZ
W    02C 3  P2DM  -S
W    03A 3  MP3DMM
W    03B 3  6.25  HZ
W    03C 3  P3DM  -S
W    04A 3  P4DM  -M
W    04B 3  12.5  HZ
W    04C 3  P4DM  -S
W    05A 3  NDMCOD-M
W    05B 3  25    HZ
W    05C 3  NDMCOD-S
W    06A 3  MDIRDWNM
W    06B 3  50    HZ
W    06C 3  DIRDWN-S
W    07A 3  MPSYNCM
W    07B 3  100   HZ
W    07C 3  PSYNC -S
W    08A 3  FRAMSL B
W    08B 3  400   HZ
W    08C 3  800   HZ
W    09A 3  RAMMUX
W    09B 3  25.6 KHZ
W    09C 3  PCPGDATA
W    10A 3  PLAY  -M
W    10B 3  3.2  KHZ
W    10C 3  PCPGDATB
W    11A 3  + 5  ADD
W    11B 3  12.8 KHZ
W    11C 3  PCPGDATC
W    12A 3
W    12B 3  - 5
W    12C 3  - 5
W    13A 3  PMNTM  1
W    13B 3  204.8KHZ
W    13C 3  PERMNTM1
W    14A 3
W    14B 3  -12
W    14C 3  -12
W    15A 3
W    15B 3    0 A
W    15C 3    0 A
W    16A 3
W    16B 3  +12
W    16C 3  +12
W    17A 3  PMNTM  2
W    17B 3  1638 KHZ
W    17C 3  PERMNTM2
                                                                                                                    ./.

GR: 99   (CONTINUATION)
PROCESSOR BACK PANEL
****************************************

EL: 03   (CONTINUATION)
-------------------------------------------
TYPE PT   LV SIG.NAME COLOR F    X      Y
---- ---  -- --------- ----- - ----- -----
W    18A 3  PMNTM  3
W    18B 3  819.2KHZ
W    18C 3  PERMNTM3
W    19A 3
W    19B 3    0 K
W    19C 3    0 K
W    20A 3
W    20B 3  +24
W    20C 3  +24
W    21A 3  PMNTM  4
W    21B 3  13.1 MHZ
W    21C 3  PERMNTM4
W    22A 3  WLINE -M
W    22B 3  51.2 KHZ
W    22C 3  WLINE -S
W    23A 3  102.4KHZ
W    23B 3  NPPWRON
W    23C 3  TDATAM/S
W    24A 3  BTCTOF-M
W    24B 3  RLINE -B
W    24C 3  BTCTOF-S
W    25A 3  BTCTA -M
W    25B 3  RLINE -A
W    25C 3  BTCTA -S
W    26A 3  BTCTB -M
W    26B 3  ADDRCT-A
W    26C 3  BTCTB -S
W    27A 3  BTCTC -M
W    27B 3  ADDRCT-B
W    27C 3  BTCTC -S
W    28A 3  BTCTD -M
W    28B 3  ADDRCT-C
W    28C 3  BTCTD -S
W    29A 3  BTCTE -M
W    29B 3  ADDRCT-D
W    29C 3  BTCTE -S
W    30A 3  BTCTF -M
W    30B 3  ADDRCT-E
W    30C 3  BTCTF -S
W    31A 3  BTCTG -M
W    31B 3  ADDRCT-F
W    31C 3  BTCTG -S
WP   32A 1  +10
WP   32B 1  +10
WP   32C 1  +10
```

```
*****************************************************************************************************************
*   S T U D E R   *      L O C A T I O N     P I N     L I S T        *    82/01/08 * 15:12      *   P A G E      9    *
*****************************************************************************************************************
TAPE LOCK SYSTEM 2000 A80: LOCATOR, PARALLEL PROGRAMMER        1.228.375.00             79-10-05

GR: 99   (CONTINUATION)
PROCESSOR BACK PANEL
****************************************

EL: 04  WRAP CONNECTOR J04.1, 3*32 PIN
-------------------------------------
TYPE PT  LV SIG.NAME COLOR F    X      Y
---- --- -- -------- ----- - ----- -----
WP   01A 1     0 L
WP   01B 1     0 L
WP   01C 1     0 L
W    02A 3  CLRADRCT
W    02B 3  ACSP-09
W    02C 3  COSTCKCT
W    03A 3  ENTADRCT
W    03B 3  ACPGAD04
W    03C 3  NCOCKCT
W    04A 3  CKACTLT
W    04B 3  ACPGAD05
W    04C 3  ACPGAD06
W    05A 3  LDADDRCT
W    05B 3  PBMASREG
W    05C 3  ACPGAD07
W    06A 3  ACPGAD00
W    06B 3  CODOCT
W    06C 3  ACPGAD08
W    07A 3  ACPGAD01
W    07B 3  LOADCKCT
W    07C 3  ACPGAD09
W    08A 3  ACPGAD02
W    08B 3  WEACFLG
W    08C 3  IFMUX-W
W    09A 3  ACPGAD03
W    09B 3  PROGSTOP
W    09C 3  ACPGAD10
W    10A 3  ACSPGRP4
W    10B 3  ACSPGRP1
W    10C 3  ACPGAD11
W    11A 3  AREN1
W    11B 3  ACSPGRP2
W    11C 3  ACSPGRP3
W    12A 3
W    12B 3  - 5
W    12C 3  - 5
W    13A 3  AREN2
W    13B 3  PMNTM  1
W    13C 3  TESTFLGS
W    14A 3
W    14B 3  -12
W    14C 3  -12
W    15A 3
W    15B 3    0 A
W    15C 3    0 A
W    16A 3
W    16B 3  +12
W    16C 3  +12
W    17A 3  NACRES1
W    17B 3  ACPGIRPT
W    17C 3  ACIFGRP
                                  ./.

GR: 99   (CONTINUATION)
PROCESSOR BACK PANEL
****************************************

EL: 04   (CONTINUATION)
-------------------------------------
TYPE PT  LV SIG.NAME COLOR F    X      Y
---- --- -- -------- ----- - ----- -----
W    18A 3  ACPGDATA
W    18B 3  PMNTM  3
W  + 18C 3  ADDRCT-A
W    19A 3
W    19B 3    0 K
W    19C 3    0 K
W    20A 3
W    20B 3  +24
W    20C 3  +24
W    21A 3  ACPGDATB
W    21B 3  PMNTM  4
W  + 21C 3  ADDRCT-B
W    22A 3  ACPGDATC
W  + 22B 3  PERMNTM4
W  + 22C 3  ADDRCT-C
W    23A 3  ACPGDATD
W    23B 3  PPWRON
W  + 23C 3  ADDRCT-D
W    24A 3  ACPGDATE
W    24B 3  ACIAPFLG
W  + 24C 3  ADDRCT-E
W    25A 3  ACPGDATF
W    25B 3  + 5  ADD
W  + 25C 3  ADDRCT-F
W    26A 3  ACPGDATG
W  + 26B 3  ARPOUT-A
W  + 26C 3  ADDRCT-G
W    27A 3  ACPGDATH
W  + 27B 3  ARPOUT-B
W  + 27C 3  ADDRCT-H
W    28A 3  ACPGDATI
W  + 28B 3  ARPOUT-C
W  + 28C 3  ADDRCT-I
W    29A 3  ACPGDATK
W  + 29B 3  ARPOUT-D
W  + 29C 3  ADDRCT-K
W    30A 3  ACPGDATL
W  + 30B 3  ARPOUT-E
W    30C 3  ACINSTEN
W    31A 3  ACPGDATM
W  + 31B 3  ARPOUT-F
W    31C 3  ACPGDATN
WP   32A 1  +10
WP   32B 1  +10
WP   32C 1  +10

GR: 99   (CONTINUATION)
PROCESSOR BACK PANEL
****************************************

EL: 05  WIRING WITH: GROUND
-------------------------------------
TYPE PT  LV SIG.NAME COLOR F    X      Y
---- --- -- -------- ----- - ----- -----
WPQ  01A 1%    0 L     4
WPQ  01B 1%    0 L     4
WPQ  01C 1%    0 L     4
W    02A 3
W    02B 3  NOMASTER
W    02C 3
W    03A 3  MP2DMM
W    03B 3  NINVCTR1
W    03C 3  P2DM  -S
W    04A 3  MP3DMM
W    04B 3  NOCODE-S
W    04C 3  P3DM  -S
W    05A 3  PPWRON
W    05B 3  NINVCTR2
W    05C 3  NFRAMSLB
W    06A 3  ACIFMUXA
W    06B 3  ACBIF1
W    06C 3
W    07A 3  MPSYNCM
W    07B 3  ACBIF2
W    07C 3  PSYNC -S
W    08A 3  MDMFAILM
W    08B 3  ACBIF3
W    08C 3  DMFAIL-S
W    09A 3  DIRUP -M
W    09B 3  CODOCT
W    09C 3  DIRUP -S
W    10A 3  DMCOD -M
W    10B 3  PERDATA
W    10C 3  DMCOD -S
W    11A 3  BTCTOF-M
W    11B 3  ARPOUT-A
W    11C 3  BTCTOF-S
W    12A 3
W    12B 3  - 5
W    12C 3  - 5
W    13A 3  G-SFRSLA
W    13B 3  G-SFRSLB
W    13C 3
W    14A 3
W    14B 3  -12
W    14C 3  -12
W    15A 3
W    15B 3    0 A
W    15C 3    0 A
W    16A 3
W    16B 3  +12
W    16C 3  +12
W    17A 3  ACIFMUXB
W    17B 3
W    17C 3  FRAMSL B
                                  ./.
```

```
*****************************************************************************************************************
*   S T U D E R   *      L O C A T I O N     P I N     L I S T        *    82/01/08 * 15:12      *   P A G E     10    *
*****************************************************************************************************************
TAPE LOCK SYSTEM 2000 A80: LOCATOR, PARALLEL PROGRAMMER        1.228.375.00             79-10-05

GR: 99   (CONTINUATION)
PROCESSOR BACK PANEL
****************************************

EL: 05   (CONTINUATION)
-------------------------------------
TYPE PT  LV SIG.NAME COLOR F    X      Y
---- --- -- -------- ----- - ----- -----
W    18A 3  ACPGDATA
W    18B 3
W    18C 3  FRAMSL A
W    19A 3
W    19B 3    0 K
W    19C 3    0 K
W    20A 3
W    20B 3  +24
W    20C 3  +24
W    21A 3  ACPGDATB
W    21B 3  PMNTM  4
W    21C 3  WLINE -S
W    22A 3  ACPGDATC
W    22B 3  ACSPGRP1
W    22C 3  WLINE -M
W    23A 3  ACPGDATD
W    23B 3  IFMUX-W
W    23C 3  RLINE -A
W    24A 3  ACPGDATE
W    24B 3
W    24C 3  RLINE -B
W    25A 3  ACPGDATF
W    25B 3  BTCTA -M
W    25C 3  BTCTA -S
W    26A 3  ACPGDATG
W    26B 3  BTCTB -M
W    26C 3  BTCTB -S
W    27A 3  ACPGDATH
W    27B 3  BTCTC -M
W    27C 3  BTCTC -S
W    28A 3  ARIF-Y
W    28B 3  BTCTD -M
W    28C 3  BTCTD -S
W    29A 3  LOADCKCT
W    29B 3  BTCTE -M
W    29C 3  BTCTE -S
W    30A 3  NCOCKCT
W    30B 3  BTCTF -M
W    30C 3  BTCTF -S
W    31A 3  ACSERDAT
W    31B 3  BTCTG -M
W    31C 3  BTCTG -S
WP   32A 1  +10
WP   32B 1  +10
WP   32C 1  +10

GR: 99   (CONTINUATION)
PROCESSOR BACK PANEL
****************************************

EL: 06  WRAP CONNECTOR J06.1, 3*32 PIN
-------------------------------------
TYPE PT  LV SIG.NAME COLOR F    X      Y
---- --- -- -------- ----- - ----- -----
WP   01A 1     0 L
WP   01B 1     0 L
WP   01C 1     0 L
WP   01D 1     0 L
WP   01E 1     0 L
WP   01F 1     0 L
W    02A 3  PCDATRDY
W    02B 3  PCSPGRPA
W    02C 3  TESTRAM
WQ   02D 3% +0.0CAP1 0
W    02E 3
W    02F 3
W    03A 3  PCDATACC
W    03B 3  PPBPRESS
W    03C 3  PCPGAD00
WQ   03D 3  +24CAP1  9
WQ   03E 3  Y-SYNC 1 1
W    03F 3
W    04A 3  RECLATEN
W    04B 3  CAPMUX
W    04C 3  PCTDCLR
WQ   04D 3  Y-OUT  1 3
WQ   04E 3  Y-SYNC 2 8
W    04F 3
W    05A 3  12.5  HZ
W    05B 3  REPRECMX
W    05C 3  PCEXPRRQ
WQ   05D 3  Y-TACH-D 4
WQ   05E 3  +0.0CAP2 0
W    05F 3
W    06A 3  WEPCFLG
W    06B 3  50    HZ
W    06C 3  PCSPGRP3
W    06D 3
WQ   06E 3  +5.8CAP1 5
W    06F 3
W    07A 3  + 5  ADD
W    07B 3  PCPGAD01
W    07C 3  TIMLDEN
W    07D 3
WQ   07E 3  -5.8CAP1 6
WQ   07F 3  S-CAPEXT 8
W    08A 3  LDTRMGT
W    08B 3  PCPGAD02
W    08C 3  LDARDATA
W    08D 3
WQ   08E 3  R-SPLY-0 2
WQ   08F 3  SPD-CTL1 1
W    09A 3  PCBAL
W    09B 3  PRIFTRXY
W    09C 3  PCPGAD03
                                  ./.

GR: 99   (CONTINUATION)
PROCESSOR BACK PANEL
****************************************

EL: 06   (CONTINUATION)
-------------------------------------
TYPE PT  LV SIG.NAME COLOR F    X      Y
---- --- -- -------- ----- - ----- -----
W    09D 3
WQ   09E 3  R-SPLY-1 1
WQ   09F 3  SPD-CTL2 2
W    10A 3  PCDATINE
W    10B 3  3.2  KHZ
W    10C 3  PCPGAD04
W    10D 3
W    10E 3
W    10F 3
W    11A 3  PRGRON
W    11B 3  TDLATEN1
W    11C 3  PCPGAD05
W    11D 3
W    11E 3
W    11F 3
W    12A 3
W    12B 3  - 5
W    12C 3  - 5
W    12D 3
W    12E 3
W    12F 3
W    13A 3  NEMGSTOP
W    13B 3  PMNTM  1
W    13C 3  CAPLATEN
W    13D 3
W    13E 3
W    13F 3
W    14A 3
W    14B 3  -12
W    14C 3  -12
W    14D 3
W    14E 3
W    14F 3
W    15A 3
W    15B 3    0 A
W    15C 3    0 A
W    15D 3
W    15E 3
W    15F 3
W    16A 3
W    16B 3  +12
W    16C 3  +12
W    16D 3
W    16E 3
W    16F 3
W    17A 3  PCBSP
W    17B 3  PMNTM  2
W    17C 3  PCTAPFLG
W  + 17D 3  Y-TACH-D
W  + 17E 3  S-LOW
W  + 17F 3  CMD.ENB2
                                  ./.
```

```
*****************************************************************************************************************
*   S T U D E R   *      L O C A T I O N     P I N     L I S T       *   82/01/08 * 15:12      *   P A G E    11    *
*****************************************************************************************************************
TAPE LOCK SYSTEM 2000 A80: LOCATOR, PARALLEL PROGRAMMER        1.228.375.00              79-10-05

GR: 99   (CONTINUATION)
PROCESSOR BACK PANEL
*****************************************

EL: 06   (CONTINUATION)
-----------------------------------------
TYPE PT  LV SIG.NAME COLOR F   X     Y
---- --- -- -------- ----- - ----- -----
W    18A 3  PCPGDATA
W    18B 3  PMNTM   3
W    18C 3  NPPWRON
W  + 18D 3  SPD-CTL1
W  + 18E 3  S-CAPEXT
WQ   18F 3  K-CUTINH 3
W    19A 3
W    19B 3    0 K
W    19C 3    0 K
W    19D 3
W    19E 3
W    19F 3
W    20A 3
W    20B 3  +24
W    20C 3  +24
W    20D 3
W    20E 3
W    20F 3
W    21A 3  PCPGDATB
W    21B 3  PCPGAD06
W    21C 3  PCPGAD09
WQ   21D 3% +0.0EMC1 0
W  + 21E 3  RECSTINH
W  + 21F 3  K-PRESS
W    22A 3  PCPGDATC
W    22B 3  TDLATEN2
W    22C 3  PCPGAD10
W  + 22D 3  B-REW
W  + 22E 3  Y-MUTE
W  + 22F 3  Y-MOVE-D
W    23A 3  PCPGDATD
W    23B 3  BPLATEN
W    23C 3  PCPGAD11
WQ   23D 3  Y-MOD1   8
WQ   23E 3  Y-STOP   3
W  + 23F 3    0 L
W    24A 3  PCPGDATE
W    24B 3  PCPGAD07
W    24C 3  PCBPLTCL
WQ   24D 3  Y-MOD2   1
W  + 24E 3  YPS-MOVE
W  + 24F 3    0 L
W    25A 3  PCPGDATF
W    25B 3  PCSPGRP2
W    25C 3  PCBPWE
WQ   25D 3  Y-RES3   2
WQ   25E 3  +5.8EMC1 5
W  + 25F 3    0 L
W    26A 3  PCPGDATG
W    26B 3  PCPGAD08
W    26C 3  TDCDMUX2
                                  ./.

GR: 99   (CONTINUATION)
PROCESSOR BACK PANEL
*****************************************

EL: 06   (CONTINUATION)
-----------------------------------------
TYPE PT  LV SIG.NAME COLOR F   X     Y
---- --- -- -------- ----- - ----- -----
W  + 26D 3  Y-CLK
WQ   26E 3% +0.0EMC2 0
W  + 26F 3  Y-FORW
W    27A 3  PCPGDATH
W    27B 3  TDCDMUX1
W    27C 3  EXTFRQSL
W  + 27D 3    0 L
W  + 27E 3  +0.0CAP2
W  + 27F 3  K-RESET
W    28A 3  PCPGDATI
W    28B 3  PCPGDATN
W    28C 3  NPINSTEN
W  + 28D 3  +0-TYPE1
WQ   28E 3  S-CUTAUT 4
WQ   28F 3  Y-RFLX   7
W    29A 3  PCPGDATK
W    29B 3  PCBTEST
W    29C 3  NOCODE-S
W  + 29D 3    0 L
WQ   29E 3  R-CUT- 1 3
WQ   29F 3  Y-TRSP   8
W    30A 3  PCPGDATL
W    30B 3  RAMMUX
W    30C 3  NOMASTER
W  + 30D 3  B-CUT
WQ   30E 3  R-CUT- 3 2
WQ   30F 3  TT1-ACT  1
W    31A 3  PCPGDATM
W    31B 3  FRPWRON
W    31C 3  25    HZ
W  + 31D 3  CCSUPVIS
WQ   31E 3  S-RES2   1
WQ   31F 3  TT2-ACT  2
WP   32A 1  +10
WP   32B 1  +10
WP   32C 1  +10
WP   32D 1  +10
WP   32E 1  +10
WP   32F 1  +10

EL: 07   WRAP CONNECTOR J07.1, 3*32 PIN
-----------------------------------------
TYPE PT  LV SIG.NAME COLOR F   X     Y
---- --- -- -------- ----- - ----- -----
WP   01A 1    0 L
WP   01B 1    0 L
WP   01C 1    0 L
WPQ  01D 1    0 L    0
WPQ  01E 1    0 L    0
WP   01F 1    0 L
W    02A 3  TRMADR0
                                  ./.

GR: 99   (CONTINUATION)
PROCESSOR BACK PANEL
*****************************************

EL: 07   (CONTINUATION)
-----------------------------------------
TYPE PT  LV SIG.NAME COLOR F   X     Y
---- --- -- -------- ----- - ----- -----
W    02B 3  PCEXPR-1
W    02C 3  TESTRAM
WQ   02D 3  LKMODEDR 1
WQ   02E 3  SYNCBDR  3
W    02F 3
W    03A 3  TRMADR1
W    03B 3  PCEXPR-2
W    03C 3  TIMLDEN
WQ   03D 3  EDMODEDR 8
WQ   03E 3  SNCPLTDR 4
W    03F 3
W    04A 3  TRMADR2
W    04B 3  PCEXPR-3
W    04C 3  ARPOUT-D
WQ   04D 3  PARKEDDR 2
WQ   04E 3  EDLEADDR 7
W    04F 3
W    05A 3  TRMADR3
W    05B 3  PCEXPRRQ
W    05C 3  ARPOUT-C
WQ   05D 3  EXTRECCM 7
W    05E 3
W    05F 3
W    06A 3  TRMADR4
W    06B 3  WEPCFLG
W    06C 3  ARPOUT-B
W    06D 3
WQ   06E 3  STARTDR1 1
W    06F 3
W    07A 3  TRMADR5
W    07B 3  LDARDATA
W    07C 3  ARPOUT-A
W    07D 3
WQ   07E 3  STARTDR2 6
W    07F 3
W    08A 3  TRMADR6
W    08B 3  LDTRMCT
W    08C 3  WEACFLG
WQ   08D 3    0 K    0
WQ   08E 3  STARTDR3 9
W    08F 3
W    09A 3  NTRMDATA
W    09B 3  PCDATINA
W    09C 3  PCBAL
WQ   09D 3  +24      2
WQ   09E 3  STARTDR4 4
W    09F 3
W    10A 3  NTRMDATB
W    10B 3  PCDATINB
W    10C 3  PEDITLD
WQ   10D 3% +0.0MC1  0
                                  ./.
```

```
*****************************************************************************************************************
*   S T U D E R   *      L O C A T I O N     P I N     L I S T       *   82/01/08 * 15:12      *   P A G E    12    *
*****************************************************************************************************************
TAPE LOCK SYSTEM 2000 A80: LOCATOR, PARALLEL PROGRAMMER        1.228.375.00              79-10-05

GR: 99   (CONTINUATION)
PROCESSOR BACK PANEL
*****************************************

EL: 07   (CONTINUATION)
-----------------------------------------
TYPE PT  LV SIG.NAME COLOR F   X     Y
---- --- -- -------- ----- - ----- -----
WQ   10E 3  CMD.ENB2 4
WQ   10F 3  +24MC3   9
W    11A 3  NTRMDATC
W    11B 3  PCDATINC
W    11C 3  ACSPGRP2
WQ   11D 3  B-REW    2
WQ   11E 3  CMD.ENB1 3
WQ   11F 3  LCC.ENB  2
W    12A 3
W    12B 3  - 5
W    12C 3  - 5
W    12D 3
W    12E 3
W    12F 3
W    13A 3  NTRMDATD
W    13B 3  PCDATIND
W    13C 3  TESTFLGS
WQ   13D 3  B-FORW   4
WQ   13E 3  S-LOW    1
WQ   13F 3  S-REW    4
W    14A 3
W    14B 3  -12
W    14C 3  -12
W    14D 3
W    14E 3
W    14F 3
W    15A 3
W    15B 3    0 A
W    15C 3    0 A
W    15D 3
W    15E 3
W    15F 3
W    16A 3
W    16B 3  +12
W    16C 3  +12
W    16D 3
W    16E 3
W    16F 3
W    17A 3  12.8 KHZ
W    17B 3  PMNTM   2
W    17C 3  819.2KHZ
WQ   17D 3  B-REPR   2
WQ   17E 3  Y-LOW    3
WQ   17F 3  S-FCRW   2
W    18A 3  PCPGDATA
W    18B 3  ACPGDATA
W    18C 3  PCBALQ2
WQ   18D 3  B-STOP   3
WQ   18E 3  K-PRESS  2
WQ   18F 3  S-REPR   3
W    19A 3
                                  ./.

GR: 99   (CONTINUATION)
PROCESSOR BACK PANEL
*****************************************

EL: 07   (CONTINUATION)
-----------------------------------------
TYPE PT  LV SIG.NAME COLOR F   X     Y
---- --- -- -------- ----- - ----- -----
W    19B 3    0 K
W    19C 3    0 K
W    19D 3
W    19E 3
W    19F 3
W    20A 3
W    20B 3  +24
W    20C 3  +24
W    20D 3
W    20E 3
W    20F 3
W    21A 3  PCPGDATB
W    21B 3  ACPGDATB
W    21C 3  PMNTM   4
WQ   21D 3  B-REC    8
WQ   21E 3  RECSTINH 7
WQ   21F 3  S-STOP   8
W    22A 3  PCPGDATC
W    22B 3  ACPGDATC
W    22C 3  PCBPMUXA
WQ   22D 3  B-CUT    1
WQ   22E 3  Y-MUTE   4
WQ   22F 3  S-REC    1
W    23A 3  PCPGDATD
W    23B 3  ACPGDATD
W    23C 3  PCBPMUXB
WQ   23D 3  B-MONO   2
WQ   23E 3  Y-MONO   3
WQ   23F 3  S-CUT    2
W    24A 3  PCPGDATE
W    24B 3  ACPGDATE
W    24C 3  PCBTESTC
WQ   24D 3  B-FAD    3
WQ   24E 3  +24MC2   9
WQ   24F 3  S-MONO   3
W    25A 3  PCPGDATF
W    25B 3  ACPGDATF
W    25C 3  PCBTESTA
WQ   25D 3  +0.0MC2  0
WQ   25E 3  Y-MOVE-1 1
WQ   25F 3  FAD-1    4
W    26A 3  PCPGDATG
W    26B 3  ACPGDATG
W    26C 3  PCBTESTB
W    26D 3
WQ   26E 3  Y-MOVE-D 8
WQ   26F 3  FAD-2    7
W    27A 3  PCPGDATH
W    27B 3  ACPGDATH
W    27C 3  REPROSEL
WQ   27D 3  Y-REVRS  8
                                  ./.

GR: 99   (CONTINUATION)
PROCESSOR BACK PANEL
*****************************************

EL: 07   (CONTINUATION)
-----------------------------------------
TYPE PT  LV SIG.NAME COLOR F   X     Y
---- --- -- -------- ----- - ----- -----
WQ   27E 3  YPS-MOVE 7
WQ   27F 3  K-RESET  8
W    28A 3  PCPGDATI
W    28B 3  BPTRMDAT
W    28C 3  SPOOLMOD
WQ   28D 3  Y-FORW   1
W    28E 3
WQ   28F 3  Y-CLK    1
W    29A 3  PCIFCTST
W    29B 3  PCBTEST
W    29C 3  SYNCSEL
WQ   29D 3  +24MC1   9
W    29E 3
WQ   29F 3  Y-ICLK   2
W    30A 3  NTRMDTA
W    30B 3  PCBALQ3
W    30C 3  ACPGIRPT
WQ   30D 3  +5.8MC1  5
WQ   30E 3  +0-TYPE2 2
WQ   30F 3% +0.0MC3  0
W    31A 3  PCBTEST4
W    31B 3  PCBALQ0
W    31C 3  PERDATA
WQ   31D 3  -5.8MC1  6
WQ   31E 3  +0-TYPE1 1
WQ   31F 3% +0.0MC4  0
WP   32A 1  +10
WP   32B 1  +10
WP   32C 1  +10
WP   32D 1  +10
WP   32E 1  +10
WP   32F 1  +10

EL: 08   WRAP CONNECTOR J08.1, 3*32 PIN
-----------------------------------------
TYPE PT  LV SIG.NAME COLOR F   X     Y
---- --- -- -------- ----- - ----- -----
WP   01A 1    0 L
WP   01B 1    0 L
WP   01C 1    0 L
WPQ  01D 1    0 L    9-5-0
WP   01E 1    0 L
WPQ  01F 1    0 L    9-4-0
W    02A 3
W  + 02B 3  Y-TACH-D
W    02C 3  PERCAPFR
WQ   02D 3  PB1      9
W  + 02E 3  PRGRON
WQ   02F 3  EXEC     9-0
W    03A 3
W    03B 3  S-CAPEXT
                                  ./.
```

```
*****************************************************************************************************************************
*   S T U D E R   *      L O C A T I O N    P I N    L I S T      *   82/01/08 * 15:12     *   P A G E    13    *
*****************************************************************************************************************************
TAPE LOCK SYSTEM 2000 A80: LOCATOR, PARALLEL PROGRAMMER        1.228.375.00              79-10-05
```

GR: 99 (CONTINUATION)
PROCESSOR BACK PANEL

EL: 08 (CONTINUATION)

TYPE	PT	LV	SIG.NAME	COLOR	F	X	Y
W	03C	3	K-CUTINH				
WQ	03D	3	BULBDPA2	1			
W	03E	3					
WQ	03F	3	PBD		1-0		
W	04A	3	SPD-CTL1				
W	04B	3	PCTDCLR				
W	04C	3	Y-FORW				
WQ	04D	3	PBA		5		
W	04E	3					
WQ	04F	3	PBI		8-5		
W	05A	3	Y-KRESET				
W +	05B	3	REPRECMX				
W	05C	3	Y-CLK				
WQ	05D	3	PBH		4		
W	05E	3					
WQ	05F	3	BULBDPA1		4-8		
W	06A	3	PPWRON				
W +	06B	3	RECLATEN				
W	06C	3	S-HIGH				
WQ	06D	3	BULBPBI3		8		
W	06E	3					
WQ	06F	3	INTGEN		5-R		
W	07A	3	K-PRESS				
W	07B	3	STARTDR3				
W	07C	3	STARTDR4				
WQ	07D	3	EDIT CD		R		
W	07E	3					
WQ	07F	3	BULBDPB2		4-R		
W	08A	3	K-RESET				
W	08B	3					
W	08C	3	AUXDROA				
WQ	08D	3	LOCKFAST		6		
W	08E	3					
WQ	08F	3	CODENDEF		5-6		
W	09A	3	AUXDRINA				
W	09B	3	K-RESET				
W	09C	3					
WQ	09D	3	ADV RET		2		
W	09E	3					
WQ	09F	3	ADD		4-6		
W	10A	3	PCPGDATH				
W	10B	3	TT1-ACT				
W	10C	3	TT2-ACT				
WQ	10D	3	MSEC		0		
W	10E	3					
WQ	10F	3	B-CALC		5-2		
W +	11A	3	REPROSEL				
W	11B	3	TDLATEN1				
W	11C	3	Y-TRSP				
WQ	11D	3	GEN N SC		7		
W	11E	3					

./.

GR: 99 (CONTINUATION)
PROCESSOR BACK PANEL

EL: 08 (CONTINUATION)

TYPE	PT	LV	SIG.NAME	COLOR	F	X	Y
WQ	11F	3	SLDECOFF		4-2		
W	12A	3					
W	12B	3	- 5				
W	12C	3	- 5				
WQ	12D	3	0 L		5-1-0		
W	12E	3					
WQ	12F	3	0 L		4-1-0		
W	13A	3	NEMGSTOP				
W	13B	3	TDLATEN2				
W	13C	3	Y-RECMD				
WQ	13D	3	B-UPPLIM		8-R		
W	13E	3					
WQ	13F	3	B-GENUSB		5-0		
W	14A	3					
W	14B	3	-12				
W	14C	3	-12				
W	14D	3					
W	14E	3					
W	14F	3					
W	15A	3					
W	15B	3	0 A				
W	15C	3	0 A				
W	15D	3					
W	15E	3					
W	15F	3					
W	16A	3					
W	16B	3	+12				
W	16C	3	+12				
W	16D	3					
W	16E	3					
W	16F	3					
W	17A	3	YMOVETLS				
W	17B	3	LOC.ENB				
W	17C	3	RECSTINH				
WQ	17D	3	ENTRY		6-2		
W	17E	3					
WQ	17F	3	SL NOTP		4-0		
W	18A	3	NPPWRON				
W	18B	3	CMD.ENB2				
W	18C	3	S-REW				
WQ	18D	3	BOFFSREG		9-5		
W	18E	3					
WQ	18F	3	PB7		8-6		
W	19A	3					
W	19B	3	0 K				
W	19C	3	0 K				
W +	19D	3	0 L				
W	19E	3					
W +	19F	3	0 L				
W	20A	3					
W	20B	3	+24				

./.

GR: 99 (CONTINUATION)
PROCESSOR BACK PANEL

EL: 08 (CONTINUATION)

TYPE	PT	LV	SIG.NAME	COLOR	F	X	Y
W	20C	3	+24				
W	20D	3					
W	20E	3					
W	20F	3					
W	21A	3	B-REW				
W	21B	3	B-FORW				
W	21C	3	S-FORW				
WQ	21D	3	B-EXITSL		1-5		
W	21E	3					
WQ	21F	3	PBG		6-R		
W	22A	3	S-REPR				
W	22B	3	B-REPR				
W	22C	3	B-STOP				
WQ	22D	3	B-PHAS		9-4		
W	22E	3					
WQ	22F	3	PB4		8-2		
W	23A	3	S-STOP				
W	23B	3	S-REC				
W	23C	3	B-REC				
WQ	23D	3	FRAM ER		4-1		
W	23E	3					
WQ	23F	3	PBK		2-R		
W	24A	3	B-CUT				
W	24B	3	S-CUT				
W	24C	3	CAP-EN				
WQ	24D	3	GEN SET		9-8		
W	24E	3					
WQ	24F	3	PBF		8-0		
W	25A	3	PMNTM	2			
W +	25B	3	EXGENOUT				
W	25C	3	S-LOW				
WQ	25D	3	B-LOWLIM		8-1		
W	25E	3					
WQ	25F	3	LWLIM EX		0-R		
W	26A	3	TDCDMUX2				
W	26B	3	NTDMOVFD				
W	26C	3	PCPGDATA				
WQ	26D	3	NO CD S		9-R		
W	26E	3					
WQ	26F	3	CONNFAIL		6-0		
W	27A	3	TDCDMUX1				
W	27B	3	YPS-MOVE				
W	27C	3	PCPGDATB				
WQ	27D	3	B-ENTRYM		1-R		
W	27E	3					
WQ	27F	3	BENT/PKS		2-0		
W	28A	3	+0-TYPE1				
W +	28B	3	CODIN1-S				
W	28C	3	Y-MOVE-D				
WQ	28D	3	SVPCI		9-6		
W	28E	3					

./.

```
*****************************************************************************************************************************
*   S T U D E R   *      L O C A T I O N    P I N    L I S T      *   82/01/08 * 15:12     *   P A G E    14    *
*****************************************************************************************************************************
TAPE LOCK SYSTEM 2000 A80: LOCATOR, PARALLEL PROGRAMMER        1.228.375.00              79-10-05
```

GR: 99 (CONTINUATION)
PROCESSOR BACK PANEL

EL: 08 (CONTINUATION)

TYPE	PT	LV	SIG.NAME	COLOR	F	X	Y
WQ	28F	3	UPLIM EX		9-1-0		
W	29A	3	NTDY-REC				
W +	29B	3	CODGENO				
W	29C	3	PCPGDATC				
WQ	29D	3	BULBPBF4		1-6		
W	29E	3					
WQ	29F	3	B-NOMAST		4-5-0		
W +	30A	3	INCODREP				
W +	30B	3	SYNCSEL				
W	30C	3	LKMODEDR				
WQ	30D	3	BULBPBF3		9-2		
W +	30E	3	SVSERPRG				
WQ	30F	3	WMPRESO1		8-R-0		
W	31A	3	Y-MUTE				
W	31B	3	EDLEADDR				
W	31C	3	EDMODEDR				
WQ	31D	3	BULBPBF2		1-2		
W	31E	3					
WQ	31F	3	WMPRESO2		6-2-0		
WP	32A	1	+10				
WP	32B	1	+10				
WP	32C	1	+10				
WP	32D	1	+10				
WP	32E	1	+10				
WP	32F	1	+10				

EL: 09 WRAP CONNECTOR J09.1, 3*32 PIN

TYPE	PT	LV	SIG.NAME	COLOR	F	X	Y
WP	01A	1	0 L				
WP	01B	1	0 L				
WP	01C	1	0 L				
WPQ	01D	1	0 L		9-5-0		
WP	01E	1	0 L				
WPQ	01F	1	0 L		9-4-0		
W	02A	3	TRMADR0				
W	02B	3	BLKDSP0				
W	02C	3	BLKDSP1				
WQ	02D	3	WMPRESO3		9		
W	02E	3					
WQ	02F	3	DISPEN1		9-0		
W	03A	3	TRMADR1				
W	03B	3	BLKDSP2				
W	03C	3	BLKDSP3				
WQ	03D	3	BLKDSP1		1		
W	03E	3					
WQ	03F	3	WMPRESO4		1-0		
W	04A	3	TRMADR2				
W	04B	3	BLKDSP4				
W	04C	3	BLKDSP5				

./.

GR: 99 (CONTINUATION)
PROCESSOR BACK PANEL

EL: 09 (CONTINUATION)

TYPE	PT	LV	SIG.NAME	COLOR	F	X	Y
WQ	04D	3	NTRMDATA		5		
W	04E	3					
WQ	04F	3	DISPEN0		8-5		
W	05A	3	TRMADR3				
W	05B	3	BLKDSP6				
W	05C	3	BLKDSP7				
WQ	05D	3	BADRSTRT		4		
W	05E	3					
WQ	05F	3	STOREOFS		4-8		
W	06A	3	TRMADR4				
W	06B	3	BLKDSP8				
W	06C	3	DISEND9+				
WQ	06D	3	BULBDPH1		8		
W	06E	3					
WQ	06F	3	DISPEN2		5-R		
W	07A	3	TRMADR5				
W	07B	3	DISEND9-				
W	07C	3	DISPEN0				
WQ	07D	3	PHASING		R		
W	07E	3					
WQ	07F	3	BLKDSP0		4-R		
W	08A	3	TRMADR6				
W	08B	3	DISPEN1				
W	08C	3	DISPEN2				
WQ	08D	3	BULBPBG3		6		
W	08E	3					
WQ	08F	3	DISPEN3		5-6		
W	09A	3	NTRMDTA				
W	09B	3	PCDATINA				
W	09C	3	DISPEN3				
WQ	09D	3	MSEC		2		
W	09E	3					
WQ	09F	3	BLKDSP2		4-6		
W	10A	3					
W	10B	3	PCDATINB				
W	10C	3	DISPEN4				
WQ	10D	3	DIFF		0		
W	10E	3					
WQ	10F	3	HOLD		5-2		
W	11A	3					
W	11B	3	PCDATINC				
W	11C	3	DISPEN5				
WQ	11D	3	FRAM		7		
W	11E	3					
WQ	11F	3	LOCKSLOW		4-2		
W	12A	3					
W	12B	3	- 5				
W	12C	3	- 5				
WQ	12D	3	0 L		5-1-0		
W	12E	3					
WQ	12F	3	0 L		4-1-0		

./.

GR: 99 (CONTINUATION)
PROCESSOR BACK PANEL

EL: 09 (CONTINUATION)

TYPE	PT	LV	SIG.NAME	COLOR	F	X	Y
W	13A	3	12.5 HZ				
W	13B	3	PCDATIND				
W	13C	3	DISPEN6				
WQ	13D	3	B-REHEAR		8-R		
W +	13E	3	PMNTM	1			
WQ	13F	3	NTRMDATB		5-0		
W	14A	3					
W	14B	3	-12				
W	14C	3	-12				
W	14D	3					
W	14E	3					
W	14F	3					
W	15A	3					
W	15B	3	0 A				
W	15C	3	0 A				
W	15D	3					
W	15E	3					
W	15F	3					
W	16A	3					
W	16B	3	+12				
W	16C	3	+12				
W	16D	3					
W	16E	3					
W	16F	3					
W	17A	3	ADCDATAA				
W	17B	3	PCDATINE				
W	17C	3	DISPEN7				
WQ	17D	3	BULBPBH3		6-2		
W	17E	3					
WQ	17F	3	BLKDSP3		4-0		
W	18A	3	ADCDATAB				
W	18B	3	PPBPRESS				
W	18C	3	DISPEN8				
WQ	18D	3	OFS DISP		9-5		
W +	18E	3	PMNTM	3			
WQ	18F	3	BULBDPL1		8-6		
W	19A	3					
W	19B	3	0 K				
W	19C	3	0 K				
W +	19D	3	0 L				
W	19E	3					
W +	19F	3	0 L				
W	20A	3	+24				
W	20B	3	+24				
W	20C	3	+24				
W	20D	3					
W	20E	3					
W	20F	3					
W	21A	3	819.2KHZ				
W	21B	3	PB0				
W	21C	3	PB1				

./.

```
*****************************************************************************************************************************
*   S T U D E R   *      L O C A T I O N    P I N    L I S T      *   82/01/08 * 15:12      *   P A G E    15    *
*****************************************************************************************************************************
TAPE LOCK SYSTEM 2000 A80: LOCATOR, PARALLEL PROGRAMMER        1.228.375.00          79-10-05
```

GR: 99 (CONTINUATION)
PROCESSOR BACK PANEL

EL: 09 (CONTINUATION)

TYPE	PT	LV	SIG.NAME	COLOR	F	X	Y
WQ	21D	3	CODEFR/S	1-5			
W +	21E	3	PMNTM 4				
WQ	21F	3	DISPEN4	6-R			
W	22A	3	ADCDATAC				
W	22B	3	PB2				
W	22C	3	PB3				
WQ	22D	3	PBULBHMS	9-4			
W	22E	3					
WQ	22F	3	BULBPBK5	8-2			
W	23A	3	PPWRON				
W	23B	3	PB4				
W	23C	3	PB5				
WQ	23D	3	ADCDATAE	4-1			
W	23E	3					
WQ	23F	3	BULBDPA0	2-R			
W	24A	3	ADCDATAD				
W	24B	3	PB6				
W	24C	3	PMNTM 2				
WQ	24D	3	BULBDPN1	9-8			
W	24E	3					
WQ	24F	3	NTRMDATC	8-0			
W	25A	3	ENADC				
W	25B	3	PB7				
W	25C	3	PCDATRDY				
WQ	25D	3	SLAV	8-1			
W	25E	3					
WQ	25F	3	SVPCII	0-R			
W	26A	3	PBI				
W	26B	3	PBK				
W	26C	3	ADCDATAE				
WQ	26D	3	UNAS B	9-R			
W	26E	3					
WQ	26F	3	BLKDSP4	6-0			
W	27A	3	PBREC				
W	27B	3	PBPLAY				
W	27C	3	PCDATACC				
WQ	27D	3	BULBPBL5	1-R			
W	27E	3					
WQ	27F	3	PBULBHMS	2-0			
W	28A	3	PBA				
W	28B	3	PBB				
W	28C	3	PCPGDATA				
WQ	28D	3	BULBDPP1	9-6			
W	28E	3					
WQ	28F	3	BLKDSP5	9-1-0			
W	29A	3	PBC				
W	29B	3	PBD				
W	29C	3	PCPGDATB				
WQ	29D	3	ADCDATAD	1-6			
W	29E	3					
WQ	29F	3	DISPEN6	4-5-0			

./.

GR: 99 (CONTINUATION)
PROCESSOR BACK PANEL

EL: 09 (CONTINUATION)

TYPE	PT	LV	SIG.NAME	COLOR	F	X	Y
W	30A	3	PBE				
W	30B	3	PBF				
W	30C	3	PCPGDATC				
WQ	30D	3	PBULBHMS	9-2			
W	30E	3					
WQ	30F	3	DISPEN5	8-R-0			
W	31A	3	PBG				
W	31B	3	PBH				
W	31C	3	PRIFTRXY				
WQ	31D	3	DISPEN7	1-2			
W	31E	3					
WQ	31F	3	BLKDSP7	6-2-0			
WP	32A	1	+10				
WP	32B	1	+10				
WP	32C	1	+10				
WP	32D	1	+10				
WP	32E	1	+10				
WP	32F	1	+10				

EL: 10 WRAP CONNECTOR J10.1, 3*32 PIN

TYPE	PT	LV	SIG.NAME	COLOR	F	X	Y
WPQ	01A	1	0 L	0			
WPQ	01B	1	0 L	0			
WPQ	01C	1	0 L	0			
WQ	01D	3	0 L	9-5-0			
W	01E	3					
WQ	01F	3	0 L	9-4-0			
W	02A	3	SYNC A				
W	02B	3	PARKED				
W	02C	3	FRAM ER				
WQ	02D	3	NTRMDATD	9			
W	02E	3					
WQ	02F	3	BLKDSP6	9-0			
W	03A	3	B-NOMAST				
W	03B	3	NO CD S				
W	03C	3	B-REHEAR				
WQ	03D	3	ADCDATAC	1			
W	03E	3					
WQ	03F	3	DISPEN8	1-0			
W	04A	3	ENTRY				
W	04B	3	STOP				
W	04C	3	REC				
WQ	04D	3	MAST	5			
W	04E	3					
WQ	04F	3	KB	8-5			
W	05A	3	FAST REW				
W	05B	3	FAST FWD				
W	05C	3	PLAY				
WQ	05D	3	USER B	4			

./.

GR: 99 (CONTINUATION)
PROCESSOR BACK PANEL

EL: 10 (CONTINUATION)

TYPE	PT	LV	SIG.NAME	COLOR	F	X	Y
W	05E	3					
WQ	05F	3	BLKDSP8	4-8			
W	06A	3	EDIT				
W	06B	3	CONNFAIL				
W	06C	3	B-CALC				
WQ	06D	3	SVPCIII	8			
W	06E	3					
WQ	06F	3	DISEND9+	5-R			
W	07A	3	BLKMMPRG				
W	07B	3	BEDMMPRG				
W	07C	3	BPKMMPRG				
WQ	07D	3	ADCDATAB	R			
W	07E	3					
WQ	07F	3	PB3	4-R			
W	08A	3	GENRUN				
W	08B	3	BPILMPRG				
W	08C	3	GEN=MAST				
WQ	08D	3	BULBPBM5	6			
W	08E	3					
WQ	08F	3	PBC	5-6			
W	09A	3	UPLIM EX				
W	09B	3	LWLIM EX				
W	09C	3	BENT/PKS				
WQ	09D	3	ADCDATAA	2			
W	09E	3					
WQ	09F	3	DISEND9-	4-6			
W	10A	3	B-EXITSL				
W	10B	3	B-ENTRYM				
W	10C	3	B-LOWLIM				
WQ	10D	3	BLOCATOR	0			
W	10E	3					
WQ	10F	3	PB5	5-2			
W	11A	3	PMNTM 2				
W	11B	3	PCDATRDY				
W	11C	3	+ 5 ADD				
WQ	11D	3	REC	7			
W	11E	3					
WQ	11F	3	PB0	4-2			
W	12A	3					
W	12B	3	- 5				
W	12C	3	- 5				
WQ	12D	3	0 L	5-1-0			
W	12E	3					
WQ	12F	3	0 L	4-1-0			
W	13A	3	B-UPPLIM				
W	13B	3	BOFFSREG				
W	13C	3	GEN SET				
WQ	13D	3	EDIT	8-R			
W	13E	3					
WQ	13F	3	PBE	5-0			
W	14A	3					

./.

```
*****************************************************************************************************************************
*   S T U D E R   *      L O C A T I O N    P I N    L I S T      *   82/01/08 * 15:12      *   P A G E    16    *
*****************************************************************************************************************************
TAPE LOCK SYSTEM 2000 A80: LOCATOR, PARALLEL PROGRAMMER        1.228.375.00          79-10-05
```

GR: 99 (CONTINUATION)
PROCESSOR BACK PANEL

EL: 10 (CONTINUATION)

TYPE	PT	LV	SIG.NAME	COLOR	F	X	Y
W	14B	3	-12				
W	14C	3	-12				
W	14D	3					
W	14E	3					
W	14F	3					
W	15A	3					
W	15B	3	0 A				
W	15C	3	0 A				
W	15D	3					
W	15E	3					
W	15F	3					
W	16A	3					
W	16B	3	+12				
W	16C	3	+12				
W	16D	3					
W	16E	3					
W	16F	3					
W	17A	3	B-PHAS				
W	17B	3	HOLD				
W	17C	3	INTGEN				
WQ	17D	3	BPKMMPRG	6-2			
W	17E	3					
WQ	17F	3	BULBDPS2	4-0			
W	18A	3	UNAS B				
W	18B	3	USER B				
W	18C	3	DIFF				
WQ	18D	3	GENRUN	9-5			
W	18E	3					
WQ	18F	3	PARKED	8-6			
W	19A	3					
W	19B	3	0 K				
W	19C	3	0 K				
W +	19D	3	0 L				
W	19E	3					
W +	19F	3	0 L				
W	20A	3					
W	20B	3	+24				
W	20C	3	+24				
W	20D	3					
W	20E	3					
W	20F	3					
W	21A	3	OFS DISP				
W	21B	3	SLAV				
W	21C	3	MAST				
WQ	21D	3	TX	1-5			
W	21E	3					
WQ	21F	3	BULBDPT2	6-R			
W	22A	3	KB				
W	22B	3	MSEC				
W	22C	3	FRAM				
WQ	22D	3	SYNC PLT	9-4			

./.

GR: 99 (CONTINUATION)
PROCESSOR BACK PANEL

EL: 10 (CONTINUATION)

TYPE	PT	LV	SIG.NAME	COLOR	F	X	Y
W	22E	3					
WQ	22F	3	STOP	8-2			
W	23A	3	CODEFR/S				
W	23B	3	B-RECENB				
W	23C	3	BADRSTRT				
WQ	23D	3	FAST FWD	4-1			
W	23E	3					
WQ	23F	3	+10 SW	2-R			
W	24A	3	SL NOTP				
W	24B	3	ADV RET				
W	24C	3	PHASING				
WQ	24D	3	BEDMMPRG	9-8			
W	24E	3					
WQ	24F	3	BULBDPU2	8-0			
W	25A	3	TX				
W	25B	3	STOREOFS				
W	25C	3	LOCKSLOW				
WQ	25D	3	PBB	8-1			
W	25E	3					
WQ	25F	3	SYNC B	0-R			
W	26A	3	LOCKFAST				
W	26B	3	ENADC				
W	26C	3	PBULBHMS				
WQ	26D	3	B-RECENB	9-R			
W	26E	3					
WQ	26F	3	BPILMPRG	6-0			
W	27A	3	EDIT CD				
W	27B	3	CODENDEF				
W	27C	3	BLOCATOR				
WQ	27D	3	PBPLAY	1-R			
W	27E	3					
WQ	27F	3	FAST REW	2-0			
W	28A	3	SYNC PLT				
W	28B	3	SYNC B				
W	28C	3	B-GENUSB				
WQ	28D	3	PBREC	9-6			
W	28E	3					
WQ	28F	3	BLKMMPRG	9-1-0			
W	29A	3	TRMADR0				
W	29B	3	TRMADR1				
W	29C	3	TRMADR2				
WQ	29D	3	GEN=MAST	1-6			
W	29E	3					
WQ	29F	3	SYNC A	4-5-0			
W	30A	3	TRMADR6				
W	30B	3	NTRMDTA				
W	30C	3	PPWRON				
WQ	30D	3	0 SW	9-2			
W	30E	3					
WQ	30F	3	PB6	8-R-0			
W	31A	3	TRMADR3				

./.

GR: 99 (CONTINUATION)
PROCESSOR BACK PANEL

EL: 10 (CONTINUATION)

TYPE	PT	LV	SIG.NAME	COLOR	F	X	Y
W	31B	3	TRMADR4				
W	31C	3	TRMADR5				
WQ	31D	3	PLAY	1-2			
W	31E	3					
WQ	31F	3	PB2	6-2-0			
WPQ	32A	1	+10	5			
WPQ	32B	1	+10	5			
WPQ	32C	1	+10	5			
W	32D	3	+10				
W	32E	3					
W	32F	3	+10				

EL: 11 WRAP CONNECTOR J11.1, 3*32 PIN

TYPE	PT	LV	SIG.NAME	COLOR	F	X	Y
WPQ	01A	1	0 L	0			
WP	01B	1	0 L				
WP	01C	1	0 L				
WQ	02A	3	RECCOD1	2			
W	02B	3					
W	02C	3	EXGENIN1				
WQ +	03A	3	RECCODTM	3			
W	03B	3					
W +	03C	3	EXGENTM				
WQ	04A	3	RECCOD2	4			
W +	04B	3	CODIN1-S				
W	04C	3	EXGENIN2				
WQ +	05A	3	Y-RECMD	2			
WQ +	05B	3	S-LOWACH	9			
WQ +	05C	3	Y-MUTEMD	5			
WQ	06A	3	YAC-BIAS	1			
WQ +	06B	3	0-ERASE	2			
WQ	06C	3	0-ERASE	8			
WQ	07A	3	0-BIAS	9			
WQ +	07B	3	CCSUPVIS	3			
WQ	07C	3	YAC-ERAS	9			
WQ +	08A	3	AC1MOD	6			
W	08B	3					
WQ +	08C	3	AC2MOD	3			
WQ +	09A	3	0-AC1	9			
W	09B	3					
WQ +	09C	3	0-AC2	9			
WQ +	10A	3	AC1MOD	5			
W	10B	3					
WQ +	10C	3	AC2MOD	7			
WQ +	11A	3	0-AC1	6			
W	11B	3					
WQ +	11C	3	0-AC2	8			
WP	12A	1	- 5				
WP	12B	1	- 5				

./.

```
*  S T U D E R  *      L O C A T I O N     P I N     L I S T       *   82/01/08 * 15:12      *   P A G E     17    *
TAPE LOCK SYSTEM 2000 A80: LOCATOR, PARALLEL PROGRAMMER        1.228.375.00            79 10 05

GR: 99   (CONTINUATION)
PROCESSOR BACK PANEL
EL: 11   (CONTINUATION)
TYPE PT   LV SIG.NAME COLOR F    X      Y
WP   12C 1  - 5
WQ   13A 3  ERASEHD1 6
WQ   13B 3  ERAHDSCR 4
WQ   13C 3  ERASEHD2 9
WP   14A 1  -12
WP   14B 1  -12
WP   14C 1  -12
WP   15A 1    0 A
WP   15B 1    0 A
WP   15C 1    0 A
WP   16A 1  +12
WP   16B 1  +12
WP   16C 1  +12
W    17A 3
W    17B 3
W    17C 3
WQ   18A 3  RECHD1   6
WQ   18B 3  RECHDSCR 4
WQ   18C 3  RECHD2   9
WP   19A 1    0 K
WP   19B 1    0 K
WP   19C 1    0 K
WP   20A 1  +24
WP   20B 1  +24
WP   20C 1  +24
W    21A 3
W    21B 3
W    21C 3  SYNCH1
W    22A 3
W    22B 3
W    22C 3  SYNCH2
W    23A 3  RECHDSCR
W    23B 3  RECHDSCR
W    23C 3  RECHDSCR
W    24A 3  PPWRON
W    24B 3
W  + 24C 3  SYNCSEL
W    25A 3  CODGENO
W    25B 3
W    25C 3  EXGENOUT
W    26A 3  REPRECMX
W    26B 3
W    26C 3  FILTNRW
W    27A 3  RECLATEN
W    27B 3
W  + 27C 3  REPROSEL
W    28A 3  PCPGDATA
W    28B 3
W    28C 3  FILTWIDE
W    29A 3  PCPGDATB
W    29B 3
                                                                                                        ./.

GR: 99   (CONTINUATION)
PROCESSOR BACK PANEL
EL: 11   (CONTINUATION)
TYPE PT   LV SIG.NAME COLOR F    X      Y
W    29C 3  INCODREP
W    30A 3  PCPGDATC
W    30B 3
W    30C 3  REPINSEL
W    31A 3  PCPGDATH
W    31B 3
W    31C 3  PMNTM  2
WP   32A 1  +10
WP   32B 1  +10
WP   32C 1  +10

EL: 12   WRAP CONNECTOR J12.1, 3*32 PIN
TYPE PT   LV SIG.NAME COLOR F    X      Y
WP   01A 1    0 L
WP   01B 1    0 L
WP   01C 1    0 L
W    02A 3  CCDINR1
W    02B 3
W    02C 3  CODINR2
W    03A 3
W    03B 3
WQ   03C 3  SYMCODD1 2
W    04A 3
W    04B 3
WQ   04C 3  SYMCODD2 3
W    05A 3  INCODREP
W    05B 3
W    05C 3  CODDSELB
W    06A 3
W    06B 3
W    06C 3  REPINSEL
W    07A 3
W    07B 3
W    07C 3
W    08A 3
W    08B 3
W    09A 3
W    09B 3
W    09C 3  FILTWIDE
W    10A 3
W    10B 3
W    10C 3
W    11A 3
W    11B 3
W    11C 3  CODIN1-S
WP   12A 1  - 5
WP   12B 1  - 5
WP   12C 1  - 5
                                                                                                        ./.

GR: 99   (CONTINUATION)
PROCESSOR BACK PANEL
EL: 12   (CONTINUATION)
TYPE PT   LV SIG.NAME COLOR F    X      Y
W    13A 3
W    13B 3
W    13C 3
WP   14A 1  -12
WP   14B 1  -12
WP   14C 1  -12
WP   15A 1    0 A
WP   15B 1    0 A
WP   15C 1    0 A
WP   16A 1  +12
WP   16B 1  +12
WP   16C 1  +12
W    17A 3
W    17B 3
W    17C 3
W    18A 3
W    18B 3
W    18C 3
WP   19A 1    0 K
WP   19B 1    0 K
WP   19C 1    0 K
WP   20A 1  +24
WP   20B 1  +24
WP   20C 1  +24
W    21A 3
W    21B 3
W    21C 3  SYNCH1
W  + 22A 3    0 L
W    22B 3
W    22C 3  SYNCH2
W    23A 3  RECHDSCR
W    23B 3  RECHDSCR
W    23C 3  RECHDSCR
W    24A 3
W    24B 3
W    24C 3
W    25A 3
W    25B 3
WQ   25C 3  REPRO1   2
W    26A 3
W    26B 3
WQ   26C 3  REPRO2   6
W    27A 3
W    27B 3
WQ   27C 3  REPROO.0 U
W    28A 3  REPROSCR
W    28B 3  REPROSCR
WQ   28C 3  REPROSCR 4
W    29A 3  REPROSEL
W    29B 3
W    29C 3
                                                                                                        ./.

*  S T U D E R  *      L O C A T I O N     P I N     L I S T       *   82/01/08 * 15:12      *   P A G E     18    *
TAPE LOCK SYSTEM 2000 A80: LOCATOR, PARALLEL PROGRAMMER        1.228.375.00            79-10-05

GR: 99   (CONTINUATION)
PROCESSOR BACK PANEL
EL: 12   (CONTINUATION)
TYPE PT   LV SIG.NAME COLOR F    X      Y
W    30A 3
W    30B 3
W    30C 3  SYNCSEL
W    31A 3  BCODEREP
W    31B 3
W    31C 3  FILTNRW
WP   32A 1  +10
WP   32B 1  +10
WP   32C 1  +10

EL: 13   WRAP CONNECTOR J13.1, 3*32 PIN
TYPE PT   LV SIG.NAME COLOR F    X      Y
WPQ  01A 1    0 L    0
WP   01B 1    0 L
WP   01C 1    0 L
WQ + 02A 3  EXGENIN1 2
W    02B 3
W    02C 3  R15 1322
WQ + 03A 3  EXGENIM  3
W    03B 3
W    03C 3
WQ + 04A 3  EXGENIN2 4
W    04B 3
W    04C 3  INCODREP
W    05A 3
W    05B 3  25    HZ
W    05C 3
W    06A 3
W    06B 3  50    HZ
W    06C 3
W    07A 3  DMFAIL-M
W    07B 3  100   HZ
W    07C 3  DMFAIL-S
W    08A 3  P1DM  -M
W    08B 3  PER1DM-S
W    08C 3  CODIN1-S
W    09A 3  P2DM  -M
W    09B 3  PER2DM-S
W    09C 3
W    10A 3  P3DM  -M
W    10B 3  PER3DM-S
W    10C 3
W    11A 3  P4DM  -M
W    11B 3  PER4DM-S
W  + 11C 3  P2DM  -S
WP   12A 1  - 5
WP   12B 1  - 5
WP   12C 1  - 5
W    13A 3  DMOSCI-M
                                                                                                        ./.

GR: 99   (CONTINUATION)
PROCESSOR BACK PANEL
EL: 13   (CONTINUATION)
TYPE PT   LV SIG.NAME COLOR F    X      Y
W    13B 3
W    13C 3  DMOSCI-S
WP   14A 1  -12
WP   14B 1  -12
WP   14C 1  -12
WP   15A 1    0 A
WP   15B 1    0 A
WP   15C 1    0 A
WP   16A 1  +12
WP   16B 1  +12
WP   16C 1  +12
W    17A 3  DMCOD -M
W    17B 3
W    17C 3  DMCOD -S
W    18A 3  NDMCOD-M
W    18B 3
W    18C 3  NDMCOD-S
WP   19A 1    0 K
WP   19B 1    0 K
WP   19C 1    0 K
WP   20A 1  +24
WP   20B 1  +24
WP   20C 1  +24
W    21A 3  PER1DM-M
W    21B 3
W    21C 3  P1DM  -S
W    22A 3  PER2DM-M
W    22B 3    0 1325
W    22C 3  P2DM  -S
W    23A 3  PER3DM-M
W    23B 3
W    23C 3  P3DM  -S
W    24A 3  PER4DM-M
W    24B 3
W    24C 3  P4DM  -S
W  + 25A 3  PMNTM  2
W    25B 3
W    25C 3
W    26A 3  DIRUP -M
W    26B 3
W    26C 3  DIRUP -S
W    27A 3  DIRDWN-M
W    27B 3
W    27C 3  DIRDWN-S
W  + 28A 3  EXFRQDAT
W  + 28B 3  + 5  ADD
W    28C 3
W    29A 3
W  + 29B 3  + 5  ADD
W    29C 3  PSYNC -S
W    30A 3
                                                                                                        ./.

GR: 99   (CONTINUATION)
PROCESSOR BACK PANEL
EL: 13   (CONTINUATION)
TYPE PT   LV SIG.NAME COLOR F    X      Y
W    30B 3
W    30C 3
W    31A 3  PSYNC -M
W    31B 3
W    31C 3
WP   32A 1  +10
WP   32B 1  +10
WP   32C 1  +10

EL: 14   WRAP CONNECTOR J14.1, 3*32 PIN
TYPE PT   LV SIG.NAME COLOR F    X      Y
WP   01A 1    0 L
WP   01B 1    0 L
WP   01C 1    0 L
W    02A 3
W    02B 3  G-SFRSLA
W    02C 3  ACPGDATA
W    03A 3
W    03B 3  G-SFRSLD
W    03C 3  ACPGDATB
W    04A 3
W    04B 3  ARPOUT-D
W    04C 3  ACPGDATC
W    05A 3
W    05B 3  ARPOUT-C
W    05C 3  ACPGDATD
W    06A 3
W    06B 3  ARPOUT-B
W    06C 3  ACPGDATE
W    07A 3
W    07B 3  ARPOUT-A
W    07C 3  ACPGDATF
W    08A 3
W    08B 3  ARIF-Y
W    08C 3  ACPGDATG
W    09A 3
W    09B 3
W    09C 3  ACPGDATH
W    10A 3
W    10B 3  COSTCKCT
W    10C 3  AREN2
W    11A 3
W    11B 3  100   HZ
W    11C 3  AREN1
WP   12A 1  - 5
WP   12B 1  - 5
WP   12C 1  - 5
W    13A 3
W    13B 3  ARSEROUT
                                                                                                        ./.
```

```
*  S T U D E R  *      L O C A T I O N     P I N     L I S T       *   82/01/08 * 15:12      *   P A G E     19    *
TAPE LOCK SYSTEM 2000 A80: LOCATOR, PARALLEL PROGRAMMER        1.228.375.00              79-10-05

GR: 99   (CONTINUATION)
PROCESSOR BACK PANEL
**************************************

EL: 14   (CONTINUATION)
-----------------------------------------
TYPE PT  LV SIG.NAME COLOR F    X     Y
---- --- -- -------- ----- - ----- -----
W    13C 3  NINVCTR1
WP   14A 1  -12
WP   14B 1  -12
WP   14C 1  -12
WP   15A 1    0 A
WP   15B 1    0 A
WP   15C 1    0 A
WP   16A 1  +12
WP   16B 1  +12
WP   16C 1  +12
W    17A 3
W    17B 3  NACRES1
W    17C 3  NINVCTR2
W    18A 3
W    18B 3  IFCDATIN
W    18C 3  ADDRCT-A
WP   19A 1    0 K
WP   19B 1    0 K
WP   19C 1    0 K
WP   20A 1  +24
WP   20B 1  +24
WP   20C 1  +24
W    21A 3
W    21B 3  PMNTM  4
W    21C 3  ADDRCT-B
W    22A 3
W    22B 3  NPPWRON
W    22C 3  ADDRCT-C
W    23A 3
W    23B 3  TDATAM/S
W    23C 3  ADDRCT-D
W    24A 3
W    24B 3  PERDATA
W    24C 3  ADDRCT-E
W    25A 3
W    25B 3  ACSERDAT
W    25C 3  ADDRCT-F
W    26A 3
W    26B 3  AUXDATIN
W    26C 3  ADDRCT-G
W    27A 3
W    27B 3  EXFRQDAT
W    27C 3  ADDRCT-H
W    28A 3
W    28B 3  DIVCT- A
W    28C 3  ADDRCT-I
W  + 29A 3  + 5  ADD
W    29B 3  DIVCT- B
W    29C 3  ADDRCT-K
W  + 30A 3  + 5  ADD
W    30B 3  DIVCT- C
                                    ./.

GR: 99   (CONTINUATION)
PROCESSOR BACK PANEL
**************************************

EL: 14   (CONTINUATION)
-----------------------------------------
TYPE PT  LV SIG.NAME COLOR F    X     Y
---- --- -- -------- ----- - ----- -----
W    30C 3  ARPOUT-E
W    31A 3
W    31B 3  DIVCT- D
W    31C 3  ARPOUT-F
WP   32A 1  +10
WP   32B 1  +10
WP   32C 1  +10

EL: 15  WIRING WITH: GROUND
-----------------------------------------
TYPE PT  LV SIG.NAME COLR F    X     Y
---- --- -- -------- ----- - ----- -----
WPQ  01A 1%   0 L    4
WPQ  01B 1%   0 L    4
WPQ  01C 1%   0 L    4
W    02A 3  ACPGAD00
W    02B 3  PMNTM  1
W    02C 3  PCPGAD00
W    03A 3  ACPGAD01
W    03B 3  PMNTM  2
W    03C 3  PCPGAD01
W    04A 3  ACPGAD02
W    04B 3  PMNTM  3
W    04C 3  PCPGAD02
W    05A 3  ACPGAD03
W    05B 3  PMNTM  4
W    05C 3  PCPGAD03
W    06A 3  ACPGAD04
W    06B 3  819.2KHZ
W    06C 3  PCPGAD04
W    07A 3  ACPGAD05
W    07B 3  FRPWRON
W    07C 3  PCPGAD05
W    08A 3  ACPGAD06
W    08B 3  PCPGAD10
W    08C 3  PCPGAD06
W    09A 3  ACPGAD07
W    09B 3  PCPGAD11
W    09C 3  PCPGAD07
W    10A 3  ACPGAD08
W    10B 3  ACPGAD10
W    10C 3  PCPGAD08
W    11A 3  ACPGAD09
W    11B 3  ACPGAD11
W    11C 3  PCPGAD09
WP   12A 1  - 5
WP   12B 1  - 5
WP   12C 1  - 5
W    13A 3  ACINSTEN
W    13B 3  + 5  ADD
W    13C 3  NPINSTEN
                                    ./.

GR: 99   (CONTINUATION)
PROCESSOR BACK PANEL
**************************************

EL: 15   (CONTINUATION)
-----------------------------------------
TYPE PT  LV SIG.NAME COLOR F    X     Y
---- --- -- -------- ----- - ----- -----
WP   14A 1  -12
WP   14B 1  -12
WP   14C 1  -12
WP   15A 1    0 A
WP   15B 1    0 A
WP   15C 1    0 A
WP   16A 1  +12
WP   16B 1  +12
WP   16C 1  +12
W    17A 3  ACPGDATA
W    17B 3  PCTAPFLG
W    17C 3  PCPGDATA
W    18A 3  ACPGDATB
W    18B 3  ACTAPFLG
W    18C 3  PCPGDATB
WP   19A 1    0 K
WP   19B 1    0 K
WP   19C 1    0 K
WP   20A 1  +24
WP   20B 1  +24
WP   20C 1  +24
W    21A 3  ACPGDATC
W    21B 3
W    21C 3  PCPGDATC
W    22A 3  ACPGDATD
W    22B 3
W    22C 3  PCPGDATD
W    23A 3  ACPGDATE
W    23B 3
W    23C 3  PCPGDATE
W    24A 3  ACPGDATF
W    24B 3
W    24C 3  PCPGDATF
W    25A 3  ACPGDATG
W    25B 3
W    25C 3  PCPGDATG
W    26A 3  ACPGDATH
W    26B 3
W    26C 3  PCPGDATH
W    27A 3  ACPGDATI
W    27B 3
W    27C 3  PCPGDATI
W    28A 3  ACPGDATK
W    28B 3
W    28C 3  PCPGDATK
W    29A 3  ACPGDATL
W    29B 3
W    29C 3  PCPGDATL
W    30A 3  ACPGDATM
W    30B 3
W    30C 3  PCPGDATM
                                    ./.
```

```
*  S T U D E R  *      L O C A T I O N     P I N     L I S T       *   82/01/08 * 15:12      *   P A G E     20    *
TAPE LOCK SYSTEM 2000 A80: LOCATOR, PARALLEL PROGRAMMER        1.228.375.00              79-10-05

GR: 99   (CONTINUATION)
PROCESSOR BACK PANEL
**************************************

EL: 15   (CONTINUATION)
-----------------------------------------
TYPE PT  LV SIG.NAME COLOR F    X     Y
---- --- -- -------- ----- - ----- -----
W    31A 3  ACPGDATN
W    31B 3
W    31C 3  PCPGDATN
WP   32A 1  +10
WP   32B 1  +10
WP   32C 1  +10

EL: 16  WRAP CONNECTOR J16.1, 3*32 PIN
-----------------------------------------
TYPE PT  LV SIG.NAME CCLOR F    X     Y
---- --- -- -------- ----- - ----- -----
WP   01A 1    0 L
WP   01B 1    0 L
WP   01C 1    0 L
W    02A 3
W    02B 3
W    02C 3
W    03A 3
W    03B 3
W    03C 3
W    04A 3
W    04B 3
W    04C 3
W    05A 3
W    05B 3
W    05C 3
W    06A 3
W    06B 3
W    06C 3
W    07A 3
W    07B 3
W    07C 3
W    08A 3
W    08B 3
W    08C 3
W    09A 3
W    09B 3
W    09C 3
W    10A 3
W    10B 3
W    10C 3
W    11A 3
W    11B 3
W    11C 3
WP   12A 1  - 5
WP   12B 1  - 5
WP   12C 1  - 5
W    13A 3
W    13B 3
W    13C 3
WP   14A 1  -12
                                    ./.

GR: 99   (CONTINUATION)
PROCESSOR BACK PANEL
**************************************

EL: 16   (CONTINUATION)
-----------------------------------------
TYPE PT  LV SIG.NAME COLOR F    X     Y
---- --- -- -------- ----- - ----- -----
WP   14B 1  -12
WP   14C 1  -12
WP   15A 1    0 A
WP   15B 1    0 A
WP   15C 1    0 A
WP   16A 1  +12
WP   16B 1  +12
WP   16C 1  +12
W    17A 3
W    17B 3
W    17C 3
W    18A 3
W    18B 3
W    18C 3
WP   19A 1    0 K
WP   19B 1    0 K
WP   19C 1    0 K
WP   20A 1  +24
WP   20B 1  +24
WP   20C 1  +24
W    21A 3
W    21B 3
W    21C 3
W    22A 3
W    22B 3
W    22C 3
W    23A 3
W    23B 3
W    23C 3
W    24A 3
W    24B 3
W    24C 3
W    25A 3
W    25B 3
W    25C 3
W    26A 3
W    26B 3
W    26C 3
W    27A 3
W    27B 3
W    27C 3
W    28A 3
W    28B 3
W    28C 3
W    29A 3
W    29B 3
W    29C 3
W    30A 3
W    30B 3
W    30C 3
W    31A 3
                                    ./.

GR: 99   (CONTINUATION)
PROCESSOR BACK PANEL
**************************************

EL: 16   (CONTINUATION)
-----------------------------------------
TYPE PT  LV SIG.NAME COLOR F    X     Y
---- --- -- -------- ----- - ----- -----
W    31B 3
W    31C 3
WP   32A 1  +10
WP   32B 1  +10
WP   32C 1  +10

EL: 17  WRAP CONNECTOR J17.1, 3*32 PIN
-----------------------------------------
TYPE PT  LV SIG.NAME COLOR F    X     Y
---- --- -- -------- ----- - ----- -----
WPQ$ 01A 1    0 L    0
WP   01B 1    0 L
WP   01C 1    0 L
WQ$  02A 3  + 5  ADD 1
W    02B 3  B-LKMBP
W    02C 3  B-GEN=M
WQ$  03A 3  B-REMOTE 3
W    03B 3  B-TDSYNC
W    03C 3  BBPRES09
WQ$  04A 3  X2TLS    2
W    04B 3  B-NOMBP
W    04C 3  BBPRES10
WQ$  05A 3  MS1TLS   4
W    05B 3  SVPC I
W    05C 3  B-CCHRDY
WQ$  06A 3  MS2TLS   7
W    06B 3  SVPC II
W    06C 3  B-CCHREC
W    07A 3
W    07B 3  BPSUPVIS
W    07C 3  B-CCHREP
W    08A 3
W    08B 3  TRMADR3
W    08C 3  B-NOSCOD
W    09A 3
W    09B 3  TRMADR2
W    09C 3  Y2BPS
W    10A 3
W    10B 3  TRMADR1
W    10C 3  Y1BPS
W    11A 3
W    11B 3  TRMADR0
W    11C 3  SVPC III
WP   12A 1  - 5
WP   12B 1  - 5
WP   12C 1  - 5
W    13A 3
W    13B 3  BPTRMDAT
W    13C 3  X5BPS
WPQ$ 14A 1  -12      8
WP   14B 1  -12
                                    ./.
```

```
*****************************************************************************************************************************
*  S T U D E R  *  L O C A T I O N  P I N  L I S T  *  82/01/08 * 15:12  *  P A G E  21  *
*****************************************************************************************************************************
TAPE LOCK SYSTEM 2000 A80: LOCATOR, PARALLEL PROGRAMMER      1.228.375.00          79-10-05

GR: 99  (CONTINUATION)
PROCESSOR BACK PANEL
****************************************

EL: 17  (CONTINUATION)
-----------------------------------------
TYPE PT  LV SIG.NAME CCLOR F   X     Y
---- --- -- -------- ----- - ----- -----
WP   14C 1  -12
WP   15A 1    0 A
WP   15B 1    0 A
WP   15C 1    0 A
WPQ$ 16A 1  +12       1
WP   16B 1  +12
WP   16C 1  +12
W    17A 3  PARKEDDR
W    17B 3  PMNTM  2
W    17C 3  Y3BPS
W    18A 3  SNCPLTDR
W    18B 3  PCBPLTCL
W    18C 3  X4BPS
WP   19A 1    0 K
WP   19B 1    0 K
WP   19C 1    0 K
WP   20A 1  +24
WP   20B 1  +24
WP   20C 1  +24
W    21A 3  +0.0CAP2
W    21B 3  PCBPWE
W    21C 3  X3BPS
W    22A 3  +5.8EMC1
W    22B 3  TRMADR4
W    22C 3  X1BPS
W    23A 3  +0.0MC2
W    23B 3  PPWRON
W    23C 3  X2BPS
W    24A 3  STARTDR2
W    24B 3  SVSERPRG
W    24C 3  B-EXTREC
W    25A 3  SYNCBDR
W    25B 3  CCSUPVIS
W    25C 3  BBPRES11
W    26A 3  EXTRECCM
W    26B 3  PCPGDATD
W    26C 3  B-CCHSYN
W    27A 3
W    27B 3  PCBPMUXB
W    27C 3  B-OUT=IN
W    28A 3  PCPGDATH
W    28B 3  PCBPMUXA
W    28C 3  B-CCHSAF
W    29A 3  BPLATEN
W    29B 3  PCPGDATA
W    29C 3  STARTDR1
W    30A 3  B-TX
W    30B 3  PCPGDATB
W    30C 3  B-PILOT
W    31A 3  B-EMSTOP
W    31B 3  PCPGDATC
                                  ./.

GR: 99  (CONTINUATION)
PROCESSOR BACK PANEL
****************************************

EL: 17  (CONTINUATION)
-----------------------------------------
TYPE PT  LV SIG.NAME COLOR F   X     Y
---- --- -- -------- ----- - ----- -----
W    31C 3  B-LAMPT
WP   32A 1  +10
WP   32B 1  +10
WP   32C 1  +10

EL: 18  WRAP CONNECTOR J18.1, 3*32 PIN
-----------------------------------------
TYPE PT  LV SIG.NAME COLOR F   X     Y
---- --- -- -------- ----- - ----- -----
WPC  01A 1    0 L     0
WPQ  01B 1    0 L     0
WPQ  01C 1    0 L     0
W    02A 3
W    02B 3
W  + 02C 3  Y-RECMD
W  + 03A 3  + 5  ADD
W    03B 3
W  + 03C 3  + 5  ADD
W    04A 3
W    04B 3
W    04C 3
W    05A 3
W    05B 3
W    05C 3
W    06A 3
W    06B 3
W    06C 3
WQ   07A 3  +10AD150 5
WQ   07B 3  +10AD150 5
WQ   07C 3  +10AD150 5
W    08A 3
W    08B 3
W    08C 3
W    09A 3
W    09B 3
W    09C 3
WQ   10A 3  0.0AD150 0
WQ   10B 3  0.0AD150 0
WQ   10C 3  0.0AD150 0
W    11A 3
W    11B 3
W    11C 3
WP   12A 1  - 5
WP   12B 1  - 5
WP   12C 1  - 5
W    13A 3
W    13B 3
W    13C 3
WP   14A 1  -12
WP   14B 1  -12
WP   14C 1  -12
                                  ./.

GR: 99  (CONTINUATION)
PROCESSOR BACK PANEL
****************************************

EL: 18  (CONTINUATION)
-----------------------------------------
TYPE PT  LV SIG.NAME COLOR F   X     Y
---- --- -- -------- ----- - ----- -----
WP   15A 1    0 A
WP   15B 1    0 A
WP   15C 1    0 A
WP   16A 1  +12
WP   16B 1  +12
WP   16C 1  +12
W    17A 3
W    17B 3
W    17C 3
W    18A 3
W    18B 3
W    18C 3
WP   19A 1    0 K
WP   19B 1    0 K
WP   19C 1    0 K
WP   20A 1  +24
WP   20B 1  +24
WP   20C 1  +24
W    21A 3
W    21B 3
W    21C 3
W    22A 3
W    22B 3
W    22C 3
W    23A 3
W    23B 3
W    23C 3
W    24A 3
W    24B 3
W    24C 3
W    25A 3
W    25B 3
W    25C 3
W  + 26A 3  PCPGDATH
W    26B 3
W    26C 3
W    27A 3
W    27B 3
W    27C 3
W    28A 3  + 5  ADD
W    28B 3  + 5  ADD
W    28C 3  + 5  ADD
W    29A 3  + 5  ADD
W    29B 3  + 5  ADD
W    29C 3  + 5  ADD
W    30A 3  + 5  ADD
W    30B 3  + 5  ADD
W    30C 3  + 5  ADD
W    31A 3
W    31B 3
W    31C 3
                                  ./.
```

```
*****************************************************************************************************************************
*  S T U D E R  *  L O C A T I O N  P I N  L I S T  *  82/01/08 * 15:12  *  P A G E  22  *
*****************************************************************************************************************************
TAPE LOCK SYSTEM 2000 A80: LOCATOR, PARALLEL PROGRAMMER      1.228.375.00          79-10-05

GR: 99  (CONTINUATION)
PROCESSOR BACK PANEL
****************************************

EL: 18  (CONTINUATION)
-----------------------------------------
TYPE PT  LV SIG.NAME COLOR F   X     Y
---- --- -- -------- ----- - ----- -----
WPQ  32A 1  +10       5
WPQ  32B 1  +10       5
WPQ  32C 1  +10       5

EL: 19  WRAP CONNECTOR J19.1, 3*32 PIN
-----------------------------------------
TYPE PT  LV SIG.NAME COLOR F   X     Y
---- --- -- -------- ----- - ----- -----
WP   01A 1    0 L
WP   01B 1    0 L
WP   01C 1    0 L
W    02A 3
W    02B 3
W    02C 3
W    03A 3
W    03B 3
W    03C 3
WQ   04A 3  -20V A80 1
W    04B 3  -20V A80
WQ   04C 3  -20V A80 1
W  + 05A 3  +10
W  + 05B 3  +10
W  + 05C 3  +10
W  + 06A 3  819.2KHZ
W    06B 3
W    06C 3
WQ   07A 3  +20V A80 3
W    07B 3  +20V A80
WQ   07C 3  +20V A80 3
W  + 08A 3  +24
W  + 08B 3  +24
W  + 08C 3  +24
W    09A 3
W    09B 3
W    09C 3
WQ   10A 3% 0.0INA80 0
WQ   10B 3% 0.0INA80 0
WQ   10C 3% 0.0INA80 0
W    11A 3
W    11B 3
W    11C 3
WP   12A 1  - 5
WP   12B 1  - 5
WP   12C 1  - 5
W    13A 3
W    13B 3
W  + 13C 3  PMNTM  1
WP   14A 1  -12
WP   14B 1  -12
WP   14C 1  -12
WP   15A 1    0 A
                                  ./.

GR: 99  (CONTINUATION)
PROCESSOR BACK PANEL
****************************************

EL: 19  (CONTINUATION)
-----------------------------------------
TYPE PT  LV SIG.NAME CCLOR F   X     Y
---- --- -- -------- ----- - ----- -----
WP   15B 1    0 A
WP   15C 1    0 A
WP   16A 1  +12
WP   16B 1  +12
WP   16C 1  +12
W  + 17A 3  PMNTM  4
W    17B 3
W    17C 3
W    18A 3
W    18B 3
W    18C 3
WP   19A 1    0 K
WP   19B 1    0 K
WP   19C 1    0 K
WP   20A 1  +24
WP   20B 1  +24
WP   20C 1  +24
W    21A 3
W    21B 3
W    21C 3
W    22A 3
W    22B 3
W    22C 3
W    23A 3
W    23B 3
W    23C 3
W    24A 3
W    24B 3
W    24C 3
W    25A 3
W    25B 3
W    25C 3
W    26A 3
W    26B 3
W    26C 3
W    27A 3
W    27B 3
W    27C 3
W    28A 3
W    28B 3
W    28C 3
W    29A 3
W    29B 3
W    29C 3
W    30A 3  WIRE001
W    30B 3  WIRE001
W    30C 3  WIRE001
W    31A 3
W    31B 3
W    31C 3
WP   32A 1  +10
                                  ./.

GR: 99  (CONTINUATION)
PROCESSOR BACK PANEL
****************************************

EL: 19  (CONTINUATION)
-----------------------------------------
TYPE PT  LV SIG.NAME COLOR F   X     Y
---- --- -- -------- ----- - ----- -----
WP   32B 1  +10
WP   32C 1  +10

EL: 20  WRAP CONNECTOR J20.1, 3*32 PIN
-----------------------------------------
TYPE PT  LV SIG.NAME COLOR F   X     Y
---- --- -- -------- ----- - ----- -----
WPQ  01A 1    0 L     0
WPQ  01B 1    0 L     0
WPQ  01C 1    0 L     0
WQ   01D 3    0 L     9
W    01E 3    0 L
WQ   01F 3    0 L     9-0
W    02A 3
W    02B 3
W    02C 3
WQ   02D 3  B-LKMBP  1
W    02E 3
WQ   02F 3  B-GEN=M  8-1
W    03A 3
W    03B 3
W    03C 3
WQ   03D 3  B-TDSYNC 5
W    03E 3
WQ   03F 3  BBPRES09 9-R
WQ   04A 3  -10V 150 6
WQ   04B 3  -10V 150 6
WQ   04C 3  -10V 150 6
WQ   04D 3  B-NOMBP  4
W    04E 3
WQ   04F 3  BBPRES10 1-R
W    05A 3
W    05B 3
W    05C 3
WQ   05D 3    0 L    8
W    05E 3
WQ   05F 3  B-CCHRDY 9-6
W    06A 3
W    06B 3
W    06C 3
WQ   06D 3    0 L    R
W    06E 3
WQ   06F 3  B-CCHREC 1-6
WQ   07A 3  +31V 150 9
WQ   07B 3  +31V 150 9
WQ   07C 3  +31V 150 9
WQ   07D 3    0 L    6
W    07E 3
WQ   07F 3  B-CCHREP 9-2
W    08A 3
W    08B 3
                                  ./.
```

```
*   S T U D E R   *      L O C A T I O N     P I N     L I S T       *    82/01/08 * 15:12      *   P A G E     23    *
TAPE LOCK SYSTEM 2000 A80: LOCATOR, PARALLEL PROGRAMMER        1.228.375.00              79-10-05
```

GR: 99 (CONTINUATION)
PROCESSOR BACK PANEL

EL: 20 (CONTINUATION)

TYPE	PT	LV	SIG.NAME	COLOR	F	X	Y
W	08C	3					
WQ	08D	3	BPSUPVIS	2			
W	08E	3					
WQ	08F	3	B-NOSCOD	1-2			
W	09A	3					
W	09B	3					
W	09C	3					
W +	09D	3	B-CCHRDY				
W	09E	3					
WQ	09F	3	Y2BPS	9-0			
WQ	10A	3%	0.0IN150	0			
WQ	10B	3%	0.0IN150	0			
WQ	10C	3%	0.0IN150	0			
W +	10D	3	B-CCHREC				
W	10E	3					
WQ	10F	3	Y1BPS	1-0			
W	11A	3					
W	11B	3					
W	11C	3					
W +	11D	3	B-CCHREP				
W	11E	3					
WQ	11F	3	NEMGSTOP	8-5			
WP	12A	1	- 5				
WP	12B	1	- 5				
WP	12C	1	- 5				
W	12D	3					
W	12E	3					
WQ	12F	3	WBPRESO3	4-8			
W	13A	3					
W	13B	3					
W	13C	3					
W +	13D	3	X5BPS				
W	13E	3					
WQ	13F	3	X5BPS	5-R			
WP	14A	1	-12				
WP	14B	1	-12				
WP	14C	1	-12				
W	14D	3					
W	14E	3					
WQ	14F	3	WBPRESO4	4-R			
WP	15A	1	0 A				
WP	15B	1	0 A				
WP	15C	1	0 A				
W	15D	3					
W	15E	3					
WQ	15F	3	WBPRESO5	5-6			
WP	16A	1	+12				
WP	16B	1	+12				
WP	16C	1	+12				
W	16D	3	WIRE001				
W	16E	3					

./.

GR: 99 (CONTINUATION)
PROCESSOR BACK PANEL

EL: 20 (CONTINUATION)

TYPE	PT	LV	SIG.NAME	COLOR	F	X	Y
WQ	16F	3	WIRE001	4-6			
W	17A	3					
W	17B	3					
W	17C	3					
W +	17D	3	B-NOSCOD				
W	17E	3					
WQ	17F	3	Y3BPS	5-2			
W	18A	3					
W	18B	3					
W	18C	3					
W +	18D	3	X4BPS				
W	18E	3					
WQ	18F	3	X4BPS	4-2			
WP	19A	1	0 K				
WP	19B	1	0 K				
WP	19C	1	0 K				
W	19D	3	0 K				
W	19E	3					
WQ	19F	3	0 K	5-0			
WP	20A	1	+24				
WP	20B	1	+24				
WP	20C	1	+24				
W	20D	3	+24				
W	20E	3					
WQ	20F	3	+24	4-0			
W	21A	3					
W	21B	3					
W	21C	3					
W +	21D	3	X3BPS				
W	21E	3					
WQ	21F	3	X3BPS	8-6			
W	22A	3					
W	22B	3					
W	22C	3					
W +	22D	3	X1BPS				
W	22E	3					
WQ	22F	3	X1BPS	6-R			
W +	23A	3	PPWRON				
W	23B	3					
W	23C	3					
W +	23D	3	X2BPS				
W	23E	3					
WQ	23F	3	X2BPS	6-Z			
W	24A	3					
W	24B	3					
W	24C	3					
W +	24D	3	B-EXTREC				
W	24E	3					
WQ	24F	3	B-EXTREC	2-R			
W	25A	3					
W	25B	3					

./.

GR: 99 (CONTINUATION)
PROCESSOR BACK PANEL

EL: 20 (CONTINUATION)

TYPE	PT	LV	SIG.NAME	COLOR	F	X	Y
W	25C	3					
WQ	25D	3	WBPRESO1	0			
W	25E	3					
WQ	25F	3	BBPRES11	8-0			
W	26A	3					
W	26B	3					
W	26C	3					
WQ +	26D	3	B-CCHSYN	7			
W	26E	3					
WQ	26F	3	B-CCHSYN	0-R			
W	27A	3					
W	27B	3					
W	27C	3					
WQ +	27D	3	B-OUT=IN	8-R			
W	27E	3					
WQ	27F	3	B-OUT=IN	6-0			
W	28A	3					
W +	28B	3	+ 5 ADD				
W +	28C	3	+ 5 ADD				
WQ	28D	3	WBPRESO2	6-Z			
W	28E	3					
WQ	28F	3	B-CCHSAF	2-0			
W	29A	3					
W	29B	3					
W	29C	3					
WQ	29D	3	WIRE001	9-5			
W	29E	3					
WQ	29F	3	B-REMOTE	9-1-0			
W	30A	3					
W	30B	3					
W	30C	3					
WQ	30D	3	B-TX	1-5			
W	30E	3					
WQ	30F	3	B-PILOT	4-5-0			
W	31A	3					
W	31B	3					
W	31C	3					
WQ	31D	3	B-EMSTOP	9-4			
W	31E	3					
WQ	31F	3	B-LAMPT	8-R-0			
WPQ	32A	1	+10	5			
WPQ	32B	1	+10	5			
WPQ	32C	1	+10	5			
WQ	32D	3	+10	4-1			
W	32E	3					
WQ	32F	3	+10	6-2-0			

```
*   S T U D E R   *      L O C A T I O N     P I N     L I S T       *    82/01/08 * 15:12      *   P A G E     24    *
TAPE LOCK SYSTEM 2000 A80: LOCATOR, PARALLEL PROGRAMMER        1.228.375.00              79-10-05
```

GR: 99 (CONTINUATION)
PROCESSOR BACK PANEL

EL: 99 CHASSIS, WIRING WITH: 0 L

TYPE	PT	LV	SIG.NAME	COLOR	F	X	Y
L	01	1%	GROUND	4,4,4			
L	02	1%	GROUND	4,4,4			

* STUDER * L O C A T I O N S U M M A R Y * 82/01/08 * 15:12 * P A G E 25 *

TAPE LOCK SYSTEM 2000 A80: LOCATOR, PARALLEL PROGRAMMER 1.228.375.00 79-10-05

GR #	USED PINS	UNUSED PINS	TOTAL PINS	COD. KEYS	ELE-MNTS	DESCRIPTION OF GROUP	PART # OF GR
96	8	0	8	0	1	RECTIFIER ASSEMBLY	1.228.396.00
97	273	46	319	14	14	RACK ELEMENTS LOWER PART	1.228.397.00
98	173	18	191	8	17	RACK ELEMENTS UPPER PART	1.228.398.00
99	1806	692	2498	0	21	PROCESSOR BACK PANEL	1.228.399.00
TOT.	2262	754	3016	22	53	DISTRIBUTED IN 4 GROUPS	

* STUDER * S I G N A L W I R E L I S T * 82/01/08 * 15:12 * P A G E 26 *

TAPE LOCK SYSTEM 2000 A80: LOCATOR, PARALLEL PROGRAMMER 1.228.375.00 79-10-05

SIG.NAME	COLOR	TYPE	GR	EL	PT	S	DESCRIPTION OF ELEMENT
0 A		W	99	01	15B		WRAP CONNECTOR J01.1, 3*32 PIN
		W	99	01	15C		WRAP CONNECTOR J01.1, 3*32 PIN
		W	99	02	15B		WRAP CONNECTOR J02.1, 3*32 PIN
		W	99	02	15C		WRAP CONNECTOR J02.1, 3*32 PIN
		W	99	03	15B		WRAP CONNECTOR J03.1, 3*32 PIN
		W	99	03	15C		WRAP CONNECTOR J03.1, 3*32 PIN
		W	99	04	15B		WRAP CONNECTOR J04.1, 3*32 PIN
		W	99	04	15C		WRAP CONNECTOR J04.1, 3*32 PIN
		W	99	05	15B		WRAP CONNECTOR J05.1, 3*32 PIN
		W	99	05	15C		WRAP CONNECTOR J05.1, 3*32 PIN
		W	99	06	15B		WRAP CONNECTOR J06.1, 3*32 PIN
		W	99	06	15C		WRAP CONNECTOR J06.1, 3*32 PIN
		WP	99	11	15A		WRAP CONNECTOR J11.1, 3*32 PIN
		WP	99	11	15B		WRAP CONNECTOR J11.1, 3*32 PIN
		WP	99	11	15C		WRAP CONNECTOR J11.1, 3*32 PIN
		WP	99	12	15A		WRAP CONNECTOR J12.1, 3*32 PIN
		WP	99	12	15B		WRAP CONNECTOR J12.1, 3*32 PIN
		WP	99	12	15C		WRAP CONNECTOR J12.1, 3*32 PIN
		WP	99	13	15A		WRAP CONNECTOR J13.1, 3*32 PIN
		WP	99	13	15B		WRAP CONNECTOR J13.1, 3*32 PIN
		WP	99	13	15C		WRAP CONNECTOR J13.1, 3*32 PIN
		WP	99	14	15A		WRAP CONNECTOR J14.1, 3*32 PIN
		WP	99	14	15B		WRAP CONNECTOR J14.1, 3*32 PIN
		WP	99	14	15C		WRAP CONNECTOR J14.1, 3*32 PIN
		WP	99	15	15A		WRAP CONNECTOR J15.1, 3*32 PIN
		WP	99	15	15B		WRAP CONNECTOR J15.1, 3*32 PIN
		WP	99	15	15C		WRAP CONNECTOR J15.1, 3*32 PIN
		WP	99	16	15A		WRAP CONNECTOR J16.1, 3*32 PIN
		WP	99	16	15B		WRAP CONNECTOR J16.1, 3*32 PIN
		WP	99	16	15C		WRAP CONNECTOR J16.1, 3*32 PIN
		WP	99	17	15A		WRAP CONNECTOR J17.1, 3*32 PIN
		WP	99	17	15B		WRAP CONNECTOR J17.1, 3*32 PIN
		WP	99	17	15C		WRAP CONNECTOR J17.1, 3*32 PIN
		WP	99	18	15A		WRAP CONNECTOR J18.1, 3*32 PIN
		WP	99	18	15B		WRAP CONNECTOR J18.1, 3*32 PIN
		WP	99	18	15C		WRAP CONNECTOR J18.1, 3*32 PIN
		WP	99	19	15A		WRAP CONNECTOR J19.1, 3*32 PIN
		WP	99	19	15B		WRAP CONNECTOR J19.1, 3*32 PIN
		WP	99	19	15C		WRAP CONNECTOR J19.1, 3*32 PIN
		WP	99	20	15A		WRAP CONNECTOR J20.1, 3*32 PIN
		WP	99	20	15B		WRAP CONNECTOR J20.1, 3*32 PIN
		WP	99	20	15C		WRAP CONNECTOR J20.1, 3*32 PIN
0 K	0	B	97	71	20		AUXILIARY CONNECTOR
	0	L	97	72	07A		RELAIS PRINT
	0	L	97	72	07C		RELAIS PRINT
	5-0	B	98	81	36		CONN. ASS. TO BASIC PROGRAMMER
		W	99	01	19B		WRAP CONNECTOR J01.1, 3*32 PIN

./.

SIG.NAME	COLOR	TYPE	GR	EL	PT	S	DESCRIPTION OF ELEMENT
(CONT.)		W	99	01	19C		WRAP CONNECTOR J01.1, 3*32 PIN
		W	99	02	19B		WRAP CONNECTOR J02.1, 3*32 PIN
		W	99	02	19C		WRAP CONNECTOR J02.1, 3*32 PIN
		W	99	03	19B		WRAP CONNECTOR J03.1, 3*32 PIN
		W	99	03	19C		WRAP CONNECTOR J03.1, 3*32 PIN
		W	99	04	19B		WRAP CONNECTOR J04.1, 3*32 PIN
		W	99	04	19C		WRAP CONNECTOR J04.1, 3*32 PIN
		W	99	05	19B		WRAP CONNECTOR J05.1, 3*32 PIN
		W	99	05	19C		WRAP CONNECTOR J05.1, 3*32 PIN
		W	99	06	19B		WRAP CONNECTOR J06.1, 3*32 PIN
		W	99	06	19C		WRAP CONNECTOR J06.1, 3*32 PIN
	0	WQ	99	07	08D		WRAP CONNECTOR J07.2, 3*32 PIN
		W	99	07	19B		WRAP CONNECTOR J07.1, 3*32 PIN
		W	99	07	19C		WRAP CONNECTOR J07.1, 3*32 PIN
		W	99	08	19B		WRAP CONNECTOR J08.1, 3*32 PIN
		W	99	08	19C		WRAP CONNECTOR J08.1, 3*32 PIN
		W	99	09	19B		WRAP CONNECTOR J09.1, 3*32 PIN
		W	99	09	19C		WRAP CONNECTOR J09.1, 3*32 PIN
		W	99	10	19B		WRAP CONNECTOR J10.1, 3*32 PIN
		W	99	10	19C		WRAP CONNECTOR J10.1, 3*32 PIN
		WP	99	11	19A		WRAP CONNECTOR J11.1, 3*32 PIN
		WP	99	11	19B		WRAP CONNECTOR J11.1, 3*32 PIN
		WP	99	11	19C		WRAP CONNECTOR J11.1, 3*32 PIN
		WP	99	12	19A		WRAP CONNECTOR J12.1, 3*32 PIN
		WP	99	12	19B		WRAP CONNECTOR J12.1, 3*32 PIN
		WP	99	12	19C		WRAP CONNECTOR J12.1, 3*32 PIN
		WP	99	13	19A		WRAP CONNECTOR J13.1, 3*32 PIN
		WP	99	13	19B		WRAP CONNECTOR J13.1, 3*32 PIN
		WP	99	13	19C		WRAP CONNECTOR J13.1, 3*32 PIN
		WP	99	14	19A		WRAP CONNECTOR J14.1, 3*32 PIN
		WP	99	14	19B		WRAP CONNECTOR J14.1, 3*32 PIN
		WP	99	14	19C		WRAP CONNECTOR J14.1, 3*32 PIN
		WP	99	15	19A		WRAP CONNECTOR J15.1, 3*32 PIN
		WP	99	15	19B		WRAP CONNECTOR J15.1, 3*32 PIN
		WP	99	15	19C		WRAP CONNECTOR J15.1, 3*32 PIN
		WP	99	16	19A		WRAP CONNECTOR J16.1, 3*32 PIN
		WP	99	16	19B		WRAP CONNECTOR J16.1, 3*32 PIN
		WP	99	16	19C		WRAP CONNECTOR J16.1, 3*32 PIN
		WP	99	17	19A		WRAP CONNECTOR J17.1, 3*32 PIN
		WP	99	17	19B		WRAP CONNECTOR J17.1, 3*32 PIN
		WP	99	17	19C		WRAP CONNECTOR J17.1, 3*32 PIN
		WP	99	18	19A		WRAP CONNECTOR J18.1, 3*32 PIN
		WP	99	18	19B		WRAP CONNECTOR J18.1, 3*32 PIN
		WP	99	18	19C		WRAP CONNECTOR J18.1, 3*32 PIN
		WP	99	19	19A		WRAP CONNECTOR J19.1, 3*32 PIN
		WP	99	19	19B		WRAP CONNECTOR J19.1, 3*32 PIN
		WP	99	19	19C		WRAP CONNECTOR J19.1, 3*32 PIN
		WP	99	20	19A		WRAP CONNECTOR J20.1, 3*32 PIN
		WP	99	20	19B		WRAP CONNECTOR J20.1, 3*32 PIN
		WP	99	20	19C		WRAP CONNECTOR J20.1, 3*32 PIN
		W	99	20	19D		WRAP CONNECTOR J20.2, 3*32 PIN
	5-0	WQ	99	20	19F		WRAP CONNECTOR J20.2, 3*32 PIN
0 L	0	L	97	15	01A		REFERENCE FREQUENCY INPUT
	0	B	97	71	01		AUXILIARY CONNECTOR
	0	B	97	71	35		AUXILIARY CONNECTOR

./.

SIG.NAME	COLOR	TYPE	GR	EL	PT	S	DESCRIPTION OF ELEMENT
(CONT.)	0	L	97	72	06A		RELAIS PRINT
	0	L	97	72	06C		RELAIS PRINT
	*	L	97	94	01		CONN. ASS. TO MAIN PROGR. (J I)
	*	L	97	95	01		CONN. ASS. TO MAIN PROGR. (J II)
	*	L	97	96	01		CONN. ASS. TO MAIN PROGR. (JIII)
	0	L	98	15	01A		MASTER INPUT/REPRO OUTPUT
	0	L	98	25	01A		GENERATOR LINE INPUT
	0	L	98	62	04A		CODE CH. REMOTE IF (OPTIONAL)
	0	A	98	71	11		ADDITIONAL POWER CONNECTOR
	0	A	98	71	12		ADDITIONAL POWER CONNECTOR
	0	A	98	71	13		ADDITIONAL POWER CONNECTOR
	9	B	98	81	02		CONN. ASS. TO BASIC PROGRAMMER
	8	B	98	81	06		CONN. ASS. TO BASIC PROGRAMMER
	R	B	98	81	07		CONN. ASS. TO BASIC PROGRAMMER
	6	B	98	81	08		CONN. ASS. TO BASIC PROGRAMMER
	9-8	B	98	81	18		CONN. ASS. TO BASIC PROGRAMMER
	0	A	98	91	05		CONNECTOR ASS. TO POWER SUPPLY
	0	A	98	91	06		CONNECTOR ASS. TO POWER SUPPLY
	0	A	98	91	07		CONNECTOR ASS. TO POWER SUPPLY
	0	A	98	91	08		CONNECTOR ASS. TO POWER SUPPLY
	0	A	98	91	09		CONNECTOR ASS. TO POWER SUPPLY
	0	A	98	91	10		CONNECTOR ASS. TO POWER SUPPLY
		WP	99	01	01A		WRAP CONNECTOR J01.1, 3*32 PIN
	0	WPQ	99	01	01B		WRAP CONNECTOR J01.1, 3*32 PIN
		WP	99	01	01C		WRAP CONNECTOR J01.1, 3*32 PIN
		WP	99	02	01A		WRAP CONNECTOR J02.1, 3*32 PIN
		WP	99	02	01B		WRAP CONNECTOR J02.1, 3*32 PIN
		WP	99	02	01C		WRAP CONNECTOR J02.1, 3*32 PIN
		WP	99	03	01A		WRAP CONNECTOR J03.1, 3*32 PIN
		WP	99	03	01B		WRAP CONNECTOR J03.1, 3*32 PIN
		WP	99	03	01C		WRAP CONNECTOR J03.1, 3*32 PIN
		WP	99	04	01A		WRAP CONNECTOR J04.1, 3*32 PIN
		WP	99	04	01B		WRAP CONNECTOR J04.1, 3*32 PIN
		WP	99	04	01C		WRAP CONNECTOR J04.1, 3*32 PIN
	4	WPQ	99	05	01A	%	WIRING WITH: GROUND
	4	WPQ	99	05	01B	%	WIRING WITH: GROUND
	4	WPQ	99	05	01C	%	WIRING WITH: GROUND
		WP	99	06	01A		WRAP CONNECTOR J06.1, 3*32 PIN
		WP	99	06	01B		WRAP CONNECTOR J06.1, 3*32 PIN
		WP	99	06	01C		WRAP CONNECTOR J06.1, 3*32 PIN
		WP	99	06	01D		WRAP CONNECTOR J06.2, 3*32 PIN
		WP	99	06	01E		WRAP CONNECTOR J06.2, 3*32 PIN
		WP	99	06	01F		WRAP CONNECTOR J06.2, 3*32 PIN
		W +	99	06	23F		WRAP CONNECTOR J06.2, 3*32 PIN
		W +	99	06	24F		WRAP CONNECTOR J06.2, 3*32 PIN
		W +	99	06	25F		WRAP CONNECTOR J06.2, 3*32 PIN
		W +	99	06	27D		WRAP CONNECTOR J06.2, 3*32 PIN
		W +	99	06	29D		WRAP CONNECTOR J06.2, 3*32 PIN
		WP	99	07	01A		WRAP CONNECTOR J07.1, 3*32 PIN
		WP	99	07	01B		WRAP CONNECTOR J07.1, 3*32 PIN
		WP	99	07	01C		WRAP CONNECTOR J07.1, 3*32 PIN
	0	WPQ	99	07	01D		WRAP CONNECTOR J07.2, 3*32 PIN
	0	WPQ	99	07	01E		WRAP CONNECTOR J07.2, 3*32 PIN
		WP	99	07	01F		WRAP CONNECTOR J07.2, 3*32 PIN
		WP	99	08	01A		WRAP CONNECTOR J08.1, 3*32 PIN
		WP	99	08	01B		WRAP CONNECTOR J08.1, 3*32 PIN

./.

SIG.NAME	COLOR	TYPE	GR	EL	PT	S	DESCRIPTION OF ELEMENT
(CONT.)		WP	99	08	01C		WRAP CONNECTOR J08.1, 3*32 PIN
	9-5-0	WPQ	99	08	01D		WRAP CONNECTOR J08.2, 3*32 PIN
		WP	99	08	01E		WRAP CONNECTOR J08.2, 3*32 PIN
	9-4-0	WPQ	99	08	01F		WRAP CONNECTOR J08.2, 3*32 PIN
	5-1-0	WQ	99	08	12D		WRAP CONNECTOR J08.2, 3*32 PIN
	4-1-0	WQ	99	08	12F		WRAP CONNECTOR J08.2, 3*32 PIN
		W +	99	08	19D		WRAP CONNECTOR J08.2, 3*32 PIN
		W +	99	08	19F		WRAP CONNECTOR J08.2, 3*32 PIN
		WP	99	09	01A		WRAP CONNECTOR J09.1, 3*32 PIN
		WP	99	09	01B		WRAP CONNECTOR J09.1, 3*32 PIN
		WP	99	09	01C		WRAP CONNECTOR J09.1, 3*32 PIN
	9-5-0	WPQ	99	09	01D		WRAP CONNECTOR J09.2, 3*32 PIN
		WP	99	09	01E		WRAP CONNECTOR J09.2, 3*32 PIN
	9-4-0	WPQ	99	09	01F		WRAP CONNECTOR J09.2, 3*32 PIN
	5-1-0	WQ	99	09	12D		WRAP CONNECTOR J09.2, 3*32 PIN
	4-1-0	WQ	99	09	12F		WRAP CONNECTOR J09.2, 3*32 PIN
		W +	99	09	19D		WRAP CONNECTOR J09.2, 3*32 PIN
		W +	99	09	19F		WRAP CONNECTOR J09.2, 3*32 PIN
	0	WPQ	99	10	01A		WRAP CONNECTOR J10.1, 3*32 PIN
	0	WPQ	99	10	01B		WRAP CONNECTOR J10.1, 3*32 PIN
	0	WPQ	99	10	01C		WRAP CONNECTOR J10.1, 3*32 PIN
	9-5-0	WQ	99	10	01D		WRAP CONNECTOR J10.2, 3*32 PIN
	9-4-0	WQ	99	10	01F		WRAP CONNECTOR J10.2, 3*32 PIN
	5-1-0	WQ	99	10	12D		WRAP CONNECTOR J10.2, 3*32 PIN
	4-1-0	WQ	99	10	12F		WRAP CONNECTOR J10.2, 3*32 PIN
		W +	99	10	19D		WRAP CONNECTOR J10.2, 3*32 PIN
		W +	99	10	19F		WRAP CONNECTOR J10.2, 3*32 PIN
	0	WPQ	99	11	01A		WRAP CONNECTOR J11.1, 3*32 PIN
		WP	99	11	01B		WRAP CONNECTOR J11.1, 3*32 PIN
		WP	99	11	01C		WRAP CONNECTOR J11.1, 3*32 PIN
		WP	99	12	01A		WRAP CONNECTOR J12.1, 3*32 PIN
		WP	99	12	01B		WRAP CONNECTOR J12.1, 3*32 PIN
		WP	99	12	01C		WRAP CONNECTOR J12.1, 3*32 PIN
		W +	99	12	22A		WRAP CONNECTOR J12.1, 3*32 PIN
	0	WPQ	99	13	01A		WRAP CONNECTOR J13.1, 3*32 PIN
		WP	99	13	01B		WRAP CONNECTOR J13.1, 3*32 PIN
		WP	99	13	01C		WRAP CONNECTOR J13.1, 3*32 PIN
		WP	99	14	01A		WRAP CONNECTOR J14.1, 3*32 PIN
		WP	99	14	01B		WRAP CONNECTOR J14.1, 3*32 PIN
		WP	99	14	01C		WRAP CONNECTOR J14.1, 3*32 PIN
	4	WPQ	99	15	01A	%	WIRING WITH: GROUND
	4	WPQ	99	15	01B	%	WIRING WITH: GROUND
	4	WPQ	99	15	01C	%	WIRING WITH: GROUND
		WP	99	16	01A		WRAP CONNECTOR J16.1, 3*32 PIN
		WP	99	16	01B		WRAP CONNECTOR J16.1, 3*32 PIN
		WP	99	16	01C		WRAP CONNECTOR J16.1, 3*32 PIN
	0	WPQ$	99	17	01A		WRAP CONNECTOR J17.1, 3*32 PIN
		WP	99	17	01B		WRAP CONNECTOR J17.1, 3*32 PIN
		WP	99	17	01C		WRAP CONNECTOR J17.1, 3*32 PIN
	0	WPQ	99	18	01A		WRAP CONNECTOR J18.1, 3*32 PIN
	0	WPQ	99	18	01B		WRAP CONNECTOR J18.1, 3*32 PIN
	0	WPQ	99	18	01C		WRAP CONNECTOR J18.1, 3*32 PIN
		WP	99	19	01A		WRAP CONNECTOR J19.1, 3*32 PIN
		WP	99	19	01B		WRAP CONNECTOR J19.1, 3*32 PIN
		WP	99	19	01C		WRAP CONNECTOR J19.1, 3*32 PIN
	0	WPQ	99	20	01A		WRAP CONNECTOR J20.1, 3*32 PIN

./.

SIG.NAME	COLOR	TYPE	GR	EL	PT	S	DESCRIPTION OF ELEMENT
(CONT.)	0	WPQ	99	20	01B		WRAP CONNECTOR J20.1, 3*32 PIN
	0	WPQ	99	20	01C		WRAP CONNECTOR J20.1, 3*32 PIN
	9	WQ	99	20	01D		WRAP CONNECTOR J20.2, 3*32 PIN
		W	99	20	01E		WRAP CONNECTOR J20.2, 3*32 PIN
	9-8	WQ	99	20	01F		WRAP CONNECTOR J20.2, 3*32 PIN
	8	WQ	99	20	05D		WRAP CONNECTOR J20.2, 3*32 PIN
	R	WQ	99	20	06D		WRAP CONNECTOR J20.2, 3*32 PIN
	6	WQ	99	20	07D		WRAP CONNECTOR J20.2, 3*32 PIN
0 SW	9-2	B	97	93	24		CONN. ASS. TO MAIN PROGR. (JIII)
	9-2	WQ	99	10	30D		WRAP CONNECTOR J10.2, 3*32 PIN
0 1325		W	99	13	22B		WRAP CONNECTOR J13.1, 3*32 PIN
+ 5 ADD	1	L	98	62	05A		CODE CH. REMOTE IF (OPTIONAL)
		W	99	03	11A		WRAP CONNECTOR J03.1, 3*32 PIN
		W	99	04	25B		WRAP CONNECTOR J04.1, 3*32 PIN
		W	99	06	07A		WRAP CONNECTOR J06.1, 3*32 PIN
		W	99	10	11C		WRAP CONNECTOR J10.1, 3*32 PIN
		W +	99	13	28B		WRAP CONNECTOR J13.1, 3*32 PIN
		W +	99	13	29B		WRAP CONNECTOR J13.1, 3*32 PIN
		W +	99	14	29A		WRAP CONNECTOR J14.1, 3*32 PIN
		W +	99	14	30A		WRAP CONNECTOR J14.1, 3*32 PIN
		W	99	15	13B		WRAP CONNECTOR J15.1, 3*32 PIN
	1	WQ$	99	17	02A		WRAP CONNECTOR J17.1, 3*32 PIN
		W +	99	18	03A		WRAP CONNECTOR J18.1, 3*32 PIN
		W +	99	18	03C		WRAP CONNECTOR J18.1, 3*32 PIN
		W	99	18	28A		WRAP CONNECTOR J18.1, 3*32 PIN
		W	99	18	28B		WRAP CONNECTOR J18.1, 3*32 PIN
		W	99	18	28C		WRAP CONNECTOR J18.1, 3*32 PIN
		W	99	18	29A		WRAP CONNECTOR J18.1, 3*32 PIN
		W	99	18	29B		WRAP CONNECTOR J18.1, 3*32 PIN
		W	99	18	29C		WRAP CONNECTOR J18.1, 3*32 PIN
		W	99	18	30A		WRAP CONNECTOR J18.1, 3*32 PIN
		W	99	18	30B		WRAP CONNECTOR J18.1, 3*32 PIN
		W	99	18	30C		WRAP CONNECTOR J18.1, 3*32 PIN
		W +	99	20	28B		WRAP CONNECTOR J20.1, 3*32 PIN
		W +	99	20	28C		WRAP CONNECTOR J20.1, 3*32 PIN
+0.0CAP1	0	B	97	41	01		CAPSTAN SPEED CONTROL
	0	WQ	99	06	02D	%	WIRING WITH: 0 L
+0.0CAP2	0	B	97	41	13		CAPSTAN SPEED CONTROL
	0	WQ	99	06	05E		WRAP CONNECTOR J06.2, 3*32 PIN
		W +	99	06	27E		WRAP CONNECTOR J06.2, 3*32 PIN
		W	99	17	21A		WRAP CONNECTOR J17.1, 3*32 PIN
+0.0EMC1	0	A	97	51	01		EXTENDED REMOTE MODE CONTROL
	0	WQ	99	06	21D	%	WIRING WITH: 0 L
+0.0EMC2	0	A	97	51	19		EXTENDED REMOTE MODE CONTROL
	0	WQ	99	06	26E	%	WIRING WITH: 0 L
+0.0MC1	0	A	97	61	01		REMOTE MODE CONTROL
	0	WQ	99	07	10D	%	WIRING WITH: 0 L

SIG.NAME	COLOR	TYPE	GR	EL	PT	S	DESCRIPTION OF ELEMENT
+0.0MC2	0	A	97	61	11		REMOTE MODE CONTROL
	0	WQ	99	07	25D		WRAP CONNECTOR J07.2, 3*32 PIN
		W	99	17	23A		WRAP CONNECTOR J17.1, 3*32 PIN
+0.0MC3	0	A	97	61	49		REMOTE MODE CONTROL
	0	WQ	99	07	30F	%	WIRING WITH: 0 L
+0.0MC4	0	A	97	61	50		REMOTE MODE CONTROL
	0	WQ	99	07	31F	%	WIRING WITH: 0 L
+0-TYPE1	1	A	97	61	33		REMOTE MODE CONTROL
		W +	99	06	28D		WRAP CONNECTOR J06.2, 3*32 PIN
	1	WQ	99	07	31E		WRAP CONNECTOR J07.2, 3*32 PIN
		W	99	08	28A		WRAP CONNECTOR J08.1, 3*32 PIN
+0-TYPE2	2	A	97	61	32		REMOTE MODE CONTROL
	2	WQ	99	07	30E		WRAP CONNECTOR J07.2, 3*32 PIN
+10	5	A	98	71	16		ADDITIONAL POWER CONNECTOR
	5	A	98	71	17		ADDITIONAL POWER CONNECTOR
	5	A	98	71	18		ADDITIONAL POWER CONNECTOR
	4-1	B	98	81	17		CONN. ASS. TO BASIC PROGRAMMER
	6-2-0	B	98	81	50		CONN. ASS. TO BASIC PROGRAMMER
	5	A	98	91	16		CONNECTOR ASS. TO POWER SUPPLY
	5	A	98	91	17		CONNECTOR ASS. TO POWER SUPPLY
	5	A	98	91	18		CONNECTOR ASS. TO POWER SUPPLY
	5	A	98	91	19		CONNECTOR ASS. TO POWER SUPPLY
	5	A	98	91	20		CONNECTOR ASS. TO POWER SUPPLY
	5	A	98	91	21		CONNECTOR ASS. TO POWER SUPPLY
		WP	99	01	32A		WRAP CONNECTOR J01.1, 3*32 PIN
		WP	99	01	32B		WRAP CONNECTOR J01.1, 3*32 PIN
		WP	99	01	32C		WRAP CONNECTOR J01.1, 3*32 PIN
		WP	99	02	32A		WRAP CONNECTOR J02.1, 3*32 PIN
		WP	99	02	32B		WRAP CONNECTOR J02.1, 3*32 PIN
		WP	99	02	32C		WRAP CONNECTOR J02.1, 3*32 PIN
		WP	99	03	32A		WRAP CONNECTOR J03.1, 3*32 PIN
		WP	99	03	32B		WRAP CONNECTOR J03.1, 3*32 PIN
		WP	99	03	32C		WRAP CONNECTOR J03.1, 3*32 PIN
		WP	99	04	32A		WRAP CONNECTOR J04.1, 3*32 PIN
		WP	99	04	32B		WRAP CONNECTOR J04.1, 3*32 PIN
		WP	99	04	32C		WRAP CONNECTOR J04.1, 3*32 PIN
		WP	99	05	32A		WRAP CONNECTOR J05.1, 3*32 PIN
		WP	99	05	32B		WRAP CONNECTOR J05.1, 3*32 PIN
		WP	99	05	32C		WRAP CONNECTOR J05.1, 3*32 PIN
		WP	99	06	32A		WRAP CONNECTOR J06.1, 3*32 PIN
		WP	99	06	32B		WRAP CONNECTOR J06.1, 3*32 PIN
		WP	99	06	32C		WRAP CONNECTOR J06.1, 3*32 PIN
		WP	99	06	32D		WRAP CONNECTOR J06.2, 3*32 PIN
		WP	99	06	32E		WRAP CONNECTOR J06.2, 3*32 PIN
		WP	99	06	32F		WRAP CONNECTOR J06.2, 3*32 PIN
		WP	99	07	32A		WRAP CONNECTOR J07.1, 3*32 PIN
		WP	99	07	32B		WRAP CONNECTOR J07.1, 3*32 PIN
		WP	99	07	32C		WRAP CONNECTOR J07.1, 3*32 PIN
		WP	99	07	32D		WRAP CONNECTOR J07.2, 3*32 PIN
		WP	99	07	32E		WRAP CONNECTOR J07.2, 3*32 PIN
		WP	99	07	32F		WRAP CONNECTOR J07.2, 3*32 PIN

./.

* S T U D E R * S I G N A L W I R E L I S T * 82/01/08 * 15:12 * P A G E 29 *

TAPE LOCK SYSTEM 2000 A80: MASTER CTRL, PARALLEL PROGRAMMER 1.228.375.00 79-10-30

SIG.NAME	COLOR	TYPE	GR	EL	PT	S	DESCRIPTION OF ELEMENT
(CONT.)		WP	99	08	32B		WRAP CONNECTOR J08.1, 3*32 PIN
		WP	99	08	32C		WRAP CONNECTOR J08.1, 3*32 PIN
		WP	99	08	32D		WRAP CONNECTOR J08.2, 3*32 PIN
		WP	99	08	32E		WRAP CONNECTOR J08.2, 3*32 PIN
		WP	99	08	32F		WRAP CONNECTOR J08.2, 3*32 PIN
		WP	99	09	32A		WRAP CONNECTOR J09.1, 3*32 PIN
		WP	99	09	32B		WRAP CONNECTOR J09.1, 3*32 PIN
		WP	99	09	32C		WRAP CONNECTOR J09.1, 3*32 PIN
		WP	99	09	32D		WRAP CONNECTOR J09.2, 3*32 PIN
		WP	99	09	32E		WRAP CONNECTOR J09.2, 3*32 PIN
		WP	99	09	32F		WRAP CONNECTOR J09.2, 3*32 PIN
	5	WPQ	99	10	32A		WRAP CONNECTOR J10.1, 3*32 PIN
	5	WPQ	99	10	32B		WRAP CONNECTOR J10.1, 3*32 PIN
	5	WPQ	99	10	32C		WRAP CONNECTOR J10.1, 3*32 PIN
		W	99	10	32D		WRAP CONNECTOR J10.2, 3*32 PIN
		W	99	10	32F		WRAP CONNECTOR J10.2, 3*32 PIN
		WP	99	11	32A		WRAP CONNECTOR J11.1, 3*32 PIN
		WP	99	11	32B		WRAP CONNECTOR J11.1, 3*32 PIN
		WP	99	11	32C		WRAP CONNECTOR J11.1, 3*32 PIN
		WP	99	12	32A		WRAP CONNECTOR J12.1, 3*32 PIN
		WP	99	12	32B		WRAP CONNECTOR J12.1, 3*32 PIN
		WP	99	12	32C		WRAP CONNECTOR J12.1, 3*32 PIN
		WP	99	13	32A		WRAP CONNECTOR J13.1, 3*32 PIN
		WP	99	13	32B		WRAP CONNECTOR J13.1, 3*32 PIN
		WP	99	13	32C		WRAP CONNECTOR J13.1, 3*32 PIN
		WP	99	14	32A		WRAP CONNECTOR J14.1, 3*32 PIN
		WP	99	14	32B		WRAP CONNECTOR J14.1, 3*32 PIN
		WP	99	14	32C		WRAP CONNECTOR J14.1, 3*32 PIN
		WP	99	15	32A		WRAP CONNECTOR J15.1, 3*32 PIN
		WP	99	15	32B		WRAP CONNECTOR J15.1, 3*32 PIN
		WP	99	15	32C		WRAP CONNECTOR J15.1, 3*32 PIN
		WP	99	16	32A		WRAP CONNECTOR J16.1, 3*32 PIN
		WP	99	16	32B		WRAP CONNECTOR J16.1, 3*32 PIN
		WP	99	16	32C		WRAP CONNECTOR J16.1, 3*32 PIN
		WP	99	17	32A		WRAP CONNECTOR J17.1, 3*32 PIN
		WP	99	17	32B		WRAP CONNECTOR J17.1, 3*32 PIN
		WP	99	17	32C		WRAP CONNECTOR J17.1, 3*32 PIN
	5	WPQ	99	18	32A		WRAP CONNECTOR J18.1, 3*32 PIN
	5	WPQ	99	18	32B		WRAP CONNECTOR J18.1, 3*32 PIN
	5	WPQ	99	18	32C		WRAP CONNECTOR J18.1, 3*32 PIN
		W +	99	19	05A		WRAP CONNECTOR J19.1, 3*32 PIN
		W +	99	19	05B		WRAP CONNECTOR J19.1, 3*32 PIN
		W +	99	19	05C		WRAP CONNECTOR J19.1, 3*32 PIN
		WP	99	19	32A		WRAP CONNECTOR J19.1, 3*32 PIN
		WP	99	19	32B		WRAP CONNECTOR J19.1, 3*32 PIN
		WP	99	19	32C		WRAP CONNECTOR J19.1, 3*32 PIN
	5	WPQ	99	20	32A		WRAP CONNECTOR J20.1, 3*32 PIN
	5	WPQ	99	20	32B		WRAP CONNECTOR J20.1, 3*32 PIN
	5	WPQ	99	20	32C		WRAP CONNECTOR J20.1, 3*32 PIN
	1	WQ	99	20	32D		WRAP CONNECTOR J20.2, 3*32 PIN
	2	WQ	99	20	32F		WRAP CONNECTOR J20.2, 3*32 PIN
+10 SW	2-R	B	97	93	41		CONN. ASS. TO MAIN PROGR. (JIII)
	2-R	WQ	99	10	23F		WRAP CONNECTOR J10.2, 3*32 PIN
+10AD150	5	A	98	81	19		ADDITICNAL POWER CONNECTOR

./.

SIG.NAME	COLOR	TYPE	GR	EL	PT	S	DESCRIPTION OF ELEMENT
(CONT.)	5	A	98	81	20		ADDITIONAL POWER CONNECTOR
	5	A	98	81	21		ADDITIONAL POWER CONNECTOR
	5	WQ	99	18	07A		WRAP CONNECTOR J18.1, 3*32 PIN
	5	WQ	99	18	07B		WRAP CONNECTOR J18.1, 3*32 PIN
	5	WQ	99	18	07C		WRAP CONNECTOR J18.1, 3*32 PIN
+12		W	99	01	16B		WRAP CONNECTOR J01.1, 3*32 PIN
		W	99	01	16C		WRAP CONNECTOR J01.1, 3*32 PIN
		W	99	02	16B		WRAP CONNECTOR J02.1, 3*32 PIN
		W	99	02	16C		WRAP CONNECTOR J02.1, 3*32 PIN
		W	99	03	16B		WRAP CONNECTOR J03.1, 3*32 PIN
		W	99	03	16C		WRAP CONNECTOR J03.1, 3*32 PIN
		W	99	04	16B		WRAP CONNECTOR J04.1, 3*32 PIN
		W	99	04	16C		WRAP CONNECTOR J04.1, 3*32 PIN
		W	99	05	16B		WRAP CONNECTOR J05.1, 3*32 PIN
		W	99	05	16C		WRAP CONNECTOR J05.1, 3*32 PIN
		W	99	06	16B		WRAP CONNECTOR J06.1, 3*32 PIN
		W	99	06	16C		WRAP CONNECTOR J06.1, 3*32 PIN
		W	99	07	16B		WRAP CONNECTOR J07.1, 3*32 PIN
		W	99	07	16C		WRAP CONNECTOR J07.1, 3*32 PIN
		W	99	08	16B		WRAP CONNECTOR J08.1, 3*32 PIN
		W	99	08	16C		WRAP CONNECTOR J08.1, 3*32 PIN
		W	99	09	16B		WRAP CONNECTOR J09.1, 3*32 PIN
		W	99	09	16C		WRAP CONNECTOR J09.1, 3*32 PIN
		W	99	10	16B		WRAP CONNECTOR J10.1, 3*32 PIN
		W	99	10	16C		WRAP CONNECTOR J10.1, 3*32 PIN
		WP	99	11	16A		WRAP CONNECTOR J11.1, 3*32 PIN
		WP	99	11	16B		WRAP CONNECTOR J11.1, 3*32 PIN
		WP	99	11	16C		WRAP CONNECTOR J11.1, 3*32 PIN
		WP	99	12	16A		WRAP CONNECTOR J12.1, 3*32 PIN
		WP	99	12	16B		WRAP CONNECTOR J12.1, 3*32 PIN
		WP	99	12	16C		WRAP CONNECTOR J12.1, 3*32 PIN
		WP	99	13	16A		WRAP CONNECTOR J13.1, 3*32 PIN
		WP	99	13	16B		WRAP CONNECTOR J13.1, 3*32 PIN
		WP	99	13	16C		WRAP CONNECTOR J13.1, 3*32 PIN
		WP	99	14	16A		WRAP CONNECTOR J14.1, 3*32 PIN
		WP	99	14	16B		WRAP CONNECTOR J14.1, 3*32 PIN
		WP	99	14	16C		WRAP CONNECTOR J14.1, 3*32 PIN
		WP	99	15	16A		WRAP CONNECTOR J15.1, 3*32 PIN
		WP	99	15	16B		WRAP CONNECTOR J15.1, 3*32 PIN
		WP	99	15	16C		WRAP CONNECTOR J15.1, 3*32 PIN
		WP	99	16	16A		WRAP CONNECTOR J16.1, 3*32 PIN
		WP	99	16	16B		WRAP CONNECTOR J16.1, 3*32 PIN
		WP	99	16	16C		WRAP CONNECTOR J16.1, 3*32 PIN
		WP	99	17	16A		WRAP CONNECTOR J17.1, 3*32 PIN
		WP	99	17	16B		WRAP CONNECTOR J17.1, 3*32 PIN
		WP	99	17	16C		WRAP CONNECTOR J17.1, 3*32 PIN
		WP	99	18	16A		WRAP CONNECTOR J18.1, 3*32 PIN
		WP	99	18	16B		WRAP CONNECTOR J18.1, 3*32 PIN
		WP	99	18	16C		WRAP CONNECTOR J18.1, 3*32 PIN
		WP	99	19	16A		WRAP CONNECTOR J19.1, 3*32 PIN
		WP	99	19	16B		WRAP CONNECTOR J19.1, 3*32 PIN
		WP	99	19	16C		WRAP CONNECTOR J19.1, 3*32 PIN
		WP	99	20	16A		WRAP CONNECTOR J20.1, 3*32 PIN
		WP	99	20	16B		WRAP CONNECTOR J20.1, 3*32 PIN
		WP	99	20	16C		WRAP CONNECTOR J20.1, 3*32 PIN

* S T U D E R * S I G N A L W I R E L I S T * 82/01/08 * 15:12 * P A G E 30 *

TAPE LOCK SYSTEM 2000 A80: LOCATOR, PARALLEL PROGRAMMER 1.220.375.00 79-10-05

SIG.NAME	COLOR	TYPE	GR	EL	PT	S	DESCRIPTION OF ELEMENT
(CONT.)		WP	99	19	16C		WRAP CONNECTOR J19.1, 3*32 PIN
		WP	99	20	16A		WRAP CONNECTOR J20.1, 3*32 PIN
		WP	99	20	16B		WRAP CONNECTOR J20.1, 3*32 PIN
		WP	99	20	16C		WRAP CONNECTOR J20.1, 3*32 PIN
+20V A80	3,3	L	96	01	03		RECTIFIER ASSEMBLY
	3	WQ	99	19	07A		WRAP CONNECTOR J19.1, 3*32 PIN
		W	99	19	07B		WRAP CONNECTOR J19.1, 3*32 PIN
	3	WQ	99	19	07C		WRAP CONNECTOR J19.1, 3*32 PIN
+24	2	B	97	71	37		AUXILIARY CONNECTOR
	2	L	97	72	08A		RELAIS PRINT
	2	L	97	72	08C		RELAIS PRINT
	4-0	B	98	81	37		CONN. ASS. TO BASIC PROGRAMMER
		W	99	01	20B		WRAP CONNECTOR J01.1, 3*32 PIN
		W	99	01	20C		WRAP CONNECTOR J01.1, 3*32 PIN
		W	99	02	20B		WRAP CONNECTOR J02.1, 3*32 PIN
		W	99	02	20C		WRAP CONNECTOR J02.1, 3*32 PIN
		W	99	03	20B		WRAP CONNECTOR J03.1, 3*32 PIN
		W	99	03	20C		WRAP CONNECTOR J03.1, 3*32 PIN
		W	99	04	20B		WRAP CONNECTOR J04.1, 3*32 PIN
		W	99	04	20C		WRAP CONNECTOR J04.1, 3*32 PIN
		W	99	05	20B		WRAP CONNECTOR J05.1, 3*32 PIN
		W	99	05	20C		WRAP CONNECTOR J05.1, 3*32 PIN
		W	99	06	20B		WRAP CONNECTOR J06.1, 3*32 PIN
		W	99	06	20C		WRAP CONNECTOR J06.1, 3*32 PIN
	2	WQ	99	07	09D		WRAP CONNECTOR J07.2, 3*32 PIN
		W	99	07	20B		WRAP CONNECTOR J07.1, 3*32 PIN
		W	99	07	20C		WRAP CONNECTOR J07.1, 3*32 PIN
		W	99	08	20B		WRAP CONNECTOR J08.1, 3*32 PIN
		W	99	08	20C		WRAP CONNECTOR J08.1, 3*32 PIN
		W	99	09	20A		WRAP CONNECTOR J09.1, 3*32 PIN
		W	99	09	20B		WRAP CONNECTOR J09.1, 3*32 PIN
		W	99	09	20C		WRAP CONNECTOR J09.1, 3*32 PIN
		W	99	10	20B		WRAP CONNECTOR J10.1, 3*32 PIN
		W	99	10	20C		WRAP CONNECTOR J10.1, 3*32 PIN
		WP	99	11	20A		WRAP CONNECTOR J11.1, 3*32 PIN
		WP	99	11	20B		WRAP CONNECTOR J11.1, 3*32 PIN
		WP	99	11	20C		WRAP CONNECTOR J11.1, 3*32 PIN
		WP	99	12	20A		WRAP CONNECTOR J12.1, 3*32 PIN
		WP	99	12	20B		WRAP CONNECTOR J12.1, 3*32 PIN
		WP	99	12	20C		WRAP CONNECTOR J12.1, 3*32 PIN
		WP	99	13	20A		WRAP CONNECTOR J13.1, 3*32 PIN
		WP	99	13	20B		WRAP CONNECTOR J13.1, 3*32 PIN
		WP	99	13	20C		WRAP CONNECTOR J13.1, 3*32 PIN
		WP	99	14	20A		WRAP CONNECTOR J14.1, 3*32 PIN
		WP	99	14	20B		WRAP CONNECTOR J14.1, 3*32 PIN
		WP	99	14	20C		WRAP CONNECTOR J14.1, 3*32 PIN
		WP	99	15	20A		WRAP CONNECTOR J15.1, 3*32 PIN
		WP	99	15	20B		WRAP CONNECTOR J15.1, 3*32 PIN
		WP	99	15	20C		WRAP CONNECTOR J15.1, 3*32 PIN
		WP	99	16	20A		WRAP CONNECTOR J16.1, 3*32 PIN
		WP	99	16	20B		WRAP CONNECTOR J16.1, 3*32 PIN
		WP	99	16	20C		WRAP CONNECTOR J16.1, 3*32 PIN
		WP	99	17	20A		WRAP CONNECTOR J17.1, 3*32 PIN
		WP	99	17	20B		WRAP CONNECTOR J17.1, 3*32 PIN

./.

SIG.NAME	COLOR	TYPE	GR	EL	PT	S	DESCRIPTION OF ELEMENT
(CONT.)		WP	99	17	20C		WRAP CONNECTOR J17.1, 3*32 PIN
		WP	99	18	20A		WRAP CONNECTOR J18.1, 3*32 PIN
		WP	99	18	20B		WRAP CONNECTOR J18.1, 3*32 PIN
		WP	99	18	20C		WRAP CONNECTOR J18.1, 3*32 PIN
		W +	99	19	08A		WRAP CONNECTOR J19.1, 3*32 PIN
		W +	99	19	08B		WRAP CONNECTOR J19.1, 3*32 PIN
		W +	99	19	08C		WRAP CONNECTOR J19.1, 3*32 PIN
		WP	99	19	20A		WRAP CONNECTOR J19.1, 3*32 PIN
		WP	99	19	20B		WRAP CONNECTOR J19.1, 3*32 PIN
		WP	99	19	20C		WRAP CONNECTOR J19.1, 3*32 PIN
		WP	99	20	20A		WRAP CONNECTOR J20.1, 3*32 PIN
		WP	99	20	20B		WRAP CONNECTOR J20.1, 3*32 PIN
		WP	99	20	20C		WRAP CONNECTOR J20.1, 3*32 PIN
		W	99	20	20D		WRAP CONNECTOR J20.2, 3*32 PIN
	4-0	WQ	99	20	20F		WRAP CONNECTOR J20.2, 3*32 PIN
+24CAP1	9	B	97	41	02		CAPSTAN SPEED CONTROL
	9	WQ	99	06	03D		WRAP CONNECTOR J06.2, 3*32 PIN
+24M	3	B	97	71	36		AUXILIARY CONNECTOR
	3	L	97	72	09A		RELAIS PRINT
+24MC1	9	A	97	61	15		REMOTE MODE CONTROL
	9	WQ	99	07	29D		WRAP CONNECTOR J07.2, 3*32 PIN
+24MC2	9	A	97	61	26		REMOTE MODE CONTROL
	9	WQ	99	07	24E		WRAP CONNECTOR J07.2, 3*32 PIN
+24MC3	9	A	97	61	34		REMOTE MODE CONTROL
	9	WQ	99	07	10F		WRAP CONNECTOR J07.2, 3*32 PIN
+31V 150	9	A	98	91	23		CONNECTOR ASS. TO POWER SUPPLY
	9	A	98	91	24		CONNECTOR ASS. TO POWER SUPPLY
	9	A	98	91	25		CONNECTOR ASS. TO POWER SUPPLY
	9	WQ	99	20	07A		WRAP CONNECTOR J20.1, 3*32 PIN
	9	WQ	99	20	07B		WRAP CONNECTOR J20.1, 3*32 PIN
	9	WQ	99	20	07C		WRAP CONNECTOR J20.1, 3*32 PIN
+5.8CAP1	5	B	97	41	14		CAPSTAN SPEED CONTROL
	5	WQ	99	06	06E		WRAP CONNECTOR J06.2, 3*32 PIN
+5.8EMC1	5	A	97	51	10		EXTENDED REMOTE MODE CONTROL
	5	WQ	99	06	25E		WRAP CONNECTOR J06.2, 3*32 PIN
		W	99	17	22A		WRAP CONNECTOR J17.1, 3*32 PIN
+5.8MC1	5	A	97	61	16		REMOTE MODE CONTROL
	5	WQ	99	07	30D		WRAP CONNECTOR J07.2, 3*32 PIN
- 5		W	99	01	12B		WRAP CONNECTOR J01.1, 3*32 PIN
		W	99	01	12C		WRAP CONNECTOR J01.1, 3*32 PIN
		W	99	02	12B		WRAP CONNECTOR J02.1, 3*32 PIN
		W	99	02	12C		WRAP CONNECTOR J02.1, 3*32 PIN
		W	99	03	12B		WRAP CONNECTOR J03.1, 3*32 PIN
		W	99	03	12C		WRAP CONNECTOR J03.1, 3*32 PIN
		W	99	04	12B		WRAP CONNECTOR J04.1, 3*32 PIN
		W	99	04	12C		WRAP CONNECTOR J04.1, 3*32 PIN

./.

```
*   S T U D E R   *   S I G N A L   W I R E   L I S T              *   82/01/08 * 15:12      *   P A G E     31    *
TAPE LOCK SYSTEM 2000 A80: LOCATOR, PARALLEL PROGRAMMER      1.228.375.00          79-10-05
```

SIG.NAME	COLOR	TYPE	GR	EL	PT	S	DESCRIPTION OF ELEMENT
(CONT.)		W	99	05	12B		WRAP CONNECTOR J05.1, 3*32 PIN
		W	99	05	12C		WRAP CONNECTOR J05.1, 3*32 PIN
		W	99	06	12B		WRAP CONNECTOR J06.1, 3*32 PIN
		W	99	06	12C		WRAP CONNECTOR J06.1, 3*32 PIN
		W	99	07	12B		WRAP CONNECTOR J07.1, 3*32 PIN
		W	99	07	12C		WRAP CONNECTOR J07.1, 3*32 PIN
		W	99	08	12B		WRAP CONNECTOR J08.1, 3*32 PIN
		W	99	08	12C		WRAP CONNECTOR J08.1, 3*32 PIN
		W	99	09	12B		WRAP CONNECTOR J09.1, 3*32 PIN
		W	99	09	12C		WRAP CONNECTOR J09.1, 3*32 PIN
		W	99	10	12B		WRAP CONNECTOR J10.1, 3*32 PIN
		W	99	10	12C		WRAP CONNECTOR J10.1, 3*32 PIN
		WP	99	11	12A		WRAP CONNECTOR J11.1, 3*32 PIN
		WP	99	11	12B		WRAP CONNECTOR J11.1, 3*32 PIN
		WP	99	11	12C		WRAP CONNECTOR J11.1, 3*32 PIN
		WP	99	12	12A		WRAP CONNECTOR J12.1, 3*32 PIN
		WP	99	12	12B		WRAP CONNECTOR J12.1, 3*32 PIN
		WP	99	12	12C		WRAP CONNECTOR J12.1, 3*32 PIN
		WP	99	13	12A		WRAP CONNECTOR J13.1, 3*32 PIN
		WP	99	13	12B		WRAP CONNECTOR J13.1, 3*32 PIN
		WP	99	13	12C		WRAP CONNECTOR J13.1, 3*32 PIN
		WP	99	14	12A		WRAP CONNECTOR J14.1, 3*32 PIN
		WP	99	14	12B		WRAP CONNECTOR J14.1, 3*32 PIN
		WP	99	14	12C		WRAP CONNECTOR J14.1, 3*32 PIN
		WP	99	15	12A		WRAP CONNECTOR J15.1, 3*32 PIN
		WP	99	15	12B		WRAP CONNECTOR J15.1, 3*32 PIN
		WP	99	15	12C		WRAP CONNECTOR J15.1, 3*32 PIN
		WP	99	16	12A		WRAP CONNECTOR J16.1, 3*32 PIN
		WP	99	16	12B		WRAP CONNECTOR J16.1, 3*32 PIN
		WP	99	16	12C		WRAP CONNECTOR J16.1, 3*32 PIN
		WP	99	17	12A		WRAP CONNECTOR J17.1, 3*32 PIN
		WP	99	17	12B		WRAP CONNECTOR J17.1, 3*32 PIN
		WP	99	17	12C		WRAP CONNECTOR J17.1, 3*32 PIN
		WP	99	18	12A		WRAP CONNECTOR J18.1, 3*32 PIN
		WP	99	18	12B		WRAP CONNECTOR J18.1, 3*32 PIN
		WP	99	18	12C		WRAP CONNECTOR J18.1, 3*32 PIN
		WP	99	19	12A		WRAP CONNECTOR J19.1, 3*32 PIN
		WP	99	19	12B		WRAP CONNECTOR J19.1, 3*32 PIN
		WP	99	19	12C		WRAP CONNECTOR J19.1, 3*32 PIN
		WP	99	20	12A		WRAP CONNECTOR J20.1, 3*32 PIN
		WP	99	20	12B		WRAP CONNECTOR J20.1, 3*32 PIN
		WP	99	20	12C		WRAP CONNECTOR J20.1, 3*32 PIN
-10V 150	6	A	98	91	01		CONNECTOR ASS. TO POWER SUPPLY
	6	A	98	91	03		CONNECTOR ASS. TO POWER SUPPLY
	6	A	98	91	04		CONNECTOR ASS. TO POWER SUPPLY
	6	WQ	99	20	04A		WRAP CONNECTOR J20.1, 3*32 PIN
	6	WQ	99	20	04B		WRAP CONNECTOR J20.1, 3*32 PIN
	6	WQ	99	20	04C		WRAP CONNECTOR J20.1, 3*32 PIN
-12	4	L	98	61	05		CODE CH. REMOTE IF (OPTIONAL)
	8	L	98	62	01A		CODE CH. REMOTE IF (OPTIONAL)
	4	L	98	62	05B		CODE CH. REMOTE IF (OPTIONAL)
		W	99	01	14B		WRAP CONNECTOR J01.1, 3*32 PIN
		W	99	01	14C		WRAP CONNECTOR J01.1, 3*32 PIN
		W	99	02	14B		WRAP CONNECTOR J02.1, 3*32 PIN
(CONT.)		W	99	02	14C		WRAP CONNECTOR J02.1, 3*32 PIN
		W	99	03	14B		WRAP CONNECTOR J03.1, 3*32 PIN
		W	99	03	14C		WRAP CONNECTOR J03.1, 3*32 PIN
		W	99	04	14B		WRAP CONNECTOR J04.1, 3*32 PIN
		W	99	04	14C		WRAP CONNECTOR J04.1, 3*32 PIN
		W	99	05	14B		WRAP CONNECTOR J05.1, 3*32 PIN
		W	99	05	14C		WRAP CONNECTOR J05.1, 3*32 PIN
		W	99	06	14B		WRAP CONNECTOR J06.1, 3*32 PIN
		W	99	06	14C		WRAP CONNECTOR J06.1, 3*32 PIN
		W	99	07	14B		WRAP CONNECTOR J07.1, 3*32 PIN
		W	99	07	14C		WRAP CONNECTOR J07.1, 3*32 PIN
		W	99	08	14B		WRAP CONNECTOR J08.1, 3*32 PIN
		W	99	08	14C		WRAP CONNECTOR J08.1, 3*32 PIN
		W	99	09	14B		WRAP CONNECTOR J09.1, 3*32 PIN
		W	99	09	14C		WRAP CONNECTOR J09.1, 3*32 PIN
		W	99	10	14B		WRAP CONNECTOR J10.1, 3*32 PIN
		W	99	10	14C		WRAP CONNECTOR J10.1, 3*32 PIN
		WP	99	11	14A		WRAP CONNECTOR J11.1, 3*32 PIN
		WP	99	11	14B		WRAP CONNECTOR J11.1, 3*32 PIN
		WP	99	11	14C		WRAP CONNECTOR J11.1, 3*32 PIN
		WP	99	12	14A		WRAP CONNECTOR J12.1, 3*32 PIN
		WP	99	12	14B		WRAP CONNECTOR J12.1, 3*32 PIN
		WP	99	12	14C		WRAP CONNECTOR J12.1, 3*32 PIN
		WP	99	13	14A		WRAP CONNECTOR J13.1, 3*32 PIN
		WP	99	13	14B		WRAP CONNECTOR J13.1, 3*32 PIN
		WP	99	13	14C		WRAP CONNECTOR J13.1, 3*32 PIN
		WP	99	14	14A		WRAP CONNECTOR J14.1, 3*32 PIN
		WP	99	14	14B		WRAP CONNECTOR J14.1, 3*32 PIN
		WP	99	14	14C		WRAP CONNECTOR J14.1, 3*32 PIN
		WP	99	15	14A		WRAP CONNECTOR J15.1, 3*32 PIN
		WP	99	15	14B		WRAP CONNECTOR J15.1, 3*32 PIN
		WP	99	15	14C		WRAP CONNECTOR J15.1, 3*32 PIN
		WP	99	16	14A		WRAP CONNECTOR J16.1, 3*32 PIN
		WP	99	16	14B		WRAP CONNECTOR J16.1, 3*32 PIN
		WP	99	16	14C		WRAP CONNECTOR J16.1, 3*32 PIN
	8	WPQ$	99	17	14A		WRAP CONNECTOR J17.1, 3*32 PIN
		WP	99	17	14B		WRAP CONNECTOR J17.1, 3*32 PIN
		WP	99	17	14C		WRAP CONNECTOR J17.1, 3*32 PIN
		WP	99	18	14A		WRAP CONNECTOR J18.1, 3*32 PIN
		WP	99	18	14B		WRAP CONNECTOR J18.1, 3*32 PIN
		WP	99	18	14C		WRAP CONNECTOR J18.1, 3*32 PIN
		WP	99	19	14A		WRAP CONNECTOR J19.1, 3*32 PIN
		WP	99	19	14B		WRAP CONNECTOR J19.1, 3*32 PIN
		WP	99	19	14C		WRAP CONNECTOR J19.1, 3*32 PIN
		WP	99	20	14A		WRAP CONNECTOR J20.1, 3*32 PIN
		WP	99	20	14B		WRAP CONNECTOR J20.1, 3*32 PIN
		WP	99	20	14C		WRAP CONNECTOR J20.1, 3*32 PIN
-20V A80	1,1	L	96	01	02		RECTIFIER ASSEMBLY
	1	WQ	99	19	04A		WRAP CONNECTOR J19.1, 3*32 PIN
		W	99	19	04B		WRAP CONNECTOR J19.1, 3*32 PIN
	1	WQ	99	19	04C		WRAP CONNECTOR J19.1, 3*32 PIN
-5.8CAP1	6	B	97	41	15		CAPSTAN SPEED CONTROL
	6	WQ	99	06	07E		WRAP CONNECTOR J06.2, 3*32 PIN

./.

```
*   S T U D E R   *   S I G N A L   W I R E   L I S T              *   82/01/08 * 15:12      *   P A G E     32    *
TAPE LOCK SYSTEM 2000 A80: LOCATOR, PARALLEL PROGRAMMER      1.228.375.00          79-10-05
```

SIG.NAME	COLOR	TYPE	GR	EL	PT	S	DESCRIPTION OF ELEMENT
-5.8MC1	6	A	97	61	17		REMOTE MODE CONTROL
	6	WQ	99	07	31D		WRAP CONNECTOR J07.2, 3*32 PIN
ACBIF1		W	99	05	06B		WRAP CONNECTOR J05.1, 3*32 PIN
ACBIF2		W	99	05	07B		WRAP CONNECTOR J05.1, 3*32 PIN
ACBIF3		W	99	05	08B		WRAP CONNECTOR J05.1, 3*32 PIN
ACIFGRP		W	99	01	17A		WRAP CONNECTOR J01.1, 3*32 PIN
		W	99	04	17C		WRAP CONNECTOR J04.1, 3*32 PIN
ACIFMUXA		W	99	05	06A		WRAP CONNECTOR J05.1, 3*32 PIN
ACIFMUXB		W	99	05	17A		WRAP CONNECTOR J05.1, 3*32 PIN
ACINSTEN		W	99	04	30C		WRAP CONNECTOR J04.1, 3*32 PIN
		W	99	15	13A		WRAP CONNECTOR J15.1, 3*32 PIN
ACPGAD00		W	99	04	06A		WRAP CONNECTOR J04.1, 3*32 PIN
		W	99	15	02A		WRAP CONNECTOR J15.1, 3*32 PIN
ACPGAD01		W	99	04	07A		WRAP CONNECTOR J04.1, 3*32 PIN
		W	99	15	03A		WRAP CONNECTOR J15.1, 3*32 PIN
ACPGAD02		W	99	04	08A		WRAP CONNECTOR J04.1, 3*32 PIN
		W	99	15	04A		WRAP CONNECTOR J15.1, 3*32 PIN
ACPGAD03		W	99	04	09A		WRAP CONNECTOR J04.1, 3*32 PIN
		W	99	15	05A		WRAP CONNECTOR J15.1, 3*32 PIN
ACPGAD04		W	99	04	03B		WRAP CONNECTOR J04.1, 3*32 PIN
		W	99	15	06A		WRAP CONNECTOR J15.1, 3*32 PIN
ACPGAD05		W	99	04	04B		WRAP CONNECTOR J04.1, 3*32 PIN
		W	99	15	07A		WRAP CONNECTOR J15.1, 3*32 PIN
ACPGAD06		W	99	04	04C		WRAP CONNECTOR J04.1, 3*32 PIN
		W	99	15	08A		WRAP CONNECTOR J15.1, 3*32 PIN
ACPGAD07		W	99	04	05C		WRAP CONNECTOR J04.1, 3*32 PIN
		W	99	15	09A		WRAP CONNECTOR J15.1, 3*32 PIN
ACPGAD08		W	99	04	06C		WRAP CONNECTOR J04.1, 3*32 PIN
		W	99	15	10A		WRAP CONNECTOR J15.1, 3*32 PIN
ACPGAD09		W	99	04	07C		WRAP CONNECTOR J04.1, 3*32 PIN
		W	99	15	11A		WRAP CONNECTOR J15.1, 3*32 PIN
ACPGAD10		W	99	04	09C		WRAP CONNECTOR J04.1, 3*32 PIN
		W	99	15	10B		WRAP CONNECTOR J15.1, 3*32 PIN
ACPGAD11		W	99	04	10C		WRAP CONNECTOR J04.1, 3*32 PIN
		W	99	15	11B		WRAP CONNECTOR J15.1, 3*32 PIN
ACPGDATA		W	99	01	17B		WRAP CONNECTOR J01.1, 3*32 PIN
(CONT.)		W	99	02	18A		WRAP CONNECTOR J02.1, 3*32 PIN
		W	99	04	18A		WRAP CONNECTOR J04.1, 3*32 PIN
		W	99	05	18A		WRAP CONNECTOR J05.1, 3*32 PIN
		W	99	07	18B		WRAP CONNECTOR J07.1, 3*32 PIN
		W	99	14	02C		WRAP CONNECTOR J14.1, 3*32 PIN
		W	99	15	17A		WRAP CONNECTOR J15.1, 3*32 PIN
ACPGDATB		W	99	01	18B		WRAP CONNECTOR J01.1, 3*32 PIN
		W	99	02	22A		WRAP CONNECTOR J02.1, 3*32 PIN
		W	99	04	21A		WRAP CONNECTOR J04.1, 3*32 PIN
		W	99	05	21A		WRAP CONNECTOR J05.1, 3*32 PIN
		W	99	07	21B		WRAP CONNECTOR J07.1, 3*32 PIN
		W	99	14	03C		WRAP CONNECTOR J14.1, 3*32 PIN
		W	99	15	18A		WRAP CONNECTOR J15.1, 3*32 PIN
ACPGDATC		W	99	01	21B		WRAP CONNECTOR J01.1, 3*32 PIN
		W	99	02	23A		WRAP CONNECTOR J02.1, 3*32 PIN
		W	99	04	22A		WRAP CONNECTOR J04.1, 3*32 PIN
		W	99	05	22A		WRAP CONNECTOR J05.1, 3*32 PIN
		W	99	07	22B		WRAP CONNECTOR J07.1, 3*32 PIN
		W	99	14	04C		WRAP CONNECTOR J14.1, 3*32 PIN
		W	99	15	21A		WRAP CONNECTOR J15.1, 3*32 PIN
ACPGDATD		W	99	01	22B		WRAP CONNECTOR J01.1, 3*32 PIN
		W	99	04	23A		WRAP CONNECTOR J04.1, 3*32 PIN
		W	99	05	23A		WRAP CONNECTOR J05.1, 3*32 PIN
		W	99	07	23B		WRAP CONNECTOR J07.1, 3*32 PIN
		W	99	14	05C		WRAP CONNECTOR J14.1, 3*32 PIN
		W	99	15	22A		WRAP CONNECTOR J15.1, 3*32 PIN
ACPGDATE		W	99	01	23B		WRAP CONNECTOR J01.1, 3*32 PIN
		W	99	04	24A		WRAP CONNECTOR J04.1, 3*32 PIN
		W	99	05	24A		WRAP CONNECTOR J05.1, 3*32 PIN
		W	99	07	24B		WRAP CONNECTOR J07.1, 3*32 PIN
		W	99	14	06C		WRAP CONNECTOR J14.1, 3*32 PIN
		W	99	15	23A		WRAP CONNECTOR J15.1, 3*32 PIN
ACPGDATF		W	99	01	31B		WRAP CONNECTOR J01.1, 3*32 PIN
		W	99	04	25A		WRAP CONNECTOR J04.1, 3*32 PIN
		W	99	05	25A		WRAP CONNECTOR J05.1, 3*32 PIN
		W	99	07	25B		WRAP CONNECTOR J07.1, 3*32 PIN
		W	99	14	07C		WRAP CONNECTOR J14.1, 3*32 PIN
		W	99	15	24A		WRAP CONNECTOR J15.1, 3*32 PIN
ACPGDATG		W	99	01	13B		WRAP CONNECTOR J01.1, 3*32 PIN
		W	99	04	26A		WRAP CONNECTOR J04.1, 3*32 PIN
		W	99	05	26A		WRAP CONNECTOR J05.1, 3*32 PIN
		W	99	07	26B		WRAP CONNECTOR J07.1, 3*32 PIN
		W	99	14	08C		WRAP CONNECTOR J14.1, 3*32 PIN
		W	99	15	25A		WRAP CONNECTOR J15.1, 3*32 PIN
ACPGDATH		W	99	01	13A		WRAP CONNECTOR J01.1, 3*32 PIN
		W	99	04	27A		WRAP CONNECTOR J04.1, 3*32 PIN
		W	99	05	27A		WRAP CONNECTOR J05.1, 3*32 PIN
		W	99	07	27B		WRAP CONNECTOR J07.1, 3*32 PIN
		W	99	14	09C		WRAP CONNECTOR J14.1, 3*32 PIN

./.

SIG.NAME	COLOR	TYPE	GR	EL	PT	S	DESCRIPTION OF ELEMENT
(CONT.)		W	99	15	26A		WRAP CONNECTOR J15.1, 3*32 PIN
ACPGDATI		W	99	04	28A		WRAP CONNECTOR J04.1, 3*32 PIN
		W	99	15	27A		WRAP CONNECTOR J15.1, 3*32 PIN
ACPGDATK		W	99	04	29A		WRAP CONNECTOR J04.1, 3*32 PIN
		W	99	15	28A		WRAP CONNECTOR J15.1, 3*32 PIN
ACPGDATL		W	99	04	30A		WRAP CONNECTOR J04.1, 3*32 PIN
		W	99	15	29A		WRAP CONNECTOR J15.1, 3*32 PIN
ACPGDATM		W	99	04	31A		WRAP CONNECTOR J04.1, 3*32 PIN
		W	99	15	30A		WRAP CONNECTOR J15.1, 3*32 PIN
ACPGDATN		W	99	04	31C		WRAP CONNECTOR J04.1, 3*32 PIN
		W	99	15	31A		WRAP CONNECTOR J15.1, 3*32 PIN
ACPGIRPT		W	99	04	17B		WRAP CONNECTOR J04.1, 3*32 PIN
		W	99	07	30C		WRAP CONNECTOR J07.1, 3*32 PIN
ACSERDAT		W	99	05	31A		WRAP CONNECTOR J05.1, 3*32 PIN
		W	99	14	25B		WRAP CONNECTOR J14.1, 3*32 PIN
ACSP-09		W	99	04	02B		WRAP CONNECTOR J04.1, 3*32 PIN
ACSPCAP		W	99	01	21A		WRAP CONNECTOR J01.1, 3*32 PIN
		W	99	02	21B		WRAP CONNECTOR J02.1, 3*32 PIN
ACSPGRP1		W	99	04	10B		WRAP CONNECTOR J04.1, 3*32 PIN
		W	99	05	22B		WRAP CONNECTOR J05.1, 3*32 PIN
ACSPGRP2		W	99	04	11B		WRAP CONNECTOR J04.1, 3*32 PIN
		W	99	07	11C		WRAP CONNECTOR J07.1, 3*32 PIN
ACSPGRP3		W	99	01	17C		WRAP CONNECTOR J01.1, 3*32 PIN
		W	99	04	11C		WRAP CONNECTOR J04.1, 3*32 PIN
ACSPGRP4		W	99	04	10A		WRAP CONNECTOR J04.1, 3*32 PIN
ACSPIFC1		W	99	01	28B		WRAP CONNECTOR J01.1, 3*32 PIN
ACTAPFLG		W	99	04	24B		WRAP CONNECTOR J04.1, 3*32 PIN
		W	99	15	18B		WRAP CONNECTOR J15.1, 3*32 PIN
AC1	6	L	98	02	02		HEADPLUG/CHANNEL SUPPLY
	6	A	98	03	35		HEADPLUG/CHANNEL SUPPLY
AC1MOD	5	L	96	01	05		RECTIFIER ASSEMBLY
	6	L	98	02	01		HEADPLUG/CHANNEL SUPPLY
	6	WQ +	99	11	08A		WRAP CONNECTOR J11.1, 3*32 PIN
	5	WQ +	99	11	10A		WRAP CONNECTOR J11.1, 3*32 PIN
AC2	3	L	98	01	02		HEADPLUG/CHANNEL SUPPLY
	3	A	98	03	37		HEADPLUG/CHANNEL SUPPLY
AC2MOD	7	L	96	01	07		RECTIFIER ASSEMBLY

./.

SIG.NAME	COLOR	TYPE	GR	EL	PT	S	DESCRIPTION OF ELEMENT
(CONT.)	3	L	98	01	01		HEADPLUG/CHANNEL SUPPLY
	3	WQ +	99	11	08C		WRAP CONNECTOR J11.1, 3*32 PIN
	7	WQ +	99	11	10C		WRAP CONNECTOR J11.1, 3*32 PIN
ADCDATAA	2	B	97	93	09		CONN. ASS. TO MAIN PROGR. (JIII)
		W	99	09	17A		WRAP CONNECTOR J09.1, 3*32 PIN
	2	WQ	99	10	09D		WRAP CONNECTOR J10.2, 3*32 PIN
ADCDATAB	R	B	97	93	07		CONN. ASS. TO MAIN PROGR. (JIII)
		W	99	09	18A		WRAP CONNECTOR J09.1, 3*32 PIN
	R	WQ	99	10	07D		WRAP CONNECTOR J10.2, 3*32 PIN
ADCDATAC	1	B	97	93	02		CONN. ASS. TO MAIN PROGR. (JIII)
		W	99	09	22A		WRAP CONNECTOR J09.1, 3*32 PIN
	1	WQ	99	10	03D		WRAP CONNECTOR J10.2, 3*32 PIN
ADCDATAD	1-6	B	97	92	23		CONN. ASS. TO MAIN PROGR. (J II)
		W	99	09	24A		WRAP CONNECTOR J09.1, 3*32 PIN
	1-6	WQ	99	09	29D		WRAP CONNECTOR J09.2, 3*32 PIN
ADCDATAE	4-1	B	97	92	17		CONN. ASS. TO MAIN PROGR. (J II)
	4-1	WQ	99	09	23D		WRAP CONNECTOR J09.2, 3*32 PIN
		W	99	09	26C		WRAP CONNECTOR J09.1, 3*32 PIN
ADD	4-6	B	97	91	33		CONN. ASS. TO MAIN PROGR. (J I)
	4-6	WQ	99	08	09F		WRAP CONNECTOR J08.2, 3*32 PIN
ADDRCT-A		W	99	01	22C		WRAP CONNECTOR J01.1, 3*32 PIN
		W	99	03	26B		WRAP CONNECTOR J03.1, 3*32 PIN
		W +	99	04	18C		WRAP CONNECTOR J04.1, 3*32 PIN
		W	99	14	18C		WRAP CONNECTOR J14.1, 3*32 PIN
ADDRCT-B		W	99	01	23C		WRAP CONNECTOR J01.1, 3*32 PIN
		W	99	03	27B		WRAP CONNECTOR J03.1, 3*32 PIN
		W +	99	04	21C		WRAP CONNECTOR J04.1, 3*32 PIN
		W	99	14	21C		WRAP CONNECTOR J14.1, 3*32 PIN
ADDRCT-C		W	99	01	24C		WRAP CONNECTOR J01.1, 3*32 PIN
		W	99	03	28B		WRAP CONNECTOR J03.1, 3*32 PIN
		W +	99	04	22C		WRAP CONNECTOR J04.1, 3*32 PIN
		W	99	14	22C		WRAP CONNECTOR J14.1, 3*32 PIN
ADDRCT-D		W	99	01	25C		WRAP CONNECTOR J01.1, 3*32 PIN
		W	99	03	29B		WRAP CONNECTOR J03.1, 3*32 PIN
		W +	99	04	23C		WRAP CONNECTOR J04.1, 3*32 PIN
		W	99	14	23C		WRAP CONNECTOR J14.1, 3*32 PIN
ADDRCT-E		W	99	01	26C		WRAP CONNECTOR J01.1, 3*32 PIN
		W	99	03	30B		WRAP CONNECTOR J03.1, 3*32 PIN
		W +	99	04	24C		WRAP CONNECTOR J04.1, 3*32 PIN
		W	99	14	24C		WRAP CONNECTOR J14.1, 3*32 PIN
ADDRCT-F		W	99	01	27C		WRAP CONNECTOR J01.1, 3*32 PIN
		W	99	03	31B		WRAP CONNECTOR J03.1, 3*32 PIN
		W +	99	04	25C		WRAP CONNECTOR J04.1, 3*32 PIN
		W	99	14	25C		WRAP CONNECTOR J14.1, 3*32 PIN

SIG.NAME	COLOR	TYPE	GR	EL	PT	S	DESCRIPTION OF ELEMENT
ADDRCT-G		W	99	01	28C		WRAP CONNECTOR J01.1, 3*32 PIN
		W +	99	04	26C		WRAP CONNECTOR J04.1, 3*32 PIN
		W	99	14	26C		WRAP CONNECTOR J14.1, 3*32 PIN
ADDRCT-H		W	99	01	29C		WRAP CONNECTOR J01.1, 3*32 PIN
		W +	99	04	27C		WRAP CONNECTOR J04.1, 3*32 PIN
		W	99	14	27C		WRAP CONNECTOR J14.1, 3*32 PIN
ADDRCT-I		W	99	01	30C		WRAP CONNECTOR J01.1, 3*32 PIN
		W +	99	04	28C		WRAP CONNECTOR J04.1, 3*32 PIN
		W	99	14	28C		WRAP CONNECTOR J14.1, 3*32 PIN
ADDRCT-K		W	99	01	31C		WRAP CONNECTOR J01.1, 3*32 PIN
		W +	99	04	29C		WRAP CONNECTOR J04.1, 3*32 PIN
		W	99	14	29C		WRAP CONNECTOR J14.1, 3*32 PIN
ADV RET	2	B	97	91	09		CONN. ASS. TO MAIN PROGR. (J I)
	2	WQ	99	08	09D		WRAP CONNECTOR J08.2, 3*32 PIN
	2	W	99	10	24B		WRAP CONNECTOR J10.1, 3*32 PIN
AREN1		W	99	04	11A		WRAP CONNECTOR J04.1, 3*32 PIN
		W	99	14	11C		WRAP CONNECTOR J14.1, 3*32 PIN
AREN2		W	99	04	13A		WRAP CONNECTOR J04.1, 3*32 PIN
		W	99	14	10C		WRAP CONNECTOR J14.1, 3*32 PIN
ARIF-Y		W	99	05	28A		WRAP CONNECTOR J05.1, 3*32 PIN
		W	99	14	08B		WRAP CONNECTOR J14.1, 3*32 PIN
ARPOUT-A		W	99	01	08A		WRAP CONNECTOR J01.1, 3*32 PIN
		W +	99	04	26B		WRAP CONNECTOR J04.1, 3*32 PIN
		W	99	05	11B		WRAP CONNECTOR J05.1, 3*32 PIN
		W	99	07	07C		WRAP CONNECTOR J07.1, 3*32 PIN
		W	99	14	07B		WRAP CONNECTOR J14.1, 3*32 PIN
ARPOUT-B		W	99	01	09A		WRAP CONNECTOR J01.1, 3*32 PIN
		W +	99	04	27B		WRAP CONNECTOR J04.1, 3*32 PIN
		W	99	07	06C		WRAP CONNECTOR J07.1, 3*32 PIN
		W	99	14	06B		WRAP CONNECTOR J14.1, 3*32 PIN
ARPOUT-C		W	99	01	10A		WRAP CONNECTOR J01.1, 3*32 PIN
		W +	99	04	28B		WRAP CONNECTOR J04.1, 3*32 PIN
		W	99	07	05C		WRAP CONNECTOR J07.1, 3*32 PIN
		W	99	14	05B		WRAP CONNECTOR J14.1, 3*32 PIN
ARPOUT-D		W	99	01	09B		WRAP CONNECTOR J01.1, 3*32 PIN
		W +	99	04	29B		WRAP CONNECTOR J04.1, 3*32 PIN
		W	99	07	04C		WRAP CONNECTOR J07.1, 3*32 PIN
		W	99	14	04B		WRAP CONNECTOR J14.1, 3*32 PIN
ARPOUT-E		W	99	01	10B		WRAP CONNECTOR J01.1, 3*32 PIN
		W +	99	04	30B		WRAP CONNECTOR J04.1, 3*32 PIN
		W	99	14	30C		WRAP CONNECTOR J14.1, 3*32 PIN
ARPOUT-F		W	99	01	11B		WRAP CONNECTOR J01.1, 3*32 PIN
		W +	99	04	31B		WRAP CONNECTOR J04.1, 3*32 PIN

./.

SIG.NAME	COLOR	TYPE	GR	EL	PT	S	DESCRIPTION OF ELEMENT
(CONT.)		W	99	14	31C		WRAP CONNECTOR J14.1, 3*32 PIN
ARSEROUT		W	99	01	29B		WRAP CONNECTOR J01.1, 3*32 PIN
		W	99	02	31B		WRAP CONNECTOR J02.1, 3*32 PIN
		W	99	14	13B		WRAP CONNECTOR J14.1, 3*32 PIN
AUXDATIN		W	99	14	26B		WRAP CONNECTOR J14.1, 3*32 PIN
AUXDRINA		W	99	08	09A		WRAP CONNECTOR J08.1, 3*32 PIN
AUXDROA		W	99	08	08C		WRAP CONNECTOR J08.1, 3*32 PIN
B-CALC	5-2	B	97	91	34		CONN. ASS. TO MAIN PROGR. (J I)
	5-2	WQ	99	08	10F		WRAP CONNECTOR J08.2, 3*32 PIN
		W	99	10	06C		WRAP CONNECTOR J10.1, 3*32 PIN
B-CCHRDY	9-6	B	98	81	22		CONN. ASS. TO BASIC PROGRAMMER
		W	99	17	05C		WRAP CONNECTOR J17.1, 3*32 PIN
	9-6	WQ	99	20	05F		WRAP CONNECTOR J20.2, 3*32 PIN
		W +	99	20	09D		WRAP CONNECTOR J20.2, 3*32 PIN
B-CCHREC	1-6	B	98	81	23		CONN. ASS. TO BASIC PROGRAMMER
		W	99	17	06C		WRAP CONNECTOR J17.1, 3*32 PIN
	1-6	WQ	99	20	06F		WRAP CONNECTOR J20.2, 3*32 PIN
		W +	99	20	10D		WRAP CONNECTOR J20.2, 3*32 PIN
B-CCHREP	9-2	B	98	81	24		CONN. ASS. TO BASIC PROGRAMMER
		W	99	17	07C		WRAP CONNECTOR J17.1, 3*32 PIN
	9-2	WQ	99	20	07F		WRAP CONNECTOR J20.2, 3*32 PIN
		W +	99	20	11D		WRAP CONNECTOR J20.2, 3*32 PIN
B-CCHSAF	2-0	B	98	81	45		CONN. ASS. TO BASIC PROGRAMMER
		W	99	17	28C		WRAP CONNECTOR J17.1, 3*32 PIN
	2-0	WQ	99	20	28F		WRAP CONNECTOR J20.2, 3*32 PIN
B-CCHSYN	7	B +	98	81	11		CONN. ASS. TO BASIC PROGRAMMER
	0-R	B	98	81	43		CONN. ASS. TO BASIC PROGRAMMER
		W	99	17	26C		WRAP CONNECTOR J17.1, 3*32 PIN
	7	WQ +	99	20	26D		WRAP CONNECTOR J20.2, 3*32 PIN
	0-R	WQ	99	20	26F		WRAP CONNECTOR J20.2, 3*32 PIN
B-CUT	1	A	97	61	08		REMOTE MODE CONTROL
		W +	99	06	30D		WRAP CONNECTOR J06.2, 3*32 PIN
	1	WQ	99	07	22D		WRAP CONNECTOR J07.2, 3*32 PIN
		W	99	08	24A		WRAP CONNECTOR J08.1, 3*32 PIN
B-EMSTOP	9-4	B	98	81	16		CONN. ASS. TO BASIC PROGRAMMER
		W	99	17	31A		WRAP CONNECTOR J17.1, 3*32 PIN
	9-4	WQ	99	20	31D		WRAP CONNECTOR J20.2, 3*32 PIN
B-ENTRYM	1-R	B	97	91	21		CONN. ASS. TO MAIN PROGR. (J I)
	1-R	WQ	99	08	27D		WRAP CONNECTOR J08.2, 3*32 PIN
		W	99	10	10B		WRAP CONNECTOR J10.1, 3*32 PIN
B-EXITSL	1-5	B	97	91	15		CONN. ASS. TO MAIN PROGR. (J I)
	1-5	WQ	99	08	21D		WRAP CONNECTOR J08.2, 3*32 PIN

./.

SIG.NAME	COLOR	TYPE	GR	EL	PT	S	DESCRIPTION OF ELEMENT
(CONT.)		W	99	10	10A		WRAP CONNECTOR J10.1, 3*32 PIN
B-EXTREC	2-R	B	98	81	41		CONN. ASS. TO BASIC PROGRAMMER
		W	99	17	24C		WRAP CONNECTOR J17.1, 3*32 PIN
		W	+ 99	20	24D		WRAP CONNECTOR J20.2, 3*32 PIN
	2-R	WQ	99	20	24F		WRAP CONNECTOR J20.2, 3*32 PIN
B-FAD	3	A	97	61	10		REMOTE MODE CONTROL
	3	WQ	99	07	24D		WRAP CONNECTOR J07.2, 3*32 PIN
B-FORW	4	A	97	61	04		REMOTE MODE CONTROL
	4	WQ	99	07	13D		WRAP CONNECTOR J07.2, 3*32 PIN
		W	99	08	21B		WRAP CONNECTOR J08.1, 3*32 PIN
B-GEN=M	8-1	B	98	81	19		CONN. ASS. TO BASIC PROGRAMMER
		W	99	17	02C		WRAP CONNECTOR J17.1, 3*32 PIN
	8-1	WQ	99	20	02F		WRAP CONNECTOR J20.2, 3*32 PIN
B-GENUSB	5-0	B	97	91	36		CONN. ASS. TO MAIN PROGR. (J I)
	5-0	WQ	99	08	13F		WRAP CONNECTOR J08.2, 3*32 PIN
		W	99	10	28C		WRAP CONNECTOR J10.1, 3*32 PIN
B-LAMPT	8-R-0	B	98	81	49		CONN. ASS. TO BASIC PROGRAMMER
		W	99	17	31C		WRAP CONNECTOR J17.1, 3*32 PIN
	8-R-0	WQ	99	20	31F		WRAP CONNECTOR J20.2, 3*32 PIN
B-LKMBP	1	B	98	81	03		CONN. ASS. TO BASIC PROGRAMMER
		W	99	17	02B		WRAP CONNECTOR J17.1, 3*32 PIN
	1	WQ	99	20	02D		WRAP CONNECTOR J20.2, 3*32 PIN
B-LOWLIM	8-1	B	97	91	19		CONN. ASS. TO MAIN PROGR. (J I)
	8-1	WQ	99	08	25D		WRAP CONNECTOR J08.2, 3*32 PIN
		W	99	10	10C		WRAP CONNECTOR J10.1, 3*32 PIN
B-MONO	2	A	97	61	09		REMOTE MODE CONTROL
	2	WQ	99	07	23D		WRAP CONNECTOR J07.2, 3*32 PIN
B-NOMAST	4-5-0	B	97	91	47		CONN. ASS. TO MAIN PROGR. (J I)
	4-5-0	WQ	99	08	29F		WRAP CONNECTOR J08.2, 3*32 PIN
		W	99	10	03A		WRAP CONNECTOR J10.1, 3*32 PIN
B-NOMBP	4	B	98	81	05		CONN. ASS. TO BASIC PROGRAMMER
		W	99	17	04B		WRAP CONNECTOR J17.1, 3*32 PIN
	4	WQ	99	20	04D		WRAP CONNECTOR J20.2, 3*32 PIN
B-NOSCOD	1-2	B	98	81	25		CONN. ASS. TO BASIC PROGRAMMER
		W	99	17	08C		WRAP CONNECTOR J17.1, 3*32 PIN
	1-2	WQ	99	20	08F		WRAP CONNECTOR J20.2, 3*32 PIN
		W	+ 99	20	17D		WRAP CONNECTOR J20.2, 3*32 PIN
B-OUT=IN	8-R	B	+ 98	81	12		CONN. ASS. TO BASIC PROGRAMMER
	6-0	B	98	81	44		CONN. ASS. TO BASIC PROGRAMMER
		W	99	17	27C		WRAP CONNECTOR J17.1, 3*32 PIN
	8-R	WQ	+ 99	20	27D		WRAP CONNECTOR J20.2, 3*32 PIN
	6-0	WQ	99	20	27F		WRAP CONNECTOR J20.2, 3*32 PIN
B-PHAS	9-4	B	97	91	16		CONN. ASS. TO MAIN PROGR. (J I)
	9-4	WQ	99	08	22D		WRAP CONNECTOR J08.2, 3*32 PIN
		W	99	10	17A		WRAP CONNECTOR J10.1, 3*32 PIN
B-PILOT	4-5-0	B	98	81	48		CONN. ASS. TO BASIC PROGRAMMER
		W	99	17	30C		WRAP CONNECTOR J17.1, 3*32 PIN
	4-5-0	WQ	99	20	30F		WRAP CONNECTOR J20.2, 3*32 PIN
B-REC	8	A	97	61	07		REMOTE MODE CONTROL
	8	WQ	99	07	21D		WRAP CONNECTOR J07.2, 3*32 PIN
		W	99	08	23C		WRAP CONNECTOR J08.1, 3*32 PIN
B-RECENB	9-R	B	97	93	20		CONN. ASS. TO MAIN PROGR. (JIII)
		W	99	10	23B		WRAP CONNECTOR J10.1, 3*32 PIN
	9-R	WQ	99	10	26D		WRAP CONNECTOR J10.2, 3*32 PIN
B-REHEAR	8-R	B	97	92	12		CONN. ASS. TO MAIN PROGR. (J II)
	8-R	WQ	99	09	13D		WRAP CONNECTOR J09.2, 3*32 PIN
		W	99	10	03C		WRAP CONNECTOR J10.1, 3*32 PIN
B-REMOTE	3	L	98	62	07A		CODE CH. REMOTE IF (OPTIONAL)
	9-1-0	B	98	81	46		CONN. ASS. TO BASIC PROGRAMMER
	3	WQ$	99	17	03A		WRAP CONNECTOR J17.1, 3*32 PIN
	9-1-0	WQ	99	20	29F		WRAP CONNECTOR J20.2, 3*32 PIN
B-REPR	2	A	97	61	05		REMOTE MODE CONTROL
	2	WQ	99	07	17D		WRAP CONNECTOR J07.2, 3*32 PIN
		W	99	08	22B		WRAP CONNECTOR J08.1, 3*32 PIN
B-REW	2	A	97	61	03		REMOTE MODE CONTROL
		W	+ 99	06	22D		WRAP CONNECTOR J06.2, 3*32 PIN
	2	WQ	99	07	11D		WRAP CONNECTOR J07.2, 3*32 PIN
		W	99	08	21A		WRAP CONNECTOR J08.1, 3*32 PIN
B-STOP	3	A	97	61	06		REMOTE MODE CONTROL
	3	WQ	99	07	18D		WRAP CONNECTOR J07.2, 3*32 PIN
		W	99	08	22C		WRAP CONNECTOR J08.1, 3*32 PIN
B-TDSYNC	5	B	98	81	04		CONN. ASS. TO BASIC PROGRAMMER
		W	99	17	03B		WRAP CONNECTOR J17.1, 3*32 PIN
	5	WQ	99	20	03D		WRAP CONNECTOR J20.2, 3*32 PIN
B-TX	1-5	B	98	81	15		CONN. ASS. TO BASIC PROGRAMMER
		W	99	17	30A		WRAP CONNECTOR J17.1, 3*32 PIN
	1-5	WQ	99	20	30D		WRAP CONNECTOR J20.2, 3*32 PIN
B-UPPLIM	8-R	B	97	91	12		CONN. ASS. TO MAIN PROGR. (J I)
	8-R	WQ	99	08	13D		WRAP CONNECTOR J08.2, 3*32 PIN
		W	99	10	13A		WRAP CONNECTOR J10.1, 3*32 PIN
BADRSTRT	4	B	97	92	05		CONN. ASS. TO MAIN PROGR. (J II)
	4	WQ	99	09	05D		WRAP CONNECTOR J09.2, 3*32 PIN
		W	99	10	23C		WRAP CONNECTOR J10.1, 3*32 PIN
BBPRES09	9-R	B	98	81	20		CONN. ASS. TO BASIC PROGRAMMER
		W	99	17	03C		WRAP CONNECTOR J17.1, 3*32 PIN

./.

SIG.NAME	COLOR	TYPE	GR	EL	PT	S	DESCRIPTION OF ELEMENT
(CONT.)	9-R	WQ	99	20	03F		WRAP CONNECTOR J20.2, 3*32 PIN
BBPRES10	1-R	B	98	81	21		CONN. ASS. TO BASIC PROGRAMMER
		W	99	17	04C		WRAP CONNECTOR J17.1, 3*32 PIN
	1-R	WQ	99	20	04F		WRAP CONNECTOR J20.2, 3*32 PIN
BBPRES11	8-0	B	98	81	42		CONN. ASS. TO BASIC PROGRAMMER
		W	99	17	25C		WRAP CONNECTOR J17.1, 3*32 PIN
	8-0	WQ	99	20	25F		WRAP CONNECTOR J20.2, 3*32 PIN
BCODEREP		W	99	12	31A		WRAP CONNECTOR J12.1, 3*32 PIN
BEDMMPRG	9-8	B	97	93	18		CONN. ASS. TO MAIN PROGR. (JIII)
		W	99	10	07B		WRAP CONNECTOR J10.1, 3*32 PIN
	9-8	WQ	99	10	24D		WRAP CONNECTOR J10.2, 3*32 PIN
BENT/PKS	2-0	B	97	91	45		CONN. ASS. TO MAIN PROGR. (J I)
	2-0	WQ	99	08	27F		WRAP CONNECTOR J08.2, 3*32 PIN
		W	99	10	09C		WRAP CONNECTOR J10.1, 3*32 PIN
BLKDSP0	4-R	B	97	92	31		CONN. ASS. TO MAIN PROGR. (J II)
		W	99	09	02B		WRAP CONNECTOR J09.1, 3*32 PIN
	4-R	WQ	99	09	07F		WRAP CONNECTOR J09.2, 3*32 PIN
BLKDSP1	1	B	97	92	03		CONN. ASS. TO MAIN PROGR. (J II)
		W	99	09	02C		WRAP CONNECTOR J09.1, 3*32 PIN
	1	WQ	99	09	03D		WRAP CONNECTOR J09.2, 3*32 PIN
BLKDSP2	4-6	B	97	92	33		CONN. ASS. TO MAIN PROGR. (J II)
		W	99	09	03B		WRAP CONNECTOR J09.1, 3*32 PIN
	4-6	WQ	99	09	09F		WRAP CONNECTOR J09.2, 3*32 PIN
BLKDSP3	4-0	B	97	92	37		CONN. ASS. TO MAIN PROGR. (J II)
		W	99	09	03C		WRAP CONNECTOR J09.1, 3*32 PIN
	4-0	WQ	99	09	17F		WRAP CONNECTOR J09.2, 3*32 PIN
BLKDSP4	6-0	B	97	92	44		CONN. ASS. TO MAIN PROGR. (J II)
		W	99	09	04B		WRAP CONNECTOR J09.1, 3*32 PIN
	6-0	WQ	99	09	26F		WRAP CONNECTOR J09.2, 3*32 PIN
BLKDSP5	9-1-0	B	97	92	46		CONN. ASS. TO MAIN PROGR. (J II)
		W	99	09	04C		WRAP CONNECTOR J09.1, 3*32 PIN
	9-1-0	WQ	99	09	28F		WRAP CONNECTOR J09.2, 3*32 PIN
BLKDSP6	9-0	B	97	93	26		CONN. ASS. TO MAIN PROGR. (JIII)
		W	99	09	05B		WRAP CONNECTOR J09.1, 3*32 PIN
	9-0	WQ	99	10	02F		WRAP CONNECTOR J10.2, 3*32 PIN
BLKDSP7	6-2-0	B	97	92	50		CONN. ASS. TO MAIN PROGR. (J II)
		W	99	09	05C		WRAP CONNECTOR J09.1, 3*32 PIN
	6-2-0	WQ	99	09	31F		WRAP CONNECTOR J09.2, 3*32 PIN
BLKDSP8	4-8	B	97	93	29		CONN. ASS. TO MAIN PROGR. (JIII)
		W	99	09	06B		WRAP CONNECTOR J09.1, 3*32 PIN
	4-8	WQ	99	10	05F		WRAP CONNECTOR J10.2, 3*32 PIN
BLKMMPRG	9-1-0	B	97	93	46		CONN. ASS. TO MAIN PROGR. (JIII)
		W	99	10	07A		WRAP CONNECTOR J10.1, 3*32 PIN
	9-1-0	WQ	99	10	28F		WRAP CONNECTOR J10.2, 3*32 PIN
BLOCATOR	0	B	97	93	10		CONN. ASS. TO MAIN PROGR. (JIII)
	0	WQ	99	10	10D		WRAP CONNECTOR J10.2, 3*32 PIN
		W	99	10	27C		WRAP CONNECTOR J10.1, 3*32 PIN
BOFFSREG	9-5	B	97	91	14		CONN. ASS. TO MAIN PROGR. (J I)
	9-5	WQ	99	08	18D		WRAP CONNECTOR J08.2, 3*32 PIN
		W	99	10	13B		WRAP CONNECTOR J10.1, 3*32 PIN
BPILMPRG	6-0	B	97	93	44		CONN. ASS. TO MAIN PROGR. (JIII)
		W	99	10	08B		WRAP CONNECTOR J10.1, 3*32 PIN
	6-0	WQ	99	10	26F		WRAP CONNECTOR J10.2, 3*32 PIN
BPKMMPRG	6-2	B	97	93	13		CONN. ASS. TO MAIN PROGR. (JIII)
		W	99	10	07C		WRAP CONNECTOR J10.1, 3*32 PIN
	6-2	WQ	99	10	17D		WRAP CONNECTOR J10.2, 3*32 PIN
BPLATEN		W	99	06	23B		WRAP CONNECTOR J06.1, 3*32 PIN
		W	99	17	29A		WRAP CONNECTOR J17.1, 3*32 PIN
BPSUPVIS	2	B	98	81	09		CONN. ASS. TO BASIC PROGRAMMER
		W	99	17	07B		WRAP CONNECTOR J17.1, 3*32 PIN
	2	WQ	99	20	08D		WRAP CONNECTOR J20.2, 3*32 PIN
BPTRMDAT		W	99	07	28B		WRAP CONNECTOR J07.1, 3*32 PIN
		W	99	17	13B		WRAP CONNECTOR J17.1, 3*32 PIN
BTCTA -M		W	99	01	25A		WRAP CONNECTOR J01.1, 3*32 PIN
		W	99	03	25A		WRAP CONNECTOR J03.1, 3*32 PIN
		W	99	05	25B		WRAP CONNECTOR J05.1, 3*32 PIN
BTCTA -S		W	99	02	25C		WRAP CONNECTOR J02.1, 3*32 PIN
		W	99	03	25C		WRAP CONNECTOR J03.1, 3*32 PIN
		W	99	05	25C		WRAP CONNECTOR J05.1, 3*32 PIN
BTCTB -M		W	99	01	26A		WRAP CONNECTOR J01.1, 3*32 PIN
		W	99	03	26A		WRAP CONNECTOR J03.1, 3*32 PIN
		W	99	05	26B		WRAP CONNECTOR J05.1, 3*32 PIN
BTCTB -S		W	99	02	26C		WRAP CONNECTOR J02.1, 3*32 PIN
		W	99	03	26C		WRAP CONNECTOR J03.1, 3*32 PIN
		W	99	05	26C		WRAP CONNECTOR J05.1, 3*32 PIN
BTCTC -M		W	99	01	27A		WRAP CONNECTOR J01.1, 3*32 PIN
		W	99	02	27A		WRAP CONNECTOR J02.1, 3*32 PIN
		W	99	03	27A		WRAP CONNECTOR J03.1, 3*32 PIN
		W	99	05	27B		WRAP CONNECTOR J05.1, 3*32 PIN
BTCTC -S		W	99	02	27C		WRAP CONNECTOR J02.1, 3*32 PIN
		W	99	03	27C		WRAP CONNECTOR J03.1, 3*32 PIN
		W	99	05	27C		WRAP CONNECTOR J05.1, 3*32 PIN
BTCTD -M		W	99	01	28A		WRAP CONNECTOR J01.1, 3*32 PIN

-/-

SIG.NAME	COLOR	TYPE	GR	EL	PT	S	DESCRIPTION OF ELEMENT
(CONT.)		W	99	03	28A		WRAP CONNECTOR J03.1, 3*32 PIN
		W	99	05	28B		WRAP CONNECTOR J05.1, 3*32 PIN
BTCTD -S		W	99	02	28C		WRAP CONNECTOR J02.1, 3*32 PIN
		W	99	03	28C		WRAP CONNECTOR J03.1, 3*32 PIN
		W	99	05	28C		WRAP CONNECTOR J05.1, 3*32 PIN
BTCTE -M		W	99	03	29A		WRAP CONNECTOR J03.1, 3*32 PIN
		W	99	05	29B		WRAP CONNECTOR J05.1, 3*32 PIN
BTCTE -S		W	99	02	29C		WRAP CONNECTOR J02.1, 3*32 PIN
		W	99	03	29C		WRAP CONNECTOR J03.1, 3*32 PIN
		W	99	05	29C		WRAP CONNECTOR J05.1, 3*32 PIN
BTCTF -M		W	99	03	30A		WRAP CONNECTOR J03.1, 3*32 PIN
		W	99	05	30B		WRAP CONNECTOR J05.1, 3*32 PIN
BTCTF -S		W	99	02	30C		WRAP CONNECTOR J02.1, 3*32 PIN
		W	99	03	30C		WRAP CONNECTOR J03.1, 3*32 PIN
		W	99	05	30C		WRAP CONNECTOR J05.1, 3*32 PIN
BTCTG -M		W	99	01	31A		WRAP CONNECTOR J01.1, 3*32 PIN
		W	99	03	31A		WRAP CONNECTOR J03.1, 3*32 PIN
		W	99	05	31B		WRAP CONNECTOR J05.1, 3*32 PIN
BTCTG -S		W	99	02	31C		WRAP CONNECTOR J02.1, 3*32 PIN
		W	99	03	31C		WRAP CONNECTOR J03.1, 3*32 PIN
		W	99	05	31C		WRAP CONNECTOR J05.1, 3*32 PIN
BTCTOF-M		W	99	03	24A		WRAP CONNECTOR J03.1, 3*32 PIN
		W	99	05	11A		WRAP CONNECTOR J05.1, 3*32 PIN
BTCTOF-S		W	99	03	24C		WRAP CONNECTOR J03.1, 3*32 PIN
		W	99	05	11C		WRAP CONNECTOR J05.1, 3*32 PIN
BULBDPA0	2-R	B	97	92	41		CONN. ASS. TO MAIN PROGR. (J II)
	2-R	WQ	99	09	23F		WRAP CONNECTOR J09.2, 3*32 PIN
BULBDPA1	4-8	B	97	91	29		CONN. ASS. TO MAIN PROGR. (J I)
	4-8	WQ	99	08	05F		WRAP CONNECTOR J08.2, 3*32 PIN
BULBDPA2	1	B	97	91	03		CONN. ASS. TO MAIN PROGR. (J I)
	1	WQ	99	08	03D		WRAP CONNECTOR J08.2, 3*32 PIN
BULBDPB2	4-R	B	97	91	31		CONN. ASS. TO MAIN PROGR. (J I)
	4-R	WQ	99	08	07F		WRAP CONNECTOR J08.2, 3*32 PIN
BULBDPH1	8	B	97	92	06		CONN. ASS. TO MAIN PROGR. (J II)
	8	WQ	99	09	06D		WRAP CONNECTOR J09.2, 3*32 PIN
BULBDPL1	8-6	B	97	92	38		CONN. ASS. TO MAIN PROGR. (J II)
	8-6	WQ	99	09	18F		WRAP CONNECTOR J09.2, 3*32 PIN
BULBDPN1	9-8	B	97	92	18		CONN. ASS. TO MAIN PROGR. (J II)
	9-8	WQ	99	09	24D		WRAP CONNECTOR J09.2, 3*32 PIN
BULBDPP1	9-6	B	97	92	22		CONN. ASS. TO MAIN PROGR. (J II)
	9-6	WQ	99	09	28D		WRAP CONNECTOR J09.2, 3*32 PIN
BULBDPS2	4-0	B	97	93	37		CONN. ASS. TO MAIN PROGR. (JIII)
	4-0	WQ	99	10	17F		WRAP CONNECTOR J10.2, 3*32 PIN
BULBDPT2	6-R	B	97	93	39		CONN. ASS. TO MAIN PROGR. (JIII)
	6-R	WQ	99	10	21F		WRAP CONNECTOR J10.2, 3*32 PIN
BULBDPU2	8-0	B	97	93	42		CONN. ASS. TO MAIN PROGR. (JIII)
	8-0	WQ	99	10	24F		WRAP CONNECTOR J10.2, 3*32 PIN
BULBPBF2	1-2	B	97	91	25		CONN. ASS. TO MAIN PROGR. (J I)
	1-2	WQ	99	08	31D		WRAP CONNECTOR J08.2, 3*32 PIN
BULBPBF3	9-2	B	97	91	24		CONN. ASS. TO MAIN PROGR. (J I)
	9-2	WQ	99	08	30D		WRAP CONNECTOR J08.2, 3*32 PIN
BULBPBF4	1-6	B	97	91	23		CONN. ASS. TO MAIN PROGR. (J I)
	1-6	WQ	99	08	29D		WRAP CONNECTOR J08.2, 3*32 PIN
BULBPBG3	6	B	97	92	08		CONN. ASS. TO MAIN PROGR. (J II)
	6	WQ	99	09	08D		WRAP CONNECTOR J09.2, 3*32 PIN
BULBPBH3	6-2	B	97	92	13		CONN. ASS. TO MAIN PROGR. (J II)
	6-2	WQ	99	09	17D		WRAP CONNECTOR J09.2, 3*32 PIN
BULBPBI3	8	B	97	91	06		CONN. ASS. TO MAIN PROGR. (J I)
	8	WQ	99	08	06D		WRAP CONNECTOR J08.2, 3*32 PIN
BULBPBK5	8-2	B	97	92	40		CONN. ASS. TO MAIN PROGR. (J II)
	8-2	WQ	99	09	22F		WRAP CONNECTOR J09.2, 3*32 PIN
BULBPBL5	1-R	B	97	92	21		CONN. ASS. TO MAIN PROGR. (J II)
	1-R	WQ	99	09	27D		WRAP CONNECTOR J09.2, 3*32 PIN
BULBPBM5	6	B	97	93	08		CONN. ASS. TO MAIN PROGR. (JIII)
	6	WQ	99	10	08D		WRAP CONNECTOR J10.2, 3*32 PIN
CAP-EN		W	99	02	24C		WRAP CONNECTOR J02.1, 3*32 PIN
		W	99	08	24C		WRAP CONNECTOR J08.1, 3*32 PIN
CAPLATEN		W	99	02	13B		WRAP CONNECTOR J02.1, 3*32 PIN
		W	99	06	13C		WRAP CONNECTOR J06.1, 3*32 PIN
CAPMUX		W	99	02	04C		WRAP CONNECTOR J02.1, 3*32 PIN
		W	99	06	04B		WRAP CONNECTOR J06.1, 3*32 PIN
CCSUPVIS	3	A	98	03	46		HEADPLUG/CHANNEL SUPPLY
		W +	99	06	31D		WRAP CONNECTOR J06.2, 3*32 PIN
	3	WQ +	99	11	07B		WRAP CONNECTOR J11.1, 3*32 PIN
		W	99	17	25B		WRAP CONNECTOR J17.1, 3*32 PIN
CKACTLT		W	99	01	07B		WRAP CONNECTOR J01.1, 3*32 PIN
		W	99	04	04A		WRAP CONNECTOR J04.1, 3*32 PIN

SIG.NAME	COLOR	TYPE	GR	EL	PT	S	DESCRIPTION OF ELEMENT
CLRADRCT		W	99	01	05B		WRAP CONNECTOR J01.1, 3*32 PIN
		W	99	04	02A		WRAP CONNECTOR J04.1, 3*32 PIN
CMD.ENB1	3	A	97	61	19		REMOTE MODE CONTROL
	3	WQ	99	07	11E		WRAP CONNECTOR J07.2, 3*32 PIN
CMD.ENB2	4	A	97	61	18		REMOTE MODE CONTROL
		W +	99	06	17F		WRAP CONNECTOR J06.2, 3*32 PIN
	4	WQ	99	07	10E		WRAP CONNECTOR J07.2, 3*32 PIN
		W	99	08	18B		WRAP CONNECTOR J08.1, 3*32 PIN
CODEFR/S	1-5	B	97	92	15		CONN. ASS. TO MAIN PROGR. (J II)
	1-5	WQ	99	09	21D		WRAP CONNECTOR J09.2, 3*32 PIN
		W	99	10	23A		WRAP CONNECTOR J10.1, 3*32 PIN
CODENDEF	5-6	B	97	91	32		CONN. ASS. TO MAIN PROGR. (J I)
	5-6	WQ	99	08	08F		WRAP CONNECTOR J08.2, 3*32 PIN
		W	99	10	27B		WRAP CONNECTOR J10.1, 3*32 PIN
CODGEND		W	99	01	05C		WRAP CONNECTOR J01.1, 3*32 PIN
		W +	99	08	29B		WRAP CONNECTOR J08.1, 3*32 PIN
		W	99	11	25A		WRAP CONNECTOR J11.1, 3*32 PIN
CODINR1		W	99	12	02A		WRAP CONNECTOR J12.1, 3*32 PIN
CODINR2		W	99	12	02C		WRAP CONNECTOR J12.1, 3*32 PIN
CODIN1-S		W +	99	08	28B		WRAP CONNECTOR J08.1, 3*32 PIN
		W +	99	11	04B		WRAP CONNECTOR J11.1, 3*32 PIN
		W	99	12	11C		WRAP CONNECTOR J12.1, 3*32 PIN
		W	99	13	08C		WRAP CONNECTOR J13.1, 3*32 PIN
CODOCT		W	99	04	06B		WRAP CONNECTOR J04.1, 3*32 PIN
		W	99	05	09B		WRAP CONNECTOR J05.1, 3*32 PIN
CODOSELB		W	99	12	05C		WRAP CONNECTOR J12.1, 3*32 PIN
CONNFAIL	6-0	B	97	91	44		CONN. ASS. TO MAIN PROGR. (J I)
	6-0	WQ	99	08	26F		WRAP CONNECTOR J08.2, 3*32 PIN
		W	99	10	06B		WRAP CONNECTOR J10.1, 3*32 PIN
COSTCKCT		W	99	04	02C		WRAP CONNECTOR J04.1, 3*32 PIN
		W	99	14	10B		WRAP CONNECTOR J14.1, 3*32 PIN
DIFF	0	B	97	92	10		CONN. ASS. TO MAIN PROGR. (J II)
	0	WQ	99	09	10D		WRAP CONNECTOR J09.2, 3*32 PIN
		W	99	10	18C		WRAP CONNECTOR J10.1, 3*32 PIN
DIRDWN-M		W	99	01	27B		WRAP CONNECTOR J01.1, 3*32 PIN
		W	99	13	27A		WRAP CONNECTOR J13.1, 3*32 PIN
DIRDWN-S		W	99	03	06C		WRAP CONNECTOR J03.1, 3*32 PIN
		W	99	13	27C		WRAP CONNECTOR J13.1, 3*32 PIN
DIRUP -M		W	99	05	09A		WRAP CONNECTOR J05.1, 3*32 PIN
		W	99	13	26A		WRAP CONNECTOR J13.1, 3*32 PIN
DIRUP -S		W	99	05	09C		WRAP CONNECTOR J05.1, 3*32 PIN
		W	99	13	26C		WRAP CONNECTOR J13.1, 3*32 PIN
DISEND9+	5-R	B	97	93	30		CONN. ASS. TO MAIN PROGR. (JIII)
		W	99	09	06C		WRAP CONNECTOR J09.1, 3*32 PIN
	5-R	WQ	99	10	06F		WRAP CONNECTOR J10.2, 3*32 PIN
DISEND9-	4-6	B	97	93	33		CONN. ASS. TO MAIN PROGR. (JIII)
		W	99	09	07B		WRAP CONNECTOR J09.1, 3*32 PIN
	4-6	WQ	99	10	09F		WRAP CONNECTOR J10.2, 3*32 PIN
DISPEN0	8-5	B	97	92	28		CONN. ASS. TO MAIN PROGR. (J II)
	8-5	WQ	99	09	04F		WRAP CONNECTOR J09.2, 3*32 PIN
		W	99	09	07C		WRAP CONNECTOR J09.1, 3*32 PIN
DISPEN1	9-0	B	97	92	26		CONN. ASS. TO MAIN PROGR. (J II)
	9-0	WQ	99	09	02F		WRAP CONNECTOR J09.2, 3*32 PIN
		W	99	09	08B		WRAP CONNECTOR J09.1, 3*32 PIN
DISPEN2	5-R	B	97	92	30		CONN. ASS. TO MAIN PROGR. (J II)
	5-R	WQ	99	09	06F		WRAP CONNECTOR J09.2, 3*32 PIN
		W	99	09	08C		WRAP CONNECTOR J09.1, 3*32 PIN
DISPEN3	5-6	B	97	92	32		CONN. ASS. TO MAIN PROGR. (J II)
	5-6	WQ	99	09	08F		WRAP CONNECTOR J09.2, 3*32 PIN
		W	99	09	09C		WRAP CONNECTOR J09.1, 3*32 PIN
DISPEN4	6-R	B	97	92	39		CONN. ASS. TO MAIN PROGR. (J II)
		W	99	09	10C		WRAP CONNECTOR J09.1, 3*32 PIN
	6-R	WQ	99	09	21F		WRAP CONNECTOR J09.2, 3*32 PIN
DISPEN5	8-R-0	B	97	92	48		CONN. ASS. TO MAIN PROGR. (J II)
		W	99	09	11C		WRAP CONNECTOR J09.1, 3*32 PIN
	8-R-0	WQ	99	09	30F		WRAP CONNECTOR J09.2, 3*32 PIN
DISPEN6	4-5-0	B	97	92	47		CONN. ASS. TO MAIN PROGR. (J II)
		W	99	09	13C		WRAP CONNECTOR J09.1, 3*32 PIN
	4-5-0	WQ	99	09	29F		WRAP CONNECTOR J09.2, 3*32 PIN
DISPEN7	1-2	B	97	92	25		CONN. ASS. TO MAIN PROGR. (J II)
		W	99	09	17C		WRAP CONNECTOR J09.1, 3*32 PIN
	1-2	WQ	99	09	31D		WRAP CONNECTOR J09.2, 3*32 PIN
DISPEN8	1-0	B	97	93	27		CONN. ASS. TO MAIN PROGR. (JIII)
		W	99	09	18C		WRAP CONNECTOR J09.1, 3*32 PIN
	1-0	WQ	99	10	03F		WRAP CONNECTOR J10.2, 3*32 PIN
DIVCT- A		W	99	14	28B		WRAP CONNECTOR J14.1, 3*32 PIN
DIVCT- B		W	99	14	29B		WRAP CONNECTOR J14.1, 3*32 PIN
DIVCT- C		W	99	14	30B		WRAP CONNECTOR J14.1, 3*32 PIN
DIVCT- D		W	99	14	31B		WRAP CONNECTOR J14.1, 3*32 PIN
DMCOD -M		W	99	05	10A		WRAP CONNECTOR J05.1, 3*32 PIN

./.

* STUDER * SIGNAL WIRE LIST * 82/01/08 * 15:12 * PAGE 39 *

TAPE LOCK SYSTEM 2000 A80: LOCATOR, PARALLEL PROGRAMMER 1.228.375.00 79-10-05

SIG.NAME	COLOR	TYPE	GR	EL	PT	S	DESCRIPTION OF ELEMENT
(CONT.)		W	99	13	17A		WRAP CONNECTOR J13.1, 3*32 PIN
DMCOD -S		W	99	05	10C		WRAP CONNECTOR J05.1, 3*32 PIN
		W	99	13	17C		WRAP CONNECTOR J13.1, 3*32 PIN
DMFAIL-M		W	99	01	26B		WRAP CONNECTOR J01.1, 3*32 PIN
		W	99	13	07A		WRAP CONNECTOR J13.1, 3*32 PIN
DMFAIL-S		W	99	05	08C		WRAP CONNECTOR J05.1, 3*32 PIN
		W	99	13	07C		WRAP CONNECTOR J13.1, 3*32 PIN
DMOSCI-M		W	99	13	13A		WRAP CONNECTOR J13.1, 3*32 PIN
DMOSCI-S		W	99	02	13C		WRAP CONNECTOR J02.1, 3*32 PIN
		W	99	13	13C		WRAP CONNECTOR J13.1, 3*32 PIN
EDIT	8-R	B	97	93	12		CONN. ASS. TO MAIN PROGR. (JIII)
		W	99	10	06A		WRAP CONNECTOR J10.1, 3*32 PIN
	8-R	WQ	99	10	13D		WRAP CONNECTOR J10.2, 3*32 PIN
EDIT CD	R	B	97	91	07		CONN. ASS. TO MAIN PROGR. (J I)
	R	WQ	99	08	07D		WRAP CONNECTOR J08.2, 3*32 PIN
		W	99	10	27A		WRAP CONNECTOR J10.1, 3*32 PIN
EDLEADDR	7	B	97	71	31		AUXILIARY CONNECTOR
	7	WQ	99	07	04E		WRAP CONNECTOR J07.2, 3*32 PIN
		W	99	08	31B		WRAP CONNECTOR J08.1, 3*32 PIN
EDMODEDR	8	B	97	71	03		AUXILIARY CONNECTOR
	8	WQ	99	07	03D		WRAP CONNECTOR J07.2, 3*32 PIN
		W	99	08	31C		WRAP CONNECTOR J08.1, 3*32 PIN
ENADC		W	99	09	25A		WRAP CONNECTOR J09.1, 3*32 PIN
		W	99	10	26B		WRAP CONNECTOR J10.1, 3*32 PIN
ENTADRCT		W	99	01	30A		WRAP CONNECTOR J01.1, 3*32 PIN
		W	99	04	03A		WRAP CONNECTOR J04.1, 3*32 PIN
ENTRY	6-2	B	97	91	13		CONN. ASS. TO MAIN PROGR. (J I)
	6-2	WQ	99	08	17D		WRAP CONNECTOR J08.2, 3*32 PIN
		W	99	10	04A		WRAP CONNECTOR J10.1, 3*32 PIN
ERAHDSCR	4	A	98	03	01		HEADPLUG/CHANNEL SUPPLY
	4	WQ	99	11	13B		WRAP CONNECTOR J11.1, 3*32 PIN
ERASEHD1	6	A	98	03	03		HEADPLUG/CHANNEL SUPPLY
	6	WQ	99	11	13A		WRAP CONNECTOR J11.1, 3*32 PIN
ERASEHD2	9	A	98	03	02		HEADPLUG/CHANNEL SUPPLY
	9	WQ	99	11	13C		WRAP CONNECTOR J11.1, 3*32 PIN
EXEC	9-0	B	97	91	26		CONN. ASS. TO MAIN PROGR. (J I)
	9-0	WQ	99	08	02F		WRAP CONNECTOR J08.2, 3*32 PIN
EXFREQTM	3	L	97	15	03A		REFERENCE FREQUENCY INPUT
	3	WQ	99	01	03B		WRAP CONNECTOR J01.1, 3*32 PIN
EXFREQ1	2	L	97	15	02A		REFERENCE FREQUENCY INPUT
	2	WQ	99	01	02B		WRAP CONNECTOR J01.1, 3*32 PIN
EXFREQ2	4	L	97	15	04A		REFERENCE FREQUENCY INPUT
	4	WQ	99	01	04B		WRAP CONNECTOR J01.1, 3*32 PIN
EXFRQDAT		W	99	01	30B		WRAP CONNECTOR J01.1, 3*32 PIN
		W	+ 99	13	28A		WRAP CONNECTOR J13.1, 3*32 PIN
		W	99	14	27B		WRAP CONNECTOR J14.1, 3*32 PIN
EXFRQINA	2	L	97	14	02		REFERENCE FREQUENCY INPUT
	2	L	97	15	02		REFERENCE FREQUENCY INPUT
EXFRQINB	3	L	97	14	03		REFERENCE FREQUENCY INPUT
	3	L	97	15	03		REFERENCE FREQUENCY INPUT
EXFRQSCR	0	L	97	13	01		REFERENCE FREQUENCY INPUT
	0	L	97	14	01		REFERENCE FREQUENCY INPUT
EXGENINA	2	L	98	24	02		GENERATOR LINE INPUT
	2	L	98	25	02		GENERATOR LINE INPUT
EXGENINB	3	L	98	24	03		GENERATOR LINE INPUT
	3	L	98	25	03		GENERATOR LINE INPUT
EXGENIN1	2	L	98	25	02A		GENERATOR LINE INPUT
		W	99	11	02C		WRAP CONNECTOR J11.1, 3*32 PIN
	2	WQ	+ 99	13	02A		WRAP CONNECTOR J13.1, 3*32 PIN
EXGENIN2	4	L	98	25	04A		GENERATOR LINE INPUT
		W	99	11	04C		WRAP CONNECTOR J11.1, 3*32 PIN
	4	WQ	+ 99	13	04A		WRAP CONNECTOR J13.1, 3*32 PIN
EXGENOUT		W	99	01	06C		WRAP CONNECTOR J01.1, 3*32 PIN
		W	+ 99	08	25B		WRAP CONNECTOR J08.1, 3*32 PIN
		W	99	11	25C		WRAP CONNECTOR J11.1, 3*32 PIN
EXGENSCR	0	L	98	23	01		GENERATOR LINE INPUT
	0	L	98	24	01		GENERATOR LINE INPUT
EXGENTM	3	L	98	25	03A		GENERATOR LINE INPUT
		W	+ 99	11	03C		WRAP CONNECTOR J11.1, 3*32 PIN
	3	WQ	+ 99	13	03A		WRAP CONNECTOR J13.1, 3*32 PIN
EXTFRQSL		W	99	06	27C		WRAP CONNECTOR J06.1, 3*32 PIN
EXTRECCM	7	L	97	72	05C		RELAIS PRINT
	7	WQ	99	07	05D		WRAP CONNECTOR J07.2, 3*32 PIN
		W	99	17	20A		WRAP CONNECTOR J17.1, 3*32 PIN
EXTSYNC		W	99	01	02C		WRAP CONNECTOR J01.1, 3*32 PIN
FAD-1	4	A	97	61	43		REMOTE MODE CONTROL
	4	WQ	99	07	25F		WRAP CONNECTOR J07.2, 3*32 PIN
FAD-2	7	A	97	61	44		REMOTE MODE CONTROL

./.

* STUDER * SIGNAL WIRE LIST * 82/01/08 * 15:12 * PAGE 40 *

TAPE LOCK SYSTEM 2000 A80: LOCATOR, PARALLEL PROGRAMMER 1.228.375.00 79-10-05

SIG.NAME	COLOR	TYPE	GR	EL	PT	S	DESCRIPTION OF ELEMENT
(CONT.)	7	WQ	99	07	26F		WRAP CONNECTOR J07.2, 3*32 PIN
FAST FWD	4-1	B	97	93	17		CONN. ASS. TO MAIN PROGR. (JIII)
		W	99	10	05B		WRAP CONNECTOR J10.1, 3*32 PIN
	4-1	WQ	99	10	23D		WRAP CONNECTOR J10.2, 3*32 PIN
FAST REW	2-0	B	97	93	45		CONN. ASS. TO MAIN PROGR. (JIII)
		W	99	10	05A		WRAP CONNECTOR J10.1, 3*32 PIN
	2-0	WQ	99	10	27F		WRAP CONNECTOR J10.2, 3*32 PIN
FILTNRW		W	99	11	26C		WRAP CONNECTOR J11.1, 3*32 PIN
		W	99	12	31C		WRAP CONNECTOR J12.1, 3*32 PIN
FILTWIDE		W	99	11	28C		WRAP CONNECTOR J11.1, 3*32 PIN
		W	99	12	09C		WRAP CONNECTOR J12.1, 3*32 PIN
FRAM	7	B	97	92	11		CONN. ASS. TO MAIN PROGR. (J II)
	7	WQ	99	09	11D		WRAP CONNECTOR J09.2, 3*32 PIN
		W	99	10	22C		WRAP CONNECTOR J10.1, 3*32 PIN
FRAM ER	4-1	B	97	91	17		CONN. ASS. TO MAIN PROGR. (J I)
	4-1	WQ	99	08	23D		WRAP CONNECTOR J08.2, 3*32 PIN
		W	99	10	02C		WRAP CONNECTOR J10.1, 3*32 PIN
FRAMSL A		W	99	05	18C		WRAP CONNECTOR J05.1, 3*32 PIN
FRAMSL B		W	99	03	08A		WRAP CONNECTOR J03.1, 3*32 PIN
		W	99	05	17C		WRAP CONNECTOR J05.1, 3*32 PIN
FRPWRON		W	99	06	31B		WRAP CONNECTOR J06.1, 3*32 PIN
		W	99	15	07B		WRAP CONNECTOR J15.1, 3*32 PIN
G-SFRSLA		W	99	05	13A		WRAP CONNECTOR J05.1, 3*32 PIN
		W	99	14	02B		WRAP CONNECTOR J14.1, 3*32 PIN
G-SFRSLB		W	99	05	13B		WRAP CONNECTOR J05.1, 3*32 PIN
		W	99	14	03B		WRAP CONNECTOR J14.1, 3*32 PIN
GEN N SC	7	B	97	91	11		CONN. ASS. TO MAIN PROGR. (J I)
	7	WQ	99	08	11D		WRAP CONNECTOR J08.2, 3*32 PIN
GEN SET	9-0	B	97	91	10		CONN. ASS. TO MAIN PROGR. (J I)
	9-8	WQ	99	08	24D		WRAP CONNECTOR J08.2, 3*32 PIN
		W	99	10	13C		WRAP CONNECTOR J10.1, 3*32 PIN
GEN=MAST	1-6	B	97	93	23		CONN. ASS. TO MAIN PROGR. (JIII)
		W	99	10	08C		WRAP CONNECTOR J10.1, 3*32 PIN
	1-6	WQ	99	10	29D		WRAP CONNECTOR J10.2, 3*32 PIN
GENRUN	9-5	B	97	93	14		CONN. ASS. TO MAIN PROGR. (JIII)
		W	99	10	08A		WRAP CONNECTOR J10.1, 3*32 PIN
	9-5	WQ	99	10	18D		WRAP CONNECTOR J10.2, 3*32 PIN
GROUND	4,4,4	L	99	99	01	%	CHASSIS, WIRING WITH: 0 L
	4,4,4	L	99	99	02	%	CHASSIS, WIRING WITH: 0 L
GROUND98	4	WQ	98	03	05		HEADPLUG/CHANNEL SUPPLY
		W	98	03	09		HEADPLUG/CHANNEL SUPPLY
		W	98	03	10		HEADPLUG/CHANNEL SUPPLY
		W	98	03	11		HEADPLUG/CHANNEL SUPPLY
		W	98	03	12		HEADPLUG/CHANNEL SUPPLY
		W	98	03	13		HEADPLUG/CHANNEL SUPPLY
		W	98	03	18		HEADPLUG/CHANNEL SUPPLY
		W	98	03	19		HEADPLUG/CHANNEL SUPPLY
		W	98	03	20		HEADPLUG/CHANNEL SUPPLY
		W	98	03	21		HEADPLUG/CHANNEL SUPPLY
		W	98	03	22		HEADPLUG/CHANNEL SUPPLY
		W	98	03	23		HEADPLUG/CHANNEL SUPPLY
		W	98	03	24		HEADPLUG/CHANNEL SUPPLY
		W	98	03	25		HEADPLUG/CHANNEL SUPPLY
		W	98	03	26		HEADPLUG/CHANNEL SUPPLY
		W	98	03	27		HEADPLUG/CHANNEL SUPPLY
		W	98	03	28		HEADPLUG/CHANNEL SUPPLY
		W	98	03	29		HEADPLUG/CHANNEL SUPPLY
		W	98	03	30		HEADPLUG/CHANNEL SUPPLY
		W	98	03	31		HEADPLUG/CHANNEL SUPPLY
		W	98	03	32		HEADPLUG/CHANNEL SUPPLY
		W	98	03	33		HEADPLUG/CHANNEL SUPPLY
	4	L	98	04	01		CHASSIS, ELEMENT 98
HOLD	5-2	B	97	92	34		CONN. ASS. TO MAIN PROGR. (J II)
	5-2	WQ	99	09	10F		WRAP CONNECTOR J09.2, 3*32 PIN
		W	99	10	17B		WRAP CONNECTOR J10.1, 3*32 PIN
IFCDATIN		W	99	14	18B		WRAP CONNECTOR J14.1, 3*32 PIN
IFMUX-W		W	99	04	08C		WRAP CONNECTOR J04.1, 3*32 PIN
		W	99	05	23B		WRAP CONNECTOR J05.1, 3*32 PIN
INCODREP		W	+ 99	08	30A		WRAP CONNECTOR J08.1, 3*32 PIN
		W	99	11	29C		WRAP CONNECTOR J11.1, 3*32 PIN
		W	99	12	05A		WRAP CONNECTOR J12.1, 3*32 PIN
		W	99	13	04C		WRAP CONNECTOR J13.1, 3*32 PIN
INTGEN	5-R	B	97	91	30		CONN. ASS. TO MAIN PROGR. (J I)
	5-R	WQ	99	08	06F		WRAP CONNECTOR J08.2, 3*32 PIN
		W	99	10	17C		WRAP CONNECTOR J10.1, 3*32 PIN
K-CUTINH	3	A	97	51	25		EXTENDED REMOTE MODE CONTROL
	3	WQ	99	06	18F		WRAP CONNECTOR J06.2, 3*32 PIN
		W	99	08	03C		WRAP CONNECTOR J08.1, 3*32 PIN
K-PRESS	2	A	97	61	22		REMOTE MODE CONTROL
		W	+ 99	06	21F		WRAP CONNECTOR J06.2, 3*32 PIN
	2	WQ	99	07	18E		WRAP CONNECTOR J07.2, 3*32 PIN
		W	99	08	07A		WRAP CONNECTOR J08.1, 3*32 PIN
K-RESET	8	A	97	61	45		REMOTE MODE CONTROL
		W	+ 99	06	27F		WRAP CONNECTOR J06.2, 3*32 PIN
	8	WQ	99	07	27F		WRAP CONNECTOR J07.2, 3*32 PIN
		W	99	08	08A		WRAP CONNECTOR J08.1, 3*32 PIN
		W	99	08	09B		WRAP CONNECTOR J08.1, 3*32 PIN

SIG.NAME	COLOR	TYPE	GR	EL	PT	S	DESCRIPTION OF ELEMENT
KB	8-5	B	97	93	28		CONN. ASS. TO MAIN PROGR. (JIII)
	8-5	WQ	99	10	04F		WRAP CONNECTOR J10.2, 3*32 PIN
		W	99	10	22A		WRAP CONNECTOR J10.1, 3*32 PIN
LDADDRCT		W	99	01	29A		WRAP CONNECTOR J01.1, 3*32 PIN
		W	99	04	05A		WRAP CONNECTOR J04.1, 3*32 PIN
LDARDATA		W	99	06	08C		WRAP CONNECTOR J06.1, 3*32 PIN
		W	99	07	07B		WRAP CONNECTOR J07.1, 3*32 PIN
LDTRMCT		W	99	06	08A		WRAP CONNECTOR J06.1, 3*32 PIN
		W	99	07	08B		WRAP CONNECTOR J07.1, 3*32 PIN
LKMODEDR	1	B	97	71	02		AUXILIARY CONNECTOR
	1	WQ	99	07	02D		WRAP CONNECTOR J07.2, 3*32 PIN
		W	99	08	30C		WRAP CONNECTOR J08.1, 3*32 PIN
LOADCKCT		W	99	04	07B		WRAP CONNECTOR J04.1, 3*32 PIN
		W	99	05	29A		WRAP CONNECTOR J05.1, 3*32 PIN
LOC.ENB	2	A	97	61	35		REMOTE MODE CONTROL
	2	WQ	99	07	11F		WRAP CONNECTOR J07.2, 3*32 PIN
		W	99	08	17B		WRAP CONNECTOR J08.1, 3*32 PIN
LOCKFAST	6	B	97	91	08		CONN. ASS. TO MAIN PROGR. (J I)
	6	WQ	99	08	08D		WRAP CONNECTOR J08.2, 3*32 PIN
		W	99	10	26A		WRAP CONNECTOR J10.1, 3*32 PIN
LOCKSLOW	4-2	B	97	92	35		CONN. ASS. TO MAIN PROGR. (J II)
	4-2	WQ	99	09	11F		WRAP CONNECTOR J09.2, 3*32 PIN
		W	99	10	25C		WRAP CONNECTOR J10.1, 3*32 PIN
LWLIM EX	0-R	B	97	91	43		CONN. ASS. TO MAIN PROGR. (J I)
	0-R	WQ	99	08	25F		WRAP CONNECTOR J08.2, 3*32 PIN
		W	99	10	09B		WRAP CONNECTOR J10.1, 3*32 PIN
MAST	5	B	97	93	04		CONN. ASS. TO MAIN PROGR. (JIII)
	5	WQ	99	10	04D		WRAP CONNECTOR J10.2, 3*32 PIN
		W	99	10	21C		WRAP CONNECTOR J10.1, 3*32 PIN
MDIRDWNM		W	99	01	06A		WRAP CONNECTOR J01.1, 3*32 PIN
		W	99	03	06A		WRAP CONNECTOR J03.1, 3*32 PIN
MDMFAILM		W	99	01	05A		WRAP CONNECTOR J01.1, 3*32 PIN
		W	99	05	08A		WRAP CONNECTOR J05.1, 3*32 PIN
MPSYNCM		W	99	01	07A		WRAP CONNECTOR J01.1, 3*32 PIN
		W	99	02	07B		WRAP CONNECTOR J02.1, 3*32 PIN
		W	99	03	07A		WRAP CONNECTOR J03.1, 3*32 PIN
		W	99	05	07A		WRAP CONNECTOR J05.1, 3*32 PIN
MP2DMM		W	99	01	03A		WRAP CONNECTOR J01.1, 3*32 PIN
		W	99	03	02A		WRAP CONNECTOR J03.1, 3*32 PIN
		W	99	05	03A		WRAP CONNECTOR J05.1, 3*32 PIN
MP3DMM		W	99	01	04A		WRAP CONNECTOR J01.1, 3*32 PIN

./.

SIG.NAME	COLOR	TYPE	GR	EL	PT	S	DESCRIPTION OF ELEMENT
(CONT.)		W	99	02	04B		WRAP CONNECTOR J02.1, 3*32 PIN
		W	99	03	03A		WRAP CONNECTOR J03.1, 3*32 PIN
		W	99	05	04A		WRAP CONNECTOR J05.1, 3*32 PIN
MSEC	0	B	97	91	10		CONN. ASS. TO MAIN PROGR. (J I)
	2	B	97	92	09		CONN. ASS. TO MAIN PROGR. (J II)
	0	WQ	99	08	10D		WRAP CONNECTOR J08.2, 3*32 PIN
	2	WQ	99	09	09D		WRAP CONNECTOR J09.2, 3*32 PIN
		W	99	10	22B		WRAP CONNECTOR J10.1, 3*32 PIN
MS1CCHRC	4	L	98	61	02		CODE CH. REMOTE IF (OPTIONAL)
	4	L	98	62	02B		CODE CH. REMOTE IF (OPTIONAL)
MS1TLS	4	L	98	62	02A		CODE CH. REMOTE IF (OPTIONAL)
	4	WQ$	99	17	05A		WRAP CONNECTOR J17.1, 3*32 PIN
MS2CCHRC	4	L	98	61	01		CODE CH. REMOTE IF (OPTIONAL)
	4	L	98	62	01B		CODE CH. REMOTE IF (OPTIONAL)
MS2TLS	7	L	98	62	03A		CODE CH. REMOTE IF (OPTIONAL)
	7	WQ$	99	17	06A		WRAP CONNECTOR J17.1, 3*32 PIN
NACRES1		W	99	04	17A		WRAP CONNECTOR J04.1, 3*32 PIN
		W	99	14	17B		WRAP CONNECTOR J14.1, 3*32 PIN
NCOCKCT		W	99	04	03C		WRAP CONNECTOR J04.1, 3*32 PIN
		W	99	05	30A		WRAP CONNECTOR J05.1, 3*32 PIN
NDMCOD-M		W	99	03	05A		WRAP CONNECTOR J03.1, 3*32 PIN
		W	99	13	18A		WRAP CONNECTOR J13.1, 3*32 PIN
NDMCOD-S		W	99	03	05C		WRAP CONNECTOR J03.1, 3*32 PIN
		W	99	13	18C		WRAP CONNECTOR J13.1, 3*32 PIN
NEMGSTOP	8-5	B	98	81	28		CONN. ASS. TO BASIC PROGRAMMER
		W	99	06	13A		WRAP CONNECTOR J06.1, 3*32 PIN
		W	99	08	13A		WRAP CONNECTOR J08.1, 3*32 PIN
	8-5	WQ	99	20	11F		WRAP CONNECTOR J20.2, 3*32 PIN
NFRAMSLB		W	99	05	05C		WRAP CONNECTOR J05.1, 3*32 PIN
NFRQCTLD		W	99	01	22A		WRAP CONNECTOR J01.1, 3*32 PIN
		W	99	02	22B		WRAP CONNECTOR J02.1, 3*32 PIN
NINVCTR1		W	99	05	03B		WRAP CONNECTOR J05.1, 3*32 PIN
		W	99	14	13C		WRAP CONNECTOR J14.1, 3*32 PIN
NINVCTR2		W	99	05	05B		WRAP CONNECTOR J05.1, 3*32 PIN
		W	99	14	17C		WRAP CONNECTOR J14.1, 3*32 PIN
NO CD S	9-R	B	97	91	20		CONN. ASS. TO MAIN PROGR. (J I)
	9-R	WQ	99	08	26D		WRAP CONNECTOR J08.2, 3*32 PIN
		W	99	10	03B		WRAP CONNECTOR J10.1, 3*32 PIN
NOCODE-S		W	99	05	04B		WRAP CONNECTOR J05.1, 3*32 PIN
		W	99	06	29C		WRAP CONNECTOR J06.1, 3*32 PIN

SIG.NAME	COLOR	TYPE	GR	EL	PT	S	DESCRIPTION OF ELEMENT
NOMASTER		W	99	05	02B		WRAP CONNECTOR J05.1, 3*32 PIN
		W	99	06	30C		WRAP CONNECTOR J06.1, 3*32 PIN
NPINSTEN		W	99	06	28C		WRAP CONNECTOR J06.1, 3*32 PIN
		W	99	15	13C		WRAP CONNECTOR J15.1, 3*32 PIN
NPPWRON		W	99	03	23B		WRAP CONNECTOR J03.1, 3*32 PIN
		W	99	06	18C		WRAP CONNECTOR J06.1, 3*32 PIN
		W	99	08	18A		WRAP CONNECTOR J08.1, 3*32 PIN
		W	99	14	22B		WRAP CONNECTOR J14.1, 3*32 PIN
NTDMOVED		W	99	08	26B		WRAP CONNECTOR J08.1, 3*32 PIN
NTDY-REC		W	99	08	29A		WRAP CONNECTOR J08.1, 3*32 PIN
NTRMDATA	5	B	97	92	04		CONN. ASS. TO MAIN PROGR. (J II)
		W	99	07	09A		WRAP CONNECTOR J07.1, 3*32 PIN
	5	WQ	99	09	04D		WRAP CONNECTOR J09.2, 3*32 PIN
NTRMDATB	5-0	B	97	92	36		CONN. ASS. TO MAIN PROGR. (J II)
		W	99	07	10A		WRAP CONNECTOR J07.1, 3*32 PIN
	5-0	WQ	99	09	13F		WRAP CONNECTOR J09.2, 3*32 PIN
NTRMDATC	8-0	B	97	92	42		CONN. ASS. TO MAIN PROGR. (J II)
		W	99	07	11A		WRAP CONNECTOR J07.1, 3*32 PIN
	8-0	WQ	99	09	24F		WRAP CONNECTOR J09.2, 3*32 PIN
NTRMDATD	9	B	97	93	01		CONN. ASS. TO MAIN PROGR. (JIII)
		W	99	07	13A		WRAP CONNECTOR J07.1, 3*32 PIN
	9	WQ	99	10	02D		WRAP CONNECTOR J10.2, 3*32 PIN
NTRMDTA		W	99	07	30A		WRAP CONNECTOR J07.1, 3*32 PIN
		W	99	09	09A		WRAP CONNECTOR J09.1, 3*32 PIN
		W	99	10	30B		WRAP CONNECTOR J10.1, 3*32 PIN
OFS DISP	9-5	B	97	92	14		CONN. ASS. TO MAIN PROGR. (J II)
	9-5	WQ	99	09	18D		WRAP CONNECTOR J09.2, 3*32 PIN
		W	99	10	21A		WRAP CONNECTOR J10.1, 3*32 PIN
PARKED	8-6	B	97	93	38		CONN. ASS. TO MAIN PROGR. (JIII)
		W	99	10	02B		WRAP CONNECTOR J10.1, 3*32 PIN
	8-6	WQ	99	10	18F		WRAP CONNECTOR J10.2, 3*32 PIN
PARKEDDR	2	B	97	71	10		AUXILIARY CONNECTOR
	2	WQ	99	07	04D		WRAP CONNECTOR J07.2, 3*32 PIN
		W	99	17	17A		WRAP CONNECTOR J17.1, 3*32 PIN
PBA	5	B	97	91	04		CONN. ASS. TO MAIN PROGR. (J I)
	5	WQ	99	08	04D		WRAP CONNECTOR J08.2, 3*32 PIN
		W	99	09	28A		WRAP CONNECTOR J09.1, 3*32 PIN
PBB	8-1	B	97	93	19		CONN. ASS. TO MAIN PROGR. (JIII)
		W	99	09	28B		WRAP CONNECTOR J09.1, 3*32 PIN
	8-1	WQ	99	10	25D		WRAP CONNECTOR J10.2, 3*32 PIN
PBC	5-6	B	97	93	32		CONN. ASS. TO MAIN PROGR. (JIII)

./.

SIG.NAME	COLOR	TYPE	GR	EL	PT	S	DESCRIPTION OF ELEMENT
(CONT.)		W	99	09	29A		WRAP CONNECTOR J09.1, 3*32 PIN
	5-6	WQ	99	10	08F		WRAP CONNECTOR J10.2, 3*32 PIN
PBD	1-0	B	97	91	27		CONN. ASS. TO MAIN PROGR. (J I)
	1-0	WQ	99	08	03F		WRAP CONNECTOR J08.2, 3*32 PIN
		W	99	09	29B		WRAP CONNECTOR J09.1, 3*32 PIN
PBE	5-0	B	97	93	36		CONN. ASS. TO MAIN PROGR. (JIII)
		W	99	09	30A		WRAP CONNECTOR J09.1, 3*32 PIN
	5-0	WQ	99	10	13F		WRAP CONNECTOR J10.2, 3*32 PIN
PBF	8-0	B	97	91	42		CONN. ASS. TO MAIN PROGR. (J I)
	8-0	WQ	99	08	24F		WRAP CONNECTOR J08.2, 3*32 PIN
		W	99	09	30B		WRAP CONNECTOR J09.1, 3*32 PIN
PBG	6-R	B	97	91	39		CONN. ASS. TO MAIN PROGR. (J I)
	6-R	WQ	99	08	21F		WRAP CONNECTOR J08.2, 3*32 PIN
		W	99	09	31A		WRAP CONNECTOR J09.1, 3*32 PIN
PBH	4	B	97	91	05		CONN. ASS. TO MAIN PROGR. (J I)
	4	WQ	99	08	05D		WRAP CONNECTOR J08.2, 3*32 PIN
		W	99	09	31B		WRAP CONNECTOR J09.1, 3*32 PIN
PBI	8-5	B	97	91	28		CONN. ASS. TO MAIN PROGR. (J I)
	8-5	WQ	99	08	04F		WRAP CONNECTOR J08.2, 3*32 PIN
		W	99	09	26A		WRAP CONNECTOR J09.1, 3*32 PIN
PBK	2-R	B	97	91	41		CONN. ASS. TO MAIN PROGR. (J I)
	2-R	WQ	99	08	23F		WRAP CONNECTOR J08.2, 3*32 PIN
		W	99	09	26B		WRAP CONNECTOR J09.1, 3*32 PIN
PBMASREG		W	99	04	05B		WRAP CONNECTOR J04.1, 3*32 PIN
PBPLAY	1-R	B	97	93	21		CONN. ASS. TO MAIN PROGR. (JIII)
		W	99	09	27B		WRAP CONNECTOR J09.1, 3*32 PIN
	1-R	WQ	99	10	27D		WRAP CONNECTOR J10.2, 3*32 PIN
PBREC	9-6	B	97	93	22		CONN. ASS. TO MAIN PROGR. (JIII)
		W	99	09	27A		WRAP CONNECTOR J09.1, 3*32 PIN
	9-6	WQ	99	10	28D		WRAP CONNECTOR J10.2, 3*32 PIN
PBULBHMS	0-4	B	97	92	16		CONN. ASS. TO MAIN PROGR. (J II)
	9-2	B	97	92	24		CONN. ASS. TO MAIN PROGR. (J II)
	2-0	B	97	92	45		CONN. ASS. TO MAIN PROGR. (J II)
	9-4	WQ	99	09	22D		WRAP CONNECTOR J09.2, 3*32 PIN
	2-0	WQ	99	09	27F		WRAP CONNECTOR J09.2, 3*32 PIN
	9-2	WQ	99	09	30D		WRAP CONNECTOR J09.2, 3*32 PIN
		W	99	10	26C		WRAP CONNECTOR J10.1, 3*32 PIN
PBO	4-2	B	97	93	35		CONN. ASS. TO MAIN PROGR. (JIII)
		W	99	09	21B		WRAP CONNECTOR J09.1, 3*32 PIN
	4-2	WQ	99	10	11F		WRAP CONNECTOR J10.2, 3*32 PIN
PB1	9	B	97	91	02		CONN. ASS. TO MAIN PROGR. (J I)
	9	WQ	99	08	02D		WRAP CONNECTOR J08.2, 3*32 PIN
		W	99	09	21C		WRAP CONNECTOR J09.1, 3*32 PIN

```
*****************************************************************************************************************************
*  S T U D E R  *  S I G N A L  W I R E  L I S T  *  82/01/08 * 15:12  *  P A G E  43  *
*****************************************************************************************************************************
TAPE LOCK SYSTEM 2000 A80: LOCATOR, PARALLEL PROGRAMMER      1.228.375.00      79-10-05
```

SIG.NAME	COLOR	TYPE	GR	EL	PT	S	DESCRIPTION OF ELEMENT
PB2	6-2-0	B	97	93	49		CONN. ASS. TO MAIN PROGR. (JIII)
		W	99	09	22B		WRAP CONNECTOR J09.1, 3*32 PIN
	6-2-0	WQ	99	10	31F		WRAP CONNECTOR J10.2, 3*32 PIN
PB3	4-R	B	97	93	31		CONN. ASS. TO MAIN PROGR. (JIII)
		W	99	09	22C		WRAP CONNECTOR J09.1, 3*32 PIN
	4-R	WQ	99	10	07F		WRAP CONNECTOR J10.2, 3*32 PIN
PB4	8-2	B	97	91	40		CONN. ASS. TO MAIN PROGR. (J I)
	8-2	WQ	99	08	22F		WRAP CONNECTOR J08.2, 3*32 PIN
		W	99	09	23B		WRAP CONNECTOR J09.1, 3*32 PIN
PB5	5-2	B	97	93	34		CONN. ASS. TO MAIN PROGR. (JIII)
		W	99	09	23C		WRAP CONNECTOR J09.1, 3*32 PIN
	5-2	WQ	99	10	10F		WRAP CONNECTOR J10.2, 3*32 PIN
PB6	8-R-0	B	97	93	48		CONN. ASS. TO MAIN PROGR. (JIII)
		W	99	09	24B		WRAP CONNECTOR J09.1, 3*32 PIN
	8-R-0	WQ	99	10	30F		WRAP CONNECTOR J10.2, 3*32 PIN
PB7	8-6	B	97	91	38		CONN. ASS. TO MAIN PROGR. (J I)
	8-6	WQ	99	08	18F		WRAP CONNECTOR J08.2, 3*32 PIN
		W	99	09	25B		WRAP CONNECTOR J09.1, 3*32 PIN
PCBAL		W	99	06	09A		WRAP CONNECTOR J06.1, 3*32 PIN
		W	99	07	09C		WRAP CONNECTOR J07.1, 3*32 PIN
PCBALQ0		W	99	01	04C		WRAP CONNECTOR J01.1, 3*32 PIN
		W	99	07	31B		WRAP CONNECTOR J07.1, 3*32 PIN
PCBALQ2		W	99	01	18A		WRAP CONNECTOR J01.1, 3*32 PIN
		W	99	07	18C		WRAP CONNECTOR J07.1, 3*32 PIN
PCBALQ3		W	99	07	30B		WRAP CONNECTOR J07.1, 3*32 PIN
PCBPLTCL		W	99	06	24C		WRAP CONNECTOR J06.1, 3*32 PIN
		W	99	17	18B		WRAP CONNECTOR J17.1, 3*32 PIN
PCBPMUXA		W	99	07	22C		WRAP CONNECTOR J07.1, 3*32 PIN
		W	99	17	28B		WRAP CONNECTOR J17.1, 3*32 PIN
PCBPMUXB		W	99	07	23C		WRAP CONNECTOR J07.1, 3*32 PIN
		W	99	17	27B		WRAP CONNECTOR J17.1, 3*32 PIN
PCBPWE		W	99	06	25C		WRAP CONNECTOR J06.1, 3*32 PIN
		W	99	17	21B		WRAP CONNECTOR J17.1, 3*32 PIN
PCBSP		W	99	06	17A		WRAP CONNECTOR J06.1, 3*32 PIN
PCBTEST		W	99	06	29B		WRAP CONNECTOR J06.1, 3*32 PIN
		W	99	07	29B		WRAP CONNECTOR J07.1, 3*32 PIN
PCBTESTA		W	99	07	25C		WRAP CONNECTOR J07.1, 3*32 PIN
PCBTESTB		W	99	07	26C		WRAP CONNECTOR J07.1, 3*32 PIN
PCBTESTC		W	99	01	24A		WRAP CONNECTOR J01.1, 3*32 PIN
		W	99	07	24C		WRAP CONNECTOR J07.1, 3*32 PIN
PCBTEST4		W	99	07	31A		WRAP CONNECTOR J07.1, 3*32 PIN
PCDATACC		W	99	06	03A		WRAP CONNECTOR J06.1, 3*32 PIN
		W	99	09	27C		WRAP CONNECTOR J09.1, 3*32 PIN
PCDATINA		W	99	07	09B		WRAP CONNECTOR J07.1, 3*32 PIN
		W	99	09	09B		WRAP CONNECTOR J09.1, 3*32 PIN
PCDATINB		W	99	07	10B		WRAP CONNECTOR J07.1, 3*32 PIN
		W	99	09	10B		WRAP CONNECTOR J09.1, 3*32 PIN
PCDATINC		W	99	07	11B		WRAP CONNECTOR J07.1, 3*32 PIN
		W	99	09	11B		WRAP CONNECTOR J09.1, 3*32 PIN
PCDATIND		W	99	07	13B		WRAP CONNECTOR J07.1, 3*32 PIN
		W	99	09	13B		WRAP CONNECTOR J09.1, 3*32 PIN
PCDATINE		W	99	06	10A		WRAP CONNECTOR J06.1, 3*32 PIN
		W	99	09	17B		WRAP CONNECTOR J09.1, 3*32 PIN
PCDATRDY		W	99	06	02A		WRAP CONNECTOR J06.1, 3*32 PIN
		W	99	09	25C		WRAP CONNECTOR J09.1, 3*32 PIN
		W	99	10	11B		WRAP CONNECTOR J10.1, 3*32 PIN
PCEXPR-1		W	99	07	02B		WRAP CONNECTOR J07.1, 3*32 PIN
PCEXPR-2		W	99	07	03B		WRAP CONNECTOR J07.1, 3*32 PIN
PCEXPR-3		W	99	07	04B		WRAP CONNECTOR J07.1, 3*32 PIN
PCEXPRRQ		W	99	06	05C		WRAP CONNECTOR J06.1, 3*32 PIN
		W	99	07	05B		WRAP CONNECTOR J07.1, 3*32 PIN
PCIFCTST		W	99	07	29A		WRAP CONNECTOR J07.1, 3*32 PIN
PCPGAD00		W	99	06	03C		WRAP CONNECTOR J06.1, 3*32 PIN
		W	99	15	02C		WRAP CONNECTOR J15.1, 3*32 PIN
PCPGAD01		W	99	06	07B		WRAP CONNECTOR J06.1, 3*32 PIN
		W	99	15	03C		WRAP CONNECTOR J15.1, 3*32 PIN
PCPGAD02		W	99	06	08B		WRAP CONNECTOR J06.1, 3*32 PIN
		W	99	15	04C		WRAP CONNECTOR J15.1, 3*32 PIN
PCPGAD03		W	99	06	09C		WRAP CONNECTOR J06.1, 3*32 PIN
		W	99	15	05C		WRAP CONNECTOR J15.1, 3*32 PIN
PCPGAD04		W	99	06	10C		WRAP CONNECTOR J06.1, 3*32 PIN
		W	99	15	06C		WRAP CONNECTOR J15.1, 3*32 PIN
PCPGAD05		W	99	06	11C		WRAP CONNECTOR J06.1, 3*32 PIN
		W	99	15	07C		WRAP CONNECTOR J15.1, 3*32 PIN

```
*****************************************************************************************************************************
*  S T U D E R  *  S I G N A L  W I R E  L I S T  *  82/01/08 * 15:12  *  P A G E  44  *
*****************************************************************************************************************************
TAPE LOCK SYSTEM 2000 A80: LOCATOR, PARALLEL PROGRAMMER      1.228.375.00      79-10-05
```

SIG.NAME	COLOR	TYPE	GR	EL	PT	S	DESCRIPTION OF ELEMENT
PCPGAD06		W	99	06	21B		WRAP CONNECTOR J06.1, 3*32 PIN
		W	99	15	08C		WRAP CONNECTOR J15.1, 3*32 PIN
PCPGAD07		W	99	06	24B		WRAP CONNECTOR J06.1, 3*32 PIN
		W	99	15	09C		WRAP CONNECTOR J15.1, 3*32 PIN
PCPGAD08		W	99	06	26B		WRAP CONNECTOR J06.1, 3*32 PIN
		W	99	15	10C		WRAP CONNECTOR J15.1, 3*32 PIN
PCPGAD09		W	99	06	21C		WRAP CONNECTOR J06.1, 3*32 PIN
		W	99	15	11C		WRAP CONNECTOR J15.1, 3*32 PIN
PCPGAD10		W	99	06	22C		WRAP CONNECTOR J06.1, 3*32 PIN
		W	99	15	08B		WRAP CONNECTOR J15.1, 3*32 PIN
PCPGAD11		W	99	06	23C		WRAP CONNECTOR J06.1, 3*32 PIN
		W	99	15	09B		WRAP CONNECTOR J15.1, 3*32 PIN
PCPGDATA		W	99	01	07C		WRAP CONNECTOR J01.1, 3*32 PIN
		W	99	02	09C		WRAP CONNECTOR J02.1, 3*32 PIN
		W	99	03	09C		WRAP CONNECTOR J03.1, 3*32 PIN
		W	99	06	18A		WRAP CONNECTOR J06.1, 3*32 PIN
		W	99	07	18A		WRAP CONNECTOR J07.1, 3*32 PIN
		W	99	08	26C		WRAP CONNECTOR J08.1, 3*32 PIN
		W	99	09	28C		WRAP CONNECTOR J09.1, 3*32 PIN
		W	99	11	28A		WRAP CONNECTOR J11.1, 3*32 PIN
		W	99	15	17C		WRAP CONNECTOR J15.1, 3*32 PIN
		W	99	17	29B		WRAP CONNECTOR J17.1, 3*32 PIN
PCPGDATB		W	99	01	08C		WRAP CONNECTOR J01.1, 3*32 PIN
		W	99	02	10C		WRAP CONNECTOR J02.1, 3*32 PIN
		W	99	03	10C		WRAP CONNECTOR J03.1, 3*32 PIN
		W	99	06	21A		WRAP CONNECTOR J06.1, 3*32 PIN
		W	99	07	21A		WRAP CONNECTOR J07.1, 3*32 PIN
		W	99	08	27C		WRAP CONNECTOR J08.1, 3*32 PIN
		W	99	09	29C		WRAP CONNECTOR J09.1, 3*32 PIN
		W	99	11	29A		WRAP CONNECTOR J11.1, 3*32 PIN
		W	99	15	18C		WRAP CONNECTOR J15.1, 3*32 PIN
		W	99	17	30B		WRAP CONNECTOR J17.1, 3*32 PIN
PCPGDATC		W	99	01	09C		WRAP CONNECTOR J01.1, 3*32 PIN
		W	99	02	11C		WRAP CONNECTOR J02.1, 3*32 PIN
		W	99	03	11C		WRAP CONNECTOR J03.1, 3*32 PIN
		W	99	06	22A		WRAP CONNECTOR J06.1, 3*32 PIN
		W	99	07	22A		WRAP CONNECTOR J07.1, 3*32 PIN
		W	99	08	29C		WRAP CONNECTOR J08.1, 3*32 PIN
		W	99	09	30C		WRAP CONNECTOR J09.1, 3*32 PIN
		W	99	11	30A		WRAP CONNECTOR J11.1, 3*32 PIN
		W	99	15	21C		WRAP CONNECTOR J15.1, 3*32 PIN
		W	99	17	31B		WRAP CONNECTOR J17.1, 3*32 PIN
PCPGDATD		W	99	06	23A		WRAP CONNECTOR J06.1, 3*32 PIN
		W	99	07	23A		WRAP CONNECTOR J07.1, 3*32 PIN
		W	99	15	22C		WRAP CONNECTOR J15.1, 3*32 PIN
		W	99	17	26B		WRAP CONNECTOR J17.1, 3*32 PIN
PCPGDATE		W	99	06	24A		WRAP CONNECTOR J06.1, 3*32 PIN
		W	99	07	24A		WRAP CONNECTOR J07.1, 3*32 PIN
		W	99	15	23C		WRAP CONNECTOR J15.1, 3*32 PIN
PCPGDATF		W	99	06	25A		WRAP CONNECTOR J06.1, 3*32 PIN
		W	99	07	25A		WRAP CONNECTOR J07.1, 3*32 PIN
		W	99	15	24C		WRAP CONNECTOR J15.1, 3*32 PIN
PCPGDATG		W	99	06	26A		WRAP CONNECTOR J06.1, 3*32 PIN
		W	99	07	26A		WRAP CONNECTOR J07.1, 3*32 PIN
		W	99	15	25C		WRAP CONNECTOR J15.1, 3*32 PIN
PCPGDATH		W	99	02	27B		WRAP CONNECTOR J02.1, 3*32 PIN
		W	99	06	27A		WRAP CONNECTOR J06.1, 3*32 PIN
		W	99	07	27A		WRAP CONNECTOR J07.1, 3*32 PIN
		W	99	08	10A		WRAP CONNECTOR J08.1, 3*32 PIN
		W	99	11	31A		WRAP CONNECTOR J11.1, 3*32 PIN
		W	99	15	26C		WRAP CONNECTOR J15.1, 3*32 PIN
		W	99	17	28A		WRAP CONNECTOR J17.1, 3*32 PIN
		W	+ 99	18	26A		WRAP CONNECTOR J18.1, 3*32 PIN
PCPGDATI		W	99	06	28A		WRAP CONNECTOR J06.1, 3*32 PIN
		W	99	07	28A		WRAP CONNECTOR J07.1, 3*32 PIN
		W	99	15	27C		WRAP CONNECTOR J15.1, 3*32 PIN
PCPGDATK		W	99	06	29A		WRAP CONNECTOR J06.1, 3*32 PIN
		W	99	15	28C		WRAP CONNECTOR J15.1, 3*32 PIN
PCPGDATL		W	99	06	30A		WRAP CONNECTOR J06.1, 3*32 PIN
		W	99	15	29C		WRAP CONNECTOR J15.1, 3*32 PIN
PCPGDATM		W	99	06	31A		WRAP CONNECTOR J06.1, 3*32 PIN
		W	99	15	30C		WRAP CONNECTOR J15.1, 3*32 PIN
PCPGDATN		W	99	06	28B		WRAP CONNECTOR J06.1, 3*32 PIN
		W	99	15	31C		WRAP CONNECTOR J15.1, 3*32 PIN
PCSPGRPA		W	99	06	02B		WRAP CONNECTOR J06.1, 3*32 PIN
PCSPGRP2		W	99	01	23A		WRAP CONNECTOR J01.1, 3*32 PIN
		W	99	06	25B		WRAP CONNECTOR J06.1, 3*32 PIN
PCSPGRP3		W	99	02	06C		WRAP CONNECTOR J02.1, 3*32 PIN
		W	99	06	06C		WRAP CONNECTOR J06.1, 3*32 PIN
PCTAPFLG		W	99	06	17C		WRAP CONNECTOR J06.1, 3*32 PIN
		W	99	15	17B		WRAP CONNECTOR J15.1, 3*32 PIN
PCTDCLR		W	99	06	04C		WRAP CONNECTOR J06.1, 3*32 PIN
		W	99	08	04B		WRAP CONNECTOR J08.1, 3*32 PIN
PEDITLD		W	99	02	10B		WRAP CONNECTOR J02.1, 3*32 PIN
		W	99	07	10C		WRAP CONNECTOR J07.1, 3*32 PIN
PERCAPFR		W	99	02	02C		WRAP CONNECTOR J02.1, 3*32 PIN
		W	99	08	02C		WRAP CONNECTOR J08.1, 3*32 PIN

```
*****************************************************************************************************************************
*  S T U D E R  *   S I G N A L   W I R E   L I S T          *   82/01/08 * 15:12     *  P A G E    45   *
*****************************************************************************************************************************
TAPE LOCK SYSTEM 2000 A80: LOCATOR, PARALLEL PROGRAMMER      1.228.375.00          79-10-05
```

SIG.NAME	COLOR	TYPE	GR	EL	PT	S	DESCRIPTION OF ELEMENT
PERDATA		W	99	05	10B		WRAP CONNECTOR J05.1, 3*32 PIN
		W	99	07	31C		WRAP CONNECTOR J07.1, 3*32 PIN
		W	99	14	24B		WRAP CONNECTOR J14.1, 3*32 PIN
PERMNTM1		W	99	03	13C		WRAP CONNECTOR J03.1, 3*32 PIN
PERMNTM2		W	99	03	17C		WRAP CONNECTOR J03.1, 3*32 PIN
PERMNTM3		W	99	03	18C		WRAP CONNECTOR J03.1, 3*32 PIN
PERMNTM4		W	99	01	10C		WRAP CONNECTOR J01.1, 3*32 PIN
		W	99	03	21C		WRAP CONNECTOR J03.1, 3*32 PIN
		W	+ 99	04	22B		WRAP CONNECTOR J04.1, 3*32 PIN
PER1DM-M		W	99	13	21A		WRAP CONNECTOR J13.1, 3*32 PIN
PER1DM-S		W	99	13	08B		WRAP CONNECTOR J13.1, 3*32 PIN
PER2DM-M		W	99	13	22A		WRAP CONNECTOR J13.1, 3*32 PIN
PER2DM-S		W	99	13	09B		WRAP CONNECTOR J13.1, 3*32 PIN
PER3DM-M		W	99	13	23A		WRAP CONNECTOR J13.1, 3*32 PIN
PER3DM-S		W	99	13	10B		WRAP CONNECTOR J13.1, 3*32 PIN
PER4DM-M		W	99	13	24A		WRAP CONNECTOR J13.1, 3*32 PIN
PER4DM-S		W	99	13	11B		WRAP CONNECTOR J13.1, 3*32 PIN
PHASING	R	B	97	92	07		CONN. ASS. TO MAIN PROGR. (J II)
	R	WQ	99	09	07D		WRAP CONNECTOR J09.2, 3*32 PIN
		W	99	10	24C		WRAP CONNECTOR J10.1, 3*32 PIN
PLAY	1-2	B	97	93	25		CONN. ASS. TO MAIN PROGR. (JIII)
		W	99	10	05C		WRAP CONNECTOR J10.1, 3*32 PIN
	1-2	WQ	99	10	31D		WRAP CONNECTOR J10.2, 3*32 PIN
PLAY -M		W	99	03	10A		WRAP CONNECTOR J03.1, 3*32 PIN
PMNTM 1		W	99	03	13A		WRAP CONNECTOR J03.1, 3*32 PIN
		W	99	04	13B		WRAP CONNECTOR J04.1, 3*32 PIN
		W	99	06	13B		WRAP CONNECTOR J06.1, 3*32 PIN
		W	+ 99	09	13E		WRAP CONNECTOR J09.2, 3*32 PIN
		W	99	15	02B		WRAP CONNECTOR J15.1, 3*32 PIN
		W	+ 99	19	13C		WRAP CONNECTOR J19.1, 3*32 PIN
PMNTM 2		W	99	01	13C		WRAP CONNECTOR J01.1, 3*32 PIN
		W	99	02	17D		WRAP CONNECTOR J02.1, 3*32 PIN
		W	99	03	17A		WRAP CONNECTOR J03.1, 3*32 PIN
		W	99	06	17B		WRAP CONNECTOR J06.1, 3*32 PIN
		W	99	07	17B		WRAP CONNECTOR J07.1, 3*32 PIN
		W	99	08	25A		WRAP CONNECTOR J08.1, 3*32 PIN
		W	99	09	24C		WRAP CONNECTOR J09.1, 3*32 PIN
		W	99	10	11A		WRAP CONNECTOR J10.1, 3*32 PIN
		W	99	11	31C		WRAP CONNECTOR J11.1, 3*32 PIN

./.

SIG.NAME	COLOR	TYPE	GR	EL	PT	S	DESCRIPTION OF ELEMENT
(CONT.)		W	+ 99	13	25A		WRAP CONNECTOR J13.1, 3*32 PIN
		W	99	15	03B		WRAP CONNECTOR J15.1, 3*32 PIN
		W	99	17	17B		WRAP CONNECTOR J17.1, 3*32 PIN
PMNTM 3		W	99	03	18A		WRAP CONNECTOR J03.1, 3*32 PIN
		W	99	04	18B		WRAP CONNECTOR J04.1, 3*32 PIN
		W	99	06	18B		WRAP CONNECTOR J06.1, 3*32 PIN
		W	+ 99	09	18E		WRAP CONNECTOR J09.2, 3*32 PIN
		W	99	15	04B		WRAP CONNECTOR J15.1, 3*32 PIN
PMNTM 4		W	99	01	11C		WRAP CONNECTOR J01.1, 3*32 PIN
		W	99	02	22C		WRAP CONNECTOR J02.1, 3*32 PIN
		W	99	03	21A		WRAP CONNECTOR J03.1, 3*32 PIN
		W	99	04	21B		WRAP CONNECTOR J04.1, 3*32 PIN
		W	99	05	21B		WRAP CONNECTOR J05.1, 3*32 PIN
		W	99	07	21C		WRAP CONNECTOR J07.1, 3*32 PIN
		W	+ 99	09	21E		WRAP CONNECTOR J09.2, 3*32 PIN
		W	99	14	21B		WRAP CONNECTOR J14.1, 3*32 PIN
		W	99	15	05B		WRAP CONNECTOR J15.1, 3*32 PIN
		W	+ 99	19	17A		WRAP CONNECTOR J19.1, 3*32 PIN
PPBPRESS		W	99	06	03B		WRAP CONNECTOR J06.1, 3*32 PIN
		W	99	09	18B		WRAP CONNECTOR J09.1, 3*32 PIN
PPWRON		W	99	04	23B		WRAP CONNECTOR J04.1, 3*32 PIN
		W	99	05	09A		WRAP CONNECTOR J05.1, 3*32 PIN
		W	99	08	06A		WRAP CONNECTOR J08.1, 3*32 PIN
		W	99	09	23A		WRAP CONNECTOR J09.1, 3*32 PIN
		W	99	10	30C		WRAP CONNECTOR J10.1, 3*32 PIN
		W	99	11	24A		WRAP CONNECTOR J11.1, 3*32 PIN
		W	99	17	23B		WRAP CONNECTOR J17.1, 3*32 PIN
		W	+ 99	20	23A		WRAP CONNECTOR J20.1, 3*32 PIN
PRGRON		W	99	06	11A		WRAP CONNECTOR J06.1, 3*32 PIN
		W	+ 99	08	02E		WRAP CONNECTOR J08.2, 3*32 PIN
PRIFTRXY		W	99	06	09B		WRAP CONNECTOR J06.1, 3*32 PIN
		W	99	09	31C		WRAP CONNECTOR J09.1, 3*32 PIN
PROGSTOP		W	99	04	09B		WRAP CONNECTOR J04.1, 3*32 PIN
PSYNC -M		W	99	01	11A		WRAP CONNECTOR J01.1, 3*32 PIN
		W	99	13	31A		WRAP CONNECTOR J13.1, 3*32 PIN
PSYNC -S		W	99	01	03C		WRAP CONNECTOR J01.1, 3*32 PIN
		W	99	03	07C		WRAP CONNECTOR J03.1, 3*32 PIN
		W	99	05	07C		WRAP CONNECTOR J05.1, 3*32 PIN
		W	99	13	29C		WRAP CONNECTOR J13.1, 3*32 PIN
P1DM -M		W	99	13	08A		WRAP CONNECTOR J13.1, 3*32 PIN
P1DM -S		W	99	02	21C		WRAP CONNECTOR J02.1, 3*32 PIN
		W	99	13	21C		WRAP CONNECTOR J13.1, 3*32 PIN
P2DM -M		W	99	01	25B		WRAP CONNECTOR J01.1, 3*32 PIN
		W	99	13	09A		WRAP CONNECTOR J13.1, 3*32 PIN

```
*****************************************************************************************************************************
*  S T U D E R  *   S I G N A L   W I R E   L I S T          *   82/01/08 * 15:12     *  P A G E    46   *
*****************************************************************************************************************************
TAPE LOCK SYSTEM 2000 A80: LOCATOR, PARALLEL PROGRAMMER      1.228.375.00          79-10-05
```

SIG.NAME	COLOR	TYPE	GR	EL	PT	S	DESCRIPTION OF ELEMENT
P2DM -S		W	99	03	02C		WRAP CONNECTOR J03.1, 3*32 PIN
		W	99	05	03C		WRAP CONNECTOR J05.1, 3*32 PIN
		W	+ 99	13	11C		WRAP CONNECTOR J13.1, 3*32 PIN
		W	99	13	22C		WRAP CONNECTOR J13.1, 3*32 PIN
P3DM -M		W	99	01	24B		WRAP CONNECTOR J01.1, 3*32 PIN
		W	99	13	10A		WRAP CONNECTOR J13.1, 3*32 PIN
P3DM -S		W	99	02	03C		WRAP CONNECTOR J02.1, 3*32 PIN
		W	99	03	03C		WRAP CONNECTOR J03.1, 3*32 PIN
		W	99	05	04C		WRAP CONNECTOR J05.1, 3*32 PIN
		W	99	13	23C		WRAP CONNECTOR J13.1, 3*32 PIN
P4DM -M		W	99	03	04A		WRAP CONNECTOR J03.1, 3*32 PIN
		W	99	13	11A		WRAP CONNECTOR J13.1, 3*32 PIN
P4DM -S		W	99	03	04C		WRAP CONNECTOR J03.1, 3*32 PIN
		W	99	13	24C		WRAP CONNECTOR J13.1, 3*32 PIN
R-CUT- 1	3	A	97	51	22		EXTENDED REMOTE MODE CONTROL
	3	WQ	99	06	29E		WRAP CONNECTOR J06.2, 3*32 PIN
R-CUT- 3	2	A	97	51	23		EXTENDED REMOTE MODE CONTROL
	2	WQ	99	06	30E		WRAP CONNECTOR J06.2, 3*32 PIN
R-SPLY-0	2	B	97	41	16		CAPSTAN SPEED CONTROL
	2	WQ	99	06	08E		WRAP CONNECTOR J06.2, 3*32 PIN
R-SPLY-1	1	B	97	41	17		CAPSTAN SPEED CONTROL
	1	WQ	99	06	09E		WRAP CONNECTOR J06.2, 3*32 PIN
RAMMUX		W	99	03	09A		WRAP CONNECTOR J03.1, 3*32 PIN
		W	99	06	30B		WRAP CONNECTOR J06.1, 3*32 PIN
REC	7	B	97	93	11		CONN. ASS. TO MAIN PROGR. (JIII)
		W	99	10	04C		WRAP CONNECTOR J10.1, 3*32 PIN
	7	WQ	99	10	11D		WRAP CONNECTOR J10.2, 3*32 PIN
RECCODTM	3	L	98	15	03A		MASTER INPUT/REPRO OUTPUT
	3	WQ +	99	11	03A		WRAP CONNECTOR J11.1, 3*32 PIN
RECCOD1	2	L	98	15	02A		MASTER INPUT/REPRO OUTPUT
	2	WQ	99	11	02A		WRAP CONNECTOR J11.1, 3*32 PIN
RECCOD2	4	L	98	15	04A		MASTER INPUT/REPRO OUTPUT
	4	WQ	99	11	04A		WRAP CONNECTOR J11.1, 3*32 PIN
RECHDSCR	4	A	98	03	06		HEADPLUG/CHANNEL SUPPLY
	4	WQ	99	11	18B		WRAP CONNECTOR J11.1, 3*32 PIN
		W	99	11	23A		WRAP CONNECTOR J11.1, 3*32 PIN
		W	99	11	23B		WRAP CONNECTOR J11.1, 3*32 PIN
		W	99	11	23C		WRAP CONNECTOR J11.1, 3*32 PIN
		W	99	12	23A		WRAP CONNECTOR J12.1, 3*32 PIN
		W	99	12	23B		WRAP CONNECTOR J12.1, 3*32 PIN
		W	99	12	23C		WRAP CONNECTOR J12.1, 3*32 PIN

SIG.NAME	COLOR	TYPE	GR	EL	PT	S	DESCRIPTION OF ELEMENT
RECHD1	6	A	98	03	08		HEADPLUG/CHANNEL SUPPLY
	6	WQ	99	11	18A		WRAP CONNECTOR J11.1, 3*32 PIN
RECHD2	9	A	98	03	07		HEADPLUG/CHANNEL SUPPLY
	9	WQ	99	11	18C		WRAP CONNECTOR J11.1, 3*32 PIN
RECINPA	2	L	98	14	02		MASTER INPUT/REPRO OUTPUT
	2	L	98	15	02		MASTER INPUT/REPRO OUTPUT
RECINPB	3	L	98	14	03		MASTER INPUT/REPRO OUTPUT
	3	L	98	15	03		MASTER INPUT/REPRO OUTPUT
RECINSCR	0	L	98	13	01		MASTER INPUT/REPRO OUTPUT
	0	L	98	14	01		MASTER INPUT/REPRO OUTPUT
RECLATEN		W	+ 99	02	26A		WRAP CONNECTOR J02.1, 3*32 PIN
		W	99	06	04A		WRAP CONNECTOR J06.1, 3*32 PIN
		W	+ 99	08	06B		WRAP CONNECTOR J08.1, 3*32 PIN
		W	99	11	27A		WRAP CONNECTOR J11.1, 3*32 PIN
RECSTINH	7	A	97	61	23		REMOTE MODE CONTROL
		W	+ 99	06	21E		WRAP CONNECTOR J06.2, 3*32 PIN
	7	WQ	99	07	21E		WRAP CONNECTOR J07.2, 3*32 PIN
		W	99	08	17C		WRAP CONNECTOR J08.1, 3*32 PIN
REPINSEL		W	99	11	30C		WRAP CONNECTOR J11.1, 3*32 PIN
		W	99	12	06C		WRAP CONNECTOR J12.1, 3*32 PIN
REPRECMX		W	+ 99	02	08B		WRAP CONNECTOR J02.1, 3*32 PIN
		W	99	06	05B		WRAP CONNECTOR J06.1, 3*32 PIN
		W	+ 99	08	05B		WRAP CONNECTOR J08.1, 3*32 PIN
		W	99	11	26A		WRAP CONNECTOR J11.1, 3*32 PIN
REPROSCR	4	A	98	03	14		HEADPLUG/CHANNEL SUPPLY
		W	99	12	28A		WRAP CONNECTOR J12.1, 3*32 PIN
		W	99	12	28B		WRAP CONNECTOR J12.1, 3*32 PIN
	4	WQ	99	12	28C		WRAP CONNECTOR J12.1, 3*32 PIN
REPROSEL		W	99	07	27C		WRAP CONNECTOR J07.1, 3*32 PIN
		W	+ 99	08	11A		WRAP CONNECTOR J08.1, 3*32 PIN
		W	+ 99	11	27C		WRAP CONNECTOR J11.1, 3*32 PIN
		W	99	12	29A		WRAP CONNECTOR J12.1, 3*32 PIN
REPROO.0	U	A	98	03	15		HEADPLUG/CHANNEL SUPPLY
	U	WQ	99	12	27C		WRAP CONNECTOR J12.1, 3*32 PIN
REPRO1	2	A	98	03	17		HEADPLUG/CHANNEL SUPPLY
	2	WQ	99	12	25C		WRAP CONNECTOR J12.1, 3*32 PIN
REPRO2	6	A	98	03	16		HEADPLUG/CHANNEL SUPPLY
	6	WQ	99	12	26C		WRAP CONNECTOR J12.1, 3*32 PIN
RLINE -A		W	99	03	25B		WRAP CONNECTOR J03.1, 3*32 PIN
		W	99	05	23C		WRAP CONNECTOR J05.1, 3*32 PIN
RLINE -B		W	99	03	24B		WRAP CONNECTOR J03.1, 3*32 PIN

./.

```
*  S T U D E R  *   S I G N A L   W I R E   L I S T          *   82/01/08 * 15:12     *  P A G E    47   *
TAPE LOCK SYSTEM 2000 A80: LOCATOR, PARALLEL PROGRAMMER      1.228.375.00          79-10-05

SIG.NAME COLOR TYPE GR EL PT  S DESCRIPTION OF ELEMENT
-------- ----- ---- -- -- --- - ------------------------------
(CONT.)        W    99 05 24C   WRAP CONNECTOR J05.1, 3*32 PIN

R15 1322       W    99 13 02C   WRAP CONNECTOR J13.1, 3*32 PIN

S-CAPEXT 8     B    97 41 23    CAPSTAN SPEED CONTROL
         8     WQ   99 06 07F   WRAP CONNECTOR J06.2, 3*32 PIN
               W  + 99 06 18E   WRAP CONNECTOR J06.2, 3*32 PIN
               W    99 08 03B   WRAP CONNECTOR J08.1, 3*32 PIN

S-CUT    2     A    97 61 41    REMOTE MODE CONTROL
         2     WQ   99 07 23F   WRAP CONNECTOR J07.2, 3*32 PIN
               W    99 08 24B   WRAP CONNECTOR J08.1, 3*32 PIN

S-CUTAUT 4     A    97 51 21    EXTENDED REMOTE MODE CONTROL
         4     WQ   99 06 28E   WRAP CONNECTOR J06.2, 3*32 PIN

S-FORW   2     A    97 61 37    REMOTE MODE CONTROL
         2     WQ   99 07 17F   WRAP CONNECTOR J07.2, 3*32 PIN
               W    99 08 21C   WRAP CONNECTOR J08.1, 3*32 PIN

S-HIGH         W    99 08 06C   WRAP CONNECTOR J08.1, 3*32 PIN

S-LOW    1     A    97 61 20    REMOTE MODE CONTROL
               W  + 99 06 17E   WRAP CONNECTOR J06.2, 3*32 PIN
         1     WQ   99 07 13E   WRAP CONNECTOR J07.2, 3*32 PIN
               W    99 08 25C   WRAP CONNECTOR J08.1, 3*32 PIN

S-LOWACH 9     A    98 03 43    HEADPLUG/CHANNEL SUPPLY
         9     WQ + 99 11 05B   WRAP CONNECTOR J11.1, 3*32 PIN

S-MONO   3     A    97 61 42    REMOTE MODE CONTROL
         3     WQ   99 07 24F   WRAP CONNECTOR J07.2, 3*32 PIN

S-REC    1     A    97 61 40    REMOTE MODE CONTROL
         1     WQ   99 07 22F   WRAP CONNECTOR J07.2, 3*32 PIN
               W    99 08 23B   WRAP CONNECTOR J08.1, 3*32 PIN

S-REPR   3     A    97 61 38    REMOTE MODE CONTROL
         3     WQ   99 07 18F   WRAP CONNECTOR J07.2, 3*32 PIN
               W    99 08 22A   WRAP CONNECTOR J08.1, 3*32 PIN

S-RES2   1     A    97 51 24    EXTENDED REMOTE MODE CONTROL
         1     WQ   99 06 31E   WRAP CONNECTOR J06.2, 3*32 PIN

S-REW    4     A    97 61 36    REMOTE MODE CONTROL
         4     WQ   99 07 13F   WRAP CONNECTOR J07.2, 3*32 PIN
               W    99 08 18C   WRAP CONNECTOR J08.1, 3*32 PIN

S-STOP   8     A    97 61 39    REMOTE MODE CONTROL
         8     WQ   99 07 21F   WRAP CONNECTOR J07.2, 3*32 PIN
               W    99 08 23A   WRAP CONNECTOR J08.1, 3*32 PIN

SL NOTP  4-0   B    97 91 37    CONN. ASS. TO MAIN PROGR. (J  I)
         4-0   WQ   99 08 17F   WRAP CONNECTOR J08.2, 3*32 PIN
               W    99 10 24A   WRAP CONNECTOR J10.1, 3*32 PIN

SIG.NAME CCLOR TYPE GR EL PT  S DESCRIPTION OF ELEMENT
-------- ----- ---- -- -- --- - ------------------------------
SLAV     8-1   B    97 92 19    CONN. ASS. TO MAIN PROGR. (J II)
         8-1   WQ   99 09 25D   WRAP CONNECTOR J09.2, 3*32 PIN
               W    99 10 21D   WRAP CONNECTOR J10.1, 3*32 PIN

SLDECOFF 4-2   B    97 91 35    CONN. ASS. TO MAIN PROGR. (J  I)
         4-2   WQ   99 08 11F   WRAP CONNECTOR J08.2, 3*32 PIN

SNCPLTDR 4     B    97 71 32    AUXILIARY CONNECTOR
         4     WQ   99 07 03E   WRAP CONNECTOR J07.2, 3*32 PIN
               W    99 17 18A   WRAP CONNECTOR J17.1, 3*32 PIN

SPD-CTL1 1     B    97 41 24    CAPSTAN SPEED CONTROL
         1     WQ   99 06 08F   WRAP CONNECTOR J06.2, 3*32 PIN
               W  + 99 06 18D   WRAP CONNECTOR J06.2, 3*32 PIN
               W    99 08 04A   WRAP CONNECTOR J08.1, 3*32 PIN

SPD-CTL2 2     B    97 41 25    CAPSTAN SPEED CONTROL
         2     WQ   99 06 09F   WRAP CONNECTOR J06.2, 3*32 PIN

SPOOLMOD       W    99 02 05A   WRAP CONNECTOR J02.1, 3*32 PIN
               W    99 07 28C   WRAP CONNECTOR J07.1, 3*32 PIN

START-1A 1     B    97 71 21    AUXILIARY CONNECTOR
         1     L    97 72 01A   RELAIS PRINT

START-1B 1     B    97 71 22    AUXILIARY CONNECTOR
         1     L    97 72 01B   RELAIS PRINT

START-2A 6     B    97 71 23    AUXILIARY CONNECTOR
         6     L    97 72 02A   RELAIS PRINT

START-2B 6     B    97 71 24    AUXILIARY CONNECTOR
         6     L    97 72 02B   RELAIS PRINT

START-3A 9     B    97 71 25    AUXILIARY CONNECTOR
         9     L    97 72 03A   RELAIS PRINT

START-3B 9     B    97 71 26    AUXILIARY CONNECTOR
         9     L    97 72 03B   RELAIS PRINT

START-4A 4     B    97 71 27    AUXILIARY CONNECTOR
         4     L    97 72 04A   RELAIS PRINT

START-4B 4     B    97 71 28    AUXILIARY CONNECTOR
         4     L    97 72 04B   RELAIS PRINT

STARTDR1 1     L    97 72 01C   RELAIS PRINT
         1     WQ   99 07 06E   WRAP CONNECTOR J07.2, 3*32 PIN
               W    99 17 29C   WRAP CONNECTOR J17.1, 3*32 PIN

STARTDR2 6     L    97 72 02C   RELAIS PRINT
         6     WQ   99 07 07E   WRAP CONNECTOR J07.2, 3*32 PIN
               W    99 17 24A   WRAP CONNECTOR J17.1, 3*32 PIN

STARTDR3 9     L    97 72 03C   RELAIS PRINT
         9     WQ   99 07 08E   WRAP CONNECTOR J07.2, 3*32 PIN
                                                          ./.
```

```
*  S T U D E R  *   S I G N A L   W I R E   L I S T          *   82/01/08 * 15:12     *  P A G E    48   *
TAPE LOCK SYSTEM 2000 A80: LOCATOR, PARALLEL PROGRAMMER      1.228.375.00          79-10-05

SIG.NAME COLOR TYPE GR EL PT  S DESCRIPTION OF ELEMENT
-------- ----- ---- -- -- --- - ------------------------------
(CONT.)        W    99 08 07B   WRAP CONNECTOR J08.1, 3*32 PIN

STARTDR4 4     L    97 72 04C   RELAIS PRINT
         4     WQ   99 07 09E   WRAP CONNECTOR J07.2, 3*32 PIN
               W    99 08 07C   WRAP CONNECTOR J08.1, 3*32 PIN

STOP     8-2   B    97 93 40    CONN. ASS. TO MAIN PROGR. (JIII)
               W    99 10 04B   WRAP CONNECTOR J10.1, 3*32 PIN
         8-2   WQ   99 10 22F   WRAP CONNECTOR J10.2, 3*32 PIN

STOREOFS 4-8   B    97 92 29    CONN. ASS. TO MAIN PROGR. (J II)
         4-8   WQ   99 09 05F   WRAP CONNECTOR J09.2, 3*32 PIN
               W    99 10 25B   WRAP CONNECTOR J10.1, 3*32 PIN

SVPCI    9-6   B    97 91 22    CONN. ASS. TO MAIN PROGR. (J  I)
         9-6   WQ   99 08 28D   WRAP CONNECTOR J08.2, 3*32 PIN
               W    99 17 05B   WRAP CONNECTOR J17.1, 3*32 PIN

SVPCII   0-R   B    97 92 43    CONN. ASS. TO MAIN PROGR. (J II)
         0-R   WQ   99 09 25F   WRAP CONNECTOR J09.2, 3*32 PIN
               W    99 17 06B   WRAP CONNECTOR J17.1, 3*32 PIN

SVPCIII  8     B    97 93 06    CONN. ASS. TO MAIN PROGR. (JIII)
         8     WQ   99 10 06D   WRAP CONNECTOR J10.2, 3*32 PIN
               W    99 17 11C   WRAP CONNECTOR J17.1, 3*32 PIN

SVSERPRG       W  + 99 08 30E   WRAP CONNECTOR J08.2, 3*32 PIN
               W    99 17 24B   WRAP CONNECTOR J17.1, 3*32 PIN

SYMCODD1 2     L    98 12 02    MASTER INPUT/REPRO OUTPUT
         2     WQ   99 12 03C   WRAP CONNECTOR J12.1, 3*32 PIN

SYMCODD2 3     L    98 12 03    MASTER INPUT/REPRO OUTPUT
         3     WQ   99 12 04C   WRAP CONNECTOR J12.1, 3*32 PIN

SYMCODSC 0     L    98 11 01    MASTER INPUT/REPRO OUTPUT
         0     L    98 12 01    MASTER INPUT/REPRO OUTPUT

SYNC A   4-5-0 B    97 93 47    CONN. ASS. TO MAIN PROGR. (JIII)
               W    99 10 02A   WRAP CONNECTOR J10.1, 3*32 PIN
         4-5-0 WQ   99 10 29F   WRAP CONNECTOR J10.2, 3*32 PIN

SYNC B   0-R   B    97 93 43    CONN. ASS. TO MAIN PROGR. (JIII)
         0-R   WQ   99 10 25F   WRAP CONNECTOR J10.2, 3*32 PIN
               W    99 10 28B   WRAP CONNECTOR J10.1, 3*32 PIN

SYNC PLT 9-4   B    97 93 16    CONN. ASS. TO MAIN PROGR. (JIII)
         9-4   WQ   99 10 22D   WRAP CONNECTOR J10.2, 3*32 PIN
               W    99 10 28A   WRAP CONNECTOR J10.1, 3*32 PIN

SYNCBDR  3     B    97 71 33    AUXILIARY CONNECTOR
         3     WQ   99 07 02E   WRAP CONNECTOR J07.2, 3*32 PIN
               W    99 17 25A   WRAP CONNECTOR J17.1, 3*32 PIN

SYNCBOUT       W    99 01 02A   WRAP CONNECTOR J01.1, 3*32 PIN
               W    99 02 02B   WRAP CONNECTOR J02.1, 3*32 PIN

SYNCH1         W    99 11 21C   WRAP CONNECTOR J11.1, 3*32 PIN
               W    99 12 21C   WRAP CONNECTOR J12.1, 3*32 PIN

SYNCH2         W    99 11 22C   WRAP CONNECTOR J11.1, 3*32 PIN
               W    99 12 22C   WRAP CONNECTOR J12.1, 3*32 PIN

SYNCSEL        W    99 07 29C   WRAP CONNECTOR J07.1, 3*32 PIN
               W  + 99 08 30B   WRAP CONNECTOR J08.1, 3*32 PIN
               W  + 99 11 24C   WRAP CONNECTOR J11.1, 3*32 PIN
               W    99 12 30C   WRAP CONNECTOR J12.1, 3*32 PIN

TDATAM/S       W    99 03 23C   WRAP CONNECTOR J03.1, 3*32 PIN
               W    99 14 23B   WRAP CONNECTOR J14.1, 3*32 PIN

TDCDMUX1       W    99 06 27B   WRAP CONNECTOR J06.1, 3*32 PIN
               W    99 08 27A   WRAP CONNECTOR J08.1, 3*32 PIN

TDCDMUX2       W    99 06 26C   WRAP CONNECTOR J06.1, 3*32 PIN
               W    99 08 26A   WRAP CONNECTOR J08.1, 3*32 PIN

TDLATEN1       W    99 06 11B   WRAP CONNECTOR J06.1, 3*32 PIN
               W    99 08 11B   WRAP CONNECTOR J08.1, 3*32 PIN

TDLATEN2       W    99 06 22B   WRAP CONNECTOR J06.1, 3*32 PIN
               W    99 08 13B   WRAP CONNECTOR J08.1, 3*32 PIN

TESTFLGS       W    99 04 13C   WRAP CONNECTOR J04.1, 3*32 PIN
               W    99 07 13C   WRAP CONNECTOR J07.1, 3*32 PIN

TESTRAM        W    99 06 02C   WRAP CONNECTOR J06.1, 3*32 PIN
               W    99 07 02C   WRAP CONNECTOR J07.1, 3*32 PIN

TIMLDEN        W    99 06 07C   WRAP CONNECTOR J06.1, 3*32 PIN
               W    99 07 03C   WRAP CONNECTOR J07.1, 3*32 PIN

TRMADR0        W    99 07 02A   WRAP CONNECTOR J07.1, 3*32 PIN
               W    99 09 02A   WRAP CONNECTOR J09.1, 3*32 PIN
               W    99 10 29A   WRAP CONNECTOR J10.1, 3*32 PIN
               W    99 17 11B   WRAP CONNECTOR J17.1, 3*32 PIN

TRMADR1        W    99 07 03A   WRAP CONNECTOR J07.1, 3*32 PIN
               W    99 09 03A   WRAP CONNECTOR J09.1, 3*32 PIN
               W    99 10 29B   WRAP CONNECTOR J10.1, 3*32 PIN
               W    99 17 10B   WRAP CONNECTOR J17.1, 3*32 PIN

TRMADR2        W    99 07 04A   WRAP CONNECTOR J07.1, 3*32 PIN
               W    99 09 04A   WRAP CONNECTOR J09.1, 3*32 PIN
               W    99 10 29C   WRAP CONNECTOR J10.1, 3*32 PIN
               W    99 17 09B   WRAP CONNECTOR J17.1, 3*32 PIN

TRMADR3        W    99 07 05A   WRAP CONNECTOR J07.1, 3*32 PIN
               W    99 09 05A   WRAP CONNECTOR J09.1, 3*32 PIN
               W    99 10 31A   WRAP CONNECTOR J10.1, 3*32 PIN
               W    99 17 08B   WRAP CONNECTOR J17.1, 3*32 PIN

TRMADR4        W    99 07 06A   WRAP CONNECTOR J07.1, 3*32 PIN
                                                          ./.
```

* S T U D E R * S I G N A L W I R E L I S T * 82/01/08 * 15:12 * P A G E 49 *

TAPE LOCK SYSTEM 2000 A80: LOCATOR, PARALLEL PROGRAMMER 1.228.375.00 79-10-05

SIG.NAME	COLOR	TYPE	GR	EL	PT	S	DESCRIPTION OF ELEMENT
(CONT.)		W	99	09	06A		WRAP CONNECTOR J09.1, 3*32 PIN
		W	99	10	31B		WRAP CONNECTOR J10.1, 3*32 PIN
		W	99	17	22B		WRAP CONNECTOR J17.1, 3*32 PIN
TRMADR5		W	99	07	07A		WRAP CONNECTOR J07.1, 3*32 PIN
		W	99	09	07A		WRAP CONNECTOR J09.1, 3*32 PIN
		W	99	10	31C		WRAP CONNECTOR J10.1, 3*32 PIN
TRMADR6		W	99	07	08A		WRAP CONNECTOR J07.1, 3*32 PIN
		W	99	09	08A		WRAP CONNECTOR J09.1, 3*32 PIN
		W	99	10	30A		WRAP CONNECTOR J10.1, 3*32 PIN
TT1-ACT	1	A	97	51	35		EXTENDED REMOTE MODE CONTROL
	1	WQ	99	06	30F		WRAP CONNECTOR J06.2, 3*32 PIN
		W	99	08	10B		WRAP CONNECTOR J08.1, 3*32 PIN
TT2-ACT	2	A	97	51	36		EXTENDED REMOTE MODE CONTROL
	2	WQ	99	06	31F		WRAP CONNECTOR J06.2, 3*32 PIN
		W	99	08	10C		WRAP CONNECTOR J08.1, 3*32 PIN
TX	1-5	B	97	93	15		CONN. ASS. TO MAIN PROGR. (JIII)
	1-5	WQ	99	10	21D		WRAP CONNECTOR J10.2, 3*32 PIN
		W	99	10	25A		WRAP CONNECTOR J10.1, 3*32 PIN
UNAS B	9-R	B	97	92	20		CONN. ASS. TO MAIN PROGR. (J II)
	9-R	WQ	99	09	26D		WRAP CONNECTOR J09.2, 3*32 PIN
		W	99	10	18A		WRAP CONNECTOR J10.1, 3*32 PIN
UPLIM EX	9-1-0	B	97	91	46		CONN. ASS. TO MAIN PROGR. (J I)
	9-1-0	WQ	99	08	28F		WRAP CONNECTOR J08.2, 3*32 PIN
		W	99	10	09A		WRAP CONNECTOR J10.1, 3*32 PIN
USER B	4	B	97	93	05		CONN. ASS. TO MAIN PROGR. (JIII)
	4	WQ	99	10	05D		WRAP CONNECTOR J10.2, 3*32 PIN
		W	99	10	18B		WRAP CONNECTOR J10.1, 3*32 PIN
WBPRESO1	0	B	98	81	10		CONN. ASS. TO BASIC PROGRAMMER
	0	WQ	99	20	25D		WRAP CONNECTOR J20.2, 3*32 PIN
WBPRESO2	6-2	B	98	81	13		CONN. ASS. TO BASIC PROGRAMMER
	6-2	WQ	99	20	28D		WRAP CONNECTOR J20.2, 3*32 PIN
WBPRESO3	4-8	B	98	81	29		CONN. ASS. TO BASIC PROGRAMMER
	4-8	WQ	99	20	12F		WRAP CONNECTOR J20.2, 3*32 PIN
WBPRESO4	4-R	B	98	81	31		CONN. ASS. TO BASIC PROGRAMMER
	4-R	WQ	99	20	14F		WRAP CONNECTOR J20.2, 3*32 PIN
WBPRESO5	5-6	B	98	81	32		CONN. ASS. TO BASIC PROGRAMMER
	5-6	WQ	99	20	15F		WRAP CONNECTOR J20.2, 3*32 PIN
WEACFLG		W	99	04	08B		WRAP CONNECTOR J04.1, 3*32 PIN
		W	99	07	08C		WRAP CONNECTOR J07.1, 3*32 PIN
WEPCFLG		W	99	06	06A		WRAP CONNECTOR J06.1, 3*32 PIN
		W	99	07	06B		WRAP CONNECTOR J07.1, 3*32 PIN
WIREOO1	9-5	B	98	81	14		UNUSED WIRE
	4-6	B	98	81	33		UNUSED WIRE
		W	99	19	30A		UNUSED WIRE
		W	99	19	30B		UNUSED WIRE
		W	99	19	30C		UNUSED WIRE
		W	99	20	16D		UNUSED WIRE
	4-6	WQ	99	20	16F		UNUSED WIRE
	9-5	WQ	99	20	29D		UNUSED WIRE
WLINE -M		W	99	03	22A		WRAP CONNECTOR J03.1, 3*32 PIN
		W	99	05	22C		WRAP CONNECTOR J05.1, 3*32 PIN
WLINE -S		W	99	03	22C		WRAP CONNECTOR J03.1, 3*32 PIN
		W	99	05	21C		WRAP CONNECTOR J05.1, 3*32 PIN
WMPRESO1	8-R-0	B	97	91	49		CONN. ASS. TO MAIN PROGR. (J I)
	8-R-0	WQ	99	08	30F		WRAP CONNECTOR J08.2, 3*32 PIN
WMPRESO2	6-2-0	B	97	91	50		CONN. ASS. TO MAIN PROGR. (J I)
	6-2-0	WQ	99	08	31F		WRAP CONNECTOR J08.2, 3*32 PIN
WMPRESO3	9	B	97	92	01		CONN. ASS. TO MAIN PROGR. (J II)
	9	WQ	99	09	02D		WRAP CONNECTOR J09.2, 3*32 PIN
WMPRESO4	1-0	B	97	92	27		CONN. ASS. TO MAIN PROGR. (J II)
	1-0	WQ	99	09	03F		WRAP CONNECTOR J09.2, 3*32 PIN
X1BPS	6-R	B	98	81	39		CONN. ASS. TO BASIC PROGRAMMER
		W	99	17	22C		WRAP CONNECTOR J17.1, 3*32 PIN
		W +	99	20	22D		WRAP CONNECTOR J20.2, 3*32 PIN
	6-R	WQ	99	20	22F		WRAP CONNECTOR J20.2, 3*32 PIN
X1CCHRC	4	L	98	61	03		CODE CH. REMOTE IF (OPTIONAL)
	4	L	98	62	03B		CODE CH. REMOTE IF (OPTIONAL)
X2BPS	8-2	B	98	81	40		CONN. ASS. TO BASIC PROGRAMMER
		W	99	17	23C		WRAP CONNECTOR J17.1, 3*32 PIN
		W +	99	20	23D		WRAP CONNECTOR J20.2, 3*32 PIN
	8-2	WQ	99	20	23F		WRAP CONNECTOR J20.2, 3*32 PIN
X2CCHRC	4	L	98	61	04		CODE CH. REMOTE IF (OPTIONAL)
	4	L	98	62	04B		CODE CH. REMOTE IF (OPTIONAL)
X2TLS	2	L	98	62	06A		CODE CH. REMOTE IF (OPTIONAL)
	2	WQ$	99	17	04A		WRAP CONNECTOR J17.1, 3*32 PIN
X3BPS	8-6	B	98	81	38		CONN. ASS. TO BASIC PROGRAMMER
		W	99	17	21C		WRAP CONNECTOR J17.1, 3*32 PIN
		W +	99	20	21D		WRAP CONNECTOR J20.2, 3*32 PIN
	8-6	WQ	99	20	21F		WRAP CONNECTOR J20.2, 3*32 PIN
X4BPS	4-2	B	98	81	35		CONN. ASS. TO BASIC PROGRAMMER
		W	99	17	18C		WRAP CONNECTOR J17.1, 3*32 PIN
		W +	99	20	18D		WRAP CONNECTOR J20.2, 3*32 PIN
	4-2	WQ	99	20	18F		WRAP CONNECTOR J20.2, 3*32 PIN

* S T U D E R * S I G N A L W I R E L I S T * 82/01/08 * 15:12 * P A G E 50 *

TAPE LOCK SYSTEM 2000 A80: LOCATOR, PARALLEL PROGRAMMER 1.228.375.00 79-10-05

SIG.NAME	COLOR	TYPE	GR	EL	PT	S	DESCRIPTION OF ELEMENT
X5BPS	5-R	B	98	81	30		CONN. ASS. TO BASIC PROGRAMMER
		W	99	17	13C		WRAP CONNECTOR J17.1, 3*32 PIN
		W +	99	20	13D		WRAP CONNECTOR J20.2, 3*32 PIN
	5-R	WQ	99	20	13F		WRAP CONNECTOR J20.2, 3*32 PIN
Y-CLK	1	A	97	61	46		REMOTE MODE CONTROL
		W +	99	06	26D		WRAP CONNECTOR J06.2, 3*32 PIN
	1	WQ	99	07	28F		WRAP CONNECTOR J07.2, 3*32 PIN
		W	99	08	05C		WRAP CONNECTOR J08.1, 3*32 PIN
Y-FORW	1	A	97	61	14		REMOTE MODE CONTROL
		W +	99	06	26F		WRAP CONNECTOR J06.2, 3*32 PIN
	1	WQ	99	07	28D		WRAP CONNECTOR J07.2, 3*32 PIN
		W	99	08	04C		WRAP CONNECTOR J08.1, 3*32 PIN
Y-ICLK	2	A	97	61	47		REMOTE MODE CONTROL
	2	WQ	99	07	29F		WRAP CONNECTOR J07.2, 3*32 PIN
Y-KRESET		W	99	08	05A		WRAP CONNECTOR J08.1, 3*32 PIN
Y-LOW	3	A	97	61	21		REMOTE MODE CONTROL
	3	WQ	99	07	17E		WRAP CONNECTOR J07.2, 3*32 PIN
Y-MOD1	8	A	97	51	04		EXTENDED REMOTE MODE CONTROL
	8	WQ	99	06	23D		WRAP CONNECTOR J06.2, 3*32 PIN
Y-MOD2	1	A	97	51	05		EXTENDED REMOTE MODE CONTROL
	1	WQ	99	06	24D		WRAP CONNECTOR J06.2, 3*32 PIN
Y-MONO	3	A	97	61	25		REMOTE MODE CONTROL
	3	WQ	99	07	23E		WRAP CONNECTOR J07.2, 3*32 PIN
Y-MOVE-D	8	A	97	61	28		REMOTE MODE CONTROL
		W +	99	06	22F		WRAP CONNECTOR J06.2, 3*32 PIN
	8	WQ	99	07	26E		WRAP CONNECTOR J07.2, 3*32 PIN
		W	99	08	28C		WRAP CONNECTOR J08.1, 3*32 PIN
Y-MOVE-1	1	A	97	61	27		REMOTE MODE CONTROL
	1	WQ	99	07	25E		WRAP CONNECTOR J07.2, 3*32 PIN
Y-MUTE	4	A	97	61	24		REMOTE MODE CONTROL
		W +	99	06	22E		WRAP CONNECTOR J06.2, 3*32 PIN
	4	WQ	99	07	22E		WRAP CONNECTOR J07.2, 3*32 PIN
		W	99	08	31A		WRAP CONNECTOR J08.1, 3*32 PIN
Y-MUTEMD	5	A	98	03	44		HEADPLUG/CHANNEL SUPPLY
	5	WQ +	99	11	05C		WRAP CONNECTOR J11.1, 3*32 PIN
Y-OUT 1	3	B	97	41	04		CAPSTAN SPEED CONTROL
	3	WQ	99	06	04D		WRAP CONNECTOR J06.2, 3*32 PIN
Y-REC-M	5	B	97	71	05		AUXILIARY CONNECTOR
	5	L	97	72	05A		RELAIS PRINT
Y-RECMD	2	A	98	03	42		HEADPLUG/CHANNEL SUPPLY
		W	99	08	13C		WRAP CONNECTOR J08.1, 3*32 PIN
(CONT.)	2	WQ +	99	11	05A		WRAP CONNECTOR J11.1, 3*32 PIN
		W +	99	18	02C		WRAP CONNECTOR J18.1, 3*32 PIN
Y-RES3	2	A	97	51	06		EXTENDED REMOTE MODE CONTROL
	2	WQ	99	06	25D		WRAP CONNECTOR J06.2, 3*32 PIN
Y-REVRS	8	A	97	61	13		REMOTE MODE CONTROL
	8	WQ	99	07	27D		WRAP CONNECTOR J07.2, 3*32 PIN
Y-RFLX	7	A	97	51	33		EXTENDED REMOTE MODE CONTROL
	7	WQ	99	06	28F		WRAP CONNECTOR J06.2, 3*32 PIN
Y-STOP	3	A	97	51	16		EXTENDED REMOTE MODE CONTROL
	3	WQ	99	06	23E		WRAP CONNECTOR J06.2, 3*32 PIN
Y-SYNC 1	1	B	97	41	11		CAPSTAN SPEED CONTROL
	1	WQ	99	06	03E		WRAP CONNECTOR J06.2, 3*32 PIN
Y-SYNC 2	8	B	97	41	12		CAPSTAN SPEED CONTROL
	8	WQ	99	06	04E		WRAP CONNECTOR J06.2, 3*32 PIN
Y-TACH-D	4	B	97	41	05		CAPSTAN SPEED CONTROL
	4	WQ	99	06	05D		WRAP CONNECTOR J06.2, 3*32 PIN
		W +	99	06	17D		WRAP CONNECTOR J06.2, 3*32 PIN
		W +	99	08	02B		WRAP CONNECTOR J08.1, 3*32 PIN
Y-TRSP	8	A	97	51	34		EXTENDED REMOTE MODE CONTROL
	8	WQ	99	06	29F		WRAP CONNECTOR J06.2, 3*32 PIN
		W	99	08	11C		WRAP CONNECTOR J08.1, 3*32 PIN
YAC-BIAS	1	A	98	03	39		HEADPLUG/CHANNEL SUPPLY
	1	WQ	99	11	06A		WRAP CONNECTOR J11.1, 3*32 PIN
YAC-ERAS	9	A	98	03	40		HEADPLUG/CHANNEL SUPPLY
	9	WQ	99	11	07C		WRAP CONNECTOR J11.1, 3*32 PIN
YMOVETLS		W	99	02	17C		WRAP CONNECTOR J02.1, 3*32 PIN
		W	99	08	17A		WRAP CONNECTOR J08.1, 3*32 PIN
YPS-MOVE	7	A	97	61	29		REMOTE MODE CONTROL
		W +	99	06	24E		WRAP CONNECTOR J06.2, 3*32 PIN
	7	WQ	99	07	27E		WRAP CONNECTOR J07.2, 3*32 PIN
		W	99	08	27B		WRAP CONNECTOR J08.1, 3*32 PIN
Y1BPS	1-0	B	98	81	27		CONN. ASS. TO BASIC PROGRAMMER
		W	99	17	10C		WRAP CONNECTOR J17.1, 3*32 PIN
	1-0	WQ	99	20	10F		WRAP CONNECTOR J20.2, 3*32 PIN
Y2BPS	9-0	B	98	81	26		CONN. ASS. TO BASIC PROGRAMMER
		W	99	17	09C		WRAP CONNECTOR J17.1, 3*32 PIN
	9-0	WQ	99	20	09F		WRAP CONNECTOR J20.2, 3*32 PIN
Y3BPS	5-2	B	98	81	34		CONN. ASS. TO BASIC PROGRAMMER
		W	99	17	17C		WRAP CONNECTOR J17.1, 3*32 PIN
	5-2	WQ	99	20	17F		WRAP CONNECTOR J20.2, 3*32 PIN

./.

SIG.NAME	COLOR	TYPE	GR	EL	PT	S	DESCRIPTION OF ELEMENT
0.0AD150	0	A	98	71	08		ADDITIONAL POWER CONNECTOR
	0	A	98	71	09		ADDITIONAL POWER CONNECTOR
	0	A	98	71	10		ADDITIONAL POWER CONNECTOR
	0	WQ	99	18	10A		WRAP CONNECTOR J18.1, 3*32 PIN
	0	WQ	99	18	10B		WRAP CONNECTOR J18.1, 3*32 PIN
	0	WQ	99	18	10C		WRAP CONNECTOR J18.1, 3*32 PIN
0.0INA80	0,0	L	96	01	01	%	RECTIFIER ASSEMBLY
	0	L	96	01	04	%	RECTIFIER ASSEMBLY
	0	WQ	99	19	10A	%	WIRING WITH: 0.0IN150
	0	WQ	99	19	10B	%	WIRING WITH: 0.0IN150
	0	WQ	99	19	10C	%	WIRING WITH: 0.0IN150
0.0IN150	0	A	98	91	11	%	CONNECTOR ASS. TO POWER SUPPLY
	0	A	98	91	12	%	CONNECTOR ASS. TO POWER SUPPLY
	0	A	98	91	13	%	CONNECTOR ASS. TO POWER SUPPLY
	0	WQ	99	20	10A	%	WIRING WITH: 0.0INA80
	0	WQ	99	20	10B	%	WIRING WITH: 0.0INA80
	0	WQ	99	20	10C	%	WIRING WITH: 0.0INA80
0-AC1	6	L	96	01	06		RECTIFIER ASSEMBLY
	9	A	98	03	34		HEADPLUG/CHANNEL SUPPLY
	9	WQ + 99	11	09A			WRAP CONNECTOR J11.1, 3*32 PIN
	6	WQ + 99	11	11A			WRAP CONNECTOR J11.1, 3*32 PIN
0-AC2	8	L	96	01	08		RECTIFIER ASSEMBLY
	9	A	98	03	36		HEADPLUG/CHANNEL SUPPLY
	9	WQ + 99	11	09C			WRAP CONNECTOR J11.1, 3*32 PIN
	8	WQ + 99	11	11C			WRAP CONNECTOR J11.1, 3*32 PIN
0-BIAS	9	A	98	03	38		HEADPLUG/CHANNEL SUPPLY
	9	WQ	99	11	07A		WRAP CONNECTOR J11.1, 3*32 PIN
0-ERASE	8	A	98	03	41		HEADPLUG/CHANNEL SUPPLY
	2	A	98	03	45		HEADPLUG/CHANNEL SUPPLY
	2	WQ + 99	11	06B			WRAP CONNECTOR J11.1, 3*32 PIN
	8	WQ	99	11	06C		WRAP CONNECTOR J11.1, 3*32 PIN
100 HZ		W	99	03	07B		WRAP CONNECTOR J03.1, 3*32 PIN
		W	99	13	07B		WRAP CONNECTOR J13.1, 3*32 PIN
		W	99	14	11B		WRAP CONNECTOR J14.1, 3*32 PIN
102.4KHZ		W	99	03	23A		WRAP CONNECTOR J03.1, 3*32 PIN
12.5 HZ		W	99	03	04B		WRAP CONNECTOR J03.1, 3*32 PIN
		W	99	06	05A		WRAP CONNECTOR J06.1, 3*32 PIN
		W	99	09	13A		WRAP CONNECTOR J09.1, 3*32 PIN
12.8 KHZ		W	99	03	11B		WRAP CONNECTOR J03.1, 3*32 PIN
		W	99	07	17A		WRAP CONNECTOR J07.1, 3*32 PIN
13.1 MHZ		W	99	01	21C		WRAP CONNECTOR J01.1, 3*32 PIN
		W	99	02	21A		WRAP CONNECTOR J02.1, 3*32 PIN
		W	99	03	21B		WRAP CONNECTOR J03.1, 3*32 PIN
1638 KHZ		W	99	03	17B		WRAP CONNECTOR J03.1, 3*32 PIN
200 HZ		W	99	03	02B		WRAP CONNECTOR J03.1, 3*32 PIN
204.8KHZ		W	99	03	13B		WRAP CONNECTOR J03.1, 3*32 PIN
25 HZ		W	99	03	05B		WRAP CONNECTOR J03.1, 3*32 PIN
		W	99	06	31C		WRAP CONNECTOR J06.1, 3*32 PIN
		W	99	13	05B		WRAP CONNECTOR J13.1, 3*32 PIN
25.6 KHZ		W	99	03	09B		WRAP CONNECTOR J03.1, 3*32 PIN
3.2 KHZ		W	99	03	10B		WRAP CONNECTOR J03.1, 3*32 PIN
		W	99	06	10B		WRAP CONNECTOR J06.1, 3*32 PIN
400 HZ		W	99	03	08B		WRAP CONNECTOR J03.1, 3*32 PIN
50 HZ		W	99	03	06B		WRAP CONNECTOR J03.1, 3*32 PIN
		W	99	06	06B		WRAP CONNECTOR J06.1, 3*32 PIN
		W	99	13	06B		WRAP CONNECTOR J13.1, 3*32 PIN
51.2 KHZ		W	99	03	22B		WRAP CONNECTOR J03.1, 3*32 PIN
6.25 HZ		W	99	01	06B		WRAP CONNECTOR J01.1, 3*32 PIN
		W	99	03	03B		WRAP CONNECTOR J03.1, 3*32 PIN
800 HZ		W	99	01	08B		WRAP CONNECTOR J01.1, 3*32 PIN
		W	99	03	08C		WRAP CONNECTOR J03.1, 3*32 PIN
819.2KHZ		W	99	01	18C		WRAP CONNECTOR J01.1, 3*32 PIN
		W	99	02	18B		WRAP CONNECTOR J02.1, 3*32 PIN
		W	99	03	18B		WRAP CONNECTOR J03.1, 3*32 PIN
		W	99	07	17C		WRAP CONNECTOR J07.1, 3*32 PIN
		W	99	09	21A		WRAP CONNECTOR J09.1, 3*32 PIN
		W	99	15	06B		WRAP CONNECTOR J15.1, 3*32 PIN
		W + 99	19	06A			WRAP CONNECTOR J19.1, 3*32 PIN

```
 ******  *******  *     *  ******   *******  ******                          *        *  ***  ******   ***  *     *   *****
*      *    *     *     *  *     *  *        *     *                         *        *  *    *     *   *   **    *  *     *      *
*           *     *     *  *     *  *        *     *                         *        *  *    *     *   *   * *   *  *            *
 *****      *     *     *  *     *  *****    ******          *******         *   *    *  *    ******    *   *  *  *  *   ***
      *     *     *     *  *     *  *        *   *                            *  *   *  *    *     *   *   *   * *  *      *
      *     *     *     *  *     *  *        *    *                            * * * *   *    *     *   *   *    **  *      *
******      *      *****   ******   *******  *     *                            *   *    ***  *     *  ***  *     *   ******
```


TITLE: TAPE LOCK SYSTEM 2000 A80: MASTER CTRL, PARALLEL PROGRAMMER 1.228.375.00 INDEX: 9 DATE OF ORIGIN: 79-10-30
DATE OF PROC.: 82/01/08

TOTAL GROUPS: 4
TOTAL ELEMENTS: 52
TOTAL PINS: 3006
TOTAL UNUSED PINS: 769
MULTIPLE PINS: 0

GROUP NODE = *
INTER GROUP NODE = #
DIRECT WIRE TO # = <
WIRING NOT COMPUTED - ə

GR: 96 1.228.396.00
RECTIFIER ASSEMBLY

EL: 01 RECTIFIER ASSEMBLY

TYPE	PT	LV	SIG.NAME	COLOR	F	X	Y
L	01	1%	0.0INA80			0	0
L	02	1	-20V A80			1	1
L	03	1	+20V A80			3	3
L	04	1%	0.0INA80			0	
L	05	1	AC1MOD			5	
L	06	1	0-AC1			6	
L	07	1	AC2MOD			7	
L	08	1	0-AC2			8	

GR: 97
RACK ELEMENTS LOWER PART

EL: 13 REFERENCE FREQUENCY INPUT

TYPE	PT	LV	SIG.NAME	COLOR	F	X	Y
L	01	1	EXFRQSCR			0	

EL: 14 REFERENCE FREQUENCY INPUT

TYPE	PT	LV	SIG.NAME	COLOR	F	X	Y
L	01	1	EXFRQSCR			0	
L	02	1	EXFRQINA			2	
L	03	1	EXFRQINB			3	

EL: 15 REFERENCE FREQUENCY INPUT

TYPE	PT	LV	SIG.NAME	COLOR	F	X	Y
L	01A	1	0 L			0	
L	02	1	EXFRQINA			2	
L	02A	1	EXFREQ1			2	
L	03	1	EXFRQINB			3	
L	03A	1	EXFREQTM			3	
L	04A	1	EXFREQ2			4	

EL: 41 CAPSTAN SPEED CONTROL

TYPE	PT	LV	SIG.NAME	COLOR	F	X	Y
B	01	1	+0.0CAP1			0	
B	02	1	+24CAP1			9	
	03	0	KEY				
B	04	1	Y-OUT 1			3	
B	05	1	Y-TACH-D			4	
	06	1					
	07	1					
	08	1					
	09	1					
	10	1					
B	11	1	Y-SYNC 1			1	
B	12	1	Y-SYNC 2			8	
B	13	1	+0.0CAP2			0	
B	14	1	+5.8CAP1			5	
B	15	1	-5.8CAP1			6	
B	16	1	R-SPLY-0			2	
B	17	1	R-SPLY-1			1	
	18	1					
	19	1					
	20	1					
	21	1					
	22	0	KEY				
B	23	1	S-CAPEXT			8	
B	24	1	SPD-CTL1			1	
B	25	1	SPD-CTL2			2	

GR: 97 (CONTINUATION)
RACK ELEMENTS LOWER PART

EL: 51 EXTENDED REMOTE MODE CONTROL

TYPE	PT	LV	SIG.NAME	COLOR	F	X	Y
A	01	1	+0.0EMC1			0	
	02	1					
	03	0	KEY				
A	04	1	Y-MOD1			8	
A	05	1	Y-MOD2			1	
A	06	1	Y-RES3			2	
	07	1					
	08	1					
	09	1					
	10	1					
	11	1					
	12	1					
	13	1					
	14	1					
	15	1					
A	16	1	Y-STOP			3	
	17	1					
A	18	1	+5.8EMC1			5	
A	19	1	+0.0EMC2			0	
	20	1					
A	21	1	S-CUTAUT			4	
A	22	1	R-CUT- 1			3	
A	23	1	R-CUT- 3			2	
A	24	1	S-RES2			1	
A	25	1	K-CUTINH			3	
	26	1					
	27	1					
	28	1					
	29	1					
	30	1					
	31	1					
	32	1					
A	33	1	Y-RFLX			7	
A	34	1	Y-TRSP			8	
A	35	1	TT1-ACT			1	
A	36	1	TT2-ACT			2	
	37	0	KEY				

EL: 61 REMOTE MODE CONTROL

TYPE	PT	LV	SIG.NAME	COLOR	F	X	Y
A	01	1	+0.0MC1			0	
	02	0	KEY				
A	03	1	B-REW			2	
A	04	1	B-FORW			4	
A	05	1	B-REPR			2	
A	06	1	B-STOP			3	
A	07	1	B-REC			8	
A	08	1	B-CUT			1	
A	09	1	B-MONO			2	

./.

* S T U D E R * L O C A T I O N P I N L I S T * 82/01/08 * 15:12 * P A G E 3 *

TAPE LOCK SYSTEM 2000 A80: MASTER CTRL, PARALLEL PROGRAMMER 1.228.375.00 79-10-30

GR: 97 (CONTINUATION)
RACK ELEMENTS LOWER PART

EL: 61 (CONTINUATION)

TYPE	PT	LV	SIG.NAME	COLOR	F	X	Y
A	10	1	B-FAD	3			
A	11	1	+0.0MC2	0			
	12	1					
A	13	1	Y-REVRS	8			
A	14	1	Y-FORW	1			
A	15	1	+24MC1	9			
A	16	1	+5.8MC1	5			
A	17	1	-5.8MC1	6			
A	18	1	CMD.ENB2	4			
A	19	1	CMD.ENB1	3			
A	20	1	S-LOW	1			
A	21	1	Y-LOW	3			
A	22	1	K-PRESS	2			
A	23	1	RECSTINH	7			
A	24	1	Y-MUTE	4			
A	25	1	Y-MONO	3			
A	26	1	+24MC2	9			
A	27	1	Y-MOVE-1	1			
A	28	1	Y-MOVE-0	8			
A	29	1	YPS-MOVE	7			
	30	1					
	31	1					
A	32	1	+0-TYPE2	2			
A	33	1	+0-TYPE1	1			
A	34	1	+24MC3	9			
A	35	1	LOC.ENB	2			
A	36	1	S-REW	4			
A	37	1	S-FORW	2			
A	38	1	S-REPR	3			
A	39	1	S-STOP	8			
A	40	1	S-REC	1			
A	41	1	S-CUT	2			
A	42	1	S-MONO	3			
A	43	1	FAD-1	4			
A	44	1	FAD-2	7			
A	45	1	K-RESET	8			
A	46	1	Y-CLK	1			
A	47	1	Y-ICLK	2			
	48	0	KEY				
A	49	1	+0.0MC3	0			
A	50	1	+0.0MC4	0			

EL: 71 AUXILIARY CONNECTOR

TYPE	PT	LV	SIG.NAME	COLOR	F	X	Y
B	01	1	O L	0			
B	02	1	LKMODEDR	1			
B	03	1	EDMODEDR	8			
	04	0	KEY				
B	05	1	Y-REC-M	5			

./.

GR: 97 (CONTINUATION)
RACK ELEMENTS LOWER PART

EL: 71 (CONTINUATION)

TYPE	PT	LV	SIG.NAME	COLOR	F	X	Y
	06	1					
	07	1					
	08	1					
	09	1					
B	10	1	PARKEDDR	2			
	11	1					
	12	1					
	13	1					
	14	1					
	15	1					
	16	1					
	17	1					
	18	1					
	19	1					
B	20	1	O K	0			
B	21	1	START-1A	1			
B	22	1	START-1B	1			
B	23	1	START-2A	6			
B	24	1	START-2B	6			
B	25	1	START-3A	9			
B	26	1	START-3B	9			
B	27	1	START-4A	4			
B	28	1	START-4B	4			
	29	1					
	30	1					
B	31	1	EDLEADDR	7			
B	32	1	SNCPLTDR	4			
B	33	1	SYNCBDR	3			
	34	0	KEY				
B	35	1	O L	0			
B	36	1	+24M	3			
B	37	1	+24	2			

EL: 72 RELAIS PRINT

TYPE	PT	LV	SIG.NAME	COLOR	F	X	Y
L	01A	1	START-1A	1			
L	01B	1	START-1B	1			
L	01C	1	STARTDR1	1			
L	02A	1	START-2A	6			
L	02B	1	START-2B	6			
L	02C	1	STARTDR2	6			
L	03A	1	START-3A	9			
L	03B	1	START-3B	9			
L	03C	1	STARTDR3	9			
L	04A	1	START-4A	4			
L	04B	1	START-4B	4			
L	04C	1	STARTDR4	4			
L	05A	1	Y-REC-M	5			
L	05C	1	EXTRECCM	7			

./.

GR: 97 (CONTINUATION)
RACK ELEMENTS LOWER PART

EL: 72 (CONTINUATION)

TYPE	PT	LV	SIG.NAME	COLOR	F	X	Y
L	06A	1	O L	0			
L	06C	1	O L	0			
L	07A	1	O K	0			
L	07C	1	O K	0			
L	08A	1	+24	2			
L	08C	1	+24	2			
L	09A	1	+24M	3			

EL: 91 CONN. ASS. TO MAIN PROGR. (J I)

TYPE	PT	LV	SIG.NAME	COLOR	F	X	Y
	01	0	KEY				
B	02	1	PB1	9			
B	03	1	BULBDPA2	1			
B	04	1	PBA	5			
B	05	1	PBH	4			
B	06	1	BULBPBI3	8			
B	07	1	EDIT CD	R			
B	08	1	LOCKFAST	6			
B	09	1	ADV RET	2			
B	10	1	MSEC	0			
B	11	1	GEN N SC	7			
B	12	1	B-UPPLIM	8-R			
B	13	1	ENTRY	6-2			
B	14	1	BOFFSREG	9-5			
B	15	1	B-EXITSL	1-5			
B	16	1	B-PHAS	9-4			
B	17	1	FRAM ER	4-1			
B	18	1	GEN SET	9-8			
B	19	1	B-LOWLIM	8-1			
B	20	1	NO CD S	9-R			
B	21	1	B-ENTRYM	1-R			
B	22	1	SVPCI	9-6			
B	23	1	BULBPBF4	1-6			
B	24	1	BULBPBF3	9-2			
B	25	1	BULBPBF2	1-2			
B	26	1	EXEC	9-0			
B	27	1	PBD	1-0			
B	28	1	PBI	8-5			
B	29	1	BULBDPA1	4-8			
B	30	1	INTGEN	5-R			
B	31	1	BULBDPB2	4-R			
B	32	1	CODENDEF	5-6			
B	33	1	ADD	4-6			
B	34	1	B-CALC	5-2			
B	35	1	SLDECOFF	4-2			
B	36	1	B-GENUSB	5-0			
B	37	1	SL NOTP	4-0			
B	38	1	PB7	8-6			
B	39	1	PBG	6-R			

./.

* S T U D E R * L O C A T I O N P I N L I S T * 82/01/08 * 15:12 * P A G E 4 *

TAPE LOCK SYSTEM 2000 A80: MASTER CTRL, PARALLEL PROGRAMMER 1.228.375.00 79-10-30

GR: 97 (CONTINUATION)
RACK ELEMENTS LOWER PART

EL: 91 (CONTINUATION)

TYPE	PT	LV	SIG.NAME	COLOR	F	X	Y
B	40	1	PB4	8-2			
B	41	1	PBK	2-R			
B	42	1	PBF	8-0			
B	43	1	LWLIM EX	0-R			
B	44	1	CONNFAIL	6-0			
B	45	1	BENT/PKS	2-0			
B	46	1	UPLIM EX	9-1-0			
B	47	1	B-NOMAST	4-5-0			
	48	0	KEY				
B	49	1	WMPRESO1	8-R-0			
B	50	1	WMPRESO2	6-2-0			

EL: 92 CONN. ASS. TO MAIN PROGR. (J II)

TYPE	PT	LV	SIG.NAME	COLOR	F	X	Y
B	01	1	WMPRESO3	9			
	02	0	KEY				
B	03	1	BLKDSP1	1			
B	04	1	NTRMDATA	5			
B	05	1	BADRSTRT	4			
B	06	1	BULBDPH1	8			
B	07	1	PHASING	R			
B	08	1	BULBPBG3	6			
B	09	1	MSEC	2			
B	10	1	DIFF	0			
B	11	1	FRAM	7			
B	12	1	B-REHEAR	8-R			
B	13	1	BULBPBH3	6-2			
B	14	1	OFS DISP	9-5			
B	15	1	CODEFR/S	1-5			
B	16	1	PBULBHMS	9-4			
B	17	1	ADCDATAE	4-1			
B	18	1	BULBDPN1	9-8			
B	19	1	SLAV	0-1			
B	20	1	UNAS B	9-R			
B	21	1	BULBPBL5	1-R			
B	22	1	BULBDPP1	9-6			
B	23	1	ADCDATAD	1-6			
B	24	1	PBULBHMS	9-2			
B	25	1	DISPEN7	1-2			
B	26	1	DISPEN1	9-0			
B	27	1	WMPRESO4	1-0			
B	28	1	DISPENO	8-5			
B	29	1	STOREOFS	4-8			
B	30	1	DISPEN2	5-R			
B	31	1	BLKDSPO	4-R			
B	32	1	DISPEN3	5-6			
B	33	1	BLKDSP2	4-6			
B	34	1	HOLD	5-2			
B	35	1	LOCKSLOW	4-2			

./.

GR: 97 (CONTINUATION)
RACK ELEMENTS LOWER PART

EL: 92 (CONTINUATION)

TYPE	PT	LV	SIG.NAME	COLOR	F	X	Y
B	36	1	NTRMDATB	5-0			
B	37	1	BLKDSP3	4-0			
B	38	1	BULBDPL1	8-6			
B	39	1	DISPEN4	6-R			
B	40	1	BULBPBK5	8-2			
B	41	1	BULBDPA0	2-R			
B	42	1	NTRMDATC	8-0			
B	43	1	SVPCII	0-R			
B	44	1	BLKDSP4	6-0			
B	45	1	PBULBHMS	2-0			
B	46	1	BLKDSP5	9-1-0			
B	47	1	DISPEN6	4-5-0			
B	48	1	DISPEN5	8-R-0			
	49	0	KEY				
B	50	1	BLKDSP7	6-2-0			

EL: 93 CONN. ASS. TO MAIN PROGR. (JIII)

TYPE	PT	LV	SIG.NAME	COLOR	F	X	Y
B	01	1	NTRMDATD	9			
B	02	1	ADCDATAC	1			
	03	0	KEY				
B	04	1	MAST	5			
B	05	1	USER B	4			
B	06	1	SVPCIII	8			
B	07	1	ADCDATAB	R			
B	08	1	BULBPBM5	6			
B	09	1	ADCDATAA	2			
B	10	1	BLOCATOR	0			
B	11	1	REC	7			
B	12	1	EDIT	8-R			
B	13	1	BPKMMPRG	6-2			
B	14	1	GENRUN	9-5			
B	15	1	TX	1-5			
B	16	1	SYNC PLT	9-4			
B	17	1	FAST FWD	4-1			
B	18	1	BEDMMPRG	9-8			
B	19	1	PBB	8-1			
B	20	1	B-RECENB	9-R			
B	21	1	PBPLAY	1-R			
B	22	1	PBREC	9-6			
B	23	1	GEN=MAST	1-6			
B	24	1	O SW	9-2			
B	25	1	PLAY	1-2			
B	26	1	BLKDSP6	9-0			
B	27	1	DISPEN8	1-0			
B	28	1	KB	8-5			
B	29	1	BLKDSP8	4-8			
B	30	1	DISEND9+	5-R			
B	31	1	PB3	4-R			

./.

GR: 97 (CONTINUATION)
RACK ELEMENTS LOWER PART

EL: 93 (CONTINUATION)

TYPE	PT	LV	SIG.NAME	COLOR	F	X	Y
B	32	1	PBC	5-6			
B	33	1	DISEND9-	4-6			
B	34	1	PB5	5-2			
B	35	1	PBO	4-2			
B	36	1	PBE	5-0			
B	37	1	BULBDPS2	4-0			
B	38	1	PARKED	8-6			
B	39	1	BULBDPT2	6-R			
B	40	1	STOP	8-2			
B	41	1	+10 SW	2-R			
B	42	1	BULBDPU2	8-0			
B	43	1	SYNC D	0-R			
B	44	1	BPILMPRG	6-0			
B	45	1	FAST REW	2-0			
B	46	1	BLKMMPRG	9-1-0			
B	47	1	SYNC A	4-5-0			
B	48	1	PB6	8-R-0			
B	49	1	PB2	6-2-0			
	50	0	KEY				

EL: 94 CONN. ASS. TO MAIN PROGR. (J I)

TYPE	PT	LV	SIG.NAME	COLOR	F	X	Y
L	01	1	O L	*			

EL: 95 CONN. ASS. TO MAIN PROGR. (J II)

TYPE	PT	LV	SIG.NAME	COLOR	F	X	Y
L	01	1	O L	*			

EL: 96 CONN. ASS. TO MAIN PROGR. (JIII)

TYPE	PT	LV	SIG.NAME	COLOR	F	X	Y
L	01	1	O L	*			

```
*****************************************************************************************************************************
*  S T U D E R  *      L O C A T I O N     P I N     L I S T       *   82/01/08 * 15:12      *   P A G E      5    *
*****************************************************************************************************************************
TAPE LOCK SYSTEM 2000 A80: MASTER CTRL, PARALLEL PROGRAMMER   1.228.375.00                  79-10-30
```

GR: 98
RACK ELEMENTS UPPER PART
****

EL: 01 HEADPLUG/CHANNEL SUPPLY

TYPE	PT	LV	SIG.NAME	COLOR	F	X	Y
L	01	1	AC2MOD	3			
L	02	1	AC2	3			

EL: 02 HEADPLUG/CHANNEL SUPPLY

TYPE	PT	LV	SIG.NAME	COLOR	F	X	Y
L	01	1	AC1MOD	6			
L	02	1	AC1	6			

EL: 03 HEADPLUG/CHANNEL SUPPLY

TYPE	PT	LV	SIG.NAME	COLOR	F	X	Y
A	01	1	ERAHDSCR	4			
A	02	1	ERASEHD2	9			
A	03	1	ERASEHD1	6			
	04	0	KEY				
WQ	05	3	GROUND98	4			
A	06	1	RECHDSCR	4			
A	07	1	RECHD2	9			
A	08	1	RECHD1	6			
W	09	3	GROUND98				
W	10	3	GROUND98				
W	11	3	GROUND98				
W	12	3	GROUND98				
W	13	3	GROUND98				
A	14	1	REPRDSCR	4			
A	15	1	REPRD0.0	U			
A	16	1	REPRD2	6			
A	17	1	REPRD1	2			
W	18	3	GROUND98				
W	19	3	GROUND98				
W	20	3	GROUND98				
W	21	3	GROUND98				
W	22	3	GROUND98				
W	23	3	GROUND98				
W	24	3	GROUND98				
W	25	3	GROUND98				
W	26	3	GROUND98				
W	27	3	GROUND98				
W	28	3	GROUND98				
W	29	3	GROUND98				
W	30	3	GROUND98				
W	31	3	GROUND98				
W	32	3	GROUND98				
W	33	3	GROUND98				
A	34	1	O-AC1	9			
A	35	1	AC1	6			
A	36	1	O-AC2	9			
A	37	1	AC2	3			

./.

GR: 98 (CONTINUATION)
RACK ELEMENTS UPPER PART
****

EL: 03 (CONTINUATION)

TYPE	PT	LV	SIG.NAME	COLOR	F	X	Y
A	38	1	O-BIAS	9			
A	39	1	YAC-BIAS	1			
A	40	1	YAC-ERAS	9			
A	41	1	O-ERASE	8			
A	42	1	Y-RECMD	2			
A	43	1	S-LOWACH	9			
A	44	1	Y-MUTEMD	5			
A	45	1	O-ERASE	2			
A	46	1	CCSUPVIS	3			
	47	1					
	48	1					
	49	1					
	50	0	KEY				

EL: 04 CHASSIS, ELEMENT 98

TYPE	PT	LV	SIG.NAME	COLOR	F	X	Y
L	01	1	GROUND98	4			

EL: 11 MASTER INPUT/REPRO OUTPUT

TYPE	PT	LV	SIG.NAME	COLOR	F	X	Y
L	01	1	SYMCODSC	0			

EL: 12 MASTER INPUT/REPRO OUTPUT

TYPE	PT	LV	SIG.NAME	COLOR	F	X	Y
L	01	1	SYMCODSC	0			
L	02	1	SYMCOD01	2			
L	03	1	SYMCOD02	3			

EL: 13 MASTER INPUT/REPRO OUTPUT

TYPE	PT	LV	SIG.NAME	COLOR	F	X	Y
L	01	1	RECINSCR	0			

EL: 14 MASTER INPUT/REPRO OUTPUT

TYPE	PT	LV	SIG.NAME	COLOR	F	X	Y
L	01	1	RECINSCR	0			
L	02	1	RECINPA	2			
L	03	1	RECINPB	3			

GR: 98 (CONTINUATION)
RACK ELEMENTS UPPER PART
****

EL: 15 MASTER INPUT/REPRO OUTPUT

TYPE	PT	LV	SIG.NAME	COLOR	F	X	Y
L	01A	1	O L	0			
L	02	1	RECINPA	2			
L	02A	1	RECCOD1	2			
L	03	1	RECINPB	3			
L	03A	1	RECCODTM	3			
L	04A	1	RECCOD2	4			

EL: 23 GENERATOR LINE INPUT

TYPE	PT	LV	SIG.NAME	COLOR	F	X	Y
L	01	1	EXGENSCR	0			

EL: 24 GENERATOR LINE INPUT

TYPE	PT	LV	SIG.NAME	COLOR	F	X	Y
L	01	1	EXGENSCR	0			
L	02	1	EXGENINA	2			
L	03	1	EXGENINB	3			

EL: 25 GENERATOR LINE INPUT

TYPE	PT	LV	SIG.NAME	COLOR	F	X	Y
L	01A	1	O L	0			
L	02	1	EXGENINA	2			
L	02A	1	EXGENIN1	2			
L	03	1	EXGENINB	3			
L	03A	1	EXGENTM	3			
L	04A	1	EXGENIN2	4			

EL: 61 CODE CHANNEL REMOTE A80

TYPE	PT	LV	SIG.NAME	COLOR	F	X	Y
	01	0	KEY				
B	02	1	+10	2			
B	03	1	B-CCHREP	3			
B	04	1	B-CCHRDY	4			
B	05	1	B-CCHREC	5			
B	06	1	BBPRES09	6			
B	07	1	B EXTREC	7			
	08	1	RESDRIV1				
B	09	1	Y3BPS	8			
B	10	1	X3BPS	2			
B	11	1	Y1BPS	1			
B	12	1	Y2BPS	9			
B	13	1	X2BPS	3			
B	14	1	X1BPS	4			
B	15	1	BBPRES11	5			

./.

```
*****************************************************************************************************************************
*  S T U D E R  *      L O C A T I O N     P I N     L I S T       *   82/01/08 * 15:12      *   P A G E      6    *
*****************************************************************************************************************************
TAPE LOCK SYSTEM 2000 A80: MASTER CTRL, PARALLEL PROGRAMMER   1.228.375.00                  79-10-30
```

GR: 98 (CONTINUATION)
RACK ELEMENTS UPPER PART
****

EL: 61 (CONTINUATION)

TYPE	PT	LV	SIG.NAME	COLOR	F	X	Y
B	16	1	BBPRES10	6			
B	17	1	B-OUT=IN	7			
B	18	1	B-CCHSAF	8			
B	19	1	B-CCHSYN	9			
B	20	1	O L	0			
B	21	1	O L	0			
B	22	1	O L	0			
B	23	1	BPSUPVIS	1			
	24	1					
	25	1					
	26	1					
	27	1					
	28	1					
	29	1					
	30	1					
	31	1					
	32	1					
	33	1					
B	34	1	NEMGSTOP	4			
	35	0	KEY				
B	36	1	X4BPS	2			
B	37	1	X5BPS	3			

EL: 71 MASTER CONTROL OUTPUT

TYPE	PT	LV	SIG.NAME	COLOR	F	X	Y
B	01	1	O L	0			
	02	0	KEY				
B	03	1	+10	1			
B	04	1	MPWRON	5			
B	05	1	LKMODDR2	2			
B	06	1	PARKEDDR	3			
B	07	1	EXTRECCM	4			
B	08	1	MCSUPVIS	1			
	09	1					
B	10	1	O K	0			
B	11	1	O K	0			
B	12	1	+24	2			
B	13	1	+24	3			
B	14	1	O L	0			
B	15	1	MCRECEDR	4			
B	16	1	MCZSETDR	5			
B	17	1	MCKCUTDR	6			
B	18	1	MCRESDR1	7			
B	19	1	MCDAT1DR	8			
B	20	1	MCDAT2DR	9			
B	21	1	MCMUTEDR	1			
B	22	1	MCDATRDY	2			
B	23	1	MCRESDR2	3			
B	24	1	MCDATODR	4			

./.

GR: 98 (CONTINUATION)
RACK ELEMENTS UPPER PART
****

EL: 71 (CONTINUATION)

TYPE	PT	LV	SIG.NAME	COLOR	F	X	Y
	25	0	KEY				

EL: 81 ADDITIONAL POWER CONNECTOR

TYPE	PT	LV	SIG.NAME	COLOR	F	X	Y
	01	1					
	02	0	KEY				
	03	1					
	04	1					
	05	1					
	06	1					
	07	1					
A	08	1	0.0AD150	0			
A	09	1	0.0AD150	0			
A	10	1	0.0AD150	0			
A	11	1	O L	0			
A	12	1	O L	0			
A	13	1	O L	0			
A	14	1					
A	15	1					
A	16	1	+10	5			
A	17	1	+10	5			
A	18	1	+10	5			
A	19	1	+10AD150	5			
A	20	1	+10AD150	5			
A	21	1	+10AD150	5			
	22	0	KEY				
	23	1					
	24	1					
	25	1					

EL: 91 CONNECTOR ASS. TO POWER SUPPLY

TYPE	PT	LV	SIG.NAME	COLOR	F	X	Y
A	01	1	-10V 150	6			
	02	0	KEY				
A	03	1	-10V 150	6			
A	04	1	-10V 150	6			
A	05	1	O L	0			
A	06	1	O L	0			
A	07	1	O L	0			
A	08	1	O L	0			
A	09	1	O L	0			
A	10	1	O L	0			
A	11	1%	0.0IN150	0			
A	12	1%	0.0IN150	0			
A	13	1%	0.0IN150	0			
	14	1					
	15	1					

./.

GR: 98 (CONTINUATION)
RACK ELEMENTS UPPER PART
****

EL: 91 (CONTINUATION)

TYPE	PT	LV	SIG.NAME	COLOR	F	X	Y
A	16	1	+10	5			
A	17	1	+10	5			
A	18	1	+10	5			
A	19	1	+10	5			
A	20	1	+10	5			
A	21	1	+10	5			
	22	0	KEY				
A	23	1	+31V 150	9			
A	24	1	+31V 150	9			
A	25	1	+31V 150	9			

```
*****************************************************************************************************************
*   S T U D E R   *      L O C A T I O N     P I N     L I S T       *   82/01/08 * 15:12      *   P A G E      7   *
*****************************************************************************************************************
TAPE LOCK SYSTEM 2000 A80: MASTER CTRL, PARALLEL PROGRAMMER   1.228.375.00              79-10-30

GR: 99   1.228.399.00       W0019
PROCESSOR BACK PANEL
*****************************************

EL: 01  WRAP CONNECTOR J01.1, 3*32 PIN
-------------------------------------
TYPE PT  LV SIG.NAME COLOR F    X      Y
---- --- -- -------- ----- - ----- -----
WP   01A 1     0 L
WPQ  01B 1     0 L     0
WP   01C 1     0 L
W    02A 3  SYNCBOUT
WQ   02B 3  EXFREQ1  2
W    02C 3  EXTSYNC
W    03A 3  MP2DMM
WQ   03B 3  EXFREQTM 3
W    03C 3  PSYNC -S
W    04A 3  MP3DMM
WQ   04B 3  EXFREQ2  4
W    04C 3  PCBALQ0
W    05A 3  MDMFAILM
W    05B 3  CLRADRCT
W    05C 3  CCDGENO
W    06A 3  MDIRDWNM
W    06B 3  6.25  HZ
W    06C 3  EXGENOUT
W    07A 3  MPSYNCM
W    07B 3  CRACTLT
W    07C 3  PCPGDATA
W    08A 3  ARPOUT-A
W    08B 3  800   HZ
W    08C 3  PCPGDATB
W    09A 3  ARPOUT-B
W    09B 3  ARPOUT-D
W    09C 3  PCPGDATC
W    10A 3  ARPOUT-C
W    10B 3  ARPOUT-E
W    10C 3  PERMNTM4
W    11A 3  PSYNC -M
W    11B 3  ARPOUT-F
W    11C 3  PMNTM  4
W    12A 3
W    12B 3  - 5
W    12C 3  - 5
W    13A 3  ACPGDATH
W    13B 3  ACPGDATG
W    13C 3  PMNTM  2
W    14A 3
W    14B 3  -12
W    14C 3  -12
W    15A 3
W    15B 3    0 A
W    15C 3    0 A
W    16A 3
W    16B 3  +12
W    16C 3  +12
W    17A 3  ACIFGRP
W    17B 3  ACPGDATA
W    17C 3  ACSPGRP3
                                                                                                        ./.

GR: 99   (CONTINUATION)
PROCESSOR BACK PANEL
*****************************************

EL: 01   (CONTINUATION)
-------------------------------------
TYPE PT  LV SIG.NAME COLOR F    X      Y
---- --- -- -------- ----- - ----- -----
W    18A 3  PCBALQ2
W    18B 3  ACPGDATB
W    18C 3  819.2KHZ
W    19A 3
W    19B 3    0 K
W    19C 3    0 K
W    20A 3
W    20B 3  +24
W    20C 3  +24
W    21A 3  ACSPCAP
W    21B 3  ACPGDATC
W    21C 3  13.1 MHZ
W    22A 3  NFRQCTLD
W    22B 3  ACPGDATD
W    22C 3  ADDRCT-A
W    23A 3  PCSPGRP2
W    23B 3  ACPGDATE
W    23C 3  ADDRCT-B
W    24A 3  PCBTESTC
W    24B 3  P3DM  -M
W    24C 3  ADDRCT-C
W    25A 3  BTCTA -M
W    25B 3  P2DM  -M
W    25C 3  ADDRCT-D
W    26A 3  BTCTB -M
W    26B 3  DMFAIL-M
W    26C 3  ADDRCT-E
W    27A 3  BTCTC -M
W    27B 3  DIRDWN-M
W    27C 3  ADDRCT-F
W    28A 3  BTCTD -M
W    28B 3  ACSPIFC1
W    28C 3  ADDRCT-G
W    29A 3  LDADDRCT
W    29B 3  ARSEROUT
W    29C 3  ADDRCT-H
W    30A 3  ENTADRCT
W    30B 3  EXFRQDAT
W    30C 3  ADDRCT-I
W    31A 3  BTCTG -M
W    31B 3  ACPGDATF
W    31C 3  ADDRCT-K
WP   32A 1  +10
WP   32B 1  +10
WP   32C 1  +10

GR: 99   (CONTINUATION)
PROCESSOR BACK PANEL
*****************************************

EL: 02  WRAP CONNECTOR J02.1, 3*32 PIN
-------------------------------------
TYPE PT  LV SIG.NAME COLOR F    X      Y
---- --- -- -------- ----- - ----- -----
WP   01A 1     0 L
WP   01B 1     0 L
WP   01C 1     0 L
W    02A 3
W    02B 3  SYNCBOUT
W    02C 3  PERCAPFR
W    03A 3
W    03B 3
W    03C 3  P3DM  -S
W    04A 3
W    04B 3  MP3DMM
W    04C 3  CAPMUX
W    05A 3  SPOOLMOD
W    05B 3
W    05C 3
W    06A 3
W    06B 3
W    06C 3  PCSPGRP3
W    07A 3
W    07B 3  MPSYNCM
W    07C 3
W    08A 3
W  + 08B 3  REPRECMX
W    08C 3
W    09A 3
W    09B 3
W    09C 3  PCPGDATA
W    10A 3
W    10B 3  PEDITLD
W    10C 3  PCPGDATB
W    11A 3
W    11B 3
W    11C 3  PCPGDATC
W    12A 3
W    12B 3  - 5
W    12C 3  - 5
W    13A 3
W    13B 3  CAPLATEN
W    13C 3  DMOSCI-S
W    14A 3
W    14B 3  -12
W    14C 3  -12
W    15A 3
W    15B 3    0 A
W    15C 3    0 A
W    16A 3
W    16B 3  +12
W    16C 3  +12
W    17A 3
W    17B 3  PMNTM  2
W    17C 3  YMOVETLS
                                                                                                        ./.
```

```
*****************************************************************************************************************
*   S T U D E R   *      L O C A T I O N     P I N     L I S T       *   82/01/08 * 15:12      *   P A G E      8   *
*****************************************************************************************************************
TAPE LOCK SYSTEM 2000 A80: MASTER CTRL, PARALLEL PROGRAMMER   1.228.375.00              79-10-30

GR: 99   (CONTINUATION)
PROCESSOR BACK PANEL
*****************************************

EL: 02   (CONTINUATION)
-------------------------------------
TYPE PT  LV SIG.NAME COLOR F    X      Y
---- --- -- -------- ----- - ----- -----
W    18A 3  ACPGDATA
W    18B 3  819.2KHZ
W    18C 3
W    19A 3
W    19B 3    0 K
W    19C 3    0 K
W    20A 3
W    20B 3  +24
W    20C 3  +24
W    21A 3  13.1 MHZ
W    21B 3  ACSPCAP
W    21C 3  P1DM  -S
W    22A 3  ACPGDATB
W    22B 3  NFRQCTLD
W    22C 3  PMNTM  4
W    23A 3  ACPGDATC
W    23B 3
W    23C 3
W    24A 3
W    24B 3
W    24C 3  CAP-EN
W    25A 3
W    25B 3
W    25C 3  BTCTA -S
W  + 26A 3  RECLATEN
W    26B 3
W    26C 3  BTCTB -S
W    27A 3  BTCTC -M
W    27B 3  PCPGDATH
W    27C 3  BTCTC -S
W    28A 3
W    28B 3
W    28C 3  BTCTD -S
W    29A 3
W    29B 3
W    29C 3  BTCTE -S
W    30A 3
W    30B 3
W    30C 3  BTCTF -S
W    31A 3
W    31B 3  ARSEROUT
W    31C 3  BTCTG -S
WP   32A 1  +10
WP   32B 1  +10
WP   32C 1  +10

GR: 99   (CONTINUATION)
PROCESSOR BACK PANEL
*****************************************

EL: 03  WRAP CONNECTOR J03.1, 3*32 PIN
-------------------------------------
TYPE PT  LV SIG.NAME COLOR F    X      Y
---- --- -- -------- ----- - ----- -----
WP   01A 1     0 L
WP   01B 1     0 L
WP   01C 1     0 L
W    02A 3  MP2DMM
W    02B 3  200   HZ
W    02C 3  P2DM  -S
W    03A 3  MP3DMM
W    03B 3  6.25  HZ
W    03C 3  P3DM  -S
W    04A 3  P4DM  -M
W    04B 3  12.5  HZ
W    04C 3  P4DM  -S
W    05A 3  NDMCOD-M
W    05B 3  25    HZ
W    05C 3  NDMCOD-S
W    06A 3  MDIRDWNM
W    06B 3  50    HZ
W    06C 3  DIRDWN-S
W    07A 3  MPSYNCM
W    07B 3  100   HZ
W    07C 3  PSYNC -S
W    08A 3  FRAMSL B
W    08B 3  400   HZ
W    08C 3  800   HZ
W    09A 3  RAMMUX
W    09B 3  25.6 KHZ
W    09C 3  PCPGDATA
W    10A 3  PLAY  -M
W    10B 3  3.2  KHZ
W    10C 3  PCPGDATB
W    11A 3  + 5  ADD
W    11B 3  12.8 KHZ
W    11C 3  PCPGDATC
W    12A 3
W    12B 3  - 5
W    12C 3  - 5
W    13A 3  PMNTM  1
W    13B 3  204.8KHZ
W    13C 3  PERMNTM1
W    14A 3
W    14B 3  -12
W    14C 3  -12
W    15A 3
W    15B 3    0 A
W    15C 3    0 A
W    16A 3
W    16B 3  +12
W    16C 3  +12
W    17A 3  PMNTM  2
W    17B 3  1638 KHZ
W    17C 3  PERMNTM2
                                                                                                        ./.

GR: 99   (CONTINUATION)
PROCESSOR BACK PANEL
*****************************************

EL: 03   (CONTINUATION)
-------------------------------------
TYPE PT  LV SIG.NAME COLOR F    X      Y
---- --- -- -------- ----- - ----- -----
W    18A 3  PMNTM  3
W    18B 3  819.2KHZ
W    18C 3  PERMNTM3
W    19A 3
W    19B 3    0 K
W    19C 3    0 K
W    20A 3
W    20B 3  +24
W    20C 3  +24
W    21A 3  PMNTM  4
W    21B 3  13.1 MHZ
W    21C 3  PERMNTM4
W    22A 3  WLINE -M
W    22B 3  51.2 KHZ
W    22C 3  WLINE -S
W    23A 3  102.4KHZ
W    23B 3  NPPWRON
W    23C 3  TDATAM/S
W    24A 3  BTCTOF-M
W    24B 3  RLINE -B
W    24C 3  BTCTOF-S
W    25A 3  BTCTA -M
W    25B 3  RLINE -A
W    25C 3  BTCTA -S
W    26A 3  BTCTB -M
W    26B 3  ADDRCT-A
W    26C 3  BTCTB -S
W    27A 3  BTCTC -M
W    27B 3  ADDRCT-B
W    27C 3  BTCTC -S
W    28A 3  BTCTD -M
W    28B 3  ADDRCT-C
W    28C 3  BTCTD -S
W    29A 3  BTCTE -M
W    29B 3  ADDRCT-D
W    29C 3  BTCTE -S
W    30A 3  BTCTF -M
W    30B 3  ADDRCT-E
W    30C 3  BTCTF -S
W    31A 3  BTCTG -M
W    31B 3  ADDRCT-F
W    31C 3  BTCTG -S
WP   32A 1  +10
WP   32B 1  +10
WP   32C 1  +10
```

```
*****************************************************************************************************************************
*  S T U D E R  *      L O C A T I O N    P I N    L I S T      *   82/01/08 * 15:12     *  P A G E     9   *
*****************************************************************************************************************************
TAPE LOCK SYSTEM 2000 A80: MASTER CTRL, PARALLEL PROGRAMMER   1.228.375.00            79-10-30
```

GR: 99 (CONTINUATION)
PROCESSOR BACK PANEL
****

EL: 04 WRAP CONNECTOR J04.1, 3*32 PIN

TYPE	PT	LV	SIG.NAME	COLOR	F	X	Y
WP	01A	1	0 L				
WP	01B	1	0 L				
WP	01C	1	0 L				
W	02A	3	CLRADRCT				
W	02B	3	ACSP-09				
W	02C	3	COSTCKCT				
W	03A	3	ENTADRCT				
W	03B	3	ACPGAD04				
W	03C	3	NCOCKCT				
W	04A	3	CKACTLT				
W	04B	3	ACPGAD05				
W	04C	3	ACPGAD06				
W	05A	3	LDADDRCT				
W	05B	3	PBMASREG				
W	05C	3	ACPGAD07				
W	06A	3	ACPGAD00				
W	06B	3	CODOCT				
W	06C	3	ACPGAD08				
W	07A	3	ACPGAD01				
W	07B	3	LOADCKCT				
W	07C	3	ACPGAD09				
W	08A	3	ACPGAD02				
W	08B	3	WEACFLG				
W	08C	3	IFMUX-W				
W	09A	3	ACPGAD03				
W	09B	3	PROGSTOP				
W	09C	3	ACPGAD10				
W	10A	3	ACSPGRP4				
W	10B	3	ACSPGRP1				
W	10C	3	ACPGAD11				
W	11A	3	AREN1				
W	11B	3	ACSPGRP2				
W	11C	3	ACSPGRP3				
W	12A	3					
W	12B	3	- 5				
W	12C	3	- 5				
W	13A	3	AREN2				
W	13B	3	PMNTM 1				
W	13C	3	TESTFLGS				
W	14A	3					
W	14B	3	-12				
W	14C	3	-12				
W	15A	3					
W	15B	3	0 A				
W	15C	3	0 A				
W	16A	3					
W	16B	3	+12				
W	16C	3	+12				
W	17A	3	NACRES1				
W	17B	3	ACPGIRPT				
W	17C	3	ACIFGRP				

./.

GR: 99 (CONTINUATION)
PROCESSOR BACK PANEL
****

EL: 04 (CONTINUATION)

TYPE	PT	LV	SIG.NAME	COLOR	F	X	Y
W	18A	3	ACPGDATA				
W	18B	3	PMNTM 3				
W	+ 18C	3	ADDRCT-A				
W	19A	3					
W	19B	3	0 K				
W	19C	3	0 K				
W	20A	3					
W	20B	3	+24				
W	20C	3	+24				
W	21A	3	ACPGDATB				
W	21B	3	PMNTM 4				
W	+ 21C	3	ADDRCT-B				
W	22A	3	ACPGDATC				
W	+ 22B	3	PERMNTM4				
W	+ 22C	3	ADDRCT-C				
W	23A	3	ACPGDATD				
W	23B	3	PPWRON				
W	+ 23C	3	ADDRCT-D				
W	24A	3	ACPGDATE				
W	24B	3	ACIAPFLG				
W	+ 24C	3	ADDRCT-E				
W	25A	3	ACPGDATF				
W	25B	3	+ 5 ADD				
W	+ 25C	3	ADDRCT-F				
W	26A	3	ACPGDATG				
W	+ 26B	3	ARPOUT-A				
W	+ 26C	3	ADDRCT-G				
W	27A	3	ACPGDATH				
W	+ 27B	3	ARPOUT-B				
W	+ 27C	3	ADDRCT-H				
W	28A	3	ACPGDATI				
W	+ 28B	3	ARPOUT-C				
W	+ 28C	3	ADDRCT-I				
W	29A	3	ACPGDATK				
W	+ 29B	3	ARPOUT-D				
W	+ 29C	3	ADDRCT-K				
W	30A	3	ACPGDATL				
W	+ 30B	3	ARPOUT-E				
W	30C	3	ACINSTEN				
W	31A	3	ACPGDATM				
W	+ 31B	3	ARPOUT-F				
W	31C	3	ACPGDATN				
WP	32A	1	+10				
WP	32B	1	+10				
WP	32C	1	+10				

GR: 99 (CONTINUATION)
PROCESSOR BACK PANEL
****

EL: 05 WIRING WITH: GROUND

TYPE	PT	LV	SIG.NAME	COLOR	F	X	Y
WPQ	01A	1%	0 L	4			
WPQ	01B	1%	0 L	4			
WPQ	01C	1%	0 L	4			
W	02A	3					
W	02B	3	NOMASTER				
W	02C	3					
W	03A	3	MP2DMM				
W	03B	3	NINVCTR1				
W	03C	3	P2DM -S				
W	04A	3	MP3DMM				
W	04B	3	NOCODE-S				
W	04C	3	P3DM -S				
W	05A	3	PPWRON				
W	05B	3	NINVCTR2				
W	05C	3	NFRAMSLB				
W	06A	3	ACIFMUXA				
W	06B	3	ACBIF1				
W	06C	3					
W	07A	3	MPSYNCM				
W	07B	3	ACBIF2				
W	07C	3	PSYNC -S				
W	08A	3	MDMFAILM				
W	08B	3	ACBIF3				
W	08C	3	DMFAIL-S				
W	09A	3	DIRUP -M				
W	09B	3	CODOCT				
W	09C	3	DIRUP -S				
W	10A	3	DMCOD -M				
W	10B	3	PERDATA				
W	10C	3	DMCOD -S				
W	11A	3	BTCTOF-M				
W	11B	3	ARPOUT-A				
W	11C	3	BTCTOF-S				
W	12A	3					
W	12B	3	- 5				
W	12C	3	- 5				
W	13A	3	G-SFRSLA				
W	13B	3	G-SFRSLB				
W	13C	3					
W	14A	3					
W	14B	3	-12				
W	14C	3	-12				
W	15A	3					
W	15B	3	0 A				
W	15C	3	0 A				
W	16A	3					
W	16B	3	+12				
W	16C	3	+12				
W	17A	3	ACIFMUXB				
W	17B	3					
W	17C	3	FRAMSL B				

./.

```
*****************************************************************************************************************************
*  S T U D E R  *      L O C A T I O N    P I N    L I S T      *   82/01/08 * 15:12     *  P A G E    10   *
*****************************************************************************************************************************
TAPE LOCK SYSTEM 2000 A80: MASTER CTRL, PARALLEL PROGRAMMER   1.228.375.00            79-10-30
```

GR: 99 (CONTINUATION)
PROCESSOR BACK PANEL
****

EL: 05 (CONTINUATION)

TYPE	PT	LV	SIG.NAME	COLOR	F	X	Y
W	18A	3	ACPGDATA				
W	18B	3					
W	18C	3	FRAMSL A				
W	19A	3					
W	19B	3	0 K				
W	19C	3	0 K				
W	20A	3					
W	20B	3	+24				
W	20C	3	+24				
W	21A	3	ACPGDATB				
W	21B	3	PMNTM -4				
W	21C	3	WLINE -S				
W	22A	3	ACPGDATC				
W	22B	3	ACSPGRP1				
W	22C	3	WLINE -M				
W	23A	3	ACPGDATD				
W	23B	3	IFMUX-W				
W	23C	3	RLINE -A				
W	24A	3	ACPGDATE				
W	24B	3					
W	24C	3	RLINE -B				
W	25A	3	ACPGDATF				
W	25B	3	BTCTA -M				
W	25C	3	BTCTA -S				
W	26A	3	ACPGDATG				
W	26B	3	BTCTB -M				
W	26C	3	BTCTB -S				
W	27A	3	ACPGDATH				
W	27B	3	BTCTC -M				
W	27C	3	BTCTC -S				
W	28A	3	ARIF-Y				
W	28B	3	BTCTD -M				
W	28C	3	BTCTD -S				
W	29A	3	LOADCKCT				
W	29B	3	BTCTE -M				
W	29C	3	BTCTE -S				
W	30A	3	NCOCKCT				
W	30B	3	BTCTF -M				
W	30C	3	BTCTF -S				
W	31A	3	ACSERDAT				
W	31B	3	BTCTG -M				
W	31C	3	BTCTG -S				
WP	32A	1	+10				
WP	32B	1	+10				
WP	32C	1	+10				

GR: 99 (CONTINUATION)
PROCESSOR BACK PANEL
****

EL: 06 WRAP CONNECTOR J06.1, 3*32 PIN

TYPE	PT	LV	SIG.NAME	COLOR	F	X	Y
WP	01A	1	0 L				
WP	01B	1	0 L				
WP	01C	1	0 L				
WP	01D	1	0 L				
WP	01E	1	0 L				
WP	01F	1	0 L				
W	02A	3	PCDATRDY				
W	02B	3	PCSPGRPA				
W	02C	3	TESTRAM				
WQ	02D	3%	+0.0CAP1 0				
W	02E	3					
W	02F	3					
W	03A	3	PCDATACC				
W	03B	3	PPBPRESS				
W	03C	3	PCPGAD00				
WQ	03D	3	+24CAP1 9				
WQ	03E	3	Y-SYNC 1 1				
W	03F	3					
W	04A	3	RECLATEN				
W	04B	3	CAPMUX				
W	04C	3	PCTDCLR				
WQ	04D	3	Y-OUT 1 3				
WQ	04E	3	Y-SYNC 2 8				
W	04F	3					
W	05A	3	12.5 HZ				
W	05B	3	REPRECMX				
W	05C	3	PCEXPRRQ				
WQ	05D	3	Y-TACH-D 4				
WQ	05E	3	+0.0CAP2 0				
W	05F	3					
W	06A	3	WEPCFLG				
W	06B	3	50 HZ				
W	06C	3	PCSPGRP3				
W	06D	3					
WQ	06E	3	+5.8CAP1 5				
W	06F	3					
W	07A	3	+ 5 ADD				
W	07B	3	PCPGAD01				
W	07C	3	TIMLDEN				
W	07D	3					
WQ	07E	3	-5.8CAP1 6				
WQ	07F	3	S-CAPEXT 8				
W	08A	3	LDTRMCT				
W	08B	3	PCPGAD02				
W	08C	3	LDARDATA				
W	08D	3					
WQ	08E	3	R-SPLY-0 2				
WQ	08F	3	SPD-CTL1 1				
W	09A	3	PCBAL				
W	09B	3	PRIFTRXY				
W	09C	3	PCPGAD03				

./.

GR: 99 (CONTINUATION)
PROCESSOR BACK PANEL
****

EL: 06 (CONTINUATION)

TYPE	PT	LV	SIG.NAME	COLOR	F	X	Y
W	09D	3					
WQ	09E	3	R-SPLY-1 1				
WQ	09F	3	SPD-CTL2 2				
W	10A	3	PCDATINE				
W	10B	3	3.2 KHZ				
W	10C	3	PCPGAD04				
W	10D	3					
W	10E	3					
W	10F	3					
W	11A	3	PRGRON				
W	11B	3	TDLATEN1				
W	11C	3	PCPGAD05				
W	11D	3					
W	11E	3					
W	11F	3					
W	12A	3					
W	12B	3	- 5				
W	12C	3	- 5				
W	12D	3					
W	12E	3					
W	12F	3					
W	13A	3	NEMGSTOP				
W	13B	3	PMNTM 1				
W	13C	3	CAPLATEN				
W	13D	3					
W	13E	3					
W	13F	3					
W	14A	3					
W	14B	3	-12				
W	14C	3	-12				
W	14D	3					
W	14E	3					
W	14F	3					
W	15A	3					
W	15B	3	0 A				
W	15C	3	0 A				
W	15D	3					
W	15E	3					
W	15F	3					
W	16A	3					
W	16B	3	+12				
W	16C	3	+12				
W	16D	3					
W	16E	3					
W	16F	3					
W	17A	3	PCBSP				
W	17B	3	PMNTM 2				
W	17C	3	PCTAPFLG				
W	+ 17D	3	Y-TACH-D				
W	+ 17E	3	S-LOW				
W	+ 17F	3	CMD.ENB2				

./.

```
*   S T U D E R   *      L O C A T I O N     P I N     L I S T       *    82/01/08 * 15:12      *   P A G E     11    *
TAPE LOCK SYSTEM 2000 A80: MASTER CTRL, PARALLEL PROGRAMMER   1.228.375.00              79-10-30
```

GR: 99 (CONTINUATION)
PROCESSOR BACK PANEL

EL: 06 (CONTINUATION)

TYPE	PT	LV	SIG.NAME	COLOR	F	X	Y
W	18A	3	PCPGDATA				
W	18B	3	PMNTM 3				
W	18C	3	NPPWRON				
W	+ 18D	3	SPD-CTL1				
W	+ 18E	3	S-CAPEXT				
WQ	18F	3	K-CUTINH 3				
W	19A	3					
W	19B	3	0 K				
W	19C	3	0 K				
W	19D	3					
W	19E	3					
W	19F	3					
W	20A	3					
W	20B	3	+24				
W	20C	3	+24				
W	20D	3					
W	20E	3					
W	20F	3					
W	21A	3	PCPGDATB				
W	21B	3	PCPGADD6				
W	21C	3	PCPGADD9				
WQ	21D	3%	+0.0EMC1	0			
W	+ 21E	3	RECSTINH				
W	+ 21F	3	K-PRESS				
W	22A	3	PCPGDATC				
W	22B	3	TDLATEN2				
W	22C	3	PCPGAD10				
W	+ 22D	3	B-REW				
W	+ 22E	3	Y-MUTE				
W	+ 22F	3	Y-MOVE-D				
W	23A	3	PCPGDATD				
W	23B	3	BPLATEN				
W	23C	3	PCPGAD11				
WQ	23D	3	Y-MOD1	8			
WQ	23E	3	Y-STOP	3			
W	+ 23F	3	0 L				
W	24A	3	PCPGDATE				
W	24B	3	PCPGAD07				
W	24C	3	PCBPLTCL				
WQ	24D	3	Y-MOD2	1			
W	+ 24E	3	YPS-MOVE				
W	+ 24F	3	0 L				
W	25A	3	PCPGDATF				
W	25B	3	PCSPGRP2				
W	25C	3	PCBPWE				
WQ	25D	3	Y-RES3	2			
WQ	25E	3	+5.8EMC1	5			
W	+ 25F	3	0 L				
W	26A	3	PCPGDATG				
W	26B	3	PCPGAD08				
W	26C	3	TDCDMUX2				

./.

GR: 99 (CONTINUATION)
PROCESSOR BACK PANEL

EL: 06 (CONTINUATION)

TYPE	PT	LV	SIG.NAME	COLOR	F	X	Y
W	+ 26D	3	Y-CLK				
WQ	26E	3%	+0.0EMC2	0			
W	+ 26F	3	Y-FORW				
W	27A	3	PCPGDATH				
W	27B	3	TDCDMUX1				
W	27C	3	EXTFRQSL				
W	+ 27D	3	0 L				
W	+ 27E	3	+0.0CAP2				
W	+ 27F	3	K-RESET				
W	28A	3	PCPGDATI				
W	28B	3	PCPGDATN				
W	28C	3	NPINSTEN				
W	+ 28D	3	+0-TYPE1				
WQ	28E	3	S-CUTAUT	4			
WQ	28F	3	Y-RFLX	7			
W	29A	3	PCPGDATK				
W	29B	3	PCBTEST				
W	29C	3	NOCODE-S				
W	+ 29D	3	0 L				
WQ	29E	3	R-CUT- 1	3			
WQ	29F	3	Y-TRSP	8			
W	30A	3	PCPGDATL				
W	30B	3	RAMMUX				
W	30C	3	NOMASTER				
W	+ 30D	3	B-CUT				
WQ	30E	3	R-CUT- 3	2			
WQ	30F	3	TT1-ACT	1			
W	31A	3	PCPGDATM				
W	31B	3	FRPWRON				
W	31C	3	25 HZ				
W	+ 31D	3	CCSUPVIS				
WQ	31E	3	S-RES2	1			
WQ	31F	3	TT2-ACT	2			
WP	32A	1	+10				
WP	32B	1	+10				
WP	32C	1	+10				
WP	32D	1	+10				
WP	32E	1	+10				
WP	32F	1	+10				

EL: 07 WRAP CONNECTOR J07.1, 3*32 PIN

TYPE	PT	LV	SIG.NAME	COLOR	F	X	Y
WP	01A	1	0 L				
WP	01B	1	0 L				
WP	01C	1	0 L				
WPQ	01D	1	0 L	0			
WPQ	01E	1	0 L	0			
WP	01F	1	0 L				
W	02A	3	TRMADR0				

./.

GR: 99 (CONTINUATION)
PROCESSOR BACK PANEL

EL: 07 (CONTINUATION)

TYPE	PT	LV	SIG.NAME	COLOR	F	X	Y
W	02B	3	PCEXPR-1				
W	02C	3	TESTRAM				
WQ	02D	3	LKMODEDR	1			
WQ	02E	3	SYNCBDR	3			
W	02F	3					
W	03A	3	TRMADR1				
W	03B	3	PCEXPR-2				
W	03C	3	TIMLDEN				
WQ	03D	3	EDMODEDR	8			
WQ	03E	3	SNCPLTDR	4			
W	03F	3					
W	04A	3	TRMADR2				
W	04B	3	PCEXPR-3				
W	04C	3	ARPOUT-D				
WQ	04D	3	PARKEDDR	2			
WQ	04E	3	EDLEADDR	7			
W	04F	3					
W	05A	3	TRMADR3				
W	05B	3	PCEXPRRQ				
W	05C	3	ARPOUT-C				
WQ	05D	3	EXTRECCM	7			
W	05E	3					
W	05F	3					
W	06A	3	TRMADR4				
W	06B	3	WEPCFLG				
W	06C	3	ARPOUT-B				
W	06D	3					
WQ	06E	3	STARTDR1	1			
W	06F	3					
W	07A	3	TRMADR5				
W	07B	3	LDARDATA				
W	07C	3	ARPOUT-A				
W	07D	3					
WQ	07E	3	STARTDR2	6			
W	07F	3					
W	08A	3	TRMADR6				
W	08B	3	LDTRMCT				
W	08C	3	WEACFLG				
WQ	08D	3	0 K	0			
WQ	08E	3	STARTDR3	9			
W	08F	3					
W	09A	3	NTRMDATA				
W	09B	3	PCDATINA				
W	09C	3	PCBAL				
WQ	09D	3	+24	2			
WQ	09E	3	STARTDR4	4			
W	09F	3					
W	10A	3	NTRMDATB				
W	10B	3	PCDATINB				
W	10C	3	PEDITLD				
WQ	10D	3%	+0.0MC1	0			

./.

```
*   S T U D E R   *      L O C A T I O N     P I N     L I S T       *    82/01/08 * 15:12      *   P A G E     12    *
TAPE LOCK SYSTEM 2000 A80: MASTER CTRL, PARALLEL PROGRAMMER   1.228.375.00              79-10-30
```

GR: 99 (CONTINUATION)
PROCESSOR BACK PANEL

EL: 07 (CONTINUATION)

TYPE	PT	LV	SIG.NAME	COLOR	F	X	Y
WQ	10E	3	CMD.ENB2	4			
WQ	10F	3	+24MC3	9			
W	11A	3	NTRMDATC				
W	11B	3	PCDATINC				
W	11C	3	ACSPGRP2				
WQ	11D	3	B-REW	2			
WQ	11E	3	CMD.ENB1	3			
WQ	11F	3	LOC.ENB	2			
W	12A	3					
W	12B	3	- 5				
W	12C	3	- 5				
W	12D	3					
W	12E	3					
W	12F	3					
W	13A	3	NTRMDATD				
W	13B	3	PCDATIND				
W	13C	3	TESTFLGS				
WQ	13D	3	B-FORW	4			
WQ	13E	3	S-LOW	1			
WQ	13F	3	S-RFW	4			
W	14A	3					
W	14B	3	-12				
W	14C	3	-12				
W	14D	3					
W	14E	3					
W	14F	3					
W	15A	3					
W	15B	3	0 A				
W	15C	3	0 A				
W	15D	3					
W	15E	3					
W	15F	3					
W	16A	3					
W	16B	3	+12				
W	16C	3	+12				
W	16D	3					
W	16E	3					
W	16F	3					
W	17A	3	12.8 KHZ				
W	17B	3	PMNTM 2				
W	17C	3	819.2KHZ				
WQ	17D	3	B-REPR	2			
WQ	17E	3	Y-LOW	3			
WQ	17F	3	S-FORW	2			
W	18A	3	PCPGDATA				
W	18B	3	ACPGDATA				
W	18C	3	PCBALQ2				
WQ	18D	3	B-STOP	3			
WQ	18E	3	K-PRESS	2			
WQ	18F	3	S-REPR	3			
W	19A	3					

./.

GR: 99 (CONTINUATION)
PROCESSOR BACK PANEL

EL: 07 (CONTINUATION)

TYPE	PT	LV	SIG.NAME	COLOR	F	X	Y
W	19B	3	0 K				
W	19C	3	0 K				
W	19D	3					
W	19E	3					
W	19F	3					
W	20A	3					
W	20B	3	+24				
W	20C	3	+24				
W	20D	3					
W	20E	3					
W	20F	3					
W	21A	3	PCPGDATB				
W	21B	3	ACPGDATB				
W	21C	3	PMNTM 4				
WQ	21D	3	B-REC	8			
WQ	21E	3	RECSTINH	7			
WQ	21F	3	S-STOP	8			
W	22A	3	PCPGDATC				
W	22B	3	ACPGDATC				
W	22C	3	PCBPMUXA				
WQ	22D	3	B-CUT	1			
WQ	22E	3	Y-MUTE	4			
WQ	22F	3	S-REC	1			
W	23A	3	PCPGDATD				
W	23B	3	ACPGDATD				
W	23C	3	PCBPMUXB				
WQ	23D	3	B-MONO	2			
WQ	23E	3	Y-MONO	3			
WQ	23F	3	S-CUT	2			
W	24A	3	PCPGDATE				
W	24B	3	ACPGDATE				
W	24C	3	PCBTESTC				
WQ	24D	3	B-FAD	3			
WQ	24E	3	+24MC2	9			
WQ	24F	3	S-MONO	3			
W	25A	3	PCPGDATF				
W	25B	3	ACPGDATF				
W	25C	3	PCBTESTA				
WQ	25D	3	+0.0MC2	0			
WQ	25E	3	Y-MOVE-1	1			
WQ	25F	3	FAD-1	4			
W	26A	3	PCPGDATG				
W	26B	3	ACPGDATG				
W	26C	3	PCBTESTB				
W	26D	3					
WQ	26E	3	Y-MOVE-D	8			
WQ	26F	3	FAD-2	7			
W	27A	3	PCPGDATH				
W	27B	3	ACPGDATH				
W	27C	3	REPROSEL				
WQ	27D	3	Y-REVRS	8			

./.

GR: 99 (CONTINUATION)
PROCESSOR BACK PANEL

EL: 07 (CONTINUATION)

TYPE	PT	LV	SIG.NAME	COLOR	F	X	Y
WQ	27E	3	YPS-MOVE	7			
WQ	27F	3	K-RESET	8			
W	28A	3	PCPGDATI				
W	28B	3	BPTRMDAT				
W	28C	3	SPCOLMOD				
WQ	28D	3	Y-FORW	1			
W	28E	3					
WQ	28F	3	Y-CLK	1			
W	29A	3	PCIFCTST				
W	29B	3	PCBTEST				
W	29C	3	SYNCSEL				
WQ	29D	3	+24MC1	9			
W	29E	3					
WQ	29F	3	Y-ICLK	2			
W	30A	3	NTRMDTA				
W	30B	3	PCBALQ3				
W	30C	3	ACPGIRPT				
WQ	30D	3	+5.8MC1	5			
WQ	30E	3	+0-TYPE2	2			
WQ	30F	3%	+0.0MC3	0			
W	31A	3	PCBTEST4				
W	31B	3	PCBALQ0				
W	31C	3	PERDATA				
WQ	31D	3	-5.8MC1	6			
WQ	31E	3	+0-TYPE1	1			
WQ	31F	3%	+0.0MC4	0			
WP	32A	1	+10				
WP	32B	1	+10				
WP	32C	1	+10				
WP	32D	1	+10				
WP	32E	1	+10				
WP	32F	1	+10				

EL: 08 WRAP CONNECTOR J08.1, 3*32 PIN

TYPE	PT	LV	SIG.NAME	COLOR	F	X	Y
WP	01A	1	0 L				
WP	01B	1	0 L				
WP	01C	1	0 L				
WPQ	01D	1	0 L	9-5-0			
WP	01E	1	0 L				
WPQ	01F	1	0 L	9-4-0			
W	02A	3					
W	+ 02B	3	Y-TACH-D				
W	02C	3	PERCAPFR				
WQ	02D	3	PB1	9			
W	+ 02E	3	PRGRON				
WQ	02F	3	EXEC	9-0			
W	03A	3					
W	03B	3	S-CAPEXT				

./.

```
*****************************************************************************************************************************
*  S T U D E R  *      L O C A T I O N     P I N     L I S T       *   82/01/08 * 15:12      *   P A G E     13    *
*****************************************************************************************************************************
TAPE LOCK SYSTEM 2000 A80: MASTER CTRL, PARALLEL PROGRAMMER   1.228.375.00            79-10-30
```

GR: 99 (CONTINUATION)
PROCESSOR BACK PANEL
****

EL: 08 (CONTINUATION)

TYPE	PT	LV	SIG.NAME	COLOR	F	X	Y
W	03C	3	K-CUTINH				
WQ	03D	3	BULBDPA2	1			
W	03E	3					
WQ	03F	3	PBD	1-0			
W	04A	3	SPD-CTL1				
W	04B	3	PCTDCLR				
W	04C	3	Y-FORW				
WQ	04D	3	PBA	5			
W	04E	3					
WQ	04F	3	PBI	8-5			
W	05A	3	Y-KRESET				
W	+ 05B	3	REPRECMX				
W	05C	3	Y-CLK				
WQ	05D	3	PBH	4			
W	05E	3					
WQ	05F	3	BULBDPA1	4-8			
W	06A	3	PPWRON				
W	+ 06B	3	RECLATEN				
W	06C	3	S-HIGH				
WQ	06D	3	BULBPBT3	8			
W	06E	3					
WQ	06F	3	INTGEN	5-R			
W	07A	3	K-PRESS				
W	07B	3	STARTDR3				
W	07C	3	STARTDR4				
WQ	07D	3	EDIT CD	R			
W	07E	3					
WQ	07F	3	BULBDPB2	4-R			
W	08A	3	K-RESET				
W	08B	3					
W	08C	3	AUXDROA				
WQ	08D	3	LOCKFAST	6			
W	08E	3					
WQ	08F	3	CODENDEF	5-6			
W	09A	3	AUXDRINA				
W	09B	3	K-RESET				
W	09C	3					
WQ	09D	3	ADV RET	2			
W	09E	3					
WQ	09F	3	ADD	4-6			
W	10A	3	PCPGDATH				
W	10B	3	TT1-ACT				
W	10C	3	TT2-ACT				
WQ	10D	3	MSEC	0			
W	10E	3					
WQ	10F	3	B-CALC	5-2			
W	+ 11A	3	REPROSEL				
W	11B	3	TDLATEN1				
W	11C	3	Y-TRSP				
WQ	11D	3	GEN N SC	7			
W	11E	3					

./.

GR: 99 (CONTINUATION)
PROCESSOR BACK PANEL
****

EL: 08 (CONTINUATION)

TYPE	PT	LV	SIG.NAME	COLOR	F	X	Y
WQ	11F	3	SLDECOFF	4-2			
W	12A	3					
W	12B	3	- 5				
W	12C	3	- 5				
WQ	12D	3	0 L	5-1-0			
W	12E	3					
WQ	12F	3	0 L	4-1-0			
W	13A	3	NEMGSTOP				
W	13B	3	TDLATEN2				
W	13C	3	Y-RECMD				
WQ	13D	3	B-UPPLIM	8-R			
W	13E	3					
WQ	13F	3	B-GENUSB	5-0			
W	14A	3					
W	14B	3	-12				
W	14C	3	-12				
W	14D	3					
W	14E	3					
W	14F	3					
W	15A	3					
W	15B	3	0 A				
W	15C	3	0 A				
W	15D	3					
W	15E	3					
W	15F	3					
W	16A	3					
W	16B	3	+12				
W	16C	3	+12				
W	16D	3					
W	16E	3					
W	16F	3					
W	17A	3	YMOVETLS				
W	17B	3	LOC.ENB				
W	17C	3	RECSTINH				
WQ	17D	3	ENTRY	6-2			
W	17E	3					
WQ	17F	3	SL NOTP	4-0			
W	18A	3	NPPWRON				
W	18B	3	CMD.ENB2				
W	18C	3	S-REW				
WQ	18D	3	BOFFSREG	9-5			
W	18E	3					
WQ	18F	3	PB7	8-6			
W	19A	3					
W	19B	3	0 K				
W	19C	3	0 K				
W	+ 19D	3	0 L				
W	19E	3					
W	+ 19F	3	0 L				
W	20A	3	+24				

./.

GR: 99 (CONTINUATION)
PROCESSOR BACK PANEL
****

EL: 08 (CONTINUATION)

TYPE	PT	LV	SIG.NAME	COLOR	F	X	Y
W	20C	3	+24				
W	20D	3					
W	20E	3					
W	20F	3					
W	21A	3	B-REW				
W	21B	3	B-FORW				
W	21C	3	S-FORW				
WQ	21D	3	B-EXITSL	1-5			
W	21E	3					
WQ	21F	3	PBG	6-R			
W	22A	3	S-REPR				
W	22B	3	B-REPR				
W	22C	3	B-STOP				
WQ	22D	3	B-PHAS	9-4			
W	22E	3					
WQ	22F	3	PB4	8-2			
W	23A	3	S-STOP				
W	23B	3	S-REC				
W	23C	3	B-REC				
WQ	23D	3	FRAM FR	4-1			
W	23E	3					
WQ	23F	3	PBK	2-R			
W	24A	3	B-CUT				
W	24B	3	S-CUT				
W	24C	3	CAP-EN				
WQ	24D	3	GEN SET	9-8			
W	24E	3					
WQ	24F	3	PBF	8-0			
W	25A	3	PMNTM 2				
W	+ 25B	3	EXGENOUT				
W	25C	3	S-LOW				
WQ	25D	3	B-LOWLIM	8-1			
W	25E	3					
WQ	25F	3	LWLIM EX	0-R			
W	26A	3	TDCDMUX2				
W	26B	3	NTDMOVED				
W	26C	3	PCPGDATA				
WQ	26D	3	NO CD S	9-R			
W	26E	3					
WQ	26F	3	CONNFAIL	6-0			
W	27A	3	TDCDMUX1				
W	27B	3	YPS-MOVE				
W	27C	3	PCPGDATR				
WQ	27D	3	B-ENTRYM	1-R			
W	27E	3					
WQ	27F	3	BENT/PKS	2-0			
W	28A	3	+0-TYPE1				
W	+ 28B	3	CODIN1-S				
W	28C	3	Y-MOVE-D				
WQ	28D	3	SVPCI	9-6			
W	28E	3					

./.

```
*****************************************************************************************************************************
*  S T U D E R  *      L O C A T I O N     P I N     L I S T       *   82/01/08 * 15:12      *   P A G E     14    *
*****************************************************************************************************************************
TAPE LOCK SYSTEM 2000 A80: MASTER CTRL, PARALLEL PROGRAMMER   1.228.375.00            79-10-30
```

GR: 99 (CONTINUATION)
PROCESSOR BACK PANEL
****

EL: 08 (CONTINUATION)

TYPE	PT	LV	SIG.NAME	COLOR	F	X	Y
WQ	28F	3	UPLIM EX	9-1-0			
W	29A	3	NTDY-REC				
W	+ 29B	3	CODGENO				
W	29C	3	PCPGDATC				
WQ	29D	3	BULBPBF4	1-6			
W	29E	3					
WQ	29F	3	B-NOMAST	4-5-0			
W	+ 30A	3	INCODREP				
W	+ 30B	3	SYNCSEL				
W	30C	3	LKMCDEDR				
WQ	30D	3	BULBPBF3	9-2			
W	+ 30E	3	SVSERPRG				
WQ	30F	3	WMPRES01	0 R-0			
W	31A	3	Y-MUTE				
W	31B	3	EDLEADDR				
W	31C	3	EDMCDEDR				
WQ	31D	3	BULBPBF2	1-2			
W	31E	3					
WQ	31F	3	WMPRES02	6-2-0			
WP	32A	1	+10				
WP	32B	1	+10				
WP	32C	1	+10				
WP	32D	1	+10				
WP	32E	1	+10				
WP	32F	1	+10				

EL: 09 WRAP CONNECTOR J09.1, 3*32 PIN

TYPE	PT	LV	SIG.NAME	COLOR	F	X	Y
WP	01A	1	0 L				
WP	01B	1	0 L				
WP	01C	1	0 L				
WPQ	01D	1	0 L	9-5-0			
WP	01E	1	0 L				
WPQ	01F	1	0 L	9-4-0			
W	02A	3	TRMADR0				
W	02B	3	BLKDSP0				
W	02C	3	BLKDSP1				
WQ	02D	3	WMPRES03	9			
W	02E	3					
WQ	02F	3	DISPEN1	9-0			
W	03A	3	TRMADR1				
W	03B	3	BLKDSP2				
W	03C	3	BLKDSP3				
WQ	03D	3	BLKDSP1	1			
W	03E	3					
WQ	03F	3	WMPRES04	1-0			
W	04A	3	TRMADR2				
W	04B	3	BLKDSP4				
W	04C	3	BLKDSP5				

./.

GR: 99 (CONTINUATION)
PROCESSOR BACK PANEL
****

EL: 09 (CONTINUATION)

TYPE	PT	LV	SIG.NAME	COLOR	F	X	Y
WQ	04D	3	NTRMDATA	5			
W	04E	3					
WQ	04F	3	DISPEN0	8-5			
W	05A	3	TRMADR3				
W	05B	3	BLKDSP6				
W	05C	3	BLKDSP7				
WQ	05D	3	BADRSTRT	4			
W	05E	3					
WQ	05F	3	STOREOFS	4-8			
W	06A	3	TRMADR4				
W	06B	3	BLKDSP8				
W	06C	3	DISEND9+				
WQ	06D	3	BULBDPH1	8			
W	06E	3					
WQ	06F	3	DISPEN2	5-R			
W	07A	3	TRMADR5				
W	07B	3	DISEND9-				
W	07C	3	DISPEN0				
WQ	07D	3	PHASING	R			
W	07E	3					
WQ	07F	3	BLKDSP0	4-R			
W	08A	3	TRMADR6				
W	08B	3	DISPEN1				
W	08C	3	DISPEN2				
WQ	08D	3	BULBPBG3	6			
W	08E	3					
WQ	08F	3	DISPEN3	5-6			
W	09A	3	NTRMDTA				
W	09B	3	PCDATINA				
W	09C	3	DISPEN3				
WQ	09D	3	MSEC	2			
W	09E	3					
WQ	09F	3	BLKDSP2	4-6			
W	10A	3					
W	10B	3	PCDATINB				
W	10C	3	DISPEN4				
WQ	10D	3	DIFF	0			
W	10E	3					
WQ	10F	3	HOLD	5-2			
W	11A	3					
W	11B	3	PCDATINC				
W	11C	3	DISPEN5				
WQ	11D	3	FRAM	7			
W	11E	3					
WQ	11F	3	LOCKSLOW	4-2			
W	12A	3					
W	12B	3	- 5				
W	12C	3	- 5				
WQ	12D	3	0 L	5-1-0			
W	12E	3					
WQ	12F	3	0 L	4-1-0			

./.

GR: 99 (CONTINUATION)
PROCESSOR BACK PANEL
****

EL: 09 (CONTINUATION)

TYPE	PT	LV	SIG.NAME	COLOR	F	X	Y
W	13A	3	12.5 HZ				
W	13B	3	PCDATIND				
W	13C	3	DISPEN6				
WQ	13D	3	B-REHEAR	8-R			
W	+ 13E	3	PMNTM 1				
WQ	13F	3	NTRMDATB	5-0			
W	14A	3					
W	14B	3	-12				
W	14C	3	-12				
W	14D	3					
W	14E	3					
W	14F	3					
W	15A	3					
W	15B	3	0 A				
W	15C	3	0 A				
W	15D	3					
W	15E	3					
W	15F	3					
W	16A	3					
W	16B	3	+12				
W	16C	3	+12				
W	16D	3					
W	16E	3					
W	16F	3					
W	17A	3	ADCDATAA				
W	17B	3	PCDATINE				
W	17C	3	DISPEN7				
WQ	17D	3	BULBPBH3	6-2			
W	17E	3					
WQ	17F	3	BLKDSP3	4-0			
W	18A	3	ADCDATAB				
W	18B	3	PPBPRESS				
W	18C	3	DISPEN8				
WQ	18D	3	OFS DISP	9-5			
W	+ 18E	3	PMNTM 3				
WQ	18F	3	BULBDPL1	8-0			
W	19A	3					
W	19B	3	0 K				
W	19C	3	0 K				
W	+ 19D	3	0 L				
W	19E	3					
W	+ 19F	3	0 L				
W	20A	3	+24				
W	20B	3	+24				
W	20C	3	+24				
W	20D	3					
W	20E	3					
W	20F	3					
W	21A	3	819.2KHZ				
W	21B	3	PB0				
W	21C	3	PB1				

./.

```
*   S T U D E R   *      L O C A T I O N     P I N     L I S T       *    82/01/08 * 15:12      *   P A G E     15    *
TAPE LOCK SYSTEM 2000 A80: MASTER CTRL, PARALLEL PROGRAMMER   1.228.375.00            79-10-30
```

GR: 99 (CONTINUATION)
PROCESSOR BACK PANEL

EL: 09 (CONTINUATION)

TYPE	PT	LV	SIG.NAME	COLOR	F	X	Y
WQ	21D	3	CODEFR/S	1-5			
W +	21E	3	PMNTM 4				
WQ	21F	3	DISPEN4	6-R			
W	22A	3	ADCDATAC				
W	22B	3	PB2				
W	22C	3	PB3				
WQ	22D	3	PBULBHMS	9-4			
W	22E	3					
WQ	22F	3	BULBPBK5	8-2			
W	23A	3	PPWRON				
W	23B	3	PB4				
W	23C	3	PB5				
WQ	23D	3	ADCDATAE	4-1			
W	23E	3					
WQ	23F	3	BULBDPA0	2-R			
W	24A	3	ADCDATAD				
W	24B	3	PB6				
W	24C	3	PMNTM 2				
WQ	24D	3	BULBDPN1	9-8			
W	24E	3					
WQ	24F	3	NTRMDATC	8-0			
W	25A	3	ENADC				
W	25B	3	PB7				
W	25C	3	PCDATRDY				
WQ	25D	3	SLAV	8-1			
W	25E	3					
WQ	25F	3	SVPCII	0-R			
W	26A	3	PBI				
W	26B	3	PBK				
W	26C	3	ADCDATAE				
WQ	26D	3	UNAS B	9-R			
W	26E	3					
WQ	26F	3	BLKDSP4	6-0			
W	27A	3	PBREC				
W	27B	3	PBPLAY				
W	27C	3	PCDATACC				
WQ	27D	3	BULBPBL5	1-R			
W	27E	3					
WQ	27F	3	PBULBHMS	2-0			
W	28A	3	PBA				
W	28B	3	PBB				
W	28C	3	PCPGDATA				
WQ	28D	3	BULBDPP1	9-6			
W	28E	3					
WQ	28F	3	BLKDSP5	9-1-0			
W	29A	3	PBC				
W	29B	3	PBD				
W	29C	3	PCPGDATB				
WQ	29D	3	ADCDATAD	1-6			
W	29E	3					
WQ	29F	3	DISPEN6	4-5-0			

./.

GR: 99 (CONTINUATION)
PROCESSOR BACK PANEL

EL: 09 (CONTINUATION)

TYPE	PT	LV	SIG.NAME	COLOR	F	X	Y
W	30A	3	PBE				
W	30B	3	PBF				
W	30C	3	PCPGDATC				
WQ	30D	3	PBULBHMS	9-2			
W	30E	3					
WQ	30F	3	DISPEN5	8-R-0			
W	31A	3	PBG				
W	31B	3	PBH				
W	31C	3	PRIFTRXY				
WQ	31D	3	DISPEN7	1-2			
W	31E	3					
WQ	31F	3	BLKDSP7	6-2-0			
WP	32A	1	+10				
WP	32B	1	+10				
WP	32C	1	+10				
WP	32D	1	+10				
WP	32E	1	+10				
WP	32F	1	+10				

EL: 10 WRAP CONNECTOR J10.1, 3*32 PIN

TYPE	PT	LV	SIG.NAME	COLOR	F	X	Y
WPQ	01A	1	0 L	0			
WPQ	01B	1	0 L	0			
WPQ	01C	1	0 L	0			
WQ	01D	3	0 L	9-5-0			
W	01E	3					
WQ	01F	3	0 L	9-4-0			
W	02A	3	SYNC A				
W	02B	3	PARKED				
W	02C	3	FRAM ER				
WQ	02D	3	NTRMDATD	9			
W	02E	3					
WQ	02F	3	BLKDSP6	9-0			
W	03A	3	B-NOMAST				
W	03B	3	NO CD S				
W	03C	3	B-REHEAR				
WQ	03D	3	ADCDATAC	1			
W	03E	3					
WQ	03F	3	DISPEN8	1-0			
W	04A	3	ENTRY				
W	04B	3	STOP				
W	04C	3	REC				
WQ	04D	3	MAST	5			
W	04E	3					
WQ	04F	3	KB	8-5			
W	05A	3	FAST REW				
W	05B	3	FAST FWD				
W	05C	3	PLAY				
WQ	05D	3	USER B	4			

./.

GR: 99 (CONTINUATION)
PROCESSOR BACK PANEL

EL: 10 (CONTINUATION)

TYPE	PT	LV	SIG.NAME	COLOR	F	X	Y
W	05E	3					
WQ	05F	3	BLKDSP8	4-8			
W	06A	3	EDIT				
W	06B	3	CONNFAIL				
W	06C	3	B-CALC				
WQ	06D	3	SVPCIII	8			
W	06E	3					
WQ	06F	3	DISEND9+	5-R			
W	07A	3	BLKMMPRG				
W	07B	3	BEDMMPRG				
W	07C	3	BPKMMPRG				
WQ	07D	3	ADCDATAB	R			
W	07E	3					
WQ	07F	3	PB3	4-R			
W	08A	3	GENRUN				
W	08B	3	BPILMPRG				
W	08C	3	GEN=MAST				
WQ	08D	3	BULBPBM5	6			
W	08E	3					
WQ	08F	3	PBC	5-6			
W	09A	3	UPLIM EX				
W	09B	3	LWLIM EX				
W	09C	3	BENT/PKS				
WQ	09D	3	ADCDATAA	2			
W	09E	3					
WQ	09F	3	DISEND9-	4-6			
W	10A	3	B-EXITSL				
W	10B	3	B-ENTRYM				
W	10C	3	B-LOWLIM				
WQ	10D	3	BLOCATOR	0			
W	10E	3					
WQ	10F	3	PB5	5-2			
W	11A	3	PMNTM 2				
W	11B	3	PCDATRDY				
W	11C	3	+ 5 ADD				
WQ	11D	3	REC	7			
W	11E	3					
WQ	11F	3	PB0	4-2			
W	12A	3					
W	12B	3	- 5				
W	12C	3	- 5				
WQ	12D	3	0 L	5-1-0			
W	12E	3					
WQ	12F	3	0 L	4-1-0			
W	13A	3	B-UPPLIM				
W	13B	3	BOFFSREG				
W	13C	3	GEN SET				
WQ	13D	3	EDIT	8-R			
W	13E	3					
WQ	13F	3	PBE	5-0			
W	14A	3					

./.

```
*   S T U D E R   *      L O C A T I O N     P I N     L I S T       *    82/01/08 * 15:12      *   P A G E     16    *
TAPE LOCK SYSTEM 2000 A80: MASTER CTRL, PARALLEL PROGRAMMER   1.228.375.00            79-10-30
```

GR: 99 (CONTINUATION)
PROCESSOR BACK PANEL

EL: 10 (CONTINUATION)

TYPE	PT	LV	SIG.NAME	COLOR	F	X	Y
W	14B	3	-12				
W	14C	3	-12				
W	14D	3					
W	14E	3					
W	14F	3					
W	15A	3					
W	15B	3	0 A				
W	15C	3	0 A				
W	15D	3					
W	15E	3					
W	15F	3					
W	16A	3					
W	16B	3	+12				
W	16C	3	+12				
W	16D	3					
W	16E	3					
W	16F	3					
W	17A	3	B-PHAS				
W	17B	3	HOLD				
W	17C	3	INTGEN				
WQ	17D	3	BPKMMPRG	6-2			
W	17E	3					
WQ	17F	3	BULBDPS2	4-0			
W	18A	3	UNAS B				
W	18B	3	USER B				
W	18C	3	DIFF				
WQ	18D	3	GENRUN	9-5			
W	18E	3					
WQ	18F	3	PARKED	8-6			
W	19A	3					
W	19B	3	0 K				
W	19C	3	0 K				
W +	19D	3	0 L				
W	19E	3					
W +	19F	3	0 L				
W	20A	3					
W	20B	3	+24				
W	20C	3	+24				
W	20D	3					
W	20E	3					
W	20F	3					
W	21A	3	OFS DISP				
W	21B	3	SLAV				
W	21C	3	MAST				
WQ	21D	3	TX	1-5			
W	21E	3					
WQ	21F	3	BULBDPT2	6-R			
W	22A	3	KB				
W	22B	3	MSEC				
W	22C	3	FRAM				
WQ	22D	3	SYNC PLT	9-4			

./.

GR: 99 (CONTINUATION)
PROCESSOR BACK PANEL

EL: 10 (CONTINUATION)

TYPE	PT	LV	SIG.NAME	COLOR	F	X	Y
W	22E	3					
WQ	22F	3	STOP	8-2			
W	23A	3	CODEFR/S				
W	23B	3	B-RECENB				
W	23C	3	BADRSTRT				
WQ	23D	3	FAST FWD	4-1			
W	23E	3					
WQ	23F	3	+10 SW	2-R			
W	24A	3	SL NOTP				
W	24B	3	ADV RET				
W	24C	3	PHASING				
WQ	24D	3	BEDMMPRG	9-8			
W	24E	3					
WQ	24F	3	BULBDPU2	8-0			
W	25A	3	TX				
W	25B	3	STOREOFS				
W	25C	3	LOCKSLOW				
WQ	25D	3	PBB	8-1			
W	25E	3					
WQ	25F	3	SYNC B	0-R			
W	26A	3	LOCKFAST				
W	26B	3	ENADC				
W	26C	3	PBULBHMS				
WQ	26D	3	B-RECENB	9-R			
W	26E	3					
WQ	26F	3	BPILMPRG	6-0			
W	27A	3	EDIT CD				
W	27B	3	CODENDEF				
W	27C	3	BLOCATOR				
WQ	27D	3	PBPLAY	1-R			
W	27E	3					
WQ	27F	3	FAST REW	2-0			
W	28A	3	SYNC PLT				
W	28B	3	SYNC B				
W	28C	3	B-GENUSB				
WQ	28D	3	PBREC	9-6			
W	28E	3					
WQ	28F	3	BLKMMPRG	9-1-0			
W	29A	3	TRMADR0				
W	29B	3	TRMADR1				
W	29C	3	TRMADR2				
WQ	29D	3	GEN=MAST	1-6			
W	29E	3					
WQ	29F	3	SYNC A	4-5-0			
W	30A	3	TRMADR6				
W	30B	3	NTRMDTA				
W	30C	3	PPWRON				
WQ	30D	3	0 SW	9-2			
W	30E	3					
WQ	30F	3	PB6	8-R-0			
W	31A	3	TRMADR3				

./.

GR: 99 (CONTINUATION)
PROCESSOR BACK PANEL

EL: 10 (CONTINUATION)

TYPE	PT	LV	SIG.NAME	COLOR	F	X	Y
W	31B	3	TRMADR4				
W	31C	3	TRMADR5				
WQ	31D	3	PLAY	1-2			
W	31E	3					
WQ	31F	3	PB2	6-2-0			
WPQ	32A	1	+10	5			
WPQ	32B	1	+10	5			
WPQ	32C	1	+10	5			
W	32D	3	+10				
W	32E	3					
W	32F	3	+10				

EL: 11 WRAP CONNECTOR J11.1, 3*32 PIN

TYPE	PT	LV	SIG.NAME	COLOR	F	X	Y
WPQ	01A	1	0 L	0			
WP	01B	1	0 L				
WP	01C	1	0 L				
WQ	02A	3	RECCOD1	2			
W	02B	3					
W	02C	3	EXGENIN1				
WQ +	03A	3	RECCODTM	3			
W	03B	3					
W +	03C	3	EXGENTM				
WQ	04A	3	RECCOD2	4			
W +	04B	3	CODIN1-S				
W	04C	3	EXGENIN2				
WQ +	05A	3	Y-RECMD	2			
WQ +	05B	3	S-LOWACH	9			
WQ +	05C	3	Y-MUTEMD	5			
WQ	06A	3	YAC-BIAS	1			
WQ +	06B	3	0-ERASE	2			
WQ	06C	3	0-ERASE	8			
WQ	07A	3	0-BIAS	9			
WQ +	07B	3	CCSUPVIS	3			
WQ	07C	3	YAC-ERAS	9			
WQ +	08A	3	AC1MOD	6			
W	08B	3					
WQ +	08C	3	AC2MOD	3			
WQ +	09A	3	0-AC1	9			
W	09B	3					
WQ +	09C	3	0-AC2	9			
WQ +	10A	3	AC1MOD	5			
W	10B	3					
WQ +	10C	3	AC2MOD	7			
WQ +	11A	3	0-AC1	6			
W	11B	3					
WQ +	11C	3	0-AC2	8			
WP	12A	1	- 5				
WP	12B	1	- 5				

./.

```
*****************************************************************************************************************
*   S T U D E R   *      L O C A T I O N     P I N     L I S T       *    82/01/08 * 15:12      *   P A G E     17    *
*****************************************************************************************************************
TAPE LOCK SYSTEM 2000 A80: MASTER CTRL, PARALLEL PROGRAMMER   1.228.375.00              79-10-30

GR: 99   (CONTINUATION)
PROCESSOR BACK PANEL
****************************************

EL: 11   (CONTINUATION)
-----------------------------------------
TYPE PT  LV SIG.NAME COLOR F    X      Y
---- --- -- -------- ----- - ----- -----
WP   12C 1  - 5
WQ   13A 3  ERASEHD1 6
WQ   13B 3  ERAHDSCR 4
WQ   13C 3  ERASEHD2 9
WP   14A 1  -12
WP   14B 1  -12
WP   14C 1  -12
WP   15A 1    0 A
WP   15B 1    0 A
WP   15C 1    0 A
WP   16A 1  +12
WP   16B 1  +12
WP   16C 1  +12
W    17A 3
W    17B 3
W    17C 3
WQ   18A 3  RECHD1   6
WQ   18B 3  RECHDSCR 4
WQ   18C 3  RECHD2   9
WP   19A 1    0 K
WP   19B 1    0 K
WP   19C 1    0 K
WP   20A 1  +24
WP   20B 1  +24
WP   20C 1  +24
W    21A 3
W    21B 3
W    21C 3  SYNCH1
W    22A 3
W    22B 3
W    22C 3  SYNCH2
W    23A 3  RECHDSCR
W    23B 3  RECHDSCR
W    23C 3  RECHDSCR
W    24A 3  PPWRON
W    24B 3
W  + 24C 3  SYNCSEL
W    25A 3  CODGENO
W    25B 3
W    25C 3  EXGENOUT
W    26A 3  REPRECMX
W    26B 3
W    26C 3  FILTNRW
W    27A 3  RECLATEN
W    27B 3
W  + 27C 3  REPROSEL
W    28A 3  PCPGDATA
W    28B 3
W    28C 3  FILTWIDE
W    29A 3  PCPGDATB
W    29B 3
                                    ./.

GR: 99   (CONTINUATION)
PROCESSOR BACK PANEL
****************************************

EL: 11   (CONTINUATION)
-----------------------------------------
TYPE PT  LV SIG.NAME COLOR F    X      Y
---- --- -- -------- ----- - ----- -----
W    29C 3  INCODREP
W    30A 3  PCPGDATC
W    30B 3
W    30C 3  REPINSEL
W    31A 3  PCPGDATH
W    31B 3
W    31C 3  PMNTM  2
WP   32A 1  +10
WP   32B 1  +10
WP   32C 1  +10

EL: 12  WRAP CONNECTOR J12.1, 3*32 PIN
-----------------------------------------
TYPE PT  LV SIG.NAME COLOR F    X      Y
---- --- -- -------- ----- - ----- -----
WP   01A 1    0 L
WP   01B 1    0 L
WP   01C 1    0 L
W    02A 3  CODINR1
W    02B 3
W    02C 3  CODINR2
W    03A 3
W    03B 3
WQ   03C 3  SYMCODO1 2
W    04A 3
W    04B 3
WQ   04C 3  SYMCODO2 3
W    05A 3  INCODREP
W    05B 3
W    05C 3  CODOSELB
W    06A 3
W    06B 3
W    06C 3  REPINSEL
W    07A 3
W    07B 3
W    07C 3
W    08A 3
W    08B 3
W    08C 3
W    09A 3
W    09B 3
W    09C 3  FILTWIDE
W    10A 3
W    10B 3
W    10C 3
W    11A 3
W    11B 3
W    11C 3  CODIN1-S
WP   12A 1  - 5
WP   12B 1  - 5
WP   12C 1  - 5
                                    ./.

GR: 99   (CONTINUATION)
PROCESSOR BACK PANEL
****************************************

EL: 12   (CONTINUATION)
-----------------------------------------
TYPE PT  LV SIG.NAME COLOR F    X      Y
---- --- -- -------- ----- - ----- -----
W    13A 3
W    13B 3
W    13C 3
WP   14A 1  -12
WP   14B 1  -12
WP   14C 1  -12
WP   15A 1    0 A
WP   15B 1    0 A
WP   15C 1    0 A
WP   16A 1  +12
WP   16B 1  +12
WP   16C 1  +12
W    17A 3
W    17B 3
W    17C 3
W    18A 3
W    18B 3
W    18C 3
WP   19A 1    0 K
WP   19B 1    0 K
WP   19C 1    0 K
WP   20A 1  +24
WP   20B 1  +24
WP   20C 1  +24
W    21A 3
W    21B 3
W    21C 3  SYNCH1
W  + 22A 3    0 L
W    22B 3
W    22C 3  SYNCH2
W    23A 3  RECHDSCR
W    23B 3  RECHDSCR
W    23C 3  RECHDSCR
W    24A 3
W    24B 3
W    24C 3
W    25A 3
W    25B 3
WQ   25C 3  REPRO1   2
W    26A 3
W    26B 3
WQ   26C 3  REPRO2   6
W    27A 3
W    27B 3
WQ   27C 3  REPRO0.0 U
W    28A 3  REPROSCR
W    28B 3  REPROSCR
WQ   28C 3  REPROSCR 4
W    29A 3  REPROSEL
W    29B 3
W    29C 3
                                    ./.
```

```
*****************************************************************************************************************
*   S T U D E R   *      L O C A T I O N     P I N     L I S T       *    82/01/08 * 15:12      *   P A G E     18    *
*****************************************************************************************************************
TAPE LOCK SYSTEM 2000 A80: MASTER CTRL, PARALLEL PROGRAMMER   1.228.375.00              79-10-30

GR: 99   (CONTINUATION)
PROCESSOR BACK PANEL
****************************************

EL: 12   (CONTINUATION)
-----------------------------------------
TYPE PT  LV SIG.NAME COLOR F    X      Y
---- --- -- -------- ----- - ----- -----
W    30A 3
W    30B 3
W    30C 3  SYNCSEL
W    31A 3  BCODEREP
W    31B 3
W    31C 3  FILTNRW
WP   32A 1  +10
WP   32B 1  +10
WP   32C 1  +10

EL: 13  WRAP CONNECTOR J13.1, 3*32 PIN
-----------------------------------------
TYPE PT  LV SIG.NAME COLOR F    X      Y
---- --- -- -------- ----- - ----- -----
WPQ  01A 1    0 L     0
WP   01B 1    0 L
WP   01C 1    0 L
WQ + 02A 3  EXGENIN1 2
W    02B 3
W    02C 3  R15 1322
WQ + 03A 3  EXGENTM  3
W    03B 3
W    03C 3
WQ + 04A 3  EXGENIN2 4
W    04B 3
W    04C 3  INCODREP
W    05A 3
W    05B 3  25     HZ
W    05C 3
W    06A 3
W    06B 3  50     HZ
W    06C 3
W    07A 3  DMFAIL-M
W    07B 3  100    HZ
W    07C 3  DMFAIL-S
W    08A 3  P1DM  -M
W    08B 3  PER1DM-S
W    08C 3  CODIN1-S
W    09A 3  P2DM  -M
W    09B 3  PER2DM-S
W    09C 3
W    10A 3  P3DM  -M
W    10B 3  PER3DM-S
W    10C 3
W    11A 3  P4DM  -M
W    11B 3  PER4DM-S
W  + 11C 3  P2DM  -S
WP   12A 1  - 5
WP   12B 1  - 5
WP   12C 1  - 5
W    13A 3  DMOSCI-M
                                    ./.

GR: 99   (CONTINUATION)
PROCESSOR BACK PANEL
****************************************

EL: 13   (CONTINUATION)
-----------------------------------------
TYPE PT  LV SIG.NAME COLOR F    X      Y
---- --- -- -------- ----- - ----- -----
W    13B 3
W    13C 3  DMOSCI-S
WP   14A 1  -12
WP   14B 1  -12
WP   14C 1  -12
WP   15A 1    0 A
WP   15B 1    0 A
WP   15C 1    0 A
WP   16A 1  +12
WP   16B 1  +12
WP   16C 1  +12
W    17A 3  DMCOD -M
W    17B 3
W    17C 3  DMCOD -S
W    18A 3  NDMCOD-M
W    18B 3
W    18C 3  NDMCOD-S
WP   19A 1    0 K
WP   19B 1    0 K
WP   19C 1    0 K
WP   20A 1  +24
WP   20B 1  +24
WP   20C 1  +24
W    21A 3  PER1DM-M
W    21B 3
W    21C 3  P1DM  -S
W    22A 3  PER2DM-M
W    22B 3    0 1325
W    22C 3  P2DM  -S
W    23A 3  PER3DM-M
W    23B 3
W    23C 3  P3DM  -S
W    24A 3  PER4DM-M
W    24B 3
W    24C 3  P4DM  -S
W  + 25A 3  PMNTM  2
W    25B 3
W    25C 3
W    26A 3  DIRUP -M
W    26B 3
W    26C 3  DIRUP -S
W    27A 3  DIRDWN-M
W    27B 3
W    27C 3  DIRDWN-S
W  + 28A 3  EXFRQDAT
W  + 28B 3  + 5  ADD
W    28C 3
W    29A 3
W  + 29B 3  + 5  ADD
W    29C 3  PSYNC -S
W    30A 3
                                    ./.

GR: 99   (CONTINUATION)
PROCESSOR BACK PANEL
****************************************

EL: 13   (CONTINUATION)
-----------------------------------------
TYPE PT  LV SIG.NAME COLOR F    X      Y
---- --- -- -------- ----- - ----- -----
W    30B 3
W    30C 3
W    31A 3  PSYNC -M
W    31B 3
W    31C 3
WP   32A 1  +10
WP   32B 1  +10
WP   32C 1  +10

EL: 14  WRAP CONNECTOR J14.1, 3*32 PIN
-----------------------------------------
TYPE PT  LV SIG.NAME COLOR F    X      Y
---- --- -- -------- ----- - ----- -----
WP   01A 1    0 L
WP   01B 1    0 L
WP   01C 1    0 L
W    02A 3
W    02B 3  G-SFRSLA
W    02C 3  ACPGDATA
W    03A 3
W    03B 3  G-SFRSLB
W    03C 3  ACPGDATB
W    04A 3
W    04B 3  ARPOUT-D
W    04C 3  ACPGDATC
W    05A 3
W    05B 3  ARPOUT-C
W    05C 3  ACPGDATD
W    06A 3
W    06B 3  ARPOUT-B
W    06C 3  ACPGDATE
W    07A 3
W    07B 3  ARPOUT-A
W    07C 3  ACPGDATF
W    08A 3
W    08B 3  ARIF-Y
W    08C 3  ACPGDATG
W    09A 3
W    09B 3
W    09C 3  ACPGDATH
W    10A 3
W    10B 3  COSTCKCT
W    10C 3  ARFN2
W    11A 3
W    11B 3  100    HZ
W    11C 3  AREN1
WP   12A 1  - 5
WP   12B 1  - 5
WP   12C 1  - 5
W    13A 3
W    13B 3  ARSEROUT
                                    ./.
```

```
*****************************************************************************************************************
*  S T U D E R  *     L O C A T I O N    P I N    L I S T     *   82/01/08 * 15:12     *  P A G E    19   *
*****************************************************************************************************************
TAPE LOCK SYSTEM 2000 A80: MASTER CTRL, PARALLEL PROGRAMMER   1.228.375.00            79-10-30

GR: 99   (CONTINUATION)
PROCESSOR BACK PANEL
****************************************

EL: 14   (CONTINUATION)
-----------------------------------------
TYPE PT  LV SIG.NAME COLOR F   X     Y
---- --- -- -------- ----- - ----- -----
W    13C 3  NINVCTR1
WP   14A 1  -12
WP   14B 1  -12
WP   14C 1  -12
WP   15A 1    0 A
WP   15B 1    0 A
WP   15C 1    0 A
WP   16A 1  +12
WP   16B 1  +12
WP   16C 1  +12
W    17A 3
W    17B 3  NACRES1
W    17C 3  NINVCTR2
W    18A 3
W    18B 3  IFCDATIN
W    18C 3  ADDRCT-A
WP   19A 1    0 K
WP   19B 1    0 K
WP   19C 1    0 K
WP   20A 1  +24
WP   20B 1  +24
WP   20C 1  +24
W    21A 3
W    21B 3  PMNTM  4
W    21C 3  ADDRCT-B
W    22A 3
W    22B 3  NPPWRON
W    22C 3  ADDRCT-C
W    23A 3
W    23B 3  TDATAM/S
W    23C 3  ADDRCT-D
W    24A 3
W    24B 3  PERDATA
W    24C 3  ADDRCT-E
W    25A 3
W    25B 3  ACSERDAT
W    25C 3  ADDRCT-F
W    26A 3
W    26B 3  AUXDATIN
W    26C 3  ADDRCT-G
W    27A 3
W    27B 3  EXFRQDAT
W    27C 3  ADDRCT-H
W    28A 3
W    28B 3  DIVCT- A
W    28C 3  ADDRCT-I
W  + 29A 3  + 5  ADD
W    29B 3  DIVCT- B
W    29C 3  ADDRCT-K
W  + 30A 3  + 5  ADD
W    30B 3  DIVCT- C
                                  ./.

GR: 99   (CONTINUATION)
PROCESSOR BACK PANEL
****************************************

EL: 14   (CONTINUATION)
-----------------------------------------
TYPE PT  LV SIG.NAME COLOR F   X     Y
---- --- -- -------- ----- - ----- -----
W    30C 3  ARPOUT-E
W    31A 3
W    31B 3  DIVCT- D
W    31C 3  ARPOUT-F
WP   32A 1  +10
WP   32B 1  +10
WP   32C 1  +10

EL: 15  WIRING WITH: GROUND
-----------------------------------------
TYPE PT  LV SIG.NAME COLOR F   X     Y
---- --- -- -------- ----- - ----- -----
WPQ  01A 1%   0 L    4
WPQ  01B 1%   0 L    4
WPQ  01C 1%   0 L    4
W    02A 3  ACPGADD0
W    02B 3  PMNTM  1
W    02C 3  PCPGADD0
W    03A 3  ACPGADD1
W    03B 3  PMNTM  2
W    03C 3  PCPGADD1
W    04A 3  ACPGADD2
W    04B 3  PMNTM  3
W    04C 3  PCPGADD2
W    05A 3  ACPGADD3
W    05B 3  PMNTM  4
W    05C 3  PCPGADD3
W    06A 3  ACPGADD4
W    06B 3  819.2KHZ
W    06C 3  PCPGADD4
W    07A 3  ACPGADD5
W    07B 3  FRPWRON
W    07C 3  PCPGADD5
W    08A 3  ACPGADD6
W    08B 3  PCPGADD10
W    08C 3  PCPGADD6
W    09A 3  ACPGADD7
W    09B 3  PCPGAD11
W    09C 3  PCPGADD7
W    10A 3  ACPGADD8
W    10B 3  ACPGADD10
W    10C 3  PCPGADD8
W    11A 3  ACPGAD09
W    11B 3  ACPGAD11
W    11C 3  PCPGADD9
WP   12A 1  - 5
WP   12B 1  - 5
WP   12C 1  - 5
W    13A 3  ACINSTEN
W    13B 3  + 5  ADD
W    13C 3  NPINSTEN
                                  ./.

GR: 99   (CONTINUATION)
PROCESSOR BACK PANEL
****************************************

EL: 15   (CONTINUATION)
-----------------------------------------
TYPE PT  LV SIG.NAME COLOR F   X     Y
---- --- -- -------- ----- - ----- -----
WP   14A 1  -12
WP   14B 1  -12
WP   14C 1  -12
WP   15A 1    0 A
WP   15B 1    0 A
WP   15C 1    0 A
WP   16A 1  +12
WP   16B 1  +12
WP   16C 1  +12
W    17A 3  ACPGDATA
W    17B 3  PCTAPFLG
W    17C 3  PCPGDATA
W    18A 3  ACPGDATB
W    18B 3  ACTAPFLG
W    18C 3  PCPGDATB
WP   19A 1    0 K
WP   19B 1    0 K
WP   19C 1    0 K
WP   20A 1  +24
WP   20B 1  +24
WP   20C 1  +24
W    21A 3  ACPGDATC
W    21B 3
W    21C 3  PCPGDATC
W    22A 3  ACPGDATD
W    22B 3
W    22C 3  PCPGDATD
W    23A 3  ACPGDATE
W    23B 3
W    23C 3  PCPGDATE
W    24A 3  ACPGDATF
W    24B 3
W    24C 3  PCPGDATF
W    25A 3  ACPGDATG
W    25B 3
W    25C 3  PCPGDATG
W    26A 3  ACPGDATH
W    26B 3
W    26C 3  PCPGDATH
W    27A 3  ACPGDATI
W    27B 3
W    27C 3  PCPGDATI
W    28A 3  ACPGDATK
W    28B 3
W    28C 3  PCPGDATK
W    29A 3  ACPGDATL
W    29B 3
W    29C 3  PCPGDATL
W    30A 3  ACPGDATM
W    30B 3
W    30C 3  PCPGDATM
                                  ./.

*****************************************************************************************************************
*  S T U D E R  *     L O C A T I O N    P I N    L I S T     *   82/01/08 * 15:12     *  P A G E    20   *
*****************************************************************************************************************
TAPE LOCK SYSTEM 2000 A80: MASTER CTRL, PARALLEL PROGRAMMER   1.228.375.00            79-10-30

GR: 99   (CONTINUATION)
PROCESSOR BACK PANEL
****************************************

EL: 15   (CONTINUATION)
-----------------------------------------
TYPE PT  LV SIG.NAME COLOR F   X     Y
---- --- -- -------- ----- - ----- -----
W    31A 3  ACPGDATN
W    31B 3
W    31C 3  PCPGDATN
WP   32A 1  +10
WP   32B 1  +10
WP   32C 1  +10

EL: 16  WRAP CONNECTOR J16.1, 3*32 PIN
-----------------------------------------
TYPE PT  LV SIG.NAME COLOR F   X     Y
---- --- -- -------- ----- - ----- -----
WP   01A 1    0 L
WP   01B 1    0 L
WP   01C 1    0 L
W    02A 3
W    02B 3
W    02C 3
W    03A 3
W    03B 3
W    03C 3
W    04A 3
W    04B 3
W    04C 3
W    05A 3
W    05B 3
W    05C 3
W    06A 3
W    06B 3
W    06C 3
W    07A 3
W    07B 3
W    07C 3
W    08A 3
W    08B 3
W    08C 3
W    09A 3
W    09B 3
W    09C 3
W    10A 3
W    10B 3
W    10C 3
W    11A 3
W    11B 3
W    11C 3
WP   12A 1  - 5
WP   12B 1  - 5
WP   12C 1  - 5
W    13A 3
W    13B 3
W    13C 3
WP   14A 1  -12
                                  ./.

GR: 99   (CONTINUATION)
PROCESSOR BACK PANEL
****************************************

EL: 16   (CONTINUATION)
-----------------------------------------
TYPE PT  LV SIG.NAME COLOR F   X     Y
---- --- -- -------- ----- - ----- -----
WP   14B 1  -12
WP   14C 1  -12
WP   15A 1    0 A
WP   15B 1    0 A
WP   15C 1    0 A
WP   16A 1  +12
WP   16B 1  +12
WP   16C 1  +12
W    17A 3
W    17B 3
W    17C 3
W    18A 3
W    18B 3
W    18C 3
WP   19A 1    0 K
WP   19B 1    0 K
WP   19C 1    0 K
WP   20A 1  +24
WP   20B 1  +24
WP   20C 1  +24
W    21A 3
W    21B 3
W    21C 3
W    22A 3
W    22B 3
W    22C 3
W    23A 3
W    23B 3
W    23C 3
W    24A 3
W    24B 3
W    24C 3
W    25A 3
W    25B 3
W    25C 3
W    26A 3
W    26B 3
W    26C 3
W    27A 3
W    27B 3
W    27C 3
W    28A 3
W    28B 3
W    28C 3
W    29A 3
W    29B 3
W    29C 3
W    30A 3
W    30B 3
W    30C 3
W    31A 3
                                  ./.

GR: 99   (CONTINUATION)
PROCESSOR BACK PANEL
****************************************

EL: 16   (CONTINUATION)
-----------------------------------------
TYPE PT  LV SIG.NAME COLOR F   X     Y
---- --- -- -------- ----- - ----- -----
W    31B 3
W    31C 3
WP   32A 1  +10
WP   32B 1  +10
WP   32C 1  +10

EL: 17  WRAP CONNECTOR J17.1, 3*32 PIN
-----------------------------------------
TYPE PT  LV SIG.NAME COLOR F   X     Y
---- --- -- -------- ----- - ----- -----
WP   01A 1    0 L
WP   01B 1    0 L
WP   01C 1    0 L
W  + 02A 3  + 5  ADD
W    02B 3  MCRECEDR
W    02C 3  MCMUTEDR
W    03A 3  MCDATRDY
W    03B 3  MCZSETDR
W    03C 3  BBPRES09
WQ   04A 3  LKMODDR2 2
W    04B 3  MCKCUTDR
W    04C 3  BBPRES10
WQ   05A 3  MCSUPVIS 1
W    05B 3  SVPCI
W    05C 3  B-CCHRDY
W    06A 3  MS2TLS
W    06B 3  SVPCII
W    06C 3  B-CCHREC
W    07A 3
W    07B 3  BPSUPVIS
W    07C 3  B-CCHREP
W    08A 3
W    08B 3  TRMADR3
W    08C 3  MCRESDR1
W    09A 3
W    09B 3  TRMADR2
W    09C 3  Y2BPS
WQ   10A 3  MPWRON   5
W    10B 3  TRMADR1
W    10C 3  Y1BPS
W    11A 3
W    11B 3  TRMADR0
W    11C 3  SVPCIII
WP   12A 1  - 5
WP   12B 1  - 5
WP   12C 1  - 5
W    13A 3
W    13B 3  BPTRMDAT
W    13C 3  X5BPS
WP   14A 1  -12
WP   14B 1  -12
                                  ./.
```

```
*****************************************************************************************************************
*   S T U D E R   *      L O C A T I O N    P I N    L I S T      *   82/01/08 * 15:12      *   P A G E    21   *
*****************************************************************************************************************
TAPE LOCK SYSTEM 2000 A80: MASTER CTRL, PARALLEL PROGRAMMER   1.228.375.00            79-10-30

GR: 99   (CONTINUATION)
PROCESSOR BACK PANEL
****************************************

EL: 17   (CONTINUATION)
-----------------------------------------
TYPE PT  LV SIG.NAME COLOR F    X     Y
---- --- -- -------- ----- - ----- -----
WP   14C 1  -12
WP   15A 1    0 A
WP   15B 1    0 A
WP   15C 1    0 A
WP   16A 1  +12
WP   16B 1  +12
WP   16C 1  +12
WQ   17A 3  PARKEDDR 3
W    17B 3  PMNTM  2
W    17C 3  Y3BPS
W    18A 3  SNCPLTDR
W    18B 3  PCBPLTCL
W    18C 3  X4BPS
WP   19A 1    0 K
WP   19B 1    0 K
WP   19C 1    0 K
WP   20A 1  +24
WP   20B 1  +24
WP   20C 1  +24
W    21A 3  +0.0CAP2
W    21B 3  PCBPWE
W    21C 3  X3BPS
W    22A 3  +5.8EMC1
W    22B 3  TRMADR4
W    22C 3  X1BPS
W    23A 3  +0.0MC2
W    23B 3  PPWRON
W    23C 3  X2BPS
W    24A 3  STARTDR2
W    24B 3  SVSERPRG
W    24C 3  B-EXTREC
W    25A 3  SYNCBDR
W    25B 3  CCSUPVIS
W    25C 3  BBPRES11
WQ   26A 3  EXTRECCM 4
W    26B 3  PCPGDATD
W    26C 3  B-CCHSYN
W    27A 3
W    27B 3  PCBPMUXB
W    27C 3  B-OUT=IN
W    28A 3  PCPGDATH
W    28B 3  PCBPMUXA
W    28C 3  B-CCHSAF
W    29A 3  BPLATEN
W    29B 3  PCPGDATA
W    29C 3  STARTDR1
W    30A 3  MCDAT1DR
W    30B 3  PCPGDATB
W    30C 3  MCRESDR2
W    31A 3  MCDAT2DR
W    31B 3  PCPGDATC
                                      ./.

GR: 99   (CONTINUATION)
PROCESSOR BACK PANEL
****************************************

EL: 17   (CONTINUATION)
-----------------------------------------
TYPE PT  LV SIG.NAME COLOR F    X     Y
---- --- -- -------- ----- - ----- -----
W    31C 3  MCDATODR
WP   32A 1  +10
WP   32B 1  +10
WP   32C 1  +10

EL: 18  WRAP CONNECTOR J18.1, 3*32 PIN
-----------------------------------------
TYPE PT  LV SIG.NAME COLOR F    X     Y
---- --- -- -------- ----- - ----- -----
WPQ  01A 1    0 L     0
WPQ  01B 1    0 L     0
WPQ  01C 1    0 L     0
W    02A 3
W    02B 3
W  + 02C 3  Y-RECMD
W  + 03A 3  + 5  ADD
W    03B 3
W  + 03C 3  + 5  ADD
W    04A 3
W    04B 3
W    04C 3
W    05A 3
W    05B 3
W    05C 3
W    06A 3
W    06B 3
W    06C 3
WQ   07A 3  +10AD150 5
WQ   07B 3  +10AD150 5
WQ   07C 3  +10AD150 5
W    08A 3
W    08B 3
W    08C 3
W    09A 3
W    09B 3
W    09C 3
WQ   10A 3  0.0AD150 0
WQ   10B 3  0.0AD150 0
WQ   10C 3  0.0AD150 0
W    11A 3
W    11B 3
W    11C 3
WP   12A 1  - 5
WP   12B 1  - 5
WP   12C 1  - 5
W    13A 3
W    13B 3
W  + 13C 3  PMNTM  1
WP   14A 1  -12
WP   14B 1  -12
WP   14C 1  -12
                                      ./.

GR: 99   (CONTINUATION)
PROCESSOR BACK PANEL
****************************************

EL: 16   (CONTINUATION)
-----------------------------------------
TYPE PT  LV SIG.NAME COLOR F    X     Y
---- --- -- -------- ----- - ----- -----
WP   15A 1    0 A
WP   15B 1    0 A
WP   15C 1    0 A
WP   16A 1  +12
WP   16B 1  +12
WP   16C 1  +12
W    17A 3
W    17B 3
W    17C 3
W    18A 3
W    18B 3
W    18C 3
WP   19A 1    0 K
WP   19B 1    0 K
WP   19C 1    0 K
WP   20A 1  +24
WP   20B 1  +24
WP   20C 1  +24
W    21A 3
W    21B 3
W    21C 3
W    22A 3
W    22B 3
W    22C 3
W    23A 3
W    23B 3
W    23C 3
W    24A 3
W    24B 3
W    24C 3
W    25A 3
W    25B 3
W    25C 3
W  + 26A 3  PCPGDATH
W    26B 3
W    26C 3
W    27A 3
W    27B 3
W    27C 3
W    28A 3  + 5  ADD
W    28B 3  + 5  ADD
W    28C 3  + 5  ADD
W    29A 3  + 5  ADD
W    29B 3  + 5  ADD
W    29C 3  + 5  ADD
W    30A 3  + 5  ADD
W    30B 3  + 5  ADD
W    30C 3  + 5  ADD
W    31A 3
W    31B 3
W    31C 3
                                      ./.
```

```
*****************************************************************************************************************
*   S T U D E R   *      L O C A T I O N    P I N    L I S T      *   82/01/08 * 15:12      *   P A G E    22   *
*****************************************************************************************************************
TAPE LOCK SYSTEM 2000 A80: MASTER CTRL, PARALLEL PROGRAMMER   1.228.375.00            79-10-30

GR: 99   (CONTINUATION)
PROCESSOR BACK PANEL
****************************************

EL: 18   (CONTINUATION)
-----------------------------------------
TYPE PT  LV SIG.NAME COLOR F    X     Y
---- --- -- -------- ----- - ----- -----
WPQ  32A 1  +10       5
WPQ  32B 1  +10       5
WPQ  32C 1  +10       5

EL: 19  WRAP CONNECTOR J19.1, 3*32 PIN
-----------------------------------------
TYPE PT  LV SIG.NAME COLOR F    X     Y
---- --- -- -------- ----- - ----- -----
WP   01A 1    0 L
WP   01B 1    0 L
WP   01C 1    0 L
W    02A 3
W    02B 3
W    02C 3
W    03A 3
W    03B 3
W    03C 3
WQ   04A 3  -20V A80 1
W    04B 3  -20V A80
WQ   04C 3  -20V A80 1
W  + 05A 3  +10
W  + 05B 3  +10
W  + 05C 3  +10
W  + 06A 3  819.2KHZ
W    06B 3
W    06C 3
WQ   07A 3  +20V A80 3
W    07B 3  +20V A80
WQ   07C 3  +20V A80 3
W  + 08A 3  +24
W  + 08B 3  +24
W  + 08C 3  +24
W    09A 3
W    09B 3
W    09C 3
WQ   10A 3% 0.0INA80 0
WQ   10B 3% 0.0INA80 0
WQ   10C 3% 0.0INA80 0
W    11A 3
W    11B 3
W    11C 3
WP   12A 1  - 5
WP   12B 1  - 5
WP   12C 1  - 5
W    13A 3
W    13B 3
W  + 13C 3  PMNTM  1
WP   14A 1  -12
WP   14B 1  -12
WP   14C 1  -12
WP   15A 1    0 A
                                      ./.

GR: 99   (CONTINUATION)
PROCESSOR BACK PANEL
****************************************

EL: 19   (CONTINUATION)
-----------------------------------------
TYPE PT  LV SIG.NAME COLOR F    X     Y
---- --- -- -------- ----- - ----- -----
WP   15B 1    0 A
WP   15C 1    0 A
WP   16A 1  +12
WP   16B 1  +12
WP   16C 1  +12
W  + 17A 3  PMNTM  4
W    17B 3
W    17C 3
W    18A 3
W    18B 3
W    18C 3
WP   19A 1    0 K
WP   19B 1    0 K
WP   19C 1    0 K
WP   20A 1  +24
WP   20B 1  +24
WP   20C 1  +24
W    21A 3
W    21B 3
W    21C 3
W    22A 3
W    22B 3
W    22C 3
W    23A 3
W    23B 3
W    23C 3
W    24A 3
W    24B 3
W    24C 3
W    25A 3
W    25B 3
W    25C 3
W    26A 3
W    26B 3
W    26C 3
W    27A 3
W    27B 3
W    27C 3
W    28A 3
W    28B 3
W    28C 3
W    29A 3
W    29B 3
W    29C 3
W    30A 3  WIRE001
W    30B 3  WIRE001
W    30C 3  WIRE001
W    31A 3
W    31B 3
W    31C 3
WP   32A 1  +10
                                      ./.

GR: 99   (CONTINUATION)
PROCESSOR BACK PANEL
****************************************

EL: 19   (CONTINUATION)
-----------------------------------------
TYPE PT  LV SIG.NAME COLOR F    X     Y
---- --- -- -------- ----- - ----- -----
WP   32B 1  +10
WP   32C 1  +10

EL: 20  WRAP CONNECTOR J20.1, 3*32 PIN
-----------------------------------------
TYPE PT  LV SIG.NAME COLOR F    X     Y
---- --- -- -------- ----- - ----- -----
WPQ  01A 1    0 L     0
WPQ  01B 1    0 L     0
WPQ  01C 1    0 L     0
WQ   01D 3    0 L     0
W  + 01E 3    0 L
WQ   01F 3    0 L     0
W    02A 3
W    02B 3
W    02C 3
WQ   02D 3  MCRECEDR 4
W    02E 3
WQ   02F 3  MCMUTEDR 1
W    03A 3
W    03B 3
W    03C 3
WQ   03D 3  MCZSETDR 5
W    03E 3
WQ   03F 3  BBPRES09 6
WQ   04A 3  -10V 150 6
WQ   04B 3  -10V 150 6
WQ   04C 3  -10V 150 6
WQ   04D 3  MCKCUTDR 6
W    04E 3
WQ   04F 3  BBPRES10 6
W    05A 3
W    05B 3
W    05C 3
WQ   05D 3    0 L     0
W    05E 3
WQ   05F 3  B-CCHRDY 4
W    06A 3
W    06B 3
W    06C 3
WQ   06D 3    0 L     0
W    06E 3
WQ   06F 3  B-CCHREC 5
WQ   07A 3  +31V 150 9
WQ   07B 3  +31V 150 9
WQ   07C 3  +31V 150 9
WQ   07D 3    0 L     0
W    07E 3
WQ   07F 3  B-CCHREP 3
W    08A 3
W    08B 3
                                      ./.
```

```
*****************************************************************************************************************************************
*   S T U D E R   *      L O C A T I O N     P I N     L I S T       *    82/01/08 * 15:12      *   P A G E     23    *
*****************************************************************************************************************************************
TAPE LOCK SYSTEM 2000 A80: MASTER CTRL, PARALLEL PROGRAMMER   1.228.375.00            79-10-30

GR: 99   (CONTINUATION)                    GR: 99   (CONTINUATION)                    GR: 99   (CONTINUATION)
PROCESSOR BACK PANEL                       PROCESSOR BACK PANEL                       PROCESSOR BACK PANEL
*****************************************  *****************************************  *****************************************

EL: 20   (CONTINUATION)                    EL: 20   (CONTINUATION)                    EL: 20   (CONTINUATION)
-----------------------------------------  -----------------------------------------  -----------------------------------------
TYPE PT  LV SIG.NAME COLOR F   X     Y     TYPE PT  LV SIG.NAME COLOR F   X     Y     TYPE PT  LV SIG.NAME COLOR F   X     Y
---- --- -- -------- ----- - ----- -----  ---- --- -- -------- ----- - ----- -----  ---- --- -- -------- ----- - ----- -----
W    08C 3                                W    16F 3  WIRE001                        W    25C 3
WQ   08D 3  BPSUPVIS 1                    W    17A 3                                  W    25D 3
W    08E 3                                W    17B 3                                  W    25E 3
W  + 08F 3  MCRESDR1                      W    17C 3                                  WQ   25F 3  BBPRES11 5
W    09A 3                                WQ   17D 3  MCRESDR1 7                      W    26A 3
W    09B 3                                W    17E 3                                  W    26B 3
W    09C 3                                WQ   17F 3  Y3BPS    8                      W    26C 3
W  + 09D 3  B-CCHRDY                      W    18A 3                                  W  + 26D 3  B-CCHSYN
W    09E 3                                W    18B 3                                  W    26E 3
WQ   09F 3  Y2BPS    9                    W    18C 3                                  WQ   26F 3  B-CCHSYN 9
WQ   10A 3% 0.01N150 0                    W  + 18D 3  X4BPS                          W    27A 3
WQ   10B 3% 0.01N150 0                    W    18E 3                                  W    27B 3
WQ   10C 3% 0.01N150 0                    WQ   18F 3  X4BPS    2                     W    27C 3
W  + 10D 3  B-CCHREC                      WP   19A 1    0 K                          W  + 27D 3  B-OUT=IN
W    10E 3                                WP   19B 1    0 K                          W    27E 3
WQ   10F 3  Y1BPS    1                    WP   19C 1    0 K                          WQ   27F 3  B-OUT=IN 7
W    11A 3                                WQ   19D 3    0 K    0                     W    28A 3
W    11B 3                                W    19E 3                                  W  + 28B 3  + 5  ADD
W    11C 3                                WQ   19F 3    0 K    0                     W  + 28C 3  + 5  ADD
W  + 11D 3  B-CCHREP                      WP   20A 1  +24                            W    28D 3
W    11E 3                                WP   20B 1  +24                            W    28E 3
WQ   11F 3  NEMGSTOP 4                    WP   20C 1  +24                            WQ   28F 3  B-CCHSAF 8
WP   12A 1  - 5                           WQ   20D 3  +24       3                    W    29A 3
WP   12B 1  - 5                           W    20E 3                                  W    29B 3
WP   12C 1  - 5                           WQ   20F 3  +24       2                    W    29C 3
W    12D 3                                W    21A 3                                  W    29D 3  WIRE001
W    12E 3                                W    21B 3                                  W    29E 3
W    12F 3                                W    21C 3                                  WQ   29F 3  MCDATRDY 2
W    13A 3                                W  + 21D 3  X3BPS                          W    30A 3
W    13B 3                                W    21E 3                                  W    30B 3
W    13C 3                                WQ   21F 3  X3BPS    2                     W    30C 3
W  + 13D 3  X5BPS                         W    22A 3                                  WQ   30D 3  MCDAT1DR 8
W    13E 3                                W    22B 3                                  W    30E 3
WQ   13F 3  X5BPS    3                    W    22C 3                                  WQ   30F 3  MCRESDR2 3
WP   14A 1  -12                           W  + 22D 3  X1BPS                          W    31A 3
WP   14B 1  -12                           W    22E 3                                  W    31B 3
WP   14C 1  -12                           WQ   22F 3  X1BPS    4                     W    31C 3
W    14D 3                                W  + 23A 3  PPWRON                         WQ   31D 3  MCDAT2DR 9
W    14E 3                                W    23B 3                                  W    31E 3
W    14F 3                                W    23C 3                                  WQ   31F 3  MCDATODR 4
WP   15A 1    0 A                         W  + 23D 3  X2BPS                          WPQ  32A 1  +10      5
WP   15B 1    0 A                         W    23E 3                                  WPQ  32B 1  +10      5
WP   15C 1    0 A                         WQ   23F 3  X2BPS    3                     WPQ  32C 1  +10      5
W    15D 3                                W    24A 3                                  WQ   32D 3  +10      1
W    15E 3                                W    24B 3                                  W    32E 3
W    15F 3                                W    24C 3                                  WQ   32F 3  +10      2
WP   16A 1  +12                           W  + 24D 3  B-EXTREC
WP   16B 1  +12                           W    24E 3
WP   16C 1  +12                           WQ   24F 3  B-EXTREC 7
W    16D 3  WIRE001                       W    25A 3
W    16E 3                                W    25B 3
                              ./.                                        ./.
```

```
*****************************************************************************************************************************************
*   S T U D E R   *      L O C A T I O N     P I N     L I S T       *    82/01/08 * 15:12      *   P A G E     24    *
*****************************************************************************************************************************************
TAPE LOCK SYSTEM 2000 A80: MASTER CTRL, PARALLEL PROGRAMMER   1.228.375.00            79-10-30

GR: 99   (CONTINUATION)
PROCESSOR BACK PANEL
*****************************************

EL: 99  CHASSIS, WIRING WITH:   0 L
-----------------------------------------
TYPE PT  LV SIG.NAME COLOR F   X     Y
---- --- -- -------- ----- - ----- -----
L    01  1% GROUND   4,4,4
L    02  1% GROUND   4,4,4
```

* STUDER * L O C A T I O N S U M M A R Y * 82/01/08 * 15:12 * P A G E 25 *

TAPE LOCK SYSTEM 2000 A80: MASTER CTRL, PARALLEL PROGRAMMER 1.228.375.00 79-10-30

GR #	USED PINS	UNUSED PINS	TOTAL PINS	COD. KEYS	ELE-MNTS	DESCRIPTION OF GROUP	PART # OF GR
96	8	0	8	0	1	RECTIFIER ASSEMBLY	1.228.396.00
97	273	46	319	14	14	RACK ELEMENTS LOWER PART	
98	154	27	181	10	16	RACK ELEMENTS UPPER PART	
99	1802	696	2498	0	21	PROCESSOR BACK PANEL	1.228.399.00
TOT.	2237	769	3006	24	52	DISTRIBUTED IN 4 GROUPS	

* STUDER * S I G N A L W I R E L I S T * 82/01/08 * 15:12 * P A G E 26 *

TAPE LOCK SYSTEM 2000 A80: MASTER CTRL, PARALLEL PROGRAMMER 1.228.375.00 79-10-30

SIG.NAME	COLOR	TYPE	GR	EL	PT	S	DESCRIPTION OF ELEMENT
0 A		W	99	01	15B		WRAP CONNECTOR J01.1, 3*32 PIN
		W	99	01	15C		WRAP CONNECTOR J01.1, 3*32 PIN
		W	99	02	15B		WRAP CONNECTOR J02.1, 3*32 PIN
		W	99	02	15C		WRAP CONNECTOR J02.1, 3*32 PIN
		W	99	03	15B		WRAP CONNECTOR J03.1, 3*32 PIN
		W	99	03	15C		WRAP CONNECTOR J03.1, 3*32 PIN
		W	99	04	15B		WRAP CONNECTOR J04.1, 3*32 PIN
		W	99	04	15C		WRAP CONNECTOR J04.1, 3*32 PIN
		W	99	05	15B		WRAP CONNECTOR J05.1, 3*32 PIN
		W	99	05	15C		WRAP CONNECTOR J05.1, 3*32 PIN
		W	99	06	15B		WRAP CONNECTOR J06.1, 3*32 PIN
		W	99	06	15C		WRAP CONNECTOR J06.1, 3*32 PIN
		W	99	07	15B		WRAP CONNECTOR J07.1, 3*32 PIN
		W	99	07	15C		WRAP CONNECTOR J07.1, 3*32 PIN
		W	99	08	15B		WRAP CONNECTOR J08.1, 3*32 PIN
		W	99	08	15C		WRAP CONNECTOR J08.1, 3*32 PIN
		W	99	09	15B		WRAP CONNECTOR J09.1, 3*32 PIN
		W	99	09	15C		WRAP CONNECTOR J09.1, 3*32 PIN
		W	99	10	15B		WRAP CONNECTOR J10.1, 3*32 PIN
		W	99	10	15C		WRAP CONNECTOR J10.1, 3*32 PIN
		WP	99	11	15A		WRAP CONNECTOR J11.1, 3*32 PIN
		WP	99	11	15B		WRAP CONNECTOR J11.1, 3*32 PIN
		WP	99	11	15C		WRAP CONNECTOR J11.1, 3*32 PIN
		WP	99	12	15A		WRAP CONNECTOR J12.1, 3*32 PIN
		WP	99	12	15B		WRAP CONNECTOR J12.1, 3*32 PIN
		WP	99	12	15C		WRAP CONNECTOR J12.1, 3*32 PIN
		WP	99	13	15A		WRAP CONNECTOR J13.1, 3*32 PIN
		WP	99	13	15B		WRAP CONNECTOR J13.1, 3*32 PIN
		WP	99	13	15C		WRAP CONNECTOR J13.1, 3*32 PIN
		WP	99	14	15A		WRAP CONNECTOR J14.1, 3*32 PIN
		WP	99	14	15B		WRAP CONNECTOR J14.1, 3*32 PIN
		WP	99	14	15C		WRAP CONNECTOR J14.1, 3*32 PIN
		WP	99	15	15A		WRAP CONNECTOR J15.1, 3*32 PIN
		WP	99	15	15B		WRAP CONNECTOR J15.1, 3*32 PIN
		WP	99	15	15C		WRAP CONNECTOR J15.1, 3*32 PIN
		WP	99	16	15A		WRAP CONNECTOR J16.1, 3*32 PIN
		WP	99	16	15B		WRAP CONNECTOR J16.1, 3*32 PIN
		WP	99	16	15C		WRAP CONNECTOR J16.1, 3*32 PIN
		WP	99	17	15A		WRAP CONNECTOR J17.1, 3*32 PIN
		WP	99	17	15B		WRAP CONNECTOR J17.1, 3*32 PIN
		WP	99	17	15C		WRAP CONNECTOR J17.1, 3*32 PIN
		WP	99	18	15A		WRAP CONNECTOR J18.1, 3*32 PIN
		WP	99	18	15B		WRAP CONNECTOR J18.1, 3*32 PIN
		WP	99	18	15C		WRAP CONNECTOR J18.1, 3*32 PIN
		WP	99	19	15A		WRAP CONNECTOR J19.1, 3*32 PIN
		WP	99	19	15B		WRAP CONNECTOR J19.1, 3*32 PIN
		WP	99	19	15C		WRAP CONNECTOR J19.1, 3*32 PIN
		WP	99	20	15A		WRAP CONNECTOR J20.1, 3*32 PIN
		WP	99	20	15B		WRAP CONNECTOR J20.1, 3*32 PIN
		WP	99	20	15C		WRAP CONNECTOR J20.1, 3*32 PIN
0 K	0	B	97	71	20		AUXILIARY CONNECTOR
	0	L	97	72	07A		RELAIS PRINT
	0	L	97	72	07C		RELAIS PRINT
	0	B	98	71	10		MASTER CONTROL OUTPUT
	0	B	98	71	11		MASTER CONTROL OUTPUT

-/-

SIG.NAME	COLOR	TYPE	GR	EL	PT	S	DESCRIPTION OF ELEMENT
(CONT.)		W	99	01	19B		WRAP CONNECTOR J01.1, 3*32 PIN
		W	99	01	19C		WRAP CONNECTOR J01.1, 3*32 PIN
		W	99	02	19B		WRAP CONNECTOR J02.1, 3*32 PIN
		W	99	02	19C		WRAP CONNECTOR J02.1, 3*32 PIN
		W	99	03	19B		WRAP CONNECTOR J03.1, 3*32 PIN
		W	99	03	19C		WRAP CONNECTOR J03.1, 3*32 PIN
		W	99	04	19B		WRAP CONNECTOR J04.1, 3*32 PIN
		W	99	04	19C		WRAP CONNECTOR J04.1, 3*32 PIN
		W	99	05	19B		WRAP CONNECTOR J05.1, 3*32 PIN
		W	99	05	19C		WRAP CONNECTOR J05.1, 3*32 PIN
		W	99	06	19B		WRAP CONNECTOR J06.1, 3*32 PIN
		W	99	06	19C		WRAP CONNECTOR J06.1, 3*32 PIN
	0	WQ	99	07	08D		WRAP CONNECTOR J07.2, 3*32 PIN
		W	99	07	19B		WRAP CONNECTOR J07.1, 3*32 PIN
		W	99	07	19C		WRAP CONNECTOR J07.1, 3*32 PIN
		W	99	08	19B		WRAP CONNECTOR J08.1, 3*32 PIN
		W	99	08	19C		WRAP CONNECTOR J08.1, 3*32 PIN
		W	99	09	19B		WRAP CONNECTOR J09.1, 3*32 PIN
		W	99	09	19C		WRAP CONNECTOR J09.1, 3*32 PIN
		W	99	10	19B		WRAP CONNECTOR J10.1, 3*32 PIN
		W	99	10	19C		WRAP CONNECTOR J10.1, 3*32 PIN
		WP	99	11	19A		WRAP CONNECTOR J11.1, 3*32 PIN
		WP	99	11	19B		WRAP CONNECTOR J11.1, 3*32 PIN
		WP	99	11	19C		WRAP CONNECTOR J11.1, 3*32 PIN
		WP	99	12	19A		WRAP CONNECTOR J12.1, 3*32 PIN
		WP	99	12	19B		WRAP CONNECTOR J12.1, 3*32 PIN
		WP	99	12	19C		WRAP CONNECTOR J12.1, 3*32 PIN
		WP	99	13	19A		WRAP CONNECTOR J13.1, 3*32 PIN
		WP	99	13	19B		WRAP CONNECTOR J13.1, 3*32 PIN
		WP	99	13	19C		WRAP CONNECTOR J13.1, 3*32 PIN
		WP	99	14	19A		WRAP CONNECTOR J14.1, 3*32 PIN
		WP	99	14	19B		WRAP CONNECTOR J14.1, 3*32 PIN
		WP	99	14	19C		WRAP CONNECTOR J14.1, 3*32 PIN
		WP	99	15	19A		WRAP CONNECTOR J15.1, 3*32 PIN
		WP	99	15	19B		WRAP CONNECTOR J15.1, 3*32 PIN
		WP	99	15	19C		WRAP CONNECTOR J15.1, 3*32 PIN
		WP	99	16	19A		WRAP CONNECTOR J16.1, 3*32 PIN
		WP	99	16	19B		WRAP CONNECTOR J16.1, 3*32 PIN
		WP	99	16	19C		WRAP CONNECTOR J16.1, 3*32 PIN
		WP	99	17	19A		WRAP CONNECTOR J17.1, 3*32 PIN
		WP	99	17	19B		WRAP CONNECTOR J17.1, 3*32 PIN
		WP	99	17	19C		WRAP CONNECTOR J17.1, 3*32 PIN
		WP	99	18	19A		WRAP CONNECTOR J18.1, 3*32 PIN
		WP	99	18	19B		WRAP CONNECTOR J18.1, 3*32 PIN
		WP	99	18	19C		WRAP CONNECTOR J18.1, 3*32 PIN
		WP	99	19	19A		WRAP CONNECTOR J19.1, 3*32 PIN
		WP	99	19	19B		WRAP CONNECTOR J19.1, 3*32 PIN
		WP	99	19	19C		WRAP CONNECTOR J19.1, 3*32 PIN
		WP	99	20	19A		WRAP CONNECTOR J20.1, 3*32 PIN
		WP	99	20	19B		WRAP CONNECTOR J20.1, 3*32 PIN
		WP	99	20	19C		WRAP CONNECTOR J20.1, 3*32 PIN
	0	WQ	99	20	19D		WRAP CONNECTOR J20.2, 3*32 PIN
	0	WQ	99	20	19F		WRAP CONNECTOR J20.2, 3*32 PIN
0 L	0	L	97	15	01A		REFERENCE FREQUENCY INPUT
	0	B	97	71	01		AUXILIARY CONNECTOR

-/-

```
*  S T U D E R  *   S I G N A L   W I R E   L I S T          *   82/01/08 * 15:12      *  P A G E    27   *
TAPE LOCK SYSTEM 2000 A80: MASTER CTRL, PARALLEL PROGRAMMER   1.228.375.00          79-10-30

SIG.NAME COLOR TYPE GR EL PT  S DESCRIPTION OF ELEMENT
-------- ----- ---- -- -- --- - ------------------------------
(CONT.)  0     B    97 71 35    AUXILIARY CONNECTOR
         0     L    97 72 06A   RELAIS PRINT
         0     L    97 72 06C   RELAIS PRINT
           *   L    97 94 01    CONN. ASS. TO MAIN PROGR. (J  I)
           *   L    97 95 01    CONN. ASS. TO MAIN PROGR. (J II)
           *   L    97 96 01    CONN. ASS. TO MAIN PROGR. (JIII)
         0     L    98 15 01A   MASTER INPUT/REPRO OUTPUT
         0     L    98 25 01A   GENERATOR LINE INPUT
         0     B    98 61 20    CODE CHANNEL REMOTE A80
         0     B    98 61 21    CODE CHANNEL REMOTE A80
         0     B    98 61 22    CODE CHANNEL REMOTE A80
         0     B    98 71 01    MASTER CONTROL OUTPUT
         0     B    98 71 14    MASTER CONTROL OUTPUT
         0     A    98 81 11    ADDITIONAL POWER CONNECTOR
         0     A    98 81 12    ADDITIONAL POWER CONNECTOR
         0     A    98 81 13    ADDITIONAL POWER CONNECTOR
         0     A    98 91 05    CONNECTOR ASS. TO POWER SUPPLY
         0     A    98 91 06    CONNECTOR ASS. TO POWER SUPPLY
         0     A    98 91 07    CONNECTOR ASS. TO POWER SUPPLY
         0     A    98 91 08    CONNECTOR ASS. TO POWER SUPPLY
         0     A    98 91 09    CONNECTOR ASS. TO POWER SUPPLY
         0     A    98 91 10    CONNECTOR ASS. TO POWER SUPPLY
               WP   99 01 01A   WRAP CONNECTOR J01.1, 3*32 PIN
         0     WPQ  99 01 01B   WRAP CONNECTOR J01.1, 3*32 PIN
               WP   99 01 01C   WRAP CONNECTOR J01.1, 3*32 PIN
               WP   99 02 01A   WRAP CONNECTOR J02.1, 3*32 PIN
               WP   99 02 01B   WRAP CONNECTOR J02.1, 3*32 PIN
               WP   99 02 01C   WRAP CONNECTOR J02.1, 3*32 PIN
               WP   99 03 01A   WRAP CONNECTOR J03.1, 3*32 PIN
               WP   99 03 01B   WRAP CONNECTOR J03.1, 3*32 PIN
               WP   99 03 01C   WRAP CONNECTOR J03.1, 3*32 PIN
               WP   99 04 01A   WRAP CONNECTOR J04.1, 3*32 PIN
               WP   99 04 01B   WRAP CONNECTOR J04.1, 3*32 PIN
               WP   99 04 01C   WRAP CONNECTOR J04.1, 3*32 PIN
         4     WPQ  99 05 01A % WIRING WITH: GROUND
         4     WPQ  99 05 01B % WIRING WITH: GROUND
         4     WPQ  99 05 01C % WIRING WITH: GROUND
               WP   99 06 01A   WRAP CONNECTOR J06.1, 3*32 PIN
               WP   99 06 01B   WRAP CONNECTOR J06.1, 3*32 PIN
               WP   99 06 01C   WRAP CONNECTOR J06.1, 3*32 PIN
               WP   99 06 01D   WRAP CONNECTOR J06.2, 3*32 PIN
               WP   99 06 01E   WRAP CONNECTOR J06.2, 3*32 PIN
               WP   99 06 01F   WRAP CONNECTOR J06.2, 3*32 PIN
               W  + 99 06 23F   WRAP CONNECTOR J06.2, 3*32 PIN
               W  + 99 06 24F   WRAP CONNECTOR J06.2, 3*32 PIN
               W  + 99 06 25F   WRAP CONNECTOR J06.2, 3*32 PIN
               W  + 99 06 27D   WRAP CONNECTOR J06.2, 3*32 PIN
               W  + 99 06 29D   WRAP CONNECTOR J06.2, 3*32 PIN
               WP   99 07 01A   WRAP CONNECTOR J07.1, 3*32 PIN
               WP   99 07 01B   WRAP CONNECTOR J07.1, 3*32 PIN
               WP   99 07 01C   WRAP CONNECTOR J07.1, 3*32 PIN
         0     WPQ  99 07 01D   WRAP CONNECTOR J07.2, 3*32 PIN
         0     WPQ  99 07 01E   WRAP CONNECTOR J07.2, 3*32 PIN
               WP   99 07 01F   WRAP CONNECTOR J07.2, 3*32 PIN
               WP   99 08 01A   WRAP CONNECTOR J08.1, 3*32 PIN
               WP   99 08 01B   WRAP CONNECTOR J08.1, 3*32 PIN
                                                          ./.

SIG.NAME COLOR TYPE GR EL PT  S DESCRIPTION OF ELEMENT
-------- ----- ---- -- -- --- - ------------------------------
(CONT.)        WP   99 08 01C   WRAP CONNECTOR J08.1, 3*32 PIN
           9-5-0 WPQ  99 08 01D   WRAP CONNECTOR J08.2, 3*32 PIN
                 WP   99 08 01E   WRAP CONNECTOR J08.2, 3*32 PIN
           9-4-0 WPQ  99 08 01F   WRAP CONNECTOR J08.2, 3*32 PIN
           5-1-0 WQ   99 08 12D   WRAP CONNECTOR J08.2, 3*32 PIN
           4-1-0 WQ   99 08 12F   WRAP CONNECTOR J08.2, 3*32 PIN
                 W  + 99 08 19D   WRAP CONNECTOR J08.2, 3*32 PIN
                 W  + 99 08 19F   WRAP CONNECTOR J08.2, 3*32 PIN
                 WP   99 09 01A   WRAP CONNECTOR J09.1, 3*32 PIN
                 WP   99 09 01B   WRAP CONNECTOR J09.1, 3*32 PIN
                 WP   99 09 01C   WRAP CONNECTOR J09.1, 3*32 PIN
           9-5-0 WPQ  99 09 01D   WRAP CONNECTOR J09.2, 3*32 PIN
                 WP   99 09 01E   WRAP CONNECTOR J09.2, 3*32 PIN
           9-4-0 WPQ  99 09 01F   WRAP CONNECTOR J09.2, 3*32 PIN
           5-1-0 WQ   99 09 12D   WRAP CONNECTOR J09.2, 3*32 PIN
           4-1-0 WQ   99 09 12F   WRAP CONNECTOR J09.2, 3*32 PIN
                 W  + 99 09 19D   WRAP CONNECTOR J09.2, 3*32 PIN
                 W  + 99 09 19F   WRAP CONNECTOR J09.2, 3*32 PIN
           0     WPQ  99 10 01A   WRAP CONNECTOR J10.1, 3*32 PIN
           0     WPQ  99 10 01B   WRAP CONNECTOR J10.1, 3*32 PIN
           0     WPQ  99 10 01C   WRAP CONNECTOR J10.1, 3*32 PIN
           9-5-0 WQ   99 10 01D   WRAP CONNECTOR J10.2, 3*32 PIN
           9-4-0 WQ   99 10 01F   WRAP CONNECTOR J10.2, 3*32 PIN
           5-1-0 WQ   99 10 12D   WRAP CONNECTOR J10.2, 3*32 PIN
           4-1-0 WQ   99 10 12F   WRAP CONNECTOR J10.2, 3*32 PIN
                 W  + 99 10 19D   WRAP CONNECTOR J10.2, 3*32 PIN
                 W  + 99 10 19F   WRAP CONNECTOR J10.2, 3*32 PIN
           0     WPQ  99 11 01A   WRAP CONNECTOR J11.1, 3*32 PIN
                 WP   99 11 01B   WRAP CONNECTOR J11.1, 3*32 PIN
                 WP   99 11 01C   WRAP CONNECTOR J11.1, 3*32 PIN
                 WP   99 12 01A   WRAP CONNECTOR J12.1, 3*32 PIN
                 WP   99 12 01B   WRAP CONNECTOR J12.1, 3*32 PIN
                 WP   99 12 01C   WRAP CONNECTOR J12.1, 3*32 PIN
                 W  + 99 12 22A   WRAP CONNECTOR J12.1, 3*32 PIN
           0     WPQ  99 13 01A   WRAP CONNECTOR J13.1, 3*32 PIN
                 WP   99 13 01B   WRAP CONNECTOR J13.1, 3*32 PIN
                 WP   99 13 01C   WRAP CONNECTOR J13.1, 3*32 PIN
                 WP   99 14 01A   WRAP CONNECTOR J14.1, 3*32 PIN
                 WP   99 14 01B   WRAP CONNECTOR J14.1, 3*32 PIN
                 WP   99 14 01C   WRAP CONNECTOR J14.1, 3*32 PIN
           4     WPQ  99 15 01A % WIRING WITH: GROUND
           4     WPQ  99 15 01B % WIRING WITH: GROUND
           4     WPQ  99 15 01C % WIRING WITH: GROUND
                 WP   99 16 01A   WRAP CONNECTOR J16.1, 3*32 PIN
                 WP   99 16 01B   WRAP CONNECTOR J16.1, 3*32 PIN
                 WP   99 16 01C   WRAP CONNECTOR J16.1, 3*32 PIN
                 WP   99 17 01A   WRAP CONNECTOR J17.1, 3*32 PIN
                 WP   99 17 01B   WRAP CONNECTOR J17.1, 3*32 PIN
                 WP   99 17 01C   WRAP CONNECTOR J17.1, 3*32 PIN
           0     WPQ  99 18 01A   WRAP CONNECTOR J18.1, 3*32 PIN
           0     WPQ  99 18 01B   WRAP CONNECTOR J18.1, 3*32 PIN
           0     WPQ  99 18 01C   WRAP CONNECTOR J18.1, 3*32 PIN
                 WP   99 19 01A   WRAP CONNECTOR J19.1, 3*32 PIN
                 WP   99 19 01B   WRAP CONNECTOR J19.1, 3*32 PIN
                 WP   99 19 01C   WRAP CONNECTOR J19.1, 3*32 PIN
           0     WPQ  99 20 01A   WRAP CONNECTOR J20.1, 3*32 PIN
                                                          ./.
```

```
*  S T U D E R  *   S I G N A L   W I R E   L I S T          *   82/01/08 * 15:12      *  P A G E    28   *
TAPE LOCK SYSTEM 2000 A80: MASTER CTRL, PARALLEL PROGRAMMER   1.228.375.00          79-10-30

SIG.NAME COLOR TYPE GR EL PT  S DESCRIPTION OF ELEMENT
-------- ----- ---- -- -- --- - ------------------------------
(CONT.)  0     WPQ  99 20 01B   WRAP CONNECTOR J20.1, 3*32 PIN
         0     WPQ  99 20 01C   WRAP CONNECTOR J20.1, 3*32 PIN
         0     WQ   99 20 01D   WRAP CONNECTOR J20.2, 3*32 PIN
               W  + 99 20 01E   WRAP CONNECTOR J20.2, 3*32 PIN
         0     WQ   99 20 01F   WRAP CONNECTOR J20.2, 3*32 PIN
         0     WQ   99 20 05D   WRAP CONNECTOR J20.2, 3*32 PIN
         0     WQ   99 20 06D   WRAP CONNECTOR J20.2, 3*32 PIN
         0     WQ   99 20 07D   WRAP CONNECTOR J20.2, 3*32 PIN

  0 SW   9-2   B    97 93 24    CONN. ASS. TO MAIN PROGR. (JIII)
         9-2   WQ   99 10 30D   WRAP CONNECTOR J10.2, 3*32 PIN

  0 1325       W    99 13 22B   WRAP CONNECTOR J13.1, 3*32 PIN

+ 5  ADD      W    99 03 11A   WRAP CONNECTOR J03.1, 3*32 PIN
             W    99 04 25B   WRAP CONNECTOR J04.1, 3*32 PIN
             W    99 06 07A   WRAP CONNECTOR J06.1, 3*32 PIN
             W    99 10 11C   WRAP CONNECTOR J10.1, 3*32 PIN
             W  + 99 13 28B   WRAP CONNECTOR J13.1, 3*32 PIN
             W  + 99 13 29B   WRAP CONNECTOR J13.1, 3*32 PIN
             W  + 99 14 29A   WRAP CONNECTOR J14.1, 3*32 PIN
             W  + 99 14 30A   WRAP CONNECTOR J14.1, 3*32 PIN
             W    99 15 13B   WRAP CONNECTOR J15.1, 3*32 PIN
             W  + 99 17 02A   WRAP CONNECTOR J17.1, 3*32 PIN
             W  + 99 18 03A   WRAP CONNECTOR J18.1, 3*32 PIN
             W  + 99 18 03C   WRAP CONNECTOR J18.1, 3*32 PIN
             W    99 18 28A   WRAP CONNECTOR J18.1, 3*32 PIN
             W    99 18 28B   WRAP CONNECTOR J18.1, 3*32 PIN
             W    99 18 28C   WRAP CONNECTOR J18.1, 3*32 PIN
             W    99 18 29A   WRAP CONNECTOR J18.1, 3*32 PIN
             W    99 18 29B   WRAP CONNECTOR J18.1, 3*32 PIN
             W    99 18 29C   WRAP CONNECTOR J18.1, 3*32 PIN
             W    99 18 30A   WRAP CONNECTOR J18.1, 3*32 PIN
             W    99 18 30B   WRAP CONNECTOR J18.1, 3*32 PIN
             W    99 18 30C   WRAP CONNECTOR J18.1, 3*32 PIN
             W  + 99 20 28B   WRAP CONNECTOR J20.1, 3*32 PIN
             W  + 99 20 28C   WRAP CONNECTOR J20.1, 3*32 PIN

+0.0CAP1 0   B    97 41 01    CAPSTAN SPEED CONTROL
         0   WQ   99 06 02D % WIRING WITH:   0 L

+0.0CAP2 0   B    97 41 13    CAPSTAN SPEED CONTROL
         0   WQ   99 06 05E   WRAP CONNECTOR J06.2, 3*32 PIN
             W  + 99 06 27E   WRAP CONNECTOR J06.2, 3*32 PIN
             W    99 17 21A   WRAP CONNECTOR J17.1, 3*32 PIN

+0.0EMC1 0   A    97 51 01    EXTENDED REMOTE MODE CONTROL
         0   WQ   99 06 21D % WIRING WITH:   0 L

+0.0EMC2 0   A    97 51 19    EXTENDED REMOTE MODE CONTROL
         0   WQ   99 06 26E % WIRING WITH:   0 L

+0.0MC1  0   A    97 61 01    REMOTE MODE CONTROL
         0   WQ   99 07 10D % WIRING WITH:   0 L

+0.0MC2  0   A    97 61 11    REMOTE MODE CONTROL
                                                          ./.

SIG.NAME COLOR TYPE GR EL PT  S DESCRIPTION OF ELEMENT
-------- ----- ---- -- -- --- - ------------------------------
(CONT.)  0     WQ   99 07 25D   WRAP CONNECTOR J07.2, 3*32 PIN
         0     W    99 17 23A   WRAP CONNECTOR J17.1, 3*32 PIN

+0.0MC3  0     A    97 61 49    REMOTE MODE CONTROL
         0     WQ   99 07 30F % WIRING WITH:   0 L

+0.0MC4  0     A    97 61 50    REMOTE MODE CONTROL
         0     WQ   99 07 31F % WIRING WITH:   0 L

+0-TYPE1 1     A    97 61 33    REMOTE MODE CONTROL
               W  + 99 06 28D   WRAP CONNECTOR J06.2, 3*32 PIN
         1     WQ   99 07 31E   WRAP CONNECTOR J07.2, 3*32 PIN
               W    99 08 28A   WRAP CONNECTOR J08.1, 3*32 PIN

+0-TYPE2 2     A    97 61 32    REMOTE MODE CONTROL
         2     WQ   99 07 30E   WRAP CONNECTOR J07.2, 3*32 PIN

+10      2     B    98 61 02    CODE CHANNEL REMOTE A80
         1     B    98 71 03    MASTER CONTROL OUTPUT
         5     A    98 81 16    ADDITIONAL POWER CONNECTOR
         5     A    98 81 17    ADDITIONAL POWER CONNECTOR
         5     A    98 81 18    ADDITIONAL POWER CONNECTOR
         5     A    98 91 16    CONNECTOR ASS. TO POWER SUPPLY
         5     A    98 91 17    CONNECTOR ASS. TO POWER SUPPLY
         5     A    98 91 18    CONNECTOR ASS. TO POWER SUPPLY
         5     A    98 91 19    CONNECTOR ASS. TO POWER SUPPLY
         5     A    98 91 20    CONNECTOR ASS. TO POWER SUPPLY
         5     A    98 91 21    CONNECTOR ASS. TO POWER SUPPLY
               WP   99 01 32A   WRAP CONNECTOR J01.1, 3*32 PIN
               WP   99 01 32B   WRAP CONNECTOR J01.1, 3*32 PIN
               WP   99 01 32C   WRAP CONNECTOR J01.1, 3*32 PIN
               WP   99 02 32A   WRAP CONNECTOR J02.1, 3*32 PIN
               WP   99 02 32B   WRAP CONNECTOR J02.1, 3*32 PIN
               WP   99 02 32C   WRAP CONNECTOR J02.1, 3*32 PIN
               WP   99 03 32A   WRAP CONNECTOR J03.1, 3*32 PIN
               WP   99 03 32B   WRAP CONNECTOR J03.1, 3*32 PIN
               WP   99 03 32C   WRAP CONNECTOR J03.1, 3*32 PIN
               WP   99 04 32A   WRAP CONNECTOR J04.1, 3*32 PIN
               WP   99 04 32B   WRAP CONNECTOR J04.1, 3*32 PIN
               WP   99 04 32C   WRAP CONNECTOR J04.1, 3*32 PIN
               WP   99 05 32A   WRAP CONNECTOR J05.1, 3*32 PIN
               WP   99 05 32B   WRAP CONNECTOR J05.1, 3*32 PIN
               WP   99 05 32C   WRAP CONNECTOR J05.1, 3*32 PIN
               WP   99 06 32A   WRAP CONNECTOR J06.1, 3*32 PIN
               WP   99 06 32B   WRAP CONNECTOR J06.1, 3*32 PIN
               WP   99 06 32C   WRAP CONNECTOR J06.1, 3*32 PIN
               WP   99 06 32D   WRAP CONNECTOR J06.2, 3*32 PIN
               WP   99 06 32E   WRAP CONNECTOR J06.2, 3*32 PIN
               WP   99 06 32F   WRAP CONNECTOR J06.2, 3*32 PIN
               WP   99 07 32A   WRAP CONNECTOR J07.1, 3*32 PIN
               WP   99 07 32B   WRAP CONNECTOR J07.1, 3*32 PIN
               WP   99 07 32C   WRAP CONNECTOR J07.1, 3*32 PIN
               WP   99 07 32D   WRAP CONNECTOR J07.2, 3*32 PIN
               WP   99 07 32E   WRAP CONNECTOR J07.2, 3*32 PIN
               WP   99 07 32F   WRAP CONNECTOR J07.2, 3*32 PIN
               WP   99 08 32A   WRAP CONNECTOR J08.1, 3*32 PIN
                                                          ./.
```

SIG.NAME	COLOR	TYPE	GR	EL	PT	S	DESCRIPTION OF ELEMENT
(CONT.)		WP	99	08	32A		WRAP CONNECTOR J08.1, 3*32 PIN
		WP	99	08	32B		WRAP CONNECTOR J08.1, 3*32 PIN
		WP	99	08	32C		WRAP CONNECTOR J08.1, 3*32 PIN
		WP	99	08	32D		WRAP CONNECTOR J08.2, 3*32 PIN
		WP	99	08	32E		WRAP CONNECTOR J08.2, 3*32 PIN
		WP	99	08	32F		WRAP CONNECTOR J08.2, 3*32 PIN
		WP	99	09	32A		WRAP CONNECTOR J09.1, 3*32 PIN
		WP	99	09	32B		WRAP CONNECTOR J09.1, 3*32 PIN
		WP	99	09	32C		WRAP CONNECTOR J09.1, 3*32 PIN
		WP	99	09	32D		WRAP CONNECTOR J09.2, 3*32 PIN
		WP	99	09	32E		WRAP CONNECTOR J09.2, 3*32 PIN
		WP	99	09	32F		WRAP CONNECTOR J09.2, 3*32 PIN
	5	WPQ	99	10	32A		WRAP CONNECTOR J10.1, 3*32 PIN
	5	WPQ	99	10	32B		WRAP CONNECTOR J10.1, 3*32 PIN
	5	WPQ	99	10	32C		WRAP CONNECTOR J10.1, 3*32 PIN
		W	99	10	32D		WRAP CONNECTOR J10.2, 3*32 PIN
		W	99	10	32F		WRAP CONNECTOR J10.2, 3*32 PIN
		WP	99	11	32A		WRAP CONNECTOR J11.1, 3*32 PIN
		WP	99	11	32B		WRAP CONNECTOR J11.1, 3*32 PIN
		WP	99	11	32C		WRAP CONNECTOR J11.1, 3*32 PIN
		WP	99	12	32A		WRAP CONNECTOR J12.1, 3*32 PIN
		WP	99	12	32B		WRAP CONNECTOR J12.1, 3*32 PIN
		WP	99	12	32C		WRAP CONNECTOR J12.1, 3*32 PIN
		WP	99	13	32A		WRAP CONNECTOR J13.1, 3*32 PIN
		WP	99	13	32B		WRAP CONNECTOR J13.1, 3*32 PIN
		WP	99	13	32C		WRAP CONNECTOR J13.1, 3*32 PIN
		WP	99	14	32A		WRAP CONNECTOR J14.1, 3*32 PIN
		WP	99	14	32B		WRAP CONNECTOR J14.1, 3*32 PIN
		WP	99	14	32C		WRAP CONNECTOR J14.1, 3*32 PIN
		WP	99	15	32A		WRAP CONNECTOR J15.1, 3*32 PIN
		WP	99	15	32B		WRAP CONNECTOR J15.1, 3*32 PIN
		WP	99	15	32C		WRAP CONNECTOR J15.1, 3*32 PIN
		WP	99	16	32A		WRAP CONNECTOR J16.1, 3*32 PIN
		WP	99	16	32B		WRAP CONNECTOR J16.1, 3*32 PIN
		WP	99	16	32C		WRAP CONNECTOR J16.1, 3*32 PIN
		WP	99	17	32A		WRAP CONNECTOR J17.1, 3*32 PIN
		WP	99	17	32B		WRAP CONNECTOR J17.1, 3*32 PIN
		WP	99	17	32C		WRAP CONNECTOR J17.1, 3*32 PIN
	5	WPQ	99	18	32A		WRAP CONNECTOR J18.1, 3*32 PIN
	5	WPQ	99	18	32B		WRAP CONNECTOR J18.1, 3*32 PIN
	5	WPQ	99	18	32C		WRAP CONNECTOR J18.1, 3*32 PIN
		W +	99	19	05A		WRAP CONNECTOR J19.1, 3*32 PIN
		W +	99	19	05B		WRAP CONNECTOR J19.1, 3*32 PIN
		W +	99	19	05C		WRAP CONNECTOR J19.1, 3*32 PIN
		WP	99	19	32A		WRAP CONNECTOR J19.1, 3*32 PIN
		WP	99	19	32B		WRAP CONNECTOR J19.1, 3*32 PIN
		WP	99	19	32C		WRAP CONNECTOR J19.1, 3*32 PIN
	5	WPQ	99	20	32A		WRAP CONNECTOR J20.1, 3*32 PIN
	5	WPQ	99	20	32B		WRAP CONNECTOR J20.1, 3*32 PIN
	5	WPQ	99	20	32C		WRAP CONNECTOR J20.1, 3*32 PIN
	4-1	WQ	99	20	32D		WRAP CONNECTOR J20.2, 3*32 PIN
	6-2-0	WQ	99	20	32F		WRAP CONNECTOR J20.2, 3*32 PIN
+10 SW	2-R	B	97	93	41		CONN. ASS. TO MAIN PROGR. (JIII)
	2-R	WQ	99	10	23F		WRAP CONNECTOR J10.2, 3*32 PIN
+10AD150	5	A	98	71	19		ADDITIONAL POWER CONNECTOR
	5	A	98	71	20		ADDITIONAL POWER CONNECTOR
	5	A	98	71	21		ADDITIONAL POWER CONNECTOR
	5	WQ	99	18	07A		WRAP CONNECTOR J18.1, 3*32 PIN
	5	WQ	99	18	07B		WRAP CONNECTOR J18.1, 3*32 PIN
	5	WQ	99	18	07C		WRAP CONNECTOR J18.1, 3*32 PIN
+12	4	L	98	61	06		CODE CH. REMOTE IF (OPTIONAL)
	4	L	98	62	06B		CODE CH. REMOTE IF (OPTIONAL)
	1	L	98	62	08A		CODE CH. REMOTE IF (OPTIONAL)
		W	99	01	16B		WRAP CONNECTOR J01.1, 3*32 PIN
		W	99	01	16C		WRAP CONNECTOR J01.1, 3*32 PIN
		W	99	02	16B		WRAP CONNECTOR J02.1, 3*32 PIN
		W	99	02	16C		WRAP CONNECTOR J02.1, 3*32 PIN
		W	99	03	16B		WRAP CONNECTOR J03.1, 3*32 PIN
		W	99	03	16C		WRAP CONNECTOR J03.1, 3*32 PIN
		W	99	04	16B		WRAP CONNECTOR J04.1, 3*32 PIN
		W	99	04	16C		WRAP CONNECTOR J04.1, 3*32 PIN
		W	99	05	16B		WRAP CONNECTOR J05.1, 3*32 PIN
		W	99	05	16C		WRAP CONNECTOR J05.1, 3*32 PIN
		W	99	06	16B		WRAP CONNECTOR J06.1, 3*32 PIN
		W	99	06	16C		WRAP CONNECTOR J06.1, 3*32 PIN
		W	99	07	16B		WRAP CONNECTOR J07.1, 3*32 PIN
		W	99	07	16C		WRAP CONNECTOR J07.1, 3*32 PIN
		W	99	08	16B		WRAP CONNECTOR J08.1, 3*32 PIN
		W	99	08	16C		WRAP CONNECTOR J08.1, 3*32 PIN
		W	99	09	16B		WRAP CONNECTOR J09.1, 3*32 PIN
		W	99	09	16C		WRAP CONNECTOR J09.1, 3*32 PIN
		W	99	10	16B		WRAP CONNECTOR J10.1, 3*32 PIN
		W	99	10	16C		WRAP CONNECTOR J10.1, 3*32 PIN
		WP	99	11	16A		WRAP CONNECTOR J11.1, 3*32 PIN
		WP	99	11	16B		WRAP CONNECTOR J11.1, 3*32 PIN
		WP	99	11	16C		WRAP CONNECTOR J11.1, 3*32 PIN
		WP	99	12	16A		WRAP CONNECTOR J12.1, 3*32 PIN
		WP	99	12	16B		WRAP CONNECTOR J12.1, 3*32 PIN
		WP	99	12	16C		WRAP CONNECTOR J12.1, 3*32 PIN
		WP	99	13	16A		WRAP CONNECTOR J13.1, 3*32 PIN
		WP	99	13	16B		WRAP CONNECTOR J13.1, 3*32 PIN
		WP	99	13	16C		WRAP CONNECTOR J13.1, 3*32 PIN
		WP	99	14	16A		WRAP CONNECTOR J14.1, 3*32 PIN
		WP	99	14	16B		WRAP CONNECTOR J14.1, 3*32 PIN
		WP	99	14	16C		WRAP CONNECTOR J14.1, 3*32 PIN
		WP	99	15	16A		WRAP CONNECTOR J15.1, 3*32 PIN
		WP	99	15	16B		WRAP CONNECTOR J15.1, 3*32 PIN
		WP	99	15	16C		WRAP CONNECTOR J15.1, 3*32 PIN
		WP	99	16	16A		WRAP CONNECTOR J16.1, 3*32 PIN
		WP	99	16	16B		WRAP CONNECTOR J16.1, 3*32 PIN
		WP	99	16	16C		WRAP CONNECTOR J16.1, 3*32 PIN
	1	WPQ$	99	17	16A		WRAP CONNECTOR J17.1, 3*32 PIN
		WP	99	17	16B		WRAP CONNECTOR J17.1, 3*32 PIN
		WP	99	17	16C		WRAP CONNECTOR J17.1, 3*32 PIN
		WP	99	18	16A		WRAP CONNECTOR J18.1, 3*32 PIN
		WP	99	18	16B		WRAP CONNECTOR J18.1, 3*32 PIN
		WP	99	18	16C		WRAP CONNECTOR J18.1, 3*32 PIN
		WP	99	19	16A		WRAP CONNECTOR J19.1, 3*32 PIN
		WP	99	19	16B		WRAP CONNECTOR J19.1, 3*32 PIN

./.

SIG.NAME	COLOR	TYPE	GR	EL	PT	S	DESCRIPTION OF ELEMENT
+20V A80	3,3	L	96	01	03		RECTIFIER ASSEMBLY
	3	WQ	99	19	07A		WRAP CONNECTOR J19.1, 3*32 PIN
		W	99	19	07B		WRAP CONNECTOR J19.1, 3*32 PIN
	3	WQ	99	19	07C		WRAP CONNECTOR J19.1, 3*32 PIN
+24	2	B	97	71	37		AUXILIARY CONNECTOR
	2	L	97	72	08A		RELAIS PRINT
	2	L	97	72	08C		RELAIS PRINT
	2	B	98	71	12		MASTER CONTROL OUTPUT
	3	B	98	71	13		MASTER CONTROL OUTPUT
		W	99	01	20B		WRAP CONNECTOR J01.1, 3*32 PIN
		W	99	01	20C		WRAP CONNECTOR J01.1, 3*32 PIN
		W	99	02	20B		WRAP CONNECTOR J02.1, 3*32 PIN
		W	99	02	20C		WRAP CONNECTOR J02.1, 3*32 PIN
		W	99	03	20B		WRAP CONNECTOR J03.1, 3*32 PIN
		W	99	03	20C		WRAP CONNECTOR J03.1, 3*32 PIN
		W	99	04	20B		WRAP CONNECTOR J04.1, 3*32 PIN
		W	99	04	20C		WRAP CONNECTOR J04.1, 3*32 PIN
		W	99	05	20B		WRAP CONNECTOR J05.1, 3*32 PIN
		W	99	05	20C		WRAP CONNECTOR J05.1, 3*32 PIN
		W	99	06	20B		WRAP CONNECTOR J06.1, 3*32 PIN
		W	99	06	20C		WRAP CONNECTOR J06.1, 3*32 PIN
	2	WQ	99	07	09D		WRAP CONNECTOR J07.2, 3*32 PIN
		W	99	07	20B		WRAP CONNECTOR J07.1, 3*32 PIN
		W	99	07	20C		WRAP CONNECTOR J07.1, 3*32 PIN
		W	99	08	20B		WRAP CONNECTOR J08.1, 3*32 PIN
		W	99	08	20C		WRAP CONNECTOR J08.1, 3*32 PIN
		W	99	09	20A		WRAP CONNECTOR J09.1, 3*32 PIN
		W	99	09	20B		WRAP CONNECTOR J09.1, 3*32 PIN
		W	99	09	20C		WRAP CONNECTOR J09.1, 3*32 PIN
		W	99	10	20B		WRAP CONNECTOR J10.1, 3*32 PIN
		W	99	10	20C		WRAP CONNECTOR J10.1, 3*32 PIN
		WP	99	11	20A		WRAP CONNECTOR J11.1, 3*32 PIN
		WP	99	11	20B		WRAP CONNECTOR J11.1, 3*32 PIN
		WP	99	11	20C		WRAP CONNECTOR J11.1, 3*32 PIN
		WP	99	12	20A		WRAP CONNECTOR J12.1, 3*32 PIN
		WP	99	12	20B		WRAP CONNECTOR J12.1, 3*32 PIN
		WP	99	12	20C		WRAP CONNECTOR J12.1, 3*32 PIN
		WP	99	13	20A		WRAP CONNECTOR J13.1, 3*32 PIN
		WP	99	13	20B		WRAP CONNECTOR J13.1, 3*32 PIN
		WP	99	13	20C		WRAP CONNECTOR J13.1, 3*32 PIN
		WP	99	14	20A		WRAP CONNECTOR J14.1, 3*32 PIN
		WP	99	14	20B		WRAP CONNECTOR J14.1, 3*32 PIN
		WP	99	14	20C		WRAP CONNECTOR J14.1, 3*32 PIN
		WP	99	15	20A		WRAP CONNECTOR J15.1, 3*32 PIN
		WP	99	15	20B		WRAP CONNECTOR J15.1, 3*32 PIN
		WP	99	15	20C		WRAP CONNECTOR J15.1, 3*32 PIN
		WP	99	16	20A		WRAP CONNECTOR J16.1, 3*32 PIN
		WP	99	16	20B		WRAP CONNECTOR J16.1, 3*32 PIN
		WP	99	16	20C		WRAP CONNECTOR J16.1, 3*32 PIN
		WP	99	17	20A		WRAP CONNECTOR J17.1, 3*32 PIN
		WP	99	17	20B		WRAP CONNECTOR J17.1, 3*32 PIN
		WP	99	17	20C		WRAP CONNECTOR J17.1, 3*32 PIN
		WP	99	18	20A		WRAP CONNECTOR J18.1, 3*32 PIN
		WP	99	18	20B		WRAP CONNECTOR J18.1, 3*32 PIN
		WP	99	18	20C		WRAP CONNECTOR J18.1, 3*32 PIN
(CONT.)		W +	99	19	08A		WRAP CONNECTOR J19.1, 3*32 PIN
		W +	99	19	08B		WRAP CONNECTOR J19.1, 3*32 PIN
		W +	99	19	08C		WRAP CONNECTOR J19.1, 3*32 PIN
		WP	99	19	20A		WRAP CONNECTOR J19.1, 3*32 PIN
		WP	99	19	20B		WRAP CONNECTOR J19.1, 3*32 PIN
		WP	99	19	20C		WRAP CONNECTOR J19.1, 3*32 PIN
		WP	99	20	20A		WRAP CONNECTOR J20.1, 3*32 PIN
		WP	99	20	20B		WRAP CONNECTOR J20.1, 3*32 PIN
		WP	99	20	20C		WRAP CONNECTOR J20.1, 3*32 PIN
	3	WQ	99	20	20D		WRAP CONNECTOR J20.2, 3*32 PIN
	2	WQ	99	20	20F		WRAP CONNECTOR J20.2, 3*32 PIN
+24CAP1	9	B	97	41	02		CAPSTAN SPEED CONTROL
	9	WQ	99	06	03D		WRAP CONNECTOR J06.2, 3*32 PIN
+24M	3	B	97	71	36		AUXILIARY CONNECTOR
	3	L	97	72	09A		RELAIS PRINT
+24MC1	9	A	97	61	15		REMOTE MODE CONTROL
	9	WQ	99	07	29D		WRAP CONNECTOR J07.2, 3*32 PIN
+24MC2	9	A	97	61	26		REMOTE MODE CONTROL
	9	WQ	99	07	24E		WRAP CONNECTOR J07.2, 3*32 PIN
+24MC3	9	A	97	61	34		REMOTE MODE CONTROL
	9	WQ	99	07	10F		WRAP CONNECTOR J07.2, 3*32 PIN
+31V 150	9	A	98	91	23		CONNECTOR ASS. TO POWER SUPPLY
	9	A	98	91	24		CONNECTOR ASS. TO POWER SUPPLY
	9	A	98	91	25		CONNECTOR ASS. TO POWER SUPPLY
	9	WQ	99	20	07A		WRAP CONNECTOR J20.1, 3*32 PIN
	9	WQ	99	20	07B		WRAP CONNECTOR J20.1, 3*32 PIN
	9	WQ	99	20	07C		WRAP CONNECTOR J20.1, 3*32 PIN
+5.0CAP1	5	B	97	41	14		CAPSTAN SPEED CONTROL
	5	WQ	99	06	06E		WRAP CONNECTOR J06.2, 3*32 PIN
+5.8EMC1	5	A	97	51	18		EXTENDED REMOTE MODE CONTROL
	5	WQ	99	06	25E		WRAP CONNECTOR J06.2, 3*32 PIN
		W	99	17	22A		WRAP CONNECTOR J17.1, 3*32 PIN
+5.8MC1	5	A	97	61	16		REMOTE MODE CONTROL
	5	WQ	99	07	30D		WRAP CONNECTOR J07.2, 3*32 PIN
- 5		W	99	01	12B		WRAP CONNECTOR J01.1, 3*32 PIN
		W	99	01	12C		WRAP CONNECTOR J01.1, 3*32 PIN
		W	99	02	12B		WRAP CONNECTOR J02.1, 3*32 PIN
		W	99	02	12C		WRAP CONNECTOR J02.1, 3*32 PIN
		W	99	03	12B		WRAP CONNECTOR J03.1, 3*32 PIN
		W	99	03	12C		WRAP CONNECTOR J03.1, 3*32 PIN
		W	99	04	12B		WRAP CONNECTOR J04.1, 3*32 PIN
		W	99	04	12C		WRAP CONNECTOR J04.1, 3*32 PIN
		W	99	05	12B		WRAP CONNECTOR J05.1, 3*32 PIN
		W	99	05	12C		WRAP CONNECTOR J05.1, 3*32 PIN
		W	99	06	12B		WRAP CONNECTOR J06.1, 3*32 PIN
		W	99	06	12C		WRAP CONNECTOR J06.1, 3*32 PIN

./.

* STUDER * SIGNAL WIRE LIST * 82/01/08 * 15:12 * PAGE 31 *

TAPE LOCK SYSTEM 2000 A80: MASTER CTRL, PARALLEL PROGRAMMER 1.228.375.00 79-10-30

SIG.NAME	COLOR	TYPE	GR	EL	PT	S	DESCRIPTION OF ELEMENT
(CONT.)		W	99	07	12B		WRAP CONNECTOR J07.1, 3*32 PIN
		W	99	07	12C		WRAP CONNECTOR J07.1, 3*32 PIN
		W	99	08	12B		WRAP CONNECTOR J08.1, 3*32 PIN
		W	99	08	12C		WRAP CONNECTOR J08.1, 3*32 PIN
		W	99	09	12B		WRAP CONNECTOR J09.1, 3*32 PIN
		W	99	09	12C		WRAP CONNECTOR J09.1, 3*32 PIN
		W	99	10	12B		WRAP CONNECTOR J10.1, 3*32 PIN
		W	99	10	12C		WRAP CONNECTOR J10.1, 3*32 PIN
		WP	99	11	12A		WRAP CONNECTOR J11.1, 3*32 PIN
		WP	99	11	12B		WRAP CONNECTOR J11.1, 3*32 PIN
		WP	99	11	12C		WRAP CONNECTOR J11.1, 3*32 PIN
		WP	99	12	12A		WRAP CONNECTOR J12.1, 3*32 PIN
		WP	99	12	12B		WRAP CONNECTOR J12.1, 3*32 PIN
		WP	99	12	12C		WRAP CONNECTOR J12.1, 3*32 PIN
		WP	99	13	12A		WRAP CONNECTOR J13.1, 3*32 PIN
		WP	99	13	12B		WRAP CONNECTOR J13.1, 3*32 PIN
		WP	99	13	12C		WRAP CONNECTOR J13.1, 3*32 PIN
		WP	99	14	12A		WRAP CONNECTOR J14.1, 3*32 PIN
		WP	99	14	12B		WRAP CONNECTOR J14.1, 3*32 PIN
		WP	99	14	12C		WRAP CONNECTOR J14.1, 3*32 PIN
		WP	99	15	12A		WRAP CONNECTOR J15.1, 3*32 PIN
		WP	99	15	12B		WRAP CONNECTOR J15.1, 3*32 PIN
		WP	99	15	12C		WRAP CONNECTOR J15.1, 3*32 PIN
		WP	99	16	12A		WRAP CONNECTOR J16.1, 3*32 PIN
		WP	99	16	12B		WRAP CONNECTOR J16.1, 3*32 PIN
		WP	99	16	12C		WRAP CONNECTOR J16.1, 3*32 PIN
		WP	99	17	12A		WRAP CONNECTOR J17.1, 3*32 PIN
		WP	99	17	12B		WRAP CONNECTOR J17.1, 3*32 PIN
		WP	99	17	12C		WRAP CONNECTOR J17.1, 3*32 PIN
		WP	99	18	12A		WRAP CONNECTOR J18.1, 3*32 PIN
		WP	99	18	12B		WRAP CONNECTOR J18.1, 3*32 PIN
		WP	99	18	12C		WRAP CONNECTOR J18.1, 3*32 PIN
		WP	99	19	12A		WRAP CONNECTOR J19.1, 3*32 PIN
		WP	99	19	12B		WRAP CONNECTOR J19.1, 3*32 PIN
		WP	99	19	12C		WRAP CONNECTOR J19.1, 3*32 PIN
		WP	99	20	12A		WRAP CONNECTOR J20.1, 3*32 PIN
		WP	99	20	12B		WRAP CONNECTOR J20.1, 3*32 PIN
		WP	99	20	12C		WRAP CONNECTOR J20.1, 3*32 PIN
-10V 150	6	A	98	91	01		CONNECTOR ASS. TO POWER SUPPLY
	6	A	98	91	03		CONNECTOR ASS. TO POWER SUPPLY
	6	A	98	91	04		CONNECTOR ASS. TO POWER SUPPLY
	6	WQ	99	20	04A		WRAP CONNECTOR J20.1, 3*32 PIN
	6	WQ	99	20	04B		WRAP CONNECTOR J20.1, 3*32 PIN
	6	WQ	99	20	04C		WRAP CONNECTOR J20.1, 3*32 PIN
-12		W	99	01	14B		WRAP CONNECTOR J01.1, 3*32 PIN
		W	99	01	14C		WRAP CONNECTOR J01.1, 3*32 PIN
		W	99	02	14B		WRAP CONNECTOR J02.1, 3*32 PIN
		W	99	02	14C		WRAP CONNECTOR J02.1, 3*32 PIN
		W	99	03	14B		WRAP CONNECTOR J03.1, 3*32 PIN
		W	99	03	14C		WRAP CONNECTOR J03.1, 3*32 PIN
		W	99	04	14B		WRAP CONNECTOR J04.1, 3*32 PIN
		W	99	04	14C		WRAP CONNECTOR J04.1, 3*32 PIN
		W	99	05	14B		WRAP CONNECTOR J05.1, 3*32 PIN
		W	99	05	14C		WRAP CONNECTOR J05.1, 3*32 PIN
(CONT.)		W	99	06	14B		WRAP CONNECTOR J06.1, 3*32 PIN
		W	99	06	14C		WRAP CONNECTOR J06.1, 3*32 PIN
		W	99	07	14B		WRAP CONNECTOR J07.1, 3*32 PIN
		W	99	07	14C		WRAP CONNECTOR J07.1, 3*32 PIN
		W	99	08	14B		WRAP CONNECTOR J08.1, 3*32 PIN
		W	99	08	14C		WRAP CONNECTOR J08.1, 3*32 PIN
		W	99	09	14B		WRAP CONNECTOR J09.1, 3*32 PIN
		W	99	09	14C		WRAP CONNECTOR J09.1, 3*32 PIN
		W	99	10	14B		WRAP CONNECTOR J10.1, 3*32 PIN
		W	99	10	14C		WRAP CONNECTOR J10.1, 3*32 PIN
		WP	99	11	14A		WRAP CONNECTOR J11.1, 3*32 PIN
		WP	99	11	14B		WRAP CONNECTOR J11.1, 3*32 PIN
		WP	99	11	14C		WRAP CONNECTOR J11.1, 3*32 PIN
		WP	99	12	14A		WRAP CONNECTOR J12.1, 3*32 PIN
		WP	99	12	14B		WRAP CONNECTOR J12.1, 3*32 PIN
		WP	99	12	14C		WRAP CONNECTOR J12.1, 3*32 PIN
		WP	99	13	14A		WRAP CONNECTOR J13.1, 3*32 PIN
		WP	99	13	14B		WRAP CONNECTOR J13.1, 3*32 PIN
		WP	99	13	14C		WRAP CONNECTOR J13.1, 3*32 PIN
		WP	99	14	14A		WRAP CONNECTOR J14.1, 3*32 PIN
		WP	99	14	14B		WRAP CONNECTOR J14.1, 3*32 PIN
		WP	99	14	14C		WRAP CONNECTOR J14.1, 3*32 PIN
		WP	99	15	14A		WRAP CONNECTOR J15.1, 3*32 PIN
		WP	99	15	14B		WRAP CONNECTOR J15.1, 3*32 PIN
		WP	99	15	14C		WRAP CONNECTOR J15.1, 3*32 PIN
		WP	99	16	14A		WRAP CONNECTOR J16.1, 3*32 PIN
		WP	99	16	14B		WRAP CONNECTOR J16.1, 3*32 PIN
		WP	99	16	14C		WRAP CONNECTOR J16.1, 3*32 PIN
		WP	99	17	14A		WRAP CONNECTOR J17.1, 3*32 PIN
		WP	99	17	14B		WRAP CONNECTOR J17.1, 3*32 PIN
		WP	99	17	14C		WRAP CONNECTOR J17.1, 3*32 PIN
		WP	99	18	14A		WRAP CONNECTOR J18.1, 3*32 PIN
		WP	99	18	14B		WRAP CONNECTOR J18.1, 3*32 PIN
		WP	99	18	14C		WRAP CONNECTOR J18.1, 3*32 PIN
		WP	99	19	14A		WRAP CONNECTOR J19.1, 3*32 PIN
		WP	99	19	14B		WRAP CONNECTOR J19.1, 3*32 PIN
		WP	99	19	14C		WRAP CONNECTOR J19.1, 3*32 PIN
		WP	99	20	14A		WRAP CONNECTOR J20.1, 3*32 PIN
		WP	99	20	14B		WRAP CONNECTOR J20.1, 3*32 PIN
		WP	99	20	14C		WRAP CONNECTOR J20.1, 3*32 PIN
-20V A80	1,1	L	96	01	02		RECTIFIER ASSEMBLY
	1	WQ	99	19	04A		WRAP CONNECTOR J19.1, 3*32 PIN
		W	99	19	04B		WRAP CONNECTOR J19.1, 3*32 PIN
	1	WQ	99	19	04C		WRAP CONNECTOR J19.1, 3*32 PIN
-5.8CAP1	6	B	97	41	15		CAPSTAN SPEED CONTROL
	6	WQ	99	06	07E		WRAP CONNECTOR J06.2, 3*32 PIN
-5.8MC1	6	A	97	61	17		REMOTE MODE CONTROL
	6	WQ	99	07	31D		WRAP CONNECTOR J07.2, 3*32 PIN
ACBIF1		W	99	05	06B		WRAP CONNECTOR J05.1, 3*32 PIN
ACBIF2		W	99	05	07B		WRAP CONNECTOR J05.1, 3*32 PIN

-/-

* STUDER * SIGNAL WIRE LIST * 82/01/08 * 15:12 * PAGE 32 *

TAPE LOCK SYSTEM 2000 A80: MASTER CTRL, PARALLEL PROGRAMMER 1.228.375.00 79-10-30

SIG.NAME	COLOR	TYPE	GR	EL	PT	S	DESCRIPTION OF ELEMENT
ACBIF3		W	99	05	08B		WRAP CONNECTOR J05.1, 3*32 PIN
ACIFGRP		W	99	01	17A		WRAP CONNECTOR J01.1, 3*32 PIN
		W	99	04	17C		WRAP CONNECTOR J04.1, 3*32 PIN
ACIFMUXA		W	99	05	06A		WRAP CONNECTOR J05.1, 3*32 PIN
ACIFMUXB		W	99	05	17A		WRAP CONNECTOR J05.1, 3*32 PIN
ACINSTEN		W	99	04	30C		WRAP CONNECTOR J04.1, 3*32 PIN
		W	99	15	13A		WRAP CONNECTOR J15.1, 3*32 PIN
ACPGAD00		W	99	04	06A		WRAP CONNECTOR J04.1, 3*32 PIN
		W	99	15	02A		WRAP CONNECTOR J15.1, 3*32 PIN
ACPGAD01		W	99	04	07A		WRAP CONNECTOR J04.1, 3*32 PIN
		W	99	15	03A		WRAP CONNECTOR J15.1, 3*32 PIN
ACPGAD02		W	99	04	08A		WRAP CONNECTOR J04.1, 3*32 PIN
		W	99	15	04A		WRAP CONNECTOR J15.1, 3*32 PIN
ACPGAD03		W	99	04	09A		WRAP CONNECTOR J04.1, 3*32 PIN
		W	99	15	05A		WRAP CONNECTOR J15.1, 3*32 PIN
ACPGAD04		W	99	04	03B		WRAP CONNECTOR J04.1, 3*32 PIN
		W	99	15	06A		WRAP CONNECTOR J15.1, 3*32 PIN
ACPGAD05		W	99	04	04B		WRAP CONNECTOR J04.1, 3*32 PIN
		W	99	15	07A		WRAP CONNECTOR J15.1, 3*32 PIN
ACPGAD06		W	99	04	04C		WRAP CONNECTOR J04.1, 3*32 PIN
		W	99	15	08A		WRAP CONNECTOR J15.1, 3*32 PIN
ACPGAD07		W	99	04	05C		WRAP CONNECTOR J04.1, 3*32 PIN
		W	99	15	09A		WRAP CONNECTOR J15.1, 3*32 PIN
ACPGAD08		W	99	04	06C		WRAP CONNECTOR J04.1, 3*32 PIN
		W	99	15	10A		WRAP CONNECTOR J15.1, 3*32 PIN
ACPGAD09		W	99	04	07C		WRAP CONNECTOR J04.1, 3*32 PIN
		W	99	15	11A		WRAP CONNECTOR J15.1, 3*32 PIN
ACPGAD10		W	99	04	09C		WRAP CONNECTOR J04.1, 3*32 PIN
		W	99	15	10B		WRAP CONNECTOR J15.1, 3*32 PIN
ACPGAD11		W	99	04	10C		WRAP CONNECTOR J04.1, 3*32 PIN
		W	99	15	11B		WRAP CONNECTOR J15.1, 3*32 PIN
ACPGDATA		W	99	01	17B		WRAP CONNECTOR J01.1, 3*32 PIN
		W	99	02	18A		WRAP CONNECTOR J02.1, 3*32 PIN
		W	99	04	18A		WRAP CONNECTOR J04.1, 3*32 PIN
		W	99	05	18A		WRAP CONNECTOR J05.1, 3*32 PIN
		W	99	07	18B		WRAP CONNECTOR J07.1, 3*32 PIN
		W	99	14	02C		WRAP CONNECTOR J14.1, 3*32 PIN
		W	99	15	17A		WRAP CONNECTOR J15.1, 3*32 PIN
ACPGDATB		W	99	01	18B		WRAP CONNECTOR J01.1, 3*32 PIN
		W	99	02	22A		WRAP CONNECTOR J02.1, 3*32 PIN
		W	99	04	21A		WRAP CONNECTOR J04.1, 3*32 PIN
		W	99	05	21A		WRAP CONNECTOR J05.1, 3*32 PIN
		W	99	07	21B		WRAP CONNECTOR J07.1, 3*32 PIN
		W	99	14	03C		WRAP CONNECTOR J14.1, 3*32 PIN
		W	99	15	18A		WRAP CONNECTOR J15.1, 3*32 PIN
ACPGDATC		W	99	01	21B		WRAP CONNECTOR J01.1, 3*32 PIN
		W	99	02	23A		WRAP CONNECTOR J02.1, 3*32 PIN
		W	99	04	22A		WRAP CONNECTOR J04.1, 3*32 PIN
		W	99	05	22A		WRAP CONNECTOR J05.1, 3*32 PIN
		W	99	07	22B		WRAP CONNECTOR J07.1, 3*32 PIN
		W	99	14	04C		WRAP CONNECTOR J14.1, 3*32 PIN
		W	99	15	21A		WRAP CONNECTOR J15.1, 3*32 PIN
ACPGDATD		W	99	01	22B		WRAP CONNECTOR J01.1, 3*32 PIN
		W	99	04	23A		WRAP CONNECTOR J04.1, 3*32 PIN
		W	99	05	23A		WRAP CONNECTOR J05.1, 3*32 PIN
		W	99	07	23B		WRAP CONNECTOR J07.1, 3*32 PIN
		W	99	14	05C		WRAP CONNECTOR J14.1, 3*32 PIN
		W	99	15	22A		WRAP CONNECTOR J15.1, 3*32 PIN
ACPGDATE		W	99	01	23B		WRAP CONNECTOR J01.1, 3*32 PIN
		W	99	04	24A		WRAP CONNECTOR J04.1, 3*32 PIN
		W	99	05	24A		WRAP CONNECTOR J05.1, 3*32 PIN
		W	99	07	24B		WRAP CONNECTOR J07.1, 3*32 PIN
		W	99	14	06C		WRAP CONNECTOR J14.1, 3*32 PIN
		W	99	15	23A		WRAP CONNECTOR J15.1, 3*32 PIN
ACPGDATF		W	99	01	31B		WRAP CONNECTOR J01.1, 3*32 PIN
		W	99	04	25A		WRAP CONNECTOR J04.1, 3*32 PIN
		W	99	05	25A		WRAP CONNECTOR J05.1, 3*32 PIN
		W	99	07	25B		WRAP CONNECTOR J07.1, 3*32 PIN
		W	99	14	07C		WRAP CONNECTOR J14.1, 3*32 PIN
		W	99	15	24A		WRAP CONNECTOR J15.1, 3*32 PIN
ACPGDATG		W	99	01	13B		WRAP CONNECTOR J01.1, 3*32 PIN
		W	99	04	26A		WRAP CONNECTOR J04.1, 3*32 PIN
		W	99	05	26A		WRAP CONNECTOR J05.1, 3*32 PIN
		W	99	07	26B		WRAP CONNECTOR J07.1, 3*32 PIN
		W	99	14	08C		WRAP CONNECTOR J14.1, 3*32 PIN
		W	99	15	25A		WRAP CONNECTOR J15.1, 3*32 PIN
ACPGDATH		W	99	01	13A		WRAP CONNECTOR J01.1, 3*32 PIN
		W	99	04	27A		WRAP CONNECTOR J04.1, 3*32 PIN
		W	99	05	27A		WRAP CONNECTOR J05.1, 3*32 PIN
		W	99	07	27B		WRAP CONNECTOR J07.1, 3*32 PIN
		W	99	14	09C		WRAP CONNECTOR J14.1, 3*32 PIN
		W	99	15	26A		WRAP CONNECTOR J15.1, 3*32 PIN
ACPGDATI		W	99	04	28A		WRAP CONNECTOR J04.1, 3*32 PIN
		W	99	15	27A		WRAP CONNECTOR J15.1, 3*32 PIN
ACPGDATK		W	99	04	29A		WRAP CONNECTOR J04.1, 3*32 PIN
		W	99	15	28A		WRAP CONNECTOR J15.1, 3*32 PIN

```
*********************************************************************************************************************
*  S T U D E R  *  S I G N A L  W I R E  L I S T          *  82/01/08 * 15:12     *  P A G E    33   *
*********************************************************************************************************************
TAPE LOCK SYSTEM 2000 A80: MASTER CTRL, PARALLEL PROGRAMMER   1.228.375.00          79-10-30

SIG.NAME COLOR TYPE GR EL PT  S DESCRIPTION OF ELEMENT
-------- ----- ---- -- -- --- - ------------------------------
ACPGDATL       W    99 04 30A   WRAP CONNECTOR J04.1, 3*32 PIN
               W    99 15 29A   WRAP CONNECTOR J15.1, 3*32 PIN

ACPGDATM       W    99 04 31A   WRAP CONNECTOR J04.1, 3*32 PIN
               W    99 15 30A   WRAP CONNECTOR J15.1, 3*32 PIN

ACPGDATN       W    99 04 31C   WRAP CONNECTOR J04.1, 3*32 PIN
               W    99 15 31A   WRAP CONNECTOR J15.1, 3*32 PIN

ACPGIRPT       W    99 04 17B   WRAP CONNECTOR J04.1, 3*32 PIN
               W    99 07 30C   WRAP CONNECTOR J07.1, 3*32 PIN

ACSERDAT       W    99 05 31A   WRAP CONNECTOR J05.1, 3*32 PIN
               W    99 14 25B   WRAP CONNECTOR J14.1, 3*32 PIN

ACSP-09        W    99 04 02B   WRAP CONNECTOR J04.1, 3*32 PIN

ACSPCAP        W    99 01 21A   WRAP CONNECTOR J01.1, 3*32 PIN
               W    99 02 21B   WRAP CONNECTOR J02.1, 3*32 PIN

ACSPGRP1       W    99 04 10B   WRAP CONNECTOR J04.1, 3*32 PIN
               W    99 05 22B   WRAP CONNECTOR J05.1, 3*32 PIN

ACSPGRP2       W    99 04 11B   WRAP CONNECTOR J04.1, 3*32 PIN
               W    99 07 11C   WRAP CONNECTOR J07.1, 3*32 PIN

ACSPGRP3       W    99 01 17C   WRAP CONNECTOR J01.1, 3*32 PIN
               W    99 04 11C   WRAP CONNECTOR J04.1, 3*32 PIN

ACSPGRP4       W    99 04 10A   WRAP CONNECTOR J04.1, 3*32 PIN

ACSPIFC1       W    99 01 28B   WRAP CONNECTOR J01.1, 3*32 PIN

ACTAPFLG       W    99 04 24B   WRAP CONNECTOR J04.1, 3*32 PIN
               W    99 15 18B   WRAP CONNECTOR J15.1, 3*32 PIN

AC1      6     L    98 02 02    HEADPLUG/CHANNEL SUPPLY
         6     A    98 03 35    HEADPLUG/CHANNEL SUPPLY

AC1MOD   5     L    96 01 05    RECTIFIER ASSEMBLY
         6     L    98 02 01    HEADPLUG/CHANNEL SUPPLY
         6     WQ + 99 11 08A   WRAP CONNECTOR J11.1, 3*32 PIN
         5     WQ + 99 11 10A   WRAP CONNECTOR J11.1, 3*32 PIN

AC2      3     L    98 01 02    HEADPLUG/CHANNEL SUPPLY
         3     A    98 03 37    HEADPLUG/CHANNEL SUPPLY

AC2MOD   7     L    96 01 07    RECTIFIER ASSEMBLY
         3     L    98 01 01    HEADPLUG/CHANNEL SUPPLY
         3     WQ + 99 11 08C   WRAP CONNECTOR J11.1, 3*32 PIN
         7     WQ + 99 11 10C   WRAP CONNECTOR J11.1, 3*32 PIN

ADCDATAA 2     B    97 93 09    CONN. ASS. TO MAIN PROGR. (JIII)
               W    99 09 17A   WRAP CONNECTOR J09.1, 3*32 PIN
         2     WQ   99 10 09D   WRAP CONNECTOR J10.2, 3*32 PIN

SIG.NAME COLOR TYPE GR EL PT  S DESCRIPTION OF ELEMENT
-------- ----- ---- -- -- --- - ------------------------------
ADCDATAB R     B    97 93 07    CONN. ASS. TO MAIN PROGR. (JIII)
               W    99 09 18A   WRAP CONNECTOR J09.1, 3*32 PIN
         R     WQ   99 10 07D   WRAP CONNECTOR J10.2, 3*32 PIN

ADCDATAC 1     B    97 93 02    CONN. ASS. TO MAIN PROGR. (JIII)
               W    99 09 22A   WRAP CONNECTOR J09.1, 3*32 PIN
         1     WQ   99 10 03D   WRAP CONNECTOR J10.2, 3*32 PIN

ADCDATAD 1-6   B    97 92 23    CONN. ASS. TO MAIN PROGR. (J II)
               W    99 09 24A   WRAP CONNECTOR J09.1, 3*32 PIN
         1-6   WQ   99 09 29D   WRAP CONNECTOR J09.2, 3*32 PIN

ADCDATAE 4-1   B    97 92 17    CONN. ASS. TO MAIN PROGR. (J II)
         4-1   WQ   99 09 23D   WRAP CONNECTOR J09.2, 3*32 PIN
               W    99 09 26C   WRAP CONNECTOR J09.1, 3*32 PIN

ADD      4-6   B    97 91 33    CONN. ASS. TO MAIN PROGR. (J  I)
         4-6   WQ   99 08 09F   WRAP CONNECTOR J08.2, 3*32 PIN

ADDRCT-A       W    99 01 22C   WRAP CONNECTOR J01.1, 3*32 PIN
               W    99 03 26B   WRAP CONNECTOR J03.1, 3*32 PIN
               W  + 99 04 18C   WRAP CONNECTOR J04.1, 3*32 PIN
               W    99 14 18C   WRAP CONNECTOR J14.1, 3*32 PIN

ADDRCT-B       W    99 01 23C   WRAP CONNECTOR J01.1, 3*32 PIN
               W    99 03 27B   WRAP CONNECTOR J03.1, 3*32 PIN
               W  + 99 04 21C   WRAP CONNECTOR J04.1, 3*32 PIN
               W    99 14 21C   WRAP CONNECTOR J14.1, 3*32 PIN

ADDRCT-C       W    99 01 24C   WRAP CONNECTOR J01.1, 3*32 PIN
               W    99 03 28B   WRAP CONNECTOR J03.1, 3*32 PIN
               W  + 99 04 22C   WRAP CONNECTOR J04.1, 3*32 PIN
               W    99 14 22C   WRAP CONNECTOR J14.1, 3*32 PIN

ADDRCT-D       W    99 01 25C   WRAP CONNECTOR J01.1, 3*32 PIN
               W    99 03 29B   WRAP CONNECTOR J03.1, 3*32 PIN
               W  + 99 04 23C   WRAP CONNECTOR J04.1, 3*32 PIN
               W    99 14 23C   WRAP CONNECTOR J14.1, 3*32 PIN

ADDRCT-E       W    99 01 26C   WRAP CONNECTOR J01.1, 3*32 PIN
               W    99 03 30B   WRAP CONNECTOR J03.1, 3*32 PIN
               W  + 99 04 24C   WRAP CONNECTOR J04.1, 3*32 PIN
               W    99 14 24C   WRAP CONNECTOR J14.1, 3*32 PIN

ADDRCT-F       W    99 01 27C   WRAP CONNECTOR J01.1, 3*32 PIN
               W    99 03 31B   WRAP CONNECTOR J03.1, 3*32 PIN
               W  + 99 04 25C   WRAP CONNECTOR J04.1, 3*32 PIN
               W    99 14 25C   WRAP CONNECTOR J14.1, 3*32 PIN

ADDRCT-G       W    99 01 28C   WRAP CONNECTOR J01.1, 3*32 PIN
               W  + 99 04 26C   WRAP CONNECTOR J04.1, 3*32 PIN
               W    99 14 26C   WRAP CONNECTOR J14.1, 3*32 PIN

ADDRCT-H       W    99 01 29C   WRAP CONNECTOR J01.1, 3*32 PIN
               W  + 99 04 27C   WRAP CONNECTOR J04.1, 3*32 PIN
               W    99 14 27C   WRAP CONNECTOR J14.1, 3*32 PIN
```

```
*********************************************************************************************************************
*  S T U D E R  *  S I G N A L  W I R E  L I S T          *  82/01/08 * 15:12     *  P A G E    34   *
*********************************************************************************************************************
TAPE LOCK SYSTEM 2000 A80: MASTER CTRL, PARALLEL PROGRAMMER   1.228.375.00          79-10-30

SIG.NAME COLOR TYPE GR EL PT  S DESCRIPTION OF ELEMENT
-------- ----- ---- -- -- --- - ------------------------------
ADDRCT-I       W    99 01 30C   WRAP CONNECTOR J01.1, 3*32 PIN
               W  + 99 04 28C   WRAP CONNECTOR J04.1, 3*32 PIN
               W    99 14 28C   WRAP CONNECTOR J14.1, 3*32 PIN

ADDRCT-K       W    99 01 31C   WRAP CONNECTOR J01.1, 3*32 PIN
               W  + 99 04 29C   WRAP CONNECTOR J04.1, 3*32 PIN
               W    99 14 29C   WRAP CONNECTOR J14.1, 3*32 PIN

ADV RET  2     B    97 91 09    CONN. ASS. TO MAIN PROGR. (J  I)
         2     WQ   99 08 09D   WRAP CONNECTOR J08.2, 3*32 PIN
               W    99 10 24B   WRAP CONNECTOR J10.1, 3*32 PIN

AREN1          W    99 04 11A   WRAP CONNECTOR J04.1, 3*32 PIN
               W    99 14 11C   WRAP CONNECTOR J14.1, 3*32 PIN

AREN2          W    99 04 13A   WRAP CONNECTOR J04.1, 3*32 PIN
               W    99 14 10C   WRAP CONNECTOR J14.1, 3*32 PIN

ARIF-Y         W    99 05 28A   WRAP CONNECTOR J05.1, 3*32 PIN
               W    99 14 08B   WRAP CONNECTOR J14.1, 3*32 PIN

ARPOUT-A       W    99 01 08A   WRAP CONNECTOR J01.1, 3*32 PIN
               W  + 99 04 26B   WRAP CONNECTOR J04.1, 3*32 PIN
               W    99 05 11B   WRAP CONNECTOR J05.1, 3*32 PIN
               W    99 07 07C   WRAP CONNECTOR J07.1, 3*32 PIN
               W    99 14 07B   WRAP CONNECTOR J14.1, 3*32 PIN

ARPOUT-B       W    99 01 09A   WRAP CONNECTOR J01.1, 3*32 PIN
               W  + 99 04 27B   WRAP CONNECTOR J04.1, 3*32 PIN
               W    99 07 06C   WRAP CONNECTOR J07.1, 3*32 PIN
               W    99 14 06B   WRAP CONNECTOR J14.1, 3*32 PIN

ARPOUT-C       W    99 01 10A   WRAP CONNECTOR J01.1, 3*32 PIN
               W  + 99 04 28B   WRAP CONNECTOR J04.1, 3*32 PIN
               W    99 07 05C   WRAP CONNECTOR J07.1, 3*32 PIN
               W    99 14 05B   WRAP CONNECTOR J14.1, 3*32 PIN

ARPOUT-D       W    99 01 09B   WRAP CONNECTOR J01.1, 3*32 PIN
               W  + 99 04 29B   WRAP CONNECTOR J04.1, 3*32 PIN
               W    99 07 04C   WRAP CONNECTOR J07.1, 3*32 PIN
               W    99 14 04B   WRAP CONNECTOR J14.1, 3*32 PIN

ARPOUT-E       W    99 01 10B   WRAP CONNECTOR J01.1, 3*32 PIN
               W  + 99 04 30B   WRAP CONNECTOR J04.1, 3*32 PIN
               W    99 14 30C   WRAP CONNECTOR J14.1, 3*32 PIN

ARPOUT-F       W    99 01 11B   WRAP CONNECTOR J01.1, 3*32 PIN
               W  + 99 04 31B   WRAP CONNECTOR J04.1, 3*32 PIN
               W    99 14 31C   WRAP CONNECTOR J14.1, 3*32 PIN

ARSEROUT       W    99 01 29B   WRAP CONNECTOR J01.1, 3*32 PIN
               W    99 02 31B   WRAP CONNECTOR J02.1, 3*32 PIN
               W    99 14 13B   WRAP CONNECTOR J14.1, 3*32 PIN

AUXDATIN       W    99 14 26B   WRAP CONNECTOR J14.1, 3*32 PIN

SIG.NAME COLOR TYPE GR EL PT  S DESCRIPTION OF ELEMENT
-------- ----- ---- -- -- --- - ------------------------------
AUXDRINA       W    99 08 09A   WRAP CONNECTOR J08.1, 3*32 PIN

AUXDROA        W    99 08 08C   WRAP CONNECTOR J08.1, 3*32 PIN

B-CALC   5-2   B    97 91 34    CONN. ASS. TO MAIN PROGR. (J  I)
         5-2   WQ   99 08 10F   WRAP CONNECTOR J08.2, 3*32 PIN
               W    99 10 06C   WRAP CONNECTOR J10.1, 3*32 PIN

B-CCHRDY 4     B    98 61 04    CODE CHANNEL REMOTE A80
               W    99 17 05C   WRAP CONNECTOR J17.1, 3*32 PIN
         4     WQ   99 20 05F   WRAP CONNECTOR J20.2, 3*32 PIN
               W  + 99 20 09D   WRAP CONNECTOR J20.2, 3*32 PIN

B-CCHREC 5     B    98 61 05    CODE CHANNEL REMOTE A80
               W    99 17 06C   WRAP CONNECTOR J17.1, 3*32 PIN
         5     WQ   99 20 06F   WRAP CONNECTOR J20.2, 3*32 PIN
               W  + 99 20 10D   WRAP CONNECTOR J20.2, 3*32 PIN

B-CCHREP 3     B    98 61 03    CODE CHANNEL REMOTE A80
               W    99 17 07C   WRAP CONNECTOR J17.1, 3*32 PIN
         3     WQ   99 20 07F   WRAP CONNECTOR J20.2, 3*32 PIN
               W  + 99 20 11D   WRAP CONNECTOR J20.2, 3*32 PIN

B-CCHSAF 8     B    98 61 18    CODE CHANNEL REMOTE A80
               W    99 17 28C   WRAP CONNECTOR J17.1, 3*32 PIN
         8     WQ   99 20 28F   WRAP CONNECTOR J20.2, 3*32 PIN

B-CCHSYN 9     B    98 61 19    CODE CHANNEL REMOTE A80
               W    99 17 26C   WRAP CONNECTOR J17.1, 3*32 PIN
               W  + 99 20 26D   WRAP CONNECTOR J20.2, 3*32 PIN
         9     WQ   99 20 26F   WRAP CONNECTOR J20.2, 3*32 PIN

B-CUT    1     A    97 61 08    REMOTE MODE CONTROL
               W  + 99 06 30D   WRAP CONNECTOR J06.2, 3*32 PIN
         1     WQ   99 07 22D   WRAP CONNECTOR J07.2, 3*32 PIN
               W    99 08 24A   WRAP CONNECTOR J08.1, 3*32 PIN

B-ENTRYM 1-R   B    97 91 21    CONN. ASS. TO MAIN PROGR. (J  I)
         1-R   WQ   99 08 27D   WRAP CONNECTOR J08.2, 3*32 PIN
               W    99 10 10B   WRAP CONNECTOR J10.1, 3*32 PIN

B-EXITSL 1-5   B    97 91 15    CONN. ASS. TO MAIN PROGR. (J  I)
         1-5   WQ   99 08 21D   WRAP CONNECTOR J08.2, 3*32 PIN
               W    99 10 10A   WRAP CONNECTOR J10.1, 3*32 PIN

B-EXTREC 7     B    98 61 07    CODE CHANNEL REMOTE A80
               W    99 17 24C   WRAP CONNECTOR J17.1, 3*32 PIN
               W  + 99 20 24D   WRAP CONNECTOR J20.2, 3*32 PIN
         7     WQ   99 20 24F   WRAP CONNECTOR J20.2, 3*32 PIN

B-FAD    3     A    97 61 10    REMOTE MODE CONTROL
         3     WQ   99 07 24D   WRAP CONNECTOR J07.2, 3*32 PIN

B-FORW   4     A    97 61 04    REMOTE MODE CONTROL
         4     WQ   99 07 13D   WRAP CONNECTOR J07.2, 3*32 PIN
               W    99 08 21B   WRAP CONNECTOR J08.1, 3*32 PIN
```

STUDER * SIGNAL WIRE LIST * 82/01/08 * 15:12 * PAGE 35 *

APE LOCK SYSTEM 2000 A80: MASTER CTRL, PARALLEL PROGRAMMER 1.228.375.00 79-10-30

SIG.NAME	COLOR	TYPE	GR	EL	PT	S	DESCRIPTION OF ELEMENT
-GENUSB	5-0	B	97	91	36		CONN. ASS. TO MAIN PROGR. (J I)
	5-0	WQ	99	08	13F		WRAP CONNECTOR J08.2, 3*32 PIN
		W	99	10	28C		WRAP CONNECTOR J10.1, 3*32 PIN
-LOWLIM	8-1	B	97	91	19		CONN. ASS. TO MAIN PROGR. (J I)
	8-1	WQ	99	08	25D		WRAP CONNECTOR J08.2, 3*32 PIN
		W	99	10	10C		WRAP CONNECTOR J10.1, 3*32 PIN
-MONO	2	A	97	61	09		REMOTE MODE CONTROL
	2	WQ	99	07	23D		WRAP CONNECTOR J07.2, 3*32 PIN
-NOMAST	4-5-0	B	97	91	47		CONN. ASS. TO MAIN PROGR. (J I)
	4-5-0	WQ	99	08	29F		WRAP CONNECTOR J08.2, 3*32 PIN
		W	99	10	03A		WRAP CONNECTOR J10.1, 3*32 PIN
-OUT=IN	7	B	98	61	17		CODE CHANNEL REMOTE A80
		W	99	17	27C		WRAP CONNECTOR J17.1, 3*32 PIN
		W +	99	20	27D		WRAP CONNECTOR J20.2, 3*32 PIN
	7	WQ	99	20	27F		WRAP CONNECTOR J20.2, 3*32 PIN
-PHAS	9-4	B	97	91	16		CONN. ASS. TO MAIN PROGR. (J I)
	9-4	WQ	99	08	22D		WRAP CONNECTOR J08.2, 3*32 PIN
		W	99	10	17A		WRAP CONNECTOR J10.1, 3*32 PIN
-REC	8	A	97	61	07		REMOTE MODE CONTROL
	8	WQ	99	07	21D		WRAP CONNECTOR J07.2, 3*32 PIN
		W	99	08	23C		WRAP CONNECTOR J08.1, 3*32 PIN
-RECENB	9-R	B	97	93	20		CONN. ASS. TO MAIN PROGR. (JIII)
		W	99	10	23B		WRAP CONNECTOR J10.1, 3*32 PIN
	9-R	WQ	99	10	26D		WRAP CONNECTOR J10.2, 3*32 PIN
-REHEAR	8-R	B	97	92	12		CONN. ASS. TO MAIN PROGR. (J II)
	8-R	WQ	99	09	13D		WRAP CONNECTOR J09.2, 3*32 PIN
		W	99	10	03C		WRAP CONNECTOR J10.1, 3*32 PIN
-REPR	2	A	97	61	05		REMOTE MODE CONTROL
	2	WQ	99	07	17D		WRAP CONNECTOR J07.2, 3*32 PIN
		W	99	08	22B		WRAP CONNECTOR J08.1, 3*32 PIN
-REW	2	A	97	61	03		REMOTE MODE CONTROL
		W +	99	06	22D		WRAP CONNECTOR J06.2, 3*32 PIN
	2	WQ	99	07	11D		WRAP CONNECTOR J07.2, 3*32 PIN
		W	99	08	21A		WRAP CONNECTOR J08.1, 3*32 PIN
-STOP	3	A	97	61	06		REMOTE MODE CONTROL
	3	WQ	99	07	18D		WRAP CONNECTOR J07.2, 3*32 PIN
		W	99	08	22C		WRAP CONNECTOR J08.1, 3*32 PIN
-UPPLIM	8-R	B	97	91	12		CONN. ASS. TO MAIN PROGR. (J I)
	8-R	WQ	99	08	13D		WRAP CONNECTOR J08.2, 3*32 PIN
		W	99	10	13A		WRAP CONNECTOR J10.1, 3*32 PIN
ADRSTRT	4	B	97	92	05		CONN. ASS. TO MAIN PROGR. (J II)
	4	WQ	99	09	05D		WRAP CONNECTOR J09.2, 3*32 PIN
		W	99	10	23C		WRAP CONNECTOR J10.1, 3*32 PIN
BBPRES09	6	B	98	61	06		CODE CHANNEL REMOTE A80
		W	99	17	03C		WRAP CONNECTOR J17.1, 3*32 PIN
	6	WQ	99	20	03F		WRAP CONNECTOR J20.2, 3*32 PIN
BBPRES10	6	B	98	61	16		CODE CHANNEL REMOTE A80
		W	99	17	04C		WRAP CONNECTOR J17.1, 3*32 PIN
	6	WQ	99	20	04F		WRAP CONNECTOR J20.2, 3*32 PIN
BBPRES11	5	B	98	61	15		CODE CHANNEL REMOTE A80
		W	99	17	25C		WRAP CONNECTOR J17.1, 3*32 PIN
	5	WQ	99	20	25F		WRAP CONNECTOR J20.2, 3*32 PIN
BCODEREP		W	99	12	31A		WRAP CONNECTOR J12.1, 3*32 PIN
BEDMMPRG	9-8	B	97	93	18		CONN. ASS. TO MAIN PROGR. (JIII)
		W	99	10	07B		WRAP CONNECTOR J10.1, 3*32 PIN
	9-8	WQ	99	10	24D		WRAP CONNECTOR J10.2, 3*32 PIN
BENT/PKS	2-0	B	97	91	45		CONN. ASS. TO MAIN PROGR. (J I)
	2-0	WQ	99	08	27F		WRAP CONNECTOR J08.2, 3*32 PIN
		W	99	10	09C		WRAP CONNECTOR J10.1, 3*32 PIN
BLKDSP0	4-R	B	97	92	31		CONN. ASS. TO MAIN PROGR. (J II)
		W	99	09	02B		WRAP CONNECTOR J09.1, 3*32 PIN
	4-R	WQ	99	09	07F		WRAP CONNECTOR J09.2, 3*32 PIN
BLKDSP1	1	B	97	92	03		CONN. ASS. TO MAIN PROGR. (J II)
		W	99	09	02C		WRAP CONNECTOR J09.1, 3*32 PIN
	1	WQ	99	09	03D		WRAP CONNECTOR J09.2, 3*32 PIN
BLKDSP2	4-6	B	97	92	33		CONN. ASS. TO MAIN PROGR. (J II)
		W	99	09	03B		WRAP CONNECTOR J09.1, 3*32 PIN
	4-6	WQ	99	09	09F		WRAP CONNECTOR J09.2, 3*32 PIN
BLKDSP3	4-0	B	97	92	37		CONN. ASS. TO MAIN PROGR. (J II)
		W	99	09	03C		WRAP CONNECTOR J09.1, 3*32 PIN
	4-0	WQ	99	09	17F		WRAP CONNECTOR J09.2, 3*32 PIN
BLKDSP4	6-0	B	97	92	44		CONN. ASS. TO MAIN PROGR. (J II)
		W	99	09	04B		WRAP CONNECTOR J09.1, 3*32 PIN
	6-0	WQ	99	09	26F		WRAP CONNECTOR J09.2, 3*32 PIN
BLKDSP5	9-1-0	B	97	92	46		CONN. ASS. TO MAIN PROGR. (J II)
		W	99	09	04C		WRAP CONNECTOR J09.1, 3*32 PIN
	9-1-0	WQ	99	09	28F		WRAP CONNECTOR J09.2, 3*32 PIN
BLKDSP6	9-0	B	97	93	26		CONN. ASS. TO MAIN PROGR. (JIII)
		W	99	09	05B		WRAP CONNECTOR J09.1, 3*32 PIN
	9-0	WQ	99	10	02F		WRAP CONNECTOR J10.2, 3*32 PIN
BLKDSP7	6-2-0	B	97	92	50		CONN. ASS. TO MAIN PROGR. (J II)
		W	99	09	05C		WRAP CONNECTOR J09.1, 3*32 PIN
	6-2-0	WQ	99	09	31F		WRAP CONNECTOR J09.2, 3*32 PIN
BLKDSP8	4-8	B	97	93	29		CONN. ASS. TO MAIN PROGR. (JIII)
		W	99	09	06B		WRAP CONNECTOR J09.1, 3*32 PIN

./.

SIG.NAME	COLOR	TYPE	GR	EL	PT	S	DESCRIPTION OF ELEMENT
CONT.)	4-8	WQ	99	10	05F		WRAP CONNECTOR J10.2, 3*32 PIN
LKMMPRG	9-1-0	B	97	93	46		CONN. ASS. TO MAIN PROGR. (JIII)
		W	99	10	07A		WRAP CONNECTOR J10.1, 3*32 PIN
	9-1-0	WQ	99	10	28F		WRAP CONNECTOR J10.2, 3*32 PIN
LOCATOR	0	B	97	93	10		CONN. ASS. TO MAIN PROGR. (JIII)
	0	WQ	99	10	10D		WRAP CONNECTOR J10.2, 3*32 PIN
		W	99	10	27C		WRAP CONNECTOR J10.1, 3*32 PIN
OFFSREG	9-5	B	97	91	14		CONN. ASS. TO MAIN PROGR. (J I)
	9-5	WQ	99	08	18D		WRAP CONNECTOR J08.2, 3*32 PIN
		W	99	10	13B		WRAP CONNECTOR J10.1, 3*32 PIN
PILMPRG	6-0	B	97	93	44		CONN. ASS. TO MAIN PROGR. (JIII)
		W	99	10	08B		WRAP CONNECTOR J10.1, 3*32 PIN
	6-0	WQ	99	10	26F		WRAP CONNECTOR J10.2, 3*32 PIN
PKMMPRG	6-2	B	97	93	13		CONN. ASS. TO MAIN PROGR. (JIII)
		W	99	10	07C		WRAP CONNECTOR J10.1, 3*32 PIN
	6-2	WQ	99	10	17D		WRAP CONNECTOR J10.2, 3*32 PIN
PLATEN		W	99	06	23B		WRAP CONNECTOR J06.1, 3*32 PIN
		W	99	17	29A		WRAP CONNECTOR J17.1, 3*32 PIN
PSUPVIS	1	B	98	61	23		CODE CHANNEL REMOTE A80
		W	99	17	07B		WRAP CONNECTOR J17.1, 3*32 PIN
	1	WQ	99	20	08D		WRAP CONNECTOR J20.2, 3*32 PIN
PTRMDAT		W	99	07	28B		WRAP CONNECTOR J07.1, 3*32 PIN
		W	99	17	13B		WRAP CONNECTOR J17.1, 3*32 PIN
TCTA -M		W	99	01	25A		WRAP CONNECTOR J01.1, 3*32 PIN
		W	99	03	25A		WRAP CONNECTOR J03.1, 3*32 PIN
		W	99	05	25B		WRAP CONNECTOR J05.1, 3*32 PIN
TCTA -S		W	99	02	25C		WRAP CONNECTOR J02.1, 3*32 PIN
		W	99	03	25C		WRAP CONNECTOR J03.1, 3*32 PIN
		W	99	05	25C		WRAP CONNECTOR J05.1, 3*32 PIN
TCTB -M		W	99	01	26A		WRAP CONNECTOR J01.1, 3*32 PIN
		W	99	03	26A		WRAP CONNECTOR J03.1, 3*32 PIN
		W	99	05	26B		WRAP CONNECTOR J05.1, 3*32 PIN
TCTB -S		W	99	02	26C		WRAP CONNECTOR J02.1, 3*32 PIN
		W	99	03	26C		WRAP CONNECTOR J03.1, 3*32 PIN
		W	99	05	26C		WRAP CONNECTOR J05.1, 3*32 PIN
TCTC -M		W	99	01	27A		WRAP CONNECTOR J01.1, 3*32 PIN
		W	99	02	27A		WRAP CONNECTOR J02.1, 3*32 PIN
		W	99	03	27A		WRAP CONNECTOR J03.1, 3*32 PIN
		W	99	05	27B		WRAP CONNECTOR J05.1, 3*32 PIN
TCTC -S		W	99	02	27C		WRAP CONNECTOR J02.1, 3*32 PIN
		W	99	03	27C		WRAP CONNECTOR J03.1, 3*32 PIN
		W	99	05	27C		WRAP CONNECTOR J05.1, 3*32 PIN
BTCTD -M		W	99	01	28A		WRAP CONNECTOR J01.1, 3*32 PIN
		W	99	03	28A		WRAP CONNECTOR J03.1, 3*32 PIN
		W	99	05	28B		WRAP CONNECTOR J05.1, 3*32 PIN
BTCTD -S		W	99	02	28C		WRAP CONNECTOR J02.1, 3*32 PIN
		W	99	03	28C		WRAP CONNECTOR J03.1, 3*32 PIN
		W	99	05	28C		WRAP CONNECTOR J05.1, 3*32 PIN
BTCTE -M		W	99	03	29A		WRAP CONNECTOR J03.1, 3*32 PIN
		W	99	05	29B		WRAP CONNECTOR J05.1, 3*32 PIN
BTCTE -S		W	99	02	29C		WRAP CONNECTOR J02.1, 3*32 PIN
		W	99	03	29C		WRAP CONNECTOR J03.1, 3*32 PIN
		W	99	05	29C		WRAP CONNECTOR J05.1, 3*32 PIN
BTCTF -M		W	99	03	30A		WRAP CONNECTOR J03.1, 3*32 PIN
		W	99	05	30B		WRAP CONNECTOR J05.1, 3*32 PIN
BTCTF -S		W	99	02	30C		WRAP CONNECTOR J02.1, 3*32 PIN
		W	99	03	30C		WRAP CONNECTOR J03.1, 3*32 PIN
		W	99	05	30C		WRAP CONNECTOR J05.1, 3*32 PIN
BTCTG -M		W	99	01	31A		WRAP CONNECTOR J01.1, 3*32 PIN
		W	99	03	31A		WRAP CONNECTOR J03.1, 3*32 PIN
		W	99	05	31B		WRAP CONNECTOR J05.1, 3*32 PIN
BTCTG -S		W	99	02	31C		WRAP CONNECTOR J02.1, 3*32 PIN
		W	99	03	31C		WRAP CONNECTOR J03.1, 3*32 PIN
		W	99	05	31C		WRAP CONNECTOR J05.1, 3*32 PIN
BTCTOF-M		W	99	03	24A		WRAP CONNECTOR J03.1, 3*32 PIN
		W	99	05	11A		WRAP CONNECTOR J05.1, 3*32 PIN
BTCTOF-S		W	99	03	24C		WRAP CONNECTOR J03.1, 3*32 PIN
		W	99	05	11C		WRAP CONNECTOR J05.1, 3*32 PIN
BULBDPA0	2-R	B	97	92	41		CONN. ASS. TO MAIN PROGR. (J II)
	2-R	WQ	99	09	23F		WRAP CONNECTOR J09.2, 3*32 PIN
BULBDPA1	4-8	B	97	91	29		CONN. ASS. TO MAIN PROGR. (J I)
	4-8	WQ	99	08	05F		WRAP CONNECTOR J08.2, 3*32 PIN
BULBDPA2	1	B	97	91	03		CONN. ASS. TO MAIN PROGR. (J I)
	1	WQ	99	08	03D		WRAP CONNECTOR J08.2, 3*32 PIN
BULBDPB2	4-R	B	97	91	31		CONN. ASS. TO MAIN PROGR. (J I)
	4-R	WQ	99	08	07F		WRAP CONNECTOR J08.2, 3*32 PIN
BULBDPN1	8	B	97	92	06		CONN. ASS. TO MAIN PROGR. (J II)
	8	WQ	99	09	06D		WRAP CONNECTOR J09.2, 3*32 PIN
BULBDPL1	8-6	B	97	92	38		CONN. ASS. TO MAIN PROGR. (J II)
	8-6	WQ	99	09	18F		WRAP CONNECTOR J09.2, 3*32 PIN
BULBDPN1	9-8	B	97	92	18		CONN. ASS. TO MAIN PROGR. (J II)
	9-8	WQ	99	09	24D		WRAP CONNECTOR J09.2, 3*32 PIN

STUDER * SIGNAL WIRE LIST * 82/01/08 * 15:12 * PAGE 37 *

APE LOCK SYSTEM 2000 A80: MASTER CTRL, PARALLEL PROGRAMMER 1.228.375.00 79-10-30

SIG.NAME	COLOR	TYPE	GR	EL	PT	S	DESCRIPTION OF ELEMENT
JLBDPP1	9-6	B	97	92	22		CONN. ASS. TO MAIN PROGR. (J II)
	9-6	WQ	99	09	28D		WRAP CONNECTOR J09.2, 3*32 PIN
JLBDPS2	4-0	B	97	93	37		CONN. ASS. TO MAIN PROGR. (JIII)
	4-0	WQ	99	10	17F		WRAP CONNECTOR J10.2, 3*32 PIN
JLBDPT2	6-R	B	97	93	39		CONN. ASS. TO MAIN PROGR. (JIII)
	6-R	WQ	99	10	21F		WRAP CONNECTOR J10.2, 3*32 PIN
JLBDPU2	8-0	B	97	93	42		CONN. ASS. TO MAIN PROGR. (JIII)
	8-0	WQ	99	10	24F		WRAP CONNECTOR J10.2, 3*32 PIN
JLBPBF2	1-2	B	97	91	25		CONN. ASS. TO MAIN PROGR. (J I)
	1-2	WQ	99	08	31D		WRAP CONNECTOR J08.2, 3*32 PIN
JLBPBF3	9-2	B	97	91	24		CONN. ASS. TO MAIN PROGR. (J I)
	9-2	WQ	99	08	30D		WRAP CONNECTOR J08.2, 3*32 PIN
JLBPBF4	1-6	B	97	91	23		CONN. ASS. TO MAIN PROGR. (J I)
	1-6	WQ	99	08	29D		WRAP CONNECTOR J08.2, 3*32 PIN
JLBPBG3	6	B	97	92	08		CONN. ASS. TO MAIN PROGR. (J II)
	6	WQ	99	09	08D		WRAP CONNECTOR J09.2, 3*32 PIN
JLBPBH3	6-2	B	97	92	13		CONN. ASS. TO MAIN PROGR. (J II)
	6-2	WQ	99	09	17D		WRAP CONNECTOR J09.2, 3*32 PIN
JLBPBI3	8	B	97	91	06		CONN. ASS. TO MAIN PROGR. (J I)
	8	WQ	99	08	06D		WRAP CONNECTOR J08.2, 3*32 PIN
JLBPBK5	8-2	B	97	92	40		CONN. ASS. TO MAIN PROGR. (J II)
	8-2	WQ	99	09	22F		WRAP CONNECTOR J09.2, 3*32 PIN
JLBPBL5	1-R	B	97	92	21		CONN. ASS. TO MAIN PROGR. (J II)
	1-R	WQ	99	09	27D		WRAP CONNECTOR J09.2, 3*32 PIN
JLBPBM5	6	B	97	93	08		CONN. ASS. TO MAIN PROGR. (JIII)
	6	WQ	99	10	08D		WRAP CONNECTOR J10.2, 3*32 PIN
AP-EN		W	99	02	24C		WRAP CONNECTOR J02.1, 3*32 PIN
		W	99	08	24C		WRAP CONNECTOR J08.1, 3*32 PIN
APLATEN		W	99	02	13B		WRAP CONNECTOR J02.1, 3*32 PIN
		W	99	06	13C		WRAP CONNECTOR J06.1, 3*32 PIN
APMUX		W	99	02	04C		WRAP CONNECTOR J02.1, 3*32 PIN
		W	99	06	04B		WRAP CONNECTOR J06.1, 3*32 PIN
CSUPVIS	3	A	98	03	46		HEADPLUG/CHANNEL SUPPLY
		W +	99	06	31D		WRAP CONNECTOR J06.2, 3*32 PIN
	3	WQ +	99	11	07B		WRAP CONNECTOR J11.1, 3*32 PIN
		W	99	17	25B		WRAP CONNECTOR J17.1, 3*32 PIN
KACTLT		W	99	01	07B		WRAP CONNECTOR J01.1, 3*32 PIN
		W	99	04	04A		WRAP CONNECTOR J04.1, 3*32 PIN
CLRADRCT		W	99	01	05B		WRAP CONNECTOR J01.1, 3*32 PIN
		W	99	04	02A		WRAP CONNECTOR J04.1, 3*32 PIN
CMD.ENB1	3	A	97	61	19		REMOTE MODE CONTROL
	3	WQ	99	07	11E		WRAP CONNECTOR J07.2, 3*32 PIN
CMD.ENB2	4	A	97	61	18		REMOTE MODE CONTROL
		W +	99	06	17F		WRAP CONNECTOR J06.2, 3*32 PIN
	4	WQ	99	07	10E		WRAP CONNECTOR J07.2, 3*32 PIN
		W	99	08	18B		WRAP CONNECTOR J08.1, 3*32 PIN
CODEFR/S	1-5	B	97	92	15		CONN. ASS. TO MAIN PROGR. (J II)
	1-5	WQ	99	09	21D		WRAP CONNECTOR J09.2, 3*32 PIN
		W	99	10	23A		WRAP CONNECTOR J10.1, 3*32 PIN
CODENDEF	5-6	B	97	91	32		CONN. ASS. TO MAIN PROGR. (J I)
	5-6	WQ	99	08	08F		WRAP CONNECTOR J08.2, 3*32 PIN
		W	99	10	27B		WRAP CONNECTOR J10.1, 3*32 PIN
CODGENO		W	99	01	05C		WRAP CONNECTOR J01.1, 3*32 PIN
		W +	99	08	29B		WRAP CONNECTOR J08.1, 3*32 PIN
		W	99	11	25A		WRAP CONNECTOR J11.1, 3*32 PIN
CODINR1		W	99	12	02A		WRAP CONNECTOR J12.1, 3*32 PIN
CODINR2		W	99	12	02C		WRAP CONNECTOR J12.1, 3*32 PIN
CODIN1-S		W +	99	08	28B		WRAP CONNECTOR J08.1, 3*32 PIN
		W +	99	11	04B		WRAP CONNECTOR J11.1, 3*32 PIN
		W	99	12	11C		WRAP CONNECTOR J12.1, 3*32 PIN
		W	99	13	08C		WRAP CONNECTOR J13.1, 3*32 PIN
CODOCT		W	99	04	06B		WRAP CONNECTOR J04.1, 3*32 PIN
		W	99	05	09B		WRAP CONNECTOR J05.1, 3*32 PIN
CODOSELB		W	99	12	05C		WRAP CONNECTOR J12.1, 3*32 PIN
CONNFAIL	6-0	B	97	91	44		CONN. ASS. TO MAIN PROGR. (J I)
	6-0	WQ	99	08	26F		WRAP CONNECTOR J08.2, 3*32 PIN
		W	99	10	06B		WRAP CONNECTOR J10.1, 3*32 PIN
COSTCKCT		W	99	04	02C		WRAP CONNECTOR J04.1, 3*32 PIN
		W	99	14	10B		WRAP CONNECTOR J14.1, 3*32 PIN
DIFF	0	B	97	92	10		CONN. ASS. TO MAIN PROGR. (J II)
	0	WQ	99	09	10D		WRAP CONNECTOR J09.2, 3*32 PIN
		W	99	10	18C		WRAP CONNECTOR J10.1, 3*32 PIN
DIRDWN-M		W	99	01	27B		WRAP CONNECTOR J01.1, 3*32 PIN
		W	99	13	27A		WRAP CONNECTOR J13.1, 3*32 PIN
DIRDWN-S		W	99	03	06C		WRAP CONNECTOR J03.1, 3*32 PIN
		W	99	13	27C		WRAP CONNECTOR J13.1, 3*32 PIN
DIRUP -M		W	99	05	09A		WRAP CONNECTOR J05.1, 3*32 PIN
		W	99	13	26A		WRAP CONNECTOR J13.1, 3*32 PIN

STUDER * SIGNAL WIRE LIST * 82/01/08 * 15:12 * PAGE 38 *

APE LOCK SYSTEM 2000 A80: MASTER CTRL, PARALLEL PROGRAMMER 1.228.375.00 79-10-30

SIG.NAME	COLOR	TYPE	GR	EL	PT	S	DESCRIPTION OF ELEMENT
IRUP -S		W	99	05	09C		WRAP CONNECTOR J05.1, 3*32 PIN
		W	99	13	26C		WRAP CONNECTOR J13.1, 3*32 PIN
ISEND9+	5-R	B	97	93	30		CONN. ASS. TO MAIN PROGR. (JIII)
		W	99	09	06C		WRAP CONNECTOR J09.1, 3*32 PIN
	5-R	WQ	99	10	06F		WRAP CONNECTOR J10.2, 3*32 PIN
ISEND9-	4-6	B	97	93	33		CONN. ASS. TO MAIN PROGR. (JIII)
		W	99	09	07B		WRAP CONNECTOR J09.1, 3*32 PIN
	4-6	WQ	99	10	09F		WRAP CONNECTOR J10.2, 3*32 PIN
ISPEN0	8-5	B	97	92	28		CONN. ASS. TO MAIN PROGR. (J II)
	8-5	WQ	99	09	04F		WRAP CONNECTOR J09.2, 3*32 PIN
		W	99	09	07C		WRAP CONNECTOR J09.1, 3*32 PIN
ISPEN1	9-0	B	97	92	26		CONN. ASS. TO MAIN PROGR. (J II)
	9-0	WQ	99	09	02F		WRAP CONNECTOR J09.2, 3*32 PIN
		W	99	09	08B		WRAP CONNECTOR J09.1, 3*32 PIN
ISPEN2	5-R	B	97	92	30		CONN. ASS. TO MAIN PROGR. (J II)
	5-R	WQ	99	09	06F		WRAP CONNECTOR J09.2, 3*32 PIN
		W	99	09	08C		WRAP CONNECTOR J09.1, 3*32 PIN
ISPEN3	5-6	B	97	92	32		CONN. ASS. TO MAIN PROGR. (J II)
	5-6	WQ	99	09	08F		WRAP CONNECTOR J09.2, 3*32 PIN
		W	99	09	09C		WRAP CONNECTOR J09.1, 3*32 PIN
ISPEN4	6-R	B	97	92	39		CONN. ASS. TO MAIN PROGR. (J II)
		W	99	09	10C		WRAP CONNECTOR J09.1, 3*32 PIN
	6-R	WQ	99	09	21F		WRAP CONNECTOR J09.2, 3*32 PIN
ISPEN5	8-R-0	B	97	92	48		CONN. ASS. TO MAIN PROGR. (J II)
		W	99	09	11C		WRAP CONNECTOR J09.1, 3*32 PIN
	8-R-0	WQ	99	09	30F		WRAP CONNECTOR J09.2, 3*32 PIN
ISPEN6	4-5-0	B	97	92	47		CONN. ASS. TO MAIN PROGR. (J II)
		W	99	09	13C		WRAP CONNECTOR J09.1, 3*32 PIN
	4-5-0	WQ	99	09	29F		WRAP CONNECTOR J09.2, 3*32 PIN
ISPEN7	1-2	B	97	92	25		CONN. ASS. TO MAIN PROGR. (J II)
		W	99	09	17C		WRAP CONNECTOR J09.1, 3*32 PIN
	1-2	WQ	99	09	31D		WRAP CONNECTOR J09.2, 3*32 PIN
ISPEN8	1-0	B	97	93	27		CONN. ASS. TO MAIN PROGR. (JIII)
		W	99	09	18C		WRAP CONNECTOR J09.1, 3*32 PIN
	1-0	WQ	99	10	03F		WRAP CONNECTOR J10.2, 3*32 PIN
IVCT- A		W	99	14	28B		WRAP CONNECTOR J14.1, 3*32 PIN
IVCT- B		W	99	14	29B		WRAP CONNECTOR J14.1, 3*32 PIN
IVCT- C		W	99	14	30B		WRAP CONNECTOR J14.1, 3*32 PIN
IVCT- D		W	99	14	31B		WRAP CONNECTOR J14.1, 3*32 PIN
MCOD -M		W	99	05	10A		WRAP CONNECTOR J05.1, 3*32 PIN
							./.
(CONT.)		W	99	13	17A		WRAP CONNECTOR J13.1, 3*32 PIN
MCOD -S		W	99	05	10C		WRAP CONNECTOR J05.1, 3*32 PIN
		W	99	13	17C		WRAP CONNECTOR J13.1, 3*32 PIN
MFAIL-M		W	99	01	26B		WRAP CONNECTOR J01.1, 3*32 PIN
		W	99	13	07A		WRAP CONNECTOR J13.1, 3*32 PIN
MFAIL-S		W	99	05	08C		WRAP CONNECTOR J05.1, 3*32 PIN
		W	99	13	07C		WRAP CONNECTOR J13.1, 3*32 PIN
MOSCI-M		W	99	13	13A		WRAP CONNECTOR J13.1, 3*32 PIN
MOSCI-S		W	99	02	13C		WRAP CONNECTOR J02.1, 3*32 PIN
		W	99	13	13C		WRAP CONNECTOR J13.1, 3*32 PIN
EDIT	8-R	B	97	93	12		CONN. ASS. TO MAIN PROGR. (JIII)
		W	99	10	06A		WRAP CONNECTOR J10.1, 3*32 PIN
	8-R	WQ	99	10	13D		WRAP CONNECTOR J10.2, 3*32 PIN
EDIT CD	R	B	97	91	07		CONN. ASS. TO MAIN PROGR. (J I)
	R	WQ	99	08	07D		WRAP CONNECTOR J08.2, 3*32 PIN
		W	99	10	27A		WRAP CONNECTOR J10.1, 3*32 PIN
EDLEADDR	7	B	97	71	31		AUXILIARY CONNECTOR
	7	WQ	99	07	09E		WRAP CONNECTOR J07.2, 3*32 PIN
		W	99	08	31B		WRAP CONNECTOR J08.1, 3*32 PIN
EDMODEDR	8	B	97	71	03		AUXILIARY CONNECTOR
	8	WQ	99	07	03D		WRAP CONNECTOR J07.2, 3*32 PIN
		W	99	08	31C		WRAP CONNECTOR J08.1, 3*32 PIN
ENADC		W	99	09	25A		WRAP CONNECTOR J09.1, 3*32 PIN
		W	99	10	26B		WRAP CONNECTOR J10.1, 3*32 PIN
ENTADRCT		W	99	01	30A		WRAP CONNECTOR J01.1, 3*32 PIN
		W	99	04	03A		WRAP CONNECTOR J04.1, 3*32 PIN
ENTRY	6-2	B	97	91	13		CONN. ASS. TO MAIN PROGR. (J I)
	6-2	WQ	99	08	17D		WRAP CONNECTOR J08.2, 3*32 PIN
		W	99	10	04A		WRAP CONNECTOR J10.1, 3*32 PIN
ERAHDSCR	4	A	98	03	01		HEADPLUG/CHANNEL SUPPLY
	4	WQ	99	11	13B		WRAP CONNECTOR J11.1, 3*32 PIN
ERASEHD1	6	A	98	03	03		HEADPLUG/CHANNEL SUPPLY
	6	WQ	99	11	13A		WRAP CONNECTOR J11.1, 3*32 PIN
ERASEHD2	9	A	98	03	02		HEADPLUG/CHANNEL SUPPLY
	9	WQ	99	11	13C		WRAP CONNECTOR J11.1, 3*32 PIN
EXEC	9-0	B	97	91	26		CONN. ASS. TO MAIN PROGR. (J I)
	9-0	WQ	99	08	02F		WRAP CONNECTOR J08.2, 3*32 PIN
EXFREQTM	3	L	97	15	03A		REFERENCE FREQUENCY INPUT
	3	WQ	99	01	03B		WRAP CONNECTOR J01.1, 3*32 PIN

* STUDER * SIGNAL WIRE LIST * 82/01/08 * 15:12 * PAGE 39 *

TAPE LOCK SYSTEM 2000 A80: MASTER CTRL, PARALLEL PROGRAMMER 1.228.375.00 79-10-30

SIG.NAME	COLOR	TYPE	GR	EL	PT	S	DESCRIPTION OF ELEMENT
EXFREQ1	2	L	97	15	02A		REFERENCE FREQUENCY INPUT
	2	WQ	99	01	02B		WRAP CONNECTOR J01.1, 3*32 PIN
EXFREQ2	4	L	97	15	04A		REFERENCE FREQUENCY INPUT
	4	WQ	99	01	04B		WRAP CONNECTOR J01.1, 3*32 PIN
EXFRQDAT		W	99	01	30B		WRAP CONNECTOR J01.1, 3*32 PIN
		W	+ 99	13	28A		WRAP CONNECTOR J13.1, 3*32 PIN
		W	99	14	27B		WRAP CONNECTOR J14.1, 3*32 PIN
EXFRQINA	2	L	97	14	02		REFERENCE FREQUENCY INPUT
	2	L	97	15	02		REFERENCE FREQUENCY INPUT
EXFRQINB	3	L	97	14	03		REFERENCE FREQUENCY INPUT
	3	L	97	15	03		REFERENCE FREQUENCY INPUT
EXFRQSCR	0	L	97	13	01		REFERENCE FREQUENCY INPUT
	0	L	97	14	01		REFERENCE FREQUENCY INPUT
EXGENINA	2	L	98	24	02		GENERATOR LINE INPUT
	2	L	98	25	02		GENERATOR LINE INPUT
EXGENINB	3	L	98	24	03		GENERATOR LINE INPUT
	3	L	98	25	03		GENERATOR LINE INPUT
EXGENIN1	2	L	98	25	02A		GENERATOR LINE INPUT
		W	99	11	02C		WRAP CONNECTOR J11.1, 3*32 PIN
	2	WQ	+ 99	13	02A		WRAP CONNECTOR J13.1, 3*32 PIN
EXGENIN2	4	L	98	25	04A		GENERATOR LINE INPUT
		W	99	11	04C		WRAP CONNECTOR J11.1, 3*32 PIN
	4	WQ	+ 99	13	04A		WRAP CONNECTOR J13.1, 3*32 PIN
EXGENOUT		W	99	01	06C		WRAP CONNECTOR J01.1, 3*32 PIN
		W	+ 99	08	25B		WRAP CONNECTOR J08.1, 3*32 PIN
		W	99	11	25C		WRAP CONNECTOR J11.1, 3*32 PIN
EXGENSCR	0	L	98	23	01		GENERATOR LINE INPUT
	0	L	98	24	01		GENERATOR LINE INPUT
EXGENTM	3	L	98	25	03A		GENERATOR LINE INPUT
		W	+ 99	11	03C		WRAP CONNECTOR J11.1, 3*32 PIN
	3	WQ	+ 99	13	03A		WRAP CONNECTOR J13.1, 3*32 PIN
EXTFRQSL		W	99	06	27C		WRAP CONNECTOR J06.1, 3*32 PIN
EXTRECCM	7	L	97	72	05C		RELAIS PRINT
	4	B	98	71	07		MASTER CONTROL OUTPUT
	7	WQ	99	07	05D		WRAP CONNECTOR J07.2, 3*32 PIN
	4	WQ	99	17	26A		WRAP CONNECTOR J17.1, 3*32 PIN
EXTSYNC		W	99	01	02C		WRAP CONNECTOR J01.1, 3*32 PIN
FAD-1	4	A	97	61	43		REMOTE MODE CONTROL
	4	WQ	99	07	25F		WRAP CONNECTOR J07.2, 3*32 PIN
FAD-2	7	A	97	61	44		REMOTE MODE CONTROL
	7	WQ	99	07	26F		WRAP CONNECTOR J07.2, 3*32 PIN
FAST FWD	4-1	B	97	93	17		CONN. ASS. TO MAIN PROGR. (JIII)
		W	99	10	05B		WRAP CONNECTOR J10.1, 3*32 PIN
	4-1	WQ	99	10	23D		WRAP CONNECTOR J10.2, 3*32 PIN
FAST REW	2-0	B	97	93	45		CONN. ASS. TO MAIN PROGR. (JIII)
		W	99	10	05A		WRAP CONNECTOR J10.1, 3*32 PIN
	2-0	WQ	99	10	27F		WRAP CONNECTOR J10.2, 3*32 PIN
FILTNRW		W	99	11	26C		WRAP CONNECTOR J11.1, 3*32 PIN
		W	99	12	31C		WRAP CONNECTOR J12.1, 3*32 PIN
FILTWIDE		W	99	11	28C		WRAP CONNECTOR J11.1, 3*32 PIN
		W	99	12	09C		WRAP CONNECTOR J12.1, 3*32 PIN
FRAM	7	B	97	92	11		CONN. ASS. TO MAIN PROGR. (J II)
	7	WQ	99	09	11D		WRAP CONNECTOR J09.2, 3*32 PIN
		W	99	10	22C		WRAP CONNECTOR J10.1, 3*32 PIN
FRAM ER	4-1	B	97	91	17		CONN. ASS. TO MAIN PROGR. (J I)
	4-1	WQ	99	08	23D		WRAP CONNECTOR J08.2, 3*32 PIN
		W	99	10	02C		WRAP CONNECTOR J10.1, 3*32 PIN
FRAMSL A		W	99	05	18C		WRAP CONNECTOR J05.1, 3*32 PIN
FRAMSL B		W	99	03	08A		WRAP CONNECTOR J03.1, 3*32 PIN
		W	99	05	17C		WRAP CONNECTOR J05.1, 3*32 PIN
FRPWRON		W	99	06	31B		WRAP CONNECTOR J06.1, 3*32 PIN
		W	99	15	07B		WRAP CONNECTOR J15.1, 3*32 PIN
G-SFRSLA		W	99	05	13A		WRAP CONNECTOR J05.1, 3*32 PIN
		W	99	14	02B		WRAP CONNECTOR J14.1, 3*32 PIN
G-SFRSLB		W	99	05	13B		WRAP CONNECTOR J05.1, 3*32 PIN
		W	99	14	03B		WRAP CONNECTOR J14.1, 3*32 PIN
GEN N SC	7	B	97	91	11		CONN. ASS. TO MAIN PROGR. (J I)
	7	WQ	99	08	11D		WRAP CONNECTOR J08.2, 3*32 PIN
GEN SET	9-8	B	97	91	18		CONN. ASS. TO MAIN PROGR. (J I)
	9-8	WQ	99	08	24D		WRAP CONNECTOR J08.2, 3*32 PIN
		W	99	10	13C		WRAP CONNECTOR J10.1, 3*32 PIN
GEN=MAST	1-6	B	97	93	23		CONN. ASS. TO MAIN PROGR. (JIII)
		W	99	10	08C		WRAP CONNECTOR J10.1, 3*32 PIN
	1-6	WQ	99	10	29D		WRAP CONNECTOR J10.2, 3*32 PIN
GENRUN	9-5	B	97	93	14		CONN. ASS. TO MAIN PROGR. (JIII)
		W	99	10	08A		WRAP CONNECTOR J10.1, 3*32 PIN
	9-5	WQ	99	10	18D		WRAP CONNECTOR J10.2, 3*32 PIN
GROUND	4,4,4	L	99	99	01	%	CHASSIS, WIRING WITH: 0 L
	4,4,4	L	99	99	02	%	CHASSIS, WIRING WITH: 0 L

* STUDER * SIGNAL WIRE LIST * 82/01/08 * 15:12 * PAGE 40 *

TAPE LOCK SYSTEM 2000 A80: MASTER CTRL, PARALLEL PROGRAMMER 1.228.375.00 79-10-30

SIG.NAME	COLOR	TYPE	GR	EL	PT	S	DESCRIPTION OF ELEMENT
GROUND98	4	WQ	98	03	05		HEADPLUG/CHANNEL SUPPLY
		W	98	03	09		HEADPLUG/CHANNEL SUPPLY
		W	98	03	10		HEADPLUG/CHANNEL SUPPLY
		W	98	03	11		HEADPLUG/CHANNEL SUPPLY
		W	98	03	12		HEADPLUG/CHANNEL SUPPLY
		W	98	03	13		HEADPLUG/CHANNEL SUPPLY
		W	98	03	18		HEADPLUG/CHANNEL SUPPLY
		W	98	03	19		HEADPLUG/CHANNEL SUPPLY
		W	98	03	20		HEADPLUG/CHANNEL SUPPLY
		W	98	03	21		HEADPLUG/CHANNEL SUPPLY
		W	98	03	22		HEADPLUG/CHANNEL SUPPLY
		W	98	03	23		HEADPLUG/CHANNEL SUPPLY
		W	98	03	24		HEADPLUG/CHANNEL SUPPLY
		W	98	03	25		HEADPLUG/CHANNEL SUPPLY
		W	98	03	26		HEADPLUG/CHANNEL SUPPLY
		W	98	03	27		HEADPLUG/CHANNEL SUPPLY
		W	98	03	28		HEADPLUG/CHANNEL SUPPLY
		W	98	03	29		HEADPLUG/CHANNEL SUPPLY
		W	98	03	30		HEADPLUG/CHANNEL SUPPLY
		W	98	03	31		HEADPLUG/CHANNEL SUPPLY
		W	98	03	32		HEADPLUG/CHANNEL SUPPLY
		W	98	03	33		HEADPLUG/CHANNEL SUPPLY
	4	L	98	04	01		CHASSIS, ELEMENT 98
HOLD	5-2	B	97	92	34		CONN. ASS. TO MAIN PROGR. (J II)
	5-2	WQ	99	09	10F		WRAP CONNECTOR J09.2, 3*32 PIN
		W	99	10	17B		WRAP CONNECTOR J10.1, 3*32 PIN
IFCDATIN		W	99	14	18B		WRAP CONNECTOR J14.1, 3*32 PIN
IFMUX-W		W	99	04	08C		WRAP CONNECTOR J04.1, 3*32 PIN
		W	99	05	23B		WRAP CONNECTOR J05.1, 3*32 PIN
INCODREP		W	+ 99	08	30A		WRAP CONNECTOR J08.1, 3*32 PIN
		W	99	11	29C		WRAP CONNECTOR J11.1, 3*32 PIN
		W	99	12	05A		WRAP CONNECTOR J12.1, 3*32 PIN
		W	99	13	04C		WRAP CONNECTOR J13.1, 3*32 PIN
INTGEN	5-R	B	97	91	30		CONN. ASS. TO MAIN PROGR. (J I)
	5-R	WQ	99	08	06F		WRAP CONNECTOR J08.2, 3*32 PIN
		W	99	10	17C		WRAP CONNECTOR J10.1, 3*32 PIN
K-CUTINH	3	A	97	51	25		EXTENDED REMOTE MODE CONTROL
	3	WQ	99	06	18F		WRAP CONNECTOR J06.2, 3*32 PIN
		W	99	08	03C		WRAP CONNECTOR J08.1, 3*32 PIN
K-PRESS	2	A	97	61	22		REMOTE MODE CONTROL
		W	+ 99	06	21F		WRAP CONNECTOR J06.2, 3*32 PIN
	2	WQ	99	07	18E		WRAP CONNECTOR J07.2, 3*32 PIN
		W	99	08	07A		WRAP CONNECTOR J08.1, 3*32 PIN
K-RESET	8	A	97	61	45		REMOTE MODE CONTROL
		W	+ 99	06	27F		WRAP CONNECTOR J06.2, 3*32 PIN
	8	WQ	99	07	27F		WRAP CONNECTOR J07.2, 3*32 PIN
		W	99	08	08A		WRAP CONNECTOR J08.1, 3*32 PIN
		W	99	08	09B		WRAP CONNECTOR J08.1, 3*32 PIN
KB	8-5	B	97	93	28		CONN. ASS. TO MAIN PROGR. (JIII)
	8-5	WQ	99	10	04F		WRAP CONNECTOR J10.2, 3*32 PIN
		W	99	10	22A		WRAP CONNECTOR J10.1, 3*32 PIN
LDADDRCT		W	99	01	29A		WRAP CONNECTOR J01.1, 3*32 PIN
		W	99	04	05A		WRAP CONNECTOR J04.1, 3*32 PIN
LDARDATA		W	99	06	08C		WRAP CONNECTOR J06.1, 3*32 PIN
		W	99	07	07B		WRAP CONNECTOR J07.1, 3*32 PIN
LDTRMCT		W	99	06	08A		WRAP CONNECTOR J06.1, 3*32 PIN
		W	99	07	08B		WRAP CONNECTOR J07.1, 3*32 PIN
LKMODDR2	2	B	98	71	05		MASTER CONTROL OUTPUT
	2	WQ	99	17	04A		WRAP CONNECTOR J17.1, 3*32 PIN
LKMODEDR	1	B	97	71	02		AUXILIARY CONNECTOR
	1	WQ	99	07	02D		WRAP CONNECTOR J07.2, 3*32 PIN
		W	99	08	30C		WRAP CONNECTOR J08.1, 3*32 PIN
LOADCKCT		W	99	04	07B		WRAP CONNECTOR J04.1, 3*32 PIN
		W	99	05	29A		WRAP CONNECTOR J05.1, 3*32 PIN
LOC.ENB	2	A	97	61	35		REMOTE MODE CONTROL
	2	WQ	99	07	11F		WRAP CONNECTOR J07.2, 3*32 PIN
		W	99	08	17B		WRAP CONNECTOR J08.1, 3*32 PIN
LOCKFAST	6	B	97	91	08		CONN. ASS. TO MAIN PROGR. (J I)
	6	WQ	99	08	08D		WRAP CONNECTOR J08.2, 3*32 PIN
		W	99	10	26A		WRAP CONNECTOR J10.1, 3*32 PIN
LOCKSLOW	4-2	B	97	92	35		CONN. ASS. TO MAIN PROGR. (J II)
	4-2	WQ	99	09	11F		WRAP CONNECTOR J09.2, 3*32 PIN
		W	99	10	25C		WRAP CONNECTOR J10.1, 3*32 PIN
LWLIM EX	0-R	B	97	91	43		CONN. ASS. TO MAIN PROGR. (J I)
	0-R	WQ	99	08	25F		WRAP CONNECTOR J08.2, 3*32 PIN
		W	99	10	09B		WRAP CONNECTOR J10.1, 3*32 PIN
MAST	5	B	97	93	04		CONN. ASS. TO MAIN PROGR. (JIII)
	5	WQ	99	10	04D		WRAP CONNECTOR J10.2, 3*32 PIN
		W	99	10	21C		WRAP CONNECTOR J10.1, 3*32 PIN
MCDATRDY	2	B	98	71	22		MASTER CONTROL OUTPUT
		W	99	17	03A		WRAP CONNECTOR J17.1, 3*32 PIN
	2	WQ	99	20	29F		WRAP CONNECTOR J20.2, 3*32 PIN
MCDATODR	4	B	98	71	24		MASTER CONTROL OUTPUT
		W	99	17	31C		WRAP CONNECTOR J17.1, 3*32 PIN
	4	WQ	99	20	31F		WRAP CONNECTOR J20.2, 3*32 PIN
MCDAT1DR	8	B	98	71	19		MASTER CONTROL OUTPUT
		W	99	17	30A		WRAP CONNECTOR J17.1, 3*32 PIN
	8	WQ	99	20	30D		WRAP CONNECTOR J20.2, 3*32 PIN
MCDAT2DR	9	B	98	71	20		MASTER CONTROL OUTPUT

./.

SIG.NAME	COLOR	TYPE	GR	EL	PT	S	DESCRIPTION OF ELEMENT
(CONT.)		W	99	17	31A		WRAP CONNECTOR J17.1, 3*32 PIN
	9	WQ	99	20	31D		WRAP CONNECTOR J20.2, 3*32 PIN
MCKCUTDR	6	B	98	71	17		MASTER CONTROL OUTPUT
		W	99	17	04B		WRAP CONNECTOR J17.1, 3*32 PIN
	6	WQ	99	20	04D		WRAP CONNECTOR J20.2, 3*32 PIN
MCMUTEDR	1	B	98	71	21		MASTER CONTROL OUTPUT
		W	99	17	02C		WRAP CONNECTOR J17.1, 3*32 PIN
	1	WQ	99	20	02F		WRAP CONNECTOR J20.2, 3*32 PIN
MCRECEDR	4	B	98	71	15		MASTER CONTROL OUTPUT
		W	99	17	02B		WRAP CONNECTOR J17.1, 3*32 PIN
	4	WQ	99	20	02D		WRAP CONNECTOR J20.2, 3*32 PIN
MCRESDR1	7	B	98	71	18		MASTER CONTROL OUTPUT
		W	99	17	08C		WRAP CONNECTOR J17.1, 3*32 PIN
		W +	99	20	08F		WRAP CONNECTOR J20.2, 3*32 PIN
	7	WQ	99	20	17D		WRAP CONNECTOR J20.2, 3*32 PIN
MCRESDR2	3	B	98	71	23		MASTER CONTROL OUTPUT
		W	99	17	30C		WRAP CONNECTOR J17.1, 3*32 PIN
	3	WQ	99	20	30F		WRAP CONNECTOR J20.2, 3*32 PIN
MCSUPVIS	1	B	98	71	08		MASTER CONTROL OUTPUT
	1	WQ	99	17	05A		WRAP CONNECTOR J17.1, 3*32 PIN
MCZSETDR	5	B	98	71	16		MASTER CONTROL OUTPUT
		W	99	17	03B		WRAP CONNECTOR J17.1, 3*32 PIN
	5	WQ	99	20	03D		WRAP CONNECTOR J20.2, 3*32 PIN
MDIRDWNM		W	99	01	06A		WRAP CONNECTOR J01.1, 3*32 PIN
		W	99	03	06A		WRAP CONNECTOR J03.1, 3*32 PIN
MDMFAILM		W	99	01	05A		WRAP CONNECTOR J01.1, 3*32 PIN
		W	99	05	08A		WRAP CONNECTOR J05.1, 3*32 PIN
MPSYNCM		W	99	01	07A		WRAP CONNECTOR J01.1, 3*32 PIN
		W	99	02	07B		WRAP CONNECTOR J02.1, 3*32 PIN
		W	99	03	07A		WRAP CONNECTOR J03.1, 3*32 PIN
		W	99	05	07A		WRAP CONNECTOR J05.1, 3*32 PIN
MPWRON	5	B	98	71	04		MASTER CONTROL OUTPUT
	5	WQ	99	17	10A		WRAP CONNECTOR J17.1, 3*32 PIN
MP2DMM		W	99	01	03A		WRAP CONNECTOR J01.1, 3*32 PIN
		W	99	03	02A		WRAP CONNECTOR J03.1, 3*32 PIN
		W	99	05	03A		WRAP CONNECTOR J05.1, 3*32 PIN
MP3DMM		W	99	01	04A		WRAP CONNECTOR J01.1, 3*32 PIN
		W	99	02	04B		WRAP CONNECTOR J02.1, 3*32 PIN
		W	99	03	03A		WRAP CONNECTOR J03.1, 3*32 PIN
		W	99	05	04A		WRAP CONNECTOR J05.1, 3*32 PIN
MSEC	0	B	97	91	10		CONN. ASS. TO MAIN PROGR. (J I)
	2	B	97	92	09		CONN. ASS. TO MAIN PROGR. (J II)
(CONT.)	0	WQ	99	08	10D		WRAP CONNECTOR J08.2, 3*32 PIN
	2	WQ	99	09	09D		WRAP CONNECTOR J09.2, 3*32 PIN
		W	99	10	22B		WRAP CONNECTOR J10.1, 3*32 PIN
MS2TLS		W	99	17	06A		WRAP CONNECTOR J17.1, 3*32 PIN
NACRES1		W	99	04	17A		WRAP CONNECTOR J04.1, 3*32 PIN
		W	99	14	17B		WRAP CONNECTOR J14.1, 3*32 PIN
NCOCKCT		W	99	04	03C		WRAP CONNECTOR J04.1, 3*32 PIN
		W	99	05	30A		WRAP CONNECTOR J05.1, 3*32 PIN
NDMCOD-M		W	99	03	05A		WRAP CONNECTOR J03.1, 3*32 PIN
		W	99	13	18A		WRAP CONNECTOR J13.1, 3*32 PIN
NDMCOD-S		W	99	03	05C		WRAP CONNECTOR J03.1, 3*32 PIN
		W	99	13	18C		WRAP CONNECTOR J13.1, 3*32 PIN
NEMGSTOP	4	B	98	61	34		CODE CHANNEL REMOTE A80
		W	99	06	13A		WRAP CONNECTOR J06.1, 3*32 PIN
		W	99	08	13A		WRAP CONNECTOR J08.1, 3*32 PIN
	4	WQ	99	20	11F		WRAP CONNECTOR J20.2, 3*32 PIN
NFRAMSLB		W	99	05	05C		WRAP CONNECTOR J05.1, 3*32 PIN
NFROCTLD		W	99	01	22A		WRAP CONNECTOR J01.1, 3*32 PIN
		W	99	02	22B		WRAP CONNECTOR J02.1, 3*32 PIN
NINVCTR1		W	99	05	03B		WRAP CONNECTOR J05.1, 3*32 PIN
		W	99	14	13C		WRAP CONNECTOR J14.1, 3*32 PIN
NINVCTR2		W	99	05	05B		WRAP CONNECTOR J05.1, 3*32 PIN
		W	99	14	17C		WRAP CONNECTOR J14.1, 3*32 PIN
NO CD S	9-R	B	97	91	20		CONN. ASS. TO MAIN PROGR. (J I)
	9-R	WQ	99	08	26D		WRAP CONNECTOR J08.2, 3*32 PIN
		W	99	10	03B		WRAP CONNECTOR J10.1, 3*32 PIN
NOCODE-S		W	99	05	04B		WRAP CONNECTOR J05.1, 3*32 PIN
		W	99	06	29C		WRAP CONNECTOR J06.1, 3*32 PIN
NOMASTER		W	99	05	02B		WRAP CONNECTOR J05.1, 3*32 PIN
		W	99	06	30C		WRAP CONNECTOR J06.1, 3*32 PIN
NPINSTEN		W	99	06	28C		WRAP CONNECTOR J06.1, 3*32 PIN
		W	99	15	13C		WRAP CONNECTOR J15.1, 3*32 PIN
NPPWRON		W	99	03	23B		WRAP CONNECTOR J03.1, 3*32 PIN
		W	99	06	18C		WRAP CONNECTOR J06.1, 3*32 PIN
		W	99	08	18A		WRAP CONNECTOR J08.1, 3*32 PIN
		W	99	14	22B		WRAP CONNECTOR J14.1, 3*32 PIN
NTDMOVED		W	99	08	26B		WRAP CONNECTOR J08.1, 3*32 PIN
NTDY-REC		W	99	08	29A		WRAP CONNECTOR J08.1, 3*32 PIN

./.

SIG.NAME	COLOR	TYPE	GR	EL	PT	S	DESCRIPTION OF ELEMENT
NTRMDATA	5	B	97	92	04		CONN. ASS. TO MAIN PROGR. (J II)
		W	99	07	09A		WRAP CONNECTOR J07.1, 3*32 PIN
	5	WQ	99	09	04D		WRAP CONNECTOR J09.2, 3*32 PIN
NTRMDATB	5-0	B	97	92	36		CONN. ASS. TO MAIN PROGR. (J II)
		W	99	07	10A		WRAP CONNECTOR J07.1, 3*32 PIN
	5-0	WQ	99	09	13F		WRAP CONNECTOR J09.2, 3*32 PIN
NTRMDATC	8-0	B	97	92	42		CONN. ASS. TO MAIN PROGR. (J II)
		W	99	07	11A		WRAP CONNECTOR J07.1, 3*32 PIN
	8-0	WQ	99	09	24F		WRAP CONNECTOR J09.2, 3*32 PIN
NTRMDATD	9	B	97	93	01		CONN. ASS. TO MAIN PROGR. (JIII)
		W	99	07	13A		WRAP CONNECTOR J07.1, 3*32 PIN
	9	WQ	99	10	02D		WRAP CONNECTOR J10.2, 3*32 PIN
NTRMDTA		W	99	07	30A		WRAP CONNECTOR J07.1, 3*32 PIN
		W	99	09	09A		WRAP CONNECTOR J09.1, 3*32 PIN
		W	99	10	30D		WRAP CONNECTOR J10.1, 3*32 PIN
OFS DISP	9-5	B	97	92	14		CONN. ASS. TO MAIN PROGR. (J II)
	9-5	WQ	99	09	18D		WRAP CONNECTOR J09.2, 3*32 PIN
		W	99	10	21A		WRAP CONNECTOR J10.1, 3*32 PIN
PARKED	8-6	B	97	93	38		CONN. ASS. TO MAIN PROGR. (JIII)
		W	99	10	02B		WRAP CONNECTOR J10.1, 3*32 PIN
	8-6	WQ	99	10	18F		WRAP CONNECTOR J10.2, 3*32 PIN
PARKEDDR	2	B	97	71	10		AUXILIARY CONNECTOR
	3	B	98	71	06		MASTER CONTROL OUTPUT
	2	WQ	99	07	04D		WRAP CONNECTOR J07.2, 3*32 PIN
	3	WQ	99	17	17A		WRAP CONNECTOR J17.1, 3*32 PIN
PBA	5	B	97	91	04		CONN. ASS. TO MAIN PROGR. (J I)
	5	WQ	99	08	04D		WRAP CONNECTOR J08.2, 3*32 PIN
		W	99	09	28A		WRAP CONNECTOR J09.1, 3*32 PIN
PBB	8-1	B	97	93	19		CONN. ASS. TO MAIN PROGR. (JIII)
		W	99	09	28B		WRAP CONNECTOR J09.1, 3*32 PIN
	8-1	WQ	99	10	25D		WRAP CONNECTOR J10.2, 3*32 PIN
PBC	5-6	B	97	93	32		CONN. ASS. TO MAIN PROGR. (JIII)
		W	99	09	29A		WRAP CONNECTOR J09.1, 3*32 PIN
	5-6	WQ	99	10	08F		WRAP CONNECTOR J10.2, 3*32 PIN
PBD	1-0	B	97	91	27		CONN. ASS. TO MAIN PROGR. (J I)
	1-0	WQ	99	08	03F		WRAP CONNECTOR J08.2, 3*32 PIN
		W	99	09	29B		WRAP CONNECTOR J09.1, 3*32 PIN
PBE	5-0	B	97	93	36		CONN. ASS. TO MAIN PROGR. (JIII)
		W	99	09	30A		WRAP CONNECTOR J09.1, 3*32 PIN
	5-0	WQ	99	10	13F		WRAP CONNECTOR J10.2, 3*32 PIN
PBF	8-0	B	97	91	42		CONN. ASS. TO MAIN PROGR. (J I)
	8-0	WQ	99	08	24F		WRAP CONNECTOR J08.2, 3*32 PIN
		W	99	09	30B		WRAP CONNECTOR J09.1, 3*32 PIN
PBG	6-R	B	97	91	39		CONN. ASS. TO MAIN PROGR. (J I)
	6-R	WQ	99	08	21F		WRAP CONNECTOR J08.2, 3*32 PIN
		W	99	09	31A		WRAP CONNECTOR J09.1, 3*32 PIN
PBH	4	B	97	91	05		CONN. ASS. TO MAIN PROGR. (J I)
	4	WQ	99	08	05D		WRAP CONNECTOR J08.2, 3*32 PIN
		W	99	09	31B		WRAP CONNECTOR J09.1, 3*32 PIN
PBI	8-5	B	97	91	28		CONN. ASS. TO MAIN PROGR. (J I)
	8-5	WQ	99	08	04F		WRAP CONNECTOR J08.2, 3*32 PIN
		W	99	09	26A		WRAP CONNECTOR J09.1, 3*32 PIN
PBK	2-R	B	97	91	41		CONN. ASS. TO MAIN PROGR. (J I)
	2-R	WQ	99	08	23F		WRAP CONNECTOR J08.2, 3*32 PIN
		W	99	09	26B		WRAP CONNECTOR J09.1, 3*32 PIN
PBMASREG		W	99	04	05B		WRAP CONNECTOR J04.1, 3*32 PIN
PBPLAY	1-R	B	97	93	21		CONN. ASS. TO MAIN PROGR. (JIII)
		W	99	09	27B		WRAP CONNECTOR J09.1, 3*32 PIN
	1-R	WQ	99	10	27D		WRAP CONNECTOR J10.2, 3*32 PIN
PBREC	9-6	B	97	93	22		CONN. ASS. TO MAIN PROGR. (JIII)
		W	99	09	27A		WRAP CONNECTOR J09.1, 3*32 PIN
	9-6	WQ	99	10	28D		WRAP CONNECTOR J10.2, 3*32 PIN
PBULBHMS	9-4	B	97	92	16		CONN. ASS. TO MAIN PROGR. (J II)
	9-2	B	97	92	24		CONN. ASS. TO MAIN PROGR. (J II)
	2-0	B	97	92	45		CONN. ASS. TO MAIN PROGR. (J II)
	9-4	WQ	99	09	22D		WRAP CONNECTOR J09.2, 3*32 PIN
	2-0	WQ	99	09	27F		WRAP CONNECTOR J09.2, 3*32 PIN
	9-2	WQ	99	09	30D		WRAP CONNECTOR J09.2, 3*32 PIN
		W	99	10	26C		WRAP CONNECTOR J10.1, 3*32 PIN
PBO	4-2	B	97	93	35		CONN. ASS. TO MAIN PROGR. (JIII)
		W	99	09	21B		WRAP CONNECTOR J09.1, 3*32 PIN
	4-2	WQ	99	10	11F		WRAP CONNECTOR J10.2, 3*32 PIN
PB1	9	B	97	91	02		CONN. ASS. TO MAIN PROGR. (J I)
	9	WQ	99	08	02D		WRAP CONNECTOR J08.2, 3*32 PIN
		W	99	09	21C		WRAP CONNECTOR J09.1, 3*32 PIN
PB2	6-2-0	B	97	93	49		CONN. ASS. TO MAIN PROGR. (JIII)
		W	99	09	22B		WRAP CONNECTOR J09.1, 3*32 PIN
	6-2-0	WQ	99	10	31F		WRAP CONNECTOR J10.2, 3*32 PIN
PB3	4-R	B	97	93	31		CONN. ASS. TO MAIN PROGR. (JIII)
		W	99	09	22C		WRAP CONNECTOR J09.1, 3*32 PIN
	4-R	WQ	99	10	07F		WRAP CONNECTOR J10.2, 3*32 PIN
PB4	8-2	B	97	91	40		CONN. ASS. TO MAIN PROGR. (J I)
	8-2	WQ	99	08	22F		WRAP CONNECTOR J08.2, 3*32 PIN
		W	99	09	23B		WRAP CONNECTOR J09.1, 3*32 PIN
PB5	5-2	B	97	93	34		CONN. ASS. TO MAIN PROGR. (JIII)
		W	99	09	23C		WRAP CONNECTOR J09.1, 3*32 PIN

./.

* STUDER * SIGNAL WIRE LIST * 82/01/08 * 15:12 * PAGE 43 *

TAPE LOCK SYSTEM 2000 A80: MASTER CTRL, PARALLEL PROGRAMMER 1.228.375.00 79-10-30

SIG.NAME	COLOR	TYPE	GR	EL	PT	S	DESCRIPTION OF ELEMENT
(CONT.)	5-2	WQ	99	10	10F		WRAP CONNECTOR J10.2, 3*32 PIN
PB6	8-R-O	B	97	93	48		CONN. ASS. TO MAIN PROGR. (JIII)
		W	99	09	24B		WRAP CONNECTOR J09.1, 3*32 PIN
	8-R-O	WQ	99	10	30F		WRAP CONNECTOR J10.2, 3*32 PIN
PB7	8-6	B	97	91	38		CONN. ASS. TO MAIN PROGR. (J I)
	8-6	WQ	99	08	18F		WRAP CONNECTOR J08.2, 3*32 PIN
		W	99	09	25B		WRAP CONNECTOR J09.1, 3*32 PIN
PCBAL		W	99	06	09A		WRAP CONNECTOR J06.1, 3*32 PIN
		W	99	07	09C		WRAP CONNECTOR J07.1, 3*32 PIN
PCBALQ0		W	99	01	04C		WRAP CONNECTOR J01.1, 3*32 PIN
		W	99	07	31B		WRAP CONNECTOR J07.1, 3*32 PIN
PCBALQ2		W	99	01	18A		WRAP CONNECTOR J01.1, 3*32 PIN
		W	99	07	18C		WRAP CONNECTOR J07.1, 3*32 PIN
PCBALQ3		W	99	07	30B		WRAP CONNECTOR J07.1, 3*32 PIN
PCBPLTCL		W	99	06	24C		WRAP CONNECTOR J06.1, 3*32 PIN
		W	99	17	18B		WRAP CONNECTOR J17.1, 3*32 PIN
PCBPMUXA		W	99	07	22C		WRAP CONNECTOR J07.1, 3*32 PIN
		W	99	17	28B		WRAP CONNECTOR J17.1, 3*32 PIN
PCBPMUXB		W	99	07	23C		WRAP CONNECTOR J07.1, 3*32 PIN
		W	99	17	27B		WRAP CONNECTOR J17.1, 3*32 PIN
PCBPWE		W	99	06	25C		WRAP CONNECTOR J06.1, 3*32 PIN
		W	99	17	21B		WRAP CONNECTOR J17.1, 3*32 PIN
PCBSP		W	99	06	17A		WRAP CONNECTOR J06.1, 3*32 PIN
PCBTEST		W	99	06	29B		WRAP CONNECTOR J06.1, 3*32 PIN
		W	99	07	29B		WRAP CONNECTOR J07.1, 3*32 PIN
PCBTESTA		W	99	07	25C		WRAP CONNECTOR J07.1, 3*32 PIN
PCBTESTB		W	99	07	26C		WRAP CONNECTOR J07.1, 3*32 PIN
PCBTESTC		W	99	01	24A		WRAP CONNECTOR J01.1, 3*32 PIN
		W	99	07	24C		WRAP CONNECTOR J07.1, 3*32 PIN
PCBTEST4		W	99	07	31A		WRAP CONNECTOR J07.1, 3*32 PIN
PCDATACC		W	99	06	03A		WRAP CONNECTOR J06.1, 3*32 PIN
		W	99	09	27C		WRAP CONNECTOR J09.1, 3*32 PIN
PCDATINA		W	99	07	09B		WRAP CONNECTOR J07.1, 3*32 PIN
		W	99	09	09B		WRAP CONNECTOR J09.1, 3*32 PIN
PCDATINB		W	99	07	10B		WRAP CONNECTOR J07.1, 3*32 PIN
		W	99	09	10B		WRAP CONNECTOR J09.1, 3*32 PIN
PCDATINC		W	99	07	11B		WRAP CONNECTOR J07.1, 3*32 PIN
		W	99	09	11B		WRAP CONNECTOR J09.1, 3*32 PIN
PCDATIND		W	99	07	13B		WRAP CONNECTOR J07.1, 3*32 PIN
		W	99	09	13B		WRAP CONNECTOR J09.1, 3*32 PIN
PCDATINE		W	99	06	10A		WRAP CONNECTOR J06.1, 3*32 PIN
		W	99	09	17B		WRAP CONNECTOR J09.1, 3*32 PIN
PCDATRDY		W	99	06	02A		WRAP CONNECTOR J06.1, 3*32 PIN
		W	99	09	25C		WRAP CONNECTOR J09.1, 3*32 PIN
		W	99	10	11B		WRAP CONNECTOR J10.1, 3*32 PIN
PCEXPR-1		W	99	07	02B		WRAP CONNECTOR J07.1, 3*32 PIN
PCEXPR-2		W	99	07	03B		WRAP CONNECTOR J07.1, 3*32 PIN
PCEXPR-3		W	99	07	04B		WRAP CONNECTOR J07.1, 3*32 PIN
PCEXPRRQ		W	99	06	05C		WRAP CONNECTOR J06.1, 3*32 PIN
		W	99	07	05B		WRAP CONNECTOR J07.1, 3*32 PIN
PCIFCTST		W	99	07	29A		WRAP CONNECTOR J07.1, 3*32 PIN
PCPGAD00		W	99	06	03C		WRAP CONNECTOR J06.1, 3*32 PIN
		W	99	15	02C		WRAP CONNECTOR J15.1, 3*32 PIN
PCPGAD01		W	99	06	07B		WRAP CONNECTOR J06.1, 3*32 PIN
		W	99	15	03C		WRAP CONNECTOR J15.1, 3*32 PIN
PCPGAD02		W	99	06	08B		WRAP CONNECTOR J06.1, 3*32 PIN
		W	99	15	04C		WRAP CONNECTOR J15.1, 3*32 PIN
PCPGAD03		W	99	06	09C		WRAP CONNECTOR J06.1, 3*32 PIN
		W	99	15	05C		WRAP CONNECTOR J15.1, 3*32 PIN
PCPGAD04		W	99	06	10C		WRAP CONNECTOR J06.1, 3*32 PIN
		W	99	15	06C		WRAP CONNECTOR J15.1, 3*32 PIN
PCPGAD05		W	99	06	11C		WRAP CONNECTOR J06.1, 3*32 PIN
		W	99	15	07C		WRAP CONNECTOR J15.1, 3*32 PIN
PCPGAD06		W	99	06	21B		WRAP CONNECTOR J06.1, 3*32 PIN
		W	99	15	08C		WRAP CONNECTOR J15.1, 3*32 PIN
PCPGAD07		W	99	06	24B		WRAP CONNECTOR J06.1, 3*32 PIN
		W	99	15	09C		WRAP CONNECTOR J15.1, 3*32 PIN
PCPGAD08		W	99	06	26B		WRAP CONNECTOR J06.1, 3*32 PIN
		W	99	15	10C		WRAP CONNECTOR J15.1, 3*32 PIN
PCPGAD09		W	99	06	21C		WRAP CONNECTOR J06.1, 3*32 PIN
		W	99	15	11C		WRAP CONNECTOR J15.1, 3*32 PIN
PCPGAD10		W	99	06	22C		WRAP CONNECTOR J06.1, 3*32 PIN
		W	99	15	08B		WRAP CONNECTOR J15.1, 3*32 PIN

* STUDER * SIGNAL WIRE LIST * 82/01/08 * 15:12 * PAGE 44 *

TAPE LOCK SYSTEM 2000 A80: MASTER CTRL, PARALLEL PROGRAMMER 1.228.375.00 79-10-30

SIG.NAME	COLOR	TYPE	GR	EL	PT	S	DESCRIPTION OF ELEMENT
PCPGAD11		W	99	06	23C		WRAP CONNECTOR J06.1, 3*32 PIN
		W	99	15	09B		WRAP CONNECTOR J15.1, 3*32 PIN
PCPGDATA		W	99	01	07C		WRAP CONNECTOR J01.1, 3*32 PIN
		W	99	02	09C		WRAP CONNECTOR J02.1, 3*32 PIN
		W	99	03	09C		WRAP CONNECTOR J03.1, 3*32 PIN
		W	99	06	18A		WRAP CONNECTOR J06.1, 3*32 PIN
		W	99	07	18A		WRAP CONNECTOR J07.1, 3*32 PIN
		W	99	08	26C		WRAP CONNECTOR J08.1, 3*32 PIN
		W	99	09	28C		WRAP CONNECTOR J09.1, 3*32 PIN
		W	99	11	28A		WRAP CONNECTOR J11.1, 3*32 PIN
		W	99	15	17C		WRAP CONNECTOR J15.1, 3*32 PIN
		W	99	17	29B		WRAP CONNECTOR J17.1, 3*32 PIN
PCPGDATB		W	99	01	08C		WRAP CONNECTOR J01.1, 3*32 PIN
		W	99	02	10C		WRAP CONNECTOR J02.1, 3*32 PIN
		W	99	03	10C		WRAP CONNECTOR J03.1, 3*32 PIN
		W	99	06	21A		WRAP CONNECTOR J06.1, 3*32 PIN
		W	99	07	21A		WRAP CONNECTOR J07.1, 3*32 PIN
		W	99	08	27C		WRAP CONNECTOR J08.1, 3*32 PIN
		W	99	09	29C		WRAP CONNECTOR J09.1, 3*32 PIN
		W	99	11	29A		WRAP CONNECTOR J11.1, 3*32 PIN
		W	99	15	18C		WRAP CONNECTOR J15.1, 3*32 PIN
		W	99	17	30B		WRAP CONNECTOR J17.1, 3*32 PIN
PCPGDATC		W	99	01	09C		WRAP CONNECTOR J01.1, 3*32 PIN
		W	99	02	11C		WRAP CONNECTOR J02.1, 3*32 PIN
		W	99	03	11C		WRAP CONNECTOR J03.1, 3*32 PIN
		W	99	06	22A		WRAP CONNECTOR J06.1, 3*32 PIN
		W	99	07	22A		WRAP CONNECTOR J07.1, 3*32 PIN
		W	99	08	29C		WRAP CONNECTOR J08.1, 3*32 PIN
		W	99	09	30C		WRAP CONNECTOR J09.1, 3*32 PIN
		W	99	11	30A		WRAP CONNECTOR J11.1, 3*32 PIN
		W	99	15	21C		WRAP CONNECTOR J15.1, 3*32 PIN
		W	99	17	31B		WRAP CONNECTOR J17.1, 3*32 PIN
PCPGDATD		W	99	06	23A		WRAP CONNECTOR J06.1, 3*32 PIN
		W	99	07	23A		WRAP CONNECTOR J07.1, 3*32 PIN
		W	99	15	22C		WRAP CONNECTOR J15.1, 3*32 PIN
		W	99	17	26B		WRAP CONNECTOR J17.1, 3*32 PIN
PCPGDATE		W	99	06	24A		WRAP CONNECTOR J06.1, 3*32 PIN
		W	99	07	24A		WRAP CONNECTOR J07.1, 3*32 PIN
		W	99	15	23C		WRAP CONNECTOR J15.1, 3*32 PIN
PCPGDATF		W	99	06	25A		WRAP CONNECTOR J06.1, 3*32 PIN
		W	99	07	25A		WRAP CONNECTOR J07.1, 3*32 PIN
		W	99	15	24C		WRAP CONNECTOR J15.1, 3*32 PIN
PCPGDATG		W	99	06	26A		WRAP CONNECTOR J06.1, 3*32 PIN
		W	99	07	26A		WRAP CONNECTOR J07.1, 3*32 PIN
		W	99	15	25C		WRAP CONNECTOR J15.1, 3*32 PIN
PCPGDATH		W	99	02	27B		WRAP CONNECTOR J02.1, 3*32 PIN
		W	99	06	27A		WRAP CONNECTOR J06.1, 3*32 PIN
		W	99	07	27A		WRAP CONNECTOR J07.1, 3*32 PIN
(CONT.)		W	99	08	10A		WRAP CONNECTOR J08.1, 3*32 PIN
		W	99	11	31A		WRAP CONNECTOR J11.1, 3*32 PIN
		W	99	15	26C		WRAP CONNECTOR J15.1, 3*32 PIN
		W	99	17	28A		WRAP CONNECTOR J17.1, 3*32 PIN
		W	+ 99	18	26A		WRAP CONNECTOR J18.1, 3*32 PIN
PCPGDATI		W	99	06	28A		WRAP CONNECTOR J06.1, 3*32 PIN
		W	99	07	28A		WRAP CONNECTOR J07.1, 3*32 PIN
		W	99	15	27C		WRAP CONNECTOR J15.1, 3*32 PIN
PCPGDATK		W	99	06	29A		WRAP CONNECTOR J06.1, 3*32 PIN
		W	99	15	28C		WRAP CONNECTOR J15.1, 3*32 PIN
PCPGDATL		W	99	06	30A		WRAP CONNECTOR J06.1, 3*32 PIN
		W	99	15	29C		WRAP CONNECTOR J15.1, 3*32 PIN
PCPGDATM		W	99	06	31A		WRAP CONNECTOR J06.1, 3*32 PIN
		W	99	15	30C		WRAP CONNECTOR J15.1, 3*32 PIN
PCPGDATN		W	99	06	28B		WRAP CONNECTOR J06.1, 3*32 PIN
		W	99	15	31C		WRAP CONNECTOR J15.1, 3*32 PIN
PCSPGRPA		W	99	06	02B		WRAP CONNECTOR J06.1, 3*32 PIN
PCSPGRP2		W	99	01	23A		WRAP CONNECTOR J01.1, 3*32 PIN
		W	99	06	25B		WRAP CONNECTOR J06.1, 3*32 PIN
PCSPGRP3		W	99	02	06C		WRAP CONNECTOR J02.1, 3*32 PIN
		W	99	06	06C		WRAP CONNECTOR J06.1, 3*32 PIN
PCTAPFLG		W	99	06	17C		WRAP CONNECTOR J06.1, 3*32 PIN
		W	99	15	17B		WRAP CONNECTOR J15.1, 3*32 PIN
PCTDCLR		W	99	06	04C		WRAP CONNECTOR J06.1, 3*32 PIN
		W	99	08	04B		WRAP CONNECTOR J08.1, 3*32 PIN
PEDITLD		W	99	02	10B		WRAP CONNECTOR J02.1, 3*32 PIN
		W	99	07	10C		WRAP CONNECTOR J07.1, 3*32 PIN
PERCAPFR		W	99	02	02C		WRAP CONNECTOR J02.1, 3*32 PIN
		W	99	08	02C		WRAP CONNECTOR J08.1, 3*32 PIN
PERDATA		W	99	05	10B		WRAP CONNECTOR J05.1, 3*32 PIN
		W	99	07	31C		WRAP CONNECTOR J07.1, 3*32 PIN
		W	99	14	24B		WRAP CONNECTOR J14.1, 3*32 PIN
PERMNTM1		W	99	03	13C		WRAP CONNECTOR J03.1, 3*32 PIN
PERMNTM2		W	99	03	17C		WRAP CONNECTOR J03.1, 3*32 PIN
PERMNTM3		W	99	03	18C		WRAP CONNECTOR J03.1, 3*32 PIN
PERMNTM4		W	99	01	10C		WRAP CONNECTOR J01.1, 3*32 PIN
		W	99	03	21C		WRAP CONNECTOR J03.1, 3*32 PIN
		W	+ 99	04	22B		WRAP CONNECTOR J04.1, 3*32 PIN

./.

```
*****************************************************************************************************************************
*  S T U D E R  *  S I G N A L  W I R E  L I S T          *  82/01/08 * 15:12     *  P A G E   45  *
*****************************************************************************************************************************
TAPE LOCK SYSTEM 2000 A80: MASTER CTRL, PARALLEL PROGRAMMER  1.228.375.00          79-10-30

SIG.NAME COLOR TYPE GR EL PT  S DESCRIPTION OF ELEMENT
-------- ----- ---- -- -- --- - --------------------------------
PER1DM-M       W    99 13 21A   WRAP CONNECTOR J13.1, 3*32 PIN

PER1DM-S       W    99 13 08B   WRAP CONNECTOR J13.1, 3*32 PIN

PER2DM-M       W    99 13 22A   WRAP CONNECTOR J13.1, 3*32 PIN

PER2DM-S       W    99 13 09B   WRAP CONNECTOR J13.1, 3*32 PIN

PER3DM-M       W    99 13 23A   WRAP CONNECTOR J13.1, 3*32 PIN

PER3DM-S       W    99 13 10B   WRAP CONNECTOR J13.1, 3*32 PIN

PER4DM-M       W    99 13 24A   WRAP CONNECTOR J13.1, 3*32 PIN

PER4DM-S       W    99 13 11B   WRAP CONNECTOR J13.1, 3*32 PIN

PHASING  R     B    97 92 07    CONN. ASS. TO MAIN PROGR. (J II)
         R     WQ   99 09 07D   WRAP CONNECTOR J09.2, 3*32 PIN
               W    99 10 24C   WRAP CONNECTOR J10.1, 3*32 PIN

PLAY     1-2   B    97 93 25    CONN. ASS. TO MAIN PROGR. (JIII)
               W    99 10 05C   WRAP CONNECTOR J10.1, 3*32 PIN
         1-2   WQ   99 10 31D   WRAP CONNECTOR J10.2, 3*32 PIN

PLAY  -M       W    99 03 10A   WRAP CONNECTOR J03.1, 3*32 PIN

PMNTM  1       W    99 03 13A   WRAP CONNECTOR J03.1, 3*32 PIN
               W    99 04 13B   WRAP CONNECTOR J04.1, 3*32 PIN
               W    99 06 13B   WRAP CONNECTOR J06.1, 3*32 PIN
               W  + 99 09 13E   WRAP CONNECTOR J09.2, 3*32 PIN
               W    99 15 02B   WRAP CONNECTOR J15.1, 3*32 PIN
               W  + 99 19 13C   WRAP CONNECTOR J19.1, 3*32 PIN

PMNTM  2       W    99 01 13C   WRAP CONNECTOR J01.1, 3*32 PIN
               W    99 02 17B   WRAP CONNECTOR J02.1, 3*32 PIN
               W    99 03 17A   WRAP CONNECTOR J03.1, 3*32 PIN
               W    99 06 17B   WRAP CONNECTOR J06.1, 3*32 PIN
               W    99 07 17B   WRAP CONNECTOR J07.1, 3*32 PIN
               W    99 08 25A   WRAP CONNECTOR J08.1, 3*32 PIN
               W    99 09 24C   WRAP CONNECTOR J09.1, 3*32 PIN
               W    99 10 11A   WRAP CONNECTOR J10.1, 3*32 PIN
               W    99 11 31C   WRAP CONNECTOR J11.1, 3*32 PIN
               W  + 99 13 25A   WRAP CONNECTOR J13.1, 3*32 PIN
               W    99 15 03B   WRAP CONNECTOR J15.1, 3*32 PIN
               W    99 17 17B   WRAP CONNECTOR J17.1, 3*32 PIN

PMNTM  3       W    99 03 18A   WRAP CONNECTOR J03.1, 3*32 PIN
               W    99 04 18B   WRAP CONNECTOR J04.1, 3*32 PIN
               W    99 06 18B   WRAP CONNECTOR J06.1, 3*32 PIN
               W  + 99 09 18E   WRAP CONNECTOR J09.2, 3*32 PIN
               W    99 15 04B   WRAP CONNECTOR J15.1, 3*32 PIN

PMNTM  4       W    99 01 11C   WRAP CONNECTOR J01.1, 3*32 PIN
               W    99 02 22C   WRAP CONNECTOR J02.1, 3*32 PIN
               W    99 03 21A   WRAP CONNECTOR J03.1, 3*32 PIN
               W    99 04 21B   WRAP CONNECTOR J04.1, 3*32 PIN
                                                          ./.

SIG.NAME COLOR TYPE GR EL PT  S DESCRIPTION OF ELEMENT
-------- ----- ---- -- -- --- - --------------------------------
(CONT.)        W    99 05 21B   WRAP CONNECTOR J05.1, 3*32 PIN
               W    99 07 21C   WRAP CONNECTOR J07.1, 3*32 PIN
               W  + 99 09 21E   WRAP CONNECTOR J09.2, 3*32 PIN
               W    99 14 21B   WRAP CONNECTOR J14.1, 3*32 PIN
               W    99 15 05B   WRAP CONNECTOR J15.1, 3*32 PIN
               W  + 99 19 17A   WRAP CONNECTOR J19.1, 3*32 PIN

PPBPRESS       W    99 06 03B   WRAP CONNECTOR J06.1, 3*32 PIN
               W    99 09 18B   WRAP CONNECTOR J09.1, 3*32 PIN

PPWRON         W    99 04 23B   WRAP CONNECTOR J04.1, 3*32 PIN
               W    99 05 05A   WRAP CONNECTOR J05.1, 3*32 PIN
               W    99 08 06A   WRAP CONNECTOR J08.1, 3*32 PIN
               W    99 09 23A   WRAP CONNECTOR J09.1, 3*32 PIN
               W    99 10 30C   WRAP CONNECTOR J10.1, 3*32 PIN
               W    99 11 24A   WRAP CONNECTOR J11.1, 3*32 PIN
               W    99 17 23B   WRAP CONNECTOR J17.1, 3*32 PIN
               W  + 99 20 23A   WRAP CONNECTOR J20.1, 3*32 PIN

PRGRON         W    99 06 11A   WRAP CONNECTOR J06.1, 3*32 PIN
               W  + 99 08 02E   WRAP CONNECTOR J08.2, 3*32 PIN

PRIFTRXY       W    99 06 09B   WRAP CONNECTOR J06.1, 3*32 PIN
               W    99 09 31C   WRAP CONNECTOR J09.1, 3*32 PIN

PROGSTOP       W    99 04 09B   WRAP CONNECTOR J04.1, 3*32 PIN

PSYNC -M       W    99 01 11A   WRAP CONNECTOR J01.1, 3*32 PIN
               W    99 13 31A   WRAP CONNECTOR J13.1, 3*32 PIN

PSYNC -S       W    99 01 03C   WRAP CONNECTOR J01.1, 3*32 PIN
               W    99 03 07C   WRAP CONNECTOR J03.1, 3*32 PIN
               W    99 05 07C   WRAP CONNECTOR J05.1, 3*32 PIN
               W    99 13 29C   WRAP CONNECTOR J13.1, 3*32 PIN

P1DM  -M       W    99 13 08A   WRAP CONNECTOR J13.1, 3*32 PIN

P1DM  -S       W    99 02 21C   WRAP CONNECTOR J02.1, 3*32 PIN
               W    99 13 21C   WRAP CONNECTOR J13.1, 3*32 PIN

P2DM  -M       W    99 01 25B   WRAP CONNECTOR J01.1, 3*32 PIN
               W    99 13 09A   WRAP CONNECTOR J13.1, 3*32 PIN

P2DM  -S       W    99 03 02C   WRAP CONNECTOR J03.1, 3*32 PIN
               W    99 05 03C   WRAP CONNECTOR J05.1, 3*32 PIN
               W  + 99 13 11C   WRAP CONNECTOR J13.1, 3*32 PIN
               W    99 13 22C   WRAP CONNECTOR J13.1, 3*32 PIN

P3DM  -M       W    99 01 24B   WRAP CONNECTOR J01.1, 3*32 PIN
               W    99 13 10A   WRAP CONNECTOR J13.1, 3*32 PIN

P3DM  -S       W    99 02 03C   WRAP CONNECTOR J02.1, 3*32 PIN
               W    99 03 03C   WRAP CONNECTOR J03.1, 3*32 PIN
               W    99 05 04C   WRAP CONNECTOR J05.1, 3*32 PIN
               W    99 13 23C   WRAP CONNECTOR J13.1, 3*32 PIN
```

```
*****************************************************************************************************************************
*  S T U D E R  *  S I G N A L  W I R E  L I S T          *  82/01/08 * 15:12     *  P A G E   46  *
*****************************************************************************************************************************
TAPE LOCK SYSTEM 2000 A80: MASTER CTRL, PARALLEL PROGRAMMER  1.228.375.00          79-10-30

SIG.NAME COLOR TYPE GR EL PT  S DESCRIPTION OF ELEMENT
-------- ----- ---- -- -- --- - --------------------------------
P4DM  -M       W    99 03 04A   WRAP CONNECTOR J03.1, 3*32 PIN
               W    99 13 11A   WRAP CONNECTOR J13.1, 3*32 PIN

P4DM  -S       W    99 03 04C   WRAP CONNECTOR J03.1, 3*32 PIN
               W    99 13 24C   WRAP CONNECTOR J13.1, 3*32 PIN

P-CUT- 1 3     A    97 51 22    EXTENDED REMOTE MODE CONTROL
         3     WQ   99 06 29E   WRAP CONNECTOR J06.2, 3*32 PIN

P-CUT- 3 2     A    97 51 23    EXTENDED REMOTE MODE CONTROL
         2     WQ   99 06 30E   WRAP CONNECTOR J06.2, 3*32 PIN

P-SPLY-0 2     B    97 41 16    CAPSTAN SPEED CONTROL
         2     WQ   99 06 08E   WRAP CONNECTOR J06.2, 3*32 PIN

P-SPLY-1 1     B    97 41 17    CAPSTAN SPEED CONTROL
         1     WQ   99 06 09E   WRAP CONNECTOR J06.2, 3*32 PIN

PMMUX          W    99 03 09A   WRAP CONNECTOR J03.1, 3*32 PIN
               W    99 06 30B   WRAP CONNECTOR J06.1, 3*32 PIN

PEC      7     B    97 93 11    CONN. ASS. TO MAIN PROGR. (JIII)
               W    99 10 04C   WRAP CONNECTOR J10.1, 3*32 PIN
         7     WQ   99 10 11D   WRAP CONNECTOR J10.2, 3*32 PIN

PECCODTM 3     L    98 15 03A   MASTER INPUT/REPRO OUTPUT
         3     WQ + 99 11 03A   WRAP CONNECTOR J11.1, 3*32 PIN

PECCOD1  2     L    98 15 02A   MASTER INPUT/REPRO OUTPUT
         2     WQ   99 11 02A   WRAP CONNECTOR J11.1, 3*32 PIN

PECCOD2  4     L    98 15 04A   MASTER INPUT/REPRO OUTPUT
         4     WQ   99 11 04A   WRAP CONNECTOR J11.1, 3*32 PIN

PECHDSCR 4     A    98 03 06    HEADPLUG/CHANNEL SUPPLY
         4     WQ   99 11 18B   WRAP CONNECTOR J11.1, 3*32 PIN
               W    99 11 23A   WRAP CONNECTOR J11.1, 3*32 PIN
               W    99 11 23B   WRAP CONNECTOR J11.1, 3*32 PIN
               W    99 11 23C   WRAP CONNECTOR J11.1, 3*32 PIN
               W    99 12 23A   WRAP CONNECTOR J12.1, 3*32 PIN
               W    99 12 23B   WRAP CONNECTOR J12.1, 3*32 PIN
               W    99 12 23C   WRAP CONNECTOR J12.1, 3*32 PIN

PECHD1   6     A    98 03 08    HEADPLUG/CHANNEL SUPPLY
         6     WQ   99 11 18A   WRAP CONNECTOR J11.1, 3*32 PIN

PECHD2   9     A    98 03 07    HEADPLUG/CHANNEL SUPPLY
         9     WQ   99 11 18C   WRAP CONNECTOR J11.1, 3*32 PIN

PECINPA  2     L    98 14 02    MASTER INPUT/REPRO OUTPUT
         2     L    98 15 02    MASTER INPUT/REPRO OUTPUT

PECINPB  3     L    98 14 03    MASTER INPUT/REPRO OUTPUT
         3     L    98 15 03    MASTER INPUT/REPRO OUTPUT

PECINSCR 0     L    98 13 01    MASTER INPUT/REPRO OUTPUT
                                                          ./.

SIG.NAME COLOR TYPE GR EL PT  S DESCRIPTION OF ELEMENT
-------- ----- ---- -- -- --- - --------------------------------
(CONT.)  0     L    98 14 01    MASTER INPUT/REPRO OUTPUT

PECLATEN       W  + 99 02 26A   WRAP CONNECTOR J02.1, 3*32 PIN
               W    99 06 04A   WRAP CONNECTOR J06.1, 3*32 PIN
               W  + 99 08 06B   WRAP CONNECTOR J08.1, 3*32 PIN
               W    99 11 27A   WRAP CONNECTOR J11.1, 3*32 PIN

PECSTINH 7     A    97 61 23    REMOTE MODE CONTROL
               W  + 99 06 21E   WRAP CONNECTOR J06.2, 3*32 PIN
         7     WQ   99 07 21E   WRAP CONNECTOR J07.2, 3*32 PIN
               W    99 08 17C   WRAP CONNECTOR J08.1, 3*32 PIN

PECINSEL       W    99 11 30C   WRAP CONNECTOR J11.1, 3*32 PIN
               W    99 12 06C   WRAP CONNECTOR J12.1, 3*32 PIN

PECRECMX       W  + 99 02 08B   WRAP CONNECTOR J02.1, 3*32 PIN
               W    99 06 05B   WRAP CONNECTOR J06.1, 3*32 PIN
               W  + 99 08 05B   WRAP CONNECTOR J08.1, 3*32 PIN
               W    99 11 26A   WRAP CONNECTOR J11.1, 3*32 PIN

PECPROSCR 4    A    98 03 14    HEADPLUG/CHANNEL SUPPLY
               W    99 12 28A   WRAP CONNECTOR J12.1, 3*32 PIN
               W    99 12 28B   WRAP CONNECTOR J12.1, 3*32 PIN
         4     WQ   99 12 28C   WRAP CONNECTOR J12.1, 3*32 PIN

PECPROSEL      W    99 07 27C   WRAP CONNECTOR J07.1, 3*32 PIN
               W  + 99 08 11A   WRAP CONNECTOR J08.1, 3*32 PIN
               W  + 99 11 27C   WRAP CONNECTOR J11.1, 3*32 PIN
               W    99 12 29A   WRAP CONNECTOR J12.1, 3*32 PIN

PECPRO0.0 U    A    98 03 15    HEADPLUG/CHANNEL SUPPLY
          U    WQ   99 12 27C   WRAP CONNECTOR J12.1, 3*32 PIN

PECPRO1  2     A    98 03 17    HEADPLUG/CHANNEL SUPPLY
         2     WQ   99 12 25C   WRAP CONNECTOR J12.1, 3*32 PIN

PECPRO2  6     A    98 03 16    HEADPLUG/CHANNEL SUPPLY
         6     WQ   99 12 26C   WRAP CONNECTOR J12.1, 3*32 PIN

PECSDRIV1      W    98 61 08    CODE CHANNEL REMOTE A80

PECLINE -A     W    99 03 25B   WRAP CONNECTOR J03.1, 3*32 PIN
               W    99 05 23C   WRAP CONNECTOR J05.1, 3*32 PIN

PECLINE -B     W    99 03 24B   WRAP CONNECTOR J03.1, 3*32 PIN
               W    99 05 24C   WRAP CONNECTOR J05.1, 3*32 PIN

PECR15 1322    W    99 13 02C   WRAP CONNECTOR J13.1, 3*32 PIN

PECS-CAPEXT 8  B    97 41 23    CAPSTAN SPEED CONTROL
            8  WQ   99 06 07F   WRAP CONNECTOR J06.2, 3*32 PIN
               W  + 99 06 18E   WRAP CONNECTOR J06.2, 3*32 PIN
               W    99 08 03B   WRAP CONNECTOR J08.1, 3*32 PIN

PECS-CUT 2     A    97 61 41    REMOTE MODE CONTROL
         2     WQ   99 07 23F   WRAP CONNECTOR J07.2, 3*32 PIN
                                                          ./.
```

SIG.NAME	COLOR	TYPE	GR	EL	PT	S	DESCRIPTION OF ELEMENT
CONT.)		W	99	08	24B		WRAP CONNECTOR J08.1, 3*32 PIN
-CUTAUT	4	A	97	51	21		EXTENDED REMOTE MODE CONTROL
	4	WQ	99	06	28E		WRAP CONNECTOR J06.2, 3*32 PIN
-FORW	2	A	97	61	37		REMOTE MODE CONTROL
	2	WQ	99	07	17F		WRAP CONNECTOR J07.2, 3*32 PIN
		W	99	08	21C		WRAP CONNECTOR J08.1, 3*32 PIN
-HIGH		W	99	08	06C		WRAP CONNECTOR J08.1, 3*32 PIN
-LOW	1	A	97	61	20		REMOTE MODE CONTROL
		W +	99	06	17E		WRAP CONNECTOR J06.2, 3*32 PIN
	1	WQ	99	07	13E		WRAP CONNECTOR J07.2, 3*32 PIN
		W	99	08	25C		WRAP CONNECTOR J08.1, 3*32 PIN
-LOWACH	9	A	98	03	43		HEADPLUG/CHANNEL SUPPLY
	9	WQ +	99	11	05B		WRAP CONNECTOR J11.1, 3*32 PIN
-MONO	3	A	97	61	42		REMOTE MODE CONTROL
	3	WQ	99	07	24F		WRAP CONNECTOR J07.2, 3*32 PIN
-REC	1	A	97	61	40		REMOTE MODE CONTROL
	1	WQ	99	07	22F		WRAP CONNECTOR J07.2, 3*32 PIN
		W	99	08	23B		WRAP CONNECTOR J08.1, 3*32 PIN
-REPR	3	A	97	61	38		REMOTE MODE CONTROL
	3	WQ	99	07	18F		WRAP CONNECTOR J07.2, 3*32 PIN
		W	99	08	22A		WRAP CONNECTOR J08.1, 3*32 PIN
-RES2	1	A	97	51	24		EXTENDED REMOTE MODE CONTROL
	1	WQ	99	06	31E		WRAP CONNECTOR J06.2, 3*32 PIN
-REW	4	A	97	61	36		REMOTE MODE CONTROL
	4	WQ	99	07	13F		WRAP CONNECTOR J07.2, 3*32 PIN
		W	99	08	18C		WRAP CONNECTOR J08.1, 3*32 PIN
-STOP	8	A	97	61	39		REMOTE MODE CONTROL
	8	WQ	99	07	21F		WRAP CONNECTOR J07.2, 3*32 PIN
		W	99	08	23A		WRAP CONNECTOR J08.1, 3*32 PIN
L NOTP	4-0	B	97	91	37		CONN. ASS. TO MAIN PROGR. (J I)
	4-0	WQ	99	08	17F		WRAP CONNECTOR J08.2, 3*32 PIN
		W	99	10	24A		WRAP CONNECTOR J10.1, 3*32 PIN
LAV	8-1	B	97	92	19		CONN. ASS. TO MAIN PROGR. (J II)
	8-1	WQ	99	09	25D		WRAP CONNECTOR J09.2, 3*32 PIN
		W	99	10	21B		WRAP CONNECTOR J10.1, 3*32 PIN
LDECOFF	4-2	B	97	91	35		CONN. ASS. TO MAIN PROGR. (J I)
	4-2	WQ	99	08	11F		WRAP CONNECTOR J08.2, 3*32 PIN
NCPLTDR	4	B	97	71	32		AUXILIARY CONNECTOR
	4	WQ	99	07	03E		WRAP CONNECTOR J07.2, 3*32 PIN
		W	99	17	18A		WRAP CONNECTOR J17.1, 3*32 PIN
SPD-CTL1	1	B	97	41	24		CAPSTAN SPEED CONTROL
	1	WQ	99	06	08F		WRAP CONNECTOR J06.2, 3*32 PIN
		W +	99	06	18D		WRAP CONNECTOR J06.2, 3*32 PIN
		W	99	08	04A		WRAP CONNECTOR J08.1, 3*32 PIN
SPD-CTL2	2	B	97	41	25		CAPSTAN SPEED CONTROL
	2	WQ	99	06	09F		WRAP CONNECTOR J06.2, 3*32 PIN
SPOOLMOD		W	99	02	05A		WRAP CONNECTOR J02.1, 3*32 PIN
		W	99	07	28C		WRAP CONNECTOR J07.1, 3*32 PIN
START-1A	1	B	97	71	21		AUXILIARY CONNECTOR
	1	L	97	72	01A		RELAIS PRINT
START-1B	1	B	97	71	22		AUXILIARY CONNECTOR
	1	L	97	72	01B		RELAIS PRINT
START-2A	6	B	97	71	23		AUXILIARY CONNECTOR
	6	L	97	72	02A		RELAIS PRINT
START-2B	6	B	97	71	24		AUXILIARY CONNECTOR
	6	L	97	72	02B		RELAIS PRINT
START-3A	9	B	97	71	25		AUXILIARY CONNECTOR
	9	L	97	72	03A		RELAIS PRINT
START-3B	9	B	97	71	26		AUXILIARY CONNECTOR
	9	L	97	72	03B		RELAIS PRINT
START-4A	4	B	97	71	27		AUXILIARY CONNECTOR
	4	L	97	72	04A		RELAIS PRINT
START-4B	4	B	97	71	28		AUXILIARY CONNECTOR
	4	L	97	72	04B		RELAIS PRINT
STARTDR1	1	L	97	72	01C		RELAIS PRINT
	1	WQ	99	07	06E		WRAP CONNECTOR J07.2, 3*32 PIN
		W	99	17	29C		WRAP CONNECTOR J17.1, 3*32 PIN
STARTDR2	6	L	97	72	02C		RELAIS PRINT
	6	WQ	99	07	07E		WRAP CONNECTOR J07.2, 3*32 PIN
		W	99	17	24A		WRAP CONNECTOR J17.1, 3*32 PIN
STARTDR3	9	L	97	72	03C		RELAIS PRINT
	9	WQ	99	07	08E		WRAP CONNECTOR J07.2, 3*32 PIN
		W	99	08	07B		WRAP CONNECTOR J08.1, 3*32 PIN
STARTDR4	4	L	97	72	04C		RELAIS PRINT
	4	WQ	99	07	09E		WRAP CONNECTOR J07.2, 3*32 PIN
		W	99	08	07C		WRAP CONNECTOR J08.1, 3*32 PIN
STOP	8-2	B	97	93	40		CONN. ASS. TO MAIN PROGR. (JIII)
		W	99	10	04B		WRAP CONNECTOR J10.1, 3*32 PIN
	8-2	WQ	99	10	22F		WRAP CONNECTOR J10.2, 3*32 PIN
STOREOFS	4-8	B	97	92	29		CONN. ASS. TO MAIN PROGR. (J II)

./.

SIG.NAME	COLOR	TYPE	GR	EL	PT	S	DESCRIPTION OF ELEMENT
CONT.)	4-8	WQ	99	09	05F		WRAP CONNECTOR J09.2, 3*32 PIN
		W	99	10	25B		WRAP CONNECTOR J10.1, 3*32 PIN
VPCI	9-6	B	97	91	22		CONN. ASS. TO MAIN PROGR. (J I)
	9-6	WQ	99	08	28D		WRAP CONNECTOR J08.2, 3*32 PIN
		W	99	17	05B		WRAP CONNECTOR J17.1, 3*32 PIN
VPCII	0-R	B	97	92	43		CONN. ASS. TO MAIN PROGR. (J II)
	0-R	WQ	99	09	25F		WRAP CONNECTOR J09.2, 3*32 PIN
		W	99	17	06B		WRAP CONNECTOR J17.1, 3*32 PIN
VPCIII	8	B	97	93	06		CONN. ASS. TO MAIN PROGR. (JIII)
	8	WQ	99	10	06D		WRAP CONNECTOR J10.2, 3*32 PIN
		W	99	17	11C		WRAP CONNECTOR J17.1, 3*32 PIN
VSERPRG		W +	99	08	30E		WRAP CONNECTOR J08.2, 3*32 PIN
		W	99	17	24B		WRAP CONNECTOR J17.1, 3*32 PIN
YMCODO1	2	L	98	12	02		MASTER INPUT/REPRO OUTPUT
	2	WQ	99	12	03C		WRAP CONNECTOR J12.1, 3*32 PIN
YMCODO2	3	L	98	12	03		MASTER INPUT/REPRO OUTPUT
	3	WQ	99	12	04C		WRAP CONNECTOR J12.1, 3*32 PIN
YMCODSC	0	L	98	11	01		MASTER INPUT/REPRO OUTPUT
	0	L	98	12	01		MASTER INPUT/REPRO OUTPUT
YNC A	4-5-0	B	97	93	47		CONN. ASS. TO MAIN PROGR. (JIII)
		W	99	10	02A		WRAP CONNECTOR J10.1, 3*32 PIN
	4-5-0	WQ	99	10	29F		WRAP CONNECTOR J10.2, 3*32 PIN
YNC B	0-R	B	97	93	43		CONN. ASS. TO MAIN PROGR. (JIII)
	0-R	WQ	99	10	25F		WRAP CONNECTOR J10.2, 3*32 PIN
		W	99	10	28B		WRAP CONNECTOR J10.1, 3*32 PIN
YNC PLT	9-4	B	97	93	16		CONN. ASS. TO MAIN PROGR. (JIII)
	9-4	WQ	99	10	22D		WRAP CONNECTOR J10.2, 3*32 PIN
		W	99	10	28A		WRAP CONNECTOR J10.1, 3*32 PIN
YNCBDR	3	B	97	71	33		AUXILIARY CONNECTOR
	3	WQ	99	07	02E		WRAP CONNECTOR J07.2, 3*32 PIN
		W	99	17	25A		WRAP CONNECTOR J17.1, 3*32 PIN
YNCBOUT		W	99	01	02A		WRAP CONNECTOR J01.1, 3*32 PIN
		W	99	02	02B		WRAP CONNECTOR J02.1, 3*32 PIN
YNCH1		W	99	11	21C		WRAP CONNECTOR J11.1, 3*32 PIN
		W	99	12	21C		WRAP CONNECTOR J12.1, 3*32 PIN
YNCH2		W	99	11	22C		WRAP CONNECTOR J11.1, 3*32 PIN
		W	99	12	22C		WRAP CONNECTOR J12.1, 3*32 PIN
YNCSEL		W	99	07	29C		WRAP CONNECTOR J07.1, 3*32 PIN
		W +	99	08	30B		WRAP CONNECTOR J08.1, 3*32 PIN
		W +	99	11	24C		WRAP CONNECTOR J11.1, 3*32 PIN
		W	99	12	30C		WRAP CONNECTOR J12.1, 3*32 PIN
TDATAM/S		W	99	03	23C		WRAP CONNECTOR J03.1, 3*32 PIN
		W	99	14	23B		WRAP CONNECTOR J14.1, 3*32 PIN
TDCDMUX1		W	99	06	27B		WRAP CONNECTOR J06.1, 3*32 PIN
		W	99	08	27A		WRAP CONNECTOR J08.1, 3*32 PIN
TDCDMUX2		W	99	06	26C		WRAP CONNECTOR J06.1, 3*32 PIN
		W	99	08	26A		WRAP CONNECTOR J08.1, 3*32 PIN
TDLATEN1		W	99	06	11B		WRAP CONNECTOR J06.1, 3*32 PIN
		W	99	08	11B		WRAP CONNECTOR J08.1, 3*32 PIN
TDLATEN2		W	99	06	22B		WRAP CONNECTOR J06.1, 3*32 PIN
		W	99	08	13B		WRAP CONNECTOR J08.1, 3*32 PIN
TESTFLGS		W	99	04	13C		WRAP CONNECTOR J04.1, 3*32 PIN
		W	99	07	13C		WRAP CONNECTOR J07.1, 3*32 PIN
TESTRAM		W	99	06	02C		WRAP CONNECTOR J06.1, 3*32 PIN
		W	99	07	02C		WRAP CONNECTOR J07.1, 3*32 PIN
TIMLDEN		W	99	06	07C		WRAP CONNECTOR J06.1, 3*32 PIN
		W	99	07	03C		WRAP CONNECTOR J07.1, 3*32 PIN
TRMADR0		W	99	07	02A		WRAP CONNECTOR J07.1, 3*32 PIN
		W	99	09	02A		WRAP CONNECTOR J09.1, 3*32 PIN
		W	99	10	29A		WRAP CONNECTOR J10.1, 3*32 PIN
		W	99	17	11B		WRAP CONNECTOR J17.1, 3*32 PIN
TRMADR1		W	99	07	03A		WRAP CONNECTOR J07.1, 3*32 PIN
		W	99	09	03A		WRAP CONNECTOR J09.1, 3*32 PIN
		W	99	10	29B		WRAP CONNECTOR J10.1, 3*32 PIN
		W	99	17	10B		WRAP CONNECTOR J17.1, 3*32 PIN
TRMADR2		W	99	07	04A		WRAP CONNECTOR J07.1, 3*32 PIN
		W	99	09	04A		WRAP CONNECTOR J09.1, 3*32 PIN
		W	99	10	29C		WRAP CONNECTOR J10.1, 3*32 PIN
		W	99	17	09B		WRAP CONNECTOR J17.1, 3*32 PIN
TRMADR3		W	99	07	05A		WRAP CONNECTOR J07.1, 3*32 PIN
		W	99	09	05A		WRAP CONNECTOR J09.1, 3*32 PIN
		W	99	10	31A		WRAP CONNECTOR J10.1, 3*32 PIN
		W	99	17	08B		WRAP CONNECTOR J17.1, 3*32 PIN
TRMADR4		W	99	07	06A		WRAP CONNECTOR J07.1, 3*32 PIN
		W	99	09	06A		WRAP CONNECTOR J09.1, 3*32 PIN
		W	99	10	31B		WRAP CONNECTOR J10.1, 3*32 PIN
		W	99	17	22B		WRAP CONNECTOR J17.1, 3*32 PIN
TRMADR5		W	99	07	07A		WRAP CONNECTOR J07.1, 3*32 PIN
		W	99	09	07A		WRAP CONNECTOR J09.1, 3*32 PIN
		W	99	10	31C		WRAP CONNECTOR J10.1, 3*32 PIN
TRMADR6		W	99	07	08A		WRAP CONNECTOR J07.1, 3*32 PIN
		W	99	09	08A		WRAP CONNECTOR J09.1, 3*32 PIN
		W	99	10	30A		WRAP CONNECTOR J10.1, 3*32 PIN

```
*****************************************************************************************************************
*  S T U D E R  *   S I G N A L   W I R E   L I S T          *   82/01/08 * 15:12     *  P A G E    49   *
*****************************************************************************************************************
TAPE LOCK SYSTEM 2000 A80: MASTER CTRL, PARALLEL PROGRAMMER   1.228.375.00          79-10-30

SIG.NAME COLOR TYPE GR EL PT  S DESCRIPTION OF ELEMENT
-------- ----- ---- -- -- --- - ------------------------------
T1-ACT   1     A    97 51 35   EXTENDED REMOTE MODE CONTROL
         1     WQ   99 06 30F  WRAP CONNECTOR J06.2, 3*32 PIN
               W    99 08 10B  WRAP CONNECTOR J08.1, 3*32 PIN

T2-ACT   2     A    97 51 36   EXTENDED REMOTE MODE CONTROL
         2     WQ   99 06 31F  WRAP CONNECTOR J06.2, 3*32 PIN
               W    99 08 10C  WRAP CONNECTOR J08.1, 3*32 PIN

X        1-5   B    97 93 15   CONN. ASS. TO MAIN PROGR. (JIII)
         1-5   WQ   99 10 21D  WRAP CONNECTOR J10.2, 3*32 PIN
               W    99 10 25A  WRAP CONNECTOR J10.1, 3*32 PIN

JNAS B   9-R   B    97 92 20   CONN. ASS. TO MAIN PROGR. (J II)
         9-R   WQ   99 09 26D  WRAP CONNECTOR J09.2, 3*32 PIN
               W    99 10 18A  WRAP CONNECTOR J10.1, 3*32 PIN

JPLIM EX 9-1-0 B    97 91 46   CONN. ASS. TO MAIN PROGR. (J  I)
         9-1-0 WQ   99 08 28F  WRAP CONNECTOR J08.2, 3*32 PIN
               W    99 10 09A  WRAP CONNECTOR J10.1, 3*32 PIN

JSER B   4     B    97 93 05   CONN. ASS. TO MAIN PROGR. (JIII)
         4     WQ   99 10 05D  WRAP CONNECTOR J10.2, 3*32 PIN
               W    99 10 18B  WRAP CONNECTOR J10.1, 3*32 PIN

MEACFLG        W    99 04 08B  WRAP CONNECTOR J04.1, 3*32 PIN
               W    99 07 08C  WRAP CONNECTOR J07.1, 3*32 PIN

MEPCFLG        W    99 06 06A  WRAP CONNECTOR J06.1, 3*32 PIN
               W    99 07 06B  WRAP CONNECTOR J07.1, 3*32 PIN

MIRE001        W    99 19 30A  UNUSED WIRE
               W    99 19 30B  UNUSED WIRE
               W    99 19 30C  UNUSED WIRE
               W    99 20 16D  UNUSED WIRE
               W    99 20 16F  UNUSED WIRE
               W    99 20 29D  UNUSED WIRE

MLINE -M       W    99 03 22A  WRAP CONNECTOR J03.1, 3*32 PIN
               W    99 05 22C  WRAP CONNECTOR J05.1, 3*32 PIN

MLINE -S       W    99 03 22C  WRAP CONNECTOR J03.1, 3*32 PIN
               W    99 05 21C  WRAP CONNECTOR J05.1, 3*32 PIN

MMPRESO1 8-R-0 B    97 91 49   CONN. ASS. TO MAIN PROGR. (J  I)
         8-R-0 WQ   99 08 30F  WRAP CONNECTOR J08.2, 3*32 PIN

MMPRESO2 6-2-0 B    97 91 50   CONN. ASS. TO MAIN PROGR. (J  I)
         6-2-0 WQ   99 08 31F  WRAP CONNECTOR J08.2, 3*32 PIN

MMPRESO3 9     B    97 92 01   CONN. ASS. TO MAIN PROGR. (J II)
         9     WQ   99 09 02D  WRAP CONNECTOR J09.2, 3*32 PIN

MMPRESO4 1-0   B    97 92 27   CONN. ASS. TO MAIN PROGR. (J II)
         1-0   WQ   99 09 03F  WRAP CONNECTOR J09.2, 3*32 PIN

X1BPS    4     B    98 61 14   CODE CHANNEL REMOTE A80
                                                    ./.

SIG.NAME COLOR TYPE GR EL PT  S DESCRIPTION OF ELEMENT
-------- ----- ---- -- -- --- - ------------------------------
(CONT.)        W    99 17 22C  WRAP CONNECTOR J17.1, 3*32 PIN
               W  + 99 20 22D  WRAP CONNECTOR J20.2, 3*32 PIN
         4     WQ   99 20 22F  WRAP CONNECTOR J20.2, 3*32 PIN

X2BPS    3     B    98 61 13   CODE CHANNEL REMOTE A80
               W    99 17 23C  WRAP CONNECTOR J17.1, 3*32 PIN
               W  + 99 20 23D  WRAP CONNECTOR J20.2, 3*32 PIN
         3     WQ   99 20 23F  WRAP CONNECTOR J20.2, 3*32 PIN

X3BPS    2     B    98 61 10   CODE CHANNEL REMOTE A80
               W    99 17 21C  WRAP CONNECTOR J17.1, 3*32 PIN
               W  + 99 20 21D  WRAP CONNECTOR J20.2, 3*32 PIN
         2     WQ   99 20 21F  WRAP CONNECTOR J20.2, 3*32 PIN

X4BPS    2     B    98 61 36   CODE CHANNEL REMOTE A80
               W    99 17 18C  WRAP CONNECTOR J17.1, 3*32 PIN
               W  + 99 20 18D  WRAP CONNECTOR J20.2, 3*32 PIN
         2     WQ   99 20 18F  WRAP CONNECTOR J20.2, 3*32 PIN

X5BPS    3     B    98 61 37   CODE CHANNEL REMOTE A80
               W    99 17 13C  WRAP CONNECTOR J17.1, 3*32 PIN
               W  + 99 20 13D  WRAP CONNECTOR J20.2, 3*32 PIN
         3     WQ   99 20 13F  WRAP CONNECTOR J20.2, 3*32 PIN

Y-CLK    1     A    97 61 46   REMOTE MODE CONTROL
               W  + 99 06 26D  WRAP CONNECTOR J06.2, 3*32 PIN
         1     WQ   99 07 28F  WRAP CONNECTOR J07.2, 3*32 PIN
               W    99 08 05C  WRAP CONNECTOR J08.1, 3*32 PIN

Y-FORW   1     A    97 61 14   REMOTE MODE CONTROL
               W  + 99 06 26F  WRAP CONNECTOR J06.2, 3*32 PIN
         1     WQ   99 07 28D  WRAP CONNECTOR J07.2, 3*32 PIN
               W    99 08 04C  WRAP CONNECTOR J08.1, 3*32 PIN

Y-ICLK   2     A    97 61 47   REMOTE MODE CONTROL
         2     WQ   99 07 29F  WRAP CONNECTOR J07.2, 3*32 PIN

Y-KRESET       W    99 08 05A  WRAP CONNECTOR J08.1, 3*32 PIN

Y-LOW    3     A    97 61 21   REMOTE MODE CONTROL
         3     WQ   99 07 17E  WRAP CONNECTOR J07.2, 3*32 PIN

Y-MOD1   8     A    97 51 04   EXTENDED REMOTE MODE CONTROL
         8     WQ   99 06 23D  WRAP CONNECTOR J06.2, 3*32 PIN

Y-MOD2   1     A    97 51 05   EXTENDED REMOTE MODE CONTROL
         1     WQ   99 06 24D  WRAP CONNECTOR J06.2, 3*32 PIN

Y-MONO   3     A    97 61 25   REMOTE MODE CONTROL
         3     WQ   99 07 23E  WRAP CONNECTOR J07.2, 3*32 PIN

Y-MOVE-D 8     A    97 61 28   REMOTE MODE CONTROL
               W  + 99 06 22F  WRAP CONNECTOR J06.2, 3*32 PIN
         8     WQ   99 07 26E  WRAP CONNECTOR J07.2, 3*32 PIN
               W    99 08 28C  WRAP CONNECTOR J08.1, 3*32 PIN
```

```
*****************************************************************************************************************
*  S T U D E R  *   S I G N A L   W I R E   L I S T          *   82/01/08 * 15:12     *  P A G E    50   *
*****************************************************************************************************************
TAPE LOCK SYSTEM 2000 A80: MASTER CTRL, PARALLEL PROGRAMMER   1.228.375.00          79-10-30

SIG.NAME COLOR TYPE GR EL PT  S DESCRIPTION OF ELEMENT
-------- ----- ---- -- -- --- - ------------------------------
Y-MOVE-1 1     A    97 61 27   REMOTE MODE CONTROL
         1     WQ   99 07 25E  WRAP CONNECTOR J07.2, 3*32 PIN

Y-MUTE   4     A    97 61 24   REMOTE MODE CONTROL
               W  + 99 06 22E  WRAP CONNECTOR J06.2, 3*32 PIN
         4     WQ   99 07 22E  WRAP CONNECTOR J07.2, 3*32 PIN
               W    99 08 31A  WRAP CONNECTOR J08.1, 3*32 PIN

Y-MUTEMD 5     A    98 03 44   HEADPLUG/CHANNEL SUPPLY
         5     WQ + 99 11 05C  WRAP CONNECTOR J11.1, 3*32 PIN

Y-OUT  1 3     B    97 41 04   CAPSTAN SPEED CONTROL
         3     WQ   99 06 04D  WRAP CONNECTOR J06.2, 3*32 PIN

Y-REC-M  5     B    97 71 05   AUXILIARY CONNECTOR
         5     L    97 72 05A  RELAIS PRINT

Y-RECMD  2     A    98 03 42   HEADPLUG/CHANNEL SUPPLY
               W    99 08 13C  WRAP CONNECTOR J08.1, 3*32 PIN
         2     WQ + 99 11 05A  WRAP CONNECTOR J11.1, 3*32 PIN
               W  + 99 18 02C  WRAP CONNECTOR J18.1, 3*32 PIN

Y-RES3   2     A    97 51 06   EXTENDED REMOTE MODE CONTROL
         2     WQ   99 06 25D  WRAP CONNECTOR J06.2, 3*32 PIN

Y-REVRS  8     A    97 61 13   REMOTE MODE CONTROL
         8     WQ   99 07 27D  WRAP CONNECTOR J07.2, 3*32 PIN

Y-RFLX   7     A    97 51 33   EXTENDED REMOTE MODE CONTROL
         7     WQ   99 06 28F  WRAP CONNECTOR J06.2, 3*32 PIN

Y-STOP   3     A    97 51 16   EXTENDED REMOTE MODE CONTROL
         3     WQ   99 06 23E  WRAP CONNECTOR J06.2, 3*32 PIN

Y-SYNC 1 1     B    97 41 11   CAPSTAN SPEED CONTROL
         1     WQ   99 06 03E  WRAP CONNECTOR J06.2, 3*32 PIN

Y-SYNC 2 8     B    97 41 12   CAPSTAN SPEED CONTROL
         8     WQ   99 06 04E  WRAP CONNECTOR J06.2, 3*32 PIN

Y-TACH-D 4     B    97 41 05   CAPSTAN SPEED CONTROL
         4     WQ   99 06 05D  WRAP CONNECTOR J06.2, 3*32 PIN
               W  + 99 06 17D  WRAP CONNECTOR J06.2, 3*32 PIN
               W  + 99 08 02B  WRAP CONNECTOR J08.1, 3*32 PIN

Y-TRSP   8     A    97 51 34   EXTENDED REMOTE MODE CONTROL
         8     WQ   99 06 29F  WRAP CONNECTOR J06.2, 3*32 PIN
               W    99 08 11C  WRAP CONNECTOR J08.1, 3*32 PIN

YAC-BIAS 1     A    98 03 39   HEADPLUG/CHANNEL SUPPLY
         1     WQ   99 11 06A  WRAP CONNECTOR J11.1, 3*32 PIN

YAC-ERAS 9     A    98 03 40   HEADPLUG/CHANNEL SUPPLY
         9     WQ   99 11 07C  WRAP CONNECTOR J11.1, 3*32 PIN

YMOVETLS       W    99 02 17C  WRAP CONNECTOR J02.1, 3*32 PIN
                                                    ./.

SIG.NAME COLOR TYPE GR EL PT  S DESCRIPTION OF ELEMENT
-------- ----- ---- -- -- --- - ------------------------------
(CONT.)        W    99 08 17A  WRAP CONNECTOR J08.1, 3*32 PIN

YPS-MOVE 7     A    97 61 29   REMOTE MODE CONTROL
               W  + 99 06 24E  WRAP CONNECTOR J06.2, 3*32 PIN
         7     WQ   99 07 27E  WRAP CONNECTOR J07.2, 3*32 PIN
               W    99 08 27B  WRAP CONNECTOR J08.1, 3*32 PIN

Y1BPS    1     B    98 61 11   CODE CHANNEL REMOTE A80
               W    99 17 10C  WRAP CONNECTOR J17.1, 3*32 PIN
         1     WQ   99 20 10F  WRAP CONNECTOR J20.2, 3*32 PIN

Y2BPS    9     B    98 61 12   CODE CHANNEL REMOTE A80
               W    99 17 09C  WRAP CONNECTOR J17.1, 3*32 PIN
         9     WQ   99 20 09F  WRAP CONNECTOR J20.2, 3*32 PIN

Y3BPS    8     B    98 61 09   CODE CHANNEL REMOTE A80
               W    99 17 17C  WRAP CONNECTOR J17.1, 3*32 PIN
         8     WQ   99 20 17F  WRAP CONNECTOR J20.2, 3*32 PIN

0.0AD150 0     A    98 81 08   ADDITIONAL POWER CONNECTOR
         0     A    98 81 09   ADDITIONAL POWER CONNECTOR
         0     A    98 81 10   ADDITIONAL POWER CONNECTOR
         0     WQ   99 18 10A  WRAP CONNECTOR J18.1, 3*32 PIN
         0     WQ   99 18 10B  WRAP CONNECTOR J18.1, 3*32 PIN
         0     WQ   99 18 10C  WRAP CONNECTOR J18.1, 3*32 PIN

0.0INA80 0,0   L    96 01 01  % RECTIFIER ASSEMBLY
         0     L    96 01 04  % RECTIFIER ASSEMBLY
         0     WQ   99 19 10A % WIRING WITH: 0.0IN150
         0     WQ   99 19 10B % WIRING WITH: 0.0IN150
         0     WQ   99 19 10C % WIRING WITH: 0.0IN150

0.0IN150 0     A    98 91 11  % CONNECTOR ASS. TO POWER SUPPLY
         0     A    98 91 12  % CONNECTOR ASS. TO POWER SUPPLY
         0     A    98 91 13  % CONNECTOR ASS. TO POWER SUPPLY
         0     WQ   99 20 10A % WIRING WITH: 0.0INA80
         0     WQ   99 20 10B % WIRING WITH: 0.0INA80
         0     WQ   99 20 10C % WIRING WITH: 0.0INA80

0-AC1    6     L    96 01 06   RECTIFIER ASSEMBLY
         9     A    98 03 34   HEADPLUG/CHANNEL SUPPLY
         9     WQ + 99 11 09A  WRAP CONNECTOR J11.1, 3*32 PIN
         6     WQ + 99 11 11A  WRAP CONNECTOR J11.1, 3*32 PIN

0-AC2    8     L    96 01 08   RECTIFIER ASSEMBLY
         9     A    98 03 36   HEADPLUG/CHANNEL SUPPLY
         9     WQ + 99 11 09C  WRAP CONNECTOR J11.1, 3*32 PIN
         8     WQ + 99 11 11C  WRAP CONNECTOR J11.1, 3*32 PIN

0-BIAS   9     A    98 03 38   HEADPLUG/CHANNEL SUPPLY
         9     WQ   99 11 07A  WRAP CONNECTOR J11.1, 3*32 PIN

0-ERASE  8     A    98 03 41   HEADPLUG/CHANNEL SUPPLY
         2     A    98 03 45   HEADPLUG/CHANNEL SUPPLY
         2     WQ + 99 11 06B  WRAP CONNECTOR J11.1, 3*32 PIN
         8     WQ   99 11 06C  WRAP CONNECTOR J11.1, 3*32 PIN
```

SIG.NAME	COLOR	TYPE	GR	EL	PT	S	DESCRIPTION OF ELEMENT
100 HZ		W	99	03	07B		WRAP CONNECTOR J03.1, 3*32 PIN
		W	99	13	07B		WRAP CONNECTOR J13.1, 3*32 PIN
		W	99	14	11B		WRAP CONNECTOR J14.1, 3*32 PIN
102.4KHZ		W	99	03	23A		WRAP CONNECTOR J03.1, 3*32 PIN
12.5 HZ		W	99	03	04B		WRAP CONNECTOR J03.1, 3*32 PIN
		W	99	06	05A		WRAP CONNECTOR J06.1, 3*32 PIN
		W	99	09	13A		WRAP CONNECTOR J09.1, 3*32 PIN
12.8 KHZ		W	99	03	11B		WRAP CONNECTOR J03.1, 3*32 PIN
		W	99	07	17A		WRAP CONNECTOR J07.1, 3*32 PIN
13.1 MHZ		W	99	01	21C		WRAP CONNECTOR J01.1, 3*32 PIN
		W	99	02	21A		WRAP CONNECTOR J02.1, 3*32 PIN
		W	99	03	21B		WRAP CONNECTOR J03.1, 3*32 PIN
1638 KHZ		W	99	03	17B		WRAP CONNECTOR J03.1, 3*32 PIN
200 HZ		W	99	03	02B		WRAP CONNECTOR J03.1, 3*32 PIN
204.8KHZ		W	99	03	13B		WRAP CONNECTOR J03.1, 3*32 PIN
25 HZ		W	99	03	05B		WRAP CONNECTOR J03.1, 3*32 PIN
		W	99	06	31C		WRAP CONNECTOR J06.1, 3*32 PIN
		W	99	13	05B		WRAP CONNECTOR J13.1, 3*32 PIN
25.6 KHZ		W	99	03	09B		WRAP CONNECTOR J03.1, 3*32 PIN
3.2 KHZ		W	99	03	10B		WRAP CONNECTOR J03.1, 3*32 PIN
		W	99	06	10B		WRAP CONNECTOR J06.1, 3*32 PIN
400 HZ		W	99	03	08B		WRAP CONNECTOR J03.1, 3*32 PIN
50 HZ		W	99	03	06B		WRAP CONNECTOR J03.1, 3*32 PIN
		W	99	06	06B		WRAP CONNECTOR J06.1, 3*32 PIN
		W	99	13	06B		WRAP CONNECTOR J13.1, 3*32 PIN
51.2 KHZ		W	99	03	22B		WRAP CONNECTOR J03.1, 3*32 PIN
6.25 HZ		W	99	01	06B		WRAP CONNECTOR J01.1, 3*32 PIN
		W	99	03	03B		WRAP CONNECTOR J03.1, 3*32 PIN
800 HZ		W	99	01	08B		WRAP CONNECTOR J01.1, 3*32 PIN
		W	99	03	08C		WRAP CONNECTOR J03.1, 3*32 PIN
819.2KHZ		W	99	01	18C		WRAP CONNECTOR J01.1, 3*32 PIN
		W	99	02	18B		WRAP CONNECTOR J02.1, 3*32 PIN
		W	99	03	18B		WRAP CONNECTOR J03.1, 3*32 PIN
		W	99	07	17C		WRAP CONNECTOR J07.1, 3*32 PIN
		W	99	09	21A		WRAP CONNECTOR J09.1, 3*32 PIN
		W	99	15	06B		WRAP CONNECTOR J15.1, 3*32 PIN
		W	+ 99	19	06A		WRAP CONNECTOR J19.1, 3*32 PIN

```
 ******  *******  *     *  ******   *******  ******                          *         *  ***  ******   ***  *     *   *****
*      *    *     *     *  *     *  *        *     *                         *         *   *   *     *   *   **   **  *     *
*      *    *     *     *  *     *  *        *     *                         *         *   *   *     *   *   * * * *  *
 *****  *    *     *     *  *****    *****    *****          *******          *    *    *   *   ******    *   *  *  *  *  ***
      *  *    *     *   *   *     *  *        *   *                          *  * * *  *   *   *         *   *     *  *     *
*     *  *    *      * *    *     *  *        *    *                          **   **   *   *   *         *   *     *  *     *
 *****   *     *****   *    *******  *******  *     *                          *     *  ***  *   *        ***  *     *   *****
```


TITLE: TAPE LOCK SYSTEM 2000 A800: PARALLEL PROGRAMMER 1.228.900.00 INDEX: 9 DATE OF ORIGIN: 79-10-05 DATE OF PROC.: 82/01/12

TOTAL GROUPS: 3
TOTAL ELEMENTS: 36
TOTAL PINS: 2815
TOTAL UNUSED PINS: 803
MULTIPLE PINS: 0

GROUP NODE = *
INTER GROUP NODE = #
DIRECT WIRE TO # = <
WIRING NOT COMPUTED = @

GR: 97
RACK ELEMENTS A800 LOWER PART

EL: 13 REFERENCE FREQUENCY INPUT

TYPE	PT	LV	SIG.NAME	COLOR	F	X	Y
L	01	1	EXFRQSCR	0			

EL: 14 REFERENCE FREQUENCY INPUT

TYPE	PT	LV	SIG.NAME	COLOR	F	X	Y
L	01	1	EXFRQSCR	0			
L	02	1	EXFRQINA	2			
L	03	1	EXFRQINB	3			

EL: 15 REFERENCE FREQUENCY INPUT

TYPE	PT	LV	SIG.NAME	COLOR	F	X	Y
L	01A	1	0 L	0			
L	02	1	EXFRQINA	2			
L	02A	1	EXFREQ1	2			
L	03	1	EXFRQINB	3			
L	03A	1	EXFREQTM	3			
L	04A	1	EXFRFQ2	4			

EL: 51 COMMAND LINE A800

TYPE	PT	LV	SIG.NAME	COLOR	F	X	Y
	01	0	KEY				
	02	0					
B	03	1	CCSUPVIS	2			
	04	0					
	05	0					
	06	0					
B	07	1	0 L	0			
	08	0					
	09	0					
	10	0					
	11	0					
	12	0					
B	13	1	0 L	0			
B	14	1	ACKNLG	7			
B	15	1	REQUEST	8			
B	16	1	DATACLK	9			
B	17	1	TRM/REC	1			
B	18	1	A800SUPV	2			
B	19	1	0 L	0			
B	20	1	0 L	0			
	21	0					
B	22	1	ZCODINSL	4			
	23	0					
B	24	1	0 L	0			
	25	0					
	26	0					

./.

GR: 97 (CONTINUATION)
RACK ELEMENTS A800 LOWER PART

EL: 51 (CONTINUATION)

TYPE	PT	LV	SIG.NAME	COLOR	F	X	Y
	27	0					
B	28	1	ZCODIN1S	8			
B	29	1	0 L	0			
B	30	1	ZEXGENO	9			
B	31	1	ZCODGENO	1			
B	32	1	ZINCODRP	2			
	33	0					
B	34	1	A800DATA	3			
B	35	1	0 L	0			
	36	0	KEY				
B	37	1	PROCSUPV	4			

EL: 71 AUXILIARY CONNECTOR

TYPE	PT	LV	SIG.NAME	COLOR	F	X	Y
B	01	1	0 L	0			
B	02	1	LKMODEDR	1			
B	03	1	EDMODEDR	8			
	04	0	KEY				
B	05	1	Y-REC-M	5			
	06	1					
	07	1					
	08	1					
	09	1					
B	10	1	PARKEDDR	2			
	11	1					
	12	1					
	13	1					
	14	1					
	15	1					
	16	1					
	17	1					
	18	1					
	19	1					
B	20	1	0 K	0			
B	21	1	START-1A	1			
B	22	1	START-1B	1			
B	23	1	START-2A	6			
B	24	1	START-2B	6			
B	25	1	START-3A	9			
B	26	1	START-3B	9			
B	27	1	START-4A	4			
B	28	1	START-4B	4			
	29	1					
	30	1					
B	31	1	EDLEADDR	7			
B	32	1	SNCPLTDR	4			
B	33	1	SYNCBDR	3			
	34	0	KEY				
B	35	1	0 L	0			

./.

GR: 97 (CONTINUATION)
RACK ELEMENTS A800 LOWER PART

EL: 71 (CONTINUATION)

TYPE	PT	LV	SIG.NAME	COLOR	F	X	Y
B	36	1	+24M	3			
B	37	1	+24	2			

EL: 72 RELAIS PRINT

TYPE	PT	LV	SIG.NAME	COLOR	F	X	Y
L	01A	1	START-1A	1			
L	01B	1	START-1B	1			
L	01C	1	STARTDR1	1			
L	02A	1	START-2A	6			
L	02B	1	START-2B	6			
L	02C	1	STARTDR2	6			
L	03A	1	START-3A	9			
L	03B	1	START-3B	9			
L	03C	1	STARTDR3	9			
L	04A	1	START-4A	4			
L	04B	1	START-4B	4			
L	04C	1	STARTDR4	4			
L	05A	1	Y-REC-M	5			
L	05C	1	EXTRECCM	7			
L	06A	1	0 L	0			
L	06C	1	0 L	0			
L	07A	1	0 K	0			
L	07C	1	0 K	0			
L	08A	1	+24	2			
L	08C	1	+24	2			
L	09A	1	+24M	3			

EL: 91 CONN. ASS. TO MAIN PROGR. (J I)

TYPE	PT	LV	SIG.NAME	COLOR	F	X	Y
	01	0	KEY				
B	02	1	PB1	9			
B	03	1	BULBDPA2	1			
B	04	1	PBA	5			
B	05	1	PBH	4			
B	06	1	BULBPBI3	8			
B	07	1	EDIT CD	R			
B	08	1	LOCKFAST	6			
B	09	1	ADV RET	2			
B	10	1	MSEC	0			
B	11	1	GEN N SC	7			
B	12	1	B-UPPLIM	8-R			
B	13	1	ENTRY	6-2			
B	14	1	BOFFSREG	9-5			
B	15	1	B-EXITSL	1-5			
B	16	1	B-PHAS	9-4			
B	17	1	FRAM ER	4-1			
B	18	1	GEN SET	9-8			

./.

```
*****************************************************************************************************************************
*  S T U D E R  *     L O C A T I O N     P I N     L I S T      *   82/01/12 * 15:02     *   P A G E     3   *
*****************************************************************************************************************************
TAPE LOCK SYSTEM 2000 A800: PARALLEL PROGRAMMER              1.228.900.00            79-10-05
```

GR: 97 (CONTINUATION)
RACK ELEMENTS A800 LOWER PART

EL: 91 (CONTINUATION)

TYPE	PT	LV	SIG.NAME	COLOR	F	X	Y
B	19	1	B-LOWLIM	8-1			
B	20	1	NO CD S	9-R			
B	21	1	B-ENTRYM	1-R			
B	22	1	SVPCI	9-6			
B	23	1	BULBPBF4	1-6			
B	24	1	BULBPBF3	9-2			
B	25	1	BULBPBF2	1-2			
B	26	1	EXEC	9-0			
B	27	1	PBD	1-0			
B	28	1	PBI	8-5			
B	29	1	BULBDPA1	4-8			
B	30	1	INTGEN	5-R			
B	31	1	BULBDPB2	4-R			
B	32	1	CODENDEF	5-6			
B	33	1	ADD	4-6			
B	34	1	B-CALC	5-2			
B	35	1	SLDECOFF	4-2			
B	36	1	B-GENUSB	5-0			
B	37	1	SL NOTP	4-0			
B	38	1	PB7	8-6			
B	39	1	PBG	6-R			
B	40	1	PB4	8-2			
B	41	1	PBK	2-R			
B	42	1	PBF	8-0			
B	43	1	LWLIM EX	0-R			
B	44	1	CONNFAIL	6-0			
B	45	1	BENT/PKS	2-0			
B	46	1	UPLIM EX	9-1-0			
B	47	1	B-NOMAST	4-5-0			
	48	0	KEY				
B	49	1	WMPRESO1	8-R-0			
B	50	1	WMPRESO2	6-2-0			

EL: 92 CONN. ASS. TO MAIN PROGR. (J II)

TYPE	PT	LV	SIG.NAME	COLOR	F	X	Y
B	01	1	WMPRESO3	9			
	02	0	KEY				
B	03	1	BLKDSP1	1			
B	04	1	NTRMDATA	5			
B	05	1	BADRSTRT	4			
B	06	1	BULBDPH1	8			
B	07	1	PHASING	R			
B	08	1	BULBPBG3	6			
B	09	1	MSEC	2			
B	10	1	DIFF	0			
B	11	1	FRAM	7			
B	12	1	B-REHEAR	8-R			
B	13	1	BULBPBH3	6-2			
B	14	1	OFS DISP	9-5			

./.

GR: 97 (CONTINUATION)
RACK ELEMENTS A800 LOWER PART

EL: 92 (CONTINUATION)

TYPE	PT	LV	SIG.NAME	COLOR	F	X	Y
B	15	1	CODEFR/S	1-5			
B	16	1	PBULBHMS	9-4			
B	17	1	ADCDATAE	4-1			
B	18	1	BULBDPN1	9-8			
B	19	1	SLAV	8-1			
B	20	1	UNAS B	9-R			
B	21	1	BULBPBL5	1-R			
B	22	1	BULBDPP1	9-6			
B	23	1	ADCDATAD	1-6			
B	24	1	PBULBHMS	9-2			
B	25	1	DISPEN7	1-2			
B	26	1	DISPEN1	9-0			
B	27	1	WMPRESO4	1-0			
B	28	1	DISPEN0	8-5			
B	29	1	STOREOFS	4-8			
B	30	1	DISPEN2	5-R			
B	31	1	BLKDSP0	4-R			
B	32	1	DISPEN3	5-6			
B	33	1	BLKDSP2	4-6			
B	34	1	MULU	5-2			
B	35	1	LOCKSLOW	4-2			
B	36	1	NTRMDATB	5-0			
B	37	1	BLKDSP3	4-0			
B	38	1	BULBDPL1	8-6			
B	39	1	DISPEN4	6-R			
B	40	1	BULBPBK5	8-2			
B	41	1	BULBDPA0	2-R			
B	42	1	NTRMDATC	8-0			
B	43	1	SVPCII	0-R			
B	44	1	BLKDSP4	6-0			
B	45	1	PBULBHMS	2-0			
B	46	1	BLKDSP5	9-1-0			
B	47	1	DISPEN6	4-5-0			
B	48	1	DISPEN5	8-R-0			
	49	0	KEY				
B	50	1	BLKDSP7	6-2-0			

EL: 93 CONN. ASS. TO MAIN PROGR. (JIII)

TYPE	PT	LV	SIG.NAME	COLOR	F	X	Y
B	01	1	NTRMDATD	9			
B	02	1	ADCDATAC	1			
	03	0	KEY				
B	04	1	MAST	5			
B	05	1	USER B	4			
B	06	1	SVPCIII	8			
B	07	1	ADCDATAB	R			
B	08	1	BULBPBM5	6			
B	09	1	ADCDATAA	2			
B	10	1	BLOCATOR	0			

./.

GR: 97 (CONTINUATION)
RACK ELEMENTS A800 LOWER PART

EL: 93 (CONTINUATION)

TYPE	PT	LV	SIG.NAME	COLOR	F	X	Y
B	11	1	REC	7			
B	12	1	EDIT	8-R			
B	13	1	BPKMMPRG	6-2			
B	14	1	GENRUN	9-5			
B	15	1	TX	1-5			
B	16	1	SYNC PLT	9-4			
B	17	1	FAST FWD	4-1			
B	18	1	BEDMMPRG	9-8			
B	19	1	PBB	8-1			
B	20	1	B-RECENB	9-R			
B	21	1	PBPLAY	1-R			
B	22	1	PBREC	9-6			
B	23	1	GEN=MAST	1-6			
B	24	1	0 SW	9-2			
B	25	1	PLAY	1-2			
B	26	1	BLKDSP6	9-0			
B	27	1	DISPEN8	1-0			
B	28	1	KB	8-5			
B	29	1	BLKDSP8	4-8			
B	30	1	DISEND9+	5-R			
B	31	1	PB3	4-R			
B	32	1	PBC	5-6			
B	33	1	DISEND9-	4-6			
B	34	1	PB5	5-2			
B	35	1	PB0	4-2			
B	36	1	PBE	5-0			
B	37	1	BULBDPS2	4-0			
B	38	1	PARKED	8-6			
B	39	1	BULBDPT2	6-R			
B	40	1	STOP	8-2			
B	41	1	+10 SW	2-R			
B	42	1	BULBDPU2	8-0			
B	43	1	SYNC B	0-R			
B	44	1	BPILMPRG	6-0			
B	45	1	FAST REW	2-0			
B	46	1	BLKMMPRG	9-1-0			
B	47	1	SYNC A	4-5-0			
B	48	1	PB6	8-R-0			
B	49	1	PB2	6-2-0			
	50	0	KEY				

EL: 94 CONN. ASS. TO MAIN PROGR. (J I)

TYPE	PT	LV	SIG.NAME	COLOR	F	X	Y
L	01	1	0 L	*			

```
*****************************************************************************************************************************
*  S T U D E R  *     L O C A T I O N     P I N     L I S T      *   82/01/12 * 15:02     *   P A G E     4   *
*****************************************************************************************************************************
TAPE LOCK SYSTEM 2000 A800: PARALLEL PROGRAMMER              1.228.900.00            79-10-05
```

GR: 97 (CONTINUATION)
RACK ELEMENTS A800 LOWER PART

EL: 95 CONN. ASS. TO MAIN PROGR. (J II)

TYPE	PT	LV	SIG.NAME	COLOR	F	X	Y
L	01	1	0 L	*			

EL: 96 CONN. ASS. TO MAIN PROGR. (JIII)

TYPE	PT	LV	SIG.NAME	COLOR	F	X	Y
L	01	1	0 L	*			

GR: 98
RACK ELEMENTS A800 UPPER PART

EL: 51 MASTER CONTROL CONNECTOR A800

TYPE	PT	LV	SIG.NAME	COLOR	F	X	Y
B	01	1	0 L	0			
	02	0	KEY				
B	03	1	+10	1			
B	04	1	MPWRON	2			
B	05	1	LKMODDR2	3			
B	06	1	PARKEDDR	4			
B	07	1	EXTRECCM	5			
B	08	1	MCSUPVIS	6			
	09	1					
B	10	1	0 K	0			
B	11	1	0 K	0			
B	12	1	+24	2			
B	13	1	+24	1			
B	14	1	0 L	0			
B	15	1	MCRECEDR	4			
B	16	1	MCZSETDR	5			
B	17	1	MCKCUTDR	6			
B	18	1	MCRESDR1	7			
B	19	1	MCDAT1DR	8			
B	20	1	MCDAT2DR	9			
B	21	1	MCMUTEDR	1			
B	22	1	MCDATRDY	2			
B	23	1	MCRHRSDR	1			
B	24	1	MCDATODR	4			
	25	0	KEY				

EL: 81 ADDITIONAL POWER CONNECTOR

TYPE	PT	LV	SIG.NAME	COLOR	F	X	Y
	01	1					
	02	0	KEY				
	03	1					
	04	1					
	05	1					
	06	1					
	07	1					
A	08	1	0.0AD150	0			
A	09	1	0.0AD150	0			
A	10	1	0.0AD150	0			
A	11	1	0 L	0			
A	12	1	0 L	0			
A	13	1	0 L	0			
A	14	1					
A	15	1					
A	16	1	+10	5			
A	17	1	+10	5			
A	18	1	+10	5			
A	19	1	+10AD150	5			
A	20	1	+10AD150	5			
A	21	1	+10AD150	5			

./.

GR: 98 (CONTINUATION)
RACK ELEMENTS A800 UPPER PART

EL: 81 (CONTINUATION)

TYPE	PT	LV	SIG.NAME	COLOR	F	X	Y
	22	0	KEY				
	23	1					
	24	1					
	25	1					

EL: 91 CONNECTOR ASS. TO POWER SUPPLY

TYPE	PT	LV	SIG.NAME	COLOR	F	X	Y
A	01	1	-10V 150	6			
	02	0	KEY				
A	03	1	-10V 150	6			
A	04	1	-10V 150	6			
A	05	1	0 L	0			
A	06	1	0 L	0			
A	07	1	0 L	0			
A	08	1	0 L	0			
A	09	1	0 L	0			
A	10	1	0 L	0			
A	11	1	0.0IN150	0			
A	12	1	0.0IN150	0			
A	13	1	0.0IN150	0			
	14	1					
	15	1					
A	16	1	+10	5			
A	17	1	+10	5			
A	18	1	+10	5			
A	19	1	+10	5			
A	20	1	+10	5			
A	21	1	+10	5			
	22	0	KEY				
A	23	1	+31V 150	9			
A	24	1	+31V 150	9			
A	25	1	+31V 150	9			

```
*****************************************************************************************************************************
*   S T U D E R   *      L O C A T I O N     P I N     L I S T      *   82/01/12 * 15:02      *   P A G E      5    *
*****************************************************************************************************************************
TAPE LOCK SYSTEM 2000 A800: PARALLEL PROGRAMMER              1.228.900.00              79-10-05
```

GR: 99 1.228.399.00 W0019
PROCESSOR BACK PANEL
****

EL: 01 WRAP CONNECTOR J01.1, 3*32 PIN

TYPE	PT	LV	SIG.NAME	COLOR	F	X	Y
WP	01A	1	0 L				
WPQ	01B	1	0 L	0			
WP	01C	1	0 L				
W	02A	3	SYNCBOUT				
WQ	02B	3	EXFREQ1	2			
W	02C	3	EXTSYNC				
W	03A	3	MP2DMM				
WQ	03B	3	EXFREQTM	3			
W	03C	3	PSYNC -S				
W	04A	3	MP3DMM				
WQ	04B	3	EXFREQ2	4			
W	04C	3	PCBALQO				
W	05A	3	MDMFAILM				
W	05B	3	CLRADRCT				
W	05C	3	CODGENO				
W	06A	3	MDIRDWNM				
W	06B	3	6.25 HZ				
W	06C	3	EXGENOUT				
W	07A	3	MPSYNCM				
W	07B	3	CKACTLT				
W	07C	3	PCPGDATA				
W	08A	3	ARPOUT-A				
W	08B	3	800 HZ				
W	08C	3	PCPGDATB				
W	09A	3	ARPOUT-B				
W	09B	3	ARPOUT-D				
W	09C	3	PCPGDATC				
W	10A	3	ARPOUT-C				
W	10B	3	ARPOUT-E				
W	10C	3	PERMNTM4				
W	11A	3	PSYNC -M				
W	11B	3	ARPOUT-F				
W	11C	3	PMNTM 4				
W	12A	3					
W	12B	3	- 5				
W	12C	3	- 5				
W	13A	3	ACPGDATH				
W	13B	3	ACPGDATG				
W	13C	3	PMNTM 2				
W	14A	3					
W	14B	3	-12				
W	14C	3	-12				
W	15A	3					
W	15B	3	0 A				
W	15C	3	0 A				
W	16A	3					
W	16B	3	+12				
W	16C	3	+12				
W	17A	3	ACIFGRP				
W	17B	3	ACPGDATA				
W	17C	3	ACSPGRP3				

./.

GR: 99 (CONTINUATION)
PROCESSOR BACK PANEL
****

EL: 01 (CONTINUATION)

TYPE	PT	LV	SIG.NAME	COLOR	F	X	Y
W	18A	3	PCBALQ2				
W	18B	3	ACPGDATB				
W	18C	3	819.2KHZ				
W	19A	3					
W	19B	3	0 K				
W	19C	3	0 K				
W	20A	3					
W	20B	3	+24				
W	20C	3	+24				
W	21A	3	ACSPCAP				
W	21B	3	ACPGDATC				
W	21C	3	13.1 MHZ				
W	22A	3	NFRQCTLD				
W	22B	3	ACPGDATD				
W	22C	3	ADDRCT-A				
W	23A	3	PCSPGRP2				
W	23B	3	ACPGDATE				
W	23C	3	ADDRCT-B				
W	24A	3	PCBTESTC				
W	24B	3	P3DM -M				
W	24C	3	ADDRCT-C				
W	25A	3	BTCTA -M				
W	25B	3	P2DM -M				
W	25C	3	ADDRCT-D				
W	26A	3	BTCTB -M				
W	26B	3	DMFAIL-M				
W	26C	3	ADDRCT-E				
W	27A	3	BTCTC -M				
W	27B	3	DIRDWN-M				
W	27C	3	ADDRCT-F				
W	28A	3	BTCTD -M				
W	28B	3	ACSPIFC1				
W	28C	3	ADDRCT-G				
W	29A	3	LDADDRCT				
W	29B	3	ARSEROUT				
W	29C	3	ADDRCT-H				
W	30A	3	ENTADRCT				
W	30B	3	EXFRQDAT				
W	30C	3	ADDRCT-I				
W	31A	3	BTCTG -M				
W	31B	3	ACPGDATF				
W	31C	3	ADDRCT-K				
WP	32A	1	+10				
WP	32B	1	+10				
WP	32C	1	+10				

GR: 99 (CONTINUATION)
PROCESSOR BACK PANEL
****

EL: 02 WRAP CONNECTOR J02.1, 3*32 PIN

TYPE	PT	LV	SIG.NAME	COLOR	F	X	Y
WP	01A	1	0 L				
WP	01B	1	0 L				
WP	01C	1	0 L				
W	02A	3					
W	02B	3	SYNCBOUT				
W	02C	3	PERCAPFR				
W	03A	3					
W	03B	3					
W	03C	3	P3DM -S				
W	04A	3					
W	04B	3	MP3DMM				
W	04C	3	CAPMUX				
W	05A	3	SPOOLMOD				
W	05B	3					
W	05C	3					
W	06A	3					
W	06B	3					
W	06C	3	PCSPGRP3				
W	07A	3					
W	07B	3	MPSYNCM				
W	07C	3					
W	08A	3					
W	+ 08B	3	REPRECMX				
W	08C	3					
W	09A	3					
W	09B	3					
W	09C	3	PCPGDATA				
W	10A	3					
W	10B	3	PEDITLD				
W	10C	3	PCPGDATB				
W	11A	3					
W	11B	3					
W	11C	3	PCPGDATC				
W	12A	3					
W	12B	3	- 5				
W	12C	3	- 5				
W	13A	3					
W	13B	3	CAPLATEN				
W	13C	3	DMOSCI-S				
W	14A	3					
W	14B	3	-12				
W	14C	3	-12				
W	15A	3					
W	15B	3	0 A				
W	15C	3	0 A				
W	16A	3					
W	16B	3	+12				
W	16C	3	+12				
W	17A	3					
W	17B	3	PMNTM 2				
W	17C	3	YMOVETLS				

./.

```
*****************************************************************************************************************************
*   S T U D E R   *      L O C A T I O N     P I N     L I S T      *   82/01/12 * 15:02      *   P A G E      6    *
*****************************************************************************************************************************
TAPE LOCK SYSTEM 2000 A800: PARALLEL PROGRAMMER              1.228.900.00              79-10-05
```

GR: 99 (CONTINUATION)
PROCESSOR BACK PANEL
****

EL: 02 (CONTINUATION)

TYPE	PT	LV	SIG.NAME	COLOR	F	X	Y
W	18A	3	ACPGDATA				
W	18B	3	819.2KHZ				
W	18C	3					
W	19A	3					
W	19B	3	0 K				
W	19C	3	0 K				
W	20A	3					
W	20B	3	+24				
W	20C	3	+24				
W	21A	3	13.1 MHZ				
W	21B	3	ACSPCAP				
W	21C	3	P1DM -S				
W	22A	3	ACPGDATB				
W	22B	3	NFRQCTLD				
W	22C	3	PMNTM 4				
W	23A	3	ACPGDATC				
W	23B	3					
W	23C	3					
W	24A	3					
W	24B	3					
W	24C	3	CAP-EN				
W	25A	3					
W	25B	3					
W	25C	3	BTCTA -S				
W	+ 26A	3	RECLATEN				
W	26B	3					
W	26C	3	BTCTB -S				
W	27A	3	BTCTC -M				
W	27B	3	PCPGDATH				
W	27C	3	BTCTC -S				
W	28A	3					
W	28B	3					
W	28C	3	BTCTD -S				
W	29A	3					
W	29B	3					
W	29C	3	BTCTE -S				
W	30A	3					
W	30B	3					
W	30C	3	BTCTF -S				
W	31A	3					
W	31B	3	ARSEROUT				
W	31C	3	BTCTG -S				
WP	32A	1	+10				
WP	32B	1	+10				
WP	32C	1	+10				

GR: 99 (CONTINUATION)
PROCESSOR BACK PANEL
****

EL: 03 WRAP CONNECTOR J03.1, 3*32 PIN

TYPE	PT	LV	SIG.NAME	COLOR	F	X	Y
WP	01A	1	0 L				
WP	01B	1	0 L				
WP	01C	1	0 L				
W	02A	3	MP2DMM				
W	02B	3	200 HZ				
W	02C	3	P2DM -S				
W	03A	3	MP3DMM				
W	03B	3	6.25 HZ				
W	03C	3	P3DM -S				
W	04A	3	P4DM -M				
W	04B	3	12.5 HZ				
W	04C	3	P4DM -S				
W	05A	3	NDMCOD-M				
W	05B	3	25 HZ				
W	05C	3	NDMCOD-S				
W	06A	3	MDIRDWNM				
W	06B	3	50 HZ				
W	06C	3	DIRDWN-S				
W	07A	3	MPSYNCM				
W	07B	3	100 HZ				
W	07C	3	PSYNC -S				
W	08A	3	FRAMSL B				
W	08B	3	400 HZ				
W	08C	3	800 HZ				
W	09A	3	RAMMUX				
W	09B	3	25.6 KHZ				
W	09C	3	PCPGDATA				
W	10A	3	PLAY -M				
W	10B	3	3.2 KHZ				
W	10C	3	PCPGDATB				
W	11A	3	+ 5 ADD				
W	11B	3	12.8 KHZ				
W	11C	3	PCPGDATC				
W	12A	3					
W	12B	3	- 5				
W	12C	3	- 5				
W	13A	3	PMNTM 1				
W	13B	3	204.8KHZ				
W	13C	3	PERMNTM1				
W	14A	3					
W	14B	3	-12				
W	14C	3	-12				
W	15A	3					
W	15B	3	0 A				
W	15C	3	0 A				
W	16A	3					
W	16B	3	+12				
W	16C	3	+12				
W	17A	3	PMNTM 2				
W	17B	3	1638 KHZ				
W	17C	3	PERMNTM2				

./.

GR: 99 (CONTINUATION)
PROCESSOR BACK PANEL
****

EL: 03 (CONTINUATION)

TYPE	PT	LV	SIG.NAME	COLOR	F	X	Y
W	18A	3	PMNTM 3				
W	18B	3	819.2KHZ				
W	18C	3	PERMNTM3				
W	19A	3					
W	19B	3	0 K				
W	19C	3	0 K				
W	20A	3					
W	20B	3	+24				
W	20C	3	+24				
W	21A	3	PMNTM 4				
W	21B	3	13.1 MHZ				
W	21C	3	PERMNTM4				
W	22A	3	WLINE -M				
W	22B	3	51.2 KHZ				
W	22C	3	WLINE -S				
W	23A	3	102.4KHZ				
W	23B	3	NPPWRON				
W	23C	3	TDATAM/S				
W	24A	3	BTCTOF-M				
W	24B	3	RLINE -B				
W	24C	3	BTCTOF-S				
W	25A	3	BTCTA -M				
W	25B	3	RLINE -A				
W	25C	3	BTCTA -S				
W	26A	3	BTCTB -M				
W	26B	3	ADDRCT-A				
W	26C	3	BTCTB -S				
W	27A	3	BTCTC -M				
W	27B	3	ADDRCT-B				
W	27C	3	BTCTC -S				
W	28A	3	BTCTD -M				
W	28B	3	ADDRCT-C				
W	28C	3	BTCTD -S				
W	29A	3	BTCTE -M				
W	29B	3	ADDRCT-D				
W	29C	3	BTCTE -S				
W	30A	3	BTCTF -M				
W	30B	3	ADDRCT-E				
W	30C	3	BTCTF -S				
W	31A	3	BTCTG -M				
W	31B	3	ADDRCT-F				
W	31C	3	BTCTG -S				
WP	32A	1	+10				
WP	32B	1	+10				
WP	32C	1	+10				

```
*****************************************************************************************************************************
*   S T U D E R   *      L O C A T I O N     P I N     L I S T       *    82/01/12 * 15:02      *   P A G E      7    *
*****************************************************************************************************************************
TAPE LOCK SYSTEM 2000 A800: PARALLEL PROGRAMMER              1.228.900.00              79-10-05
```

GR: 99 (CONTINUATION)
PROCESSOR BACK PANEL

EL: 04 WRAP CONNECTOR J04.1, 3*32 PIN

TYPE	PT	LV	SIG.NAME	COLOR	F	X	Y
WP	01A	1	0 L				
WP	01B	1	0 L				
WP	01C	1	0 L				
W	02A	3	CLRADRCT				
W	02B	3	ACSP-09				
W	02C	3	COSTCKCT				
W	03A	3	ENTADRCT				
W	03B	3	ACPGAD04				
W	03C	3	NCOCKCT				
W	04A	3	CKACTLT				
W	04B	3	ACPGAD05				
W	04C	3	ACPGAD06				
W	05A	3	LDADDRCT				
W	05B	3	PBMASREG				
W	05C	3	ACPGAD07				
W	06A	3	ACPGAD00				
W	06B	3	CODOCT				
W	06C	3	ACPGAD08				
W	07A	3	ACPGAD01				
W	07B	3	LOADCKCT				
W	07C	3	ACPGAD09				
W	08A	3	ACPGAD02				
W	08B	3	WEACFLG				
W	08C	3	IFMUX-W				
W	09A	3	ACPGAD03				
W	09B	3	PROGSTOP				
W	09C	3	ACPGAD10				
W	10A	3	ACSPGRP4				
W	10B	3	ACSPGRP1				
W	10C	3	ACPGAD11				
W	11A	3	AREN1				
W	11B	3	ACSPGRP2				
W	11C	3	ACSPGRP3				
W	12A	3					
W	12B	3	- 5				
W	12C	3	- 5				
W	13A	3	AREN2				
W	13B	3	PMNTM 1				
W	13C	3	TESTFLGS				
W	14A	3					
W	14B	3	-12				
W	14C	3	-12				
W	15A	3					
W	15B	3	0 A				
W	15C	3	0 A				
W	16A	3					
W	16B	3	+12				
W	16C	3	+12				
W	17A	3	NACRES1				
W	17B	3	ACPGIRPT				
W	17C	3	ACIFGRP				

./.

GR: 99 (CONTINUATION)
PROCESSOR BACK PANEL

EL: 04 (CONTINUATION)

TYPE	PT	LV	SIG.NAME	COLOR	F	X	Y
W	18A	3	ACPGDATA				
W	18B	3	PMNTM 3				
W	+ 18C	3	ADDRCT-A				
W	19A	3					
W	19B	3	0 K				
W	19C	3	0 K				
W	20A	3					
W	20B	3	+24				
W	20C	3	+24				
W	21A	3	ACPGDATB				
W	21B	3	PMNTM 4				
W	+ 21C	3	ADDRCT-B				
W	22A	3	ACPGDATC				
W	+ 22B	3	PERMNTM4				
W	+ 22C	3	ADDRCT-C				
W	23A	3	ACPGDATD				
W	23B	3	PPWRON				
W	+ 23C	3	ADDRCT-D				
W	24A	3	ACPGDATE				
W	24B	3	ACTAPFLG				
W	+ 24C	3	ADDRCT-E				
W	25A	3	ACPGDATF				
W	25B	3	+ 5 ADD				
W	+ 25C	3	ADDRCT-F				
W	26A	3	ACPGDATG				
W	+ 26B	3	ARPOUT-A				
W	+ 26C	3	ADDRCT-G				
W	27A	3	ACPGDATH				
W	+ 27B	3	ARPOUT-B				
W	+ 27C	3	ADDRCT-H				
W	28A	3	ACPGDATI				
W	+ 28B	3	ARPOUT-C				
W	+ 28C	3	ADDRCT-I				
W	29A	3	ACPGDATK				
W	+ 29B	3	ARPOUT-D				
W	+ 29C	3	ADDRCT-K				
W	30A	3	ACPGDATL				
W	+ 30B	3	ARPOUT-E				
W	30C	3	ACINSTEN				
W	31A	3	ACPGDATM				
W	+ 31B	3	ARPOUT-F				
W	31C	3	ACPGDATN				
WP	32A	1	+10				
WP	32B	1	+10				
WP	32C	1	+10				

GR: 99 (CONTINUATION)
PROCESSOR BACK PANEL

EL: 05 WIRING WITH: GROUND

TYPE	PT	LV	SIG.NAME	COLOR	F	X	Y
WPQ	01A	1%	0 L	4			
WPQ	01B	1%	0 L	4			
WPQ	01C	1%	0 L	4			
W	02A	3					
W	02B	3	NOMASTER				
W	02C	3					
W	03A	3	MP2DMM				
W	03B	3	NINVCTR1				
W	03C	3	P2DM -S				
W	04A	3	MP3DMM				
W	04B	3	NOCODE-S				
W	04C	3	P3DM -S				
W	05A	3	PPWRON				
W	05B	3	NINVCTR2				
W	05C	3	NFRAMSLB				
W	06A	3	ACIFMUXA				
W	06B	3	ACBIF1				
W	06C	3					
W	07A	3	MPSYNCM				
W	07B	3	ACBIF2				
W	07C	3	PSYNC -S				
W	08A	3	MDMFAILM				
W	08B	3	ACBIF3				
W	08C	3	DMFAIL-S				
W	09A	3	DIRUP -M				
W	09B	3	CODOCT				
W	09C	3	DIRUP -S				
W	10A	3	DMCOD -M				
W	10B	3	PERDATA				
W	10C	3	DMCOD -S				
W	11A	3	BTCTOF-M				
W	11B	3	ARPOUT-A				
W	11C	3	BTCTOF-S				
W	12A	3					
W	12B	3	- 5				
W	12C	3	- 5				
W	13A	3	G-SFRSLA				
W	13B	3	G-SFRSLB				
W	13C	3					
W	14A	3					
W	14B	3	-12				
W	14C	3	-12				
W	15A	3					
W	15B	3	0 A				
W	15C	3	0 A				
W	16A	3					
W	16B	3	+12				
W	16C	3	+12				
W	17A	3	ACIFMUXB				
W	17B	3					
W	17C	3	FRAMSL B				

./.

```
*****************************************************************************************************************************
*   S T U D E R   *      L O C A T I O N     P I N     L I S T       *    82/01/12 * 15:02      *   P A G E      8    *
*****************************************************************************************************************************
TAPE LOCK SYSTEM 2000 A800: PARALLEL PROGRAMMER              1.228.900.00              79-10-05
```

GR: 99 (CONTINUATION)
PROCESSOR BACK PANEL

EL: 05 (CONTINUATION)

TYPE	PT	LV	SIG.NAME	COLOR	F	X	Y
W	18A	3	ACPGDATA				
W	18B	3					
W	18C	3	FRAMSL A				
W	19A	3					
W	19B	3	0 K				
W	19C	3	0 K				
W	20A	3					
W	20B	3	+24				
W	20C	3	+24				
W	21A	3	ACPGDATB				
W	21B	3	PMNTM 4				
W	21C	3	WLINE -S				
W	22A	3	ACPGDATC				
W	22B	3	ACSPGRP1				
W	22C	3	WLINE -M				
W	23A	3	ACPGDATD				
W	23B	3	IFMUX-W				
W	23C	3	RLINE -A				
W	24A	3	ACPGDATE				
W	24B	3					
W	24C	3	RLINE -B				
W	25A	3	ACPGDATF				
W	25B	3	BTCTA -M				
W	25C	3	BTCTA -S				
W	26A	3	ACPGDATG				
W	26B	3	BTCTB -M				
W	26C	3	BTCTB -S				
W	27A	3	ACPGDATH				
W	27B	3	BTCTC -M				
W	27C	3	BTCTC -S				
W	28A	3	ARIF-Y				
W	28B	3	BTCTD -M				
W	28C	3	BTCTD -S				
W	29A	3	LOADCKCT				
W	29B	3	BTCTE -M				
W	29C	3	BTCTE -S				
W	30A	3	NCOCKCT				
W	30B	3	BTCTF -M				
W	30C	3	BTCTF -S				
W	31A	3	ACSERDAT				
W	31B	3	BTCTG -M				
W	31C	3	BTCTG -S				
WP	32A	1	+10				
WP	32B	1	+10				
WP	32C	1	+10				

GR: 99 (CONTINUATION)
PROCESSOR BACK PANEL

EL: 06 WRAP CONNECTOR J06.1, 3*32 PIN

TYPE	PT	LV	SIG.NAME	COLOR	F	X	Y
WP	01A	1	0 L				
WP	01B	1	0 L				
WP	01C	1	0 L				
WP	01D	1	0 L				
WP	01E	1	0 L				
WP	01F	1	0 L				
W	02A	3	PCDATRDY				
W	02B	3	PCSPGRPA				
W	02C	3	TESTRAM				
W	+ 02D	3	0 L				
W	02E	3					
W	02F	3					
W	03A	3	PCDATACC				
W	03B	3	PPBPRESS				
W	03C	3	PCPGAD00				
W	03D	3					
W	03E	3					
W	03F	3					
W	04A	3	RECLATEN				
W	04B	3	CAPMUX				
W	04C	3	PCTOCLR				
W	04D	3					
W	04E	3					
W	04F	3					
W	05A	3	12.5 HZ				
W	05B	3	REPRECMX				
W	05C	3	PCEXPRRQ				
W	05D	3	WIRE001				
W	+ 05E	3	PROCSUPV				
W	05F	3					
W	06A	3	WEPCFLG				
W	06B	3	50 HZ				
W	06C	3	PCSPGRP3				
W	06D	3					
W	06E	3					
W	06F	3					
W	07A	3	+ 5 ADD				
W	07B	3	PCPGAD01				
W	07C	3	TIMLDEN				
W	07D	3					
W	07E	3					
W	+ 07F	3	A800SUPV				
W	08A	3	LDTRMCT				
W	08B	3	PCPGAD02				
W	08C	3	LDARDATA				
W	08D	3					
W	08E	3					
W	+ 08F	3	ZCODINSL				
W	09A	3	PCBAL				
W	09B	3	PRIFTRXY				
W	09C	3	PCPGAD03				

./.

GR: 99 (CONTINUATION)
PROCESSOR BACK PANEL

EL: 06 (CONTINUATION)

TYPE	PT	LV	SIG.NAME	COLOR	F	X	Y
W	09D	3					
W	09E	3					
W	09F	3					
W	10A	3	PCDATINE				
W	10B	3	3.2 KHZ				
W	10C	3	PCPGAD04				
W	10D	3					
W	10E	3					
W	10F	3					
W	11A	3	PRGRON				
W	11B	3	TDLATEN1				
W	11C	3	PCPGAD05				
W	11D	3					
W	11E	3					
W	11F	3					
W	12A	3					
W	12B	3	- 5				
W	12C	3	- 5				
W	12D	3					
W	12E	3					
W	12F	3					
W	13A	3	NEMGSTOP				
W	13B	3	PMNTM 1				
W	13C	3	CAPLATEN				
W	13D	3					
W	13E	3					
W	13F	3					
W	14A	3					
W	14B	3	-12				
W	14C	3	-12				
W	14D	3					
W	14E	3					
W	14F	3					
W	15A	3					
W	15B	3	0 A				
W	15C	3	0 A				
W	15D	3					
W	15E	3					
W	15F	3					
W	16A	3					
W	16B	3	+12				
W	16C	3	+12				
W	16D	3					
W	16E	3					
W	16F	3					
W	17A	3	PCBSP				
W	17B	3	PMNTM 2				
W	17C	3	PCTAPFLG				
W	17D	3	WIRE001				
W	17E	3	WIRE013				
W	17F	3	WIRE012				

./.

```
*****************************************************************************************************************************
*  S T U D E R  *      L O C A T I O N     P I N     L I S T       *   82/01/12 * 15:02      *   P A G E      9    *
*****************************************************************************************************************************
TAPE LOCK SYSTEM 2000 A800: PARALLEL PROGRAMMER              1.228.900.00              79-10-05
```

GR: 99 (CONTINUATION)
PROCESSOR BACK PANEL

EL: 06 (CONTINUATION)

TYPE	PT	LV	SIG.NAME	COLOR	F	X	Y
W	18A	3	PCPGDATA				
W	18B	3	PMNTM 3				
W	18C	3	NPPWRON				
WQ	18D	3	ZCODINSL	4			
WQ	18E	3	A800SUPV	2			
WQ	18F	3	REQUEST	8			
W	19A	3					
W	19B	3	0 K				
W	19C	3	0 K				
W	19D	3					
W	19E	3					
W	19F	3					
W	20A	3					
W	20B	3	+24				
W	20C	3	+24				
W	20D	3					
W	20E	3					
W	20F	3					
W	21A	3	PCPGDATB				
W	21B	3	PCPGAD06				
W	21C	3	PCPGAD09				
WQ	21D	3	0 L	0			
W	21E	3	WIRE015				
W	21F	3	WIRE014				
W	22A	3	PCPGDATC				
W	22B	3	TDLATEN2				
W	22C	3	PCPGAD10				
W	22D	3	WIRE002				
W	22E	3	WIRE016				
W	22F	3	WIRE017				
W	23A	3	PCPGDATD				
W	23B	3	BPLATEN				
W	23C	3	PCPGAD11				
W	23D	3					
W	23E	3					
WQ	23F	3	0 L	0			
W	24A	3	PCPGDATE				
W	24B	3	PCPGAD07				
W	24C	3	PCBPLTCL				
W	24D	3					
W	24E	3	WIRE018				
WQ	24F	3	0 L	0			
W	25A	3	PCPGDATF				
W	25B	3	PCSPGRP2				
W	25C	3	PCBPWE				
W	25D	3					
W +	25E	3	MCRHRSDR				
WQ	25F	3	0 L	0			
W	26A	3	PCPGDATG				
W	26B	3	PCPGAD08				
W	26C	3	TDCDMUX2				

./.

GR: 99 (CONTINUATION)
PROCESSOR BACK PANEL

EL: 06 (CONTINUATION)

TYPE	PT	LV	SIG.NAME	COLOR	F	X	Y
WQ	26D	3	ZEXGENO	9			
WQ	26E	3	0 L	0			
WQ	26F	3	ZINCODRP	2			
W	27A	3	PCPGDATH				
W	27B	3	TDCDMUX1				
W	27C	3	EXTFRQSL				
WQ	27D	3	0 L	0			
WQ	27E	3	PROCSUPV	4			
WQ	27F	3	DATACLK	9			
W	28A	3	PCPGDATI				
W	28B	3	PCPGDATN				
W	28C	3	NPINSTEN				
WQ	28D	3	ZCODIN1S	8			
W	28E	3					
W	28F	3					
W	29A	3	PCPGDATK				
W	29B	3	PCBTEST				
W	29C	3	NOCODE-S				
WQ	29D	3	0 L	0			
W	29E	3					
WQ	29F	3	ACKNLG	7			
W	30A	3	PCPGDATL				
W	30B	3	RAMMUX				
W	30C	3	NOMASTER				
WQ	30D	3	ZCODGENO	1			
W	30E	3					
WQ	30F	3	TRM/REC	1			
W	31A	3	PCPGDATM				
W	31B	3	FRPWRON				
W	31C	3	25 HZ				
WQ	31D	3	CCSUPVIS	2			
W	31E	3					
WQ	31F	3	A800DATA	3			
WP	32A	1	+10				
WP	32B	1	+10				
WP	32C	1	+10				
WP	32D	1	+10				
WP	32E	1	+10				
WP	32F	1	+10				

EL: 07 WRAP CONNECTOR J07.1, 3*32 PIN

TYPE	PT	LV	SIG.NAME	COLOR	F	X	Y
WP	01A	1	0 L				
WP	01B	1	0 L				
WP	01C	1	0 L				
WPQ	01D	1	0 L	0			
WPQ	01E	1	0 L	0			
WP	01F	1	0 L				
W	02A	3	TRMADR0				

./.

GR: 99 (CONTINUATION)
PROCESSOR BACK PANEL

EL: 07 (CONTINUATION)

TYPE	PT	LV	SIG.NAME	COLOR	F	X	Y
W	02B	3	PCEXPR-1				
W	02C	3	TESTRAM				
WQ	02D	3	LKMODEDR	1			
WQ	02E	3	SYNCBDR	3			
W	02F	3					
W	03A	3	TRMADR1				
W	03B	3	PCEXPR-2				
W	03C	3	TIMLDEN				
WQ	03D	3	EDMODEDR	8			
WQ	03E	3	SNCPLTDR	4			
W	03F	3					
W	04A	3	TRMADR2				
W	04B	3	PCEXPR-3				
W	04C	3	ARPOUT-D				
WQ	04D	3	PARKEDDR	2			
WQ	04E	3	EDLEADDR	7			
W	04F	3					
W	05A	3	TRMADR3				
W	05B	3	PCEXPRRQ				
W	05C	3	ARPOUT-C				
WQ	05D	3	EXTRECCM	7			
W	05E	3					
W	05F	3					
W	06A	3	TRMADR4				
W	06B	3	WEPCFLG				
W	06C	3	ARPOUT-B				
W	06D	3					
WQ	06E	3	STARTDR1	1			
W	06F	3					
W	07A	3	TRMADR5				
W	07B	3	LDARDATA				
W	07C	3	ARPOUT-A				
W	07D	3					
WQ	07E	3	STARTDR2	6			
W	07F	3					
W	08A	3	TRMADR6				
W	08B	3	LDTRMCT				
W	08C	3	WEACFLG				
WQ	08D	3	0 K	0			
WQ	08E	3	STARTDR3	9			
W	08F	3					
W	09A	3	NTRMDATA				
W	09B	3	PCDATINA				
W	09C	3	PCBAL				
WQ	09D	3	+24	2			
WQ	09E	3	STARTDR4	4			
W	09F	3					
W	10A	3	NTRMDATB				
W	10B	3	PCDATINB				
W	10C	3	PEDITLD				
W +	10D	3	0 L				

./.

```
*****************************************************************************************************************************
*  S T U D E R  *      L O C A T I O N     P I N     L I S T       *   82/01/12 * 15:02      *   P A G E     10    *
*****************************************************************************************************************************
TAPE LOCK SYSTEM 2000 A800: PARALLEL PROGRAMMER              1.228.900.00              79-10-05
```

GR: 99 (CONTINUATION)
PROCESSOR BACK PANEL

EL: 07 (CONTINUATION)

TYPE	PT	LV	SIG.NAME	COLOR	F	X	Y
W	10E	3	WIRE012				
W	10F	3	WIRE019				
W	11A	3	NTRMDATC				
W	11B	3	PCDATINC				
W	11C	3	ACSPGRP2				
W	11D	3	WIRE002				
W	11E	3					
W	11F	3					
W	12A	3					
W	12B	3	- 5				
W	12C	3	- 5				
W	12D	3					
W	12E	3					
W	12F	3					
W	13A	3	NTRMDATD				
W	13B	3	PCDATIND				
W	13C	3	TESTFLGS				
W	13D	3	WIRE003				
W	13E	3	WIRE013				
W	13F	3	WIRE020				
W	14A	3					
W	14B	3	-12				
W	14C	3	-12				
W	14D	3					
W	14E	3					
W	14F	3					
W	15A	3					
W	15B	3	0 A				
W	15C	3	0 A				
W	15D	3					
W	15E	3					
W	15F	3					
W	16A	3					
W	16B	3	+12				
W	16C	3	+12				
W	16D	3					
W	16E	3					
W	16F	3					
W	17A	3	12.8 KHZ				
W	17B	3	PMNTM 2				
W	17C	3	819.2KHZ				
W	17D	3	WIRE008				
W	17E	3					
W	17F	3	WIRE021				
W	18A	3	PCPGDATA				
W	18B	3	ACPGDATA				
W	18C	3	PCBALQ2				
W	18D	3	WIRE009				
W	18E	3	WIRE014				
W	18F	3	WIRE022				
W	19A	3					

./.

GR: 99 (CONTINUATION)
PROCESSOR BACK PANEL

EL: 07 (CONTINUATION)

TYPE	PT	LV	SIG.NAME	COLOR	F	X	Y
W	19B	3	0 K				
W	19C	3	0 K				
W	19D	3					
W	19E	3					
W	19F	3					
W	20A	3					
W	20B	3	+24				
W	20C	3	+24				
W	20D	3					
W	20E	3					
W	20F	3					
W	21A	3	PCPGDATB				
W	21B	3	ACPGDATB				
W	21C	3	PMNTM 4				
W	21D	3	WIRE010				
W	21E	3	WIRE015				
W	21F	3	WIRE023				
W	22A	3	PCPGDATC				
W	22B	3	ACPGDATC				
W	22C	3	PCBPMUXA				
W +	22D	3	ZCODGENO				
W	22E	3	WIRE016				
W	22F	3	WIRE024				
W	23A	3	PCPGDATD				
W	23B	3	ACPGDATD				
W	23C	3	PCBPMUXB				
W	23D	3					
W	23E	3					
W	23F	3	WIRE025				
W	24A	3	PCPGDATE				
W	24B	3	ACPGDATE				
W	24C	3	PCBTESTC				
W	24D	3					
W	24E	3					
W	24F	3					
W	25A	3	PCPGDATF				
W	25B	3	ACPGDATF				
W	25C	3	PCBTESTA				
W	25D	3	WIRE011				
W	25E	3					
W	25F	3					
W	26A	3	PCPGDATG				
W	26B	3	ACPGDATG				
W	26C	3	PCBTESTB				
W	26D	3					
W	26E	3	WIRE017				
W	26F	3					
W	27A	3	PCPGDATH				
W	27B	3	ACPGDATH				
W	27C	3	REPROSEL				
W	27D	3					

./.

GR: 99 (CONTINUATION)
PROCESSOR BACK PANEL

EL: 07 (CONTINUATION)

TYPE	PT	LV	SIG.NAME	COLOR	F	X	Y
W	27E	3	WIRE018				
W +	27F	3	DATACLK				
W	28A	3	PCPGDATI				
W	28B	3	BPTRMDAT				
W	28C	3	SPOOLMOD				
W +	28D	3	ZINCODRP				
W	28E	3					
W +	28F	3	ZEXGENO				
W	29A	3	PCIFCTST				
W	29B	3	PCBTEST				
W	29C	3	SYNCSEL				
W	29D	3					
W	29E	3					
W	29F	3					
W	30A	3	NTRMDTA				
W	30B	3	PCBALQ3				
W	30C	3	ACPGIRPT				
W	30D	3					
W	30E	3					
W +	30F	3	0 L				
W	31A	3	PCBTEST4				
W	31B	3	PCBALQ0				
W	31C	3	PERDATA				
W	31D	3					
W +	31E	3	ZCODIN1S				
W +	31F	3	0 L				
WP	32A	1	+10				
WP	32B	1	+10				
WP	32C	1	+10				
WP	32D	1	+10				
WP	32E	1	+10				
WP	32F	1	+10				

EL: 08 WRAP CONNECTOR J08.1, 3*32 PIN

TYPE	PT	LV	SIG.NAME	COLOR	F	X	Y
WP	01A	1	0 L				
WP	01B	1	0 L				
WP	01C	1	0 L				
WPQ	01D	1	0 L	9-5-0			
WP	01E	1	0 L				
WPQ	01F	1	0 L	9-4-0			
W	02A	3					
W	02B	3	WIRE001				
W +	02C	3	PERCAPFR				
WQ	02D	3	PB1	9			
W +	02E	3	PRGRON				
WQ	02F	3	EXEC	9-0			
W	03A	3					
W	03B	3	A800SUPV				

./.

```
*****************************************************************************************************************************
*   S T U D E R   *      L O C A T I O N     P I N     L I S T      *   82/01/12 * 15:02      *   P A G E     11    *
*****************************************************************************************************************************
TAPE LOCK SYSTEM 2000 A800: PARALLEL PROGRAMMER              1.228.900.00              79-10-05
```

GR: 99 (CONTINUATION)
PROCESSOR BACK PANEL

EL: 08 (CONTINUATION)

TYPE	PT	LV	SIG.NAME	COLOR	F	X	Y
W	03C	3	REQUEST				
WQ	03D	3	BULBDPA2	1			
W	03E	3					
WQ	03F	3	PBD	1-0			
W	04A	3	ZCODINSL				
W +	04B	3	PCTDCLR				
W	04C	3	ZINCODRP				
WQ	04D	3	PBA	5			
W	04E	3					
WQ	04F	3	PBI	8-5			
W	05A	3					
W +	05B	3	REPRECMX				
W	05C	3	ZEXGENO				
WQ	05D	3	PBH	4			
W	05E	3					
WQ	05F	3	BULBDPA1	4-8			
W	06A	3	PPWRON				
W +	06B	3	RECLATEN				
W	06C	3					
WQ	06D	3	BULBPBI3	8			
W	06E	3					
WQ	06F	3	INTGEN	5-R			
W	07A	3	WIRE014				
W	07B	3	STARTDR3				
W	07C	3	STARTDR4				
WQ	07D	3	EDIT CD	R			
W	07E	3					
WQ	07F	3	BULBDPB2	4-R			
W	08A	3	DATACLK				
W	08B	3					
W	08C	3					
WQ	08D	3	LOCKFAST	6			
W	08E	3					
WQ	08F	3	CODENDEF	5-6			
W	09A	3					
W +	09B	3	DATACLK				
W	09C	3					
WQ	09D	3	ADV RET	2			
W	09E	3					
WQ	09F	3	ADD	4-6			
W	10A	3	PCPGDATH				
W	10B	3	TRM/REC				
W	10C	3	A800DATA				
WQ	10D	3	MSEC	0			
W	10E	3					
WQ	10F	3	B-CALC	5-2			
W +	11A	3	REPROSEL				
W	11B	3	TDLATEN1				
W	11C	3	ACKNLG				
WQ	11D	3	GEN N SC	7			
W	11E	3					

./.

GR: 99 (CONTINUATION)
PROCESSOR BACK PANEL

EL: 08 (CONTINUATION)

TYPE	PT	LV	SIG.NAME	COLOR	F	X	Y
WQ	11F	3	SLDECOFF	4-2			
W	12A	3					
W	12B	3	- 5				
W	12C	3	- 5				
WQ	12D	3	0 L	5-1-0			
W	12E	3					
WQ	12F	3	0 L	4-1-0			
W +	13A	3	NEMGSTOP				
W	13B	3	TDLATEN2				
W	13C	3	WIRE029				
WQ	13D	3	B-UPPLIM	8-R			
W	13E	3					
WQ	13F	3	B-GENUSB	5-0			
W	14A	3					
W	14B	3	-12				
W	14C	3	-12				
W	14D	3					
W	14E	3					
W	14F	3					
W	15A	3					
W	15B	3	0 A				
W	15C	3	0 A				
W	15D	3					
W	15E	3					
W	15F	3					
W	16A	3					
W	16B	3	+12				
W	16C	3	+12				
W	16D	3					
W	16E	3					
W	16F	3					
W +	17A	3	YMOVETLS				
W	17B	3	WIRE019				
W	17C	3	WIRE015				
WQ	17D	3	ENTRY	6-2			
W	17E	3					
WQ	17F	3	SL NOTP	4-0			
W	18A	3	NPPWRON				
W	18B	3	WIRE012				
W	18C	3	WIRE020				
WQ	18D	3	BOFFSREG	9-5			
W	18E	3					
WQ	18F	3	PB7	8-6			
W	19A	3					
W	19B	3	0 K				
W	19C	3	0 K				
W +	19D	3	0 L				
W	19E	3					
W +	19F	3	0 L				
W	20A	3	+24				

./.

GR: 99 (CONTINUATION)
PROCESSOR BACK PANEL

EL: 08 (CONTINUATION)

TYPE	PT	LV	SIG.NAME	COLOR	F	X	Y
W	20C	3	+24				
W	20D	3					
W	20E	3					
W	20F	3					
W	21A	3	WIRE002				
W	21B	3	WIRE003				
W	21C	3	WIRE021				
WQ	21D	3	B-EXITSL	1-5			
W	21E	3					
WQ	21F	3	PBG	6-R			
W	22A	3	WIRE022				
W	22B	3	WIRE008				
W	22C	3	WIRE009				
WQ	22D	3	B-PHAS	9-4			
W	22E	3					
WQ	22F	3	PB4	8-2			
W	23A	3	WIRE023				
W	23B	3	WIRE024				
W	23C	3	WIRE010				
WQ	23D	3	FRAM ER	4-1			
W	23E	3					
WQ	23F	3	PBK	2-R			
W	24A	3	ZCODGENO				
W	24B	3	WIRE025				
W +	24C	3	CAP-EN				
WQ	24D	3	GEN SET	9-8			
W	24E	3					
WQ	24F	3	PBF	8-0			
W	25A	3	PMNTM 2				
W	25B	3	EXGENOUT				
W	25C	3	WIRE013				
WQ	25D	3	B-LOWLIM	8-1			
W	25E	3					
WQ	25F	3	LWLIM EX	0-R			
W	26A	3	TDCDMUX2				
W	26B	3					
W	26C	3	PCPGDATA				
WQ	26D	3	NO CD S	9-R			
W	26E	3					
WQ	26F	3	CONNFAIL	6-0			
W	27A	3	TDCDMUX1				
W	27B	3	WIRE018				
W	27C	3	PCPGDATB				
WQ	27D	3	B-ENTRYM	1-R			
W	27E	3					
WQ	27F	3	BENT/PKS	2-0			
W	28A	3	ZCODIN1S				
W	28B	3	CODIN1-S				
W	28C	3	WIRE017				
WQ	28D	3	SVPCI	9-6			
W	28E	3					

./.

```
*****************************************************************************************************************************
*   S T U D E R   *      L O C A T I O N     P I N     L I S T      *   82/01/12 * 15:02      *   P A G E     12    *
*****************************************************************************************************************************
TAPE LOCK SYSTEM 2000 A800: PARALLEL PROGRAMMER              1.228.900.00              79-10-05
```

GR: 99 (CONTINUATION)
PROCESSOR BACK PANEL

EL: 08 (CONTINUATION)

TYPE	PT	LV	SIG.NAME	COLOR	F	X	Y
WQ	28F	3	UPLIM EX	9-1-0			
W	29A	3					
W	29B	3	CODGENO				
W	29C	3	PCPGDATC				
WQ	29D	3	BULBPBF4	1-6			
W	29E	3					
WQ	29F	3	B-NOMAST	4-5-0			
W	30A	3	INCODREP				
W +	30B	3	SYNCSEL				
W	30C	3	LKMODEDR				
WQ	30D	3	BULBPBF3	9-2			
W +	30E	3	SVSERPRG				
WQ	30F	3	WMPRESO1	8-R-0			
W	31A	3	WIRE016				
W	31B	3	EDLEADDR				
W	31C	3	EDMODEDR				
WQ	31D	3	BULBPBF2	1-2			
W	31E	3					
WQ	31F	3	WMPRESO2	6-2-0			
WP	32A	1	+10				
WP	32B	1	+10				
WP	32C	1	+10				
WP	32D	1	+10				
WP	32E	1	+10				
WP	32F	1	+10				

EL: 09 WRAP CONNECTOR J09.1, 3*32 PIN

TYPE	PT	LV	SIG.NAME	COLOR	F	X	Y
WP	01A	1	0 L				
WP	01B	1	0 L				
WP	01C	1	0 L				
WPQ	01D	1	0 L	9-5-0			
WP	01E	1	0 L				
WPQ	01F	1	0 L	9-4-0			
W	02A	3	TRMADRO				
W	02B	3	BLKDSPO				
W	02C	3	BLKDSP1				
WQ	02D	3	WMPRESO3	9			
W	02E	3					
WQ	02F	3	DISPEN1	9-0			
W	03A	3	TRMADR1				
W	03B	3	BLKDSP2				
W	03C	3	BLKDSP3				
WQ	03D	3	BLKDSP1	1			
W	03E	3					
WQ	03F	3	WMPRESO4	1-0			
W	04A	3	TRMADR2				
W	04B	3	BLKDSP4				
W	04C	3	BLKDSP5				

./.

GR: 99 (CONTINUATION)
PROCESSOR BACK PANEL

EL: 09 (CONTINUATION)

TYPE	PT	LV	SIG.NAME	COLOR	F	X	Y
WQ	04D	3	NTRMDATA	5			
W	04E	3					
WQ	04F	3	DISPENO	8-5			
W	05A	3	TRMADR3				
W	05B	3	BLKDSP6				
W	05C	3	BLKDSP7				
WQ	05D	3	BADRSTRT	4			
W	05E	3					
WQ	05F	3	STOREOFS	4-8			
W	06A	3	TRMADR4				
W	06B	3	BLKDSP8				
W	06C	3	DISEND9+				
WQ	06D	3	BULBDPH1	8			
W	06E	3					
WQ	06F	3	DISPEN2	5-R			
W	07A	3	TRMADR5				
W	07B	3	DISEND9-				
W	07C	3	DISPENO				
WQ	07D	3	PHASING	R			
W	07E	3					
WQ	07F	3	BLKDSP0	4-R			
W	08A	3	TRMADR6				
W	08B	3	DISPEN1				
W	08C	3	DISPEN2				
WQ	08D	3	BULBPBG3	6			
W	08E	3					
WQ	08F	3	DISPEN3	5-6			
W	09A	3	NTRMDTA				
W	09B	3	PCDATINA				
W	09C	3	DISPEN3				
WQ	09D	3	MSEC	2			
W	09E	3					
WQ	09F	3	BLKDSP2	4-6			
W	10A	3					
W	10B	3	PCDATINB				
W	10C	3	DISPEN4				
WQ	10D	3	DIFF	0			
W	10E	3					
WQ	10F	3	HOLD	5-2			
W	11A	3					
W	11B	3	PCDATINC				
W	11C	3	DISPEN5				
WQ	11D	3	FRAM	7			
W	11E	3					
WQ	11F	3	LOCKSLOW	4-2			
W	12A	3					
W	12B	3	- 5				
W	12C	3	- 5				
WQ	12D	3	0 L	5-1-0			
W	12E	3					
WQ	12F	3	0 L	4-1-0			

./.

GR: 99 (CONTINUATION)
PROCESSOR BACK PANEL

EL: 09 (CONTINUATION)

TYPE	PT	LV	SIG.NAME	COLOR	F	X	Y
W	13A	3	12.5 HZ				
W	13B	3	PCDATIND				
W	13C	3	DISPEN6				
WQ	13D	3	B-REHEAR	8-R			
W +	13E	3	PMNTM 1				
WQ	13F	3	NTRMDATB	5-0			
W	14A	3					
W	14B	3	-12				
W	14C	3	-12				
W	14D	3					
W	14E	3					
W	14F	3					
W	15A	3					
W	15B	3	0 A				
W	15C	3	0 A				
W	15D	3					
W	15E	3					
W	15F	3					
W	16A	3					
W	16B	3	+12				
W	16C	3	+12				
W	16D	3					
W	16E	3					
W	16F	3					
W	17A	3	ADCDATAA				
W	17B	3	PCDATINE				
W	17C	3	DISPEN7				
WQ	17D	3	BULBPBH3	6-2			
W	17E	3					
WQ	17F	3	BLKDSP3	4-0			
W	18A	3	ADCDATAB				
W	18B	3	PPBPRESS				
W	18C	3	DISPEN8				
WQ	18D	3	OFS DISP	9-5			
W +	18E	3	PMNTM 3				
WQ	18F	3	BULBDPL1	8-6			
W	19A	3					
W	19B	3	0 K				
W	19C	3	0 K				
W +	19D	3	0 L				
W	19E	3					
W +	19F	3	0 L				
W	20A	3	+24				
W	20B	3	+24				
W	20C	3	+24				
W	20D	3					
W	20E	3					
W	20F	3					
W	21A	3	819.2KHZ				
W	21B	3	PBO				
W	21C	3	PB1				

./.

```
*****************************************************************************************************************
*  S T U D E R  *      L O C A T I O N     P I N     L I S T       *    82/01/12 * 15:02      *   P A G E     13    *
*****************************************************************************************************************
TAPE LOCK SYSTEM 2000 A800: PARALLEL PROGRAMMER              1.228.900.00              79-10-05

GR: 99   (CONTINUATION)
PROCESSOR BACK PANEL
****************************************

EL: 09   (CONTINUATION)
-----------------------------------------
TYPE PT  LV SIG.NAME COLOR F   X     Y
---- --- -- -------- ----- - ----- -----
WQ   21D 3  CODEFR/S 1-5
W  + 21E 3  PMNTM  4
WQ   21F 3  DISPEN4  6-R
W    22A 3  ADCDATAC
W    22B 3  PB2
W    22C 3  PB3
WQ   22D 3  PBULBHMS 9-4
W    22E 3
WQ   22F 3  BULBPBK5 8-2
W    23A 3  PPWRON
W    23B 3  PB4
W    23C 3  PB5
WQ   23D 3  ADCDATAE 4-1
W    23E 3
WQ   23F 3  BULBDPAO 2-R
W    24A 3  ADCDATAD
W    24B 3  PB6
W    24C 3  PMNTM  2
WQ   24D 3  BULBDPN1 9-8
W    24E 3
WQ   24F 3  NTRMDATC 8-0
W    25A 3  ENADC
W    25B 3  PB7
W    25C 3  PCDATRDY
WQ   25D 3  SLAV     8-1
W    25E 3
WQ   25F 3  SVPCII   0-R
W    26A 3  PBI
W    26B 3  PBK
W    26C 3  ADCDATAE
WQ   26D 3  UNAS B   9-R
W    26E 3
WQ   26F 3  BLKDSP4  6-0
W    27A 3  PBREC
W    27B 3  PBPLAY
W    27C 3  PCDATACC
WQ   27D 3  BULBPBL5 1-R
W    27E 3
WQ   27F 3  PBULBHMS 2-0
W    28A 3  PBA
W    28B 3  PBB
W    28C 3  PCPGDATA
WQ   28D 3  BULBDPP1 9-6
W    28E 3
WQ   28F 3  BLKDSP5  9-1-0
W    29A 3  PBC
W    29B 3  PBD
W    29C 3  PCPGDATB
WQ   29D 3  ADCDATAD 1-6
W    29E 3
WQ   29F 3  DISPEN6  4-5-0
                                        ./.

GR: 99   (CONTINUATION)
PROCESSOR BACK PANEL
****************************************

EL: 09   (CONTINUATION)
-----------------------------------------
TYPE PT  LV SIG.NAME COLOR F   X     Y
---- --- -- -------- ----- - ----- -----
W    30A 3  PBE
W    30B 3  PBF
W    30C 3  PCPGDATC
WQ   30D 3  PBULBHMS 9-2
W    30E 3
WQ   30F 3  DISPEN5  8-R-0
W    31A 3  PBG
W    31B 3  PBH
W    31C 3  PRIFTRXY
WQ   31D 3  DISPEN7  1-2
W    31E 3
WQ   31F 3  BLKDSP7  6-2-0
WP   32A 1  +10
WP   32B 1  +10
WP   32C 1  +10
WP   32D 1  +10
WP   32E 1  +10
WP   32F 1  +10

EL: 10   WRAP CONNECTOR J10.1, 3*32 PIN
-----------------------------------------
TYPE PT  LV SIG.NAME COLOR F   X     Y
---- --- -- -------- ----- - ----- -----
WPQ  01A 1    0 L    0
WPQ  01B 1    0 L    0
WPQ  01C 1    0 L    0
WQ   01D 3    0 L    9-5-0
W    01E 3
WQ   01F 3    0 L    9-4-0
W    02A 3  SYNC A
W    02B 3  PARKED
W    02C 3  FRAM ER
WQ   02D 3  NTRMDATD 9
W    02E 3
WQ   02F 3  BLKDSP6  9-0
W    03A 3  B-NOMAST
W    03B 3  NO CD S
W    03C 3  B-REHEAR
WQ   03D 3  ADCDATAC 1
W    03E 3
WQ   03F 3  DISPEN8  1-0
W    04A 3  ENTRY
W    04B 3  STOP
W    04C 3  REC
WQ   04D 3  MAST     5
W    04E 3
WQ   04F 3  KB       8-5
W    05A 3  FAST REW
W    05B 3  FAST FWD
W    05C 3  PLAY
WQ   05D 3  USER B   4
                                        ./.

GR: 99   (CONTINUATION)
PROCESSOR BACK PANEL
****************************************

EL: 10   (CONTINUATION)
-----------------------------------------
TYPE PT  LV SIG.NAME COLOR F   X     Y
---- --- -- -------- ----- - ----- -----
W    05E 3
WQ   05F 3  BLKDSP8  4-8
W    06A 3  EDIT
W    06B 3  CONNFAIL
W    06C 3  B-CALC
WQ   06D 3  SVPCIII  8
W    06E 3
WQ   06F 3  DISEND9+ 5-R
W    07A 3  BLKMMPRG
W    07B 3  BEDMMPRG
W    07C 3  BPKMMPRG
WQ   07D 3  ADCDATAB R
W    07E 3
WQ   07F 3  PB3      4-R
W    08A 3  GENRUN
W    08B 3  BPILMPRG
W    08C 3  GEN=MAST
WQ   08D 3  BULBPBM5 6
W    08E 3
WQ   08F 3  PBC      5-6
W    09A 3  UPLIM EX
W    09B 3  LWLIM EX
W    09C 3  BENT/PKS
WQ   09D 3  ADCDATAA 2
W    09E 3
WQ   09F 3  DISEND9- 4-6
W    10A 3  B-EXITSL
W    10B 3  B-ENTRYM
W    10C 3  B-LOWLIM
WQ   10D 3  BLOCATOR 0
W    10E 3
WQ   10F 3  PB5      5-2
W    11A 3  PMNTM  2
W    11B 3  PCDATRDY
W    11C 3  + 5  ADD
WQ   11D 3  REC      7
W    11E 3
WQ   11F 3  PB0      4-2
W    12A 3
W    12B 3  - 5
W    12C 3  - 5
WQ   12D 3    0 L    5-1-0
W    12E 3
WQ   12F 3    0 L    4-1-0
W    13A 3  B-UPPLIM
W    13B 3  BOFFSREG
W    13C 3  GEN SET
WQ   13D 3  EDIT     8-R
W    13E 3
WQ   13F 3  PBE      5-0
W    14A 3                              ./.

*****************************************************************************************************************
*  S T U D E R  *      L O C A T I O N     P I N     L I S T       *    82/01/12 * 15:02      *   P A G E     14    *
*****************************************************************************************************************
TAPE LOCK SYSTEM 2000 A800: PARALLEL PROGRAMMER              1.228.900.00              79-10-05

GR: 99   (CONTINUATION)
PROCESSOR BACK PANEL
****************************************

EL: 10   (CONTINUATION)
-----------------------------------------
TYPE PT  LV SIG.NAME COLOR F   X     Y
---- --- -- -------- ----- - ----- -----
W    14B 3  -12
W    14C 3  -12
W    14D 3
W    14E 3
W    14F 3
W    15A 3
W    15B 3    0 A
W    15C 3    0 A
W    15D 3
W    15E 3
W    15F 3
W    16A 3
W    16B 3  +12
W    16C 3  +12
W    16D 3
W    16E 3
W    16F 3
W    17A 3  B-PHAS
W    17B 3  HOLD
W    17C 3  INTGEN
WQ   17D 3  BPKMMPRG 6-2
W    17E 3
WQ   17F 3  BULBDPS2 4-0
W    18A 3  UNAS B
W    18B 3  USER B
W    18C 3  DIFF
WQ   18D 3  GENRUN   9-5
W    18E 3
WQ   18F 3  PARKED   8-6
W    19A 3
W    19B 3    0 K
W    19C 3    0 K
W  + 19D 3    0 L
W    19E 3
W  + 19F 3    0 L
W    20A 3
W    20B 3  +24
W    20C 3  +24
W    20D 3
W    20E 3
W    20F 3
W    21A 3  OFS DISP
W    21B 3  SLAV
W    21C 3  MAST
WQ   21D 3  TX       1-5
W    21E 3
WQ   21F 3  BULBDPT2 6-R
W    22A 3  KB
W    22B 3  MSEC
W    22C 3  FRAM
WQ   22D 3  SYNC PLT 9-4
                                        ./.

GR: 99   (CONTINUATION)
PROCESSOR BACK PANEL
****************************************

EL: 10   (CONTINUATION)
-----------------------------------------
TYPE PT  LV SIG.NAME COLOR F   X     Y
---- --- -- -------- ----- - ----- -----
W    22E 3
WQ   22F 3  STOP     8-2
W    23A 3  CODEFR/S
W    23B 3  B-RECENB
W    23C 3  BADRSTRT
WQ   23D 3  FAST FWD 4-1
W    23E 3
WQ   23F 3  +10 SW   2-R
W    24A 3  SL NOTP
W    24B 3  ADV RET
W    24C 3  PHASING
WQ   24D 3  BEDMMPRG 9-8
W    24E 3
WQ   24F 3  BULBDPU2 8-0
W    25A 3  TX
W    25B 3  STOREOFS
W    25C 3  LOCKSLOW
WQ   25D 3  PBB      8-1
W    25E 3
WQ   25F 3  SYNC B   0-R
W    26A 3  LOCKFAST
W    26B 3  ENADC
W    26C 3  PBULBHMS
WQ   26D 3  B-RECENB 9-R
W    26E 3
WQ   26F 3  BPILMPRG 6-0
W    27A 3  EDIT CD
W    27B 3  CODENDEF
W    27C 3  BLOCATOR
WQ   27D 3  PBPLAY   1-R
W    27E 3
WQ   27F 3  FAST REW 2-0
W    28A 3  SYNC PLT
W    28B 3  SYNC B
W    28C 3  B-GENUSB
WQ   28D 3  PBREC    9-6
W    28E 3
WQ   28F 3  BLKMMPRG 9-1-0
W    29A 3  TRMADR0
W    29B 3  TRMADR1
W    29C 3  TRMADR2
WQ   29D 3  GEN=MAST 1-6
W    29E 3
WQ   29F 3  SYNC A   4-5-0
W    30A 3  TRMADR6
W    30B 3  NTRMDTA
W    30C 3  PPWRON
WQ   30D 3    0 SW   9-2
W    30E 3
WQ   30F 3  PB6      8-R-0
W    31A 3  TRMADR3
                                        ./.

GR: 99   (CONTINUATION)
PROCESSOR BACK PANEL
****************************************

EL: 10   (CONTINUATION)
-----------------------------------------
TYPE PT  LV SIG.NAME COLOR F   X     Y
---- --- -- -------- ----- - ----- -----
W    31B 3  TRMADR4
W    31C 3  TRMADR5
WQ   31D 3  PLAY     1-2
W    31E 3
WQ   31F 3  PBZ      6-2-0
WPQ  32A 1  +10      5
WPQ  32B 1  +10      5
WPQ  32C 1  +10      5
W    32D 3  +10
W    32E 3
W    32F 3  +10

EL: 11   WRAP CONNECTOR J11.1, 3*32 PIN
-----------------------------------------
TYPE PT  LV SIG.NAME COLOR F   X     Y
---- --- -- -------- ----- - ----- -----
WP   01A 1    0 L
WP   01B 1    0 L
WP   01C 1    0 L
W    02A 3
W    02B 3
W    02C 3  WIRE030
W    03A 3
W    03B 3
W    03C 3  WIRE031
W    04A 3
W  + 04B 3  CODIN1-S
W    04C 3  WIRE032
W    05A 3  WIRE029
W    05B 3
W    05C 3
W    06A 3
W    06B 3  WIRE028
W    06C 3  WIRE028
W    07A 3
W  + 07B 3  CCSUPVIS
W    07C 3
W    08A 3  WIRE004
W    08B 3
W    08C 3  WIRE006
W    09A 3  WIRE005
W    09B 3
W    09C 3  WIRE007
W    10A 3  WIRE004
W    10B 3
W    10C 3  WIRE006
W    11A 3  WIRE005
W    11B 3
W    11C 3  WIRE007
WP   12A 1  - 5
WP   12B 1  - 5
                                        ./.
```

```
*****************************************************************************************************************************
*   S T U D E R   *      L O C A T I O N     P I N     L I S T       *    82/01/12 * 15:02      *   P A G E     15    *
*****************************************************************************************************************************
TAPE LOCK SYSTEM 2000 A800: PARALLEL PROGRAMMER              1.228.900.00             79-10-05

GR: 99   (CONTINUATION)
PROCESSOR BACK PANEL
*****************************************

EL: 11   (CONTINUATION)
-----------------------------------------
TYPE PT  LV SIG.NAME COLOR F    X      Y
---- --- -- -------- ----- - ----- -----
WP   12C 1  - 5
W    13A 3
W    13B 3
W    13C 3
WP   14A 1  -12
WP   14B 1  -12
WP   14C 1  -12
WP   15A 1    0 A
WP   15B 1    0 A
WP   15C 1    0 A
WP   16A 1  +12
WP   16B 1  +12
WP   16C 1  +12
W    17A 3
W    17B 3
W    17C 3
W    18A 3
W    18B 3  WIRE026
W    18C 3
WP   19A 1    0 K
WP   19B 1    0 K
WP   19C 1    0 K
WP   20A 1  +24
WP   20B 1  +24
WP   20C 1  +24
W    21A 3
W    21B 3
W    21C 3  WIRE054
W    22A 3
W    22B 3
W    22C 3  WIRE055
W    23A 3  WIRE026
W    23B 3  WIRE026
W    23C 3  WIRE026
W  + 24A 3  PPWRON
W    24B 3
W  + 24C 3  SYNCSEL
W  + 25A 3  CODGENO
W    25B 3
W  + 25C 3  EXGENOUT
W  + 26A 3  REPRECMX
W    26B 3
W    26C 3  WIRE056
W  + 27A 3  RECLATEN
W    27B 3
W  + 27C 3  REPROSEL
W  + 28A 3  PCPGDATA
W    28B 3
W    28C 3  WIRE057
W  + 29A 3  PCPGDATB
W    29B 3
                                      ./.

GR: 99   (CONTINUATION)
PROCESSOR BACK PANEL
*****************************************

EL: 11   (CONTINUATION)
-----------------------------------------
TYPE PT  LV SIG.NAME COLOR F    X      Y
---- --- -- -------- ----- - ----- -----
W  + 29C 3  INCODREP
W  + 30A 3  PCPGDATC
W    30B 3
W    30C 3  WIRE058
W  + 31A 3  PCPGDATH
W    31B 3
W  + 31C 3  PMNTM  2
WP   32A 1  +10
WP   32B 1  +10
WP   32C 1  +10

EL: 12  WRAP CONNECTOR J12.1, 3*32 PIN
-----------------------------------------
TYPE PT  LV SIG.NAME COLOR F    X      Y
---- --- -- -------- ----- - ----- -----
WP   01A 1    0 L
WP   01B 1    0 L
WP   01C 1    0 L
W    02A 3
W    02B 3
W    02C 3
W    03A 3
W    03B 3
W    03C 3
W    04A 3
W    04B 3
W    04C 3
W  + 05A 3  INCODREP
W    05B 3
W    05C 3
W    06A 3
W    06B 3
W    06C 3  WIRE058
W    07A 3
W    07B 3
W    07C 3
W    08A 3
W    08B 3
W    08C 3
W    09A 3
W    09B 3
W    09C 3  WIRE057
W    10A 3
W    10B 3
W    10C 3
W    11A 3
W    11B 3
W  + 11C 3  CODIN1-S
WP   12A 1  - 5
WP   12B 1  - 5
WP   12C 1  - 5
                                      ./.

GR: 99   (CONTINUATION)
PROCESSOR BACK PANEL
*****************************************

EL: 12   (CONTINUATION)
-----------------------------------------
TYPE PT  LV SIG.NAME COLOR F    X      Y
---- --- -- -------- ----- - ----- -----
W    13A 3
W    13B 3
W    13C 3
WP   14A 1  -12
WP   14B 1  -12
WP   14C 1  -12
WP   15A 1    0 A
WP   15B 1    0 A
WP   15C 1    0 A
WP   16A 1  +12
WP   16B 1  +12
WP   16C 1  +12
W    17A 3
W    17B 3
W    17C 3
W    18A 3
W    18B 3
W    18C 3
WP   19A 1    0 K
WP   19B 1    0 K
WP   19C 1    0 K
WP   20A 1  +24
WP   20B 1  +24
WP   20C 1  +24
W    21A 3
W    21B 3
W    21C 3  WIRE054
W  + 22A 3    0 L
W    22B 3
W    22C 3  WIRE055
W    23A 3  WIRE026
W    23B 3  WIRE026
W    23C 3  WIRE026
W    24A 3
W    24B 3
W    24C 3
W    25A 3
W    25B 3
W    25C 3
W    26A 3
W    26B 3
W    26C 3
W    27A 3
W    27B 3
W    27C 3
W    28A 3  WIRE027
W    28B 3  WIRE027
W    28C 3  WIRE027
W  + 29A 3  REPROSEL
W    29B 3
W    29C 3
                                      ./.
```

```
*****************************************************************************************************************************
*   S T U D E R   *      L O C A T I O N     P I N     L I S T       *    82/01/12 * 15:02      *   P A G E     16    *
*****************************************************************************************************************************
TAPE LOCK SYSTEM 2000 A800: PARALLEL PROGRAMMER              1.228.900.00             79-10-05

GR: 99   (CONTINUATION)
PROCESSOR BACK PANEL
*****************************************

EL: 12   (CONTINUATION)
-----------------------------------------
TYPE PT  LV SIG.NAME COLOR F    X      Y
---- --- -- -------- ----- - ----- -----
W    30A 3
W    30B 3
W  + 30C 3  SYNCSEL
W    31A 3
W    31B 3
W    31C 3  WIRE056
WP   32A 1  +10
WP   32B 1  +10
WP   32C 1  +10

EL: 13  WRAP CONNECTOR J13.1, 3*32 PIN
-----------------------------------------
TYPE PT  LV SIG.NAME COLOR F    X      Y
---- --- -- -------- ----- - ----- -----
WP   01A 1    0 L
WP   01B 1    0 L
WP   01C 1    0 L
W    02A 3  WIRE030
W    02B 3
W    02C 3  R15 1322
W    03A 3  WIRE031
W    03B 3
W    03C 3
W    04A 3  WIRE032
W    04B 3
W    04C 3  INCODREP
W    05A 3
W    05B 3  25    HZ
W    05C 3
W    06A 3
W    06B 3  50    HZ
W    06C 3
W    07A 3  DMFAIL-M
W    07B 3  100   HZ
W    07C 3  DMFAIL-S
W    08A 3  P1DM  -M
W    08B 3  PER1DM-S
W    08C 3  CODIN1-S
W    09A 3  P2DM  -M
W    09B 3  PER2DM-S
W    09C 3
W    10A 3  P3DM  -M
W    10B 3  PER3DM-S
W    10C 3
W    11A 3  P4DM  -M
W    11B 3  PER4DM-S
W  + 11C 3  P2DM  -S
WP   12A 1  - 5
WP   12B 1  - 5
WP   12C 1  - 5
W    13A 3  DMOSCI-M
                                      ./.

GR: 99   (CONTINUATION)
PROCESSOR BACK PANEL
*****************************************

EL: 13   (CONTINUATION)
-----------------------------------------
TYPE PT  LV SIG.NAME COLOR F    X      Y
---- --- -- -------- ----- - ----- -----
W    13B 3
W    13C 3  DMOSCI-S
WP   14A 1  -12
WP   14B 1  -12
WP   14C 1  -12
WP   15A 1    0 A
WP   15B 1    0 A
WP   15C 1    0 A
WP   16A 1  +12
WP   16B 1  +12
WP   16C 1  +12
W    17A 3  DMCOD -M
W    17B 3
W    17C 3  DMCOD -S
W    18A 3  NDMCOD-M
W    18B 3
W    18C 3  NDMCOD-S
WP   19A 1    0 K
WP   19B 1    0 K
WP   19C 1    0 K
WP   20A 1  +24
WP   20B 1  +24
WP   20C 1  +24
W    21A 3  PER1DM-M
W    21B 3
W    21C 3  P1DM  -S
W    22A 3  PER2DM-M
W    22B 3    0 1325
W    22C 3  P2DM  -S
W    23A 3  PER3DM-M
W    23B 3
W    23C 3  P3DM  -S
W    24A 3  PER4DM-M
W    24B 3
W    24C 3  P4DM  -S
W  + 25A 3  PMNTM  2
W    25B 3
W    25C 3
W    26A 3  DIRUP -M
W    26B 3
W    26C 3  DIRUP -S
W    27A 3  DIRDWN-M
W    27B 3
W    27C 3  DIRDWN-S
W  + 28A 3  EXFRQDAT
W  + 28B 3  + 5  ADD
W    28C 3
W    29A 3
W  + 29B 3  + 5  ADD
W    29C 3  PSYNC -S
W    30A 3
                                      ./.

GR: 99   (CONTINUATION)
PROCESSOR BACK PANEL
*****************************************

EL: 13   (CONTINUATION)
-----------------------------------------
TYPE PT  LV SIG.NAME COLOR F    X      Y
---- --- -- -------- ----- - ----- -----
W    30B 3
W    30C 3
W    31A 3  PSYNC -M
W    31B 3
W    31C 3
WP   32A 1  +10
WP   32B 1  +10
WP   32C 1  +10

EL: 14  WRAP CONNECTOR J14.1, 3*32 PIN
-----------------------------------------
TYPE PT  LV SIG.NAME COLOR F    X      Y
---- --- -- -------- ----- - ----- -----
WP   01A 1    0 L
WP   01B 1    0 L
WP   01C 1    0 L
W    02A 3
W    02B 3  G-SFRSLA
W    02C 3  ACPGDATA
W    03A 3
W    03B 3  G-SFRSLB
W    03C 3  ACPGDATB
W    04A 3
W    04B 3  ARPOUT-D
W    04C 3  ACPGDATC
W    05A 3
W    05B 3  ARPOUT-C
W    05C 3  ACPGDATD
W    06A 3
W    06B 3  ARPOUT-B
W    06C 3  ACPGDATE
W    07A 3
W    07B 3  ARPOUT-A
W    07C 3  ACPGDATF
W    08A 3
W    08B 3  ARIF-Y
W    08C 3  ACPGDATG
W    09A 3
W    09B 3
W    09C 3  ACPGDATH
W    10A 3
W    10B 3  COSTCKCT
W    10C 3  AREN2
W    11A 3
W    11B 3  100   HZ
W    11C 3  AREN1
WP   12A 1  - 5
WP   12B 1  - 5
WP   12C 1  - 5
W    13A 3
W    13B 3  ARSEROUT
                                      ./.
```

```
*****************************************************************************************************************
*  S T U D E R  *      L O C A T I O N    P I N    L I S T      *   82/01/12 * 15:02     *   P A G E    17   *
*****************************************************************************************************************
TAPE LOCK SYSTEM 2000 A800: PARALLEL PROGRAMMER              1.228.900.00            79-10-05

GR: 99   (CONTINUATION)
PROCESSOR BACK PANEL
****************************************

EL: 14   (CONTINUATION)
-----------------------------------------
TYPE PT  LV SIG.NAME COLOR F   X     Y
---- --- -- -------- ----- - ----- -----
W    13C 3  NINVCTR1
WP   14A 1  -12
WP   14B 1  -12
WP   14C 1  -12
WP   15A 1    0 A
WP   15B 1    0 A
WP   15C 1    0 A
WP   16A 1  +12
WP   16B 1  +12
WP   16C 1  +12
W    17A 3
W    17B 3  NACRES1
W    17C 3  NINVCTR2
W    18A 3
W    18B 3  IFCDATIN
W    18C 3  ADDRCT-A
WP   19A 1    0 K
WP   19B 1    0 K
WP   19C 1    0 K
WP   20A 1  +24
WP   20B 1  +24
WP   20C 1  +24
W    21A 3
W    21B 3  PMNTM  4
W    21C 3  ADDRCT-B
W    22A 3
W    22B 3  NPPWRON
W    22C 3  ADDRCT-C
W    23A 3
W    23B 3  TDATAM/S
W    23C 3  ADDRCT-D
W    24A 3
W    24B 3  PERDATA
W    24C 3  ADDRCT-E
W    25A 3
W    25B 3  ACSERDAT
W    25C 3  ADDRCT-F
W    26A 3
W    26B 3  AUXDATIN
W    26C 3  ADDRCT-G
W    27A 3
W    27B 3  EXFRQDAT
W    27C 3  ADDRCT-H
W    28A 3
W    28B 3  DIVCT- A
W    28C 3  ADDRCT-I
W  + 29A 3  + 5  ADD
W    29B 3  DIVCT- B
W    29C 3  ADDRCT-K
W  + 30A 3  + 5  ADD
W    30B 3  DIVCT- C
                                        ./.

GR: 99   (CONTINUATION)
PROCESSOR BACK PANEL
****************************************

EL: 14   (CONTINUATION)
-----------------------------------------
TYPE PT  LV SIG.NAME COLOR F   X     Y
---- --- -- -------- ----- - ----- -----
W    30C 3  ARPOUT-E
W    31A 3
W    31B 3  DIVCT- D
W    31C 3  ARPOUT-F
WP   32A 1  +10
WP   32B 1  +10
WP   32C 1  +10

EL: 15  WIRING WITH: GROUND
-----------------------------------------
TYPE PT  LV SIG.NAME COLOR F   X     Y
---- --- -- -------- ----- - ----- -----
WPQ  01A 1%   0 L    4
WPQ  01B 1%   0 L    4
WPQ  01C 1%   0 L    4
W    02A 3  ACPGAD00
W    02B 3  PMNTM  1
W    02C 3  PCPGAD00
W    03A 3  ACPGAD01
W    03B 3  PMNTM  2
W    03C 3  PCPGAD01
W    04A 3  ACPGAD02
W    04B 3  PMNTM  3
W    04C 3  PCPGAD02
W    05A 3  ACPGAD03
W    05B 3  PMNTM  4
W    05C 3  PCPGAD03
W    06A 3  ACPGAD04
W    06B 3  819.2KHZ
W    06C 3  PCPGAD04
W    07A 3  ACPGAD05
W    07B 3  FRPWRON
W    07C 3  PCPGAD05
W    08A 3  ACPGAD06
W    08B 3  PCPGAD10
W    08C 3  PCPGAD06
W    09A 3  ACPGAD07
W    09B 3  PCPGAD11
W    09C 3  PCPGAD07
W    10A 3  ACPGAD08
W    10B 3  ACPGAD10
W    10C 3  PCPGAD08
W    11A 3  ACPGAD09
W    11B 3  ACPGAD11
W    11C 3  PCPGAD09
WP   12A 1  - 5
WP   12B 1  - 5
WP   12C 1  - 5
W    13A 3  ACINSTEN
W    13B 3  + 5  ADD
W    13C 3  NPINSTEN
                                        ./.

GR: 99   (CONTINUATION)
PROCESSOR BACK PANEL
****************************************

EL: 15   (CONTINUATION)
-----------------------------------------
TYPE PT  LV SIG.NAME COLOR F   X     Y
---- --- -- -------- ----- - ----- -----
WP   14A 1  -12
WP   14B 1  -12
WP   14C 1  -12
WP   15A 1    0 A
WP   15B 1    0 A
WP   15C 1    0 A
WP   16A 1  +12
WP   16B 1  +12
WP   16C 1  +12
W    17A 3  ACPGDATA
W    17B 3  PCTAPFLG
W    17C 3  PCPGDATA
W    18A 3  ACPGDATB
W    18B 3  ACTAPFLG
W    18C 3  PCPGDATB
WP   19A 1    0 K
WP   19B 1    0 K
WP   19C 1    0 K
WP   20A 1  +24
WP   20B 1  +24
WP   20C 1  +24
W    21A 3  ACPGDATC
W    21B 3
W    21C 3  PCPGDATC
W    22A 3  ACPGDATD
W    22B 3
W    22C 3  PCPGDATD
W    23A 3  ACPGDATE
W    23B 3
W    23C 3  PCPGDATE
W    24A 3  ACPGDATF
W    24B 3
W    24C 3  PCPGDATF
W    25A 3  ACPGDATG
W    25B 3
W    25C 3  PCPGDATG
W    26A 3  ACPGDATH
W    26B 3
W    26C 3  PCPGDATH
W    27A 3  ACPGDATI
W    27B 3
W    27C 3  PCPGDATI
W    28A 3  ACPGDATK
W    28B 3
W    28C 3  PCPGDATK
W    29A 3  ACPGDATL
W    29B 3
W    29C 3  PCPGDATL
W    30A 3  ACPGDATM
W    30B 3
W    30C 3  PCPGDATM
                                        ./.
```

```
*****************************************************************************************************************
*  S T U D E R  *      L O C A T I O N    P I N    L I S T      *   82/01/12 * 15:02     *   P A G E    18   *
*****************************************************************************************************************
TAPE LOCK SYSTEM 2000 A800: PARALLEL PROGRAMMER              1.228.900.00            79-10-05

GR: 99   (CONTINUATION)
PROCESSOR BACK PANEL
****************************************

EL: 15   (CONTINUATION)
-----------------------------------------
TYPE PT  LV SIG.NAME COLOR F   X     Y
---- --- -- -------- ----- - ----- -----
W    31A 3  ACPGDATN
W    31B 3
W    31C 3  PCPGDATN
WP   32A 1  +10
WP   32B 1  +10
WP   32C 1  +10

EL: 16  WRAP CONNECTOR J16.1, 3*32 PIN
-----------------------------------------
TYPE PT  LV SIG.NAME COLOR F   X     Y
---- --- -- -------- ----- - ----- -----
WP   01A 1    0 L
WP   01B 1    0 L
WP   01C 1    0 L
W    02A 3
W    02B 3
W    02C 3
W    03A 3
W    03B 3
W    03C 3
W    04A 3
W    04B 3
W    04C 3
W    05A 3
W    05B 3
W    05C 3
W    06A 3
W    06B 3
W    06C 3
W    07A 3
W    07B 3
W    07C 3
W    08A 3
W    08B 3
W    08C 3
W    09A 3
W    09B 3
W    09C 3
W    10A 3
W    10B 3
W    10C 3
W    11A 3
W    11B 3
W    11C 3
WP   12A 1  - 5
WP   12B 1  - 5
WP   12C 1  - 5
W    13A 3
W    13B 3
W    13C 3
WP   14A 1  -12
                                        ./.

GR: 99   (CONTINUATION)
PROCESSOR BACK PANEL
****************************************

EL: 16   (CONTINUATION)
-----------------------------------------
TYPE PT  LV SIG.NAME COLOR F   X     Y
---- --- -- -------- ----- - ----- -----
WP   14B 1  -12
WP   14C 1  -12
WP   15A 1    0 A
WP   15B 1    0 A
WP   15C 1    0 A
WP   16A 1  +12
WP   16B 1  +12
WP   16C 1  +12
W    17A 3
W    17B 3
W    17C 3
W    18A 3
W    18B 3
W    18C 3
WP   19A 1    0 K
WP   19B 1    0 K
WP   19C 1    0 K
WP   20A 1  +24
WP   20B 1  +24
WP   20C 1  +24
W    21A 3
W    21B 3
W    21C 3
W    22A 3
W    22B 3
W    22C 3
W    23A 3
W    23B 3
W    23C 3
W    24A 3
W    24B 3
W    24C 3
W    25A 3
W    25B 3
W    25C 3
W    26A 3
W    26B 3
W    26C 3
W    27A 3
W    27B 3
W    27C 3
W    28A 3
W    28B 3
W    28C 3
W    29A 3
W    29B 3
W    29C 3
W    30A 3
W    30B 3
W    30C 3
W    31A 3
                                        ./.

GR: 99   (CONTINUATION)
PROCESSOR BACK PANEL
****************************************

EL: 16   (CONTINUATION)
-----------------------------------------
TYPE PT  LV SIG.NAME COLOR F   X     Y
---- --- -- -------- ----- - ----- -----
W    31B 3
W    31C 3
WP   32A 1  +10
WP   32B 1  +10
WP   32C 1  +10

EL: 17  WRAP CONNECTOR J17.1, 3*32 PIN
-----------------------------------------
TYPE PT  LV SIG.NAME COLOR F   X     Y
---- --- -- -------- ----- - ----- -----
WPQ  01A 1    0 L    0
WP   01B 1    0 L
WPQ  01C 1    0 L    0
W  + 02A 3  + 5  ADD
W    02B 3  WIRE033
WQ   02C 3  MCRECEDR 4
WQ   03A 3  MCRESDR1 7
W    03B 3  WIRE034
WQ   03C 3  MCZSETDR 5
W    04A 3
W    04B 3  WIRE035
WQ   04C 3  MCKCUTDR 6
W    05A 3
W    05B 3  SVPCI
W    05C 3  WIRE040
W    06A 3
W    06B 3  SVPCII
W    06C 3  WIRE041
WQ   07A 3  MCDAT1DR 8
W    07B 3  WIRE036
W    07C 3  WIRE042
WQ   08A 3  MCDAT2DR 9
W    08B 3  TRMADR3
W    08C 3  WIRE043
WQ   09A 3  MCMUTEDR 1
W    09B 3  TRMADR2
W    09C 3  WIRE044
W    10A 3
W    10B 3  TRMADR1
W    10C 3  WIRE045
W    11A 3
W    11B 3  TRMADR0
W    11C 3  SVPCIII
WP   12A 1  - 5
WP   12B 1  - 5
WP   12C 1  - 5
W    13A 3
W    13B 3  BPTRMDAT
W    13C 3  WIRE046
WP   14A 1  -12
WP   14B 1  -12
                                        ./.
```

```
*****************************************************************************************************************************
*   S T U D E R   *      L O C A T I O N    P I N    L I S T      *   82/01/12 * 15:02      *   P A G E     19    *
*****************************************************************************************************************************
TAPE LOCK SYSTEM 2000 A800: PARALLEL PROGRAMMER                1.228.900.00              79-10-05
```

GR: 99 (CONTINUATION)
PROCESSOR BACK PANEL

EL: 17 (CONTINUATION)

TYPE	PT	LV	SIG.NAME	COLOR	F	X	Y
WP	14C	1	-12				
WP	15A	1	0 A				
WP	15B	1	0 A				
WP	15C	1	0 A				
WP	16A	1	+12				
WP	16B	1	+12				
WP	16C	1	+12				
WQ	17A	3	PARKEDDR	4			
W	17B	3	PMNTM	2			
W	17C	3	WIRE047				
W	18A	3	SNCPLTDR				
W +	18B	3	PCBPLTCL				
W	18C	3	WIRE048				
WPQ	19A	1	0 K	0			
WP	19B	1	0 K				
WPQ	19C	1	0 K	0			
WPQ	20A	1	+24	1			
WP	20B	1	+24				
WPQ	20C	1	+24	2			
W	21A	3	PROGSUPV				
W	21B	3	PCBPWE				
W	21C	3	WIRE049				
WQ	22A	3	MCRHRSDR	1			
W	22B	3	TRMADR4				
W	22C	3	WIRE050				
W	23A	3	WIRE011				
W	23B	3	PPWRON				
W	23C	3	WIRE051				
W	24A	3	STARTDR2				
W	24B	3	SVSERPRG				
W	24C	3	WIRE052				
W	25A	3	SYNCBDR				
W	25B	3	CCSUPVIS				
WQ	25C	3	MCSUPVIS	6			
WQ	26A	3	EXTRECCM	5			
W	26B	3	PCPGDATD				
W	26C	3	WIRE037				
WQ	27A	3	MPWRON	2			
W	27B	3	PCBPMUXB				
W	27C	3	WIRE038				
W	28A	3	PCPGDATH				
W	28B	3	PCBPMUXA				
WQ	28C	3	MCDATRDY	2			
W	29A	3	BPLATEN				
W	29B	3	PCPGDATA				
W	29C	3	STARTDR1				
WQ	30A	3	MCDATODR	4			
W	30B	3	PCPGDATB				
WQ	30C	3	LKMODDR2	3			
W	31A	3	WIRE039				
W	31B	3	PCPGDATC				

./.

GR: 99 (CONTINUATION)
PROCESSOR BACK PANEL

EL: 17 (CONTINUATION)

TYPE	PT	LV	SIG.NAME	COLOR	F	X	Y
W	31C	3	WIRE053				
WP	32A	1	+10				
WP	32B	1	+10				
WPQ	32C	1	+10	1			

EL: 18 WRAP CONNECTOR J18.1, 3*32 PIN

TYPE	PT	LV	SIG.NAME	COLOR	F	X	Y
WPQ	01A	1	0 L	0			
WPQ	01B	1	0 L	0			
WPQ	01C	1	0 L	0			
W	02A	3					
W	02B	3					
W	02C	3	WIRE029				
W +	03A	3	+ 5 ADD				
W	03B	3					
W +	03C	3	+ 5 ADD				
W	04A	3					
W	04B	3					
W	04C	3					
W	05A	3					
W	05B	3					
W	05C	3					
W	06A	3					
W	06B	3					
W	06C	3					
WQ	07A	3	+10AD150	5			
WQ	07B	3	+10AD150	5			
WQ	07C	3	+10AD150	5			
W	08A	3					
W	08B	3					
W	08C	3					
W	09A	3					
W	09B	3					
W	09C	3					
WQ	10A	3	0.0AD150	0			
WQ	10B	3	0.0AD150	0			
WQ	10C	3	0.0AD150	0			
W	11A	3					
W	11B	3					
W	11C	3					
WP	12A	1	- 5				
WP	12B	1	- 5				
WP	12C	1	- 5				
W	13A	3					
W	13B	3					
W +	13C	3	PMNTM	1			
WP	14A	1	-12				
WP	14B	1	-12				
WP	14C	1	-12				

./.

GR: 99 (CONTINUATION)
PROCESSOR BACK PANEL

EL: 16 (CONTINUATION)

TYPE	PT	LV	SIG.NAME	COLOR	F	X	Y
WP	15A	1	0 A				
WP	15B	1	0 A				
WP	15C	1	0 A				
WP	16A	1	+12				
WP	16B	1	+12				
WP	16C	1	+12				
W	17A	3					
W	17B	3					
W	17C	3					
W	18A	3					
W	18B	3					
W	18C	3					
WP	19A	1	0 K				
WP	19B	1	0 K				
WP	19C	1	0 K				
WP	20A	1	+24				
WP	20B	1	+24				
WP	20C	1	+24				
W	21A	3					
W	21B	3					
W	21C	3					
W	22A	3					
W	22B	3					
W	22C	3					
W	23A	3					
W	23B	3					
W	23C	3					
W	24A	3					
W	24B	3					
W	24C	3					
W	25A	3					
W	25B	3					
W	25C	3					
W +	26A	3	PCPGDATH				
W	26B	3					
W	26C	3					
W	27A	3					
W	27B	3					
W	27C	3					
W	28A	3	+ 5 ADD				
W	28B	3	+ 5 ADD				
W	28C	3	+ 5 ADD				
W	29A	3	+ 5 ADD				
W	29B	3	+ 5 ADD				
W	29C	3	+ 5 ADD				
W	30A	3	+ 5 ADD				
W	30B	3	+ 5 ADD				
W	30C	3	+ 5 ADD				
W	31A	3					
W	31B	3					
W	31C	3					

./.

```
*****************************************************************************************************************************
*   S T U D E R   *      L O C A T I O N    P I N    L I S T      *   82/01/12 * 15:02      *   P A G E     20    *
*****************************************************************************************************************************
TAPE LOCK SYSTEM 2000 A800: PARALLEL PROGRAMMER                1.228.900.00              79-10-05
```

GR: 99 (CONTINUATION)
PROCESSOR BACK PANEL

EL: 18 (CONTINUATION)

TYPE	PT	LV	SIG.NAME	COLOR	F	X	Y
WPQ	32A	1	+10	5			
WPQ	32B	1	+10	5			
WPQ	32C	1	+10	5			

EL: 19 WRAP CONNECTOR J19.1, 3*32 PIN

TYPE	PT	LV	SIG.NAME	COLOR	F	X	Y
WP	01A	1	0 L				
WP	01B	1	0 L				
WP	01C	1	0 L				
W	02A	3					
W	02B	3					
W	02C	3					
W	03A	3					
W	03B	3					
W	03C	3					
W	04A	3	WIRE060				
W	04B	3	WIRE060				
W	04C	3	WIRE060				
W	05A	3	+10				
W	05B	3	+10				
W	05C	3	+10				
W +	06A	3	819.2KHZ				
W	06B	3					
W	06C	3					
W	07A	3	WIRE059				
W	07B	3	WIRE059				
W	07C	3	WIRE059				
W	08A	3	+24				
W	08B	3	+24				
W	08C	3	+24				
W	09A	3					
W	09B	3					
W	09C	3					
W	10A	3	0.0IN150				
W	10B	3	0.0IN150				
W	10C	3	0.0IN150				
W	11A	3					
W	11B	3					
W	11C	3					
WP	12A	1	- 5				
WP	12B	1	- 5				
WP	12C	1	- 5				
W	13A	3					
W	13B	3					
W +	13C	3	PMNTM	1			
WP	14A	1	-12				
WP	14B	1	-12				
WP	14C	1	-12				
WP	15A	1	0 A				

./.

GR: 99 (CONTINUATION)
PROCESSOR BACK PANEL

EL: 19 (CONTINUATION)

TYPE	PT	LV	SIG.NAME	COLOR	F	X	Y
WP	15B	1	0 A				
WP	15C	1	0 A				
WP	16A	1	+12				
WP	16B	1	+12				
WP	16C	1	+12				
W +	17A	3	PMNTM	4			
W	17B	3					
W	17C	3					
W	18A	3					
W	18B	3					
W	18C	3					
WP	19A	1	0 K				
WP	19B	1	0 K				
WP	19C	1	0 K				
WP	20A	1	+24				
WP	20B	1	+24				
WP	20C	1	+24				
W	21A	3					
W	21B	3					
W	21C	3					
W	22A	3					
W	22B	3					
W	22C	3					
W	23A	3					
W	23B	3					
W	23C	3					
W	24A	3					
W	24B	3					
W	24C	3					
W	25A	3					
W	25B	3					
W	25C	3					
W	26A	3					
W	26B	3					
W	26C	3					
W	27A	3					
W	27B	3					
W	27C	3					
W	28A	3					
W	28B	3					
W	28C	3					
W	29A	3					
W	29B	3					
W	29C	3					
W	30A	3	+5.0-LED				
W	30B	3	+5.0-LED				
W	30C	3	+5.0-LED				
W	31A	3					
W	31B	3					
W	31C	3					
WP	32A	1	+10				

./.

GR: 99 (CONTINUATION)
PROCESSOR BACK PANEL

EL: 19 (CONTINUATION)

TYPE	PT	LV	SIG.NAME	COLOR	F	X	Y
WP	32B	1	+10				
WP	32C	1	+10				

EL: 20 WRAP CONNECTOR J20.1, 3*32 PIN

TYPE	PT	LV	SIG.NAME	COLOR	F	X	Y
WPQ	01A	1	0 L	0			
WPQ	01B	1	0 L	0			
WPQ	01C	1	0 L	0			
W +	01D	3	0 L				
W +	01E	3	0 L				
W +	01F	3	0 L				
W	02A	3					
W	02B	3					
W	02C	3					
W	02D	3	WIRE033				
W	02E	3					
W +	02F	3	MCRECEDR				
W	03A	3					
W	03B	3					
W	03C	3					
W	03D	3	WIRE034				
W	03E	3					
W +	03F	3	MCZSETDR				
WQ	04A	3	-10V 150	6			
WQ	04B	3	-10V 150	6			
WQ	04C	3	-10V 150	6			
W	04D	3	WIRE035				
W	04E	3					
W +	04F	3	MCKCUTDR				
W	05A	3					
W	05B	3					
W	05C	3					
W +	05D	3	0 L				
W	05E	3					
W	05F	3	WIRE040				
W	06A	3					
W	06B	3					
W	06C	3					
W +	06D	3	0 L				
W	06E	3					
W	06F	3	WIRE041				
WQ	07A	3	+31V 150	9			
WQ	07B	3	+31V 150	9			
WQ	07C	3	+31V 150	9			
W +	07D	3	0 L				
W	07E	3					
W	07F	3	WIRE042				
W	08A	3					
W	08B	3					

./.

```
*****************************************************************************************************************************************
*  S T U D E R  *      L O C A T I O N    P I N    L I S T      *   82/01/12 * 15:02     *   P A G E    21   *
*****************************************************************************************************************************************
TAPE LOCK SYSTEM 2000 A800: PARALLEL PROGRAMMER              1.228.900.00            79-10-05
```

GR: 99 (CONTINUATION)
PROCESSOR BACK PANEL
****

EL: 20 (CONTINUATION)

TYPE	PT	LV	SIG.NAME	COLOR	F	X	Y
W	08C	3					
W	08D	3	WIRE036				
W	08E	3					
W	08F	3	WIRE043				
W	09A	3					
W	09B	3					
W	09C	3					
W	09D	3	WIRE040				
W	09E	3					
W	09F	3	WIRE044				
WQ	10A	3	0.0IN150	0			
WQ	10B	3	0.0IN150	0			
WQ	10C	3	0.0IN150	0			
W	10D	3	WIRE041				
W	10E	3					
W	10F	3	WIRE045				
W	11A	3					
W	11B	3					
W	11C	3					
W	11D	3	WIRE042				
W	11E	3					
W +	11F	3	NEMGSTOP				
WP	12A	1	- 5				
WP	12B	1	- 5				
WP	12C	1	- 5				
W	12D	3					
W	12E	3					
W	12F	3					
W	13A	3					
W	13B	3					
W	13C	3					
W	13D	3	WIRE046				
W	13E	3					
W	13F	3	WIRE046				
WP	14A	1	-12				
WP	14B	1	-12				
WP	14C	1	-12				
W	14D	3					
W	14E	3					
W	14F	3					
WP	15A	1	0 A				
WP	15B	1	0 A				
WP	15C	1	0 A				
W	15D	3					
W	15E	3					
W	15F	3					
WP	16A	1	+12				
WP	16B	1	+12				
WP	16C	1	+12				
W +	16D	3	+5.0-LED				
W	16E	3					

./.

GR: 99 (CONTINUATION)
PROCESSOR BACK PANEL
****

EL: 20 (CONTINUATION)

TYPE	PT	LV	SIG.NAME	COLOR	F	X	Y
W +	16F	3	+5.0-LED				
W	17A	3					
W	17B	3					
W	17C	3					
W	17D	3	WIRE043				
W	17E	3					
W	17F	3	WIRE047				
W	18A	3					
W	18B	3					
W	18C	3					
W	18D	3	WIRE048				
W	18E	3					
W	18F	3	WIRE048				
WP	19A	1	0 K				
WP	19B	1	0 K				
WP	19C	1	0 K				
W +	19D	3	0 K				
W	19E	3					
W +	19F	3	0 K				
WP	20A	1	+24				
WP	20B	1	+24				
WP	20C	1	+24				
W +	20D	3	+24				
W	20E	3					
W +	20F	3	+24				
W	21A	3					
W	21B	3					
W	21C	3					
W	21D	3	WIRE049				
W	21E	3					
W	21F	3	WIRE049				
W	22A	3					
W	22B	3					
W	22C	3					
W	22D	3	WIRE050				
W	22E	3					
W	22F	3	WIRE050				
W +	23A	3	PPWRON				
W	23B	3					
W	23C	3					
W	23D	3	WIRE051				
W	23E	3					
W	23F	3	WIRE051				
W	24A	3					
W	24B	3					
W	24C	3					
W	24D	3	WIRE052				
W	24E	3					
W	24F	3	WIRE052				
W	25A	3					
W	25B	3					

./.

GR: 99 (CONTINUATION)
PROCESSOR BACK PANEL
****

EL: 20 (CONTINUATION)

TYPE	PT	LV	SIG.NAME	COLOR	F	X	Y
W	25C	3					
W	25D	3					
W	25E	3					
W +	25F	3	MCSUPVIS				
W	26A	3					
W	26B	3					
W	26C	3					
W	26D	3	WIRE037				
W	26E	3					
W	26F	3	WIRE037				
W	27A	3					
W	27B	3					
W	27C	3					
W	27D	3	WIRE038				
W	27E	3					
W	27F	3	WIRE038				
W	28A	3					
W +	28B	3	+ 5 ADD				
W +	28C	3	+ 5 ADD				
W	28D	3					
W	28E	3					
W +	28F	3	MCDATRDY				
W	29A	3					
W	29B	3					
W	29C	3					
W +	29D	3	+5.0-LED				
W	29E	3					
W +	29F	3	MCRESDR1				
W	30A	3					
W	30B	3					
W	30C	3					
W +	30D	3	MCDATODR				
W	30E	3					
W +	30F	3	LKMODDR2				
W	31A	3					
W	31B	3					
W	31C	3					
W	31D	3	WIRE039				
W	31E	3					
W	31F	3	WIRE053				
WPQ	32A	1	+10			5	
WPQ	32B	1	+10			5	
WPQ	32C	1	+10			5	
W +	32D	3	+10				
W	32E	3					
W +	32F	3	+10				

```
*****************************************************************************************************************************************
*  S T U D E R  *      L O C A T I O N    P I N    L I S T      *   82/01/12 * 15:02     *   P A G E    22   *
*****************************************************************************************************************************************
TAPE LOCK SYSTEM 2000 A800: PARALLEL PROGRAMMER              1.228.900.00            79-10-05
```

GR: 99 (CONTINUATION)
PROCESSOR BACK PANEL
****

EL: 99 CHASSIS, WIRING WITH: 0 L

TYPE	PT	LV	SIG.NAME	COLOR	F	X	Y
L	01	1%	GROUND	4,4,4			
L	02	1%	GROUND	4,4,4			

SECTION 4/80

A800
P

GR #	USED PINS	UNUSED PINS	TOTAL PINS	COD. KEYS	ELE-MNTS	DESCRIPTION OF GROUP	PART # OF GR
97	218	30	248	10	12	RACK ELEMENTS A800 LOWER PART	
98	55	14	69	A	3	RACK ELEMENTS A800 UPPER PART	
99	1739	759	2498	0	21	PROCESSOR BACK PANEL	1.228.399.00
TOT.	2012	803	2815	16	36	DISTRIBUTED IN 3 GROUPS	

```
*****************************************************************************************************************************
*  S T U D E R  *  S I G N A L  W I R E  L I S T          *   82/01/12 * 15:02     *  P A G E    24   *
*****************************************************************************************************************************
TAPE LOCK SYSTEM 2000 A800: PARALLEL PROGRAMMER          1.228.900.00          79-10-05
```

SIG.NAME	COLOR	TYPE	GR	EL	PT	S	DESCRIPTION OF ELEMENT
0 A		W	99	01	15B		WRAP CONNECTOR J01.1, 3*32 PIN
		W	99	01	15C		WRAP CONNECTOR J01.1, 3*32 PIN
		W	99	02	15B		WRAP CONNECTOR J02.1, 3*32 PIN
		W	99	02	15C		WRAP CONNECTOR J02.1, 3*32 PIN
		W	99	03	15B		WRAP CONNECTOR J03.1, 3*32 PIN
		W	99	03	15C		WRAP CONNECTOR J03.1, 3*32 PIN
		W	99	04	15B		WRAP CONNECTOR J04.1, 3*32 PIN
		W	99	04	15C		WRAP CONNECTOR J04.1, 3*32 PIN
		W	99	05	15B		WRAP CONNECTOR J05.1, 3*32 PIN
		W	99	05	15C		WRAP CONNECTOR J05.1, 3*32 PIN
		W	99	06	15B		WRAP CONNECTOR J06.1, 3*32 PIN
		W	99	06	15C		WRAP CONNECTOR J06.1, 3*32 PIN
		W	99	07	15B		WRAP CONNECTOR J07.1, 3*32 PIN
		W	99	07	15C		WRAP CONNECTOR J07.1, 3*32 PIN
		W	99	08	15B		WRAP CONNECTOR J08.1, 3*32 PIN
		W	99	08	15C		WRAP CONNECTOR J08.1, 3*32 PIN
		W	99	09	15B		WRAP CONNECTOR J09.1, 3*32 PIN
		W	99	09	15C		WRAP CONNECTOR J09.1, 3*32 PIN
		W	99	10	15B		WRAP CONNECTOR J10.1, 3*32 PIN
		W	99	10	15C		WRAP CONNECTOR J10.1, 3*32 PIN
		WP	99	11	15A		WRAP CONNECTOR J11.1, 3*32 PIN
		WP	99	11	15B		WRAP CONNECTOR J11.1, 3*32 PIN
		WP	99	11	15C		WRAP CONNECTOR J11.1, 3*32 PIN
		WP	99	12	15A		WRAP CONNECTOR J12.1, 3*32 PIN
		WP	99	12	15B		WRAP CONNECTOR J12.1, 3*32 PIN
		WP	99	12	15C		WRAP CONNECTOR J12.1, 3*32 PIN
		WP	99	13	15A		WRAP CONNECTOR J13.1, 3*32 PIN
		WP	99	13	15B		WRAP CONNECTOR J13.1, 3*32 PIN
		WP	99	13	15C		WRAP CONNECTOR J13.1, 3*32 PIN
		WP	99	14	15A		WRAP CONNECTOR J14.1, 3*32 PIN
		WP	99	14	15B		WRAP CONNECTOR J14.1, 3*32 PIN
		WP	99	14	15C		WRAP CONNECTOR J14.1, 3*32 PIN
		WP	99	15	15A		WRAP CONNECTOR J15.1, 3*32 PIN
		WP	99	15	15B		WRAP CONNECTOR J15.1, 3*32 PIN
		WP	99	15	15C		WRAP CONNECTOR J15.1, 3*32 PIN
		WP	99	16	15A		WRAP CONNECTOR J16.1, 3*32 PIN
		WP	99	16	15B		WRAP CONNECTOR J16.1, 3*32 PIN
		WP	99	16	15C		WRAP CONNECTOR J16.1, 3*32 PIN
		WP	99	17	15A		WRAP CONNECTOR J17.1, 3*32 PIN
		WP	99	17	15B		WRAP CONNECTOR J17.1, 3*32 PIN
		WP	99	17	15C		WRAP CONNECTOR J17.1, 3*32 PIN
		WP	99	18	15A		WRAP CONNECTOR J18.1, 3*32 PIN
		WP	99	18	15B		WRAP CONNECTOR J18.1, 3*32 PIN
		WP	99	18	15C		WRAP CONNECTOR J18.1, 3*32 PIN
		WP	99	19	15A		WRAP CONNECTOR J19.1, 3*32 PIN
		WP	99	19	15B		WRAP CONNECTOR J19.1, 3*32 PIN
		WP	99	19	15C		WRAP CONNECTOR J19.1, 3*32 PIN
		WP	99	20	15A		WRAP CONNECTOR J20.1, 3*32 PIN
		WP	99	20	15B		WRAP CONNECTOR J20.1, 3*32 PIN
		WP	99	20	15C		WRAP CONNECTOR J20.1, 3*32 PIN
0 K	0	B	97	71	20		AUXILIARY CONNECTOR
	0	L	97	72	07A		RELAIS PRINT
	0	L	97	72	07C		RELAIS PRINT
	0	B	98	51	10		MASTER CONTROL CONNECTOR A800
	0	B	98	51	11		MASTER CONTROL CONNECTOR A800
(CONT.)		W	99	01	19B		WRAP CONNECTOR J01.1, 3*32 PIN
		W	99	01	19C		WRAP CONNECTOR J01.1, 3*32 PIN
		W	99	02	19B		WRAP CONNECTOR J02.1, 3*32 PIN
		W	99	02	19C		WRAP CONNECTOR J02.1, 3*32 PIN
		W	99	03	19B		WRAP CONNECTOR J03.1, 3*32 PIN
		W	99	03	19C		WRAP CONNECTOR J03.1, 3*32 PIN
		W	99	04	19B		WRAP CONNECTOR J04.1, 3*32 PIN
		W	99	04	19C		WRAP CONNECTOR J04.1, 3*32 PIN
		W	99	05	19B		WRAP CONNECTOR J05.1, 3*32 PIN
		W	99	05	19C		WRAP CONNECTOR J05.1, 3*32 PIN
		W	99	06	19B		WRAP CONNECTOR J06.1, 3*32 PIN
		W	99	06	19C		WRAP CONNECTOR J06.1, 3*32 PIN
	0	WQ	99	07	08D		WRAP CONNECTOR J07.2, 3*32 PIN
		W	99	07	19B		WRAP CONNECTOR J07.1, 3*32 PIN
		W	99	07	19C		WRAP CONNECTOR J07.1, 3*32 PIN
		W	99	08	19B		WRAP CONNECTOR J08.1, 3*32 PIN
		W	99	08	19C		WRAP CONNECTOR J08.1, 3*32 PIN
		W	99	09	19B		WRAP CONNECTOR J09.1, 3*32 PIN
		W	99	09	19C		WRAP CONNECTOR J09.1, 3*32 PIN
		W	99	10	19B		WRAP CONNECTOR J10.1, 3*32 PIN
		W	99	10	19C		WRAP CONNECTOR J10.1, 3*32 PIN
		WP	99	11	19A		WRAP CONNECTOR J11.1, 3*32 PIN
		WP	99	11	19B		WRAP CONNECTOR J11.1, 3*32 PIN
		WP	99	11	19C		WRAP CONNECTOR J11.1, 3*32 PIN
		WP	99	12	19A		WRAP CONNECTOR J12.1, 3*32 PIN
		WP	99	12	19B		WRAP CONNECTOR J12.1, 3*32 PIN
		WP	99	12	19C		WRAP CONNECTOR J12.1, 3*32 PIN
		WP	99	13	19A		WRAP CONNECTOR J13.1, 3*32 PIN
		WP	99	13	19B		WRAP CONNECTOR J13.1, 3*32 PIN
		WP	99	13	19C		WRAP CONNECTOR J13.1, 3*32 PIN
		WP	99	14	19A		WRAP CONNECTOR J14.1, 3*32 PIN
		WP	99	14	19B		WRAP CONNECTOR J14.1, 3*32 PIN
		WP	99	14	19C		WRAP CONNECTOR J14.1, 3*32 PIN
		WP	99	15	19A		WRAP CONNECTOR J15.1, 3*32 PIN
		WP	99	15	19B		WRAP CONNECTOR J15.1, 3*32 PIN
		WP	99	15	19C		WRAP CONNECTOR J15.1, 3*32 PIN
		WP	99	16	19A		WRAP CONNECTOR J16.1, 3*32 PIN
		WP	99	16	19B		WRAP CONNECTOR J16.1, 3*32 PIN
		WP	99	16	19C		WRAP CONNECTOR J16.1, 3*32 PIN
	0	WPQ	99	17	19A		WRAP CONNECTOR J17.1, 3*32 PIN
		WP	99	17	19B		WRAP CONNECTOR J17.1, 3*32 PIN
	0	WPQ	99	17	19C		WRAP CONNECTOR J17.1, 3*32 PIN
		WP	99	18	19A		WRAP CONNECTOR J18.1, 3*32 PIN
		WP	99	18	19B		WRAP CONNECTOR J18.1, 3*32 PIN
		WP	99	18	19C		WRAP CONNECTOR J18.1, 3*32 PIN
		WP	99	19	19A		WRAP CONNECTOR J19.1, 3*32 PIN
		WP	99	19	19B		WRAP CONNECTOR J19.1, 3*32 PIN
		WP	99	19	19C		WRAP CONNECTOR J19.1, 3*32 PIN
		WP	99	20	19A		WRAP CONNECTOR J20.1, 3*32 PIN
		WP	99	20	19B		WRAP CONNECTOR J20.1, 3*32 PIN
		WP	99	20	19C		WRAP CONNECTOR J20.1, 3*32 PIN
		W +	99	20	19D		WRAP CONNECTOR J20.2, 3*32 PIN
		W +	99	20	19F		WRAP CONNECTOR J20.2, 3*32 PIN
0 L	0	L	97	15	01A		REFERENCE FREQUENCY INPUT
	0	B	97	51	07		COMMAND LINE A800

./.

```
*****************************************************************************************************************************
*  S T U D E R  *  S I G N A L  W I R E  L I S T          *   82/01/12 * 15:02     *  P A G E    25   *
*****************************************************************************************************************************
TAPE LOCK SYSTEM 2000 A800: PARALLEL PROGRAMMER          1.228.900.00          79-10-05
```

SIG.NAME	COLOR	TYPE	GR	EL	PT	S	DESCRIPTION OF ELEMENT
(CONT.)	0	B	97	51	13		COMMAND LINE A800
	0	B	97	51	19		COMMAND LINE A800
	0	B	97	51	20		COMMAND LINE A800
	0	B	97	51	24		COMMAND LINE A800
	0	B	97	51	29		COMMAND LINE A800
	0	B	97	51	35		COMMAND LINE A800
	0	B	97	71	01		AUXILIARY CONNECTOR
	0	B	97	71	35		AUXILIARY CONNECTOR
	0	L	97	72	06A		RELAIS PRINT
	0	L	97	72	06C		RELAIS PRINT
	*	L	97	94	01		CONN. ASS. TO MAIN PROGR. (J I)
	*	L	97	95	01		CONN. ASS. TO MAIN PROGR. (J II)
	*	L	97	96	01		CONN. ASS. TO MAIN PROGR. (JIII)
	0	B	98	51	01		MASTER CONTROL CONNECTOR A800
	0	B	98	51	14		MASTER CONTROL CONNECTOR A800
	0	A	98	81	11		ADDITIONAL POWER CONNECTOR
	0	A	98	81	12		ADDITIONAL POWER CONNECTOR
	0	A	98	81	13		ADDITIONAL POWER CONNECTOR
	0	A	98	91	05		CONNECTOR ASS. TO POWER SUPPLY
	0	A	98	91	06		CONNECTOR ASS. TO POWER SUPPLY
	0	A	98	91	07		CONNECTOR ASS. TO POWER SUPPLY
	0	A	98	91	08		CONNECTOR ASS. TO POWER SUPPLY
	0	A	98	91	09		CONNECTOR ASS. TO POWER SUPPLY
	0	A	98	91	10		CONNECTOR ASS. TO POWER SUPPLY
		WP	99	01	01A		WRAP CONNECTOR J01.1, 3*32 PIN
	0	WPQ	99	01	01B		WRAP CONNECTOR J01.1, 3*32 PIN
		WP	99	01	01C		WRAP CONNECTOR J01.1, 3*32 PIN
		WP	99	02	01A		WRAP CONNECTOR J02.1, 3*32 PIN
		WP	99	02	01B		WRAP CONNECTOR J02.1, 3*32 PIN
		WP	99	02	01C		WRAP CONNECTOR J02.1, 3*32 PIN
		WP	99	03	01A		WRAP CONNECTOR J03.1, 3*32 PIN
		WP	99	03	01B		WRAP CONNECTOR J03.1, 3*32 PIN
		WP	99	03	01C		WRAP CONNECTOR J03.1, 3*32 PIN
		WP	99	04	01A		WRAP CONNECTOR J04.1, 3*32 PIN
		WP	99	04	01B		WRAP CONNECTOR J04.1, 3*32 PIN
		WP	99	04	01C		WRAP CONNECTOR J04.1, 3*32 PIN
	4	WPQ	99	05	01A	%	WIRING WITH: GROUND
	4	WPQ	99	05	01B	%	WIRING WITH: GROUND
	4	WPQ	99	05	01C	%	WIRING WITH: GROUND
		WP	99	06	01A		WRAP CONNECTOR J06.1, 3*32 PIN
		WP	99	06	01B		WRAP CONNECTOR J06.1, 3*32 PIN
		WP	99	06	01C		WRAP CONNECTOR J06.1, 3*32 PIN
		WP	99	06	01D		WRAP CONNECTOR J06.2, 3*32 PIN
		WP	99	06	01E		WRAP CONNECTOR J06.2, 3*32 PIN
		WP	99	06	01F		WRAP CONNECTOR J06.2, 3*32 PIN
		W +	99	06	02D		WRAP CONNECTOR J06.2, 3*32 PIN
	0	WQ	99	06	21D		WRAP CONNECTOR J06.2, 3*32 PIN
	0	WQ	99	06	23F		WRAP CONNECTOR J06.2, 3*32 PIN
	0	WQ	99	06	24F		WRAP CONNECTOR J06.2, 3*32 PIN
	0	WQ	99	06	25F		WRAP CONNECTOR J06.2, 3*32 PIN
	0	WQ	99	06	26E		WRAP CONNECTOR J06.2, 3*32 PIN
	0	WQ	99	06	27D		WRAP CONNECTOR J06.2, 3*32 PIN
	0	WQ	99	06	29D		WRAP CONNECTOR J06.2, 3*32 PIN
		WP	99	07	01A		WRAP CONNECTOR J07.1, 3*32 PIN
		WP	99	07	01B		WRAP CONNECTOR J07.1, 3*32 PIN
		WP	99	07	01C		WRAP CONNECTOR J07.1, 3*32 PIN
(CONT.)	0	WPQ	99	07	01D		WRAP CONNECTOR J07.2, 3*32 PIN
	0	WPQ	99	07	01E		WRAP CONNECTOR J07.2, 3*32 PIN
		WP	99	07	01F		WRAP CONNECTOR J07.2, 3*32 PIN
		W +	99	07	10D		WRAP CONNECTOR J07.2, 3*32 PIN
		W +	99	07	30F		WRAP CONNECTOR J07.2, 3*32 PIN
		W +	99	07	31F		WRAP CONNECTOR J07.2, 3*32 PIN
		WP	99	08	01A		WRAP CONNECTOR J08.1, 3*32 PIN
		WP	99	08	01B		WRAP CONNECTOR J08.1, 3*32 PIN
		WP	99	08	01C		WRAP CONNECTOR J08.1, 3*32 PIN
	9-5-0	WPQ	99	08	01D		WRAP CONNECTOR J08.2, 3*32 PIN
		WP	99	08	01E		WRAP CONNECTOR J08.2, 3*32 PIN
	9-4-0	WPQ	99	08	01F		WRAP CONNECTOR J08.2, 3*32 PIN
	5-1-0	WQ	99	08	12D		WRAP CONNECTOR J08.2, 3*32 PIN
	4-1-0	WQ	99	08	12F		WRAP CONNECTOR J08.2, 3*32 PIN
		W +	99	08	19D		WRAP CONNECTOR J08.2, 3*32 PIN
		W +	99	08	19F		WRAP CONNECTOR J08.2, 3*32 PIN
		WP	99	09	01A		WRAP CONNECTOR J09.1, 3*32 PIN
		WP	99	09	01B		WRAP CONNECTOR J09.1, 3*32 PIN
		WP	99	09	01C		WRAP CONNECTOR J09.1, 3*32 PIN
	9-5-0	WPQ	99	09	01D		WRAP CONNECTOR J09.2, 3*32 PIN
		WP	99	09	01E		WRAP CONNECTOR J09.2, 3*32 PIN
	9-4-0	WPQ	99	09	01F		WRAP CONNECTOR J09.2, 3*32 PIN
	5-1-0	WQ	99	09	12D		WRAP CONNECTOR J09.2, 3*32 PIN
	4-1-0	WQ	99	09	12F		WRAP CONNECTOR J09.2, 3*32 PIN
		W +	99	09	19D		WRAP CONNECTOR J09.2, 3*32 PIN
		W +	99	09	19F		WRAP CONNECTOR J09.2, 3*32 PIN
	0	WPQ	99	10	01A		WRAP CONNECTOR J10.1, 3*32 PIN
	0	WPQ	99	10	01B		WRAP CONNECTOR J10.1, 3*32 PIN
	0	WPQ	99	10	01C		WRAP CONNECTOR J10.1, 3*32 PIN
	9-5-0	WQ	99	10	01D		WRAP CONNECTOR J10.2, 3*32 PIN
	9-4-0	WQ	99	10	01F		WRAP CONNECTOR J10.2, 3*32 PIN
	5-1-0	WQ	99	10	12D		WRAP CONNECTOR J10.2, 3*32 PIN
	4-1-0	WQ	99	10	12F		WRAP CONNECTOR J10.2, 3*32 PIN
		W +	99	10	19D		WRAP CONNECTOR J10.2, 3*32 PIN
		W +	99	10	19F		WRAP CONNECTOR J10.2, 3*32 PIN
		WP	99	11	01A		WRAP CONNECTOR J11.1, 3*32 PIN
		WP	99	11	01B		WRAP CONNECTOR J11.1, 3*32 PIN
		WP	99	11	01C		WRAP CONNECTOR J11.1, 3*32 PIN
		WP	99	12	01A		WRAP CONNECTOR J12.1, 3*32 PIN
		WP	99	12	01B		WRAP CONNECTOR J12.1, 3*32 PIN
		WP	99	12	01C		WRAP CONNECTOR J12.1, 3*32 PIN
		W +	99	12	22A		WRAP CONNECTOR J12.1, 3*32 PIN
		WP	99	13	01A		WRAP CONNECTOR J13.1, 3*32 PIN
		WP	99	13	01B		WRAP CONNECTOR J13.1, 3*32 PIN
		WP	99	13	01C		WRAP CONNECTOR J13.1, 3*32 PIN
		WP	99	14	01A		WRAP CONNECTOR J14.1, 3*32 PIN
		WP	99	14	01B		WRAP CONNECTOR J14.1, 3*32 PIN
		WP	99	14	01C		WRAP CONNECTOR J14.1, 3*32 PIN
	4	WPQ	99	15	01A	%	WIRING WITH: GROUND
	4	WPQ	99	15	01B	%	WIRING WITH: GROUND
	4	WPQ	99	15	01C	%	WIRING WITH: GROUND
		WP	99	16	01A		WRAP CONNECTOR J16.1, 3*32 PIN
		WP	99	16	01B		WRAP CONNECTOR J16.1, 3*32 PIN
		WP	99	16	01C		WRAP CONNECTOR J16.1, 3*32 PIN
	0	WPQ	99	17	01A		WRAP CONNECTOR J17.1, 3*32 PIN
		WP	99	17	01B		WRAP CONNECTOR J17.1, 3*32 PIN

./.

SIG.NAME	COLOR	TYPE	GR	EL	PT	S	DESCRIPTION OF ELEMENT
(CONT.)	0	WPQ	99	17	01C		WRAP CONNECTOR J17.1, 3*32 PIN
	0	WPQ	99	18	01A		WRAP CONNECTOR J18.1, 3*32 PIN
	0	WPQ	99	18	01B		WRAP CONNECTOR J18.1, 3*32 PIN
	0	WPQ	99	18	01C		WRAP CONNECTOR J18.1, 3*32 PIN
		WP	99	19	01A		WRAP CONNECTOR J19.1, 3*32 PIN
		WP	99	19	01B		WRAP CONNECTOR J19.1, 3*32 PIN
		WP	99	19	01C		WRAP CONNECTOR J19.1, 3*32 PIN
	0	WPQ	99	20	01A		WRAP CONNECTOR J20.1, 3*32 PIN
	0	WPQ	99	20	01B		WRAP CONNECTOR J20.1, 3*32 PIN
	0	WPQ	99	20	01C		WRAP CONNECTOR J20.1, 3*32 PIN
		W	+ 99	20	01D		WRAP CONNECTOR J20.2, 3*32 PIN
		W	+ 99	20	01E		WRAP CONNECTOR J20.2, 3*32 PIN
		W	+ 99	20	01F		WRAP CONNECTOR J20.2, 3*32 PIN
		W	+ 99	20	05D		WRAP CONNECTOR J20.2, 3*32 PIN
		W	+ 99	20	06D		WRAP CONNECTOR J20.2, 3*32 PIN
		W	+ 99	20	07D		WRAP CONNECTOR J20.2, 3*32 PIN
0 SW	9-2	B		97	93	24	CONN. ASS. TO MAIN PROGR. (JIII)
	9-2	WQ		99	10	30D	WRAP CONNECTOR J10.2, 3*32 PIN
0 1325		W		99	13	22B	WRAP CONNECTOR J13.1, 3*32 PIN
+ 5 ADD		W		99	03	11A	WRAP CONNECTOR J03.1, 3*32 PIN
		W		99	04	25B	WRAP CONNECTOR J04.1, 3*32 PIN
		W		99	06	07A	WRAP CONNECTOR J06.1, 3*32 PIN
		W		99	10	11C	WRAP CONNECTOR J10.1, 3*32 PIN
		W	+ 99	13	28B		WRAP CONNECTOR J13.1, 3*32 PIN
		W	+ 99	13	29B		WRAP CONNECTOR J13.1, 3*32 PIN
		W	+ 99	14	29A		WRAP CONNECTOR J14.1, 3*32 PIN
		W	+ 99	14	30A		WRAP CONNECTOR J14.1, 3*32 PIN
		W		99	15	13B	WRAP CONNECTOR J15.1, 3*32 PIN
		W	+ 99	17	02A		WRAP CONNECTOR J17.1, 3*32 PIN
		W	+ 99	18	03A		WRAP CONNECTOR J18.1, 3*32 PIN
		W	+ 99	18	03C		WRAP CONNECTOR J18.1, 3*32 PIN
		W		99	18	28A	WRAP CONNECTOR J18.1, 3*32 PIN
		W		99	18	28B	WRAP CONNECTOR J18.1, 3*32 PIN
		W		99	18	28C	WRAP CONNECTOR J18.1, 3*32 PIN
		W		99	18	29A	WRAP CONNECTOR J18.1, 3*32 PIN
		W		99	18	29B	WRAP CONNECTOR J18.1, 3*32 PIN
		W		99	18	29C	WRAP CONNECTOR J18.1, 3*32 PIN
		W		99	18	30A	WRAP CONNECTOR J18.1, 3*32 PIN
		W		99	18	30B	WRAP CONNECTOR J18.1, 3*32 PIN
		W		99	18	30C	WRAP CONNECTOR J18.1, 3*32 PIN
		W	+ 99	20	28B		WRAP CONNECTOR J20.1, 3*32 PIN
		W	+ 99	20	28C		WRAP CONNECTOR J20.1, 3*32 PIN
+10	1	B		98	51	03	MASTER CONTROL CONNECTOR A800
	5	A		98	81	16	ADDITIONAL POWER CONNECTOR
	5	A		98	81	17	ADDITIONAL POWER CONNECTOR
	5	A		98	81	18	ADDITIONAL POWER CONNECTOR
	5	A		98	91	16	CONNECTOR ASS. TO POWER SUPPLY
	5	A		98	91	17	CONNECTOR ASS. TO POWER SUPPLY
	5	A		98	91	18	CONNECTOR ASS. TO POWER SUPPLY
	5	A		98	91	19	CONNECTOR ASS. TO POWER SUPPLY
	5	A		98	91	20	CONNECTOR ASS. TO POWER SUPPLY
	5	A		98	91	21	CONNECTOR ASS. TO POWER SUPPLY

./.

SIG.NAME	COLOR	TYPE	GR	EL	PT	S	DESCRIPTION OF ELEMENT
(CONT.)		WP	99	01	32A		WRAP CONNECTOR J01.1, 3*32 PIN
		WP	99	01	32B		WRAP CONNECTOR J01.1, 3*32 PIN
		WP	99	01	32C		WRAP CONNECTOR J01.1, 3*32 PIN
		WP	99	02	32A		WRAP CONNECTOR J02.1, 3*32 PIN
		WP	99	02	32B		WRAP CONNECTOR J02.1, 3*32 PIN
		WP	99	02	32C		WRAP CONNECTOR J02.1, 3*32 PIN
		WP	99	03	32A		WRAP CONNECTOR J03.1, 3*32 PIN
		WP	99	03	32B		WRAP CONNECTOR J03.1, 3*32 PIN
		WP	99	03	32C		WRAP CONNECTOR J03.1, 3*32 PIN
		WP	99	04	32A		WRAP CONNECTOR J04.1, 3*32 PIN
		WP	99	04	32B		WRAP CONNECTOR J04.1, 3*32 PIN
		WP	99	04	32C		WRAP CONNECTOR J04.1, 3*32 PIN
		WP	99	05	32A		WRAP CONNECTOR J05.1, 3*32 PIN
		WP	99	05	32B		WRAP CONNECTOR J05.1, 3*32 PIN
		WP	99	05	32C		WRAP CONNECTOR J05.1, 3*32 PIN
		WP	99	06	32A		WRAP CONNECTOR J06.1, 3*32 PIN
		WP	99	06	32B		WRAP CONNECTOR J06.1, 3*32 PIN
		WP	99	06	32C		WRAP CONNECTOR J06.1, 3*32 PIN
		WP	99	06	32D		WRAP CONNECTOR J06.2, 3*32 PIN
		WP	99	06	32E		WRAP CONNECTOR J06.2, 3*32 PIN
		WP	99	06	32F		WRAP CONNECTOR J06.2, 3*32 PIN
		WP	99	07	32A		WRAP CONNECTOR J07.1, 3*32 PIN
		WP	99	07	32B		WRAP CONNECTOR J07.1, 3*32 PIN
		WP	99	07	32C		WRAP CONNECTOR J07.1, 3*32 PIN
		WP	99	07	32D		WRAP CONNECTOR J07.2, 3*32 PIN
		WP	99	07	32E		WRAP CONNECTOR J07.2, 3*32 PIN
		WP	99	07	32F		WRAP CONNECTOR J07.2, 3*32 PIN
		WP	99	08	32A		WRAP CONNECTOR J08.1, 3*32 PIN
		WP	99	08	32B		WRAP CONNECTOR J08.1, 3*32 PIN
		WP	99	08	32C		WRAP CONNECTOR J08.1, 3*32 PIN
		WP	99	08	32D		WRAP CONNECTOR J08.2, 3*32 PIN
		WP	99	08	32E		WRAP CONNECTOR J08.2, 3*32 PIN
		WP	99	08	32F		WRAP CONNECTOR J08.2, 3*32 PIN
		WP	99	09	32A		WRAP CONNECTOR J09.1, 3*32 PIN
		WP	99	09	32B		WRAP CONNECTOR J09.1, 3*32 PIN
		WP	99	09	32C		WRAP CONNECTOR J09.1, 3*32 PIN
		WP	99	09	32D		WRAP CONNECTOR J09.2, 3*32 PIN
		WP	99	09	32E		WRAP CONNECTOR J09.2, 3*32 PIN
		WP	99	09	32F		WRAP CONNECTOR J09.2, 3*32 PIN
	5	WPQ	99	10	32A		WRAP CONNECTOR J10.1, 3*32 PIN
	5	WPQ	99	10	32B		WRAP CONNECTOR J10.1, 3*32 PIN
	5	WPQ	99	10	32C		WRAP CONNECTOR J10.1, 3*32 PIN
		W	99	10	32D		WRAP CONNECTOR J10.2, 3*32 PIN
		W	99	10	32F		WRAP CONNECTOR J10.2, 3*32 PIN
		WP	99	11	32A		WRAP CONNECTOR J11.1, 3*32 PIN
		WP	99	11	32B		WRAP CONNECTOR J11.1, 3*32 PIN
		WP	99	11	32C		WRAP CONNECTOR J11.1, 3*32 PIN
		WP	99	12	32A		WRAP CONNECTOR J12.1, 3*32 PIN
		WP	99	12	32B		WRAP CONNECTOR J12.1, 3*32 PIN
		WP	99	12	32C		WRAP CONNECTOR J12.1, 3*32 PIN
		WP	99	13	32A		WRAP CONNECTOR J13.1, 3*32 PIN
		WP	99	13	32B		WRAP CONNECTOR J13.1, 3*32 PIN
		WP	99	13	32C		WRAP CONNECTOR J13.1, 3*32 PIN
		WP	99	14	32A		WRAP CONNECTOR J14.1, 3*32 PIN
		WP	99	14	32B		WRAP CONNECTOR J14.1, 3*32 PIN
		WP	99	14	32C		WRAP CONNECTOR J14.1, 3*32 PIN

./.

SIG.NAME	COLOR	TYPE	GR	EL	PT	S	DESCRIPTION OF ELEMENT
(CONT.)		WP	99	15	32A		WRAP CONNECTOR J15.1, 3*32 PIN
		WP	99	15	32B		WRAP CONNECTOR J15.1, 3*32 PIN
		WP	99	15	32C		WRAP CONNECTOR J15.1, 3*32 PIN
		WP	99	16	32A		WRAP CONNECTOR J16.1, 3*32 PIN
		WP	99	16	32B		WRAP CONNECTOR J16.1, 3*32 PIN
		WP	99	16	32C		WRAP CONNECTOR J16.1, 3*32 PIN
		WP	99	17	32A		WRAP CONNECTOR J17.1, 3*32 PIN
		WP	99	17	32B		WRAP CONNECTOR J17.1, 3*32 PIN
	1	WPQ	99	17	32C		WRAP CONNECTOR J17.1, 3*32 PIN
	5	WPQ	99	18	32A		WRAP CONNECTOR J18.1, 3*32 PIN
	5	WPQ	99	18	32B		WRAP CONNECTOR J18.1, 3*32 PIN
	5	WPQ	99	18	32C		WRAP CONNECTOR J18.1, 3*32 PIN
		W	99	19	05A		WRAP CONNECTOR J19.1, 3*32 PIN
		W	99	19	05B		WRAP CONNECTOR J19.1, 3*32 PIN
		W	99	19	05C		WRAP CONNECTOR J19.1, 3*32 PIN
		WP	99	19	32A		WRAP CONNECTOR J19.1, 3*32 PIN
		WP	99	19	32B		WRAP CONNECTOR J19.1, 3*32 PIN
		WP	99	19	32C		WRAP CONNECTOR J19.1, 3*32 PIN
	5	WPQ	99	20	32A		WRAP CONNECTOR J20.1, 3*32 PIN
	5	WPQ	99	20	32B		WRAP CONNECTOR J20.1, 3*32 PIN
	5	WPQ	99	20	32C		WRAP CONNECTOR J20.1, 3*32 PIN
		W	+ 99	20	32D		WRAP CONNECTOR J20.2, 3*32 PIN
		W	+ 99	20	32F		WRAP CONNECTOR J20.2, 3*32 PIN
+10 SW	2-R	B		97	93	41	CONN. ASS. TO MAIN PROGR. (JIII)
	2-R	WQ		99	10	23F	WRAP CONNECTOR J10.2, 3*32 PIN
+10AD150	5	A		98	81	19	ADDITIONAL POWER CONNECTOR
	5	A		98	81	20	ADDITIONAL POWER CONNECTOR
	5	A		98	81	21	ADDITIONAL POWER CONNECTOR
	5	WQ		99	18	07A	WRAP CONNECTOR J18.1, 3*32 PIN
	5	WQ		99	18	07B	WRAP CONNECTOR J18.1, 3*32 PIN
	5	WQ		99	18	07C	WRAP CONNECTOR J18.1, 3*32 PIN
+12		W		99	01	16B	WRAP CONNECTOR J01.1, 3*32 PIN
		W		99	01	16C	WRAP CONNECTOR J01.1, 3*32 PIN
		W		99	02	16B	WRAP CONNECTOR J02.1, 3*32 PIN
		W		99	02	16C	WRAP CONNECTOR J02.1, 3*32 PIN
		W		99	03	16B	WRAP CONNECTOR J03.1, 3*32 PIN
		W		99	03	16C	WRAP CONNECTOR J03.1, 3*32 PIN
		W		99	04	16B	WRAP CONNECTOR J04.1, 3*32 PIN
		W		99	04	16C	WRAP CONNECTOR J04.1, 3*32 PIN
		W		99	05	16B	WRAP CONNECTOR J05.1, 3*32 PIN
		W		99	05	16C	WRAP CONNECTOR J05.1, 3*32 PIN
		W		99	06	16B	WRAP CONNECTOR J06.1, 3*32 PIN
		W		99	06	16C	WRAP CONNECTOR J06.1, 3*32 PIN
		W		99	07	16B	WRAP CONNECTOR J07.1, 3*32 PIN
		W		99	07	16C	WRAP CONNECTOR J07.1, 3*32 PIN
		W		99	08	16B	WRAP CONNECTOR J08.1, 3*32 PIN
		W		99	08	16C	WRAP CONNECTOR J08.1, 3*32 PIN
		W		99	09	16B	WRAP CONNECTOR J09.1, 3*32 PIN
		W		99	09	16C	WRAP CONNECTOR J09.1, 3*32 PIN
		W		99	10	16B	WRAP CONNECTOR J10.1, 3*32 PIN
		W		99	10	16C	WRAP CONNECTOR J10.1, 3*32 PIN
		WP		99	11	16A	WRAP CONNECTOR J11.1, 3*32 PIN
		WP		99	11	16B	WRAP CONNECTOR J11.1, 3*32 PIN

./.

SIG.NAME	COLOR	TYPE	GR	EL	PT	S	DESCRIPTION OF ELEMENT
(CONT.)		WP	99	11	16C		WRAP CONNECTOR J11.1, 3*32 PIN
		WP	99	12	16A		WRAP CONNECTOR J12.1, 3*32 PIN
		WP	99	12	16B		WRAP CONNECTOR J12.1, 3*32 PIN
		WP	99	12	16C		WRAP CONNECTOR J12.1, 3*32 PIN
		WP	99	13	16A		WRAP CONNECTOR J13.1, 3*32 PIN
		WP	99	13	16B		WRAP CONNECTOR J13.1, 3*32 PIN
		WP	99	13	16C		WRAP CONNECTOR J13.1, 3*32 PIN
		WP	99	14	16A		WRAP CONNECTOR J14.1, 3*32 PIN
		WP	99	14	16B		WRAP CONNECTOR J14.1, 3*32 PIN
		WP	99	14	16C		WRAP CONNECTOR J14.1, 3*32 PIN
		WP	99	15	16A		WRAP CONNECTOR J15.1, 3*32 PIN
		WP	99	15	16B		WRAP CONNECTOR J15.1, 3*32 PIN
		WP	99	15	16C		WRAP CONNECTOR J15.1, 3*32 PIN
		WP	99	16	16A		WRAP CONNECTOR J16.1, 3*32 PIN
		WP	99	16	16B		WRAP CONNECTOR J16.1, 3*32 PIN
		WP	99	16	16C		WRAP CONNECTOR J16.1, 3*32 PIN
		WP	99	17	16A		WRAP CONNECTOR J17.1, 3*32 PIN
		WP	99	17	16B		WRAP CONNECTOR J17.1, 3*32 PIN
		WP	99	17	16C		WRAP CONNECTOR J17.1, 3*32 PIN
		WP	99	18	16A		WRAP CONNECTOR J18.1, 3*32 PIN
		WP	99	18	16B		WRAP CONNECTOR J18.1, 3*32 PIN
		WP	99	18	16C		WRAP CONNECTOR J18.1, 3*32 PIN
		WP	99	19	16A		WRAP CONNECTOR J19.1, 3*32 PIN
		WP	99	19	16B		WRAP CONNECTOR J19.1, 3*32 PIN
		WP	99	19	16C		WRAP CONNECTOR J19.1, 3*32 PIN
		WP	99	20	16A		WRAP CONNECTOR J20.1, 3*32 PIN
		WP	99	20	16B		WRAP CONNECTOR J20.1, 3*32 PIN
		WP	99	20	16C		WRAP CONNECTOR J20.1, 3*32 PIN
+24	2	B		97	71	37	AUXILIARY CONNECTOR
	2	L		97	72	08A	RELAIS PRINT
	2	L		97	72	08C	RELAIS PRINT
	2	B		98	51	12	MASTER CONTROL CONNECTOR A800
	1	B		98	51	13	MASTER CONTROL CONNECTOR A800
		W		99	01	20B	WRAP CONNECTOR J01.1, 3*32 PIN
		W		99	01	20C	WRAP CONNECTOR J01.1, 3*32 PIN
		W		99	02	20B	WRAP CONNECTOR J02.1, 3*32 PIN
		W		99	02	20C	WRAP CONNECTOR J02.1, 3*32 PIN
		W		99	03	20B	WRAP CONNECTOR J03.1, 3*32 PIN
		W		99	03	20C	WRAP CONNECTOR J03.1, 3*32 PIN
		W		99	04	20B	WRAP CONNECTOR J04.1, 3*32 PIN
		W		99	04	20C	WRAP CONNECTOR J04.1, 3*32 PIN
		W		99	05	20B	WRAP CONNECTOR J05.1, 3*32 PIN
		W		99	05	20C	WRAP CONNECTOR J05.1, 3*32 PIN
		W		99	06	20B	WRAP CONNECTOR J06.1, 3*32 PIN
		W		99	06	20C	WRAP CONNECTOR J06.1, 3*32 PIN
	2	WQ		99	07	09D	WRAP CONNECTOR J07.2, 3*32 PIN
		W		99	07	20B	WRAP CONNECTOR J07.1, 3*32 PIN
		W		99	07	20C	WRAP CONNECTOR J07.1, 3*32 PIN
		W		99	08	20B	WRAP CONNECTOR J08.1, 3*32 PIN
		W		99	08	20C	WRAP CONNECTOR J08.1, 3*32 PIN
		W		99	09	20A	WRAP CONNECTOR J09.1, 3*32 PIN
		W		99	09	20B	WRAP CONNECTOR J09.1, 3*32 PIN
		W		99	09	20C	WRAP CONNECTOR J09.1, 3*32 PIN
		W		99	10	20B	WRAP CONNECTOR J10.1, 3*32 PIN
		W		99	10	20C	WRAP CONNECTOR J10.1, 3*32 PIN

./.

```
*  STUDER  *  SIGNAL  WIRE  LIST  *  82/01/12 * 15:02  *  PAGE  28  *
TAPE LOCK SYSTEM 2000 A800: PARALLEL PROGRAMMER  1.228.900.00  79-10-05
```

SIG.NAME	COLOR	TYPE	GR	EL	PT	S	DESCRIPTION OF ELEMENT
(CONT.)		WP	99	11	20A		WRAP CONNECTOR J11.1, 3*32 PIN
		WP	99	11	20B		WRAP CONNECTOR J11.1, 3*32 PIN
		WP	99	11	20C		WRAP CONNECTOR J11.1, 3*32 PIN
		WP	99	12	20A		WRAP CONNECTOR J12.1, 3*32 PIN
		WP	99	12	20B		WRAP CONNECTOR J12.1, 3*32 PIN
		WP	99	12	20C		WRAP CONNECTOR J12.1, 3*32 PIN
		WP	99	13	20A		WRAP CONNECTOR J13.1, 3*32 PIN
		WP	99	13	20B		WRAP CONNECTOR J13.1, 3*32 PIN
		WP	99	13	20C		WRAP CONNECTOR J13.1, 3*32 PIN
		WP	99	14	20A		WRAP CONNECTOR J14.1, 3*32 PIN
		WP	99	14	20B		WRAP CONNECTOR J14.1, 3*32 PIN
		WP	99	14	20C		WRAP CONNECTOR J14.1, 3*32 PIN
		WP	99	15	20A		WRAP CONNECTOR J15.1, 3*32 PIN
		WP	99	15	20B		WRAP CONNECTOR J15.1, 3*32 PIN
		WP	99	15	20C		WRAP CONNECTOR J15.1, 3*32 PIN
		WP	99	16	20A		WRAP CONNECTOR J16.1, 3*32 PIN
		WP	99	16	20B		WRAP CONNECTOR J16.1, 3*32 PIN
		WP	99	16	20C		WRAP CONNECTOR J16.1, 3*32 PIN
	1	WPQ	99	17	20A		WRAP CONNECTOR J17.1, 3*32 PIN
		WP	99	17	20B		WRAP CONNECTOR J17.1, 3*32 PIN
	2	WPQ	99	17	20C		WRAP CONNECTOR J17.1, 3*32 PIN
		WP	99	18	20A		WRAP CONNECTOR J18.1, 3*32 PIN
		WP	99	18	20B		WRAP CONNECTOR J18.1, 3*32 PIN
		WP	99	18	20C		WRAP CONNECTOR J18.1, 3*32 PIN
		W	99	19	08A		WRAP CONNECTOR J19.1, 3*32 PIN
		W	99	19	08B		WRAP CONNECTOR J19.1, 3*32 PIN
		W	99	19	08C		WRAP CONNECTOR J19.1, 3*32 PIN
		WP	99	19	20A		WRAP CONNECTOR J19.1, 3*32 PIN
		WP	99	19	20B		WRAP CONNECTOR J19.1, 3*32 PIN
		WP	99	19	20C		WRAP CONNECTOR J19.1, 3*32 PIN
		WP	99	20	20A		WRAP CONNECTOR J20.1, 3*32 PIN
		WP	99	20	20B		WRAP CONNECTOR J20.1, 3*32 PIN
		WP	99	20	20C		WRAP CONNECTOR J20.1, 3*32 PIN
		W	+ 99	20	20D		WRAP CONNECTOR J20.2, 3*32 PIN
		W	+ 99	20	20F		WRAP CONNECTOR J20.2, 3*32 PIN
+24M	3	B	97	71	36		AUXILIARY CONNECTOR
	3	L	97	72	09A		RELAIS PRINT
+31V 150	9	A	98	91	23		CONNECTOR ASS. TO POWER SUPPLY
	9	A	98	91	24		CONNECTOR ASS. TO POWER SUPPLY
	9	A	98	91	25		CONNECTOR ASS. TO POWER SUPPLY
	9	WQ	99	20	07A		WRAP CONNECTOR J20.1, 3*32 PIN
	9	WQ	99	20	07B		WRAP CONNECTOR J20.1, 3*32 PIN
	9	WQ	99	20	07C		WRAP CONNECTOR J20.1, 3*32 PIN
+5.0-LED		W	99	19	30A		WRAP CONNECTOR J19.1, 3*32 PIN
		W	99	19	30B		WRAP CONNECTOR J19.1, 3*32 PIN
		W	99	19	30C		WRAP CONNECTOR J19.1, 3*32 PIN
		W	+ 99	20	16D		WRAP CONNECTOR J20.2, 3*32 PIN
		W	+ 99	20	16F		WRAP CONNECTOR J20.2, 3*32 PIN
		W	+ 99	20	29D		WRAP CONNECTOR J20.2, 3*32 PIN
- 5		W	99	01	12B		WRAP CONNECTOR J01.1, 3*32 PIN
		W	99	01	12C		WRAP CONNECTOR J01.1, 3*32 PIN
		W	99	02	12B		WRAP CONNECTOR J02.1, 3*32 PIN
(CONT.)		W	99	02	12C		WRAP CONNECTOR J02.1, 3*32 PIN
		W	99	03	12B		WRAP CONNECTOR J03.1, 3*32 PIN
		W	99	03	12C		WRAP CONNECTOR J03.1, 3*32 PIN
		W	99	04	12B		WRAP CONNECTOR J04.1, 3*32 PIN
		W	99	04	12C		WRAP CONNECTOR J04.1, 3*32 PIN
		W	99	05	12B		WRAP CONNECTOR J05.1, 3*32 PIN
		W	99	05	12C		WRAP CONNECTOR J05.1, 3*32 PIN
		W	99	06	12B		WRAP CONNECTOR J06.1, 3*32 PIN
		W	99	06	12C		WRAP CONNECTOR J06.1, 3*32 PIN
		W	99	07	12B		WRAP CONNECTOR J07.1, 3*32 PIN
		W	99	07	12C		WRAP CONNECTOR J07.1, 3*32 PIN
		W	99	08	12B		WRAP CONNECTOR J08.1, 3*32 PIN
		W	99	08	12C		WRAP CONNECTOR J08.1, 3*32 PIN
		W	99	09	12B		WRAP CONNECTOR J09.1, 3*32 PIN
		W	99	09	12C		WRAP CONNECTOR J09.1, 3*32 PIN
		W	99	10	12B		WRAP CONNECTOR J10.1, 3*32 PIN
		W	99	10	12C		WRAP CONNECTOR J10.1, 3*32 PIN
		WP	99	11	12A		WRAP CONNECTOR J11.1, 3*32 PIN
		WP	99	11	12B		WRAP CONNECTOR J11.1, 3*32 PIN
		WP	99	11	12C		WRAP CONNECTOR J11.1, 3*32 PIN
		WP	99	12	12A		WRAP CONNECTOR J12.1, 3*32 PIN
		WP	99	12	12B		WRAP CONNECTOR J12.1, 3*32 PIN
		WP	99	12	12C		WRAP CONNECTOR J12.1, 3*32 PIN
		WP	99	13	12A		WRAP CONNECTOR J13.1, 3*32 PIN
		WP	99	13	12B		WRAP CONNECTOR J13.1, 3*32 PIN
		WP	99	13	12C		WRAP CONNECTOR J13.1, 3*32 PIN
		WP	99	14	12A		WRAP CONNECTOR J14.1, 3*32 PIN
		WP	99	14	12B		WRAP CONNECTOR J14.1, 3*32 PIN
		WP	99	14	12C		WRAP CONNECTOR J14.1, 3*32 PIN
		WP	99	15	12A		WRAP CONNECTOR J15.1, 3*32 PIN
		WP	99	15	12B		WRAP CONNECTOR J15.1, 3*32 PIN
		WP	99	15	12C		WRAP CONNECTOR J15.1, 3*32 PIN
		WP	99	16	12A		WRAP CONNECTOR J16.1, 3*32 PIN
		WP	99	16	12B		WRAP CONNECTOR J16.1, 3*32 PIN
		WP	99	16	12C		WRAP CONNECTOR J16.1, 3*32 PIN
		WP	99	17	12A		WRAP CONNECTOR J17.1, 3*32 PIN
		WP	99	17	12B		WRAP CONNECTOR J17.1, 3*32 PIN
		WP	99	17	12C		WRAP CONNECTOR J17.1, 3*32 PIN
		WP	99	18	12A		WRAP CONNECTOR J18.1, 3*32 PIN
		WP	99	18	12B		WRAP CONNECTOR J18.1, 3*32 PIN
		WP	99	18	12C		WRAP CONNECTOR J18.1, 3*32 PIN
		WP	99	19	12A		WRAP CONNECTOR J19.1, 3*32 PIN
		WP	99	19	12B		WRAP CONNECTOR J19.1, 3*32 PIN
		WP	99	19	12C		WRAP CONNECTOR J19.1, 3*32 PIN
		WP	99	20	12A		WRAP CONNECTOR J20.1, 3*32 PIN
		WP	99	20	12B		WRAP CONNECTOR J20.1, 3*32 PIN
		WP	99	20	12C		WRAP CONNECTOR J20.1, 3*32 PIN
-10V 150	6	A	98	91	01		CONNECTOR ASS. TO POWER SUPPLY
	6	A	98	91	03		CONNECTOR ASS. TO POWER SUPPLY
	6	A	98	91	04		CONNECTOR ASS. TO POWER SUPPLY
	6	WQ	99	20	04A		WRAP CONNECTOR J20.1, 3*32 PIN
	6	WQ	99	20	04B		WRAP CONNECTOR J20.1, 3*32 PIN
	6	WQ	99	20	04C		WRAP CONNECTOR J20.1, 3*32 PIN
-12		W	99	01	14B		WRAP CONNECTOR J01.1, 3*32 PIN

./.

```
*  STUDER  *  SIGNAL  WIRE  LIST  *  82/01/12 * 15:02  *  PAGE  29  *
TAPE LOCK SYSTEM 2000 A800: PARALLEL PROGRAMMER  1.228.900.00  79-10-05
```

SIG.NAME	COLOR	TYPE	GR	EL	PT	S	DESCRIPTION OF ELEMENT
(CONT.)		W	99	01	14C		WRAP CONNECTOR J01.1, 3*32 PIN
		W	99	02	14B		WRAP CONNECTOR J02.1, 3*32 PIN
		W	99	02	14C		WRAP CONNECTOR J02.1, 3*32 PIN
		W	99	03	14B		WRAP CONNECTOR J03.1, 3*32 PIN
		W	99	03	14C		WRAP CONNECTOR J03.1, 3*32 PIN
		W	99	04	14B		WRAP CONNECTOR J04.1, 3*32 PIN
		W	99	04	14C		WRAP CONNECTOR J04.1, 3*32 PIN
		W	99	05	14B		WRAP CONNECTOR J05.1, 3*32 PIN
		W	99	05	14C		WRAP CONNECTOR J05.1, 3*32 PIN
		W	99	06	14B		WRAP CONNECTOR J06.1, 3*32 PIN
		W	99	06	14C		WRAP CONNECTOR J06.1, 3*32 PIN
		W	99	07	14B		WRAP CONNECTOR J07.1, 3*32 PIN
		W	99	07	14C		WRAP CONNECTOR J07.1, 3*32 PIN
		W	99	08	14B		WRAP CONNECTOR J08.1, 3*32 PIN
		W	99	08	14C		WRAP CONNECTOR J08.1, 3*32 PIN
		W	99	09	14B		WRAP CONNECTOR J09.1, 3*32 PIN
		W	99	09	14C		WRAP CONNECTOR J09.1, 3*32 PIN
		W	99	10	14B		WRAP CONNECTOR J10.1, 3*32 PIN
		W	99	10	14C		WRAP CONNECTOR J10.1, 3*32 PIN
		WP	99	11	14A		WRAP CONNECTOR J11.1, 3*32 PIN
		WP	99	11	14B		WRAP CONNECTOR J11.1, 3*32 PIN
		WP	99	11	14C		WRAP CONNECTOR J11.1, 3*32 PIN
		WP	99	12	14A		WRAP CONNECTOR J12.1, 3*32 PIN
		WP	99	12	14B		WRAP CONNECTOR J12.1, 3*32 PIN
		WP	99	12	14C		WRAP CONNECTOR J12.1, 3*32 PIN
		WP	99	13	14A		WRAP CONNECTOR J13.1, 3*32 PIN
		WP	99	13	14B		WRAP CONNECTOR J13.1, 3*32 PIN
		WP	99	13	14C		WRAP CONNECTOR J13.1, 3*32 PIN
		WP	99	14	14A		WRAP CONNECTOR J14.1, 3*32 PIN
		WP	99	14	14B		WRAP CONNECTOR J14.1, 3*32 PIN
		WP	99	14	14C		WRAP CONNECTOR J14.1, 3*32 PIN
		WP	99	15	14A		WRAP CONNECTOR J15.1, 3*32 PIN
		WP	99	15	14B		WRAP CONNECTOR J15.1, 3*32 PIN
		WP	99	15	14C		WRAP CONNECTOR J15.1, 3*32 PIN
		WP	99	16	14A		WRAP CONNECTOR J16.1, 3*32 PIN
		WP	99	16	14B		WRAP CONNECTOR J16.1, 3*32 PIN
		WP	99	16	14C		WRAP CONNECTOR J16.1, 3*32 PIN
		WP	99	17	14A		WRAP CONNECTOR J17.1, 3*32 PIN
		WP	99	17	14B		WRAP CONNECTOR J17.1, 3*32 PIN
		WP	99	17	14C		WRAP CONNECTOR J17.1, 3*32 PIN
		WP	99	18	14A		WRAP CONNECTOR J18.1, 3*32 PIN
		WP	99	18	14B		WRAP CONNECTOR J18.1, 3*32 PIN
		WP	99	18	14C		WRAP CONNECTOR J18.1, 3*32 PIN
		WP	99	19	14A		WRAP CONNECTOR J19.1, 3*32 PIN
		WP	99	19	14B		WRAP CONNECTOR J19.1, 3*32 PIN
		WP	99	19	14C		WRAP CONNECTOR J19.1, 3*32 PIN
		WP	99	20	14A		WRAP CONNECTOR J20.1, 3*32 PIN
		WP	99	20	14B		WRAP CONNECTOR J20.1, 3*32 PIN
		WP	99	20	14C		WRAP CONNECTOR J20.1, 3*32 PIN
ACBIF1		W	99	05	06B		WRAP CONNECTOR J05.1, 3*32 PIN
ACBIF2		W	99	05	07B		WRAP CONNECTOR J05.1, 3*32 PIN
ACBIF3		W	99	05	08B		WRAP CONNECTOR J05.1, 3*32 PIN
ACIFGRP		W	99	01	17A		WRAP CONNECTOR J01.1, 3*32 PIN
		W	99	04	17C		WRAP CONNECTOR J04.1, 3*32 PIN
ACIFMUXA		W	99	05	06A		WRAP CONNECTOR J05.1, 3*32 PIN
ACIFMUXB		W	99	05	17A		WRAP CONNECTOR J05.1, 3*32 PIN
ACINSTEN		W	99	04	30C		WRAP CONNECTOR J04.1, 3*32 PIN
		W	99	15	13A		WRAP CONNECTOR J15.1, 3*32 PIN
ACKNLG	7	B	97	51	14		COMMAND LINE A800
	7	WQ	99	06	29F		WRAP CONNECTOR J06.2, 3*32 PIN
		W	99	08	11C		WRAP CONNECTOR J08.1, 3*32 PIN
ACPGAD00		W	99	04	06A		WRAP CONNECTOR J04.1, 3*32 PIN
		W	99	15	02A		WRAP CONNECTOR J15.1, 3*32 PIN
ACPGAD01		W	99	04	07A		WRAP CONNECTOR J04.1, 3*32 PIN
		W	99	15	03A		WRAP CONNECTOR J15.1, 3*32 PIN
ACPGAD02		W	99	04	08A		WRAP CONNECTOR J04.1, 3*32 PIN
		W	99	15	04A		WRAP CONNECTOR J15.1, 3*32 PIN
ACPGAD03		W	99	04	09A		WRAP CONNECTOR J04.1, 3*32 PIN
		W	99	15	05A		WRAP CONNECTOR J15.1, 3*32 PIN
ACPGAD04		W	99	04	03B		WRAP CONNECTOR J04.1, 3*32 PIN
		W	99	15	06A		WRAP CONNECTOR J15.1, 3*32 PIN
ACPGAD05		W	99	04	04B		WRAP CONNECTOR J04.1, 3*32 PIN
		W	99	15	07A		WRAP CONNECTOR J15.1, 3*32 PIN
ACPGAD06		W	99	04	04C		WRAP CONNECTOR J04.1, 3*32 PIN
		W	99	15	08A		WRAP CONNECTOR J15.1, 3*32 PIN
ACPGAD07		W	99	04	05C		WRAP CONNECTOR J04.1, 3*32 PIN
		W	99	15	09A		WRAP CONNECTOR J15.1, 3*32 PIN
ACPGAD08		W	99	04	06C		WRAP CONNECTOR J04.1, 3*32 PIN
		W	99	15	10A		WRAP CONNECTOR J15.1, 3*32 PIN
ACPGAD09		W	99	04	07C		WRAP CONNECTOR J04.1, 3*32 PIN
		W	99	15	11A		WRAP CONNECTOR J15.1, 3*32 PIN
ACPGAD10		W	99	04	09C		WRAP CONNECTOR J04.1, 3*32 PIN
		W	99	15	10B		WRAP CONNECTOR J15.1, 3*32 PIN
ACPGAD11		W	99	04	10C		WRAP CONNECTOR J04.1, 3*32 PIN
		W	99	15	11B		WRAP CONNECTOR J15.1, 3*32 PIN
ACPGDATA		W	99	01	17B		WRAP CONNECTOR J01.1, 3*32 PIN
		W	99	02	18A		WRAP CONNECTOR J02.1, 3*32 PIN
		W	99	04	18A		WRAP CONNECTOR J04.1, 3*32 PIN
		W	99	05	18A		WRAP CONNECTOR J05.1, 3*32 PIN
		W	99	07	18B		WRAP CONNECTOR J07.1, 3*32 PIN
		W	99	14	02C		WRAP CONNECTOR J14.1, 3*32 PIN

./.

* STUDER * SIGNAL WIRE LIST * 82/01/12 * 15:02 * PAGE 30 *

TAPE LOCK SYSTEM 2000 A800: PARALLEL PROGRAMMER 1.228.900.00 79-10-05

SIG.NAME	COLOR	TYPE	GR	EL	PT	S	DESCRIPTION OF ELEMENT
(CONT.)		W	99	15	17A		WRAP CONNECTOR J15.1, 3*32 PIN
ACPGDATB		W	99	01	18B		WRAP CONNECTOR J01.1, 3*32 PIN
		W	99	02	22A		WRAP CONNECTOR J02.1, 3*32 PIN
		W	99	04	21A		WRAP CONNECTOR J04.1, 3*32 PIN
		W	99	05	21A		WRAP CONNECTOR J05.1, 3*32 PIN
		W	99	07	21B		WRAP CONNECTOR J07.1, 3*32 PIN
		W	99	14	03C		WRAP CONNECTOR J14.1, 3*32 PIN
		W	99	15	18A		WRAP CONNECTOR J15.1, 3*32 PIN
ACPGDATC		W	99	01	21B		WRAP CONNECTOR J01.1, 3*32 PIN
		W	99	02	23A		WRAP CONNECTOR J02.1, 3*32 PIN
		W	99	04	22A		WRAP CONNECTOR J04.1, 3*32 PIN
		W	99	05	22A		WRAP CONNECTOR J05.1, 3*32 PIN
		W	99	07	22B		WRAP CONNECTOR J07.1, 3*32 PIN
		W	99	14	04C		WRAP CONNECTOR J14.1, 3*32 PIN
		W	99	15	21A		WRAP CONNECTOR J15.1, 3*32 PIN
ACPGDATD		W	99	01	22B		WRAP CONNECTOR J01.1, 3*32 PIN
		W	99	04	23A		WRAP CONNECTOR J04.1, 3*32 PIN
		W	99	05	23A		WRAP CONNECTOR J05.1, 3*32 PIN
		W	99	07	23B		WRAP CONNECTOR J07.1, 3*32 PIN
		W	99	14	05C		WRAP CONNECTOR J14.1, 3*32 PIN
		W	99	15	22A		WRAP CONNECTOR J15.1, 3*32 PIN
ACPGDATE		W	99	01	23B		WRAP CONNECTOR J01.1, 3*32 PIN
		W	99	04	24A		WRAP CONNECTOR J04.1, 3*32 PIN
		W	99	05	24A		WRAP CONNECTOR J05.1, 3*32 PIN
		W	99	07	24B		WRAP CONNECTOR J07.1, 3*32 PIN
		W	99	14	06C		WRAP CONNECTOR J14.1, 3*32 PIN
		W	99	15	23A		WRAP CONNECTOR J15.1, 3*32 PIN
ACPGDATF		W	99	01	31B		WRAP CONNECTOR J01.1, 3*32 PIN
		W	99	04	25A		WRAP CONNECTOR J04.1, 3*32 PIN
		W	99	05	25A		WRAP CONNECTOR J05.1, 3*32 PIN
		W	99	07	25B		WRAP CONNECTOR J07.1, 3*32 PIN
		W	99	14	07C		WRAP CONNECTOR J14.1, 3*32 PIN
		W	99	15	24A		WRAP CONNECTOR J15.1, 3*32 PIN
ACPGDATG		W	99	01	13B		WRAP CONNECTOR J01.1, 3*32 PIN
		W	99	04	26A		WRAP CONNECTOR J04.1, 3*32 PIN
		W	99	05	26A		WRAP CONNECTOR J05.1, 3*32 PIN
		W	99	07	26B		WRAP CONNECTOR J07.1, 3*32 PIN
		W	99	14	08C		WRAP CONNECTOR J14.1, 3*32 PIN
		W	99	15	25A		WRAP CONNECTOR J15.1, 3*32 PIN
ACPGDATH		W	99	01	13A		WRAP CONNECTOR J01.1, 3*32 PIN
		W	99	04	27A		WRAP CONNECTOR J04.1, 3*32 PIN
		W	99	05	27A		WRAP CONNECTOR J05.1, 3*32 PIN
		W	99	07	27B		WRAP CONNECTOR J07.1, 3*32 PIN
		W	99	14	09C		WRAP CONNECTOR J14.1, 3*32 PIN
		W	99	15	26A		WRAP CONNECTOR J15.1, 3*32 PIN
ACPGDATI		W	99	04	28A		WRAP CONNECTOR J04.1, 3*32 PIN
		W	99	15	27A		WRAP CONNECTOR J15.1, 3*32 PIN
ACPGDATK		W	99	04	29A		WRAP CONNECTOR J04.1, 3*32 PIN
		W	99	15	28A		WRAP CONNECTOR J15.1, 3*32 PIN
ACPGDATL		W	99	04	30A		WRAP CONNECTOR J04.1, 3*32 PIN
		W	99	15	29A		WRAP CONNECTOR J15.1, 3*32 PIN
ACPGDATM		W	99	04	31A		WRAP CONNECTOR J04.1, 3*32 PIN
		W	99	15	30A		WRAP CONNECTOR J15.1, 3*32 PIN
ACPGDATN		W	99	04	31C		WRAP CONNECTOR J04.1, 3*32 PIN
		W	99	15	31A		WRAP CONNECTOR J15.1, 3*32 PIN
ACPGIRPT		W	99	04	17B		WRAP CONNECTOR J04.1, 3*32 PIN
		W	99	07	30C		WRAP CONNECTOR J07.1, 3*32 PIN
ACSERDAT		W	99	05	31A		WRAP CONNECTOR J05.1, 3*32 PIN
		W	99	14	25B		WRAP CONNECTOR J14.1, 3*32 PIN
ACSP-09		W	99	04	02B		WRAP CONNECTOR J04.1, 3*32 PIN
ACSPCAP		W	99	01	21A		WRAP CONNECTOR J01.1, 3*32 PIN
		W	99	02	21B		WRAP CONNECTOR J02.1, 3*32 PIN
ACSPGRP1		W	99	04	10B		WRAP CONNECTOR J04.1, 3*32 PIN
		W	99	05	22B		WRAP CONNECTOR J05.1, 3*32 PIN
ACSPGRP2		W	99	04	11B		WRAP CONNECTOR J04.1, 3*32 PIN
		W	99	07	11C		WRAP CONNECTOR J07.1, 3*32 PIN
ACSPGRP3		W	99	01	17C		WRAP CONNECTOR J01.1, 3*32 PIN
		W	99	04	11C		WRAP CONNECTOR J04.1, 3*32 PIN
ACSPGRP4		W	99	04	10A		WRAP CONNECTOR J04.1, 3*32 PIN
ACSPIFC1		W	99	01	28B		WRAP CONNECTOR J01.1, 3*32 PIN
ACTAPFLG		W	99	04	24B		WRAP CONNECTOR J04.1, 3*32 PIN
		W	99	15	18B		WRAP CONNECTOR J15.1, 3*32 PIN
ADCDATAA	2	B	97	93	09		CONN. ASS. TO MAIN PROGR. (J III)
		W	99	09	17A		WRAP CONNECTOR J09.1, 3*32 PIN
	2	WQ	99	10	09D		WRAP CONNECTOR J10.2, 3*32 PIN
ADCDATAB	R	B	97	93	07		CONN. ASS. TO MAIN PROGR. (J III)
		W	99	09	18A		WRAP CONNECTOR J09.1, 3*32 PIN
	R	WQ	99	10	07D		WRAP CONNECTOR J10.2, 3*32 PIN
ADCDATAC	1	B	97	93	02		CONN. ASS. TO MAIN PROGR. (J III)
		W	99	09	22A		WRAP CONNECTOR J09.1, 3*32 PIN
	1	WQ	99	10	03D		WRAP CONNECTOR J10.2, 3*32 PIN
ADCDATAD	1-6	B	97	92	23		CONN. ASS. TO MAIN PROGR. (J II)
		W	99	09	24A		WRAP CONNECTOR J09.1, 3*32 PIN
	1-6	WQ	99	09	29D		WRAP CONNECTOR J09.2, 3*32 PIN
ADCDATAE	4-1	B	97	92	17		CONN. ASS. TO MAIN PROGR. (J II)

./.

* STUDER * SIGNAL WIRE LIST * 82/01/12 * 15:02 * PAGE 31 *

TAPE LOCK SYSTEM 2000 A800: PARALLEL PROGRAMMER 1.228.900.00 79-10-05

SIG.NAME	COLOR	TYPE	GR	EL	PT	S	DESCRIPTION OF ELEMENT
(CONT.)	4-1	WQ	99	09	23D		WRAP CONNECTOR J09.2, 3*32 PIN
		W	99	09	26C		WRAP CONNECTOR J09.1, 3*32 PIN
ADD	4-6	B	97	91	33		CONN. ASS. TO MAIN PROGR. (J I)
	4-6	WQ	99	08	09F		WRAP CONNECTOR J08.2, 3*32 PIN
ADDRCT-A		W	99	01	22C		WRAP CONNECTOR J01.1, 3*32 PIN
		W	99	03	26B		WRAP CONNECTOR J03.1, 3*32 PIN
		W	+ 99	04	18C		WRAP CONNECTOR J04.1, 3*32 PIN
		W	99	14	18C		WRAP CONNECTOR J14.1, 3*32 PIN
ADDRCT-B		W	99	01	23C		WRAP CONNECTOR J01.1, 3*32 PIN
		W	99	03	27B		WRAP CONNECTOR J03.1, 3*32 PIN
		W	+ 99	04	21C		WRAP CONNECTOR J04.1, 3*32 PIN
		W	99	14	21C		WRAP CONNECTOR J14.1, 3*32 PIN
ADDRCT-C		W	99	01	24C		WRAP CONNECTOR J01.1, 3*32 PIN
		W	99	03	28B		WRAP CONNECTOR J03.1, 3*32 PIN
		W	+ 99	04	22C		WRAP CONNECTOR J04.1, 3*32 PIN
		W	99	14	22C		WRAP CONNECTOR J14.1, 3*32 PIN
ADDRCT-D		W	99	01	25C		WRAP CONNECTOR J01.1, 3*32 PIN
		W	99	03	29B		WRAP CONNECTOR J03.1, 3*32 PIN
		W	+ 99	04	23C		WRAP CONNECTOR J04.1, 3*32 PIN
		W	99	14	23C		WRAP CONNECTOR J14.1, 3*32 PIN
ADDRCT-E		W	99	01	26C		WRAP CONNECTOR J01.1, 3*32 PIN
		W	99	03	30B		WRAP CONNECTOR J03.1, 3*32 PIN
		W	+ 99	04	24C		WRAP CONNECTOR J04.1, 3*32 PIN
		W	99	14	24C		WRAP CONNECTOR J14.1, 3*32 PIN
ADDRCT-F		W	99	01	27C		WRAP CONNECTOR J01.1, 3*32 PIN
		W	99	03	31B		WRAP CONNECTOR J03.1, 3*32 PIN
		W	+ 99	04	25C		WRAP CONNECTOR J04.1, 3*32 PIN
		W	99	14	25C		WRAP CONNECTOR J14.1, 3*32 PIN
ADDRCT-G		W	99	01	28C		WRAP CONNECTOR J01.1, 3*32 PIN
		W	+ 99	04	26C		WRAP CONNECTOR J04.1, 3*32 PIN
		W	99	14	26C		WRAP CONNECTOR J14.1, 3*32 PIN
ADDRCT-H		W	99	01	29C		WRAP CONNECTOR J01.1, 3*32 PIN
		W	+ 99	04	27C		WRAP CONNECTOR J04.1, 3*32 PIN
		W	99	14	27C		WRAP CONNECTOR J14.1, 3*32 PIN
ADDRCT-I		W	99	01	30C		WRAP CONNECTOR J01.1, 3*32 PIN
		W	+ 99	04	28C		WRAP CONNECTOR J04.1, 3*32 PIN
		W	99	14	28C		WRAP CONNECTOR J14.1, 3*32 PIN
ADDRCT-K		W	99	01	31C		WRAP CONNECTOR J01.1, 3*32 PIN
		W	+ 99	04	29C		WRAP CONNECTOR J04.1, 3*32 PIN
		W	99	14	29C		WRAP CONNECTOR J14.1, 3*32 PIN
ADV RET	2	B	97	91	09		CONN. ASS. TO MAIN PROGR. (J I)
	2	WQ	99	08	09D		WRAP CONNECTOR J08.2, 3*32 PIN
		W	99	10	24B		WRAP CONNECTOR J10.1, 3*32 PIN
AREN1		W	99	04	11A		WRAP CONNECTOR J04.1, 3*32 PIN
		W	99	14	11C		WRAP CONNECTOR J14.1, 3*32 PIN
AREN2		W	99	04	13A		WRAP CONNECTOR J04.1, 3*32 PIN
		W	99	14	10C		WRAP CONNECTOR J14.1, 3*32 PIN
ARIF-Y		W	99	05	28A		WRAP CONNECTOR J05.1, 3*32 PIN
		W	99	14	08B		WRAP CONNECTOR J14.1, 3*32 PIN
ARPOUT-A		W	99	01	08A		WRAP CONNECTOR J01.1, 3*32 PIN
		W	+ 99	04	26B		WRAP CONNECTOR J04.1, 3*32 PIN
		W	99	05	11B		WRAP CONNECTOR J05.1, 3*32 PIN
		W	99	07	07C		WRAP CONNECTOR J07.1, 3*32 PIN
		W	99	14	07B		WRAP CONNECTOR J14.1, 3*32 PIN
ARPOUT-B		W	99	01	09A		WRAP CONNECTOR J01.1, 3*32 PIN
		W	+ 99	04	27B		WRAP CONNECTOR J04.1, 3*32 PIN
		W	99	07	06C		WRAP CONNECTOR J07.1, 3*32 PIN
		W	99	14	06B		WRAP CONNECTOR J14.1, 3*32 PIN
ARPOUT-C		W	99	01	10A		WRAP CONNECTOR J01.1, 3*32 PIN
		W	+ 99	04	28B		WRAP CONNECTOR J04.1, 3*32 PIN
		W	99	07	05C		WRAP CONNECTOR J07.1, 3*32 PIN
		W	99	14	05B		WRAP CONNECTOR J14.1, 3*32 PIN
ARPOUT-D		W	99	01	09D		WRAP CONNECTOR J01.1, 3*32 PIN
		W	+ 99	04	29B		WRAP CONNECTOR J04.1, 3*32 PIN
		W	99	07	04C		WRAP CONNECTOR J07.1, 3*32 PIN
		W	99	14	04B		WRAP CONNECTOR J14.1, 3*32 PIN
ARPOUT-E		W	99	01	10B		WRAP CONNECTOR J01.1, 3*32 PIN
		W	+ 99	04	30B		WRAP CONNECTOR J04.1, 3*32 PIN
		W	99	14	30C		WRAP CONNECTOR J14.1, 3*32 PIN
ARPOUT-F		W	99	01	11B		WRAP CONNECTOR J01.1, 3*32 PIN
		W	+ 99	04	31B		WRAP CONNECTOR J04.1, 3*32 PIN
		W	99	14	31C		WRAP CONNECTOR J14.1, 3*32 PIN
ARSEROUT		W	99	01	29B		WRAP CONNECTOR J01.1, 3*32 PIN
		W	99	02	31B		WRAP CONNECTOR J02.1, 3*32 PIN
		W	99	14	13B		WRAP CONNECTOR J14.1, 3*32 PIN
AUXDATIN		W	99	14	26B		WRAP CONNECTOR J14.1, 3*32 PIN
A800DATA	3	B	97	51	34		COMMAND LINE A800
	3	WQ	99	06	31F		WRAP CONNECTOR J06.2, 3*32 PIN
		W	99	08	10C		WRAP CONNECTOR J08.1, 3*32 PIN
A800SUPV	2	D	97	51	10		COMMAND LINE A800
		W	+ 99	06	07F		WRAP CONNECTOR J06.2, 3*32 PIN
	2	WQ	99	06	18E		WRAP CONNECTOR J06.2, 3*32 PIN
		W	99	08	03B		WRAP CONNECTOR J08.1, 3*32 PIN
B-CALC	5-2	B	97	91	34		CONN. ASS. TO MAIN PROGR. (J I)
	5-2	WQ	99	08	10F		WRAP CONNECTOR J08.2, 3*32 PIN
		W	99	10	06C		WRAP CONNECTOR J10.1, 3*32 PIN

* STUDER * SIGNAL WIRE LIST * 82/01/12 * 15:02 * PAGE 32 *

TAPE LOCK SYSTEM 2000 A800: PARALLEL PROGRAMMER 1.228.900.00 79-10-05

SIG.NAME	COLOR	TYPE	GR	EL	PT	S	DESCRIPTION OF ELEMENT
B-ENTRYM	1-R	B	97	91	21		CONN. ASS. TO MAIN PROGR. (J I)
	1-R	WQ	99	08	27D		WRAP CONNECTOR J08.2, 3*32 PIN
		W	99	10	10B		WRAP CONNECTOR J10.1, 3*32 PIN
B-EXITSL	1-5	B	97	91	15		CONN. ASS. TO MAIN PROGR. (J I)
	1-5	WQ	99	08	21D		WRAP CONNECTOR J08.2, 3*32 PIN
		W	99	10	10A		WRAP CONNECTOR J10.1, 3*32 PIN
B-GENUSB	5-0	B	97	91	36		CONN. ASS. TO MAIN PROGR. (J I)
	5-0	WQ	99	08	13F		WRAP CONNECTOR J08.2, 3*32 PIN
		W	99	10	28C		WRAP CONNECTOR J10.1, 3*32 PIN
B-LOWLIM	8-1	B	97	91	19		CONN. ASS. TO MAIN PROGR. (J I)
	8-1	WQ	99	08	25D		WRAP CONNECTOR J08.2, 3*32 PIN
		W	99	10	10C		WRAP CONNECTOR J10.1, 3*32 PIN
B-NOMAST	4-5-0	B	97	91	47		CONN. ASS. TO MAIN PROGR. (J I)
	4-5-0	WQ	99	08	29F		WRAP CONNECTOR J08.2, 3*32 PIN
		W	99	10	03A		WRAP CONNECTOR J10.1, 3*32 PIN
B-PHAS	9-4	B	97	91	16		CONN. ASS. TO MAIN PROGR. (J I)
	9-4	WQ	99	08	22D		WRAP CONNECTOR J08.2, 3*32 PIN
		W	99	10	17A		WRAP CONNECTOR J10.1, 3*32 PIN
B-RECENB	9-R	B	97	93	20		CONN. ASS. TO MAIN PROGR. (JIII)
		W	99	10	23B		WRAP CONNECTOR J10.1, 3*32 PIN
	9-R	WQ	99	10	26D		WRAP CONNECTOR J10.2, 3*32 PIN
B-REHEAR	8-R	B	97	92	12		CONN. ASS. TO MAIN PROGR. (J II)
	8-R	WQ	99	09	13D		WRAP CONNECTOR J09.2, 3*32 PIN
		W	99	10	03C		WRAP CONNECTOR J10.1, 3*32 PIN
B-UPPLIM	8-R	B	97	91	12		CONN. ASS. TO MAIN PROGR. (J I)
	8-R	WQ	99	08	13D		WRAP CONNECTOR J08.2, 3*32 PIN
		W	99	10	13A		WRAP CONNECTOR J10.1, 3*32 PIN
BADRSTRT	4	B	97	92	05		CONN. ASS. TO MAIN PROGR. (J II)
	4	WQ	99	09	05D		WRAP CONNECTOR J09.2, 3*32 PIN
		W	99	10	23C		WRAP CONNECTOR J10.1, 3*32 PIN
BEDMMPRG	9-8	B	97	93	18		CONN. ASS. TO MAIN PROGR. (JIII)
		W	99	10	07B		WRAP CONNECTOR J10.1, 3*32 PIN
	9-8	WQ	99	10	24D		WRAP CONNECTOR J10.2, 3*32 PIN
BENT/PKS	2-0	B	97	91	45		CONN. ASS. TO MAIN PROGR. (J I)
	2-0	WQ	99	08	27F		WRAP CONNECTOR J08.2, 3*32 PIN
		W	99	10	09C		WRAP CONNECTOR J10.1, 3*32 PIN
BLKDSP0	4-R	B	97	92	31		CONN. ASS. TO MAIN PROGR. (J II)
		W	99	09	02B		WRAP CONNECTOR J09.1, 3*32 PIN
	4-R	WQ	99	09	07F		WRAP CONNECTOR J09.2, 3*32 PIN
BLKDSP1	1	B	97	92	03		CONN. ASS. TO MAIN PROGR. (J II)
		W	99	09	02C		WRAP CONNECTOR J09.1, 3*32 PIN
	1	WQ	99	09	03D		WRAP CONNECTOR J09.2, 3*32 PIN
BLKDSP2	4-6	B	97	92	33		CONN. ASS. TO MAIN PROGR. (J II)
		W	99	09	03B		WRAP CONNECTOR J09.1, 3*32 PIN
	4-6	WQ	99	09	09F		WRAP CONNECTOR J09.2, 3*32 PIN
BLKDSP3	4-0	B	97	92	37		CONN. ASS. TO MAIN PROGR. (J II)
		W	99	09	03C		WRAP CONNECTOR J09.1, 3*32 PIN
	4-0	WQ	99	09	17F		WRAP CONNECTOR J09.2, 3*32 PIN
BLKDSP4	6-0	B	97	92	44		CONN. ASS. TO MAIN PROGR. (J II)
		W	99	09	04B		WRAP CONNECTOR J09.1, 3*32 PIN
	6-0	WQ	99	09	26F		WRAP CONNECTOR J09.2, 3*32 PIN
BLKDSP5	9-1-0	B	97	92	46		CONN. ASS. TO MAIN PROGR. (J II)
		W	99	09	04C		WRAP CONNECTOR J09.1, 3*32 PIN
	9-1-0	WQ	99	09	28F		WRAP CONNECTOR J09.2, 3*32 PIN
BLKDSP6	9-0	B	97	93	26		CONN. ASS. TO MAIN PROGR. (JIII)
		W	99	09	05B		WRAP CONNECTOR J09.1, 3*32 PIN
	9-0	WQ	99	10	02F		WRAP CONNECTOR J10.2, 3*32 PIN
BLKDSP7	6-2-0	B	97	92	50		CONN. ASS. TO MAIN PROGR. (J II)
		W	99	09	05C		WRAP CONNECTOR J09.1, 3*32 PIN
	6-2-0	WQ	99	09	31F		WRAP CONNECTOR J09.2, 3*32 PIN
BLKDSP8	4-8	B	97	93	29		CONN. ASS. TO MAIN PROGR. (JIII)
		W	99	09	06B		WRAP CONNECTOR J09.1, 3*32 PIN
	4-8	WQ	99	10	05F		WRAP CONNECTOR J10.2, 3*32 PIN
BLKMMPRG	9-1-0	B	97	93	46		CONN. ASS. TO MAIN PROGR. (JIII)
		W	99	10	07A		WRAP CONNECTOR J10.1, 3*32 PIN
	9-1-0	WQ	99	10	28F		WRAP CONNECTOR J10.2, 3*32 PIN
BLOCATOR	0	B	97	93	10		CONN. ASS. TO MAIN PROGR. (JIII)
	0	WQ	99	10	10D		WRAP CONNECTOR J10.2, 3*32 PIN
		W	99	10	27C		WRAP CONNECTOR J10.1, 3*32 PIN
BOFFSREG	9-5	B	97	91	14		CONN. ASS. TO MAIN PROGR. (J I)
	9-5	WQ	99	08	18D		WRAP CONNECTOR J08.2, 3*32 PIN
		W	99	10	13B		WRAP CONNECTOR J10.1, 3*32 PIN
BPILMPRG	6-0	B	97	93	44		CONN. ASS. TO MAIN PROGR. (JIII)
		W	99	10	08B		WRAP CONNECTOR J10.1, 3*32 PIN
	6-0	WQ	99	10	26F		WRAP CONNECTOR J10.2, 3*32 PIN
BPKMMPRG	6-2	B	97	93	13		CONN. ASS. TO MAIN PROGR. (JIII)
		W	99	10	07C		WRAP CONNECTOR J10.1, 3*32 PIN
	6-2	WQ	99	10	17D		WRAP CONNECTOR J10.2, 3*32 PIN
BPLATEN		W	99	06	23B		WRAP CONNECTOR J06.1, 3*32 PIN
		W	99	17	29A		WRAP CONNECTOR J17.1, 3*32 PIN
BPTRMDAT		W	99	07	28B		WRAP CONNECTOR J07.1, 3*32 PIN
		W	99	17	13B		WRAP CONNECTOR J17.1, 3*32 PIN
BTCTA -M		W	99	01	25A		WRAP CONNECTOR J01.1, 3*32 PIN
		W	99	03	25A		WRAP CONNECTOR J03.1, 3*32 PIN

./.

* STUDER * SIGNAL WIRE LIST * 82/01/12 * 15:02 * PAGE 33 *

TAPE LOCK SYSTEM 2000 A800: PARALLEL PROGRAMMER 1.228.900.00 79-10-05

SIG.NAME	COLOR	TYPE	GR	EL	PT	S	DESCRIPTION OF ELEMENT
(CONT.)		W	99	05	25B		WRAP CONNECTOR J05.1, 3*32 PIN
BTCTA -S		W	99	02	25C		WRAP CONNECTOR J02.1, 3*32 PIN
		W	99	03	25C		WRAP CONNECTOR J03.1, 3*32 PIN
		W	99	05	25C		WRAP CONNECTOR J05.1, 3*32 PIN
BTCTB -M		W	99	01	26A		WRAP CONNECTOR J01.1, 3*32 PIN
		W	99	03	26A		WRAP CONNECTOR J03.1, 3*32 PIN
		W	99	05	26B		WRAP CONNECTOR J05.1, 3*32 PIN
BTCTB -S		W	99	02	26C		WRAP CONNECTOR J02.1, 3*32 PIN
		W	99	03	26C		WRAP CONNECTOR J03.1, 3*32 PIN
		W	99	05	26C		WRAP CONNECTOR J05.1, 3*32 PIN
BTCTC -M		W	99	01	27A		WRAP CONNECTOR J01.1, 3*32 PIN
		W	99	02	27A		WRAP CONNECTOR J02.1, 3*32 PIN
		W	99	03	27A		WRAP CONNECTOR J03.1, 3*32 PIN
		W	99	05	27B		WRAP CONNECTOR J05.1, 3*32 PIN
BTCTC -S		W	99	02	27C		WRAP CONNECTOR J02.1, 3*32 PIN
		W	99	03	27C		WRAP CONNECTOR J03.1, 3*32 PIN
		W	99	05	27C		WRAP CONNECTOR J05.1, 3*32 PIN
BTCTD -M		W	99	01	28A		WRAP CONNECTOR J01.1, 3*32 PIN
		W	99	03	28A		WRAP CONNECTOR J03.1, 3*32 PIN
		W	99	05	28B		WRAP CONNECTOR J05.1, 3*32 PIN
BTCTD -S		W	99	02	28C		WRAP CONNECTOR J02.1, 3*32 PIN
		W	99	03	28C		WRAP CONNECTOR J03.1, 3*32 PIN
		W	99	05	28C		WRAP CONNECTOR J05.1, 3*32 PIN
BTCTE -M		W	99	03	29A		WRAP CONNECTOR J03.1, 3*32 PIN
		W	99	05	29B		WRAP CONNECTOR J05.1, 3*32 PIN
BTCTE -S		W	99	02	29C		WRAP CONNECTOR J02.1, 3*32 PIN
		W	99	03	29C		WRAP CONNECTOR J03.1, 3*32 PIN
		W	99	05	29C		WRAP CONNECTOR J05.1, 3*32 PIN
BTCTF -M		W	99	03	30A		WRAP CONNECTOR J03.1, 3*32 PIN
		W	99	05	30B		WRAP CONNECTOR J05.1, 3*32 PIN
BTCTF -S		W	99	02	30C		WRAP CONNECTOR J02.1, 3*32 PIN
		W	99	03	30C		WRAP CONNECTOR J03.1, 3*32 PIN
		W	99	05	30C		WRAP CONNECTOR J05.1, 3*32 PIN
BTCTG -M		W	99	01	31A		WRAP CONNECTOR J01.1, 3*32 PIN
		W	99	03	31A		WRAP CONNECTOR J03.1, 3*32 PIN
		W	99	05	31B		WRAP CONNECTOR J05.1, 3*32 PIN
BTCTG -S		W	99	02	31C		WRAP CONNECTOR J02.1, 3*32 PIN
		W	99	03	31C		WRAP CONNECTOR J03.1, 3*32 PIN
		W	99	05	31C		WRAP CONNECTOR J05.1, 3*32 PIN
BTCTOF-M		W	99	03	24A		WRAP CONNECTOR J03.1, 3*32 PIN
		W	99	05	11A		WRAP CONNECTOR J05.1, 3*32 PIN
BTCTOF-S		W	99	03	24C		WRAP CONNECTOR J03.1, 3*32 PIN
		W	99	05	11C		WRAP CONNECTOR J05.1, 3*32 PIN
BULBDPA0	2-R	B	97	92	41		CONN. ASS. TO MAIN PROGR. (J II)
	2-R	WQ	99	09	23F		WRAP CONNECTOR J09.2, 3*32 PIN
BULBDPA1	4-8	B	97	91	29		CONN. ASS. TO MAIN PROGR. (J I)
	4-8	WQ	99	08	05F		WRAP CONNECTOR J08.2, 3*32 PIN
BULBDPA2	1	B	97	91	03		CONN. ASS. TO MAIN PROGR. (J I)
	1	WQ	99	08	03D		WRAP CONNECTOR J08.2, 3*32 PIN
BULBDPB2	4-R	B	97	91	31		CONN. ASS. TO MAIN PROGR. (J I)
	4-R	WQ	99	08	07F		WRAP CONNECTOR J08.2, 3*32 PIN
BULBDPH1	8	B	97	92	06		CONN. ASS. TO MAIN PROGR. (J II)
	8	WQ	99	09	06D		WRAP CONNECTOR J09.2, 3*32 PIN
BULBDPL1	8-6	B	97	92	30		CONN. ASS. TO MAIN PROGR. (J II)
	8-6	WQ	99	09	18F		WRAP CONNECTOR J09.2, 3*32 PIN
BULBDPN1	9-8	B	97	92	18		CONN. ASS. TO MAIN PROGR. (J II)
	9-8	WQ	99	09	24D		WRAP CONNECTOR J09.2, 3*32 PIN
BULBDPP1	9-6	B	97	92	22		CONN. ASS. TO MAIN PROGR. (J II)
	9-6	WQ	99	09	28D		WRAP CONNECTOR J09.2, 3*32 PIN
BULBDPS2	4-0	B	97	93	37		CONN. ASS. TO MAIN PROGR. (JIII)
	4-0	WQ	99	10	17F		WRAP CONNECTOR J10.2, 3*32 PIN
BULBDPT2	6-R	B	97	93	39		CONN. ASS. TO MAIN PROGR. (JIII)
	6-R	WQ	99	10	21F		WRAP CONNECTOR J10.2, 3*32 PIN
BULBDPU2	8-0	B	97	93	42		CONN. ASS. TO MAIN PROGR. (JIII)
	8-0	WQ	99	10	24F		WRAP CONNECTOR J10.2, 3*32 PIN
BULBPBF2	1-2	B	97	91	25		CONN. ASS. TO MAIN PROGR. (J I)
	1-2	WQ	99	08	31D		WRAP CONNECTOR J08.2, 3*32 PIN
BULBPBF3	9-2	B	97	91	24		CONN. ASS. TO MAIN PROGR. (J I)
	9-2	WQ	99	08	30D		WRAP CONNECTOR J08.2, 3*32 PIN
BULBPBF4	1-6	B	97	91	23		CONN. ASS. TO MAIN PROGR. (J I)
	1-6	WQ	99	08	29D		WRAP CONNECTOR J08.2, 3*32 PIN
BULBPBG3	6	B	97	92	08		CONN. ASS. TO MAIN PROGR. (J II)
	6	WQ	99	09	08D		WRAP CONNECTOR J09.2, 3*32 PIN
BULBPBH3	6-2	B	97	92	13		CONN. ASS. TO MAIN PROGR. (J II)
	6-2	WQ	99	09	17D		WRAP CONNECTOR J09.2, 3*32 PIN
BULBPBI3	8	B	97	91	06		CONN. ASS. TO MAIN PROGR. (J I)
	8	WQ	99	08	06D		WRAP CONNECTOR J08.2, 3*32 PIN
BULBPBK5	8-2	B	97	92	40		CONN. ASS. TO MAIN PROGR. (J II)
	8-2	WQ	99	09	22F		WRAP CONNECTOR J09.2, 3*32 PIN

```
*****************************************************************************************************************
*  S T U D E R  *  S I G N A L  W I R E  L I S T          *  82/01/12 * 15:02    *  P A G E    34   *
*****************************************************************************************************************
TAPE LOCK SYSTEM 2000 A800: PARALLEL PROGRAMMER          1.228.900.00          79-10-05

SIG.NAME  COLOR TYPE GR EL PT  S DESCRIPTION OF ELEMENT
--------- ----- ---- -- -- --- - ------------------------------
BULBPBL5  1-R   B    97 92 21   CONN. ASS. TO MAIN PROGR. (J II)
          1-R   WQ   99 09 27D  WRAP CONNECTOR J09.2, 3*32 PIN

BULBPBM5  6     B    97 93 08   CONN. ASS. TO MAIN PROGR. (JIII)
          6     WQ   99 10 08D  WRAP CONNECTOR J10.2, 3*32 PIN

CAP-EN            W    99 02 24C  WRAP CONNECTOR J02.1, 3*32 PIN
                  W  + 99 08 24C  WRAP CONNECTOR J08.1, 3*32 PIN

CAPLATEN          W    99 02 13B  WRAP CONNECTOR J02.1, 3*32 PIN
                  W    99 06 13C  WRAP CONNECTOR J06.1, 3*32 PIN

CAPMUX            W    99 02 04C  WRAP CONNECTOR J02.1, 3*32 PIN
                  W    99 06 04B  WRAP CONNECTOR J06.1, 3*32 PIN

CCSUPVIS  2       B    97 51 03   COMMAND LINE A800
          2       WQ   99 06 31D  WRAP CONNECTOR J06.2, 3*32 PIN
                  W  + 99 11 07B  WRAP CONNECTOR J11.1, 3*32 PIN
                  W    99 17 25B  WRAP CONNECTOR J17.1, 3*32 PIN

CKACTLT           W    99 01 07B  WRAP CONNECTOR J01.1, 3*32 PIN
                  W    99 04 04A  WRAP CONNECTOR J04.1, 3*32 PIN

CLRADRCT          W    99 01 05B  WRAP CONNECTOR J01.1, 3*32 PIN
                  W    99 04 02A  WRAP CONNECTOR J04.1, 3*32 PIN

CODEFR/S  1-5     B    97 92 15   CONN. ASS. TO MAIN PROGR. (J II)
          1-5     WQ   99 09 21D  WRAP CONNECTOR J09.2, 3*32 PIN
                  W    99 10 23A  WRAP CONNECTOR J10.1, 3*32 PIN

CODENDEF  5-6     B    97 91 32   CONN. ASS. TO MAIN PROGR. (J  I)
          5-6     WQ   99 08 08F  WRAP CONNECTOR J08.2, 3*32 PIN
                  W    99 10 27B  WRAP CONNECTOR J10.1, 3*32 PIN

CODGENO           W    99 01 05C  WRAP CONNECTOR J01.1, 3*32 PIN
                  W    99 08 29B  WRAP CONNECTOR J08.1, 3*32 PIN
                  W  + 99 11 25A  WRAP CONNECTOR J11.1, 3*32 PIN

CODIN1-S          W    99 08 28B  WRAP CONNECTOR J08.1, 3*32 PIN
                  W  + 99 11 04B  WRAP CONNECTOR J11.1, 3*32 PIN
                  W  + 99 12 11C  WRAP CONNECTOR J12.1, 3*32 PIN
                  W    99 13 08C  WRAP CONNECTOR J13.1, 3*32 PIN

CODOCT            W    99 04 06B  WRAP CONNECTOR J04.1, 3*32 PIN
                  W    99 05 09B  WRAP CONNECTOR J05.1, 3*32 PIN

CONNFAIL  6-0     B    97 91 44   CONN. ASS. TO MAIN PROGR. (J  I)
          6-0     WQ   99 08 26F  WRAP CONNECTOR J08.2, 3*32 PIN
                  W    99 10 06B  WRAP CONNECTOR J10.1, 3*32 PIN

COSTCKCT          W    99 04 02C  WRAP CONNECTOR J04.1, 3*32 PIN
                  W    99 14 10B  WRAP CONNECTOR J14.1, 3*32 PIN

DATACLK   9       B    97 51 16   COMMAND LINE A800
          9       WQ   99 06 27F  WRAP CONNECTOR J06.2, 3*32 PIN
                  W  + 99 07 27F  WRAP CONNECTOR J07.2, 3*32 PIN
                                                              ./.

SIG.NAME  COLOR TYPE GR EL PT  S DESCRIPTION OF ELEMENT
--------- ----- ---- -- -- --- - ------------------------------
(CONT.)           W    99 08 08A  WRAP CONNECTOR J08.1, 3*32 PIN
                  W  + 99 08 09B  WRAP CONNECTOR J08.1, 3*32 PIN

DIFF      0       B    97 92 10   CONN. ASS. TO MAIN PROGR. (J II)
          0       WQ   99 09 10D  WRAP CONNECTOR J09.2, 3*32 PIN
                  W    99 10 18C  WRAP CONNECTOR J10.1, 3*32 PIN

DIRDWN-M          W    99 01 27B  WRAP CONNECTOR J01.1, 3*32 PIN
                  W    99 13 27A  WRAP CONNECTOR J13.1, 3*32 PIN

DIRDWN-S          W    99 03 06C  WRAP CONNECTOR J03.1, 3*32 PIN
                  W    99 13 27C  WRAP CONNECTOR J13.1, 3*32 PIN

DIRUP -M          W    99 05 09A  WRAP CONNECTOR J05.1, 3*32 PIN
                  W    99 13 26A  WRAP CONNECTOR J13.1, 3*32 PIN

DIRUP -S          W    99 05 09C  WRAP CONNECTOR J05.1, 3*32 PIN
                  W    99 13 26C  WRAP CONNECTOR J13.1, 3*32 PIN

DISEND9+  5-R     B    97 93 30   CONN. ASS. TO MAIN PROGR. (JIII)
                  W    99 09 06C  WRAP CONNECTOR J09.1, 3*32 PIN
          5-R     WQ   99 10 06F  WRAP CONNECTOR J10.2, 3*32 PIN

DISEND9-  4-6     B    97 93 33   CONN. ASS. TO MAIN PROGR. (JIII)
                  W    99 09 07B  WRAP CONNECTOR J09.1, 3*32 PIN
          4-6     WQ   99 10 09F  WRAP CONNECTOR J10.2, 3*32 PIN

DISPEN0   8-5     B    97 92 28   CONN. ASS. TO MAIN PROGR. (J II)
          8-5     WQ   99 09 04F  WRAP CONNECTOR J09.2, 3*32 PIN
                  W    99 09 07C  WRAP CONNECTOR J09.1, 3*32 PIN

DISPEN1   9-0     B    97 92 26   CONN. ASS. TO MAIN PROGR. (J II)
          9-0     WQ   99 09 02F  WRAP CONNECTOR J09.2, 3*32 PIN
                  W    99 09 08B  WRAP CONNECTOR J09.1, 3*32 PIN

DISPEN2   5-R     B    97 92 30   CONN. ASS. TO MAIN PROGR. (J II)
          5-R     WQ   99 09 06F  WRAP CONNECTOR J09.2, 3*32 PIN
                  W    99 09 08C  WRAP CONNECTOR J09.1, 3*32 PIN

DISPEN3   5-6     B    97 92 32   CONN. ASS. TO MAIN PROGR. (J II)
          5-6     WQ   99 09 08F  WRAP CONNECTOR J09.2, 3*32 PIN
                  W    99 09 09C  WRAP CONNECTOR J09.1, 3*32 PIN

DISPEN4   6-R     B    97 92 39   CONN. ASS. TO MAIN PROGR. (J II)
                  W    99 09 10C  WRAP CONNECTOR J09.1, 3*32 PIN
          6-R     WQ   99 09 21F  WRAP CONNECTOR J09.2, 3*32 PIN

DISPEN5   8-R-0   B    97 92 48   CONN. ASS. TO MAIN PROGR. (J II)
                  W    99 09 11C  WRAP CONNECTOR J09.1, 3*32 PIN
          8-R-0   WQ   99 09 30F  WRAP CONNECTOR J09.2, 3*32 PIN

DISPEN6   4-5-0   B    97 92 47   CONN. ASS. TO MAIN PROGR. (J II)
                  W    99 09 13C  WRAP CONNECTOR J09.1, 3*32 PIN
          4-5-0   WQ   99 09 29F  WRAP CONNECTOR J09.2, 3*32 PIN

DISPEN7   1-2     B    97 92 25   CONN. ASS. TO MAIN PROGR. (J II)
                                                              ./.
```

```
*****************************************************************************************************************
*  S T U D E R  *  S I G N A L  W I R E  L I S T          *  82/01/12 * 15:02    *  P A G E    35   *
*****************************************************************************************************************
TAPE LOCK SYSTEM 2000 A800: PARALLEL PROGRAMMER          1.228.900.00          79-10-05

SIG.NAME  COLOR TYPE GR EL PT  S DESCRIPTION OF ELEMENT
--------- ----- ---- -- -- --- - ------------------------------
(CONT.)           W    99 09 17C  WRAP CONNECTOR J09.1, 3*32 PIN
          1-2     WQ   99 09 31D  WRAP CONNECTOR J09.2, 3*32 PIN

DISPEN8   1-0     B    97 93 27   CONN. ASS. TO MAIN PROGR. (JIII)
                  W    99 09 18C  WRAP CONNECTOR J09.1, 3*32 PIN
          1-0     WQ   99 10 03F  WRAP CONNECTOR J10.2, 3*32 PIN

DIVCT- A          W    99 14 28B  WRAP CONNECTOR J14.1, 3*32 PIN

DIVCT- B          W    99 14 29B  WRAP CONNECTOR J14.1, 3*32 PIN

DIVCT- C          W    99 14 30B  WRAP CONNECTOR J14.1, 3*32 PIN

DIVCT- D          W    99 14 31B  WRAP CONNECTOR J14.1, 3*32 PIN

DMCOD -M          W    99 05 10A  WRAP CONNECTOR J05.1, 3*32 PIN
                  W    99 13 17A  WRAP CONNECTOR J13.1, 3*32 PIN

DMCOD -S          W    99 05 10C  WRAP CONNECTOR J05.1, 3*32 PIN
                  W    99 13 17C  WRAP CONNECTOR J13.1, 3*32 PIN

DMFAIL-M          W    99 01 26B  WRAP CONNECTOR J01.1, 3*32 PIN
                  W    99 13 07A  WRAP CONNECTOR J13.1, 3*32 PIN

DMFAIL-S          W    99 05 08C  WRAP CONNECTOR J05.1, 3*32 PIN
                  W    99 13 07C  WRAP CONNECTOR J13.1, 3*32 PIN

DMOSCI-M          W    99 13 13A  WRAP CONNECTOR J13.1, 3*32 PIN

DMOSCI-S          W    99 02 13C  WRAP CONNECTOR J02.1, 3*32 PIN
                  W    99 13 13C  WRAP CONNECTOR J13.1, 3*32 PIN

EDIT      8-R     B    97 93 12   CONN. ASS. TO MAIN PROGR. (JIII)
                  W    99 10 06A  WRAP CONNECTOR J10.1, 3*32 PIN
          8-R     WQ   99 10 13D  WRAP CONNECTOR J10.2, 3*32 PIN

EDIT CD   R       B    97 91 07   CONN. ASS. TO MAIN PROGR. (J  I)
          R       WQ   99 08 07D  WRAP CONNECTOR J08.2, 3*32 PIN
                  W    99 10 27A  WRAP CONNECTOR J10.1, 3*32 PIN

EDLEADDR  7       B    97 71 31   AUXILIARY CONNECTOR
          7       WQ   99 07 09E  WRAP CONNECTOR J07.2, 3*32 PIN
                  W    99 08 31B  WRAP CONNECTOR J08.1, 3*32 PIN

EDMODEDR  8       B    97 71 03   AUXILIARY CONNECTOR
          8       WQ   99 07 03D  WRAP CONNECTOR J07.2, 3*32 PIN
                  W    99 08 31C  WRAP CONNECTOR J08.1, 3*32 PIN

ENADC             W    99 09 25A  WRAP CONNECTOR J09.1, 3*32 PIN
                  W    99 10 26B  WRAP CONNECTOR J10.1, 3*32 PIN

ENTADRCT          W    99 01 30A  WRAP CONNECTOR J01.1, 3*32 PIN
                  W    99 04 03A  WRAP CONNECTOR J04.1, 3*32 PIN

ENTRY     6-2     B    97 91 13   CONN. ASS. TO MAIN PROGR. (J  I)
          6-2     WQ   99 08 17D  WRAP CONNECTOR J08.2, 3*32 PIN
                                                              -/.

SIG.NAME  COLOR TYPE GR EL PT  S DESCRIPTION OF ELEMENT
--------- ----- ---- -- -- --- - ------------------------------
(CONT.)           W    99 10 04A  WRAP CONNECTOR J10.1, 3*32 PIN

EXEC      9-0     B    97 91 26   CONN. ASS. TO MAIN PROGR. (J  I)
          9-0     WQ   99 08 02F  WRAP CONNECTOR J08.2, 3*32 PIN

EXFREQTM  3       L    97 15 03A  REFERENCE FREQUENCY INPUT
          3       WQ   99 01 03B  WRAP CONNECTOR J01.1, 3*32 PIN

EXFREQ1   2       L    97 15 02A  REFERENCE FREQUENCY INPUT
          2       WQ   99 01 02B  WRAP CONNECTOR J01.1, 3*32 PIN

EXFREQ2   4       L    97 15 04A  REFERENCE FREQUENCY INPUT
          4       WQ   99 01 04B  WRAP CONNECTOR J01.1, 3*32 PIN

EXFRQDAT          W    99 01 30B  WRAP CONNECTOR J01.1, 3*32 PIN
                  W  + 99 13 28A  WRAP CONNECTOR J13.1, 3*32 PIN
                  W    99 14 27B  WRAP CONNECTOR J14.1, 3*32 PIN

EXFRQINA  2       L    97 14 02   REFERENCE FREQUENCY INPUT
          2       L    97 15 02   REFERENCE FREQUENCY INPUT

EXFRQINB  3       L    97 14 03   REFERENCE FREQUENCY INPUT
          3       L    97 15 03   REFERENCE FREQUENCY INPUT

EXFRQSCR  0       L    97 13 01   REFERENCE FREQUENCY INPUT
          0       L    97 14 01   REFERENCE FREQUENCY INPUT

EXGENOUT          W    99 01 06C  WRAP CONNECTOR J01.1, 3*32 PIN
                  W    99 08 25B  WRAP CONNECTOR J08.1, 3*32 PIN
                  W  + 99 11 25C  WRAP CONNECTOR J11.1, 3*32 PIN

EXTFRQSL          W    99 06 27C  WRAP CONNECTOR J06.1, 3*32 PIN

EXTRECCM  7       L    97 72 05C  RELAIS PRINT
          5       B    98 51 07   MASTER CONTROL CONNECTOR A800
          7       WQ   99 07 05D  WRAP CONNECTOR J07.2, 3*32 PIN
          5       WQ   99 17 26A  WRAP CONNECTOR J17.1, 3*32 PIN

EXTSYNC           W    99 01 02C  WRAP CONNECTOR J01.1, 3*32 PIN

FAST FWD  4-1     B    97 93 17   CONN. ASS. TO MAIN PROGR. (JIII)
                  W    99 10 05B  WRAP CONNECTOR J10.1, 3*32 PIN
          4-1     WQ   99 10 23D  WRAP CONNECTOR J10.2, 3*32 PIN

FAST REW  2-0     B    97 93 45   CONN. ASS. TO MAIN PROGR. (JIII)
                  W    99 10 05A  WRAP CONNECTOR J10.1, 3*32 PIN
          2-0     WQ   99 10 27F  WRAP CONNECTOR J10.2, 3*32 PIN

FRAM      7       B    97 92 11   CONN. ASS. TO MAIN PROGR. (J II)
          7       WQ   99 09 11D  WRAP CONNECTOR J09.2, 3*32 PIN
                  W    99 10 22C  WRAP CONNECTOR J10.1, 3*32 PIN

FRAM ER   4-1     B    97 91 17   CONN. ASS. TO MAIN PROGR. (J  I)
          4-1     WQ   99 08 23D  WRAP CONNECTOR J08.2, 3*32 PIN
                  W    99 10 02C  WRAP CONNECTOR J10.1, 3*32 PIN
```

```
*****************************************************************************************************************************
*  S T U D E R  *  S I G N A L  W I R E  L I S T  *  82/01/12 * 15:02  *  P A G E  36  *
*****************************************************************************************************************************
TAPE LOCK SYSTEM 2000 A800: PARALLEL PROGRAMMER          1.228.900.00          79-10-05

SIG.NAME COLOR TYPE GR EL PT  S DESCRIPTION OF ELEMENT
-------- ----- ---- -- -- --- - ------------------------------
FRAMSL A       W    99 05 18C   WRAP CONNECTOR J05.1, 3*32 PIN

FRAMSL B       W    99 03 08A   WRAP CONNECTOR J03.1, 3*32 PIN
               W    99 05 17C   WRAP CONNECTOR J05.1, 3*32 PIN

FRPWRON        W    99 06 31B   WRAP CONNECTOR J06.1, 3*32 PIN
               W    99 15 07B   WRAP CONNECTOR J15.1, 3*32 PIN

G-SFRSLA       W    99 05 13A   WRAP CONNECTOR J05.1, 3*32 PIN
               W    99 14 02B   WRAP CONNECTOR J14.1, 3*32 PIN

G-SFRSLB       W    99 05 13B   WRAP CONNECTOR J05.1, 3*32 PIN
               W    99 14 03B   WRAP CONNECTOR J14.1, 3*32 PIN

GEN N SC 7     B    97 91 11    CONN. ASS. TO MAIN PROGR. (J  I)
         7     WQ   99 08 11D   WRAP CONNECTOR J08.2, 3*32 PIN

GEN SET  9-8   B    97 91 18    CONN. ASS. TO MAIN PROGR. (J  I)
         9-8   WQ   99 08 24D   WRAP CONNECTOR J08.2, 3*32 PIN
               W    99 10 13C   WRAP CONNECTOR J10.1, 3*32 PIN

GEN=MAST 1-6   B    97 93 23    CONN. ASS. TO MAIN PROGR. (JIII)
               W    99 10 08C   WRAP CONNECTOR J10.1, 3*32 PIN
         1-6   WQ   99 10 29D   WRAP CONNECTOR J10.2, 3*32 PIN

GENRUN   9-5   B    97 93 14    CONN. ASS. TO MAIN PROGR. (JIII)
               W    99 10 08A   WRAP CONNECTOR J10.1, 3*32 PIN
         9-5   WQ   99 10 18D   WRAP CONNECTOR J10.2, 3*32 PIN

GROUND   4,4,4 L    99 99 01  % CHASSIS, WIRING WITH:   0 L
         4,4,4 L    99 99 02  % CHASSIS, WIRING WITH:   0 L

HOLD     5-2   B    97 92 34    CONN. ASS. TO MAIN PROGR. (J II)
         5-2   WQ   99 09 10F   WRAP CONNECTOR J09.2, 3*32 PIN
               W    99 10 17B   WRAP CONNECTOR J10.1, 3*32 PIN

IFCDATIN       W    99 14 18B   WRAP CONNECTOR J14.1, 3*32 PIN

IFMUX-W        W    99 04 08C   WRAP CONNECTOR J04.1, 3*32 PIN
               W    99 05 23B   WRAP CONNECTOR J05.1, 3*32 PIN

INCODREP       W    99 08 30A   WRAP CONNECTOR J08.1, 3*32 PIN
               W  + 99 11 29C   WRAP CONNECTOR J11.1, 3*32 PIN
               W  + 99 12 05A   WRAP CONNECTOR J12.1, 3*32 PIN
               W    99 13 04C   WRAP CONNECTOR J13.1, 3*32 PIN

INTGEN   5-R   B    97 91 30    CONN. ASS. TO MAIN PROGR. (J  I)
         5-R   WQ   99 08 06F   WRAP CONNECTOR J08.2, 3*32 PIN
               W    99 10 17C   WRAP CONNECTOR J10.1, 3*32 PIN

KB       8-5   B    97 93 28    CONN. ASS. TO MAIN PROGR. (JIII)
         8-5   WQ   99 10 04F   WRAP CONNECTOR J10.2, 3*32 PIN
               W    99 10 22A   WRAP CONNECTOR J10.1, 3*32 PIN

LDADDRCT       W    99 01 29A   WRAP CONNECTOR J01.1, 3*32 PIN
               W    99 04 05A   WRAP CONNECTOR J04.1, 3*32 PIN

SIG.NAME COLOR TYPE GR EL PT  S DESCRIPTION OF ELEMENT
-------- ----- ---- -- -- --- - ------------------------------
LDARDATA       W    99 06 08C   WRAP CONNECTOR J06.1, 3*32 PIN
               W    99 07 07B   WRAP CONNECTOR J07.1, 3*32 PIN

LDTRMCT        W    99 06 08A   WRAP CONNECTOR J06.1, 3*32 PIN
               W    99 07 08B   WRAP CONNECTOR J07.1, 3*32 PIN

LKMODDR2 3     B    98 51 05    MASTER CONTROL CONNECTOR A800
         3     WQ   99 17 30C   WRAP CONNECTOR J17.1, 3*32 PIN
               W  + 99 20 30F   WRAP CONNECTOR J20.2, 3*32 PIN

LKMODEDR 1     B    97 71 02    AUXILIARY CONNECTOR
         1     WQ   99 07 02D   WRAP CONNECTOR J07.2, 3*32 PIN
               W    99 08 30C   WRAP CONNECTOR J08.1, 3*32 PIN

LOADCKCT       W    99 04 07B   WRAP CONNECTOR J04.1, 3*32 PIN
               W    99 05 29A   WRAP CONNECTOR J05.1, 3*32 PIN

LOCKFAST 6     B    97 91 08    CONN. ASS. TO MAIN PROGR. (J  I)
         6     WQ   99 08 08D   WRAP CONNECTOR J08.2, 3*32 PIN
               W    99 10 26A   WRAP CONNECTOR J10.1, 3*32 PIN

LOCKSLOW 4-2   B    97 92 35    CONN. ASS. TO MAIN PROGR. (J II)
         4-2   WQ   99 09 11F   WRAP CONNECTOR J09.2, 3*32 PIN
               W    99 10 25C   WRAP CONNECTOR J10.1, 3*32 PIN

LWLIM EX 0-R   B    97 91 43    CONN. ASS. TO MAIN PROGR. (J  I)
         0-R   WQ   99 08 25F   WRAP CONNECTOR J08.2, 3*32 PIN
               W    99 10 09B   WRAP CONNECTOR J10.1, 3*32 PIN

MAST     5     B    97 93 04    CONN. ASS. TO MAIN PROGR. (JIII)
         5     WQ   99 10 04D   WRAP CONNECTOR J10.2, 3*32 PIN
               W    99 10 21C   WRAP CONNECTOR J10.1, 3*32 PIN

MCDATRDY 2     B    98 51 22    MASTER CONTROL CONNECTOR A800
         2     WQ   99 17 28C   WRAP CONNECTOR J17.1, 3*32 PIN
               W  + 99 20 28F   WRAP CONNECTOR J20.2, 3*32 PIN

MCDATODR 4     B    98 51 24    MASTER CONTROL CONNECTOR A800
         4     WQ   99 17 30A   WRAP CONNECTOR J17.1, 3*32 PIN
               W  + 99 20 30D   WRAP CONNECTOR J20.2, 3*32 PIN

MCDAT1DR 8     B    98 51 19    MASTER CONTROL CONNECTOR A800
         8     WQ   99 17 07A   WRAP CONNECTOR J17.1, 3*32 PIN

MCDAT2DR 9     B    98 51 20    MASTER CONTROL CONNECTOR A800
         9     WQ   99 17 08A   WRAP CONNECTOR J17.1, 3*32 PIN

MCKCUTDR 6     B    98 51 17    MASTER CONTROL CONNECTOR A800
         6     WQ   99 17 04C   WRAP CONNECTOR J17.1, 3*32 PIN
               W  + 99 20 04F   WRAP CONNECTOR J20.2, 3*32 PIN

MCMUTEDR 1     B    98 51 21    MASTER CONTROL CONNECTOR A800
         1     WQ   99 17 09A   WRAP CONNECTOR J17.1, 3*32 PIN

MCRECEDR 4     B    98 51 15    MASTER CONTROL CONNECTOR A800
         4     WQ   99 17 02C   WRAP CONNECTOR J17.1, 3*32 PIN
                                                                  ./.
```

```
*****************************************************************************************************************************
*  S T U D E R  *  S I G N A L  W I R E  L I S T  *  82/01/12 * 15:02  *  P A G E  37  *
*****************************************************************************************************************************
TAPE LOCK SYSTEM 2000 A800: PARALLEL PROGRAMMER          1.228.900.00          79-10-05

SIG.NAME COLOR TYPE GR EL PT  S DESCRIPTION OF ELEMENT
-------- ----- ---- -- -- --- - ------------------------------
(CONT.)        W  + 99 20 02F   WRAP CONNECTOR J20.2, 3*32 PIN

MCRESDR1 7     B    98 51 18    MASTER CONTROL CONNECTOR A800
         7     WQ   99 17 03A   WRAP CONNECTOR J17.1, 3*32 PIN
               W  + 99 20 29F   WRAP CONNECTOR J20.2, 3*32 PIN

MCRHRSDR 1     B    98 51 23    MASTER CONTROL CONNECTOR A800
               W  + 99 06 25E   WRAP CONNECTOR J06.2, 3*32 PIN
         1     WQ   99 17 22A   WRAP CONNECTOR J17.1, 3*32 PIN

MCSUPVIS 6     B    98 51 08    MASTER CONTROL CONNECTOR A800
         6     WQ   99 17 25C   WRAP CONNECTOR J17.1, 3*32 PIN
               W  + 99 20 25F   WRAP CONNECTOR J20.2, 3*32 PIN

MCZSETDR 5     B    98 51 16    MASTER CONTROL CONNECTOR A800
         5     WQ   99 17 03C   WRAP CONNECTOR J17.1, 3*32 PIN
               W  + 99 20 03F   WRAP CONNECTOR J20.2, 3*32 PIN

MDTRDWNM       W    99 01 06A   WRAP CONNECTOR J01.1, 3*32 PIN
               W    99 03 06A   WRAP CONNECTOR J03.1, 3*32 PIN

MDMFAILM       W    99 01 05A   WRAP CONNECTOR J01.1, 3*32 PIN
               W    99 05 08A   WRAP CONNECTOR J05.1, 3*32 PIN

MPSYNCM        W    99 01 07A   WRAP CONNECTOR J01.1, 3*32 PIN
               W    99 02 07B   WRAP CONNECTOR J02.1, 3*32 PIN
               W    99 03 07A   WRAP CONNECTOR J03.1, 3*32 PIN
               W    99 05 07A   WRAP CONNECTOR J05.1, 3*32 PIN

MPWRON   2     B    98 51 04    MASTER CONTROL CONNECTOR A800
         2     WQ   99 17 27A   WRAP CONNECTOR J17.1, 3*32 PIN

MP2DMM         W    99 01 03A   WRAP CONNECTOR J01.1, 3*32 PIN
               W    99 03 02A   WRAP CONNECTOR J03.1, 3*32 PIN
               W    99 05 03A   WRAP CONNECTOR J05.1, 3*32 PIN

MP3DMM         W    99 01 04A   WRAP CONNECTOR J01.1, 3*32 PIN
               W    99 02 04B   WRAP CONNECTOR J02.1, 3*32 PIN
               W    99 03 03A   WRAP CONNECTOR J03.1, 3*32 PIN
               W    99 05 04A   WRAP CONNECTOR J05.1, 3*32 PIN

MSEC     0     B    97 91 10    CONN. ASS. TO MAIN PROGR. (J  I)
         2     B    97 92 09    CONN. ASS. TO MAIN PROGR. (J II)
         0     WQ   99 08 10D   WRAP CONNECTOR J08.2, 3*32 PIN
         2     WQ   99 09 09D   WRAP CONNECTOR J09.2, 3*32 PIN
               W    99 10 22B   WRAP CONNECTOR J10.1, 3*32 PIN

NACRES1        W    99 04 17A   WRAP CONNECTOR J04.1, 3*32 PIN
               W    99 14 17B   WRAP CONNECTOR J14.1, 3*32 PIN

NCOCKCT        W    99 04 03C   WRAP CONNECTOR J04.1, 3*32 PIN
               W    99 05 30A   WRAP CONNECTOR J05.1, 3*32 PIN

NDMCOD-M       W    99 03 05A   WRAP CONNECTOR J03.1, 3*32 PIN
               W    99 13 18A   WRAP CONNECTOR J13.1, 3*32 PIN

SIG.NAME COLOR TYPE GR EL PT  S DESCRIPTION OF ELEMENT
-------- ----- ---- -- -- --- - ------------------------------
NDMCOD-S       W    99 03 05C   WRAP CONNECTOR J03.1, 3*32 PIN
               W    99 13 18C   WRAP CONNECTOR J13.1, 3*32 PIN

NEMGSTOP       W    99 06 13A   WRAP CONNECTOR J06.1, 3*32 PIN
               W  + 99 08 13A   WRAP CONNECTOR J08.1, 3*32 PIN
               W  + 99 20 11F   WRAP CONNECTOR J20.2, 3*32 PIN

NFRAMSLB       W    99 05 05C   WRAP CONNECTOR J05.1, 3*32 PIN

NFRQCTLD       W    99 01 22A   WRAP CONNECTOR J01.1, 3*32 PIN
               W    99 02 22B   WRAP CONNECTOR J02.1, 3*32 PIN

NINVCTR1       W    99 05 03B   WRAP CONNECTOR J05.1, 3*32 PIN
               W    99 14 13C   WRAP CONNECTOR J14.1, 3*32 PIN

NINVCTR2       W    99 05 05B   WRAP CONNECTOR J05.1, 3*32 PIN
               W    99 14 17C   WRAP CONNECTOR J14.1, 3*32 PIN

NO CD S  9-R   B    97 91 20    CONN. ASS. TO MAIN PROGR. (J  I)
         9-R   WQ   99 08 26D   WRAP CONNECTOR J08.2, 3*32 PIN
               W    99 10 03B   WRAP CONNECTOR J10.1, 3*32 PIN

NOCODE-S       W    99 05 04B   WRAP CONNECTOR J05.1, 3*32 PIN
               W    99 06 29C   WRAP CONNECTOR J06.1, 3*32 PIN

NOMASTER       W    99 05 02B   WRAP CONNECTOR J05.1, 3*32 PIN
               W    99 06 30C   WRAP CONNECTOR J06.1, 3*32 PIN

NPINSTEN       W    99 06 28C   WRAP CONNECTOR J06.1, 3*32 PIN
               W    99 15 13C   WRAP CONNECTOR J15.1, 3*32 PIN

NPPWRON        W    99 03 23B   WRAP CONNECTOR J03.1, 3*32 PIN
               W    99 06 18C   WRAP CONNECTOR J06.1, 3*32 PIN
               W    99 08 18A   WRAP CONNECTOR J08.1, 3*32 PIN
               W    99 14 22B   WRAP CONNECTOR J14.1, 3*32 PIN

NTRMDATA 5     B    97 92 04    CONN. ASS. TO MAIN PROGR. (J II)
               W    99 07 09A   WRAP CONNECTOR J07.1, 3*32 PIN
         5     WQ   99 09 04D   WRAP CONNECTOR J09.2, 3*32 PIN

NTRMDATB 5-0   B    97 92 36    CONN. ASS. TO MAIN PROGR. (J II)
               W    99 07 10A   WRAP CONNECTOR J07.1, 3*32 PIN
         5-0   WQ   99 09 13F   WRAP CONNECTOR J09.2, 3*32 PIN

NTRMDATC 8-0   B    97 92 42    CONN. ASS. TO MAIN PROGR. (J II)
               W    99 07 11A   WRAP CONNECTOR J07.1, 3*32 PIN
         8-0   WQ   99 09 24F   WRAP CONNECTOR J09.2, 3*32 PIN

NTRMDATD 9     B    97 93 01    CONN. ASS. TO MAIN PROGR. (JIII)
               W    99 07 13A   WRAP CONNECTOR J07.1, 3*32 PIN
         9     WQ   99 10 02D   WRAP CONNECTOR J10.2, 3*32 PIN

NTRMDTA        W    99 07 30A   WRAP CONNECTOR J07.1, 3*32 PIN
               W    99 09 09A   WRAP CONNECTOR J09.1, 3*32 PIN
               W    99 10 30B   WRAP CONNECTOR J10.1, 3*32 PIN
```

```
*****************************************************************************************************************************
*   S T U D E R   *   S I G N A L   W I R E   L I S T                 *   82/01/12 * 15:02      *   P A G E     38    *
*****************************************************************************************************************************
TAPE LOCK SYSTEM 2000 A800: PARALLEL PROGRAMMER                1.228.900.00              79-10-05

SIG.NAME COLOR TYPE GR EL PT  S DESCRIPTION OF ELEMENT
-------- ----- ---- -- -- --- - ------------------------------
OFS DISP 9-5   B    97 92 14    CONN. ASS. TO MAIN PROGR. (J II)
         9-5   WQ   99 09 18D   WRAP CONNECTOR J09.2, 3*32 PIN
               W    99 10 21A   WRAP CONNECTOR J10.1, 3*32 PIN

PARKED   8-6   B    97 93 38    CONN. ASS. TO MAIN PROGR. (JIII)
               W    99 10 02B   WRAP CONNECTOR J10.1, 3*32 PIN
         8-6   WQ   99 10 18F   WRAP CONNECTOR J10.2, 3*32 PIN

PARKEDDR 2     B    97 71 10    AUXILIARY CONNECTOR
         4     B    98 51 06    MASTER CONTROL CONNECTOR A800
         2     WQ   99 07 04D   WRAP CONNECTOR J07.2, 3*32 PIN
         4     WQ   99 17 17A   WRAP CONNECTOR J17.1, 3*32 PIN

PBA      5     B    97 91 04    CONN. ASS. TO MAIN PROGR. (J  I)
         5     WQ   99 08 04D   WRAP CONNECTOR J08.2, 3*32 PIN
               W    99 09 28A   WRAP CONNECTOR J09.1, 3*32 PIN

PBB      8-1   B    97 93 19    CONN. ASS. TO MAIN PROGR. (JIII)
               W    99 09 28B   WRAP CONNECTOR J09.1, 3*32 PIN
         8-1   WQ   99 10 25D   WRAP CONNECTOR J10.2, 3*32 PIN

PBC      5-6   B    97 93 32    CONN. ASS. TO MAIN PROGR. (JIII)
               W    99 09 29A   WRAP CONNECTOR J09.1, 3*32 PIN
         5-6   WQ   99 10 08F   WRAP CONNECTOR J10.2, 3*32 PIN

PBD      1-0   B    97 91 27    CONN. ASS. TO MAIN PROGR. (J  I)
         1-0   WQ   99 08 03F   WRAP CONNECTOR J08.2, 3*32 PIN
               W    99 09 29B   WRAP CONNECTOR J09.1, 3*32 PIN

PBE      5-0   B    97 93 36    CONN. ASS. TO MAIN PROGR. (JIII)
               W    99 09 30A   WRAP CONNECTOR J09.1, 3*32 PIN
         5-0   WQ   99 10 13F   WRAP CONNECTOR J10.2, 3*32 PIN

PBF      8-0   B    97 91 42    CONN. ASS. TO MAIN PROGR. (J  I)
         8-0   WQ   99 08 24F   WRAP CONNECTOR J08.2, 3*32 PIN
               W    99 09 30B   WRAP CONNECTOR J09.1, 3*32 PIN

PBG      6-R   B    97 91 39    CONN. ASS. TO MAIN PROGR. (J  I)
         6-R   WQ   99 08 21F   WRAP CONNECTOR J08.2, 3*32 PIN
               W    99 09 31A   WRAP CONNECTOR J09.1, 3*32 PIN

PBH      4     B    97 91 05    CONN. ASS. TO MAIN PROGR. (J  I)
         4     WQ   99 08 05D   WRAP CONNECTOR J08.2, 3*32 PIN
               W    99 09 31B   WRAP CONNECTOR J09.1, 3*32 PIN

PBI      8-5   B    97 91 28    CONN. ASS. TO MAIN PROGR. (J  I)
         8-5   WQ   99 08 04F   WRAP CONNECTOR J08.2, 3*32 PIN
               W    99 09 26A   WRAP CONNECTOR J09.1, 3*32 PIN

PBK      2-R   B    97 91 41    CONN. ASS. TO MAIN PROGR. (J  I)
         2-R   WQ   99 08 23F   WRAP CONNECTOR J08.2, 3*32 PIN
               W    99 09 26B   WRAP CONNECTOR J09.1, 3*32 PIN

PBMASREG       W    99 04 05B   WRAP CONNECTOR J04.1, 3*32 PIN

PBPLAY   1-R   B    97 93 21    CONN. ASS. TO MAIN PROGR. (JIII)
                                                                                                                    ./.

SIG.NAME COLOR TYPE GR EL PT  S DESCRIPTION OF ELEMENT
-------- ----- ---- -- -- --- - ------------------------------
(CONT.)        W    99 09 27B   WRAP CONNECTOR J09.1, 3*32 PIN
         1-R   WQ   99 10 27D   WRAP CONNECTOR J10.2, 3*32 PIN

PBREC    9-6   B    97 93 22    CONN. ASS. TO MAIN PROGR. (JIII)
               W    99 09 27A   WRAP CONNECTOR J09.1, 3*32 PIN
         9-6   WQ   99 10 28D   WRAP CONNECTOR J10.2, 3*32 PIN

PBULBHMS 9-4   B    97 92 16    CONN. ASS. TO MAIN PROGR. (J II)
         9-2   B    97 92 24    CONN. ASS. TO MAIN PROGR. (J II)
         2-0   B    97 92 45    CONN. ASS. TO MAIN PROGR. (J II)
         9-4   WQ   99 09 22D   WRAP CONNECTOR J09.2, 3*32 PIN
         2-0   WQ   99 09 27F   WRAP CONNECTOR J09.2, 3*32 PIN
         9-2   WQ   99 09 30D   WRAP CONNECTOR J09.2, 3*32 PIN
               W    99 10 26C   WRAP CONNECTOR J10.1, 3*32 PIN

PB0      4-2   B    97 93 35    CONN. ASS. TO MAIN PROGR. (JIII)
               W    99 09 21B   WRAP CONNECTOR J09.1, 3*32 PIN
         4-2   WQ   99 10 11F   WRAP CONNECTOR J10.2, 3*32 PIN

PB1      9     B    97 91 02    CONN. ASS. TO MAIN PROGR. (J  I)
         9     WQ   99 08 02D   WRAP CONNECTOR J08.2, 3*32 PIN
               W    99 09 21C   WRAP CONNECTOR J09.1, 3*32 PIN

PB2      6-2-0 B    97 93 49    CONN. ASS. TO MAIN PROGR. (JIII)
               W    99 09 22B   WRAP CONNECTOR J09.1, 3*32 PIN
         6-2-0 WQ   99 10 31F   WRAP CONNECTOR J10.2, 3*32 PIN

PB3      4-R   B    97 93 31    CONN. ASS. TO MAIN PROGR. (JIII)
               W    99 09 22C   WRAP CONNECTOR J09.1, 3*32 PIN
         4-R   WQ   99 10 07F   WRAP CONNECTOR J10.2, 3*32 PIN

PB4      8-2   B    97 91 40    CONN. ASS. TO MAIN PROGR. (J  I)
         8-2   WQ   99 08 22F   WRAP CONNECTOR J08.2, 3*32 PIN
               W    99 09 23B   WRAP CONNECTOR J09.1, 3*32 PIN

PB5      5-2   B    97 93 34    CONN. ASS. TO MAIN PROGR. (JIII)
               W    99 09 23C   WRAP CONNECTOR J09.1, 3*32 PIN
         5-2   WQ   99 10 10F   WRAP CONNECTOR J10.2, 3*32 PIN

PB6      8-R-0 B    97 93 48    CONN. ASS. TO MAIN PROGR. (JIII)
               W    99 09 24B   WRAP CONNECTOR J09.1, 3*32 PIN
         8-R-0 WQ   99 10 30F   WRAP CONNECTOR J10.2, 3*32 PIN

PB7      8-6   B    97 91 38    CONN. ASS. TO MAIN PROGR. (J  I)
         8-6   WQ   99 08 18F   WRAP CONNECTOR J08.2, 3*32 PIN
               W    99 09 25B   WRAP CONNECTOR J09.1, 3*32 PIN

PCBAL          W    99 06 09A   WRAP CONNECTOR J06.1, 3*32 PIN
               W    99 07 09C   WRAP CONNECTOR J07.1, 3*32 PIN

PCBALQ0        W    99 01 04C   WRAP CONNECTOR J01.1, 3*32 PIN
               W    99 07 31B   WRAP CONNECTOR J07.1, 3*32 PIN

PCBALQ2        W    99 01 18A   WRAP CONNECTOR J01.1, 3*32 PIN
               W    99 07 18C   WRAP CONNECTOR J07.1, 3*32 PIN
```

```
*****************************************************************************************************************************
*   S T U D E R   *   S I G N A L   W I R E   L I S T                 *   82/01/12 * 15:02      *   P A G E     39    *
*****************************************************************************************************************************
TAPE LOCK SYSTEM 2000 A800: PARALLEL PROGRAMMER                1.228.900.00              79-10-05

SIG.NAME COLOR TYPE GR EL PT  S DESCRIPTION OF ELEMENT
-------- ----- ---- -- -- --- - ------------------------------
PCBALQ3        W    99 07 30B   WRAP CONNECTOR J07.1, 3*32 PIN

PCBPLTCL       W    99 06 24C   WRAP CONNECTOR J06.1, 3*32 PIN
               W  + 99 17 18B   WRAP CONNECTOR J17.1, 3*32 PIN

PCBPMUXA       W    99 07 22C   WRAP CONNECTOR J07.1, 3*32 PIN
               W    99 17 28B   WRAP CONNECTOR J17.1, 3*32 PIN

PCBPMUXB       W    99 07 23C   WRAP CONNECTOR J07.1, 3*32 PIN
               W    99 17 27B   WRAP CONNECTOR J17.1, 3*32 PIN

PCBPWE         W    99 06 25C   WRAP CONNECTOR J06.1, 3*32 PIN
               W    99 17 21B   WRAP CONNECTOR J17.1, 3*32 PIN

PCBSP          W    99 06 17A   WRAP CONNECTOR J06.1, 3*32 PIN

PCBTEST        W    99 06 29B   WRAP CONNECTOR J06.1, 3*32 PIN
               W    99 07 29B   WRAP CONNECTOR J07.1, 3*32 PIN

PCBTESTA       W    99 07 25C   WRAP CONNECTOR J07.1, 3*32 PIN

PCBTESTB       W    99 07 26C   WRAP CONNECTOR J07.1, 3*32 PIN

PCBTESTC       W    99 01 24A   WRAP CONNECTOR J01.1, 3*32 PIN
               W    99 07 24C   WRAP CONNECTOR J07.1, 3*32 PIN

PCBTEST4       W    99 07 31A   WRAP CONNECTOR J07.1, 3*32 PIN

PCDATACC       W    99 06 03A   WRAP CONNECTOR J06.1, 3*32 PIN
               W    99 09 27C   WRAP CONNECTOR J09.1, 3*32 PIN

PCDATINA       W    99 07 09B   WRAP CONNECTOR J07.1, 3*32 PIN
               W    99 09 09B   WRAP CONNECTOR J09.1, 3*32 PIN

PCDATINB       W    99 07 10B   WRAP CONNECTOR J07.1, 3*32 PIN
               W    99 09 10B   WRAP CONNECTOR J09.1, 3*32 PIN

PCDATINC       W    99 07 11B   WRAP CONNECTOR J07.1, 3*32 PIN
               W    99 09 11B   WRAP CONNECTOR J09.1, 3*32 PIN

PCDATIND       W    99 07 13B   WRAP CONNECTOR J07.1, 3*32 PIN
               W    99 09 13B   WRAP CONNECTOR J09.1, 3*32 PIN

PCDATINE       W    99 06 10A   WRAP CONNECTOR J06.1, 3*32 PIN
               W    99 09 17B   WRAP CONNECTOR J09.1, 3*32 PIN

PCDATRDY       W    99 06 02A   WRAP CONNECTOR J06.1, 3*32 PIN
               W    99 09 25C   WRAP CONNECTOR J09.1, 3*32 PIN
               W    99 10 11A   WRAP CONNECTOR J10.1, 3*32 PIN

PCEXPR-1       W    99 07 02B   WRAP CONNECTOR J07.1, 3*32 PIN

PCEXPR-2       W    99 07 03B   WRAP CONNECTOR J07.1, 3*32 PIN

PCEXPR-3       W    99 07 04B   WRAP CONNECTOR J07.1, 3*32 PIN

SIG.NAME COLOR TYPE GR EL PT  S DESCRIPTION OF ELEMENT
-------- ----- ---- -- -- --- - ------------------------------
PCEXPRRQ       W    99 06 05C   WRAP CONNECTOR J06.1, 3*32 PIN
               W    99 07 05B   WRAP CONNECTOR J07.1, 3*32 PIN

PCIFCTST       W    99 07 29A   WRAP CONNECTOR J07.1, 3*32 PIN

PCPGAD00       W    99 06 03C   WRAP CONNECTOR J06.1, 3*32 PIN
               W    99 15 02C   WRAP CONNECTOR J15.1, 3*32 PIN

PCPGAD01       W    99 06 07B   WRAP CONNECTOR J06.1, 3*32 PIN
               W    99 15 03C   WRAP CONNECTOR J15.1, 3*32 PIN

PCPGAD02       W    99 06 08B   WRAP CONNECTOR J06.1, 3*32 PIN
               W    99 15 04C   WRAP CONNECTOR J15.1, 3*32 PIN

PCPGAD03       W    99 06 09C   WRAP CONNECTOR J06.1, 3*32 PIN
               W    99 15 05C   WRAP CONNECTOR J15.1, 3*32 PIN

PCPGAD04       W    99 06 10C   WRAP CONNECTOR J06.1, 3*32 PIN
               W    99 15 06C   WRAP CONNECTOR J15.1, 3*32 PIN

PCPGAD05       W    99 06 11C   WRAP CONNECTOR J06.1, 3*32 PIN
               W    99 15 07C   WRAP CONNECTOR J15.1, 3*32 PIN

PCPGAD06       W    99 06 21B   WRAP CONNECTOR J06.1, 3*32 PIN
               W    99 15 08C   WRAP CONNECTOR J15.1, 3*32 PIN

PCPGAD07       W    99 06 24B   WRAP CONNECTOR J06.1, 3*32 PIN
               W    99 15 09C   WRAP CONNECTOR J15.1, 3*32 PIN

PCPGAD08       W    99 06 26B   WRAP CONNECTOR J06.1, 3*32 PIN
               W    99 15 10C   WRAP CONNECTOR J15.1, 3*32 PIN

PCPGAD09       W    99 06 21C   WRAP CONNECTOR J06.1, 3*32 PIN
               W    99 15 11C   WRAP CONNECTOR J15.1, 3*32 PIN

PCPGAD10       W    99 06 22C   WRAP CONNECTOR J06.1, 3*32 PIN
               W    99 15 08B   WRAP CONNECTOR J15.1, 3*32 PIN

PCPGAD11       W    99 06 23C   WRAP CONNECTOR J06.1, 3*32 PIN
               W    99 15 09B   WRAP CONNECTOR J15.1, 3*32 PIN

PCPGDATA       W    99 01 07C   WRAP CONNECTOR J01.1, 3*32 PIN
               W    99 02 09C   WRAP CONNECTOR J02.1, 3*32 PIN
               W    99 03 09C   WRAP CONNECTOR J03.1, 3*32 PIN
               W    99 06 18A   WRAP CONNECTOR J06.1, 3*32 PIN
               W    99 07 18A   WRAP CONNECTOR J07.1, 3*32 PIN
               W    99 08 26C   WRAP CONNECTOR J08.1, 3*32 PIN
               W    99 09 28C   WRAP CONNECTOR J09.1, 3*32 PIN
               W  + 99 11 28A   WRAP CONNECTOR J11.1, 3*32 PIN
               W    99 15 17C   WRAP CONNECTOR J15.1, 3*32 PIN
               W    99 17 29B   WRAP CONNECTOR J17.1, 3*32 PIN

PCPGDATB       W    99 01 08C   WRAP CONNECTOR J01.1, 3*32 PIN
               W    99 02 10C   WRAP CONNECTOR J02.1, 3*32 PIN
               W    99 03 10C   WRAP CONNECTOR J03.1, 3*32 PIN
               W    99 06 21A   WRAP CONNECTOR J06.1, 3*32 PIN
                                                                                                                    ./.
```

```
*****************************************************************************************************************
*  S T U D E R  *  S I G N A L  W I R E  L I S T          *   82/01/12 * 15:02     *  P A G E    40   *
*****************************************************************************************************************
TAPE LOCK SYSTEM 2000 A800: PARALLEL PROGRAMMER              1.228.900.00          79-10-05

SIG.NAME COLOR TYPE GR EL PT  S DESCRIPTION OF ELEMENT
-------- ----- ---- -- -- --- - ------------------------------
(CONT.)        W    99 07 21A   WRAP CONNECTOR J07.1, 3*32 PIN
               W    99 08 27C   WRAP CONNECTOR J08.1, 3*32 PIN
               W    99 09 29C   WRAP CONNECTOR J09.1, 3*32 PIN
               W  + 99 11 29A   WRAP CONNECTOR J11.1, 3*32 PIN
               W    99 15 18C   WRAP CONNECTOR J15.1, 3*32 PIN
               W    99 17 30B   WRAP CONNECTOR J17.1, 3*32 PIN

PCPGDATC       W    99 01 09C   WRAP CONNECTOR J01.1, 3*32 PIN
               W    99 02 11C   WRAP CONNECTOR J02.1, 3*32 PIN
               W    99 03 11C   WRAP CONNECTOR J03.1, 3*32 PIN
               W    99 06 22A   WRAP CONNECTOR J06.1, 3*32 PIN
               W    99 07 22A   WRAP CONNECTOR J07.1, 3*32 PIN
               W    99 08 29C   WRAP CONNECTOR J08.1, 3*32 PIN
               W    99 09 30C   WRAP CONNECTOR J09.1, 3*32 PIN
               W  + 99 11 30A   WRAP CONNECTOR J11.1, 3*32 PIN
               W    99 15 21C   WRAP CONNECTOR J15.1, 3*32 PIN
               W    99 17 31B   WRAP CONNECTOR J17.1, 3*32 PIN

PCPGDATD       W    99 06 23A   WRAP CONNECTOR J06.1, 3*32 PIN
               W    99 07 23A   WRAP CONNECTOR J07.1, 3*32 PIN
               W    99 15 22C   WRAP CONNECTOR J15.1, 3*32 PIN
               W    99 17 26B   WRAP CONNECTOR J17.1, 3*32 PIN

PCPGDATE       W    99 06 24A   WRAP CONNECTOR J06.1, 3*32 PIN
               W    99 07 24A   WRAP CONNECTOR J07.1, 3*32 PIN
               W    99 15 23C   WRAP CONNECTOR J15.1, 3*32 PIN

PCPGDATF       W    99 06 25A   WRAP CONNECTOR J06.1, 3*32 PIN
               W    99 07 25A   WRAP CONNECTOR J07.1, 3*32 PIN
               W    99 15 24C   WRAP CONNECTOR J15.1, 3*32 PIN

PCPGDATG       W    99 06 26A   WRAP CONNECTOR J06.1, 3*32 PIN
               W    99 07 26A   WRAP CONNECTOR J07.1, 3*32 PIN
               W    99 15 25C   WRAP CONNECTOR J15.1, 3*32 PIN

PCPGDATH       W    99 02 27B   WRAP CONNECTOR J02.1, 3*32 PIN
               W    99 06 27A   WRAP CONNECTOR J06.1, 3*32 PIN
               W    99 07 27A   WRAP CONNECTOR J07.1, 3*32 PIN
               W    99 08 10A   WRAP CONNECTOR J08.1, 3*32 PIN
               W  + 99 11 31A   WRAP CONNECTOR J11.1, 3*32 PIN
               W    99 15 26C   WRAP CONNECTOR J15.1, 3*32 PIN
               W    99 17 28A   WRAP CONNECTOR J17.1, 3*32 PIN
               W  + 99 18 26A   WRAP CONNECTOR J18.1, 3*32 PIN

PCPGDATI       W    99 06 28A   WRAP CONNECTOR J06.1, 3*32 PIN
               W    99 07 28A   WRAP CONNECTOR J07.1, 3*32 PIN
               W    99 15 27C   WRAP CONNECTOR J15.1, 3*32 PIN

PCPGDATK       W    99 06 29A   WRAP CONNECTOR J06.1, 3*32 PIN
               W    99 15 28C   WRAP CONNECTOR J15.1, 3*32 PIN

PCPGDATL       W    99 06 30A   WRAP CONNECTOR J06.1, 3*32 PIN
               W    99 15 29C   WRAP CONNECTOR J15.1, 3*32 PIN

PCPGDATM       W    99 06 31A   WRAP CONNECTOR J06.1, 3*32 PIN
               W    99 15 30C   WRAP CONNECTOR J15.1, 3*32 PIN

SIG.NAME COLOR TYPE GR EL PT  S DESCRIPTION OF ELEMENT
-------- ----- ---- -- -- --- - ------------------------------
PCPGDATN       W    99 06 28B   WRAP CONNECTOR J06.1, 3*32 PIN
               W    99 15 31C   WRAP CONNECTOR J15.1, 3*32 PIN

PCSPGRPA       W    99 06 02B   WRAP CONNECTOR J06.1, 3*32 PIN

PCSPGRP2       W    99 01 23A   WRAP CONNECTOR J01.1, 3*32 PIN
               W    99 06 25B   WRAP CONNECTOR J06.1, 3*32 PIN

PCSPGRP3       W    99 02 06C   WRAP CONNECTOR J02.1, 3*32 PIN
               W    99 06 06C   WRAP CONNECTOR J06.1, 3*32 PIN

PCTAPFLG       W    99 06 17C   WRAP CONNECTOR J06.1, 3*32 PIN
               W    99 15 17B   WRAP CONNECTOR J15.1, 3*32 PIN

PCTDCLR        W    99 06 04C   WRAP CONNECTOR J06.1, 3*32 PIN
               W  + 99 08 04B   WRAP CONNECTOR J08.1, 3*32 PIN

PEDITLD        W    99 02 10B   WRAP CONNECTOR J02.1, 3*32 PIN
               W    99 07 10C   WRAP CONNECTOR J07.1, 3*32 PIN

PERCAPFR       W    99 02 02C   WRAP CONNECTOR J02.1, 3*32 PIN
               W  + 99 08 02C   WRAP CONNECTOR J08.1, 3*32 PIN

PERDATA        W    99 05 10B   WRAP CONNECTOR J05.1, 3*32 PIN
               W    99 07 31C   WRAP CONNECTOR J07.1, 3*32 PIN
               W    99 14 24B   WRAP CONNECTOR J14.1, 3*32 PIN

PERMNTM1       W    99 03 13C   WRAP CONNECTOR J03.1, 3*32 PIN

PERMNTM2       W    99 03 17C   WRAP CONNECTOR J03.1, 3*32 PIN

PERMNTM3       W    99 03 18C   WRAP CONNECTOR J03.1, 3*32 PIN

PERMNTM4       W    99 01 10C   WRAP CONNECTOR J01.1, 3*32 PIN
               W    99 03 21C   WRAP CONNECTOR J03.1, 3*32 PIN
               W  + 99 04 22B   WRAP CONNECTOR J04.1, 3*32 PIN

PER1DM-M       W    99 13 21A   WRAP CONNECTOR J13.1, 3*32 PIN

PER1DM-S       W    99 13 08B   WRAP CONNECTOR J13.1, 3*32 PIN

PER2DM-M       W    99 13 22A   WRAP CONNECTOR J13.1, 3*32 PIN

PER2DM-S       W    99 13 09B   WRAP CONNECTOR J13.1, 3*32 PIN

PER3DM-M       W    99 13 23A   WRAP CONNECTOR J13.1, 3*32 PIN

PER3DM-S       W    99 13 10B   WRAP CONNECTOR J13.1, 3*32 PIN

PER4DM-M       W    99 13 24A   WRAP CONNECTOR J13.1, 3*32 PIN

PER4DM-S       W    99 13 11B   WRAP CONNECTOR J13.1, 3*32 PIN

PHASING  R     B    97 92 07    CONN. ASS. TO MAIN PROGR. (J II)
         R     WQ   99 09 07D   WRAP CONNECTOR J09.2, 3*32 PIN
               W    99 10 24C   WRAP CONNECTOR J10.1, 3*32 PIN
```

```
*****************************************************************************************************************
*  S T U D E R  *  S I G N A L  W I R E  L I S T          *   82/01/12 * 15:02     *  P A G E    41   *
*****************************************************************************************************************
TAPE LOCK SYSTEM 2000 A800: PARALLEL PROGRAMMER              1.228.900.00          79-10-05

SIG.NAME COLOR TYPE GR EL PT  S DESCRIPTION OF ELEMENT
-------- ----- ---- -- -- --- - ------------------------------
PLAY     1-2   B    97 93 25    CONN. ASS. TO MAIN PROGR. (JIII)
               W    99 10 05C   WRAP CONNECTOR J10.1, 3*32 PIN
         1-2   WQ   99 10 31D   WRAP CONNECTOR J10.2, 3*32 PIN

PLAY  -M       W    99 03 10A   WRAP CONNECTOR J03.1, 3*32 PIN

PMNTM  1       W    99 03 13A   WRAP CONNECTOR J03.1, 3*32 PIN
               W    99 04 13B   WRAP CONNECTOR J04.1, 3*32 PIN
               W    99 06 13B   WRAP CONNECTOR J06.1, 3*32 PIN
               W  + 99 09 13E   WRAP CONNECTOR J09.2, 3*32 PIN
               W    99 15 02B   WRAP CONNECTOR J15.1, 3*32 PIN
               W  + 99 19 13C   WRAP CONNECTOR J19.1, 3*32 PIN

PMNTM  2       W    99 01 13C   WRAP CONNECTOR J01.1, 3*32 PIN
               W    99 02 17B   WRAP CONNECTOR J02.1, 3*32 PIN
               W    99 03 17A   WRAP CONNECTOR J03.1, 3*32 PIN
               W    99 06 17B   WRAP CONNECTOR J06.1, 3*32 PIN
               W    99 07 17B   WRAP CONNECTOR J07.1, 3*32 PIN
               W    99 08 25A   WRAP CONNECTOR J08.1, 3*32 PIN
               W    99 09 24C   WRAP CONNECTOR J09.1, 3*32 PIN
               W    99 10 11A   WRAP CONNECTOR J10.1, 3*32 PIN
               W  + 99 11 31C   WRAP CONNECTOR J11.1, 3*32 PIN
               W  + 99 13 25A   WRAP CONNECTOR J13.1, 3*32 PIN
               W    99 15 03B   WRAP CONNECTOR J15.1, 3*32 PIN
               W    99 17 17B   WRAP CONNECTOR J17.1, 3*32 PIN

PMNTM  3       W    99 03 18A   WRAP CONNECTOR J03.1, 3*32 PIN
               W    99 04 18B   WRAP CONNECTOR J04.1, 3*32 PIN
               W    99 06 18B   WRAP CONNECTOR J06.1, 3*32 PIN
               W  + 99 09 18E   WRAP CONNECTOR J09.2, 3*32 PIN
               W    99 15 04B   WRAP CONNECTOR J15.1, 3*32 PIN

PMNTM  4       W    99 01 11C   WRAP CONNECTOR J01.1, 3*32 PIN
               W    99 02 22C   WRAP CONNECTOR J02.1, 3*32 PIN
               W    99 03 21A   WRAP CONNECTOR J03.1, 3*32 PIN
               W    99 04 21B   WRAP CONNECTOR J04.1, 3*32 PIN
               W    99 05 21B   WRAP CONNECTOR J05.1, 3*32 PIN
               W    99 07 21C   WRAP CONNECTOR J07.1, 3*32 PIN
               W  + 99 09 21E   WRAP CONNECTOR J09.2, 3*32 PIN
               W    99 14 21B   WRAP CONNECTOR J14.1, 3*32 PIN
               W    99 15 05B   WRAP CONNECTOR J15.1, 3*32 PIN
               W  + 99 19 17A   WRAP CONNECTOR J19.1, 3*32 PIN

PPBPRESS       W    99 06 03B   WRAP CONNECTOR J06.1, 3*32 PIN
               W    99 09 18B   WRAP CONNECTOR J09.1, 3*32 PIN

PPWRON         W    99 04 23B   WRAP CONNECTOR J04.1, 3*32 PIN
               W    99 05 05A   WRAP CONNECTOR J05.1, 3*32 PIN
               W    99 08 06A   WRAP CONNECTOR J08.1, 3*32 PIN
               W    99 09 23A   WRAP CONNECTOR J09.1, 3*32 PIN
               W    99 10 30C   WRAP CONNECTOR J10.1, 3*32 PIN
               W  + 99 11 24A   WRAP CONNECTOR J11.1, 3*32 PIN
               W    99 17 23B   WRAP CONNECTOR J17.1, 3*32 PIN
               W  + 99 20 23A   WRAP CONNECTOR J20.1, 3*32 PIN

PRGRON         W    99 06 11A   WRAP CONNECTOR J06.1, 3*32 PIN
                                                          ./.

SIG.NAME COLOR TYPE GR EL PT  S DESCRIPTION OF ELEMENT
-------- ----- ---- -- -- --- - ------------------------------
(CONT.)        W  + 99 08 02E   WRAP CONNECTOR J08.2, 3*32 PIN

PRIFTRXY       W    99 06 09B   WRAP CONNECTOR J06.1, 3*32 PIN
               W    99 09 31C   WRAP CONNECTOR J09.1, 3*32 PIN

PROCSUPV 4     B    97 51 37    COMMAND LINE A800
               W  + 99 06 05E   WRAP CONNECTOR J06.2, 3*32 PIN
         4     WQ   99 06 27E   WRAP CONNECTOR J06.2, 3*32 PIN
               W    99 17 21A   WRAP CONNECTOR J17.1, 3*32 PIN

PROGSTOP       W    99 04 09B   WRAP CONNECTOR J04.1, 3*32 PIN

PSYNC -M       W    99 01 11A   WRAP CONNECTOR J01.1, 3*32 PIN
               W    99 13 31A   WRAP CONNECTOR J13.1, 3*32 PIN

PSYNC -S       W    99 01 03C   WRAP CONNECTOR J01.1, 3*32 PIN
               W    99 03 07C   WRAP CONNECTOR J03.1, 3*32 PIN
               W    99 05 07C   WRAP CONNECTOR J05.1, 3*32 PIN
               W    99 13 29C   WRAP CONNECTOR J13.1, 3*32 PIN

P1DM  -M       W    99 13 08A   WRAP CONNECTOR J13.1, 3*32 PIN

P1DM  -S       W    99 02 21C   WRAP CONNECTOR J02.1, 3*32 PIN
               W    99 13 21C   WRAP CONNECTOR J13.1, 3*32 PIN

P2DM  -M       W    99 01 25B   WRAP CONNECTOR J01.1, 3*32 PIN
               W    99 13 09A   WRAP CONNECTOR J13.1, 3*32 PIN

P2DM  -S       W    99 03 02C   WRAP CONNECTOR J03.1, 3*32 PIN
               W    99 05 03C   WRAP CONNECTOR J05.1, 3*32 PIN
               W  + 99 13 11C   WRAP CONNECTOR J13.1, 3*32 PIN
               W    99 13 22C   WRAP CONNECTOR J13.1, 3*32 PIN

P3DM  -M       W    99 01 24B   WRAP CONNECTOR J01.1, 3*32 PIN
               W    99 13 10A   WRAP CONNECTOR J13.1, 3*32 PIN

P3DM  -S       W    99 02 03C   WRAP CONNECTOR J02.1, 3*32 PIN
               W    99 03 03C   WRAP CONNECTOR J03.1, 3*32 PIN
               W    99 05 04C   WRAP CONNECTOR J05.1, 3*32 PIN
               W    99 13 23C   WRAP CONNECTOR J13.1, 3*32 PIN

P4DM  -M       W    99 03 04A   WRAP CONNECTOR J03.1, 3*32 PIN
               W    99 13 11A   WRAP CONNECTOR J13.1, 3*32 PIN

P4DM  -S       W    99 03 04C   WRAP CONNECTOR J03.1, 3*32 PIN
               W    99 13 24C   WRAP CONNECTOR J13.1, 3*32 PIN

RAMMUX         W    99 03 09A   WRAP CONNECTOR J03.1, 3*32 PIN
               W    99 06 30B   WRAP CONNECTOR J06.1, 3*32 PIN

REC      7     B    97 93 11    CONN. ASS. TO MAIN PROGR. (JIII)
               W    99 10 04C   WRAP CONNECTOR J10.1, 3*32 PIN
         7     WQ   99 10 11D   WRAP CONNECTOR J10.2, 3*32 PIN

RECLATEN       W  + 99 02 26A   WRAP CONNECTOR J02.1, 3*32 PIN
               W    99 06 04A   WRAP CONNECTOR J06.1, 3*32 PIN
                                                          ./.
```

```
*********************************************************************************************************************
*  STUDER  *  SIGNAL  WIRE  LIST          *  82/01/12 * 15:02    *  PAGE   42  *
*********************************************************************************************************************
TAPE LOCK SYSTEM 2000 A800: PARALLEL PROGRAMMER          1.228.900.00          79-10-05

SIG.NAME COLOR TYPE GR EL PT  S DESCRIPTION OF ELEMENT
-------- ----- ---- -- -- --- - ------------------------------
(CONT.)        W  + 99 08 06B   WRAP CONNECTOR J08.1, 3*32 PIN
               W  + 99 11 27A   WRAP CONNECTOR J11.1, 3*32 PIN

REPRECMX       W  + 99 02 08B   WRAP CONNECTOR J02.1, 3*32 PIN
               W    99 06 05B   WRAP CONNECTOR J06.1, 3*32 PIN
               W  + 99 08 05B   WRAP CONNECTOR J08.1, 3*32 PIN
               W  + 99 11 26A   WRAP CONNECTOR J11.1, 3*32 PIN

REPROSEL       W    99 07 27C   WRAP CONNECTOR J07.1, 3*32 PIN
               W  + 99 08 11A   WRAP CONNECTOR J08.1, 3*32 PIN
               W  + 99 11 27C   WRAP CONNECTOR J11.1, 3*32 PIN
               W  + 99 12 29A   WRAP CONNECTOR J12.1, 3*32 PIN

REQUEST  8     B    97 51 15    COMMAND LINE A800
         8     WQ   99 06 18F   WRAP CONNECTOR J06.2, 3*32 PIN
               W    99 08 03C   WRAP CONNECTOR J08.1, 3*32 PIN

RLINE -A       W    99 03 25B   WRAP CONNECTOR J03.1, 3*32 PIN
               W    99 05 23C   WRAP CONNECTOR J05.1, 3*32 PIN

RLINE -B       W    99 03 24B   WRAP CONNECTOR J03.1, 3*32 PIN
               W    99 05 24C   WRAP CONNECTOR J05.1, 3*32 PIN

R15 1322       W    99 13 02C   WRAP CONNECTOR J13.1, 3*32 PIN

SL NOTP  4-0   B    97 91 37    CONN. ASS. TO MAIN PROGR. (J  I)
         4-0   WQ   99 08 17F   WRAP CONNECTOR J08.2, 3*32 PIN
               W    99 10 24A   WRAP CONNECTOR J10.1, 3*32 PIN

SLAV     8-1   B    97 92 19    CONN. ASS. TO MAIN PROGR. (J II)
         8-1   WQ   99 09 25D   WRAP CONNECTOR J09.2, 3*32 PIN
               W    99 10 21B   WRAP CONNECTOR J10.1, 3*32 PIN

SLDECOFF 4-2   B    97 91 35    CONN. ASS. TO MAIN PROGR. (J  I)
         4-2   WQ   99 08 11F   WRAP CONNECTOR J08.2, 3*32 PIN

SNCPLTDR 4     B    97 71 32    AUXILIARY CONNECTOR
         4     WQ   99 07 03E   WRAP CONNECTOR J07.2, 3*32 PIN
               W    99 17 18A   WRAP CONNECTOR J17.1, 3*32 PIN

SPOOLMOD       W    99 02 05A   WRAP CONNECTOR J02.1, 3*32 PIN
               W    99 07 28C   WRAP CONNECTOR J07.1, 3*32 PIN

START-1A 1     B    97 71 21    AUXILIARY CONNECTOR
         1     L    97 72 01A   RELAIS PRINT

START-1B 1     B    97 71 22    AUXILIARY CONNECTOR
         1     L    97 72 01B   RELAIS PRINT

START-2A 6     B    97 71 23    AUXILIARY CONNECTOR
         6     L    97 72 02A   RELAIS PRINT

START-2B 6     B    97 71 24    AUXILIARY CONNECTOR
         6     L    97 72 02B   RELAIS PRINT

START-3A 9     B    97 71 25    AUXILIARY CONNECTOR
                                                                  ./.

SIG.NAME COLOR TYPE GR EL PT  S DESCRIPTION OF ELEMENT
-------- ----- ---- -- -- --- - ------------------------------
(CONT.)  9     L    97 72 03A   RELAIS PRINT

START-3B 9     B    97 71 26    AUXILIARY CONNECTOR
         9     L    97 72 03B   RELAIS PRINT

START-4A 4     B    97 71 27    AUXILIARY CONNECTOR
         4     L    97 72 04A   RELAIS PRINT

START-4B 4     B    97 71 28    AUXILIARY CONNECTOR
         4     L    97 72 04B   RELAIS PRINT

STARTDR1 1     L    97 72 01C   RELAIS PRINT
         1     WQ   99 07 06E   WRAP CONNECTOR J07.2, 3*32 PIN
               W    99 17 29C   WRAP CONNECTOR J17.1, 3*32 PIN

STARTDR2 6     L    97 72 02C   RELAIS PRINT
         6     WQ   99 07 07E   WRAP CONNECTOR J07.2, 3*32 PIN
               W    99 17 24A   WRAP CONNECTOR J17.1, 3*32 PIN

STARTDR3 9     L    97 72 03C   RELAIS PRINT
         9     WQ   99 07 08E   WRAP CONNECTOR J07.2, 3*32 PIN
               W    99 08 07B   WRAP CONNECTOR J08.1, 3*32 PIN

STARTDR4 4     L    97 72 04C   RELAIS PRINT
         4     WQ   99 07 09E   WRAP CONNECTOR J07.2, 3*32 PIN
               W    99 08 07C   WRAP CONNECTOR J08.1, 3*32 PIN

STOP     8-2   B    97 93 40    CONN. ASS. TO MAIN PROGR. (JIII)
               W    99 10 04B   WRAP CONNECTOR J10.1, 3*32 PIN
         8-2   WQ   99 10 22F   WRAP CONNECTOR J10.2, 3*32 PIN

STOREOFS 4-8   B    97 92 29    CONN. ASS. TO MAIN PROGR. (J II)
         4-8   WQ   99 09 05F   WRAP CONNECTOR J09.2, 3*32 PIN
               W    99 10 25B   WRAP CONNECTOR J10.1, 3*32 PIN

SVPCI    9-6   B    97 91 22    CONN. ASS. TO MAIN PROGR. (J  I)
         9-6   WQ   99 08 28D   WRAP CONNECTOR J08.2, 3*32 PIN
               W    99 17 05B   WRAP CONNECTOR J17.1, 3*32 PIN

SVPCII   0-R   B    97 92 43    CONN. ASS. TO MAIN PROGR. (J II)
         0-R   WQ   99 09 25F   WRAP CONNECTOR J09.2, 3*32 PIN
               W    99 17 06B   WRAP CONNECTOR J17.1, 3*32 PIN

SVPCIII  8     B    97 93 06    CONN. ASS. TO MAIN PROGR. (JIII)
         8     WQ   99 10 06D   WRAP CONNECTOR J10.2, 3*32 PIN
               W    99 17 11C   WRAP CONNECTOR J17.1, 3*32 PIN

SVSERPRG       W  + 99 08 30E   WRAP CONNECTOR J08.2, 3*32 PIN
               W    99 17 24B   WRAP CONNECTOR J17.1, 3*32 PIN

SYNC A   4-5-0 B    97 93 47    CONN. ASS. TO MAIN PROGR. (JIII)
               W    99 10 02A   WRAP CONNECTOR J10.1, 3*32 PIN
         4-5-0 WQ   99 10 29F   WRAP CONNECTOR J10.2, 3*32 PIN

SYNC B   0-R   B    97 93 43    CONN. ASS. TO MAIN PROGR. (JIII)
         0-R   WQ   99 10 25F   WRAP CONNECTOR J10.2, 3*32 PIN
                                                                  ./.
```

```
*********************************************************************************************************************
*  STUDER  *  SIGNAL  WIRE  LIST          *  82/01/12 * 15:02    *  PAGE   43  *
*********************************************************************************************************************
TAPE LOCK SYSTEM 2000 A800: PARALLEL PROGRAMMER          1.228.900.00          79-10-05

SIG.NAME COLOR TYPE GR EL PT  S DESCRIPTION OF ELEMENT
-------- ----- ---- -- -- --- - ------------------------------
(CONT.)        W    99 10 28B   WRAP CONNECTOR J10.1, 3*32 PIN

SYNC PLT 9-4   B    97 93 16    CONN. ASS. TO MAIN PROGR. (JIII)
         9-4   WQ   99 10 22D   WRAP CONNECTOR J10.2, 3*32 PIN
               W    99 10 28A   WRAP CONNECTOR J10.1, 3*32 PIN

SYNCBDR  3     B    97 71 33    AUXILIARY CONNECTOR
         3     WQ   99 07 02E   WRAP CONNECTOR J07.2, 3*32 PIN
               W    99 17 25A   WRAP CONNECTOR J17.1, 3*32 PIN

SYNCBOUT       W    99 01 02A   WRAP CONNECTOR J01.1, 3*32 PIN
               W    99 02 02B   WRAP CONNECTOR J02.1, 3*32 PIN

SYNCSEL        W    99 07 29C   WRAP CONNECTOR J07.1, 3*32 PIN
               W  + 99 08 30B   WRAP CONNECTOR J08.1, 3*32 PIN
               W  + 99 11 24C   WRAP CONNECTOR J11.1, 3*32 PIN
               W  + 99 12 30C   WRAP CONNECTOR J12.1, 3*32 PIN

TDATAM/S       W    99 03 23C   WRAP CONNECTOR J03.1, 3*32 PIN
               W    99 14 23B   WRAP CONNECTOR J14.1, 3*32 PIN

TDCDMUX1       W    99 06 27B   WRAP CONNECTOR J06.1, 3*32 PIN
               W    99 08 27A   WRAP CONNECTOR J08.1, 3*32 PIN

TDCDMUX2       W    99 06 26C   WRAP CONNECTOR J06.1, 3*32 PIN
               W    99 08 26A   WRAP CONNECTOR J08.1, 3*32 PIN

TDLATEN1       W    99 06 11B   WRAP CONNECTOR J06.1, 3*32 PIN
               W    99 08 11B   WRAP CONNECTOR J08.1, 3*32 PIN

TDLATEN2       W    99 06 22B   WRAP CONNECTOR J06.1, 3*32 PIN
               W    99 08 13B   WRAP CONNECTOR J08.1, 3*32 PIN

TESTFLGS       W    99 04 13C   WRAP CONNECTOR J04.1, 3*32 PIN
               W    99 07 13C   WRAP CONNECTOR J07.1, 3*32 PIN

TESTRAM        W    99 06 02C   WRAP CONNECTOR J06.1, 3*32 PIN
               W    99 07 02C   WRAP CONNECTOR J07.1, 3*32 PIN

TIMLDEN        W    99 06 07C   WRAP CONNECTOR J06.1, 3*32 PIN
               W    99 07 03C   WRAP CONNECTOR J07.1, 3*32 PIN

TRM/REC  1     B    97 51 17    COMMAND LINE A800
         1     WQ   99 06 30F   WRAP CONNECTOR J06.2, 3*32 PIN
               W    99 08 10B   WRAP CONNECTOR J08.1, 3*32 PIN

TRMADR0        W    99 07 02A   WRAP CONNECTOR J07.1, 3*32 PIN
               W    99 09 02A   WRAP CONNECTOR J09.1, 3*32 PIN
               W    99 10 29A   WRAP CONNECTOR J10.1, 3*32 PIN
               W    99 17 11B   WRAP CONNECTOR J17.1, 3*32 PIN

TRMADR1        W    99 07 03A   WRAP CONNECTOR J07.1, 3*32 PIN
               W    99 09 03A   WRAP CONNECTOR J09.1, 3*32 PIN
               W    99 10 29B   WRAP CONNECTOR J10.1, 3*32 PIN
               W    99 17 10B   WRAP CONNECTOR J17.1, 3*32 PIN

SIG.NAME CCLOR TYPE GR EL PT  S DESCRIPTION OF ELEMENT
-------- ----- ---- -- -- --- - ------------------------------
TRMADR2        W    99 07 04A   WRAP CONNECTOR J07.1, 3*32 PIN
               W    99 09 04A   WRAP CONNECTOR J09.1, 3*32 PIN
               W    99 10 29C   WRAP CONNECTOR J10.1, 3*32 PIN
               W    99 17 09B   WRAP CONNECTOR J17.1, 3*32 PIN

TRMADR3        W    99 07 05A   WRAP CONNECTOR J07.1, 3*32 PIN
               W    99 09 05A   WRAP CONNECTOR J09.1, 3*32 PIN
               W    99 10 31A   WRAP CONNECTOR J10.1, 3*32 PIN
               W    99 17 08B   WRAP CONNECTOR J17.1, 3*32 PIN

TRMADR4        W    99 07 06A   WRAP CONNECTOR J07.1, 3*32 PIN
               W    99 09 06A   WRAP CONNECTOR J09.1, 3*32 PIN
               W    99 10 31B   WRAP CONNECTOR J10.1, 3*32 PIN
               W    99 17 22B   WRAP CONNECTOR J17.1, 3*32 PIN

TRMADR5        W    99 07 07A   WRAP CONNECTOR J07.1, 3*32 PIN
               W    99 09 07A   WRAP CONNECTOR J09.1, 3*32 PIN
               W    99 10 31C   WRAP CONNECTOR J10.1, 3*32 PIN

TRMADR6        W    99 07 08A   WRAP CONNECTOR J07.1, 3*32 PIN
               W    99 09 08A   WRAP CONNECTOR J09.1, 3*32 PIN
               W    99 10 30A   WRAP CONNECTOR J10.1, 3*32 PIN

TX       1-5   B    97 93 15    CONN. ASS. TO MAIN PROGR. (JIII)
         1-5   WQ   99 10 21D   WRAP CONNECTOR J10.2, 3*32 PIN
               W    99 10 25A   WRAP CONNECTOR J10.1, 3*32 PIN

UNAS B   9-R   B    97 92 20    CONN. ASS. TO MAIN PROGR. (J II)
         9-R   WQ   99 09 26D   WRAP CONNECTOR J09.2, 3*32 PIN
               W    99 10 18A   WRAP CONNECTOR J10.1, 3*32 PIN

UPLIM EX 9-1-0 B    97 91 46    CONN. ASS. TO MAIN PROGR. (J  I)
         9-1-0 WQ   99 08 28F   WRAP CONNECTOR J08.2, 3*32 PIN
               W    99 10 09A   WRAP CONNECTOR J10.1, 3*32 PIN

USER B   4     B    97 93 05    CONN. ASS. TO MAIN PROGR. (JIII)
         4     WQ   99 10 05D   WRAP CONNECTOR J10.2, 3*32 PIN
               W    99 10 18B   WRAP CONNECTOR J10.1, 3*32 PIN

WEACFLG        W    99 04 08B   WRAP CONNECTOR J04.1, 3*32 PIN
               W    99 07 08C   WRAP CONNECTOR J07.1, 3*32 PIN

WEPCFLG        W    99 06 06A   WRAP CONNECTOR J06.1, 3*32 PIN
               W    99 07 06B   WRAP CONNECTOR J07.1, 3*32 PIN

WIRE001        W    99 06 05D   UNUSED WIRE
               W    99 06 17D   UNUSED WIRE
               W    99 08 02B   UNUSED WIRE

WIRE002        W    99 06 22D   UNUSED WIRE
               W    99 07 11D   UNUSED WIRE
               W    99 08 21A   UNUSED WIRE

WIRE003        W    99 07 13D   UNUSED WIRE
               W    99 08 21B   UNUSED WIRE
```

* STUDER * SIGNAL WIRE LIST * 82/01/12 * 15:02 * PAGE 44 *

TAPE LOCK SYSTEM 2000 A800: PARALLEL PROGRAMMER 1.228.900.00 79-10-05

SIG.NAME	COLOR	TYPE	GR	EL	PT	S	DESCRIPTION OF ELEMENT
WIRE004		W	99	11	08A		UNUSED WIRE
		W	99	11	10A		UNUSED WIRE
WIRE005		W	99	11	09A		UNUSED WIRE
		W	99	11	11A		UNUSED WIRE
WIRE006		W	99	11	08C		UNUSED WIRE
		W	99	11	10C		UNUSED WIRE
WIRE007		W	99	11	09C		UNUSED WIRE
		W	99	11	11C		UNUSED WIRE
WIRE008		W	99	07	17D		UNUSED WIRE
		W	99	08	22B		UNUSED WIRE
WIRE009		W	99	07	18D		UNUSED WIRE
		W	99	08	22C		UNUSED WIRE
WIRE010		W	99	07	21D		UNUSED WIRE
		W	99	08	23C		UNUSED WIRE
WIRE011		W	99	07	25D		UNUSED WIRE
		W	99	17	23A		UNUSED WIRE
WIRE012		W	99	06	17F		UNUSED WIRE
		W	99	07	10E		UNUSED WIRE
		W	99	08	18B		UNUSED WIRE
WIRE013		W	99	06	17E		UNUSED WIRE
		W	99	07	13E		UNUSED WIRE
		W	99	08	25C		UNUSED WIRE
WIRE014		W	99	06	21F		UNUSED WIRE
		W	99	07	18E		UNUSED WIRE
		W	99	08	07A		UNUSED WIRE
WIRE015		W	99	06	21E		UNUSED WIRE
		W	99	07	21E		UNUSED WIRE
		W	99	08	17C		UNUSED WIRE
WIRE016		W	99	06	22E		UNUSED WIRE
		W	99	07	22E		UNUSED WIRE
		W	99	08	31A		UNUSED WIRE
WIRE017		W	99	06	22F		UNUSED WIRE
		W	99	07	26E		UNUSED WIRE
		W	99	08	28C		UNUSED WIRE
WIRE018		W	99	06	24E		UNUSED WIRE
		W	99	07	27E		UNUSED WIRE
		W	99	08	27B		UNUSED WIRE
WIRE019		W	99	07	10F		UNUSED WIRE
		W	99	08	17B		UNUSED WIRE
WIRE020		W	99	07	13F		UNUSED WIRE
(CONT.)		W	99	08	18C		UNUSED WIRE
WIRE021		W	99	07	17F		UNUSED WIRE
		W	99	08	21C		UNUSED WIRE
WIRE022		W	99	07	18F		UNUSED WIRE
		W	99	08	22A		UNUSED WIRE
WIRE023		W	99	07	21F		UNUSED WIRE
		W	99	08	23A		UNUSED WIRE
WIRE024		W	99	07	22F		UNUSED WIRE
		W	99	08	23B		UNUSED WIRE
WIRE025		W	99	07	23F		UNUSED WIRE
		W	99	08	24B		UNUSED WIRE
WIRE026		W	99	11	18D		UNUSED WIRE
		W	99	11	23A		UNUSED WIRE
		W	99	11	23B		UNUSED WIRE
		W	99	11	23C		UNUSED WIRE
		W	99	12	23A		UNUSED WIRE
		W	99	12	23B		UNUSED WIRE
		W	99	12	23C		UNUSED WIRE
WIRE027		W	99	12	28A		UNUSED WIRE
		W	99	12	28B		UNUSED WIRE
		W	99	12	28C		UNUSED WIRE
WIRE028		W	99	11	06B		UNUSED WIRE
		W	99	11	06C		UNUSED WIRE
WIRE029		W	99	08	13C		UNUSED WIRE
		W	99	11	05A		UNUSED WIRE
		W	99	18	02C		UNUSED WIRE
WIRE030		W	99	11	02C		UNUSED WIRE
		W	99	13	02A		UNUSED WIRE
WIRE031		W	99	11	03C		UNUSED WIRE
		W	99	13	03A		UNUSED WIRE
WIRE032		W	99	11	04C		UNUSED WIRE
		W	99	13	04A		UNUSED WIRE
WIRE033		W	99	17	02B		UNUSED WIRE
		W	99	20	02D		UNUSED WIRE
WIRE034		W	99	17	03B		UNUSED WIRE
		W	99	20	03D		UNUSED WIRE
WIRE035		W	99	17	04B		UNUSED WIRE
		W	99	20	04D		UNUSED WIRE
WIRE036		W	99	17	07B		UNUSED WIRE
		W	99	20	08D		UNUSED WIRE

./.

* STUDER * SIGNAL WIRE LIST * 82/01/12 * 15:02 * PAGE 45 *

TAPE LOCK SYSTEM 2000 A800: PARALLEL PROGRAMMER 1.228.900.00 79-10-05

SIG.NAME	COLOR	TYPE	GR	EL	PT	S	DESCRIPTION OF ELEMENT
WIRE037		W	99	17	26C		UNUSED WIRE
		W	99	20	26D		UNUSED WIRE
		W	99	20	26F		UNUSED WIRE
WIRE038		W	99	17	27C		UNUSED WIRE
		W	99	20	27D		UNUSED WIRE
		W	99	20	27F		UNUSED WIRE
WIRE039		W	99	17	31A		UNUSED WIRE
		W	99	20	31D		UNUSED WIRE
WIRE040		W	99	17	05C		UNUSED WIRE
		W	99	20	05F		UNUSED WIRE
		W	99	20	09D		UNUSED WIRE
WIRE041		W	99	17	06C		UNUSED WIRE
		W	99	20	06F		UNUSED WIRE
		W	99	20	10D		UNUSED WIRE
WIRE042		W	99	17	07C		UNUSED WIRE
		W	99	20	07F		UNUSED WIRE
		W	99	20	11D		UNUSED WIRE
WIRE043		W	99	17	08C		UNUSED WIRE
		W	99	20	08F		UNUSED WIRE
		W	99	20	17D		UNUSED WIRE
WIRE044		W	99	17	09C		UNUSED WIRE
		W	99	20	09F		UNUSED WIRE
WIRE045		W	99	17	10C		UNUSED WIRE
		W	99	20	10F		UNUSED WIRE
WIRE046		W	99	17	13C		UNUSED WIRE
		W	99	20	13D		UNUSED WIRE
		W	99	20	13F		UNUSED WIRE
WIRE047		W	99	17	17C		UNUSED WIRE
		W	99	20	17F		UNUSED WIRE
WIRE048		W	99	17	18C		UNUSED WIRE
		W	99	20	18D		UNUSED WIRE
		W	99	20	18F		UNUSED WIRE
WIRE049		W	99	17	21C		UNUSED WIRE
		W	99	20	21D		UNUSED WIRE
		W	99	20	21F		UNUSED WIRE
WIRE050		W	99	17	22C		UNUSED WIRE
		W	99	20	22D		UNUSED WIRE
		W	99	20	22F		UNUSED WIRE
WIRE051		W	99	17	23C		UNUSED WIRE
		W	99	20	23D		UNUSED WIRE
		W	99	20	23F		UNUSED WIRE
WIRE052		W	99	17	24C		UNUSED WIRE
		W	99	20	24D		UNUSED WIRE
		W	99	20	24F		UNUSED WIRE
WIRE053		W	99	17	31C		UNUSED WIRE
		W	99	20	31F		UNUSED WIRE
WIRE054		W	99	11	21C		UNUSED WIRE
		W	99	12	21C		UNUSED WIRE
WIRE055		W	99	11	22C		UNUSED WIRE
		W	99	12	22C		UNUSED WIRE
WIRE056		W	99	11	26C		UNUSED WIRE
		W	99	12	31C		UNUSED WIRE
WIRE057		W	99	11	28C		UNUSED WIRE
		W	99	12	09C		UNUSED WIRE
WIRE058		W	99	11	30C		UNUSED WIRE
		W	99	12	06C		UNUSED WIRE
WIRE059		W	99	19	07A		UNUSED WIRE
		W	99	19	07B		UNUSED WIRE
		W	99	19	07C		UNUSED WIRE
WIRE060		W	99	19	04A		UNUSED WIRE
		W	99	19	04B		UNUSED WIRE
		W	99	19	04C		UNUSED WIRE
WLINE -M		W	99	03	22A		WRAP CONNECTOR J03.1, 3*32 PIN
		W	99	05	22C		WRAP CONNECTOR J05.1, 3*32 PIN
WLINE -S		W	99	03	22C		WRAP CONNECTOR J03.1, 3*32 PIN
		W	99	05	21C		WRAP CONNECTOR J05.1, 3*32 PIN
WMPRESO1	8-R-0	B	97	91	49		CONN. ASS. TO MAIN PROGR. (J I)
	8-R-0	WQ	99	08	30F		WRAP CONNECTOR J08.2, 3*32 PIN
WMPRESO2	6-2-0	B	97	91	50		CONN. ASS. TO MAIN PROGR. (J I)
	6-2-0	WQ	99	08	31F		WRAP CONNECTOR J08.2, 3*32 PIN
WMPRESO3	9	B	97	92	01		CONN. ASS. TO MAIN PROGR. (J II)
	9	WQ	99	09	02D		WRAP CONNECTOR J09.2, 3*32 PIN
WMPRESO4	1-0	B	97	92	27		CONN. ASS. TO MAIN PROGR. (J II)
	1-0	WQ	99	09	03F		WRAP CONNECTOR J09.2, 3*32 PIN
Y-REC-M	5	B	97	71	05		AUXILIARY CONNECTOR
	5	L	97	72	05A		RELAIS PRINT
YMOVETLS		W	99	02	17C		WRAP CONNECTOR J02.1, 3*32 PIN
		W	+ 99	08	17A		WRAP CONNECTOR J08.1, 3*32 PIN
ZCODGENO	1	B	97	51	31		COMMAND LINE A800
	1	WQ	99	06	30D		WRAP CONNECTOR J06.2, 3*32 PIN

./.

SIG.NAME	COLOR	TYPE	GR	EL	PT	S	DESCRIPTION OF ELEMENT
(CONT.)		W	+ 99	07	22D		WRAP CONNECTOR J07.2, 3*32 PIN
		W	99	08	24A		WRAP CONNECTOR J08.1, 3*32 PIN
ZCODINSL	4	B	97	51	22		COMMAND LINE A800
		W	+ 99	06	08F		WRAP CONNECTOR J06.2, 3*32 PIN
	4	WQ	99	06	18D		WRAP CONNECTOR J06.2, 3*32 PIN
		W	99	08	04A		WRAP CONNECTOR J08.1, 3*32 PIN
ZCODIN1S	8	B	97	51	28		COMMAND LINE A800
	8	WQ	99	06	28D		WRAP CONNECTOR J06.2, 3*32 PIN
		W	+ 99	07	31E		WRAP CONNECTOR J07.2, 3*32 PIN
		W	99	08	28A		WRAP CONNECTOR J08.1, 3*32 PIN
ZEXGENO	9	B	97	51	30		COMMAND LINE A800
	9	WQ	99	06	26D		WRAP CONNECTOR J06.2, 3*32 PIN
		W	+ 99	07	28F		WRAP CONNECTOR J07.2, 3*32 PIN
		W	99	08	05C		WRAP CONNECTOR J08.1, 3*32 PIN
ZINCODRP	2	B	97	51	32		COMMAND LINE A800
	2	WQ	99	06	26F		WRAP CONNECTOR J06.2, 3*32 PIN
		W	+ 99	07	28D		WRAP CONNECTOR J07.2, 3*32 PIN
		W	99	08	04C		WRAP CONNECTOR J08.1, 3*32 PIN
0.0AD150	0	A	98	81	08		ADDITIONAL POWER CONNECTOR
	0	A	98	81	09		ADDITIONAL POWER CONNECTOR
	0	A	98	81	10		ADDITIONAL POWER CONNECTOR
	0	WQ	99	18	10A		WRAP CONNECTOR J18.1, 3*32 PIN
	0	WQ	99	18	10B		WRAP CONNECTOR J18.1, 3*32 PIN
	0	WQ	99	18	10C		WRAP CONNECTOR J18.1, 3*32 PIN
0.0IN150	0	A	98	91	11		CONNECTOR ASS. TO POWER SUPPLY
	0	A	98	91	12		CONNECTOR ASS. TO POWER SUPPLY
	0	A	98	91	13		CONNECTOR ASS. TO POWER SUPPLY
		W	99	19	10A		WRAP CONNECTOR J19.1, 3*32 PIN
		W	99	19	10B		WRAP CONNECTOR J19.1, 3*32 PIN
		W	99	19	10C		WRAP CONNECTOR J19.1, 3*32 PIN
	0	WQ	99	20	10A		WRAP CONNECTOR J20.1, 3*32 PIN
	0	WQ	99	20	10B		WRAP CONNECTOR J20.1, 3*32 PIN
	0	WQ	99	20	10C		WRAP CONNECTOR J20.1, 3*32 PIN
100 HZ		W	99	03	07B		WRAP CONNECTOR J03.1, 3*32 PIN
		W	99	13	07B		WRAP CONNECTOR J13.1, 3*32 PIN
		W	99	14	11B		WRAP CONNECTOR J14.1, 3*32 PIN
102.4KHZ		W	99	03	23A		WRAP CONNECTOR J03.1, 3*32 PIN
12.5 HZ		W	99	03	04B		WRAP CONNECTOR J03.1, 3*32 PIN
		W	99	06	05A		WRAP CONNECTOR J06.1, 3*32 PIN
		W	99	09	13A		WRAP CONNECTOR J09.1, 3*32 PIN
12.8 KHZ		W	99	03	11B		WRAP CONNECTOR J03.1, 3*32 PIN
		W	99	07	17A		WRAP CONNECTOR J07.1, 3*32 PIN
13.1 MHZ		W	99	01	21C		WRAP CONNECTOR J01.1, 3*32 PIN
		W	99	02	21A		WRAP CONNECTOR J02.1, 3*32 PIN
		W	99	03	21B		WRAP CONNECTOR J03.1, 3*32 PIN
1638 KHZ		W	99	03	17B		WRAP CONNECTOR J03.1, 3*32 PIN
200 HZ		W	99	03	02B		WRAP CONNECTOR J03.1, 3*32 PIN
204.8KHZ		W	99	03	13B		WRAP CONNECTOR J03.1, 3*32 PIN
25 HZ		W	99	03	05B		WRAP CONNECTOR J03.1, 3*32 PIN
		W	99	06	31C		WRAP CONNECTOR J06.1, 3*32 PIN
		W	99	13	05B		WRAP CONNECTOR J13.1, 3*32 PIN
25.6 KHZ		W	99	03	09B		WRAP CONNECTOR J03.1, 3*32 PIN
3.2 KHZ		W	99	03	10B		WRAP CONNECTOR J03.1, 3*32 PIN
		W	99	06	10B		WRAP CONNECTOR J06.1, 3*32 PIN
400 HZ		W	99	03	08B		WRAP CONNECTOR J03.1, 3*32 PIN
50 HZ		W	99	03	06B		WRAP CONNECTOR J03.1, 3*32 PIN
		W	99	06	06B		WRAP CONNECTOR J06.1, 3*32 PIN
		W	99	13	06B		WRAP CONNECTOR J13.1, 3*32 PIN
51.2 KHZ		W	99	03	22B		WRAP CONNECTOR J03.1, 3*32 PIN
6.25 HZ		W	99	01	06B		WRAP CONNECTOR J01.1, 3*32 PIN
		W	99	03	03B		WRAP CONNECTOR J03.1, 3*32 PIN
800 HZ		W	99	01	08B		WRAP CONNECTOR J01.1, 3*32 PIN
		W	99	03	08C		WRAP CONNECTOR J03.1, 3*32 PIN
819.2KHZ		W	99	01	18C		WRAP CONNECTOR J01.1, 3*32 PIN
		W	99	02	18B		WRAP CONNECTOR J02.1, 3*32 PIN
		W	99	03	18B		WRAP CONNECTOR J03.1, 3*32 PIN
		W	99	07	17C		WRAP CONNECTOR J07.1, 3*32 PIN
		W	99	09	21A		WRAP CONNECTOR J09.1, 3*32 PIN
		W	99	15	06B		WRAP CONNECTOR J15.1, 3*32 PIN
		W	+ 99	19	06A		WRAP CONNECTOR J19.1, 3*32 PIN

STUDER — LOCATION PIN LIST

TITLE: TAPE LOCK SYSTEM 2000 A800: SERIAL PROGRAMMER 1.228.900.00 INDEX: 9

DATE OF ORIGIN: 79/10/10
DATE OF PROC.: 82/01/12

TOTAL GROUPS: 3
TOTAL ELEMENTS: 33
TOTAL PINS: 2685
TOTAL UNUSED PINS: 1061
MULTIPLE PINS: 0

GROUP NODE = *
INTER GROUP NODE = #
DIRECT WIRE TO # = <
WIRING NOT COMPUTED = @

TAPE LOCK SYSTEM 2000 A800: SERIAL PROGRAMMER 1.228.900.00 79/10/10

GR: 97
RACK ELEMENTS A800 LOWER PART

EL: 13 REFERENCE FREQUENCY INPUT

TYPE	PT	LV	SIG.NAME	COLOR	F	X	Y
L	01	1	EXFRQSCR	0			

EL: 14 REFERENCE FREQUENCY INPUT

TYPE	PT	LV	SIG.NAME	COLOR	F	X	Y
L	01	1	EXFRQSCR	0			
L	02	1	EXFRQINA	2			
L	03	1	EXFRQINB	3			

EL: 15 REFERENCE FREQUENCY INPUT

TYPE	PT	LV	SIG.NAME	COLOR	F	X	Y
L	01A	1	0 L	0			
L	02	1	EXFRQINA	2			
L	02A	1	EXFREQ1	2			
L	03	1	EXFRQINB	3			
L	03A	1	EXFREQTM	3			
L	04A	1	EXFREQ2	4			

EL: 51 COMMAND LINE A800

TYPE	PT	LV	SIG.NAME	COLOR	F	X	Y
	01	0	KEY				
	02	0					
B	03	1	CCSUPVIS	2			
	04	0					
	05	0					
	06	0					
B	07	1	0 L	0			
	08	0					
	09	0					
	10	0					
	11	0					
	12	0					
B	13	1	0 L	0			
B	14	1	ACKNLG	7			
B	15	1	REQUEST	8			
B	16	1	DATACLK	9			
B	17	1	TRM/REC	1			
B	18	1	A800SUPV	2			
B	19	1	0 L	0			
B	20	1	0 L	0			
	21	0					
B	22	1	ZCODINSL	4			
	23	0					
B	24	1	0 L	0			
	25	0					
	26	0					

./.

GR: 97 (CONTINUATION)
RACK ELEMENTS A800 LOWER PART

EL: 51 (CONTINUATION)

TYPE	PT	LV	SIG.NAME	COLOR	F	X	Y
	27	0					
B	28	1	ZCODIN1S	8			
B	29	1	0 L	0			
B	30	1	ZEXGENO	9			
B	31	1	ZCODGENO	1			
B	32	1	ZINCODRP	2			
	33	0					
B	34	1	A800DATA	3			
B	35	1	0 L	0			
	36	0	KEY				
B	37	1	PROCSUPV	4			

EL: 71 AUXILIARY CONNECTOR

TYPE	PT	LV	SIG.NAME	COLOR	F	X	Y
B	01	1	0 L	0			
B	02	1	LKMODEDR	1			
B	03	1	EDMODEDR	8			
	04	0	KEY				
B	05	1	Y-REC-M	5			
	06	1					
	07	1					
	08	1					
	09	1					
B	10	1	PARKEDDR	2			
	11	1					
	12	1					
	13	1					
	14	1					
	15	1					
	16	1					
	17	1					
	18	1					
	19	1					
B	20	1	0 K	0			
B	21	1	START-1A	1			
B	22	1	START-1B	1			
B	23	1	START-2A	6			
B	24	1	START-2B	6			
B	25	1	START-3A	9			
B	26	1	START-3B	9			
B	27	1	START-4A	4			
B	28	1	START-4B	4			
	29	1					
	30	1					
B	31	1	EDLEADDR	7			
B	32	1	SNCPLTDR	4			
B	33	1	SYNCBDR	3			
	34	0	KEY				
B	35	1	0 L	0			

./.

GR: 97 (CONTINUATION)
RACK ELEMENTS A800 LOWER PART

EL: 71 (CONTINUATION)

TYPE	PT	LV	SIG.NAME	COLOR	F	X	Y
B	36	1	+24M	3			
B	37	1	+24	2			

EL: 72 RELAIS PRINT

TYPE	PT	LV	SIG.NAME	COLOR	F	X	Y
L	01A	1	START-1A	1			
L	01B	1	START-1B	1			
L	01C	1	STARTDR1	1			
L	02A	1	START-2A	6			
L	02B	1	START-2B	6			
L	02C	1	STARTDR2	6			
L	03A	1	START-3A	9			
L	03B	1	START-3B	9			
L	03C	1	STARTDR3	9			
L	04A	1	START-4A	4			
L	04B	1	START-4B	4			
L	04C	1	STARTDR4	4			
L	05A	1	Y-REC-M	5			
L	05C	1	EXTRECCM	7			
L	06A	1	0 L	0			
L	06C	1	0 L	0			
L	07A	1	0 K	0			
L	07C	1	0 K	0			
L	08A	1	+24	2			
L	08C	1	+24	2			
L	09A	1	+24M	3			

EL: 81 TLS LINE AMPLIFIER, PRINT

TYPE	PT	LV	SIG.NAME	COLOR	F	X	Y
L	00A	1	TRANSM1	4			
L	00B	1	TRANSM2	5			
L	00C	1	RECEIVE1	2			
L	00D	1	RECEIVE2	3			
L	01	1	EXTGND				
L	02	1	RECDATA	1			
L	03	1	+5.0V	2			
L	04	1	TRMDATA	5			
L	05	1	LAGND				
L	06	1	0 L	0			
L	07	1	+24	3			

EL: 82 TLS LINE AMPLIFIER, 5POL. FEMALE

TYPE	PT	LV	SIG.NAME	COLOR	F	X	Y
L	01	1	GROUND81	0			
L	02	1	RECEIVE1	2			

./.

```
*****************************************************************************************************************************
*   S T U D E R   *      L O C A T I O N     P I N     L I S T       *   82/01/12 * 15:02      *   P A G E      3    *
*****************************************************************************************************************************
TAPE LOCK SYSTEM 2000 A800: SERIAL PROGRAMMER                1.228.900.00              79/10/10
```

GR: 97 (CONTINUATION)
RACK ELEMENTS A800 LOWER PART

EL: 02 (CONTINUATION)

TYPE	PT	LV	SIG.NAME	COLOR	F	X	Y
L	03	1	RECEIVE2	3			
L	04	1	TRANSM1	4			
L	05	1	TRANSM2	5			

EL: 83 TLS LINE AMPLIFIER, GROUND SCREW

TYPE	PT	LV	SIG.NAME	COLOR	F	X	Y
L	01	1	GROUND81	0			

GR: 98
RACK ELEMENTS A800 UPPER PART

EL: 51 MASTER CONTROL CONNECTOR A800

TYPE	PT	LV	SIG.NAME	COLOR	F	X	Y
B	01	1	0 L	0			
	02	0	KEY				
B	03	1	+10	1			
B	04	1	MPWRON	2			
B	05	1	LKMODDR2	3			
B	06	1	PARKEDDR	4			
B	07	1	EXTRECCM	5			
B	08	1	MCSUPVIS	6			
	09	1					
B	10	1	0 K	0			
B	11	1	0 K	0			
B	12	1	+24	2			
B	13	1	+24	1			
B	14	1	0 L	0			
B	15	1	MCRECEDR	4			
B	16	1	MCZSETDR	5			
B	17	1	MCKCUTDR	6			
B	18	1	MCRESDR1	7			
B	19	1	MCDAT1DR	8			
B	20	1	MCDAT2DR	9			
B	21	1	MCMUTEDR	1			
B	22	1	MCDATRDY	2			
B	23	1	MCRHRSDR	1			
B	24	1	MCDATODR	4			
	25	0	KEY				

EL: 81 ADDITIONAL POWER CONNECTOR

TYPE	PT	LV	SIG.NAME	COLOR	F	X	Y
	01	1					
	02	0	KEY				
	03	1					
	04	1					
	05	1					
	06	1					
	07	1					
A	08	1	0.0AD150	0			
A	09	1	0.0AD150	0			
A	10	1	0.0AD150	0			
A	11	1	0 L	0			
A	12	1	0 L	0			
A	13	1	0 L	0			
A	14	1					
A	15	1					
A	16	1	+10	5			
A	17	1	+10	5			
A	18	1	+10	5			
A	19	1	+10AD150	5			
A	20	1	+10AD150	5			
A	21	1	+10AD150	5			

./.

GR: 98 (CONTINUATION)
RACK ELEMENTS A800 UPPER PART

EL: 01 (CONTINUATION)

TYPE	PT	LV	SIG.NAME	COLOR	F	X	Y
	22	0	KEY				
	23	1					
	24	1					
	25	1					

EL: 91 CONNECTOR ASS. TO POWER SUPPLY

TYPE	PT	LV	SIG.NAME	COLOR	F	X	Y
A	01	1	-10V 150	6			
	02	0	KEY				
A	03	1	-10V 150	6			
A	04	1	-10V 150	6			
A	05	1	0 L	0			
A	06	1	0 L	0			
A	07	1	0 L	0			
A	08	1	0 L	0			
A	09	1	0 L	0			
A	10	1	0 L	0			
A	11	1	0.0IN150	0			
A	12	1	0.0IN150	0			
A	13	1	0.0IN150	0			
	14	1					
	15	1					
A	16	1	+10	5			
A	17	1	+10	5			
A	18	1	+10	5			
A	19	1	+10	5			
A	20	1	+10	5			
A	21	1	+10	5			
	22	0	KEY				
A	23	1	+31V 150	9			
A	24	1	+31V 150	9			
A	25	1	+31V 150	9			

```
*****************************************************************************************************************************
*   S T U D E R   *      L O C A T I O N     P I N     L I S T       *   82/01/12 * 15:02      *   P A G E      4    *
*****************************************************************************************************************************
TAPE LOCK SYSTEM 2000 A800: SERIAL PROGRAMMER                1.228.900.00              79/10/10
```

GR: 99 1.228.399.00 W0019
PROCESSOR BACK PANEL

EL: 01 WRAP CONNECTOR J01.1, 3*32 PIN

TYPE	PT	LV	SIG.NAME	COLOR	F	X	Y
WP	01A	1	0 L				
WPQ	01B	1	0 L	0			
WP	01C	1	0 L				
W	02A	3	SYNCBOUT				
WQ	02B	3	EXFREQ1	2			
W	02C	3	EXTSYNC				
W	03A	3	MP2DMM				
WQ	03B	3	EXFREQTM	3			
W	03C	3	PSYNC -S				
W	04A	3	MP3DMM				
WQ	04B	3	EXFREQ2	4			
W	04C	3	PCBALQO				
W	05A	3	MDMFAILM				
W	05B	3	CLRADRCT				
W	05C	3	CODGENO				
W	06A	3	MDIRDWNM				
W	06B	3	6.25 HZ				
W	06C	3	EXGENOUT				
W	07A	3	MPSYNCM				
W	07B	3	CKACTLT				
W	07C	3	PCPGDATA				
W	08A	3	ARPOUT-A				
W	08B	3	800 HZ				
W	08C	3	PCPGDATB				
W	09A	3	ARPOUT-B				
W	09B	3	ARPOUT-D				
W	09C	3	PCPGDATC				
W	10A	3	ARPOUT-C				
W	10B	3	ARPOUT-E				
W	10C	3	PERMNTM4				
W	11A	3	PSYNC -M				
W	11B	3	ARPOUT-F				
W	11C	3	PMNTM 4				
W	12A	3					
W	12B	3	- 5				
W	12C	3	- 5				
W	13A	3	ACPGDATH				
W	13B	3	ACPGDATG				
W	13C	3	PMNTM 2				
W	14A	3					
W	14B	3	-12				
W	14C	3	-12				
W	15A	3					
W	15B	3	0 A				
W	15C	3	0 A				
W	16A	3					
W	16B	3	+12				
W	16C	3	+12				
W	17A	3	ACIFGRP				
W	17B	3	ACPGDATA				
W	17C	3	ACSPGRP3				

./.

GR: 99 (CONTINUATION)
PROCESSOR BACK PANEL

EL: 01 (CONTINUATION)

TYPE	PT	LV	SIG.NAME	COLOR	F	X	Y
W	18A	3	PCBALQ2				
W	18B	3	ACPGDATB				
W	18C	3	819.2KHZ				
W	19A	3					
W	19B	3	0 K				
W	19C	3	0 K				
W	20A	3					
W	20B	3	+24				
W	20C	3	+24				
W	21A	3	ACSPCAP				
W	21B	3	ACPGDATC				
W	21C	3	13.1 MHZ				
W	22A	3	NFRQCTLD				
W	22B	3	ACPGDATD				
W	22C	3	ADDRCT-A				
W	23A	3	PCSPGRP2				
W	23B	3	ACPGDATE				
W	23C	3	ADDRCT-B				
W	24A	3	PCBTESTC				
W	24B	3	P3DM -M				
W	24C	3	ADDRCT-C				
W	25A	3	BTCTA -M				
W	25B	3	P2DM -M				
W	25C	3	ADDRCT-D				
W	26A	3	BTCTB -M				
W	26B	3	DMFAIL-M				
W	26C	3	ADDRCT-E				
W	27A	3	BTCTC -M				
W	27B	3	DIRDWN-M				
W	27C	3	ADDRCT-F				
W	28A	3	BTCTD -M				
W	28B	3	ACSPIFC1				
W	28C	3	ADDRCT-G				
W	29A	3	LDADDRCT				
W	29B	3	ARSEROUT				
W	29C	3	ADDRCT-H				
W	30A	3	ENTADRCT				
W	30B	3	EXFRQDAT				
W	30C	3	ADDRCT-I				
W	31A	3	BTCTG -M				
W	31B	3	ACPGDATF				
W	31C	3	ADDRCT-K				
WP	32A	1	+10				
WP	32B	1	+10				
WP	32C	1	+10				

GR: 99 (CONTINUATION)
PROCESSOR BACK PANEL

EL: 02 WRAP CONNECTOR J02.1, 3*32 PIN

TYPE	PT	LV	SIG.NAME	COLOR	F	X	Y
WP	01A	1	0 L				
WP	01B	1	0 L				
WP	01C	1	0 L				
W	02A	3					
W	02B	3	SYNCBOUT				
W	02C	3	PERCAPFR				
W	03A	3					
W	03B	3					
W	03C	3	P3DM -S				
W	04A	3					
W	04B	3	MP3DMM				
W	04C	3	CAPMUX				
W	05A	3	SPOOLMOD				
W	05B	3					
W	05C	3					
W	06A	3					
W	06B	3					
W	06C	3	PCSPGRP3				
W	07A	3					
W	07B	3	MPSYNCM				
W	07C	3					
W	08A	3					
W	+ 08B	3	REPRECMX				
W	08C	3					
W	09A	3					
W	09B	3					
W	09C	3	PCPGDATA				
W	10A	3					
W	10B	3	PEDITLD				
W	10C	3	PCPGDATB				
W	11A	3					
W	11B	3					
W	11C	3	PCPGDATC				
W	12A	3					
W	12B	3	- 5				
W	12C	3	- 5				
W	13A	3					
W	13B	3	CAPLATEN				
W	13C	3	DMOSCI-S				
W	14A	3					
W	14B	3	-12				
W	14C	3	-12				
W	15A	3					
W	15B	3	0 A				
W	15C	3	0 A				
W	16A	3					
W	16B	3	+12				
W	16C	3	+12				
W	17A	3					
W	17B	3	PMNTM 2				
W	17C	3	YMOVETLS				

./.

```
*****************************************************************************************************************************
*  S T U D E R  *      L O C A T I O N     P I N     L I S T       *    82/01/12 * 15:02      *   P A G E      5    *
*****************************************************************************************************************************
TAPE LOCK SYSTEM 2000 A800: SERIAL PROGRAMMER                1.228.900.00              79/10/10

GR: 99   (CONTINUATION)
PROCESSOR BACK PANEL
****************************************

EL: 02   (CONTINUATION)
-----------------------------------------
TYPE PT   LV SIG.NAME COLOR F    X      Y
---- ---  -- -------- ----- - ----- -----
W    18A  3  ACPGDATA
W    18B  3  819.2KHZ
W    18C  3
W    19A  3
W    19B  3    0 K
W    19C  3    0 K
W    20A  3
W    20B  3  +24
W    20C  3  +24
W    21A  3  13.1 MHZ
W    21B  3  ACSPCAP
W    21C  3  P1DM  -S
W    22A  3  ACPGDATB
W    22B  3  NFRQCTLD
W    22C  3  PMNTM  4
W    23A  3  ACPGDATC
W    23B  3
W    23C  3
W    24A  3
W    24B  3
W    24C  3  CAP-EN
W    25A  3
W    25B  3
W    25C  3  BTCTA -S
W  + 26A  3  RECLATEN
W    26B  3
W    26C  3  BTCTB -S
W    27A  3  BTCTC -M
W    27B  3  PCPGDATH
W    27C  3  BTCTC -S
W    28A  3
W    28B  3
W    28C  3  BTCTD -S
W    29A  3
W    29B  3
W    29C  3  BTCTE -S
W    30A  3
W    30B  3
W    30C  3  BTCTF -S
W    31A  3
W    31B  3  ARSEROUT
W    31C  3  BTCTG -S
WP   32A  1  +10
WP   32B  1  +10
WP   32C  1  +10

GR: 99   (CONTINUATION)
PROCESSOR BACK PANEL
****************************************

EL: 03   WRAP CONNECTOR J03.1, 3*32 PIN
-----------------------------------------
TYPE PT   LV SIG.NAME COLOR F    X      Y
---- ---  -- -------- ----- - ----- -----
WP   01A  1    0 L
WP   01B  1    0 L
WP   01C  1    0 L
W    02A  3  MP2DMM
W    02B  3  200    HZ
W    02C  3  P2DM   -S
W    03A  3  MP3DMM
W    03B  3  6.25   HZ
W    03C  3  P3DM   -S
W    04A  3  P4DM   -M
W    04B  3  12.5   HZ
W    04C  3  P4DM   -S
W    05A  3  NDMCOD-M
W    05B  3  25     HZ
W    05C  3  NDMCOD-S
W    06A  3  MDIRDWNM
W    06B  3  50     HZ
W    06C  3  DIRDWN-S
W    07A  3  MPSYNCM
W    07B  3  100    HZ
W    07C  3  PSYNC  -S
W    08A  3  FRAMSL B
W    08B  3  400    HZ
W    08C  3  800    HZ
W    09A  3  RAMMUX
W    09B  3  25.6 KHZ
W    09C  3  PCPGDATA
W    10A  3  PLAY  -M
W    10B  3  3.2  KHZ
W    10C  3  PCPGDATB
W    11A  3  + 5  ADD
W    11B  3  12.8 KHZ
W    11C  3  PCPGDATC
W    12A  3
W    12B  3  - 5
W    12C  3  - 5
W    13A  3  PMNTM  1
W    13B  3  204.8KHZ
W    13C  3  PERMNTM1
W    14A  3
W    14B  3  -12
W    14C  3  -12
W    15A  3
W    15B  3    0 A
W    15C  3    0 A
W    16A  3
W    16B  3  +12
W    16C  3  +12
W    17A  3  PMNTM  2
W    17B  3  1638 KHZ
W    17C  3  PERMNTM2

                                                                                                                  ./.

GR: 99   (CONTINUATION)
PROCESSOR BACK PANEL
****************************************

EL: 03   (CONTINUATION)
-----------------------------------------
TYPE PT   LV SIG.NAME COLOR F    X      Y
---- ---  -- -------- ----- - ----- -----
W    18A  3  PMNTM  3
W    18B  3  819.2KHZ
W    18C  3  PERMNTM3
W    19A  3
W    19B  3    0 K
W    19C  3    0 K
W    20A  3
W    20B  3  +24
W    20C  3  +24
W    21A  3  PMNTM  4
W    21B  3  13.1 MHZ
W    21C  3  PERMNTM4
W    22A  3  WLINE -M
W    22B  3  51.2 KHZ
W    22C  3  WLINE -S
W    23A  3  102.4KHZ
W    23B  3  NPPWRON
W    23C  3  TDATAM/S
W    24A  3  BTCTOF-M
W    24B  3  RLINE -B
W    24C  3  BTCTOF-S
W    25A  3  BTCTA -M
W    25B  3  RLINE -A
W    25C  3  BTCTA -S
W    26A  3  BTCTB -M
W    26B  3  ADDRCT-A
W    26C  3  BTCTB -S
W    27A  3  BTCTC -M
W    27B  3  ADDRCT-B
W    27C  3  BTCTC -S
W    28A  3  BTCTD -M
W    28B  3  ADDRCT-C
W    28C  3  BTCTD -S
W    29A  3  BTCTE -M
W    29B  3  ADDRCT-D
W    29C  3  BTCTE -S
W    30A  3  BTCTF -M
W    30B  3  ADDRCT-E
W    30C  3  BTCTF -S
W    31A  3  BTCTG -M
W    31B  3  ADDRCT-F
W    31C  3  BTCTG -S
WP   32A  1  +10
WP   32B  1  +10
WP   32C  1  +10
```

```
*****************************************************************************************************************************
*  S T U D E R  *      L O C A T I O N     P I N     L I S T       *    82/01/12 * 15:02      *   P A G E      6    *
*****************************************************************************************************************************
TAPE LOCK SYSTEM 2000 A800: SERIAL PROGRAMMER                1.228.900.00              79/10/10

GR: 99   (CONTINUATION)
PROCESSOR BACK PANEL
****************************************

EL: 04   WRAP CONNECTOR J04.1, 3*32 PIN
-----------------------------------------
TYPE PT   LV SIG.NAME COLOR F    X      Y
---- ---  -- -------- ----- - ----- -----
WP   01A  1    0 L
WP   01B  1    0 L
WP   01C  1    0 L
W    02A  3  CLRADRCT
W    02B  3  ACSP-09
W    02C  3  COSTCKCT
W    03A  3  ENTADRCT
W    03B  3  ACPGAD04
W    03C  3  NCOCKCT
W    04A  3  CKACTLT
W    04B  3  ACPGAD05
W    04C  3  ACPGAD06
W    05A  3  LDADDRCT
W    05B  3  PBMASREG
W    05C  3  ACPGAD07
W    06A  3  ACPGAD00
W    06B  3  CODOCT
W    06C  3  ACPGAD08
W    07A  3  ACPGAD01
W    07B  3  IMANCKCT
W    07C  3  ACPGAD09
W    08A  3  ACPGAD02
W    08B  3  WEACFLG
W    08C  3  IFMUX-W
W    09A  3  ACPGAD03
W    09B  3  PROGSTOP
W    09C  3  ACPGAD10
W    10A  3  ACSPGRP4
W    10B  3  ACSPGRP1
W    10C  3  ACPGAD11
W    11A  3  AREN1
W    11B  3  ACSPGRP2
W    11C  3  ACSPGRP3
W    12A  3
W    12B  3  - 5
W    12C  3  - 5
W    13A  3  AREN2
W    13B  3  PMNTM  1
W    13C  3  TESTFLGS
W    14A  3
W    14B  3  -12
W    14C  3  -12
W    15A  3
W    15B  3    0 A
W    15C  3    0 A
W    16A  3
W    16B  3  +12
W    16C  3  +12
W    17A  3  NACRES1
W    17B  3  ACPGIRPT
W    17C  3  ACIFGRP

                                                                                                                  ./.

GR: 99   (CONTINUATION)
PROCESSOR BACK PANEL
****************************************

EL: 04   (CONTINUATION)
-----------------------------------------
TYPE PT   LV SIG.NAME COLOR F    X      Y
---- ---  -- -------- ----- - ----- -----
W    18A  3  ACPGDATA
W    18B  3  PMNTM  3
W  + 18C  3  ADDRCT-A
W    19A  3
W    19B  3    0 K
W    19C  3    0 K
W    20A  3
W    20B  3  +24
W    20C  3  +24
W    21A  3  ACPGDATB
W    21B  3  PMNTM  4
W  + 21C  3  ADDRCT-B
W    22A  3  ACPGDATC
W  + 22B  3  PERMNTM4
W  + 22C  3  ADDRCT-C
W    23A  3  ACPGDATD
W    23B  3  PPWRON
W  + 23C  3  ADDRCT-D
W    24A  3  ACPGDATE
W    24B  3  ACPADFLG
W  + 24C  3  ADDRCT-E
W    25A  3  ACPGDATF
W    25B  3  + 5  ADD
W  + 25C  3  ADDRCT-F
W    26A  3  ACPGDATG
W  + 26B  3  ARPOUT-A
W  + 26C  3  ADDRCT-G
W    27A  3  ACPGDATH
W  + 27B  3  ARPOUT-B
W  + 27C  3  ADDRCT-H
W    28A  3  ACPGDATI
W  + 28B  3  ARPOUT-C
W  + 28C  3  ADDRCT-I
W    29A  3  ACPGDATK
W  + 29B  3  ARPOUT-D
W  + 29C  3  ADDRCT-K
W    30A  3  ACPGDATL
W  + 30B  3  ARPOUT-E
W    30C  3  ACINSTEN
W    31A  3  ACPGDATM
W  + 31B  3  ARPOUT-F
W    31C  3  ACPGDATN
WP   32A  1  +10
WP   32B  1  +10
WP   32C  1  +10

GR: 99   (CONTINUATION)
PROCESSOR BACK PANEL
****************************************

EL: 05   WRAP CONNECTOR J05.1, 3*32 PIN
-----------------------------------------
TYPE PT   LV SIG.NAME COLOR F    X      Y
---- ---  -- -------- ----- - ----- -----
WPQ  01A  1    0 L    4
WPQ  01B  1    0 L    4
WPQ  01C  1    0 L    4
W    02A  3
W    02B  3  NOMASTER
W    02C  3
W    03A  3  MP2DMM
W    03B  3  NINVCTR1
W    03C  3  P2DM   -S
W    04A  3  MP3DMM
W    04B  3  NOCODE-S
W    04C  3  P3DM   -S
W    05A  3  PPWRON
W    05B  3  NINVCTR2
W    05C  3  NFRAMSLB
W    06A  3  ACIFMUXA
W    06B  3  ACBIF1
W    06C  3
W    07A  3  MPSYNCM
W    07B  3  ACPTP2
W    07C  3  PSYNC  -S
W    08A  3  MDMFAILM
W    08B  3  ACBIF3
W    08C  3  DMFAIL-S
W    09A  3  DIRUP  -M
W    09B  3  CODOCT
W    09C  3  DIRUP  -S
W    10A  3  DMCOD  -M
W    10B  3  PERDATA
W    10C  3  DMCOD  -S
W    11A  3  BTCTOF-M
W    11B  3  ARPOUT-A
W    11C  3  BTCTOF-S
W    12A  3
W    12B  3  - 5
W    12C  3  - 5
W    13A  3  G-SFRSLA
W    13B  3  G-SFRSLB
W    13C  3
W    14A  3
W    14B  3  -12
W    14C  3  -12
W    15A  3
W    15B  3    0 A
W    15C  3    0 A
W    16A  3
W    16B  3  +12
W    16C  3  +12
W    17A  3  ACIFMUXB
W    17B  3
W    17C  3  FRAMSL B

                                                                                                                  ./.
```

```
*****************************************************************************************************************
*   S T U D E R   *      L O C A T I O N     P I N     L I S T       *   82/01/12 * 15:02      *   P A G E      7   *
*****************************************************************************************************************
TAPE LOCK SYSTEM 2000 A800: SERIAL PROGRAMMER              1.228.900.00              79/10/10

GR: 99   (CONTINUATION)
PROCESSOR BACK PANEL
****************************************

EL: 05   (CONTINUATION)
-----------------------------------------
TYPE PT   LV SIG.NAME COLOR F    X     Y
---- ---  -- -------- ----- - ----- -----
W    18A  3  ACPGDATA
W    18B  3
W    18C  3  FRAMSL A
W    19A  3
W    19B  3    0 K
W    19C  3    0 K
W    20A  3
W    20B  3  +24
W    20C  3  +24
W    21A  3  ACPGDATB
W    21B  3  PMNTM  4
W    21C  3  WLINE  S
W    22A  3  ACPGDATC
W    22B  3  ACSPGRP1
W    22C  3  WLINE -M
W    23A  3  ACPGDATD
W    23B  3  IFMUX-W
W    23C  3  RLINE -A
W    24A  3  ACPGDATE
W    24B  3
W    24C  3  RLINE -B
W    25A  3  ACPGDATF
W    25B  3  BTCTA -M
W    25C  3  BTCTA -S
W    26A  3  ACPGDATG
W    26B  3  BTCTB -M
W    26C  3  BTCTB -S
W    27A  3  ACPGDATH
W    27B  3  BTCTC -M
W    27C  3  BTCTC -S
W    28A  3  ARIF-Y
W    28B  3  BTCTD -M
W    28C  3  BTCTD -S
W    29A  3  LOADCKCT
W    29B  3  BTCTE -M
W    29C  3  BTCTE -S
W    30A  3  NCOCKCT
W    30B  3  BTCTF -M
W    30C  3  BTCTF -S
W    31A  3  ACSERDAT
W    31B  3  BTCTG -M
W    31C  3  BTCTG -S
WP   32A  1  +10
WP   32B  1  +10
WP   32C  1  +10

GR: 99   (CONTINUATION)
PROCESSOR BACK PANEL
****************************************

EL: 06  WRAP CONNECTOR J06.1, 3*32 PIN
-----------------------------------------
TYPE PT   LV SIG.NAME COLOR F    X     Y
---- ---  -- -------- ----- - ----- -----
WP   01A  1    0 L
WP   01B  1    0 L
WP   01C  1    0 L
WP   01D  1    0 L
WP   01E  1    0 L
WP   01F  1    0 L
W    02A  3  PCDATRDY
W    02B  3  PCSPGRPA
W    02C  3  TESTRAM
W  + 02D  3    0 L
W    02E  3
W    02F  3
W    03A  3  PCDATACC
W    03B  3  PPBPRESS
W    03C  3  PCPGAD00
W    03D  3
W    03E  3
W    03F  3
W    04A  3  RECLATEN
W    04B  3  CAPMUX
W    04C  3  PCTDCLR
W    04D  3
W    04E  3
W    04F  3
W    05A  3  12.5  HZ
W    05B  3  REPRECMX
W    05C  3  PCEXPRRQ
W    05D  3  WIRE001
W  + 05E  3  PROCSUPV
W    05F  3
W    06A  3  WEPCFLG
W    06B  3  50    HZ
W    06C  3  PCSPGRP3
W    06D  3
W    06E  3
W    06F  3
W    07A  3  + 5  ADD
W    07B  3  PCPGAD01
W    07C  3  TIMLDEN
W    07D  3
W    07E  3
W  + 07F  3  A800SUPV
W    08A  3  LDTRMCT
W    08B  3  PCPGAD02
W    08C  3  LDARDATA
W    08D  3
W    08E  3
W  + 08F  3  ZCODINSL
W    09A  3  PCBAL
W    09B  3  PRIFTRXY
W    09C  3  PCPGAD03
                                                  ./.

GR: 99   (CONTINUATION)
PROCESSOR BACK PANEL
****************************************

EL: 06   (CONTINUATION)
-----------------------------------------
TYPE PT   LV SIG.NAME COLOR F    X     Y
---- ---  -- -------- ----- - ----- -----
W    09D  3
W    09E  3
W    09F  3
W    10A  3  PCDATINE
W    10B  3  3.2  KHZ
W    10C  3  PCPGAD04
W    10D  3
W    10E  3
W    10F  3
W    11A  3  PRGRON
W    11B  3  TDLATEN1
W    11C  3  PCPGAD05
W    11D  3
W    11E  3
W    11F  3
W    12A  3
W    12B  3  - 5
W    12C  3  - 5
W    12D  3
W    12E  3
W    12F  3
W    13A  3  NEMGSTOP
W    13B  3  PMNTM  1
W    13C  3  CAPLATEN
W    13D  3
W    13E  3
W    13F  3
W    14A  3
W    14B  3  -12
W    14C  3  -12
W    14D  3
W    14E  3
W    14F  3
W    15A  3
W    15B  3    0 A
W    15C  3    0 A
W    15D  3
W    15E  3
W    15F  3
W    16A  3
W    16B  3  +12
W    16C  3  +12
W    16D  3
W    16E  3
W    16F  3
W    17A  3  PCBSP
W    17B  3  PMNTM  2
W    17C  3  PCTAPFLG
W    17D  3  WIRE001
W    17E  3  WIRE013
W    17F  3  WIRE012
                                                  ./.
```

```
*****************************************************************************************************************
*   S T U D E R   *      L O C A T I O N     P I N     L I S T       *   82/01/12 * 15:02      *   P A G E      8   *
*****************************************************************************************************************
TAPE LOCK SYSTEM 2000 A800: SERIAL PROGRAMMER              1.228.900.00              79/10/10

GR: 99   (CONTINUATION)
PROCESSOR BACK PANEL
****************************************

EL: 06   (CONTINUATION)
-----------------------------------------
TYPE PT   LV SIG.NAME COLOR F    X     Y
---- ---  -- -------- ----- - ----- -----
W    18A  3  PCPGDATA
W    18B  3  PMNTM  3
W    18C  3  NPPWRON
WQ   18D  3  ZCODINSL 4
WQ   18E  3  A800SUPV 2
WQ   18F  3  REQUEST  8
W    19A  3
W    19B  3    0 K
W    19C  3    0 K
W    19D  3
W    19E  3
W    19F  3
W    20A  3
W    20B  3  +24
W    20C  3  +24
W    20D  3
W    20E  3
W    20F  3
W    21A  3  PCPGDATB
W    21B  3  PCPGAD06
W    21C  3  PCPGAD09
WQ   21D  3    0 L    0
W    21E  3  WIRE015
W    21F  3  WIRE014
W    22A  3  PCPGDATC
W    22B  3  TDLATEN2
W    22C  3  PCPGAD10
W    22D  3  WIRE002
W    22E  3  WIRE016
W    22F  3  WIRE017
W    23A  3  PCPGDATD
W    23B  3  BPLATEN
W    23C  3  PCPGAD11
W    23D  3
W    23E  3
WQ   23F  3    0 L    0
W    24A  3  PCPGDATE
W    24B  3  PCPGAD07
W    24C  3  PCBPLTCL
W    24D  3
W    24E  3  WIRE018
WQ   24F  3    0 L    0
W    25A  3  PCPGDATF
W    25B  3  PCSPGRP2
W    25C  3  PCBPWE
W    25D  3
W  + 25E  3  MCRHRSDR
WQ   25F  3    0 L    0
W    26A  3  PCPGDATG
W    26B  3  PCPGAD08
W    26C  3  TDCDMUX2
                                                  ./.

GR: 99   (CONTINUATION)
PROCESSOR BACK PANEL
****************************************

EL: 06   (CONTINUATION)
-----------------------------------------
TYPE PT   LV SIG.NAME COLOR F    X     Y
---- ---  -- -------- ----- - ----- -----
WQ   26D  3  ZEXGENO  9
WQ   26E  3    0 L    0
WQ   26F  3  ZINCODRP 2
W    27A  3  PCPGDATH
W    27B  3  TDCDMUX1
W    27C  3  EXTFRQSL
WQ   27D  3    0 L    0
WQ   27E  3  PROCSUPV 4
WQ   27F  3  DATACLK  9
W    28A  3  PCPGDATI
W    28B  3  PCPGDATN
W    28C  3  NPINSTFN
WQ   28D  3  ZCODIN1S 8
W    28E  3
W    28F  3
W    29A  3  PCPGDATK
W    29B  3  PCBTEST
W    29C  3  NOCODE-S
WQ   29D  3    0 L    0
W    29E  3
WQ   29F  3  ACKNLG   7
W    30A  3  PCPGDATL
W    30B  3  RAMMUX
W    30C  3  NOMASTER
WQ   30D  3  ZCODGENO 1
W    30E  3
WQ   30F  3  TRM/REC  1
W    31A  3  PCPGDATM
W    31B  3  FRPWRON
W    31C  3  25    HZ
WQ   31D  3  CCSUPVIS 2
W    31E  3
WQ   31F  3  A800DATA 3
WP   32A  1  +10
WP   32B  1  +10
WP   32C  1  +10
WP   32D  1  +10
WP   32E  1  +10
WP   32F  1  +10

EL: 07  WRAP CONNECTOR J07.1, 3*32 PIN
-----------------------------------------
TYPE PT   LV SIG.NAME COLOR F    X     Y
---- ---  -- -------- ----- - ----- -----
WP   01A  1    0 L
WP   01B  1    0 L
WP   01C  1    0 L
WPQ  01D  1    0 L    0
WPQ  01E  1    0 L    0
WP   01F  1    0 L
W    02A  3  TRMADRO
                                                  ./.

GR: 99   (CONTINUATION)
PROCESSOR BACK PANEL
****************************************

EL: 07   (CONTINUATION)
-----------------------------------------
TYPE PT   LV SIG.NAME COLOR F    X     Y
---- ---  -- -------- ----- - ----- -----
W    02B  3  PCEXPR-1
W    02C  3  TESTRAM
WQ   02D  3  LKMODEDR 1
WQ   02E  3  SYNCBDR  3
W    02F  3
W    03A  3  TRMADR1
W    03B  3  PCEXPR-2
W    03C  3  TIMLDEN
WQ   03D  3  EDMODEDR 8
WQ   03E  3  SNCPLTDR 4
W    03F  3
W    04A  3  TRMADR2
W    04B  3  PCEXPR-3
W    04C  3  ARPOUT-D
WQ   04D  3  PARKEDDR 2
WQ   04E  3  EDLEADDR 7
W    04F  3
W    05A  3  TRMADR3
W    05B  3  PCEXPRRQ
W    05C  3  ARPOUT C
WQ   05D  3  EXTRECCM 7
W    05E  3
W    05F  3
W    06A  3  TRMADR4
W    06B  3  WEPCFLG
W    06C  3  ARPOUT-B
W    06D  3
WQ   06E  3  STARTDR1 1
W    06F  3
W    07A  3  TRMADR5
W    07B  3  LDARDATA
W    07C  3  ARPOUT-A
W    07D  3
WQ   07E  3  STARTDR2 6
W    07F  3
W    08A  3  TRMADR6
W    08B  3  LDTRMCT
W    08C  3  WEACFLG
WQ   08D  3    0 K    0
WQ   08E  3  STARTDR3 9
W    08F  3
W    09A  3  NTRMDATA
W    09B  3  PCDATINA
W    09C  3  PCBAL
WQ   09D  3  +24      2
WQ   09E  3  STARTDR4 4
W    09F  3
W    10A  3  NTRMDATB
W    10B  3  PCDATINB
W    10C  3  PEDITLD
W  + 10D  3    0 L
                                                  ./.
```

```
*****************************************************************************************************************************
*  S T U D E R  *     L O C A T I O N     P I N     L I S T     *   82/01/12 * 15:02     *  P A G E     9  *
*****************************************************************************************************************************
TAPE LOCK SYSTEM 2000 A800: SERIAL PROGRAMMER              1.228.900.00              79/10/10

GR: 99   (CONTINUATION)
PROCESSOR BACK PANEL
****************************************

EL: 07   (CONTINUATION)
-------------------------------------
TYPE PT   LV SIG.NAME COLOR F    X     Y
---- ---  -- -------- ----- - ----- -----
W    10E  3  WIRE012
W    10F  3  WIRE019
W    11A  3  NTRMDATC
W    11B  3  PCDATINC
W    11C  3  ACSPGRP2
W    11D  3  WIRE002
W    11E  3
W    11F  3
W    12A  3
W    12B  3  - 5
W    12C  3  - 5
W    12D  3
W    12E  3
W    12F  3
W    13A  3  NTRMDATD
W    13B  3  PCDATIND
W    13C  3  TESTFLGS
W    13D  3  WIRE003
W    13E  3  WIRE013
W    13F  3  WIRE020
W    14A  3
W    14B  3  -12
W    14C  3  -12
W    14D  3
W    14E  3
W    14F  3
W    15A  3
W    15B  3    0 A
W    15C  3    0 A
W    15D  3
W    15E  3
W    15F  3
W    16A  3
W    16B  3  +12
W    16C  3  +12
W    16D  3
W    16E  3
W    16F  3
W    17A  3  12.8 KHZ
W    17B  3  PMNTM  2
W    17C  3  819.2KHZ
W    17D  3  WIRE008
W    17E  3
W    17F  3  WIRE021
W    18A  3  PCPGDATA
W    18B  3  ACPGDATA
W    18C  3  PCBALQ2
W    18D  3  WIRE009
W    18E  3  WIRE014
W    18F  3  WIRE022
W    19A  3
                                  ./.

GR: 99   (CONTINUATION)
PROCESSOR BACK PANEL
****************************************

EL: 07   (CONTINUATION)
-------------------------------------
TYPE PT   LV SIG.NAME COLOR F    X     Y
---- ---  -- -------- ----- - ----- -----
W    19B  3    0 K
W    19C  3    0 K
W    19D  3
W    19E  3
W    19F  3
W    20A  3
W    20B  3  +24
W    20C  3  +24
W    20D  3
W    20E  3
W    20F  3
W    21A  3  PCPGDATB
W    21B  3  ACPGDATB
W    21C  3  PMNTM  4
W    21D  3  WIRE010
W    21E  3  WIRE015
W    21F  3  WIRE023
W    22A  3  PCPGDATC
W    22B  3  ACPGDATC
W    22C  3  PCBPMUXA
W  + 22D  3  ZCODGENO
W    22E  3  WIRE016
W    22F  3  WIRE024
W    23A  3  PCPGDATD
W    23B  3  ACPGDATD
W    23C  3  PCBPMUXB
W    23D  3
W    23E  3
W    23F  3  WIRE025
W    24A  3  PCPGDATE
W    24B  3  ACPGDATE
W    24C  3  PCBTESTC
W    24D  3
W    24E  3
W    24F  3
W    25A  3  PCPGDATF
W    25B  3  ACPGDATF
W    25C  3  PCBTESTA
W    25D  3  WIRE011
W    25E  3
W    25F  3
W    26A  3  PCPGDATG
W    26B  3  ACPGDATG
W    26C  3  PCBTESTB
W    26D  3
W    26E  3  WIRE017
W    26F  3
W    27A  3  PCPGDATH
W    27B  3  ACPGDATH
W    27C  3  REPROSEL
W    27D  3
                                  ./.

GR: 99   (CONTINUATION)
PROCESSOR BACK PANEL
****************************************

EL: 07   (CONTINUATION)
-------------------------------------
TYPE PT   LV SIG.NAME COLOR F    X     Y
---- ---  -- -------- ----- - ----- -----
W    27E  3  WIRE018
W  + 27F  3  DATACLK
W    28A  3  PCPGDATI
W    28B  3  BPTRMDAT
W    28C  3  SPOOLMOD
W  + 28D  3  ZINCODRP
W    28E  3
W  + 28F  3  ZEXGENO
W    29A  3  PCIFCTST
W    29B  3  PCBTEST
W    29C  3  SYNCSEL
W    29D  3
W    29E  3
W    29F  3
W    30A  3  NTRMDTA
W    30B  3  PCBALQ3
W    30C  3  ACPGIRPT
W    30D  3
W    30E  3
W  + 30F  3    0 L
W    31A  3  PCBTEST4
W    31B  3  PCBALQ0
W    31C  3  PERDATA
W    31D  3
W  + 31E  3  ZCODIN1S
W  + 31F  3    0 L
WP   32A  1  +10
WP   32B  1  +10
WP   32C  1  +10
WP   32D  1  +10
WP   32E  1  +10
WP   32F  1  +10

EL: 08  WRAP CONNECTOR J08.1, 3*32 PIN
-------------------------------------
TYPE PT   LV SIG.NAME COLOR F    X     Y
---- ---  -- -------- ----- - ----- -----
WP   01A  1    0 L
WP   01B  1    0 L
WP   01C  1    0 L
WP   01D  1    0 L
WP   01E  1    0 L
WP   01F  1    0 L
W    02A  3
W    02B  3  WIRE001
W  + 02C  3  PERCAPFR
W    02D  3
W  + 02E  3  PRGRON
W    02F  3
W    03A  3
W    03B  3  A800SUPV
                                  ./.
```

```
*****************************************************************************************************************************
*  S T U D E R  *     L O C A T I O N     P I N     L I S T     *   82/01/12 * 15:02     *  P A G E    10  *
*****************************************************************************************************************************
TAPE LOCK SYSTEM 2000 A800: SERIAL PROGRAMMER              1.228.900.00              79/10/10

GR: 99   (CONTINUATION)
PROCESSOR BACK PANEL
****************************************

EL: 08   (CONTINUATION)
-------------------------------------
TYPE PT   LV SIG.NAME COLOR F    X     Y
---- ---  -- -------- ----- - ----- -----
W    03C  3  REQUEST
W    03D  3
W    03E  3
W    03F  3
W    04A  3  ZCODINSL
W  + 04B  3  PCTDCLR
W    04C  3  ZINCODRP
W    04D  3
W    04E  3
W    04F  3
W    05A  3
W  + 05B  3  REPRECMX
W    05C  3  ZEXGENO
W    05D  3
W    05E  3
W    05F  3
W    06A  3  PPWRON
W  + 06B  3  RECLATEN
W    06C  3
W    06D  3
W    06E  3
W    06F  3
W    07A  3  WIRE014
W    07B  3  STARTDR3
W    07C  3  STARTDR4
W    07D  3
W    07E  3
W    07F  3
W    08A  3  DATACLK
W    08B  3
W    08C  3
W    08D  3
W    08E  3
W    08F  3
W    09A  3
W  + 09B  3  DATACLK
W    09C  3
W    09D  3
W    09E  3
W    09F  3
W    10A  3  PCPGDATH
W    10B  3  TRM/REC
W    10C  3  A800DATA
W    10D  3
W    10E  3
W    10F  3
W  + 11A  3  REPROSEL
W    11B  3  TDLATEN1
W    11C  3  ACKNLG
W    11D  3
W    11E  3
                                  ./.

GR: 99   (CONTINUATION)
PROCESSOR BACK PANEL
****************************************

EL: 08   (CONTINUATION)
-------------------------------------
TYPE PT   LV SIG.NAME COLOR F    X     Y
---- ---  -- -------- ----- - ----- -----
W    11F  3
W    12A  3
W    12B  3  - 5
W    12C  3  - 5
W    12D  3
W    12E  3
W    12F  3
W  + 13A  3  NEMGSTOP
W    13B  3  TDLATEN2
W    13C  3  WIRE029
W    13D  3
W    13E  3
W    13F  3
W    14A  3
W    14B  3  -12
W    14C  3  -12
W    14D  3
W    14E  3
W    14F  3
W    15A  3
W    15B  3    0 A
W    15C  3    0 A
W    15D  3
W    15E  3
W    15F  3
W    16A  3
W    16B  3  +12
W    16C  3  +12
W    16D  3
W    16E  3
W  + 17A  3  YMOVETLS
W    17B  3  WIRE019
W    17C  3  WIRE015
W    17D  3
W    17E  3
W    17F  3
W    18A  3  NPPWRON
W    18B  3  WIRE012
W    18C  3  WIRE020
W    18D  3
W    18E  3
W    18F  3
W    19A  3
W    19B  3    0 K
W    19C  3    0 K
W    19D  3
W    19E  3
W    19F  3
W    20A  3
W    20B  3  +24
                                  ./.

GR: 99   (CONTINUATION)
PROCESSOR BACK PANEL
****************************************

EL: 08   (CONTINUATION)
-------------------------------------
TYPE PT   LV SIG.NAME COLOR F    X     Y
---- ---  -- -------- ----- - ----- -----
W    20C  3  +24
W    20D  3
W    20E  3
W    20F  3
W    21A  3  WIRE002
W    21B  3  WIRE003
W    21C  3  WIRE021
W    21D  3
W    21E  3
W    21F  3
W    22A  3  WIRE022
W    22B  3  WIRE008
W    22C  3  WIRE009
W    22D  3
W    22E  3
W    22F  3
W    23A  3  WIRE023
W    23B  3  WIRE024
W    23C  3  WIRE010
W    23D  3
W    23E  3
W    23F  3
W    24A  3  ZCODGENO
W    24B  3  WIRE025
W  + 24C  3  CAP-EN
W    24D  3
W    24E  3
W    24F  3
W    25A  3  PMNTM  2
W    25B  3  EXGENOUT
W    25C  3  WIRE013
W    25D  3
W    25E  3
W    25F  3
W    26A  3  TDCDMUX2
W    26B  3
W    26C  3  PCPGDATA
W    26D  3
W    26E  3
W    26F  3
W    27A  3  TDCDMUX1
W    27B  3  WIRE018
W    27C  3  PCPGDATB
W    27D  3
W    27E  3
W    27F  3
W    28A  3  ZCODIN1S
W    28B  3  CODIN1-S
W    28C  3  WIRE017
W  + 28D  3  SVPCI
W    28E  3
                                  ./.
```

```
*****************************************************************************************************************
*   S T U D E R   *     L O C A T I O N     P I N     L I S T     *   82/01/12 * 15:02     *   P A G E    11   *
*****************************************************************************************************************
TAPE LOCK SYSTEM 2000 A800: SERIAL PROGRAMMER              1.228.900.00              79/10/10
```

GR: 99 (CONTINUATION)
PROCESSOR BACK PANEL

EL: 00 (CONTINUATION)

TYPE	PT	LV	SIG.NAME	COLOR	F	X	Y
W	28F	3					
W	29A	3					
W	29B	3	CODGENO				
W	29C	3	PCPGDATC				
W	29D	3					
W	29E	3					
W	29F	3					
W	30A	3	INCODREP				
W +	30B	3	SYNCSEL				
W	30C	3	LKMODEDR				
W	30D	3					
WQ	30E	3	SVSERPRG	6			
W	30F	3					
W	31A	3	WIRE016				
W	31B	3	EDLEADDR				
W	31C	3	EDMODEDR				
W	31D	3					
W	31E	3					
W	31F	3					
WP	32A	1	+10				
WP	32B	1	+10				
WP	32C	1	+10				
WP	32D	1	+10				
WP	32E	1	+10				
WP	32F	1	+10				

EL: 09 WRAP CONNECTOR J09.1, 3*32 PIN

TYPE	PT	LV	SIG.NAME	COLOR	F	X	Y
WP	01A	1	0 L				
WP	01B	1	0 L				
WPQ	01C	1	0 L	0			
WP	01D	1	0 L				
WP	01E	1	0 L				
WP	01F	1	0 L				
W	02A	3	TRMADR0				
W	02B	3					
W	02C	3					
W	02D	3					
W	02E	3					
W	02F	3					
W	03A	3	TRMADR1				
W	03B	3					
W	03C	3					
W	03D	3					
W	03E	3					
W	03F	3					
W	04A	3	TRMADR2				
W	04B	3					
W	04C	3					

./.

GR: 99 (CONTINUATION)
PROCESSOR BACK PANEL

EL: 09 (CONTINUATION)

TYPE	PT	LV	SIG.NAME	COLOR	F	X	Y
W	04D	3	NTRMDATA				
W	04E	3					
W	04F	3					
W	05A	3	TRMADR3				
W	05B	3					
W	05C	3					
W	05D	3					
W	05E	3					
W	05F	3					
W	06A	3	TRMADR4				
W	06B	3					
W	06C	3					
W	06D	3					
W	06E	3					
W	06F	3					
W	07A	3	TRMADR5				
W	07B	3					
W	07C	3					
W	07D	3					
W	07E	3					
W	07F	3					
W	08A	3	TRMADR6				
W	08B	3					
W	08C	3					
W	08D	3					
W	08E	3					
W	08F	3					
W	09A	3	NTRMDTA				
W	09B	3	PCDATINA				
WQ	09C	3	NTRMDATB	0			
W	09D	3					
W	09E	3					
W	09F	3					
W	10A	3					
W	10B	3	PCDATINB				
WQ	10C	3	NTRMDATC	1			
W	10D	3					
W	10E	3					
W	10F	3					
W	11A	3					
W	11B	3	PCDATINC				
WQ	11C	3	NTRMDATD	2			
W	11D	3					
W	11E	3					
W	11F	3					
W	12A	3					
W	12B	3	- 5				
W	12C	3	- 5				
W	12D	3					
W	12E	3					
W	12F	3					

./.

GR: 99 (CONTINUATION)
PROCESSOR BACK PANEL

EL: 09 (CONTINUATION)

TYPE	PT	LV	SIG.NAME	COLOR	F	X	Y
W	13A	3	12.5 HZ				
W	13B	3	PCDATIND				
W	13C	3					
W	13D	3					
WQ	13E	3	PMNTM	1 4			
WQ	13F	3	NTRMDATB	0			
W	14A	3					
W	14B	3	-12				
W	14C	3	-12				
W	14D	3					
W	14E	3					
W	14F	3					
W	15A	3					
W	15B	3	0 A				
W	15C	3	0 A				
W	15D	3					
W	15E	3					
W	15F	3					
W	16A	3					
W	16B	3	+12				
W	16C	3	+12				
W	16D	3					
W	16E	3					
W	16F	3					
W	17A	3					
W	17B	3	PCDATINE				
WQ	17C	3	TRMDATA	5			
W	17D	3					
W	17E	3					
W	17F	3					
W	18A	3					
W	18B	3	PPBPRESS				
WQ	18C	3	PMNTM	1 4			
W	18D	3					
W +	18E	3	PMNTM	3			
W	18F	3					
W	19A	3					
W	19B	3	0 K				
W	19C	3	0 K				
W	19D	3					
W	19E	3					
W	19F	3					
W	20A	3	+24				
W	20B	3	+24				
WQ	20C	3	+24	3			
W	20D	3					
W	20E	3					
W	20F	3					
W	21A	3	819.2KHZ				
W	21B	3					
W	21C	3					

./.

```
*****************************************************************************************************************
*   S T U D E R   *     L O C A T I O N     P I N     L I S T     *   82/01/12 * 15:02     *   P A G E    12   *
*****************************************************************************************************************
TAPE LOCK SYSTEM 2000 A800: SERIAL PROGRAMMER              1.228.900.00              79/10/10
```

GR: 99 (CONTINUATION)
PROCESSOR BACK PANEL

EL: 09 (CONTINUATION)

TYPE	PT	LV	SIG.NAME	COLOR	F	X	Y
W	21D	3					
W +	21E	3	PMNTM	4			
W	21F	3					
W	22A	3	+5.0V				
W	22B	3					
WQ	22C	3	+5.0V	2			
W	22D	3					
W	22E	3					
W	22F	3					
W	23A	3	PPWRON				
W	23B	3					
WQ	23C	3	RECDATA	1			
W	23D	3					
W	23E	3					
W	23F	3					
W	24A	3					
W	24B	3					
W	24C	3	PMNTM	2			
W	24D	3					
W	24E	3					
WQ	24F	3	NTRMDATC	1			
W	25A	3					
W	25B	3					
WQ	25C	3	PCDATRDY	9			
W	25D	3					
W	25E	3					
W +	25F	3	SVPCII				
W	26A	3					
W	26B	3					
WQ	26C	3	SVSERPRG	6			
W	26D	3					
W	26E	3					
W	26F	3					
W	27A	3					
W	27B	3					
W	27C	3	PCDATACC				
W	27D	3					
W	27E	3					
W	27F	3					
W	28A	3					
W	28B	3					
W	28C	3	PCPGDATA				
W	28D	3					
W	28E	3					
W	28F	3					
W	29A	3					
W	29B	3					
W	29C	3	PCPGDATB				
W	29D	3					
W	29E	3					
W	29F	3					

./.

GR: 99 (CONTINUATION)
PROCESSOR BACK PANEL

EL: 09 (CONTINUATION)

TYPE	PT	LV	SIG.NAME	COLOR	F	X	Y
W	30A	3					
W	30B	3					
W	30C	3	PCPGDATC				
W	30D	3					
W	30E	3					
W	30F	3					
W	31A	3					
W	31B	3					
W	31C	3	PRIFTRXY				
W	31D	3					
W	31E	3					
W	31F	3					
WP	32A	1	+10				
WP	32B	1	+10				
WP	32C	1	+10				
WP	32D	1	+10				
WP	32E	1	+10				
WP	32F	1	+10				

EL: 10 WRAP CONNECTOR J10.1, 3*32 PIN

TYPE	PT	LV	SIG.NAME	COLOR	F	X	Y
WPQ	01A	1	0 L	0			
WPQ	01B	1	0 L	0			
WPQ	01C	1	0 L	0			
W	01D	3					
W	01E	3					
W	01F	3					
W	02A	3					
W	02B	3					
W	02C	3					
WQ	02D	3	NTRMDATD	2			
W	02E	3					
W	02F	3					
W	03A	3					
W	03B	3					
W	03C	3					
W	03D	3					
W	03E	3					
W	03F	3					
W	04A	3					
W	04B	3					
W	04C	3					
W	04D	3					
W	04E	3					
W	04F	3					
W	05A	3					
W	05B	3					
W	05C	3					
W	05D	3					

./.

GR: 99 (CONTINUATION)
PROCESSOR BACK PANEL

EL: 10 (CONTINUATION)

TYPE	PT	LV	SIG.NAME	COLOR	F	X	Y
W	05E	3					
W	05F	3					
W	06A	3					
W	06B	3					
W	06C	3					
W +	06D	3	SVPCIII				
W	06E	3					
W	06F	3					
W	07A	3					
W	07B	3					
W	07C	3					
W	07D	3					
W	07E	3					
W	07F	3					
W	08A	3					
W	08B	3					
W	08C	3					
W	08D	3					
W	08E	3					
W	08F	3					
W	09A	3					
W	09B	3					
W	09C	3					
W	09D	3					
W	09E	3					
W	09F	3					
W	10A	3					
W	10B	3					
W	10C	3					
W	10D	3					
W	10E	3					
W	10F	3					
W	11A	3	PMNTM	2			
WQ	11B	3	PCDATRDY	9			
W	11C	3	+ 5	ADD			
W	11D	3					
W	11E	3					
W	11F	3					
W	12A	3					
W	12B	3	- 5				
W	12C	3	- 5				
W	12D	3					
W	12E	3					
W	12F	3					
W	13A	3					
W	13B	3					
W	13C	3					
W	13D	3					
W	13E	3					
W	13F	3					
W	14A	3					

./.

```
*****************************************************************************************************************
*  S T U D E R  *      L O C A T I O N     P I N     L I S T       *    82/01/12 * 15:02      *   P A G E     13    *
*****************************************************************************************************************
TAPE LOCK SYSTEM 2000 A800: SERIAL PROGRAMMER                1.228.900.00              79/10/10

GR: 99   (CONTINUATION)
PROCESSOR BACK PANEL
****************************************

EL: 10   (CONTINUATION)
-----------------------------------------
TYPE PT   LV SIG.NAME COLOR F   X     Y
---- ---  -- -------- ----- - ----- -----
W    14B  3 -12
W    14C  3 -12
W    14D  3
W    14E  3
W    14F  3
W    15A  3
W    15B  3    0 A
W    15C  3    0 A
W    15D  3
W    15E  3
W    15F  3
W    16A  3
W    16B  3 +12
W    16C  3 +12
W    16D  3
W    16E  3
W    16F  3
W    17A  3
W    17B  3
W    17C  3
W    17D  3
W    17E  3
W    17F  3
W    18A  3
W    18B  3
W    18C  3
W    18D  3
W    18E  3
W    18F  3
W    19A  3
W    19B  3    0 K
W    19C  3    0 K
W    19D  3
W    19E  3
W    19F  3
W    20A  3
W    20B  3 +24
W    20C  3 +24
W    20D  3
W    20E  3
W    20F  3
W    21A  3
W    21B  3
W    21C  3
W    21D  3
W    21E  3
W    21F  3
W    22A  3
W    22B  3
W    22C  3
W    22D  3
                                        ./.

GR: 99   (CONTINUATION)
PROCESSOR BACK PANEL
****************************************

EL: 10   (CONTINUATION)
-----------------------------------------
TYPE PT   LV SIG.NAME COLOR F   X     Y
---- ---  -- -------- ----- - ----- -----
W    22E  3
W    22F  3
W    23A  3
W    23B  3
W    23C  3
W    23D  3
W    23E  3
W    23F  3
W    24A  3
W    24B  3
W    24C  3
W    24D  3
W    24E  3
W    24F  3
W    25A  3
W    25B  3
W    25C  3
W    25D  3
W    25E  3
W    25F  3
W    26A  3
W    26B  3
W    26C  3
W    26D  3
W    26E  3
W    26F  3
W    27A  3
W    27B  3
W    27C  3
W    27D  3
W    27E  3
W    27F  3
W    28A  3
W    28B  3
W    28C  3
W    28D  3
W    28E  3
W    28F  3
W    29A  3
W    29B  3
W    29C  3
W    29D  3
W    29E  3
W    29F  3
W    30A  3
W    30B  3
W    30C  3 PPWRON
W    30D  3
W    30E  3
W    30F  3
W    31A  3
                                        ./.

GR: 99   (CONTINUATION)
PROCESSOR BACK PANEL
****************************************

EL: 10   (CONTINUATION)
-----------------------------------------
TYPE PT   LV SIG.NAME COLOR F   X     Y
---- ---  -- -------- ----- - ----- -----
W    31B  3
W    31C  3
W    31D  3
W    31E  3
W    31F  3
WPQ  32A  1 +10       5
WPQ  32B  1 +10       5
WPQ  32C  1 +10       5
W    32D  3
W    32E  3
W    32F  3

EL: 11  WRAP CONNECTOR J11.1, 3*32 PIN
-----------------------------------------
TYPE PT   LV SIG.NAME COLOR F   X     Y
---- ---  -- -------- ----- - ----- -----
WP   01A  1    0 L
WP   01B  1    0 L
WP   01C  1    0 L
W    02A  3
W    02B  3
W    02C  3 WIRE030
W    03A  3
W    03B  3
W    03C  3 WIRE031
W    04A  3
W  + 04B  3 CODIN1-S
W    04C  3 WIRE032
W    05A  3 WIRE029
W    05B  3
W    05C  3
W    06A  3
W    06B  3 WIRE028
W    06C  3 WIRE028
W    07A  3
W  + 07B  3 CCSUPVIS
W    07C  3
W    08A  3 WIRE004
W    08B  3
W    08C  3 WIRE006
W    09A  3 WIRE005
W    09B  3
W    09C  3 WIRE007
W    10A  3 WIRE004
W    10B  3
W    10C  3 WIRE006
W    11A  3 WIRE005
W    11B  3
W    11C  3 WIRE007
WP   12A  1 - 5
WP   12B  1 - 5
                                        ./.
```

```
*****************************************************************************************************************
*  S T U D E R  *      L O C A T I O N     P I N     L I S T       *    82/01/12 * 15:02      *   P A G E     14    *
*****************************************************************************************************************
TAPE LOCK SYSTEM 2000 A800: SERIAL PROGRAMMER                1.228.900.00              79/10/10

GR: 99   (CONTINUATION)
PROCESSOR BACK PANEL
****************************************

EL: 11   (CONTINUATION)
-----------------------------------------
TYPE PT   LV SIG.NAME COLOR F   X     Y
---- ---  -- -------- ----- - ----- -----
WP   12C  1 - 5
W    13A  3
W    13B  3
W    13C  3
WP   14A  1 -12
WP   14B  1 -12
WP   14C  1 -12
WP   15A  1    0 A
WP   15B  1    0 A
WP   15C  1    0 A
WP   16A  1 +12
WP   16B  1 +12
WP   16C  1 +12
W    17A  3
W    17B  3
W    17C  3
W    18A  3
W    18B  3 WIRE026
W    18C  3
WP   19A  1    0 K
WP   19B  1    0 K
WP   19C  1    0 K
WP   20A  1 +24
WP   20B  1 +24
WP   20C  1 +24
W    21A  3
W    21B  3
W    21C  3 WIRE054
W    22A  3
W    22B  3
W    22C  3 WIRE055
W    23A  3 WIRE026
W    23B  3 WIRE026
W    23C  3 WIRE026
W  + 24A  3 PPWRON
W    24B  3
W  + 24C  3 SYNCSEL
W  + 25A  3 CODGENO
W    25B  3
W  + 25C  3 EXGENOUT
W  + 26A  3 REPRECMX
W    26B  3
W    26C  3 WIRE056
W  + 27A  3 RECLATEN
W    27B  3
W  + 27C  3 REPROSEL
W  + 28A  3 PCPGDATA
W    28B  3
W    28C  3 WIRE057
W  + 29A  3 PCPGDATB
W    29B  3
                                        ./.

GR: 99   (CONTINUATION)
PROCESSOR BACK PANEL
****************************************

EL: 11   (CONTINUATION)
-----------------------------------------
TYPE PT   LV SIG.NAME COLOR F   X     Y
---- ---  -- -------- ----- - ----- -----
W  + 29C  3 INCODREP
W  + 30A  3 PCPGDATC
W    30B  3
W    30C  3 WIRE058
W  + 31A  3 PCPGDATH
W    31B  3
W  + 31C  3 PMNTM  2
WP   32A  1 +10
WP   32B  1 +10
WP   32C  1 +10

EL: 12  WRAP CONNECTOR J12.1, 3*32 PIN
-----------------------------------------
TYPE PT   LV SIG.NAME COLOR F   X     Y
---- ---  -- -------- ----- - ----- -----
WP   01A  1    0 L
WP   01B  1    0 L
WP   01C  1    0 L
W    02A  3
W    02B  3
W    02C  3
W    03A  3
W    03B  3
W    03C  3
W    04A  3
W    04B  3
W    04C  3
W  + 05A  3 INCODREP
W    05B  3
W    05C  3
W    06A  3
W    06B  3
W    06C  3 WIRE058
W    07A  3
W    07B  3
W    07C  3
W    08A  3
W    08B  3
W    08C  3
W    09A  3
W    09B  3
W    09C  3 WIRE057
W    10A  3
W    10B  3
W    10C  3
W    11A  3
W    11B  3
W  + 11C  3 CODIN1-S
WP   12A  1 - 5
WP   12B  1 - 5
WP   12C  1 - 5
                                        ./.

GR: 99   (CONTINUATION)
PROCESSOR BACK PANEL
****************************************

EL: 12   (CONTINUATION)
-----------------------------------------
TYPE PT   LV SIG.NAME COLOR F   X     Y
---- ---  -- -------- ----- - ----- -----
W    13A  3
W    13B  3
W    13C  3
WP   14A  1 -12
WP   14B  1 -12
WP   14C  1 -12
WP   15A  1    0 A
WP   15B  1    0 A
WP   15C  1    0 A
WP   16A  1 +12
WP   16B  1 +12
WP   16C  1 +12
W    17A  3
W    17B  3
W    17C  3
W    18A  3
W    18B  3
W    18C  3
WP   19A  1    0 K
WP   19B  1    0 K
WP   19C  1    0 K
WP   20A  1 +24
WP   20B  1 +24
WP   20C  1 +24
W    21A  3
W    21B  3
W    21C  3 WIRE054
W  + 22A  3    0 L
W    22B  3
W    22C  3 WIRE055
W    23A  3 WIRE026
W    23B  3 WIRE026
W    23C  3 WIRE026
W    24A  3
W    24B  3
W    24C  3
W    25A  3
W    25B  3
W    25C  3
W    26A  3
W    26B  3
W    26C  3
W    27A  3
W    27B  3
W    27C  3
W    28A  3 WIRE027
W    28B  3 WIRE027
W    28C  3 WIRE027
W  + 29A  3 REPROSEL
W    29B  3
W    29C  3
                                        ./.
```

* STUDER * LOCATION PIN LIST * 82/01/12 * 15:02 * PAGE 15 *

TAPE LOCK SYSTEM 2000 A800: SERIAL PROGRAMMER 1.228.900.00 79/10/10

GR: 99 (CONTINUATION)
PROCESSOR BACK PANEL

EL: 12 (CONTINUATION)

TYPE	PT	LV	SIG.NAME	COLOR	F	X	Y
W	30A	3					
W	30B	3					
W +	30C	3	SYNCSEL				
W	31A	3					
W	31B	3					
W	31C	3	WIRE056				
WP	32A	1	+10				
WP	32B	1	+10				
WP	32C	1	+10				

EL: 13 WRAP CONNECTOR J13.1, 3*32 PIN

TYPE	PT	LV	SIG.NAME	COLOR	F	X	Y
WP	01A	1	0 L				
WP	01B	1	0 L				
WP	01C	1	0 L				
W	02A	3	WIRE030				
W	02B	3					
W	02C	3	R15 1322				
W	03A	3	WIRE031				
W	03B	3					
W	03C	3					
W	04A	3	WIRE032				
W	04B	3					
W	04C	3	INCODREP				
W	05A	3					
W	05B	3	25 HZ				
W	05C	3					
W	06A	3					
W	06B	3	50 HZ				
W	06C	3					
W	07A	3	DMFAIL-M				
W	07B	3	100 HZ				
W	07C	3	DMFAIL-S				
W	08A	3	P1DM -M				
W	08B	3	PER1DM-S				
W	08C	3	CODIN1-S				
W	09A	3	P2DM -M				
W	09B	3	PER2DM-S				
W	09C	3					
W	10A	3	P3DM -M				
W	10B	3	PER3DM-S				
W	10C	3					
W	11A	3	P4DM -M				
W	11B	3	PER4DM-S				
W +	11C	3	P2DM -S				
WP	12A	1	- 5				
WP	12B	1	- 5				
WP	12C	1	- 5				
W	13A	3	DMOSCI-M				

./.

GR: 99 (CONTINUATION)
PROCESSOR BACK PANEL

EL: 13 (CONTINUATION)

TYPE	PT	LV	SIG.NAME	COLOR	F	X	Y
W	13B	3					
W	13C	3	DMOSCI-S				
WP	14A	1	-12				
WP	14B	1	-12				
WP	14C	1	-12				
WP	15A	1	0 A				
WP	15B	1	0 A				
WP	15C	1	0 A				
WP	16A	1	+12				
WP	16B	1	+12				
WP	16C	1	+12				
W	17A	3	DMCOD -M				
W	17B	3					
W	17C	3	DMCOD -S				
W	18A	3	NDMCOD-M				
W	18B	3					
W	18C	3	NDMCOD-S				
WP	19A	1	0 K				
WP	19B	1	0 K				
WP	19C	1	0 K				
WP	20A	1	+24				
WP	20B	1	+24				
WP	20C	1	+24				
W	21A	3	PER1DM-M				
W	21B	3					
W	21C	3	P1DM -S				
W	22A	3	PER2DM-M				
W	22B	3	0 1325				
W	22C	3	P2DM -S				
W	23A	3	PER3DM-M				
W	23B	3					
W	23C	3	P3DM -S				
W	24A	3	PER4DM-M				
W	24B	3					
W	24C	3	P4DM -S				
W +	25A	3	PMNTM 2				
W	25B	3					
W	25C	3					
W	26A	3	DIRUP -M				
W	26B	3					
W	26C	3	DIRUP -S				
W	27A	3	DIRDWN-M				
W	27B	3					
W	27C	3	DIRDWN-S				
W +	28A	3	EXFRQDAT				
W +	28B	3	+ 5 ADD				
W	28C	3					
W	29A	3					
W +	29B	3	+ 5 ADD				
W	29C	3	PSYNC -S				
W	30A	3					

./.

GR: 99 (CONTINUATION)
PROCESSOR BACK PANEL

EL: 15 (CONTINUATION)

TYPE	PT	LV	SIG.NAME	COLOR	F	X	Y
W	30B	3					
W	30C	3					
W	31A	3	PSYNC -M				
W	31B	3					
W	31C	3					
WP	32A	1	+10				
WP	32B	1	+10				
WP	32C	1	+10				

EL: 14 WRAP CONNECTOR J14.1, 3*32 PIN

TYPE	PT	LV	SIG.NAME	COLOR	F	X	Y
WP	01A	1	0 L				
WP	01B	1	0 L				
WP	01C	1	0 L				
W	02A	3					
W	02B	3	G-SFRSLA				
W	02C	3	ACPGDATA				
W	03A	3					
W	03B	3	G-SFRSLB				
W	03C	3	ACPGDATB				
W	04A	3					
W	04B	3	ARPOUT-D				
W	04C	3	ACPGDATC				
W	05A	3					
W	05B	3	ARPOUT-C				
W	05C	3	ACPGDATD				
W	06A	3					
W	06B	3	ARPOUT-B				
W	06C	3	ACPGDATE				
W	07A	3					
W	07B	3	ARPOUT-A				
W	07C	3	ACPGDATF				
W	08A	3					
W	08B	3	ARIF-Y				
W	08C	3	ACPGDATG				
W	09A	3					
W	09B	3					
W	09C	3	ACPGDATH				
W	10A	3					
W	10B	3	COSTCKCT				
W	10C	3	AREN2				
W	11A	3					
W	11B	3	100 HZ				
W	11C	3	AREN1				
WP	12A	1	- 5				
WP	12B	1	- 5				
WP	12C	1	- 5				
W	13A	3					
W	13B	3	ARSEROUT				

./.

* STUDER * LOCATION PIN LIST * 82/01/12 * 15:02 * PAGE 16 *

TAPE LOCK SYSTEM 2000 A800: SERIAL PROGRAMMER 1.228.900.00 79/10/10

GR: 99 (CONTINUATION)
PROCESSOR BACK PANEL

EL: 14 (CONTINUATION)

TYPE	PT	LV	SIG.NAME	COLOR	F	X	Y
W	13C	3	NINVCTR1				
WP	14A	1	-12				
WP	14B	1	-12				
WP	14C	1	-12				
WP	15A	1	0 A				
WP	15B	1	0 A				
WP	15C	1	0 A				
WP	16A	1	+12				
WP	16B	1	+12				
WP	16C	1	+12				
W	17A	3					
W	17B	3	NACRES1				
W	17C	3	NINVCTR2				
W	18A	3					
W	18B	3	IFCDATIN				
W	18C	3	ADDRCT-A				
WP	19A	1	0 K				
WP	19B	1	0 K				
WP	19C	1	0 K				
WP	20A	1	+24				
WP	20B	1	+24				
WP	20C	1	+24				
W	21A	3					
W	21B	3	PMNTM 4				
W	21C	3	ADDRCT-B				
W	22A	3					
W	22B	3	NPPWRON				
W	22C	3	ADDRCT-C				
W	23A	3					
W	23B	3	TDATAM/S				
W	23C	3	ADDRCT-D				
W	24A	3					
W	24B	3	PERDATA				
W	24C	3	ADDRCT-E				
W	25A	3					
W	25B	3	ACSERDAT				
W	25C	3	ADDRCT-F				
W	26A	3					
W	26B	3	AUXDATIN				
W	26C	3	ADDRCT-G				
W	27A	3					
W	27B	3	EXFRQDAT				
W	27C	3	ADDRCT-H				
W	28A	3					
W	28B	3	DIVCT- A				
W	28C	3	ADDRCT-I				
W +	29A	3	+ 5 ADD				
W	29B	3	DIVCT- B				
W	29C	3	ADDRCT-K				
W +	30A	3	+ 5 ADD				
W	30B	3	DIVCT- C				

./.

GR: 99 (CONTINUATION)
PROCESSOR BACK PANEL

EL: 14 (CONTINUATION)

TYPE	PT	LV	SIG.NAME	COLOR	F	X	Y
W	30C	3	ARPOUT-E				
W	31A	3					
W	31B	3	DIVCT- D				
W	31C	3	ARPOUT-F				
WP	32A	1	+10				
WP	32B	1	+10				
WP	32C	1	+10				

EL: 15 WRAP CONNECTOR J15.1, 3*32 PIN

TYPE	PT	LV	SIG.NAME	COLOR	F	X	Y
WPQ	01A	1	0 L	4			
WPQ	01B	1	0 L	4			
WPQ	01C	1	0 L	4			
W	02A	3	ACPGAD00				
W	02B	3	PMNTM 1				
W	02C	3	PCPGAD00				
W	03A	3	ACPGAD01				
W	03B	3	PMNTM 2				
W	03C	3	PCPGAD01				
W	04A	3	ACPGAD02				
W	04B	3	PMNTM 3				
W	04C	3	PCPGAD02				
W	05A	3	ACPGAD03				
W	05B	3	PMNTM 4				
W	05C	3	PCPGAD03				
W	06A	3	ACPGAD04				
W	06B	3	819.2KHZ				
W	06C	3	PCPGAD04				
W	07A	3	ACPGAD05				
W	07B	3	FRPWRON				
W	07C	3	PCPGAD05				
W	08A	3	ACPGAD06				
W	08B	3	PCPGAD10				
W	08C	3	PCPGAD06				
W	09A	3	ACPGAD07				
W	09B	3	PCPGAD11				
W	09C	3	PCPGAD07				
W	10A	3	ACPGAD08				
W	10B	3	ACPGAD10				
W	10C	3	PCPGAD08				
W	11A	3	ACPGAD09				
W	11B	3	ACPGAD11				
W	11C	3	PCPGAD09				
WP	12A	1	- 5				
WP	12B	1	- 5				
WP	12C	1	- 5				
W	13A	3	ACINSTEN				
W	13B	3	+ 5 ADD				
W	13C	3	NPINSTEN				

./.

GR: 99 (CONTINUATION)
PROCESSOR BACK PANEL

EL: 15 (CONTINUATION)

TYPE	PT	LV	SIG.NAME	COLOR	F	X	Y
WP	14A	1	-12				
WP	14B	1	-12				
WP	14C	1	-12				
WP	15A	1	0 A				
WP	15B	1	0 A				
WP	15C	1	0 A				
WP	16A	1	+12				
WP	16B	1	+12				
WP	16C	1	+12				
W	17A	3	ACPGDATA				
W	17B	3	PCTAPFLG				
W	17C	3	PCPGDATA				
W	18A	3	ACPGDATB				
W	18B	3	ACTAPFLG				
W	18C	3	PCPGDATB				
WP	19A	1	0 K				
WP	19B	1	0 K				
WP	19C	1	0 K				
WP	20A	1	+24				
WP	20B	1	+24				
WP	20C	1	+24				
W	21A	3	ACPGDATC				
W	21B	3					
W	21C	3	PCPGDATC				
W	22A	3	ACPGDATD				
W	22B	3					
W	22C	3	PCPGDATD				
W	23A	3	ACPGDATE				
W	23B	3					
W	23C	3	PCPGDATE				
W	24A	3	ACPGDATF				
W	24B	3					
W	24C	3	PCPGDATF				
W	25A	3	ACPGDATG				
W	25B	3					
W	25C	3	PCPGDATG				
W	26A	3	ACPGDATH				
W	26B	3					
W	26C	3	PCPGDATH				
W	27A	3	ACPGDATI				
W	27B	3					
W	27C	3	PCPGDATI				
W	28A	3	ACPGDATK				
W	28B	3					
W	28C	3	PCPGDATK				
W	29A	3	ACPGDATL				
W	29B	3					
W	29C	3	PCPGDATL				
W	30A	3	ACPGDATM				
W	30B	3					
W	30C	3	PCPGDATM				

./.

```
*********************************************************************************************************************************
*  S T U D E R  *      L O C A T I O N     P I N     L I S T       *   82/01/12 * 15:02     *   P A G E     17    *
*********************************************************************************************************************************
TAPE LOCK SYSTEM 2000 A800: SERIAL PROGRAMMER              1.228.900.00              79/10/10
```

GR: 99 (CONTINUATION)
PROCESSOR BACK PANEL

EL: 15 (CONTINUATION)

TYPE	PT	LV	SIG.NAME	COLOR	F	X	Y
W	31A	3	ACPGDATN				
W	31B	3					
W	31C	3	PCPGDATN				
WP	32A	1	+10				
WP	32B	1	+10				
WP	32C	1	+10				

EL: 16 WRAP CONNECTOR J16.1, 3*32 PIN

TYPE	PT	LV	SIG.NAME	COLOR	F	X	Y
WP	01A	1	0 L				
WP	01B	1	0 L				
WP	01C	1	0 L				
W	02A	3					
W	02B	3					
W	02C	3					
W	03A	3					
W	03B	3					
W	03C	3					
W	04A	3					
W	04B	3					
W	04C	3					
W	05A	3					
W	05B	3					
W	05C	3					
W	06A	3					
W	06B	3					
W	06C	3					
W	07A	3					
W	07B	3					
W	07C	3					
W	08A	3					
W	08B	3					
W	08C	3					
W	09A	3					
W	09B	3					
W	09C	3					
W	10A	3					
W	10B	3					
W	10C	3					
W	11A	3					
W	11B	3					
W	11C	3					
WP	12A	1	- 5				
WP	12B	1	- 5				
WP	12C	1	- 5				
W	13A	3					
W	13B	3					
W	13C	3					
WP	14A	1	-12				

./.

GR: 99 (CONTINUATION)
PROCESSOR BACK PANEL

EL: 16 (CONTINUATION)

TYPE	PT	LV	SIG.NAME	COLOR	F	X	Y
WP	14B	1	-12				
WP	14C	1	-12				
WP	15A	1	0 A				
WP	15B	1	0 A				
WP	15C	1	0 A				
WP	16A	1	+12				
WP	16B	1	+12				
WP	16C	1	+12				
W	17A	3					
W	17B	3					
W	17C	3					
W	18A	3					
W	18B	3					
W	18C	3					
WP	19A	1	0 K				
WP	19B	1	0 K				
WP	19C	1	0 K				
WP	20A	1	+24				
WP	20B	1	+24				
WP	20C	1	+24				
W	21A	3					
W	21B	3					
W	21C	3					
W	22A	3					
W	22B	3					
W	22C	3					
W	23A	3					
W	23B	3					
W	23C	3					
W	24A	3					
W	24B	3					
W	24C	3					
W	25A	3					
W	25B	3					
W	25C	3					
W	26A	3					
W	26B	3					
W	26C	3					
W	27A	3					
W	27B	3					
W	27C	3					
W	28A	3					
W	28B	3					
W	28C	3					
W	29A	3					
W	29B	3					
W	29C	3					
W	30A	3					
W	30B	3					
W	30C	3					
W	31A	3					

./.

GR: 99 (CONTINUATION)
PROCESSOR BACK PANEL

EL: 16 (CONTINUATION)

TYPE	PT	LV	SIG.NAME	COLOR	F	X	Y
W	31B	3					
W	31C	3					
WP	32A	1	+10				
WP	32B	1	+10				
WP	32C	1	+10				

EL: 17 WRAP CONNECTOR J17.1, 3*32 PIN

TYPE	PT	LV	SIG.NAME	COLOR	F	X	Y
WPQ	01A	1	0 L	0			
WP	01B	1	0 L				
WPQ	01C	1	0 L	0			
W +	02A	3	+ 5 ADD				
W	02B	3	WIRE033				
WQ	02C	3	MCRECEDR	4			
WQ	03A	3	MCRESDR1	7			
W	03B	3	WIRE034				
WQ	03C	3	MCZSETDR	5			
W	04A	3					
W	04B	3	WIRE035				
WQ	04C	3	MCKCUTDR	6			
W	05A	3					
W	05B	3	SVPCI				
W	05C	3	WIRE040				
W	06A	3					
W	06B	3	SVPCII				
W	06C	3	WIRE041				
WQ	07A	3	MCDAT1DR	8			
W	07B	3	WIRE036				
W	07C	3	WIRE042				
WQ	08A	3	MCDAT2DR	9			
W	08B	3	TRMADR3				
W	08C	3	WIRE043				
WQ	09A	3	MCMUTEDR	1			
W	09B	3	TRMADR2				
W	09C	3	WIRE044				
W	10A	3					
W	10B	3	TRMADR1				
W	10C	3	WIRE045				
W	11A	3					
W	11B	3	TRMADR0				
W	11C	3	SVPCIII				
WP	12A	1	- 5				
WP	12B	1	- 5				
WP	12C	1	- 5				
W	13A	3					
W	13B	3	BPTRMDAT				
W	13C	3	WIRE046				
WP	14A	1	-12				
WP	14B	1	-12				

./.

```
*********************************************************************************************************************************
*  S T U D E R  *      L O C A T I O N     P I N     L I S T       *   82/01/12 * 15:02     *   P A G E     18    *
*********************************************************************************************************************************
TAPE LOCK SYSTEM 2000 A800: SERIAL PROGRAMMER              1.228.900.00              79/10/10
```

GR: 99 (CONTINUATION)
PROCESSOR BACK PANEL

EL: 17 (CONTINUATION)

TYPE	PT	LV	SIG.NAME	COLOR	F	X	Y
WP	14C	1	-12				
WP	15A	1	0 A				
WP	15B	1	0 A				
WP	15C	1	0 A				
WP	16A	1	+12				
WP	16B	1	+12				
WP	16C	1	+12				
WQ	17A	3	PARKEDDR	4			
W	17B	3	PMNTM	2			
W	17C	3	WIRE047				
W	18A	3	SNCPLTDR				
W +	18B	3	PCBPLTCL				
W	18C	3	WIRE048				
WPQ	19A	1	0 K	0			
WP	19B	1	0 K				
WPQ	19C	1	0 K	0			
WPQ	20A	1	+24	1			
WP	20B	1	+24				
WPQ	20C	1	+24	2			
W	21A	3	PROCSUPV				
W	21B	3	PCBPWE				
W	21C	3	WIRE049				
WQ	22A	3	MCRHRSDR	1			
W	22B	3	TRMADR4				
W	22C	3	WIRE050				
W	23A	3	WIRE011				
W	23B	3	PPWRON				
W	23C	3	WIRE051				
W	24A	3	STARTDR2				
W	24B	3	SVSERPRG				
W	24C	3	WIRE052				
W	25A	3	SYNCBDR				
W	25B	3	CCSUPVIS				
WQ	25C	3	MCSUPVIS	6			
WQ	26A	3	EXTRECCM	5			
W	26B	3	PCPGDATD				
W	26C	3	WIRE037				
WQ	27A	3	MPWRON	2			
W	27B	3	PCBPMUXB				
W	27C	3	WIRE038				
W	28A	3	PCPGDATH				
W	28B	3	PCBPMUXA				
WQ	28C	3	MCDATRDY	2			
W	29A	3	BPLATEN				
W	29B	3	PCPGDATA				
W	29C	3	STARTDR1				
WQ	30A	3	MCDATODR	4			
W	30B	3	PCPGDATB				
WQ	30C	3	LKMODDR2	3			
W	31A	3	WIRE039				
W	31B	3	PCPGDATC				

./.

GR: 99 (CONTINUATION)
PROCESSOR BACK PANEL

EL: 17 (CONTINUATION)

TYPE	PT	LV	SIG.NAME	COLOR	F	X	Y
W	31C	3	WIRE053				
WP	32A	1	+10				
WP	32B	1	+10				
WPQ	32C	1	+10	1			

EL: 18 WRAP CONNECTOR J18.1, 3*32 PIN

TYPE	PT	LV	SIG.NAME	COLOR	F	X	Y
WPQ	01A	1	0 L	0			
WPQ	01B	1	0 L	0			
WPQ	01C	1	0 L	0			
W	02A	3					
W	02B	3					
W	02C	3	WIRE029				
W +	03A	3	+ 5 ADD				
W	03B	3					
W +	03C	3	+ 5 ADD				
W	04A	3					
W	04B	3					
W	04C	3					
W	05A	3					
W	05B	3					
W	05C	3					
W	06A	3					
W	06B	3					
W	06C	3					
WQ	07A	3	+10AD150	5			
WQ	07B	3	+10AD150	5			
WQ	07C	3	+10AD150	5			
W	08A	3					
W	08B	3					
W	08C	3					
W	09A	3					
W	09B	3					
W	09C	3					
WQ	10A	3	0.0AD150	0			
WQ	10B	3	0.0AD150	0			
WQ	10C	3	0.0AD150	0			
W	11A	3					
W	11B	3					
W	11C	3					
WP	12A	1	- 5				
WP	12B	1	- 5				
WP	12C	1	- 5				
W	13A	3					
W	13B	3					
W	13C	3					
WP	14A	1	-12				
WP	14B	1	-12				
WP	14C	1	-12				

./.

GR: 99 (CONTINUATION)
PROCESSOR BACK PANEL

EL: 18 (CONTINUATION)

TYPE	PT	LV	SIG.NAME	COLOR	F	X	Y
WP	15A	1	0 A				
WP	15B	1	0 A				
WP	15C	1	0 A				
WP	16A	1	+12				
WP	16B	1	+12				
WP	16C	1	+12				
W	17A	3					
W	17B	3					
W	17C	3					
W	18A	3					
W	18B	3					
W	18C	3					
WP	19A	1	0 K				
WP	19B	1	0 K				
WP	19C	1	0 K				
WP	20A	1	+24				
WP	20B	1	+24				
WP	20C	1	+24				
W	21A	3					
W	21B	3					
W	21C	3					
W	22A	3					
W	22B	3					
W	22C	3					
W	23A	3					
W	23B	3					
W	23C	3					
W	24A	3					
W	24B	3					
W	24C	3					
W	25A	3					
W	25B	3					
W	25C	3					
W +	26A	3	PCPGDATH				
W	26B	3					
W	26C	3					
W	27A	3					
W	27B	3					
W	27C	3					
W	28A	3	+ 5 ADD				
W	28B	3	+ 5 ADD				
W	28C	3	+ 5 ADD				
W	29A	3	+ 5 ADD				
W	29B	3	+ 5 ADD				
W	29C	3	+ 5 ADD				
W	30A	3	+ 5 ADD				
W	30B	3	+ 5 ADD				
W	30C	3	+ 5 ADD				
W	31A	3					
W	31B	3					
W	31C	3					

./.

```
*****************************************************************************************************************************
*   S T U D E R   *      L O C A T I O N     P I N     L I S T       *    82/01/12 * 15:02      *   P A G E     19    *
*****************************************************************************************************************************
TAPE LOCK SYSTEM 2000 A800: SERIAL PROGRAMMER                1.228.900.00              79/10/10

GR: 99   (CONTINUATION)
PROCESSOR BACK PANEL
****************************************

EL: 18   (CONTINUATION)
----------------------------------------
TYPE PT  LV SIG.NAME COLOR F    X      Y
---- --- -- -------- ----- - ----- -----
WPQ  32A 1  +10       5
WPQ  32B 1  +10       5
WPQ  32C 1  +10       5

EL: 19  WRAP CONNECTOR J19.1, 3*32 PIN
----------------------------------------
TYPE PT  LV SIG.NAME COLOR F    X      Y
---- --- -- -------- ----- - ----- -----
WP   01A 1     0 L
WP   01B 1     0 L
WP   01C 1     0 L
W    02A 3
W    02B 3
W    02C 3
W    03A 3
W    03B 3
W    03C 3
W    04A 3  WIRE060
W    04B 3  WIRE060
W    04C 3  WIRE060
W    05A 3  +10
W    05B 3  +10
W    05C 3  +10
W  + 06A 3  819.2KHZ
W    06B 3
W    06C 3
W    07A 3  WIRE059
W    07B 3  WIRE059
W    07C 3  WIRE059
W    08A 3  +24
W    08B 3  +24
W    08C 3  +24
W    09A 3
W    09B 3
W    09C 3
W    10A 3  0.01N150
W    10B 3  0.01N150
W    10C 3  0.01N150
W    11A 3
W    11B 3
W    11C 3
WP   12A 1  - 5
WP   12B 1  - 5
WP   12C 1  - 5
W    13A 3
W    13B 3
W  + 13C 3  PMNTM   1
WP   14A 1  -12
WP   14B 1  -12
WP   14C 1  -12
WP   15A 1     0 A
                                                                                                              ./.

GR: 99   (CONTINUATION)
PROCESSOR BACK PANEL
****************************************

EL: 19   (CONTINUATION)
----------------------------------------
TYPE PT  LV SIG.NAME COLOR F    X      Y
---- --- -- -------- ----- - ----- -----
WP   15B 1     0 A
WP   15C 1     0 A
WP   16A 1  +12
WP   16B 1  +12
WP   16C 1  +12
W  + 17A 3  PMNTM   4
W    17B 3
W    17C 3
W    18A 3
W    18B 3
W    18C 3
WP   19A 1     0 K
WP   19B 1     0 K
WP   19C 1     0 K
WP   20A 1  +24
WP   20B 1  +24
WP   20C 1  +24
W    21A 3
W    21B 3
W    21C 3
W    22A 3
W    22B 3
W    22C 3
W    23A 3
W    23B 3
W    23C 3
W    24A 3
W    24B 3
W    24C 3
W    25A 3
W    25B 3
W    25C 3
W    26A 3
W    26B 3
W    26C 3
W    27A 3
W    27B 3
W    27C 3
W    28A 3
W    28B 3
W    28C 3
W    29A 3
W    29B 3
W    29C 3
W    30A 3  +5.0-LED
W    30B 3  +5.0-LED
W    30C 3  +5.0-LED
W    31A 3
W    31B 3
W    31C 3
WP   32A 1  +10
                                                                                                              ./.

GR: 99   (CONTINUATION)
PROCESSOR BACK PANEL
****************************************

EL: 19   (CONTINUATION)
----------------------------------------
TYPE PT  LV SIG.NAME COLOR F    X      Y
---- --- -- -------- ----- - ----- -----
WP   32B 1  +10
WP   32C 1  +10

EL: 20  WRAP CONNECTOR J20.1, 3*32 PIN
----------------------------------------
TYPE PT  LV SIG.NAME COLOR F    X      Y
---- --- -- -------- ----- - ----- -----
WPQ  01A 1     0 L    0
WPQ  01B 1     0 L    0
WPQ  01C 1     0 L    0
W  + 01D 3     0 L
W  + 01E 3     0 L
W  + 01F 3     0 L
W    02A 3
W    02B 3
W    02C 3
W    02D 3  WIRE033
W    02E 3
W  + 02F 3  MCRECEDR
W    03A 3
W    03B 3
W    03C 3
W    03D 3  WIRE034
W    03E 3
W  + 03F 3  MCZSETDR
WQ   04A 3  -10V 150 6
WQ   04B 3  -10V 150 6
WQ   04C 3  -10V 150 6
W    04D 3  WIRE035
W    04E 3
W  + 04F 3  MCKCUTDR
W    05A 3
W    05B 3
W    05C 3
W  + 05D 3     0 L
W    05E 3
W    05F 3  WIRE040
W    06A 3
W    06B 3
W    06C 3
W  + 06D 3     0 L
W    06E 3
W    06F 3  WIRE041
WQ   07A 3  +31V 150 9
WQ   07B 3  +31V 150 9
WQ   07C 3  +31V 150 9
W  + 07D 3     0 L
W    07E 3
W    07F 3  WIRE042
W    08A 3
W    08B 3
                                                                                                              ./.
```

```
*****************************************************************************************************************************
*   S T U D E R   *      L O C A T I O N     P I N     L I S T       *    82/01/12 * 15:02      *   P A G E     20    *
*****************************************************************************************************************************
TAPE LOCK SYSTEM 2000 A800: SERIAL PROGRAMMER                1.228.900.00              79/10/10

GR: 99   (CONTINUATION)
PROCESSOR BACK PANEL
****************************************

EL: 20   (CONTINUATION)
----------------------------------------
TYPE PT  LV SIG.NAME COLOR F    X      Y
---- --- -- -------- ----- - ----- -----
W    08C 3
W    08D 3  WIRE036
W    08E 3
W    08F 3  WIRE043
W    09A 3
W    09B 3
W    09C 3
W    09D 3  WIRE040
W    09E 3
W    09F 3  WIRE044
WQ   10A 3  0.01N150 0
WQ   10B 3  0.01N150 0
WQ   10C 3  0.01N150 0
W    10D 3  WIRE041
W    10E 3
W    10F 3  WIRE045
W    11A 3
W    11B 3
W    11C 3
W    11D 3  WIRE042
W    11E 3
W  + 11F 3  NEMGSTOP
WP   12A 1  - 5
WP   12B 1  - 5
WP   12C 1  - 5
W    12D 3
W    12E 3
W    12F 3
W    13A 3
W    13B 3
W    13C 3
W    13D 3  WIRE046
W    13E 3
W    13F 3  WIRE046
WP   14A 1  -12
WP   14B 1  -12
WP   14C 1  -12
W    14D 3
W    14E 3
W    14F 3
WP   15A 1     0 A
WP   15B 1     0 A
WP   15C 1     0 A
W    15D 3
W    15E 3
W    15F 3
WP   16A 1  +12
WP   16B 1  +12
WP   16C 1  +12
W  + 16D 3  +5.0-LED
W    16E 3
                                                                                                              ./.

GR: 99   (CONTINUATION)
PROCESSOR BACK PANEL
****************************************

EL: 20   (CONTINUATION)
----------------------------------------
TYPE PT  LV SIG.NAME COLOR F    X      Y
---- --- -- -------- ----- - ----- -----
W  + 16F 3  +5.0-LED
W    17A 3
W    17B 3
W    17C 3
W    17D 3  WIRE043
W    17E 3
W    17F 3  WIRE047
W    18A 3
W    18B 3
W    18C 3
W    18D 3  WIRE048
W    18E 3
W    18F 3  WIRE048
WP   19A 1     0 K
WP   19B 1     0 K
WP   19C 1     0 K
W  + 19D 3     0 K
W    19E 3
W  + 19F 3     0 K
WP   20A 1  +24
WP   20B 1  +24
WP   20C 1  +24
W  + 20D 3  +24
W    20E 3
W  + 20F 3  +24
W    21A 3
W    21B 3
W    21C 3
W    21D 3  WIRE049
W    21E 3
W    21F 3  WIRE049
W    22A 3
W    22B 3
W    22C 3
W    22D 3  WIRE050
W    22E 3
W    22F 3  WIRE050
W  + 23A 3  PPWRON
W    23B 3
W    23C 3
W    23D 3  WIRE051
W    23E 3
W    23F 3  WIRE051
W    24A 3
W    24B 3
W    24C 3
W    24D 3  WIRE052
W    24E 3
W    24F 3  WIRE052
W    25A 3
W    25B 3
                                                                                                              ./.

GR: 99   (CONTINUATION)
PROCESSOR BACK PANEL
****************************************

EL: 20   (CONTINUATION)
----------------------------------------
TYPE PT  LV SIG.NAME COLOR F    X      Y
---- --- -- -------- ----- - ----- -----
W    25C 3
W    25D 3
W    25E 3
W  + 25F 3  MCSUPVIS
W    26A 3
W    26B 3
W    26C 3
W    26D 3  WIRE037
W    26E 3
W    26F 3  WIRE037
W    27A 3
W    27B 3
W    27C 3
W    27D 3  WIRE038
W    27E 3
W    27F 3  WIRE038
W    28A 3
W  + 28B 3  + 5  ADD
W  + 28C 3  + 5  ADD
W    28D 3
W    28E 3
W  + 28F 3  MCDATRDY
W    29A 3
W    29B 3
W    29C 3
W  + 29D 3  +5.0-LED
W    29E 3
W  + 29F 3  MCRESDR1
W    30A 3
W    30B 3
W    30C 3
W  + 30D 3  MCDATODR
W    30E 3
W  + 30F 3  LKMODDR2
W    31A 3
W    31B 3
W    31C 3
W    31D 3  WIRE039
W    31E 3
W    31F 3  WIRE053
WPQ  32A 1  +10       5
WPQ  32B 1  +10       5
WPQ  32C 1  +10       5
W  + 32D 3  +10
W    32E 3
W  + 32F 3  +10
```

```
*****************************************************************************************************************************
*   S T U D E R   *      L O C A T I O N    P I N    L I S T      *    82/01/12 * 15:02     *   P A G E     21    *
*****************************************************************************************************************************
TAPE LOCK SYSTEM 2000 A800: SERIAL PROGRAMMER                1.228.900.00            79/10/10

GR: 99   (CONTINUATION)
PROCESSOR BACK PANEL
*****************************************

EL: 99  CHASSIS, CONNECTED WITH:   0 L
-----------------------------------------
TYPE PT  LV SIG.NAME COLOR F   X      Y
---- --- -- -------- ----- - ----- -----
L    01  1    0 L    4,4,4
L    02  1    0 L    4,4,4
```

```
*****************************************************************************************************************************
*   S T U D E R   *      L O C A T I O N    S U M M A R Y        *    82/01/12 * 15:02     *   P A G E     22    *
*****************************************************************************************************************************
TAPE LOCK SYSTEM 2000 A800: SERIAL PROGRAMMER                1.228.900.00            79/10/10

 GR  USED    UNUSED  TOTAL   COD.  ELE-
 #    PINS    PINS    PINS   KEYS  MNTS  DESCRIPTION OF GROUP                      PART # OF GR
--  ------  ------  ------  ----  ----  ---------------------------------------  ------------
97      88      30     118     4     9  RACK ELEMENTS A800 LOWER PART
98      55      14      69     6     3  RACK ELEMENTS A800 UPPER PART
99    1481    1017    2498     0    21  PROCESSOR BACK PANEL                     1.228.399.00
--  ------  ------  ------  ----  ----  ---------------------------------------  ------------
TOT.  1624    1061    2685    10    33    DISTRIBUTED IN  3 GROUPS
      ======  ======  ======  ====  ====
```

```
*****************************************************************************************************************************
*  S T U D E R  *  S I G N A L  W I R E  L I S T                *  82/01/12 * 15:02    *  P A G E    23   *
*****************************************************************************************************************************
TAPE LOCK SYSTEM 2000 A800: SERIAL PROGRAMMER                1.228.900.00            79/10/10

SIG.NAME COLOR TYPE GR EL PT  S DESCRIPTION OF ELEMENT          SIG.NAME COLOR TYPE GR EL PT  S DESCRIPTION OF ELEMENT
-------- ----- ---- -- -- --- - ------------------------------ -------- ----- ---- -- -- --- - ------------------------------
  0 A          W    99 01 15B   WRAP CONNECTOR J01.1, 3*32 PIN (CONT.)          W    99 01 19B   WRAP CONNECTOR J01.1, 3*32 PIN
               W    99 01 15C   WRAP CONNECTOR J01.1, 3*32 PIN                  W    99 01 19C   WRAP CONNECTOR J01.1, 3*32 PIN
               W    99 02 15B   WRAP CONNECTOR J02.1, 3*32 PIN                  W    99 02 19B   WRAP CONNECTOR J02.1, 3*32 PIN
               W    99 02 15C   WRAP CONNECTOR J02.1, 3*32 PIN                  W    99 02 19C   WRAP CONNECTOR J02.1, 3*32 PIN
               W    99 03 15B   WRAP CONNECTOR J03.1, 3*32 PIN                  W    99 03 19B   WRAP CONNECTOR J03.1, 3*32 PIN
               W    99 03 15C   WRAP CONNECTOR J03.1, 3*32 PIN                  W    99 03 19C   WRAP CONNECTOR J03.1, 3*32 PIN
               W    99 04 15B   WRAP CONNECTOR J04.1, 3*32 PIN                  W    99 04 19B   WRAP CONNECTOR J04.1, 3*32 PIN
               W    99 04 15C   WRAP CONNECTOR J04.1, 3*32 PIN                  W    99 04 19C   WRAP CONNECTOR J04.1, 3*32 PIN
               W    99 05 15B   WRAP CONNECTOR J05.1, 3*32 PIN                  W    99 05 19B   WRAP CONNECTOR J05.1, 3*32 PIN
               W    99 05 15C   WRAP CONNECTOR J05.1, 3*32 PIN                  W    99 05 19C   WRAP CONNECTOR J05.1, 3*32 PIN
               W    99 06 15B   WRAP CONNECTOR J06.1, 3*32 PIN                  W    99 06 19B   WRAP CONNECTOR J06.1, 3*32 PIN
               W    99 06 15C   WRAP CONNECTOR J06.1, 3*32 PIN                  W    99 06 19C   WRAP CONNECTOR J06.1, 3*32 PIN
               W    99 07 15B   WRAP CONNECTOR J07.1, 3*32 PIN              0   WQ   99 07 08D   WRAP CONNECTOR J07.2, 3*32 PIN
               W    99 07 15C   WRAP CONNECTOR J07.1, 3*32 PIN                  W    99 07 19B   WRAP CONNECTOR J07.1, 3*32 PIN
               W    99 08 15B   WRAP CONNECTOR J08.1, 3*32 PIN                  W    99 07 19C   WRAP CONNECTOR J07.1, 3*32 PIN
               W    99 08 15C   WRAP CONNECTOR J08.1, 3*32 PIN                  W    99 08 19B   WRAP CONNECTOR J08.1, 3*32 PIN
               W    99 09 15B   WRAP CONNECTOR J09.1, 3*32 PIN                  W    99 08 19C   WRAP CONNECTOR J08.1, 3*32 PIN
               W    99 09 15C   WRAP CONNECTOR J09.1, 3*32 PIN                  W    99 09 19B   WRAP CONNECTOR J09.1, 3*32 PIN
               W    99 10 15B   WRAP CONNECTOR J10.1, 3*32 PIN                  W    99 09 19C   WRAP CONNECTOR J09.1, 3*32 PIN
               W    99 10 15C   WRAP CONNECTOR J10.1, 3*32 PIN                  W    99 10 19B   WRAP CONNECTOR J10.1, 3*32 PIN
               WP   99 11 15A   WRAP CONNECTOR J11.1, 3*32 PIN                  W    99 10 19C   WRAP CONNECTOR J10.1, 3*32 PIN
               WP   99 11 15B   WRAP CONNECTOR J11.1, 3*32 PIN                  WP   99 11 19A   WRAP CONNECTOR J11.1, 3*32 PIN
               WP   99 11 15C   WRAP CONNECTOR J11.1, 3*32 PIN                  WP   99 11 19B   WRAP CONNECTOR J11.1, 3*32 PIN
               WP   99 12 15A   WRAP CONNECTOR J12.1, 3*32 PIN                  WP   99 11 19C   WRAP CONNECTOR J11.1, 3*32 PIN
               WP   99 12 15B   WRAP CONNECTOR J12.1, 3*32 PIN                  WP   99 12 19A   WRAP CONNECTOR J12.1, 3*32 PIN
               WP   99 12 15C   WRAP CONNECTOR J12.1, 3*32 PIN                  WP   99 12 19B   WRAP CONNECTOR J12.1, 3*32 PIN
               WP   99 13 15A   WRAP CONNECTOR J13.1, 3*32 PIN                  WP   99 12 19C   WRAP CONNECTOR J12.1, 3*32 PIN
               WP   99 13 15B   WRAP CONNECTOR J13.1, 3*32 PIN                  WP   99 13 19A   WRAP CONNECTOR J13.1, 3*32 PIN
               WP   99 13 15C   WRAP CONNECTOR J13.1, 3*32 PIN                  WP   99 13 19B   WRAP CONNECTOR J13.1, 3*32 PIN
               WP   99 14 15A   WRAP CONNECTOR J14.1, 3*32 PIN                  WP   99 13 19C   WRAP CONNECTOR J13.1, 3*32 PIN
               WP   99 14 15B   WRAP CONNECTOR J14.1, 3*32 PIN                  WP   99 14 19A   WRAP CONNECTOR J14.1, 3*32 PIN
               WP   99 14 15C   WRAP CONNECTOR J14.1, 3*32 PIN                  WP   99 14 19B   WRAP CONNECTOR J14.1, 3*32 PIN
               WP   99 15 15A   WRAP CONNECTOR J15.1, 3*32 PIN                  WP   99 14 19C   WRAP CONNECTOR J14.1, 3*32 PIN
               WP   99 15 15B   WRAP CONNECTOR J15.1, 3*32 PIN                  WP   99 15 19A   WRAP CONNECTOR J15.1, 3*32 PIN
               WP   99 15 15C   WRAP CONNECTOR J15.1, 3*32 PIN                  WP   99 15 19B   WRAP CONNECTOR J15.1, 3*32 PIN
               WP   99 16 15A   WRAP CONNECTOR J16.1, 3*32 PIN                  WP   99 15 19C   WRAP CONNECTOR J15.1, 3*32 PIN
               WP   99 16 15B   WRAP CONNECTOR J16.1, 3*32 PIN                  WP   99 16 19A   WRAP CONNECTOR J16.1, 3*32 PIN
               WP   99 16 15C   WRAP CONNECTOR J16.1, 3*32 PIN                  WP   99 16 19B   WRAP CONNECTOR J16.1, 3*32 PIN
               WP   99 17 15A   WRAP CONNECTOR J17.1, 3*32 PIN                  WP   99 16 19C   WRAP CONNECTOR J16.1, 3*32 PIN
               WP   99 17 15B   WRAP CONNECTOR J17.1, 3*32 PIN              0   WPQ  99 17 19A   WRAP CONNECTOR J17.1, 3*32 PIN
               WP   99 17 15C   WRAP CONNECTOR J17.1, 3*32 PIN                  WP   99 17 19B   WRAP CONNECTOR J17.1, 3*32 PIN
               WP   99 18 15A   WRAP CONNECTOR J18.1, 3*32 PIN              0   WPQ  99 17 19C   WRAP CONNECTOR J17.1, 3*32 PIN
               WP   99 18 15B   WRAP CONNECTOR J18.1, 3*32 PIN                  WP   99 18 19A   WRAP CONNECTOR J18.1, 3*32 PIN
               WP   99 18 15C   WRAP CONNECTOR J18.1, 3*32 PIN                  WP   99 18 19B   WRAP CONNECTOR J18.1, 3*32 PIN
               WP   99 19 15A   WRAP CONNECTOR J19.1, 3*32 PIN                  WP   99 18 19C   WRAP CONNECTOR J18.1, 3*32 PIN
               WP   99 19 15B   WRAP CONNECTOR J19.1, 3*32 PIN                  WP   99 19 19A   WRAP CONNECTOR J19.1, 3*32 PIN
               WP   99 19 15C   WRAP CONNECTOR J19.1, 3*32 PIN                  WP   99 19 19B   WRAP CONNECTOR J19.1, 3*32 PIN
               WP   99 20 15A   WRAP CONNECTOR J20.1, 3*32 PIN                  WP   99 19 19C   WRAP CONNECTOR J19.1, 3*32 PIN
               WP   99 20 15B   WRAP CONNECTOR J20.1, 3*32 PIN                  WP   99 20 19A   WRAP CONNECTOR J20.1, 3*32 PIN
               WP   99 20 15C   WRAP CONNECTOR J20.1, 3*32 PIN                  WP   99 20 19B   WRAP CONNECTOR J20.1, 3*32 PIN
                                                                               WP   99 20 19C   WRAP CONNECTOR J20.1, 3*32 PIN
  0 K      0    B    97 71 20    AUXILIARY CONNECTOR                          W  + 99 20 19D   WRAP CONNECTOR J20.2, 3*32 PIN
           0    L    97 72 07A   RELAIS PRINT                                  W  + 99 20 19F   WRAP CONNECTOR J20.2, 3*32 PIN
           0    L    97 72 07C   RELAIS PRINT
           0    B    98 51 10    MASTER CONTROL CONNECTOR A800        0 L    0    L    97 15 01A   REFERENCE FREQUENCY INPUT
           0    B    98 51 11    MASTER CONTROL CONNECTOR A800            0    B    97 51 07    COMMAND LINE A800
                                                        ./.                                                          ./.
```

```
*****************************************************************************************************************************
*  S T U D E R  *  S I G N A L  W I R E  L I S T                *  82/01/12 * 15:02    *  P A G E    24   *
*****************************************************************************************************************************
TAPE LOCK SYSTEM 2000 A800: SERIAL PROGRAMMER                1.228.900.00            79/10/10

SIG.NAME COLOR TYPE GR EL PT  S DESCRIPTION OF ELEMENT          SIG.NAME COLOR TYPE GR EL PT  S DESCRIPTION OF ELEMENT
-------- ----- ---- -- -- --- - ------------------------------ -------- ----- ---- -- -- --- - ------------------------------
(CONT.)    0    B    97 51 13    COMMAND LINE A800            (CONT.)          WP   99 07 01F   WRAP CONNECTOR J07.2, 3*32 PIN
           0    B    97 51 19    COMMAND LINE A800                             W  + 99 07 10D   WRAP CONNECTOR J07.2, 3*32 PIN
           0    B    97 51 20    COMMAND LINE A800                             W  + 99 07 30F   WRAP CONNECTOR J07.2, 3*32 PIN
           0    B    97 51 24    COMMAND LINE A800                             W  + 99 07 31F   WRAP CONNECTOR J07.2, 3*32 PIN
           0    B    97 51 29    COMMAND LINE A800                             WP   99 08 01A   WRAP CONNECTOR J08.1, 3*32 PIN
           0    B    97 51 35    COMMAND LINE A800                             WP   99 08 01B   WRAP CONNECTOR J08.1, 3*32 PIN
           0    B    97 71 01    AUXILIARY CONNECTOR                           WP   99 08 01C   WRAP CONNECTOR J08.1, 3*32 PIN
           0    B    97 71 35    AUXILIARY CONNECTOR                           WP   99 08 01D   WRAP CONNECTOR J08.2, 3*32 PIN
           0    L    97 72 06A   RELAIS PRINT                                  WP   99 08 01E   WRAP CONNECTOR J08.2, 3*32 PIN
           0    L    97 72 06C   RELAIS PRINT                                  WP   99 08 01F   WRAP CONNECTOR J08.2, 3*32 PIN
           0    L    97 81 06    TLS LINE AMPLIFIER, PRINT                     WP   99 09 01A   WRAP CONNECTOR J09.1, 3*32 PIN
           0    B    98 51 01    MASTER CONTROL CONNECTOR A800                 WP   99 09 01B   WRAP CONNECTOR J09.1, 3*32 PIN
           0    B    98 51 14    MASTER CONTROL CONNECTOR A800            0    WPQ  99 09 01C   WRAP CONNECTOR J09.1, 3*32 PIN
           0    A    98 81 11    ADDITIONAL POWER CONNECTOR                    WP   99 09 01D   WRAP CONNECTOR J09.2, 3*32 PIN
           0    A    98 81 12    ADDITIONAL POWER CONNECTOR                    WP   99 09 01E   WRAP CONNECTOR J09.2, 3*32 PIN
           0    A    98 81 13    ADDITIONAL POWER CONNECTOR                    WP   99 09 01F   WRAP CONNECTOR J09.2, 3*32 PIN
           0    A    98 91 05    CONNECTOR ASS. TO POWER SUPPLY           0    WPQ  99 10 01A   WRAP CONNECTOR J10.1, 3*32 PIN
           0    A    98 91 06    CONNECTOR ASS. TO POWER SUPPLY           0    WPQ  99 10 01B   WRAP CONNECTOR J10.1, 3*32 PIN
           0    A    98 91 07    CONNECTOR ASS. TO POWER SUPPLY           0    WPQ  99 10 01C   WRAP CONNECTOR J10.1, 3*32 PIN
           0    A    98 91 08    CONNECTOR ASS. TO POWER SUPPLY                WP   99 11 01A   WRAP CONNECTOR J11.1, 3*32 PIN
           0    A    98 91 09    CONNECTOR ASS. TO POWER SUPPLY                WP   99 11 01B   WRAP CONNECTOR J11.1, 3*32 PIN
           0    A    98 91 10    CONNECTOR ASS. TO POWER SUPPLY                WP   99 11 01C   WRAP CONNECTOR J11.1, 3*32 PIN
                WP   99 01 01A   WRAP CONNECTOR J01.1, 3*32 PIN               WP   99 12 01A   WRAP CONNECTOR J12.1, 3*32 PIN
           0    WPQ  99 01 01B   WRAP CONNECTOR J01.1, 3*32 PIN               WP   99 12 01B   WRAP CONNECTOR J12.1, 3*32 PIN
                WP   99 01 01C   WRAP CONNECTOR J01.1, 3*32 PIN               WP   99 12 01C   WRAP CONNECTOR J12.1, 3*32 PIN
                WP   99 02 01A   WRAP CONNECTOR J02.1, 3*32 PIN               W  + 99 12 22A   WRAP CONNECTOR J12.1, 3*32 PIN
                WP   99 02 01B   WRAP CONNECTOR J02.1, 3*32 PIN               WP   99 13 01A   WRAP CONNECTOR J13.1, 3*32 PIN
                WP   99 02 01C   WRAP CONNECTOR J02.1, 3*32 PIN               WP   99 13 01B   WRAP CONNECTOR J13.1, 3*32 PIN
                WP   99 03 01A   WRAP CONNECTOR J03.1, 3*32 PIN               WP   99 13 01C   WRAP CONNECTOR J13.1, 3*32 PIN
                WP   99 03 01B   WRAP CONNECTOR J03.1, 3*32 PIN               WP   99 14 01A   WRAP CONNECTOR J14.1, 3*32 PIN
                WP   99 03 01C   WRAP CONNECTOR J03.1, 3*32 PIN               WP   99 14 01B   WRAP CONNECTOR J14.1, 3*32 PIN
                WP   99 04 01A   WRAP CONNECTOR J04.1, 3*32 PIN               WP   99 14 01C   WRAP CONNECTOR J14.1, 3*32 PIN
                WP   99 04 01B   WRAP CONNECTOR J04.1, 3*32 PIN           4   WPQ  99 15 01A   WRAP CONNECTOR J15.1, 3*32 PIN
                WP   99 04 01C   WRAP CONNECTOR J04.1, 3*32 PIN           4   WPQ  99 15 01B   WRAP CONNECTOR J15.1, 3*32 PIN
           4    WPQ  99 05 01A   WRAP CONNECTOR J05.1, 3*32 PIN           4   WPQ  99 15 01C   WRAP CONNECTOR J15.1, 3*32 PIN
           4    WPQ  99 05 01B   WRAP CONNECTOR J05.1, 3*32 PIN               WP   99 16 01A   WRAP CONNECTOR J16.1, 3*32 PIN
           4    WPQ  99 05 01C   WRAP CONNECTOR J05.1, 3*32 PIN               WP   99 16 01B   WRAP CONNECTOR J16.1, 3*32 PIN
                WP   99 06 01A   WRAP CONNECTOR J06.1, 3*32 PIN               WP   99 16 01C   WRAP CONNECTOR J16.1, 3*32 PIN
                WP   99 06 01B   WRAP CONNECTOR J06.1, 3*32 PIN           0   WPQ  99 17 01A   WRAP CONNECTOR J17.1, 3*32 PIN
                WP   99 06 01C   WRAP CONNECTOR J06.1, 3*32 PIN               WP   99 17 01B   WRAP CONNECTOR J17.1, 3*32 PIN
                WP   99 06 01D   WRAP CONNECTOR J06.2, 3*32 PIN           0   WPQ  99 17 01C   WRAP CONNECTOR J17.1, 3*32 PIN
                WP   99 06 01E   WRAP CONNECTOR J06.2, 3*32 PIN           0   WPQ  99 18 01A   WRAP CONNECTOR J18.1, 3*32 PIN
                WP   99 06 01F   WRAP CONNECTOR J06.2, 3*32 PIN           0   WPQ  99 18 01B   WRAP CONNECTOR J18.1, 3*32 PIN
                W  + 99 06 02D   WRAP CONNECTOR J06.2, 3*32 PIN           0   WPQ  99 18 01C   WRAP CONNECTOR J18.1, 3*32 PIN
           0    WQ   99 06 21D   WRAP CONNECTOR J06.2, 3*32 PIN               WP   99 19 01A   WRAP CONNECTOR J19.1, 3*32 PIN
           0    WQ   99 06 23F   WRAP CONNECTOR J06.2, 3*32 PIN               WP   99 19 01B   WRAP CONNECTOR J19.1, 3*32 PIN
           0    WQ   99 06 24F   WRAP CONNECTOR J06.2, 3*32 PIN               WP   99 19 01C   WRAP CONNECTOR J19.1, 3*32 PIN
           0    WQ   99 06 25F   WRAP CONNECTOR J06.2, 3*32 PIN           0   WPQ  99 20 01A   WRAP CONNECTOR J20.1, 3*32 PIN
           0    WQ   99 06 26E   WRAP CONNECTOR J06.2, 3*32 PIN           0   WPQ  99 20 01B   WRAP CONNECTOR J20.1, 3*32 PIN
           0    WQ   99 06 27D   WRAP CONNECTOR J06.2, 3*32 PIN           0   WPQ  99 20 01C   WRAP CONNECTOR J20.1, 3*32 PIN
           0    WQ   99 06 29D   WRAP CONNECTOR J06.2, 3*32 PIN               W  + 99 20 01D   WRAP CONNECTOR J20.2, 3*32 PIN
                WP   99 07 01A   WRAP CONNECTOR J07.1, 3*32 PIN               W  + 99 20 01E   WRAP CONNECTOR J20.2, 3*32 PIN
                WP   99 07 01B   WRAP CONNECTOR J07.1, 3*32 PIN               W  + 99 20 01F   WRAP CONNECTOR J20.2, 3*32 PIN
                WP   99 07 01C   WRAP CONNECTOR J07.1, 3*32 PIN               W  + 99 20 05D   WRAP CONNECTOR J20.2, 3*32 PIN
           0    WPQ  99 07 01D   WRAP CONNECTOR J07.2, 3*32 PIN               W  + 99 20 06D   WRAP CONNECTOR J20.2, 3*32 PIN
           0    WPQ  99 07 01E   WRAP CONNECTOR J07.2, 3*32 PIN               W  + 99 20 07D   WRAP CONNECTOR J20.2, 3*32 PIN
                                                        ./.                                                          ./.
```

```
*   S T U D E R   *    S I G N A L     W I R E     L I S T              *    82/01/12 * 15:02       *   P A G E     25    *
TAPE LOCK SYSTEM 2000 A800: SERIAL PROGRAMMER                1.228.900.00            79/10/10

SIG.NAME COLOR TYPE GR EL PT  S DESCRIPTION OF ELEMENT
-------- ----- ---- -- -- --- - ------------------------------
(CONT.)  4,4,4 L    99 99 01    CHASSIS, CONNECTED WITH:   0 L
         4,4,4 L    99 99 02    CHASSIS, CONNECTED WITH:   0 L

  0 1325       W    99 13 22B   WRAP CONNECTOR J13.1, 3*32 PIN

+ 5  ADD       W    99 03 11A   WRAP CONNECTOR J03.1, 3*32 PIN
             W    99 04 25B   WRAP CONNECTOR J04.1, 3*32 PIN
             W    99 06 07A   WRAP CONNECTOR J06.1, 3*32 PIN
             W    99 10 11C   WRAP CONNECTOR J10.1, 3*32 PIN
             W  + 99 13 28B   WRAP CONNECTOR J13.1, 3*32 PIN
             W  + 99 13 29B   WRAP CONNECTOR J13.1, 3*32 PIN
             W  + 99 14 29A   WRAP CONNECTOR J14.1, 3*32 PIN
             W  + 99 14 30A   WRAP CONNECTOR J14.1, 3*32 PIN
             W    99 15 13B   WRAP CONNECTOR J15.1, 3*32 PIN
             W  + 99 17 02A   WRAP CONNECTOR J17.1, 3*32 PIN
             W  + 99 18 03A   WRAP CONNECTOR J18.1, 3*32 PIN
             W  + 99 18 03C   WRAP CONNECTOR J18.1, 3*32 PIN
             W    99 18 28A   WRAP CONNECTOR J18.1, 3*32 PIN
             W    99 18 28B   WRAP CONNECTOR J18.1, 3*32 PIN
             W    99 18 28C   WRAP CONNECTOR J18.1, 3*32 PIN
             W    99 18 29A   WRAP CONNECTOR J18.1, 3*32 PIN
             W    99 18 29B   WRAP CONNECTOR J18.1, 3*32 PIN
             W    99 18 29C   WRAP CONNECTOR J18.1, 3*32 PIN
             W    99 18 3CA   WRAP CONNECTOR J18.1, 3*32 PIN
             W    99 18 30B   WRAP CONNECTOR J18.1, 3*32 PIN
             W    99 18 30C   WRAP CONNECTOR J18.1, 3*32 PIN
             W  + 99 20 28B   WRAP CONNECTOR J20.1, 3*32 PIN
             W  + 99 20 28C   WRAP CONNECTOR J20.1, 3*32 PIN

+10          1    B    98 51 03    MASTER CONTROL CONNECTOR A800
             5    A    98 81 16    ADDITIONAL POWER CONNECTOR
             5    A    98 81 17    ADDITIONAL POWER CONNECTOR
             5    A    98 81 18    ADDITIONAL POWER CONNECTOR
             5    A    98 91 16    CONNECTOR ASS. TO POWER SUPPLY
             5    A    98 91 17    CONNECTOR ASS. TO POWER SUPPLY
             5    A    98 91 18    CONNECTOR ASS. TO POWER SUPPLY
             5    A    98 91 19    CONNECTOR ASS. TO POWER SUPPLY
             5    A    98 91 20    CONNECTOR ASS. TO POWER SUPPLY
             5    A    98 91 21    CONNECTOR ASS. TO POWER SUPPLY
                  WP   99 01 32A   WRAP CONNECTOR J01.1, 3*32 PIN
                  WP   99 01 32B   WRAP CONNECTOR J01.1, 3*32 PIN
                  WP   99 01 32C   WRAP CONNECTOR J01.1, 3*32 PIN
                  WP   99 02 32A   WRAP CONNECTOR J02.1, 3*32 PIN
                  WP   99 02 32B   WRAP CONNECTOR J02.1, 3*32 PIN
                  WP   99 02 32C   WRAP CONNECTOR J02.1, 3*32 PIN
                  WP   99 03 32A   WRAP CONNECTOR J03.1, 3*32 PIN
                  WP   99 03 32B   WRAP CONNECTOR J03.1, 3*32 PIN
                  WP   99 03 32C   WRAP CONNECTOR J03.1, 3*32 PIN
                  WP   99 04 32A   WRAP CONNECTOR J04.1, 3*32 PIN
                  WP   99 04 32B   WRAP CONNECTOR J04.1, 3*32 PIN
                  WP   99 04 32C   WRAP CONNECTOR J04.1, 3*32 PIN
                  WP   99 05 32A   WRAP CONNECTOR J05.1, 3*32 PIN
                  WP   99 05 32B   WRAP CONNECTOR J05.1, 3*32 PIN
                  WP   99 05 32C   WRAP CONNECTOR J05.1, 3*32 PIN
                  WP   99 06 32A   WRAP CONNECTOR J06.1, 3*32 PIN
                  WP   99 06 32B   WRAP CONNECTOR J06.1, 3*32 PIN
                                                                ./.

SIG.NAME COLOR TYPE GR EL PT  S DESCRIPTION OF ELEMENT
-------- ----- ---- -- -- --- - ------------------------------
(CONT.)        WP   99 06 32C   WRAP CONNECTOR J06.1, 3*32 PIN
               WP   99 06 32D   WRAP CONNECTOR J06.2, 3*32 PIN
               WP   99 06 32E   WRAP CONNECTOR J06.2, 3*32 PIN
               WP   99 06 32F   WRAP CONNECTOR J06.2, 3*32 PIN
               WP   99 07 32A   WRAP CONNECTOR J07.1, 3*32 PIN
               WP   99 07 32B   WRAP CONNECTOR J07.1, 3*32 PIN
               WP   99 07 32C   WRAP CONNECTOR J07.1, 3*32 PIN
               WP   99 07 32D   WRAP CONNECTOR J07.2, 3*32 PIN
               WP   99 07 32E   WRAP CONNECTOR J07.2, 3*32 PIN
               WP   99 07 32F   WRAP CONNECTOR J07.2, 3*32 PIN
               WP   99 08 32A   WRAP CONNECTOR J08.1, 3*32 PIN
               WP   99 08 32B   WRAP CONNECTOR J08.1, 3*32 PIN
               WP   99 08 32C   WRAP CONNECTOR J08.1, 3*32 PIN
               WP   99 08 32D   WRAP CONNECTOR J08.2, 3*32 PIN
               WP   99 08 32E   WRAP CONNECTOR J08.2, 3*32 PIN
               WP   99 08 32F   WRAP CONNECTOR J08.2, 3*32 PIN
               WP   99 09 32A   WRAP CONNECTOR J09.1, 3*32 PIN
               WP   99 09 32B   WRAP CONNECTOR J09.1, 3*32 PIN
               WP   99 09 32C   WRAP CONNECTOR J09.1, 3*32 PIN
               WP   99 09 32D   WRAP CONNECTOR J09.2, 3*32 PIN
               WP   99 09 32E   WRAP CONNECTOR J09.2, 3*32 PIN
               WP   99 09 32F   WRAP CONNECTOR J09.2, 3*32 PIN
            5  WPQ  99 10 32A   WRAP CONNECTOR J10.1, 3*32 PIN
            5  WPQ  99 10 32B   WRAP CONNECTOR J10.1, 3*32 PIN
            5  WPQ  99 10 32C   WRAP CONNECTOR J10.1, 3*32 PIN
               WP   99 11 32A   WRAP CONNECTOR J11.1, 3*32 PIN
               WP   99 11 32B   WRAP CONNECTOR J11.1, 3*32 PIN
               WP   99 11 32C   WRAP CONNECTOR J11.1, 3*32 PIN
               WP   99 12 32A   WRAP CONNECTOR J12.1, 3*32 PIN
               WP   99 12 32B   WRAP CONNECTOR J12.1, 3*32 PIN
               WP   99 12 32C   WRAP CONNECTOR J12.1, 3*32 PIN
               WP   99 13 32A   WRAP CONNECTOR J13.1, 3*32 PIN
               WP   99 13 32B   WRAP CONNECTOR J13.1, 3*32 PIN
               WP   99 13 32C   WRAP CONNECTOR J13.1, 3*32 PIN
               WP   99 14 32A   WRAP CONNECTOR J14.1, 3*32 PIN
               WP   99 14 32B   WRAP CONNECTOR J14.1, 3*32 PIN
               WP   99 14 32C   WRAP CONNECTOR J14.1, 3*32 PIN
               WP   99 15 32A   WRAP CONNECTOR J15.1, 3*32 PIN
               WP   99 15 32B   WRAP CONNECTOR J15.1, 3*32 PIN
               WP   99 15 32C   WRAP CONNECTOR J15.1, 3*32 PIN
               WP   99 16 32A   WRAP CONNECTOR J16.1, 3*32 PIN
               WP   99 16 32B   WRAP CONNECTOR J16.1, 3*32 PIN
               WP   99 16 32C   WRAP CONNECTOR J16.1, 3*32 PIN
               WP   99 17 32A   WRAP CONNECTOR J17.1, 3*32 PIN
               WP   99 17 32B   WRAP CONNECTOR J17.1, 3*32 PIN
            1  WPQ  99 17 32C   WRAP CONNECTOR J17.1, 3*32 PIN
            5  WPQ  99 18 32A   WRAP CONNECTOR J18.1, 3*32 PIN
            5  WPQ  99 18 32B   WRAP CONNECTOR J18.1, 3*32 PIN
            5  WPQ  99 18 32C   WRAP CONNECTOR J18.1, 3*32 PIN
               W    99 19 05A   WRAP CONNECTOR J19.1, 3*32 PIN
               W    99 19 05B   WRAP CONNECTOR J19.1, 3*32 PIN
               W    99 19 05C   WRAP CONNECTOR J19.1, 3*32 PIN
               WP   99 19 32A   WRAP CONNECTOR J19.1, 3*32 PIN
               WP   99 19 32B   WRAP CONNECTOR J19.1, 3*32 PIN
               WP   99 19 32C   WRAP CONNECTOR J19.1, 3*32 PIN
            5  WPQ  99 20 32A   WRAP CONNECTOR J20.1, 3*32 PIN
                                                          ./.
```

```
*   S T U D E R   *    S I G N A L     W I R E     L I S T              *    82/01/12 * 15:02       *   P A G E     26    *
TAPE LOCK SYSTEM 2000 A800: SERIAL PROGRAMMER                1.228.900.00            79/10/10

SIG.NAME COLOR TYPE GR EL PT  S DESCRIPTION OF ELEMENT
-------- ----- ---- -- -- --- - ------------------------------
(CONT.)  5     WPQ  99 20 32B   WRAP CONNECTOR J20.1, 3*32 PIN
         5     WPQ  99 20 32C   WRAP CONNECTOR J20.1, 3*32 PIN
               W  + 99 20 32D   WRAP CONNECTOR J20.2, 3*32 PIN
               W  + 99 20 32F   WRAP CONNECTOR J20.2, 3*32 PIN

+10AD150 5     A    98 81 19    ADDITIONAL POWER CONNECTOR
         5     A    98 81 20    ADDITIONAL POWER CONNECTOR
         5     A    98 81 21    ADDITIONAL POWER CONNECTOR
         5     WQ   99 18 07A   WRAP CONNECTOR J18.1, 3*32 PIN
         5     WQ   99 18 07B   WRAP CONNECTOR J18.1, 3*32 PIN
         5     WQ   99 18 07C   WRAP CONNECTOR J18.1, 3*32 PIN

+12            W    99 01 16B   WRAP CONNECTOR J01.1, 3*32 PIN
               W    99 01 16C   WRAP CONNECTOR J01.1, 3*32 PIN
               W    99 02 16B   WRAP CONNECTOR J02.1, 3*32 PIN
               W    99 02 16C   WRAP CONNECTOR J02.1, 3*32 PIN
               W    99 03 16B   WRAP CONNECTOR J03.1, 3*32 PIN
               W    99 03 16C   WRAP CONNECTOR J03.1, 3*32 PIN
               W    99 04 16B   WRAP CONNECTOR J04.1, 3*32 PIN
               W    99 04 16C   WRAP CONNECTOR J04.1, 3*32 PIN
               W    99 05 16B   WRAP CONNECTOR J05.1, 3*32 PIN
               W    99 05 16C   WRAP CONNECTOR J05.1, 3*32 PIN
               W    99 06 16B   WRAP CONNECTOR J06.1, 3*32 PIN
               W    99 06 16C   WRAP CONNECTOR J06.1, 3*32 PIN
               W    99 07 16B   WRAP CONNECTOR J07.1, 3*32 PIN
               W    99 07 16C   WRAP CONNECTOR J07.1, 3*32 PIN
               W    99 08 16B   WRAP CONNECTOR J08.1, 3*32 PIN
               W    99 08 16C   WRAP CONNECTOR J08.1, 3*32 PIN
               W    99 09 16B   WRAP CONNECTOR J09.1, 3*32 PIN
               W    99 09 16C   WRAP CONNECTOR J09.1, 3*32 PIN
               W    99 10 16B   WRAP CONNECTOR J10.1, 3*32 PIN
               W    99 10 16C   WRAP CONNECTOR J10.1, 3*32 PIN
               WP   99 11 16A   WRAP CONNECTOR J11.1, 3*32 PIN
               WP   99 11 16B   WRAP CONNECTOR J11.1, 3*32 PIN
               WP   99 11 16C   WRAP CONNECTOR J11.1, 3*32 PIN
               WP   99 12 16A   WRAP CONNECTOR J12.1, 3*32 PIN
               WP   99 12 16B   WRAP CONNECTOR J12.1, 3*32 PIN
               WP   99 12 16C   WRAP CONNECTOR J12.1, 3*32 PIN
               WP   99 13 16A   WRAP CONNECTOR J13.1, 3*32 PIN
               WP   99 13 16B   WRAP CONNECTOR J13.1, 3*32 PIN
               WP   99 13 16C   WRAP CONNECTOR J13.1, 3*32 PIN
               WP   99 14 16A   WRAP CONNECTOR J14.1, 3*32 PIN
               WP   99 14 16B   WRAP CONNECTOR J14.1, 3*32 PIN
               WP   99 14 16C   WRAP CONNECTOR J14.1, 3*32 PIN
               WP   99 15 16A   WRAP CONNECTOR J15.1, 3*32 PIN
               WP   99 15 16B   WRAP CONNECTOR J15.1, 3*32 PIN
               WP   99 15 16C   WRAP CONNECTOR J15.1, 3*32 PIN
               WP   99 16 16A   WRAP CONNECTOR J16.1, 3*32 PIN
               WP   99 16 16B   WRAP CONNECTOR J16.1, 3*32 PIN
               WP   99 16 16C   WRAP CONNECTOR J16.1, 3*32 PIN
               WP   99 17 16A   WRAP CONNECTOR J17.1, 3*32 PIN
               WP   99 17 16B   WRAP CONNECTOR J17.1, 3*32 PIN
               WP   99 17 16C   WRAP CONNECTOR J17.1, 3*32 PIN
               WP   99 18 16A   WRAP CONNECTOR J18.1, 3*32 PIN
               WP   99 18 16B   WRAP CONNECTOR J18.1, 3*32 PIN
               WP   99 18 16C   WRAP CONNECTOR J18.1, 3*32 PIN
                                                          ./.

SIG.NAME COLOR TYPE GR EL PT  S DESCRIPTION OF ELEMENT
-------- ----- ---- -- -- --- - ------------------------------
(CONT.)        WP   99 19 16A   WRAP CONNECTOR J19.1, 3*32 PIN
               WP   99 19 16B   WRAP CONNECTOR J19.1, 3*32 PIN
               WP   99 19 16C   WRAP CONNECTOR J19.1, 3*32 PIN
               WP   99 20 16A   WRAP CONNECTOR J20.1, 3*32 PIN
               WP   99 20 16B   WRAP CONNECTOR J20.1, 3*32 PIN
               WP   99 20 16C   WRAP CONNECTOR J20.1, 3*32 PIN

+24            2    B    97 71 37    AUXILIARY CONNECTOR
               2    L    97 72 08A   RELAIS PRINT
               2    L    97 72 08C   RELAIS PRINT
               3    L    97 81 07    TLS LINE AMPLIFIER, PRINT
               2    B    98 51 12    MASTER CONTROL CONNECTOR A800
               1    B    98 51 13    MASTER CONTROL CONNECTOR A800
               W    99 01 20B   WRAP CONNECTOR J01.1, 3*32 PIN
               W    99 01 20C   WRAP CONNECTOR J01.1, 3*32 PIN
               W    99 02 20B   WRAP CONNECTOR J02.1, 3*32 PIN
               W    99 02 20C   WRAP CONNECTOR J02.1, 3*32 PIN
               W    99 03 20B   WRAP CONNECTOR J03.1, 3*32 PIN
               W    99 03 20C   WRAP CONNECTOR J03.1, 3*32 PIN
               W    99 04 20B   WRAP CONNECTOR J04.1, 3*32 PIN
               W    99 04 20C   WRAP CONNECTOR J04.1, 3*32 PIN
               W    99 05 20B   WRAP CONNECTOR J05.1, 3*32 PIN
               W    99 05 20C   WRAP CONNECTOR J05.1, 3*32 PIN
               W    99 06 20B   WRAP CONNECTOR J06.1, 3*32 PIN
               W    99 06 20C   WRAP CONNECTOR J06.1, 3*32 PIN
            2  WQ   99 07 09B   WRAP CONNECTOR J07.2, 3*32 PIN
               W    99 07 20B   WRAP CONNECTOR J07.1, 3*32 PIN
               W    99 07 20C   WRAP CONNECTOR J07.1, 3*32 PIN
               W    99 08 20B   WRAP CONNECTOR J08.1, 3*32 PIN
               W    99 08 20C   WRAP CONNECTOR J08.1, 3*32 PIN
               W    99 09 20A   WRAP CONNECTOR J09.1, 3*32 PIN
               W    99 09 20B   WRAP CONNECTOR J09.1, 3*32 PIN
            3  WQ   99 09 20C   WRAP CONNECTOR J09.1, 3*32 PIN
               W    99 10 20B   WRAP CONNECTOR J10.1, 3*32 PIN
               W    99 10 20C   WRAP CONNECTOR J10.1, 3*32 PIN
               WP   99 11 20A   WRAP CONNECTOR J11.1, 3*32 PIN
               WP   99 11 20B   WRAP CONNECTOR J11.1, 3*32 PIN
               WP   99 11 20C   WRAP CONNECTOR J11.1, 3*32 PIN
               WP   99 12 20A   WRAP CONNECTOR J12.1, 3*32 PIN
               WP   99 12 20B   WRAP CONNECTOR J12.1, 3*32 PIN
               WP   99 12 20C   WRAP CONNECTOR J12.1, 3*32 PIN
               WP   99 13 20A   WRAP CONNECTOR J13.1, 3*32 PIN
               WP   99 13 20B   WRAP CONNECTOR J13.1, 3*32 PIN
               WP   99 13 20C   WRAP CONNECTOR J13.1, 3*32 PIN
               WP   99 14 20A   WRAP CONNECTOR J14.1, 3*32 PIN
               WP   99 14 20B   WRAP CONNECTOR J14.1, 3*32 PIN
               WP   99 14 20C   WRAP CONNECTOR J14.1, 3*32 PIN
               WP   99 15 20A   WRAP CONNECTOR J15.1, 3*32 PIN
               WP   99 15 20B   WRAP CONNECTOR J15.1, 3*32 PIN
               WP   99 15 20C   WRAP CONNECTOR J15.1, 3*32 PIN
               WP   99 16 20A   WRAP CONNECTOR J16.1, 3*32 PIN
               WP   99 16 20B   WRAP CONNECTOR J16.1, 3*32 PIN
               WP   99 16 20C   WRAP CONNECTOR J16.1, 3*32 PIN
            1  WPQ  99 17 20A   WRAP CONNECTOR J17.1, 3*32 PIN
               WP   99 17 20B   WRAP CONNECTOR J17.1, 3*32 PIN
            2  WPQ  99 17 20C   WRAP CONNECTOR J17.1, 3*32 PIN
                                                          ./.
```

```
*  S T U D E R  *   S I G N A L   W I R E   L I S T          *   82/01/12 * 15:02     *  P A G E    27   *
TAPE LOCK SYSTEM 2000 A800: SERIAL PROGRAMMER              1.228.900.00          79/10/10

SIG.NAME COLOR TYPE GR EL PT  S DESCRIPTION OF ELEMENT
-------- ----- ---- -- -- --- - ------------------------------
(CONT.)        WP   99 18 20A   WRAP CONNECTOR J18.1, 3*32 PIN
               WP   99 18 20B   WRAP CONNECTOR J18.1, 3*32 PIN
               WP   99 18 20C   WRAP CONNECTOR J18.1, 3*32 PIN
               W    99 19 08A   WRAP CONNECTOR J19.1, 3*32 PIN
               W    99 19 08B   WRAP CONNECTOR J19.1, 3*32 PIN
               W    99 19 08C   WRAP CONNECTOR J19.1, 3*32 PIN
               WP   99 19 20A   WRAP CONNECTOR J19.1, 3*32 PIN
               WP   99 19 20B   WRAP CONNECTOR J19.1, 3*32 PIN
               WP   99 19 20C   WRAP CONNECTOR J19.1, 3*32 PIN
               WP   99 20 20A   WRAP CONNECTOR J20.1, 3*32 PIN
               WP   99 20 20B   WRAP CONNECTOR J20.1, 3*32 PIN
               WP   99 20 20C   WRAP CONNECTOR J20.1, 3*32 PIN
               W  + 99 20 20D   WRAP CONNECTOR J20.2, 3*32 PIN
               W  + 99 20 20F   WRAP CONNECTOR J20.2, 3*32 PIN

+24M       3   B    97 71 36    AUXILIARY CONNECTOR
           3   L    97 72 09A   RELAIS PRINT

+31V 150   9   A    98 91 23    CONNECTOR ASS. TO POWER SUPPLY
           9   A    98 91 24    CONNECTOR ASS. TO POWER SUPPLY
           9   A    98 91 25    CONNECTOR ASS. TO POWER SUPPLY
           9   WQ   99 20 07A   WRAP CONNECTOR J20.1, 3*32 PIN
           9   WQ   99 20 07B   WRAP CONNECTOR J20.1, 3*32 PIN
           9   WQ   99 20 07C   WRAP CONNECTOR J20.1, 3*32 PIN

+5.0-LED       W    99 19 30A   WRAP CONNECTOR J19.1, 3*32 PIN
               W    99 19 30B   WRAP CONNECTOR J19.1, 3*32 PIN
               W    99 19 30C   WRAP CONNECTOR J19.1, 3*32 PIN
               W  + 99 20 16D   WRAP CONNECTOR J20.2, 3*32 PIN
               W  + 99 20 16F   WRAP CONNECTOR J20.2, 3*32 PIN
               W  + 99 20 29D   WRAP CONNECTOR J20.2, 3*32 PIN

+5.0V      2   L    97 81 03    TLS LINE AMPLIFIER, PRINT
               W    99 09 22A   WRAP CONNECTOR J09.1, 3*32 PIN
           2   WQ   99 09 22C   WRAP CONNECTOR J09.1, 3*32 PIN

- 5           W    99 01 12B   WRAP CONNECTOR J01.1, 3*32 PIN
               W    99 01 12C   WRAP CONNECTOR J01.1, 3*32 PIN
               W    99 02 12B   WRAP CONNECTOR J02.1, 3*32 PIN
               W    99 02 12C   WRAP CONNECTOR J02.1, 3*32 PIN
               W    99 03 12B   WRAP CONNECTOR J03.1, 3*32 PIN
               W    99 03 12C   WRAP CONNECTOR J03.1, 3*32 PIN
               W    99 04 12B   WRAP CONNECTOR J04.1, 3*32 PIN
               W    99 04 12C   WRAP CONNECTOR J04.1, 3*32 PIN
               W    99 05 12B   WRAP CONNECTOR J05.1, 3*32 PIN
               W    99 05 12C   WRAP CONNECTOR J05.1, 3*32 PIN
               W    99 06 12B   WRAP CONNECTOR J06.1, 3*32 PIN
               W    99 06 12C   WRAP CONNECTOR J06.1, 3*32 PIN
               W    99 07 12B   WRAP CONNECTOR J07.1, 3*32 PIN
               W    99 07 12C   WRAP CONNECTOR J07.1, 3*32 PIN
               W    99 08 12B   WRAP CONNECTOR J08.1, 3*32 PIN
               W    99 08 12C   WRAP CONNECTOR J08.1, 3*32 PIN
               W    99 09 12B   WRAP CONNECTOR J09.1, 3*32 PIN
               W    99 09 12C   WRAP CONNECTOR J09.1, 3*32 PIN
               W    99 10 12B   WRAP CONNECTOR J10.1, 3*32 PIN
               W    99 10 12C   WRAP CONNECTOR J10.1, 3*32 PIN
                                                          ./.

SIG.NAME COLOR TYPE GR EL PT  S DESCRIPTION OF ELEMENT
-------- ----- ---- -- -- --- - ------------------------------
(CONT.)        WP   99 11 12A   WRAP CONNECTOR J11.1, 3*32 PIN
               WP   99 11 12B   WRAP CONNECTOR J11.1, 3*32 PIN
               WP   99 11 12C   WRAP CONNECTOR J11.1, 3*32 PIN
               WP   99 12 12A   WRAP CONNECTOR J12.1, 3*32 PIN
               WP   99 12 12B   WRAP CONNECTOR J12.1, 3*32 PIN
               WP   99 12 12C   WRAP CONNECTOR J12.1, 3*32 PIN
               WP   99 13 12A   WRAP CONNECTOR J13.1, 3*32 PIN
               WP   99 13 12B   WRAP CONNECTOR J13.1, 3*32 PIN
               WP   99 13 12C   WRAP CONNECTOR J13.1, 3*32 PIN
               WP   99 14 12A   WRAP CONNECTOR J14.1, 3*32 PIN
               WP   99 14 12B   WRAP CONNECTOR J14.1, 3*32 PIN
               WP   99 14 12C   WRAP CONNECTOR J14.1, 3*32 PIN
               WP   99 15 12A   WRAP CONNECTOR J15.1, 3*32 PIN
               WP   99 15 12B   WRAP CONNECTOR J15.1, 3*32 PIN
               WP   99 15 12C   WRAP CONNECTOR J15.1, 3*32 PIN
               WP   99 16 12A   WRAP CONNECTOR J16.1, 3*32 PIN
               WP   99 16 12B   WRAP CONNECTOR J16.1, 3*32 PIN
               WP   99 16 12C   WRAP CONNECTOR J16.1, 3*32 PIN
               WP   99 17 12A   WRAP CONNECTOR J17.1, 3*32 PIN
               WP   99 17 12B   WRAP CONNECTOR J17.1, 3*32 PIN
               WP   99 17 12C   WRAP CONNECTOR J17.1, 3*32 PIN
               WP   99 18 12A   WRAP CONNECTOR J18.1, 3*32 PIN
               WP   99 18 12B   WRAP CONNECTOR J18.1, 3*32 PIN
               WP   99 18 12C   WRAP CONNECTOR J18.1, 3*32 PIN
               WP   99 19 12A   WRAP CONNECTOR J19.1, 3*32 PIN
               WP   99 19 12B   WRAP CONNECTOR J19.1, 3*32 PIN
               WP   99 19 12C   WRAP CONNECTOR J19.1, 3*32 PIN
               WP   99 20 12A   WRAP CONNECTOR J20.1, 3*32 PIN
               WP   99 20 12B   WRAP CONNECTOR J20.1, 3*32 PIN
               WP   99 20 12C   WRAP CONNECTOR J20.1, 3*32 PIN

-10V 150   6   A    98 91 01    CONNECTOR ASS. TO POWER SUPPLY
           6   A    98 91 03    CONNECTOR ASS. TO POWER SUPPLY
           6   A    98 91 04    CONNECTOR ASS. TO POWER SUPPLY
           6   WQ   99 20 04A   WRAP CONNECTOR J20.1, 3*32 PIN
           6   WQ   99 20 04B   WRAP CONNECTOR J20.1, 3*32 PIN
           6   WQ   99 20 04C   WRAP CONNECTOR J20.1, 3*32 PIN

-12            W    99 01 14B   WRAP CONNECTOR J01.1, 3*32 PIN
               W    99 01 14C   WRAP CONNECTOR J01.1, 3*32 PIN
               W    99 02 14B   WRAP CONNECTOR J02.1, 3*32 PIN
               W    99 02 14C   WRAP CONNECTOR J02.1, 3*32 PIN
               W    99 03 14B   WRAP CONNECTOR J03.1, 3*32 PIN
               W    99 03 14C   WRAP CONNECTOR J03.1, 3*32 PIN
               W    99 04 14B   WRAP CONNECTOR J04.1, 3*32 PIN
               W    99 04 14C   WRAP CONNECTOR J04.1, 3*32 PIN
               W    99 05 14B   WRAP CONNECTOR J05.1, 3*32 PIN
               W    99 05 14C   WRAP CONNECTOR J05.1, 3*32 PIN
               W    99 06 14B   WRAP CONNECTOR J06.1, 3*32 PIN
               W    99 06 14C   WRAP CONNECTOR J06.1, 3*32 PIN
               W    99 07 14B   WRAP CONNECTOR J07.1, 3*32 PIN
               W    99 07 14C   WRAP CONNECTOR J07.1, 3*32 PIN
               W    99 08 14B   WRAP CONNECTOR J08.1, 3*32 PIN
               W    99 08 14C   WRAP CONNECTOR J08.1, 3*32 PIN
               W    99 09 14B   WRAP CONNECTOR J09.1, 3*32 PIN
               W    99 09 14C   WRAP CONNECTOR J09.1, 3*32 PIN
                                                          ./.
```

```
*  S T U D E R  *   S I G N A L   W I R E   L I S T          *   82/01/12 * 15:02     *  P A G E    28   *
TAPE LOCK SYSTEM 2000 A800: SERIAL PROGRAMMER              1.228.900.00          79/10/10

SIG.NAME COLOR TYPE GR EL PT  S DESCRIPTION OF ELEMENT
-------- ----- ---- -- -- --- - ------------------------------
(CONT.)        W    99 10 14B   WRAP CONNECTOR J10.1, 3*32 PIN
               W    99 10 14C   WRAP CONNECTOR J10.1, 3*32 PIN
               WP   99 11 14A   WRAP CONNECTOR J11.1, 3*32 PIN
               WP   99 11 14B   WRAP CONNECTOR J11.1, 3*32 PIN
               WP   99 11 14C   WRAP CONNECTOR J11.1, 3*32 PIN
               WP   99 12 14A   WRAP CONNECTOR J12.1, 3*32 PIN
               WP   99 12 14B   WRAP CONNECTOR J12.1, 3*32 PIN
               WP   99 12 14C   WRAP CONNECTOR J12.1, 3*32 PIN
               WP   99 13 14A   WRAP CONNECTOR J13.1, 3*32 PIN
               WP   99 13 14B   WRAP CONNECTOR J13.1, 3*32 PIN
               WP   99 13 14C   WRAP CONNECTOR J13.1, 3*32 PIN
               WP   99 14 14A   WRAP CONNECTOR J14.1, 3*32 PIN
               WP   99 14 14B   WRAP CONNECTOR J14.1, 3*32 PIN
               WP   99 14 14C   WRAP CONNECTOR J14.1, 3*32 PIN
               WP   99 15 14A   WRAP CONNECTOR J15.1, 3*32 PIN
               WP   99 15 14B   WRAP CONNECTOR J15.1, 3*32 PIN
               WP   99 15 14C   WRAP CONNECTOR J15.1, 3*32 PIN
               WP   99 16 14A   WRAP CONNECTOR J16.1, 3*32 PIN
               WP   99 16 14B   WRAP CONNECTOR J16.1, 3*32 PIN
               WP   99 16 14C   WRAP CONNECTOR J16.1, 3*32 PIN
               WP   99 17 14A   WRAP CONNECTOR J17.1, 3*32 PIN
               WP   99 17 14B   WRAP CONNECTOR J17.1, 3*32 PIN
               WP   99 17 14C   WRAP CONNECTOR J17.1, 3*32 PIN
               WP   99 18 14A   WRAP CONNECTOR J18.1, 3*32 PIN
               WP   99 18 14B   WRAP CONNECTOR J18.1, 3*32 PIN
               WP   99 18 14C   WRAP CONNECTOR J18.1, 3*32 PIN
               WP   99 19 14A   WRAP CONNECTOR J19.1, 3*32 PIN
               WP   99 19 14B   WRAP CONNECTOR J19.1, 3*32 PIN
               WP   99 19 14C   WRAP CONNECTOR J19.1, 3*32 PIN
               WP   99 20 14A   WRAP CONNECTOR J20.1, 3*32 PIN
               WP   99 20 14B   WRAP CONNECTOR J20.1, 3*32 PIN
               WP   99 20 14C   WRAP CONNECTOR J20.1, 3*32 PIN

ACBIF1         W    99 05 06B   WRAP CONNECTOR J05.1, 3*32 PIN

ACBIF2         W    99 05 07B   WRAP CONNECTOR J05.1, 3*32 PIN

ACBIF3         W    99 05 08B   WRAP CONNECTOR J05.1, 3*32 PIN

ACIFGRP        W    99 01 17A   WRAP CONNECTOR J01.1, 3*32 PIN
               W    99 04 17C   WRAP CONNECTOR J04.1, 3*32 PIN

ACIFMUXA       W    99 05 06A   WRAP CONNECTOR J05.1, 3*32 PIN

ACIFMUXB       W    99 05 17A   WRAP CONNECTOR J05.1, 3*32 PIN

ACINSTEN       W    99 04 30C   WRAP CONNECTOR J04.1, 3*32 PIN
               W    99 15 13A   WRAP CONNECTOR J15.1, 3*32 PIN

ACKNLG     7   B    97 51 14    COMMAND LINE A800
           7   WQ   99 06 29F   WRAP CONNECTOR J06.2, 3*32 PIN
               W    99 08 11C   WRAP CONNECTOR J08.1, 3*32 PIN

ACPGAD00       W    99 04 06A   WRAP CONNECTOR J04.1, 3*32 PIN
               W    99 15 02A   WRAP CONNECTOR J15.1, 3*32 PIN

SIG.NAME COLOR TYPE GR EL PT  S DESCRIPTION OF ELEMENT
-------- ----- ---- -- -- --- - ------------------------------
ACPGAD01       W    99 04 07A   WRAP CONNECTOR J04.1, 3*32 PIN
               W    99 15 03A   WRAP CONNECTOR J15.1, 3*32 PIN

ACPGAD02       W    99 04 08A   WRAP CONNECTOR J04.1, 3*32 PIN
               W    99 15 04A   WRAP CONNECTOR J15.1, 3*32 PIN

ACPGAD03       W    99 04 09A   WRAP CONNECTOR J04.1, 3*32 PIN
               W    99 15 05A   WRAP CONNECTOR J15.1, 3*32 PIN

ACPGAD04       W    99 04 03B   WRAP CONNECTOR J04.1, 3*32 PIN
               W    99 15 06A   WRAP CONNECTOR J15.1, 3*32 PIN

ACPGAD05       W    99 04 04B   WRAP CONNECTOR J04.1, 3*32 PIN
               W    99 15 07A   WRAP CONNECTOR J15.1, 3*32 PIN

ACPGAD06       W    99 04 04C   WRAP CONNECTOR J04.1, 3*32 PIN
               W    99 15 08A   WRAP CONNECTOR J15.1, 3*32 PIN

ACPGAD07       W    99 04 05C   WRAP CONNECTOR J04.1, 3*32 PIN
               W    99 15 09A   WRAP CONNECTOR J15.1, 3*32 PIN

ACPGAD08       W    99 04 06C   WRAP CONNECTOR J04.1, 3*32 PIN
               W    99 15 10A   WRAP CONNECTOR J15.1, 3*32 PIN

ACPGAD09       W    99 04 07C   WRAP CONNECTOR J04.1, 3*32 PIN
               W    99 15 11A   WRAP CONNECTOR J15.1, 3*32 PIN

ACPGAD10       W    99 04 09C   WRAP CONNECTOR J04.1, 3*32 PIN
               W    99 15 10B   WRAP CONNECTOR J15.1, 3*32 PIN

ACPGAD11       W    99 04 10C   WRAP CONNECTOR J04.1, 3*32 PIN
               W    99 15 11B   WRAP CONNECTOR J15.1, 3*32 PIN

ACPGDATA       W    99 01 17B   WRAP CONNECTOR J01.1, 3*32 PIN
               W    99 02 18A   WRAP CONNECTOR J02.1, 3*32 PIN
               W    99 04 18A   WRAP CONNECTOR J04.1, 3*32 PIN
               W    99 05 18A   WRAP CONNECTOR J05.1, 3*32 PIN
               W    99 07 18B   WRAP CONNECTOR J07.1, 3*32 PIN
               W    99 14 02C   WRAP CONNECTOR J14.1, 3*32 PIN
               W    99 15 17A   WRAP CONNECTOR J15.1, 3*32 PIN

ACPGDATB       W    99 01 18B   WRAP CONNECTOR J01.1, 3*32 PIN
               W    99 02 22A   WRAP CONNECTOR J02.1, 3*32 PIN
               W    99 04 21A   WRAP CONNECTOR J04.1, 3*32 PIN
               W    99 05 21A   WRAP CONNECTOR J05.1, 3*32 PIN
               W    99 07 21B   WRAP CONNECTOR J07.1, 3*32 PIN
               W    99 14 03C   WRAP CONNECTOR J14.1, 3*32 PIN
               W    99 15 18A   WRAP CONNECTOR J15.1, 3*32 PIN

ACPGDATC       W    99 01 21B   WRAP CONNECTOR J01.1, 3*32 PIN
               W    99 02 23A   WRAP CONNECTOR J02.1, 3*32 PIN
               W    99 04 22A   WRAP CONNECTOR J04.1, 3*32 PIN
               W    99 05 22A   WRAP CONNECTOR J05.1, 3*32 PIN
               W    99 07 22B   WRAP CONNECTOR J07.1, 3*32 PIN
               W    99 14 04C   WRAP CONNECTOR J14.1, 3*32 PIN
               W    99 15 21A   WRAP CONNECTOR J15.1, 3*32 PIN
```

```
*  S T U D E R  *   S I G N A L   W I R E   L I S T          *   82/01/12 * 15:02     *  P A G E    29   *
TAPE LOCK SYSTEM 2000 A800: SERIAL PROGRAMMER              1.228.900.00          79/10/10

SIG.NAME COLOR TYPE GR EL PT  S DESCRIPTION OF ELEMENT
-------- ----- ---- -- -- --- - ------------------------------
ACPGDATD       W    99 01 22B   WRAP CONNECTOR J01.1, 3*32 PIN
               W    99 04 23A   WRAP CONNECTOR J04.1, 3*32 PIN
               W    99 05 23A   WRAP CONNECTOR J05.1, 3*32 PIN
               W    99 07 23B   WRAP CONNECTOR J07.1, 3*32 PIN
               W    99 14 05C   WRAP CONNECTOR J14.1, 3*32 PIN
               W    99 15 22A   WRAP CONNECTOR J15.1, 3*32 PIN

ACPGDATE       W    99 01 23B   WRAP CONNECTOR J01.1, 3*32 PIN
               W    99 04 24A   WRAP CONNECTOR J04.1, 3*32 PIN
               W    99 05 24A   WRAP CONNECTOR J05.1, 3*32 PIN
               W    99 07 24B   WRAP CONNECTOR J07.1, 3*32 PIN
               W    99 14 06C   WRAP CONNECTOR J14.1, 3*32 PIN
               W    99 15 23A   WRAP CONNECTOR J15.1, 3*32 PIN

ACPGDATF       W    99 01 31B   WRAP CONNECTOR J01.1, 3*32 PIN
               W    99 04 25A   WRAP CONNECTOR J04.1, 3*32 PIN
               W    99 05 25A   WRAP CONNECTOR J05.1, 3*32 PIN
               W    99 07 25B   WRAP CONNECTOR J07.1, 3*32 PIN
               W    99 14 07C   WRAP CONNECTOR J14.1, 3*32 PIN
               W    99 15 24A   WRAP CONNECTOR J15.1, 3*32 PIN

ACPGDATG       W    99 01 13B   WRAP CONNECTOR J01.1, 3*32 PIN
               W    99 04 26A   WRAP CONNECTOR J04.1, 3*32 PIN
               W    99 05 26A   WRAP CONNECTOR J05.1, 3*32 PIN
               W    99 07 26B   WRAP CONNECTOR J07.1, 3*32 PIN
               W    99 14 08C   WRAP CONNECTOR J14.1, 3*32 PIN
               W    99 15 25A   WRAP CONNECTOR J15.1, 3*32 PIN

ACPGDATH       W    99 01 13A   WRAP CONNECTOR J01.1, 3*32 PIN
               W    99 04 27A   WRAP CONNECTOR J04.1, 3*32 PIN
               W    99 05 27A   WRAP CONNECTOR J05.1, 3*32 PIN
               W    99 07 27B   WRAP CONNECTOR J07.1, 3*32 PIN
               W    99 14 09C   WRAP CONNECTOR J14.1, 3*32 PIN
               W    99 15 26A   WRAP CONNECTOR J15.1, 3*32 PIN

ACPGDATI       W    99 04 28A   WRAP CONNECTOR J04.1, 3*32 PIN
               W    99 15 27A   WRAP CONNECTOR J15.1, 3*32 PIN

ACPGDATK       W    99 04 29A   WRAP CONNECTOR J04.1, 3*32 PIN
               W    99 15 28A   WRAP CONNECTOR J15.1, 3*32 PIN

ACPGDATL       W    99 04 30A   WRAP CONNECTOR J04.1, 3*32 PIN
               W    99 15 29A   WRAP CONNECTOR J15.1, 3*32 PIN

ACPGDATM       W    99 04 31A   WRAP CONNECTOR J04.1, 3*32 PIN
               W    99 15 30A   WRAP CONNECTOR J15.1, 3*32 PIN

ACPGDATN       W    99 04 31C   WRAP CONNECTOR J04.1, 3*32 PIN
               W    99 15 31A   WRAP CONNECTOR J15.1, 3*32 PIN

ACPGIRPT       W    99 04 17B   WRAP CONNECTOR J04.1, 3*32 PIN
               W    99 07 30C   WRAP CONNECTOR J07.1, 3*32 PIN

ACSERDAT       W    99 05 31A   WRAP CONNECTOR J05.1, 3*32 PIN
               W    99 14 25B   WRAP CONNECTOR J14.1, 3*32 PIN

ACSP-09        W    99 04 02B   WRAP CONNECTOR J04.1, 3*32 PIN

ACSPCAP        W    99 01 21A   WRAP CONNECTOR J01.1, 3*32 PIN
               W    99 02 21B   WRAP CONNECTOR J02.1, 3*32 PIN

ACSPGRP1       W    99 04 10B   WRAP CONNECTOR J04.1, 3*32 PIN
               W    99 05 22B   WRAP CONNECTOR J05.1, 3*32 PIN

ACSPGRP2       W    99 04 11B   WRAP CONNECTOR J04.1, 3*32 PIN
               W    99 07 11C   WRAP CONNECTOR J07.1, 3*32 PIN

ACSPGRP3       W    99 01 17C   WRAP CONNECTOR J01.1, 3*32 PIN
               W    99 04 11C   WRAP CONNECTOR J04.1, 3*32 PIN

ACSPGRP4       W    99 04 10A   WRAP CONNECTOR J04.1, 3*32 PIN

ACSPIFC1       W    99 01 28B   WRAP CONNECTOR J01.1, 3*32 PIN

ACTAPFLG       W    99 04 24B   WRAP CONNECTOR J04.1, 3*32 PIN
               W    99 15 18B   WRAP CONNECTOR J15.1, 3*32 PIN

ADDRCT-A       W    99 01 22C   WRAP CONNECTOR J01.1, 3*32 PIN
               W    99 03 26B   WRAP CONNECTOR J03.1, 3*32 PIN
               W  + 99 04 18C   WRAP CONNECTOR J04.1, 3*32 PIN
               W    99 14 18C   WRAP CONNECTOR J14.1, 3*32 PIN

ADDRCT-B       W    99 01 23C   WRAP CONNECTOR J01.1, 3*32 PIN
               W    99 03 27B   WRAP CONNECTOR J03.1, 3*32 PIN
               W  + 99 04 21C   WRAP CONNECTOR J04.1, 3*32 PIN
               W    99 14 21C   WRAP CONNECTOR J14.1, 3*32 PIN

ADDRCT-C       W    99 01 24C   WRAP CONNECTOR J01.1, 3*32 PIN
               W    99 03 28B   WRAP CONNECTOR J03.1, 3*32 PIN
               W  + 99 04 22C   WRAP CONNECTOR J04.1, 3*32 PIN
               W    99 14 22C   WRAP CONNECTOR J14.1, 3*32 PIN

ADDRCT-D       W    99 01 25C   WRAP CONNECTOR J01.1, 3*32 PIN
               W    99 03 29B   WRAP CONNECTOR J03.1, 3*32 PIN
               W  + 99 04 23C   WRAP CONNECTOR J04.1, 3*32 PIN
               W    99 14 23C   WRAP CONNECTOR J14.1, 3*32 PIN

ADDRCT-E       W    99 01 26C   WRAP CONNECTOR J01.1, 3*32 PIN
               W    99 03 30B   WRAP CONNECTOR J03.1, 3*32 PIN
               W  + 99 04 24C   WRAP CONNECTOR J04.1, 3*32 PIN
               W    99 14 24C   WRAP CONNECTOR J14.1, 3*32 PIN

ADDRCT-F       W    99 01 27C   WRAP CONNECTOR J01.1, 3*32 PIN
               W    99 03 31B   WRAP CONNECTOR J03.1, 3*32 PIN
               W  + 99 04 25C   WRAP CONNECTOR J04.1, 3*32 PIN
               W    99 14 25C   WRAP CONNECTOR J14.1, 3*32 PIN

ADDRCT-G       W    99 01 28C   WRAP CONNECTOR J01.1, 3*32 PIN
               W  + 99 04 26C   WRAP CONNECTOR J04.1, 3*32 PIN
               W    99 14 26C   WRAP CONNECTOR J14.1, 3*32 PIN

ADDRCT-H       W    99 01 29C   WRAP CONNECTOR J01.1, 3*32 PIN
                                                          ./.
```

```
*  S T U D E R  *   S I G N A L   W I R E   L I S T          *   82/01/12 * 15:02     *  P A G E    30   *
TAPE LOCK SYSTEM 2000 A800: SERIAL PROGRAMMER              1.228.900.00          79/10/10

SIG.NAME COLOR TYPE GR EL PT  S DESCRIPTION OF ELEMENT
-------- ----- ---- -- -- --- - ------------------------------
(CONT.)        W  + 99 04 27C   WRAP CONNECTOR J04.1, 3*32 PIN
               W    99 14 27C   WRAP CONNECTOR J14.1, 3*32 PIN

ADDRCT-I       W    99 01 30C   WRAP CONNECTOR J01.1, 3*32 PIN
               W  + 99 04 28C   WRAP CONNECTOR J04.1, 3*32 PIN
               W    99 14 28C   WRAP CONNECTOR J14.1, 3*32 PIN

ADDRCT-K       W    99 01 31C   WRAP CONNECTOR J01.1, 3*32 PIN
               W  + 99 04 29C   WRAP CONNECTOR J04.1, 3*32 PIN
               W    99 14 29C   WRAP CONNECTOR J14.1, 3*32 PIN

AREN1          W    99 04 11A   WRAP CONNECTOR J04.1, 3*32 PIN
               W    99 14 11C   WRAP CONNECTOR J14.1, 3*32 PIN

AREN2          W    99 04 13A   WRAP CONNECTOR J04.1, 3*32 PIN
               W    99 14 10C   WRAP CONNECTOR J14.1, 3*32 PIN

ARIF-Y         W    99 05 28A   WRAP CONNECTOR J05.1, 3*32 PIN
               W    99 14 08B   WRAP CONNECTOR J14.1, 3*32 PIN

ARPOUT-A       W    99 01 08A   WRAP CONNECTOR J01.1, 3*32 PIN
               W  + 99 04 26B   WRAP CONNECTOR J04.1, 3*32 PIN
               W    99 05 11B   WRAP CONNECTOR J05.1, 3*32 PIN
               W    99 07 07C   WRAP CONNECTOR J07.1, 3*32 PIN
               W    99 14 07B   WRAP CONNECTOR J14.1, 3*32 PIN

ARPOUT-B       W    99 01 09A   WRAP CONNECTOR J01.1, 3*32 PIN
               W  + 99 04 27B   WRAP CONNECTOR J04.1, 3*32 PIN
               W    99 07 06C   WRAP CONNECTOR J07.1, 3*32 PIN
               W    99 14 06B   WRAP CONNECTOR J14.1, 3*32 PIN

ARPOUT-C       W    99 01 10A   WRAP CONNECTOR J01.1, 3*32 PIN
               W  + 99 04 28B   WRAP CONNECTOR J04.1, 3*32 PIN
               W    99 07 05C   WRAP CONNECTOR J07.1, 3*32 PIN
               W    99 14 05B   WRAP CONNECTOR J14.1, 3*32 PIN

ARPOUT-D       W    99 01 09B   WRAP CONNECTOR J01.1, 3*32 PIN
               W  + 99 04 29B   WRAP CONNECTOR J04.1, 3*32 PIN
               W    99 07 04C   WRAP CONNECTOR J07.1, 3*32 PIN
               W    99 14 04B   WRAP CONNECTOR J14.1, 3*32 PIN

ARPOUT-E       W    99 01 10B   WRAP CONNECTOR J01.1, 3*32 PIN
               W  + 99 04 30B   WRAP CONNECTOR J04.1, 3*32 PIN
               W    99 14 30C   WRAP CONNECTOR J14.1, 3*32 PIN

ARPOUT-F       W    99 01 11B   WRAP CONNECTOR J01.1, 3*32 PIN
               W  + 99 04 31B   WRAP CONNECTOR J04.1, 3*32 PIN
               W    99 14 31C   WRAP CONNECTOR J14.1, 3*32 PIN

ARSEROUT       W    99 01 29B   WRAP CONNECTOR J01.1, 3*32 PIN
               W    99 02 31B   WRAP CONNECTOR J02.1, 3*32 PIN
               W    99 14 13B   WRAP CONNECTOR J14.1, 3*32 PIN

AUXDATIN       W    99 14 26B   WRAP CONNECTOR J14.1, 3*32 PIN

A800DATA 3     B    97 51 34    COMMAND LINE A800
                                                          ./.

(CONT.)  3     WQ   99 06 31F   WRAP CONNECTOR J06.2, 3*32 PIN
               W    99 08 10C   WRAP CONNECTOR J08.1, 3*32 PIN

A800SUPV 2     B    97 51 18    COMMAND LINE A800
               W  + 99 06 07F   WRAP CONNECTOR J06.2, 3*32 PIN
         2     WQ   99 06 18E   WRAP CONNECTOR J06.2, 3*32 PIN
               W    99 08 03B   WRAP CONNECTOR J08.1, 3*32 PIN

BPLATEN        W    99 06 23B   WRAP CONNECTOR J06.1, 3*32 PIN
               W    99 17 29A   WRAP CONNECTOR J17.1, 3*32 PIN

BPTRMDAT       W    99 07 28B   WRAP CONNECTOR J07.1, 3*32 PIN
               W    99 17 13B   WRAP CONNECTOR J17.1, 3*32 PIN

BTCTA -M       W    99 01 25A   WRAP CONNECTOR J01.1, 3*32 PIN
               W    99 03 25A   WRAP CONNECTOR J03.1, 3*32 PIN
               W    99 05 25B   WRAP CONNECTOR J05.1, 3*32 PIN

BTCTA -S       W    99 02 25C   WRAP CONNECTOR J02.1, 3*32 PIN
               W    99 03 25C   WRAP CONNECTOR J03.1, 3*32 PIN
               W    99 05 25C   WRAP CONNECTOR J05.1, 3*32 PIN

BTCTB -M       W    99 01 26A   WRAP CONNECTOR J01.1, 3*32 PIN
               W    99 03 26A   WRAP CONNECTOR J03.1, 3*32 PIN
               W    99 05 26B   WRAP CONNECTOR J05.1, 3*32 PIN

BTCTB -S       W    99 02 26C   WRAP CONNECTOR J02.1, 3*32 PIN
               W    99 03 26C   WRAP CONNECTOR J03.1, 3*32 PIN
               W    99 05 26C   WRAP CONNECTOR J05.1, 3*32 PIN

BTCTC -M       W    99 01 27A   WRAP CONNECTOR J01.1, 3*32 PIN
               W    99 02 27A   WRAP CONNECTOR J02.1, 3*32 PIN
               W    99 03 27A   WRAP CONNECTOR J03.1, 3*32 PIN
               W    99 05 27B   WRAP CONNECTOR J05.1, 3*32 PIN

BTCTC -S       W    99 02 27C   WRAP CONNECTOR J02.1, 3*32 PIN
               W    99 03 27C   WRAP CONNECTOR J03.1, 3*32 PIN
               W    99 05 27C   WRAP CONNECTOR J05.1, 3*32 PIN

BTCTD -M       W    99 01 28A   WRAP CONNECTOR J01.1, 3*32 PIN
               W    99 03 28A   WRAP CONNECTOR J03.1, 3*32 PIN
               W    99 05 28B   WRAP CONNECTOR J05.1, 3*32 PIN

BTCTD -S       W    99 02 28C   WRAP CONNECTOR J02.1, 3*32 PIN
               W    99 03 28C   WRAP CONNECTOR J03.1, 3*32 PIN
               W    99 05 28C   WRAP CONNECTOR J05.1, 3*32 PIN

BTCTE -M       W    99 03 29A   WRAP CONNECTOR J03.1, 3*32 PIN
               W    99 05 29B   WRAP CONNECTOR J05.1, 3*32 PIN

BTCTE -S       W    99 02 29C   WRAP CONNECTOR J02.1, 3*32 PIN
               W    99 03 29C   WRAP CONNECTOR J03.1, 3*32 PIN
               W    99 05 29C   WRAP CONNECTOR J05.1, 3*32 PIN

BTCTF -M       W    99 03 30A   WRAP CONNECTOR J03.1, 3*32 PIN
               W    99 05 30B   WRAP CONNECTOR J05.1, 3*32 PIN
```

```
*  STUDER  *  SIGNAL  WIRE  LIST  *  82/01/12 * 15:02  *  PAGE  31  *
TAPE LOCK SYSTEM 2000 A800: SERIAL PROGRAMMER  1.228.900.00  79/10/10
```

SIG.NAME	COLOR	TYPE	GR	EL	PT	S	DESCRIPTION OF ELEMENT
BTCTF -S		W	99	02	30C		WRAP CONNECTOR J02.1, 3*32 PIN
		W	99	03	30C		WRAP CONNECTOR J03.1, 3*32 PIN
		W	99	05	30C		WRAP CONNECTOR J05.1, 3*32 PIN
BTCTG -M		W	99	01	31A		WRAP CONNECTOR J01.1, 3*32 PIN
		W	99	03	31A		WRAP CONNECTOR J03.1, 3*32 PIN
		W	99	05	31B		WRAP CONNECTOR J05.1, 3*32 PIN
BTCTG -S		W	99	02	31C		WRAP CONNECTOR J02.1, 3*32 PIN
		W	99	03	31C		WRAP CONNECTOR J03.1, 3*32 PIN
		W	99	05	31C		WRAP CONNECTOR J05.1, 3*32 PIN
BTCTOF-M		W	99	03	24A		WRAP CONNECTOR J03.1, 3*32 PIN
		W	99	05	11A		WRAP CONNECTOR J05.1, 3*32 PIN
BTCTOF-S		W	99	03	24C		WRAP CONNECTOR J03.1, 3*32 PIN
		W	99	05	11C		WRAP CONNECTOR J05.1, 3*32 PIN
CAP-EN		W	99	02	24C		WRAP CONNECTOR J02.1, 3*32 PIN
		W	+ 99	08	24C		WRAP CONNECTOR J08.1, 3*32 PIN
CAPLATEN		W	99	02	13B		WRAP CONNECTOR J02.1, 3*32 PIN
		W	99	06	13C		WRAP CONNECTOR J06.1, 3*32 PIN
CAPMUX		W	99	02	04C		WRAP CONNECTOR J02.1, 3*32 PIN
		W	99	06	04B		WRAP CONNECTOR J06.1, 3*32 PIN
CCSUPVIS	2	B	97	51	03		COMMAND LINE A800
	2	WQ	99	06	31D		WRAP CONNECTOR J06.2, 3*32 PIN
		W	+ 99	11	07B		WRAP CONNECTOR J11.1, 3*32 PIN
		W	99	17	25B		WRAP CONNECTOR J17.1, 3*32 PIN
CKACTLT		W	99	01	07B		WRAP CONNECTOR J01.1, 3*32 PIN
		W	99	04	04A		WRAP CONNECTOR J04.1, 3*32 PIN
CLRADRCT		W	99	01	05B		WRAP CONNECTOR J01.1, 3*32 PIN
		W	99	04	02A		WRAP CONNECTOR J04.1, 3*32 PIN
CODGENO		W	99	01	05C		WRAP CONNECTOR J01.1, 3*32 PIN
		W	99	08	29B		WRAP CONNECTOR J08.1, 3*32 PIN
		W	+ 99	11	25A		WRAP CONNECTOR J11.1, 3*32 PIN
CODIN1-S		W	99	08	28B		WRAP CONNECTOR J08.1, 3*32 PIN
		W	+ 99	11	04B		WRAP CONNECTOR J11.1, 3*32 PIN
		W	+ 99	12	11C		WRAP CONNECTOR J12.1, 3*32 PIN
		W	99	13	08C		WRAP CONNECTOR J13.1, 3*32 PIN
CODOCT		W	99	04	06B		WRAP CONNECTOR J04.1, 3*32 PIN
		W	99	05	09B		WRAP CONNECTOR J05.1, 3*32 PIN
COSTCKCT		W	99	04	02C		WRAP CONNECTOR J04.1, 3*32 PIN
		W	99	14	10B		WRAP CONNECTOR J14.1, 3*32 PIN
CATACLK	9	B	97	51	16		COMMAND LINE A800
	9	WQ	99	06	27F		WRAP CONNECTOR J06.2, 3*32 PIN
		W	+ 99	07	27F		WRAP CONNECTOR J07.2, 3*32 PIN

./.

SIG.NAME	COLOR	TYPE	GR	EL	PT	S	DESCRIPTION OF ELEMENT
(CONT.)		W	99	08	08A		WRAP CONNECTOR J08.1, 3*32 PIN
		W	+ 99	08	09B		WRAP CONNECTOR J08.1, 3*32 PIN
DIRDWN-M		W	99	01	27B		WRAP CONNECTOR J01.1, 3*32 PIN
		W	99	13	27A		WRAP CONNECTOR J13.1, 3*32 PIN
DIRDWN-S		W	99	03	06C		WRAP CONNECTOR J03.1, 3*32 PIN
		W	99	13	27C		WRAP CONNECTOR J13.1, 3*32 PIN
DIRUP -M		W	99	05	09A		WRAP CONNECTOR J05.1, 3*32 PIN
		W	99	13	26A		WRAP CONNECTOR J13.1, 3*32 PIN
DIRUP -S		W	99	05	09C		WRAP CONNECTOR J05.1, 3*32 PIN
		W	99	13	26C		WRAP CONNECTOR J13.1, 3*32 PIN
DIVCT- A		W	99	14	28B		WRAP CONNECTOR J14.1, 3*32 PIN
DIVCT- B		W	99	14	29D		WRAP CONNECTOR J14.1, 3*32 PIN
DIVCT- C		W	99	14	30B		WRAP CONNECTOR J14.1, 3*32 PIN
DIVCT- D		W	99	14	31B		WRAP CONNECTOR J14.1, 3*32 PIN
DMCOD -M		W	99	05	10A		WRAP CONNECTOR J05.1, 3*32 PIN
		W	99	13	17A		WRAP CONNECTOR J13.1, 3*32 PIN
DMCOD -S		W	99	05	10C		WRAP CONNECTOR J05.1, 3*32 PIN
		W	99	13	17C		WRAP CONNECTOR J13.1, 3*32 PIN
DMFAIL-M		W	99	01	26B		WRAP CONNECTOR J01.1, 3*32 PIN
		W	99	13	07A		WRAP CONNECTOR J13.1, 3*32 PIN
DMFAIL-S		W	99	05	08C		WRAP CONNECTOR J05.1, 3*32 PIN
		W	99	13	07C		WRAP CONNECTOR J13.1, 3*32 PIN
DMOSCI-M		W	99	13	13A		WRAP CONNECTOR J13.1, 3*32 PIN
DMOSCI-S		W	99	02	13C		WRAP CONNECTOR J02.1, 3*32 PIN
		W	99	13	13C		WRAP CONNECTOR J13.1, 3*32 PIN
EDLEADDR	7	B	97	71	31		AUXILIARY CONNECTOR
	7	WQ	99	07	04E		WRAP CONNECTOR J07.2, 3*32 PIN
		W	99	08	31B		WRAP CONNECTOR J08.1, 3*32 PIN
EDMODEDR	8	B	97	71	03		AUXILIARY CONNECTOR
	8	WQ	99	07	03D		WRAP CONNECTOR J07.2, 3*32 PIN
		W	99	08	31C		WRAP CONNECTOR J08.1, 3*32 PIN
ENTADRCT		W	99	01	30A		WRAP CONNECTOR J01.1, 3*32 PIN
		W	99	04	03A		WRAP CONNECTOR J04.1, 3*32 PIN
EXFREQTM	3	L	97	15	03A		REFERENCE FREQUENCY INPUT
	3	WQ	99	01	03B		WRAP CONNECTOR J01.1, 3*32 PIN
EXFREQ1	2	L	97	15	02A		REFERENCE FREQUENCY INPUT
	2	WQ	99	01	02B		WRAP CONNECTOR J01.1, 3*32 PIN

```
*  STUDER  *  SIGNAL  WIRE  LIST  *  82/01/12 * 15:02  *  PAGE  32  *
TAPE LOCK SYSTEM 2000 A800: SERIAL PROGRAMMER  1.228.900.00  79/10/10
```

SIG.NAME	COLOR	TYPE	GR	EL	PT	S	DESCRIPTION OF ELEMENT
EXFREQ2	4	L	97	15	04A		REFERENCE FREQUENCY INPUT
	4	WQ	99	01	04B		WRAP CONNECTOR J01.1, 3*32 PIN
EXFRQDAT		W	99	01	30B		WRAP CONNECTOR J01.1, 3*32 PIN
		W	+ 99	13	28A		WRAP CONNECTOR J13.1, 3*32 PIN
		W	99	14	27B		WRAP CONNECTOR J14.1, 3*32 PIN
EXFRQINA	2	L	97	14	02		REFERENCE FREQUENCY INPUT
	2	L	97	15	02		REFERENCE FREQUENCY INPUT
EXFRQINB	3	L	97	14	03		REFERENCE FREQUENCY INPUT
	3	L	97	15	03		REFERENCE FREQUENCY INPUT
EXFRQSCR	0	L	97	13	01		REFERENCE FREQUENCY INPUT
	0	L	97	14	01		REFERENCE FREQUENCY INPUT
EXGENOUT		W	99	01	06C		WRAP CONNECTOR J01.1, 3*32 PIN
		W	99	08	25B		WRAP CONNECTOR J08.1, 3*32 PIN
		W	+ 99	11	25C		WRAP CONNECTOR J11.1, 3*32 PIN
EXTFRQSL		W	99	06	27C		WRAP CONNECTOR J06.1, 3*32 PIN
EXTGND		L	97	81	01		TLS LINE AMPLIFIER, PRINT
EXTRECCM	7	L	97	72	05C		RELAIS PRINT
	5	B	98	51	07		MASTER CONTROL CONNECTOR A800
	7	WQ	99	07	05D		WRAP CONNECTOR J07.2, 3*32 PIN
	5	WQ	99	17	26A		WRAP CONNECTOR J17.1, 3*32 PIN
EXTSYNC		W	99	01	02C		WRAP CONNECTOR J01.1, 3*32 PIN
FRAMSL A		W	99	05	18C		WRAP CONNECTOR J05.1, 3*32 PIN
FRAMSL B		W	99	03	08A		WRAP CONNECTOR J03.1, 3*32 PIN
		W	99	05	17C		WRAP CONNECTOR J05.1, 3*32 PIN
FRPWRON		W	99	06	31B		WRAP CONNECTOR J06.1, 3*32 PIN
		W	99	15	07B		WRAP CONNECTOR J15.1, 3*32 PIN
G-SFRSLA		W	99	05	13A		WRAP CONNECTOR J05.1, 3*32 PIN
		W	99	14	02B		WRAP CONNECTOR J14.1, 3*32 PIN
G-SFRSLB		W	99	05	13B		WRAP CONNECTOR J05.1, 3*32 PIN
		W	99	14	03B		WRAP CONNECTOR J14.1, 3*32 PIN
GROUND81	0	L	97	82	01		TLS LINE AMPLIFIER, 5POL. FEMALE
	0	L	97	83	01		TLS LINE AMPLIFIER, GROUND SCREW
IFCDATIN		W	99	14	10B		WRAP CONNECTOR J14.1, 3*32 PIN
IFMUX-W		W	99	04	08C		WRAP CONNECTOR J04.1, 3*32 PIN
		W	99	05	23B		WRAP CONNECTOR J05.1, 3*32 PIN
INCODREP		W	99	08	30A		WRAP CONNECTOR J08.1, 3*32 PIN
		W	+ 99	11	29C		WRAP CONNECTOR J11.1, 3*32 PIN
		W	+ 99	12	05A		WRAP CONNECTOR J12.1, 3*32 PIN

./.

SIG.NAME	COLOR	TYPE	GR	EL	PT	S	DESCRIPTION OF ELEMENT
(CONT.)		W	99	13	04C		WRAP CONNECTOR J13.1, 3*32 PIN
LAGND		L	97	81	05		TLS LINE AMPLIFIER, PRINT
LDADDRCT		W	99	01	29A		WRAP CONNECTOR J01.1, 3*32 PIN
		W	99	04	05A		WRAP CONNECTOR J04.1, 3*32 PIN
LDARDATA		W	99	06	08C		WRAP CONNECTOR J06.1, 3*32 PIN
		W	99	07	07B		WRAP CONNECTOR J07.1, 3*32 PIN
LDTRMCT		W	99	06	08A		WRAP CONNECTOR J06.1, 3*32 PIN
		W	99	07	08B		WRAP CONNECTOR J07.1, 3*32 PIN
LKMODDR2	3	B	98	51	05		MASTER CONTROL CONNECTOR A800
	3	WQ	99	17	30C		WRAP CONNECTOR J17.1, 3*32 PIN
		W	+ 99	20	30F		WRAP CONNECTOR J20.2, 3*32 PIN
LKMODEDR	1	B	97	71	02		AUXILIARY CONNECTOR
	1	WQ	99	07	02D		WRAP CONNECTOR J07.2, 3*32 PIN
		W	99	08	30C		WRAP CONNECTOR J08.1, 3*32 PIN
LOADCKCT		W	99	04	07B		WRAP CONNECTOR J04.1, 3*32 PIN
		W	99	05	29A		WRAP CONNECTOR J05.1, 3*32 PIN
MCDATRDY	2	B	98	51	22		MASTER CONTROL CONNECTOR A800
	2	WQ	99	17	28C		WRAP CONNECTOR J17.1, 3*32 PIN
		W	+ 99	20	28F		WRAP CONNECTOR J20.2, 3*32 PIN
MCDATODR	4	B	98	51	24		MASTER CONTROL CONNECTOR A800
	4	WQ	99	17	30A		WRAP CONNECTOR J17.1, 3*32 PIN
		W	+ 99	20	30D		WRAP CONNECTOR J20.2, 3*32 PIN
MCDAT1DR	8	B	98	51	19		MASTER CONTROL CONNECTOR A800
	8	WQ	99	17	07A		WRAP CONNECTOR J17.1, 3*32 PIN
MCDAT2DR	9	B	98	51	20		MASTER CONTROL CONNECTOR A800
	9	WQ	99	17	08A		WRAP CONNECTOR J17.1, 3*32 PIN
MCKCUTDR	6	B	98	51	17		MASTER CONTROL CONNECTOR A800
	6	WQ	99	17	04C		WRAP CONNECTOR J17.1, 3*32 PIN
		W	+ 99	20	04F		WRAP CONNECTOR J20.2, 3*32 PIN
MCMUTEDR	1	B	98	51	21		MASTER CONTROL CONNECTOR A800
	1	WQ	99	17	09A		WRAP CONNECTOR J17.1, 3*32 PIN
MCRECEDR	4	B	98	51	15		MASTER CONTROL CONNECTOR A800
	4	WQ	99	17	02C		WRAP CONNECTOR J17.1, 3*32 PIN
		W	+ 99	20	02F		WRAP CONNECTOR J20.2, 3*32 PIN
MCRESDR1	7	B	98	51	18		MASTER CONTROL CONNECTOR A800
	7	WQ	99	17	03A		WRAP CONNECTOR J17.1, 3*32 PIN
		W	+ 99	20	29F		WRAP CONNECTOR J20.2, 3*32 PIN
MCRHRSDR	1	B	98	51	23		MASTER CONTROL CONNECTOR A800
		W	+ 99	06	25E		WRAP CONNECTOR J06.2, 3*32 PIN
	1	WQ	99	17	22A		WRAP CONNECTOR J17.1, 3*32 PIN

```
*  STUDER  *  SIGNAL  WIRE  LIST          *  82/01/12 * 15:02    *  PAGE   33  *
TAPE LOCK SYSTEM 2000 A800: SERIAL PROGRAMMER          1.228.900.00        79/10/10

SIG.NAME COLOR TYPE GR EL PT  S DESCRIPTION OF ELEMENT
-------- ----- ---- -- -- --- - ------------------------------
MCSUPVIS 6     B    98 51 08   MASTER CONTROL CONNECTOR A800
         6     WQ   99 17 25C  WRAP CONNECTOR J17.1, 3*32 PIN
               W  + 99 20 25F  WRAP CONNECTOR J20.2, 3*32 PIN

MCZSETDR 5     B    98 51 16   MASTER CONTROL CONNECTOR A800
         5     WQ   99 17 03C  WRAP CONNECTOR J17.1, 3*32 PIN
               W  + 99 20 03F  WRAP CONNECTOR J20.2, 3*32 PIN

MDIRDWNM       W    99 01 06A  WRAP CONNECTOR J01.1, 3*32 PIN
               W    99 03 06A  WRAP CONNECTOR J03.1, 3*32 PIN

MDMFAILM       W    99 01 05A  WRAP CONNECTOR J01.1, 3*32 PIN
               W    99 05 08A  WRAP CONNECTOR J05.1, 3*32 PIN

MPSYNCM        W    99 01 07A  WRAP CONNECTOR J01.1, 3*32 PIN
               W    99 02 07B  WRAP CONNECTOR J02.1, 3*32 PIN
               W    99 03 07A  WRAP CONNECTOR J03.1, 3*32 PIN
               W    99 05 07A  WRAP CONNECTOR J05.1, 3*32 PIN

MPWRON   2     B    98 51 04   MASTER CONTROL CONNECTOR A800
         2     WQ   99 17 27A  WRAP CONNECTOR J17.1, 3*32 PIN

MP2DMM         W    99 01 03A  WRAP CONNECTOR J01.1, 3*32 PIN
               W    99 03 02A  WRAP CONNECTOR J03.1, 3*32 PIN
               W    99 05 03A  WRAP CONNECTOR J05.1, 3*32 PIN

MP3DMM         W    99 01 04A  WRAP CONNECTOR J01.1, 3*32 PIN
               W    99 02 04B  WRAP CONNECTOR J02.1, 3*32 PIN
               W    99 03 03A  WRAP CONNECTOR J03.1, 3*32 PIN
               W    99 05 04A  WRAP CONNECTOR J05.1, 3*32 PIN

NACRES1        W    99 04 17A  WRAP CONNECTOR J04.1, 3*32 PIN
               W    99 14 17B  WRAP CONNECTOR J14.1, 3*32 PIN

NCOCKCT        W    99 04 03C  WRAP CONNECTOR J04.1, 3*32 PIN
               W    99 05 30A  WRAP CONNECTOR J05.1, 3*32 PIN

NDMCOD-M       W    99 03 05A  WRAP CONNECTOR J03.1, 3*32 PIN
               W    99 13 18A  WRAP CONNECTOR J13.1, 3*32 PIN

NDMCOD-S       W    99 03 05C  WRAP CONNECTOR J03.1, 3*32 PIN
               W    99 13 18C  WRAP CONNECTOR J13.1, 3*32 PIN

NEMGSTOP       W    99 06 13A  WRAP CONNECTOR J06.1, 3*32 PIN
               W  + 99 08 13A  WRAP CONNECTOR J08.1, 3*32 PIN
               W  + 99 20 11F  WRAP CONNECTOR J20.2, 3*32 PIN

NFRAMSLB       W    99 05 05C  WRAP CONNECTOR J05.1, 3*32 PIN

NFRQCTLD       W    99 01 22A  WRAP CONNECTOR J01.1, 3*32 PIN
               W    99 02 22B  WRAP CONNECTOR J02.1, 3*32 PIN

NINVCTR1       W    99 05 03B  WRAP CONNECTOR J05.1, 3*32 PIN
               W    99 14 13C  WRAP CONNECTOR J14.1, 3*32 PIN

NINVCTR2       W    99 05 05B  WRAP CONNECTOR J05.1, 3*32 PIN
                                                          ./.

SIG.NAME COLOR TYPE GR EL PT  S DESCRIPTION OF ELEMENT
-------- ----- ---- -- -- --- - ------------------------------
(CONT.)        W    99 14 17C  WRAP CONNECTOR J14.1, 3*32 PIN

NOCODE-3       W    99 05 04B  WRAP CONNECTOR J05.1, 3*32 PIN
               W    99 06 29C  WRAP CONNECTOR J06.1, 3*32 PIN

NOMASTER       W    99 05 02B  WRAP CONNECTOR J05.1, 3*32 PIN
               W    99 06 30C  WRAP CONNECTOR J06.1, 3*32 PIN

NPINSTEN       W    99 06 28C  WRAP CONNECTOR J06.1, 3*32 PIN
               W    99 15 13C  WRAP CONNECTOR J15.1, 3*32 PIN

NPPWRON        W    99 03 23B  WRAP CONNECTOR J03.1, 3*32 PIN
               W    99 06 18C  WRAP CONNECTOR J06.1, 3*32 PIN
               W    99 08 18A  WRAP CONNECTOR J08.1, 3*32 PIN
               W    99 14 22B  WRAP CONNECTOR J14.1, 3*32 PIN

NTRMDATA       W    99 07 09A  WRAP CONNECTOR J07.1, 3*32 PIN
               W    99 09 04D  WRAP CONNECTOR J09.2, 3*32 PIN

NTRMDATB       W    99 07 10A  WRAP CONNECTOR J07.1, 3*32 PIN
           0   WQ   99 09 09C  WRAP CONNECTOR J09.1, 3*32 PIN
           0   WQ   99 09 13F  WRAP CONNECTOR J09.2, 3*32 PIN

NTRMDATC       W    99 07 11A  WRAP CONNECTOR J07.1, 3*32 PIN
           1   WQ   99 09 10C  WRAP CONNECTOR J09.1, 3*32 PIN
           1   WQ   99 09 24F  WRAP CONNECTOR J09.2, 3*32 PIN

NTRMDATD       W    99 07 13A  WRAP CONNECTOR J07.1, 3*32 PIN
           2   WQ   99 09 11C  WRAP CONNECTOR J09.1, 3*32 PIN
           2   WQ   99 10 02D  WRAP CONNECTOR J10.2, 3*32 PIN

NTRMDTA        W    99 07 30A  WRAP CONNECTOR J07.1, 3*32 PIN
               W    99 09 09A  WRAP CONNECTOR J09.1, 3*32 PIN

PARKEDDR 2     B    97 71 10   AUXILIARY CONNECTOR
         4     B    98 51 06   MASTER CONTROL CONNECTOR A800
         2     WQ   99 07 04D  WRAP CONNECTOR J07.2, 3*32 PIN
         4     WQ   99 17 17A  WRAP CONNECTOR J17.1, 3*32 PIN

PBMASREG       W    99 04 05B  WRAP CONNECTOR J04.1, 3*32 PIN

PCBAL          W    99 06 09A  WRAP CONNECTOR J06.1, 3*32 PIN
               W    99 07 09C  WRAP CONNECTOR J07.1, 3*32 PIN

PCBALQ0        W    99 01 04C  WRAP CONNECTOR J01.1, 3*32 PIN
               W    99 07 31B  WRAP CONNECTOR J07.1, 3*32 PIN

PCBALQ2        W    99 01 18A  WRAP CONNECTOR J01.1, 3*32 PIN
               W    99 07 18C  WRAP CONNECTOR J07.1, 3*32 PIN

PCBALQ3        W    99 07 30B  WRAP CONNECTOR J07.1, 3*32 PIN

PCBPLTCL       W    99 06 24C  WRAP CONNECTOR J06.1, 3*32 PIN
               W  + 99 17 18B  WRAP CONNECTOR J17.1, 3*32 PIN

PCBPMUXA       W    99 07 22C  WRAP CONNECTOR J07.1, 3*32 PIN
                                                          ./.
```

```
*  STUDER  *  SIGNAL  WIRE  LIST          *  82/01/12 * 15:02    *  PAGE   34  *
TAPE LOCK SYSTEM 2000 A800: SERIAL PROGRAMMER          1.228.900.00        79/10/10

SIG.NAME COLOR TYPE GR EL PT  S DESCRIPTION OF ELEMENT
-------- ----- ---- -- -- --- - ------------------------------
(CONT.)        W    99 17 28B  WRAP CONNECTOR J17.1, 3*32 PIN

PCBPMUXB       W    99 07 23C  WRAP CONNECTOR J07.1, 3*32 PIN
               W    99 17 27B  WRAP CONNECTOR J17.1, 3*32 PIN

PCBPWE         W    99 06 25C  WRAP CONNECTOR J06.1, 3*32 PIN
               W    99 17 21B  WRAP CONNECTOR J17.1, 3*32 PIN

PCBSP          W    99 06 17A  WRAP CONNECTOR J06.1, 3*32 PIN

PCBTEST        W    99 06 29B  WRAP CONNECTOR J06.1, 3*32 PIN
               W    99 07 29B  WRAP CONNECTOR J07.1, 3*32 PIN

PCBTESTA       W    99 07 25C  WRAP CONNECTOR J07.1, 3*32 PIN

PCBTESTB       W    99 07 26C  WRAP CONNECTOR J07.1, 3*32 PIN

PCBTESTC       W    99 01 24A  WRAP CONNECTOR J01.1, 3*32 PIN
               W    99 07 24C  WRAP CONNECTOR J07.1, 3*32 PIN

PCBTEST4       W    99 07 31A  WRAP CONNECTOR J07.1, 3*32 PIN

PCDATACC       W    99 06 03A  WRAP CONNECTOR J06.1, 3*32 PIN
               W    99 09 27C  WRAP CONNECTOR J09.1, 3*32 PIN

PCDATINA       W    99 07 09B  WRAP CONNECTOR J07.1, 3*32 PIN
               W    99 09 09B  WRAP CONNECTOR J09.1, 3*32 PIN

PCDATINB       W    99 07 10B  WRAP CONNECTOR J07.1, 3*32 PIN
               W    99 09 10B  WRAP CONNECTOR J09.1, 3*32 PIN

PCDATINC       W    99 07 11B  WRAP CONNECTOR J07.1, 3*32 PIN
               W    99 09 11B  WRAP CONNECTOR J09.1, 3*32 PIN

PCDATIND       W    99 07 13B  WRAP CONNECTOR J07.1, 3*32 PIN
               W    99 09 13B  WRAP CONNECTOR J09.1, 3*32 PIN

PCDATINE       W    99 06 10A  WRAP CONNECTOR J06.1, 3*32 PIN
               W    99 09 17B  WRAP CONNECTOR J09.1, 3*32 PIN

PCDATRDY       W    99 06 02A  WRAP CONNECTOR J06.1, 3*32 PIN
         9     WQ   99 09 25C  WRAP CONNECTOR J09.1, 3*32 PIN
         9     WQ   99 10 11B  WRAP CONNECTOR J10.1, 3*32 PIN

PCEXPR-1       W    99 07 02B  WRAP CONNECTOR J07.1, 3*32 PIN

PCEXPR-2       W    99 07 03B  WRAP CONNECTOR J07.1, 3*32 PIN

PCEXPR-3       W    99 07 04B  WRAP CONNECTOR J07.1, 3*32 PIN

PCEXPRRQ       W    99 06 05C  WRAP CONNECTOR J06.1, 3*32 PIN
               W    99 07 05B  WRAP CONNECTOR J07.1, 3*32 PIN

PCIFCTST       W    99 07 29A  WRAP CONNECTOR J07.1, 3*32 PIN

PCPGAD00       W    99 06 03C  WRAP CONNECTOR J06.1, 3*32 PIN
                                                          ./.

SIG.NAME COLOR TYPE GR EL PT  S DESCRIPTION OF ELEMENT
-------- ----- ---- -- -- --- - ------------------------------
(CONT.)        W    99 15 02C  WRAP CONNECTOR J15.1, 3*32 PIN

PCPGAD01       W    99 06 07B  WRAP CONNECTOR J06.1, 3*32 PIN
               W    99 15 03C  WRAP CONNECTOR J15.1, 3*32 PIN

PCPGAD02       W    99 06 08B  WRAP CONNECTOR J06.1, 3*32 PIN
               W    99 15 04C  WRAP CONNECTOR J15.1, 3*32 PIN

PCPGAD03       W    99 06 09C  WRAP CONNECTOR J06.1, 3*32 PIN
               W    99 15 05C  WRAP CONNECTOR J15.1, 3*32 PIN

PCPGAD04       W    99 06 10C  WRAP CONNECTOR J06.1, 3*32 PIN
               W    99 15 06C  WRAP CONNECTOR J15.1, 3*32 PIN

PCPGAD05       W    99 06 11C  WRAP CONNECTOR J06.1, 3*32 PIN
               W    99 15 07C  WRAP CONNECTOR J15.1, 3*32 PIN

PCPGAD06       W    99 06 21B  WRAP CONNECTOR J06.1, 3*32 PIN
               W    99 15 08C  WRAP CONNECTOR J15.1, 3*32 PIN

PCPGAD07       W    99 06 24B  WRAP CONNECTOR J06.1, 3*32 PIN
               W    99 15 09C  WRAP CONNECTOR J15.1, 3*32 PIN

PCPGAD08       W    99 06 26B  WRAP CONNECTOR J06.1, 3*32 PIN
               W    99 15 10C  WRAP CONNECTOR J15.1, 3*32 PIN

PCPGAD09       W    99 06 21C  WRAP CONNECTOR J06.1, 3*32 PIN
               W    99 15 11C  WRAP CONNECTOR J15.1, 3*32 PIN

PCPGAD10       W    99 06 22C  WRAP CONNECTOR J06.1, 3*32 PIN
               W    99 15 08B  WRAP CONNECTOR J15.1, 3*32 PIN

PCPGAD11       W    99 06 23C  WRAP CONNECTOR J06.1, 3*32 PIN
               W    99 15 09B  WRAP CONNECTOR J15.1, 3*32 PIN

PCPGDATA       W    99 01 07C  WRAP CONNECTOR J01.1, 3*32 PIN
               W    99 02 09C  WRAP CONNECTOR J02.1, 3*32 PIN
               W    99 03 09C  WRAP CONNECTOR J03.1, 3*32 PIN
               W    99 06 18A  WRAP CONNECTOR J06.1, 3*32 PIN
               W    99 07 18A  WRAP CONNECTOR J07.1, 3*32 PIN
               W    99 08 26C  WRAP CONNECTOR J08.1, 3*32 PIN
               W    99 09 28C  WRAP CONNECTOR J09.1, 3*32 PIN
               W  + 99 11 28A  WRAP CONNECTOR J11.1, 3*32 PIN
               W    99 15 17C  WRAP CONNECTOR J15.1, 3*32 PIN
               W    99 17 29B  WRAP CONNECTOR J17.1, 3*32 PIN

PCPGDATB       W    99 01 08C  WRAP CONNECTOR J01.1, 3*32 PIN
               W    99 02 10C  WRAP CONNECTOR J02.1, 3*32 PIN
               W    99 03 10C  WRAP CONNECTOR J03.1, 3*32 PIN
               W    99 06 21A  WRAP CONNECTOR J06.1, 3*32 PIN
               W    99 07 21A  WRAP CONNECTOR J07.1, 3*32 PIN
               W    99 08 27C  WRAP CONNECTOR J08.1, 3*32 PIN
               W    99 09 29C  WRAP CONNECTOR J09.1, 3*32 PIN
               W  + 99 11 29A  WRAP CONNECTOR J11.1, 3*32 PIN
               W    99 15 18C  WRAP CONNECTOR J15.1, 3*32 PIN
               W    99 17 30B  WRAP CONNECTOR J17.1, 3*32 PIN
```

```
*****************************************************************************************************************
*  S T U D E R  *   S I G N A L   W I R E   L I S T          *   82/01/12 * 15:02      *  P A G E    35   *
*****************************************************************************************************************
TAPE LOCK SYSTEM 2000 A800: SERIAL PROGRAMMER                1.228.900.00              79/10/10

SIG.NAME COLOR TYPE GR EL PT  S DESCRIPTION OF ELEMENT
-------- ----- ---- -- -- --- - ------------------------------
PCPGDATC       W    99 01 09C   WRAP CONNECTOR J01.1, 3*32 PIN
               W    99 02 11C   WRAP CONNECTOR J02.1, 3*32 PIN
               W    99 03 11C   WRAP CONNECTOR J03.1, 3*32 PIN
               W    99 06 22A   WRAP CONNECTOR J06.1, 3*32 PIN
               W    99 07 22A   WRAP CONNECTOR J07.1, 3*32 PIN
               W    99 08 29C   WRAP CONNECTOR J08.1, 3*32 PIN
               W    99 09 30C   WRAP CONNECTOR J09.1, 3*32 PIN
               W  + 99 11 30A   WRAP CONNECTOR J11.1, 3*32 PIN
               W    99 15 21C   WRAP CONNECTOR J15.1, 3*32 PIN
               W    99 17 31B   WRAP CONNECTOR J17.1, 3*32 PIN

PCPGDATD       W    99 06 23A   WRAP CONNECTOR J06.1, 3*32 PIN
               W    99 07 23A   WRAP CONNECTOR J07.1, 3*32 PIN
               W    99 15 22C   WRAP CONNECTOR J15.1, 3*32 PIN
               W    99 17 26B   WRAP CONNECTOR J17.1, 3*32 PIN

PCPGDATE       W    99 06 24A   WRAP CONNECTOR J06.1, 3*32 PIN
               W    99 07 24A   WRAP CONNECTOR J07.1, 3*32 PIN
               W    99 15 23C   WRAP CONNECTOR J15.1, 3*32 PIN

PCPGDATF       W    99 06 25A   WRAP CONNECTOR J06.1, 3*32 PIN
               W    99 07 25A   WRAP CONNECTOR J07.1, 3*32 PIN
               W    99 15 24C   WRAP CONNECTOR J15.1, 3*32 PIN

PCPGDATG       W    99 06 26A   WRAP CONNECTOR J06.1, 3*32 PIN
               W    99 07 26A   WRAP CONNECTOR J07.1, 3*32 PIN
               W    99 15 25C   WRAP CONNECTOR J15.1, 3*32 PIN

PCPGDATH       W    99 02 27B   WRAP CONNECTOR J02.1, 3*32 PIN
               W    99 06 27A   WRAP CONNECTOR J06.1, 3*32 PIN
               W    99 07 27A   WRAP CONNECTOR J07.1, 3*32 PIN
               W    99 08 10A   WRAP CONNECTOR J08.1, 3*32 PIN
               W  + 99 11 31A   WRAP CONNECTOR J11.1, 3*32 PIN
               W    99 15 26C   WRAP CONNECTOR J15.1, 3*32 PIN
               W    99 17 28A   WRAP CONNECTOR J17.1, 3*32 PIN
               W  + 99 18 26A   WRAP CONNECTOR J18.1, 3*32 PIN

PCPGDATI       W    99 06 28A   WRAP CONNECTOR J06.1, 3*32 PIN
               W    99 07 28A   WRAP CONNECTOR J07.1, 3*32 PIN
               W    99 15 27C   WRAP CONNECTOR J15.1, 3*32 PIN

PCPGDATK       W    99 06 29A   WRAP CONNECTOR J06.1, 3*32 PIN
               W    99 15 28C   WRAP CONNECTOR J15.1, 3*32 PIN

PCPGDATL       W    99 06 30A   WRAP CONNECTOR J06.1, 3*32 PIN
               W    99 15 29C   WRAP CONNECTOR J15.1, 3*32 PIN

PCPGDATM       W    99 06 31A   WRAP CONNECTOR J06.1, 3*32 PIN
               W    99 15 30C   WRAP CONNECTOR J15.1, 3*32 PIN

PCPGDATN       W    99 06 28B   WRAP CONNECTOR J06.1, 3*32 PIN
               W    99 15 31C   WRAP CONNECTOR J15.1, 3*32 PIN

PCSPGRPA       W    99 06 02B   WRAP CONNECTOR J06.1, 3*32 PIN

PCSPGRP2       W    99 01 23A   WRAP CONNECTOR J01.1, 3*32 PIN
                                                          ./.

SIG.NAME COLOR TYPE GR EL PT  S DESCRIPTION OF ELEMENT
-------- ----- ---- -- -- --- - ------------------------------
(CONT.)        W    99 06 25B   WRAP CONNECTOR J06.1, 3*32 PIN

PCSPGRP3       W    99 02 06C   WRAP CONNECTOR J02.1, 3*32 PIN
               W    99 06 06C   WRAP CONNECTOR J06.1, 3*32 PIN

PCTAPFLG       W    99 06 17C   WRAP CONNECTOR J06.1, 3*32 PIN
               W    99 15 17B   WRAP CONNECTOR J15.1, 3*32 PIN

PCTDCLR        W    99 06 04C   WRAP CONNECTOR J06.1, 3*32 PIN
               W  + 99 08 04B   WRAP CONNECTOR J08.1, 3*32 PIN

PEDITLD        W    99 02 10B   WRAP CONNECTOR J02.1, 3*32 PIN
               W    99 07 10C   WRAP CONNECTOR J07.1, 3*32 PIN

PERCAPFR       W    99 02 02C   WRAP CONNECTOR J02.1, 3*32 PIN
               W  + 99 08 02C   WRAP CONNECTOR J08.1, 3*32 PIN

PERDATA        W    99 05 10B   WRAP CONNECTOR J05.1, 3*32 PIN
               W    99 07 31C   WRAP CONNECTOR J07.1, 3*32 PIN
               W    99 14 24B   WRAP CONNECTOR J14.1, 3*32 PIN

PERMNTM1       W    99 03 13C   WRAP CONNECTOR J03.1, 3*32 PIN

PERMNTM2       W    99 03 17C   WRAP CONNECTOR J03.1, 3*32 PIN

PERMNTM3       W    99 03 18C   WRAP CONNECTOR J03.1, 3*32 PIN

PERMNTM4       W    99 01 10C   WRAP CONNECTOR J01.1, 3*32 PIN
               W    99 03 21C   WRAP CONNECTOR J03.1, 3*32 PIN
               W  + 99 04 22B   WRAP CONNECTOR J04.1, 3*32 PIN

PER1DM-M       W    99 13 21A   WRAP CONNECTOR J13.1, 3*32 PIN

PER1DM-S       W    99 13 08B   WRAP CONNECTOR J13.1, 3*32 PIN

PER2DM-M       W    99 13 22A   WRAP CONNECTOR J13.1, 3*32 PIN

PER2DM-S       W    99 13 09B   WRAP CONNECTOR J13.1, 3*32 PIN

PER3DM-M       W    99 13 23A   WRAP CONNECTOR J13.1, 3*32 PIN

PER3DM-S       W    99 13 10B   WRAP CONNECTOR J13.1, 3*32 PIN

PER4DM-M       W    99 13 24A   WRAP CONNECTOR J13.1, 3*32 PIN

PER4DM-S       W    99 13 11B   WRAP CONNECTOR J13.1, 3*32 PIN

PLAY  -M       W    99 03 10A   WRAP CONNECTOR J03.1, 3*32 PIN

PMNTM  1       W    99 03 13A   WRAP CONNECTOR J03.1, 3*32 PIN
               W    99 04 13B   WRAP CONNECTOR J04.1, 3*32 PIN
               W    99 06 13B   WRAP CONNECTOR J06.1, 3*32 PIN
           4   WQ   99 09 13E   WRAP CONNECTOR J09.2, 3*32 PIN
           4   WQ   99 09 18C   WRAP CONNECTOR J09.1, 3*32 PIN
               W    99 15 02B   WRAP CONNECTOR J15.1, 3*32 PIN
               W  + 99 19 13C   WRAP CONNECTOR J19.1, 3*32 PIN
```

```
*****************************************************************************************************************
*  S T U D E R  *   S I G N A L   W I R E   L I S T          *   82/01/12 * 15:02      *  P A G E    36   *
*****************************************************************************************************************
TAPE LOCK SYSTEM 2000 A800: SERIAL PROGRAMMER                1.228.900.00              79/10/10

SIG.NAME COLOR TYPE GR EL PT  S DESCRIPTION OF ELEMENT
-------- ----- ---- -- -- --- - ------------------------------
PMNTM  2       W    99 01 13C   WRAP CONNECTOR J01.1, 3*32 PIN
               W    99 02 17B   WRAP CONNECTOR J02.1, 3*32 PIN
               W    99 03 17A   WRAP CONNECTOR J03.1, 3*32 PIN
               W    99 06 17B   WRAP CONNECTOR J06.1, 3*32 PIN
               W    99 07 17B   WRAP CONNECTOR J07.1, 3*32 PIN
               W    99 08 25A   WRAP CONNECTOR J08.1, 3*32 PIN
               W    99 09 24C   WRAP CONNECTOR J09.1, 3*32 PIN
               W    99 10 11A   WRAP CONNECTOR J10.1, 3*32 PIN
               W  + 99 11 31C   WRAP CONNECTOR J11.1, 3*32 PIN
               W  + 99 13 25A   WRAP CONNECTOR J13.1, 3*32 PIN
               W    99 15 03B   WRAP CONNECTOR J15.1, 3*32 PIN
               W    99 17 17B   WRAP CONNECTOR J17.1, 3*32 PIN

PMNTM  3       W    99 03 18A   WRAP CONNECTOR J03.1, 3*32 PIN
               W    99 04 18B   WRAP CONNECTOR J04.1, 3*32 PIN
               W    99 06 18B   WRAP CONNECTOR J06.1, 3*32 PIN
               W  + 99 09 18E   WRAP CONNECTOR J09.2, 3*32 PIN
               W    99 15 04B   WRAP CONNECTOR J15.1, 3*32 PIN

PMNTM  4       W    99 01 11C   WRAP CONNECTOR J01.1, 3*32 PIN
               W    99 02 22C   WRAP CONNECTOR J02.1, 3*32 PIN
               W    99 03 21A   WRAP CONNECTOR J03.1, 3*32 PIN
               W    99 04 21B   WRAP CONNECTOR J04.1, 3*32 PIN
               W    99 05 21B   WRAP CONNECTOR J05.1, 3*32 PIN
               W    99 07 21C   WRAP CONNECTOR J07.1, 3*32 PIN
               W  + 99 09 21E   WRAP CONNECTOR J09.2, 3*32 PIN
               W    99 14 21B   WRAP CONNECTOR J14.1, 3*32 PIN
               W    99 15 05B   WRAP CONNECTOR J15.1, 3*32 PIN
               W  + 99 19 17A   WRAP CONNECTOR J19.1, 3*32 PIN

PPBPRESS       W    99 06 03B   WRAP CONNECTOR J06.1, 3*32 PIN
               W    99 09 18B   WRAP CONNECTOR J09.1, 3*32 PIN

PPWRON         W    99 04 23B   WRAP CONNECTOR J04.1, 3*32 PIN
               W    99 05 05A   WRAP CONNECTOR J05.1, 3*32 PIN
               W    99 08 06A   WRAP CONNECTOR J08.1, 3*32 PIN
               W    99 09 23A   WRAP CONNECTOR J09.1, 3*32 PIN
               W    99 10 30C   WRAP CONNECTOR J10.1, 3*32 PIN
               W  + 99 11 24A   WRAP CONNECTOR J11.1, 3*32 PIN
               W    99 17 23B   WRAP CONNECTOR J17.1, 3*32 PIN
               W  + 99 20 23A   WRAP CONNECTOR J20.1, 3*32 PIN

PRGRON         W    99 06 11A   WRAP CONNECTOR J06.1, 3*32 PIN
               W  + 99 08 02E   WRAP CONNECTOR J08.2, 3*32 PIN

PRIFTRXY       W    99 06 09B   WRAP CONNECTOR J06.1, 3*32 PIN
               W    99 09 31C   WRAP CONNECTOR J09.1, 3*32 PIN

PROCSUPV 4     B    97 51 37    COMMAND LINE A800
               W  + 99 06 05E   WRAP CONNECTOR J06.2, 3*32 PIN
         4     WQ   99 06 27E   WRAP CONNECTOR J06.2, 3*32 PIN
               W    99 17 21A   WRAP CONNECTOR J17.1, 3*32 PIN

PROGSTOP       W    99 04 09B   WRAP CONNECTOR J04.1, 3*32 PIN

PSYNC -M       W    99 01 11A   WRAP CONNECTOR J01.1, 3*32 PIN
                                                          ./.

SIG.NAME COLOR TYPE GR EL PT  S DESCRIPTION OF ELEMENT
-------- ----- ---- -- -- --- - ------------------------------
(CONT.)        W    99 13 31A   WRAP CONNECTOR J13.1, 3*32 PIN

PSYNC -S       W    99 01 03C   WRAP CONNECTOR J01.1, 3*32 PIN
               W    99 03 07C   WRAP CONNECTOR J03.1, 3*32 PIN
               W    99 05 07C   WRAP CONNECTOR J05.1, 3*32 PIN
               W    99 13 29C   WRAP CONNECTOR J13.1, 3*32 PIN

P1DM  -M       W    99 13 08A   WRAP CONNECTOR J13.1, 3*32 PIN

P1DM  -S       W    99 02 21C   WRAP CONNECTOR J02.1, 3*32 PIN
               W    99 13 21C   WRAP CONNECTOR J13.1, 3*32 PIN

P2DM  -M       W    99 01 25B   WRAP CONNECTOR J01.1, 3*32 PIN
               W    99 13 09A   WRAP CONNECTOR J13.1, 3*32 PIN

P2DM  -S       W    99 03 02C   WRAP CONNECTOR J03.1, 3*32 PIN
               W    99 05 03C   WRAP CONNECTOR J05.1, 3*32 PIN
               W  + 99 13 11C   WRAP CONNECTOR J13.1, 3*32 PIN
               W    99 13 22C   WRAP CONNECTOR J13.1, 3*32 PIN

P3DM  -M       W    99 01 24B   WRAP CONNECTOR J01.1, 3*32 PIN
               W    99 13 10A   WRAP CONNECTOR J13.1, 3*32 PIN

P3DM  -S       W    99 02 03C   WRAP CONNECTOR J02.1, 3*32 PIN
               W    99 03 03C   WRAP CONNECTOR J03.1, 3*32 PIN
               W    99 05 04C   WRAP CONNECTOR J05.1, 3*32 PIN
               W    99 13 23C   WRAP CONNECTOR J13.1, 3*32 PIN

P4DM  -M       W    99 03 04A   WRAP CONNECTOR J03.1, 3*32 PIN
               W    99 13 11A   WRAP CONNECTOR J13.1, 3*32 PIN

P4DM  -S       W    99 03 04C   WRAP CONNECTOR J03.1, 3*32 PIN
               W    99 13 24C   WRAP CONNECTOR J13.1, 3*32 PIN

RAMMUX         W    99 03 09A   WRAP CONNECTOR J03.1, 3*32 PIN
               W    99 06 30B   WRAP CONNECTOR J06.1, 3*32 PIN

RECDATA  1     L    97 81 02    TLS LINE AMPLIFIER, PRINT
         1     WQ   99 09 23C   WRAP CONNECTOR J09.1, 3*32 PIN

RECEIVE1 2     L    97 81 00C   TLS LINE AMPLIFIER, PRINT
         2     L    97 82 02    TLS LINE AMPLIFIER, 5POL. FEMALE

RECEIVE2 3     L    97 81 00D   TLS LINE AMPLIFIER, PRINT
         3     L    97 82 03    TLS LINE AMPLIFIER, 5POL. FEMALE

RECLATEN       W  + 99 02 26A   WRAP CONNECTOR J02.1, 3*32 PIN
               W    99 06 04A   WRAP CONNECTOR J06.1, 3*32 PIN
               W  + 99 08 06B   WRAP CONNECTOR J08.1, 3*32 PIN
               W  + 99 11 27A   WRAP CONNECTOR J11.1, 3*32 PIN

REPRECMX       W  + 99 02 08B   WRAP CONNECTOR J02.1, 3*32 PIN
               W    99 06 05B   WRAP CONNECTOR J06.1, 3*32 PIN
               W  + 99 08 05B   WRAP CONNECTOR J08.1, 3*32 PIN
               W  + 99 11 26A   WRAP CONNECTOR J11.1, 3*32 PIN
```

```
*  STUDER  *    S I G N A L    W I R E    L I S T          *   82/01/12 * 15:02     *  P A G E    37   *
TAPE LOCK SYSTEM 2000 A800: SERIAL PROGRAMMER              1.228.900.00          79/10/10

SIG.NAME  COLOR TYPE GR EL PT  S DESCRIPTION OF ELEMENT
--------- ----- ---- -- -- --- - ------------------------------
REPROSEL          W    99 07 27C   WRAP CONNECTOR J07.1, 3*32 PIN
                  W  + 99 08 11A   WRAP CONNECTOR J08.1, 3*32 PIN
                  W  + 99 11 27C   WRAP CONNECTOR J11.1, 3*32 PIN
                  W  + 99 12 29A   WRAP CONNECTOR J12.1, 3*32 PIN

REQUEST   8       B    97 51 15    COMMAND LINE A800
          8       WQ   99 06 18F   WRAP CONNECTOR J06.2, 3*32 PIN
                  W    99 08 03C   WRAP CONNECTOR J08.1, 3*32 PIN

RLINE -A          W    99 03 25B   WRAP CONNECTOR J03.1, 3*32 PIN
                  W    99 05 23C   WRAP CONNECTOR J05.1, 3*32 PIN

RLINE -B          W    99 03 24B   WRAP CONNECTOR J03.1, 3*32 PIN
                  W    99 05 24C   WRAP CONNECTOR J05.1, 3*32 PIN

R15 1322          W    99 13 02C   WRAP CONNECTOR J13.1, 3*32 PIN

SNCPLTDR  4       B    97 71 32    AUXILIARY CONNECTOR
          4       WQ   99 07 03E   WRAP CONNECTOR J07.2, 3*32 PIN
                  W    99 17 18A   WRAP CONNECTOR J17.1, 3*32 PIN

SPOOLMOD          W    99 02 05A   WRAP CONNECTOR J02.1, 3*32 PIN
                  W    99 07 28C   WRAP CONNECTOR J07.1, 3*32 PIN

START-1A  1       B    97 71 21    AUXILIARY CONNECTOR
          1       L    97 72 01A   RELAIS PRINT

START-1B  1       B    97 71 22    AUXILIARY CONNECTOR
          1       L    97 72 01B   RELAIS PRINT

START-2A  6       B    97 71 23    AUXILIARY CONNECTOR
          6       L    97 72 02A   RELAIS PRINT

START-2B  6       B    97 71 24    AUXILIARY CONNECTOR
          6       L    97 72 02B   RELAIS PRINT

START-3A  9       B    97 71 25    AUXILIARY CONNECTOR
          9       L    97 72 03A   RELAIS PRINT

START-3B  9       B    97 71 26    AUXILIARY CONNECTOR
          9       L    97 72 03B   RELAIS PRINT

START-4A  4       B    97 71 27    AUXILIARY CONNECTOR
          4       L    97 72 04A   RELAIS PRINT

START-4B  4       B    97 71 28    AUXILIARY CONNECTOR
          4       L    97 72 04B   RELAIS PRINT

STARTDR1  1       L    97 72 01C   RELAIS PRINT
          1       WQ   99 07 06E   WRAP CONNECTOR J07.2, 3*32 PIN
                  W    99 17 29C   WRAP CONNECTOR J17.1, 3*32 PIN

STARTDR2  6       L    97 72 02C   RELAIS PRINT
          6       WQ   99 07 07E   WRAP CONNECTOR J07.2, 3*32 PIN
                  W    99 17 24A   WRAP CONNECTOR J17.1, 3*32 PIN

STARTDR3  9       L    97 72 03C   RELAIS PRINT
          9       WQ   99 07 08E   WRAP CONNECTOR J07.2, 3*32 PIN
                  W    99 08 07B   WRAP CONNECTOR J08.1, 3*32 PIN

STARTDR4  4       L    97 72 04C   RELAIS PRINT
          4       WQ   99 07 09E   WRAP CONNECTOR J07.2, 3*32 PIN
                  W    99 08 07C   WRAP CONNECTOR J08.1, 3*32 PIN

SVPCI             W  + 99 08 28D   WRAP CONNECTOR J08.2, 3*32 PIN
                  W    99 17 05B   WRAP CONNECTOR J17.1, 3*32 PIN

SVPCII            W  + 99 09 25F   WRAP CONNECTOR J09.2, 3*32 PIN
                  W    99 17 06B   WRAP CONNECTOR J17.1, 3*32 PIN

SVPCIII           W  + 99 10 06D   WRAP CONNECTOR J10.2, 3*32 PIN
                  W    99 17 11C   WRAP CONNECTOR J17.1, 3*32 PIN

SVSERPRC  6       WQ   99 08 30E   WRAP CONNECTOR J08.2, 3*32 PIN
          6       WQ   99 09 26C   WRAP CONNECTOR J09.1, 3*32 PIN
                  W    99 17 24B   WRAP CONNECTOR J17.1, 3*32 PIN

SYNCBDR   3       B    97 71 33    AUXILIARY CONNECTOR
          3       WQ   99 07 02E   WRAP CONNECTOR J07.2, 3*32 PIN
                  W    99 17 25A   WRAP CONNECTOR J17.1, 3*32 PIN

SYNCBOUT          W    99 01 02A   WRAP CONNECTOR J01.1, 3*32 PIN
                  W    99 02 02B   WRAP CONNECTOR J02.1, 3*32 PIN

SYNCSEL           W    99 07 29C   WRAP CONNECTOR J07.1, 3*32 PIN
                  W  + 99 08 30B   WRAP CONNECTOR J08.1, 3*32 PIN
                  W  + 99 11 24C   WRAP CONNECTOR J11.1, 3*32 PIN
                  W  + 99 12 30C   WRAP CONNECTOR J12.1, 3*32 PIN

TDATAM/S          W    99 03 23C   WRAP CONNECTOR J03.1, 3*32 PIN
                  W    99 14 23B   WRAP CONNECTOR J14.1, 3*32 PIN

TDCDMUX1          W    99 06 27B   WRAP CONNECTOR J06.1, 3*32 PIN
                  W    99 08 27A   WRAP CONNECTOR J08.1, 3*32 PIN

TDCDMUX2          W    99 06 26C   WRAP CONNECTOR J06.1, 3*32 PIN
                  W    99 08 26A   WRAP CONNECTOR J08.1, 3*32 PIN

TDLATEN1          W    99 06 11B   WRAP CONNECTOR J06.1, 3*32 PIN
                  W    99 08 11B   WRAP CONNECTOR J08.1, 3*32 PIN

TDLATEN2          W    99 06 22B   WRAP CONNECTOR J06.1, 3*32 PIN
                  W    99 08 13B   WRAP CONNECTOR J08.1, 3*32 PIN

TESTFLGS          W    99 04 13C   WRAP CONNECTOR J04.1, 3*32 PIN
                  W    99 07 13C   WRAP CONNECTOR J07.1, 3*32 PIN

TESTRAM           W    99 06 02C   WRAP CONNECTOR J06.1, 3*32 PIN
                  W    99 07 02C   WRAP CONNECTOR J07.1, 3*32 PIN

TIMLDEN           W    99 06 07C   WRAP CONNECTOR J06.1, 3*32 PIN
                  W    99 07 03C   WRAP CONNECTOR J07.1, 3*32 PIN
```

```
*  STUDER  *    S I G N A L    W I R E    L I S T          *   82/01/12 * 15:02     *  P A G E    38   *
TAPE LOCK SYSTEM 2000 A800: SERIAL PROGRAMMER              1.228.900.00          79/10/10

SIG.NAME  COLOR TYPE GR EL PT  S DESCRIPTION OF ELEMENT
--------- ----- ---- -- -- --- - ------------------------------
TRANSM1   4       L    97 81 00A   TLS LINE AMPLIFIER, PRINT
          4       L    97 82 04    TLS LINE AMPLIFIER, 5POL. FEMALE

TRANSM2   5       L    97 81 00B   TLS LINE AMPLIFIER, PRINT
          5       L    97 82 05    TLS LINE AMPLIFIER, 5POL. FEMALE

TRM/REC   1       B    97 51 17    COMMAND LINE A800
          1       WQ   99 06 30F   WRAP CONNECTOR J06.2, 3*32 PIN
                  W    99 08 10B   WRAP CONNECTOR J08.1, 3*32 PIN

TRMADR0           W    99 07 02A   WRAP CONNECTOR J07.1, 3*32 PIN
                  W    99 09 02A   WRAP CONNECTOR J09.1, 3*32 PIN
                  W    99 17 11B   WRAP CONNECTOR J17.1, 3*32 PIN

TRMADR1           W    99 07 03A   WRAP CONNECTOR J07.1, 3*32 PIN
                  W    99 09 03A   WRAP CONNECTOR J09.1, 3*32 PIN
                  W    99 17 10B   WRAP CONNECTOR J17.1, 3*32 PIN

TRMADR2           W    99 07 04A   WRAP CONNECTOR J07.1, 3*32 PIN
                  W    99 09 04A   WRAP CONNECTOR J09.1, 3*32 PIN
                  W    99 17 09B   WRAP CONNECTOR J17.1, 3*32 PIN

TRMADR3           W    99 07 05A   WRAP CONNECTOR J07.1, 3*32 PIN
                  W    99 09 05A   WRAP CONNECTOR J09.1, 3*32 PIN
                  W    99 17 08B   WRAP CONNECTOR J17.1, 3*32 PIN

TRMADR4           W    99 07 06A   WRAP CONNECTOR J07.1, 3*32 PIN
                  W    99 09 06A   WRAP CONNECTOR J09.1, 3*32 PIN
                  W    99 17 22B   WRAP CONNECTOR J17.1, 3*32 PIN

TRMADR5           W    99 07 07A   WRAP CONNECTOR J07.1, 3*32 PIN
                  W    99 09 07A   WRAP CONNECTOR J09.1, 3*32 PIN

TRMADR6           W    99 07 08A   WRAP CONNECTOR J07.1, 3*32 PIN
                  W    99 09 08A   WRAP CONNECTOR J09.1, 3*32 PIN

TRMDATA   5       L    97 81 04    TLS LINE AMPLIFIER, PRINT
          5       WQ   99 09 17C   WRAP CONNECTOR J09.1, 3*32 PIN

WEACFLG           W    99 04 08B   WRAP CONNECTOR J04.1, 3*32 PIN
                  W    99 07 08C   WRAP CONNECTOR J07.1, 3*32 PIN

WEPCFLG           W    99 06 06A   WRAP CONNECTOR J06.1, 3*32 PIN
                  W    99 07 06B   WRAP CONNECTOR J07.1, 3*32 PIN

WIRE001           W    99 06 05D   WRAP CONNECTOR J06.2,UNUSED WIRE
                  W    99 06 17D   WRAP CONNECTOR J06.2,UNUSED WIRE
                  W    99 08 02B   WRAP CONNECTOR J08.1,UNUSED WIRE

WIRE002           W    99 06 22D   WRAP CONNECTOR J06.2,UNUSED WIRE
                  W    99 07 11D   WRAP CONNECTOR J07.2,UNUSED WIRE
                  W    99 08 21A   WRAP CONNECTOR J08.1,UNUSED WIRE

WIRE003           W    99 07 13D   WRAP CONNECTOR J07.2,UNUSED WIRE
                  W    99 08 21B   WRAP CONNECTOR J08.1,UNUSED WIRE

WIRE004           W    99 11 08A   WRAP CONNECTOR J11.1,UNUSED WIRE
                  W    99 11 10A   WRAP CONNECTOR J11.1,UNUSED WIRE

WIRE005           W    99 11 09A   WRAP CONNECTOR J11.1,UNUSED WIRE
                  W    99 11 11A   WRAP CONNECTOR J11.1,UNUSED WIRE

WIRE006           W    99 11 08C   WRAP CONNECTOR J11.1,UNUSED WIRE
                  W    99 11 10C   WRAP CONNECTOR J11.1,UNUSED WIRE

WIRE007           W    99 11 09C   WRAP CONNECTOR J11.1,UNUSED WIRE
                  W    99 11 11C   WRAP CONNECTOR J11.1,UNUSED WIRE

WIRE008           W    99 07 17D   WRAP CONNECTOR J07.2,UNUSED WIRE
                  W    99 08 22B   WRAP CONNECTOR J08.1,UNUSED WIRE

WIRE009           W    99 07 18D   WRAP CONNECTOR J07.2,UNUSED WIRE
                  W    99 08 22C   WRAP CONNECTOR J08.1,UNUSED WIRE

WIRE010           W    99 07 21D   WRAP CONNECTOR J07.2,UNUSED WIRE
                  W    99 08 23C   WRAP CONNECTOR J08.1,UNUSED WIRE

WIRE011           W    99 07 25D   WRAP CONNECTOR J07.2,UNUSED WIRE
                  W    99 17 23A   WRAP CONNECTOR J17.1,UNUSED WIRE

WIRE012           W    99 06 17F   WRAP CONNECTOR J06.2,UNUSED WIRE
                  W    99 07 10E   WRAP CONNECTOR J07.2,UNUSED WIRE
                  W    99 08 18B   WRAP CONNECTOR J08.1,UNUSED WIRE

WIRE013           W    99 06 17E   WRAP CONNECTOR J06.2,UNUSED WIRE
                  W    99 07 13E   WRAP CONNECTOR J07.2,UNUSED WIRE
                  W    99 08 25C   WRAP CONNECTOR J08.1,UNUSED WIRE

WIRE014           W    99 06 21F   WRAP CONNECTOR J06.2,UNUSED WIRE
                  W    99 07 18E   WRAP CONNECTOR J07.2,UNUSED WIRE
                  W    99 08 07A   WRAP CONNECTOR J08.1,UNUSED WIRE

WIRE015           W    99 06 21E   WRAP CONNECTOR J06.2,UNUSED WIRE
                  W    99 07 21E   WRAP CONNECTOR J07.2,UNUSED WIRE
                  W    99 08 17C   WRAP CONNECTOR J08.1,UNUSED WIRE

WIRE016           W    99 06 22E   WRAP CONNECTOR J06.2,UNUSED WIRE
                  W    99 07 22E   WRAP CONNECTOR J07.2,UNUSED WIRE
                  W    99 08 31A   WRAP CONNECTOR J08.1,UNUSED WIRE

WIRE017           W    99 06 22F   WRAP CONNECTOR,J06.2,UNUSED WIRE
                  W    99 07 26E   WRAP CONNECTOR J07.2,UNUSED WIRE
                  W    99 08 28C   WRAP CONNECTOR J08.1,UNUSED WIRE

WIRE018           W    99 06 24E   WRAP CONNECTOR J06.2,UNUSED WIRE
                  W    99 07 27E   WRAP CONNECTOR J07.2,UNUSED WIRE
                  W    99 08 27B   WRAP CONNECTOR J08.1,UNUSED WIRE

WIRE019           W    99 07 10F   WRAP CONNECTOR J07.2,UNUSED WIRE
                  W    99 08 17B   WRAP CONNECTOR J08.1,UNUSED WIRE

WIRE020           W    99 07 13F   WRAP CONNECTOR J07.2,UNUSED WIRE
```

./.

SIG.NAME	COLOR	TYPE	GR	EL	PT	S	DESCRIPTION OF ELEMENT
(CONT.)		W	99	08	18C		WRAP CONNECTOR J08.1,UNUSED WIRE
WIRE021		W	99	07	17F		WRAP CONNECTOR J07.2,UNUSED WIRE
		W	99	08	21C		WRAP CONNECTOR J08.1,UNUSED WIRE
WIRE022		W	99	07	18F		WRAP CONNECTOR J07.2,UNUSED WIRE
		W	99	08	22A		WRAP CONNECTOR J08.1,UNUSED WIRE
WIRE023		W	99	07	21F		WRAP CONNECTOR J07.2,UNUSED WIRE
		W	99	08	23A		WRAP CONNECTOR J08.1,UNUSED WIRE
WIRE024		W	99	07	22F		WRAP CONNECTOR J07.2,UNUSED WIRE
		W	99	08	23B		WRAP CONNECTOR J08.1,UNUSED WIRE
WIRE025		W	99	07	23F		WRAP CONNECTOR J07.2,UNUSED WIRE
		W	99	08	24B		WRAP CONNECTOR J08.1,UNUSED WIRE
WIRE026		W	99	11	18B		WRAP CONNECTOR J11.1,UNUSED WIRE
		W	99	11	23A		WRAP CONNECTOR J11.1,UNUSED WIRE
		W	99	11	23B		WRAP CONNECTOR J11.1,UNUSED WIRE
		W	99	11	23C		WRAP CONNECTOR J11.1,UNUSED WIRE
		W	99	12	23A		WRAP CONNECTOR J12.1,UNUSED WIRE
		W	99	12	23B		WRAP CONNECTOR J12.1,UNUSED WIRE
		W	99	12	23C		WRAP CONNECTOR J12.1,UNUSED WIRE
WIRE027		W	99	12	28A		WRAP CONNECTOR J12.1,UNUSED WIRE
		W	99	12	28B		WRAP CONNECTOR J12.1,UNUSED WIRE
		W	99	12	28C		WRAP CONNECTOR J12.1,UNUSED WIRE
WIRE028		W	99	11	06B		WRAP CONNECTOR J11.1,UNUSED WIRE
		W	99	11	06C		WRAP CONNECTOR J11.1,UNUSED WIRE
WIRE029		W	99	08	13C		WRAP CONNECTOR J08.1,UNUSED WIRE
		W	99	11	05A		WRAP CONNECTOR J11.1,UNUSED WIRE
		W	99	18	02C		WRAP CONNECTOR J18.1,UNUSED WIRE
WIRE030		W	99	11	02C		WRAP CONNECTOR J11.1,UNUSED WIRE
		W	99	13	02A		WRAP CONNECTOR J13.1,UNUSED WIRE
WIRE031		W	99	11	03C		WRAP CONNECTOR J11.1,UNUSED WIRE
		W	99	13	03A		WRAP CONNECTOR J13.1,UNUSED WIRE
WIRE032		W	99	11	04C		WRAP CONNECTOR J11.1,UNUSED WIRE
		W	99	13	04A		WRAP CONNECTOR J13.1,UNUSED WIRE
WIRE033		W	99	17	02B		WRAP CONNECTOR J17.1,UNUSED WIRE
		W	99	20	02D		WRAP CONNECTOR J20.2,UNUSED WIRE
WIRE034		W	99	17	03B		WRAP CONNECTOR J17.1,UNUSED WIRE
		W	99	20	03D		WRAP CONNECTOR J20.2,UNUSED WIRE
WIRE035		W	99	17	04B		WRAP CONNECTOR J17.1,UNUSED WIRE
		W	99	20	04D		WRAP CONNECTOR J20.2,UNUSED WIRE
WIRE036		W	99	17	07B		WRAP CONNECTOR J17.1,UNUSED WIRE
		W	99	20	08D		WRAP CONNECTOR J20.2,UNUSED WIRE
WIRE037		W	99	17	26C		WRAP CONNECTOR J17.1,UNUSED WIRE
		W	99	20	26D		WRAP CONNECTOR J20.2,UNUSED WIRE
		W	99	20	26F		WRAP CONNECTOR J20.2,UNUSED WIRE
WIRE038		W	99	17	27C		WRAP CONNECTOR J17.1,UNUSED WIRE
		W	99	20	27D		WRAP CONNECTOR J20.2,UNUSED WIRE
		W	99	20	27F		WRAP CONNECTOR J20.2,UNUSED WIRE
WIRE039		W	99	17	31A		WRAP CONNECTOR J17.1,UNUSED WIRE
		W	99	20	31D		WRAP CONNECTOR J20.2,UNUSED WIRE
WIRE040		W	99	17	05C		WRAP CONNECTOR J17.1,UNUSED WIRE
		W	99	20	05F		WRAP CONNECTOR J20.2,UNUSED WIRE
		W	99	20	09D		WRAP CONNECTOR J20.2,UNUSED WIRE
WIRE041		W	99	17	06C		WRAP CONNECTOR J17.1,UNUSED WIRE
		W	99	20	06F		WRAP CONNECTOR J20.2,UNUSED WIRE
		W	99	20	10D		WRAP CONNECTOR J20.2,UNUSED WIRE
WIRE042		W	99	17	07C		WRAP CONNECTOR J17.1,UNUSED WIRE
		W	99	20	07F		WRAP CONNECTOR J20.2,UNUSED WIRE
		W	99	20	11D		WRAP CONNECTOR J20.2,UNUSED WIRE
WIRE043		W	99	17	08C		WRAP CONNECTOR J17.1,UNUSED WIRE
		W	99	20	08F		WRAP CONNECTOR J20.2,UNUSED WIRE
		W	99	20	17D		WRAP CONNECTOR J20.2,UNUSED WIRE
WIRE044		W	99	17	09C		WRAP CONNECTOR J17.1,UNUSED WIRE
		W	99	20	09F		WRAP CONNECTOR J20.2,UNUSED WIRE
WIRE045		W	99	17	10C		WRAP CONNECTOR J17.1,UNUSED WIRE
		W	99	20	10F		WRAP CONNECTOR J20.2,UNUSED WIRE
WIRE046		W	99	17	13C		WRAP CONNECTOR J17.1,UNUSED WIRE
		W	99	20	13D		WRAP CONNECTOR J20.2,UNUSED WIRE
		W	99	20	13F		WRAP CONNECTOR J20.2,UNUSED WIRE
WIRE047		W	99	17	17C		WRAP CONNECTOR J17.1,UNUSED WIRE
		W	99	20	17F		WRAP CONNECTOR J20.2,UNUSED WIRE
WIRE048		W	99	17	18C		WRAP CONNECTOR J17.1,UNUSED WIRE
		W	99	20	18D		WRAP CONNECTOR J20.2,UNUSED WIRE
		W	99	20	18F		WRAP CONNECTOR J20.2,UNUSED WIRE
WIRE049		W	99	17	21C		WRAP CONNECTOR J17.1,UNUSED WIRE
		W	99	20	21D		WRAP CONNECTOR J20.2,UNUSED WIRE
		W	99	20	21F		WRAP CONNECTOR J20.2,UNUSED WIRE
WIRE050		W	99	17	22C		WRAP CONNECTOR J17.1,UNUSED WIRE
		W	99	20	22D		WRAP CONNECTOR J20.2,UNUSED WIRE
		W	99	20	22F		WRAP CONNECTOR J20.2,UNUSED WIRE
WIRE051		W	99	17	23C		WRAP CONNECTOR J17.1,UNUSED WIRE
		W	99	20	23D		WRAP CONNECTOR J20.2,UNUSED WIRE
		W	99	20	23F		WRAP CONNECTOR J20.2,UNUSED WIRE

SIG.NAME	COLOR	TYPE	GR	EL	PT	S	DESCRIPTION OF ELEMENT
WIRE052		W	99	17	24C		WRAP CONNECTOR J17.1,UNUSED WIRE
		W	99	20	24D		WRAP CONNECTOR J20.2,UNUSED WIRE
		W	99	20	24F		WRAP CONNECTOR J20.2,UNUSED WIRE
WIRE053		W	99	17	31C		WRAP CONNECTOR J17.1,UNUSED WIRE
		W	99	20	31F		WRAP CONNECTOR J20.2,UNUSED WIRE
WIRE054		W	99	11	21C		WRAP CONNECTOR J11.1,UNUSED WIRE
		W	99	12	21C		WRAP CONNECTOR J12.1,UNUSED WIRE
WIRE055		W	99	11	22C		WRAP CONNECTOR J11.1,UNUSED WIRE
		W	99	12	22C		WRAP CONNECTOR J12.1,UNUSED WIRE
WIRE056		W	99	11	26C		WRAP CONNECTOR J11.1,UNUSED WIRE
		W	99	12	31C		WRAP CONNECTOR J12.1,UNUSED WIRE
WIRE057		W	99	11	28C		WRAP CONNECTOR J11.1,UNUSED WIRE
		W	99	12	09C		WRAP CONNECTOR J12.1,UNUSED WIRE
WIRE058		W	99	11	30C		WRAP CONNECTOR J11.1,UNUSED WIRE
		W	99	12	06C		WRAP CONNECTOR J12.1,UNUSED WIRE
WIRE059		W	99	19	07A		WRAP CONNECTOR J19.1,UNUSED WIRE
		W	99	19	07B		WRAP CONNECTOR J19.1,UNUSED WIRE
		W	99	19	07C		WRAP CONNECTOR J19.1,UNUSED WIRE
WIRE060		W	99	19	04A		WRAP CONNECTOR J19.1,UNUSED WIRE
		W	99	19	04B		WRAP CONNECTOR J19.1,UNUSED WIRE
		W	99	19	04C		WRAP CONNECTOR J19.1,UNUSED WIRE
WLINE -M		W	99	03	22A		WRAP CONNECTOR J03.1, 3*32 PIN
		W	99	05	22C		WRAP CONNECTOR J05.1, 3*32 PIN
WLINE -S		W	99	03	22C		WRAP CONNECTOR J03.1, 3*32 PIN
		W	99	05	21C		WRAP CONNECTOR J05.1, 3*32 PIN
Y-REC-M	5	B	97	71	05		AUXILIARY CONNECTOR
	5	L	97	72	05A		RELAIS PRINT
YMOVETLS		W	99	02	17C		WRAP CONNECTOR J02.1, 3*32 PIN
		W	+ 99	08	17A		WRAP CONNECTOR J08.1, 3*32 PIN
ZCODGENO	1	B	97	51	31		COMMAND LINE A800
	1	WQ	99	06	30D		WRAP CONNECTOR J06.2, 3*32 PIN
		W	+ 99	07	22D		WRAP CONNECTOR J07.2, 3*32 PIN
		W	99	08	24A		WRAP CONNECTOR J08.1, 3*32 PIN
ZCODINSL	4	B	97	51	22		COMMAND LINE A800
		W	+ 99	06	08F		WRAP CONNECTOR J06.2, 3*32 PIN
	4	WQ	99	06	18D		WRAP CONNECTOR J06.2, 3*32 PIN
		W	99	08	04A		WRAP CONNECTOR J08.1, 3*32 PIN
ZCODIN1S	8	B	97	51	28		COMMAND LINE A800
	8	WQ	99	06	28D		WRAP CONNECTOR J06.2, 3*32 PIN
		W	+ 99	07	31E		WRAP CONNECTOR J07.2, 3*32 PIN
		W	99	08	28A		WRAP CONNECTOR J08.1, 3*32 PIN
ZEXGENO	9	B	97	51	30		COMMAND LINE A800
	9	WQ	99	06	26D		WRAP CONNECTOR J06.2, 3*32 PIN
		W	+ 99	07	28F		WRAP CONNECTOR J07.2, 3*32 PIN
		W	99	08	05C		WRAP CONNECTOR J08.1, 3*32 PIN
ZINCODRP	2	B	97	51	32		COMMAND LINE A800
	2	WQ	99	06	26F		WRAP CONNECTOR J06.2, 3*32 PIN
		W	+ 99	07	28D		WRAP CONNECTOR J07.2, 3*32 PIN
		W	99	08	04C		WRAP CONNECTOR J08.1, 3*32 PIN
0.0AD150	0	A	98	81	08		ADDITIONAL POWER CONNECTOR
	0	A	98	81	09		ADDITIONAL POWER CONNECTOR
	0	A	98	81	10		ADDITIONAL POWER CONNECTOR
	0	WQ	99	18	10A		WRAP CONNECTOR J18.1, 3*32 PIN
	0	WQ	99	18	10B		WRAP CONNECTOR J18.1, 3*32 PIN
	0	WQ	99	18	10C		WRAP CONNECTOR J18.1, 3*32 PIN
0.0IN150	0	A	98	91	11		CONNECTOR ASS. TO POWER SUPPLY
	0	A	98	91	12		CONNECTOR ASS. TO POWER SUPPLY
	0	A	98	91	13		CONNECTOR ASS. TO POWER SUPPLY
		W	99	19	10A		WRAP CONNECTOR J19.1, 3*32 PIN
		W	99	19	10B		WRAP CONNECTOR J19.1, 3*32 PIN
		W	99	19	10C		WRAP CONNECTOR J19.1, 3*32 PIN
	0	WQ	99	20	10A		WRAP CONNECTOR J20.1, 3*32 PIN
	0	WQ	99	20	10B		WRAP CONNECTOR J20.1, 3*32 PIN
	0	WQ	99	20	10C		WRAP CONNECTOR J20.1, 3*32 PIN
100 HZ		W	99	03	07B		WRAP CONNECTOR J03.1, 3*32 PIN
		W	99	13	07B		WRAP CONNECTOR J13.1, 3*32 PIN
		W	99	14	11B		WRAP CONNECTOR J14.1, 3*32 PIN
102.4KHZ		W	99	03	23A		WRAP CONNECTOR J03.1, 3*32 PIN
12.5 HZ		W	99	03	04B		WRAP CONNECTOR J03.1, 3*32 PIN
		W	99	06	05A		WRAP CONNECTOR J06.1, 3*32 PIN
		W	99	09	13A		WRAP CONNECTOR J09.1, 3*32 PIN
12.8 KHZ		W	99	03	11B		WRAP CONNECTOR J03.1, 3*32 PIN
		W	99	07	17A		WRAP CONNECTOR J07.1, 3*32 PIN
13.1 MHZ		W	99	01	21C		WRAP CONNECTOR J01.1, 3*32 PIN
		W	99	02	21A		WRAP CONNECTOR J02.1, 3*32 PIN
		W	99	03	21B		WRAP CONNECTOR J03.1, 3*32 PIN
1638 KHZ		W	99	03	17B		WRAP CONNECTOR J03.1, 3*32 PIN
200 HZ		W	99	03	02B		WRAP CONNECTOR J03.1, 3*32 PIN
204.8KHZ		W	99	03	13B		WRAP CONNECTOR J03.1, 3*32 PIN
25 HZ		W	99	03	05B		WRAP CONNECTOR J03.1, 3*32 PIN
		W	99	06	31C		WRAP CONNECTOR J06.1, 3*32 PIN
		W	99	13	05B		WRAP CONNECTOR J13.1, 3*32 PIN
25.6 KHZ		W	99	03	09B		WRAP CONNECTOR J03.1, 3*32 PIN

A80 LOCATOR | A80 MASTER-CONTROL | A800

MASTER (CODE SOURCE)

AUDIO TRANSPORTS

A800

A80/OTHERS

7.3 ... 7.8

SECTION 7.3 ... 7.8:
VIDEO TRANSPORTS

SECTION 7.2:
SWITCH SET
1.228.373

7

SECTION 7.1: INTERFACE RACK
1.228.890

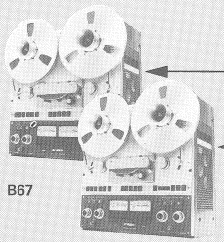

B67

7.9

7.9

7.9

7.9

SECTION 7.9:
ADDRESS START INTERFACE
1.228.374 (1.228.623)

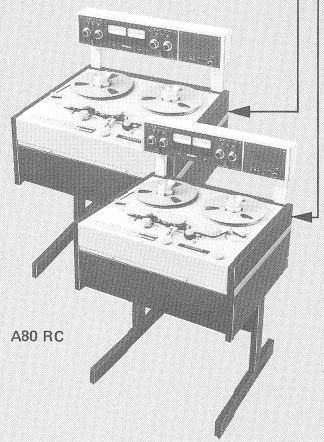

A80 RC

25/50 / 8000

SECTION 7.10:
EXTERNAL FREQUENCY
CONTROLLER 1.228.601

SPROCKET
FILM TRANSPORT

STATION SYNC
FREQUENCY, CODE

SLAVE PROCESSOR RACK

SECTION 4:
BACK PANELS
ORGANIZATION
AND
WIRING GR 99

SECTION 2: SCHEMATIC DIAGRAMS
RACK LOCATIONS 1-20, LAYOUTS,
PARTS LIST, JUMPER SETTING

SECTION 3: CIRCUIT DESCRIPTION
RACK LOCATIONS 1-20

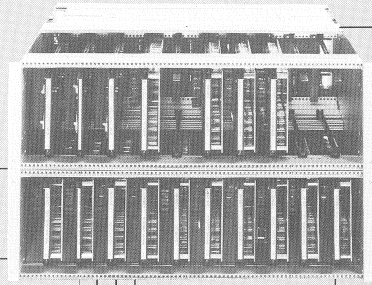

(REAR OF RACK)
SECTION 5:
CONNECTION
FIELDS
RACK ELEMENTS
UPPER PART GR 98,
LOWER PART GR 97

SLAVE PERIPHERAL EQUIPMENTS

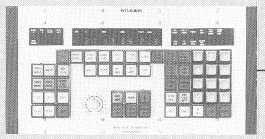

6.1

SECTION 6.1: MAIN PROGRAMMER
1.228.460 (461)

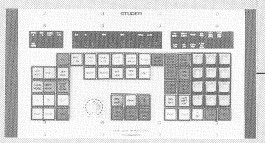

6.1

SECTION 6.1: MAIN PROGRAMMER
1.228.460 (461)

6.3

SECTION 6.3: PARALLEL/ SERIAL
CONVERTER
1.228.430

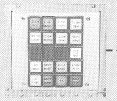

6.6

SECTION 6.6: BASIC PROGRAMMER
1.228.380

6.4

SECTION 6.4: POWER SUPPLY
1.228.150

6.2

SECTION 6.2: CODE CHANNEL REMOTE CONTROL
1.228.328

6.5

SECTION 6.5: POWER SUPPLY
1.228.170

SLAVE TRANSPORTS

8

8.1

SECTION 8:
TLS-CIRCUITS IN A800
1.180.086

SECTION 8.1:
CODE CHANNEL
REMOTE CONTROL A800
1.328.140

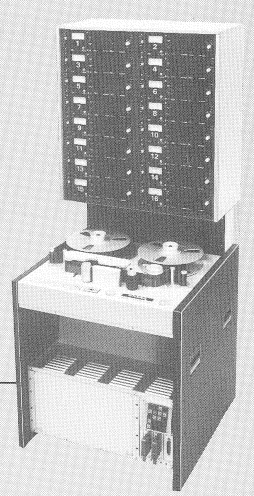

9

SECTION 9:
TLS-MODIFICATIONS AND CIRCUITS
IN A80 VU MK II / MK III

☒ INDICATES PARAGRAPH OF CABLE DESCRIPTION

CONTENTS SECTION 5

CONNECTION FIELDS

SECTION/PAGE	PART NUMBER	DESCRIPTION
5/3		SURVEY OF RACK ELEMENTS
5/4	1.228.602	REFERENCE FREQUENCY INPUT
5/5	1.228.605	CAPSTAN SPEED CONTROL A80
5/6	1.228.606	EXPENDED MODE CONTROL A80
5/7	1.228.607	REMOTE MODE CONTROL A80
5/8	1.228.608	AUXILIARY CONNECTOR
5/9	1.228.393	EXTENDED RECORD COMMAND ADRESS START
5/10	1.228.610	CONNECTOR ASSEMBLY TO MAIN PROGRAMMER
5/11	1.228.611	HEAD PLUG CHANNEL SUPPLY
5/12	1.228.396	RECTIFIER ASSEMBLY
5/13	1.228.612	MASTER CODE LINE INPUT
		REPRO CODE LINE OUTPUT
5/14	1.228.613	GENERATOR LINE INPUT
5/15	1.228.617	CONNECTOR ASSEMBLY FOR TLS MASTER CONTROL A80
5/16	1.228.618	AD CONNECTOR TO STUDER POWER SUPPLY
5/17	1.228.619	CONNECTOR ASSEMBLY TO BASIC PROGRAMMER
5/18	1.228.620	CONNECTOR TO STUDER POWER SUPPLY
5/19	1.228.906	COMMAND LINE A800
5/20	1.228.916	MASTER CONTROL CONNECTOR A800

SURVEY OF RACK ELEMENTS LOWER (GR97) AND UPPER PART (GR98)

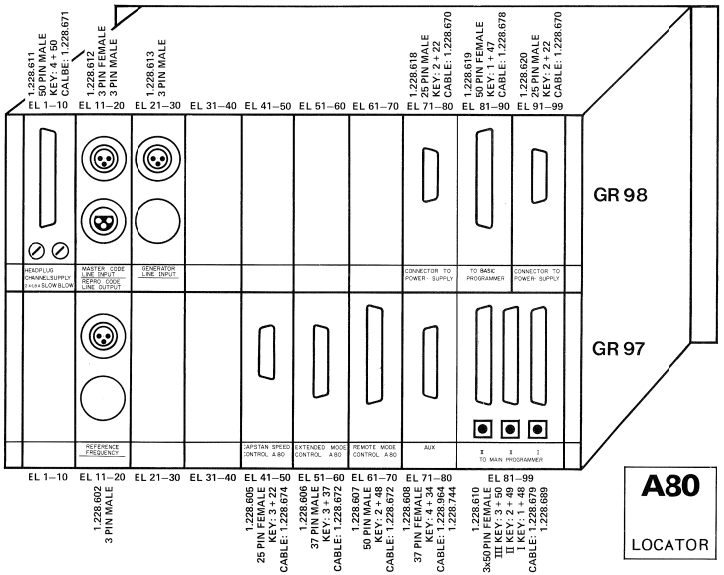

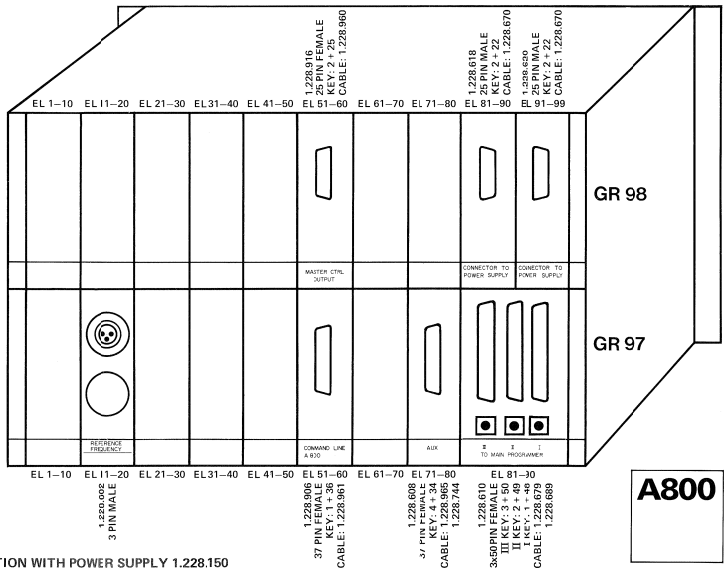

IN CONNECTION WITH POWER SUPPLY 1.228.150

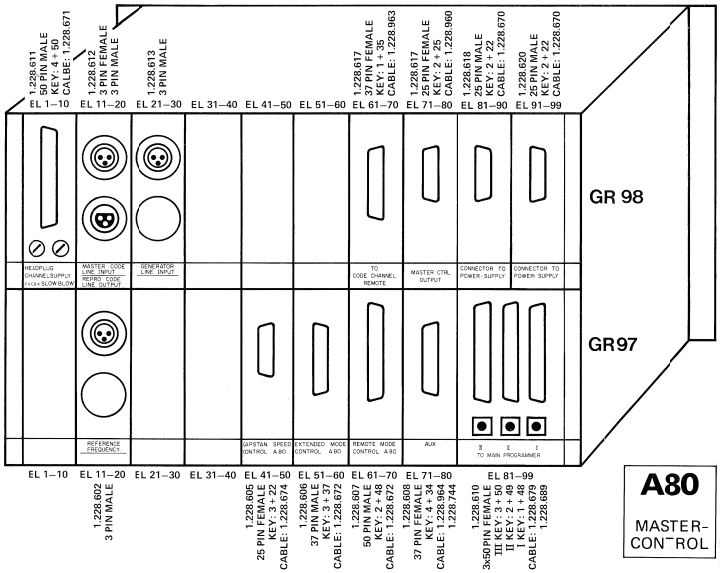

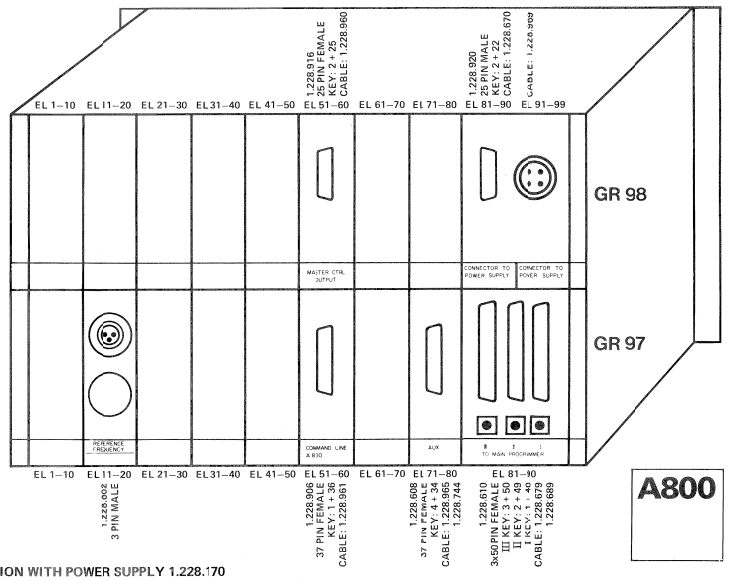

IN CONNECTION WITH POWER SUPPLY 1.228.170

A80 LOCATOR | A80 MASTER-CONTROL | A800

REFERENCE FREQUENCY 1.228.602

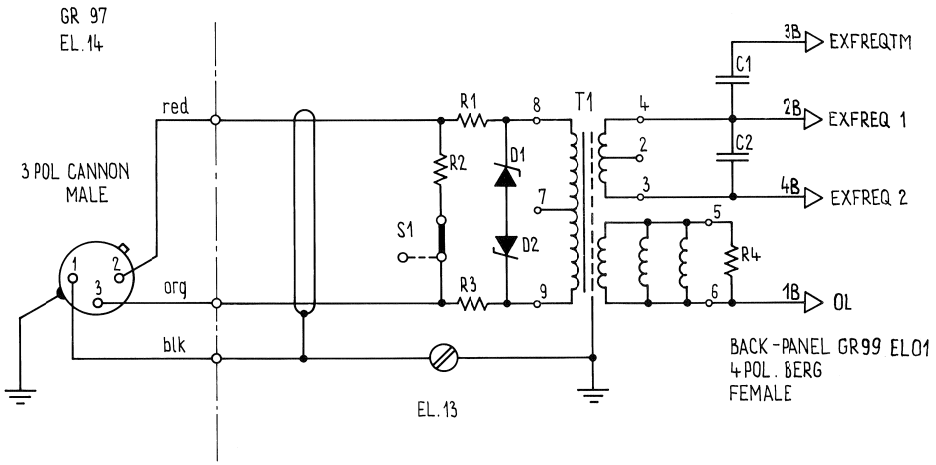

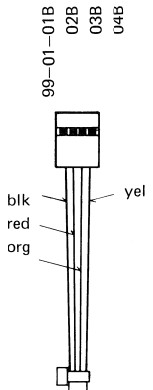

Color	GR	EL	PT	GR	EL	PT	Sig. Name
blk	97	13	01	97	14	01	EXFRQSCR
red	97	14	02	97	15	02	EXFRQINA
org	97	14	03	97	15	03	EXFRQINB
blk	97	15	01A	99	01	01B	0 L
red	97	15	02A	99	01	02B	EXFREQ1
org	97	15	03A	99	01	03B	EXFREQTM
yel	97	15	04A	99	01	04B	EXFREQ2

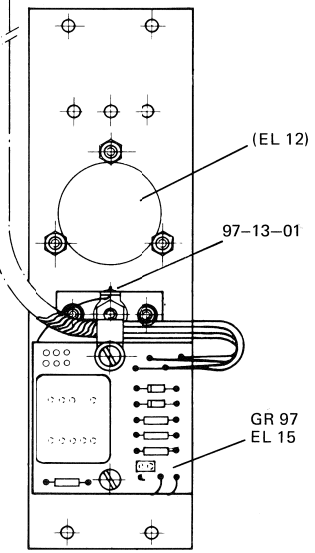

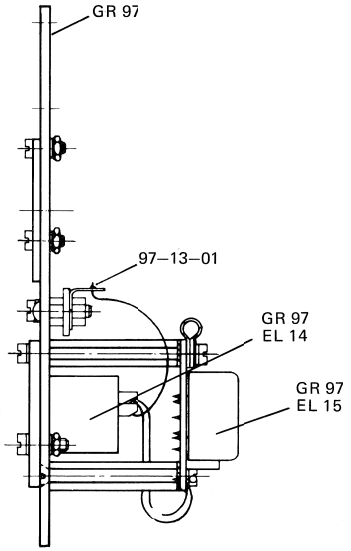

A80 LOCATOR | A80 MASTER-CONTROL

CAPSTAN SPEED CONTROL A80 1.228.605

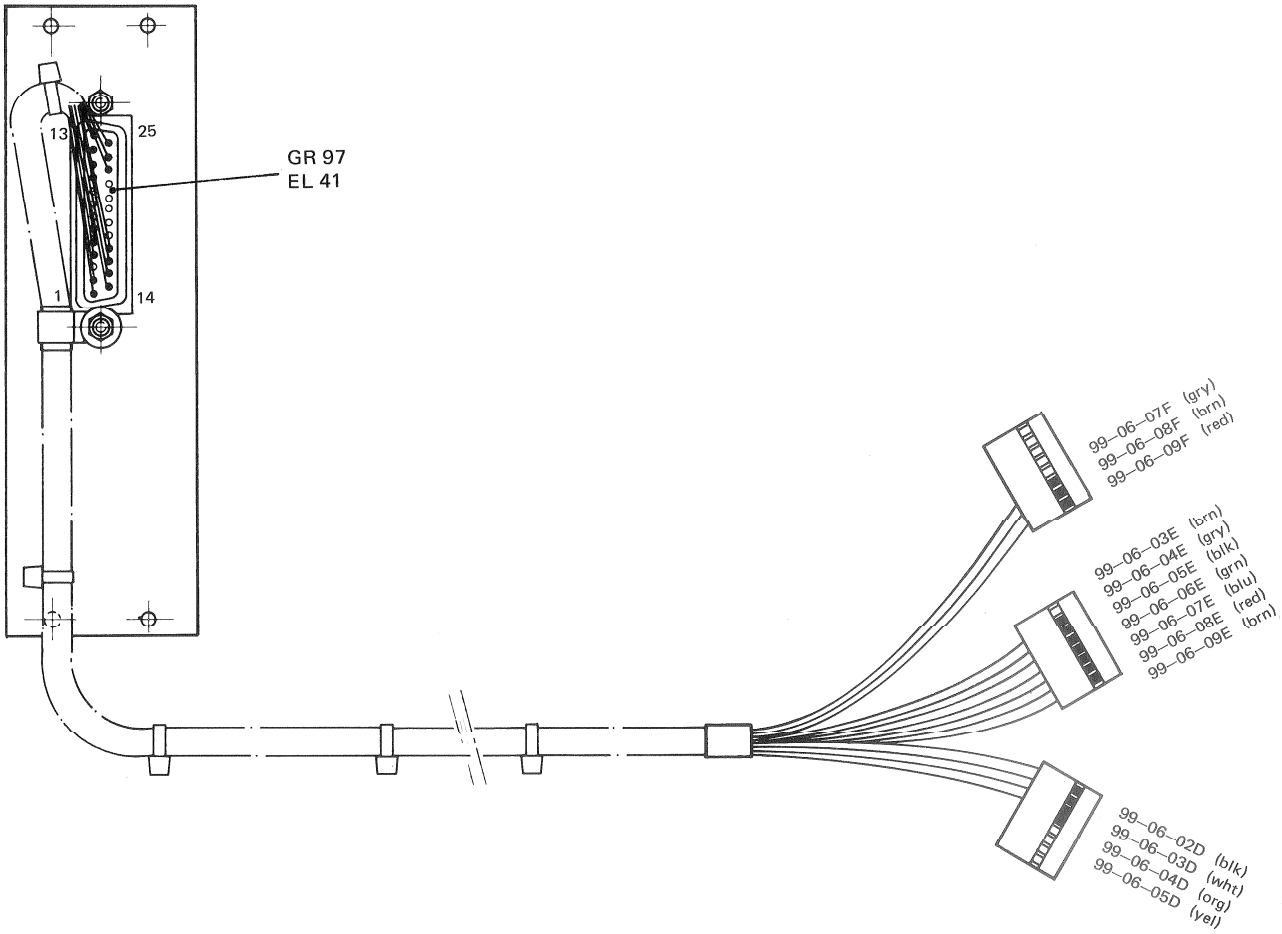

Color	GR	EL	PT	GR	EL	PT	Sig. Name
blk	97	41	01	99	06	02D	+0.0 CAP1
wht	97	41	02	99	06	03D	+24 CAP1
org	97	41	04	99	06	04D	Y–ØUT–1
yel	97	41	05	99	06	05D	Y–TACH–D
brn	97	41	11	99	06	03E	Y–SYNC 1
gry	97	41	12	99	06	04E	Y–SYNC 2
blk	97	41	13	99	06	05E	+0.0 CAP2
grn	97	41	14	99	06	06E	+5.8 CAP1
blu	97	41	15	99	06	07E	–5.8 CAP1
red	97	41	16	99	06	08E	R–SPLY–0
brn	97	41	17	99	06	09E	R–SPLY–1
gry	97	41	23	99	06	07F	S–CAPEXT
brn	97	41	24	99	06	08F	SPD–CTL1
red	97	41	25	99	06	09F	SPD–CTL2
	97	41	03				(Key)
	97	41	22				(Key)

A80 LOCATOR | A80 MASTER-CONTROL

EXTENDED MODE CONTROL A80 1.228.606

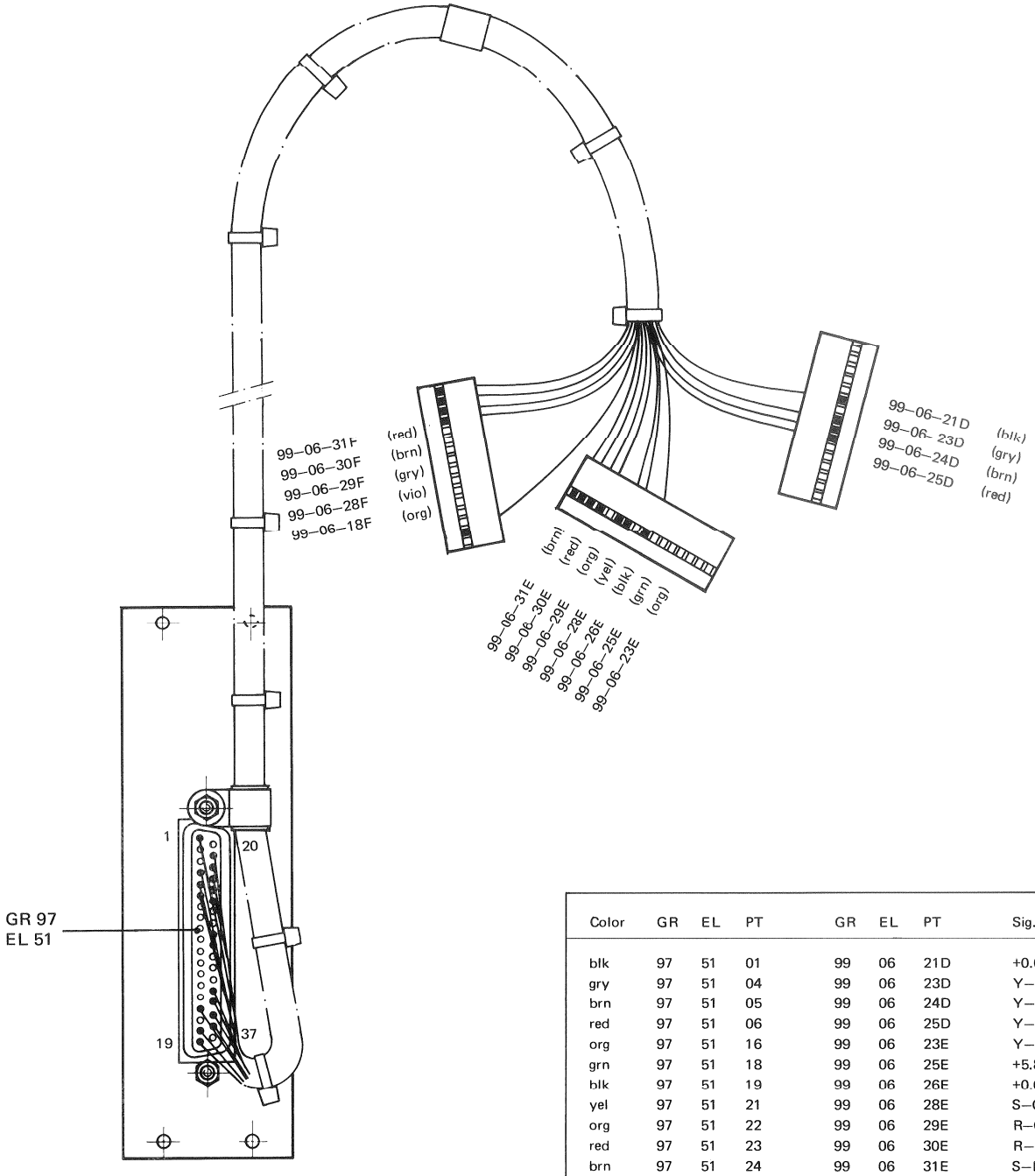

Color	GR	EL	PT	GR	EL	PT	Sig. Name
blk	97	51	01	99	06	21D	+0.0 EMC1
gry	97	51	04	99	06	23D	Y–MØD1
brn	97	51	05	99	06	24D	Y–MØD2
red	97	51	06	99	06	25D	Y–RES3
org	97	51	16	99	06	23E	Y–STØP
grn	97	51	18	99	06	25E	+5.8 EMC1
blk	97	51	19	99	06	26E	+0.0 EMC2
yel	97	51	21	99	06	28E	S–CUTAUT
org	97	51	22	99	06	29E	R–CUT– 1
red	97	51	23	99	06	30E	R–CUT– 3
brn	97	51	24	99	06	31E	S–RES2
org	97	51	25	99	06	18F	K–CUTINH
vio	97	51	33	99	06	28F	Y–RFLX
gry	97	51	34	99	06	29F	Y–TRSP
brn	97	51	35	99	06	30F	TT1–ACT
red	97	51	36	99	06	31F	TT2–ACT
	97	51	03				(Key)
	97	51	37				(Key)

A80 LOCATOR | A80 MASTER-CONTROL

REMOTE MODE CONTROL A80 1.228.607

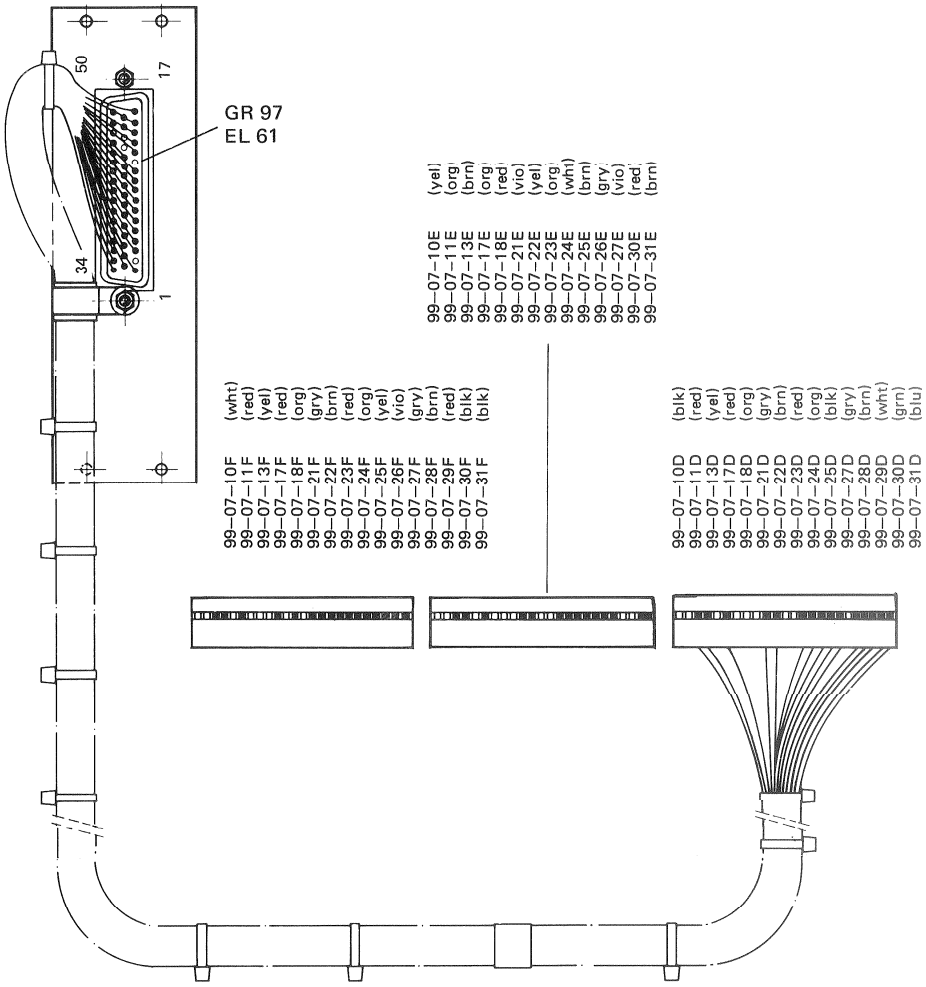

Color	GR	EL	PT	GR	EL	PT	Sig. Name	Color	GR	EL	PT	GR	EL	PT	Sig. Name
blk	97	61	01	99	07	10D	+0.0 MC1	brn	97	61	27	99	07	25E	Y–MØVE–1
red	97	61	03	99	07	11D	B–REW	gry	97	61	28	99	07	26E	Y–MØVE–D
yel	97	61	04	99	07	13D	B–FØRW	vio	97	61	29	99	07	27E	YPS–MØVE
red	97	61	05	99	07	17D	B–REPR	red	97	61	32	99	07	30E	+0–TYPE2
org	97	61	06	99	07	18D	B–STØP	brn	97	61	33	99	07	31E	+0–TYPE1
gry	97	61	07	99	07	21D	B–REC	wht	97	61	34	99	07	10F	+24 MC3
brn	97	61	08	99	07	22D	B–CUT	red	97	61	35	99	07	11F	LØC.ENB
red	97	61	09	99	07	23D	B–MØNØ	yel	97	61	36	99	07	13F	S–REW
org	97	61	10	99	07	24D	B–FAD	red	97	61	37	99	07	17F	S–FØRW
blk	97	61	11	99	07	25D	+0.0 MC2	org	97	61	38	99	07	18F	S–REPR
gry	97	61	13	99	07	27D	Y–REVRS	gry	97	61	39	99	07	21F	S–STØP
brn	97	61	14	99	07	28D	Y–FØRW	brn	97	61	40	99	07	22F	S–REC
wht	97	61	15	99	07	29D	+24 MC1	red	97	61	41	99	07	23F	S–CUT
grn	97	61	16	99	07	30D	+5.8 MC1	org	97	61	42	99	07	24F	S–MØNØ
blu	97	61	17	99	07	31D	–5.8 MC1	yel	97	61	43	99	07	25F	FAD–1
yel	97	61	18	99	07	10E	CMD.ENB2	vio	97	61	44	99	07	26F	FAD–2
org	97	61	19	99	07	11E	CMD.ENB1	gry	97	61	45	99	07	27F	K–RESET
brn	97	61	20	99	07	13E	S–LØW	brn	97	61	46	99	07	28F	Y–CLK
org	97	61	21	99	07	17E	Y–LØW	red	97	61	47	99	07	29F	Y–ICLK
red	97	61	22	99	07	18E	K–PRESS	blk	97	61	49	99	07	30F	+0.0 MC3
vio	97	61	23	99	07	21E	RECSTINH	blk	97	61	50	99	07	31F	+0.0 MC4
yel	97	61	24	99	07	22E	Y–MUTE		97	61	02				(Key)
org	97	61	25	99	07	23E	Y–MØNØ		97	61	48				(Key)
wht	97	61	26	99	07	24E	+24 MC2								

A80 LOCATOR | A80 MASTER-CONTROL | A800

AUXILIARY CONNECTOR 1.228.608

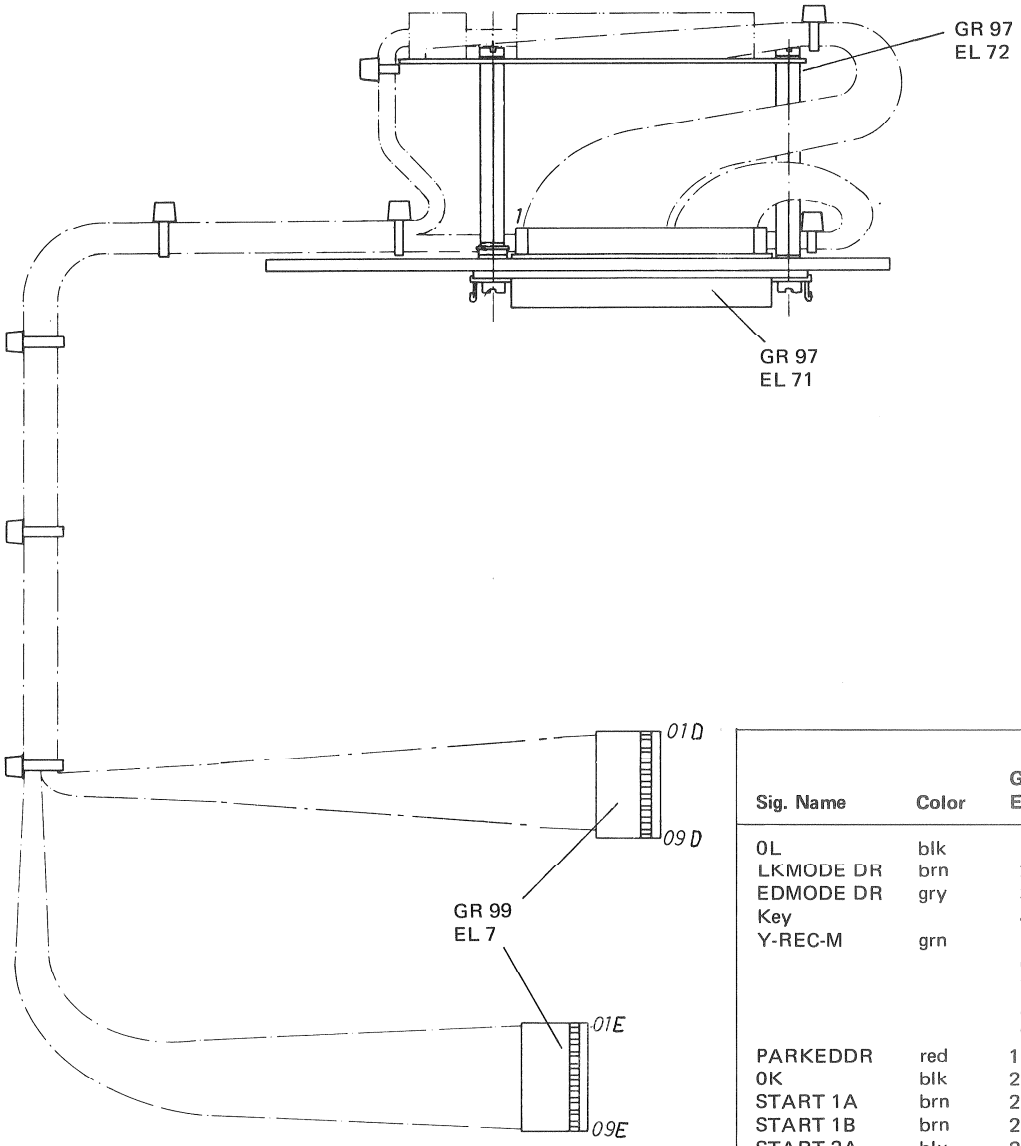

Sig. Name	Color	GR 97 EL 71	GR 97 EL 72	GR 99 EL 7
0L	blk	1	6A	
LKMODE DR	brn	2		2D
EDMODE DR	gry	3		3D
Key		4		
Y-REC-M	grn	5	5A	
		6		
		7		
		8		
		9		
PARKEDDR	red	10		4D
0K	blk	20	7A	
START 1A	brn	21	1A	
START 1B	brn	22	1B	
START 2A	blu	23	2A	
START 2B	blu	24	2B	
START 3A	wht	25	3A	
START 3B	wht	26	3B	
START 4A	yel	27	4A	
START 4B	yel	28	4B	
		29		
		30		
EDLEADDR	vio	31		4E
SNCPLTDR	yel	32		3E
SYNCBDR	org	33		2E
Key		34		
OL	blk	35		1E
+24M	org	36	9A	
+24	red	37	8A	
START DR1	brn		IC	6E
START DR2	blu		2C	7E
START DR3	wht		3C	8E
START DR4	yel		4C	9E
+24	red		8C	9D
0K	blk		7C	8D
0L	blk		6C	1D
EXTRECM	vio		5C	5D

A80 LOCATOR | A80 MASTER-CONTROL | A800

EXTENDED RECORD COMMAND ADDRESS START 1.228.393

(MOUNTED ON 1.228.608)

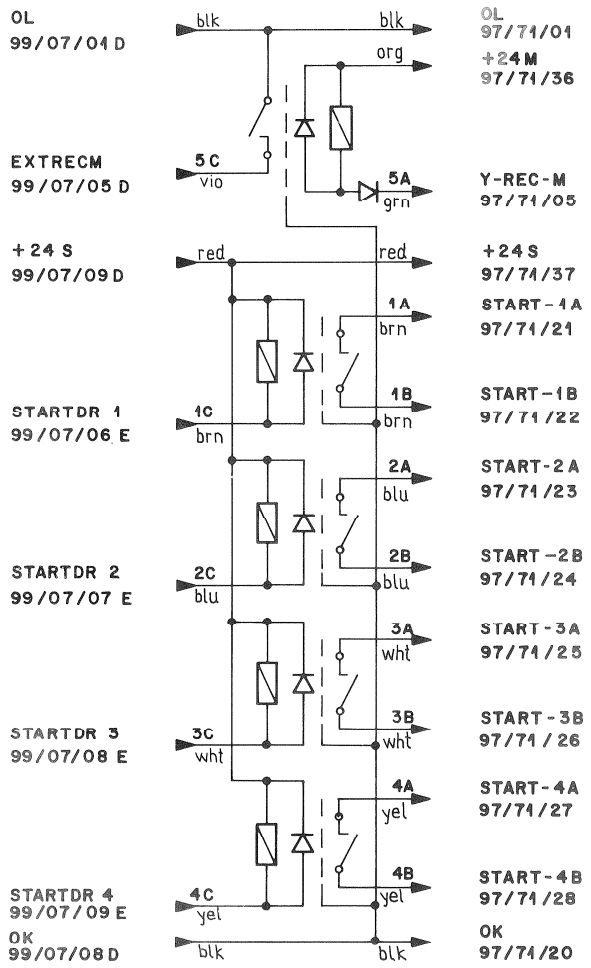

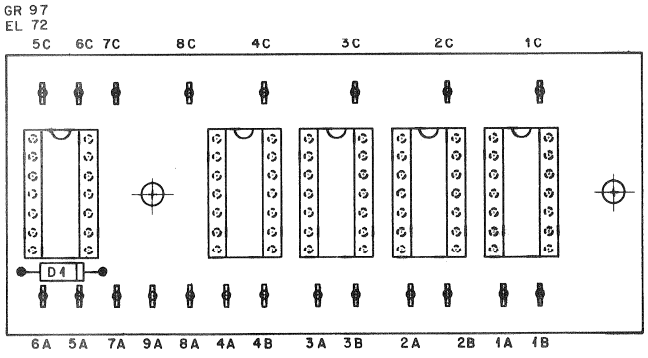

A80 LOCATOR | A80 MASTER-CONTROL | A800

CONNECTOR ASSEMBLY TO MAIN PROGRAMMER 1.228.610

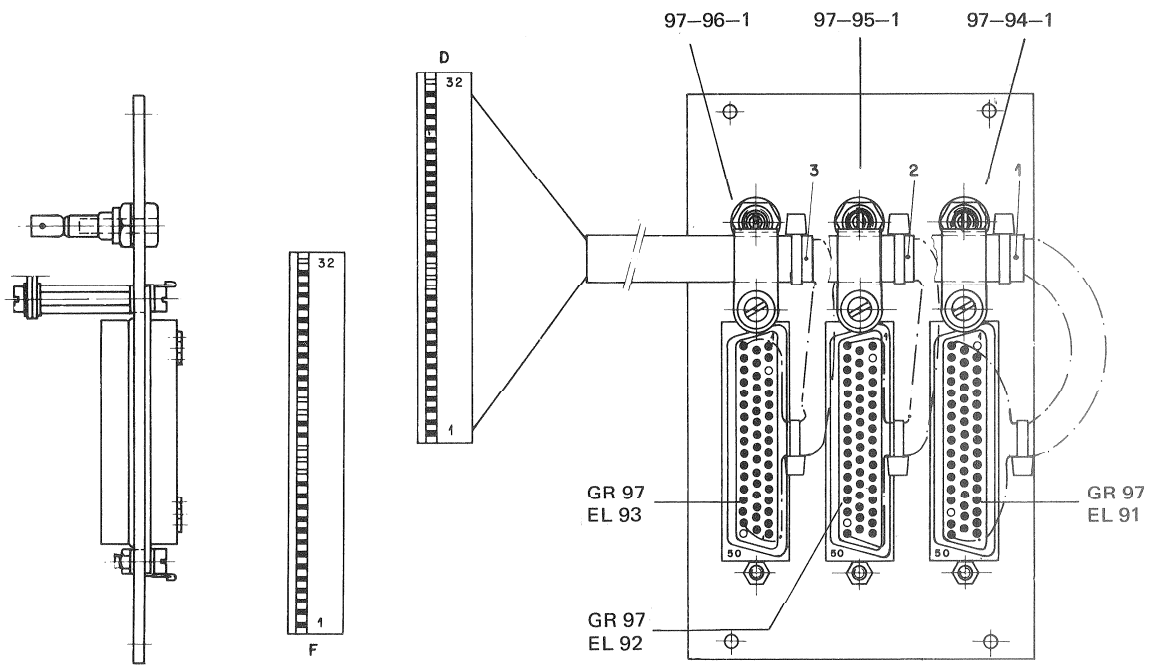

Sig. Name	Color	GR 99 EL 8	GR 97 EL 91	Sig. Name	Color	GR 99 EL 9	GR 97 EL92	Sig. Name	Color	GR 99 EL 10	GR 97 EL 93
PB 1	wht	2 D	2	WMPRESO3	wht	2 D	1	NTRMDATD	wht	2 D	1
BULBDPA 2	brn	3 D	3	BLKDISP 1	brn	3 D	3	ADCDATA C	brn	3 D	2
PBA	grn	4 D	4	NTRMDATA	grn	4 D	4	MAST	grn	4 D	4
PBH	yel	5 D	5	BADRSTRT	yel	5 D	5	USER B	yel	5 D	5
BULBPBI 3	gry	6 D	6	BULBDPH 1	gry	6 D	6	SVPC III	gry	6 D	6
EDIT CD	pink	7 D	7	PHASING	pink	7 D	7	ADCDATA B	pink	7 D	7
LOCKFAST	blu	8 D	8	BULBPBG 3	blu	8 D	8	BULBPBM 5	blu	8 D	8
ADVRET	red	9 D	9	MSEC	red	9 D	9	ADCDATA A	red	9 D	9
MSEC	blk	10 D	10	DIFF	blk	10 D	10	BLOCATOR	blk	10 D	10
GENNSC	vio	11 D	11	FRAM	vio	11 D	11	REC	vio	11 D	11
B-UPPLIM	gry pink	13 D	12	B-REHEAR	gry pink	13 D	12	EDIT	gry pink	13 D	12
ENTRY	blu red	17 D	13	BULBPBH 3	blu red	17 D	13	BPKMMPRG	blu red	17 D	13
BOFFSREG	wht grn	18 D	14	OFS DISP	wht grn	18 D	14	GENRUN	wht grn	18 D	14
B-EXITSL	brn grn	21 D	15	CODEFR/S	brn grn	21 D	15	TX	brn grn	21 D	15
B-PHAS	wht yel	22 D	16	PBULBHMS	wht yel	22 D	16	SYNC PLT	wht yel	22 D	16
FRAMER	yel brn	23 D	17	ADCDATAE	yel brn	23 D	17	FAST FWD	yel brn	23 D	17
GENSET	wht gry	24 D	18	BULBDPN 1	wht gry	24 D	18	BEDMMPRG	wht gry	24 D	18
B-LOWLIM	gry brn	25 D	19	SLAV	gry brn	25 D	19	PBB	gry brn	25 D	19
NO. CD. S	wht pink	26 D	20	UNAS B	wht pink	26 D	20	B-RECENB	wht pink	26 D	20
B-ENTRYM	pink brn	27 D	21	BULBPBL 5	pink brn	27 D	21	PBPLAY	pink brn	27 D	21
SVPCI	wht blu	28 D	22	BULBDPP 1	wht blu	28 D	22	PB REC	wht blu	28 D	22
BULBPBF 4	brn blu	29 D	23	ADCDATAD	brn blu	29 D	23	GEN=MAST	brn blu	29 D	23
BULBPBF 3	wht red	30 D	24	PBULBHMS	wht red	30 D	24	OSW	wht red	30 D	24
BULBPBF 2	brn red	31 D	25	DISPEN 7	brn red	31 D	25	PLAY	brn red	31 D	25
EXEC	wht blk	2 F	26	DISPEN 1	wht blk	2 F	26	BLKDSP 6	wht blk	2 F	26
PBD	brn blk	3 F	27	WMPRESO4	brn blk	3 F	27	DISPEN 8	brn blk	3 F	27
PBI	gry grn	4 F	28	DISPEN 0	gry grn	4 F	28	KB	gry grn	4 F	28
BULBDPA 1	yel gry	5 F	29	STOREOFS	yel gry	5 F	29	BLKDSP 8	yel gry	5 F	29
INTGEN	pink grn	6 F	30	DISPEN 2	pink grn	6 F	30	DISEND 9+	pink grn	6 F	30
BULBDPB 2	yel pink	7 F	31	BLKDSP 0	yel pink	7 F	31	PB 3	yel pink	7 F	31
CODENDEF	grn blu	8 F	32	DISPEN 3	grn blu	8 F	32	PBC	grn blu	8 F	32
ADD	yel blu	9 F	33	BLKDSP 2	yel blu	9 F	33	DISEND 9–	yel blu	9 F	33
B-CALC	grn red	10 F	34	HOLD	grn red	10 F	34	PB 5	grn red	10 F	34
SLDECOFF	yel red	11 F	35	LOCKSLOW	yel red	11 F	35	PBO	yel red	11 F	35
B-GENUSB	grn blk	13 F	36	NTRMDATB	grn blk	13 F	36	PBE	grn blk	13 F	36
SLNOTP	yel blk	17 F	37	BLKDSP 3	yel blk	17 F	37	BULBDPS 2	yel blk	17 F	37
PB 7	gry blu	18 F	38	BULBDPL 1	gry blu	18 F	38	PARKED	gry blu	18 F	38
PBG	pink blu	21 F	39	DISPEN 4	pink blu	21 F	39	BULBDPT 2	pink blu	21 F	39
PB 4	gry red	22 F	40	BULBPBK 5	gry red	22F	40	STOP	gry red	22 F	40
PBK	pink red	23 F	41	BULBDPA 0	pink red	23 F	41	+ 10 SW	pink red	23 F	41
PBF	gry blk	24 F	42	NTRMDATC	gry blk	24 F	42	BULBDPU 2	gry blk	24 F	42
LWLIMEX	pink blk	25 F	43	SVPC II	pink blk	25 F	43	SYNC B	pink blk	25 F	43
CONNFAIL	blu blk	26 F	44	BLKDSP 4	blu blk	26 F	44	BPILMPRG	blu blk	26 F	44
BENT/PKS	red blk	27 F	45	PBULBHMS	red blk	27 F	45	FASTREW	red blk	27 F	45
UPLIMEX	wht brn blk	28 F	46	BLKDSP 5	wht brn blk	28 F	46	BLKMMPRG	wht brn blk	28 F	46
B-NOMAST	yel grn blk	29 F	47	DISPEN 6	yel grn blk	29 F	47	SYNC A	yel grn blk	29 F	47
WMPRESO1	gry pink blk	30 F	49	DISPEN 5	gry pink blk	30 F	48	PB 6	gry pink blk	30 F	48
WMPRESO2	blu red blk	31 F	50	BLKDSP 7	blu red blk	31 F	50	PB 2	blu red blk	31 F	49
Key			1	Key			2	Key			3
Key			48	Key			49	Key			50

		GR 97 EL 94				GR 97 EL 96				GR 97 EL 96	
OL	wht grn blk	1 D	BANANEN BUCHSE 1	OL	wht grn blk	1 D	BANANEN BUCHSE 2	OL	wht grn blk	1 D	BANANEN BUCHSE 3
OL	grn brn blk	12 D		OL	grn brn blk	12 D		OL	grn brn blk	12 D	
OL	wht yel blk	1 F		OL	wht yel blk	1 F		OL	wht yel blk	1 F	
OL	yel brn blk	12 F		OL	yel brn blk	12 F		OL	yel brn blk	12 F	

A80 LOCATOR | A80 MASTER-CONTROL

HEAD PLUG CHANNEL SUPPLY 1.228.611

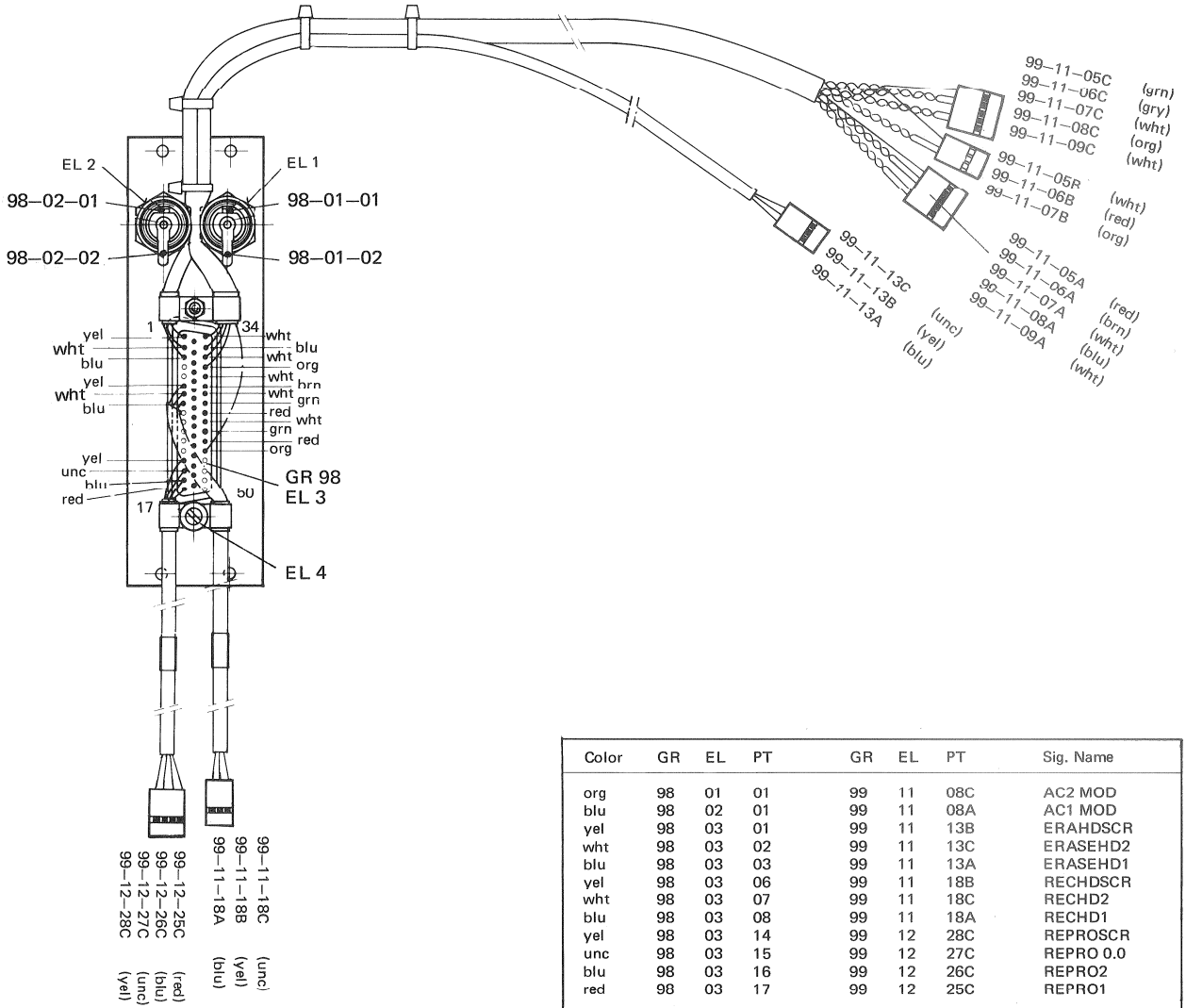

Color	GR	EL	PT	GR	EL	PT	Sig. Name
org	98	01	01	99	11	08C	AC2 MOD
blu	98	02	01	99	11	08A	AC1 MOD
yel	98	03	01	99	11	13B	ERAHDSCR
wht	98	03	02	99	11	13C	ERASEHD2
blu	98	03	03	99	11	13A	ERASEHD1
yel	98	03	06	99	11	18B	RECHDSCR
wht	98	03	07	99	11	18C	RECHD2
blu	98	03	08	99	11	18A	RECHD1
yel	98	03	14	99	12	28C	REPROSCR
unc	98	03	15	99	12	27C	REPRO 0.0
blu	98	03	16	99	12	26C	REPRO2
red	98	03	17	99	12	25C	REPRO1
wht	98	03	34	99	11	09A	0–AC1
blu	98	03	35	98	02	02	AC1
wht	98	03	36	99	11	09C	0–AC2
org	98	03	37	98	01	02	AC2
wht	98	03	38	99	11	07A	0–BIAS
brn	98	02	39	99	11	06A	YAC–BIAS
wht	98	03	40	99	11	07C	YAC–ERAS
gry	98	03	41	99	11	06C	0–ERASE
red	98	03	42	99	11	05A	Y–RECMD
wht	98	03	43	99	11	05B	S–LOWACH
grn	98	03	44	99	11	05C	Y–MUTEMD
red	98	03	45	99	11	06B	0–ERASE
org	98	03	46	99	11	07B	CCSUPVIS
	98	03	04				(Key)
	98	03	50				(Key)

EL 3 (AMP MALE 50 poles) 54.02.0449

SHORTCIRCUIT BETWEEN: SHIELD EL4 PT1
18–19–20–21–5–22–23–24–25–9–26–10–27–11–28–12–29–13–30–31–32–33

A80 LOCATOR | A80 MASTER-CONTROL

RECTIFIER ASSEMBLY 1.228.396 (GR 96)

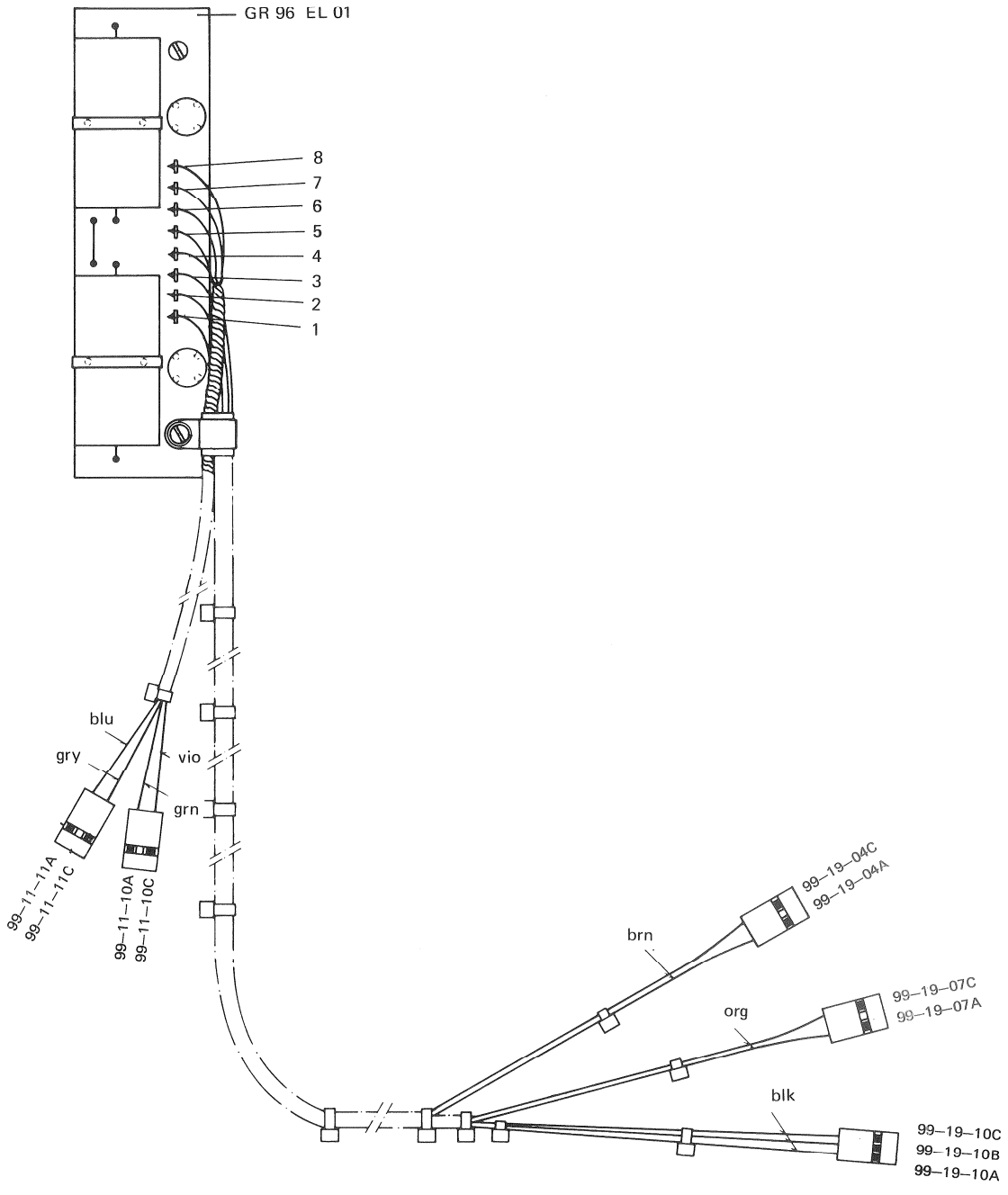

Color	GR	EL	PT	GR	EL	PT	Sig. Name
blk	96	01	01	99	19	10A	0.0 INA80
blk	96	01	01	99	19	10B	0.0 INA80
brn	96	01	02	99	19	04A	–20 V A80
brn	96	01	02	99	19	04C	–20 V A80
org	96	01	03	99	19	07A	+20 V A80
org	96	01	03	99	19	07C	+20 V A80
blk	96	01	04	99	19	10C	0.0 INA80
grn	96	01	05	99	11	10A	AC1 MOD
blu	96	01	06	99	11	11A	0–AC1
vio	96	01	07	99	11	10C	AC2 MOD
gry	96	01	08	99	11	11C	0–AC2

A80 LOCATOR | A80 MASTER-CONTROL

MASTER CODE LINE INPUT–REPRO CODE LINE OUTPUT 1.228.612

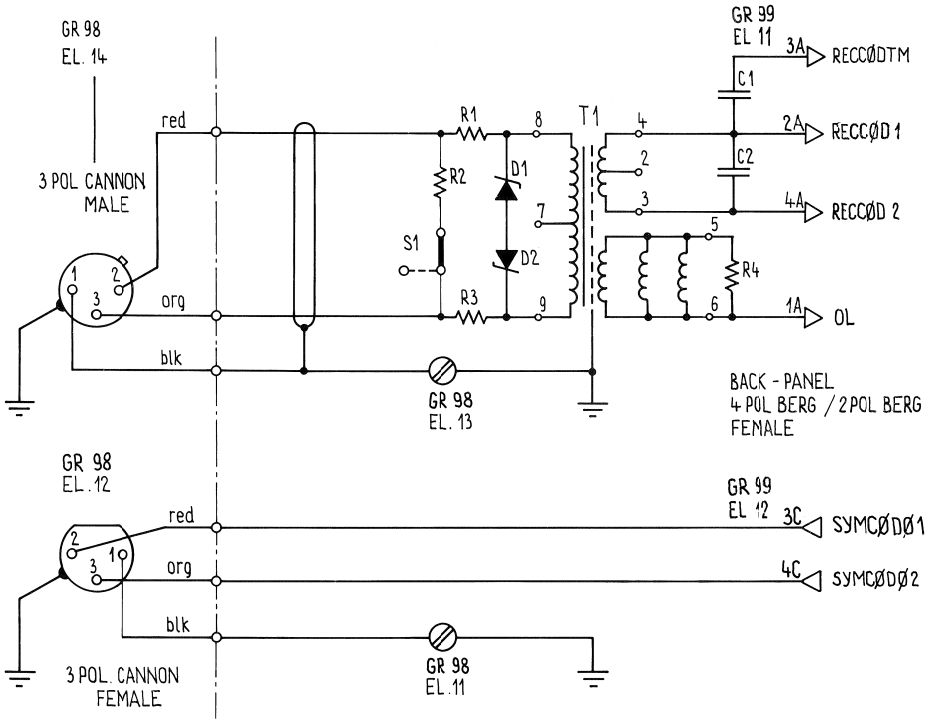

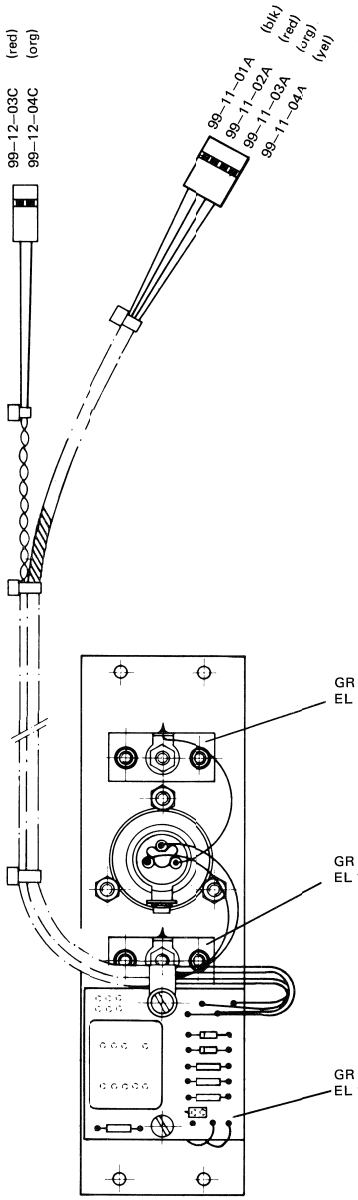

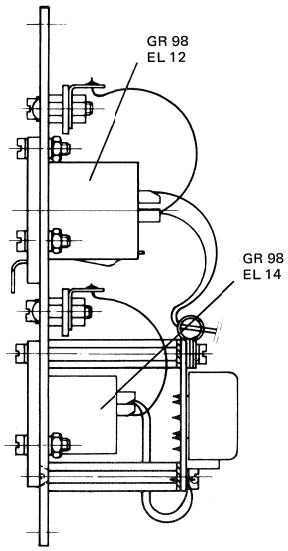

Color	GR	EL	PT	GR	EL	PT	Sig. Name
blk	98	11	01	98	12	01	SYMCØDSC
blk	98	13	01	98	14	01	RECINSCR
red	98	14	02	98	15	02	RECINPA
org	98	14	03	98	15	03	RECINPB
red	98	12	02	99	12	03C	SYMCØDØ1
org	98	12	03	99	12	04C	SYMCØDØ2
blk	98	15	01A	99	11	01A	0 L
red	98	15	02A	99	11	02A	RECCØD1
org	98	15	03A	99	11	03A	RECCØDTM
yel	98	15	04A	99	11	04A	RECCØD2

A80 LOCATOR | A80 MASTER-CONTROL

GENERATOR LINE INPUT 1.228.613

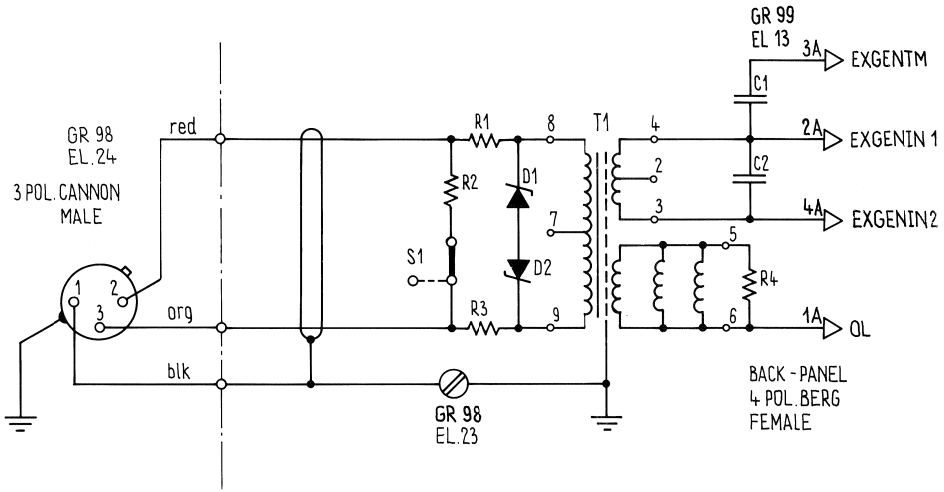

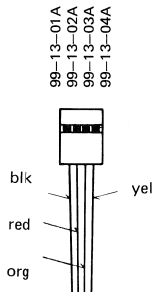

Color	GR	EL	PT	GR	EL	PT	Sig. Name
blk	98	23	01	98	24	01	EXGENSCR
red	98	24	02	98	25	02	EXGENINA
org	98	24	03	98	25	03	EXGENINB
blk	98	25	01A	99	13	01A	0 L
red	98	25	02A	99	13	02A	EXGENIN1
org	98	25	03A	99	13	03A	EXGENTM
yel	98	25	04A	99	13	04A	EXGENIN2

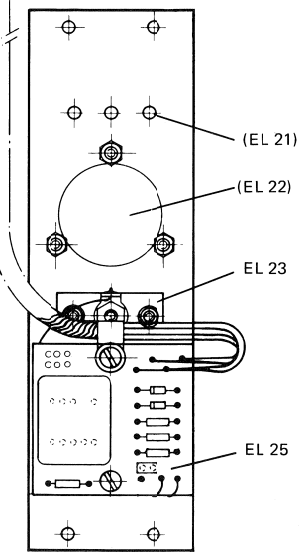

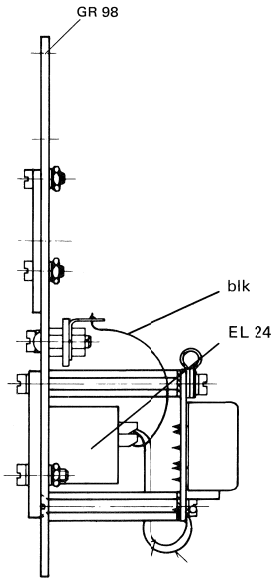

A80
MASTER-CONTROL

CONNECTOR ASSEMBLY FOR TLS MASTER CONTROL A80 1.228.617

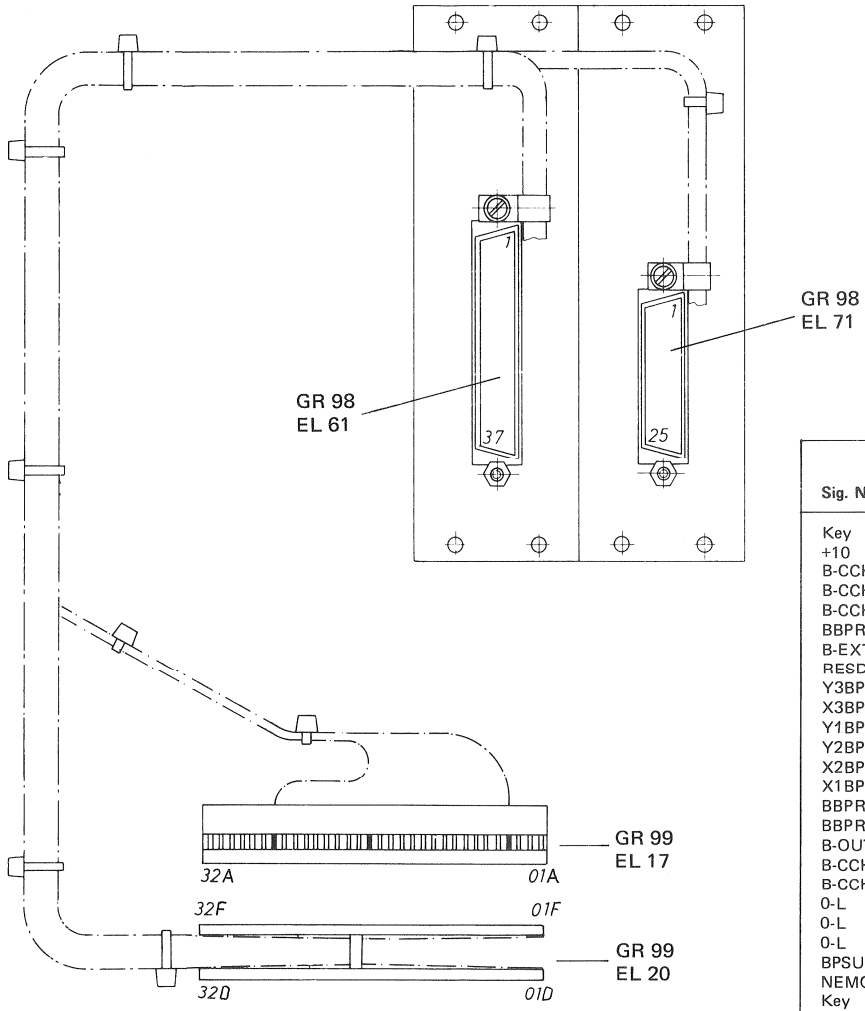

Sig. Name	Color	GR 98 EL 61	GR 98 EL 71	GR 99
Key		1		
+10	red	2		EL 20 32F
B-CCHREP	org	3		EL 20 07F
B-CCHRDY	yel	4		EL 20 05F
B-CCHREC	grn	5		EL 20 06F
BBPRES09	blu	6		EL 20 03F
B-EXTREC	vio	7		EL 20 24F
RESDRIV1		8		
Y3BPS	gry	9		EL 20 17F
X3BPS	red	10		EL 20 21F
Y1BPS	brn	11		EL 20 10F
Y2BPS	wht	12		EL 20 09F
X2BPS	org	13		EL 20 23F
X1BPS	yel	14		EL 20 22F
BBPRES11	grn	15		EL 20 25F
BBPRES10	blu	16		EL 20 04F
B-OUT=IN	vio	17		EL 20 27F
B-CCHSAF	gry	18		EL 20 28F
B-CCHSYN	wht	19		EL 20 26F
0-L	blk	20		EL 20 01F
0-L	blk	21		EL 20 06D
0-L	blk	22		EL 20 07D
BPSUPVIS	brn	23		EL 20 08D
NEMGSTOP	yel	34		EL 20 11F
Key		35		
X4BPS	red	36		EL 20 18F
X5BPS	org	37		EL 20 13F
0-L	blk		1	EL 20 01D
Key			2	
+10	brn		3	EL 20 32D
0-K	blk		10	EL 20 19F
0-K	blk		11	EL 20 19D
+24	red		12	EL 20 20F
+24	org		13	EL 20 20D
0-L	blk		14	EL 20 05D
MCRECEDR	yel		15	EL 20 02D
MCSETDR	grn		16	EL 20 03D
MCKCUTDR	blu		17	EL 20 04D
MCRESDR1	vio		18	EL 20 17D
MCDAT1DR	gry		19	EL 20 30D
MCDAT2DR	wht		20	EL 20 31D
MCMUTEDR	brn		21	EL 20 02F
MCDATRDY	red		22	EL 20 29F
MCRESDR2	org		23	EL 20 30F
MCDATODR	yel		24	EL 20 31F
Key			25	
LKMODDR2	red		5	EL 17 04A
PARKEDDR	org		6	EL 17 17A
EXTRECCM	yel		7	EL 17 26A

A80 LOCATOR | A80 MASTER-CONTROL | A800

AD CONNECTOR TO STUDER POWER SUPPLY 1.228.618

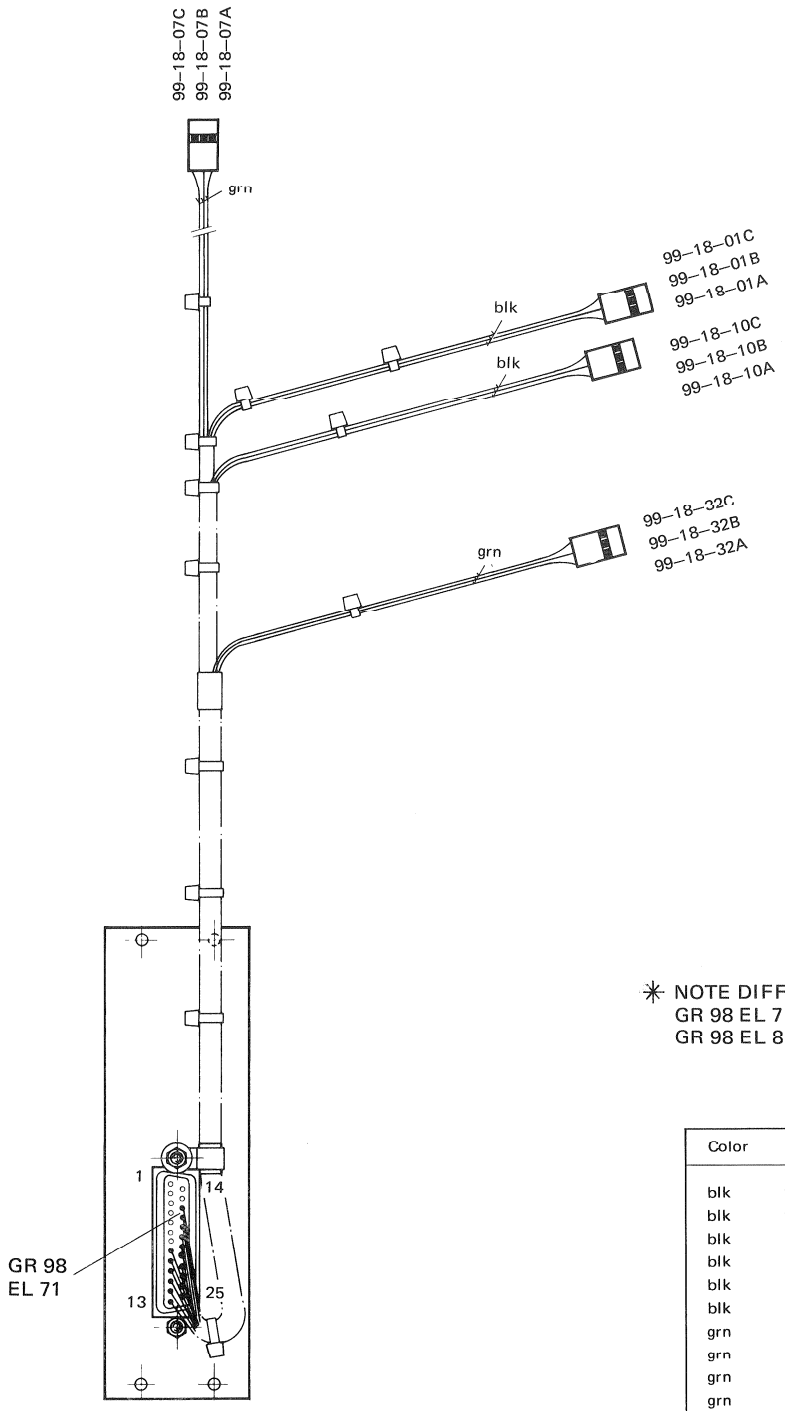

✳ NOTE DIFFERENT ELEMENT NUMBERS OF CONNECTOR:
GR 98 EL 71 FOR A80 LOCATOR VERSION
GR 98 EL 81 FOR A80 MASTER CONTROL AND A800 VERSION

✳

Color	GR	EL	PT	GR	EL	PT	Sig. Name
blk	98	71	08	99	18	10A	0.0 AD150
blk	98	71	09	99	18	10B	0.0 AD150
blk	98	71	10	99	18	10C	0.0 AD150
blk	98	71	11	99	18	01A	0.L
blk	98	71	12	99	18	01B	0.L
blk	98	71	13	99	18	01C	0.L
grn	98	71	16	99	18	32A	+10
grn	98	71	17	99	18	32B	+10
grn	98	71	18	99	18	32C	+10
grn	98	71	19	99	18	07A	+10 AD150
grn	98	71	20	99	18	07B	+10 AD150
grn	98	71	21	99	18	07C	+10 AD150
	98	71	02				(Key)
	98	71	22				(Key)

A80
LOCATOR

CONNECTOR ASSEMBLY TO BASIC PROGRAMMER 1.228.619

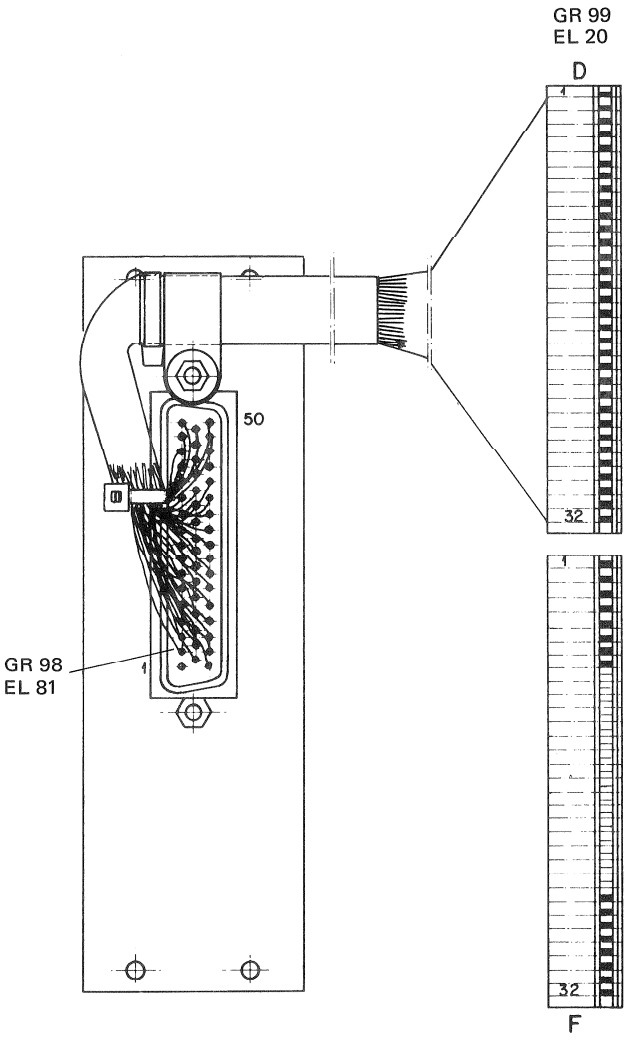

Sign. Name	Color	GR 99 EL 20	GR 98 EL 81
OL	wht	1 D	2
B-LKMBP	brn	2 D	3
B-TDSYNC	grn	3 D	4
B-NOMBP	yel	4 D	5
OL	gry	5 D	6
OL	pink	6 D	7
OL	blu	7 D	8
BPSUPVIS	red	8 D	9
WBPRES 01	blk	25 D	10
B-CCHSYN	vio	26 D	11
B-OUT IN	gry pink	27 D	12
WBPRES 02	blu red	28 D	13
WIREOO1	wht grn	29 D	14
B-TX	brn grn	30 D	15
B-EMSTOP	wht yel	31 D	16
+10	yel brn	32 D	17
OL	wht gry	1 F	18
B-GEN=M	gry brn	2 F	19
BBPRES 09	wht pink	3 F	20
BBPRES 10	pink brn	4 F	21
B-CCHRDY	wht blu	5 F	22
B-CCHREC	brn blu	6 F	23
B-CCHREP	wht red	7 F	24
B-NOSCOD	brn red	8 F	25
Y2 BPS	wht blk	9 F	26
Y1 BPS	brn blk	10 F	27
NEMGSTOP	gry grn	11 F	28
WBPRES 03	yel gry	12 F	29
X5 BPS	pink grn	13 F	30
WBPRES 04	yel pink	14 F	31
WBPRES 05	grn blu	15 F	32
WIREOO1	yel blu	16 F	33
Y3 BPS	grn red	17 F	34
X4 BPS	yel red	18 F	35
OK	grn blk	19 F	36
+24	yel blk	20 F	37
X3 BPS	gry blu	21 F	38
X1 BPS	pink blu	22 F	39
X2 BPS	gry red	23 F	40
B-EXTREC	pink red	24 F	41
BBPRES 11	gry blk	25 F	42
B-CCHSYN	pink blk	26 F	43
B-OUT=IN	blu blk	27 F	44
B-CCHSAT	red blk	28 F	45
B-REMOTE	wht brn blk	29 F	46
B-PILOT	yel grn blk	30 F	48
B-LAMPT	gry pink blk	31 F	49
+10	blu red blk	32 F	50
KEY			1
KEY			47

A80 LOCATOR | A80 MASTER-CONTROL | A800

CONNECTOR TO STUDER POWER SUPPLY 1.228.620

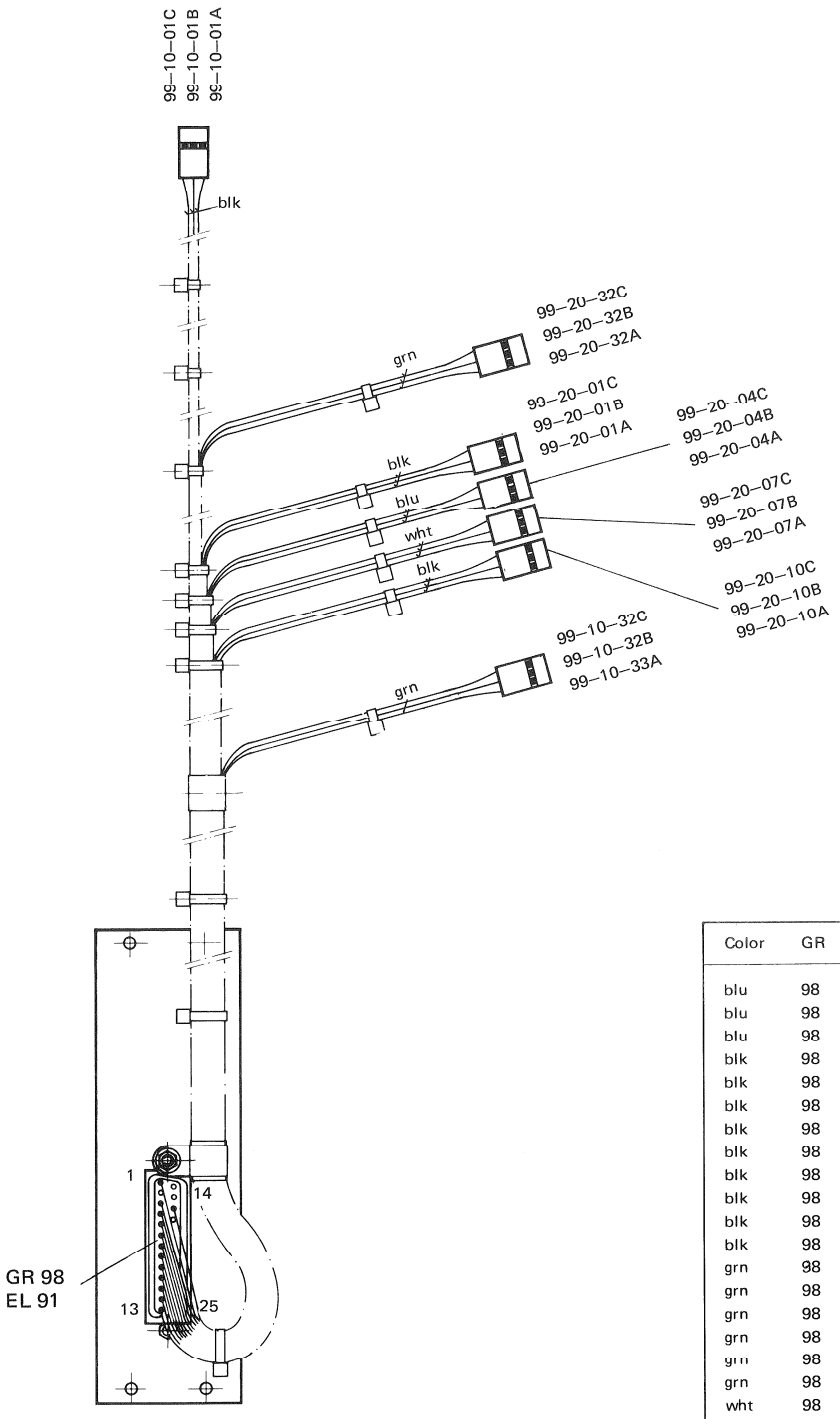

Color	GR	EL	PT	GR	EL	PT	Sig. Name
blu	98	91	01	99	20	04C	–10 V 150
blu	98	91	03	99	20	04B	–10 V 150
blu	98	91	04	99	20	04A	–10 V 150
blk	98	91	05	99	10	01C	0 L
blk	98	91	06	99	10	01B	0 L
blk	98	91	07	99	10	01A	0 L
blk	98	91	08	99	20	01C	0 L
blk	98	91	09	99	20	01B	0 L
blk	98	91	10	99	20	01A	0 L
blk	98	91	11	99	20	10C	0.0 IN150
blk	98	91	12	99	20	10B	0.0 IN150
blk	98	91	13	99	20	10A	0.0 IN150
grn	98	91	16	99	10	32C	+10
grn	98	91	17	99	10	32B	+10
grn	98	91	18	99	10	32A	+10
grn	98	91	19	99	20	32C	+10
grn	98	91	20	99	20	32B	+10
grn	98	91	21	99	20	32A	+10
wht	98	91	23	99	20	07C	+31 V 150
wht	98	91	24	99	20	07B	+31 V 150
wht	98	91	25	99	20	07A	+31 V 150
	98	91	02				(Key)
	98	91	22				(Key)

A800

COMMAND LINE A800 1.228.906

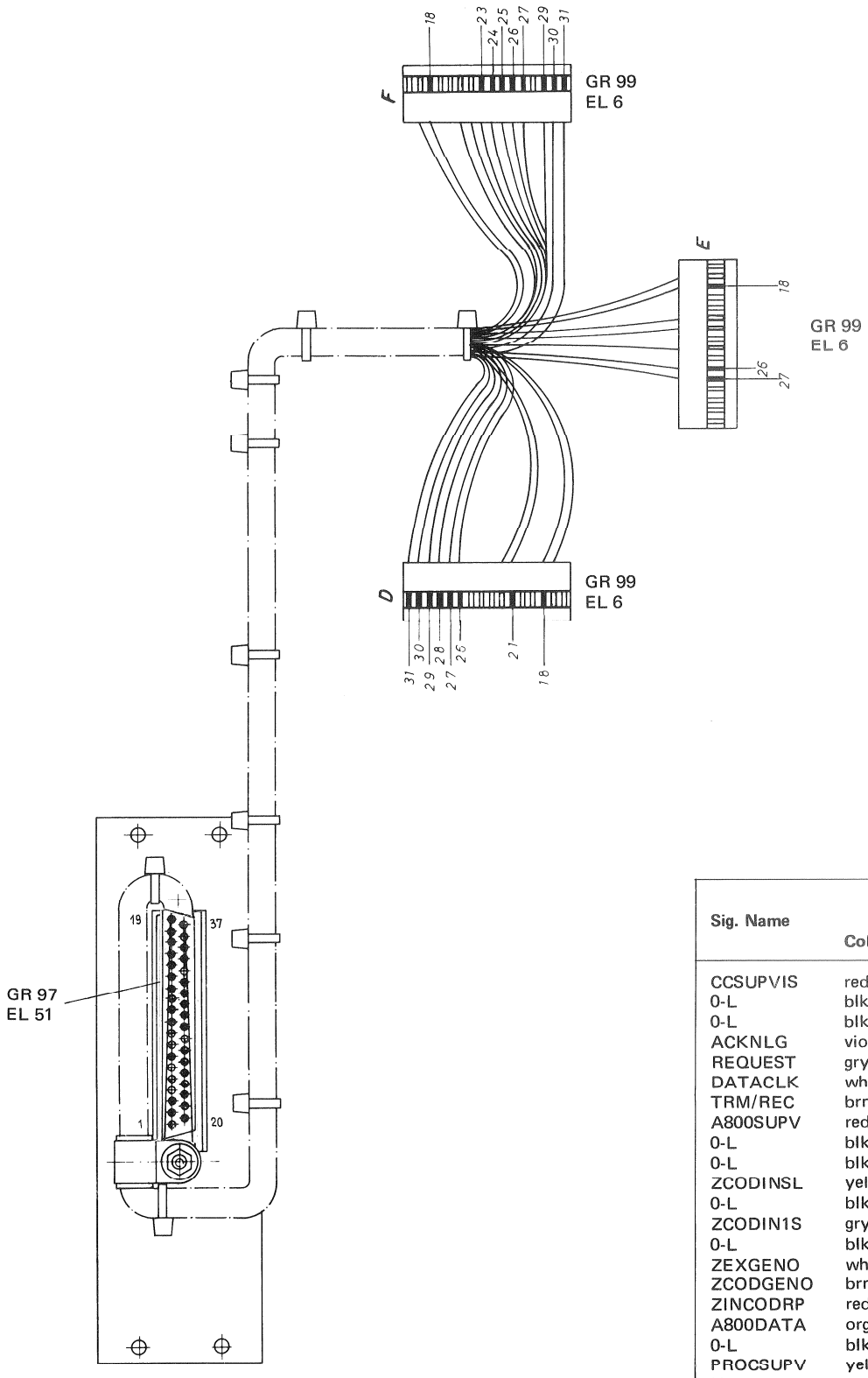

Sig. Name	Color	GR 97 EL 51	GR 99 EL 6
CCSUPVIS	red	3	31D
0-L	blk	7	21D
0-L	blk	13	27D
ACKNLG	vio	14	29F
REQUEST	gry	15	18F
DATACLK	wht	16	27F
TRM/REC	brn	17	30F
A800SUPV	red	18	18E
0-L	blk	19	29D
0-L	blk	20	26E
ZCODINSL	yel	22	18D
0-L	blk	24	23F
ZCODIN1S	gry	28	28D
0-L	blk	29	24F
ZEXGENO	wht	30	26D
ZCODGENO	brn	31	30D
ZINCODRP	red	32	26F
A800DATA	org	34	31F
0-L	blk	35	25F
PROCSUPV	yel	37	27E
Key		1	
Key		36	

A800

MASTER CONTROL CONNECTOR A800 1.228.916

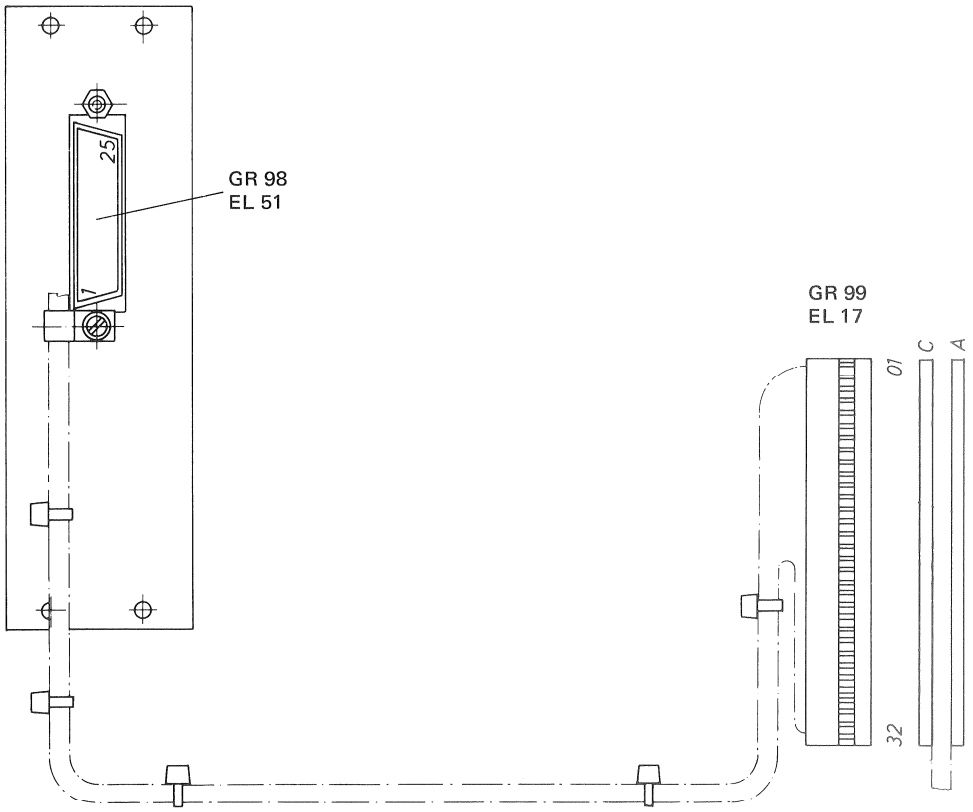

Sig. Name	Color	GR 98 EL 51	GR 99 EL 17
0L	blk	1	1C
Key		2	
+10	brn	3	32C
		4	
LKMODDR2	org	5	30C
PARKEDDR	yel	6	17A
EXTRECCM	grn	7	26A
MCSUPVIS	blu	8	25C
		9	
0K	blk	10	19C
0K	blk	11	19A
+24	red	12	20C
+24	brn	13	20A
0L	blk	14	1A
MCRECEDR	yel	15	2C
MCZSETDR	grn	16	3C
MCKCUTDR	blu	17	4C
MCRESDR1	vio	18	3A
MCDAT1DR	gry	19	7A
MCDAT2DR	wht	20	8A
MCMUTEDR	brn	21	9A
MCDATRDY	red	22	28C
MCRESDR2	brn	23	22A
MCDAT0DR	yel	24	30A
Key		25	

A80 LOCATOR | A80 MASTER-CONTROL | A800

MASTER (CODE SOURCE)

AUDIO TRANSPORTS

A800

A80/OTHERS

7.3 ... 7.8

SECTION 7.3 ... 7.8:
VIDEO TRANSPORTS

SECTION 7.2:
SWITCH SET
1.228.373

7

SECTION 7.1: INTERFACE RACK
1.228.890

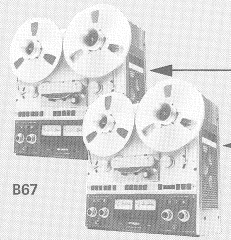

B67

7.9

7.9

7.9

7.9

SECTION 7.9:
ADDRESS START INTERFACE
1.228.374 (1.228.623)

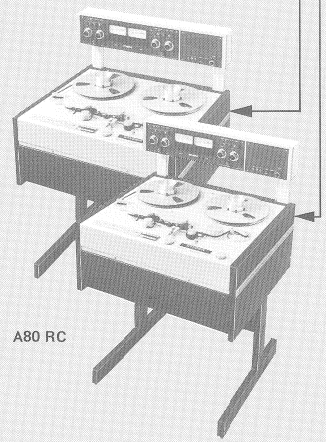

A80 RC

25/50 / 8000

SECTION 7.10:
EXTERNAL FREQUENCY
CONTROLLER 1.228.601

SPROCKET
FILM TRANSPORT

STATION SYNC
FREQUENCY, CODE

SLAVE PROCESSOR RACK

SECTION 2: SCHEMATIC DIAGRAMS
RACK LOCATIONS 1-20, LAYOUTS,
PARTS LIST, JUMPER SETTING

SECTION 3: CIRCUIT DESCRIPTION
RACK LOCATIONS 1-20

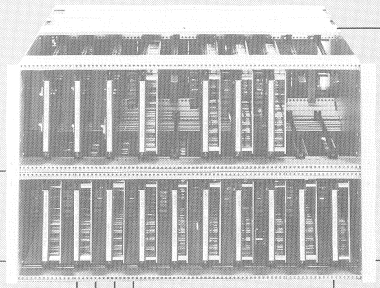

SECTION 4:
BACK PANELS
ORGANIZATION
AND
WIRING GR 99

(REAR OF RACK)
SECTION 5:
CONNECTION
FIELDS
RACK ELEMENTS
UPPER PART GR 98,
LOWER PART GR 97

SLAVE PERIPHERAL EQUIPMENTS

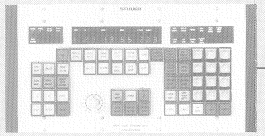

6.1

SECTION 6.1: MAIN PROGRAMMER
1.228.460 (461)

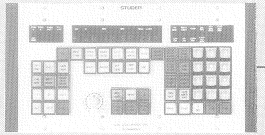

6.1

SECTION 6.1: MAIN PROGRAMMER
1.228.460 (461)

6.3

SECTION 6.3: PARALLEL/ SERIAL
CONVERTER
1.228.490

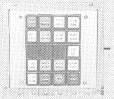

6.6

SECTION 6.6: BASIC PROGRAMMER
1.228.380

6.4

SECTION 6.4: POWER SUPPLY
1.228.150

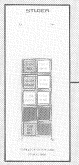

6.2

SECTION 6.2: CODE CHANNEL REMOTE CONTROL
1.228.328

6.5

SECTION 6.5: POWER SUPPLY
1.228.170

SLAVE TRANSPORTS

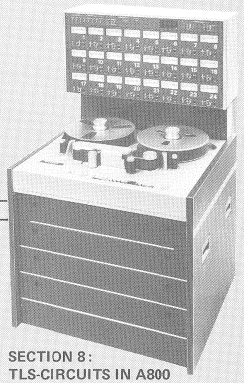

8

8.1

SECTION 8:
TLS-CIRCUITS IN A800
1.180.086

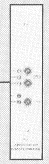

SECTION 8.1:
CODE CHANNEL
REMOTE CONTROL A800
1.328.140

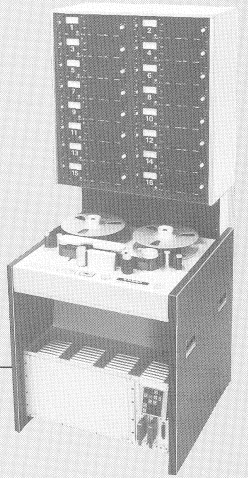

9

SECTION 9:
TLS-MODIFICATIONS AND CIRCUITS
IN A80 VU MK II / MK III

☒ INDICATES PARAGRAPH OF CABLE DESCRIPTION

CONTENTS SECTION 6
SLAVE PERIPHERAL EQUIPMENTS

SECTION	PAGE	PCB NUMBER	DESCRIPTION
6.1	**6/3**	**1.228.460/461**	**MAIN PROGRAMMER UNIT**
			LOCATION OF BOARDS
	6/4	1.228.460/461	MAIN PROGRAMMER (INDEX 1)
	6/6	1.228.460/461	MAIN PROGRAMMER (INDEX 1 WITH WIRE CONNECTIONS)
	6/8	1.228.460/461	MAIN PROGRAMMER (INDEX 2)
	6/10	1.228.466	ROTARY SWITCH BOARD
	6/11	1.228.468	STABILIZER CONTROL
	6/12	1.228.679/689	MAIN PROGRAMMER CABLE
6.3	**6/13**	**1.228.382**	**CODE CHANNEL REMOTE CONTROL UNIT**
			KEY CONFIGURATION
	6/14	1.228.382	CODE CHANNEL REMOTE CONTROL PCB
	6/15		CONNECTION CABLE REMOTE CONTROL TO SLAVE RACK
6.2	**6/16**	**1.228.490**	**PARALLEL / SERIAL CONVERTER RACK**
	6/17		SYSTEM BLOCK DIAGRAM
	6/20		SURVEY OF GROUP NUMBERS
	6/21	1.228.420	STABILIZER (- 5,2V / + 24V) GR99 EL6
	6/22	1.228.491	SERIAL TRANSCEIVER GR99 EL8
	6/24	1.228.409–71	PARALLEL CONNECTED PROGRAMMER RECEIVER GR99 EL9
	6/26	1.228.410–72	PARALLEL CONNECTED PROGRAMMER TRANSMITER GR99 EL10
	6/28		BACK PANEL CONNECTIONS GR96, 97, 99
	6/29	1.228.754	MAINS INTERCONNECTION CABLE
	6/30	1.228.755	SUPPLY INTERCONNECTION CALBE
	6/31	1.228.610	CONNECTION ASSEMBLY TO MAIN PROGRAMMER CABLES
	6/32	1.228.493	PROGRAMMER LINE AMPLIFIER GR97 EL80
	6/34		WIRE LIST
	6/37		LOCATION PIN LIST
	6/42		SIGNAL WIRE LIST
	6/47		TRANSMISSION LINE SPECIFICATIONS
	6/48	1.228.494	TLS LINE AMPLIFIER
	6/50	1.228.492	SERIAL PROGRAMMER INTERFACE
6.4	**6/52**	**1.228.150**	**POWER SUPPLY UNIT**
			LOCATION OF COMPONENTS
	6/54	1.228.670	POWER SUPPLY CABLE
6.5	**6/55**	**1.228.170**	**POWER SUPPLY UNIT**
			FRONT- AND REAR COMPONENTS
	6/55	1.228.969	POWER SUPPLY CABLE
	6/58	1.228.171	SWITCH–ON BOARD
	6/58	1.180.336–81	LINE FILTER PCB
	6/59	1.228.920	CONNECTOR ELEMENT
6.6	**6/60**	**1.228.380**	**BASIC PROGRAMMER UNIT**
			LOCATION OF BOARDS
	6/61	1.228.385	KEY BOARD PCB
	6/62	1.228.386	DRIVER PCB
	6/63	1.228.380 (780)	BASIC PROGRAMMER
	6/64	1.228.678	BASIC PROGRAMMER CABLE
	6/65	1.228.780	CODE CHANNEL CONTROL FOR A80 MASTER

6.1
MAIN PROGRAMMER UNIT 1.228.460/61

LOCATION OF BOARDS

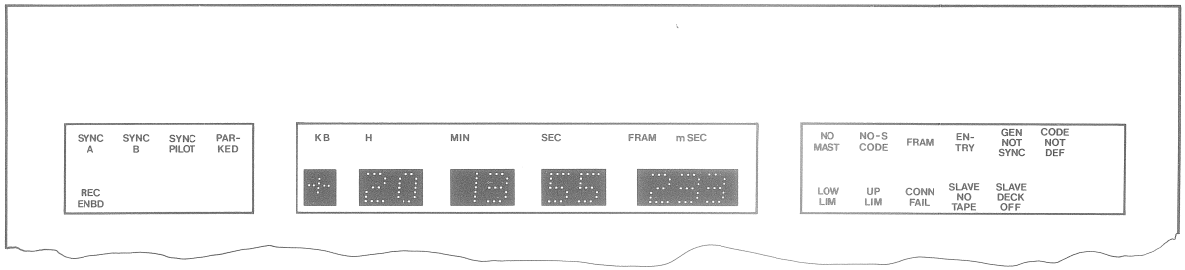

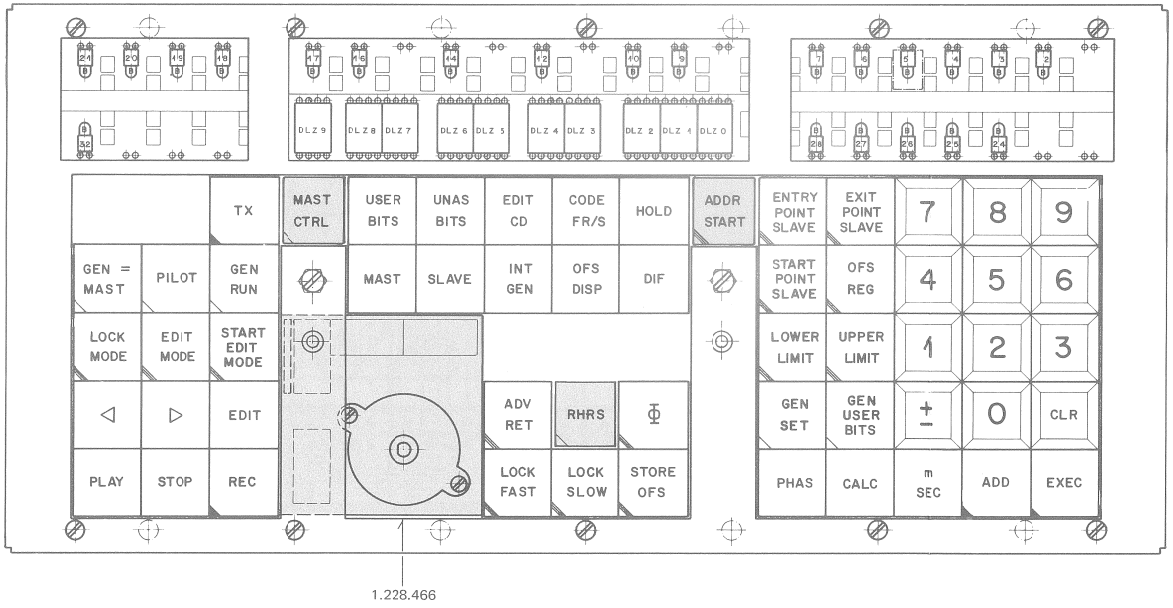

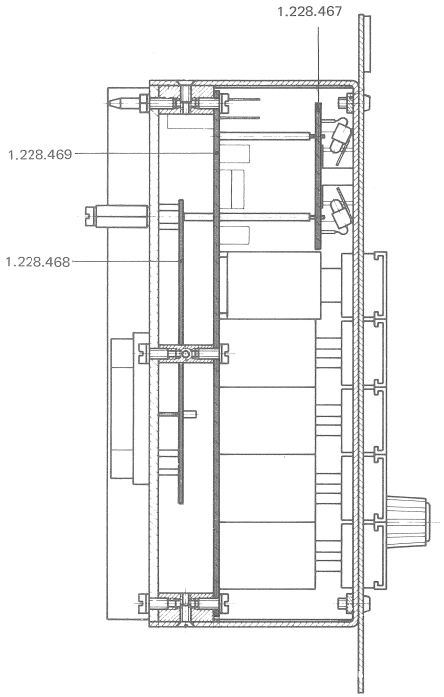

MAIN PROGRAMMER 1.228.460/461 (INDEX 1)

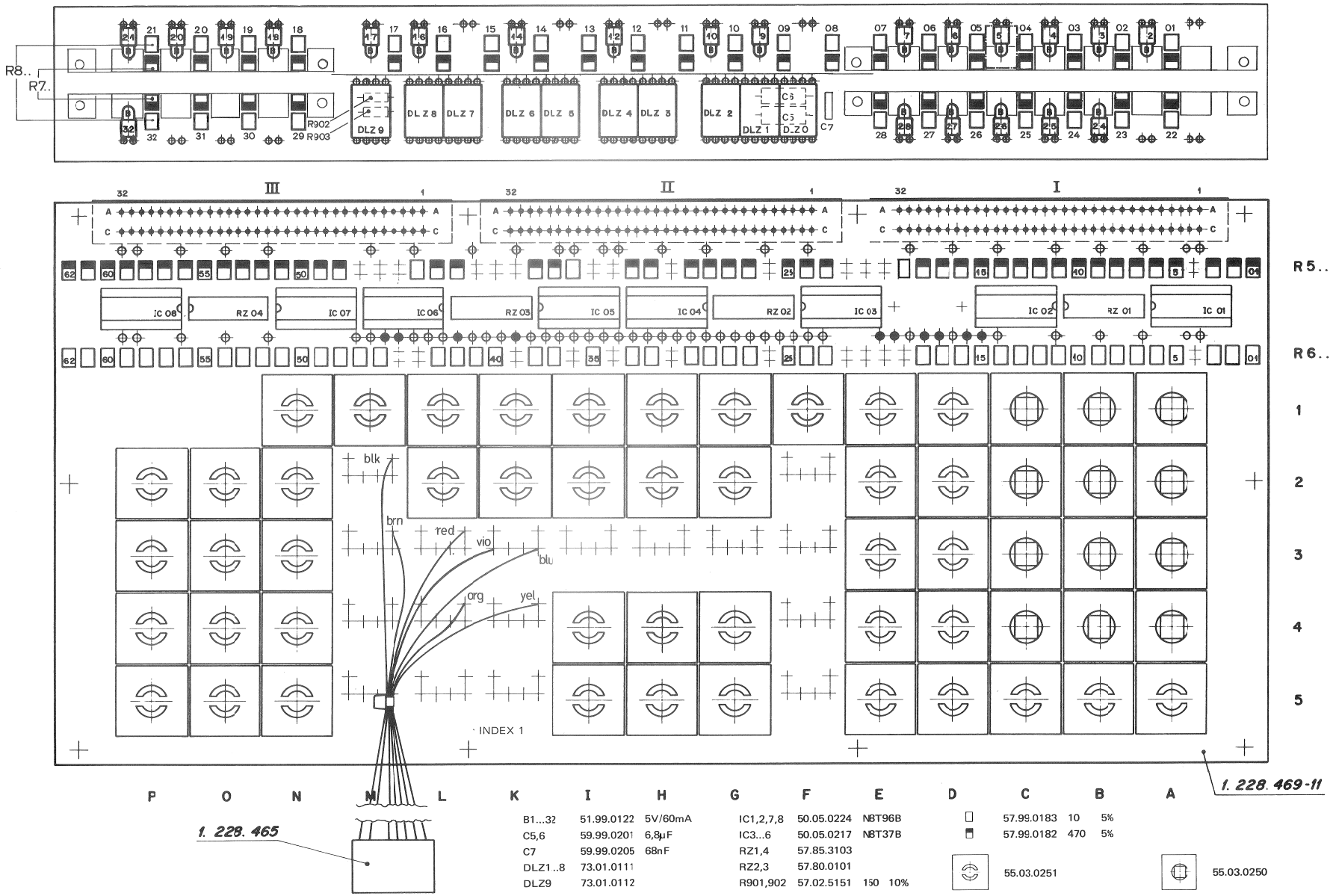

P	O	N	M	L	K	I	H	G	F	E	D	C	B	A

B1...32	51.99.0122	5V/60mA		IC1,2,7,8	50.05.0224	N8T96B		57.99.0183	10	5%
C5,6	59.99.0201	6,8µF		IC3...6	50.05.0217	N8T37B		57.99.0182	470	5%
C7	59.99.0205	68nF		RZ1,4	57.85.3103					
DLZ1..8	73.01.0111			RZ2,3	57.80.0101			55.03.0251		
DLZ9	73.01.0112			R901,902	57.02.5151	150	10%			

55.03.0250

A80 LOCATOR	A80 MASTER-CONTROL	A80 MASTER-CONTROL REHEARS	A800

NUMBER IS 1.228.461 IF REHEARSE KEY IS FITTED

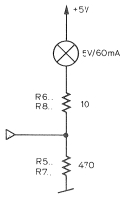

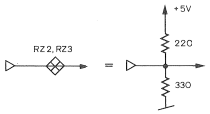

TABLE OF PUSH BUTTON INSCRIPTION

COORDINATES	A80 (LOCATOR)	A80 (MASTER CONTROL)	A80 (MASTER CONTROL REHEARS) / A800
D 2	OFFSET / RETURN POINT	OFS REG	OFS REG
D 4	SET GEN USER BITS / ASD TAPE TIMER	GEN USER BITS	GEN USER BITS
E 4	SET TIME CODE GEN / SET TLS TAPE TIMER	GEN SET	GEN SET
H 4			RHRS
I 2	INT. TIME CODE GEN. / TLS TAPE TIMER	INT GEN	INT GEN
K 2	SLAVE TIME CODE / ASD TAPE TIMER	SLAVE	SLAVE
M 1	TLS LOCATOR	MAST CTRL	MAST CTRL
P 3	LOCK / CHANGE TAKE	LOCK MODE	LOCK MODE

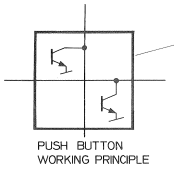

1.228.469

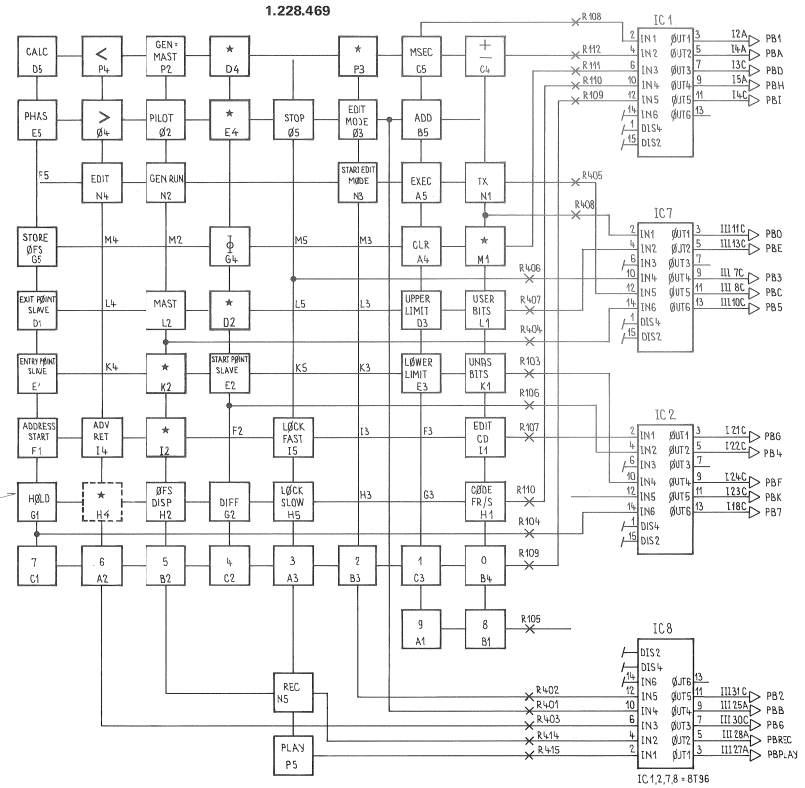

★ SEE TABLE OF PUSH BUTTON INSCRIPTION

1.228.467

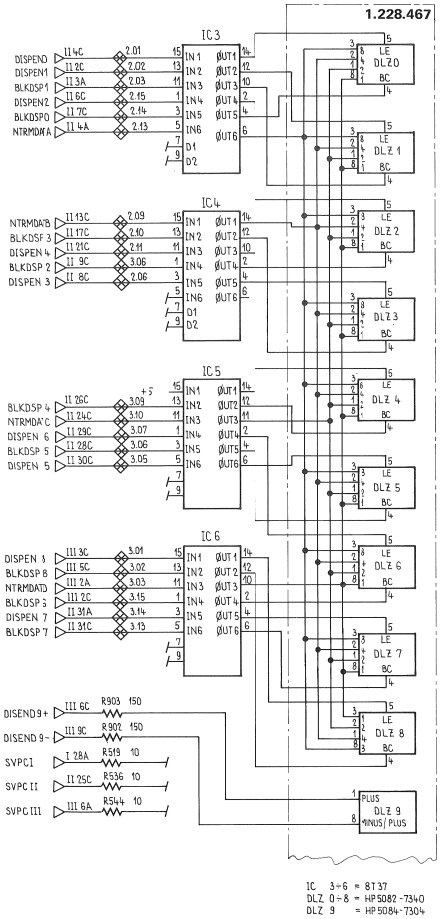

IC 3÷6 = 8T37
DLZ 0÷8 = HP5082-7340
DLZ 9 = HP5084-7304

1.228.468

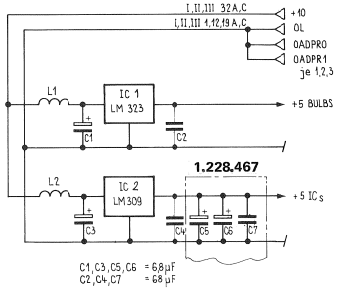

1.228.467

MAIN PROGRAMMER 1.228.460/461 (INDEX 1 WITH WIRE CONNECTIONS)

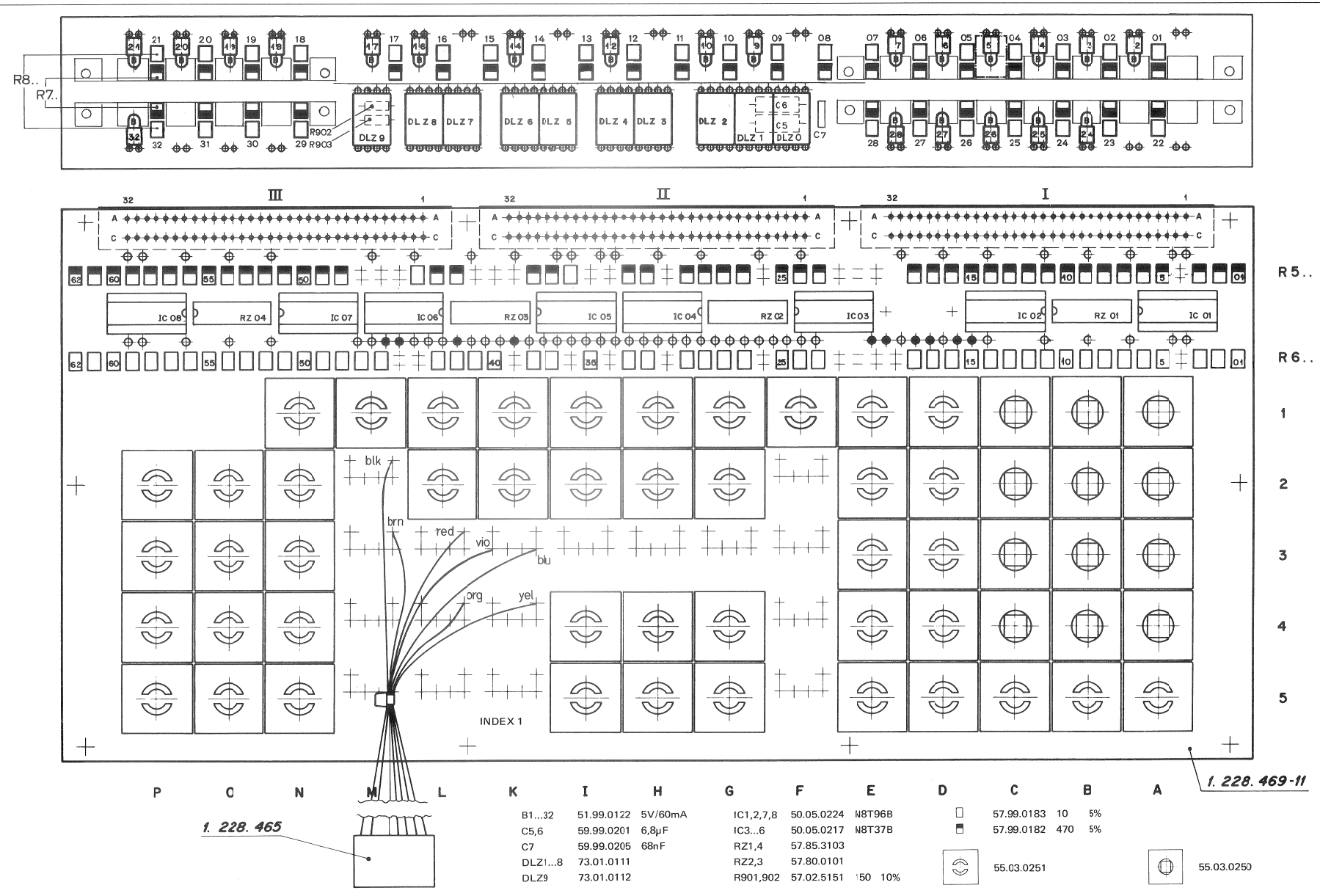

B1...32	51.99.0122	5V/60mA	IC1,2,7,8	50.05.0224	N8T96B		57.99.0183	10	5%		
C5,6	59.99.0201	6,8µF	IC3...6	50.05.0217	N8T37B		57.99.0182	470	5%		
C7	59.99.0205	68nF	RZ1,4	57.85.3103							
DLZ1...8	73.01.0111		RZ2,3	57.80.0101							
DLZ9	73.01.0112		R901,902	57.02.5151	150	10%	55.03.0251			55.03.0250	

A80 LOCATOR	A80 MASTER-CONTROL	A80 MASTER-CONTROL REHEARS	A800

NUMBER IS 1.228.461 IF REHEARSE KEY IS FITTED

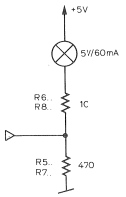

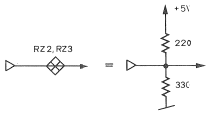

TABLE OF PUSH BUTTON INSCRIPTION			
COORDINATES	A80 LOCATOR	A80 MASTER CONTROL	A80 MASTER CONTROL REHEARS / A800
D2	OFFSET / RETURN POINT	OFS REG	OFS REG
D4	SET GEN USER BITS / AND TAPE TIMER	GEN USER BITS	GEN USER BITS
E4	SET TIME CODE GEN / SET TLS TAPE TIMER	GEN SET	GEN SET
H4			RHRS
I2	INT. TIME CODE GEN / TLS TAPE TIMER	INT GEN	INT GEN
K2	SLAVE TIME CODE / AND TAPE TIMER	SLAVE	SLAVE
M1	TLS / LOCATOR	MAST CTRL	MAST CTRL
F3	LOCK / CHANGE TAKE	LOCK MODE	LOCK MODE

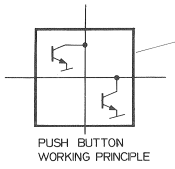

1.228.469

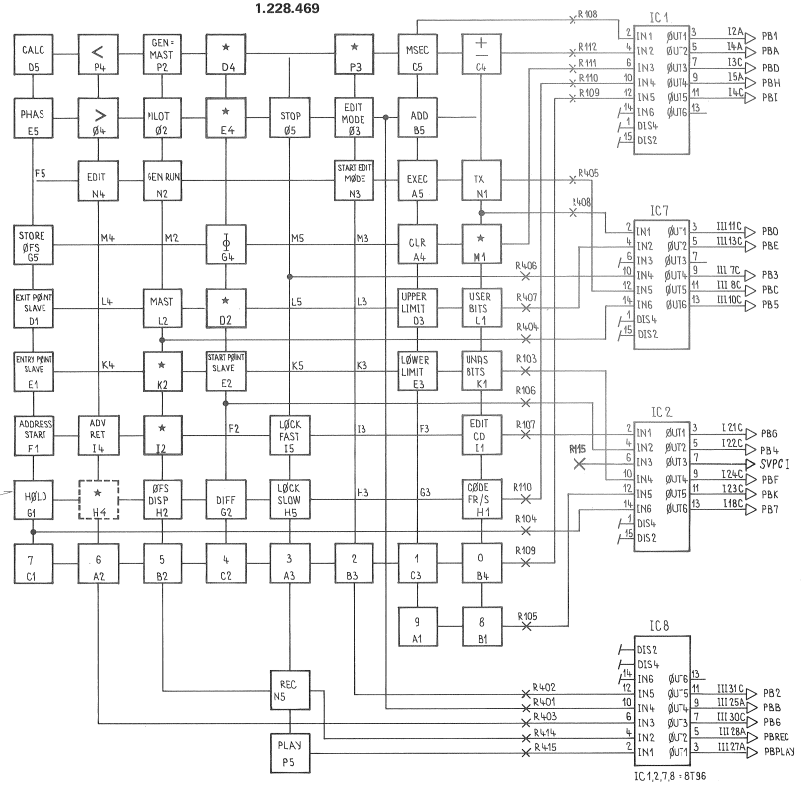

★SEE TABLE OF PUSH BUTTON INSCRIPTION

1.228.467

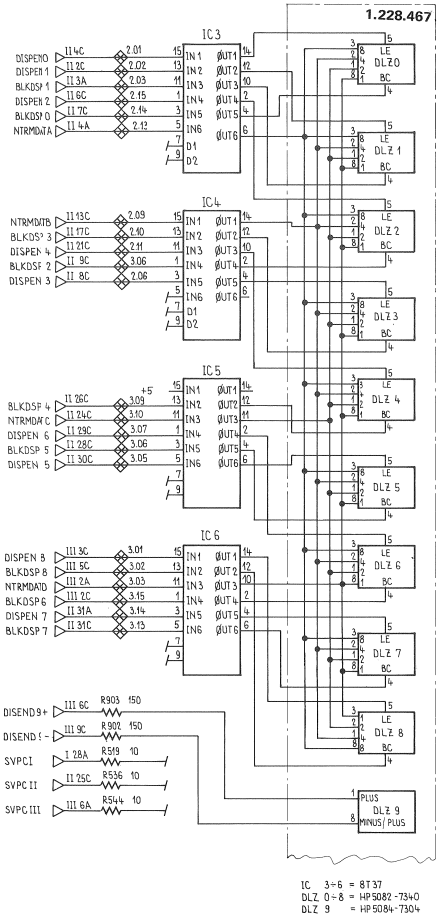

IC 3÷6 = BT37
DLZ Ø÷8 = HP5082-7340
DLZ 9 = HP5084-7304

1.228.468

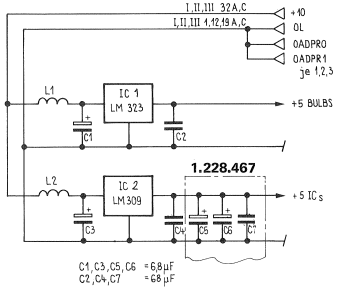

C1, C3, C5, C6 = 6,8 µF
C2, C4, C7 = 68 µF

MAIN PROGRAMMER 1.228.460/461 (INDEX 2)

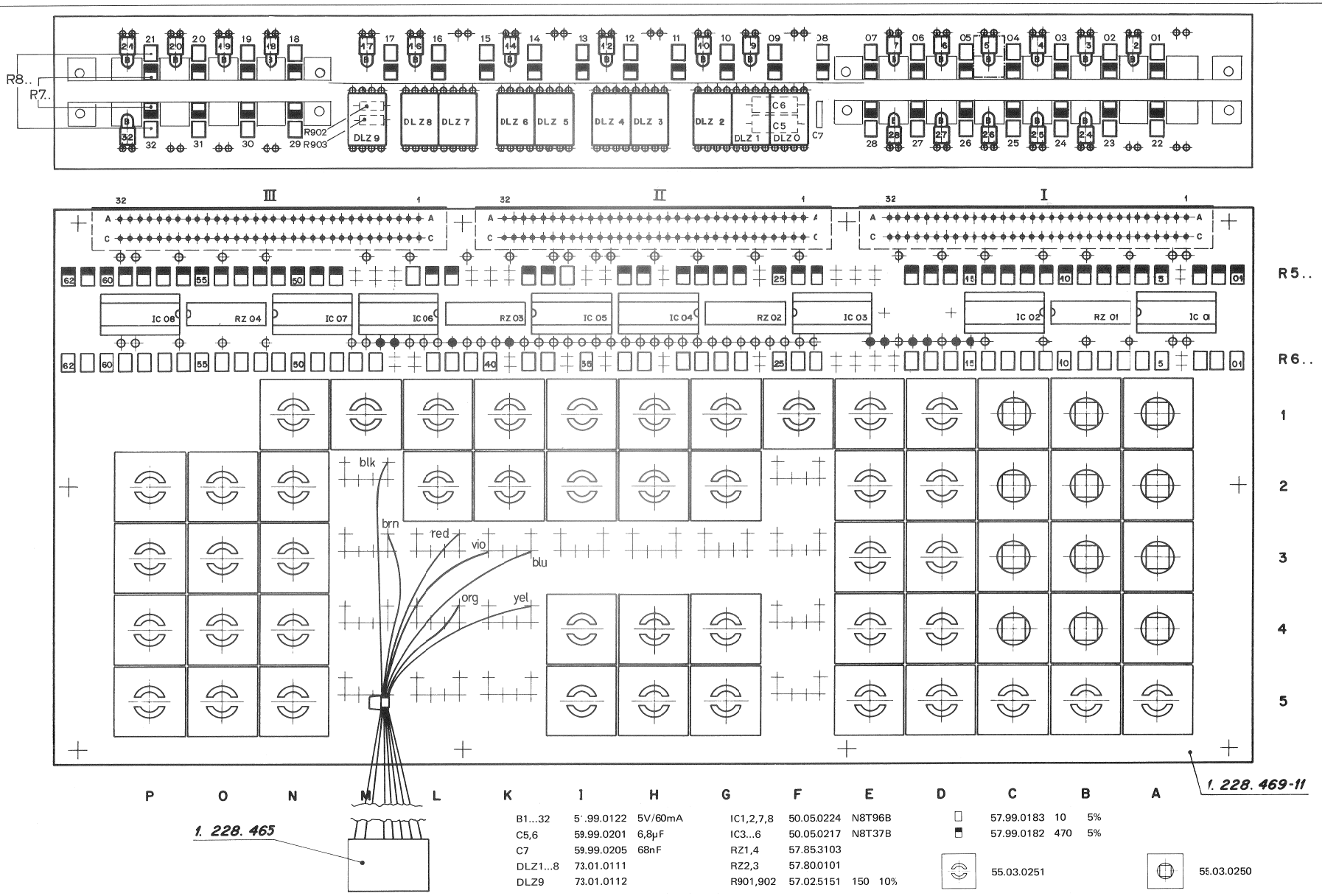

B1...32	5'.99.0122	5V/60mA	IC1,2,7,8	50.05.0224	N8T96B		57.99.0183	10	5%
C5,6	59.99.0201	6,8µF	IC3...6	50.05.0217	N8T37B		57.99.0182	470	5%
C7	59.99.0205	68nF	RZ1,4	57.85.3103					
DLZ1...8	73.01.0111		RZ2,3	57.80.0101					
DLZ9	73.01.0112		R901,902	57.02.5151	150 10%				

55.03.0251 55.03.0250

A80 LOCATOR | A80 MASTER-CONTROL | A80 MASTER-CONTROL REHEARS | A800

NUMBER IS 1.228.461 IF REHEARSE KEY IS FITTED

1.228.469

COORDINATES	A80 LOCATOR	A80 MASTER CONTROL	A80 MASTER CONTROL REHEARS / A800
D 2	OFFSET / RETURN POINT	OFS REG	OFS REG
D 4	SET GEN USER BITS / LED TAPE TIMER	GEN USER BITS	GEN USER BITS
E 4	SET TIME CODE GEN / SET TLS TAPE TIMER	GEN SET	GEN SET
H 4			RHRS
I 2	INT. TIME CODE GEN. / TLS TAPE TIMER	INT GEN	INT GEN
K 2	SLAVE TIME CODE / A80 TAPE TIMER	SLAVE	SLAVE
M 1	TLS / LOCATOR	MAST CTRL	MAST CTRL
P 3	LOCK / CHANGE TAKE	LOCK MODE	LOCK MODE

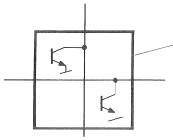

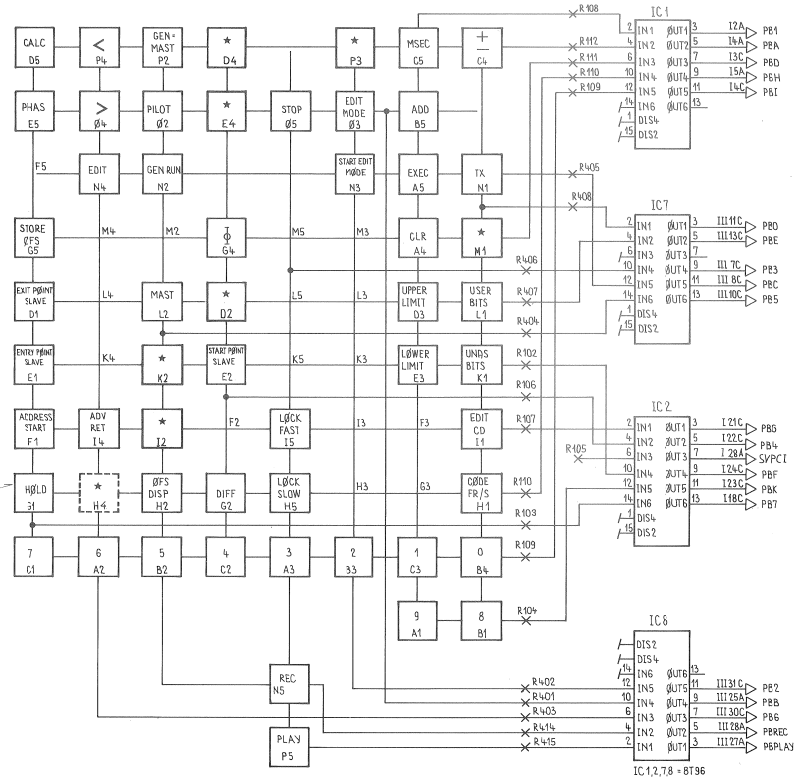

★ SEE TABLE OF PUSH BUTTON INSCRIPTION

1.228.467

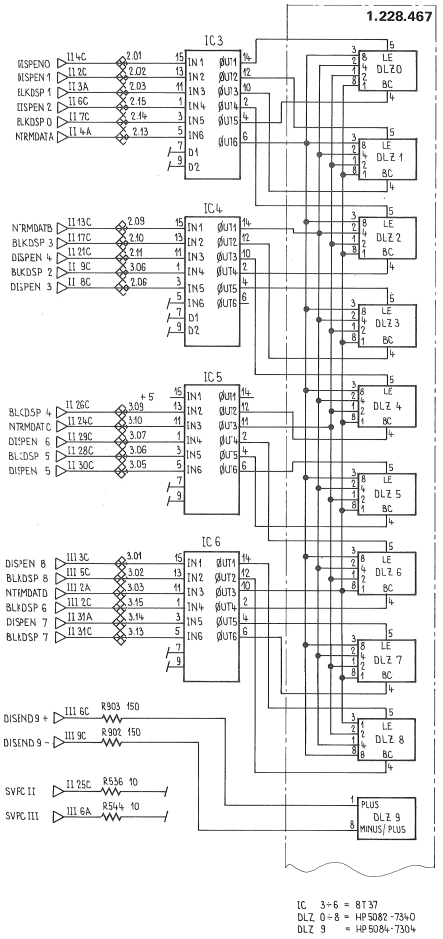

IC 3÷6 = BT 37
DLZ 0-8 = HP 5082-7340
DLZ 9 = HP 5084-7304

1.228.468

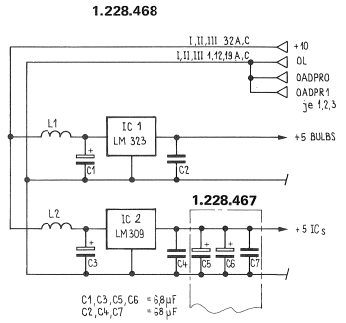

ROTARY SWITCH BOARD 1.228.466

IND	POS NO	PART NO	VALUE	SPECIFICATIONS/EQUIVALENT		MFR
	C 1	59.08.1689	6,8 uF	6 V	TA	
	C 2	59.99.0205	0,068 uF	63 V	KER	SI
	IC 1	50.05.0202	74148	PRIORITY ENCODER		F
	IC 2	50.05.0202	74148	PRIORITY ENCODER		F
	IC 3	50.05.0224	8 T 96	HEX. INV. DRIV. 3-ST		S
	P 1	54.01.0020		HEADER INLINE 2,54 mm		B
	RZ 1	57.85.3103	15* 10 k	P16 = COMMON	DTL 16	BE
1	XIC 1	53.03.0168		IC SOCKET	DTL 16	SAE
1	XIC 2	53.03.0168		IC SOCKET	DTL 16	SAE
1	XIC 3	53.03.0168		IC SOCKET	DTL 16	SAE
1	XIC 4	53.03.0168		IC SOCKET	DTL 16	SAE

IND	DATE	NAME
④		
③		
②		
①	5.12.78	
○	14.10.76	Saxer/al

B = BERG
BE = BECKMANN
F = FAIRCHILD
S = SIGNETICS
SI = SIEMENS

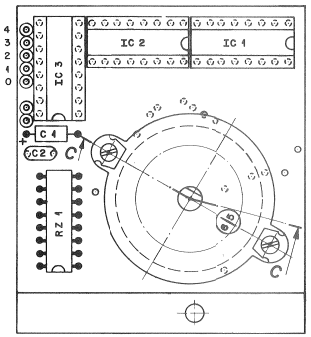

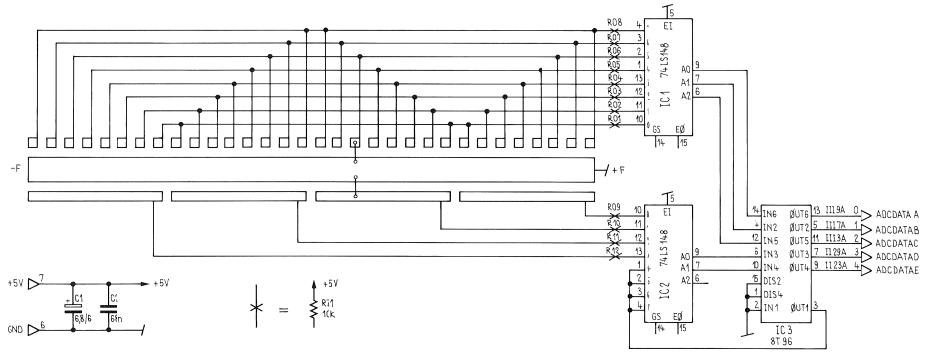

A80 LOCATOR | A80 MASTER-CONTROL | A80 MASTER-CONTROL REHEARS | A800

STABILIZER CONTROL 1.228.468

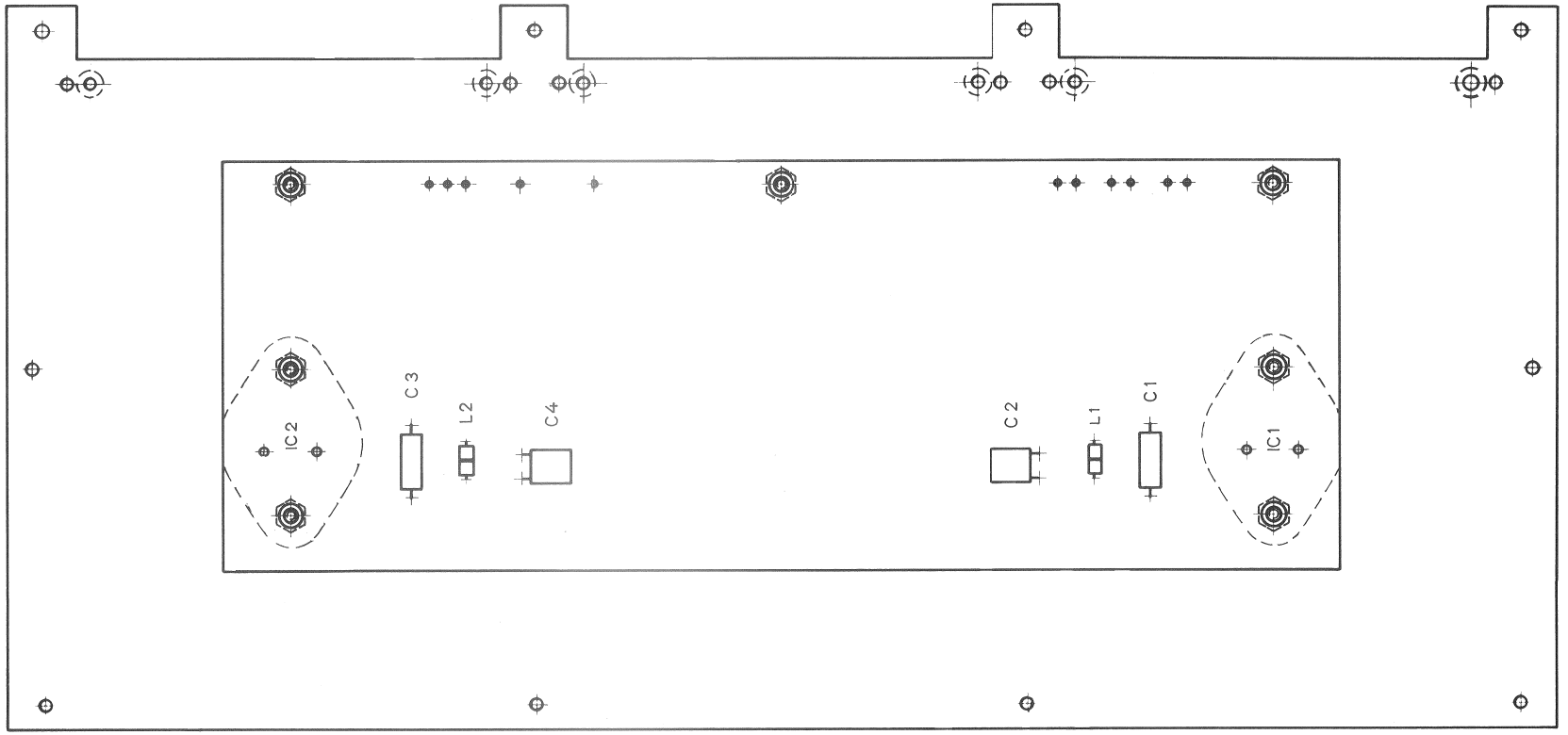

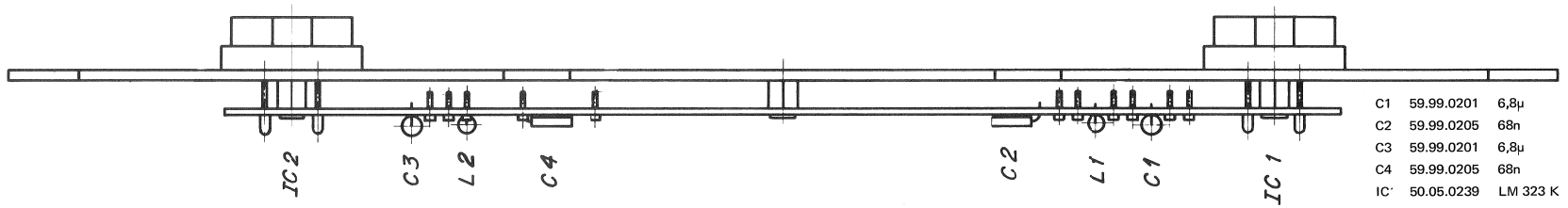

C1	59.99.0201	6,8µ
C2	59.99.0205	68n
C3	59.99.0201	6,8µ
C4	59.99.0205	68n
IC1	50.05.0239	LM 323 K
IC2	50.05.0133	LM 309 K
L1	2 x 61.99.0124	
L2	2 x 61.99.0124	

A80 LOCATOR | A80 MASTER-CONTROL | A80 MASTER-CONTROL REHEARS | A800

MAIN PROGRAMMER CABLE 1.228.679/689

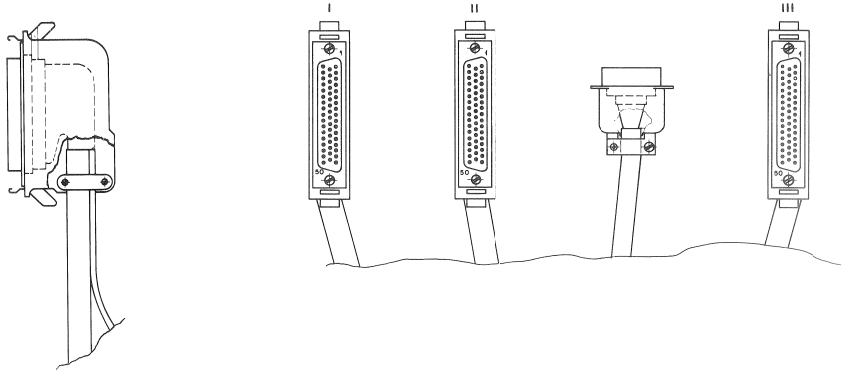

MAIN PROGRAMMER CABLE (15m) 1.228.679
or
MAIN PROGRAMMER CABLE (1.4m) 1.228.689

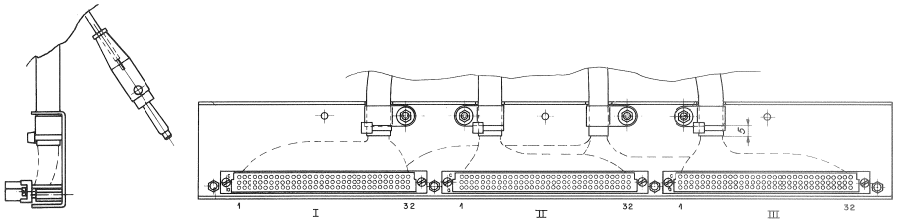

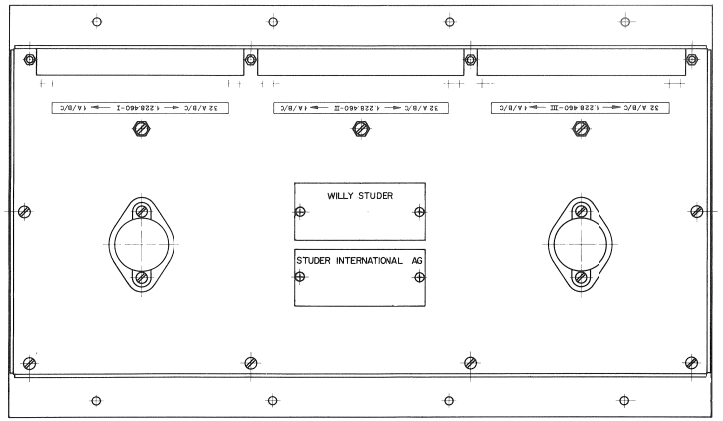

Sig. Name	Color	Micro Ribbon 14 pol. male	Progr. I 96 pol. AMP	Progr. II 96 pol. AMP	Progr. III 96 pol. AMP
0.0 V	wht	2/3	19A		
0.0 V	wht		19C		
0.0 V	wht			19A	
0.0 V	wht	9/10		19C	
0.0 V	wht				19A
0.0 V	wht				19C
+10 V	blk	4/5	32A		
+10 V	blk		32C		
+10 V	grn			32A	
+10 V	grn	11/12		32C	
+10 V	wht				32A
+10 V	wht				32C

Sig. Name	Colbr	AMP 1 50 pol. male	Progr. I 96 pol. AMP
PB 1	wht	2	2 A
BULBDPA 2	brn	3	3 A
PBA	grn	4	4 A
PBH	yel	5	5 A
BULBPBI 3	gry	6	6 A
EDIT CD	pink	7	7 A
LOCKFAST	blu	8	8 A
ADVRET	red	9	9 A
MSEC	blk	10	10 A
GENNSC	vio	11	11 A
B-UPPLIM	grypink	12	13 A
ENTRY	bl rd	13	17 A
BOFFSREG	wht grn	14	18 A
B-EXITSL	brngrn	15	21 A
B-PHAS	wht yel	16	22 A
FRAMER	yel brn	17	23 A
GENSET	wht gry	18	24 A
B-LOWLIM	grybrn	19	25 A
NOCODES	wht ping	20	26 A
B-ENTRYM	ping brn	21	27 A
SVPCI	wht blu	22	28 A
BULBPBF 4	brnblu	23	29 A
BULBPBF 3	wht red	24	30 A
BULBPBF 2	brnred	25	31 A
EXEC	wht blk	26	2 C
PBD	brnblk	27	3 C
PBI	grygrn	28	4 C
BULBDPA 1	yel gry	29	5 C
INTGEN	pink grn	30	6 C
BULBDPB 2	yel pink	31	7 C
CODENDEF	grnblu	32	8 C
ADD	yel blu	33	9 C
B-CALC	grnred	34	10 C
SLDECOFF	yel red	35	11 C
B-GENUSB	grnblk	36	13 C
SLNOTP	yel blk	37	17 C
PB 7	grybl u	38	18 C
PBG	pink blu	39	21 C
PB 4	gry red	40	22 C
PBK	pink red	41	23 C
PBF	grybl k	42	24 C
LWLIMEX	pink blk	43	25 C
CONNFAIL	blublk	44	26 C
BENT / PKS	redblk	45	27 C
UPLIMEX	wht brn blk	46	28 C
B-NOMAST	yel grn blk	47	29 C
	grypink blk	49	30 C
	blu red blk	50	31 C
Key		1	
Key		48	
OL	wht grn blk	Bananen Stecker 1	1 A
OADPRG 01	grnbrn blk		12 A
OL	wht yel blk		1 C
OADPRG 02	yel brn blk		12 C

Sig. Name	Color	AMP 2 50 pol. male	Progr. II 96 pol. AMP
	wht	1	2 A
BLKDISP 1	brn	3	3 A
NTRMDAT A	grn	4	4 A
BULBPBF	yel	5	5 A
BULBDPH 1	gry	6	6 A
PHASING	pink	7	7 A
BULBPBG 3	blu	8	8 A
MSEC	red	9	9 A
DIFF	blk	10	10 A
FRAM	vio	11	11 A
BULBPBH 4	gry pink	12	13 A
BULBPBH 3	blu red	13	17 A
OFS DISP	wht grn	14	18 A
CODEFR / S	brn grn	15	21 A
PBULBHMS	wht yel	16	22 A
ADCDATAE	yel brn	17	23 A
BULBDPM 1	wht gry	18	24 A
SLAV	gry brn	19	25 A
UNAS B	wht pink	20	26 A
BULBPBL 5	pink brn	21	27 A
BULBDPP 1	wht blu	22	28 A
ADCDATAD	brn blu	23	29 A
BULBHMS	wht red	24	30 A
DISPEN 7	brn red	25	31 A
DISPEN 1	wht blk	26	2 C
	brn blk	27	3 C
DISPEN 0	gry grn	28	4 C
STOREOFS	yel gry	29	5 C
DISPEN 2	pink grn	30	6 C
BLKDSP 0	yel pink	31	7 C
DISPEN 3	grn blu	32	8 C
BLKDSP 2	yel blu	33	9 C
HOLD	grn red	34	10 C
LOCKSLOW	yel red	35	11 C
NTPMDAT B	grn blk	36	13 C
BLKDSP 3	yel blk	37	17 C
BULBDPL 1	gry blu	38	18 C
DISPEN 4	pink blu	39	21 C
BULBPBK 5	gry red	40	22 C
BULBDPA 0	pink red	41	23 C
NTRMDATC	gry blk	42	24 C
SVPC II	pink blk	43	25 C
BLKDSP 4	blu blk	44	26 C
PBULBHMS	red blk	45	27 C
BLKDSP 5	wht brn blk	46	28 C
DISPEN 6	yel grn blk	47	29 C
DISPEN 5	gry pink blk	48	30 C
BLKDSP 7	blu red blk	50	31 C
Key		2	
Key		49	
OL	wht grn blk	Bananen Stecker 2	1 A
OADPRG 03	grn brn blk		12 A
OL	wht yel blk		1 C
OADPRG	yel brn blk		12 C

Sig Name	Color	AMP 3 50 pol. male	Progr. III 96 pol.
NTRMDAT D	wht	1	2 A
ACCDATAC	brn	2	3 A
MAST	grn	4	4 A
USER B	yel	5	5 A
SVPC III	gry	6	6 A
ACCDATA B	pink	7	7 A
BULBPBM 5	blu	8	8 A
ACCDATA A	red	9	9 A
BULBPBM 1	blk	10	10 A
REC	vio	11	11 A
EDIT	gry pink	12	13 A
BPKMMPRG	blu red	13	17 A
GENRUN	wht grn	14	18 A
TX	brn grn	15	21 A
SYNCPLT	wht yel	16	22 A
PAST FWD	yel brn	17	23 A
BEDMMPRG	wht gry	18	24 A
PB8	gry brn	19	25 A
B-RECENB	wht ping	20	26 A
PBPLAY	ping brn	21	27 A
PB9EC	wht blu	22	28 A
GEN=MAST	brn blu	23	29 A
OSW	wht red	24	30 A
PLAY	brn red	25	31 A
BLK DSP 6	wht blk	26	2 C
DISPEN 8	brn blk	27	3 C
KB	gry grn	28	4 C
BLK DSP 8	yel gry	29	5 C
DISEnd 9 +	pink grn	30	6 C
PB3	yel pink	31	7 C
PBC	grn blu	32	8 C
DISEND 9 –	yel blu	33	9 C
PB5	grn red	34	10 C
PBD	yel red	35	11 C
PBE	grn blk	36	13 C
BULBDPS 2	yel blk	37	17 C
PARKED	gry blu	38	18 C
BULBDPT 2	pink blu	39	21 C
STOP	gry red	40	22 C
+ 10 SW	pink red	41	23 C
BULBDPU 2	gry blk	42	24 C
SYNC B	pink blk	43	25 C
BPLMPRG	blu blk	44	26 C
FAST REW	red blk	45	27 C
BLKMMPRG	wht brn blk	46	28 C
SYNAC A	yel grn blk	47	29 C
PB6	gry pink blk	48	30 C
PB2	blu red blk	49	31 C
Key		3	
Key		50	
OADPRG	wht grn blk	Bananen Stecker 3	1 A
OADPRG 05	grn brn blk		12 A
OADPRG	wht yel blk		1 C
OADPRG 06	yel brn blk		12 C

6.2
CODE CHANNEL REMOTE CONTROL UNIT 1.228.382

A80 MASTER-CONTROL | A80 MASTER-CONTROL REHEARS

KEY CONFIGURATION

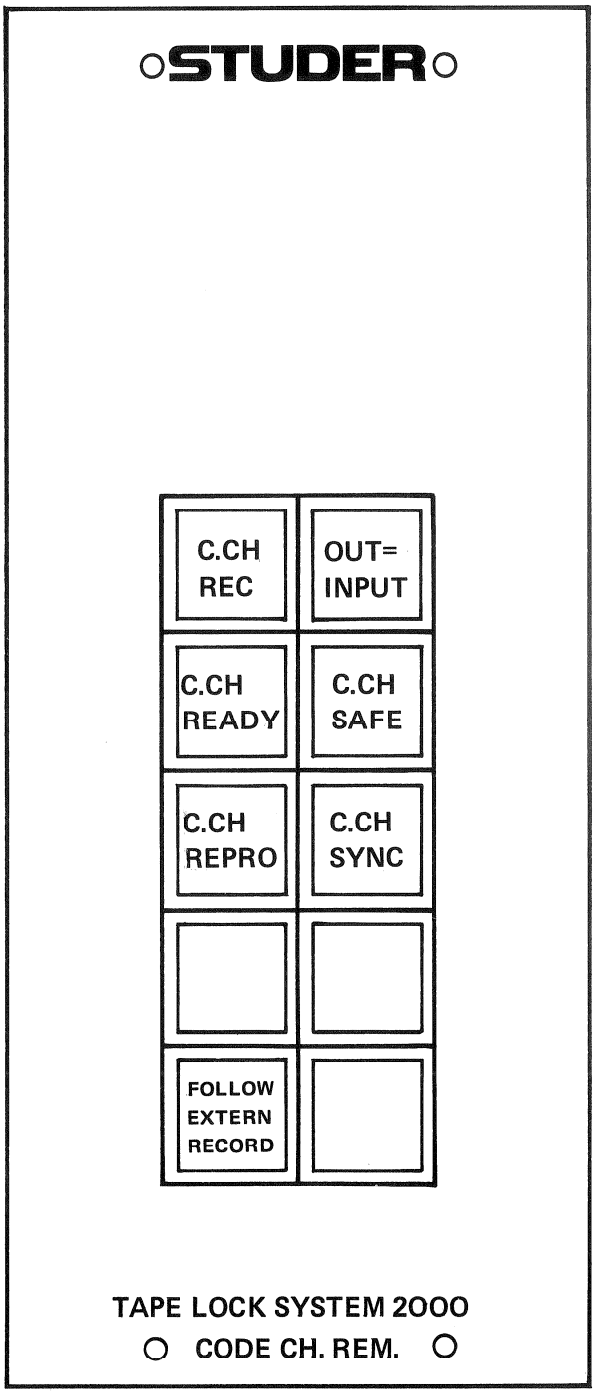

CODE CHANNEL REMOTE CONTROL PCB 1.228.382

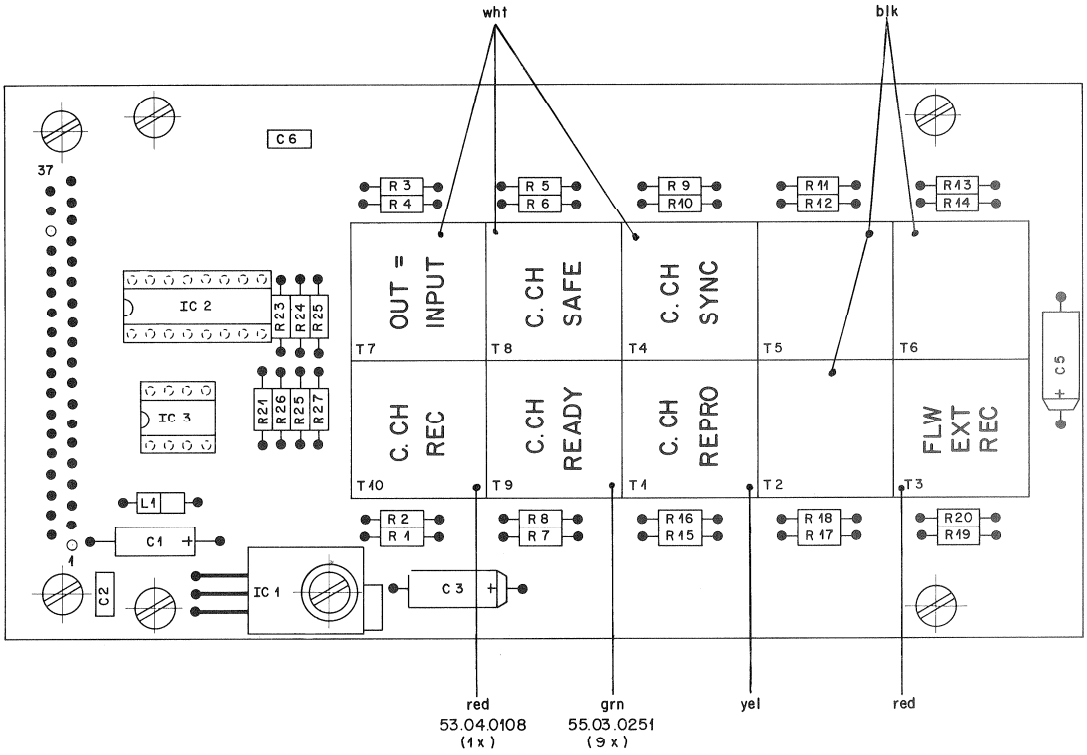

IND	POS NO	PART NO	VALUE	SPECIFICATIONS/EQUIVALENT	MFR
	C 01	59.99.0201	6,8 µ	35 V 20% TA	
	C 02	59.99.0205	68000p	63 V 20% KER	
	C 03	59.99.0202	39 µ	10 V 20% TA	
	C 04	59.99.0205	68000p	63 V 20% KER	
	C 05	59.99.0202	39 µ	10 V 20% TA	
	C 06	59.99.0205	68000p	63 V 20% KER	
	IC 01	50.05.0221	LM 340		
	IC 02	50.05.0224	8T96B TTL-3		
	R 01	57.02.5100	10 Ω	10%	
	R 02	57.02.5471	470 Ω		
	R 03	57.02.5100	10 Ω		
	R 04	57.02.5471	470 Ω		
	R 05	57.02.5100	10 Ω		
	R 06	57.02.5471	470 Ω		
	R 07	57.02.5100	10 Ω		
	R 08	57.02.5471	470 Ω		
	R 09	57.02.5100	10 Ω		
	R 10	57.02.5471	470 Ω		
	R 11	57.02.5100	10 Ω		
	R 12	57.02.5471	470 Ω		
	R 13	57.02.5100	10 Ω		
	R 14	57.02.5471	470 Ω		
	R 15	57.02.5100	10 Ω		
	R 16	57.02.5471	470 Ω		
	R 17	57.02.5100	10 Ω		
	R 18	57.02.5471	470 Ω		

IND	DATE	NAME
④		
③		
②		
①		
○	8.12.1978	MS/gv

IND	POS NO	PART NO	VALUE	SPECIFICATIONS/EQUIVALENT	MFR
	R 19	57.02.5100	10 Ω	10%	
	R 20	57.02.5471	470 Ω		
	R 21	57.02.5103	10 K		
	R 22	57.02.5103	10 K		
	R 23	57.02.5103	10 K		
	R 24	57.02.5103	10 K		
	R 25	57.02.5103	10 K		
	R 26	57.02.5103	10 K		
	R 27	57.02.5103	10 K		
	X IC	53.03.0166	DIP 8		
	X IC	53.03.0168	DIP 16		
	L 01	61.99.0124	D 3,5x3		
	T 01	55.03.0251	SBX	1 TASTE, 2xA, TTL	
	T 02	55.03.0251	SBX		
	T 03	55.03.0251	SBX		
	T 04	55.03.0251	SBX		
	T 05	55.03.0251	SBX		
	T 06	55.03.0251	SBX		
	T 07	55.03.0251	SBX		
	T 08	55.03.0251	SBX		
	T 09	55.03.0251	SBX		
	T 10	53.04.0108	XB	T-1, 5V, PRINT	

IND	DATE	NAME
④		
③		
②		
①		
○	8.12.1978	MS/gv

A80 MASTER-CONTROL | A80 MASTER-CONTROL REHEARS

CODE CHANNEL REMOTE CONTROL PCB 1.228.382

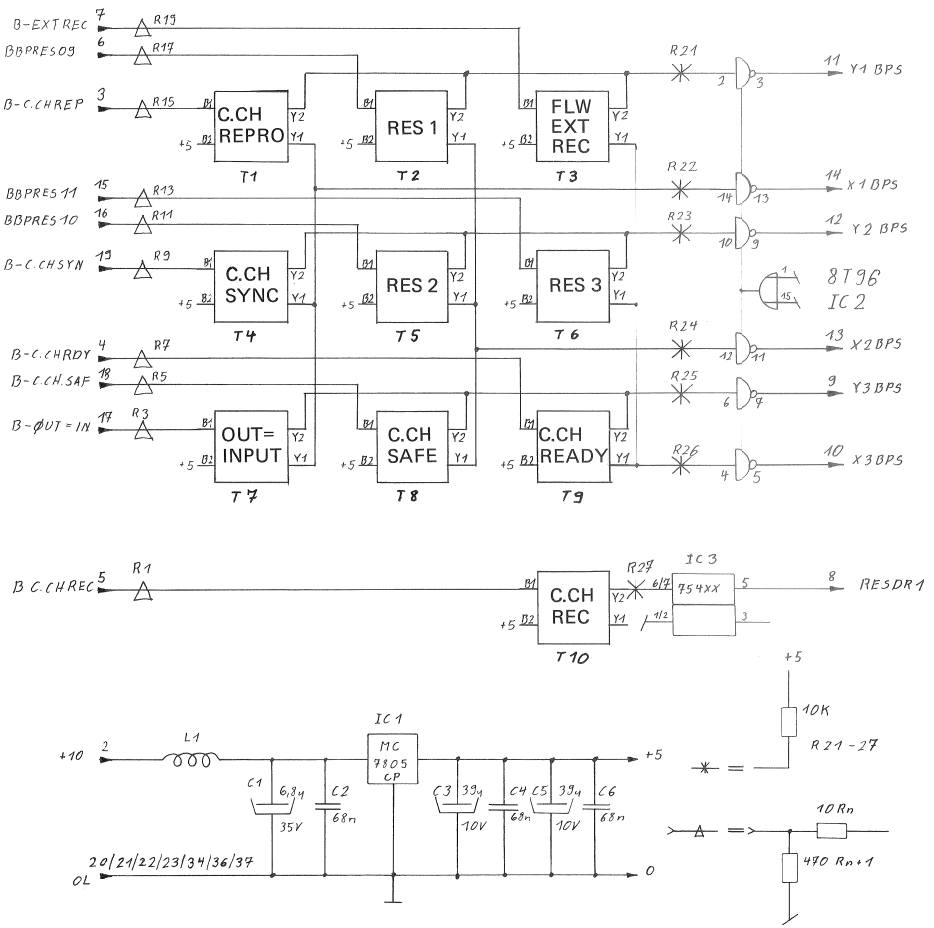

CONNECTION CABLE REMOTE CONTROL TO SLAVE RACK 1.228.963

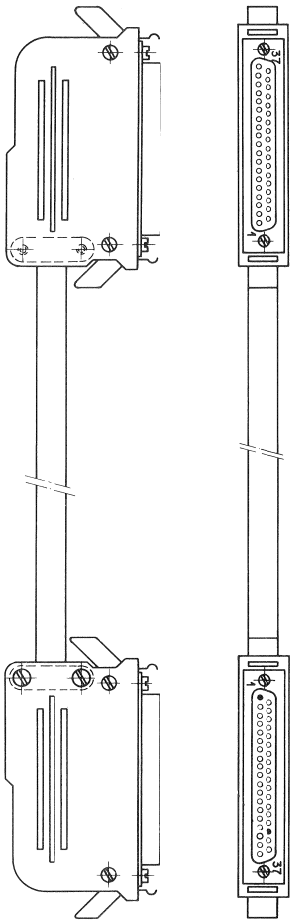

Sign. Name	Color	Start	End
0L	wht blu*	20	20
0L	wht org*	21	21
0L	wht grn*	22	22
+10	wht brn*	2	2
BPSUPVIS	wht gry*	23	23
B-CCHREP	red *	3	3
B-CCHRDY	blu	4	4
B-CCHREC	red *	5	5
BBPRES09	org	6	6
B-EXTREC	red *	7	7
RESDRIVI	grn	8	8
Y3BPS	red *	9	9
Y2BPS	brn	10	10
Y1BPS	red *	11	11
X3BPS	gry	12	12
X2BPS	blk *	13	13
X1BPS	blu	14	14
BBPRES11	blk *	15	15
BBPRES10	org	16	16
B-OUT=IN	blk *	17	17
B-CCHSAF	grn	18	18
B-CCHSYN	blk *	19	19
X4	brn	36	36
X5	blk *	37	37
unused	gry	24	24
unused	yel *	25	25
unused	blu	26	26
unused	yel *	27	27
unused	org	28	28
unused	yel *	29	29
unused	grn	30	30
unused	yel *	31	31
unused	brn	32	32
unused	yel *	33	33
NEMGSTOP	gry	34	34
Key		1	1
Key		35	35

*TWISTED PAIRS AMONGST CABLES

6.3 DER PARALLEL-/SERIEWANDLER (P/S-WANDLER) 1.228.490

6.3.1 System ohne P/S-Wandler

Die Distanz zwischen Rack und Programmiereinheit kann bei einwandfreier Funktion bis zu 25m betragen.

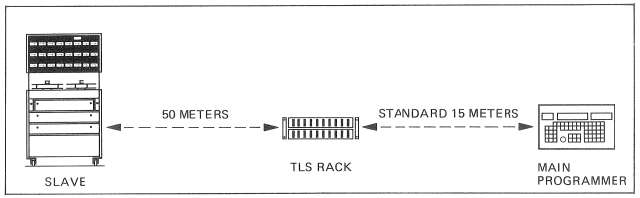

Fig. 6.3.1
System ohne P/S-Wandler

6.3.2 System mit P/S-Wandler

Die Distanz zwischen Wandler und TLS-Rack kann jetzt ohne Beeinträchtigung der Funktion ca. 1000m betragen.
Die Elektronik und das Netzgerät sind in einem 19Zoll-Rack untergebracht. Dieses ist über eine Leitung von 2x2 Drähten mit dem TLS-Slave Rack verbunden.

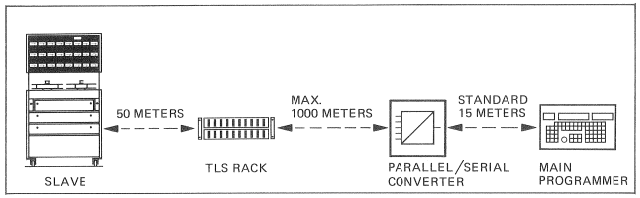

Fig. 6.3.2
System mit P/S-Wandler

Die beiden Karten 1.228.409 und 410 auf den Rack-Plätzen 9 und 10, welche die Kommunikation mit der Programmiereinheit gewährleisten, werden aus dem Slave Rack entfernt und in den P/S-Wandler eingesetzt.
An deren Stelle wird auf Platz 9 das TLS-Interface 1.228.492 eingesetzt. Es sendet und empfängt die seriellen Daten über den Line Amplifier 1.228.494. Im P/S-Wandler kommt die gleiche Rolle dem Line Amplifier 1.228.493 und dem Serial Transceiver 1.228.491 zu.

6.3 PARALLEL/SERIAL CONVERTER (P/S CONVERTER) 1.228.490

6.3.1 System without P/S converter

Proper functioning is ensured as long as the distance between the rack and the programming unit does not exceed 25m.

Fig. 6.3.1
System without P/S converter

6.3.2 System with P/S converter

In this configuration the distance between the converter and the TLS rack can measure approx. 1000m without impairing proper functioning.
The electronics and the power supply are mounted in a 19" rack which is interconnected with the TLS slave rack by a 2x2 conductor cable.

Fig. 6.3.2
System with P/S converter

The two cards 1.228.409 and 410 mounted in rack locations 9 and 10 which enable communication with the programming unit are removed from the slave rack and mounted in the P/S converter.
They are replaced by the TLS interface 1.228.492 which is mounted in location 9 of the slave rack. This interface transmits and receives the serial data via line amplifier 1.228.494. In the PS converter, the corresponding function is performed by line amplifier 1.228.493 and the serial transceiver 1.228.491.

PARALLEL SERIAL CONVERTER

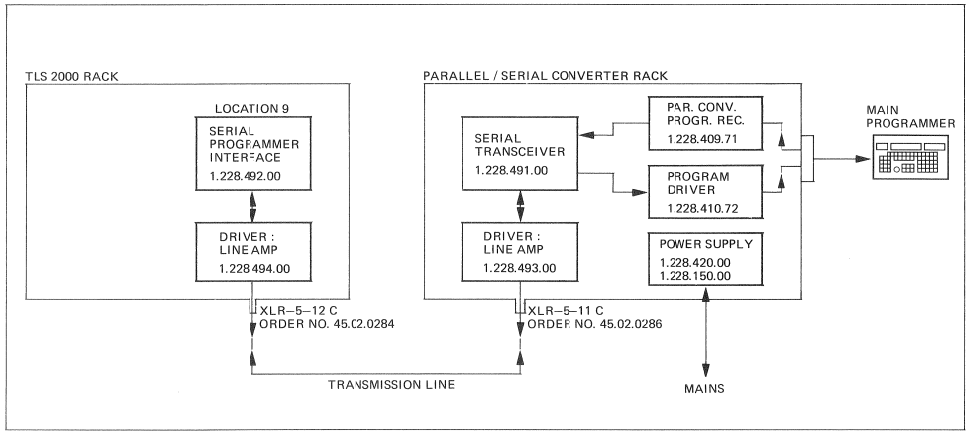

Fig. 6.3.3
Die Komponenten des Systems

Fig. 6.3.3
System components

6.3.3 Das Übertragungsprinzip

Übertragungsart:
- pausenmoduliertes Zweiphasensignal, Vollduplex
- Übertragungsrate: 2'400 Baud
- Bandbreite: 3500 Hz mit Bessel-Tiefpassfilter 4. Ordnung
- Spannung des Übertragungssignals: 1.5 Vss

6.3.3 Principle of transmission

Transmission mode:
- Phase modulated two-phase signal, full duplex
- Transmission rate: 2400 baud
- Band width: 3500 Hz with Bessel low-pass filter 4th order
- Voltage of transmission signal: 1.5 Vss

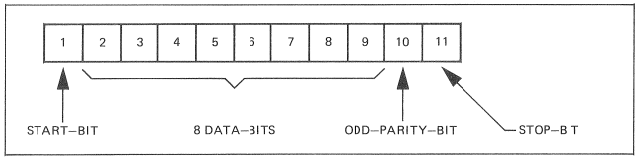

Fig. 6.3.4
Format eines Übertragungswortes

Fig. 6.3.4
Format of a transmission word

Übertragung eines Drucktastensignales vom Programmer zum TLS-Rack:
Wenn eine Drucktaste gedrückt ist, wird ein Kontrollwort gesendet. Nach diesem folgen zwei Informationsworte. Bis zum Loslassen der Taste wird das Kontrollwort wiederholt. Die Übertragungsleitung wird somit immer aktiv gehalten.

Das Kontrollwort weist dabei eine Nummer zwischen $ 50 und $ 5F auf. Sie wird nach jedem Funktionswechsel erhöht.

Transmission of a push button signal from the programmer to the TLS rack:
A control word is transmitted each time a push button is depressed. This control word is followed by two information words. The control word is repeated until the button is released. In this way, the transmission line is always kept active.

The control words are numbered between $ 50 and $ 5F. The number is incremented after each change of function

PARALLEL SERIAL CONVERTER

SYSTEM BLOCK DIAGRAM

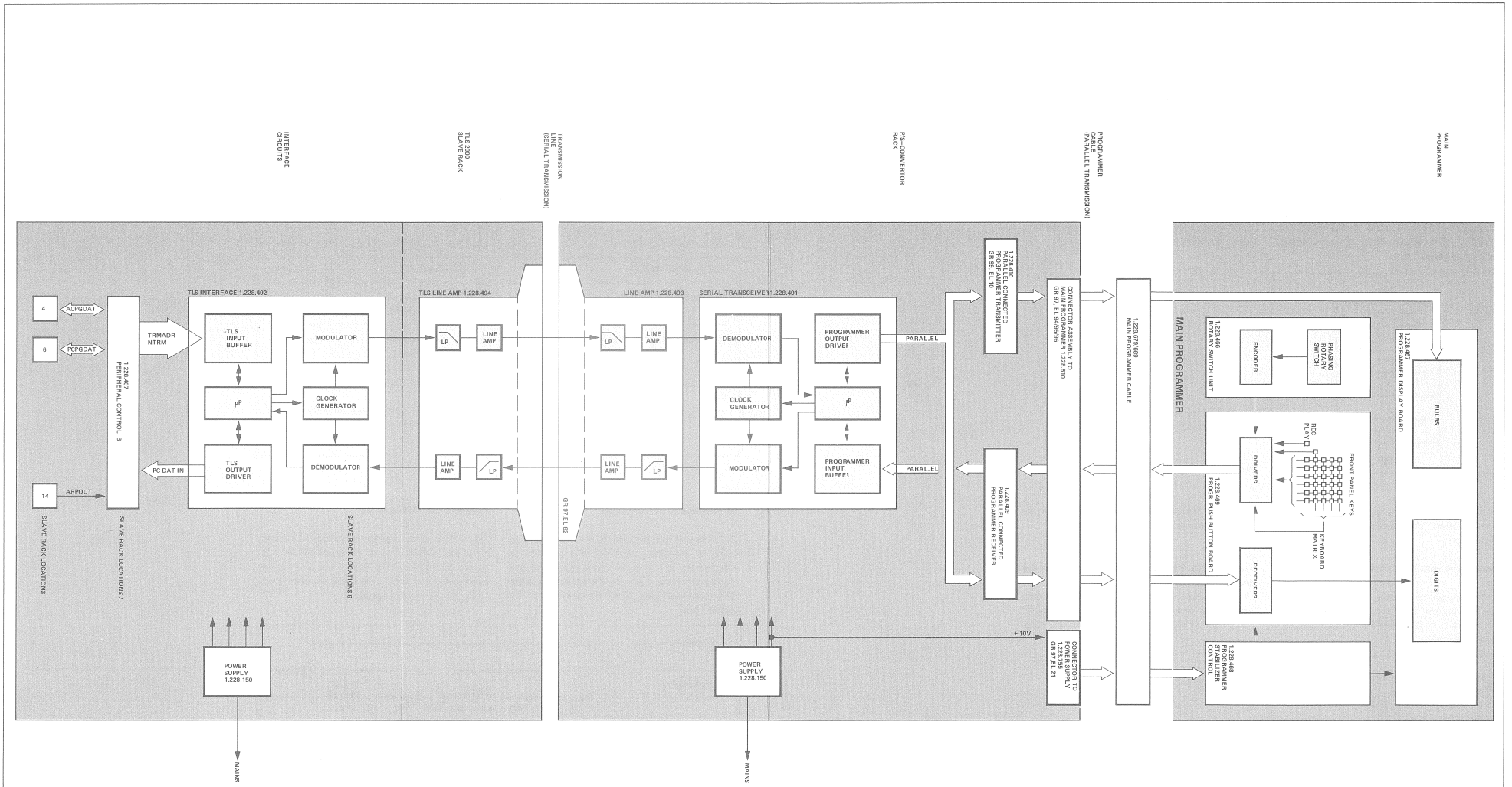

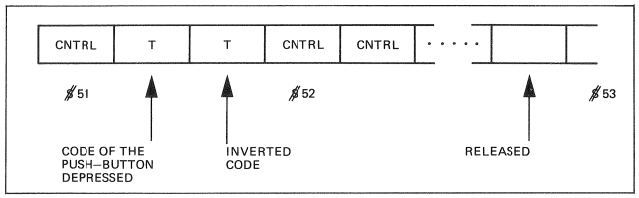

Fig. 6.3.5
Format des Datentransfers

Fig. 6.3.5
Format of data transfer

Das Signal wird auf beiden Seiten der Leitung in ein Stack-Register mit sechs Speichern geladen. Die sechs zuletzt angekommenen Wörter werden wie folgt abgespeichert:

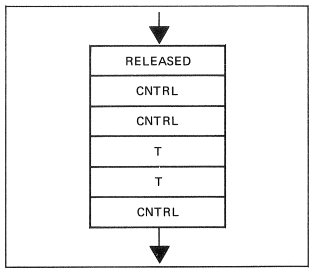

Fig. 6.3.6
Speicherung der ankommenden Wörter

At both ends of the line, the signal is stored in a stack register with six storage levels. The last six words received are stored as follows:

Fig. 6.3.6
Storage of incoming words

Die Übertragungsleitung wird durch das Aussenden von Daten- oder Kontrollworten immer aktiv gehalten.

The transmission line is continuously kept active by transmitting data or control words.

Übertragung vom TLS-Slave Rack zum Programmer
Abwechslungsweise sendet das TLS Adressen- und Datenworte. Wie schon erwähnt, besteht jedes Wort aus 11 Bits. Es werden keine Kontrollworte übertragen.

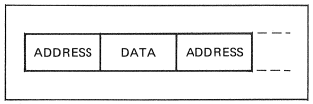

Fig. 6.3.7
Übertragung vom TLS

Transmission from the TLS slave rack to the programmer
The TLS alternately transmits address and data words. As previously mentioned, each word comprises 11 bits. No control words are transmitted.

Fig. 6.3.7
Transmission from the TLS

PARALLEL SERIAL CONVERTER

6.3.4 Ablauf beim Einschalten

TLS-SLAVE RACK	PROGRAMMER
Das TLS wartet auf die Übermittlung von drei korrekten "OE" vom Programmer.	Der Programmer wartet auf die Übermittlung von drei korrekten "7C" vom TLS.
TLS sendet alle 25 msec ein "7C".	Der Programmer sendet alle 25 msec ein "7C".
TLS beginnt mit der Übermittlung von Informationen.	Kontrollampe "connection fail" verlöscht.
	Beginnt auch mit der Übermittlung vor Informationen.

6.3.4 Power-on sequence

TLS SLAVE RACK	PROGRAMMER
TLS waits for transmission of three correct "OE" from programmer.	Programmer waits for transmission of three correct "7C" from TLS.
TLS transmits a "7C" in intervals of 25 msec.	Programmer transmits a "7C" in intervals of 25 msec.
TLS starts with the transmission of information.	Control lamp "Connection fail" is extinguished.
	Also starts with the transmission of information.

6.3.5 Auswertung der Information

Um eine gute Unterdrückung unerwünschter Impulse zu erreichen, wird nur jene Information ausgewertet, die zu einem festgelegten Zeitraum empfangen wird. Flanken, die ausserhalb dieses Zeitraumes auftreten, lösen das Fehlersignal "no carrier" aus.

6.3.5 Evaluation of information

For effective suppression of undesired pulses, only that information is evaluated which is received during a specific time zone. Slopes arriving outside this time zone cause the error signal "No carrier" to be triggered.

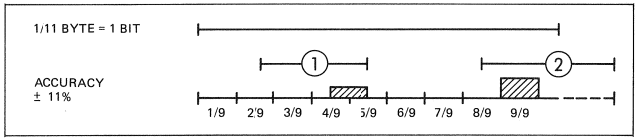

Fig. 6.3.8
Toleranzfeld für die Informationsübertragung

Fig. 6.3.8
Tolerance field for the transmission of information

Die Zone [1] bestimmt die Wertigkeit des Bites. Tritt innerhalb der Toleranzgrenze eine Flanke auf, (Wechsel plus zu minus oder umgekehrt) hat das Bit die Wertung "1". Keine Flanke bedeutet die Wertung "Null".

Innerhalb der Zone [2] muss für eine korrekte Übertragung immer eine Flanke auftreten, unabhängig der Wertung des Bites.

Zone [1] determines the bit significance. If a slope arrives within the tolerance field (change from negative to positive or vice versa), the bit is assigned a significance of "1". In the absence of a slope, a significance of "0" is assigned.

Within zone [2] a slope must always occur if the transmission is correct, regardless of the bit significance.

PARALLEL SERIAL CONVERTER

6.3.6 Fehlerhafter Empfang der Information

Erkennt der Empfänger einen der aufgeführten Fehler, so "stört" er den von ihm selbst ausgesandten Träger durch 5 zusätzliche Flanken pro Byte. Damit wird dem Absender mitgeteilt, dass ein Übertragungsfehler vorliegt. Der Absender quittiert den Empfang der Fehlermeldung, indem er auch einige Millisekunden 5 zusätzliche Flanken pro Byte aussendet.
Dann wird wieder ein Träger ausgesendet. Sobald dieser Ausgangszustand hergestellt ist, werden die letzten sechs Datenworte wiederholt. Falls der Empfänger abermals einen Übertragungsfehler erkennt, wird der TLS-Status "eingefroren", die Programmer-Kontrollampe "connector fail" leuchtet auf und die Maschine stoppt.

6.3.6 Faulty reception of information

If the receiver detects one of these faults, it "disturbs" its own carrier by dropping in 5 slopes per byte. The transmitter is thus notified that a transmission error has been detected. The transmitter acknowledges the receipt of this fault signal by also transmitting 5 additional slopes per byte during a few milliseconds. A new carrier is subsequently transmitted. As soon as the initial state has been reestablished, the last 6 data words are repeated. If the receiver detects a second transmission error, the TLS status is "frozen", the programm control lamp "Connection fail" lights up and the machine stops.

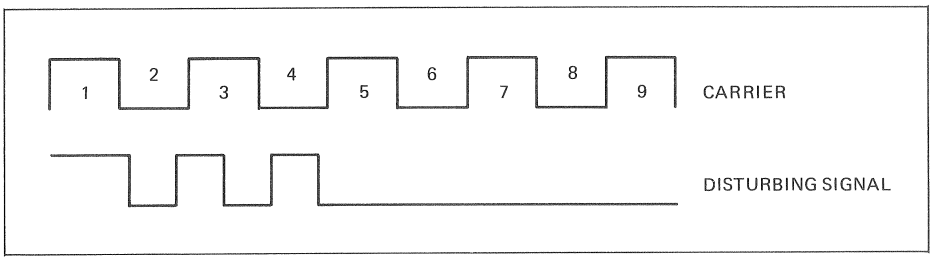

Fig. 6.3.9
Fehlermeldung durch Störsignal

Fig. 6.3.9
Fault signalization through disturbing signal

Die Anzeige "connector fail" zeigt also nicht nur eine fehlende Hardware-Verbindung an, sondern auch Übertragungsfehler durch starke Magnetfeldeinwirkungen (Brumm, Impulsspitzen, etc.).

The indicator "Connection fail" therefore, not only signals a missing hardware connection, but also transmission errors caused by strong magnetic fields (ripple, spikes, etc.).

PARALLEL SERIAL CONVERTER

SURVEY OF GROUP NUMBERS

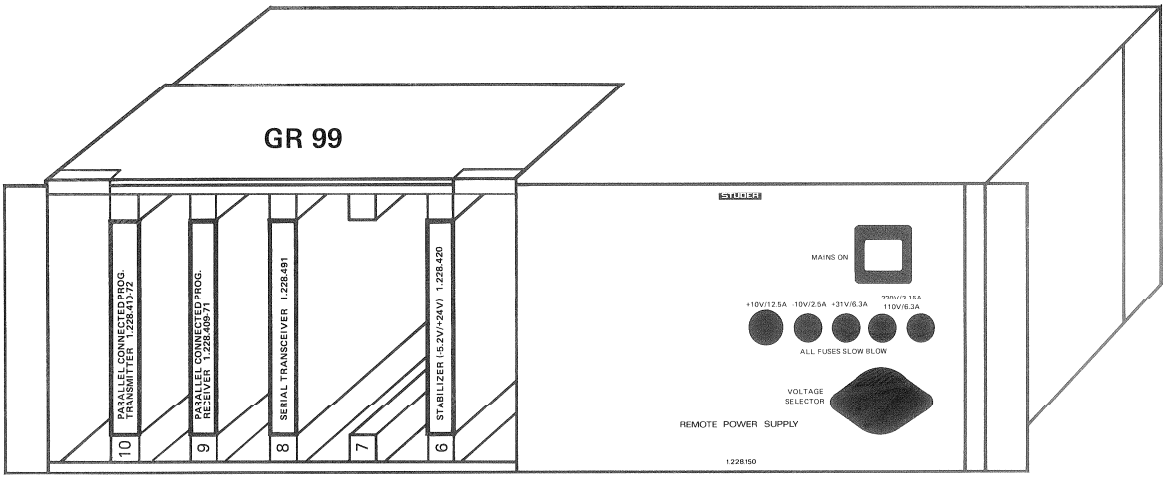

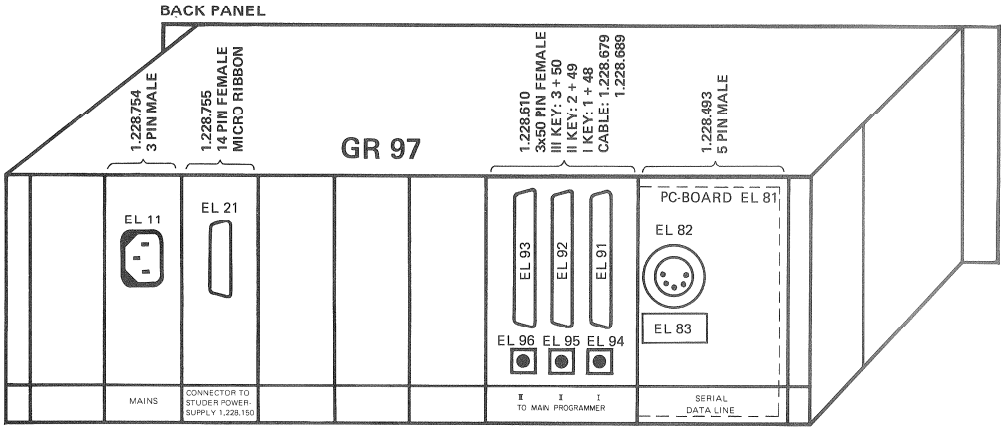

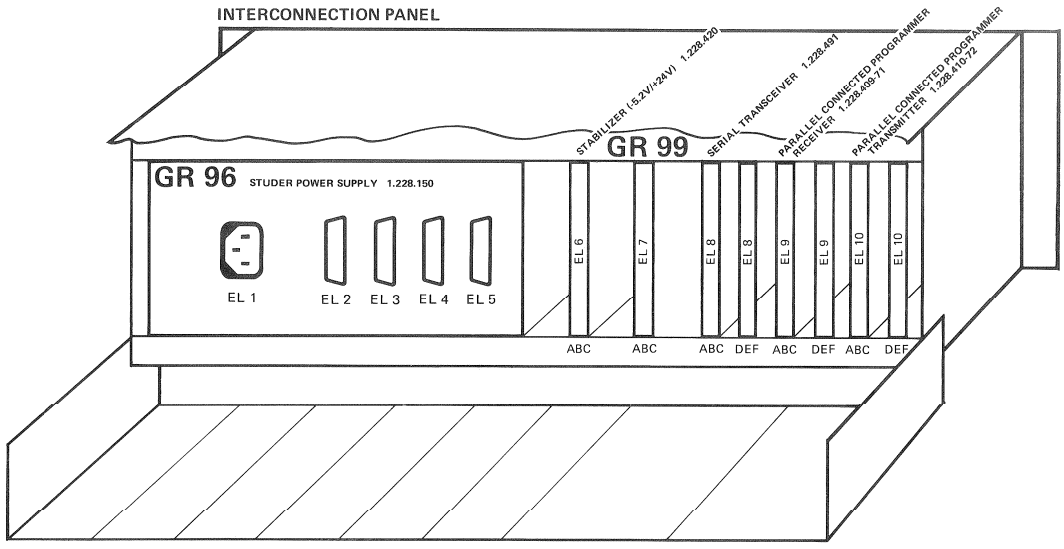

PARALLEL SERIAL CONVERTER

STABILIZER (–5,2/+24V) 1.228.420 GR99 EL6

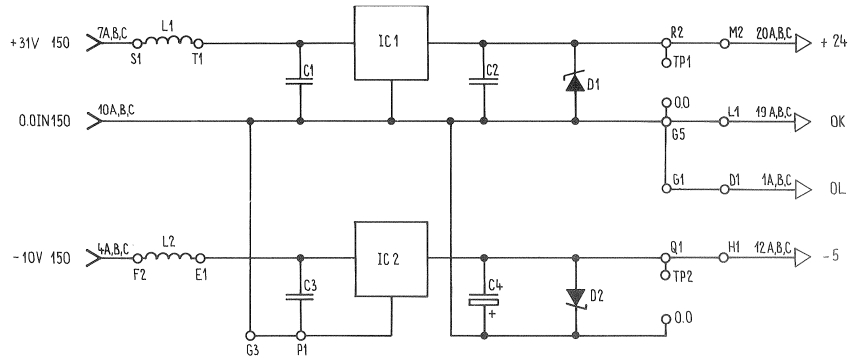

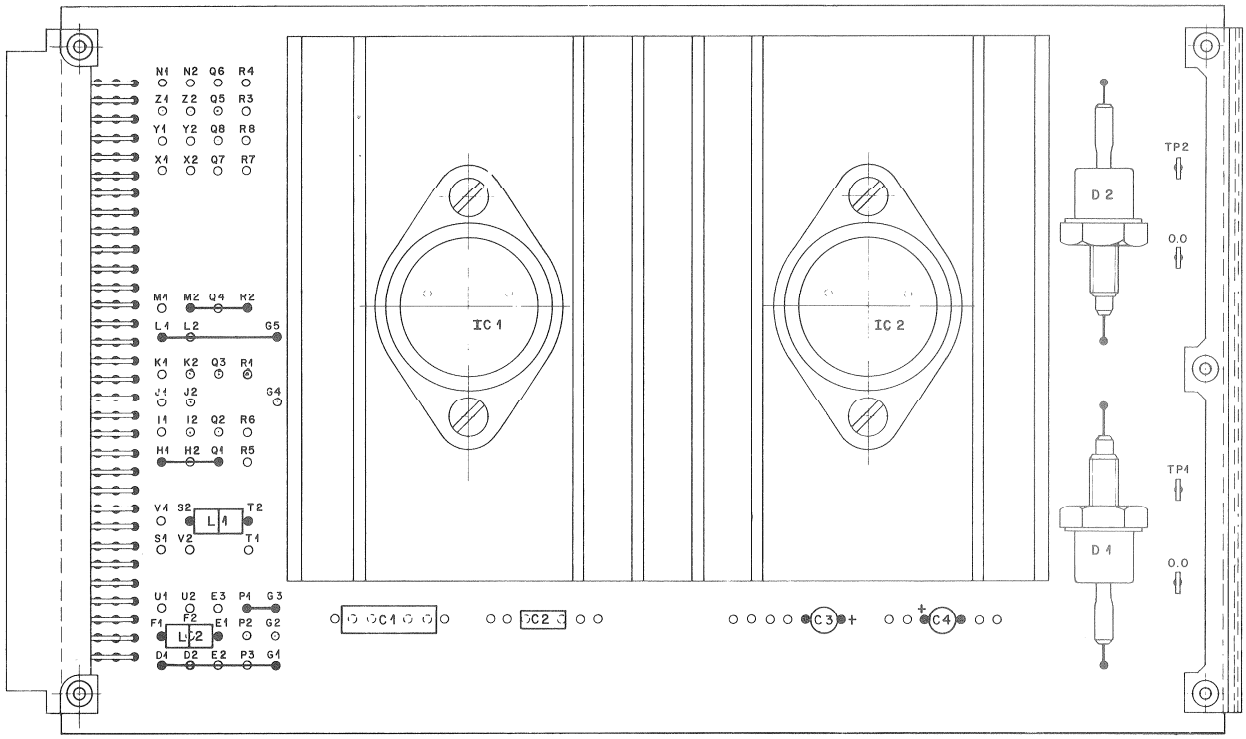

POS NO	PART NO	VALUE	SPECIFICATIONS	EQUIVALENT	MFR
C 01	59.31.1224	0,22µ	20% 100V MPETP		
C 02	59.99.0205	68n	-20% 63V KER		
C 03	59.30.8109	1,0µ	-20% 50V TA		
1) C 04	59.26.5229	2,2µ	20% 25V~ SAL		
D 01	50.04.1509	27 V	ZX27 5% 1,3W Z		
D 02	50.04.1502	6,2V	5% 1,3W Z		
IC 01	50.05.0175	LM340-24K	24V LIN		
IC 02	50.05.0212	LM320-5,2	-5,2V		
L 01	61.99.0124	D3,5 x 3	2x Ferritperle		
L 02	61.99.0124	D3,5 x 3	2x Ferritperle		
S 01	54.01.0358	3 x 32	Leiste Burndy		
TP1-4	29.21.6002		4x Lötöse		

IND	DATE	NAME
④		
③		
②		
①	3.10.80	gv/Vo
C	17.5.78	Spe/gv

STUDER	STABI (-5,2V/+24V)	1.228.420	PAGE 1 of 1

SERIAL TRANSCEIVER 1.228.491 GR99 EL8

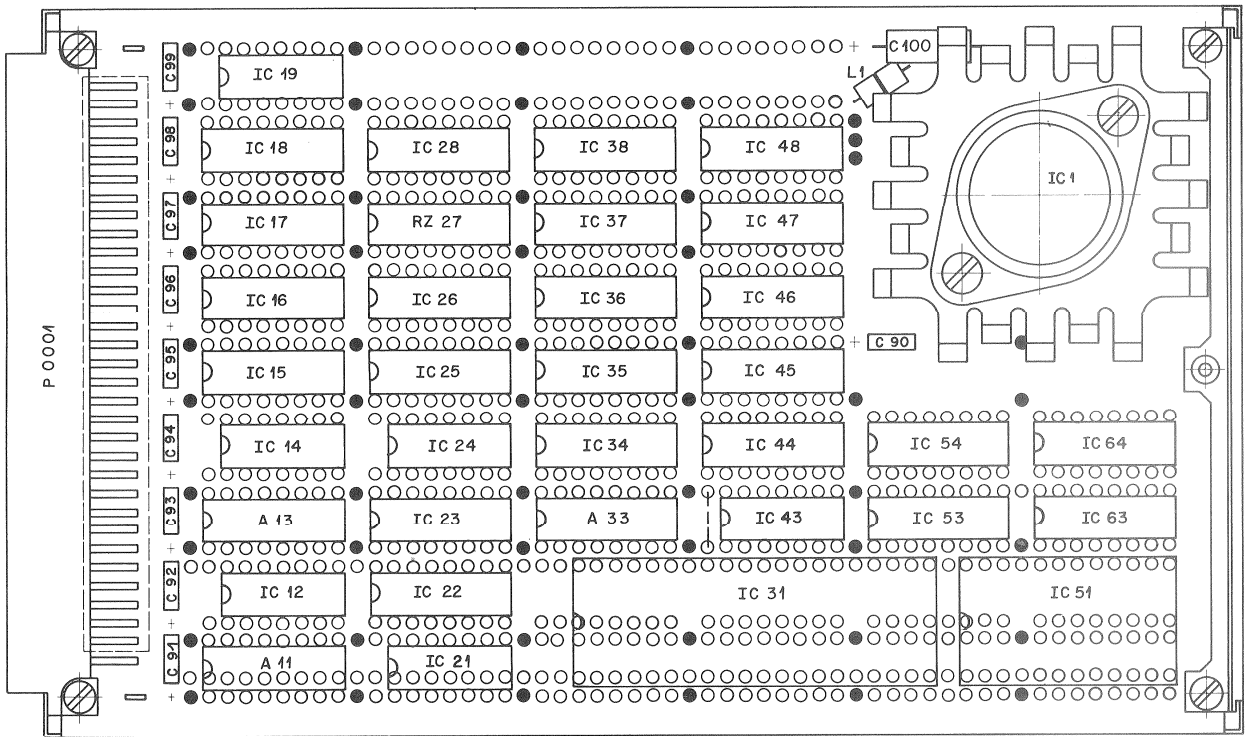

IND	POS NO	PART NO	VALUE	SPECIFICATIONS/EQUIVALENT	MFR
	A 11	1.228.736.00		12.5 HZ ØSCILLATØR	
	A13	1.228.590.81		ASS. 08-26	
	A33	1.228.734.00		4 MHZ CRYSTAL BØARD	
	C90-99	59.99.0205	68 n	63V, 20%, CER	
	C100	59.99.0201	6,8 µ	35V, 20%, TANTAL	
	IC 1	50.05.0133	LM 309K	PØS. VOLTAGE REGULATØR, 5V	
	IC 12	50.06.0014	SN74LS14	HEX SCHMITT-TRIGGER INVERTERS	
	IC 14	50.06.0086	SN74LS86	QUAD 2-INPUT EXØR	
	IC 15	50.06.0175	SN74LS175	QUAD D-FLIP FLØPS	
	IC 16	50.05.0216	8T95	HEX THREE STATE BUFFERS	
	IC 17	50.05.0216	8T95	"	
	IC 18	50.05.0216	8T95	"	
	IC 19	50.06.0014	SN74LS14	HEX SCHMITT-TRIGGER INVERTERS	
	IC 21	50.06.0074	SN74LS74	DUAL D-FLIP FLØPS	
	IC 22	50.06.0138	SN74LS138	3 TØ 8 LINE DECØDER	
	IC 23	50.06.0138	SN74LS138	"	
	IC 24	50.06.0032	SN74LS32	QUAD 2-INPUT ØR	
	IC 25	50.06.0175	SN74LS175	QUAD D-FLIP FLØPS	
	IC 26	50.06.0175	SN74LS175	"	
	IC 28	50.06.0109	SN74LS109	DUAL JK-FLIP FLØPS	
	IC 31	50.05.0276	MC 6802	MPU	
	IC 34	50.05.0216	8T95	HEX THREE STATE BUFFERS	
	IC 35	1.025.018.80		512 * 4 BIT PRØM	
	IC 36	1.025.019.00		"	
	IC 37	50.06.0109	SN74LS109	DUAL JK-FLIP FLØPS	
	IC 38	50.06.0161	SN74LS161	4 BIT BINARY CØUNTER	
	IC 43	50.06.0008	SN74LS08	QUAD 2-INPUT AND	
	IC 44	50.05.0236	8T97	HEX THREE STATE BUFFERS	

IND	DATE	NAME
④		
③		
②		
①		
○	24.9.79	SAXER

STUDER	SER TRANSCEIVER	1.228.491.00	PAGE 1 OF 2

IND	POS NO	PART NO	VALUE	SPECIFICATIONS/EQUIVALENT	MFR
	IC 45	1.025.018.90		512 * 4 BIT PRØM	
	IC 46	1.025.019.10		512 * 4 BIT PRØM	
	IC 47	50.06.0161	SN74LS161	4 BIT BINARY CØUNTER	
	IC 48	50.06.0161	SN74LS161	"	
	IC 51	50.16.0101	MC 6850	ACIA	
	IC 53	50.06.0175	SN74LS175	QUAD D-FLIP FLØPS	
	IC 54	50.06.0109	SN74LS109	DUAL JK-FLIP FLØPS	
	IC 63	50.06.0174	SN74LS174	HEX D-FLIP FLØPS	
	IC 64	1.025.018.20		512 * 4 BIT PRØM	
	L 1	61.99.0124		FERRIT PEARLS	
	RZ 27	57.85.3332		RESISTØR ARRAY, 15 * 3.3K	

IND	DATE	NAME
④		
③		
②		
①		
○	24.9.79	SAXER

STUDER	SER TRANSCEIVER	1.228.491.00	PAGE 2 OF 2

PARALLEL SERIAL CONVERTER

SERIAL TRANSCEIVER 1.228.491 GR99 EL8

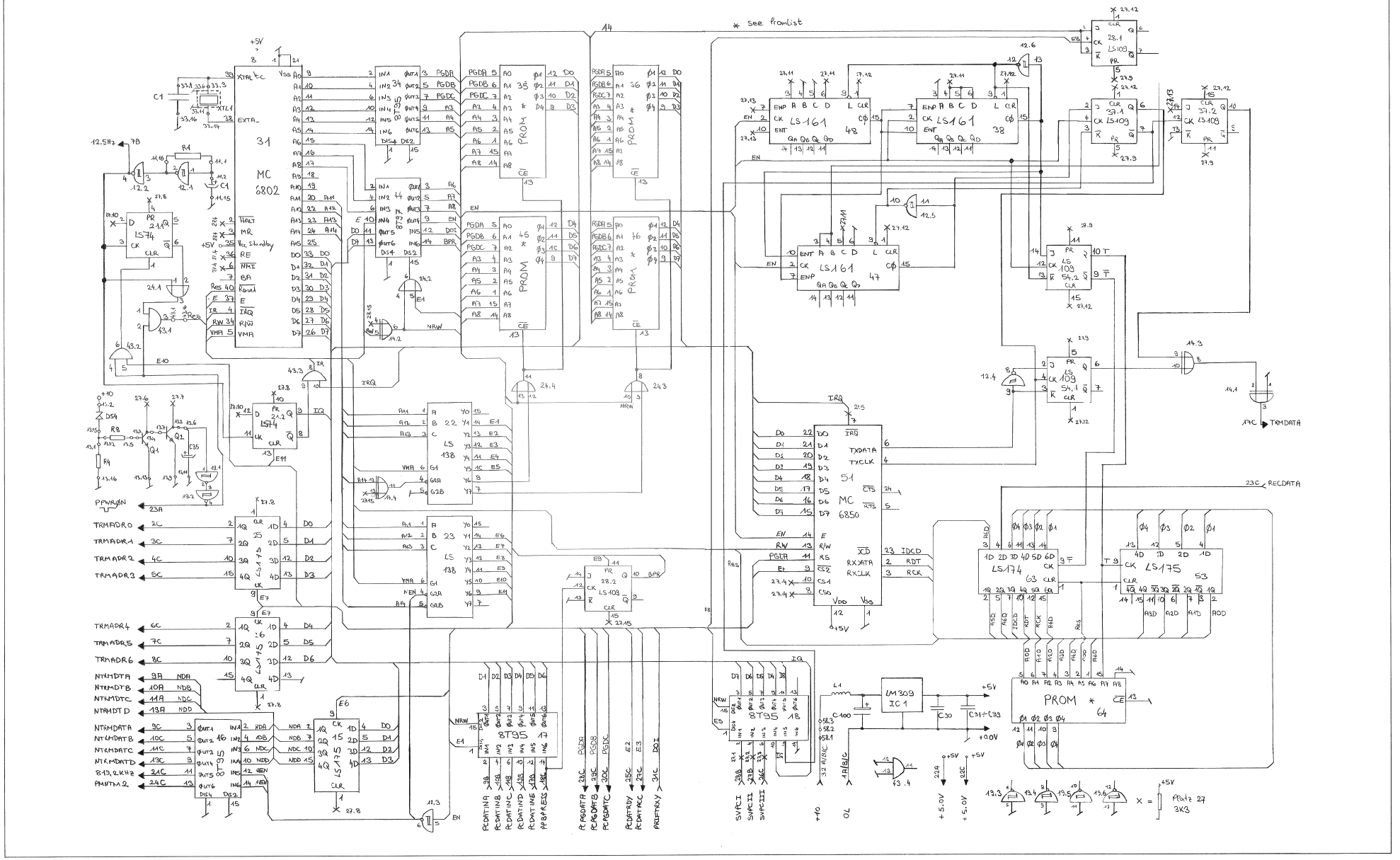

PARALLEL CONNECTED PROGRAMMER RECEIVER 1.228.409-71 GR99 EL9

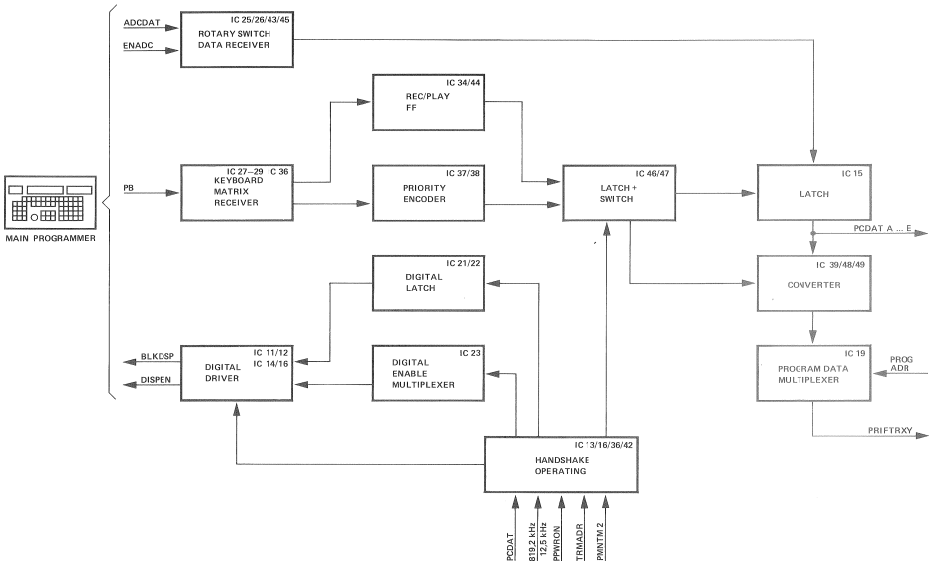

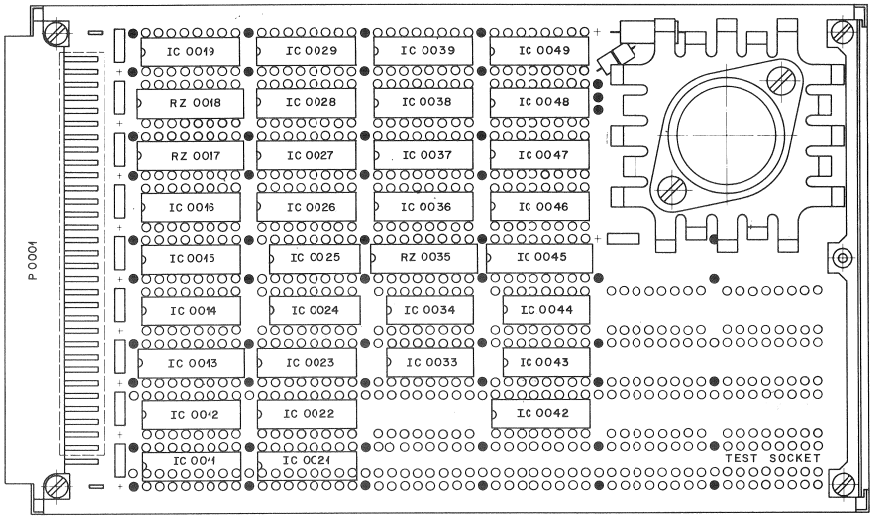

* S T U D E R * POSITION LIST OF PARTS 1.228.409.71 * 79/03/22 * PAGE 1 OF 1 *
* TAPE LOCK SYSTEM 200 * PARALLEL CONN. PROGR. RECEIVER * 79/02/12-A *
81/09/29-1

POSITION KD.	POS.M	PART NO.	DESCRIPTION OF PART	
IC	0011	50.05.0224	IC N 8T96B,	TTL-3
IC	0012	50.05.0224	IC N 8T96B,	TTL-3
IC	0013	50.06.0138	IC SN74LS138N	,TTL
IC	0014	50.05.0224	IC N 8T96B,	TTL-3
IC	0015	50.06.0298	IC SN 74 LS 298N ,	TTL
IC	0016	50.05.0216	IC N 8 T 95B,	,TTL-3
IC	0019	50.06.0151	IC SN 74 LS 151 N	TTL
1) IC	0021	50.06.0259	IC **74 LS 259 PC**	TTL
1) IC	0022	50.06.0259	IC **74 LS 259 PC**	TTL
IC	0023	50.06.0155	IC SN 74 LS 155 N	TTL
IC	0024	50.06.0008	IC SN 74 LS 08 N	TTL
IC	0025	50.06.0086	IC SN 74 LS 86 N	TTL
IC	0026	50.05.0217	IC N 8T37B,	TTL
IC	0027	50.05.0217	IC N 8T37B,	TTL
IC	0028	50.05.0217	IC N 8T37B,	TTL
IC	0029	50.05.0217	IC N 8T37B,	TTL
IC	0033	50.06.0000	IC SN 74 LS 00 N	TTL
IC	0034	50.06.0002	IC SN 74 LS 02 N	TTL
IC	0036	50.05.0217	IC N 8T37B,	TTL
IC	0037	50.06.0148	IC SN 74 LS 148 N	TTL
IC	0038	50.06.0148	IC SN 74 LS 148 N	TTL
IC	0039	L.025.000.92	T_S KEYBOARD ENCODING 1	
IC	0042	50.06.0161	IC SN 74 LS 161 N	TTL
IC	0043	50.06.0074	IC SN 74 LS 74 N	TTL
IC	0044	50.06.0074	IC SN 74 LS 74 N	TTL
IC	0045	50.05.0131	IC SN 74LLIN,FLJ 351	,TTL
IC	0046	50.06.0175	IC SN 74 LS 175 N	TTL
IC	0047	50.06.0157	IC SN 74 LS 157 N	TTL
IC	0048	50.06.0157	IC SN 74 LS 157 N	TTL
IC	0049	L.025.001.01	T_S KEYBOARD ENCODING 2	
P	0001	54.01.0354	P LEISTE 3 * 32 POL	WRAP
RZ	0017	57.80.0101	RZ 14*330/220,2%,	DIL16
RZ	0018	57.80.0101	RZ 14*330/220,2%,	DIL16
RZ	0035	57.85.3103	RZ 15*10K , 2%,	DIL

PARALLEL SERIAL CONVERTER

PARALLEL CONNECTED PROGRAMMER RECEIVER 1.228.409–71 GR99 EL9

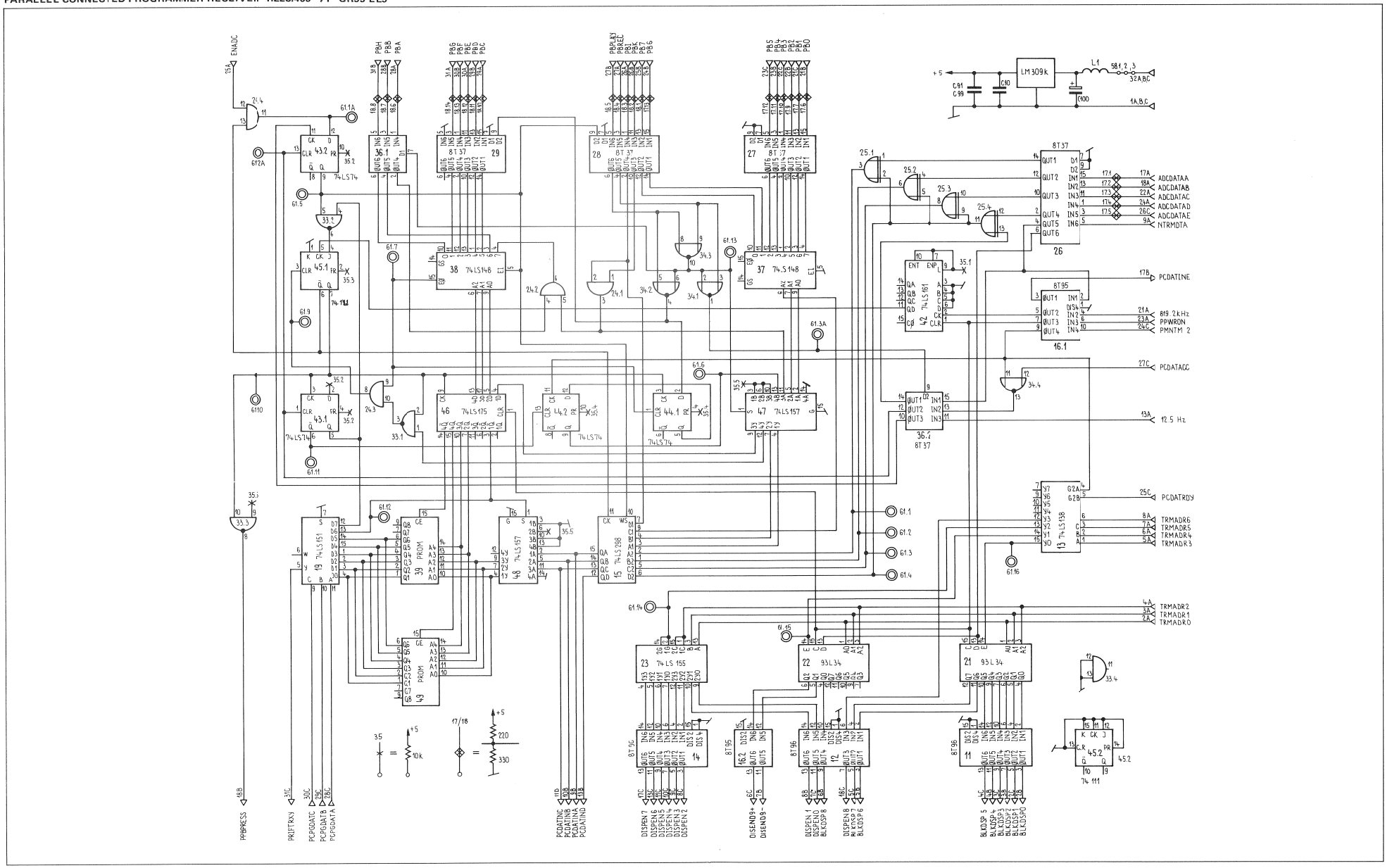

PARALLEL CONNECTED PROGRAMMER TRANSMITTER 1.228.410–72 GR99 EL10

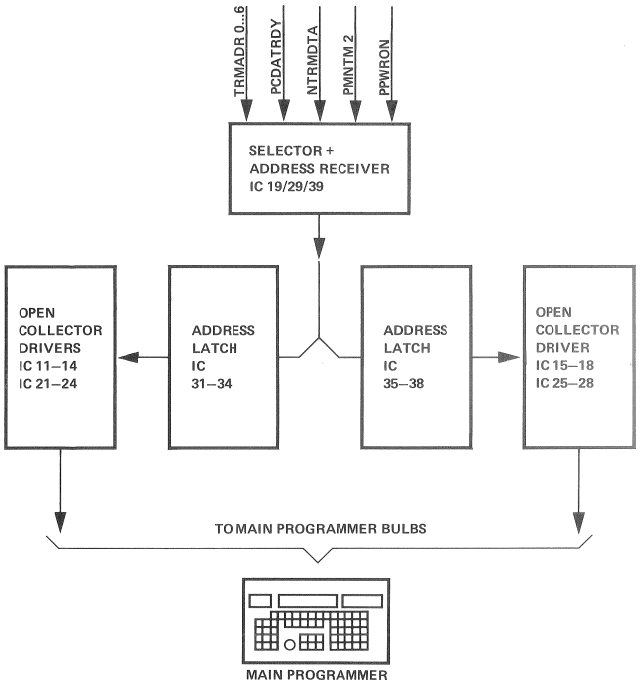

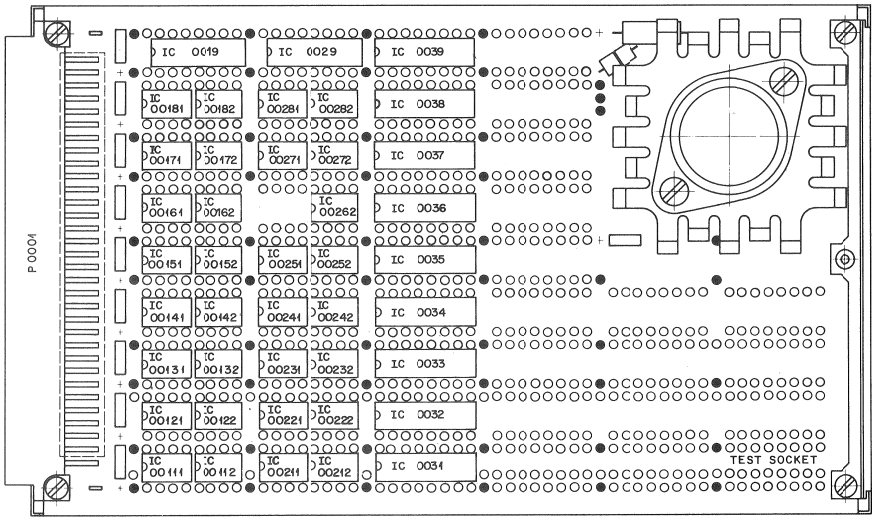

* S T U D E R * POSITION LIST OF PARTS 1.228.410.72 * 77/01/25 * PAGE 1 OF 1 *
* TAPE LOCK SYSTEM 2000 * PARALLEL CONN. PROGR. TRANSM. * 81/01/29- 1 *

POSITION RD. POS.M	PART NO.	DESCRIPTION OF PART
IC 00111	50.05.0204	IC SN 75464P,LM 3614 N, DRIV
IC 00112	50.05.0204	IC SN 75464P,LM 3614 N, DRIV
IC 00121	50.05.0204	IC SN 75464P,LM 3614 N, DRIV
IC 00122	50.05.0204	IC SN 75464P,LM 3614 N, DRIV
IC 00131	50.05.0204	IC SN 75464P,LM 3614 N, DRIV
IC 00132	50.05.0204	IC SN 75464P,LM 3614 N, DRIV
IC 00141	50.05.0204	IC SN 75464P,LM 3614 N, DRIV
IC 00142	50.05.0204	IC SN 75464P,LM 3614 N, DRIV
IC 00151	50.05.0204	IC SN 75464P,LM 3614 N, DRIV
IC 00152	50.05.0204	IC SN 75464P,LM 3614 N, DRIV
IC 00161	50.05.0204	IC SN 75464P,LM 3614 N, DRIV
IC 00162	50.05.0204	IC SN 75464P,LM 3614 N, DRIV
IC 00171	50.05.0204	IC SN 75464P,LM 3614 N, DRIV
IC 00172	50.05.0204	IC SN 75464P,LM 3614 N, DRIV
IC 00181	50.05.0204	IC SN 75464P,LM 3614 N, DRIV
IC 00182	50.05.0204	IC SN 75464P,LM 3614 N, DRIV
IC 0019	50.06.0032	IC SN 74 LS 32 N TTL
IC 00211	50.05.0204	IC SN 75464P,LM 3614 N, DRIV
IC 00212	50.05.0204	IC SN 75464P,LM 3614 N, DRIV
IC 00221	50.05.0204	IC SN 75464P,LM 3614 N, DRIV
IC 00222	50.05.0204	IC SN 75464P,LM 3614 N, DRIV
IC 00231	50.05.0204	IC SN 75464P,LM 3614 N, DRIV
IC 00232	50.05.0204	IC SN 75464P,LM 3614 N, DRIV
IC 00241	50.05.0204	IC SN 75464P,LM 3614 N, DRIV
IC 00242	50.05.0204	IC SN 75464P,LM 3614 N, DRIV
IC 00251	50.05.0204	IC SN 75464P,LM 3614 N, DRIV
IC 00252	50.05.0204	IC SN 75464P,LM 3614 N, DRIV
IC 0026	50.05.0204	IC SN 75464P,LM 3614 N, DRIV
IC 00271	50.05.0204	IC SN 75464P,LM 3614 N, DRIV
IC 00272	50.05.0204	IC SN 75464P,LM 3614 N, DRIV
IC 00281	50.05.0204	IC SN 75464P,LM 3614 N, DRIV
IC 00282	50.05.0204	IC SN 75464P,LM 3614 N, DRIV
IC 0029	50.06.0086	IC SN 74 LS 86 N TTL
IC 0031	50.06.0259	IC 74 LS 259 PC TTL
IC 0032	50.06.0259	IC 74 LS 259 PC TTL
IC 0033	50.06.0259	IC 74 LS 259 PC TTL
IC 0034	50.06.0259	IC 74 LS 259 PC TTL
IC 0035	50.06.0259	IC 74 LS 259 PC TTL
IC 0036	50.06.0259	IC 74 LS 259 PC TTL
IC 0037	50.06.0259	IC 74 LS 259 PC TTL
IC 0038	50.06.0259	IC 74 LS 259 PC TTL
IC 0039	50.06.0155	IC SN 74 LS 155 N TTL
P 0001	54.01.0354	P LEISTE 3 * 32 POL WRAP

PARALLEL SERIAL CONVERTER

PARALLEL CONNECTED PROGRAMMER TRANSMITTER 1.228.410–72 GR99 EL10

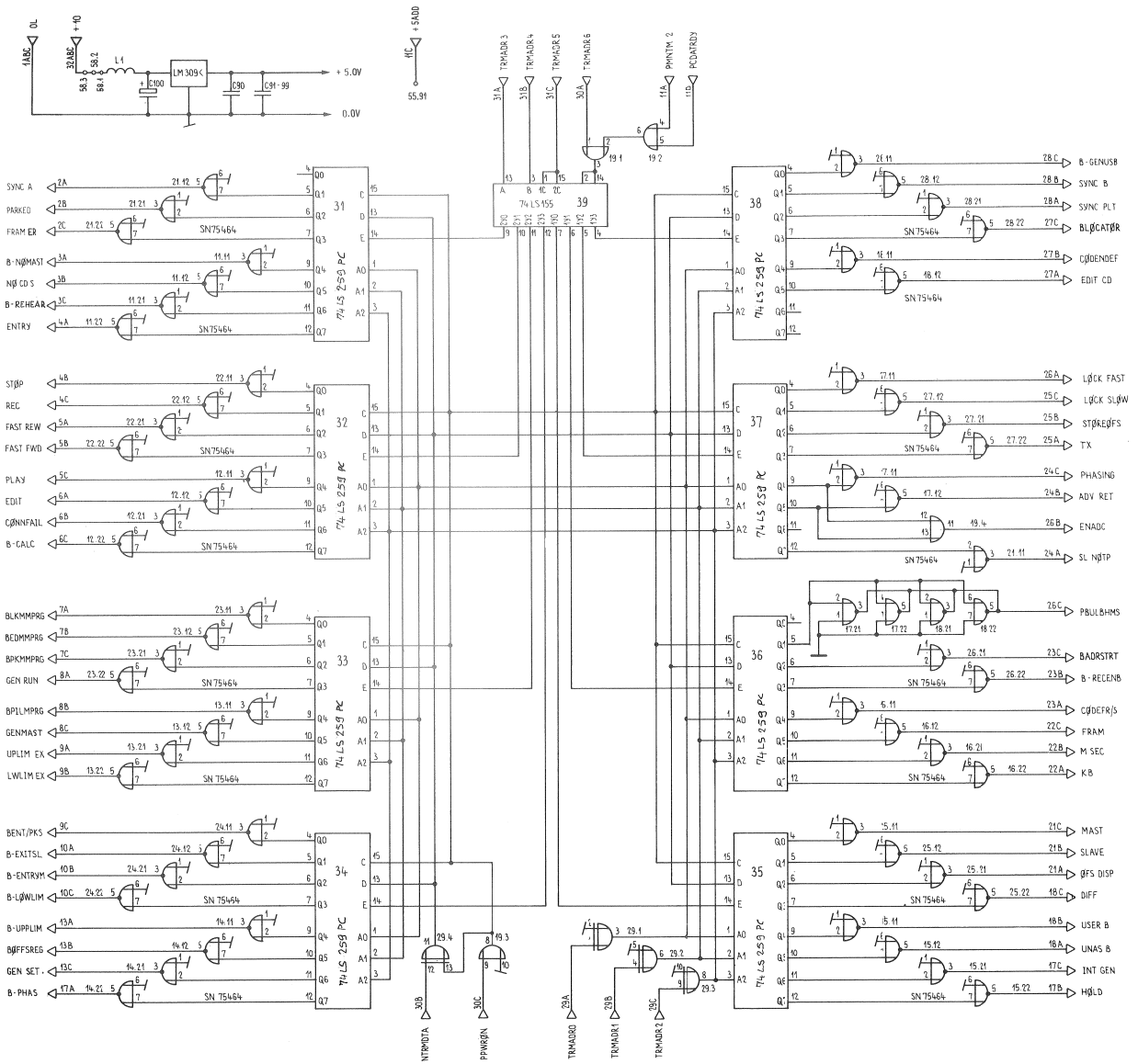

BACK PANEL CONNECTIONS GR96, 97, 99

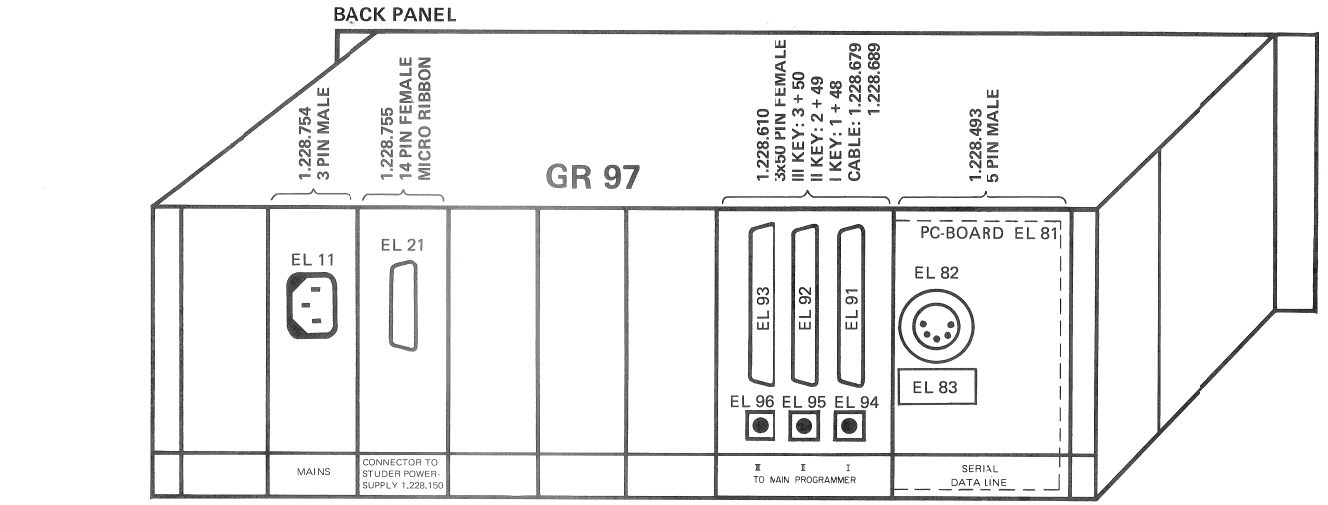

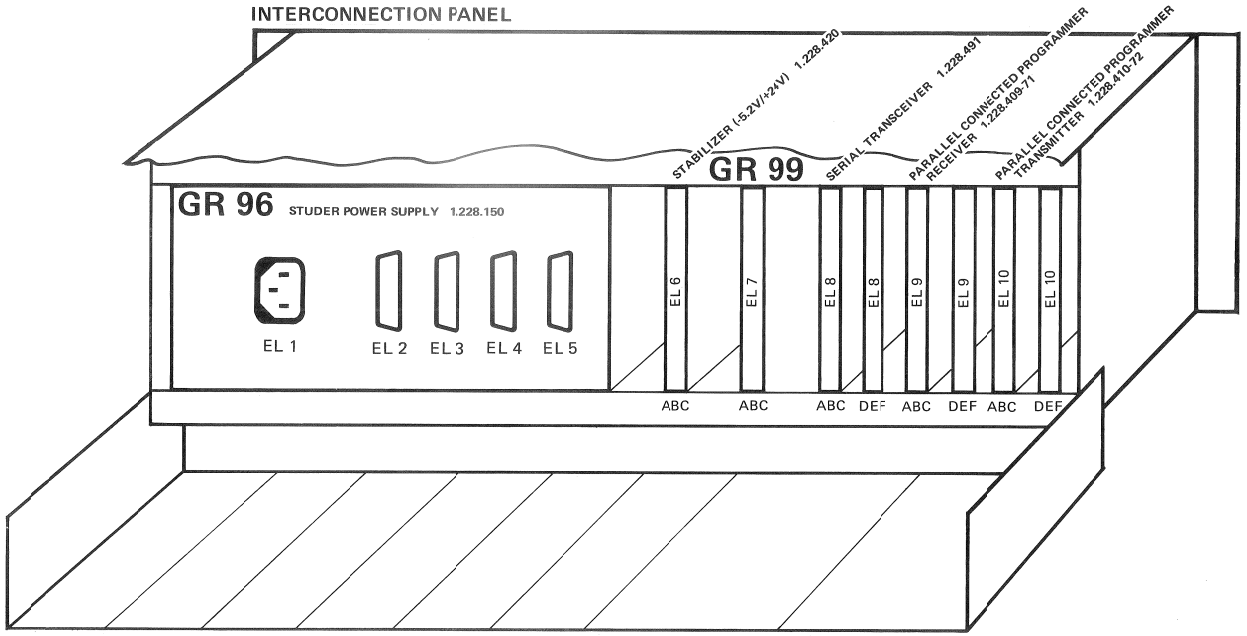

PARALLEL SERIAL CONVERTER

MAINS INTERCONNECTION CABLE 1.228.754

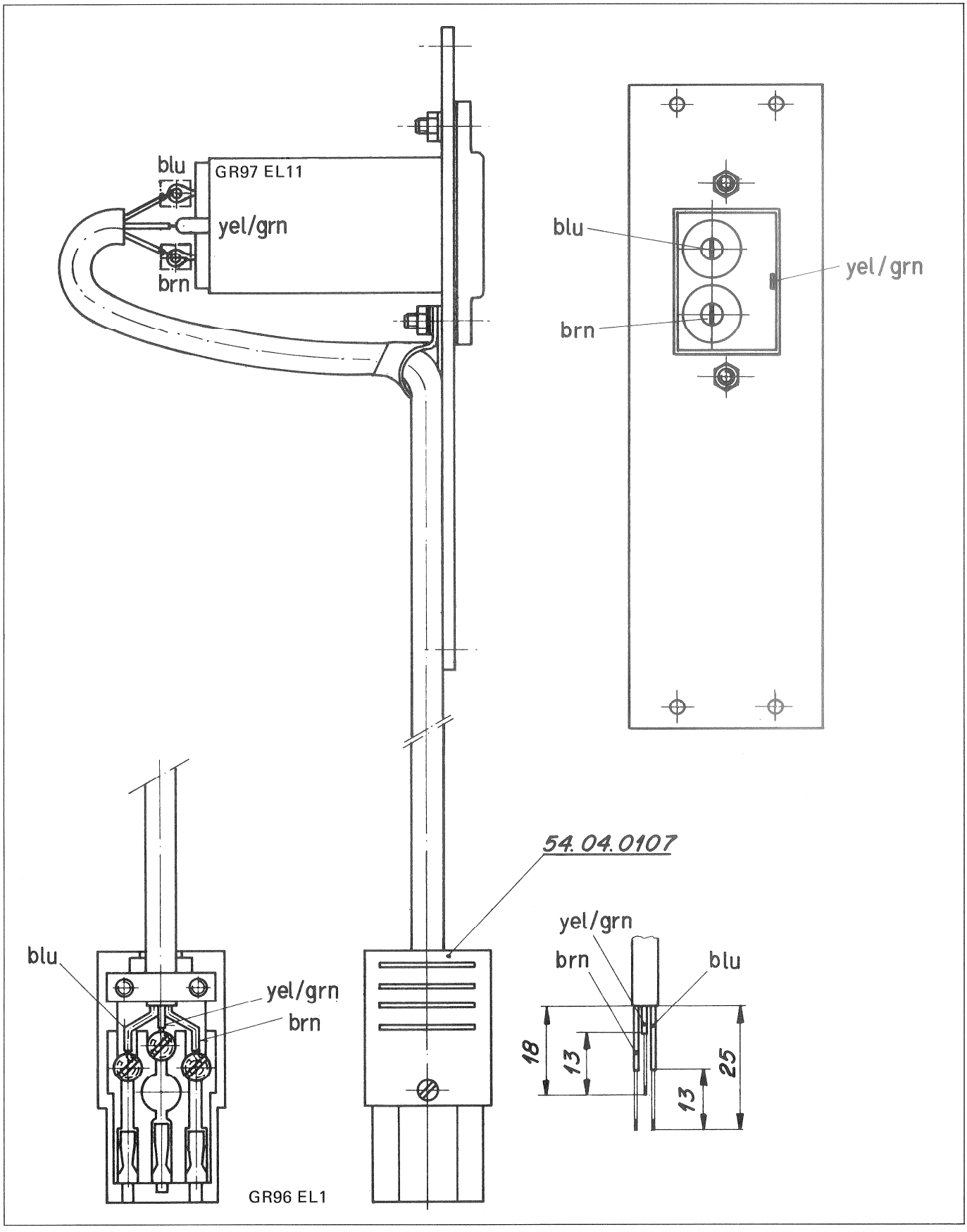

PARALLEL SERIAL CONVERTER

SUPPLY INTERCONNECTION CABLE 1.228.755

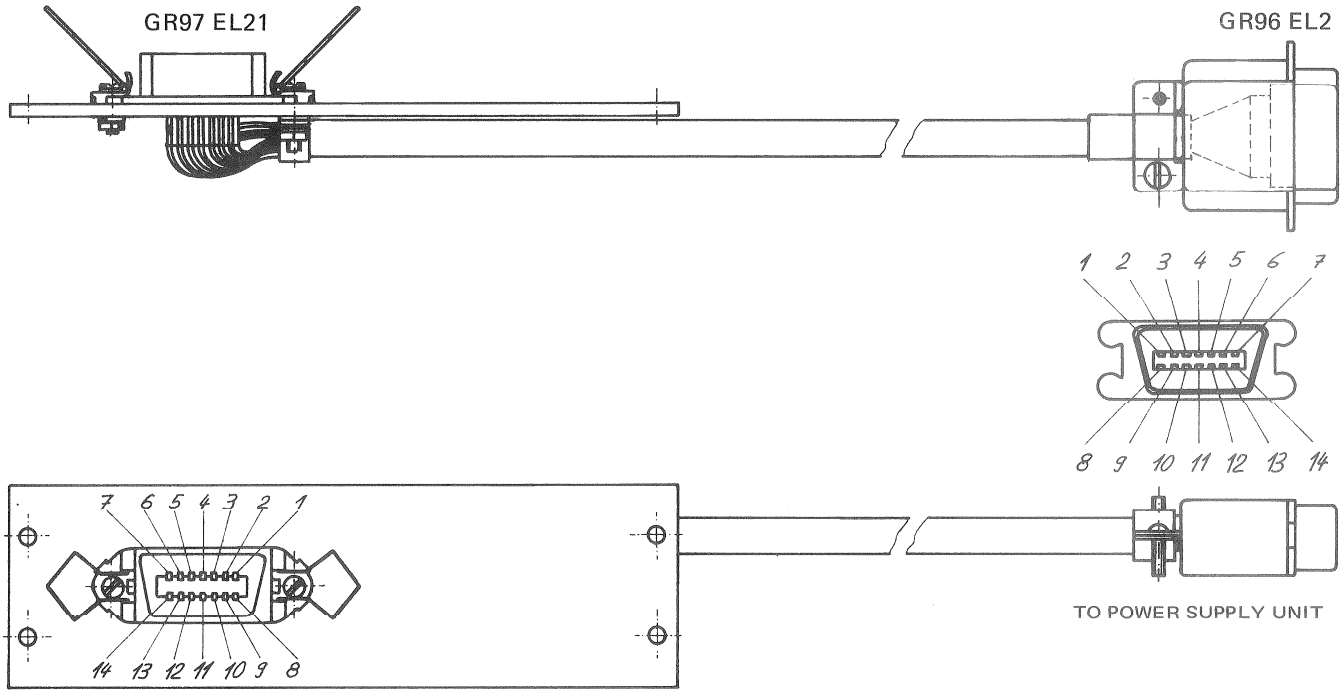

	Micro Ribbon 54.02.0131	Micro Ribbon 54.02.0150
COLOR	PIN NO.	PIN NO.
wht / blu	1	1
	2	2
wht / org	3	3
	4	4
wht / grn	5	5
	6	6
wht / brn	7	7
	8	8
wht / grn	9	9
	10	10
red / blu	11	11
	12	12
red / org	13	13
	14	14

PARALLEL SERIAL CONVERTER

CONNECTION ASSEMBLY TO MAIN PROGRAMMER CABLES 1.228.610

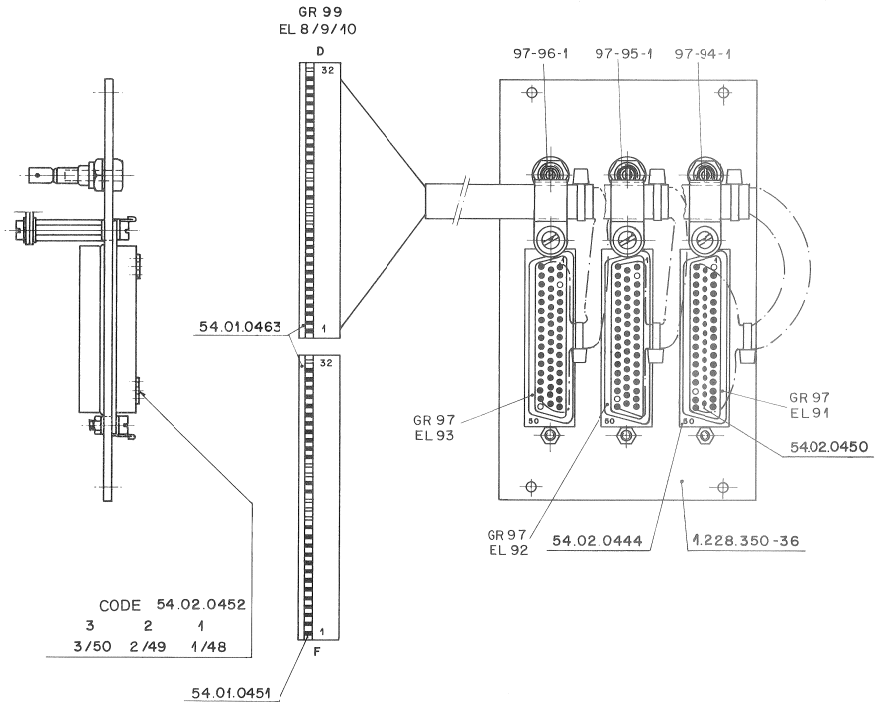

SIG. NAME	COLOR	GR 99 EL 8	GR 97 EL 91
PB 1	wht	2D	2
BULBDPA 2	brn	3D	3
PBA	grn	4D	4
PBH	yel	5D	5
BULBPBI 3	gry	6D	6
EDIT CL	pnk	7D	7
LOCKFAST	blu	8D	8
ADVRE~	red	9D	9
MSEC	blk	10D	10
GENNSC	vio	11D	11
B-UPPLIM	gry pnk	13D	12
ENTRY	red blu	17D	13
BOFFSREG	wht grn	18D	14
B-EXITSL	brn grn	21D	15
B-PHAS	wht yel	22D	16
FRAMER	yel brn	23D	17
GENSET	wht gry	24D	18
B-LOWLIM	gry brn	25D	19
NO CD S	wht pnk	26D	20
B-ENTRYM	pnk brn	27D	21
SVPCI	wht blu	28D	22
BULBPBF 4	brn blu	29D	23
BULBPEF 3	wht red	30D	24
BULBPBF 2	brn red	31D	25
EXEC	wht blk	2F	26
PBD	brn blk	3F	27
PBI	gry grn	4F	28
BULBDPA 1	yel gry	5F	29
INTGEN	pnk grn	6F	30
BULBDFB 2	yel pnk	7F	31
CODENCEF	grn blu	8F	32
ADD	yel blu	9F	33
B-CALC	grn red	10F	34
SLDECOFF	yel red	11F	35
B-GENLSB	grn blk	13F	36
SLNOTP	yel blk	17F	37
PB 7	gry blu	18F	38
PBG	pnk blu	21F	39
PB 4	gry red	22F	40
PBK	pnk red	23F	41
PBF	gry blk	24F	42
LWLIMEX	pnk blk	25F	43
CONNFAIL	blu blk	26F	44
BENT/PKS	red blk	27F	45
UPLIMEX	wht brn blk	28F	46
B-NOMAST	yel grn blk	29F	47
WMPRES 01	gry pnk blk	30F	49
WMPRES 02	blu red blk	31F	50
Key			1
Key			48
OL	wht grn blk	1D	EL 94 BANANA SOCKET 1
OL	grn brn blk	12D	
OL	wht yel blk	1F	
OL	yel brn blk	12F	

SIG. NAME	COLOR	GR 99 EL 9	GR 97 EL 92
WMPRES 03	wht	2D	1
BLKDSP 1	brn	3D	3
NTRMDATA	grn	4D	4
BADRSTRT	yel	5D	5
BULBDPH 1	gry	6D	6
PHASING	pnk	7D	7
BULBPBG 3	blu	8D	8
MSEC	red	9D	9
DIFF	blk	10D	10
FRAME	vio	11D	11
B-REHEAR	gry pnk	13D	12
BULBPBH 3	red blu	17D	13
OFS DISP	wht grn	18D	14
CODEFR/S	brn grn	21D	15
PBULBHMS	wht yel	22D	16
ADCDATAE	yel brn	23D	17
BULBDPN 1	wht gry	24D	18
SLAV	gry brn	25D	19
UNAS B	wht pnk	26D	20
BULBPBL 5	pnk brn	27D	21
BULBDPP 1	wht blu	28D	22
ADCDATAD	brn blu	29D	23
PBULBHMS	wht red	30D	24
DISPEN 7	brn red	31D	25
DISPEN 1	wht blk	2F	26
WMPRES 04	brn blk	3F	27
DISPEN 0	gry grn	4F	28
STOREOFS	yel gry	5F	29
DISPEN 2	pnk grn	6F	30
BLKDSP 0	yel pnk	7F	31
DISPEN 3	grn blu	8F	32
BLKDSP 2	yel blu	9F	33
HOLD	grn red	10F	34
LOCKSLOW	yel red	11F	35
NTRMDATB	grn blk	13F	36
BLKDSP 3	yel blk	17F	37
BULBDPL 1	gry blu	18F	38
DISPEN 4	pnk blu	21F	39
BULBPBK 5	gry red	22F	40
BULBDPA 0	pnk red	23F	41
NTRMDATC	gry blk	24F	42
SVPCII	pnk blk	25F	43
BLKDSP 4	blu blk	26F	44
PBULBHMS	red blk	27F	45
BLKDSP 5	wht brn blk	28F	46
DISPEN 6	yel grn blk	29F	47
DISPEN 5	gry pnk blk	30F	48
BLKDSP7	blu red blk	31F	50
Key			2
Key			49
OL	wht grn blk	1D	EL 95 BANANA SOCKET 2
OL	grn brn blk	12D	
OL	wht yel blk	1F	
OL	yel brn blk	12F	

SIG. NAME	COLOR	GR 99 EL 10	GR 97 EL 93
NTRMDATD	wht	2D	1
ADCDATAC	brn	3D	2
MAST	grn	4D	4
USER B	yel	5D	5
SVPC III	gry	6D	6
ADCDATA B	pnk	7D	7
BULBPBM 5	blu	8D	8
ADCDATA A	red	9D	9
BLOCATOR	blk	10D	10
REC	vio	11D	11
EDIT	gry pnk	13D	12
BPKMMPRG	red blu	17D	13
GENRUN	wht grn	18D	14
TX	brn grn	21D	15
SYNC PLT	wht yel	22D	16
FAST FWD	yel brn	23D	17
BEDMMPRG	wht gry	24D	18
PBB	gry brn	25D	19
B-RECENB	wht pnk	26D	20
PBPLAY	pnk brn	27D	21
PB REC	wht blu	28D	22
GEN=MAST	brn blu	29D	23
OSW	wht red	30D	24
PLAY	brn red	31D	25
BLKDSP 6	wht blk	2F	26
DISPEN 8	brn blk	3F	27
KB	gry grn	4F	28
BLKDSP 8	yel gry	5F	29
DISEND9+	pnk grn	6F	30
PB 3	yel pnk	7F	31
PBC	grn blu	8F	32
DISEND9-	yel blu	9F	33
PB 5	grn red	10F	34
PBO	yel red	11F	35
PBE	grn blk	13F	36
BULBDPS 2	yel blk	17F	37
PARKED	gry blu	18F	38
BULBDPT 2	pnk blu	21F	39
STOP	gry red	22F	40
+10 SW	pnk red	23F	41
BULBDPU 2	gry blk	24F	42
SYNC B	pnk blk	25F	43
BPILMPRG	blu blk	26F	44
FAST REW	red blk	27F	45
BLKMMPRG	wht brn blk	28F	46
SYNC A	yel grn blk	29F	47
PB 6	gry pnk blk	30F	48
PB 2	blu red blk	31F	49
Key			3
Key			50
OL	wht grn blk	1D	EL 96 BANANA SOCKET 3
OL	grn brn blk	12D	
OL	wht yel blk	1F	
OL	yel brn blk	12F	

PROGRAMMER LINE AMPLIFIER 1.228.493 GR97 EL80

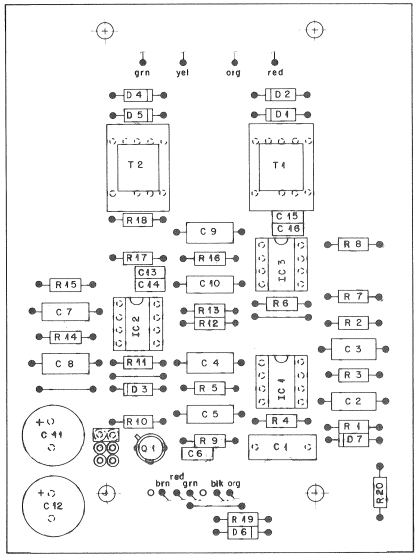

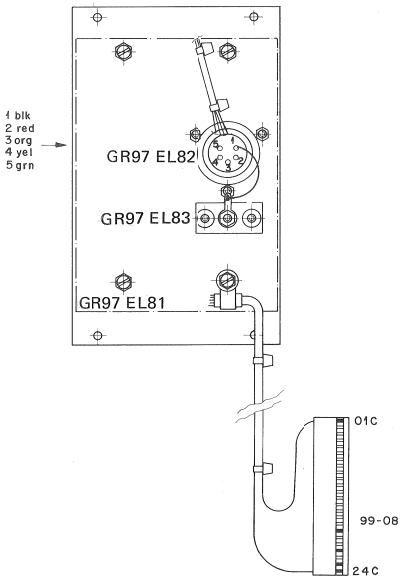

COLOR	PC-BOARD 1.228.493-11	CR 99 1.228.499	5 PIN MALE 54.02.0278	SIGN. NAME
blk	6	EL 08 01C		OL
brn	2	EL 08 23C		RECDATA
red	3	EL 08 22C		+5.0 V
org	7	EL 08 20C		+24
grn	4	EL 08 17C		TRMDATA
blk	Shield		1	GRØUND01
red	A		2	TRANSM1
org	B		3	TRANSM2
yel	C		4	RECEIVE1
grn	D		5	RECEIVE2

PARALLEL SERIAL CONVERTER

PROGRAMMER LINE AMPLIFIER 1.228.493 GR97 EL80

Kondensatoren

IND	POS NO	PART NO	VALUE	SPECIFICATIONS/EQUIVALENT		MFR
	C01	59.02.5474	470 n	5%	63V	MPC
	C02	59.08.7402	1 n	2.5%	63V	PS
	C03	59.04.8452	15 n	5%	160V	PS
	C04	59.04.8452	15 n	5%	160V	PS
	C05	59.08.7392	3.9 n	2.5%	63V	PS
	C06	59.99.0205	68 n	-20%	63V	KER
	C07	59.08.7392	3.9 n	2.5%	63V	PS
	C08	59.04.8452	15 n	5%	160V	PS
	C09	59.04.8452	15 n	5%	160V	PS
	C10	59.08.7402	1 n	2.5%	63V	PS
	C11	59.22.4224	220 µ	-10%	16V	EL
	C12	59.22.4224	220 µ	-10%	16V	EL
	C13	59.99.0205	68 n	-20%	63V	KER
	C14	59.99.0205	68 n	-20%	63V	KER
	C15	59.99.0205	68 n	-20%	63V	KER
	C16	59.99.0205	68 n	-20%	63V	KER

IND	DATE	NAME
④		
③		
②		
①		
○	13.9.79	Rohner

STUDER PROGRAMMER LINE AMPLIFIER 1.228.493.00 PAGE 1 OF 3

Widerstände

IND	POS NO	PART NO	VALUE	SPECIFICATIONS/EQUIVALENT		MFR
	R01	57.02.5333	33 kΩ	10%	0.25W	
	R02	57.02.5473	47 kΩ	10%	0.25W	
	R03	57.02.5153	15 kΩ	10%	0.25W	
	R04	57.02.5123	12 kΩ	10%	0.25W	
	R05	57.02.5123	12 kΩ	10%	0.25W	
	R06	57.02.5333	33 kΩ	10%	0.25W	
	R07	57.02.5333	33 kΩ	10%	0.25W	
	R08	57.02.5561	560 Ω	10%	0.25W	
	R09	57.02.5227	22 kΩ	10%	0.25W	
	R10	57.02.5227	22 kΩ	10%	0.25W	
	R11	57.02.5153	15 kΩ	10%	0.25W	
	R12	57.02.5473	47 kΩ	10%	0.25W	
	R13	57.02.5221	220 Ω	10%	0.25W	
	R14	57.02.5123	12 kΩ	10%	0.25W	
	R15	57.02.5123	12 kΩ	10%	0.25W	
	R16	57.02.5153	15 kΩ	10%	0.25W	
	R17	57.02.5473	47 kΩ	10%	0.25W	
	R18	57.02.5561	560 Ω	10%	0.25W	
	R19	57.02.5152	1.5 kΩ	10%	0.25W	
	R20	57.02.5152	1.5 kΩ	10%	0.25W	

IND	DATE	NAME
④		
③		
②		
①		
○	13.9.79	Rohner

STUDER PROGRAMMER LINE AMPLIFIER 1.228.493.00 PAGE 2 OF 3

Halbleiter und Rest

IND	POS NO	PART NO	VALUE	SPECIFICATIONS/EQUIVALENT	MFR
	D01	50.04.1511	ZD 6.2V	1.3W	
	D02	50.04.1511	ZD 6.2V	1.3W	
	D03	50.04.1106	ZD 2.7V	0.4W	
	D04	50.04.1511	ZD 6.2V	1.3W	
	D05	50.04.1511	ZD 6.2V	1.3W	
	D06	50.04.1115	ZD 5.1V	0.4W	
	D07	50.04.1115	ZD 5.1V	0.4W	
	IC01	50.05.0245	RC 4558	Dual OP-AMP	IN
	IC02	50.05.0245	RC 4558	Dual OP-AMP	IN
	IC03	50.05.0245	RC 4558	Dual OP-AMP	IN
	Q01	50.03.0483	BSX 20		NPN
	X IC..	53.03.0166	IC Sockel	8-polig	
	T01	1.022.416	1:1	Trafo	
	T02	1.022.416	1:1	Trafo	
	S01	54.01.0021		Brücke 2 x 0.63	
	S02..	54.01.0020		Stift 0.63 x 0.63	

IND	DATE	NAME
④		
③		
②		
①		
○	13.9.79	Rohner

STUDER PROGRAMMER LINE AMPLIFIER 1.228.493 PAGE 3 OF 3

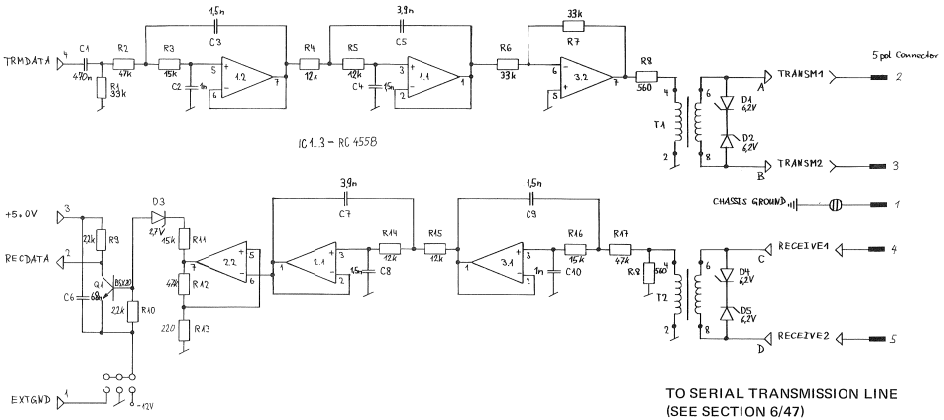

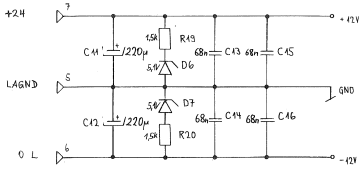

79/10/10

TLS 2000: SERIAL PARALLEL CONVERTER RACK 1.228.490.00 - 0 PAGE 1

TYPE:
A = DELTA CRIMP CONNECTOR MALE
B = DELTA CRIMP CONNECTOR FEMALE
C = 14 PIN MICRO RIBBON
L = SOLDERLUG
P = MAINS CONNECTOR
Q = AMP OR 3ERG CRIMP CONNECTOR
W = WIRE WRAP PIN

COLOR:
0 = BLACK
1 = BROWN
2 = RED
3 = ORANGE
4 = YELLOW
5 = GREEN
6 = BLUE
7 = VIOLET
8 = GREY
9 = WHITE
R = PINK

BACK PANEL PARALLEL - SERIAL CONVERTER 1.228.490

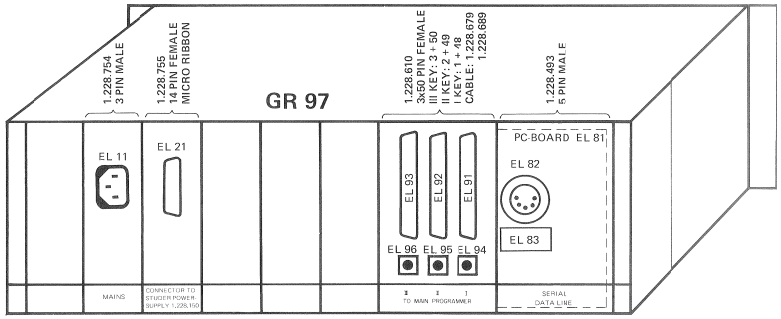

INTERCONNECTION PANEL PARALLEL - SERIAL CONVERTER 1.228.490

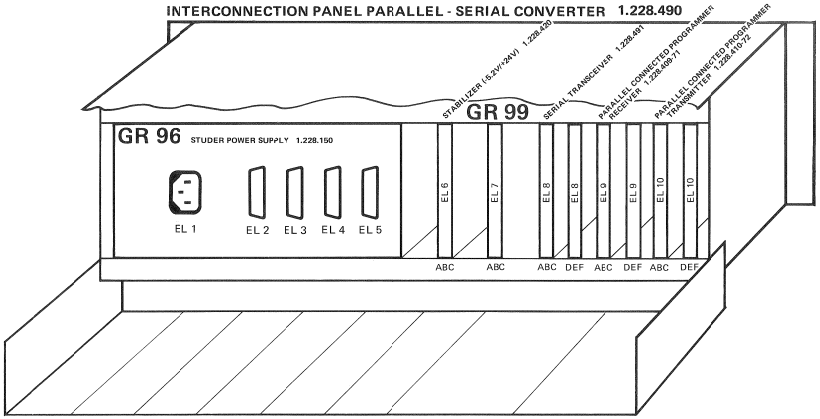

STUDER WIRE LIST 79/10/10 PAGE 2

TLS 2000: SERIAL PARALLEL CONVERTER RACK 1.228.490.00 - 0

SIGNAL NAME	COLOR	FROM T	GR	EL	PT	L	S	TO T	GR	EL	PT	L	S
0 K		W	99	06	19A	2		W	99	06	19B	2	
0 K		W	99	06	19A	1		W	99	07	19A	1	
0 K		W	99	06	19B	1		W	99	07	19B	1	
0 K		W	99	06	19C	1		W	99	07	19C	1	
0 K		W	99	07	19A	2		W	99	08	19A	2	
0 K		W	99	07	19B	2		W	99	08	19B	2	
0 K		W	99	07	19C	2		W	99	08	19C	2	
0 K		W	99	08	19C	1		W	99	08	19A	1	
0 L	5	C	96	05	02	1		Q	99	06	10A	3	
0 L	9	C	96	05	02	1		Q	99	06	10C	3	
0 L	2	C	96	05	03	1		Q	99	10	01A	3	
0 L	3	C	96	05	03	1		Q	99	10	01C	3	
0 L	6	C	96	05	09	1		Q	99	07	01C	3	
0 L	2	C	96	05	09	1		Q	99	07	01A	3	
0 L	6	L	97	21	02	1		C	96	02	02	1	
0 L	9	L	97	21	03	1		C	96	02	03	1	
0 L	9	L	97	21	09	1		C	96	02	09	1	
0 L	8	L	97	21	10	1		C	96	02	10	1	
0 L	0	L	97	81	06	1		Q	99	08	01C	3	
0 L		W	99	06	01A	2		W	99	06	01B	2	
0 L		W	99	06	01A	1		W	99	07	01A	1	
0 L		W	99	06	01B	1		W	99	07	01B	1	
0 L		W	99	06	01C	1		W	99	07	01C	1	
0 L		W	99	07	01A	2		W	99	08	01A	2	
0 L		W	99	07	01B	2		W	99	08	01B	2	
0 L		W	99	07	01C	2		W	99	08	01C	2	
0 L		W	99	08	01A	1		W	99	08	01D	1	
0 L		W	99	08	01B	1		W	99	08	01E	1	
0 L		W	99	08	01C	1		W	99	08	01F	1	
0 L		W	99	08	01D	2		W	99	08	12D	2	
0 L		W	99	08	01E	2		W	99	09	01B	2	
0 L		W	99	08	12D	1		W	99	09	01A	1	
0 L		W	99	08	12F	2		W	99	09	01E	2	
0 L		W	99	09	01A	2		W	99	09	01D	2	
0 L		W	99	09	01B	1		W	99	09	01E	1	
0 L		W	99	09	01C	2		W	99	09	01F	2	
0 L		W	99	09	01C	1		W	99	08	12F	1	
0 L		W	99	09	01D	1		W	99	09	12D	1	
0 L		W	99	09	01E	2		W	99	10	01B	2	
0 L		W	99	09	01F	1		W	99	09	12F	1	
0 L		W	99	09	12D	2		W	99	10	01A	2	
0 L		W	99	10	01A	1		W	99	10	01D	1	
0 L		W	99	10	01C	1		W	99	10	01F	1	
0 L		W	99	10	01C	2		W	99	09	12F	2	
0 L		W	99	10	01D	2		W	99	10	12D	2	
0 L		W	99	10	01F	2		W	99	10	12F	2	
0 L		W	99	10	12F	1		W	99	10	12D	1	
0 L	4	L	99	99	01	1		Q	99	09	01A	3	
0 L	4	L	99	99	01	1		Q	99	09	01B	3	
0 L	4	L	99	99	01	1		Q	99	09	01C	3	
0 SW	9-2	B	97	93	24	1		Q	99	10	30D	3	

SIGNAL NAME	COLOR	FROM T	GR	EL	PT	L	S	TO T	GR	EL	PT	L	S
+10	1	C	96	05	04	1		Q	99	07	32A	3	
+10	9	C	96	05	04	1		Q	99	07	32C	3	
+10	9	C	96	05	12	1		Q	99	10	32C	3	
+10	8	C	96	05	12	1		Q	99	10	32A	3	
+10	3	L	97	21	04	1		C	96	02	04	1	
+10	9	L	97	21	05	1		C	96	02	05	1	
+10	2	L	97	21	11	1		C	96	02	11	1	
+10	6	L	97	21	12	1		C	96	02	12	1	
+10		W	99	06	32B	2		W	99	06	32A	2	
+10		W	99	07	32A	1		W	99	06	32A	1	
+10		W	99	07	32B	1		W	99	06	32B	1	
+10		W	99	07	32C	1		W	99	06	32C	1	
+10		W	99	08	32A	2		W	99	07	32A	2	
+10		W	99	08	32B	2		W	99	07	32B	2	
+10		W	99	08	32C	2		W	99	07	32C	2	
+10		W	99	08	32D	1		W	99	08	32A	1	
+10		W	99	08	32E	1		W	99	08	32B	1	
+10		W	99	08	32F	1		W	99	08	32C	1	
+10		W	99	09	32A	2		W	99	08	32D	2	
+10		W	99	09	32B	2		W	99	08	32E	2	
+10		W	99	09	32C	2		W	99	08	32F	2	
+10		W	99	09	32D	1		W	99	09	32A	1	
+10		W	99	09	32E	1		W	99	09	32B	1	
+10		W	99	09	32F	1		W	99	09	32C	1	
+10		W	99	10	32A	2		W	99	09	32D	2	
+10		W	99	10	32B	2		W	99	09	32E	2	
+10		W	99	10	32C	2		W	99	09	32F	2	
+10		W	99	10	32C	1		W	99	10	32A	1	
+10 SW	2-R	B	97	93	41	1		Q	99	10	23F	3	
+24	3	L	97	81	07	1		Q	99	08	20C	3	
+24		W	99	06	20A	2		W	99	06	20B	2	
+24		W	99	06	20A	1		W	99	07	20A	1	
+24		W	99	06	20B	1		W	99	07	20B	1	
+24		W	99	06	20C	1		W	99	07	20C	1	
+24		W	99	07	20A	2		W	99	08	20A	2	
+24		W	99	07	20B	2		W	99	08	20B	2	
+24		W	99	07	20C	2		W	99	08	20C	2	
+24		W	99	08	20A	1		W	99	08	20C	1	
+31	9	C	96	05	07	1		Q	99	06	07C	3	
+31	6	C	96	05	07	1		Q	99	06	07A	3	
+31	9	L	97	21	07	1		C	96	02	07	1	
+31	3	L	97	21	14	1		C	96	02	14	1	
+5.0V	2	L	97	81	03	1		Q	99	08	22C	3	
- 5		W	99	06	12A	1		W	99	07	12A	1	
- 5		W	99	06	12A	2		W	99	06	12B	2	
- 5		W	99	06	12B	1		W	99	07	12B	1	
- 5		W	99	06	12C	1		W	99	07	12C	1	
- 5		W	99	07	12A	2		W	99	08	12A	2	
- 5		W	99	07	12B	2		W	99	08	12B	2	

STUDER WIRE LIST 79/10/10 PAGE 3

TLS 2000: SERIAL PARALLEL CONVERTER RACK 1.228.490.00 - 0

SIGNAL NAME	COLOR	FROM T	GR	EL	PT	L	S	TO T	GR	EL	PT	L	S
- 5		W	99	07	12C	2		W	99	08	12C	2	
- 5		W	99	08	12A	1		W	99	08	12C	1	
-10	9	C	96	05	13	1		Q	99	06	04C	3	
-10	3	C	96	05	13	1		Q	99	06	04A	3	
-10	5	L	97	21	06	1		C	96	02	06	1	
-10	2	L	97	21	13	1		C	96	02	13	1	
ADCDATAA	2	B	97	93	09	1		Q	99	10	09D	3	
ADCDATAA		W	99	09	17A	1		W	99	10	09D	1	
ADCDATAB	R	B	97	93	07	1		Q	99	10	07D	3	
ADCDATAB		W	99	09	18A	1		W	99	10	07D	1	
ADCDATAC	1	B	97	93	02	1		Q	99	10	03D	3	
ADCDATAC		W	99	09	22A	1		W	99	10	03D	1	
ADCDATAD	1-6	B	97	92	23	1		Q	99	09	29D	3	
ADCDATAD		W	99	09	29D	2		W	99	09	24A	2	
ADCDATAE	4-1	B	97	92	17	1		Q	99	09	23D	3	
ADCDATAE		W	99	09	26C	2		W	99	09	23D	2	
ADD	4-6	B	97	91	33	1		Q	99	08	09F	3	
ADV RET	2	B	97	91	09	1		Q	99	08	09D	3	
ADV RET		W	99	08	09D	1		W	99	10	24B	1	
B-CALC	5-2	B	97	91	34	1		Q	99	08	10F	3	
B-CALC		W	99	10	06C	1		W	99	08	10F	1	
B-ENTRYM	1-R	B	97	91	21	1		Q	99	08	27D	3	
B-ENTRYM		W	99	08	27D	1		W	99	10	10B	1	
B-EXITSL	1-5	B	97	91	15	1		Q	99	08	21D	3	
B-EXITSL		W	99	08	21D	1		W	99	10	10A	1	
B-GENUSB	5-0	B	97	91	36	1		Q	99	08	13F	3	
B-GENUSB		W	99	08	13F	1		W	99	10	28C	1	
B-LOWLIM	8-1	B	97	91	19	1		Q	99	08	25D	3	
B-LOWLIM		W	99	10	10C	1		W	99	08	25D	1	
B-NOMAST	4-5-0	B	97	91	47	1		Q	99	08	29F	3	
B-NOMAST		W	99	10	03A	1		W	99	08	29F	1	
B-PHAS	9-4	B	97	91	16	1		Q	99	08	22D	3	
B-PHAS		W	99	08	22D	1		W	99	10	17A	1	
B-RECENB	9-R	B	97	93	20	1		Q	99	10	26D	3	
B-RECENB		W	99	10	26D	2		W	99	10	23B	2	
B-REHEAR	8-R	B	97	92	12	1		Q	99	09	13D	3	
B-REHEAR		W	99	10	03C	2		W	99	09	13D	2	

SIGNAL NAME	COLOR	FROM T	GR	EL	PT	L	S	TO T	GR	EL	PT	L	S
B-UPPLIM	8-R	B	97	91	12	1		Q	99	08	13D	3	
B-UPPLIM		W	99	08	13D	1		W	99	10	13A	1	
BADRSTRT	4	B	97	92	05	1		Q	99	09	05D	3	
BADRSTRT		W	99	10	23C	1		W	99	09	05D	1	
BEDMMPRG	9-8	B	97	93	18	1		Q	99	10	24D	3	
BEDMMPRG		W	99	10	24D	2		W	99	10	07B	2	
BENT/PKS	2-0	B	97	91	45	1		Q	99	08	27F	3	
BENT/PKS		W	99	10	09C	1		W	99	08	27F	1	
BLKDSPJ	4-R	B	97	92	31	1		Q	99	09	07F	3	
BLKDSPJ		W	99	09	02B	2		W	99	09	07F	2	
BLKDSPL	1	B	97	92	03	1		Q	99	09	03D	3	
BLKDSPL		W	99	09	02C	2		W	99	09	03D	2	
BLKDSP2	4-6	B	97	92	33	1		Q	99	09	09F	3	
BLKDSP2		W	99	09	09F	2		W	99	09	03B	2	
BLKDSP3	4-0	B	97	92	37	1		Q	99	09	17F	3	
BLKDSP3		W	99	09	03C	2		W	99	09	17F	2	
BLKDSP4	6-0	B	97	92	44	1		Q	99	09	26F	3	
BLKDSP4		W	99	09	26F	1		W	99	09	04B	1	
BLKDSP5	9-1-0	B	97	92	46	1		Q	99	09	28F	3	
BLKDSP5		W	99	09	04C	1		W	99	09	28F	1	
BLKDSP6	9-0	B	97	93	26	1		Q	99	10	02F	3	
BLKDSP6		W	99	09	05B	1		W	99	10	02F	1	
BLKDSP7	6-2-0	B	97	92	50	1		Q	99	09	31F	3	
BLKDSP7		W	99	09	05C	1		W	99	09	31F	1	
BLKDSP8	4-8	B	97	93	29	1		Q	99	10	05F	3	
BLKDSP8		W	99	10	05F	1		W	99	09	06B	1	
BLKMMPRG	9-1-0	B	97	93	46	1		Q	99	10	28F	3	
BLKMMPRG		W	99	10	07A	1		W	99	10	28F	1	
BLOCATOR	0	B	97	93	10	1		Q	99	10	10D	3	
BLOCATOR		W	99	10	10D	2		W	99	10	27C	2	
BOFFSREG	9-5	B	97	91	14	1		Q	99	08	18D	3	
BOFFSREG		W	99	08	18D	1		W	99	10	13B	1	
BPILMPRG	6-0	B	97	93	44	1		Q	99	10	26F	3	
BPILMPRG		W	99	10	08B	1		W	99	10	26F	1	
BPKMMPRG	6-2	B	97	93	13	1		Q	99	10	17D	3	
BPKMMPRG		W	99	10	07C	2		W	99	10	17D	2	

* STUDER * WIRE LIST * 79/10/10 * PAGE 4 *

TLS 2000: SERIAL PARALLEL CONVERTER RACK 1.228.490.00 - 0

SIGNAL NAME	COLOR	FROM T GR EL PT L S	TO T GR EL PT L S
BULBDPA0	2-R	B 97 92 41 1	Q 99 09 23F 3
BULBDPA1	4-8	B 97 91 29 1	Q 99 08 05F 3
BULBDPA2	1	B 97 91 03 1	Q 99 08 03D 3
BULBDPB2	4-R	B 97 91 31 1	Q 99 08 07F 3
BULBDPH1	8	B 97 92 06 1	Q 99 09 06D 3
BULBDPL1	8-6	B 97 92 38 1	Q 99 09 18F 3
BULBDPN1	9-8	B 97 92 18 1	Q 99 09 24D 3
BULBDPP1	9-6	B 97 92 22 1	Q 99 09 28D 3
BULBDPS2	4-0	B 97 93 37 1	Q 99 10 17F 3
BULBDPT2	6-R	B 97 93 39 1	Q 99 10 21F 3
BULBDPU2	8-0	B 97 93 42 1	Q 99 10 24F 3
BULBPBF2	1-2	B 97 91 25 1	Q 99 08 31D 3
BULBPBF3	9-2	B 97 91 24 1	Q 99 08 30D 3
BULBPBF4	1-6	B 97 91 23 1	Q 99 08 29D 3
BULBPBG3	6	B 97 92 08 1	Q 99 09 08D 3
BULBPBH3	6-2	B 97 92 13 1	Q 99 09 17D 3
BULBPBI3	8	B 97 91 06 1	Q 99 08 06D 3
BULBPBK5	8-2	B 97 92 40 1	Q 99 09 22F 3
BULBPBL5	1-R	B 97 92 21 1	Q 99 09 27D 3
BULBPBM5	6	B 97 93 08 1	Q 99 10 08D 3
CODEFR/S	1-5	B 97 92 15 1	Q 99 09 21D 3
CODEFR/S		W 99 10 23A 2	W 99 09 21D 2
CODENDEF	5-6	B 97 91 32 1	Q 99 08 08F 3
CODENDEF		W 99 08 08F 1	W 99 10 27B 1
CONNFAIL	6-0	B 97 91 44 1	Q 99 08 26F 3
CONNFAIL		W 99 10 06B 1	W 99 08 26F 1
DIFF	0	B 97 92 10 1	Q 99 09 10D 3
DIFF		W 99 09 10D 2	W 99 10 18C 2
DISEND9+	5-R	B 97 93 30 1	Q 99 10 06F 3
DISEND9+		W 99 09 06C 1	W 99 10 06F 1
DISEND9-	4-6	B 97 93 33 1	Q 99 10 09F 3
DISEND9-		W 99 09 07B 1	W 99 10 09F 1
DISPEN0	8-5	B 97 92 28 1	Q 99 09 04F 3
DISPEN0		W 99 09 04F 2	W 99 09 07C 2
DISPEN1	9-0	B 97 92 26 1	Q 99 09 02F 3
DISPEN1		W 99 09 02F 2	W 99 09 08B 2
DISPEN2	5-R	B 97 92 30 1	Q 99 09 06F 3
DISPEN2		W 99 09 06F 2	W 99 09 08C 2
DISPEN3	5-6	B 97 92 32 1	Q 99 09 08F 3
DISPEN3		W 99 09 08F 2	W 99 09 09C 2
DISPEN4	6-R	B 97 92 39 1	Q 99 09 21F 3
DISPEN4		W 99 09 10C 2	W 99 09 21F 2
DISPEN5	8-R-0	B 97 92 48 1	Q 99 09 30F 3
DISPEN5		W 99 09 11C 1	W 99 09 30F 1
DISPEN6	4-5-0	B 97 92 47 1	Q 99 09 29F 3
DISPEN6		W 99 09 13C 2	W 99 09 29F 2
DISPEN7	1-2	B 97 92 25 1	Q 99 09 31D 3
DISPEN7		W 99 09 31D 2	W 99 09 17C 2
DISPEN8	1-0	B 97 93 27 1	Q 99 10 03F 3
DISPEN8		W 99 10 03F 1	W 99 09 18C 1
EDIT	8-R	B 97 93 12 1	Q 99 10 13D 3
EDIT		W 99 10 13D 2	W 99 10 06A 2
EDIT CD	R	B 97 91 07 1	Q 99 08 07D 3
EDIT CD		W 99 10 27A 1	W 99 08 07D 1
ENADC		W 99 09 25A 2	W 99 10 26B 2
ENTRY	6-2	B 97 91 13 1	Q 99 08 17D 3
ENTRY		W 99 08 17D 1	W 99 10 04A 1
EXEC	9-0	B 97 91 26 1	Q 99 08 02F 3
FAST FWD	4-1	B 97 93 17 1	Q 99 10 23D 3
FAST FWD		W 99 10 23D 1	W 99 10 05B 1
FAST REW	2-0	B 97 93 45 1	Q 99 10 27F 3
FAST REW		W 99 10 05A 1	W 99 10 27F 1
FRAM	7	B 97 92 11 1	Q 99 09 11D 3
FRAM		W 99 10 22C 2	W 99 09 11D 2
FRAM ER	4-1	B 97 91 17 1	Q 99 08 23D 3
FRAM ER		W 99 10 02C 1	W 99 08 23D 1

* STUDER * WIRE LIST * 79/10/10 * PAGE 5 *

TLS 2000: SERIAL PARALLEL CONVERTER RACK 1.228.490.00 - 0

SIGNAL NAME	COLOR	FROM T GR EL PT L S	TO T GR EL PT L S
GEN N SC	7	B 97 91 11 1	Q 99 08 11D 3
GEN SET	9-8	B 97 91 18 1	Q 99 08 24D 3
GEN SET		W 99 08 24D 1	W 99 10 13C 1
GEN=MAST	1-6	B 97 93 23 1	Q 99 10 29D 3
GEN=MAST		W 99 10 29D 1	W 99 10 08C 1
GENRUN	9-5	B 97 93 14 1	Q 99 10 18D 3
GENRUN		W 99 10 18D 2	W 99 10 08A 2
GROUND81	0	L 97 82 01 1	L 97 83 01 1
HOLD	5-2	B 97 92 34 1	Q 99 09 10F 3
HOLD		W 99 09 10F 2	W 99 10 17B 2
INTGEN	5-R	B 97 91 30 1	Q 99 08 06F 3
INTGEN		W 99 08 06F 1	W 99 10 17C 1
KB	8-5	B 97 93 28 1	Q 99 10 04F 3
KB		W 99 10 04F 1	W 99 10 22A 1
LOCKFAST	6	B 97 91 08 1	Q 99 08 08D 3
LOCKFAST		W 99 10 26A 1	W 99 08 08D 1
LOCKSLOW	4-2	B 97 92 35 1	Q 99 09 11F 3
LOCKSLOW		W 99 09 11F 2	W 99 10 25C 2
LWLIM EX	0-R	B 97 91 43 1	Q 99 08 25F 3
LWLIM EX		W 99 10 09B 1	W 99 08 25F 1
MAST	5	B 97 93 04 1	Q 99 10 04D 3
MAST		W 99 10 04D 2	W 99 10 21C 2
MSEC	0	B 97 91 10 1	Q 99 08 10D 3
MSEC	2	B 97 92 09 1	Q 99 09 09D 3
MSEC		W 99 08 10D 2	W 99 09 09D 2
MSEC		W 99 09 09D 1	W 99 10 22B 1
NO CD S	9-R	B 97 91 20 1	Q 99 08 26D 3
NO CD S		W 99 08 26D 1	W 99 10 03B 1
NTRMDATA	5	B 97 92 04 1	Q 99 09 04D 3
NTRMDATA		W 99 09 04D 1	W 99 08 09C 1
NTRMDATB	5-0	B 97 92 36 1	Q 99 09 13F 3
NTRMDATB		W 99 08 10C 1	W 99 09 13F 1
NTRMDATC	8-0	B 97 92 42 1	Q 99 09 24F 3
NTRMDATC		W 99 08 11C 1	W 99 09 24F 1
NTRMDATD	9	B 97 93 01 1	Q 99 10 02D 3
NTRMDATD		W 99 08 13C 1	W 99 10 02D 1
NTRMDTA		W 99 07 09C 1	W 99 08 09A 1
NTRMDTA		W 99 08 09A 2	W 99 09 09A 2
NTRMDTA		W 99 09 09A 1	W 99 10 30B 1
NTRMDTB		W 99 07 10C 2	W 99 08 10A 2
NTRMDTC		W 99 07 11C 2	W 99 08 11A 2
NTRMDTD		W 99 07 13C 2	W 99 08 13A 2
OFS DISP	9-5	B 97 92 14 1	Q 99 09 18D 3
OFS DISP		W 99 10 21A 2	W 99 09 18D 2
PARKED	8-6	B 97 93 38 1	Q 99 10 18F 3
PARKED		W 99 10 02B 1	W 99 10 18F 1
PBA	5	B 97 91 04 1	Q 99 08 04D 3
PBA		W 99 09 28A 1	W 99 08 04D 1
PBB	8-1	B 97 93 19 1	Q 99 10 25D 3
PBB		W 99 09 28B 1	W 99 10 25D 1
PBC	5-6	B 97 93 32 1	Q 99 10 08F 3
PBC		W 99 09 29A 1	W 99 10 08F 1
PBD	1-0	B 97 91 27 1	Q 99 08 03F 3
PBD		W 99 08 03F 1	W 99 09 29B 1
PBE	5-0	B 97 93 36 1	Q 99 10 13F 3
PBE		W 99 10 13F 1	W 99 09 30A 1
PBF	8-0	B 97 91 42 1	Q 99 08 24F 3
PBF		W 99 08 24F 2	W 99 09 30B 2
PBG	6-R	B 97 91 39 1	Q 99 08 21F 3
PBG		W 99 09 31A 2	W 99 08 21F 2
PBH	4	B 97 91 05 1	Q 99 08 05D 3
PBH		W 99 08 05D 1	W 99 09 31B 1
PBI	8-5	B 97 91 28 1	Q 99 08 04F 3
PBI		W 99 08 04F 1	W 99 09 26A 1
PBK	2-R	B 97 91 41 1	Q 99 08 23F 3
PBK		W 99 08 23F 2	W 99 09 26B 2
PBPLAY	1-R	B 97 93 21 1	Q 99 10 27D 3
PBPLAY		W 99 09 27B 1	W 99 10 27D 1
PBREC	9-6	B 97 93 22 1	Q 99 10 28D 3
PBREC		W 99 10 28D 1	W 99 09 27A 1
PBULBHMS	9-4	B 97 92 16 1	Q 99 09 22D 3
PBULBHMS	9-2	B 97 92 24 1	Q 99 09 30D 3

TLS 2000: SERIAL PARALLEL CONVERTER RACK 1.228.490.00 - 0

SIGNAL NAME	COLOR	FROM T GR EL PT L S	TO T GR EL PT L S
PBULBHMS	2-0	B 97 92 45 1	Q 99 09 27F 3
PBULBHMS		W 99 09 27F 2	W 99 09 30D 2
PBULBHMS		W 99 09 27F 1	W 99 09 22D 1
PBULBHMS		W 99 09 30D 1	W 99 10 26C 1
PB0	4-2	B 97 93 35 1	Q 99 10 11F 3
PB0		W 99 10 11F 1	W 99 09 21B 1
PB1	9	B 97 91 02 1	Q 99 08 02D 3
PB1		W 99 08 02D 1	W 99 09 21C 1
PB2	6-2-0	B 97 93 49 1	Q 99 10 31F 3
PB2		W 99 10 31F 1	W 99 09 22B 1
PB3	4-R	B 97 93 31 1	Q 99 10 07F 3
PB3		W 99 10 07F 1	W 99 09 22C 1
PB4	8-2	B 97 91 40 1	Q 99 08 22F 3
PB4		W 99 08 22F 2	W 99 09 23B 2
PB5	5-2	B 97 93 34 1	Q 99 10 10F 3
PB5		W 99 10 10F 1	W 99 09 23C 1
PB6	8-R-0	B 97 93 48 1	Q 99 10 30F 3
PB6		W 99 09 24B 1	W 99 10 30F 1
PB7	8-6	B 97 91 38 1	Q 99 08 18F 3
PB7		W 99 08 18F 2	W 99 09 25B 2
PCDATACC		W 99 08 27C 2	W 99 09 27C 2
PCDATINA		W 99 08 09B 2	W 99 09 09B 2
PCDATINB		W 99 08 10B 2	W 99 09 10B 2
PCDATINC		W 99 08 11B 2	W 99 09 11B 2
PCDATIND		W 99 08 13B 2	W 99 09 13B 2
PCDATINE		W 99 08 17B 2	W 99 09 17B 2
PCDATRDY		W 99 07 25C 1	W 99 08 25C 1
PCDATRDY		W 99 08 25C 2	W 99 09 25C 2
PCDATRDY		W 99 10 11B 1	W 99 09 25C 1
PCPGDATA		W 99 08 28C 2	W 99 09 28C 2
PCPGDATB		W 99 08 29C 2	W 99 09 29C 2
PCPGDATC		W 99 08 30C 2	W 99 09 30C 2
PHASING	R	B 97 92 07 1	Q 99 09 07D 3
PHASING		W 99 09 07D 1	W 99 10 24C 1

SIGNAL NAME	COLOR	FROM T GR EL PT L S	TO T GR EL PT L S
PLAY	1-2	B 97 93 25 1	Q 99 10 31D 3
PLAY		W 99 10 05C 1	W 99 10 31D 1
PMNTM 2		W 99 07 24C 1	W 99 08 24C 1
PMNTM 2		W 99 08 24C 2	W 99 09 24C 2
PMNTM 2		W 99 10 11A 1	W 99 09 24C 1
PPBPRESS		W 99 08 18C 2	W 99 09 18B 2
PPWRON		W 99 07 23C 1	W 99 08 23A 1
PPWRON		W 99 08 23A 2	W 99 09 23A 2
PPWRON		W 99 10 30C 1	W 99 09 23A 1
PRIFTRXY		W 99 09 31C 2	W 99 08 31C 2
REC	7	B 97 93 11 1	Q 99 10 11D 3
REC		W 99 10 04C 2	W 99 10 11D 2
RECDATA	1	L 97 81 02 1	Q 99 08 23C 3
RECEIVE1	4	L 97 81 C 1	L 97 82 04 1
RECEIVE2	5	L 97 81 D 1	L 97 82 05 1
SL NOTP	4-0	B 97 91 37 1	Q 99 08 17F 3
SL NOTP		W 99 08 17F 1	W 99 10 24A 1
SLAV	8-1	B 97 92 19 1	Q 99 09 25D 3
SLAV		W 99 09 25D 2	W 99 10 21B 2
SLDECOFF	4-2	B 97 91 35 1	Q 99 08 11F 3
STOP	8-2	B 97 93 40 1	Q 99 10 22F 3
STOP		W 99 10 04B 1	W 99 10 22F 1
STOREOFS	4-8	B 97 92 29 1	Q 99 09 05F 3
STOREOFS		W 99 09 05F 1	W 99 10 25B 1
SVPCI	9-6	B 97 91 22 1	Q 99 08 28D 3
SVPCI		W 99 08 28B 2	W 99 08 28D 2
SVPCII	0-R	B 97 92 43 1	Q 99 09 25F 3
SVPCII		W 99 08 27B 1	W 99 09 25F 1
SVPCIII	8	B 97 93 06 1	Q 99 10 06D 3
SVPCIII		W 99 08 26C 1	W 99 10 06D 1
SYNC A	4-5-0	B 97 93 47 1	Q 99 10 29F 3
SYNC A		W 99 10 02A 1	W 99 10 29F 1
SYNC B	0-R	B 97 93 43 1	Q 99 10 25F 3
SYNC B		W 99 10 28B 2	W 99 10 25F 2
SYNC PLT	9-4	B 97 93 16 1	Q 99 10 22D 3

TLS 2000: SERIAL PARALLEL CONVERTER RACK 1.228.490.00 - 0

SIGNAL NAME	COLOR	FROM T GR EL PT L S	TO T GR EL PT L S
SYNC PLT		W 99 10 28A 2	W 99 10 22D 2
TRANSM1	2	L 97 81 A 1	L 97 82 02 1
TRANSM2	3	L 97 81 B 1	L 97 82 03 1
TRMADR0		W 99 07 02C 1	W 99 08 02C 1
TRMADR0		W 99 08 02C 2	W 99 09 02A 2
TRMADR0		W 99 09 02A 1	W 99 10 29A 1
TRMADR1		W 99 07 03C 2	W 99 08 03C 2
TRMADR1		W 99 08 03C 1	W 99 09 03A 1
TRMADR1		W 99 09 03A 2	W 99 10 29B 2
TRMADR2		W 99 07 04C 1	W 99 08 04C 1
TRMADR2		W 99 08 04C 2	W 99 09 04A 2
TRMADR2		W 99 10 29C 1	W 99 09 04A 1
TRMADR3		W 99 07 05C 2	W 99 08 05C 2
TRMADR3		W 99 08 05C 1	W 99 09 05A 1
TRMADR3		W 99 09 05A 2	W 99 10 31A 2
TRMADR4		W 99 07 06C 1	W 99 08 06C 1
TRMADR4		W 99 08 06C 2	W 99 09 06A 2
TRMADR4		W 99 09 06A 1	W 99 10 31B 1
TRMADR5		W 99 07 07C 2	W 99 08 07C 2
TRMADR5		W 99 08 07C 1	W 99 09 07A 1
TRMADR5		W 99 10 31C 2	W 99 09 07A 2
TRMADR6		W 99 07 08C 1	W 99 08 08C 1
TRMADR6		W 99 08 08C 2	W 99 09 08A 2
TRMADR6		W 99 09 08A 1	W 99 10 30A 1
TRMDATA	5	L 97 81 04 1	Q 99 08 17C 3
TX	1-5	B 97 93 15 1	Q 99 10 21D 3
TX		W 99 10 25A 2	W 99 10 21D 2
UNAS B	9-R	B 97 92 20 1	Q 99 09 26D 3
UNAS B		W 99 09 26D 2	W 99 10 18A 2
UPLIM EX	9-1-0	B 97 91 46 1	Q 99 08 28F 3
UPLIM EX		W 99 10 09A 1	W 99 08 28F 1
USER B	4	B 97 93 05 1	Q 99 10 05D 3
USER B		W 99 10 18B 2	W 99 10 05D 2
WMPRESO1	8-R-0	B 97 91 49 1	Q 99 08 30F 3
WMPRESO2	6-2-0	B 97 91 50 1	Q 99 08 31F 3
WMPRESO3	9	B 97 92 01 1	Q 99 09 02D 3

SIGNAL NAME	COLOR	FROM T GR EL PT L S	TO T GR EL PT L S
WMPRESO4	1-0	B 97 92 27 1	Q 99 09 03F 3
12.5 HZ		W 99 09 13A 2	W 99 08 07B 2
220VACE	4-5	L 97 11 02 1	P 96 01 02 1
220VAC1	6	L 97 11 01 1	P 96 01 01 1
220VAC2	1	L 97 11 03 1	P 96 01 03 1
24VAC1	9	L 97 21 01 1	C 96 02 01 1
24VAC2	1	L 97 21 08 1	C 96 02 08 1
819.2KHZ		W 99 07 21C 1	W 99 08 21C 1
819.2KHZ		W 99 08 21C 2	W 99 09 21A 2

END OF LIST

```
 ******  *******  *     *  ******   *******  ******                          *        *  ***  ******   ***  *     *   *****
*           *     *     *  *     *  *        *     *                         *        *   *  *     *   *   **    *  *     *
*           *     *     *  *     *  *        *     *                         *        *   *  *     *   *   * *   *  *
 *****      *     *     *  *     *  *****    ******          *******         *    *   *   *  ******    *   *  * *  *  *   ***
      *     *     *     *  *     *  *        *   *                          *  *   *   *   *  *   *     *   *   * *  *  *     *
      *     *     *     *  *     *  *        *    *                          * * * *    *   *  *    *    *   *    **  *  *     *
******      *      *****   ******   *******  *     *                          *   *     ***  *     *  ***  *     *   *  *****
```

****

TITLE: TLS 2000: SERIAL - PARALLEL CONVERTER RACK 1.228.490.00 INDEX: 0 DATE OF ORIGIN: 79/10/10
DATE OF PROC.: 79/10/10

OPTIONS IN EFFECT: LOCLIS, SIGLIS, ALLCOL, RECIDT, WIRALL

TOTAL GROUPS: 3
TOTAL ELEMENTS: 22
TOTAL PINS: 1009
TOTAL UNUSED PINS: 347
MULTIPLE PINS: 0

SIGNALS: TOTAL: 191
USED: 189
UNUSED: 2

GROUP NODE = *
INTER GROUP NODE = #
DIRECT WIRE TO # = <
WIRING NOT COMPUTED = a

DIAGNOSTICS GENERATED: N O N E

****

****

TLS 2000: SERIAL - PARALLEL CONVERTER RACK 1.228.490.00 79/10/10

GR: 96
STUDER POWER SUPPLY 1.228.150

EL: 01 POWER SUPPLY MAINS INPUT

TYPE	PT	LV	SIG.NAME	COLOR	F	X	Y
P	01	1	220VAC1	6			
P	02	1	220VACE	4-5			
P	03	1	220VAC2	1			

EL: 02 POWER SUPPLY OUTPUT CONNECTOR 1

TYPE	PT	LV	SIG.NAME	COLOR	F	X	Y
C	01	1	24VAC1	9			
C	02	1	0 L	6			
C	03	1	0 L	9			
C	04	1	+10	3			
C	05	1	+10	9			
C	06	1	-10	5			
C	07	1	+31	9			
C	08	1	24VAC2	1			
C	09	1	0 L	9			
C	10	1	0 L	8			
C	11	1	+10	2			
C	12	1	+10	6			
C	13	1	-10	2			
C	14	1	+31	3			

EL: 03 POWER SUPPLY OUTPUT CONNECTOR 2

TYPE	PT	LV	SIG.NAME	COLOR	F	X	Y
C	01	1	24VAC1				
C	02	1	0 L				
C	03	1	0 L				
C	04	1	+10				
C	05	1	+10				
C	06	1	-10				
C	07	1	+31				
C	08	1	24VAC2				
C	09	1	0 L				
C	10	1	0 L				
C	11	1	+10				
C	12	1	+10				
C	13	1	-10				
C	14	1	+31				

EL: 04 POWER SUPPLY OUTPUT CONNECTOR 3

TYPE	PT	LV	SIG.NAME	COLOR	F	X	Y
C	01	1	24VAC1				
C	02	1	0 L				
C	03	1	0 L				
C	04	1	+10				
C	05	1	+10				

./.

GR: 96 (CONTINUATION)
STUDER POWER SUPPLY 1.228.150

EL: 04 (CONTINUATION)

TYPE	PT	LV	SIG.NAME	COLOR	F	X	Y
C	06	1	-10				
C	07	1	+31				
C	08	1	24VAC2				
C	09	1	0 L				
C	10	1	0 L				
C	11	1	+10				
C	12	1	+10				
C	13	1	-10				
C	14	1	+31				

EL: 05 POWER SUPPLY OUTPUT CONNECTOR 4

TYPE	PT	LV	SIG.NAME	COLOR	F	X	Y
C	01	1	24VAC1				
C	02	1	0 L	5,9			
C	03	1	0 L	2,3			
C	04	1	+10	1,9			
C	05	1	+10				
C	06	1	-10				
C	07	1	+31	6,9			
C	08	1	24VAC2				
C	09	1	0 L	2,6			
C	10	1	0 L				
C	11	1	+10				
C	12	1	+10	8,9			
C	13	1	-10	3,9			
C	14	1	+31				

GR: 97
RACK ELEMENTS SER - PAR CONVERTER RACK

EL: 11 MASTER MAINS INPUT

TYPE	PT	LV	SIG.NAME	COLOR	F	X	Y
L	01	1	220VAC1	6			
L	02	1	220VACE	4-5			
L	03	1	220VAC2	1			

EL: 21 POWER JUMPER CABLE

TYPE	PT	LV	SIG.NAME	COLOR	F	X	Y
L	01	1	24VAC1	9			
L	02	1	0 L	6			
L	03	1	0 L	9			
L	04	1	+10	3			
L	05	1	+10	9			
L	06	1	-10	5			
L	07	1	+31	9			
L	08	1	24VAC2	1			
L	09	1	0 L	9			
L	10	1	0 L	8			
L	11	1	+10	2			
L	12	1	+10	6			
L	13	1	-10	2			
L	14	1	+31	3			

EL: 81 PROGRAMMER LINE AMPLIFIER,PRINT

TYPE	PT	LV	SIG.NAME	COLOR	F	X	Y
L	00A	1	TRANSM1	2			
L	00B	1	TRANSM2	3			
L	00C	1	RECEIVE1	4			
L	00D	1	RECEIVE2	5			
L	01	1	EXTGND				
L	02	1	RECDATA	1			
L	03	1	+5.0V	2			
L	04	1	TRMDATA	5			
L	05	1	LAGND				
L	06	1	0 L	0			
L	07	1	+24	3			

EL: 82 PROGRAMMER LINE AMPLIFIER,5P MAL

TYPE	PT	LV	SIG.NAME	COLOR	F	X	Y
L	01	1	GROUND81	0			
L	02	1	TRANSM1	2			
L	03	1	TRANSM2	3			
L	04	1	RECEIVE1	4			
L	05	1	RECEIVE2	5			

```
*****************************************************************************************************************
*  S T U D E R  *     L O C A T I O N    P I N    L I S T      *   79/10/10 * 16:34     *  P A G E     3   *
*****************************************************************************************************************
TLS 2000: SERIAL - PARALLEL CONVERTER RACK                1.228.490.00          79/10/10

GR: 97   (CONTINUATION)
RACK ELEMENTS SER - PAR CONVERTER RACK
*************************************

EL: 83  PROGR. LINE AMPL. GROUND SCREW
-------------------------------------
TYPE PT  LV SIG.NAME COLOR F    X      Y
---- --- -- -------- ----- - ------ ------
L    01  1  GROUND81 0

EL: 91  CONN. ASS. TO MAIN PROGR. (J  I)
---------------------------------------
TYPE PT  LV SIG.NAME COLOR F    X      Y
---- --- -- -------- ----- - ------ ------
     01  0  KEY
B    02  1  PB1      9
B    03  1  BULBDPA2 1
B    04  1  PBA      5
B    05  1  PBII     4
B    06  1  BULBPBI3 8
B    07  1  EDIT CD  R
B    08  1  LOCKFAST 6
B    09  1  ADV RET  2
B    10  1  MSEC     0
B    11  1  GEN N SC 7
B    12  1  B-UPPITM 8-R
B    13  1  ENTRY    6-2
B    14  1  BOFFSREG 9-5
B    15  1  B-EXITSL 1-5
B    16  1  B-PHAS   9-4
B    17  1  FRAM ER  4-1
B    18  1  GEN SET  9-8
B    19  1  B-LOWLIM 8-1
B    20  1  NO CD S  9-R
B    21  1  B-ENTRYM 1-R
B    22  1  SVPCI    9-6
B    23  1  BULBPBF4 1-6
B    24  1  BULBPBF3 9-2
B    25  1  BULBPBF2 1-2
B    26  1  EXEC     9-0
B    27  1  PBD      1-0
B    28  1  PBI      8-5
B    29  1  BULBDPA1 4-8
B    30  1  INTGEN   5-R
B    31  1  BULBDPB2 4-R
B    32  1  CODENDEF 5-6
B    33  1  ADD      4-6
B    34  1  B-CALC   5-2
B    35  1  SLDECOFF 4-2
B    36  1  B-GENUSB 5-0
B    37  1  SL NOTP  4-0
B    38  1  PB7      8-6
B    39  1  PBG      6-R
B    40  1  PB4      8-2
B    41  1  PBK      2-R
B    42  1  PBF      8-0
B    43  1  LWLIM EX 0-R
B    44  1  CONNFAIL 6-0
B    45  1  BENT/PKS 2-0
                                  ./.

GR: 97   (CONTINUATION)
RACK ELEMENTS SER - PAR CONVERTER RACK
*************************************

EL: 91   (CONTINUATION)
---------------------------------------
TYPE PT  LV SIG.NAME COLOR F    X      Y
---- --- -- -------- ----- - ------ ------
B    46  1  UPLIM EX 9-1-0
B    47  1  B-NOMAST 4-5-0
     48  0  KEY
B    49  1  WMPRESO1 8-R-0
B    50  1  WMPRESO2 6-2-0

EL: 92  CONN. ASS. TO MAIN PROGR. (J II)
----------------------------------------
TYPE PT  LV SIG.NAME COLOR F    X      Y
---- --- -- -------- ----- - ------ ------
B    01  1  WMPRESO3 9
     02  0  KEY
B    03  1  BLKDSP1  1
B    04  1  NTRMDATA 5
B    05  1  BADRSTRT 4
B    06  1  BULBDPH1 8
B    07  1  PHASING  R
B    08  1  BULBPBG3 6
B    09  1  MSEC     2
B    10  1  DIFF     0
B    11  1  FRAM     7
B    12  1  B-REHEAR 8-R
B    13  1  BULBPBH3 6-2
B    14  1  OFS DISP 9-5
B    15  1  CODEFR/S 1-5
B    16  1  PBULBHMS 9-4
B    17  1  ADCDATAE 4-1
B    18  1  BULBDPN1 9-8
B    19  1  SLAV     8-1
B    20  1  UNAS B   9-R
B    21  1  BULBPBL5 1-R
B    22  1  BULBDPP1 9-6
B    23  1  ADCDATAD 1-6
B    24  1  PBULBHMS 9-2
B    25  1  DISPEN7  1-2
B    26  1  DISPEN1  9-0
B    27  1  WMPRESO4 1-0
B    28  1  DISPENO  8-5
B    29  1  STOREOFS 4-8
B    30  1  DISPEN2  5-R
B    31  1  BLKDSP0  4-R
B    32  1  DISPEN3  5-6
B    33  1  BLKDSP2  4-6
B    34  1  HOLD     5-2
B    35  1  LOCKSLOW 4-2
B    36  1  NTRMDATB 5-0
B    37  1  BLKDSP3  4-0
B    38  1  BULBDPL1 8-6
B    39  1  DISPEN4  6-R
B    40  1  BULBPBK5 8-2
B    41  1  BULBDPA0 2-R
                                  ./.

GR: 97   (CONTINUATION)
RACK ELEMENTS SER - PAR CONVERTER RACK
*************************************

EL: 92   (CONTINUATION)
---------------------------------------
TYPE PT  LV SIG.NAME COLOR F    X      Y
---- --- -- -------- ----- - ------ ------
B    42  1  NTRMDATC 8-0
B    43  1  SVPCII   0-R
B    44  1  BLKDSP4  6-0
B    45  1  PBULBHMS 2-0
B    46  1  BLKDSP5  9-1-0
B    47  1  DISPEN6  4-5-0
B    48  1  DISPEN5  8-R-0
     49  0  KEY
B    50  1  BLKDSP7  6-2-0

EL: 93  CONN. ASS. TO MAIN PROGR. (JIII)
----------------------------------------
TYPE PT  LV SIG.NAME COLOR F    X      Y
---- --- -- -------- ----- - ------ ------
B    01  1  NTRMDATD 9
B    02  1  ADCDATAC 1
     03  0  KEY
B    04  1  MAST     5
B    05  1  USER B   4
B    06  1  SVPCIII  8
B    07  1  ADCDATAB R
B    08  1  BULBPBM5 6
B    09  1  ADCDATAA 2
B    10  1  BLOCATOR 0
B    11  1  REC      7
B    12  1  EDIT     8-R
B    13  1  BPKMMPRG 6-2
B    14  1  GENRUN   9-5
B    15  1  TX       1-5
B    16  1  SYNC PLT 9-4
B    17  1  FAST FWD 4-1
B    18  1  BEDMMPRG 9-8
B    19  1  PBB      8-1
B    20  1  B-RECENB 9-R
B    21  1  PBPLAY   1-R
B    22  1  PBREC    9-6
B    23  1  GEN=MAST 1-6
B    24  1    0 SW   9-2
B    25  1  PLAY     1-2
B    26  1  BLKDSP6  9-0
B    27  1  DISPEN8  1-0
B    28  1  KB       8-5
B    29  1  BLKDSP8  4-8
B    30  1  DISEND9+ 5-R
B    31  1  PB3      4-R
B    32  1  PBC      5-6
B    33  1  DISEND9- 4-6
B    34  1  PB5      5-2
B    35  1  PBO      4-2
B    36  1  PBE      5-0
B    37  1  BULBDPS2 4-0
                                  ./.
```

```
*****************************************************************************************************************
*  S T U D E R  *     L O C A T I O N    P I N    L I S T      *   79/10/10 * 16:34     *  P A G E     4   *
*****************************************************************************************************************
TLS 2000: SERIAL - PARALLEL CONVERTER RACK                1.228.490.00          79/10/10

GR: 97   (CONTINUATION)
RACK ELEMENTS SER - PAR CONVERTER RACK
*************************************

EL: 93   (CONTINUATION)
---------------------------------------
TYPE PT  LV SIG.NAME COLOR F    X      Y
---- --- -- -------- ----- - ------ ------
B    38  1  PARKED   8-6
B    39  1  BULBDPT2 6-R
B    40  1  STOP     8-2
B    41  1  +10 SW   2-R
B    42  1  BULBDPU2 8-0
B    43  1  SYNC B   0-R
B    44  1  BPILMPRG 6-0
B    45  1  FAST REW 2-0
B    46  1  BLKMMPRG 9-1-0
B    47  1  SYNC A   4-5-0
B    48  1  PB6      8-R-0
B    49  1  PB2      6-2-0
     50  0  KEY

EL: 94  CONN. ASS. TO MAIN PROGR. (J  I)
----------------------------------------
TYPE PT  LV SIG.NAME COLOR F    X      Y
---- --- -- -------- ----- - ------ ------
L    01  1    0 L      *

EL: 95  CONN. ASS. TO MAIN PROGR. (J II)
----------------------------------------
TYPE PT  LV SIG.NAME COLOR F    X      Y
---- --- -- -------- ----- - ------ ------
L    01  1    0 L      *

EL: 96  CONN. ASS. TO MAIN PROGR. (JIII)
----------------------------------------
TYPE PT  LV SIG.NAME COLOR F    X      Y
---- --- -- -------- ----- - ------ ------
L    01  1    0 L      *

GR: 99   1.228.499.00      W0055
TLS SER - PAR CONVERTER BACK PANEL
*************************************

EL: 06  WRAP CONNECTOR J06.1, 3*32 PIN
--------------------------------------
TYPE PT  LV SIG.NAME COLOR F    X      Y
---- --- -- -------- ----- - ------ ------
W    01A 3    0 L
W    01B 3    0 L
W    01C 3    0 L
W    02A 3
W    02B 3
W    02C 3
W    03A 3
W    03B 3
W    03C 3
WQ   04A 3  -10        3
W    04B 3
WQ   04C 3  -10        9
W    05A 3
W    05B 3
W    05C 3
W    06A 3
W    06B 3
W    06C 3
WQ   07A 3  +31        6
W    07B 3
WQ   07C 3  +31        9
W    08A 3
W    08B 3
W    08C 3
W    09A 3
W    09B 3
W    09C 3
WQ   10A 3    0 L      5
W    10B 3
WQ   10C 3    0 L      9
W    11A 3
W    11B 3
W    11C 3
W    12A 3  - 5
W    12B 3  - 5
W    12C 3  - 5
W    13A 3
W    13B 3
W    13C 3
W    14A 3
W    14B 3
W    14C 3
W    15A 3
W    15B 3
W    15C 3
W    16A 3
W    16B 3
W    16C 3
W    17A 3
W    17B 3
W    17C 3
                                  ./.

GR: 99   (CONTINUATION)
TLS SER - PAR CONVERTER BACK PANEL
*************************************

EL: 06   (CONTINUATION)
---------------------------------------
TYPE PT  LV SIG.NAME COLOR F    X      Y
---- --- -- -------- ----- - ------ ------
W    18A 3
W    18B 3
W    18C 3
W    19A 3    0 K
W    19B 3    0 K
W    19C 3    0 K
W    20A 3  +24
W    20B 3  +24
W    20C 3  +24
W    21A 3
W    21B 3
W    21C 3
W    22A 3
W    22B 3
W    22C 3
W    23A 3
W    23B 3
W    23C 3
W    24A 3
W    24B 3
W    24C 3
W    25A 3
W    25B 3
W    25C 3
W    26A 3
W    26B 3
W    26C 3
W    27A 3
W    27B 3
W    27C 3
W    28A 3
W    28B 3
W    28C 3
W    29A 3
W    29B 3
W    29C 3
W    30A 3
W    30B 3
W    30C 3
W    31A 3
W    31B 3
W    31C 3
W    32A 3  +10
W    32B 3  +10
W    32C 3  +10
```

```
*****************************************************************************************************************************
*  S T U D E R  *      L O C A T I O N    P I N    L I S T      *  79/10/10 * 16:34     *  P A G E     5   *
*****************************************************************************************************************************
TLS 2000: SERIAL - PARALLEL CONVERTER RACK                1.228.490.00          79/10/10

GR: 99   (CONTINUATION)
TLS SER - PAR CONVERTER BACK PANEL
****************************************

EL: 07  WRAP CONNECTOR J07.1, 3*32 PIN
-------------------------------------------
TYPE PT  LV SIG.NAME COLOR F    X     Y
---- --- -- -------- ----- - ----- -----
WQ   01A 3    0 L    2
W    01B 3    0 L
WQ   01C 3    0 L    6
W    02A 3
W    02B 3
W    02C 3  TRMADR0
W    03A 3
W    03B 3
W    03C 3  TRMADR1
W    04A 3
W    04B 3
W    04C 3  TRMADR2
W    05A 3
W    05B 3
W    05C 3  TRMADR3
W    06A 3
W    06B 3
W    06C 3  TRMADR4
W    07A 3
W    07B 3
W    07C 3  TRMADR5
W    08A 3
W    08B 3
W    08C 3  TRMADR6
W    09A 3
W    09B 3
W    09C 3  NTRMDTA
W    10A 3
W    10B 3
W    10C 3  NTRMDTB
W    11A 3
W    11B 3
W    11C 3  NTRMDTC
W    12A 3  - 5
W    12B 3  - 5
W    12C 3  - 5
W    13A 3
W    13B 3
W    13C 3  NTRMDTD
W    14A 3
W    14B 3
W    14C 3
W    15A 3
W    15B 3
W    15C 3
W    16A 3
W    16B 3
W    16C 3
W    17A 3
W    17B 3
W    17C 3
                                        ./.

GR: 99   (CONTINUATION)
TLS SER - PAR CONVERTER BACK PANEL
****************************************

EL: 07   (CONTINUATION)
-------------------------------------------
TYPE PT  LV SIG.NAME COLOR F    X     Y
---- --- -- -------- ----- - ----- -----
W    18A 3
W    18B 3
W    18C 3
W    19A 3    0 K
W    19B 3    0 K
W    19C 3    0 K
W    20A 3  +24
W    20B 3  +24
W    20C 3  +24
W    21A 3
W    21B 3
W    21C 3  819.2KHZ
W    22A 3
W    22B 3
W    22C 3
W    23A 3
W    23B 3
W    23C 3  PPWRON
W    24A 3
W    24B 3
W    24C 3  PMNTM  2
W    25A 3
W    25B 3
W    25C 3  PCDATRDY
W    26A 3
W    26B 3
W    26C 3
W    27A 3
W    27B 3
W    27C 3
W    28A 3
W    28B 3
W    28C 3
W    29A 3
W    29B 3
W    29C 3
W    30A 3
W    30B 3
W    30C 3
W    31A 3
W    31B 3
W    31C 3
WQ   32A 3  +10       1
W    32B 3  +10
WQ   32C 3  +10       9

GR: 99   (CONTINUATION)
TLS SER - PAR CONVERTER BACK PANEL
****************************************

EL: 08  WRAP CONNECTOR J08.1, 3*32 PIN
-------------------------------------------
TYPE PT  LV SIG.NAME COLOR F    X     Y
---- --- -- -------- ----- - ----- -----
W    01A 3    0 L
W    01B 3    0 L
WQ   01C 3    0 L    0
WQ   01D 3    0 L    9-5-0
W    01E 3    0 L
WQ   01F 3    0 L    9-4-0
W    02A 3
W    02B 3
W    02C 3  TRMADR0
WQ   02D 3  PB1       9
W    02E 3
WQ   02F 3  EXEC      9-0
W    03A 3
W    03B 3
W    03C 3  TRMADR1
WQ   03D 3  BULBDPA2 1
W    03E 3
WQ   03F 3  PBD       1-0
W    04A 3
W    04B 3
W    04C 3  TRMADR2
WQ   04D 3  PBA       5
W    04E 3
WQ   04F 3  PBI       8-5
W    05A 3
W    05B 3
W    05C 3  TRMADR3
WQ   05D 3  PBH       4
W    05E 3
WQ   05F 3  BULBDPA1 4-8
W    06A 3
W    06B 3
W    06C 3  TRMADR4
WQ   06D 3  BULBPBI3 8
W    06E 3
WQ   06F 3  INTGEN    5-R
W    07A 3
W    07B 3  12.5  HZ
W    07C 3  TRMADR5
WQ   07D 3  EDIT CD  R
W    07E 3
WQ   07F 3  BULBDPB2 4-R
W    08A 3
W    08B 3
W    08C 3  TRMADR6
WQ   08D 3  LOCKFAST 6
W    08E 3
WQ   08F 3  CODENDEF 5-6
W    09A 3  NTRMDTA
W    09B 3  PCDATINA
W    09C 3  NTRMDATA
                                        ./.
```

```
*****************************************************************************************************************************
*  S T U D E R  *      L O C A T I O N    P I N    L I S T      *  79/10/10 * 16:34     *  P A G E     6   *
*****************************************************************************************************************************
TLS 2000: SERIAL - PARALLEL CONVERTER RACK                1.228.490.00          79/10/10

GR: 99   (CONTINUATION)
TLS SER - PAR CONVERTER BACK PANEL
****************************************

EL: 08   (CONTINUATION)
-------------------------------------------
TYPE PT  LV SIG.NAME COLOR F    X     Y
---- --- -- -------- ----- - ----- -----
WQ   09D 3  ADV RET   2
W    09E 3
WQ   09F 3  ADD       4-6
W    10A 3  NTRMDTB
W    10B 3  PCDATINB
W    10C 3  NTRMDATB
WQ   10D 3  MSEC      0
W    10E 3
WQ   10F 3  B-CALC    5-2
W    11A 3  NTRMDTC
W    11B 3  PCDATINC
W    11C 3  NTRMDATC
WQ   11D 3  GEN N SC 7
W    11E 3
WQ   11F 3  SLDECOFF  4-2
W    12A 3  - 5
W    12B 3  - 5
W    12C 3  - 5
WQ   12D 3    0 I     5-1-0
W    12E 3
WQ   12F 3    0 L     4-1-0
W    13A 3  NTRMDTD
W    13B 3  PCDATIND
W    13C 3  NTRMDATD
WQ   13D 3  B-UPPLIM 8-R
W    13E 3
WQ   13F 3  B-GENUSB 5-0
W    14A 3
W    14B 3
W    14C 3
W    14D 3
W    14E 3
W    14F 3
W    15A 3
W    15B 3
W    15C 3
W    15D 3
W    15E 3
W    15F 3
W    16A 3
W    16B 3
W    16C 3
W    16D 3
W    16E 3
W    16F 3
W    17A 3
W    17B 3  PCDATINE
WQ   17C 3  TRMDATA  5
WQ   17D 3  ENTRY    6-2
W    17E 3
WQ   17F 3  SL NOTP  4-0
                                        ./.

GR: 99   (CONTINUATION)
TLS SER - PAR CONVERTER BACK PANEL
****************************************

EL: 08   (CONTINUATION)
-------------------------------------------
TYPE PT  LV SIG.NAME COLOR F    X     Y
---- --- -- -------- ----- - ----- -----
W    18A 3
W    18B 3
W    18C 3  PPBPRESS
WQ   18D 3  BOFFSREG 9-5
W    18E 3
WQ   18F 3  PB7       8-6
W    19A 3    0 K
W    19B 3    0 K
W    19C 3    0 K
W    19D 3
W    19E 3
W    19F 3
W    20A 3  +24
W    20B 3  +24
WQ   20C 3  +24       3
W    20D 3
W    20E 3
W    20F 3
W    21A 3
W    21B 3
W    21C 3  819.2KHZ
WQ   21D 3  B-EXITSL 1-5
W    21E 3
WQ   21F 3  PBG       6-R
W    22A 3  +5.0V
W    22B 3
WQ   22C 3  +5.0V     2
WQ   22D 3  B-PHAS    9-4
W    22E 3
WQ   22F 3  PB4       8-2
W    23A 3  PPWRON
W    23B 3
WQ   23C 3  RECDATA   1
WQ   23D 3  FRAMER    4-1
W    23E 3
WQ   23F 3  PBK       2-R
W    24A 3
W    24B 3
W    24C 3  PMNTM  2
WQ   24D 3  GEN SET   9-8
W    24E 3
WQ   24F 3  PBF       8-0
W    25A 3
W    25B 3
W    25C 3  PCDATRDY
WQ   25D 3  B-LOWLIM 8-1
W    25E 3
WQ   25F 3  LWLIM EX 0-R
W    26A 3
W    26B 3
W    26C 3  SVPCIII
                                        ./.

GR: 99   (CONTINUATION)
TLS SER - PAR CONVERTER BACK PANEL
****************************************

EL: 08   (CONTINUATION)
-------------------------------------------
TYPE PT  LV SIG.NAME COLOR F    X     Y
---- --- -- -------- ----- - ----- -----
WQ   26D 3  NO CD S   9-R
W    26E 3
WQ   26F 3  CONNFAIL 6-0
W    27A 3
W    27B 3  SVPCII
W    27C 3  PCDATACC
WQ   27D 3  B-ENTRYM 1-R
W    27E 3
WQ   27F 3  BENT/PKS 2-0
W    28A 3
W    28B 3  SVPCI
W    28C 3  PCPGDATA
WQ   28D 3  SVPCI     9-6
W    28E 3
WQ   28F 3  UPLIM EX 9-1-0
W    29A 3
W    29B 3
W    29C 3  PCPGDATB
WQ   29D 3  BULBPBF4 1-6
W    29E 3
WQ   29F 3  B-NOMAST 4-5-0
W    30A 3
W    30B 3
W    30C 3  PCPGDATC
WQ   30D 3  BULBPBF3 9-2
W    30E 3
WQ   30F 3  WMPRES01 8-R-0
W    31A 3
W    31B 3
W    31C 3  PRIFTRXY
WQ   31D 3  BULBPBF2 1-2
W    31E 3
WQ   31F 3  WMPRES02 6-2-0
W    32A 3  +10
W    32B 3  +10
W    32C 3  +10
W    32D 3  +10
W    32E 3  +10
W    32F 3  +10

EL: 09  WRAP CONNECTOR J09.1, 3*32 PIN
-------------------------------------------
TYPE PT  LV SIG.NAME COLOR F    X     Y
---- --- -- -------- ----- - ----- -----
WQ   01A 3    0 L    4
WQ   01B 3    0 L    4
WQ   01C 3    0 L    4
WQ   01D 3    0 L    9-5-0
W    01E 3    0 L
WQ   01F 3    0 L    9-4-0
W    02A 3  TRMADR0
                                        ./.
```

```
*****************************************************************************************************************************
*   S T U D E R   *      L O C A T I O N     P I N     L I S T       *   79/10/10 * 16:34      *   P A G E      7    *
*****************************************************************************************************************************
TLS 2000: SERIAL - PARALLEL CONVERTER RACK                    1.228.490.00          79/10/10
```

GR: 99 (CONTINUATION)
TLS SER - PAR CONVERTER BACK PANEL

EL: 09 (CONTINUATION)

TYPE	PT	LV	SIG.NAME	COLOR	F	X	Y
W	02B	3	BLKDSP0				
W	02C	3	BLKDSP1				
WQ	02D	3	WMPRESO3	9			
W	02E	3					
WQ	02F	3	DISPEN1	9-0			
W	03A	3	TRMADR1				
W	03B	3	BLKDSP2				
W	03C	3	BLKDSP3				
WQ	03D	3	BLKDSP1	1			
W	03E	3					
WQ	03F	3	WMPRESO4	1 0			
W	04A	3	TRMADR2				
W	04B	3	BLKDSP4				
W	04C	3	BLKDSP5				
WQ	04D	3	NTRMDATA	5			
W	04E	3					
WQ	04F	3	DISPEN0	8-5			
W	05A	3	TRMADR3				
W	05B	3	BLKDSP6				
W	05C	3	BLKDSP7				
WQ	05D	3	BADRSTRT	4			
W	05E	3					
WQ	05F	3	STOREOFS	4-8			
W	06A	3	TRMADR4				
W	06B	3	BLKDSP8				
W	06C	3	DISEND9+				
WQ	06D	3	BULBDPH1	8			
W	06E	3					
WQ	06F	3	DISPEN2	5-R			
W	07A	3	TRMADR5				
W	07B	3	DISEND9-				
W	07C	3	DISPEN0				
WQ	07D	3	PHASING	R			
W	07E	3					
WQ	07F	3	BLKDSP0	4-R			
W	08A	3	TRMADR6				
W	08B	3	DISPEN1				
W	08C	3	DISPEN2				
WQ	08D	3	BULBPBG3	6			
W	08E	3					
WQ	08F	3	DISPEN3	5-6			
W	09A	3	NTRMDTA				
W	09B	3	PCDATINA				
W	09C	3	DISPEN3				
WQ	09D	3	MSEC	2			
W	09E	3					
WQ	09F	3	BLKDSP2	4-6			
W	10A	3					
W	10B	3	PCDATINB				
W	10C	3	DISPEN4				
WQ	10D	3	DIFF	0			

./.

GR: 99 (CONTINUATION)
TLS SER - PAR CONVERTER BACK PANEL

EL: 09 (CONTINUATION)

TYPE	PT	LV	SIG.NAME	COLOR	F	X	Y
W	10E	3					
WQ	10F	3	HOLD	5-2			
W	11A	3					
W	11B	3	PCDATINC				
W	11C	3	DISPEN5				
WQ	11D	3	FRAM	7			
W	11E	3					
WQ	11F	3	LOCKSLOW	4-2			
W	12A	3					
W	12B	3					
W	12C	3					
WQ	12D	3	0 L	5-1-0			
W	12E	3					
WQ	12F	3	0 L	4-1-0			
W	13A	3	12.5 HZ				
W	13B	3	PCDATIND				
W	13C	3	DISPEN6				
WQ	13D	3	B-REHEAR	8-R			
W	13E	3					
WQ	13F	3	NTRMDATB	5-0			
W	14A	3					
W	14B	3					
W	14C	3					
W	14D	3					
W	14E	3					
W	14F	3					
W	15A	3					
W	15B	3					
W	15C	3					
W	15D	3					
W	15E	3					
W	15F	3					
W	16A	3					
W	16B	3					
W	16C	3					
W	16D	3					
W	16E	3					
W	16F	3					
W	17A	3	ADCDATAA				
W	17B	3	PCDATINE				
W	17C	3	DISPEN7				
WQ	17D	3	BULBPBH3	6-2			
W	17E	3					
WQ	17F	3	BLKDSP3	4-0			
W	18A	3	ADCDATAB				
W	18B	3	PPBPRESS				
W	18C	3	DISPEN8				
WQ	18D	3	OFS DISP	9-5			
W	18E	3					
WQ	18F	3	BULBDPL1	8-6			
W	19A	3					

./.

GR: 99 (CONTINUATION)
TLS SER - PAR CONVERTER BACK PANEL

EL: 09 (CONTINUATION)

TYPE	PT	LV	SIG.NAME	COLOR	F	X	Y
W	19B	3					
W	19C	3					
W	19D	3					
W	19E	3					
W	19F	3					
W	20A	3					
W	20B	3					
W	20C	3					
W	20D	3					
W	20E	3					
W	20F	3					
W	21A	3	819.2KHZ				
W	21B	3	PB0				
W	21C	3	PB1				
WQ	21D	3	CODEFR/S	1-5			
W	21E	3					
WQ	21F	3	DISPEN4	6-R			
W	22A	3	ADCDATAC				
W	22B	3	PB2				
W	22C	3	PB3				
WQ	22D	3	PBULBHMS	9-4			
W	22E	3					
WQ	22F	3	BULBPBK5	8-2			
W	23A	3	PPWRON				
W	23B	3	PB4				
W	23C	3	PB5				
WQ	23D	3	ADCDATAE	4-1			
W	23E	3					
WQ	23F	3	BULBDPA0	2-R			
W	24A	3	ADCDATAD				
W	24B	3	PB6				
W	24C	3	PMNTM	2			
WQ	24D	3	BULBDPN1	9-8			
W	24E	3					
WQ	24F	3	NTRMDATC	8-0			
W	25A	3	ENADC				
W	25B	3	PB7				
W	25C	3	PCDATRDY				
WQ	25D	3	SLAV	8-1			
W	25E	3					
WQ	25F	3	SVPCII	0-R			
W	26A	3	PBI				
W	26B	3	PBK				
W	26C	3	ADCDATAE				
WQ	26D	3	UNAS B	9-R			
W	26E	3					
WQ	26F	3	BLKDSP4	6-0			
W	27A	3	PBREC				
W	27B	3	PBPLAY				
W	27C	3	PCDATACC				
WQ	27D	3	BULBPBL5	1-R			

./.

```
*****************************************************************************************************************************
*   S T U D E R   *      L O C A T I O N     P I N     L I S T       *   79/10/10 * 16:34      *   P A G E      8    *
*****************************************************************************************************************************
TLS 2000: SERIAL - PARALLEL CONVERTER RACK                    1.228.490.00          79/10/10
```

GR: 99 (CONTINUATION)
TLS SER - PAR CONVERTER BACK PANEL

EL: 09 (CONTINUATION)

TYPE	PT	LV	SIG.NAME	COLOR	F	X	Y
W	27E	3					
WQ	27F	3	PBULBHMS	2-0			
W	28A	3	PBA				
W	28B	3	PBB				
W	28C	3	PCPGDATA				
WQ	28D	3	BULBDPP1	9-6			
W	28E	3					
WQ	28F	3	BLKDSP5	9-1-0			
W	29A	3	PBC				
W	29B	3	PBD				
W	29C	3	PCPGDATB				
WQ	29D	3	ADCDATAD	1-6			
W	29E	3					
WQ	29F	3	DISPEN6	4-5-0			
W	30A	3	PBE				
W	30B	3	PBF				
W	30C	3	PCPGDATC				
WQ	30D	3	PBULBHMS	9-2			
W	30E	3					
WQ	30F	3	DISPEN5	8-R-0			
W	31A	3	PBG				
W	31B	3	PBH				
W	31C	3	PRIFTRXY				
WQ	31D	3	DISPEN7	1-2			
W	31E	3					
WQ	31F	3	BLKDSP7	6-2-0			
W	32A	3	+10				
W	32B	3	+10				
W	32C	3	+10				
W	32D	3	+10				
W	32E	3	+10				
W	32F	3	+10				

EL: 10 WRAP CONNECTOR J10.1, 3*32 PIN

TYPE	PT	LV	SIG.NAME	COLOR	F	X	Y
WQ	01A	3	0 L	2			
W	01B	3	0 L				
WQ	01C	3	0 L	3			
WQ	01D	3	0 L	9-5-0			
W	01E	3					
WQ	01F	3	0 L	9-4-0			
W	02A	3	SYNC A				
W	02B	3	PARKED				
W	02C	3	FRAM ER				
WQ	02D	3	NTRMDATD	9			
W	02E	3					
WQ	02F	3	BLKDSP6	9-0			
W	03A	3	B-NOMAST				
W	03B	3	NO CD S				

./.

GR: 99 (CONTINUATION)
TLS SER - PAR CONVERTER BACK PANEL

EL: 10 (CONTINUATION)

TYPE	PT	LV	SIG.NAME	COLOR	F	X	Y
W	03C	3	B-REHEAR				
WQ	03D	3	ADCDATAC	1			
W	03E	3					
WQ	03F	3	DISPEN8	1-0			
W	04A	3	ENTRY				
W	04B	3	STOP				
W	04C	3	REC				
WQ	04D	3	MAST	5			
W	04E	3					
WQ	04F	3	KB	8-5			
W	05A	3	FAST REW				
W	05B	3	FAST FWD				
W	05C	3	PLAY				
WQ	05D	3	USER B	4			
W	05E	3					
WQ	05F	3	BLKDSP8	4-8			
W	06A	3	EDIT				
W	06B	3	CONNFAIL				
W	06C	3	B-CALC				
WQ	06D	3	SVPCIII	8			
W	06E	3					
WQ	06F	3	DISEND9+	5-R			
W	07A	3	BLKMMPRG				
W	07B	3	BEDMMPRG				
W	07C	3	BPKMMPRG				
WQ	07D	3	ADCDATAB	R			
W	07E	3					
WQ	07F	3	PB3	4-R			
W	08A	3	GENRUN				
W	08B	3	BPILMPRG				
W	08C	3	GEN=MAST				
WQ	08D	3	BULBPBM5	6			
W	08E	3					
WQ	08F	3	PBC	5-6			
W	09A	3	UPLIM EX				
W	09B	3	LWLIM EX				
W	09C	3	BENT/PKS				
WQ	09D	3	ADCDATAA	2			
W	09E	3					
WQ	09F	3	DISEND9-	4-6			
W	10A	3	B-EXITSL				
W	10B	3	B-ENTRYM				
W	10C	3	B-LOWLIM				
WQ	10D	3	BLOCATOR	0			
W	10E	3					
WQ	10F	3	PB5	5-2			
W	11A	3	PMNTM	2			
W	11B	3	PCDATRDY				
W	11C	3					
WQ	11D	3	REC	7			
W	11E	3					

./.

GR: 99 (CONTINUATION)
TLS SER - PAR CONVERTER BACK PANEL

EL: 10 (CONTINUATION)

TYPE	PT	LV	SIG.NAME	COLOR	F	X	Y
WQ	11F	3	PB0	4-2			
W	12A	3					
W	12B	3					
W	12C	3					
WQ	12D	3	0 L	5-1-0			
W	12E	3					
WQ	12F	3	0 L	4-1-0			
W	13A	3	B-UPPLIM				
W	13B	3	BOFFSREG				
W	13C	3	GEN SET				
WQ	13D	3	EDIT	8-R			
W	13E	3					
WQ	13F	3	PBE	5-0			
W	14A	3					
W	14B	3					
W	14C	3					
W	14D	3					
W	14E	3					
W	14F	3					
W	15A	3					
W	15B	3					
W	15C	3					
W	15D	3					
W	15E	3					
W	15F	3					
W	16A	3					
W	16B	3					
W	16C	3					
W	16D	3					
W	16E	3					
W	16F	3					
W	17A	3	B-PHAS				
W	17B	3	HOLD				
W	17C	3	INTGEN				
WQ	17D	3	BPKMMPRG	6-2			
W	17E	3					
WQ	17F	3	BULBDPS2	4-0			
W	18A	3	UNAS B				
W	18B	3	USER B				
W	18C	3	DIFF				
WQ	18D	3	GENRUN	9-5			
W	18E	3					
WQ	18F	3	PARKED	8-6			
W	19A	3					
W	19B	3					
W	19C	3					
W	19D	3					
W	19E	3					
W	19F	3					
W	20A	3					
W	20B	3					

./.

```
*****************************************************************************************************************************************
*   S T U D E R   *      L O C A T I O N     P I N     L I S T       *    79/10/10 * 16:34      *   P A G E      9    *
*****************************************************************************************************************************************
TLS 2000: SERIAL - PARALLEL CONVERTER RACK                  1.228.490.00              79/10/10
```

GR: 99 (CONTINUATION)
TLS SER - PAR CONVERTER BACK PANEL
****

EL: 10 (CONTINUATION)

TYPE	PT	LV	SIG.NAME	COLOR	F	X	Y
W	20C	3					
W	20D	3					
W	20E	3					
W	20F	3					
W	21A	3	OFS DISP				
W	21B	3	SLAV				
W	21C	3	MAST				
WQ	21D	3	TX	1-5			
W	21E	3					
WQ	21F	3	BULBDPT2	6-R			
W	22A	3	KR				
W	22B	3	MSEC				
W	22C	3	FRAM				
WQ	22D	3	SYNC PLT	9-4			
W	22E	3					
WQ	22F	3	STOP	8-2			
W	23A	3	CODEFR/S				
W	23B	3	B-RECENB				
W	23C	3	BADRSTRT				
WQ	23D	3	FAST FWD	4-1			
W	23E	3					
WQ	23F	3	+10 SW	2-R			
W	24A	3	SL NOTP				
W	24B	3	ADV RET				
W	24C	3	PHASING				
WQ	24D	3	BEDMMPRG	9-8			
W	24E	3					
WQ	24F	3	BULBDPU2	8-0			
W	25A	3	TX				
W	25B	3	STOREOFS				
W	25C	3	LOCKSLOW				
WQ	25D	3	PBB	8-1			
W	25E	3					
WQ	25F	3	SYNC B	0-R			
W	26A	3	LOCKFAST				
W	26B	3	ENADC				
W	26C	3	PBULBHMS				
WQ	26D	3	B-RECENB	9-R			
W	26E	3					
WQ	26F	3	BPILMPRG	6-0			
W	27A	3	EDIT CD				
W	27B	3	CODENDEF				
W	27C	3	BLOCATOR				
WQ	27D	3	PBPLAY	1-R			
W	27E	3					
WQ	27F	3	FAST REW	2-0			
W	28A	3	SYNC PLT				
W	28B	3	SYNC B				
W	28C	3	B-GENUSB				
WQ	28D	3	PBREC	9-6			
W	28E	3					

./.

GR: 99 (CONTINUATION)
TLS SER - PAR CONVERTER BACK PANEL
****

EL: 10 (CONTINUATION)

TYPE	PT	LV	SIG.NAME	COLOR	F	X	Y
WQ	28F	3	BLKMMPRG	9-1-0			
W	29A	3	TRMADR0				
W	29B	3	TRMADR1				
W	29C	3	TRMADR2				
WQ	29D	3	GEN=MAST	1-6			
W	29E	3					
WQ	29F	3	SYNC A	4-5-0			
W	30A	3	TRMADR6				
W	30B	3	NTRMDTA				
W	30C	3	PPWRON				
WQ	30D	3	0 SW	9-2			
W	30E	3					
WQ	30F	3	PB6	8-R-0			
W	31A	3	TRMADR3				
W	31B	3	TRMADR4				
W	31C	3	TRMADR5				
WQ	31D	3	PLAY	1-2			
W	31E	3					
WQ	31F	3	PB2	6-2-0			
WQ	32A	3	+10	8			
W	32B	3	+10				
WQ	32C	3	+10	9			
W	32D	3					
W	32E	3					
W	32F	3					

EL: 99 CHASSIS, WIRING WITH: 0 L

TYPE	PT	LV	SIG.NAME	COLOR	F	X	Y
L	01	1	0 L	4,4,4			

```
*****************************************************************************************************************************************
*   S T U D E R   *      L O C A T I O N     S U M M A R Y         *    79/10/10 * 16:34      *   P A G E     10    *
*****************************************************************************************************************************************
TLS 2000: SERIAL - PARALLEL CONVERTER RACK                  1.228.490.00              79/10/10
```

GR #	USED PINS	UNUSED PINS	TOTAL PINS	COD. KEYS	ELE-MNTS	DESCRIPTION OF GROUP	PART # OF GR
96	59	0	59	0	5	STUDER POWER SUPPLY 1.228.150	
97	181	0	181	6	11	RACK ELEMENTS SER - PAR CONVERTER RACK	
99	422	347	769	0	6	TLS SER - PAR CONVERTER BACK PANEL	1.228.499.00
TOT.	662	347	1009	6	22	DISTRIBUTED IN 3 GROUPS	

SIG.NAME	COLOR	TYPE	GR	EL	PT	S	DESCRIPTION OF ELEMENT
0 K		W	99	06	19A		WRAP CONNECTOR J06.1, 3*32 PIN
		W	99	06	19B		WRAP CONNECTOR J06.1, 3*32 PIN
		W	99	06	19C		WRAP CONNECTOR J06.1, 3*32 PIN
		W	99	07	19A		WRAP CONNECTOR J07.1, 3*32 PIN
		W	99	07	19B		WRAP CONNECTOR J07.1, 3*32 PIN
		W	99	07	19C		WRAP CONNECTOR J07.1, 3*32 PIN
		W	99	08	19A		WRAP CONNECTOR J08.1, 3*32 PIN
		W	99	08	19B		WRAP CONNECTOR J08.1, 3*32 PIN
		W	99	08	19C		WRAP CONNECTOR J08.1, 3*32 PIN
0 L	6	C	96	02	02		POWER SUPPLY OUTPUT CONNECTOR 1
	9	C	96	02	03		POWER SUPPLY OUTPUT CONNECTOR 1
	9	C	96	02	09		POWER SUPPLY OUTPUT CONNECTOR 1
	8	C	96	02	10		POWER SUPPLY OUTPUT CONNECTOR 1
		C	96	03	02		POWER SUPPLY OUTPUT CONNECTOR 2
		C	96	03	03		POWER SUPPLY OUTPUT CONNECTOR 2
		C	96	03	09		POWER SUPPLY OUTPUT CONNECTOR 2
		C	96	03	10		POWER SUPPLY OUTPUT CONNECTOR 2
		C	96	04	02		POWER SUPPLY OUTPUT CONNECTOR 3
		C	96	04	03		POWER SUPPLY OUTPUT CONNECTOR 3
		C	96	04	09		POWER SUPPLY OUTPUT CONNECTOR 3
		C	96	04	10		POWER SUPPLY OUTPUT CONNECTOR 3
	5,9	C	96	05	02		POWER SUPPLY OUTPUT CONNECTOR 4
	2,3	C	96	05	03		POWER SUPPLY OUTPUT CONNECTOR 4
	2,6	C	96	05	09		POWER SUPPLY OUTPUT CONNECTOR 4
		C	96	05	10		POWER SUPPLY OUTPUT CONNECTOR 4
	6	L	97	21	02		POWER JUMPER CABLE
	9	L	97	21	03		POWER JUMPER CABLE
	9	L	97	21	09		POWER JUMPER CABLE
	8	L	97	21	10		POWER JUMPER CABLE
	0	L	97	81	06		PROGRAMMER LINE AMPLIFIER,PRINT
	*	L	97	94	01		CONN. ASS. TO MAIN PROGR. (J I)
	*	L	97	95	01		CONN. ASS. TO MAIN PROGR. (J II)
	*	L	97	96	01		CONN. ASS. TO MAIN PROGR. (JIII)
		W	99	06	01A		WRAP CONNECTOR J06.1, 3*32 PIN
		W	99	06	01B		WRAP CONNECTOR J06.1, 3*32 PIN
		W	99	06	01C		WRAP CONNECTOR J06.1, 3*32 PIN
	5	WQ	99	06	10A		WRAP CONNECTOR J06.1, 3*32 PIN
	9	WQ	99	06	10C		WRAP CONNECTOR J06.1, 3*32 PIN
	2	WQ	99	07	01A		WRAP CONNECTOR J07.1, 3*32 PIN
		W	99	07	01B		WRAP CONNECTOR J07.1, 3*32 PIN
	6	WQ	99	07	01C		WRAP CONNECTOR J07.1, 3*32 PIN
		W	99	08	01A		WRAP CONNECTOR J08.1, 3*32 PIN
		W	99	08	01B		WRAP CONNECTOR J08.1, 3*32 PIN
	0	WQ	99	08	01C		WRAP CONNECTOR J08.1, 3*32 PIN
	9-5-0	WQ	99	08	01D		WRAP CONNECTOR J08.2, 3*32 PIN
		W	99	08	01E		WRAP CONNECTOR J08.2, 3*32 PIN
	9-4-0	WQ	99	08	01F		WRAP CONNECTOR J08.2, 3*32 PIN
	5-1-0	WQ	99	08	12D		WRAP CONNECTOR J08.2, 3*32 PIN
	4-1-0	WQ	99	08	12F		WRAP CONNECTOR J08.2, 3*32 PIN
	4	WQ	99	09	01A		WRAP CONNECTOR J09.1, 3*32 PIN
	4	WQ	99	09	01B		WRAP CONNECTOR J09.1, 3*32 PIN
	4	WQ	99	09	01C		WRAP CONNECTOR J09.1, 3*32 PIN
	9-5-0	WQ	99	09	01D		WRAP CONNECTOR J09.2, 3*32 PIN
		W	99	09	01E		WRAP CONNECTOR J09.2, 3*32 PIN
	9-4-0	WQ	99	09	01F		WRAP CONNECTOR J09.2, 3*32 PIN
(CONT.)	5-1-0	WQ	99	09	12D		WRAP CONNECTOR J09.2, 3*32 PIN
	4-1-0	WQ	99	09	12F		WRAP CONNECTOR J09.2, 3*32 PIN
	2	WQ	99	10	01A		WRAP CONNECTOR J10.1, 3*32 PIN
		W	99	10	01B		WRAP CONNECTOR J10.1, 3*32 PIN
	3	WQ	99	10	01C		WRAP CONNECTOR J10.1, 3*32 PIN
	9-5-0	WQ	99	10	01D		WRAP CONNECTOR J10.2, 3*32 PIN
	9-4-0	WQ	99	10	01F		WRAP CONNECTOR J10.2, 3*32 PIN
	5-1-0	WQ	99	10	12D		WRAP CONNECTOR J10.2, 3*32 PIN
	4-1-0	WQ	99	10	12F		WRAP CONNECTOR J10.2, 3*32 PIN
	4,4,4	L	99	99	01		CHASSIS, WIRING WITH: 0 L
0 SW	9-2	B	97	93	24		CONN. ASS. TO MAIN PROGR. (JIII)
	9-2	WQ	99	10	30D		WRAP CONNECTOR J10.2, 3*32 PIN
+10	3	C	96	02	04		POWER SUPPLY OUTPUT CONNECTOR 1
	9	C	96	02	05		POWER SUPPLY OUTPUT CONNECTOR 1
	2	C	96	02	11		POWER SUPPLY OUTPUT CONNECTOR 1
	6	C	96	02	12		POWER SUPPLY OUTPUT CONNECTOR 1
		C	96	03	04		POWER SUPPLY OUTPUT CONNECTOR 2
		C	96	03	05		POWER SUPPLY OUTPUT CONNECTOR 2
		C	96	03	11		POWER SUPPLY OUTPUT CONNECTOR 2
		C	96	03	12		POWER SUPPLY OUTPUT CONNECTOR 2
		C	96	04	04		POWER SUPPLY OUTPUT CONNECTOR 3
		C	96	04	05		POWER SUPPLY OUTPUT CONNECTOR 3
		C	96	04	11		POWER SUPPLY OUTPUT CONNECTOR 3
		C	96	04	12		POWER SUPPLY OUTPUT CONNECTOR 3
	1,9	C	96	05	04		POWER SUPPLY OUTPUT CONNECTOR 4
		C	96	05	05		POWER SUPPLY OUTPUT CONNECTOR 4
		C	96	05	11		POWER SUPPLY OUTPUT CONNECTOR 4
	8,9	C	96	05	12		POWER SUPPLY OUTPUT CONNECTOR 4
	3	L	97	21	04		POWER JUMPER CABLE
	9	L	97	21	05		POWER JUMPER CABLE
	2	L	97	21	11		POWER JUMPER CABLE
	6	L	97	21	12		POWER JUMPER CABLE
		W	99	06	32A		WRAP CONNECTOR J06.1, 3*32 PIN
		W	99	06	32B		WRAP CONNECTOR J06.1, 3*32 PIN
		W	99	06	32C		WRAP CONNECTOR J06.1, 3*32 PIN
	1	WQ	99	07	32A		WRAP CONNECTOR J07.1, 3*32 PIN
		W	99	07	32B		WRAP CONNECTOR J07.1, 3*32 PIN
	9	WQ	99	07	32C		WRAP CONNECTOR J07.1, 3*32 PIN
		W	99	08	32A		WRAP CONNECTOR J08.1, 3*32 PIN
		W	99	08	32B		WRAP CONNECTOR J08.1, 3*32 PIN
		W	99	08	32C		WRAP CONNECTOR J08.1, 3*32 PIN
		W	99	08	32D		WRAP CONNECTOR J08.2, 3*32 PIN
		W	99	08	32E		WRAP CONNECTOR J08.2, 3*32 PIN
		W	99	08	32F		WRAP CONNECTOR J08.2, 3*32 PIN
		W	99	09	32A		WRAP CONNECTOR J09.1, 3*32 PIN
		W	99	09	32B		WRAP CONNECTOR J09.1, 3*32 PIN
		W	99	09	32C		WRAP CONNECTOR J09.1, 3*32 PIN
		W	99	09	32D		WRAP CONNECTOR J09.2, 3*32 PIN
		W	99	09	32E		WRAP CONNECTOR J09.2, 3*32 PIN
		W	99	09	32F		WRAP CONNECTOR J09.2, 3*32 PIN
	8	WQ	99	10	32A		WRAP CONNECTOR J10.1, 3*32 PIN
		W	99	10	32B		WRAP CONNECTOR J10.1, 3*32 PIN
	9	WQ	99	10	32C		WRAP CONNECTOR J10.1, 3*32 PIN

./.

SIG.NAME	COLOR	TYPE	GR	EL	PT	S	DESCRIPTION OF ELEMENT
+10 SW	2-R	B	97	93	41		CONN. ASS. TO MAIN PROGR. (JIII)
	2-R	WQ	99	10	23F		WRAP CONNECTOR J10.2, 3*32 PIN
+24	3	L	97	81	07		PROGRAMMER LINE AMPLIFIER,PRINT
		W	99	06	20A		WRAP CONNECTOR J06.1, 3*32 PIN
		W	99	06	20B		WRAP CONNECTOR J06.1, 3*32 PIN
		W	99	06	20C		WRAP CONNECTOR J06.1, 3*32 PIN
		W	99	07	20A		WRAP CONNECTOR J07.1, 3*32 PIN
		W	99	07	20B		WRAP CONNECTOR J07.1, 3*32 PIN
		W	99	07	20C		WRAP CONNECTOR J07.1, 3*32 PIN
		W	99	08	20A		WRAP CONNECTOR J08.1, 3*32 PIN
		W	99	08	20B		WRAP CONNECTOR J08.1, 3*32 PIN
	3	WQ	99	08	20C		WRAP CONNECTOR J08.1, 3*32 PIN
+31	9	C	96	02	07		POWER SUPPLY OUTPUT CONNECTOR 1
	3	C	96	02	14		POWER SUPPLY OUTPUT CONNECTOR 1
		C	96	03	07		POWER SUPPLY OUTPUT CONNECTOR 2
		C	96	03	14		POWER SUPPLY OUTPUT CONNECTOR 2
		C	96	04	07		POWER SUPPLY OUTPUT CONNECTOR 3
		C	96	04	14		POWER SUPPLY OUTPUT CONNECTOR 3
	6,9	C	96	05	07		POWER SUPPLY OUTPUT CONNECTOR 4
		C	96	05	14		POWER SUPPLY OUTPUT CONNECTOR 4
	9	L	97	21	07		POWER JUMPER CABLE
	3	L	97	21	14		POWER JUMPER CABLE
	6	WQ	99	06	07A		WRAP CONNECTOR J06.1, 3*32 PIN
	9	WQ	99	06	07C		WRAP CONNECTOR J06.1, 3*32 PIN
+5.0V	2	L	97	81	03		PROGRAMMER LINE AMPLIFIER,PRINT
		W	99	08	22A		WRAP CONNECTOR J08.1, 3*32 PIN
	2	WQ	99	08	22C		WRAP CONNECTOR J08.1, 3*32 PIN
- 5		W	99	06	12A		WRAP CONNECTOR J06.1, 3*32 PIN
		W	99	06	12B		WRAP CONNECTOR J06.1, 3*32 PIN
		W	99	06	12C		WRAP CONNECTOR J06.1, 3*32 PIN
		W	99	07	12A		WRAP CONNECTOR J07.1, 3*32 PIN
		W	99	07	12B		WRAP CONNECTOR J07.1, 3*32 PIN
		W	99	07	12C		WRAP CONNECTOR J07.1, 3*32 PIN
		W	99	08	12A		WRAP CONNECTOR J08.1, 3*32 PIN
		W	99	08	12B		WRAP CONNECTOR J08.1, 3*32 PIN
		W	99	08	12C		WRAP CONNECTOR J08.1, 3*32 PIN
-10	5	C	96	02	06		POWER SUPPLY OUTPUT CONNECTOR 1
	2	C	96	02	13		POWER SUPPLY OUTPUT CONNECTOR 1
		C	96	03	06		POWER SUPPLY OUTPUT CONNECTOR 2
		C	96	03	13		POWER SUPPLY OUTPUT CONNECTOR 2
		C	96	04	06		POWER SUPPLY OUTPUT CONNECTOR 3
		C	96	04	13		POWER SUPPLY OUTPUT CONNECTOR 3
		C	96	05	06		POWER SUPPLY OUTPUT CONNECTOR 4
	3,9	C	96	05	13		POWER SUPPLY OUTPUT CONNECTOR 4
	5	L	97	21	06		POWER JUMPER CABLE
	2	L	97	21	13		POWER JUMPER CABLE
	3	WQ	99	06	04A		WRAP CONNECTOR J06.1, 3*32 PIN
	9	WQ	99	06	04C		WRAP CONNECTOR J06.1, 3*32 PIN
ADCDATAA	2	B	97	93	09		CONN. ASS. TO MAIN PROGR. (JIII)
		W	99	09	17A		WRAP CONNECTOR J09.1, 3*32 PIN
(CONT.)	2	WQ	99	10	09D		WRAP CONNECTOR J10.2, 3*32 PIN
ADCDATAB	R	B	97	93	07		CONN. ASS. TO MAIN PROGR. (JIII)
		W	99	09	18A		WRAP CONNECTOR J09.1, 3*32 PIN
	R	WQ	99	10	07D		WRAP CONNECTOR J10.2, 3*32 PIN
ADCDATAC	1	B	97	93	02		CONN. ASS. TO MAIN PROGR. (JIII)
		W	99	09	22A		WRAP CONNECTOR J09.1, 3*32 PIN
	1	WQ	99	10	03D		WRAP CONNECTOR J10.2, 3*32 PIN
ADCDATAD	1-6	B	97	92	23		CONN. ASS. TO MAIN PROGR. (J II)
		W	99	09	24A		WRAP CONNECTOR J09.1, 3*32 PIN
	1-6	WQ	99	09	29D		WRAP CONNECTOR J09.2, 3*32 PIN
ADCDATAE	4-1	B	97	92	17		CONN. ASS. TO MAIN PROGR. (J II)
	4-1	WQ	99	09	23D		WRAP CONNECTOR J09.2, 3*32 PIN
		W	99	09	26C		WRAP CONNECTOR J09.1, 3*32 PIN
ADD	4-6	B	97	91	33		CONN. ASS. TO MAIN PROGR. (J I)
	4-6	WQ	99	08	09F		WRAP CONNECTOR J08.2, 3*32 PIN
ADV RET	2	B	97	91	09		CONN. ASS. TO MAIN PROGR. (J I)
	2	WQ	99	08	09D		WRAP CONNECTOR J08.2, 3*32 PIN
		W	99	10	24B		WRAP CONNECTOR J10.1, 3*32 PIN
B-CALC	5-2	B	97	91	34		CONN. ASS. TO MAIN PROGR. (J I)
	5-2	WQ	99	08	10F		WRAP CONNECTOR J08.2, 3*32 PIN
		W	99	10	06C		WRAP CONNECTOR J10.1, 3*32 PIN
B-ENTRYM	1-R	B	97	91	21		CONN. ASS. TO MAIN PROGR. (J I)
	1-R	WQ	99	08	27D		WRAP CONNECTOR J08.2, 3*32 PIN
		W	99	10	10B		WRAP CONNECTOR J10.1, 3*32 PIN
B-EXITSL	1-5	B	97	91	15		CONN. ASS. TO MAIN PROGR. (J I)
	1-5	WQ	99	08	21D		WRAP CONNECTOR J08.2, 3*32 PIN
		W	99	10	10A		WRAP CONNECTOR J10.1, 3*32 PIN
B-GENUSB	5-0	B	97	91	36		CONN. ASS. TO MAIN PROGR. (J I)
	5-0	WQ	99	08	13F		WRAP CONNECTOR J08.2, 3*32 PIN
		W	99	10	28C		WRAP CONNECTOR J10.1, 3*32 PIN
B-LOWLIM	8-1	B	97	91	19		CONN. ASS. TO MAIN PROGR. (J I)
	8-1	WQ	99	08	25D		WRAP CONNECTOR J08.2, 3*32 PIN
		W	99	10	10C		WRAP CONNECTOR J10.1, 3*32 PIN
B-NOMAST	4-5-0	B	97	91	47		CONN. ASS. TO MAIN PROGR. (J I)
	4-5-0	WQ	99	08	29F		WRAP CONNECTOR J08.2, 3*32 PIN
		W	99	10	03A		WRAP CONNECTOR J10.1, 3*32 PIN
B-PHAS	9-4	B	97	91	16		CONN. ASS. TO MAIN PROGR. (J I)
	9-4	WQ	99	08	22D		WRAP CONNECTOR J08.2, 3*32 PIN
		W	99	10	17A		WRAP CONNECTOR J10.1, 3*32 PIN
B-RECENB	9-R	B	97	93	20		CONN. ASS. TO MAIN PROGR. (JIII)
		W	99	10	23B		WRAP CONNECTOR J10.1, 3*32 PIN
	9-R	WQ	99	10	26D		WRAP CONNECTOR J10.2, 3*32 PIN

./.

SIG.NAME	COLOR	TYPE	GR	EL	PT	S	DESCRIPTION OF ELEMENT
B-REHEAR	8-R	B	97	92	12		CONN. ASS. TO MAIN PROGR. (J II)
	8-R	WQ	99	09	13D		WRAP CONNECTOR J09.2, 3*32 PIN
		W	99	10	03C		WRAP CONNECTOR J10.1, 3*32 PIN
B-UPPLIM	8-R	B	97	91	12		CONN. ASS. TO MAIN PROGR. (J I)
	8-R	WQ	99	08	13D		WRAP CONNECTOR J08.2, 3*32 PIN
		W	99	10	13A		WRAP CONNECTOR J10.1, 3*32 PIN
BADRSTRT	4	B	97	92	05		CONN. ASS. TO MAIN PROGR. (J II)
	4	WQ	99	09	05D		WRAP CONNECTOR J09.2, 3*32 PIN
		W	99	10	23C		WRAP CONNECTOR J10.1, 3*32 PIN
BEDMMPRG	9-8	B	97	93	18		CONN. ASS. TO MAIN PROGR. (JIII)
		W	99	10	07B		WRAP CONNECTOR J10.1, 3*32 PIN
	9-8	WQ	99	10	24D		WRAP CONNECTOR J10.2, 3*32 PIN
BENT/PKS	2-0	B	97	91	45		CONN. ASS. TO MAIN PROGR. (J I)
	2-0	WQ	99	08	27F		WRAP CONNECTOR J08.2, 3*32 PIN
		W	99	10	09C		WRAP CONNECTOR J10.1, 3*32 PIN
BLKDSP0	4-R	B	97	92	31		CONN. ASS. TO MAIN PROGR. (J II)
		W	99	09	02B		WRAP CONNECTOR J09.1, 3*32 PIN
	4-R	WQ	99	09	07F		WRAP CONNECTOR J09.2, 3*32 PIN
BLKDSP1	1	B	97	92	03		CONN. ASS. TO MAIN PROGR. (J II)
		W	99	09	02C		WRAP CONNECTOR J09.1, 3*32 PIN
	1	WQ	99	09	03D		WRAP CONNECTOR J09.2, 3*32 PIN
BLKDSP2	4-6	B	97	92	33		CONN. ASS. TO MAIN PROGR. (J II)
		W	99	09	03B		WRAP CONNECTOR J09.1, 3*32 PIN
	4-6	WQ	99	09	09F		WRAP CONNECTOR J09.2, 3*32 PIN
BLKDSP3	4-0	B	97	92	37		CONN. ASS. TO MAIN PROGR. (J II)
		W	99	09	03C		WRAP CONNECTOR J09.1, 3*32 PIN
	4-0	WQ	99	09	17F		WRAP CONNECTOR J09.2, 3*32 PIN
BLKDSP4	6-0	B	97	92	44		CONN. ASS. TO MAIN PROGR. (J II)
		W	99	09	04B		WRAP CONNECTOR J09.1, 3*32 PIN
	6-0	WQ	99	09	26F		WRAP CONNECTOR J09.2, 3*32 PIN
BLKDSP5	9-1-0	B	97	92	46		CONN. ASS. TO MAIN PROGR. (J II)
		W	99	09	04C		WRAP CONNECTOR J09.1, 3*32 PIN
	9-1-0	WQ	99	09	28F		WRAP CONNECTOR J09.2, 3*32 PIN
BLKDSP6	9-0	B	97	93	26		CONN. ASS. TO MAIN PROGR. (JIII)
		W	99	09	05B		WRAP CONNECTOR J09.1, 3*32 PIN
	9-0	WQ	99	10	02F		WRAP CONNECTOR J10.2, 3*32 PIN
BLKDSP7	6-2-0	B	97	92	50		CONN. ASS. TO MAIN PROGR. (J II)
		W	99	09	05C		WRAP CONNECTOR J09.1, 3*32 PIN
	6-2-0	WQ	99	09	31F		WRAP CONNECTOR J09.2, 3*32 PIN
BLKDSP8	4-8	B	97	93	29		CONN. ASS. TO MAIN PROGR. (JIII)
		W	99	09	06B		WRAP CONNECTOR J09.1, 3*32 PIN
	4-8	WQ	99	10	05F		WRAP CONNECTOR J10.2, 3*32 PIN
BLKMMPRG	9-1-0	B	97	93	46		CONN. ASS. TO MAIN PROGR. (JIII)
		W	99	10	07A		WRAP CONNECTOR J10.1, 3*32 PIN
	9-1-0	WQ	99	10	28F		WRAP CONNECTOR J10.2, 3*32 PIN
BLOCATOR	0	B	97	93	10		CONN. ASS. TO MAIN PROGR. (JIII)
	0	WQ	99	10	10D		WRAP CONNECTOR J10.2, 3*32 PIN
		W	99	10	27C		WRAP CONNECTOR J10.1, 3*32 PIN
BOFFSREG	9-5	B	97	91	14		CONN. ASS. TO MAIN PROGR. (J I)
	9-5	WQ	99	08	18D		WRAP CONNECTOR J08.2, 3*32 PIN
		W	99	10	13B		WRAP CONNECTOR J10.1, 3*32 PIN
BPILMPRG	6-0	B	97	93	44		CONN. ASS. TO MAIN PROGR. (JIII)
		W	99	10	08B		WRAP CONNECTOR J10.1, 3*32 PIN
	6-0	WQ	99	10	26F		WRAP CONNECTOR J10.2, 3*32 PIN
BPKMMPRG	6-2	B	97	93	13		CONN. ASS. TO MAIN PROGR. (JIII)
		W	99	10	07C		WRAP CONNECTOR J10.1, 3*32 PIN
	6-2	WQ	99	10	17D		WRAP CONNECTOR J10.2, 3*32 PIN
BULBDPA0	2-R	B	97	92	41		CONN. ASS. TO MAIN PROGR. (J II)
	2-R	WQ	99	09	23F		WRAP CONNECTOR J09.2, 3*32 PIN
BULBDPA1	4-8	B	97	91	29		CONN. ASS. TO MAIN PROGR. (J I)
	4-8	WQ	99	08	05F		WRAP CONNECTOR J08.2, 3*32 PIN
BULBDPA2	1	B	97	91	03		CONN. ASS. TO MAIN PROGR. (J I)
	1	WQ	99	08	03D		WRAP CONNECTOR J08.2, 3*32 PIN
BULBDPB2	4-R	B	97	91	31		CONN. ASS. TO MAIN PROGR. (J I)
	4-R	WQ	99	08	07F		WRAP CONNECTOR J08.2, 3*32 PIN
BULBDPH1	8	B	97	92	06		CONN. ASS. TO MAIN PROGR. (J II)
	8	WQ	99	09	06D		WRAP CONNECTOR J09.2, 3*32 PIN
BULBDPL1	8-6	B	97	92	38		CONN. ASS. TO MAIN PROGR. (J II)
	8-6	WQ	99	09	18F		WRAP CONNECTOR J09.2, 3*32 PIN
BULBDPN1	9-8	B	97	92	18		CONN. ASS. TO MAIN PROGR. (J II)
	9-8	WQ	99	09	24D		WRAP CONNECTOR J09.2, 3*32 PIN
BULBDPP1	9-6	B	97	92	22		CONN. ASS. TO MAIN PROGR. (J II)
	9-6	WQ	99	09	28D		WRAP CONNECTOR J09.2, 3*32 PIN
BULBDPS2	4-0	B	97	93	37		CONN. ASS. TO MAIN PROGR. (JIII)
	4-0	WQ	99	10	17F		WRAP CONNECTOR J10.2, 3*32 PIN
BULBDPT2	6-R	B	97	93	39		CONN. ASS. TO MAIN PROGR. (JIII)
	6-R	WQ	99	10	21F		WRAP CONNECTOR J10.2, 3*32 PIN
BULBDPU2	8-0	B	97	93	42		CONN. ASS. TO MAIN PROGR. (JIII)
	8-0	WQ	99	10	24F		WRAP CONNECTOR J10.2, 3*32 PIN
BULBPBF2	1-2	B	97	91	25		CONN. ASS. TO MAIN PROGR. (J I)
	1-2	WQ	99	08	31D		WRAP CONNECTOR J08.2, 3*32 PIN

SIG.NAME	COLOR	TYPE	GR	EL	PT	S	DESCRIPTION OF ELEMENT
BULBPBF3	9-2	B	97	91	24		CONN. ASS. TO MAIN PROGR. (J I)
	9-2	WQ	99	08	30D		WRAP CONNECTOR J08.2, 3*32 PIN
BULBPBF4	1-6	B	97	91	23		CONN. ASS. TO MAIN PROGR. (J I)
	1-6	WQ	99	08	29D		WRAP CONNECTOR J08.2, 3*32 PIN
BULBPBG3	6	B	97	92	08		CONN. ASS. TO MAIN PROGR. (J II)
	6	WQ	99	09	08D		WRAP CONNECTOR J09.2, 3*32 PIN
BULBPBH3	6-2	B	97	92	13		CONN. ASS. TO MAIN PROGR. (J II)
	6-2	WQ	99	09	17D		WRAP CONNECTOR J09.2, 3*32 PIN
BULBPBI3	8	B	97	91	06		CONN. ASS. TO MAIN PROGR. (J I)
	8	WQ	99	08	06D		WRAP CONNECTOR J08.2, 3*32 PIN
BULBPBK5	8-2	B	97	92	40		CONN. ASS. TO MAIN PROGR. (J II)
	8-2	WQ	99	09	22F		WRAP CONNECTOR J09.2, 3*32 PIN
BULBPBL5	1-R	B	97	92	21		CONN. ASS. TO MAIN PROGR. (J II)
	1-R	WQ	99	09	27D		WRAP CONNECTOR J09.2, 3*32 PIN
BULBPBM5	6	B	97	93	08		CONN. ASS. TO MAIN PROGR. (JIII)
	6	WQ	99	10	08D		WRAP CONNECTOR J10.2, 3*32 PIN
CODEER/S	1-5	B	97	92	15		CONN. ASS. TO MAIN PROGR. (J II)
	1-5	WQ	99	09	21D		WRAP CONNECTOR J09.2, 3*32 PIN
		W	99	10	23A		WRAP CONNECTOR J10.1, 3*32 PIN
CODENDEF	5-6	B	97	91	32		CONN. ASS. TO MAIN PROGR. (J I)
	5-6	WQ	99	08	08F		WRAP CONNECTOR J08.2, 3*32 PIN
		W	99	10	27B		WRAP CONNECTOR J10.1, 3*32 PIN
CONNFAIL	6-0	B	97	91	44		CONN. ASS. TO MAIN PROGR. (J I)
	6-0	WQ	99	08	26F		WRAP CONNECTOR J08.2, 3*32 PIN
		W	99	10	06B		WRAP CONNECTOR J10.1, 3*32 PIN
DIFF	0	B	97	92	10		CONN. ASS. TO MAIN PROGR. (J II)
	0	WQ	99	09	10D		WRAP CONNECTOR J09.2, 3*32 PIN
		W	99	10	18C		WRAP CONNECTOR J10.1, 3*32 PIN
DISEND9+	5-R	B	97	93	30		CONN. ASS. TO MAIN PROGR. (JIII)
		W	99	09	06C		WRAP CONNECTOR J09.1, 3*32 PIN
	5-R	WQ	99	10	06F		WRAP CONNECTOR J10.2, 3*32 PIN
DISEND9-	4-6	B	97	93	33		CONN. ASS. TO MAIN PROGR. (JIII)
		W	99	09	07B		WRAP CONNECTOR J09.1, 3*32 PIN
	4-6	WQ	99	10	09F		WRAP CONNECTOR J10.2, 3*32 PIN
DISPEN0	8-5	B	97	92	28		CONN. ASS. TO MAIN PROGR. (J II)
	8-5	WQ	99	09	04F		WRAP CONNECTOR J09.2, 3*32 PIN
		W	99	09	07C		WRAP CONNECTOR J09.1, 3*32 PIN
DISPEN1	9-0	B	97	92	26		CONN. ASS. TO MAIN PROGR. (J II)
	9-0	WQ	99	09	02F		WRAP CONNECTOR J09.2, 3*32 PIN
		W	99	09	08B		WRAP CONNECTOR J09.1, 3*32 PIN
DISPEN2	5-R	B	97	92	30		CONN. ASS. TO MAIN PROGR. (J II)
	5-R	WQ	99	09	06F		WRAP CONNECTOR J09.2, 3*32 PIN
		W	99	09	08C		WRAP CONNECTOR J09.1, 3*32 PIN
DISPEN3	5-6	B	97	92	32		CONN. ASS. TO MAIN PROGR. (J II)
	5-6	WQ	99	09	08F		WRAP CONNECTOR J09.2, 3*32 PIN
		W	99	09	09C		WRAP CONNECTOR J09.1, 3*32 PIN
DISPEN4	6-R	B	97	92	39		CONN. ASS. TO MAIN PROGR. (J II)
		W	99	09	10C		WRAP CONNECTOR J09.1, 3*32 PIN
	6-R	WQ	99	09	21F		WRAP CONNECTOR J09.2, 3*32 PIN
DISPEN5	8-R-0	B	97	92	48		CONN. ASS. TO MAIN PROGR. (J II)
		W	99	09	11C		WRAP CONNECTOR J09.1, 3*32 PIN
	8-R-0	WQ	99	09	30F		WRAP CONNECTOR J09.2, 3*32 PIN
DISPEN6	4-5-0	B	97	92	47		CONN. ASS. TO MAIN PROGR. (J II)
		W	99	09	13C		WRAP CONNECTOR J09.1, 3*32 PIN
	4-5-0	WQ	99	09	29F		WRAP CONNECTOR J09.2, 3*32 PIN
DISPEN7	1-2	B	97	92	25		CONN. ASS. TO MAIN PROGR. (J II)
		W	99	09	17C		WRAP CONNECTOR J09.1, 3*32 PIN
	1-2	WQ	99	09	31D		WRAP CONNECTOR J09.2, 3*32 PIN
DISPEN8	1-0	B	97	93	27		CONN. ASS. TO MAIN PROGR. (JIII)
		W	99	09	18C		WRAP CONNECTOR J09.1, 3*32 PIN
	1-0	WQ	99	10	03F		WRAP CONNECTOR J10.2, 3*32 PIN
EDIT	8-R	B	97	93	12		CONN. ASS. TO MAIN PROGR. (JIII)
		W	99	10	06A		WRAP CONNECTOR J10.1, 3*32 PIN
	8-R	WQ	99	10	13D		WRAP CONNECTOR J10.2, 3*32 PIN
EDIT CD	R	B	97	91	07		CONN. ASS. TO MAIN PROGR. (J I)
	R	WQ	99	08	07D		WRAP CONNECTOR J08.2, 3*32 PIN
		W	99	10	27A		WRAP CONNECTOR J10.1, 3*32 PIN
ENADC		W	99	09	25A		WRAP CONNECTOR J09.1, 3*32 PIN
		W	99	10	26B		WRAP CONNECTOR J10.1, 3*32 PIN
ENTRY	6-2	B	97	91	13		CONN. ASS. TO MAIN PROGR. (J I)
	6-2	WQ	99	08	17D		WRAP CONNECTOR J08.2, 3*32 PIN
		W	99	10	04A		WRAP CONNECTOR J10.1, 3*32 PIN
EXEC	9-0	B	97	91	26		CONN. ASS. TO MAIN PROGR. (J I)
	9-0	WQ	99	08	02F		WRAP CONNECTOR J08.2, 3*32 PIN
EXTGND		L	97	01	01		PROGRAMMER LINE AMPLIFIER,PRINT
FAST FWD	4-1	B	97	93	17		CONN. ASS. TO MAIN PROGR. (JIII)
		W	99	10	05B		WRAP CONNECTOR J10.1, 3*32 PIN
	4-1	WQ	99	10	23D		WRAP CONNECTOR J10.2, 3*32 PIN
FAST REW	2-0	B	97	93	45		CONN. ASS. TO MAIN PROGR. (JIII)
		W	99	10	05A		WRAP CONNECTOR J10.1, 3*32 PIN
	2-0	WQ	99	10	27F		WRAP CONNECTOR J10.2, 3*32 PIN

SIG.NAME	COLOR	TYPE	GR	EL	PT	S	DESCRIPTION OF ELEMENT
FRAM	7	B	97	92	11		CONN. ASS. TO MAIN PROGR. (J II)
	7	WQ	99	09	11D		WRAP CONNECTOR J09.2, 3*32 PIN
		W	99	10	22C		WRAP CONNECTOR J10.1, 3*32 PIN
FRAM ER	4-1	B	97	91	17		CONN. ASS. TO MAIN PROGR. (J I)
	4-1	WQ	99	08	23D		WRAP CONNECTOR J08.2, 3*32 PIN
		W	99	10	02C		WRAP CONNECTOR J10.1, 3*32 PIN
GEN N SC	7	B	97	91	11		CONN. ASS. TO MAIN PROGR. (J I)
	7	WQ	99	08	11D		WRAP CONNECTOR J08.2, 3*32 PIN
GEN SET	9-8	B	97	91	18		CONN. ASS. TO MAIN PROGR. (J I)
	9-8	WQ	99	08	24D		WRAP CONNECTOR J08.2, 3*32 PIN
		W	99	10	13C		WRAP CONNECTOR J10.1, 3*32 PIN
GEN=MAST	1-6	B	97	93	23		CONN. ASS. TO MAIN PROGR. (JIII)
		W	99	10	08C		WRAP CONNECTOR J10.1, 3*32 PIN
	1-6	WQ	99	10	29D		WRAP CONNECTOR J10.2, 3*32 PIN
GENRUN	9-5	B	97	93	14		CONN. ASS. TO MAIN PROGR. (JIII)
		W	99	10	08A		WRAP CONNECTOR J10.1, 3*32 PIN
	9-5	WQ	99	10	18D		WRAP CONNECTOR J10.2, 3*32 PIN
GROUND81	0	L	97	82	01		PROGRAMMER LINE AMPLIFIER,5P MAL
	0	L	97	83	01		PROGR. LINE AMPL. GROUND SCREW
HOLD	5-2	B	97	92	34		CONN. ASS. TO MAIN PROGR. (J II)
	5-2	WQ	99	09	10F		WRAP CONNECTOR J09.2, 3*32 PIN
		W	99	10	17B		WRAP CONNECTOR J10.1, 3*32 PIN
INTGEN	5-R	B	97	91	30		CONN. ASS. TO MAIN PROGR. (J I)
	5-R	WQ	99	08	06F		WRAP CONNECTOR J08.2, 3*32 PIN
		W	99	10	17C		WRAP CONNECTOR J10.1, 3*32 PIN
KB	8-5	B	97	93	28		CONN. ASS. TO MAIN PROGR. (JIII)
	8-5	WQ	99	10	04F		WRAP CONNECTOR J10.2, 3*32 PIN
		W	99	10	22A		WRAP CONNECTOR J10.1, 3*32 PIN
LAGND		L	97	81	05		PROGRAMMER LINE AMPLIFIER,PRINT
LOCKFAST	6	B	97	91	08		CONN. ASS. TO MAIN PROGR. (J I)
	6	WQ	99	08	08D		WRAP CONNECTOR J08.2, 3*32 PIN
		W	99	10	26A		WRAP CONNECTOR J10.1, 3*32 PIN
LOCKSLOW	4-2	B	97	92	35		CONN. ASS. TO MAIN PROGR. (J II)
	4-2	WQ	99	09	11F		WRAP CONNECTOR J09.2, 3*32 PIN
		W	99	10	25C		WRAP CONNECTOR J10.1, 3*32 PIN
LWLIM EX	0-R	B	97	91	43		CONN. ASS. TO MAIN PROGR. (J I)
	0-R	WQ	99	08	25F		WRAP CONNECTOR J08.2, 3*32 PIN
		W	99	10	09B		WRAP CONNECTOR J10.1, 3*32 PIN
MAST	5	B	97	93	04		CONN. ASS. TO MAIN PROGR. (JIII)
	5	WQ	99	10	04D		WRAP CONNECTOR J10.2, 3*32 PIN
		W	99	10	21C		WRAP CONNECTOR J10.1, 3*32 PIN
MSEC	0	B	97	91	10		CONN. ASS. TO MAIN PROGR. (J I)
	2	B	97	92	09		CONN. ASS. TO MAIN PROGR. (J II)
	0	WQ	99	08	10D		WRAP CONNECTOR J08.2, 3*32 PIN
	2	WQ	99	09	09D		WRAP CONNECTOR J09.2, 3*32 PIN
		W	99	10	22B		WRAP CONNECTOR J10.1, 3*32 PIN
NO CD S	9-R	B	97	91	20		CONN. ASS. TO MAIN PROGR. (J I)
	9-R	WQ	99	08	26D		WRAP CONNECTOR J08.2, 3*32 PIN
		W	99	10	03B		WRAP CONNECTOR J10.1, 3*32 PIN
NTRMDATA	5	B	97	92	04		CONN. ASS. TO MAIN PROGR. (J II)
		W	99	08	09C		WRAP CONNECTOR J08.1, 3*32 PIN
	5	WQ	99	09	04D		WRAP CONNECTOR J09.2, 3*32 PIN
NTRMDATB	5-0	B	97	92	36		CONN. ASS. TO MAIN PROGR. (J II)
		W	99	08	10C		WRAP CONNECTOR J08.1, 3*32 PIN
	5-0	WQ	99	09	13F		WRAP CONNECTOR J09.2, 3*32 PIN
NTRMDATC	8-0	B	97	92	42		CONN. ASS. TO MAIN PROGR. (J II)
		W	99	08	11C		WRAP CONNECTOR J08.1, 3*32 PIN
	8-0	WQ	99	09	24F		WRAP CONNECTOR J09.2, 3*32 PIN
NTRMDATD	9	B	97	93	01		CONN. ASS. TO MAIN PROGR. (JIII)
		W	99	08	13C		WRAP CONNECTOR J08.1, 3*32 PIN
	9	WQ	99	10	02D		WRAP CONNECTOR J10.2, 3*32 PIN
NTRMDTA		W	99	07	09C		WRAP CONNECTOR J07.1, 3*32 PIN
		W	99	08	09A		WRAP CONNECTOR J08.1, 3*32 PIN
		W	99	09	09A		WRAP CONNECTOR J09.1, 3*32 PIN
		W	99	10	30B		WRAP CONNECTOR J10.1, 3*32 PIN
NTRMDTB		W	99	07	10C		WRAP CONNECTOR J07.1, 3*32 PIN
		W	99	08	10A		WRAP CONNECTOR J08.1, 3*32 PIN
NTRMDTC		W	99	07	11C		WRAP CONNECTOR J07.1, 3*32 PIN
		W	99	08	11A		WRAP CONNECTOR J08.1, 3*32 PIN
NTRMDTD		W	99	07	13C		WRAP CONNECTOR J07.1, 3*32 PIN
		W	99	08	13A		WRAP CONNECTOR J08.1, 3*32 PIN
OFS DISP	9-5	B	97	92	14		CONN. ASS. TO MAIN PROGR. (J II)
	9-5	WQ	99	09	18D		WRAP CONNECTOR J09.2, 3*32 PIN
		W	99	10	21A		WRAP CONNECTOR J10.1, 3*32 PIN
PARKED	8-6	B	97	93	38		CONN. ASS. TO MAIN PROGR. (JIII)
		W	99	10	02B		WRAP CONNECTOR J10.1, 3*32 PIN
	8-6	WQ	99	10	18F		WRAP CONNECTOR J10.2, 3*32 PIN
PBA	5	B	97	91	04		CONN. ASS. TO MAIN PROGR. (J I)
	5	WQ	99	08	04D		WRAP CONNECTOR J08.2, 3*32 PIN
		W	99	09	28A		WRAP CONNECTOR J09.1, 3*32 PIN
PBB	8-1	B	97	93	19		CONN. ASS. TO MAIN PROGR. (JIII)
		W	99	09	28B		WRAP CONNECTOR J09.1, 3*32 PIN
	8-1	WQ	99	10	25D		WRAP CONNECTOR J10.2, 3*32 PIN

SIG.NAME	COLOR	TYPE	GR	EL	PT	S	DESCRIPTION OF ELEMENT
PBC	5-6	B	97	93	32		CONN. ASS. TO MAIN PROGR. (JIII)
		W	99	09	29A		WRAP CONNECTOR J09.1, 3*32 PIN
	5-6	WQ	99	10	08F		WRAP CONNECTOR J10.2, 3*32 PIN
PBD	1-0	B	97	91	27		CONN. ASS. TO MAIN PROGR. (J I)
	1-0	WQ	99	08	03F		WRAP CONNECTOR J08.2, 3*32 PIN
		W	99	09	29B		WRAP CONNECTOR J09.1, 3*32 PIN
PBE	5-0	B	97	93	36		CONN. ASS. TO MAIN PROGR. (JIII)
		W	99	09	30A		WRAP CONNECTOR J09.1, 3*32 PIN
	5-0	WQ	99	10	13F		WRAP CONNECTOR J10.2, 3*32 PIN
PBF	8-0	B	97	91	42		CONN. ASS. TO MAIN PROGR. (J I)
	8-0	WQ	99	08	24F		WRAP CONNECTOR J08.2, 3*32 PIN
		W	99	09	30B		WRAP CONNECTOR J09.1, 3*32 PIN
PBG	6-R	B	97	91	39		CONN. ASS. TO MAIN PROGR. (J I)
	6-R	WQ	99	08	21F		WRAP CONNECTOR J08.2, 3*32 PIN
		W	99	09	31A		WRAP CONNECTOR J09.1, 3*32 PIN
PBH	4	B	97	91	05		CONN. ASS. TO MAIN PROGR. (J I)
	4	WQ	99	08	05D		WRAP CONNECTOR J08.2, 3*32 PIN
		W	99	09	31B		WRAP CONNECTOR J09.1, 3*32 PIN
PBI	8-5	B	97	91	28		CONN. ASS. TO MAIN PROGR. (J I)
	8-5	WQ	99	08	04F		WRAP CONNECTOR J08.2, 3*32 PIN
		W	99	09	26A		WRAP CONNECTOR J09.1, 3*32 PIN
PBK	2-R	B	97	91	41		CONN. ASS. TO MAIN PROGR. (J I)
	2-R	WQ	99	08	23F		WRAP CONNECTOR J08.2, 3*32 PIN
		W	99	09	26B		WRAP CONNECTOR J09.1, 3*32 PIN
PBPLAY	1-R	B	97	93	21		CONN. ASS. TO MAIN PROGR. (JIII)
		W	99	09	27B		WRAP CONNECTOR J09.1, 3*32 PIN
	1-R	WQ	99	10	27D		WRAP CONNECTOR J10.2, 3*32 PIN
PBREC	9-6	B	97	93	22		CONN. ASS. TO MAIN PROGR. (JIII)
		W	99	09	27A		WRAP CONNECTOR J09.1, 3*32 PIN
	9-6	WQ	99	10	28D		WRAP CONNECTOR J10.2, 3*32 PIN
PBULBHMS	9-4	B	97	92	16		CONN. ASS. TO MAIN PROGR. (J II)
	9-2	B	97	92	24		CONN. ASS. TO MAIN PROGR. (J II)
	2-0	B	97	92	45		CONN. ASS. TO MAIN PROGR. (J II)
	9-4	WQ	99	09	22D		WRAP CONNECTOR J09.2, 3*32 PIN
	2-0	WQ	99	09	27F		WRAP CONNECTOR J09.2, 3*32 PIN
	9-2	WQ	99	09	30D		WRAP CONNECTOR J09.2, 3*32 PIN
		W	99	10	26C		WRAP CONNECTOR J10.1, 3*32 PIN
PBO	4-2	B	97	93	35		CONN. ASS. TO MAIN PROGR. (JIII)
		W	99	09	21B		WRAP CONNECTOR J09.1, 3*32 PIN
	4-2	WQ	99	10	11F		WRAP CONNECTOR J10.2, 3*32 PIN
PB1	9	B	97	91	02		CONN. ASS. TO MAIN PROGR. (J I)
	9	WQ	99	08	02D		WRAP CONNECTOR J08.2, 3*32 PIN
		W	99	09	21C		WRAP CONNECTOR J09.1, 3*32 PIN
PB2	6-2-0	B	97	93	49		CONN. ASS. TO MAIN PROGR. (JIII)
		W	99	09	22B		WRAP CONNECTOR J09.1, 3*32 PIN
	6-2-0	WQ	99	10	31F		WRAP CONNECTOR J10.2, 3*32 PIN
PB3	4-R	B	97	93	31		CONN. ASS. TO MAIN PROGR. (JIII)
		W	99	09	22C		WRAP CONNECTOR J09.1, 3*32 PIN
	4-R	WQ	99	10	07F		WRAP CONNECTOR J10.2, 3*32 PIN
PB4	8-2	B	97	91	40		CONN. ASS. TO MAIN PROGR. (J I)
	8-2	WQ	99	08	22F		WRAP CONNECTOR J08.2, 3*32 PIN
		W	99	09	23B		WRAP CONNECTOR J09.1, 3*32 PIN
PB5	5-2	B	97	93	34		CONN. ASS. TO MAIN PROGR. (JIII)
		W	99	09	23C		WRAP CONNECTOR J09.1, 3*32 PIN
	5-2	WQ	99	10	10F		WRAP CONNECTOR J10.2, 3*32 PIN
PB6	8-R-0	B	97	93	48		CONN. ASS. TO MAIN PROGR. (JIII)
		W	99	09	24B		WRAP CONNECTOR J09.1, 3*32 PIN
	8-R-0	WQ	99	10	30F		WRAP CONNECTOR J10.2, 3*32 PIN
PB7	8-6	B	97	91	38		CONN. ASS. TO MAIN PROGR. (J I)
	8-6	WQ	99	08	18F		WRAP CONNECTOR J08.2, 3*32 PIN
		W	99	09	25B		WRAP CONNECTOR J09.1, 3*32 PIN
PCDATACC		W	99	08	27C		WRAP CONNECTOR J08.1, 3*32 PIN
		W	99	09	27C		WRAP CONNECTOR J09.1, 3*32 PIN
PCDATINA		W	99	08	09B		WRAP CONNECTOR J08.1, 3*32 PIN
		W	99	09	09B		WRAP CONNECTOR J09.1, 3*32 PIN
PCDATINB		W	99	08	10B		WRAP CONNECTOR J08.1, 3*32 PIN
		W	99	09	10B		WRAP CONNECTOR J09.1, 3*32 PIN
PCDATINC		W	99	08	11B		WRAP CONNECTOR J08.1, 3*32 PIN
		W	99	09	11B		WRAP CONNECTOR J09.1, 3*32 PIN
PCDATIND		W	99	08	13B		WRAP CONNECTOR J08.1, 3*32 PIN
		W	99	09	13B		WRAP CONNECTOR J09.1, 3*32 PIN
PCDATINE		W	99	08	17B		WRAP CONNECTOR J08.1, 3*32 PIN
		W	99	09	17B		WRAP CONNECTOR J09.1, 3*32 PIN
PCDATRDY		W	99	07	25C		WRAP CONNECTOR J07.1, 3*32 PIN
		W	99	08	25C		WRAP CONNECTOR J08.1, 3*32 PIN
		W	99	09	25C		WRAP CONNECTOR J09.1, 3*32 PIN
		W	99	10	11B		WRAP CONNECTOR J10.1, 3*32 PIN
PCPGDATA		W	99	08	28C		WRAP CONNECTOR J08.1, 3*32 PIN
		W	99	09	28C		WRAP CONNECTOR J09.1, 3*32 PIN
PCPGDATB		W	99	08	29C		WRAP CONNECTOR J08.1, 3*32 PIN
		W	99	09	29C		WRAP CONNECTOR J09.1, 3*32 PIN
PCPGDATC		W	99	08	30C		WRAP CONNECTOR J08.1, 3*32 PIN
		W	99	09	30C		WRAP CONNECTOR J09.1, 3*32 PIN

SIG.NAME	COLOR	TYPE	GR	EL	PT	S	DESCRIPTION OF ELEMENT
PHASING	R	B	97	92	07		CONN. ASS. TO MAIN PROGR. (J II)
	R	WQ	99	09	07D		WRAP CONNECTOR J09.2, 3*32 PIN
		W	99	10	24C		WRAP CONNECTOR J10.1, 3*32 PIN
PLAY	1-2	B	97	93	25		CONN. ASS. TO MAIN PROGR. (JIII)
		W	99	10	05C		WRAP CONNECTOR J10.1, 3*32 PIN
	1-2	WQ	99	10	31D		WRAP CONNECTOR J10.2, 3*32 PIN
PMNTM	2	W	99	07	24C		WRAP CONNECTOR J07.1, 3*32 PIN
		W	99	08	24C		WRAP CONNECTOR J08.1, 3*32 PIN
		W	99	09	24C		WRAP CONNECTOR J09.1, 3*32 PIN
		W	99	10	11A		WRAP CONNECTOR J10.1, 3*32 PIN
PPBPRESS		W	99	08	18C		WRAP CONNECTOR J08.1, 3*32 PIN
		W	99	09	18B		WRAP CONNECTOR J09.1, 3*32 PIN
PPWRON		W	99	07	23C		WRAP CONNECTOR J07.1, 3*32 PIN
		W	99	08	23A		WRAP CONNECTOR J08.1, 3*32 PIN
		W	99	09	23A		WRAP CONNECTOR J09.1, 3*32 PIN
		W	99	10	30C		WRAP CONNECTOR J10.1, 3*32 PIN
PRIFTRXY		W	99	08	31C		WRAP CONNECTOR J08.1, 3*32 PIN
		W	99	09	31C		WRAP CONNECTOR J09.1, 3*32 PIN
REC	7	B	97	93	11		CONN. ASS. TO MAIN PROGR. (JIII)
		W	99	10	04C		WRAP CONNECTOR J10.1, 3*32 PIN
	7	WQ	99	10	11D		WRAP CONNECTOR J10.2, 3*32 PIN
RECDATA	1	L	97	81	02		PROGRAMMER LINE AMPLIFIER,PRINT
	1	WQ	99	08	23C		WRAP CONNECTOR J08.1, 3*32 PIN
RECEIVE1	4	L	97	81	00C		PROGRAMMER LINE AMPLIFIER,PRINT
	4	L	97	82	04		PROGRAMMER LINE AMPLIFIER,5P MAL
RECEIVE2	5	L	97	81	00D		PROGRAMMER LINE AMPLIFIER,PRINT
	5	L	97	82	05		PROGRAMMER LINE AMPLIFIER,5P MAL
SL NOTP	4-0	B	97	91	37		CONN. ASS. TO MAIN PROGR. (J I)
	4-0	WQ	99	08	17F		WRAP CONNECTOR J08.2, 3*32 PIN
		W	99	10	24A		WRAP CONNECTOR J10.1, 3*32 PIN
SLAV	8-1	B	97	92	19		CONN. ASS. TO MAIN PROGR. (J II)
	8-1	WQ	99	09	25D		WRAP CONNECTOR J09.2, 3*32 PIN
		W	99	10	21B		WRAP CONNECTOR J10.1, 3*32 PIN
SLDECOFF	4-2	B	97	91	35		CONN. ASS. TO MAIN PROGR. (J I)
	4-2	WQ	99	08	11F		WRAP CONNECTOR J08.2, 3*32 PIN
STOP	8-2	B	97	93	40		CONN. ASS. TO MAIN PROGR. (JIII)
		W	99	10	04B		WRAP CONNECTOR J10.1, 3*32 PIN
	8-2	WQ	99	10	22F		WRAP CONNECTOR J10.2, 3*32 PIN
STOREOFS	4-8	B	97	92	29		CONN. ASS. TO MAIN PROGR. (J II)
	4-8	WQ	99	09	05F		WRAP CONNECTOR J09.2, 3*32 PIN
		W	99	10	25B		WRAP CONNECTOR J10.1, 3*32 PIN
SVPCI	9-6	B	97	91	22		CONN. ASS. TO MAIN PROGR. (J I)
		W	99	08	28B		WRAP CONNECTOR J08.1, 3*32 PIN
	9-6	WQ	99	08	28D		WRAP CONNECTOR J08.2, 3*32 PIN
SVPCII	0-R	B	97	92	43		CONN. ASS. TO MAIN PROGR. (J II)
		W	99	08	27B		WRAP CONNECTOR J08.1, 3*32 PIN
	0-R	WQ	99	09	25F		WRAP CONNECTOR J09.2, 3*32 PIN
SVPCIII	8	B	97	93	06		CONN. ASS. TO MAIN PROGR. (JIII)
		W	99	08	26C		WRAP CONNECTOR J08.1, 3*32 PIN
	8	WQ	99	10	06D		WRAP CONNECTOR J10.2, 3*32 PIN
SYNC A	4-5-0	B	97	93	47		CONN. ASS. TO MAIN PROGR. (JIII)
		W	99	10	02A		WRAP CONNECTOR J10.1, 3*32 PIN
	4-5-0	WQ	99	10	29F		WRAP CONNECTOR J10.2, 3*32 PIN
SYNC B	0-R	B	97	93	43		CONN. ASS. TO MAIN PROGR. (JIII)
	0-R	WQ	99	10	25F		WRAP CONNECTOR J10.2, 3*32 PIN
		W	99	10	28B		WRAP CONNECTOR J10.1, 3*32 PIN
SYNC PLT	9-4	B	97	93	16		CONN. ASS. TO MAIN PROGR. (JIII)
	9-4	WQ	99	10	22D		WRAP CONNECTOR J10.2, 3*32 PIN
		W	99	10	28A		WRAP CONNECTOR J10.1, 3*32 PIN
TRANSM1	2	L	97	81	00A		PROGRAMMER LINE AMPLIFIER,PRINT
	2	L	97	82	02		PROGRAMMER LINE AMPLIFIER,5P MAL
TRANSM2	3	L	97	81	00B		PROGRAMMER LINE AMPLIFIER,PRINT
	3	L	97	82	03		PROGRAMMER LINE AMPLIFIER,5P MAL
TRMADR0		W	99	07	02C		WRAP CONNECTOR J07.1, 3*32 PIN
		W	99	08	02C		WRAP CONNECTOR J08.1, 3*32 PIN
		W	99	09	02A		WRAP CONNECTOR J09.1, 3*32 PIN
		W	99	10	29A		WRAP CONNECTOR J10.1, 3*32 PIN
TRMADR1		W	99	07	03C		WRAP CONNECTOR J07.1, 3*32 PIN
		W	99	08	03C		WRAP CONNECTOR J08.1, 3*32 PIN
		W	99	09	03A		WRAP CONNECTOR J09.1, 3*32 PIN
		W	99	10	29B		WRAP CONNECTOR J10.1, 3*32 PIN
TRMADR2		W	99	07	04C		WRAP CONNECTOR J07.1, 3*32 PIN
		W	99	08	04C		WRAP CONNECTOR J08.1, 3*32 PIN
		W	99	09	04A		WRAP CONNECTOR J09.1, 3*32 PIN
		W	99	10	29C		WRAP CONNECTOR J10.1, 3*32 PIN
TRMADR3		W	99	07	05C		WRAP CONNECTOR J07.1, 3*32 PIN
		W	99	08	05C		WRAP CONNECTOR J08.1, 3*32 PIN
		W	99	09	05A		WRAP CONNECTOR J09.1, 3*32 PIN
		W	99	10	31A		WRAP CONNECTOR J10.1, 3*32 PIN
TRMADR4		W	99	07	06C		WRAP CONNECTOR J07.1, 3*32 PIN
		W	99	08	06C		WRAP CONNECTOR J08.1, 3*32 PIN
		W	99	09	06A		WRAP CONNECTOR J09.1, 3*32 PIN
		W	99	10	31B		WRAP CONNECTOR J10.1, 3*32 PIN
TRMADR5		W	99	07	07C		WRAP CONNECTOR J07.1, 3*32 PIN

./.

SIG.NAME	COLOR	TYPE	GR	EL	PT	S	DESCRIPTION OF ELEMENT
(CONT.)		W	99	08	07C		WRAP CONNECTOR J08.1, 3*32 PIN
		W	99	09	07A		WRAP CONNECTOR J09.1, 3*32 PIN
		W	99	10	31C		WRAP CONNECTOR J10.1, 3*32 PIN
TRMADR6		W	99	07	08C		WRAP CONNECTOR J07.1, 3*32 PIN
		W	99	08	08C		WRAP CONNECTOR J08.1, 3*32 PIN
		W	99	09	08A		WRAP CONNECTOR J09.1, 3*32 PIN
		W	99	10	30A		WRAP CONNECTOR J10.1, 3*32 PIN
TRMDATA	5	L	97	81	04		PROGRAMMER LINE AMPLIFIER,PRINT
	5	WQ	99	08	17C		WRAP CONNECTOR J08.1, 3*32 PIN
TX	1-5	B	97	93	15		CONN. ASS. TO MAIN PROGR. (JIII)
	1-5	WQ	99	10	21D		WRAP CONNECTOR J10.2, 3*32 PIN
		W	99	10	25A		WRAP CONNECTOR J10.1, 3*32 PIN
UNAS B	9-R	B	97	92	20		CONN. ASS. TO MAIN PROGR. (J II)
	9-R	WQ	99	09	26D		WRAP CONNECTOR J09.2, 3*32 PIN
		W	99	10	18A		WRAP CONNECTOR J10.1, 3*32 PIN
UPLIM EX	9-1-0	B	97	91	46		CONN. ASS. TO MAIN PROGR. (J I)
	9-1-0	WQ	99	08	28F		WRAP CONNECTOR J08.2, 3*32 PIN
		W	99	10	09A		WRAP CONNECTOR J10.1, 3*32 PIN
USER B	4	B	97	93	05		CONN. ASS. TO MAIN PROGR. (JIII)
	4	WQ	99	10	05D		WRAP CONNECTOR J10.2, 3*32 PIN
		W	99	10	18B		WRAP CONNECTOR J10.1, 3*32 PIN
WMPRESO1	8-R-0	B	97	91	49		CONN. ASS. TO MAIN PROGR. (J I)
	8-R-0	WQ	99	08	30F		WRAP CONNECTOR J08.2, 3*32 PIN
WMPRESO2	6-2-0	B	97	91	50		CONN. ASS. TO MAIN PROGR. (J I)
	6-2-0	WQ	99	08	31F		WRAP CONNECTOR J08.2, 3*32 PIN
WMPRESO3	9	B	97	92	01		CONN. ASS. TO MAIN PROGR. (J II)
	9	WQ	99	09	02D		WRAP CONNECTOR J09.2, 3*32 PIN
WMPRESO4	1-0	B	97	92	27		CONN. ASS. TO MAIN PROGR. (J II)
	1-0	WQ	99	09	03F		WRAP CONNECTOR J09.2, 3*32 PIN
12.5 HZ		W	99	08	07B		WRAP CONNECTOR J08.1, 3*32 PIN
		W	99	09	13A		WRAP CONNECTOR J09.1, 3*32 PIN
220VACE	4-5	P	96	01	02		POWER SUPPLY MAINS INPUT
	4-5	L	97	11	02		MASTER MAINS INPUT
220VAC1	6	P	96	01	01		POWER SUPPLY MAINS INPUT
	6	L	97	11	01		MASTER MAINS INPUT
220VAC2	1	P	96	01	03		POWER SUPPLY MAINS INPUT
	1	L	97	11	03		MASTER MAINS INPUT
24VAC1	9	C	96	02	01		POWER SUPPLY OUTPUT CONNECTOR 1
		C	96	03	01		POWER SUPPLY OUTPUT CONNECTOR 2
		C	96	04	01		POWER SUPPLY OUTPUT CONNECTOR 3
		C	96	05	01		POWER SUPPLY OUTPUT CONNECTOR 4
(CONT.)	9	L	97	21	01		POWER JUMPER CABLE
24VAC2	1	C	96	02	08		POWER SUPPLY OUTPUT CONNECTOR 1
		C	96	03	08		POWER SUPPLY OUTPUT CONNECTOR 2
		C	96	04	08		POWER SUPPLY OUTPUT CONNECTOR 3
		C	96	05	08		POWER SUPPLY OUTPUT CONNECTOR 4
	1	L	97	21	08		POWER JUMPER CABLE
819.2KHZ		W	99	07	21C		WRAP CONNECTOR J07.1, 3*32 PIN
		W	99	08	21C		WRAP CONNECTOR J08.1, 3*32 PIN
		W	99	09	21A		WRAP CONNECTOR J09.1, 3*32 PIN

./.

TRANSMISSION LINE SPECIFICATIONS

SERIAL PROGR.
INTERFACE

TRANSMISSION LINE

TLS 2000 RACK

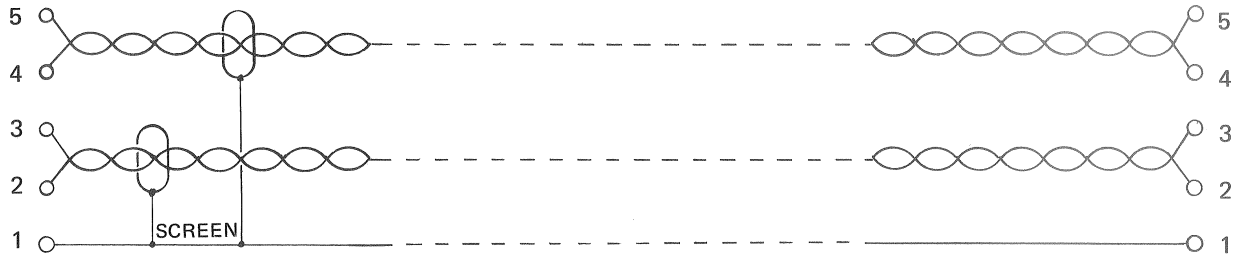

CONNECTOR:
IEC 268-14 B
FEMALE 5 POLE

CONNECTOR:
IEC 268-14 B
MALE 5 POLE

CABLE:
- 2 TWISTED PAIRS
- UP TO 1000 METERS
- LOOP RESISTANCE OF ONE PAIR <500 OHMS
- SCREEN NORMALLY NOT NECESSARY BUT RECOMMENDED IN ELECTRICALLY NOISY ENVIRONMENTS

SIGNAL CHARACTERISTICS:
- ~1,5V $_{P-P}$
- BAUDRATE: 2400 BAUD
- BI-PHASE SPACE MODULATED
- FILTERED WITH LOWPASS 3,5 kHz, 4 POLE BESSEL

TLS LINE AMPLIFIER 1.228.494

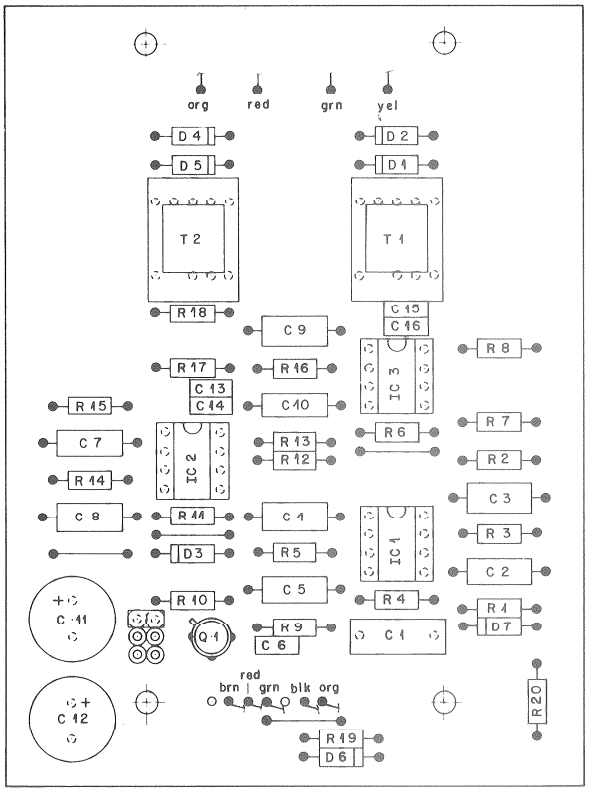

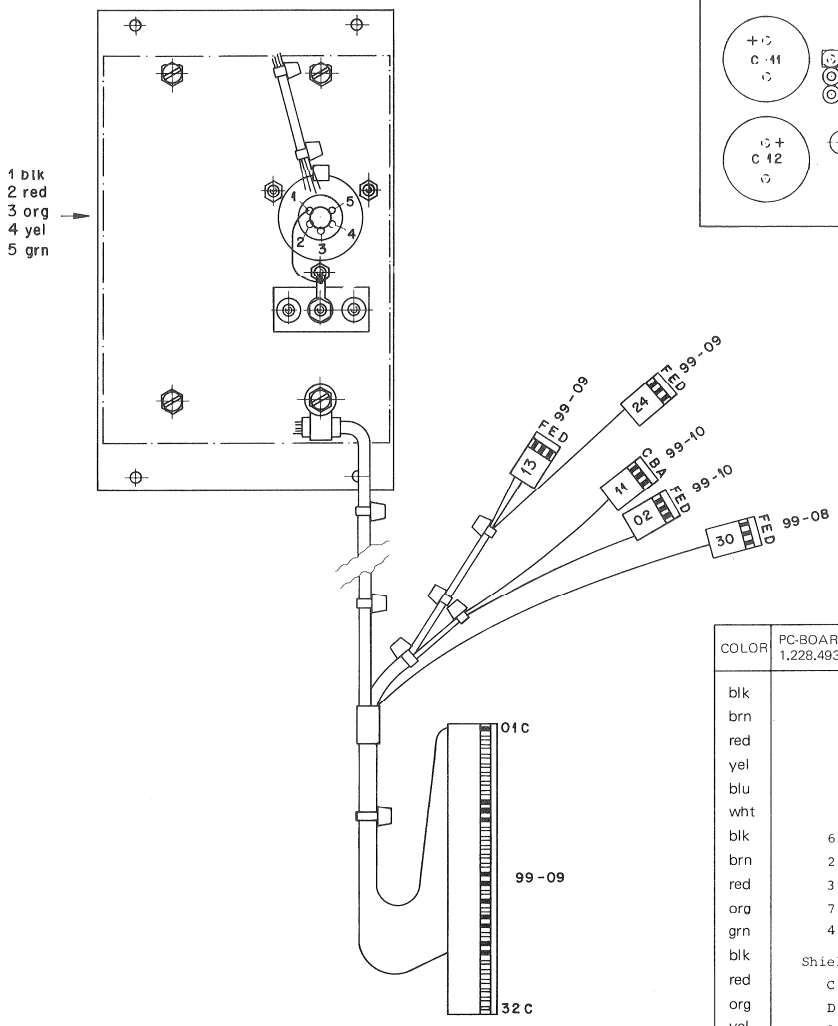

COLOR	PC-BOARD 1.228.493-11	GR 99 1.228.399	GR 99 1.228.399	5 PIN FEMALE 54.02.0279	SIGN. NAME
blk		EL 09 13F	EL 09 09C		NTRMDATB
brn		EL 09 24F	EL 09 10C		NTRMDATC
red		EL 10 02D	EL 09 11C		NTRMDATD
yel		EL 09 13E	EL 09 18C		PMNTM 1
blu		EL 08 30E	EL 09 26C		SVSERPRG
wht		EL 10 11D	EL 09 25C		PCDATRDY
blk	6		EL 09 01C		OL
brn	2		EL 09 23C		RECDATA
red	3		EL 09 22C		+5.0 V
org	7		EL 09 20C		+24
grn	4		EL 09 17C		TRMDATA
blk	Shield			1	GRØUND81
red	C			2	RECEIVE1
org	D			3	RECEIVE2
yel	A			4	TRANSM1
grn	B			5	TRANSM2

PARALLEL SERIAL CONVERTER

TLS LINE AMPLIFIER 1.228.494

Kondensatoren

IND	POS NO	PART NO	VALUE	SPECIFICATIONS/EQUIVALENT		MFR
	C 01	59.02.2474	470 n	5%	63V	MPC
	C 02	59.08.7402	1 n	25%	63V	PS
	C 03	59.04.8152	15 n	5%	160V	PS
	C 04	59.04.8152	15 n	5%	160V	PS
	C 05	59.08.7392	39 n	25%	63V	PS
	C 06	59.99.0205	68 n	-20%	63V	KER
	C 07	59.08.7392	39 n	25%	63V	PS
	C 08	59.04.8152	15 n	5%	160V	PS
	C 09	59.04.8152	15 n	5%	160V	PS
	C 10	59.08.7402	1 n	25%	63V	PS
	C 11	59.22.4221	220 µ	-10%	16V	EL
	C 12	59.22.4221	220 µ	-10%	16V	EL
	C 13	59.99.0205	68 n	-20%	63V	KER
	C 14	59.99.0205	68 n	-20%	63V	KER
	C 15	59.99.0205	68 n	-20%	63V	KER
	C 16	59.99.0205	68 n	-20%	63V	KER

IND	DATE	NAME
4		
3		
2		
1		
○	13.9.79	Rohner

STUDER | TLS LINE AMPLIFIER | 1.228.494.00 | PAGE 1 OF 3

Widerstände

IND	POS NO	PART NO	VALUE	SPECIFICATIONS/EQUIVALENT		MFR
	R 01	57.02.5333	33 kΩ	10%	0,25W	
	R 02	57.02.5473	47 kΩ	10%	0,25W	
	R 03	57.02.5153	15 kΩ	10%	0,25W	
	R 04	57.02.5123	12 kΩ	10%	0,25W	
	R 05	57.02.5123	12 kΩ	10%	0,25W	
	R 06	57.02.5333	33 kΩ	10%	0,25W	
	R 07	57.02.5333	33 kΩ	10%	0,25W	
	R 08	57.02.5561	560 Ω	10%	0,25W	
	R 09	57.02.5222	2,2 kΩ	10%	0,25W	
	R 10	57.02.5222	2,2 kΩ	10%	0,25W	
	R 11	57.02.5153	15 kΩ	10%	0,25W	
	R 12	57.02.5473	47 kΩ	10%	0,25W	
	R 13	57.02.5221	220 Ω	10%	0,25W	
	R 14	57.02.5123	12 kΩ	10%	0,25W	
	R 15	57.02.5123	12 kΩ	10%	0,25W	
	R 16	57.02.5153	15 kΩ	10%	0,25W	
	R 17	57.02.5473	47 kΩ	10%	0,25W	
	R 18	57.02.5561	560 Ω	10%	0,25W	
	R 19	57.02.5152	1,5 kΩ	10%	0,25W	
	R 20	57.02.5152	1,5 kΩ	10%	0,25W	

IND	DATE	NAME
4		
3		
2		
1		
○	13.9.79	Rohner

STUDER | TLS LINE AMPLIFIER | 1.228.494.00 | PAGE 2 OF 3

Halbleiter und Rest

IND	POS NO	PART NO	VALUE	SPECIFICATIONS/EQUIVALENT	
	D 01	50.04.1511	ZD 6,2V	1,3W	
	D 02	50.04.1511	ZD 6,2V	1,3W	
	D 03	50.04.1106	ZD 27V	0,4W	
	D 04	50.04.1511	ZD 6,2V	1,3W	
	D 05	50.04.1511	ZD 6,2V	1,3W	
	D 06	50.04.1112	ZD 5,1V	0,4W	
	D 07	50.04.1112	ZD 5,1V	0,4W	
	IC 01	50.05.0245	RC 4558	Dual OP-AMP	LIN
	IC 02	50.05.0245	RC 4558	Dual OP-AMP	LIN
	IC 03	50.05.0245	RC 4558	Dual OP-AMP	LIN
	Q 01	50.03.0485	BSX 20		NPN
	X IC 3	53.03.0166	IC Sockel	8-polig	
	T 01	1.022.416	1:1	Trafo	
	T 02	1.022.416	1:1	Trafo	
	S 01	54.01.0021		Brücke 2 x 0,63	
	S 02 6x	54.01.0020		Stift 0,63 x 0,63	

IND	DATE	NAME
4		
3		
2		
1		
○	13.9.79	Rohner

STUDER | TLS LINE AMPLIFIER | 1.228.494.00 | PAGE 3 OF 3

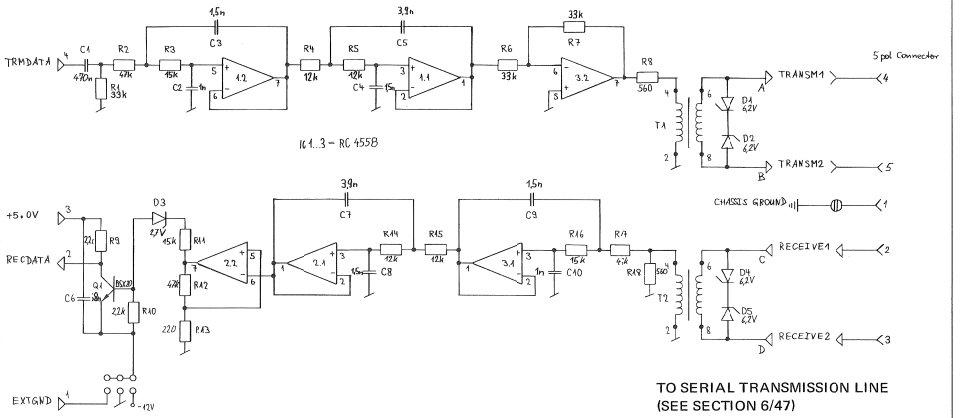

TO SERIAL TRANSMISSION LINE (SEE SECTION 6/47)

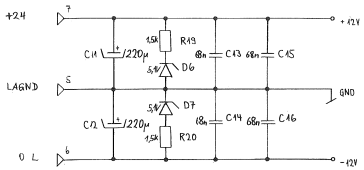

SLAVE RACK LOCATION 9

SERIAL PROGRAMMER INTERFACE 1.228.492

IND	POS NO	PART NO	VALUE	SPECIFICATIONS/EQUIVALENT	MFR
	IC 11	50.05.0270	MC 6821P	PERIPHERAL INTERFACE ADAPTER	
	IC 13	50.06.0174	SN74LS174	HEX D FLIP-FLOP	
	IC 14	50.06.0174	SN74LS174	HEX D FLIP-FLOP	
	IC 15	50.06.0000	SN74LS00	QUAD 2-INPUT NAND	
	IC 16	50.06.0157	SN74LS157	QUAD 2-INPUT MULTIPLEXER	
	IC 17	50.06.0086	SN74LS86	QUAD 2-INPUT EXOR	
	IC 18	50.06.0008	SN74LS08	QUAD 2-INPUT AND	
	IC 19	50.06.0151	SN74LS151	8-INPUT MULTIPLEXER	
	IC 23	50.05.0271	SN74S189	16 x 4 BIT RAM, THREE STATE	
	IC 24	50.06.0157	SN74LS157	QUAD 2-INPUT MULTIPLEXER	
	IC 25	50.05.0283	SN74S200	256x1 BIT RAM, THREE STATE	
				DM74S200, IM 55523	
	IC 26	50.06.0004	SN74LS04	HEX INVERTER	
	IC 27	50.05.0224	M8T96B	HEX THREE STATE INVERTER, MC8796	
	IC 28	50.06.0032	SN74LS32	QUAD 2-INPUT OR	
	IC 29	50.06.0109	SN74LS109	DUAL JK POS. EDGE TRIGGERED FF	
	IC 34	1.025.018.40		512 x 4 BIT PROM	
	IC 35	1.025.018.50		512 x 4 BIT PROM	
	IC 36	1.025.018.60		512 x 4 BIT PROM	
	IC 37	1.025.018.70		512 x 4 BIT PROM	
	IC 38	50.06.0032	SN74LS32	QUAD 2-INPUT OR	
	IC 39	50.06.0074	SN74LS74	DUAL D FLIP-FLOP	
	IC 43	50.05.0216	M8T95B	HEX THREE STATE BUFFER, MC8195	
	IC 44	50.06.0138	SN74LS138	3 TO 8 DECODER	
	IC 45	50.06.0161	SN74LS161	4 BIT BINARY COUNTER	
	IC 46	50.06.0174	SN74LS174	HEX D FLIP-FLOP	
	IC 47	1.025.018.20		512 x 4 BIT PROM	
	IC 48	50.06.0175	SN74LS175	QUAD D FLIP-FLOP	
	IC 34	50.05.0276	MC 6802	MICROPROCESSING UNIT	
	IC 51	50.16.0101	MC 6850	ASYNCH. COMM. INTERFACE ADAPTER	

IND	DATE	NAME
④		
③		
②		
①		
○	21.9.79	Rohner

STUDER SERIAL PROGRAMMER INTERFACE 1.228.492.00 PAGE 1 OF 3

IND	POS NO	PART NO	VALUE	SPECIFICATIONS/EQUIVALENT	MFR
	A 33	1.228.734.00		4 MHZ CRYSTAL BOARD	
	C 90	59.59.0205	68 nF	20%, 63V, CER	
	C 91				
	C 92				
	C 93				
	C 94				
	C 95				
	C 96				
	C 97				
	C 98				
	C 99	59.59.0205	68 nF	20%, 63V, CER	
	C 100	59.29.0201	6,8 µF	20%, 35V, TANTAL	
	L 1	64.59.0124		FERRIT PEARLS	
	RZ 49	57.85.3332	15x 3K3	RESISTOR ARRAY, 2%, DIL	

IND	DATE	NAME
④		
③		
②		
①		
○	21.9.79	Rohner

STUDER SERIAL PROGRAMMER INTERFACE 1.228.492.00 PAGE 3 OF 3

IND	POS NO	PART NO	VALUE	SPECIFICATIONS/EQUIVALENT	MFR
	IC 53	50.05.0216	M8T95B	HEX THREE STATE BUFFER, MC8195	
	IC 54	50.06.0109	SN74LS109	DUAL JK POS. EDGE TRIGGERED FF	
	IC 63	50.06.0161	SN74LS161	4 BIT BINARY COUNTER	
	IC 64	50.06.0161	SN74LS161	4 BIT BINARY COUNTER	
	IC 1	50.05.0133	LM 309K	POS. VOLTAGE REGULATOR, 5V	

IND	DATE	NAME
④		
③		
②		
①		
○	21.9.79	Rohner

STUDER SERIAL PROGRAMMER INTERFACE 1.228.492.00 PAGE 2 OF 3

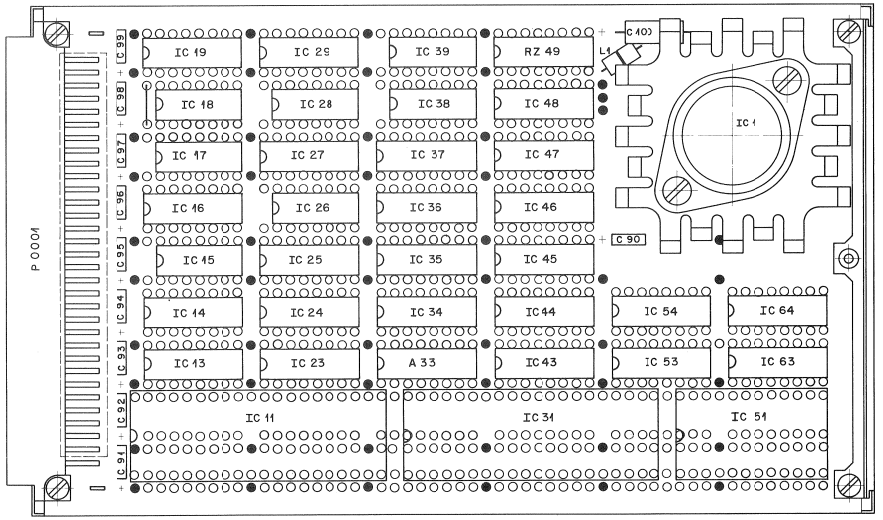

PARALLEL SERIAL CONVERTER

SERIAL PROGRAMMER INTERFACE 1.228.492

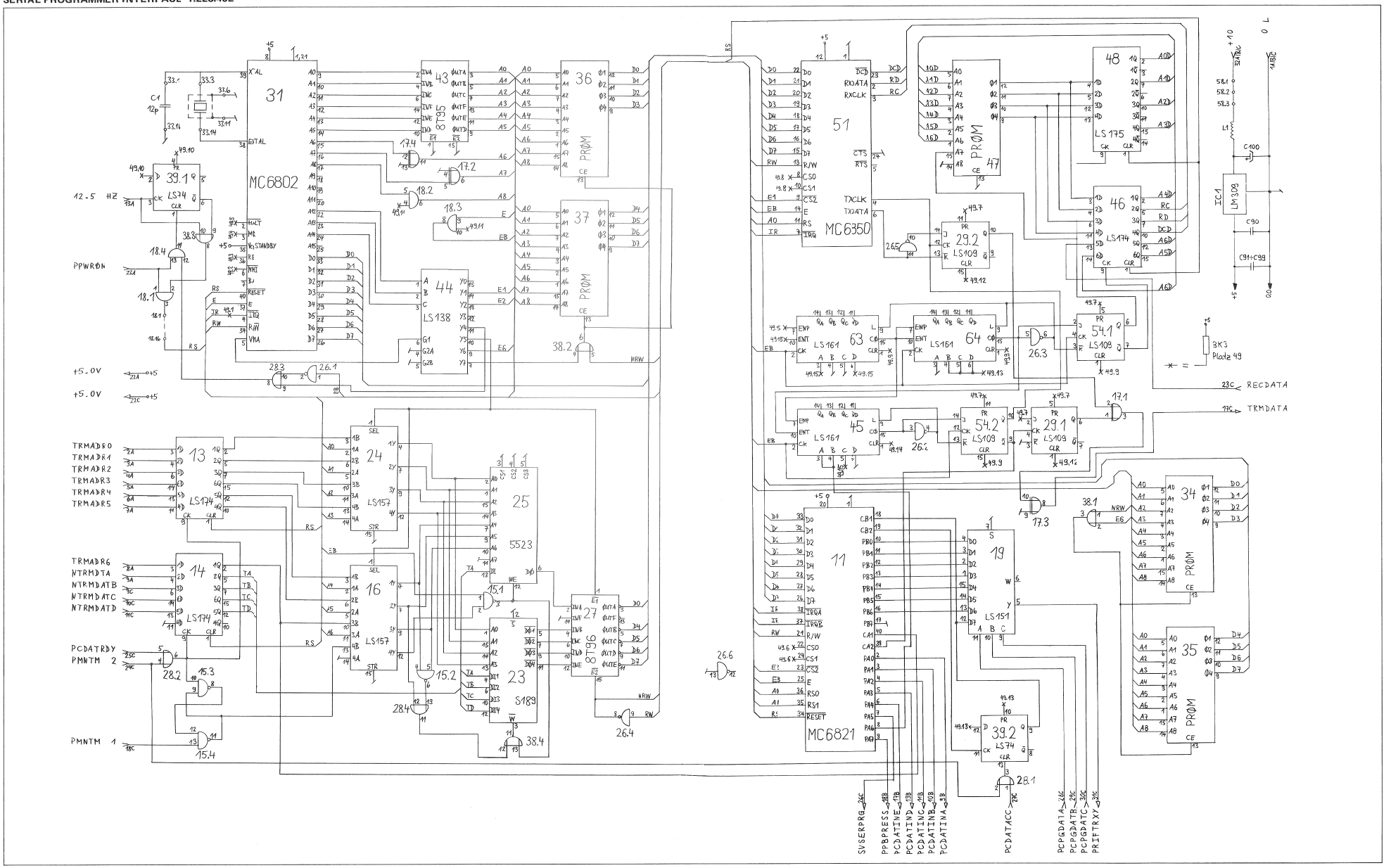

6.4
POWER SUPPLY UNIT 1.228.150

LOCATION OF COMPONENTS

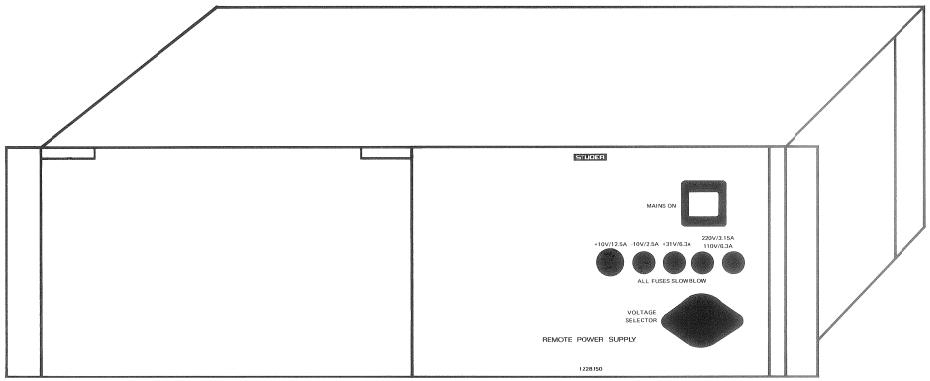

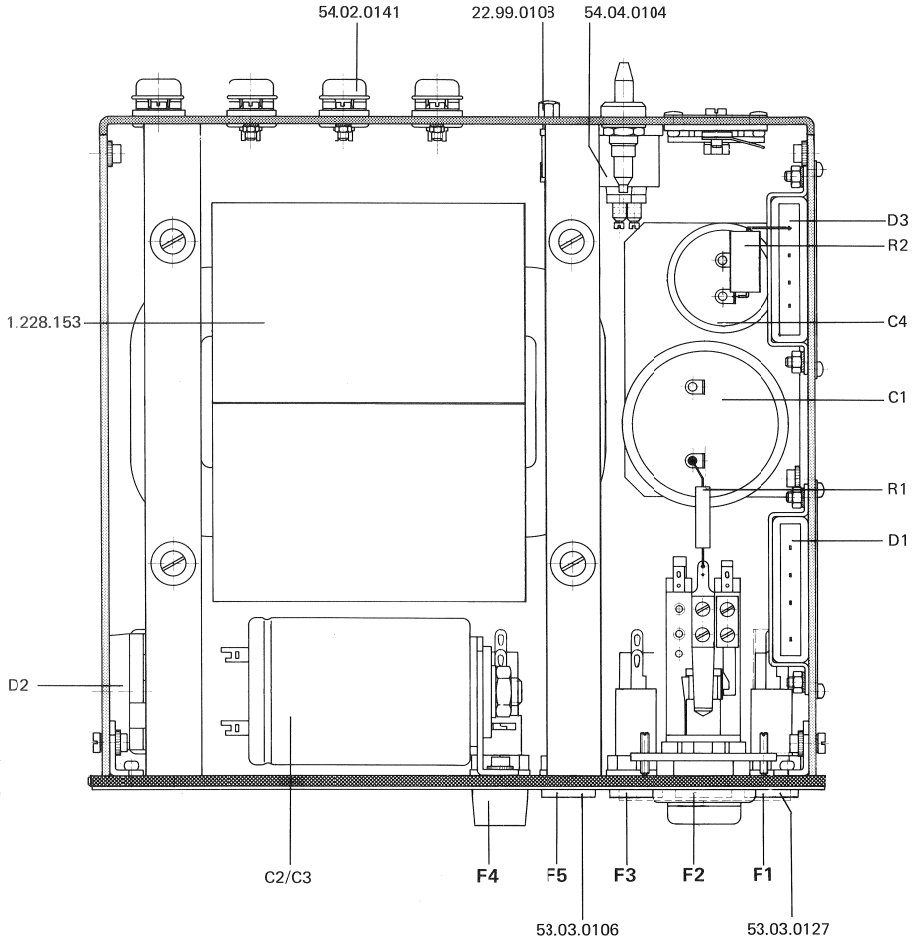

FUSES F1/F2/F3/F5: 5x20 mm
FUSE F4: 6,3x32 mm
ALL FUSES SLOW BLOW!

	Pos.	Bauteil No.	Bezeichnung	Stk.	Bemerkung
1)	C 01	59.99.0400	C 4700 U, 50%, 50 V, EL	1	
	C 02	59.26.322[illegible]	C 22000 U, 50%, 16 V, EL	1	
	C 03	59.26.322[illegible]	C 22000 U, 50%, 16 V, EL	1	
	C 04	59.26.347[illegible]	C 4700 U, 50%, 16 V, EL	1	
	D 01	70.01.021[illegible]	D B 40 C 5000/3300, SI	1	
	D 02	70.01.022[illegible]	D MDA 980-1, SI	1	
	D 03	70.01.021[illegible]	D B 40 C 3200/2200 SI	1	
	F 01	51.01.012[illegible]	F 3.15 A, T	1	
	F 02	51.01.012[illegible]	F 3.15 A, T	1	
	F 03	51.01.012[illegible]	F 6.3 A, T	1	
	F 04	51.01.012[illegible]	F 12.5 A, T	1	
	F 05	51.01.012[illegible]	F 2.5 A, T	1	
	R 01	57.13.418[illegible]	R 180 , 5%, .5 W, CSCH	1	
	R 02	57.56.468[illegible]	R .68 , 10%, 4 W, DR	1	

Aenderungen ① 13.12.73 ② ③ ④ ⑤

STUDER REGENSDORF ZURICH

Positionsliste

Remote Power Supply

Erstellt: 14.7.72 Bz
Geprüft: 18.7.72 Kä
Blatt: 1 Blätter 1

Kopie für:

Ersatz für:
Ersetzt durch:

1.228.150.00

POWER SUPPLY 1.228.150

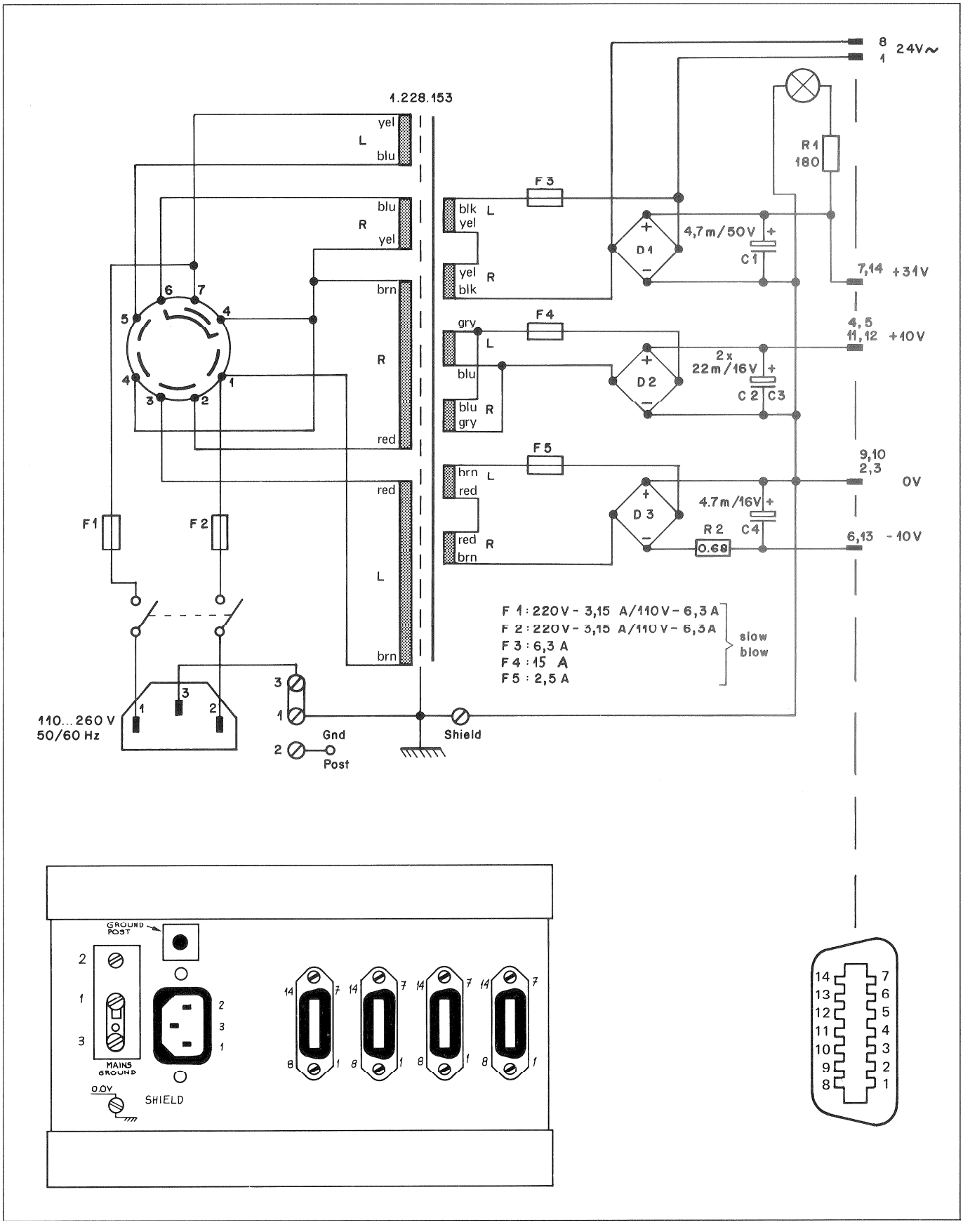

POWER SUPPLY CABLE 1.228.670

TLS 2000 SLAVE RACK
1.228.618/20
CONNECTOR
TO STUDER
POWER SUPPLY

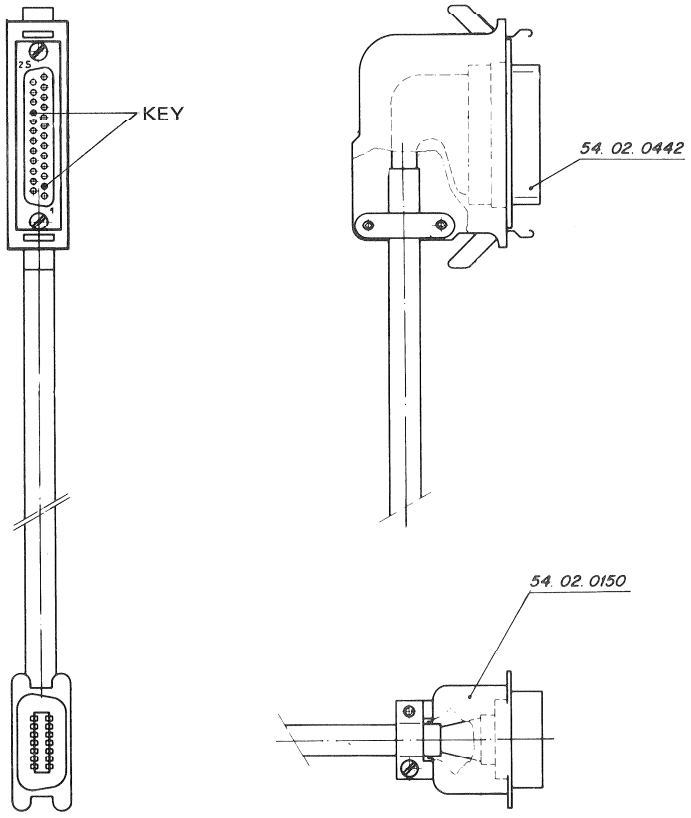

STUDER
POWER SUPPLY

	AMP female 54.02.0442	Micro Ribbon 54.02.0150	
Color	Pin. Nr.	Pin. Nr.	Sign. Name
wht blu	1 3	6 13	−10V −10V
wht org	4 5	13 2	10V 0.0V
wht grn	6 7	2 3	0.0V 0.0V
wht brn	8 9	3 3	0.0V 0.0V
wht gry	19 16	4 4	+10V +10V
red blu	12 13	10 10	0.0V 0.0V
red org	14 15	1 8	24V~ 24V~
red grn	10 11	9 9	0.0V 0.0V
red brn	18 17	11 5	+10V +10V
red gry	20 21	12 12	+10V +10V
blk blu	23 24	7 14	+31V +31V
blk	25	14	+31V
	2 22		(Key) (Key)

6.5
POWER SUPPLY UNIT 1.228.170

FRONT- AND REAR COMPONENTS

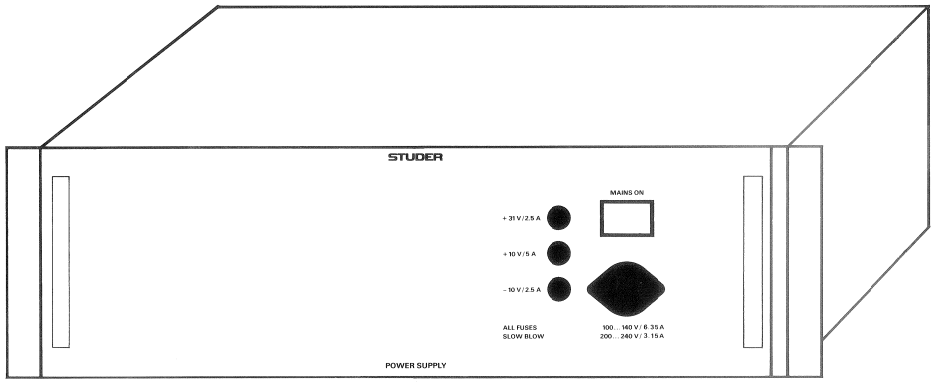

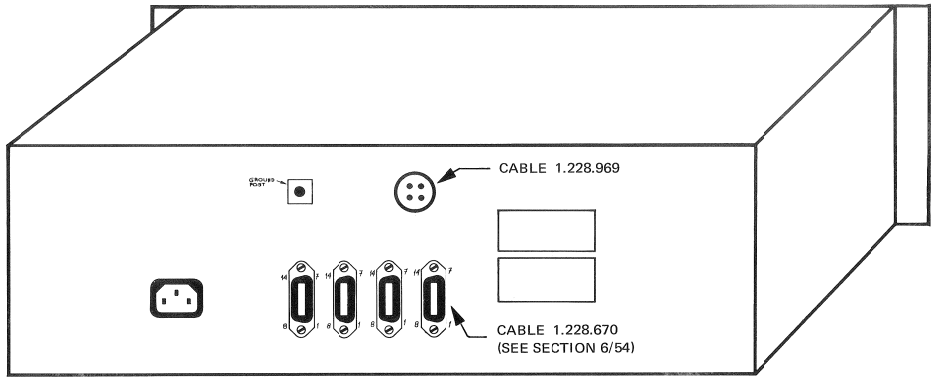

POWER SUPPLY CABLE 1.228.969

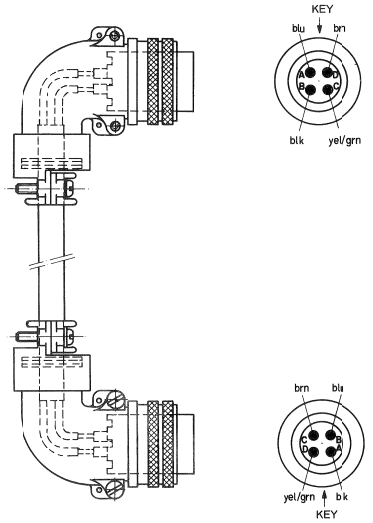

A/B AND C/D SHORTED

THIS CABLE DISTRIBUTES A DC-VOLTAGE 0F +10V TO THE CONNECTOR ELEMENT 1.228.920 ON THE REAR OF THE SLAVE RACK (SEE SECTION 6/59).

POWER SUPPLY TLS 1.228.170

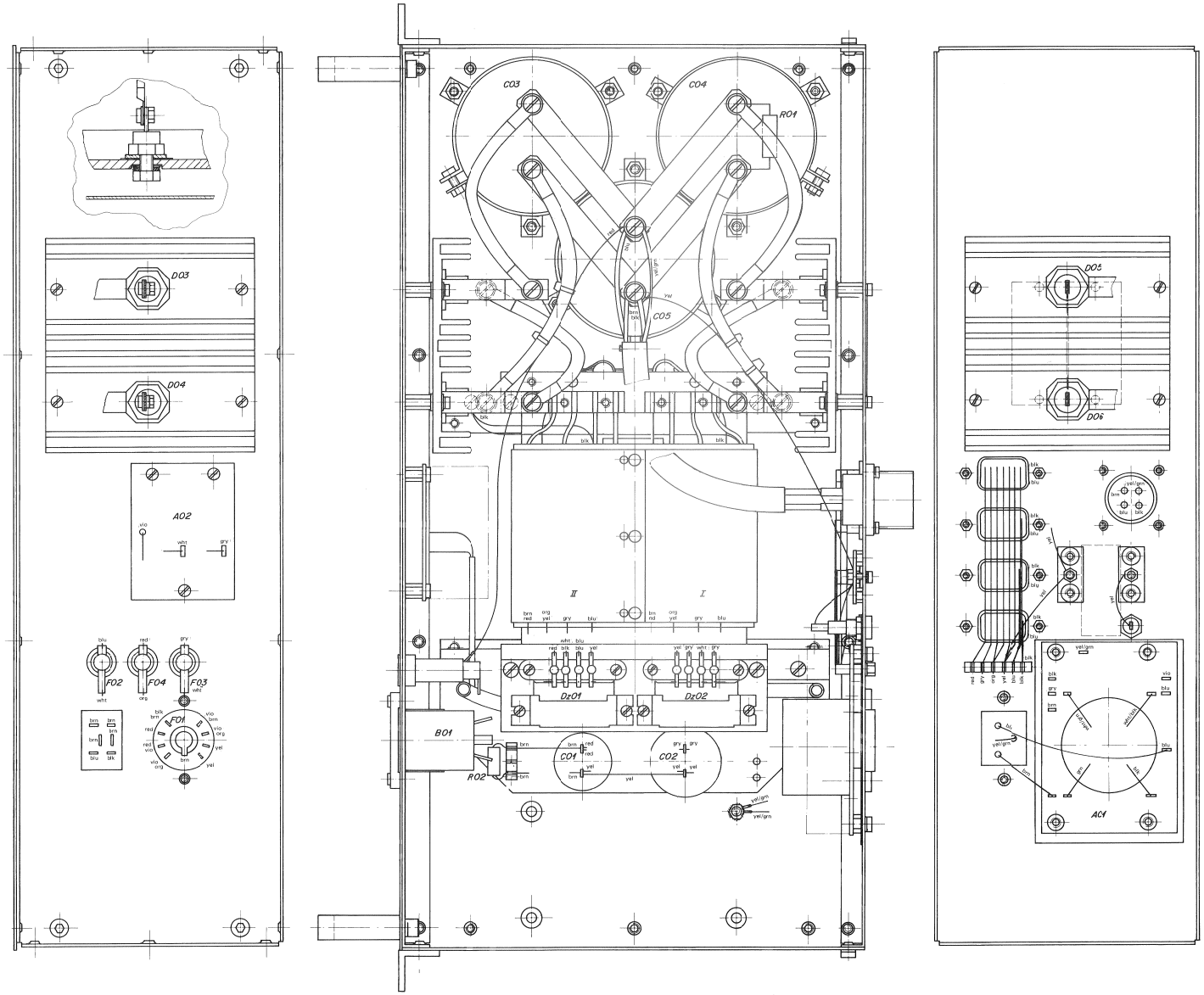

IND	POS NO	PART NO	VALUE	SPECIFICATIONS/EQUIVALENT	MFR
	A 01	1.180.336.00		line Filter PCB	
	A 02	1.228.171.00		Switch ON Board	
	B 01	51.02.0140		24-30V, 10mA, W 2x4,6D	
	C 01	59.99.0400		4700U 50 V EL	
	C 02	59.26.3223		22nF 50% 16V EL	
	C03-05	59.99.0423		150nF -10% 16V EL	
	D 03-06	50.04.0514		MBR 7520,75Hz 030,Si	
	Dz 01	70.01.0235		B 80 C 3700/2200 Si	
	Dz 02	70.01.0235		B 80 C 3700/2200 Si	
	F 01	51.01.0122		3,15 A, 5 x 20, T	
	F 02	51.01.0121		2,5 A, 5 x 20, T	
	F 03	51.01.0121		2,5 A, 5 x 20, T	
	F 04	51.01.0124		5 A, 5 x 20, T	
1	R 01	57.13.4471		470 Ω, 5%, .5W, CSCH	
	R 02	57.56.5470		47 Ω, 10%, 4W, DR	

IND	DATE	NAME
④		
③		
②		
①	21.1.81	Vo/gv
○	25.8.80	/gv

STUDER Netzteil TLS 1.228.170.00 PAGE 1 OF 1

POWER SUPPLY TLS 1.228.170

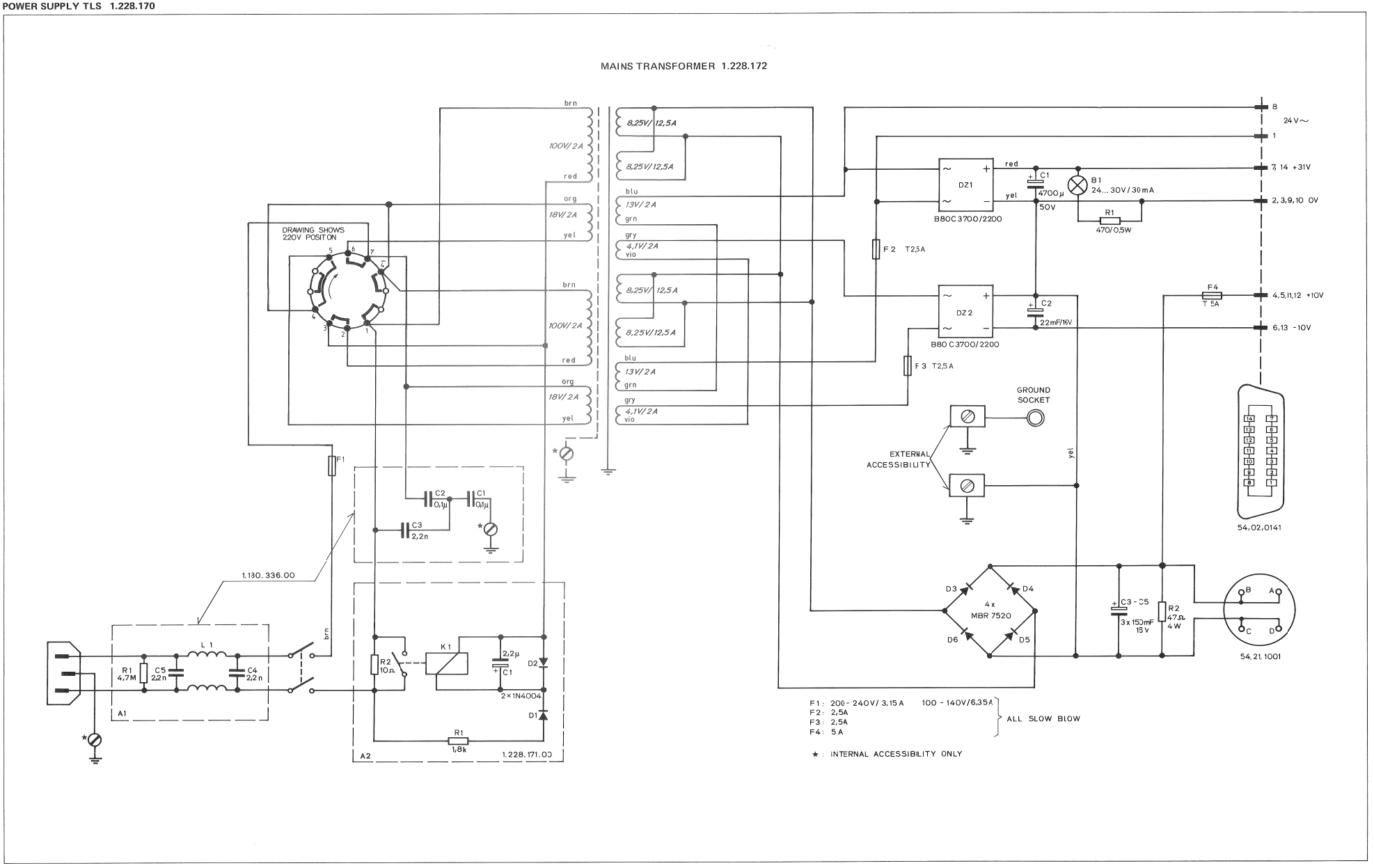

SWITCH ON BOARD 1.228.171

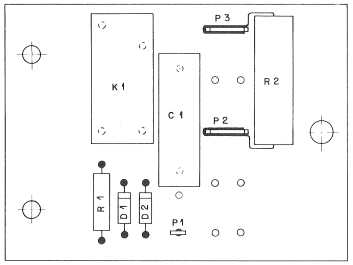

1.228.171.00

IND	POS NO	PART NO	VALUE	SPECIFICATIONS/EQUIVALENT	MFR
1	C 01	59.05.2225	2,2 U	±10% 100V MPC	
	D 01	50.04.0105	1N4004	10µs,400V,Isurge 30A	
	D 02	50.04.0105	1N4004		
	K 01	56.01.0119	42V - 90V	1 * A 220V/6A	
	P 01	54.02.0320	2,8*0,8		
	P 02	54.02.0335	6,3*0,8		
	P 03	54.02.0335	6,3*0,8		
1	R 01	57.43.4182	1,8 k	5% .5W CF	
1	R 02	57.56.5100	10 Ω	10% 4 W Wire	
	A 01	1.168.740.11		Switch on Board	

IND	DATE	NAME
④		
③		
②		
①	4.3.80	Vo/gv
○	27.6.79	Saxer/gv

STUDER	Switch on Board	1.228.171.00	PAGE 1 OF 1

LINE FILTER PCB 1.180.336–81

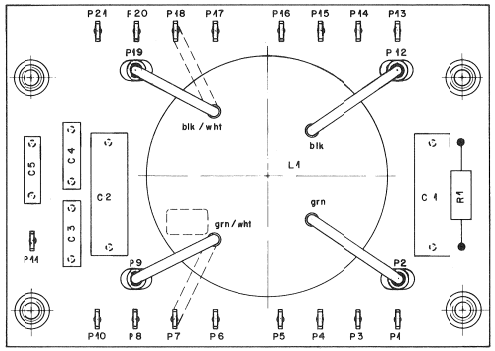

1.180.336-81

IND	POS NO	PART NO	VALUE	SPECIFICATIONSEQUIVALENT	MFR
	R 1	57.03.5475	4,7 MΩ	10% 0,5W CMA	
	L 1	1.022.196.00	RD 52-6	2 × 6A 2 × 3mH	Sch.
	C 1	59.99.0453	0,1µ	250 V 10% MP	R
	C 2	59.99.0453	0,1µ	250 V 10% MP	R
	C 3	59.99.0458	2,2µ	250 V 10% MP	R
	C 4	59.99.0458	2,2µ	250 V 10% MP	R
	C 5	59.99.0458	2,2µ	250 V 10% MP	R
	P1-21	54.02.0320	Flach	2,8 × 0,8 gerade	AMP

IND	DATE	NAME
④		
③		
②		
①		
○	07.05.80	Kurz

Sch = Schaffner
R = Rifa

STUDER	LINE FILTER PCB 6	1.180.336.81	PAGE 1 OF 1

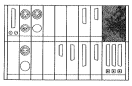

CONNECTOR ELEMENT 1.228.920

COLOR	PC-BOARD 1.228.919-11	AMP 24POLE 54.02.0447	GR 99 1.228.399	SOCKET 54.21.1001
blk		11	EL 20 10A	
blk		12	20 10B	
blk		13	20 10C	
blu		1	20 4A	
blu		3	20 4B	
blu		4	20 4C	
wht		23	20 7A	
wht		24	20 7B	
wht		25	20 7C	
blk	D 7		EL 20 1A	
	E 7		20 1B	
	D 6		20 1C	
	E 3		18 10A	
	D 2		18 10B	
	E 2		18 10C	
	E 6		12 1A	
	D 5		12 1B	
	E 5		12 1C	
	D 4		10 1A	
	E 4		10 1B	
	D 3		10 1C	
	D 1		2 1A	
	E 1		2 1B	
blk	F 1		2 1C	
grn	A 7		EL 20 32A	
	B 7		20 32B	
	A 6		20 32C	
	B 3		18 7A	
	A 2		18 7B	
	B 2		18 7C	
	B 6		12 32A	
	A 5		12 32B	
	B 5		12 32C	
	A 4		10 32A	
	B 4		10 32B	
	A 3		10 32C	
	A 1		2 32A	
	B 1		2 32B	
grn	C 1		2 32C	
brn	-			D
yel/grn	-			C
blu	+			A
blk	+			B

C1/C4 : 59.99.0205
C2/C3 : 59.99.0201

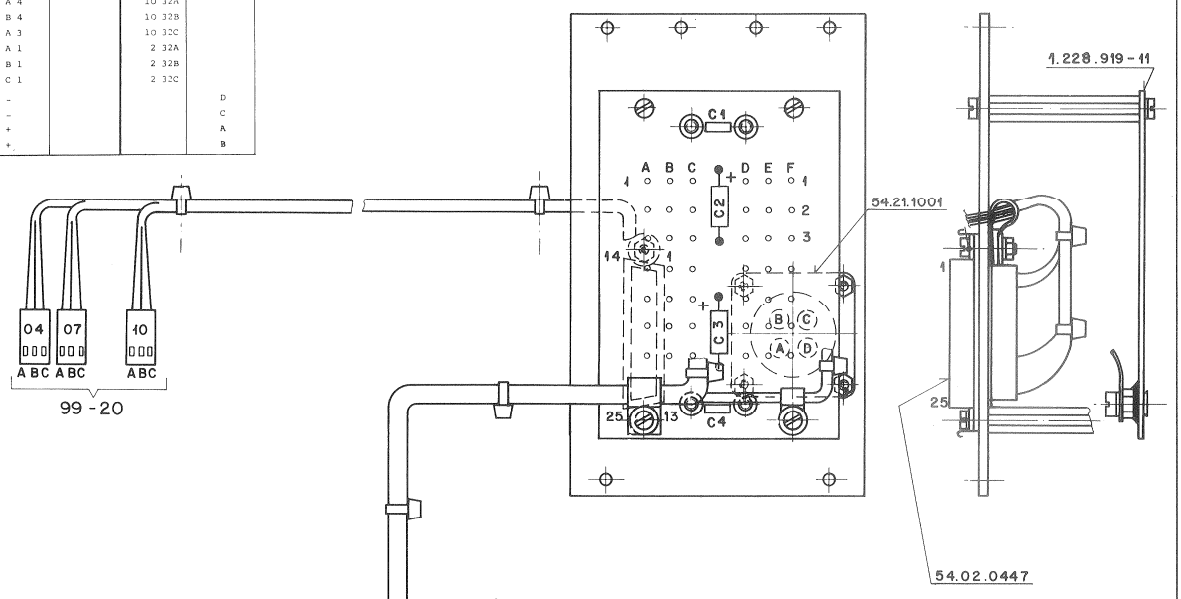

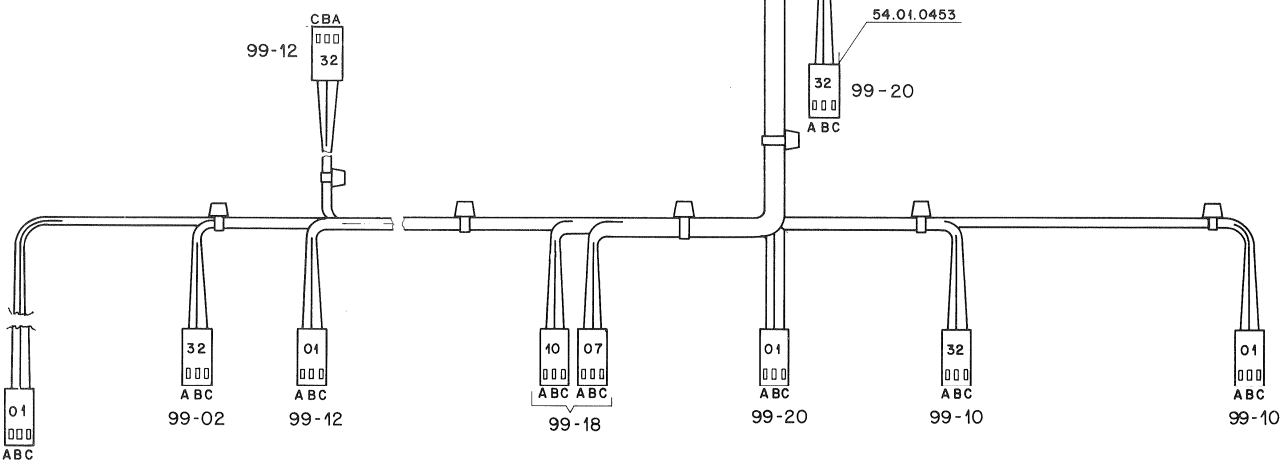

6.6
BASIC PROGRAMMER UNIT 1.228.380

A80
LOCATOR

LOCATION OF BOARDS

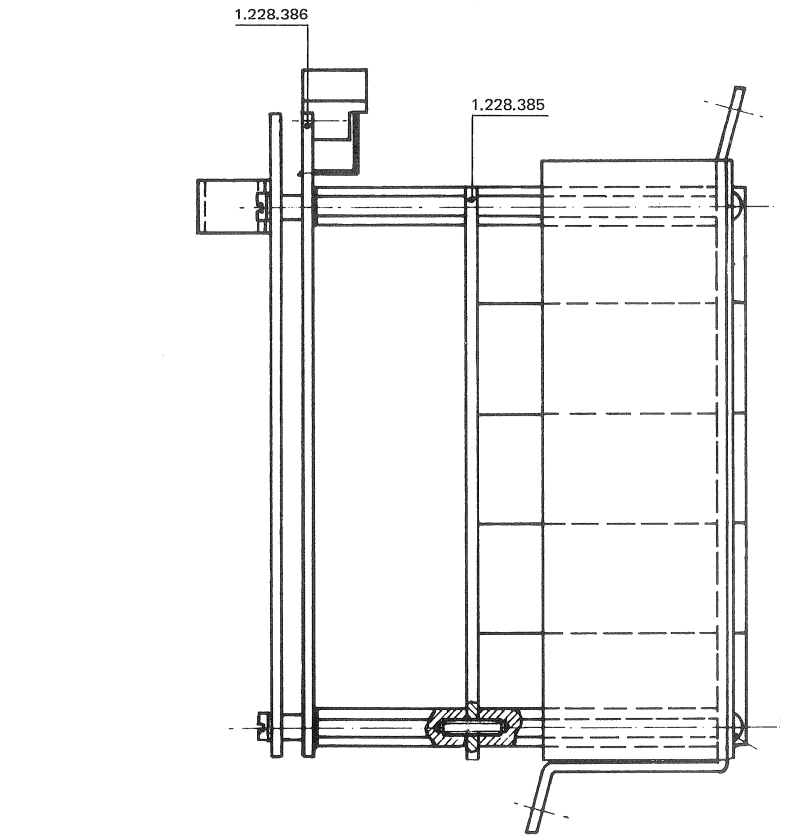

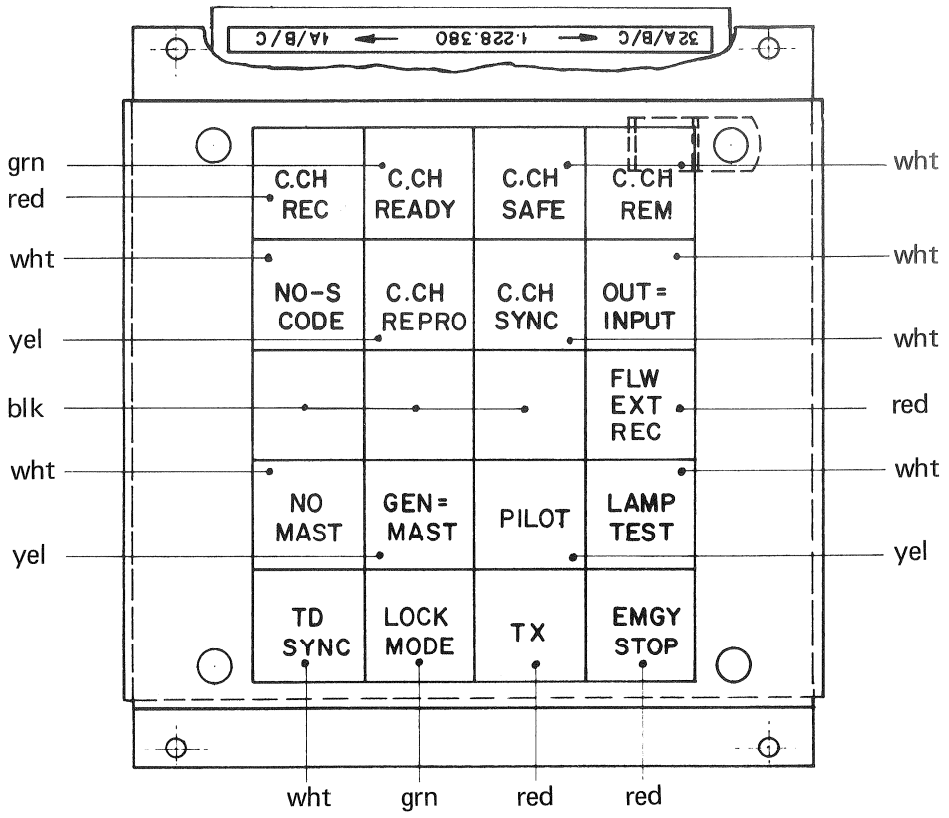

KEYBOARD PCB 1.228.385

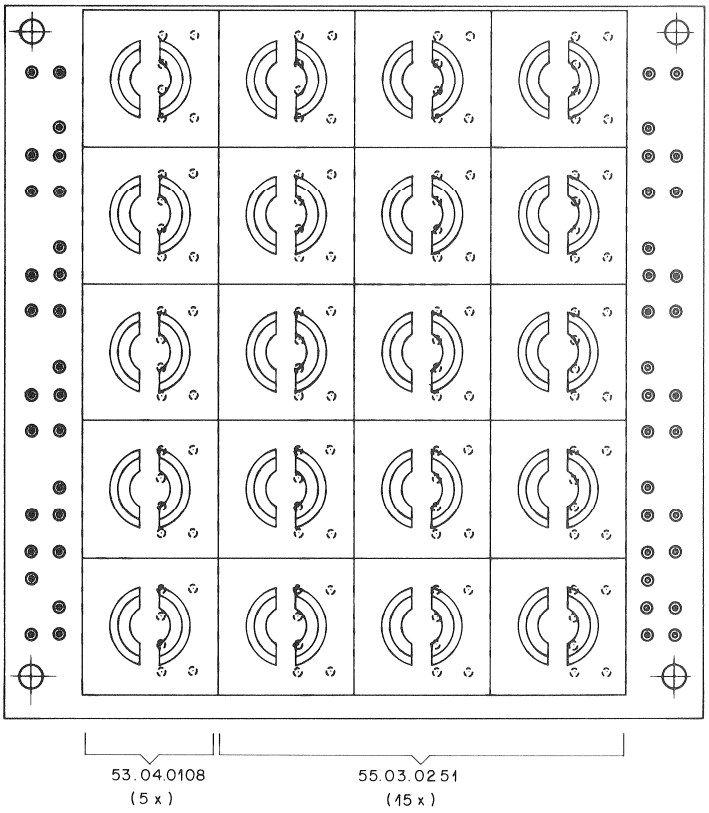

DRIVER PCB 1.228.386

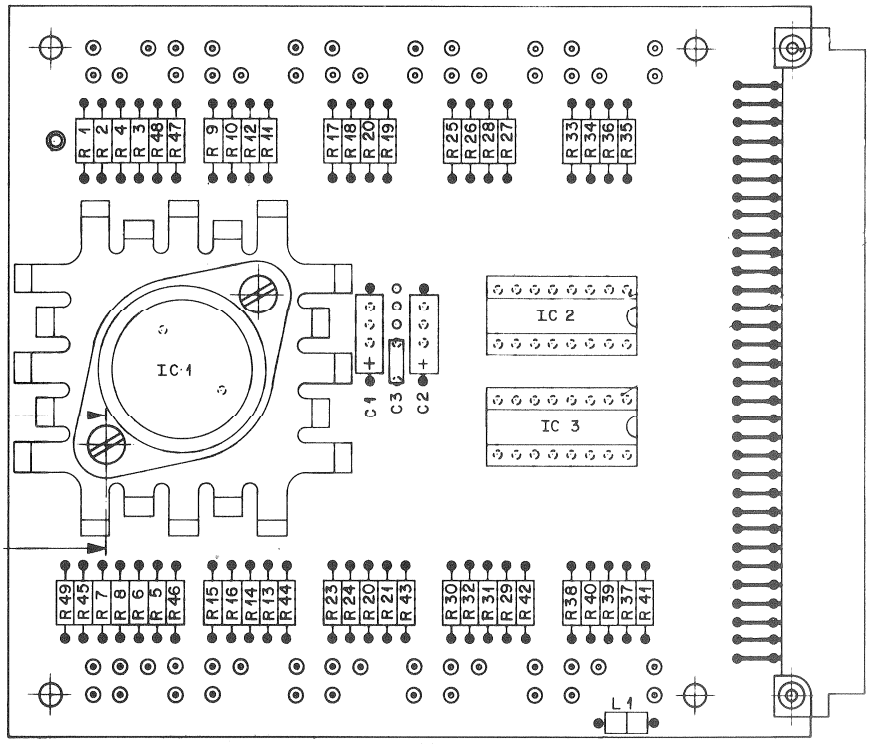

POS NO	PART NO	VALUE	SPECIFICATIONS	EQUIVALENT	MFR
C 01	59.99.0201	6,8 µ	35 V 20% TA		
C 02	59.99.0202	39 µ	10 V		
C 03	59.99.0205	68 000 p	63 V KER		SI
TP 1	61.99.0124	RF Suppress			
IC 1	50.05.0133	LM309K	5 V Stabi		
IC 2	50.05.0224	N8T96B	Hex Invert Driv		
IC 3	50.05.0224	N8T96B	Hex Invert Driv		
R 01	57.02.5100	10 Ω	10%		
R 02	57.02.5471	470 Ω			
R 03	57.02.5100	10 Ω			
R 04	57.02.5471	470 Ω			
R 05	57.02.5100	10 Ω			
R 06	57.02.5471	470 Ω			
R 07	57.02.5100	10 Ω			
R 08	57.02.5471	470 Ω			
R 09	57.02.5100	10 Ω			
R 10	57.02.5471	470 Ω			
R 11	57.02.5100	10 Ω			
R 12	57.02.5471	470 Ω			
R 13	57.02.5100	10 Ω			
R 14	57.02.5471	470 Ω			
R 15	57.02.5100	10 Ω			
R 16	57.02.5471	470 Ω			
R 17	57.02.5100	10 Ω			
R 18	57.02.5471	470 Ω			
R 19	57.02.5100	10 Ω			
R 20	57.02.5471	470 Ω			
R 21	57.02.5100	10 Ω			
R 22	57.02.5471	470 Ω			
R 23	57.02.5100	10 Ω			
R 24	57.02.5471	470 Ω			
R 25	57.02.5100	10 Ω			
R 26	57.02.5471	470 Ω			
R 27	57.02.5100	10 Ω			
R 28	57.02.5471	470 Ω			
R 29	57.02.5100	10 Ω			
R 30	57.02.5471	470 Ω			
R 31	57.02.5100	10 Ω			
R 32	57.02.5471	470 Ω			
R 33	57.02.5100	10 Ω			
R 34	57.02.5471	470 Ω			

IND	DATE	NAME
0	20.10.76	MS/gv

STUDER | Driver Print Basic Programmer | 1.228.386 | PAGE 1 of 2

POS NO	PART NO	VALUE	SPECIFICATIONS	EQUIVALENT	MFR
R 35	57.02.5100	10 Ω	10%		
R 36	57.02.5471	470 Ω			
R 37	57.02.5100	10 Ω			
R 38	57.02.5471	470 Ω			
R 39	57.02.5100	10 Ω			
R 40	57.02.5471	470 Ω			
R 41	57.02.5103	10 K			
R 42	57.02.5103	10 K			
R 43	57.02.5103	10 K			
R 44	57.02.5103	10 K			
R 45	57.02.5103	10 K			
R 46	57.02.5103	10 K			
R 47	57.02.5103	10 K			
R 48	57.02.5103	10 K			
R 49	57.02.5103	10 K			
P 01	54.01.0365	2*32	2,54 mm Löt		
TP 1	54.01.0471	Test Punkt			

IND	DATE	NAME
0	20.10.76	MS/gv

STUDER | Driver Print Basic Programmer | 1.228.386 | PAGE 2 of 2

A80
LOCATOR

BASIC PROGRAMMER 1.228.380 (1.228.780)

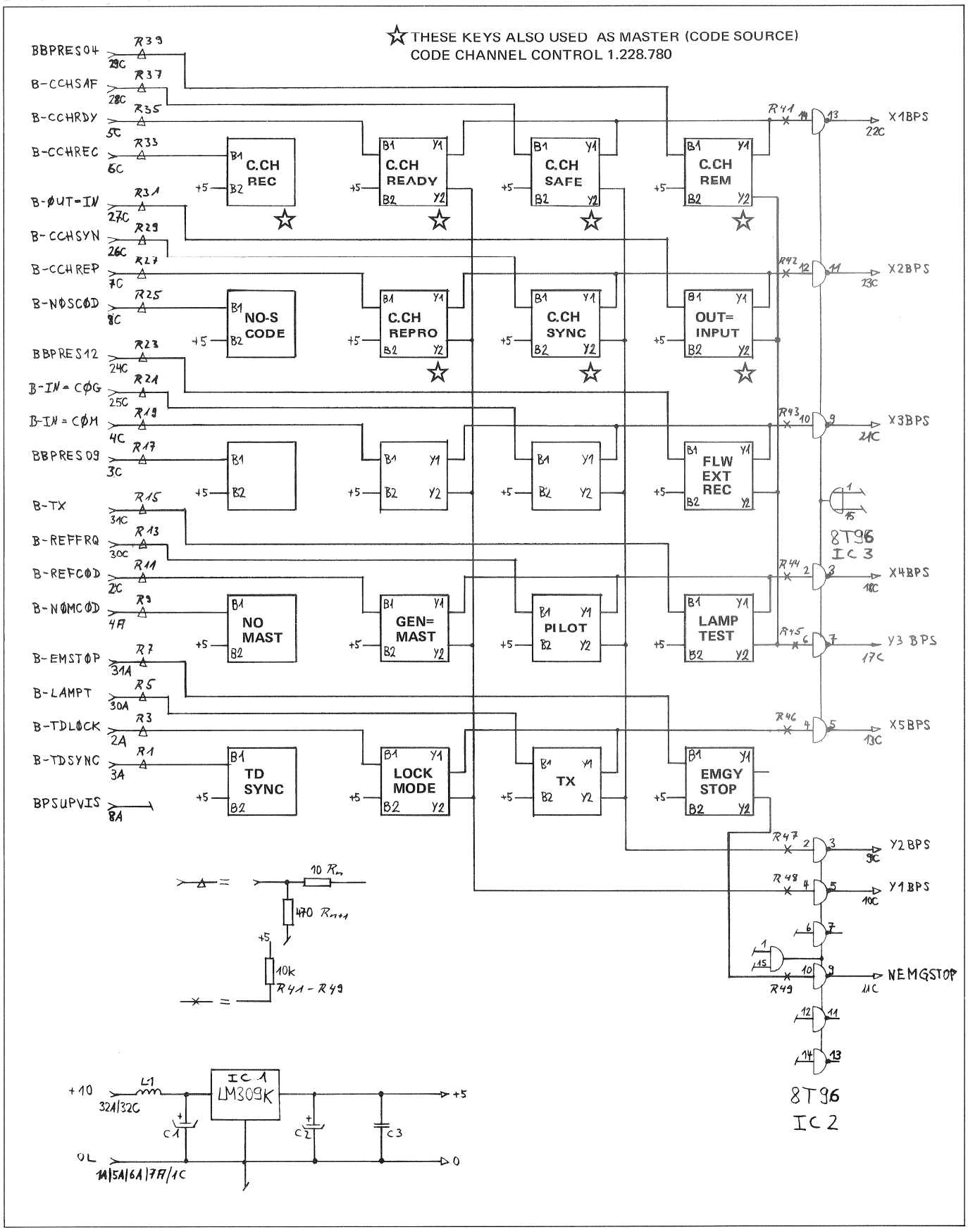

BASIC PROGRAMMER CABLE 1.228.678

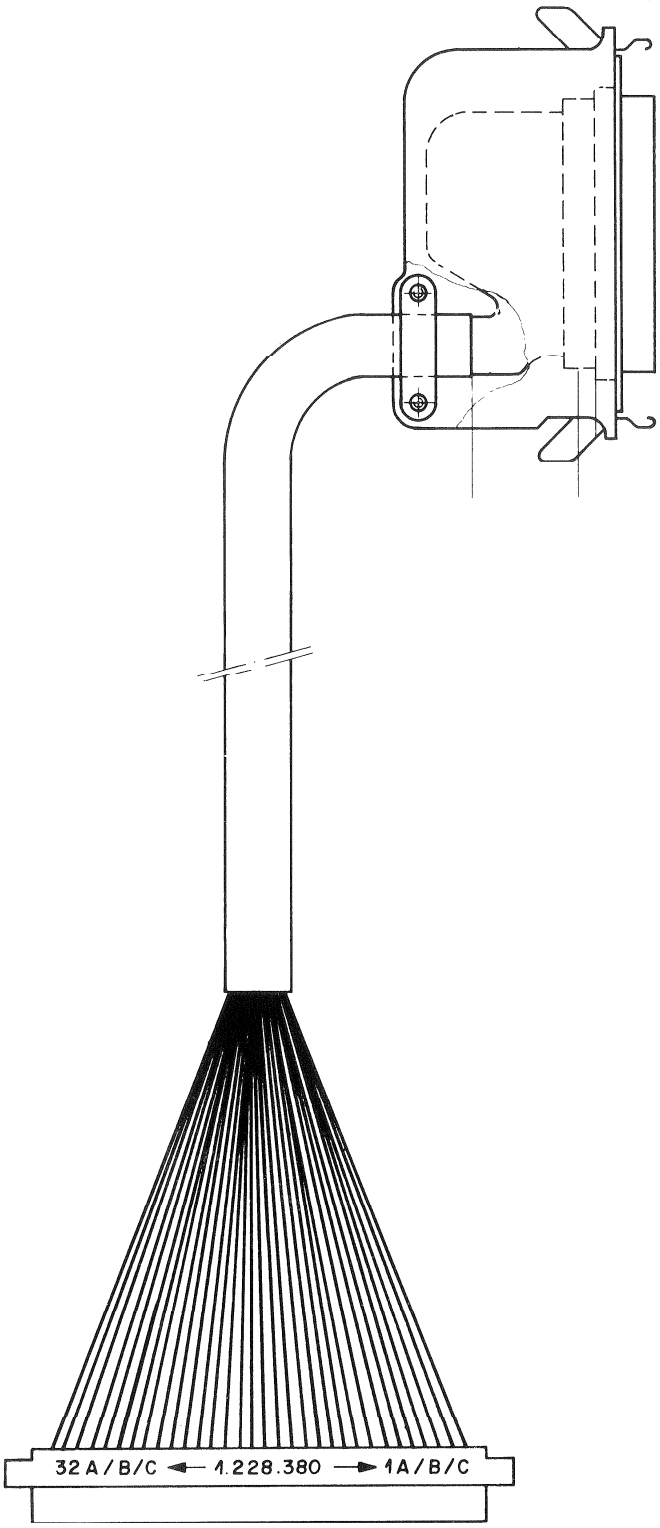

Sign. Name	Color	AMP 50 pol. male	AMP 96 pol. female
OL	wht	2	1 A
B-LKMBP	brn	3	2 A
B-TDSYNC	grn	4	3 A
B-NOMBP	yel	5	4 A
OL	gry	6	5 A
OL	pink	7	6 A
OL	blu	8	7 A
BPSUPVIS	red	9	8 A
	blk	10	25 A
	vio	11	26 A
gry pink	12	27 A	
	blu red	12	28 A
	wht grn	14	29 A
B-TX	brn grn	15	30 A
B-EMSTOP	wht yel	16	31 A
+10	yel brn	17	32 A
OL	wht gry	18	1 C
B-GEN=M	gry brn	19	2 C
BBPRES 09	wht pink	20	3 C
BBPRES 10	pink brn	21	4 C
B-CCHRDY	wht blu	22	5 C
B-CCHREC	brn blu	23	6 C
B-CCHREP	wht red	24	7 C
B-NOSCOD	brn red	25	8 C
Y2 BPS	wht blk	26	9 C
Y1 BPS	brn blk	27	10 C
NEMGSTOP	gry grn	28	11 C
-5	yel gry	29	12 C
X5 BPS	pink grn	30	13 C
-12	yel pink	31	14 C
0A	grn blu	32	15 C
+12	yel blu	33	16 C
Y3 BPS	grn red	34	17 C
X4 BPS	yel red	35	18 C
OK	grn blk	36	19 C
+24	yel blk	37	20 C
X3 BPS	gry blu	38	21 C
X1 BPS	pink blu	39	22 C
X2 BPS	gry red	40	23 C
BBPRES 12	pink red	41	24 C
BBPRES 11	gry blu	42	25 C
B-CCHSYN	pink blu	43	26 C
B-OUT=IN	blu blk	44	27 C
B-CCHSAF	red blk	45	28 C
B-REMOTE	wht brn blk	46	29 C
B-PILOT	yel grn blk	48	30 C
B-Lampt	gry pink blk	49	31 C
+10	blu red blk	50	32 C
Key		1	
Key		47	

CODE CHANNEL CONTROL FOR A80 MASTER 1.228.780

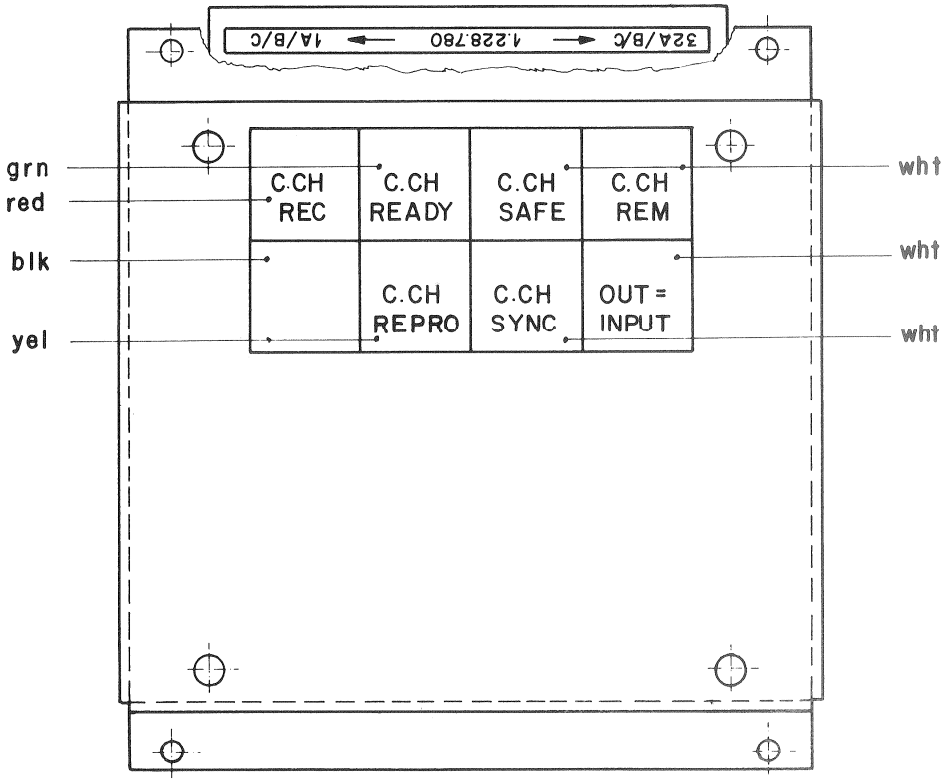

SCHEMATIC DIAGRAMM SEE UPPER PART OF DIAGRAMM IN SECTION 6/63.

A80 LOCATOR | A80 MASTER-CONTROL | A800

MASTER (CODE SOURCE)

AUDIO TRANSPORTS

A800

A80/OTHERS

SECTION 7.3 ... 7.8:
VIDEO TRANSPORTS

7.3 ... 7.8

SECTION 7.2:
SWITCH SET
1.228.373

7

SECTION 7.1: INTERFACE RACK
1.228.890

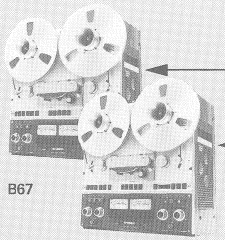

B67

7.9

7.9

7.9

7.9

SECTION 7.9:
ADDRESS START INTERFACE
1.228.374 (1.228.623)

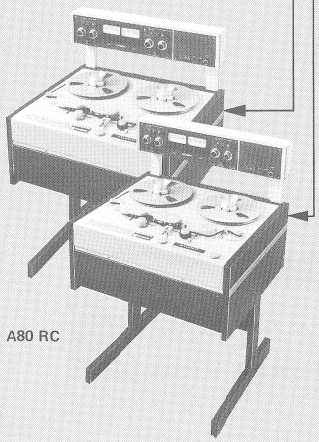

A80 RC

25/50

8000

SECTION 7.10:
EXTERNAL FREQUENCY
CONTROLLER 1.228.601

SPROCKET
FILM TRANSPORT

STATION SYNC
FREQUENCY, CODE

SLAVE PROCESSOR RACK

SECTION 2: SCHEMATIC DIAGRAMS
RACK LOCATIONS 1-20, LAYOUTS,
PARTS LIST, JUMPER SETTING

SECTION 3: CIRCUIT DESCRIPTION
RACK LOCATIONS 1-20

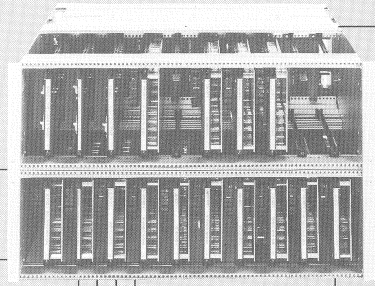

SECTION 4:
BACK PANELS
ORGANIZATION
AND
WIRING GR 99

(REAR OF RACK)
SECTION 5:
CONNECTION
FIELDS
RACK ELEMENTS
UPPER PART GR 98,
LOWER PART GR 97

SLAVE PERIPHERAL EQUIPMENTS

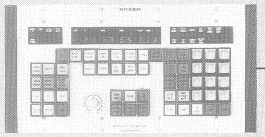

6.1

SECTION 6.1: MAIN PROGRAMMER
1.228.460 (461)

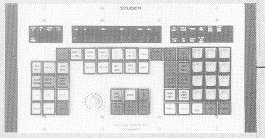

6.1

SECTION 6.1: MAIN PROGRAMMER
1.228.460 (461)

6.3

SECTION 6.3: PARALLEL/ SERIAL
CONVERTER
1.228.490

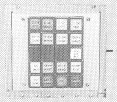

6.6

SECTION 6.6: BASIC PROGRAMMER
1.228.380

6.4

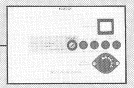

SECTION 6.4: POWER SUPPLY
1.228.150

6.2

6.5

SECTION 6.5: POWER SUPPLY
1.228.170

SECTION 6.2: CODE CHANNEL REMOTE CONTROL
1.228.328

SLAVE TRANSPORTS

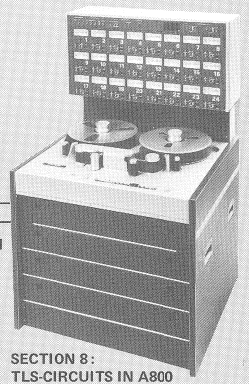

8

8.1

SECTION 8:
TLS-CIRCUITS IN A800
1.180.086

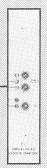

SECTION 8.1:
CODE CHANNEL
REMOTE CONTROL A800
1.328.140

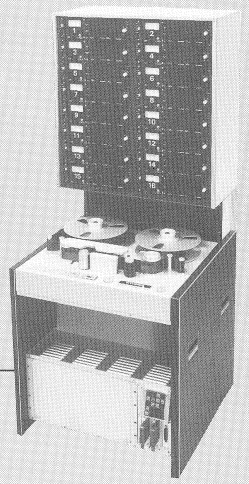

9

SECTION 9:
TLS-MODIFICATIONS AND CIRCUITS
IN A80 VU MK II / MK III

☒ INDICATES PARAGRAPH OF CABLE DESCRIPTION

CONTENTS SECTION 7

MASTER/INTERFACE RACK

SECTION	PAGE		PART NUMBER	DESCRIPTION
7.1	**7/3**			**GENERAL/INTERFACE RACK**
				LOCATION OF INTERFACE RACK ELEMENTS
	7/4		1.228.418	STABILIZER PCB +5V/+5V
	7/5	▲	1.228.621–81	TLS MASTER CONTROL PROCESSOR (BASIC EQUIPMENT)
	7/8		1.228.618	POWER SUPPLY CONNECTOR
	7/9		1.228.670	POWER SUPPLY CABLE
	7/10		1.228.648	CONNECTOR TLS MASTER CONTROL
	7/11		1.228.960	TLS MASTER CONTROL CABLE
	7/12			WIRE LIST
7.2	**7/13**		**1.228.373**	**SWITCH SET**
				SURVEY OF INTERFACE RACK WITH SWITCH SET
	7/14		1.228.624	TLS MASTER CONTROL SWITCH PCB
	7/16		1.228.644	CONNECTOR MASTER CONTROL CODE OUTPUT
			1.228.645	CONNECTOR MASTER CONTROL CODE INPUT
7.3	**7/17**		**1.100.011**	**MASTER CONTROL SET TO SONY VP 2850/ VP 2030/ VP 2630/ VP 2860**
				SURVEY OF INTERFACE RACK (SONY VP 2850)
	7/18			TLS MASTER CONTROL PROCESSOR PCB 1.228.621–81
	7/19			TLS MASTER CONTROL ADAPTER PCB VP 2850
	7/20		1.228.649	CONNECTOR TO MASTER REMOTE CONTROL
			1.228.639–11	CABLE MASTER REMOTE CONTROL-INTERFACE RACK
			10.022.114	CODE AMPLIFIER FOR SONY VP 2030/ VP 2630/ VP 2850/ VP 2860
7.4	**7/23**		**1.100.012**	**MASTER CONTROL SET TO SONY BVU 200**
				SURVEY OF INTERFACE RACK (SONY BVU 200)
	7/24			TLS MASTER CONTROL PROCESSOR PCB 1.228.621–81
	7/25			TLS MASTER CONTROL ADAPTER PCB SONY BVU 200
	7/26		1.228.649	CONNECTOR TO MASTER REMOTE CONTROL
			1.228.639–12	CABLE MASTER REMOTE CONTROL-INTERFACE RACK
7.5	**7/27**		**1.100.013**	**MASTER CONTROL SET TO AMPEX VPR 1/ VPR 2**
				SURVEY OF INTERFACE RACK (AMPEX VPR 1)
	7/28			TLS MASTER CONTROL PROCESSOR PCB 1.228.621–81
	7/29			TLS MASTER CONTROL ADAPTER PCB AMPEX VPR 1
	7/30		1.228.649	CONNECTOR TO MASTER REMOTE CONTROL
			1.228.639–13	CABLE MASTER REMOTE CONTROL-INTERFACE RACK
	7/31		10.023.005	TLS MASTER CONTROL ADAPTER PCB AMPEX VPR 2
	7/32		1.228.649	CONNECTOR TO MASTER REMOTE CONTROL
			1.228.639–13 (VPR 2)	CABLE MASTER REMOTE CONTROL-INTERFACE RACK
7.6	**7/33**	▲	**1.100.014**	**MASTER CONTROL SET TO BOSCH BCN 50**
				SURVEY OF INTERFACE RACK (BOSCH BCN 50)
	7/34	▲	1.228.621–82	TLS MASTER CONTROL PROCESSOR PCB 1.228.621–82
	7/37			TLS MASTER CONTROL ADAPTER PCB BOSCH BCN 50
	7/38		1.228.643	BCN 40/50 CODE RECEIVER ASSEMBLY
	7/39		1.228.647	CONNECTOR TO MASTER AND MASTER REMOTE CONTROL
			1.228.635	CABLE MASTER-INTERFACE RACK
7.7	**7/41**		**1.100.015**	**MASTER CONTROL SET TO SONY BVH 1000 PS**
				SURVEY OF INTERFACE RACK (SONY BVH 1000 PS)
	7/42	▲	1.228.625	TLS MASTER CONTROL PROCESSOR PCB 1.228.625
	7/44			TLS MASTER CONTROL ADAPTER PCB SONY BVH 1000 PS
	7/45		1.228.649	CONNECTOR TO MASTER REMOTE CONTROL
			1.228.638	CABLE MASTER REMOTE CONTROL-INTERFACE RACK
7.8	**7/47**		**1.100.016**	**MASTER CONTROL SET TO JVC CR 8500 LE**
				SURVEY OF INTERFACE RACK (JVC CR 8500 LE)
	7/48			TLS MASTER CONTROL PROCESSOR PCB 1.228.621
	7/49			TLS MASTER CONTROL ADAPTER PCB JVC CR 8500 LE
	7/50		1.228.649	CONNECTOR TO MASTER REMOTE CONTROL
			1.228.639–16	CABLE MASTER REMOTE CONTROL-INTERFACE RACK
7.9	**7/51**			**TLS ADDRESS START**
				SURVEY OF INTERFACE RACK WITH ADDRESS START
	7/52		1.228.623	TLS ADDRESS START INTERFACE PCB
	7/53		1.228.636	CABLE ADDRESS START INTERFACE RACK-EFFECT MACHINE
	7/54		1.228.646	CONNECTOR ASSENBLY TLS ADDRESS START
			1.228.964/965	CABLE INTERFACE RACK AUX-TLS AUX
7.10	**7/55**	▲	**1.228.601**	**EXTERNAL FREQUENCY CONVERTER**
				BLOCKDIAGRAM
	7/56		1.228.601	EXTERNAL FREQUENCY CONVERTER PCB
	7/58			EXTERNAL FREQUENCY CONVERTER UNIT

ALL PCBs MARKED WITH THIS SIGN ▲ CONTAIN COMPONENTS SENSITIVE TO STATIC CHARGES.
PLEASE, REFER TO PREFACE BEFORE YOU REMOVE THESE BOARDS.

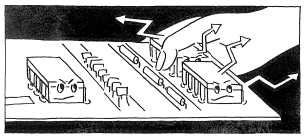

7.1
GENERAL/INTERFACE RACK

TLS INTERFACE RACK

LOCATION OF INTERFACE RACK ELEMENTS

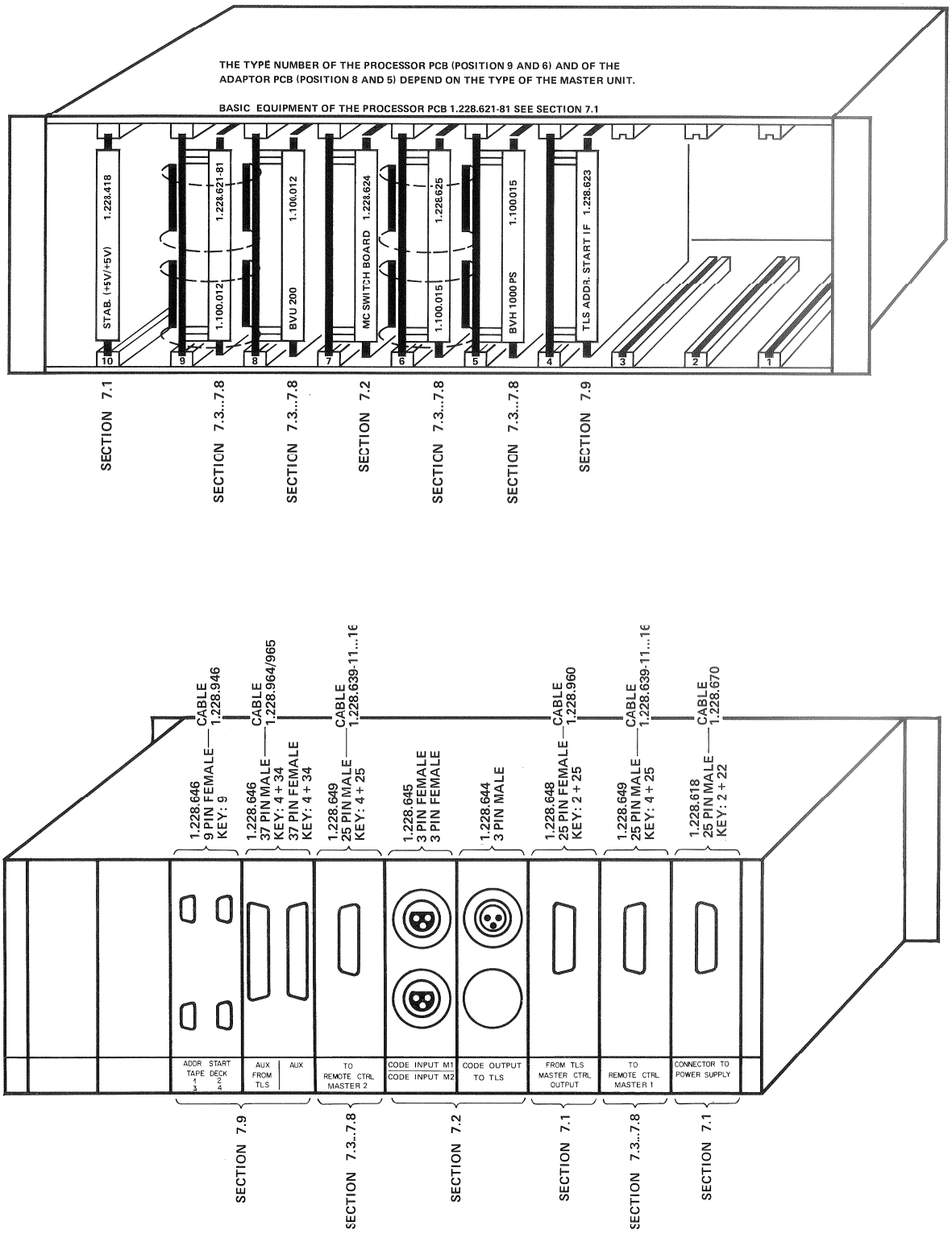

TLS INTERFACE RACK

STABILIZER PCB +5V/+5V 1.228.418

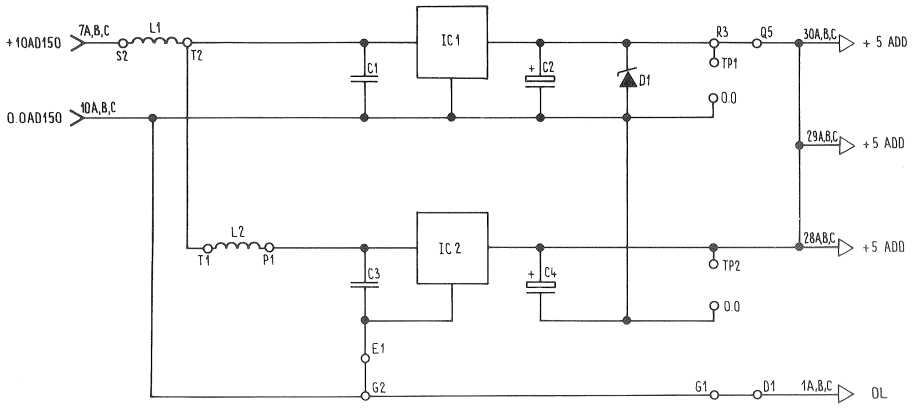

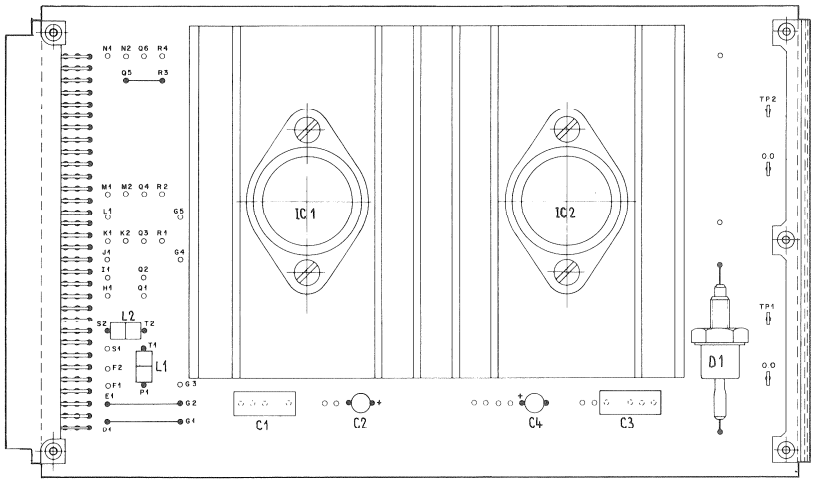

POS NO	PART NO	VALUE	SPECIFICATIONS	EQUIVALENT MFR
C 01	59.31.1224	0,22µ	20% 100V MPETP	
C 02	59.36.5100	10µ	20% 35V- TA	
C 03	59.36.5100	10µ		
C 04	59.31.1224	0,22µ	20% 100V MPETP	
D 01	50.04.1502	6,2V	5% 1,3W Z	
IC 01	50.05.0133	LM309K	TO3 5V LIN	MLM309K
IC 02	50.05.0133	LM309K		
L 01	61.99.0124	D3,5x3	2x Ferritperle	
L 02	61.99.0124	D3,5x3		
S 01	54.01.0358	3 x 32	Leiste Burndy	
TP1-4	29.21.6002		4x Lötöse	

IND	DATE	NAME
④③②①○	17.5.78	Spe/gv

TLS INTERFACE RACK

TLS MASTER CONTROL PROCESSOR (BASIC EQUIPMENT) 1.228.621–81

Allgemeine Einführung in das IF-Rack

Das Interface Rack ist Teil des Tape Lock Systems und ermöglicht das Fernsteuern verschiedenster Mastermaschinen durch den TLS-Programmer. Dazu müssen die Master über einen Fernsteueranschluss und eine Codeisemöglichkeit verfügen.
Im Interface Rack sind nebst der Addressstart-Elektronik für die Zuspielmaschinen ein Master-Interface-Prozessor mit dem Adapterprint zur maschinenspezifischen Anpassung untergebracht.
bracht.

Die ganze Funktionseinheit zur Steuerung des Masters wird durch die individuelle Software ergänzt und als Set unter einer eigenen Nummer aufgeführt.(z.B. 1.100.011).

Die wesentlichen Funktionen der Audio- oder Video-Master können ferngesteuert werden:

- Stop
- Wiedergabe
- Schnelles Vor- und Rückwickeln
- Pause
- Aufnahme

Diese Fernsteuerkommandos werden über drei Datenleitungen im Master Control Kabel vom Slave- zum Interfacerack übertragen.

General introduction to IF-Rack

The Interface Rack is part of the Tape Lock System and it brings out remote control functions for various types of master transports by the Main Programmer Unit. Therefore the master transport must be equipped with a remote control jack and a code reading facility.
The Interface Rack contains the Address. Start electronics to control the effect machines. and a Master Interface Processor with an Adapter PCB to match the master transport to the TLS.

The whole Master Control Unit is completed by an individual software and it is specified as a whole set with its own number (e.g. 1.100.011).

The essential functions of the master transport (Video or Audio) can be operated by the Remote Control keys on the Main Programmer:

- Stop
- Play
- Fast forward and Rewind
- Pause
- Record

The Remote Control commands are transmitted from the slave rack to the Interface rack via three data lines in the master control cable.

MCDAT2DR	MCDAT1DR	MCDAT0DR	FUNCTION
1	1	1	MControl off
1	1	0	Play
1	0	1	Pause
1	0	0	Record
0	1	1	Stop
0	1	0	Rewind
0	0	1	Loc to zero
0	0	0	Fast forward

Die Funktionen sind durch die Pegel der Datenleitungen definiert:
Um die Master-Schnittstelle universell zu halten, stehen noch folgende Signale zur Verfügung:

MC REHDR	Rehearse
MC RESDR 1	reserve
MC ZSETDR	Set to zero
MC KCUTDR	Go to edit position with pinch roller
MC DATRDY	Is set when a push button on the programmer is depressed

Die Master- Schnittstelle ist unidirektional, die Überwachung erfolgt durch das Interface.

The functions are defined by the level of the data lines:
The following signals are available to keep the Master interface universal:

The Masterinterface is unidirectional, the supervision is managed by the Interface PCB.

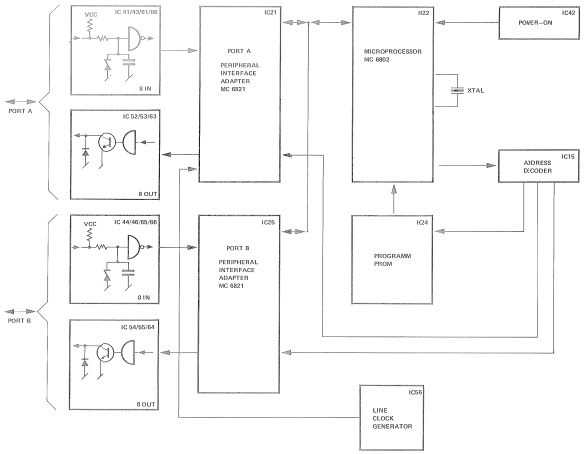

Die TLS-Funktionen werden immer dann ausgeführt, wenn MASTER CONTROL aktiv ist.

The TLS functions are executed when Master control is active.

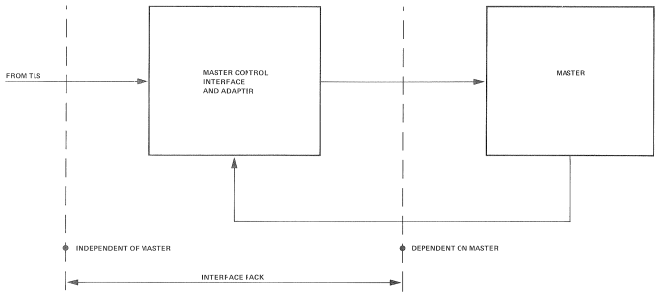

Beim Einschalten des Masters wird eine Power-On Sequenz durchgeführt und der Zustand "Master Control OFF" erstellt.

Auf "Master Control ON" geht der Master in der Zustand STOP, auf "Master Control OFF" ebenfalls auf STOP.

When the Master transport is switched on the processor runs through a "Power On" sequence which resets the Master control function.

When the Master control function is switched On or Off, the Master transport goes into Stop mode.

Der Master Control Processor 1.228.621–81 besteht aus:

- Microprocessor
- Port A
- Port B
- Programm PROM

The Master control processor 1.228.621–81 consists of:

- Microprocessor
- Port A
- Port B
- Program PROM

Die Kommunikation des Processors mit der Peripherie erfolgt über die beiden PIA (Peripheral Interface Adapter) MC 6821 C 21 und 25. Sie sind in 2 Gruppen PORT A und PORT B unterteilt. Jede Gruppe verfügt über je 8 Eingänge und 8 Ausgänge. Die Eingangssignale werden über Schmitt-Trigger-Line-Receivers zu TLS gerechten Signalen aufbereitet und dem PIA zugeführt. Zusätzlich wird die Eingangscharakteristik der Leitungen den Signalquellen angepasst.
Die Ausgänge sind Open-Collector-Drivers mit Clamp-Dioden.

The processor communicates with the peripheral devices by the two PIA (Peripheral Interface Adapters) MC 6821 IC 21 and 25. They are divided in two groups: Port A and Port B. Each group disposes of 8 Inputs and 8 Outputs. The Input signals are processed by Schmitt Trigger Line Receivers so that they match with the TLS circuits. On top of that the input characteristic of the lines is matched to the signal sources.
The outputs are designed as open collector drivers with clamp diodes.

Der Processor selbst bezieht seine Informationen aus dem Programm-Prom IC 24. Dieses Prom ist maschinenspezifisch und beinhaltet die Eigenheiten der Mastermaschine. IC 42 bewirkt bei "Power On", dass der µP in einen definierten Zustand gebracht wird.

The processor gets its information out of the program Prom IC 24. This Prom is specified according to the type of the machine and contains the characteristics of the Master transport. IC 42 defines the start position of the µP when Power is switched on.

IC 15 bereitet die Enable-Signale für die beiden PIA's und das Programm-Prom auf.

IC 15 processes the Enable signals for the two PIA's and the program Prom.

IC 56 ist als Oszillator betrieben. Er liefert ein 1kHz Rechtecksignal, das als Line Clock verwendet wird. Dieser Line Clock wird vom µP als periodischer Interrupt erkannt.

IC 56 is run as an oscillator. It generates a 1kHz square wave signal, which is used as Line Clock. This clock is recognized as a periodic interrupt by the µP.

TLS MASTER CONTROL PROCESSOR (BASIC EQUIPMENT) 1.228.621–81

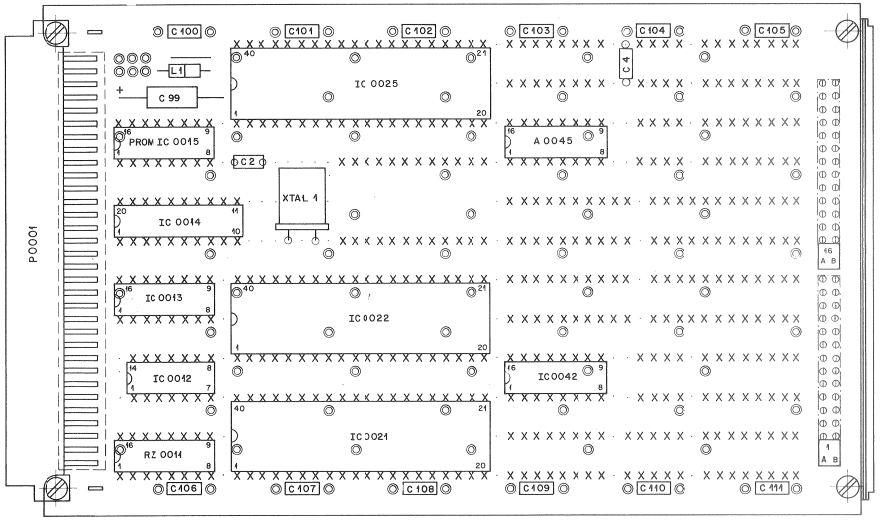

FRONT PIN NR.	SIGNAL NAME	ATTENUATOR NAME	PIN A	PIN B	PIN C	PIN D	PIN E	RECEIVER PIN
5B	PA0 - INA	DAA 1	61.1	62.1	62.16	41.1	41.16	43.2
5A	PA1 - INA	DAA 2	61.3	62.3	62.14	41.3	41.14	43.4
6B	PA2 - INA	DAA 3	61.5	62.5	62.12	41.5	41.12	43.6
6A	PA3 - INA	DAA 4	61.7	62.7	62.10	41.7	41.10	43.8
7B	PA4 - INA	DAA 5	61.9	62.8	62.9	41.8	41.9	43.11
7A	PA5 - INA	DAA 6	61.11	62.6	62.11	41.6	41.11	43.13
8B	PA6 - INA	DAA 7	61.13	62.4	62.13	41.4	41.13	43.15
2B	REQ - A	DAA 8	61.15	62.2	62.15	41.2	41.15	43.17
25B	PA0 - INB	DAB 1	66.1	65.16	65.1	46.1	46.16	44.2
25A	PA1 - INB	DAB 2	66.3	65.14	65.3	46.3	46.14	44.4
26B	PA2 - INB	DAB 3	66.5	65.12	65.5	46.5	46.12	44.6
26A	PA3 - INB	DAB 4	66.7	65.10	65.7	46.7	46.10	44.8
27B	PA4 - INB	DAB 5	66.9	65.9	65.8	46.8	46.9	44.11
27A	PA5 - INB	DAB 6	66.11	65.11	65.6	46.6	46.11	44.13
28B	PA6 - INB	DAB 7	66.13	65.13	65.4	46.4	46.18	44.15
18B	REQ - B	DAB 8	66.15	65.15	65.2	46.2	46.15	44.17

ADDRESS ALLOCATION (DECODING PROM)		
	POS	BASE ADDRESS
RAM 1K	INTERN	0000 - 03 FF
PIA PORT A	21	8000 - 8003
PIA PORT B	25	8004 - 8007
PROM	24	D000 - DFFF

PROM POS. 24 (APPLIC. DEP.)		
PART NO.	TYPE	APPLICATION
1.025.016.20	2716	UMATIC VP2850
1.025.016.50	2716	UMATIC BV200
1.025.018.00	2716	AMPEX VPR1

APPLICATION	POS. 61	POS. 62	POS. 65	POS. 64	POS. 41	POS. 46
UMATIC VP2850	14 220/330	8 100				3,3+68n
UMATIC BVU200	14 220/330	8 100	8 1K	1519K		3,3+68n
AMPEX VPR-1/2	DO	DO	DO	DO		

POS	PACKAGE POSITION	PIA 1 LAYOUT POSITION	TYPE
11	16	11A 02	15 3K3
12	14	11B 08	74LS08
13	16	11A 14	74LS133
14	20	11A 20	74LS240
15	16	11A 26	74S288/R161 ①
21	40	11C 02	MC 6821
22	40	11C 11	MC6802
24	24	11C 20	2758/2716 OR EQUIV. ①
25	40	11C 29	MC6821
41	16	12B 02	DISCR.ASSY
42	16	12B 08	74LS161
43	20	12B 14	74LS240 ②
44	20	12B 20	74LS240 ②
45	16	12B 26	DISCR.ASSY
46	16	12B 36	DO
52	8	12C 08	MC1472
53	8	12D 14	DO
54	8	12D 20	DO
55	8	12C 26	DO
56	8	12C 32	LM555
61	16	12E 02	15 R OR 14 220/330 ③
62	16	12E 08	8 R ③
63.1	8	12E 14	MC1472
63.2	8	13D 14	DO
64.1	8	12E 20	DO
64.2	8	13D 20	DO
65	16	12E 26	8 R ③
66	16	12E 32	15 R OR 14 220/330 ③

① FACTORY PART
② MOTOROLA AND FAIRCHILD ONLY
③ APPLICATION DEPENDENT

```
*   S T U D E R   *   POSITION LIST OF PARTS 1.228.621.81   *   79/03/22   *
*****************************************************************************
*   TLS INTERFACE RACK              *   TLS MASTER CONTROL PROCESSOR        *

POSITION       PART NO. DESCRIPTION OF PART
RD. POS.M
---------  ------------ ------------------------------
A    0045  1.228.733.00 PWRON ASS TLS IF PROCESSOR
C    0002    59.34.1120 C     12  P ,  5%, NP 0 , KER
C    0004    59.99.0205 C     68  N ,-20%,  63V , KER
C    0099    59.99.0202 C     39  U , 20%,  10V , TA
C    0100    59.99.0205 C     68  N ,-20%,  63V , KER
C    0101    59.99.0205 C     68  N ,-20%,  63V , KER
C    0102    59.99.0205 C     68  N ,-20%,  63V , KER
C    0103    59.99.0205 C     68  N ,-20%,  63V , KER
C    0104    59.99.0205 C     68  N ,-20%,  63V , KER
C    0105    59.99.0205 C     68  N ,-20%,  63V , KER
C    0106    59.99.0205 C     68  N ,-20%,  63V , KER
C    0107    59.99.0205 C     68  N ,-20%,  63V , KER
C    0108    59.99.0205 C     68  N ,-20%,  63V , KER
C    0109    59.99.0205 C     68  N ,-20%,  63V , KER
C    0110    59.99.0205 C     68  N ,-20%,  63V , KER
C    0111    59.99.0205 C     68  N ,-20%,  63V , KER
IC   0012    50.06.0008 IC  SN 74 LS  08 N        TTL
IC   0013    50.06.0133 IC SN 74LS133
IC   0014    50.06.0240 IC SN 74LS240
IC   0015  1.025.016.10 TLS MASTER CTRL ADDRESSDECODER
IC   0021    50.05.0270 IC MC6821P
IC   0022    50.05.0276 IC MC6702P
IC   0025    50.05.0270 IC MC6821P
IC   0042    50.06.0161 IC  SN 74 LS 161 N        TTL
P    0001    54.01.0354 P   LEISTE  3 * 32 POL  WRAP
RZ   0011    57.85.3332 RZ  15*3.3K,  2%,        DIL16
Y    0001    89.01.0378 Y 4.000MHZ
```

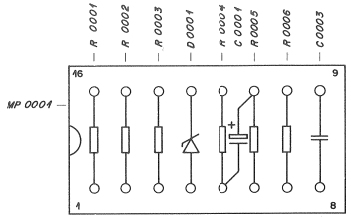

IND	POS NO	PART NO	VALUE	SPECIFICATIONS/EQUIVALENT	MFR
	C 01	59.30.3101	100 U	-20% 10V TA	
	C 02				
	C 03	59.02.5103	10 N	5% 250V MPC	
	D 01	50.04.1106	2,7 V	5% .4OW Z	
	MP 1	53.03.0170	2x8x0,3	Adaptor Plug	
1)	R 01	57.02.5102	1 k	10% .25W CMA	
1)	R 02	57.02.5102	1 k		
1)	R 03	57.02.5102	1 k		
1)	R 04	57.02.5331	330		
1)	R 05	57.02.5681	680		
1)	R 06	57.02.5683	68 k		

IND	DATE	NAME
④		
③		
②		
①	16.4.79	
○	31.10.78	B.Sch/gv

STUDER	POWER ON ASSEMBLY TLS IF PROC	1.228.733	PAGE 1 OF 1

CONNECTOR CABLE PROCESSOR-ADAPTOR PCB
1.228.655

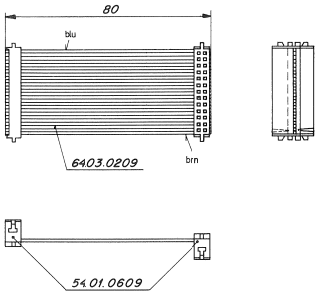

TLS INTERFACE RACK

TLS MASTER CONTROL PROCESSOR 1.228.621-81

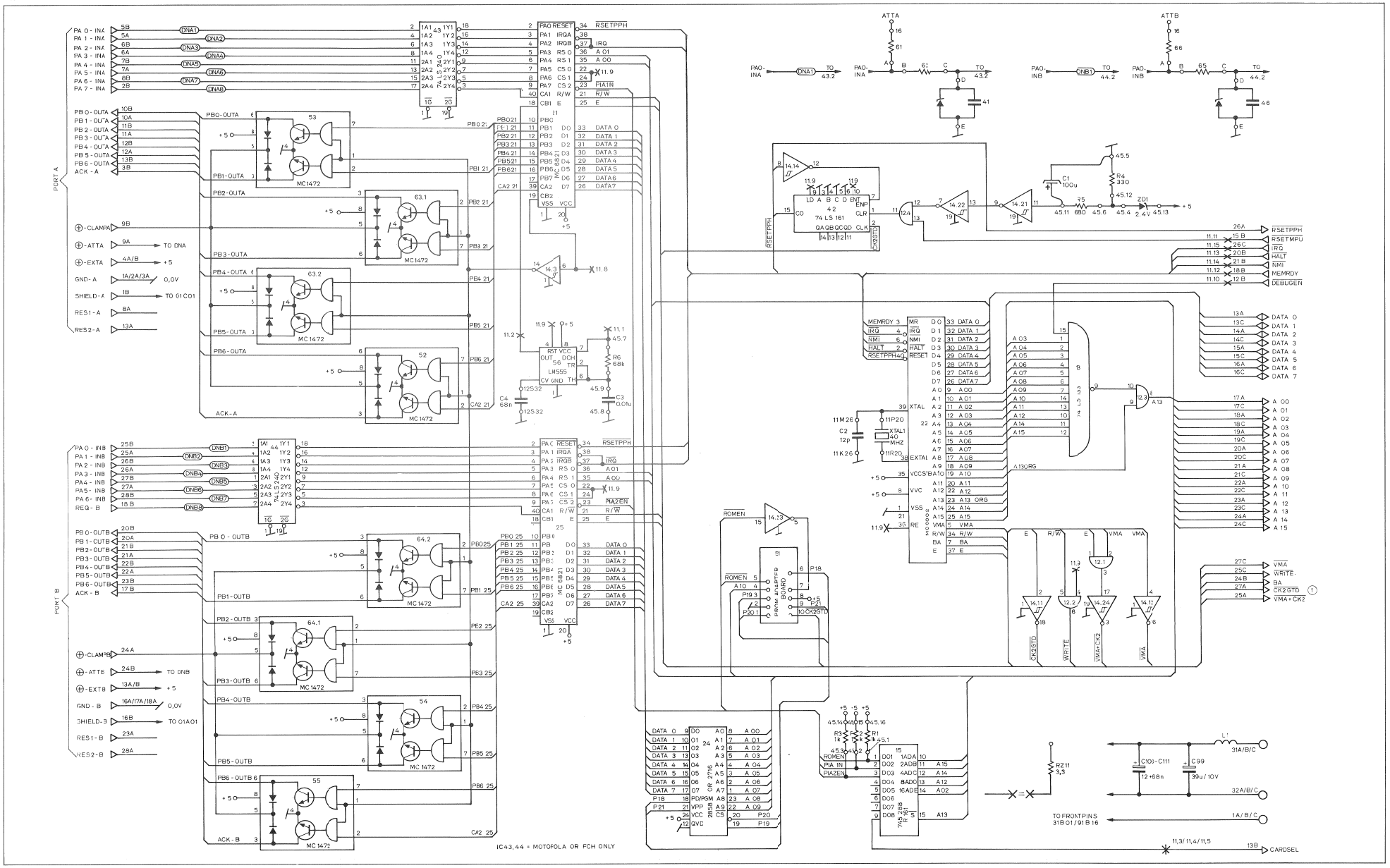

TLS INTERFACE RACK

POWER SUPPLY CONNECTOR 1.228.618

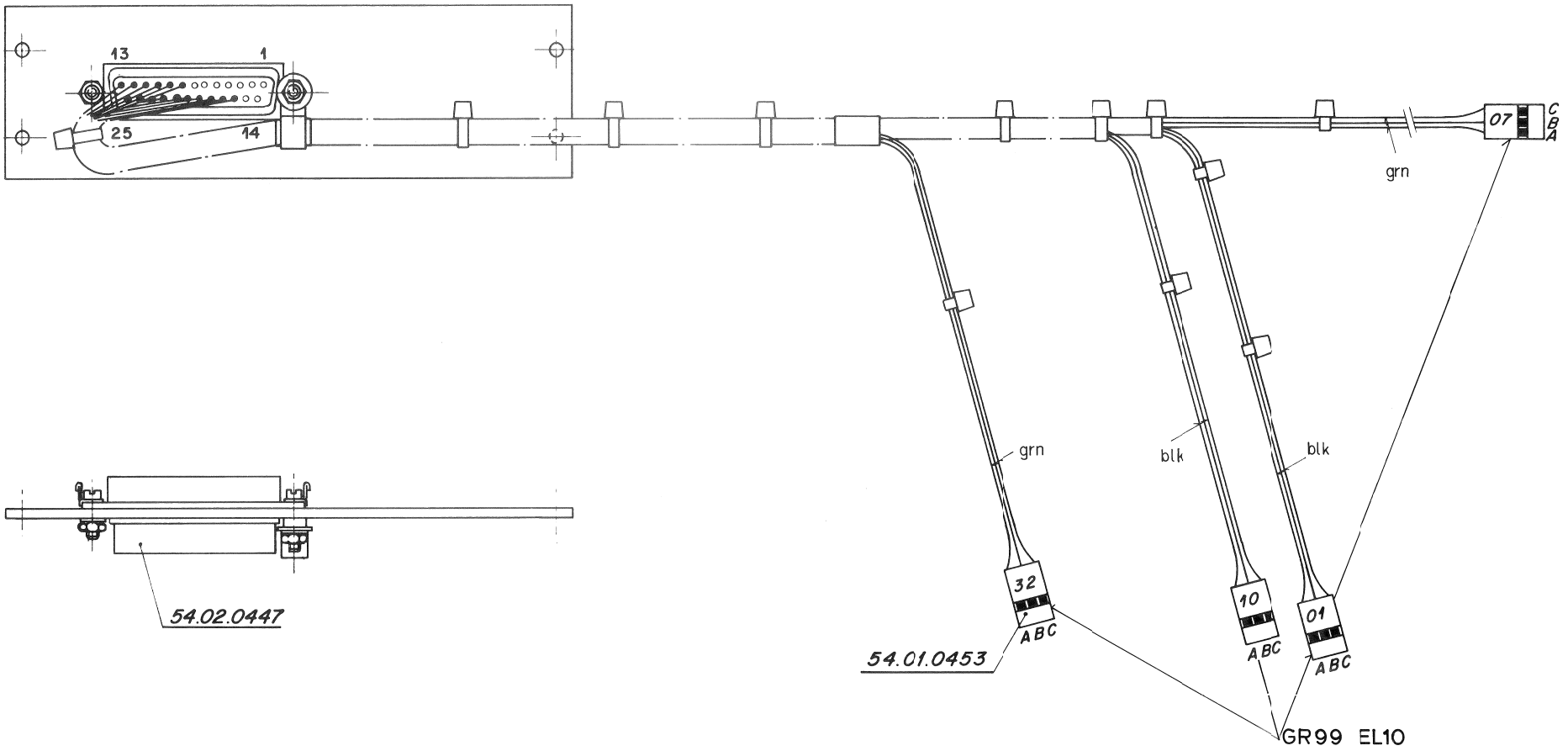

TLS INTERFACE RACK

POWER SUPPLY CABLE 1.228.670

TLS 2000
INTERFACE RACK
CONNECTOR
TO STUDER
POWER SUPPLY

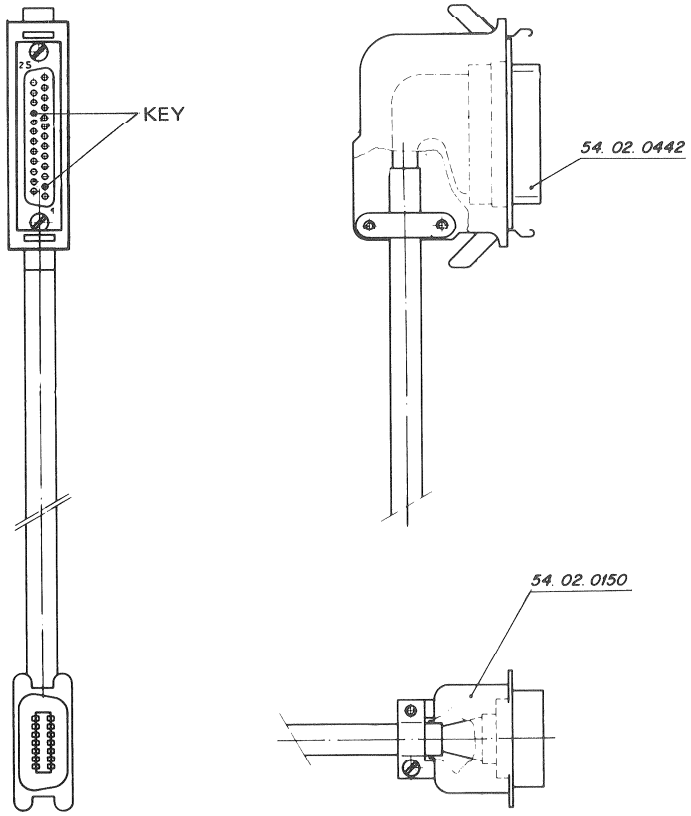

STUDER
POWER SUPPLY

	AMP female 54.02.0442	Micro Ribbon 54.02.0150	
Color	Pin. Nr.	Pin. Nr.	Sign. Name
wht blu	1 3	6 13	–10V –10V
wht org	4 5	13 2	–10V 0.0V
wht grn	6 7	2 3	0.0V 0.0V
wht brn	8 9	3 3	0.0V 0.0V
wht gry	19 16	4 4	+10V +10V
red blu	12 13	10 10	0.0V 0.0V
red org	14 15	1 8	24V~ 24V~
red grn	10 11	9 9	0.0V 0.0V
red brn	18 17	11 5	+10V +10V
red gry	20 21	12 12	+10V +10V
blk blu	23 24	7 14	+31V +31V
blk	25	14	+31V
	2 22		(Key) (Key)

TLS INTERFACE RACK

CONNECTOR TLS MASTER CONTROL 1.228.648

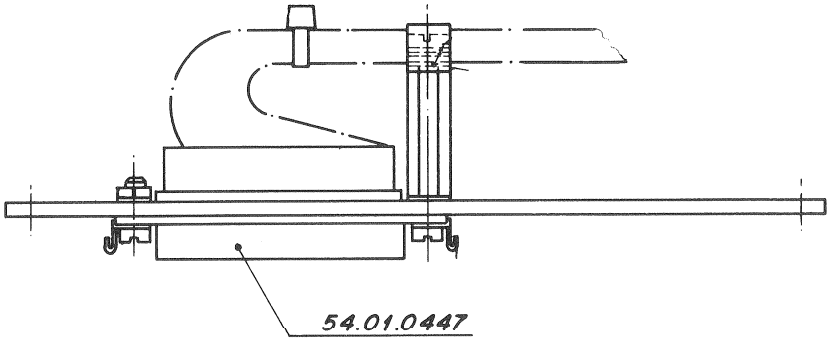

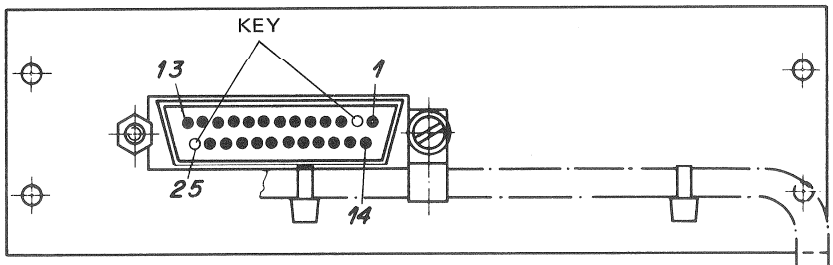

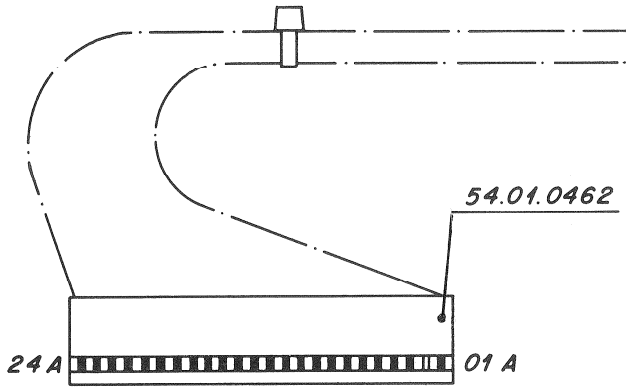

GR99 EL8

Sign. Name	Color	Start	End
OL	brn	1	1 A
KEY		2	
+ 10	org	3	3 A
MPWRON	yel	4	4 A
LKMODDR 2	grn	5	5 A
PARKEDDR	blu	6	6 A
EXTRECCM	vio	7	7 A
MCSUPVIS	gry	8	8 A
unused	wht	9	9 A
OK	blk	10	10 A
OK	brn	11	11 A
+ 24	red	12	12 A
+ 24	org	13	13 A
OL	yel	14	14 A
MCRECEDR	grn	15	15 A
MCZSETDR	blu	16	16 A
MCKCUTDR	vio	17	17 A
MCRESDR1	gry	18	18 A
MCDAT1DR	wht	19	19 A
MCDAT2DR	blk	20	20 A
MCMUTEDR	brn	21	21 A
MCDATRDY	red	22	22 A
MCRIINSDR	org	23	23 A
MCDATODR	yel	24	24 A
KEY		25	

TLS INTERFACE RACK

TLS MASTER CONTROL CABLE 1.228.960

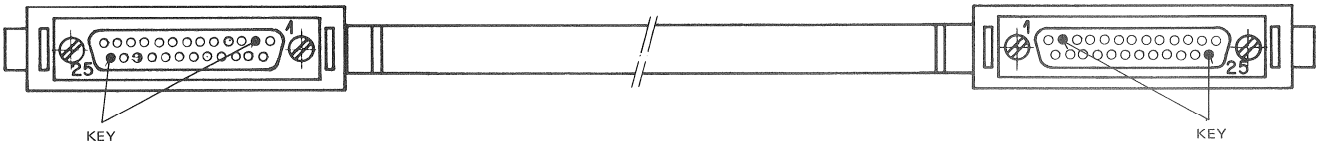

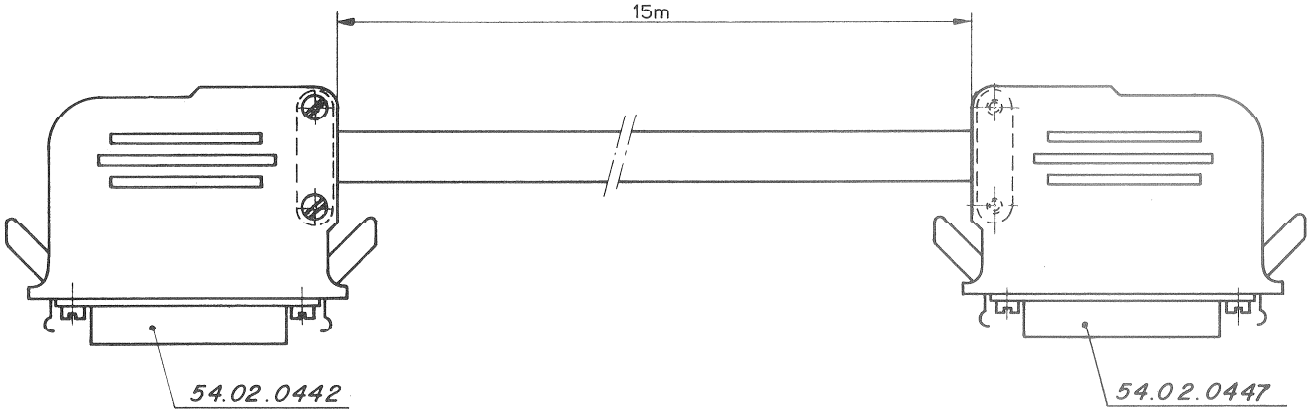

SIGNAL NAME	COLOR	CONNECTOR 54.02.0447 25 POL	CONNECTOR 54.02.0442 25 POL
OL	wht ★	1	1
KEY	blu ★	2	2
+ 10	wht ★	3	3
MPWRON	org ★	4	4
LKMODDR 2	wht ★	5	5
PARKEDDR	grn ★	6	6
EXTRECCM	wht ★	7	7
MCSUPVIS	brn ★	8	8
UNUSED	wht ★	9	9
OK	gry ★	10	10
OK	red ★	11	11
+ 24 V	blu ★	12	12
+ 24 V	red ★	13	13
OL	org ★	14	14
MCRECEDR	red ★	15	15
MCZSETDR	grn ★	16	16
MCKCUTDR	red ★	17	17
MCRESDR 1	brn ★	18	18
MCDAT 1DR	red ★	19	19
MCDAT 2DR	gry ★	20	20
MCMUTEDR	blk ★	21	21
MCDATRDY	blu ★	22	22
MCRHRSDR	blk ★	23	23
MCDATODR	org ★	24	24
KEY		25	25

★ TWISTED PAIRS AMONGST CABLES

WIRE LIST

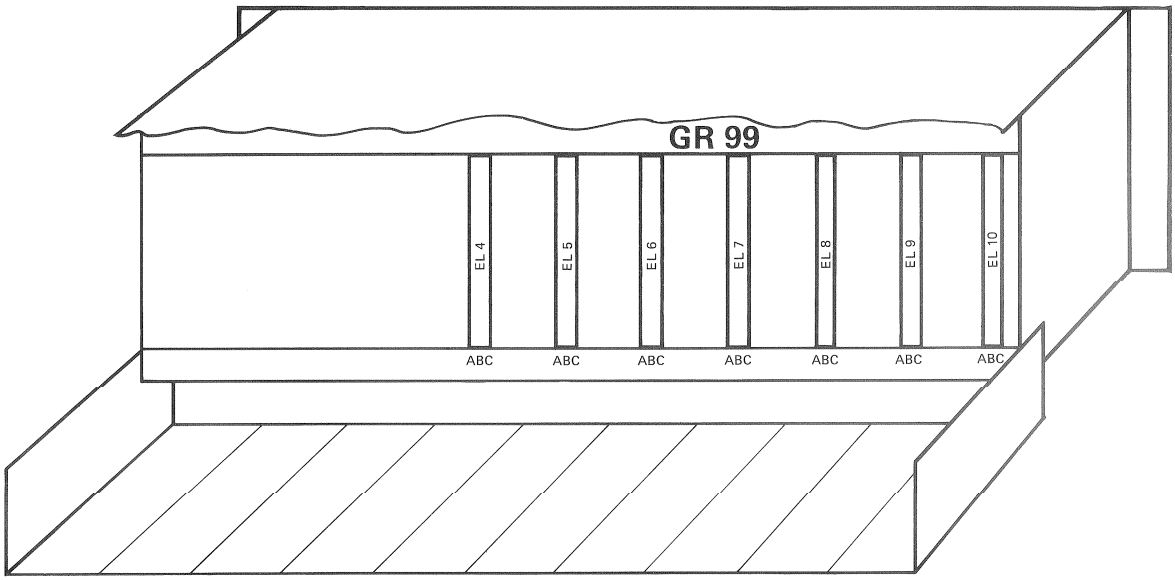

*** 1.228.898.00 ***

BACK PANEL 1 TLS MASTER CONTROL INTERFACE RACK 81/05/18 * 15:49

WIRING LOCATION 1					WIRING LOCATION 2					SIGNAL-NAME
TYP	GR	EL	PT	LEV*	TYP	GR	EL	PT	LEV*	
W	99	06	31A	1	W	99	05	31A	1	5.0V-CPU
W	99	06	31B	1	W	99	05	31B	1	5.0V-CPU
W	99	06	31C	1	W	99	05	31C	1	5.0V-CPU
W	99	06	32A	1	W	99	05	32A	1	0.0V-CPU
W	99	06	32B	1	W	99	05	32B	1	0.0V-CPU
W	99	06	32C	1	W	99	05	32C	1	0.0V-CPU
W	99	07	01B	1	W	99	05	01A	1	P2-OL
W	99	07	01C	1	W	99	08	01A	1	P1-OL
W	99	07	02B	1	W	99	05	02A	1	UNUSED
W	99	07	02C	1	W	99	08	02A	1	UNUSED
W	99	07	03B	1	W	99	05	03A	1	P2-+10
W	99	07	03C	1	W	99	08	03A	1	P1-+10
W	99	07	04B	1	W	99	05	04A	1	UNUSED
W	99	07	04C	1	W	99	08	04A	1	UNUSED
W	99	07	05B	1	W	99	05	05A	1	P2LKMODR
W	99	07	05C	1	W	99	08	05A	1	P1LKMODR
W	99	07	06B	1	W	99	05	06A	1	P2PARKDR
W	99	07	06C	1	W	99	08	06A	1	P1PARKDR
W	99	07	07B	1	W	99	05	07A	1	P2EXRCCM
W	99	07	07C	1	W	99	08	07A	1	P1EXRCCM
W	99	07	08B	1	W	99	05	08A	1	UNUSED
W	99	07	08C	1	W	99	08	08A	1	UNUSED
W	99	07	09B	1	W	99	05	09A	1	UNUSED
W	99	07	09C	1	W	99	08	09A	1	UNUSED
W	99	07	10B	1	W	99	05	10A	1	P2-OK
W	99	07	10C	1	W	99	08	10A	1	P1-OK
W	99	07	11B	1	W	99	05	11A	1	P2-OK
W	99	07	11C	1	W	99	08	11A	1	P1-OK
W	99	07	12B	1	W	99	05	12A	1	P2-+24
W	99	07	12C	1	W	99	08	12A	1	P1-+24
W	99	07	13B	1	W	99	05	13A	1	P2-+24
W	99	07	13C	1	W	99	08	13A	1	P1-+24
W	99	07	14B	1	W	99	05	14A	1	P2-OL
W	99	07	14C	1	W	99	08	14A	1	P1-OL
W	99	07	15B	1	W	99	05	15A	1	P2RECEDR
W	99	07	15C	1	W	99	08	15A	1	P1RECEDR
W	99	07	16B	1	W	99	05	16A	1	P2ZSETDR
W	99	07	16C	1	W	99	08	16A	1	P1ZSETDR
W	99	07	17B	1	W	99	05	17A	1	P2KCUTDR
W	99	07	17C	1	W	99	08	17A	1	P1KCUTDR
W	99	07	18B	1	W	99	05	18A	1	P2RESDR1
W	99	07	18C	1	W	99	08	10A	1	P1RESDR1
W	99	07	19B	1	W	99	05	19A	1	P2DAT1DR
W	99	07	19C	1	W	99	08	19A	1	P1DAT1DR
W	99	07	20B	1	W	99	05	20A	1	P2DAT2DR
W	99	07	20C	1	W	99	08	20A	1	P1DAT2DR
W	99	07	21B	1	W	99	05	21A	1	P2MUTEDR
W	99	07	21C	1	W	99	08	21A	1	P1MUTEDR
W	99	07	22B	1	W	99	05	22A	1	P2DATRDY
W	99	07	22C	1	W	99	08	22A	1	P1DATRDY
W	99	07	23B	1	W	99	05	23A	1	P2RESDR2
W	99	07	23C	1	W	99	08	23A	1	P1RESDR2
W	99	07	24B	1	W	99	05	24A	1	P2DATODR
W	99	07	24C	1	W	99	08	24A	1	P1DATODR
W	99	07	25A	1	W	99	09	27A	1	ICK2GTD
W	99	07	25C	1	W	99	09	26A	1	IRSETPPH
W	99	08	31A	1	W	99	07	31A	1	5.0V-CPU
W	99	08	31B	1	W	99	07	31B	1	5.0V-CPU
W	99	08	31C	1	W	99	07	31C	1	5.0V-CPU
W	99	08	32A	1	W	99	07	32A	1	0.0V-CPU
W	99	08	32B	1	W	99	07	32B	1	0.0V-CPU
W	99	08	32C	1	W	99	07	32C	1	0.0V-CPU
W	99	09	31A	1	W	99	10	30A	1	5.0V-CPU
W	99	09	31B	1	W	99	10	30B	1	5.0V-CPU
W	99	09	31C	1	W	99	10	30C	1	5.0V-CPU
W	99	09	32A	1	W	99	10	01A	1	0.0V-CPU
W	99	09	32B	1	W	99	10	01B	1	0.0V-CPU
W	99	09	32C	1	W	99	10	01C	1	0.0V-CPU
W	99	07	31A	2	W	99	06	31A	2	5.0V-CPU
W	99	07	31B	2	W	99	06	31B	2	5.0V-CPU
W	99	07	31C	2	W	99	06	31C	2	5.0V-CPU
W	99	07	32A	2	W	99	06	32A	2	0.0V-CPU
W	99	07	32B	2	W	99	06	32B	2	0.0V-CPU
W	99	07	32C	2	W	99	06	32C	2	0.0V-CPU
W	99	09	31A	2	W	99	08	31A	2	5.0V-CPU
W	99	09	31B	2	W	99	08	31B	2	5.0V-CPU
W	99	09	31C	2	W	99	08	31C	2	5.0V-CPU
W	99	09	32A	2	W	99	08	32A	2	0.0V-CPU
W	99	09	32B	2	W	99	08	32B	2	0.0V-CPU
W	99	09	32C	2	W	99	08	32C	2	0.0V-CPU

7.2
SWITCH SET 1.228.373

SURVEY OF INTERFACE RACK WITH SWITCH SET

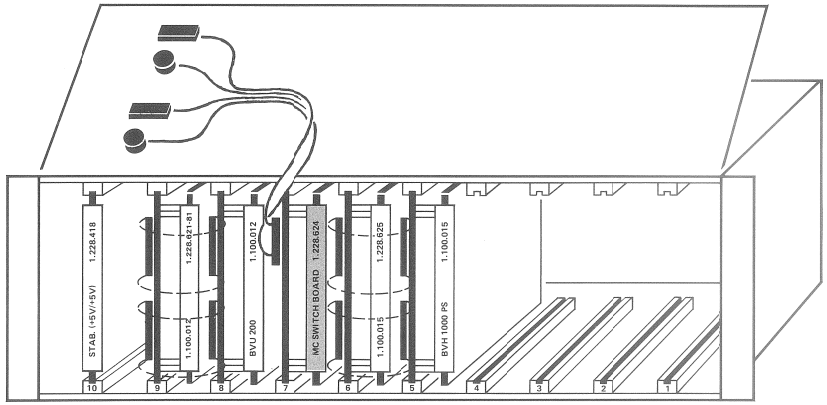

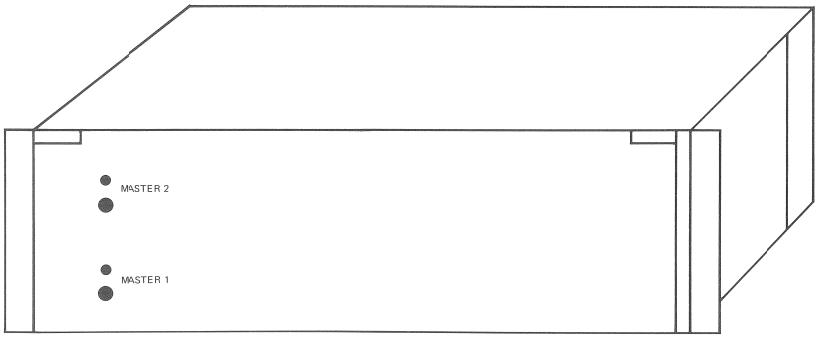

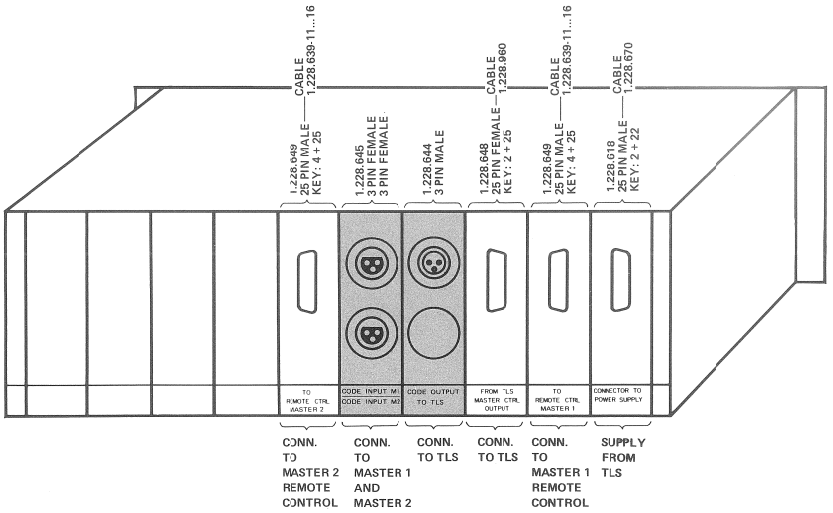

TLS MASTER CONTROL SWITCH PCB 1.228.624

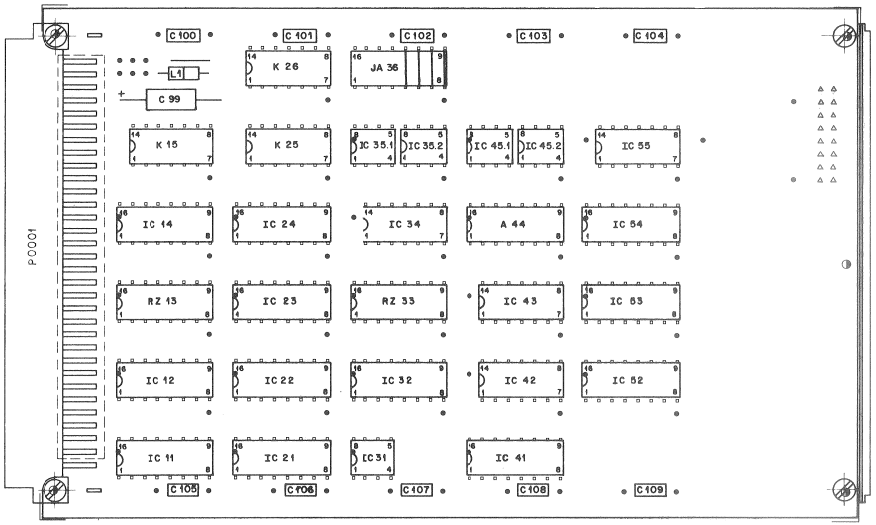

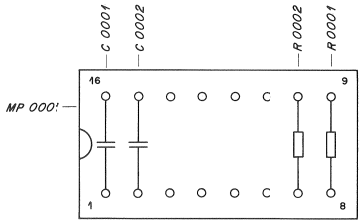

IND	POS NO	PART NO	VALUE	SPECIFICATIONS/EQUIVALENT	MFR
	C 99	59.99.0202	39 U	20% 10V TA	
	C100	59.99.0205	68 N	-20% 63V CER	
	C101				
	C102				
	C103				
	C104				
	C105				
	C106				
	C107				
	C108				
	C109	59.99.0205	68 N	-20% 63V CER	
	A 44	1.228.738.00	TLS Master ctrl swicth assy		
	IC 11	50.05.0217	NBT37B	Hex Bus Receiver	
	IC 12	50.05.0217	NBT37B		
	IC 14	50.05.0217	NBT37B		
	IC 21	50.05.0224	NBT96B	Hex Three State Inverter MC8796	
	IC 22	50.05.0224	NBT96B		
	IC 23	50.05.0224	NBT96B		
	IC 24	50.05.0224	NBT96B		
	IC 31	50.05.0204	SN75464P	Dual NOR Driver DS75464N	
	IC 32	50.06.0298	SN74LS298N	Quad 2 Inp Mux w.Storage	
	IC 34	50.06.0004	SN74LS04N	Hex Inverter	
	IC35.1	50.05.0203	SN75463P	Dual OR Driver DS75463N	
	IC35.2	50.05.0203	SN75463P		
	IC 41	50.06.0175	SN74LS175N	Quad D Flip-Flop	
	IC 42	50.06.0074	SN74LS74N	Dual D Flip-Flop	
	IC 43	50.06.0074	SN74LS74N		

IND	DATE	NAME
④		
③		
②		
①		
○	5.7.79	Rohner/gv

STUDER | MASTER CONTROL SWITCHBOARD | 1.228.624.00 | PAGE 1 OF 2

IND	POS NO	PART NO	VALUE	SPECIFICATIONS/EQUIVALENT	MFR
	IC45.1	50.05.0203	SN75463P	Dual OR Driver DS75463N	
	IC45.2	50.05.0203	SN75463P		
	IC 52	1.025.019.30		512*4 Bit PROM	
	IC 53	50.06.0161	SN74LS161A	4 Bit binary Counter	
	IC 54	50.06.0161	SN74LS161A		
	IC 55	50.06.0074	SN74LS74N	Dual D Flip-Flop	
	K 15	56.02.1006	1*U,10VA	w.Screen, 24V,2000Ω	
	K 25	56.02.1006	1*U,10VA		
	K 26	56.02.1006	1*U,10VA		
	L 01	61.99.0124	D 3,5*3	Ferritpearls	
	P 01	54.01.0354	3*32Pole	Wrap, male	
	RZ13	57.85.3102	15 * 1 k	2%	
	RZ33	57.85.3102	15 * 1 k	2%	

IND	DATE	NAME
④		
③		
②		
①		
○	5.7.79	Rohner/gv

STUDER | MASTER CONTROL SWITCHBOARD | 1.228.624.0C | PAGE 2OF 2

IND	POS NO	PART NO	VALUE	SPECIFICATIONSEQUIVALENT	MFR
	C 01	59.99.0205	68 N	100V CER	
	C 02	59.99.0205	68 N	100V CER	
	MP 01	53.0.0.0170	0.3"	Board	
	R 01	57.0.0.5151	150	10% .25W CMA	
	R 02	57.0.0.5151	150	10% .25W CMA	

IND	DATE	NAME
④		
③		
②		
①		
○	3.7.1979	RC /gv

STUDER | TLS MASTER CTRL SWITCH ASSY | 1.228.738.00 | PAGE 1 OF 1

TLS INTERFACE RACK

TLS MASTER CONTROL SWITCH PCB 1.228.624

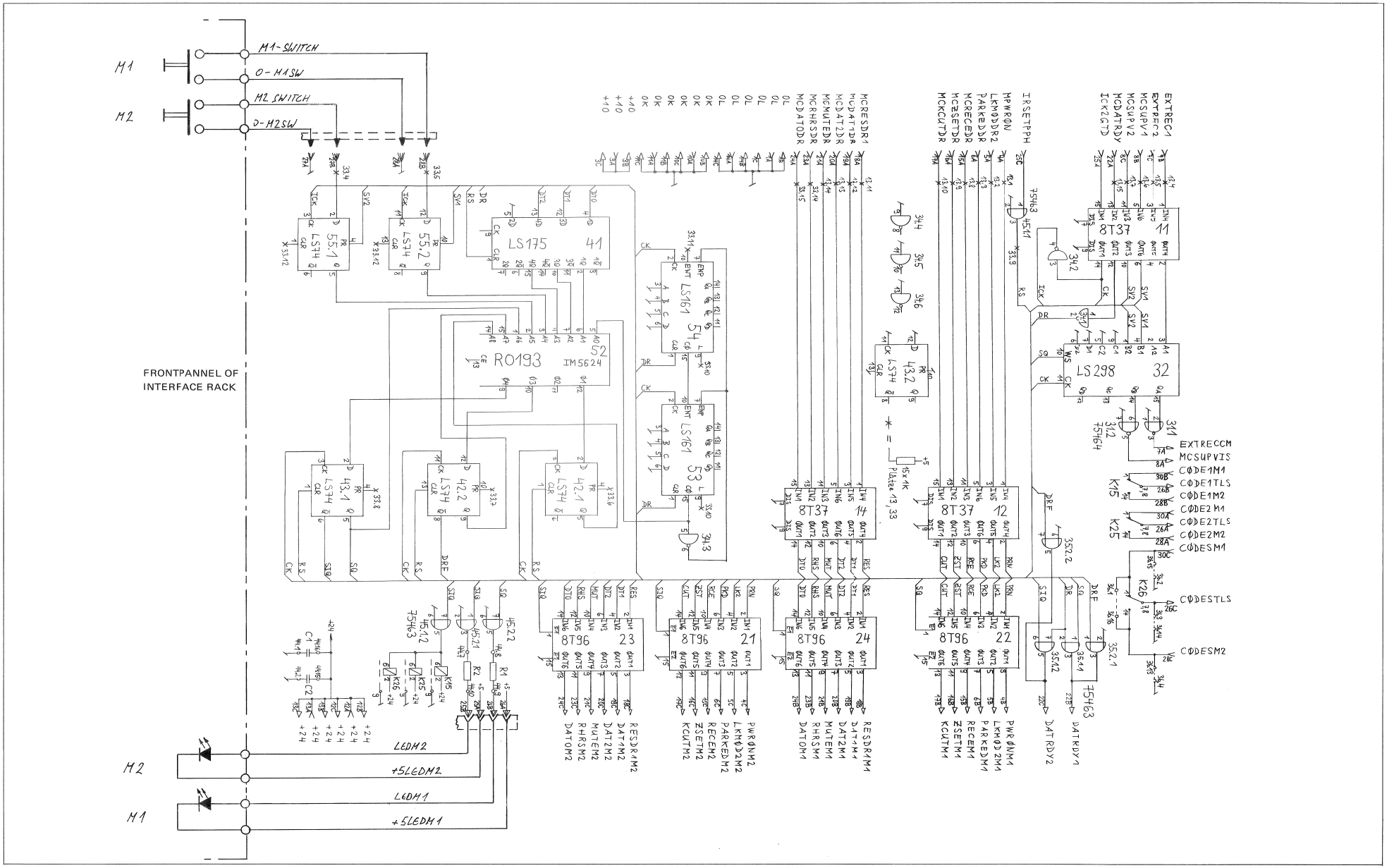

TLS INTERFACE RACK

CONNECTOR MASTER CONTROL CODE OUTPUT 1.228.644

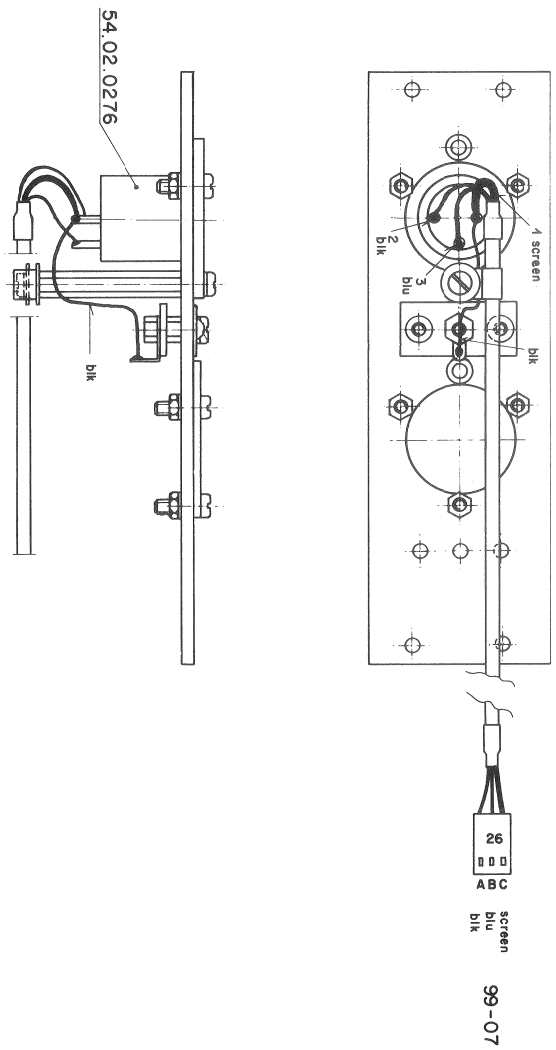

CONNECTOR MASTER CONTROL CODE INPUT 1.228.645

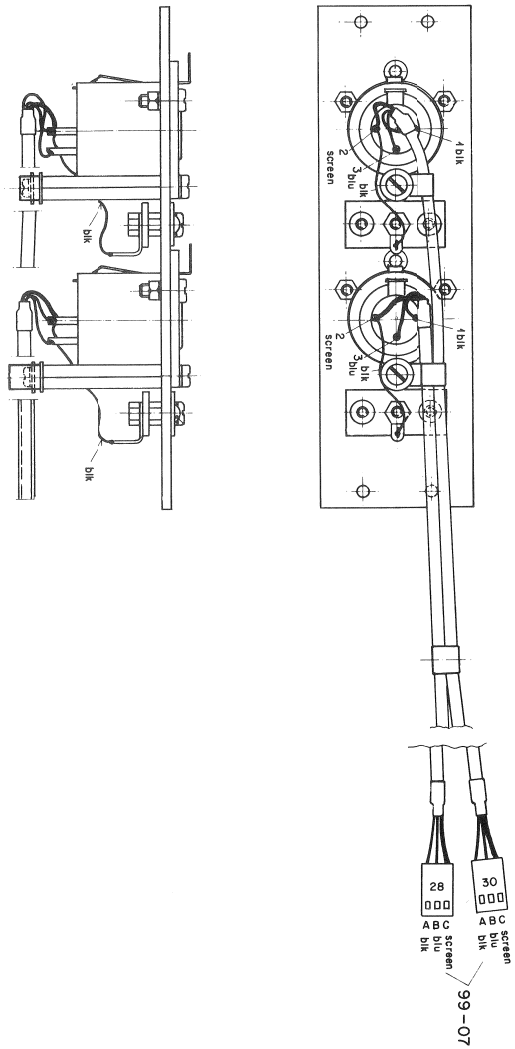

7.3
MASTER CONTROL SET TO SONY VP 2850/ VP 2030/ VP 2630/ VP 2860

TLS INTERFACE RACK

SURVEY OF INTERFACE RACK (SONY VP 2850)

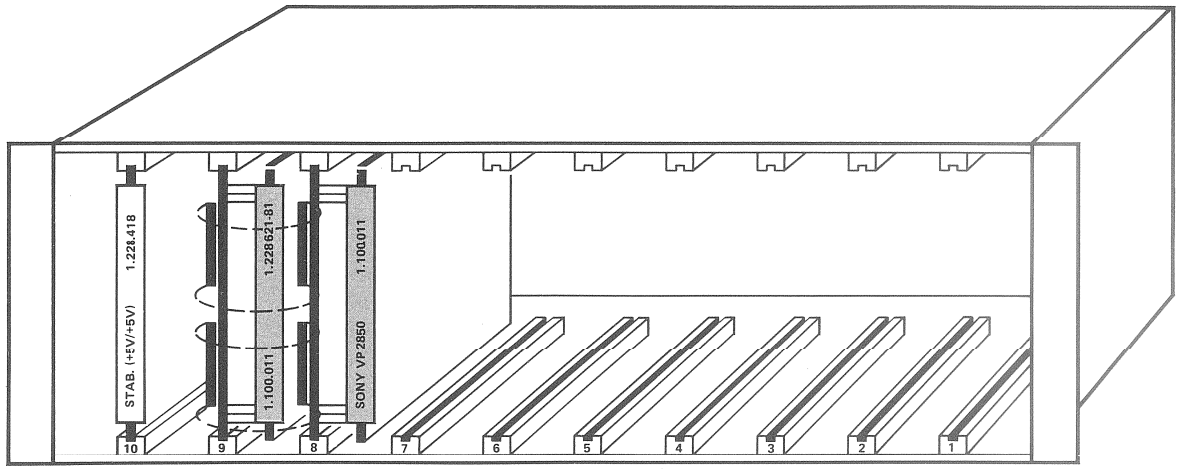

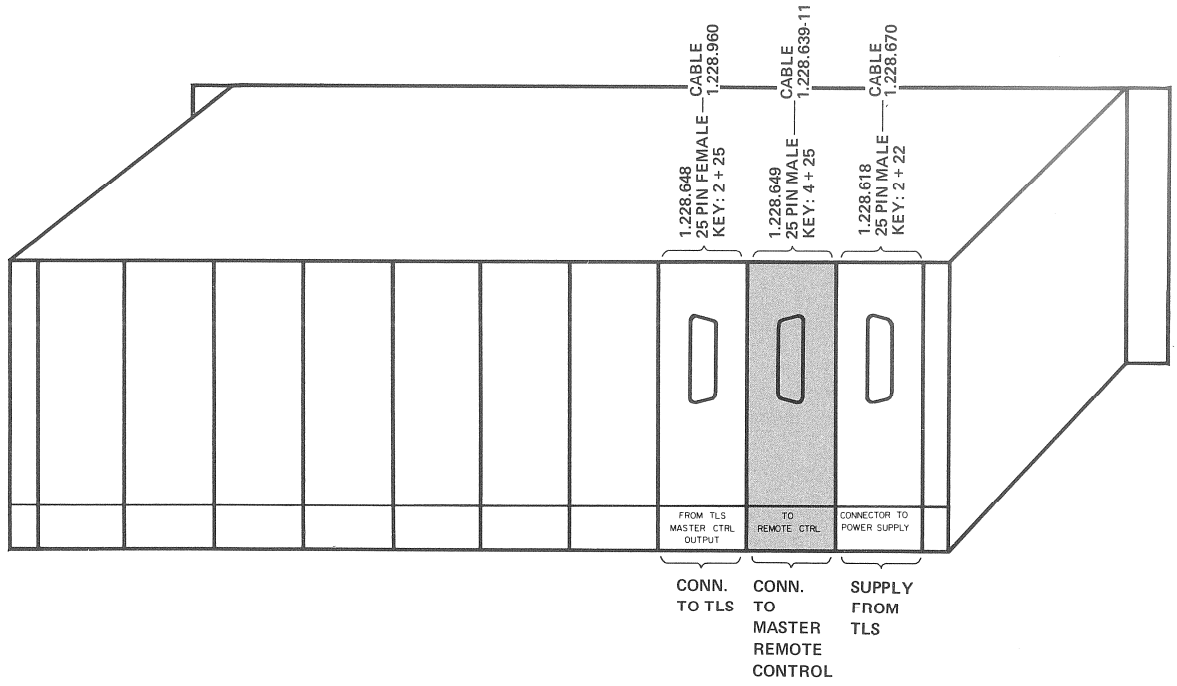

TLS MASTER CONTROL PROCESSOR PCB 1.228.621–81

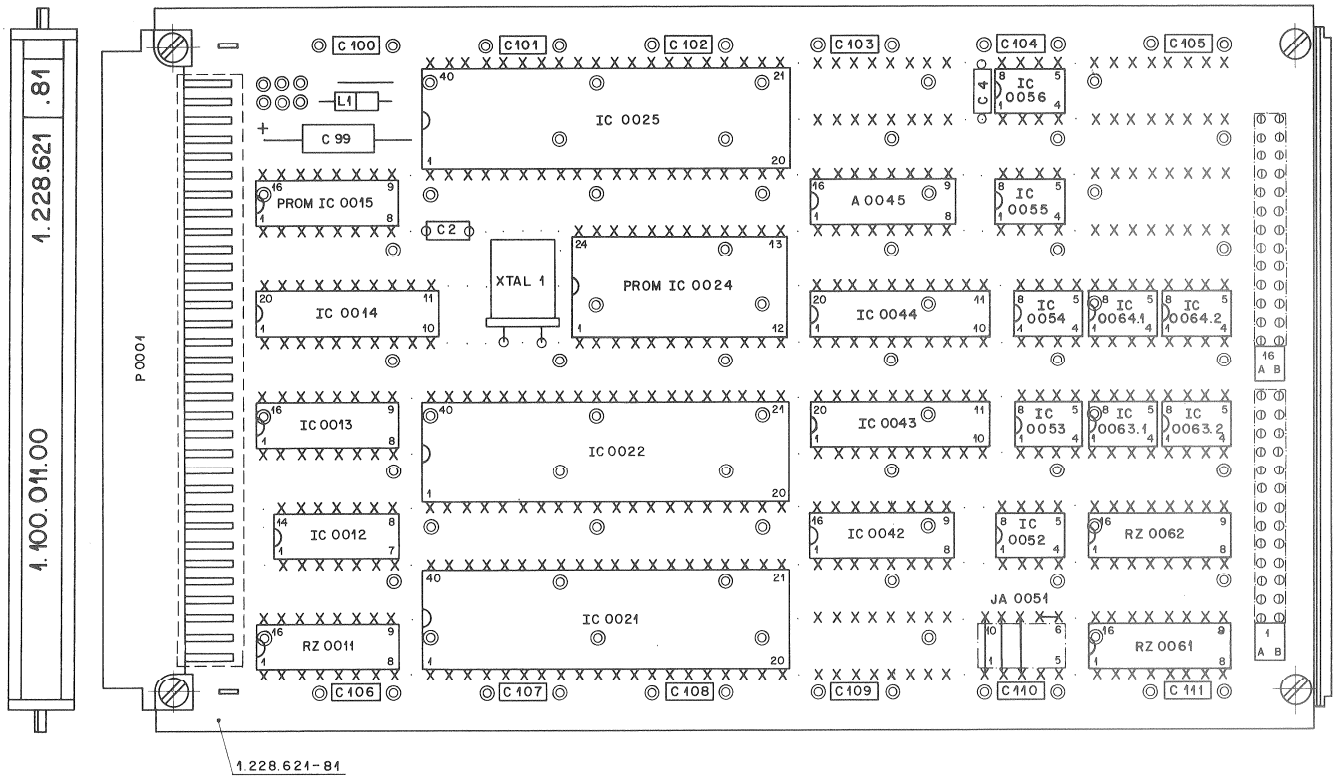


```
*   S T U D E R   *   POSITION LIST OF PARTS 1.100.011.00   *   79/04/04   *                PAGE  1 OF  1   *
*****************************************************************************************************************
*   TLS INTERFACE RACK                 *   TLS MASTER CTRL SET SONY VP2850  *                          79/04/03-0   *
```

POSITION RD.	POS.M	PART NO.	DESCRIPTION OF PART
A	0045	1.228.733.00	PWRON ASS TLS IF PROCESSOR
C	0002	59.34.1120	C 12 P , 5%, NP 0 , KER
C	0004	59.99.0205	C 68 N ,-20%, 63V , KER
C	0099	59.99.0202	C 39 U , 20%, 10V , TA
C	0100	59.99.0205	C 68 N ,-20%, 63V , KER
C	0101	59.99.0205	C 68 N ,-20%, 63V , KER
C	0102	59.99.0205	C 68 N ,-20%, 63V , KER
C	0103	59.99.0205	C 68 N ,-20%, 63V , KER
C	0104	59.99.0205	C 68 N ,-20%, 63V , KER
C	0105	59.99.0205	C 68 N ,-20%, 63V , KER
C	0106	59.99.0205	C 68 N ,-20%, 63V , KER
C	0107	59.99.0205	C 68 N ,-20%, 63V , KER
C	0108	59.99.0205	C 68 N ,-20%, 63V , KER
C	0109	59.99.0205	C 68 N ,-20%, 63V , KER
C	0110	59.99.0205	C 68 N ,-20%, 63V , KER
C	0111	59.99.0205	C 68 N ,-20%, 63V , KER
IC	0012	50.06.0008	IC SN 74 LS 08 N . TTL
IC	0013	50.06.0133	IC SN 74LS133
IC	0014	50.06.0240	IC SN 74LS240
IC	0015	1.025.016.10	TLS MASTER CTRL ADDRESSDECODER
IC	0021	50.05.0270	IC MC6821P
IC	0022	50.05.0276	IC MC6802P
IC	0024	1.025.016.20	TLS MASTER CTRL U-MATIC VP2850
IC	0025	50.05.0270	IC MC6821P
IC	0042	50.06.0161	IC SN 74 LS 161 N TTL
IC	0043	50.06.0240	IC SN 74LS240
IC	0044	50.06.0240	IC SN 74LS240
IC	0052	50.15.0101	IC MC 1472
IC	0053	50.15.0101	IC MC 1472
IC	0054	50.15.0101	IC MC 1472
IC	0055	50.15.0101	IC MC 1472
IC	0056	50.05.0158	IC NE 555N ,MC 1455P1 ,LIN
IC	00631	50.15.0101	IC MC 1472
IC	00632	50.15.0101	IC MC 1472
IC	00641	50.15.0101	IC MC 1472
IC	00642	50.15.0161	IC MC 1472

POSITION RD.	POS.M	PART NO.	DESCRIPTION OF PART
P	0001	54.01.0354	P LEISTE 3 * 32 POL WRAP
RZ	0011	57.85.3332	RZ 15*3.3K, 2%, DIL16
RZ	0061	57.80.0101	RZ 14*330/220,2%, DIL16
RZ	0062	57.88.3101	RZ 8*100 2% DIL
Y	0001	89.01.0378	XTAL 4.000MHZ

POWER ON ASSEMBLY 1.228.733

SEE SECTION 7.1 PAGE 7/6

TLS MASTER CONTROL ADAPTER PCB VP 2850

TLS INTERFACE RACK

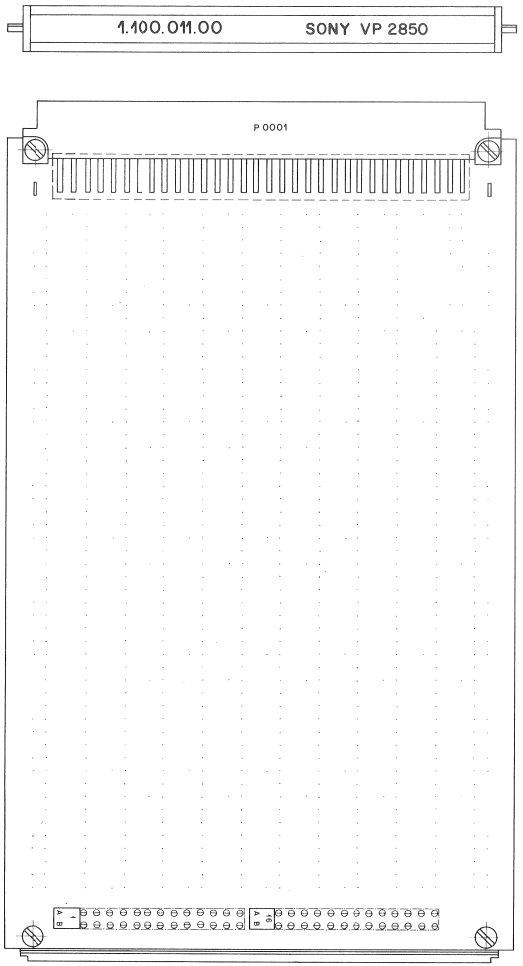

GND-A	2A	10C	GND-UM
GND-A	3A	14C	GND-UM
GND-B	17A	8A	MCSUPVIS
GND-B	18A		
Θ-EXTA	4A		
Θ-EXTA	4B		
Θ-ATTA	9A		
PB1-ØUTA	10A	7C	CUTØKEY
REQ-A	2B	22A	MCDATRDY
PA0-INA	5B	24A	MCDAT0DR
PA2-INA	6B	20A	MCDAT2DR
PA4-INA	7B	16A	MCZSETDR
PA6-INA	8B	21A	MCMUTEDR
PB0-ØUTA	10B	6C	CUTINKEY
PB2-ØUTA	11B	16C	FKT.OFF
GND-B	16A	1A	0 L
GND-A	1A	14A	0 L
PB1-ØUTB	20A	12C	FFKEY
PB3-ØUTB	21A	13C	FWDKEY
PB5-ØUTB	22A	5C	RECAKEY
PA1-INB	25A	3C	RECLAMP
PA3-INB	26A	2C	INSLAMP
PB0-ØUTB	20B	8C	STØPKEY
PB2-ØUTB	21B	11C	REWKEY
PB4-ØUTB	22B	9C	PAUSEKEY
PB6-ØUTB	23B	24C	EDITKEY
Θ-ATTB	24B		
Θ-CLAMPB	24A	1C	REG 6.5V
Θ-CLAMPA	9B		
PA0-INB	25B	18C	STBYLAMP
PA2-INB	26B	17C	PAUSLAMP
PA4-INB	27B	15C	EDCTØUT
PA1-INA	5A	19A	MCDAT1DR
PA3-INA	6A	15A	MCRECEDR
PA5-INA	7A	23A	MCREHDR

TLS INTERFACE RACK

CONNECTOR TO MASTER REMOTE CONTROL 1.228.643

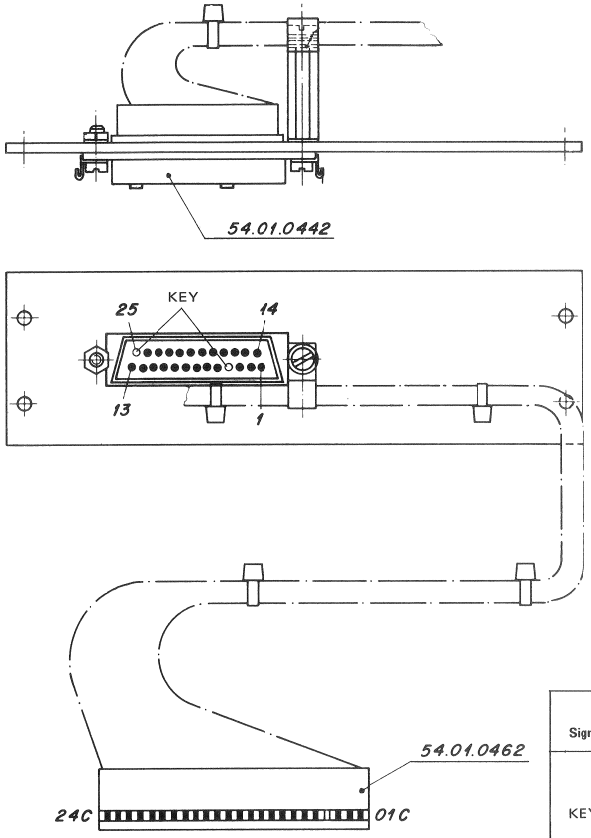

Sign. Name	Color	Start	End
	brn	1	1 C
	red	2	2 C
	org	3	3 C
KEY		4	
	grn	5	5 C
	blu	6	6 C
	vio	7	7 C
	grn	8	8 C
	wht	9	9 C
	blk	10	10 C
	brn	11	11 C
	red	12	12 C
	org	13	13 C
	yel	14	14 C
	grn	15	15 C
	blu	16	16 C
	vio	17	17 C
	gry	18	18 C
	wht	19	19 C
	blk	20	20 C
	brn	21	21 C
	red	22	22 C
	org	23	23 C
	yel	24	24 C
KEY		25	

CABLE MASTER REMOTE CONTROL-INTERFACE RACK 1.228.639–11

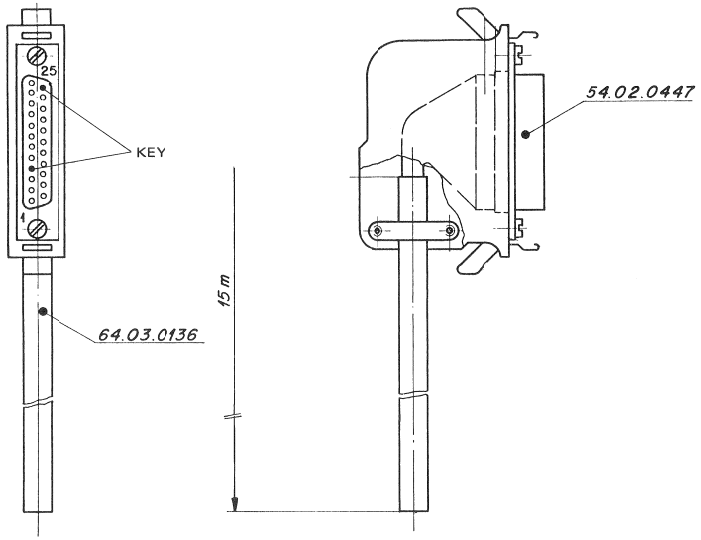

SIG.NAME	COLOR	AMP 54.02.0447 PIN NR.	SONY VP 2850 TAPE DECK PIN NR.
REG 6,5V	wht	1	1
INSLAMP	blu	2	2
RECLAMP	wht	3	3
KEY		4	
RECAKEY	org	5	5
CUTINKEY	wht	6	6
CUTOKEY	grn	7	7
STOPKEY	wht	8	8
PAUSEKEY	brn	9	9
GROUND	wht	10	10
REWKEY	gry	11	11
FFKEY	red	12	12
FWDKEY	blu	13	13
GROUND	red	14	14
EDCTOUT	org	15	15
FUTOFF	red	16	16
PAUSELAMP	grn	17	17
STBYLAMP	red	18	18
SLSCHKEY	brn	19	19
SRCHLAMP	red	20	20
EDITKEY	gry	21	4
UNUSED	blk	22	
UNUSED	blu	23	
UNUSED	blk	24	
KEY		25	

7.3
MASTER CONTROL SET TO SONY VP 2850/ VP 2030/ VP 2630/ VP 2860 1.100.011

CODE AMPLIFIER FOR SONY VP 2030/ VP 2630/ VP 2850/ VP 2860 10.022.114

SONY UMATIC

CODELESEMÖGLICHKEIT WÄHREND SCHNELLWICKELN
(Code auf Audiokanal zwei)

Die Zusatzausrüstung zum Lesen des Codes während dem Schnellwickeln besteht aus einem zusätzlichen Wiedergabekopf (identisch mit dem Aufnahme-Wiedergabekopf im Grundgerät), einem Löschkopf und einem breitbandigen Wiedergabeverstärker.

SONY UMATIC

FAST WIND CODE READ FACILITY
(using audio track two)

The Fast Wind Code Read Facility comprises of an additional head mounted together with the erase head on a new base plate and an additional wide band read amplifier. The additional head used for this feature is identical to the audio record/reproduce head in the machine.

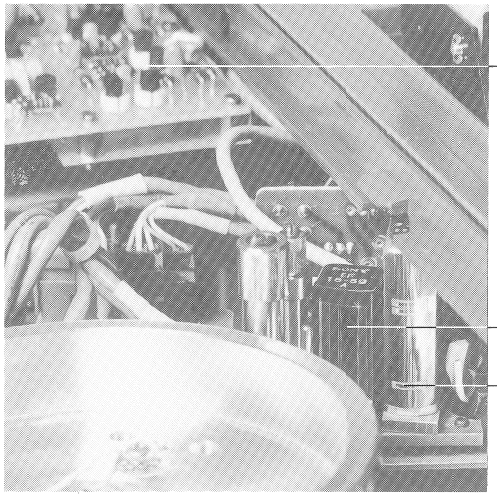

Die Montagefläche der Köpfe wurde speziell überarbeitet; auf die neue Grundplatte montiert wird so die korrekte Höhe und Neigung der Köpfe gewährleistet.
Der Breitband-Wiedergabeverstärker besteht aus einem Vorverstärker mit hoher Eingangsimpedanz gefolgt von einer 6dB/Oktave-Entzerrerstufe sowie der Kopfentzerrung.
Die nachfolgende Verstärkerstufe wird über Relaiskontakte angesteuert. Dieses Relais schaltet je nach Betriebsart vom Schnellwickel-Codelesekopf auf den Audioausgangsverstärker Kanal zwei um.
Das angewählte Codesignal wird nach der Verstärkung über einen Begrenzerverstärker und den symmetrischen Linientransformer zum Linienausgang geführt.
Für Einstellzwecke (Azimuth) kann das Signal vor dem Begrenzerverstärker abgegriffen werden. Dazu sind die beiden Brückenstecker in die Position "TEST" zu stecken.

Before mounting the heads onto the new base plate their mounting surfaces are accurately machined in order to assure equal zenith and correct relative hight of the two heads.
The amplifier consists of a high input impedance preamplifier followed by an equalization stage which contains 6dB/octave and head response equalization.
The subsequent amplifier stage receives its input signal via the relay contact either from the preamplifier or from the channel two audio amplifier output dependent on the operating mode of the machine.
The output of this amplifier is routed through to the output-limiter amplifier and from here to symmetrical line output transformer.
With the aid of two jumpers the signal can be taped off before the output-limiter amplifier for the purpose of head azimuth adjustment.

ABGLEICHANLEITUNG

- Testton von ca. 12kHz mit 0VU auf Audiokanal zwei aufnehmen.
- Brückerstecker in Position "TEST" umstecken.
- Chassisverbindung von TP1 nach Gerätemasse herstellen.
- Oscilloscope mit dem Code Output-Stecker verbinden.

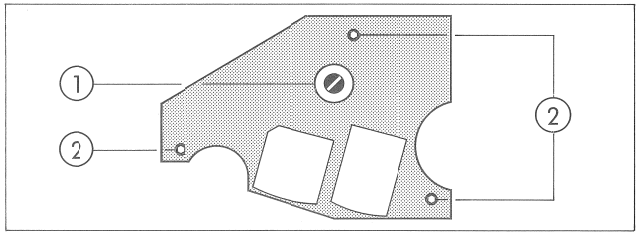

- Schraube (1) um 1-2 Umdrehungen lösen.
- Testton abspielen und abwechslungsweise die Schrauben (2) mit Imbusschlüssel 1,5mm verstellen bis das Oscilloscope den grössten Ausgangspegel zeigt.
- Azimutheinstellung überprüfen.
- Schraube (1) vorsichtig festziehen bis die Feder gerade zusammengedrückt ist.
- Chassisverbindung an TP1 entfernen.
- Brückenstecker in Position "OPERATION" stecken.

ADJUSTEMENT PROCEDURE:

- Record a tone (approximately 12kHz) at operating level (0VU) on audio track two.
- Insert the two jumpers on the amplifier board in the "TEST" positions.
- Make a connection from tag TP1 to the chassis of the machine.
- Connect an oscilloscope to the code output socket.
- Loosen the spring loaded screw (1) in the centre of the head baseplate by 1-2 turns.
- Play the recorded 12kHz tone and adjust the 3 screws (2) alternately with a 1.5mm Allen key until maximum output level is obtained on the scope.
- Make sure that zenith is still correct after the above adjustment.
- Tighten spring loaded screw (1) until the spring is compressed. Do not tighten further in order not to distort the base bracket.
- Remove chassis connection and insert the two jumpers in the "OPERATION" positions.

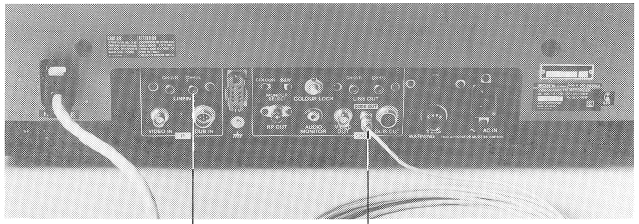

- Audioeingang Kanal zwei und Code Output mit dem TLS 2000 verbinden.
- SMPTE-Code 10dB und 15dB unter Arbeitspegel aufnehmen.
- Aufgenommener Code in Play und Schnellspulen abspielen. Korrekte Codeanzeige auf dem TLS überprüfen.
(Gelegentliche Dropouts können im −15dB-Teil vorkommen.)

- Connect the code output and the audio track two input to the TLS 2000 system.
- Record SMPTE code 10dB and 15dB below operating level.
- Play back the recorded sections of the tape in play and fast wind mode and check that the code is displayed correctly by the TLS systems.
(Occasional drop-outs during the minus 15dB recording are permissible.)

CODE AMPLIFIER FOR SONY VP 2030/ VP 2630/ VP 2850/ VP 2860 10.022.114

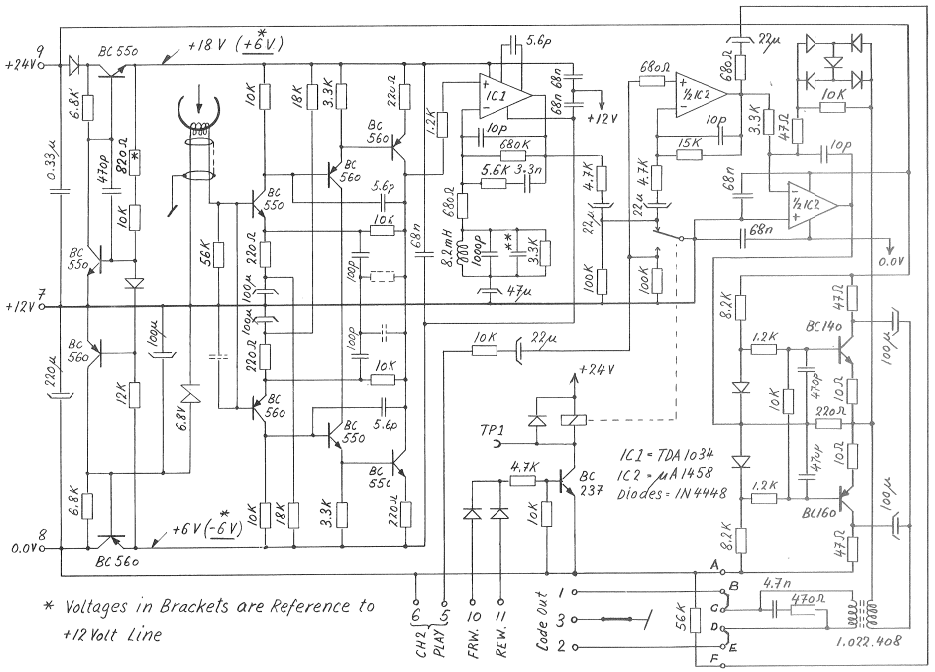

* Voltages in Brackets are Reference to +12 Volt Line

JUMPER SETTINGS:

OPERATION TEST

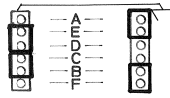

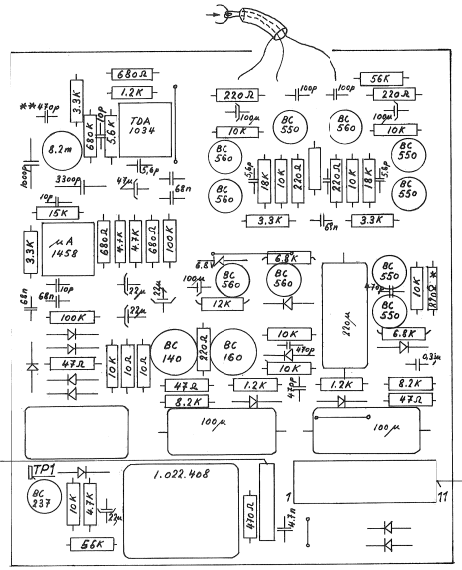

OUTPUT AND SUPPLY CONNECTOR

Signal name	11pin CIS connector	2030	2030	2630	2860		Code o/p connector
Code o/p live1	1 wt						
" " live2	2 bl						
" " screen	3						LEMO
Key	4						
Audio 2 live	5 rd	CH2	CH2	CH2	CH2		
" screen	6 rd	CH2	CH2	CH2	CH2		
+12 Volt	7 or	TP2	TP2	TP2	TP2		
0.0 Volt	8 bk	E1 PW30	E1 PW30	E1 PW30	E1 PW30		
+24 Volt	9 rd	TP1	TP1	TP1	TP1		
F-Forw.	10 vi	4 SY5	5 SY46	6 SY47	7 SY28		
F-Rew	11 gy	6 CN7	4 CN5	5 CN6	5 CN7		

IND	PIECES	PART NO	VALUE	SPECIFICATIONS/EQUIVALENT	MFR
	2	57.41.4100	10 E	RESISTOR	
	3	57.41.4470	47 E	RESISTOR	
	5	57.41.4221	220 E	RESISTOR	
	1	57.41.4471	470 E	RESISTOR	
	3	57.41.4681	680 E	RESISTOR	
	1	57.41.4821	820 E	RESISTOR	
	3	57.41.4122	1,2 k	RESISTOR	
	4	57.41.4332	3,3 k	RESISTOR	
	3	57.41.4472	4,7 k	RESISTOR	
	2	57.41.4682	6,8 k	RESISTOR	
	2	57.41.4822	8,2 k	RESISTOR	
	9	57.41.4103	10 k	RESISTOR	
	1	57.41.4123	12 k	RESISTOR	
	1	57.41.4153	15 k	RESISTOR	
	2	57.41.4183	18 k	RESISTOR	
	1	57.41.4562	5,6 k	RESISTOR	
	2	57.41.4563	56 k	RESISTOR	
	2	57.41.4104	100 k	RESISTOR	
	1	57.41.4684	680 k	RESISTOR	
	3	59.34.0569	5,6 p	CAPACITOR	
	4	59.34.1100	10 p	CAPACITOR	
	2	59.34.1101	100 p	CAPACITOR	
	3	59.34.5471	470 p	CAPACITOR	
	1	59.11.6102	1000 p	CAPACITOR	
	1	59.11.6332	3300 p	CAPACITOR	
	1	59.32.2472	4700 p	CAPACITOR	
	5	59.99.0205	68 n	CAPACITOR	
	1	59.31.0334	0,33 µ	CAPACITOR	
	2	59.30.7220	22 µ 25 V	TANTAL	
	2	59.30.4220	22 µ 16 V	TANTAL	

IND	DATE	NAME
4		
3		
2		
1		
○	2.12.80	

IND	PIECES	PART NO	VALUE	SPECIFICATIONS/EQUIVALENT	MFR
	1	59.30.1470	47 µ 1 V	TANTAL	
	2	59.30.1101	100µ 1 V	TANTAL	
	1	59.30.3101	100µ 1½ V	TANTAL	
	2	59.25.4101	100µ 2½ V	ELECTROLYTIC CAP.	
	1	59.25.3221	220µ 1½ V	ELECTROLYTIC CAP.	
	11	50.04.0125	IN 4448	DIODE	
	1	50.03.0316	BC 140	TRANSISTOR	
	1	50.03.0315	BC 160	TRANSISTOR	
	1	50.03.0437	BC 237	TRANSISTOR	
	5	50.03.0497	BC 550	TRANSISTOR	
	5	50.03.0496	BC 560	TRANSISTOR	
	1	50.05.0238	TDA 1034	IC	
	1	50.05.0245	µA 1458	IC	
	1	62.02.1822	8,2 mH	INDUCTOR	
	1	1.022.408		TRANSFORMER	
	1	56.02.1001		RELAIS	
	1	50.04.1102	6,8 V	ZEHNERDIODE	
	1	10.022.114-11		PRINT	

IND	DATE	NAME
4		
3		
2		
1		
○	2.12.80	

7.4
MASTER CONTROL SET TO SONY BVU 200 1.100.012

TLS INTERFACE RACK

SURVEY OF INTERFACE RACK (SONY BVU 200)

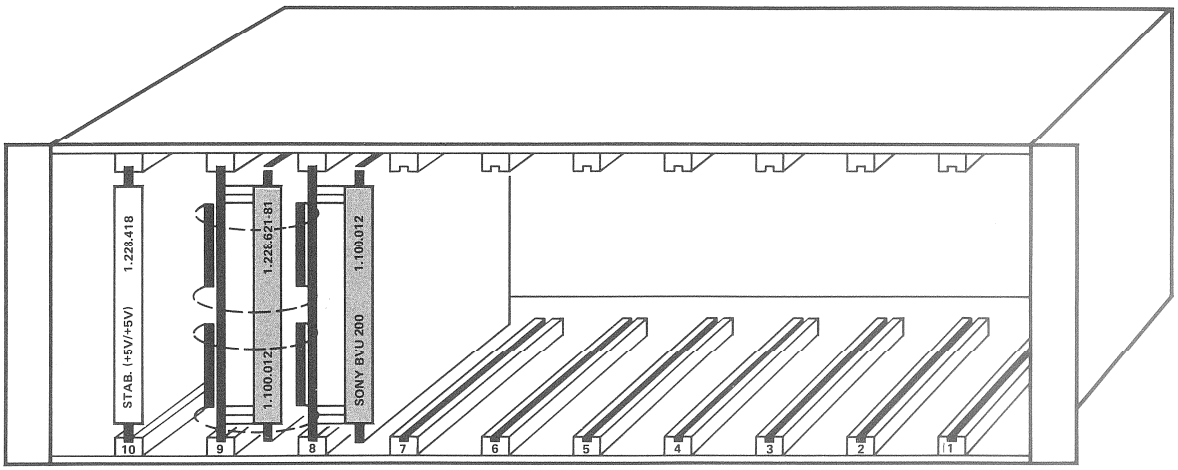

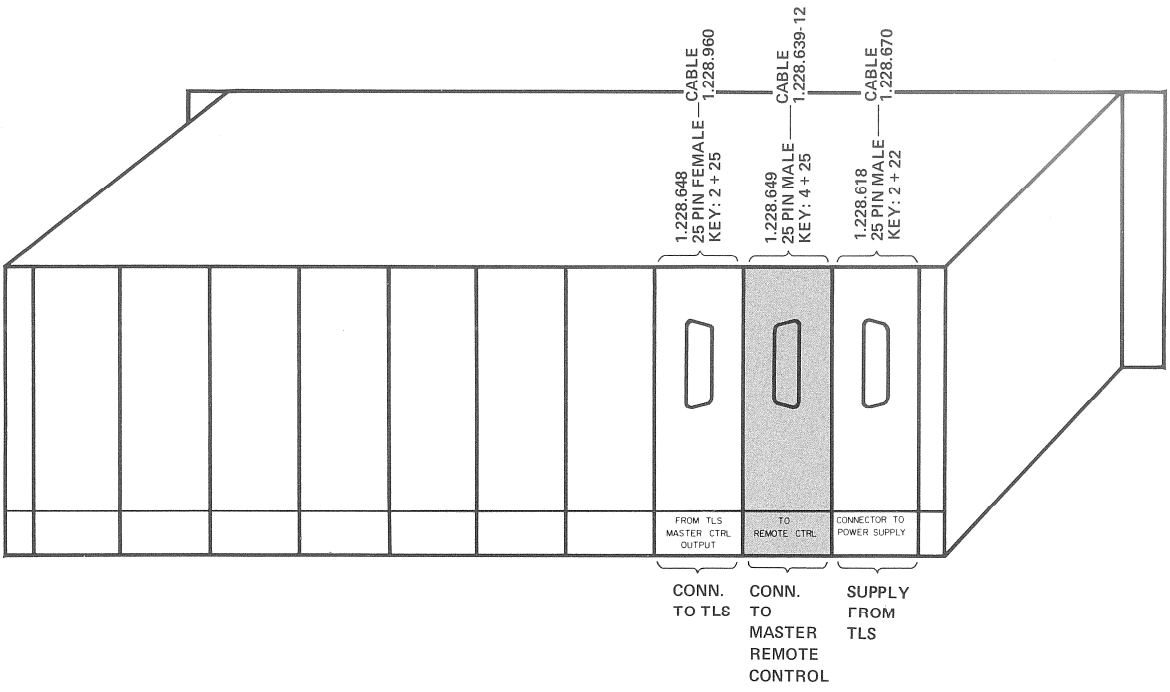

TLS MASTER CONTROL PROCESSOR PCB 1.228.621–81

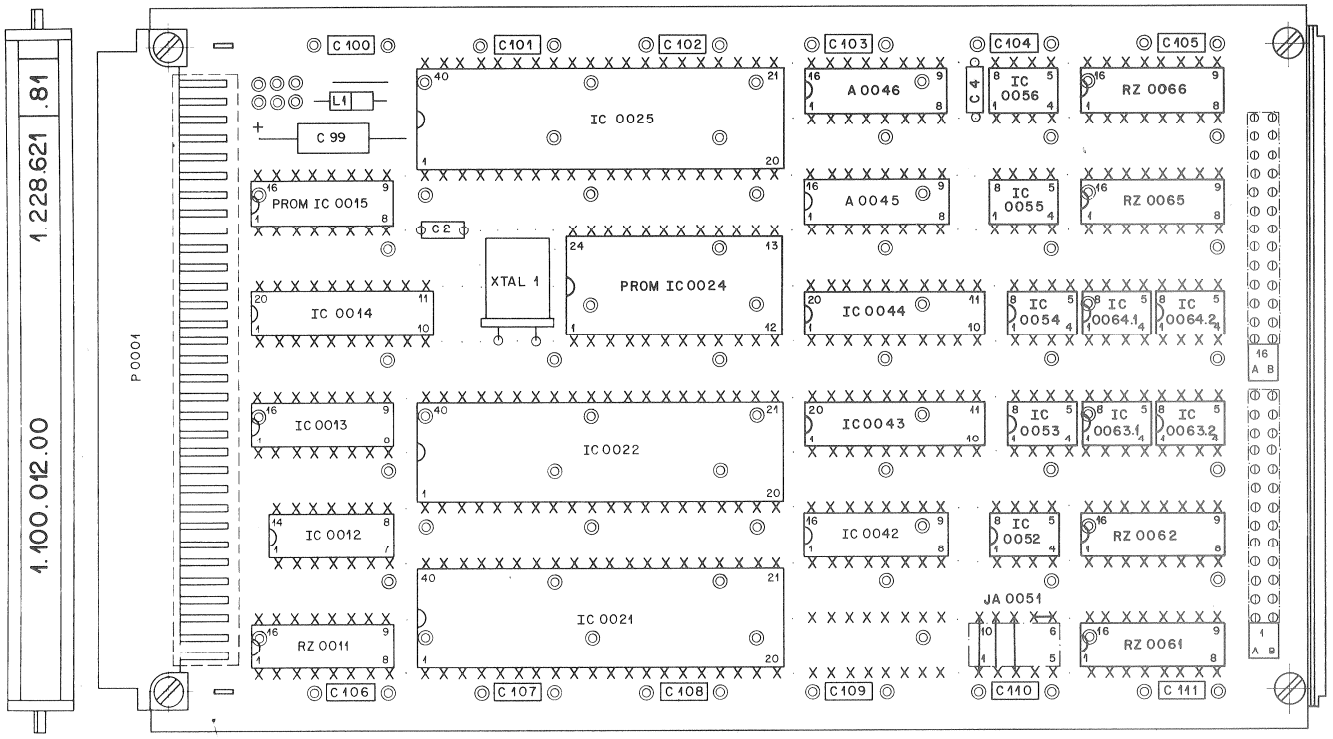


```
*   S T U D E R   *   POSITION LIST OF PARTS 1.100.012.00   *   79/04/04   *
*****************************************************************************
*   TLS INTERFACE RACK              *   TLS MASTER CTRL SET SONY BVU200   *

POSITION      PART NO. DESCRIPTION OF PART
RD. POS.M
------------ ------------ ------------------------------------------
A    0045  1.228.733.00 PWRON ASS TLS IF PROCESSOR
A    0046  1.228.735.00 8 * 3,3V-68NF ARRAY
C    0002    59.34.1120 C    12  P ,  5%, NP 0 , KER
C    0004    59.99.0205 C    68  N ,-20%,  63V , KER
C    0099    59.99.0202 C    39  U , 20%,  10V , TA
C    0100    59.99.0205 C    68  N ,-20%,  63V , KER
C    0101    59.99.0205 C    68  N ,-20%,  63V , KER
C    0102    59.99.0205 C    68  N ,-20%,  63V , KER
C    0103    59.99.0205 C    68  N ,-20%,  63V , KER
C    0104    59.99.0205 C    68  N ,-20%,  63V , KER
C    0105    59.99.0205 C    68  N ,-20%,  63V , KER
C    0106    59.99.0205 C    68  N ,-20%,  63V , KER
C    0107    59.99.0205 C    68  N ,-20%,  63V , KER
C    0108    59.99.0205 C    68  N ,-20%,  63V , KER
C    0109    59.99.0205 C    68  N ,-20%,  63V , KER
C    0110    59.99.0205 C    68  N ,-20%,  63V , KER
C    0111    59.99.0205 C    68  N ,-20%,  63V , KER
IC   0012    50.06.0008 IC  SN 74 LS  08 N        TTL
IC   0013    50.06.0133 IC SN 74LS133
IC   0014    50.06.0240 IC SN 74LS240
IC   0015  1.025.016.10 TLS MASTER CTRL ADDRESSDECODER
IC   0021    50.05.0270 IC MC6821P
IC   0022    50.05.0276 IC MC6802P
IC   0024  1.025.016.50 TLS MASTER CTRL U-MATIC BVU200
IC   0025    50.05.0270 IC MC6821P
IC   0042    50.06.0161 IC  SN 74 LS 161 N        TTL
IC   0043    50.06.0240 IC SN 74LS240
IC   0044    50.06.0240 IC SN 74LS240
IC   0052    50.15.0101 IC MC 1472
IC   0053    50.15.0101 IC MC 1472
IC   0054    50.15.0101 IC MC 1472
IC   0055    50.15.0101 IC MC 1472
IC   0056    50.05.0158 IC  NE 555N  ,MC 1455P1 ,LIN
IC   00631   50.15.0101 IC MC 1472
IC   00632   50.15.0101 IC MC 1472
IC   00641   50.15.0101 IC MC 1472
IC   00642   50.15.0101 IC MC 1472
P    0001    54.01.0354 P    LEISTE  3 * 32 POL  WRAP
RZ   0011    57.85.3132 RZ  15*3,3K,  2%,        DIL16
RZ   0061    57.80.0101 RZ  14*330/220,2%,       DIL16
RZ   0062    57.88.3101 RZ  8*100     2%         DIL
RZ   0065    57.88.3102 RZ 8 * 1K
RZ   0066    57.85.3103 RZ  15*10K ,  2%,        DIL
Y    0001    89.01.0378 XTAL 4.000MHZ
```

POWER ON ASSEMBLY 1.228.733

SEE SECTION 7.1 PAGE 7/6

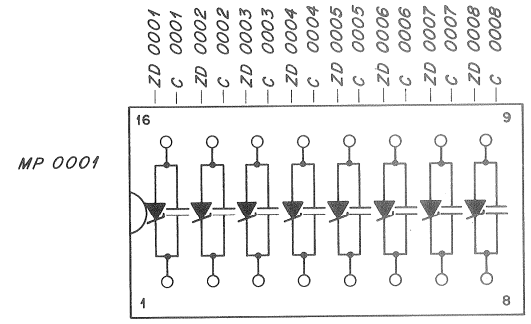

IND	POS NO	PART NO	VALUE	SPECIFICATIONS/EQUIVALENT	MFR
	C 01	59.99.0205	68 N	-20% 63V CER	Si
	C 02	59.99.0205	68 N		
	C 03	59.99.0205	68 N		
	C 04	59.99.0205	68 N		
	C 05	59.99.0205	68 N		
	C 06	59.99.0205	68 N		
	C 07	59.99.0205	68 N		
	C 08	59.99.0205	68 N		
	D 01	50.04.1107	3,3V	5% .40W Z	
	D 02	50.04.1107	3,3V		
	D 03	50.04.1107	3,3V		
	D 04	50.04.1107	3,3V		
	D 05	50.04.1107	3,3V		
	D 06	50.04.1107	3,3V		
	D 07	50.04.1107	3,3V		
	D 08	50.04.1107	3,3V		
	MP 1	53.03.0170	2x8x0.3	Adaptor Plug DIL	

IND	DATE	NAME	
④			CER = Ceramic Si= Siemens
③			
②			
①			
○	17.4.1979	/gv	

STUDER	8 * 3,3V - 68nF Array	1.228.735.00	PAGE 1 OF 1

TLS INTERFACE RACK

TLS MASTER CONTROL ADAPTER PCB SONY BVU 200 1.100.012

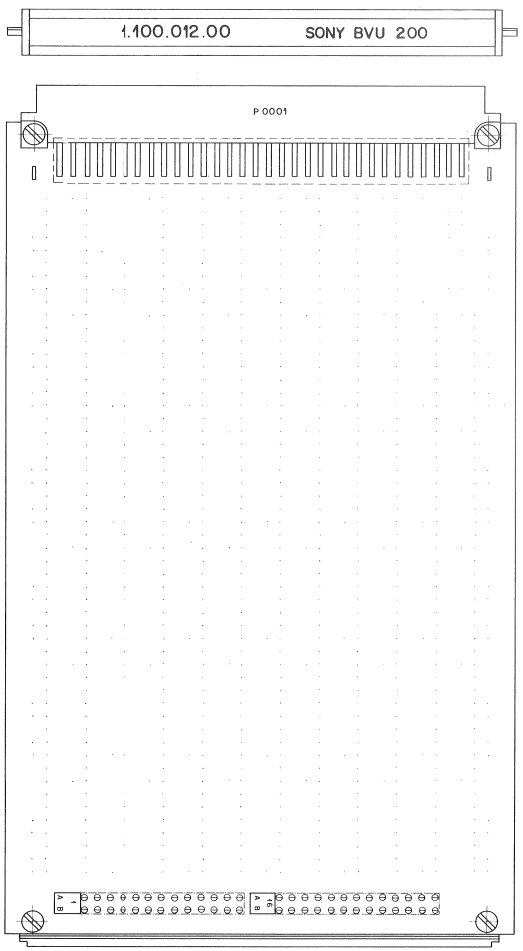

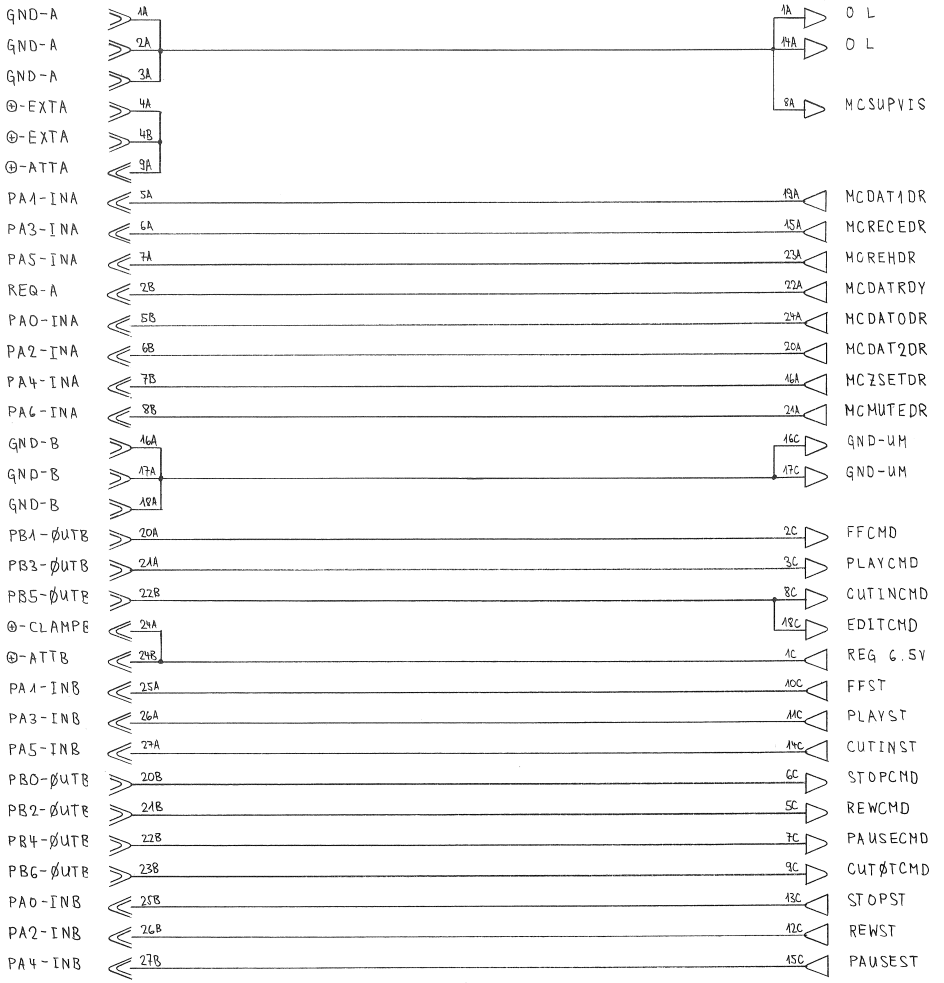

TLS INTERFACE RACK

CONNECTOR TO MASTER REMOTE CONTROL 1.228.649

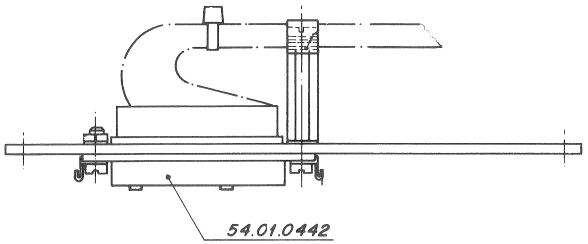

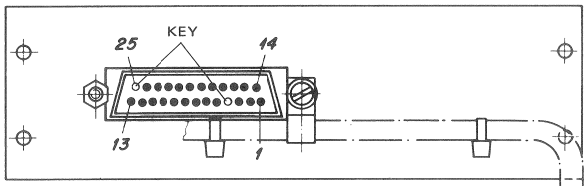

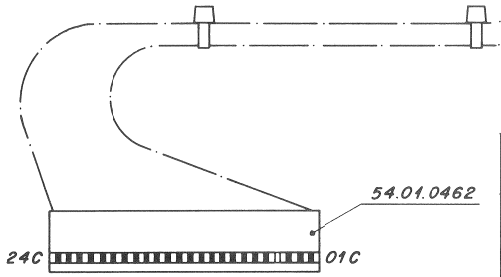

GR99 EL8

Sign. Name	Color	Start	End
	brn	1	1 C
	red	2	2 C
	org	3	3 C
KEY		4	
	grn	5	5 C
	blu	6	6 C
	vio	7	7 C
	grn	8	8 C
	wht	9	9 C
	blk	10	10 C
	brn	11	11 C
	red	12	12 C
	org	13	13 C
	yel	14	14 C
	grn	15	15 C
	blu	16	16 C
	vio	17	17 C
	gry	18	18 C
	wht	19	19 C
	blk	20	20 C
	brn	21	21 C
	red	22	22 C
	org	23	23 C
	yel	24	24 C
KEY		25	

CABLE MASTER REMOTE CONTRCL-INTERFACE RACK 1.228.639–12

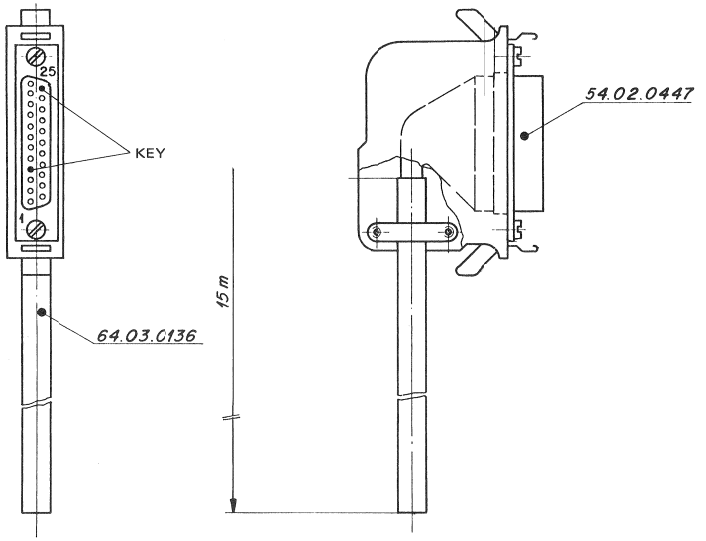

SIG.NAME	COLOR	AMP 54.02.0447 PIN NR.	SONY BVU 200 TAPE DECK PIN NR.
UNREG 5V	wht	1	1
FFCMD	blu	2	2
PLAYCMD	wht	3	3
KEY		4	
REWCMD	org	5	4
STOPCMD	wht	6	6
PAUSECMD	grn	7	7
CUTINCMD	wht	8	9
CUTOCMD	brn	9	11
FFST	wht	10	12
PLAY ST	gry	11	13
REWST	red	12	14
STOPS T	blu	13	16
CUTINST	red	14	19
PAUSE 2ST	org	15	32
CND	red	16	35
CND	grn	17	36
EDITCMD	red	18	10
UNUSED	brn	19	
UNUSED	red	20	
UNUSED	gry	21	
UNUSED	blk	22	
UNUSED	blu	23	
UNUSED	blk	24	
KEY		25	

7.5
MASTER CONTROL SET TO AMPEX VPR1/VPR2 1.100.013

TLS INTERFACE RACK

SURVEY OF INTERFACE RACK (AMPEX VPR1)

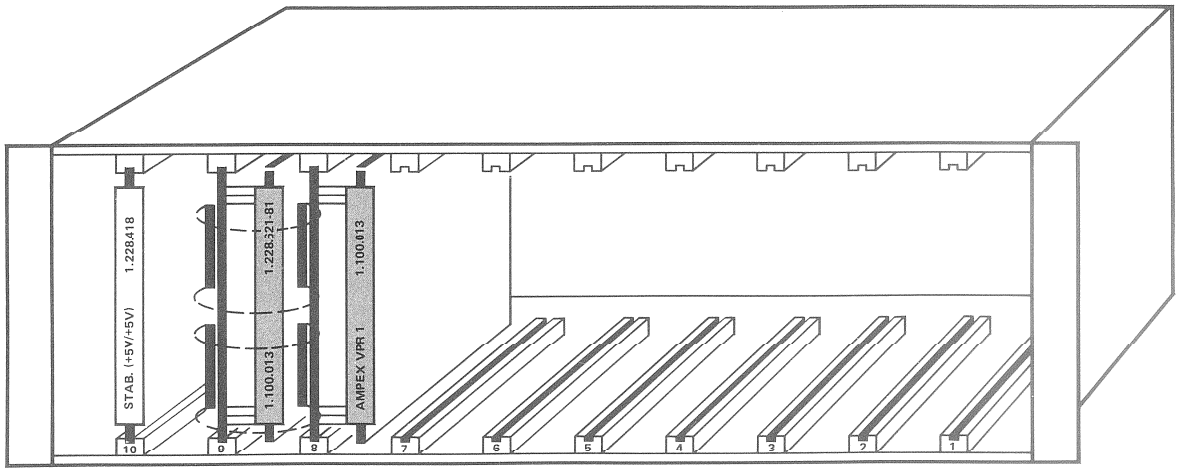

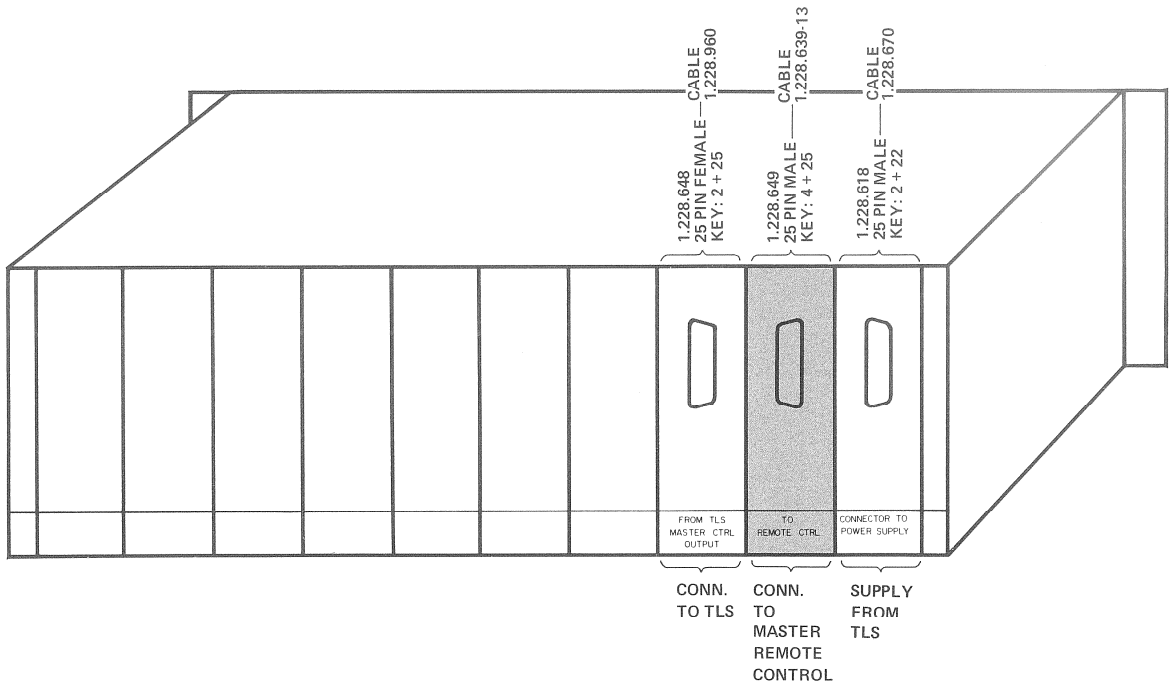

TLS MASTER CONTROL PROCESSOR PCB 1.228.621–81

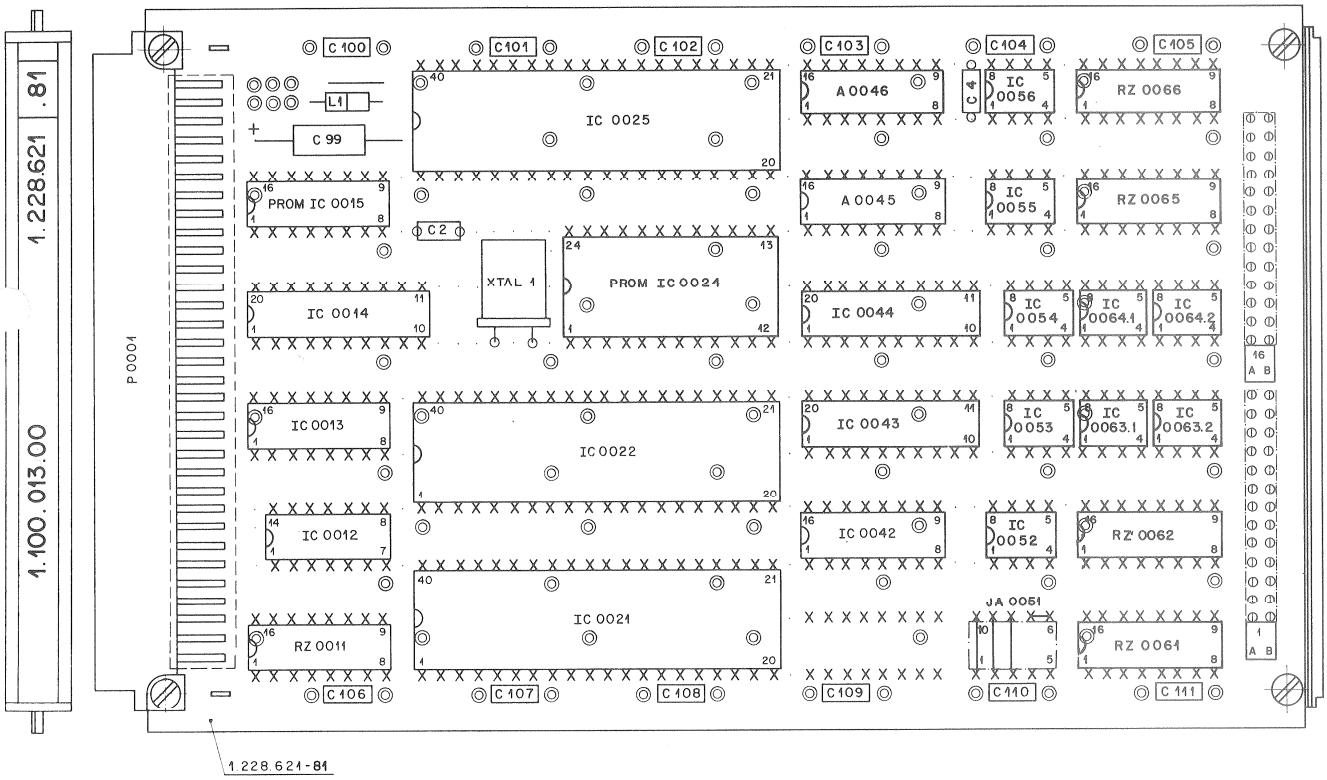


```
*   S T U D E R   *   POSITION LIST OF PARTS 1.100.013.00   *   79/04/04                    PAGE  1 OF  1   *
*****************************************************************************************************
*   TLS INTERFACE RACK                 *   TLS MASTER CTRL SET AMPEX VPR1   *                79/04/03-C   *
```

POSITION RD. POS.M	PART NO.	DESCRIPTION OF PART
A 0045	1.228.733.00	PWRON ASS TLS IF PROCESSOR
A 0046	1.228.735.00	8 * 3,3V-6RNF ARRAY
C 0002	59.34.1120	C 12 P , 5%, NP 0 , KER
C 0004	59.99.0205	C 68 N +-20%, 63V , KER
C 0099	59.99.0202	C 39 U , 20%, 10V , TA
C 0100	59.99.0205	C 68 N +-20%, 63V , KER
C 0101	59.99.0205	C 68 N +-20%, 63V , KER
C 0102	59.99.0205	C 68 N +-20%, 63V , KER
C 0103	59.99.0205	C 68 N +-20%, 63V , KER
C 0104	59.99.0205	C 68 N +-20%, 63V , KER
C 0105	59.99.0205	C 68 N +-20%, 63V , KER
C 0106	59.99.0205	C 68 N +-20%, 63V , KER
C 0107	59.99.0205	C 68 N +-20%, 63V , KER
C 0108	59.99.0205	C 68 N +-20%, 63V , KER
C 0109	59.99.0205	C 68 N +-20%, 63V , KER
C 0110	59.99.0205	C 68 N +-20%, 63V , KER
C 0111	59.99.0205	C 68 N +-20%, 63V , KER
IC 0012	50.06.0008	IC SN 74 LS 08 N TTL
IC 0013	50.06.0133	IC SN 74LS133
IC 0014	50.06.0240	IC SN 74LS240
IC 0015	1.025.016.10	TLS MASTER CTRL ADDRESSDECODER
IC 0021	50.05.0270	IC MC6821P
IC 0022	50.05.0276	IC MC6802P
IC 0024	1.025.018.00	TLS MASTER CTRL AMPEX VPR1
IC 0025	50.05.0270	IC MC6821P
IC 0042	50.06.0161	IC SN 74 LS 161 N TTL
IC 0043	50.06.0240	IC SN 74LS240
IC 0044	50.06.0240	IC SN 74LS240
IC 0052	50.15.0101	IC MC 1472
IC 0053	50.15.0101	IC MC 1472
IC 0054	50.15.0101	IC MC 1472
IC 0055	50.15.0101	IC MC 1472
IC 0056	50.05.0158	IC NE 555N ,MC 1455P1 ,LIN
IC 00631	50.15.0101	IC MC 1472
IC 00632	50.15.0101	IC MC 1472
IC 00641	50.15.0101	IC MC 1472

POSITION RD. POS.M	PART NO.	DESCRIPTION OF PART
IC 00642	50.15.0101	IC MC 1472
P 0001	54.01.0354	P LEISTE 3 * 32 POL WRAP
RZ 0011	57.85.3332	RZ 15*3.3K, 2%, DIL16
RZ 0061	57.80.0101	RZ 14*330/220,2%, DIL16
RZ 0062	57.88.3101	RZ 8*100 2% DIL
RZ 0065	57.88.3102	RZ 8 * 1K
RZ 0066	57.85.3103	RZ 15*10K , 2%, DIL
Y 0001	09.01.0378	XTAL 4.000MHZ

POWER ON ASSEMBLY 1.228.733
SEE SECTION 7.1 PAGE 7/6

ASSEMBLY 1.228.735
SEE PAGE 7/24

TLS INTERFACE RACK

TLS MASTER CONTROL ADAPTER PCB AMPEX VPR1

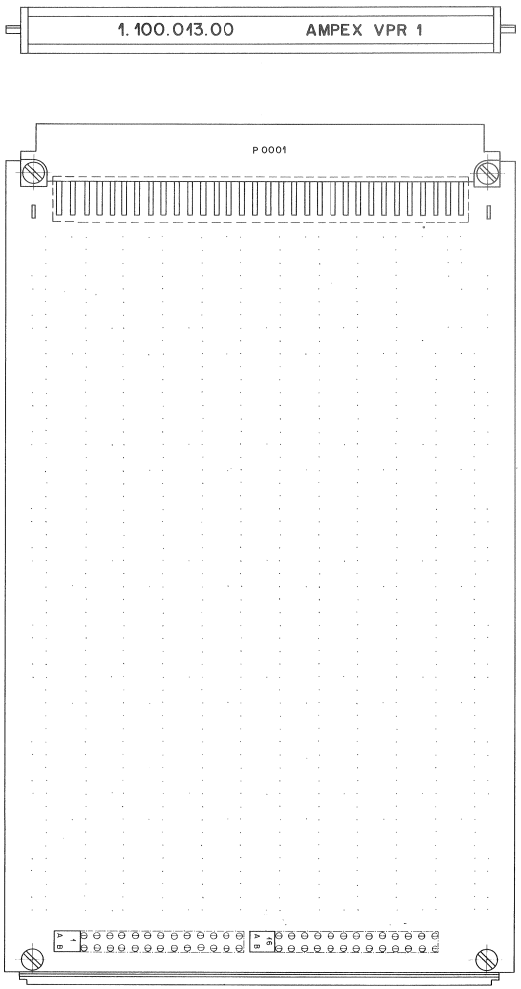

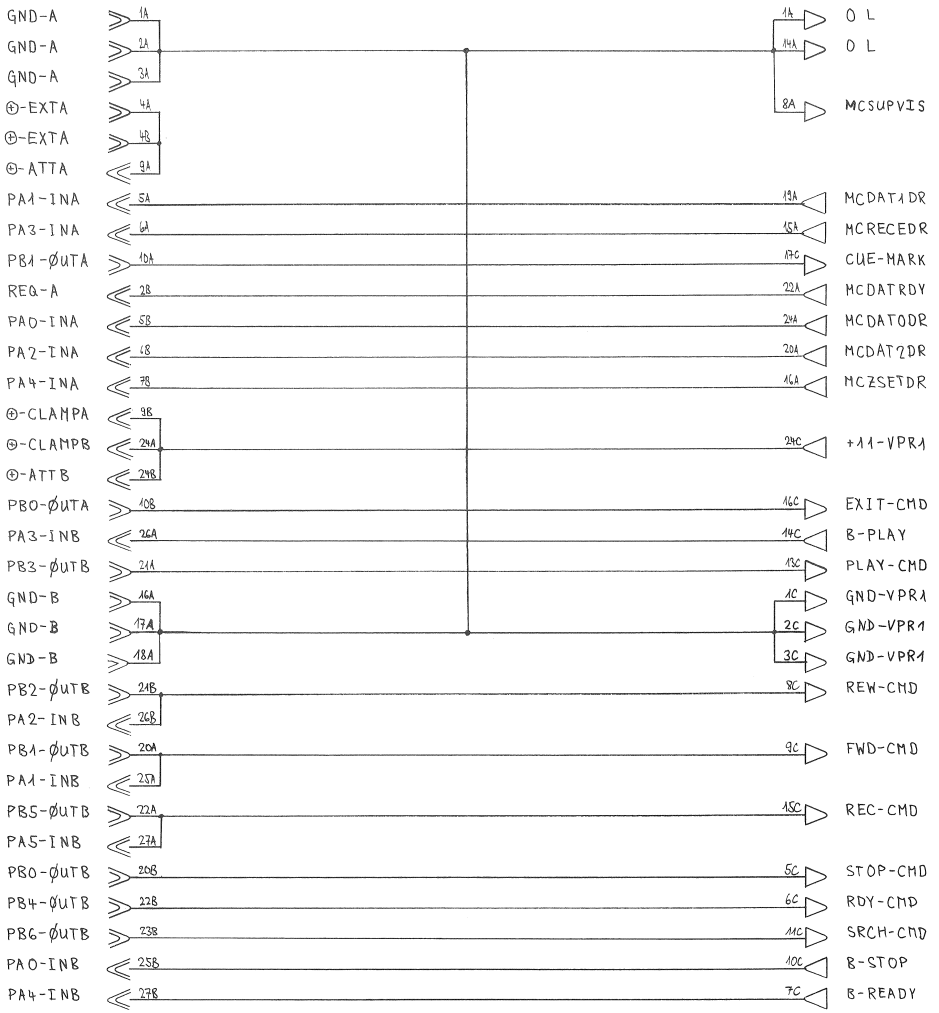

TLS INTERFACE RACK

CONNECTOR TO MASTER REMOTE CONTROL 1.228.649

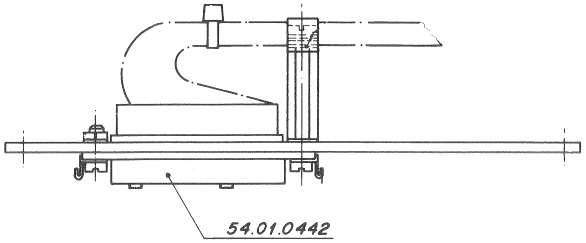

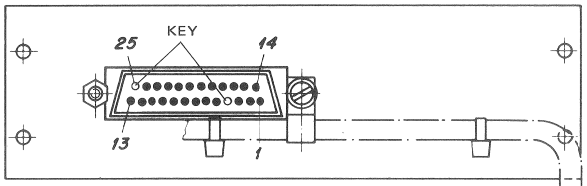

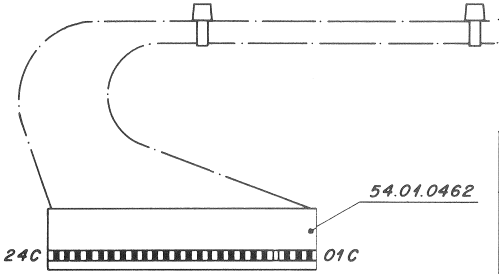

GR99 EL8

Sign. Name	Color	Start	End
	brn	1	1 C
	red	2	2 C
	org	3	3 C
KEY		4	
	grn	5	5 C
	blu	6	6 C
	vio	7	7 C
	grn	8	8 C
	wht	9	9 C
	blk	10	10 C
	brn	11	11 C
	red	12	12 C
	org	13	13 C
	yel	14	14 C
	grn	15	15 C
	blu	16	16 C
	vio	17	17 C
	gry	18	18 C
	wht	19	19 C
	blk	20	20 C
	brn	21	21 C
	red	22	22 C
	org	23	23 C
	yel	24	24 C
KEY		25	

CABLE MASTER REMOTE CONTROL-INTERFACE RACK 1.228.639–13

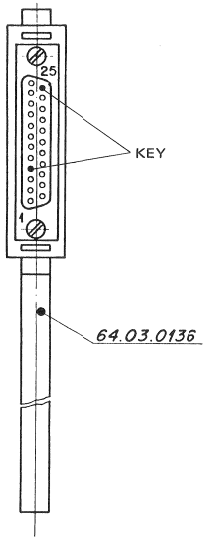

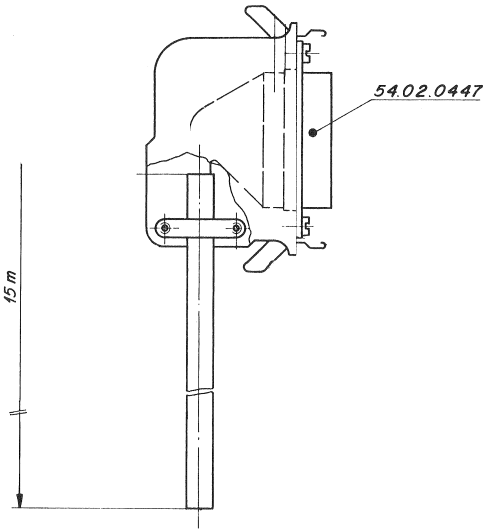

SIG.NAME	COLOR	AMP 54.02.0447 PIN NR.	AMPEX VPR 1 TAPE DECK PIN NR.
GND-VPR 1	wht	1	X
GND-VPR 1	blu	2	X
GND-VPR 1	wht	3	X
KEY		4	
STOPCMD	org	5	K
RDYCMD	wht	6	L
RDYLAMP	grn	7	M
RWDCMD	wht	8	N
FWDCMD	brn	9	P
STOPLAMP	wht	10	S
SRCHCMD	gry	11	T
SRCHLAMP	red	12	U
PLAYCMD	blu	13	V
PLAYLAMP	red	14	W
RECCMD	org	15	X
EXITCMD	red	16	Y
CUEMARK	grn	17	BB
UNUSED	red	18	
UNUSED	brn	19	
UNUSED	red	20	
UNUSED	gry	21	
UNUSED	blk	22	
UNUSED	blu	23	
+ 11V VPR 1	blk	24	V
KEY		25	

TLS INTERFACE RACK

TLS MASTER CONTROL ADAPTER PCB AMPEX VPR2 10.023.005

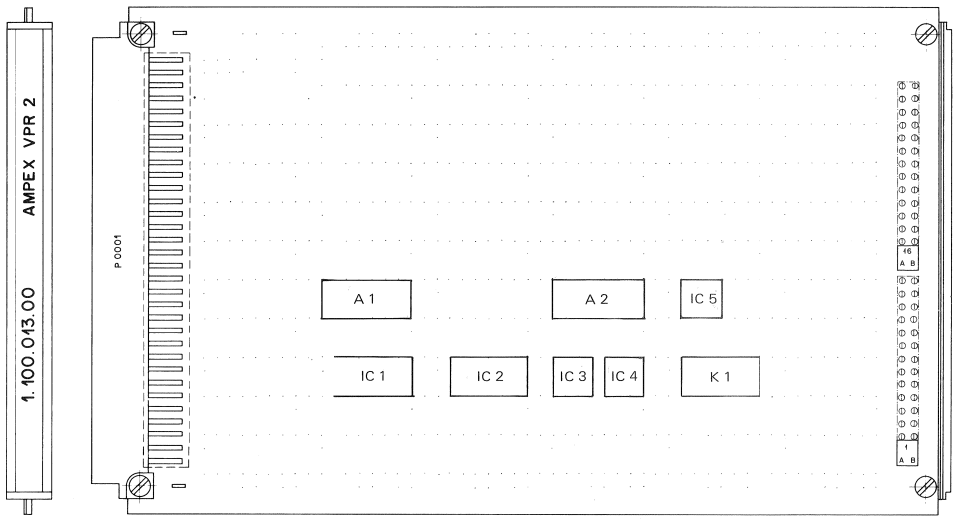

IC 1	SN 74 LS 00	50.06.0000
IC 2	SN 74 LS 74	50.06.0074
IC 3	SN 75462	50.05.0227
IC 4	SN 75462	50.05.0227
IC 5	NE 555 N	50.05.0158
K 1	RELAIS 1 x U 5V	56.02.1003

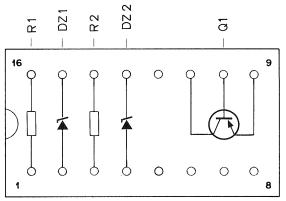

A 1	DZ 1	5,1V	50.04.1112
	DZ 2	5,1V	50.04.1112
	R 1	1 k	
	R 2	1 k	
	Q 1	BC 177	50.03.0515

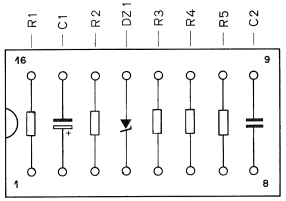

A 2	C 1	3,3 uF	
	C 2	0,1 uF	
	DZ 1	10V	50.04.1114
	R 1	10 E	
	R 2	1 M	
	R 3	120 E	
	R 4	470 E	
	R 5	470 E	

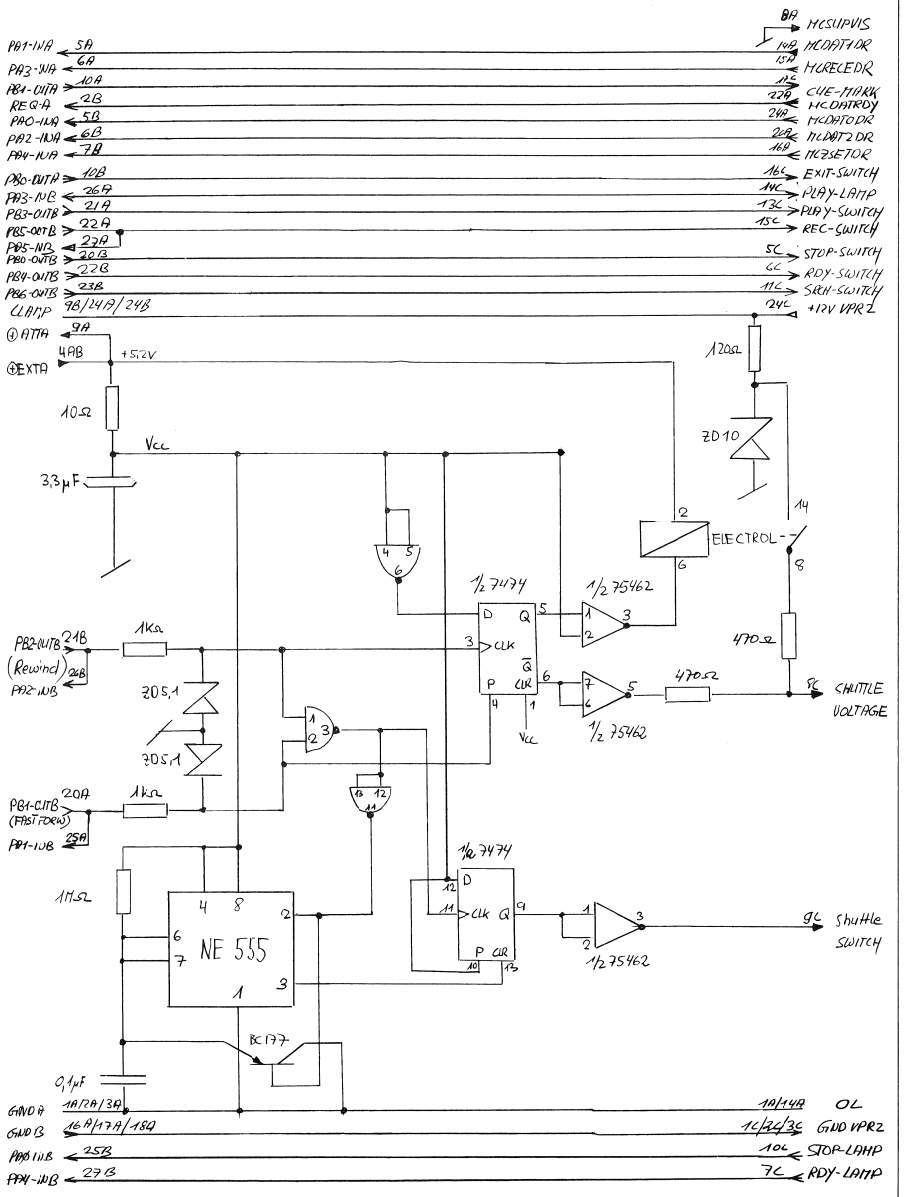

TLS INTERFACE RACK

CONNECTOR TO MASTER REMOTE CONTROL 1.228.649

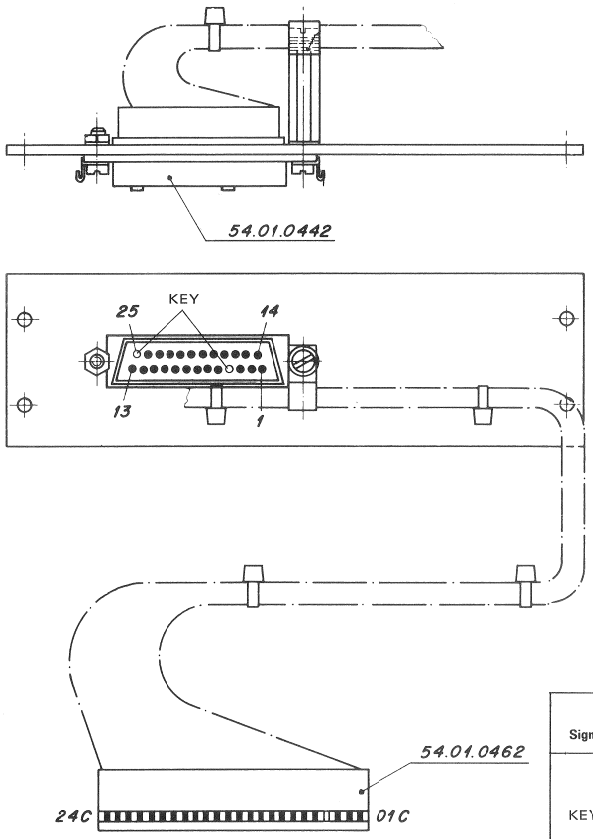

GR99 EL8

Sign. Name	Color	Start	End
	brn	1	1 C
	red	2	2 C
	org	3	3 C
KEY		4	
	grn	5	5 C
	blu	6	6 C
	vio	7	7 C
	grn	8	8 C
	wht	9	9 C
	blk	10	10 C
	brn	11	11 C
	red	12	12 C
	org	13	13 C
	yel	14	14 C
	grn	15	15 C
	blu	16	16 C
	vio	17	17 C
	gry	18	18 C
	wht	19	19 C
	blk	20	20 C
	brn	21	21 C
	red	22	22 C
	org	23	23 C
	yel	24	24 C
KEY		25	

CABLE MASTER REMOTE CONTROL-INTERFACE RACK 1.228.639–13 (VPR2)

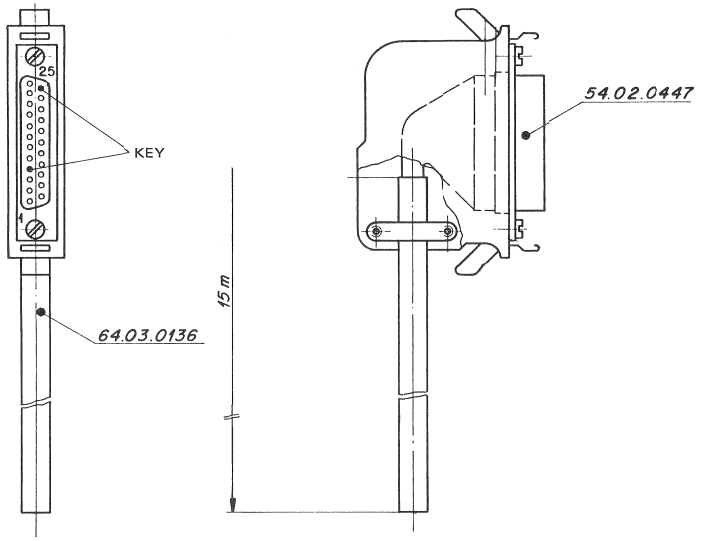

SIG.NAME	COLOR	AMP 54.02.0447 PIN.NR	AMPEX VPR2 TAPE DECK PIN.NR
GND-VPR 2	wht	1	31
GND-VPR 2	blu	2	31
GND-VPR 2	wht	3	31
KEY		4	
STOPSWITCH	org	5	15
RDYSWITCH	wht	6	28
RDYLAMP	grn	7	34
SHUTTLE 0/10	wht	8	18
SHUTTLE SWITCH	brn	9	20
STOPLAMP	wht	10	22
SRCHSWITCH	gry	11	65
SRCHINDIC	red	12	73
PLAYSWITCH	blu	13	1
PLAYLAMP	red	14	8
RECSWITCH	org	15	5
EXITSWITCH	red	16	71
ENTERSWITCH	grn	17	52
	red	18	
UNUSED	brn	19	
UNUSED	red	20	
UNUSED	gry	21	
UNUSED	blk	22	
UNUSED	blu	23	
+ 12 VPR	blk	24	
KEY	org	25	

7.6
MASTER CONTROL SET TO BOSCH BCN 50 1.100.014

TLS INTERFACE RACK

SURVEY OF INTERFACE RACK (BOSCH BCN 50)

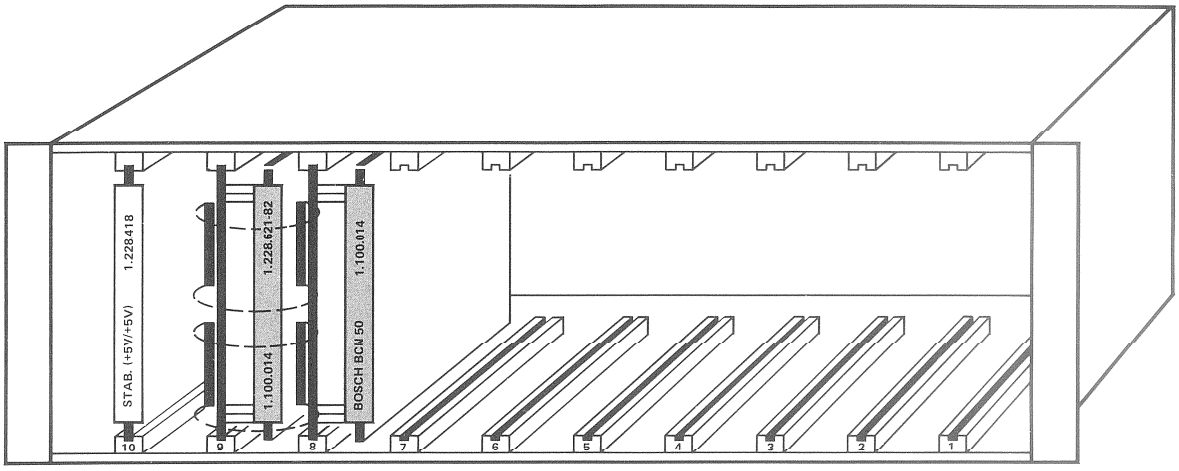

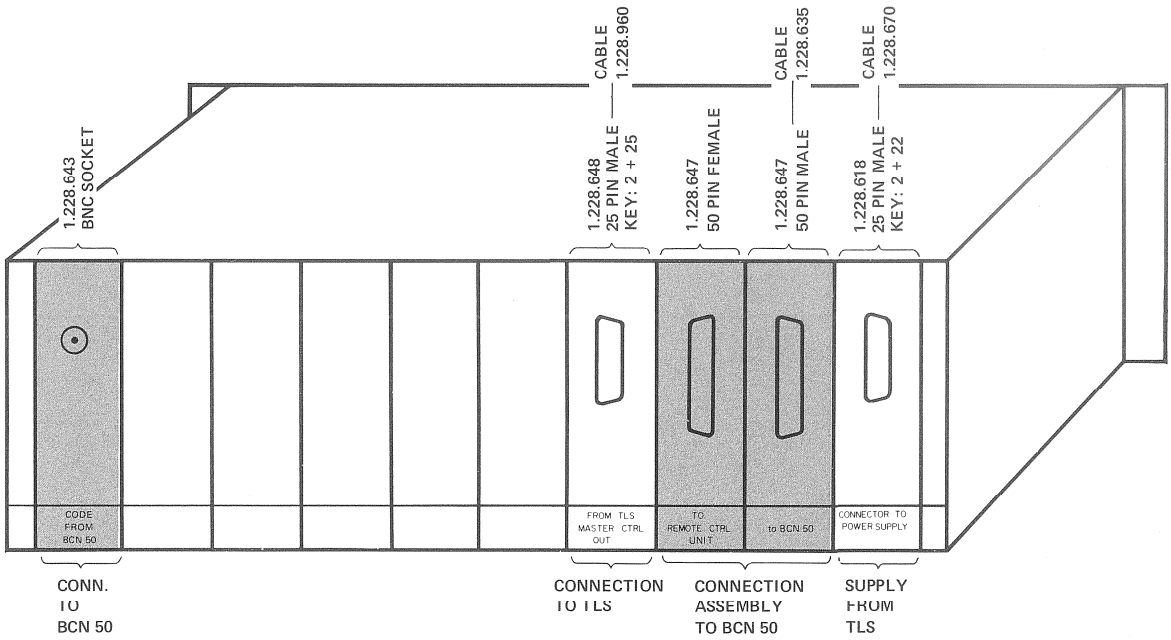

TLS MASTER CONTROL PROCESSOR PCB 1.228.621–82

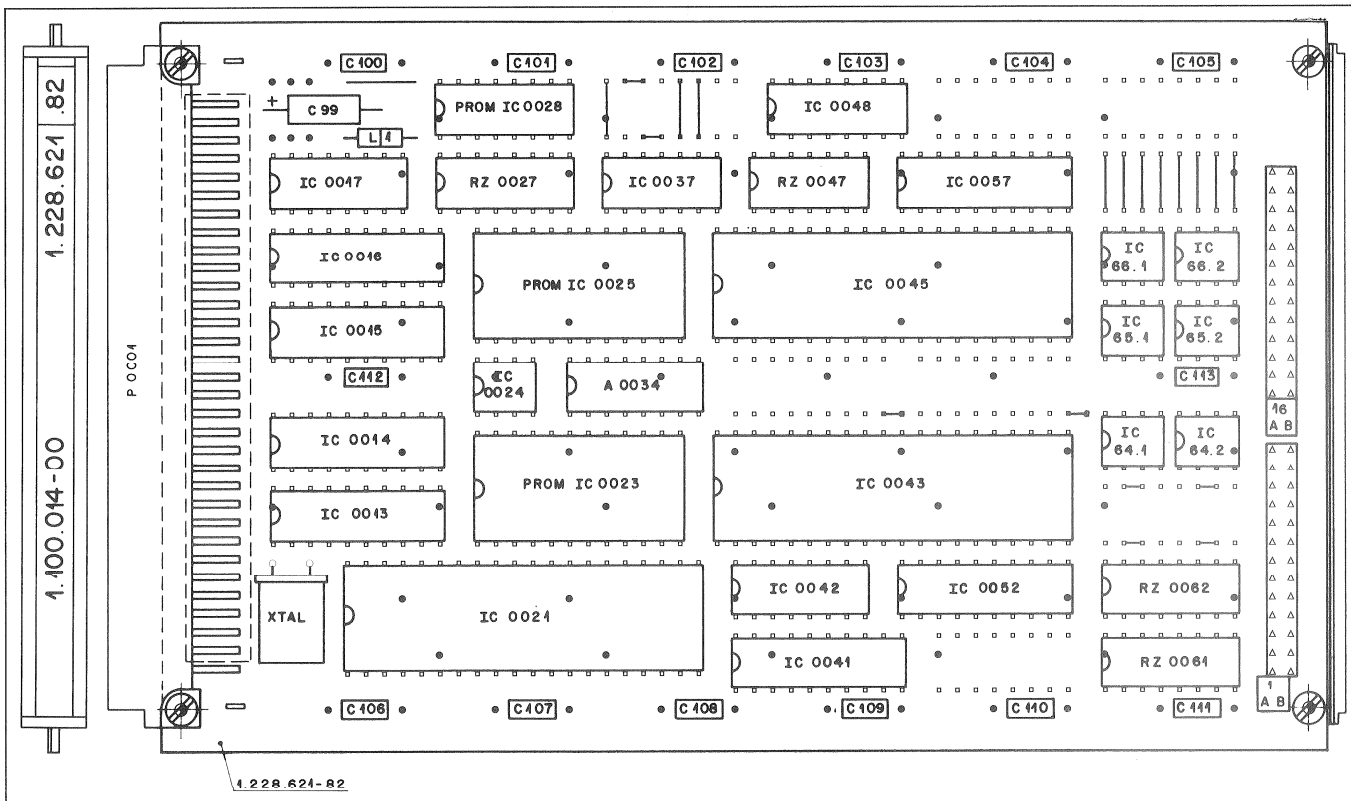

IND	POS NO	PART NO	VALUE	SPECIFICATIONS/EQUIVALENT	MFR
	A34	1.228.733.81		PWRON ASSEMBLY	
	C99	59.99.0202	39 U	20% 10V TA	
	C100	59.99.0205	68 N	20% 63V CER	
	C101	59.99.0205			
	C102	59.99.0205			
	C103	59.99.0205			
	C104	59.99.0205			
	C105	59.99.0205			
	C106	59.99.0205			
	C107	59.99.0205			
	C108	59.99.0205			
	C109	59.99.0205			
	C110	59.99.0205			
	C111	59.99.0205			
	C112	59.99.0205			
	C113	59.99.0205			
	IC13	50.06.0245	74LS245	Octal Transceiver	
	IC14	50.06.0244	74LS244	Octal Receiver	
	IC15	50.06.0244	74LS244	Octal Receiver	
	IC16	50.06.0240	74LS240	Octal inverting Receiver	
	IC17	50.05.0126	4929		
	IC21	50.05.0276	MC6802P	Microprocessing Unit	
	IC23	1.025.025.00	E-PROM		
	IC24	50.05.0158	NE 555	Timing Circuit	
	IC25	1.025.025.10	E-PROM		
	IC28	1.025.016.40	PROM	32 x 8 Bit, 3-state	
	IC37	50.06.0008	74LS08	Quad 2-input AND Gate	
	IC41	50.06.0240	74LS240	Octal inverting Receiver	

IND	DATE	NAME	
④			
③			
②			
①	1.7.80		
○	14.3.80	Sc	(Zeichnung Blatt 1)

STUDER | TLS MC PROCESSOR BOSCH BCN 50 | 1.100.014.00 | PAGE 1 OF 5

IND	POS NO	PART NO	VALUE	SPECIFICATIONS/EQUIVALENT	MFR
	IC42	50.06.0133	74LS133	13-input NAND Gate	
	IC43	50.05.0270	MC6821	Peripheral Interface	
	IC45	50.05.0270	MC6821	Peripheral Interface	
	IC48	50.06.0161	74LS161	4 bit binary Counter	
	IC52	50.06.0240	74LS240	Octal inverting Receiver	
1	IC57	50.06.0244	74LS244	Octal Receiver	
	IC63.1	50.15.0101	MC1472	Dual NAND Driver	
	IC63.2	50.15.0101			
	IC64.1	50.15.0101			
	IC64.2	50.15.0101			
	IC66.1	50.15.0101			
	IC66.2	50.15.0101			
	RZ27	57.85.3332	15*3k3	2% Resistor Array DIP	
	RZ47	57.83.3332	13*3k3	2% Resistor Array DIP	
	RZ61	57.80.0101	14*220/330E	2% Resistornetwork DIF	
	RZ62	57.88.3101	8*100E	2% Resistor Array DIP	
	XTAL2	89.01.0378	4 MHz	± 100 ppM C_L 20 pF	
	L 1	61.99.0124		Ferritpearls D 3,5 * 3	
	P 1	54.01.0354	3*32 P	Wrap Leiste 96 p, male	

IND	DATE	NAME	
④			
③			
②			
①	1.7.80		
○	14.3.80	Sc	(Zeichnung Blatt 1)

CONTINUATION
SEE PAGE 7/36

STUDER | TLS MC PROCESSOR BOSCH BCN 50 | 1.100.014.00 | PAGE 2 OF 5

POWER ON ASSEMBLY 1.228.733
SEE SECTION 7.1 PAGE 7/6

TLS INTERFACE RACK

TLS MASTER CONTROL PROCESSOR PCB 1.228.621–82

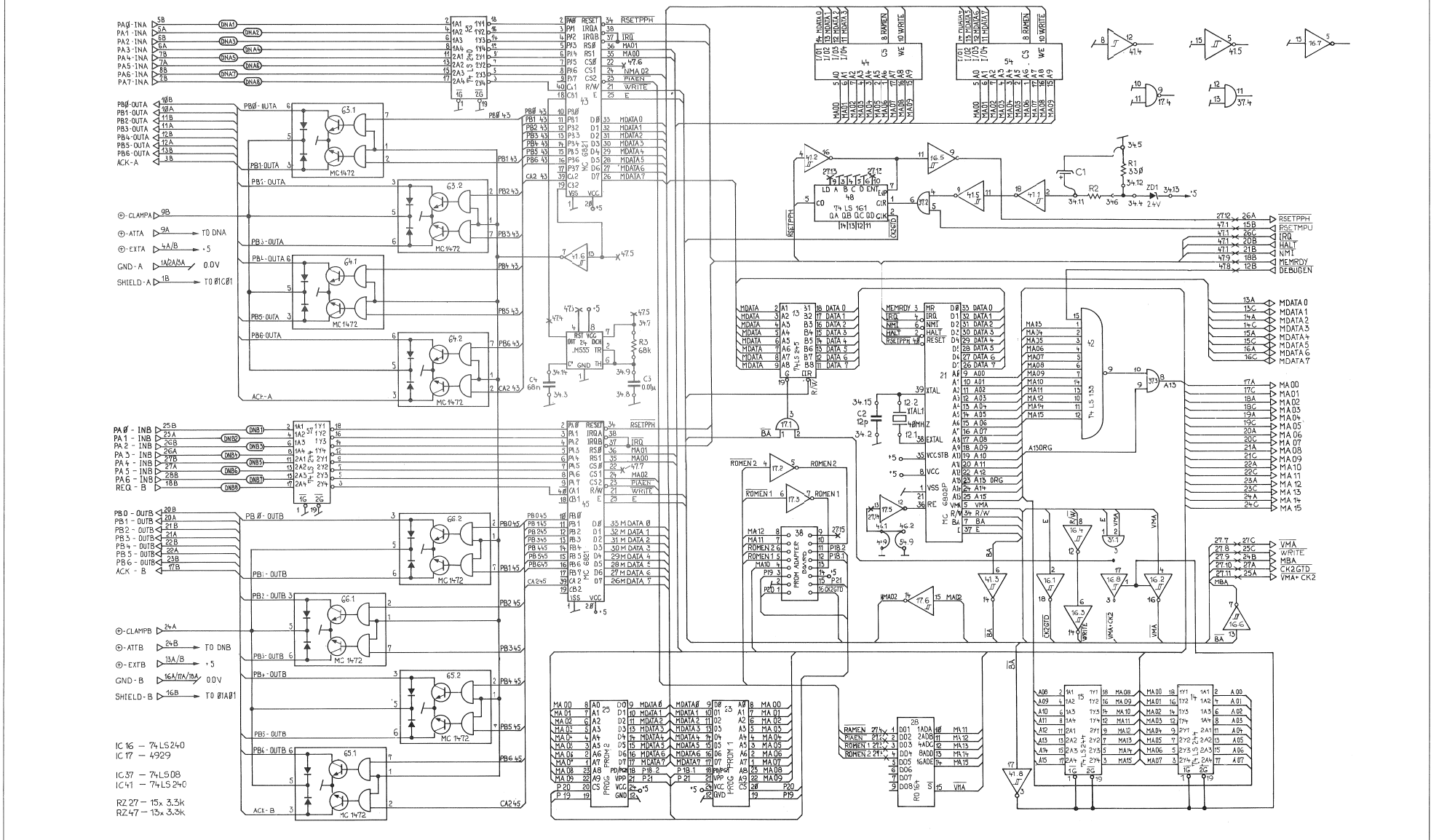

TLS MASTER CONTROL PROCESSOR PCB 1.228.621–82

IND	POS NO	PART NO	VALUE	SPECIFICATIONS/EQUIVALENT	MFR
	C99	59.99.0202	39 U	20% 10V TA	
	C100	59.99.0205	68 N	20% 63V CER	
	C101	59.99.0205	68 N	20% 63V CER	
	C102	59.99.0205	68 N	20% 63V CER	
	C103	59.99.0205	68 N	20% 63V CER	
	C104	59.99.0205	68 N	20% 63V CER	
	C105	59.99.0205	68 N	20% 63V CER	
	C106	59.99.0205	68 N	20% 63V CER	
	C107	59.99.0205	68 N	20% 63V CER	
	C108	59.99.0205	68 N	20% 63V CER	
	C109	59.99.0205	68 N	20% 63V CER	
	C110	59.99.0205	68 N	20% 63V CER	
	C111	59.99.0205	68 N	20% 63V CER	
	C112	59.99.0205	68 N	20% 63V CER	
	C113	59.99.0205	68 N	20% 63V CER	
	C114	59.99.0205	68 N	20% 63V CER	
	C115	59.99.0205	68 N	20% 63V CER	
	C116	59.99.0205	68 N	20% 63V CER	
	C117	59.99.0205	68 N	20% 63V CER	
	A12	1.228.540.00		8 x 1N4448 ARRAY	
	A16	1.228.739.00		DC Network 1 BCN 50	
	A26	1.228.735.00		8 x 3,3V - 68 nF ARRAY	
	A28	1.228.735.00		8 x 3,3V - 68 nF ARRAY	
	A65	1.228.740.00		DC Network 2 BCN 50	
	P 1	54.01.0354	3x32 Wrap	96 pol Wrap Plug, male	
	L 1	61.99.0124		Ferritpearls D 3,5 * 3	
	K 1	56.04.0160		K 1 * U DIL 6	

IND	DATE	NAME
④		
③		
②		
①	1.7.80	
○	14.3.80	Sc

(Zeichnung Blatt 2)

STUDER	TLS MC Bosch BCN 50	1.100.014.00	PAGE 3 OF 5

IND	POS NO	PART NO	VALUE	SPECIFICATIONS/EQUIVALENT	MFR
	IC21.1	50.99.0111	MCT-6	2 * Opto ILD-74	
	IC21.2	50.99.0111	MCT-6		
	IC22.1	50.99.0111	MCT-6		
	IC22.2	50.99.0111	MCT-6		
	IC23.1	50.99.0111	MCT-6		
	IC23.2	50.99.0111	MCT-6		
	IC31	50.06.0299	SN74LS299		
	IC32	50.06.0299	SN74LS299		
	IC33	50.06.0299	SN74LS299		
	IC34	50.06.0299	SN74LS299		
	IC41	50.06.0161	SN74LS161		
	IC42	50.06.0161	SN74LS161		
	IC43	1.025.019.80	PROM	512 * 4 BIT, 3-state	
	IC44	50.06.0157	SN74LS157		
	IC45	50.06.0151	SN74LS151		
	IC46	50.06.0240	SN74LS240		
	IC47	50.06.0240	SN74LS240		
	IC48	50.06.0151	SN74LS151		
	IC51	50.06.0074	SN74LS74		
	IC52	50.06.0324	SN74LS324		
	IC55	50.06.0002	SN74LS02		
	IC56	50.05.0203	SN75463		
	IC57	50.05.0203	SN75463		
	IC58	50.06.0151	SN74LS151		
	IC62	50.06.0014	SN74LS14		
	IC63	50.06.0174	SN74LS174		
	IC64	50.05.0203	SN75463		
	SZ68	55.01.0168	Switch	8 * AMP SWITCH ARRAY	

IND	DATE	NAME
④		
③		
②		
①	1.7.80	
○	14.3.80	Sc

(Zeichnung Blatt 2)

STUDER	TLS MC AD BOARD Bosch BCN 50	1.100.014.00	PAGE 4 OF 5

IND	POS NO	PART NO	VALUE	SPECIFICATIONS/EQUIVALENT	MFR
	RZ11	57.88.3222	8*2k2	Resistor Array DIP	
	RZ13	57.88.3102	8*1k	Resistor Array DIP	
	RZ14	57.88.3151	8*150	Resistor Array DIP	
	RZ24	57.88.3151	8*150	Resistor Array DIP	
	RZ25	57.88.3222	8*2k2	Resistor Array DIP	
	RZ27	57.88.3222	8*2k2	Resistor Array DIP	
	RZ35	57.88.3222	8*2k2	Resistor Array DIP	
	RZ36	57.88.3472	8*4k7	Resistor Array DIP	
	RZ37	57.88.3222	8*2k2	Resistor Array DIP	
	RZ38	57.88.3472	8*4k7	Resistor Array DIP	
	RZ67	57.85.3332	15*3k3	Resistor Array DIP	
	RZ61	57.83.3332	13*3k3	Resistor Array DIP	
	X-TAL	89.01.0651	6MHZ		

IND	DATE	NAME
①		
③		
②		
①	1.7.80	
○	14.3.80	Sc

(Zeichnung Blatt 2)

STUDER	TLS MC AD BOARD Bosch BCN 50	1.100.014.00	PAGE 5 OF 5

IND	POS NO	PART NO	VALUE	SPECIFICATIONS/EQUIVALENT	MFR
	C1	59.99.0201	6.8U	20% 35V TA	
	C2	59.99.0201	6.8U	20% 35V TA	
	C3	59.99.0201	6.8U	20% 35V TA	
	ZD1	50.04.1117	ZD12V	5% 40W Z	
	R1	57.02.5221	220	10% 25W	
	MP01	53.03.0171	6/10"	Adapter Plug	

IND	DATE	NAME
④		
③		
②		
①		
○	14.3.80	Sc

STUDER	DC Network 2 BCN 50	1.228.740.00	PAGE 1 OF 1

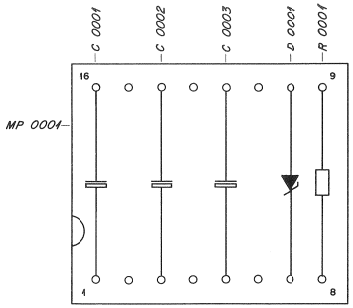

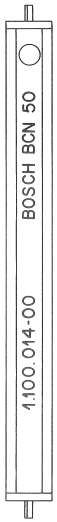

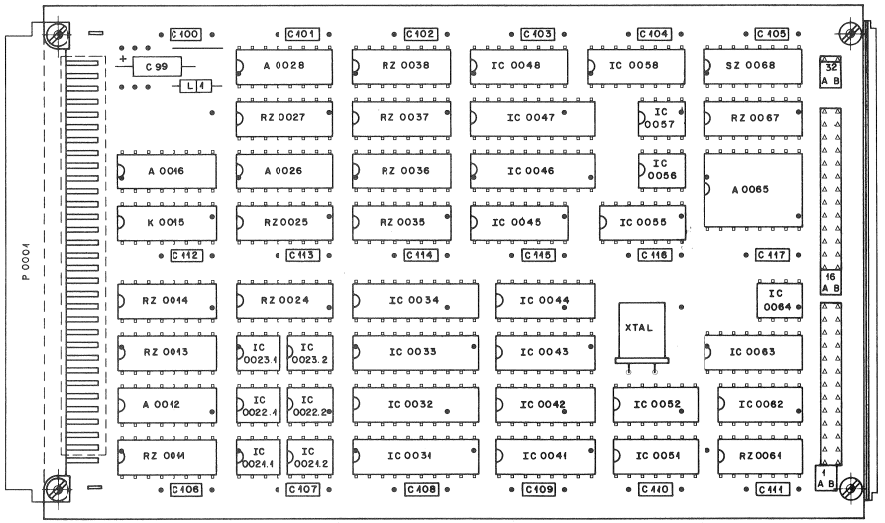

ASSEMBLY 1.228.735
SEE PAGE 7/24

```
*  S T U D E R  *   POSITION LIST OF PARTS 1.228.540.00
**********************************************************
*  TAPE LOCK SYSTEM 2000          *   ASS.09-12
**********************************************************

POSITION      PART NO. DESCRIPTION OF PART
RD. PO.M
-------- ------------ ----------------------------------
D   0001   50.04.0125 D   1N 4448          ,SI
D   0007   50.04.0125 D   1N 4448          ,SI
D   0011   50.04.0125 D   1N 4448          ,SI
D   0035   50.04.0125 D   1N 4448          ,SI
D   0007   50.04.0125 D   1N 4448          ,SI
D   0007   50.04.0125 D   1N 4448          ,SI
D   0001   50.04.0125 D   1N 4448          ,SI
D   0015   50.04.0125 D   1N 4448          ,SI
MP  0001   53.03.0170 MP ADAPTOR PLUG 2*8*0.3  DIL
```

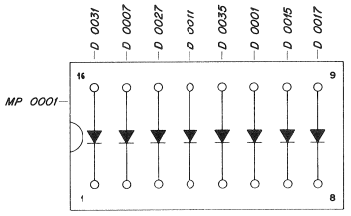

IND	POS NO	PART NO	VALUE	SPECIFICATIONS/EQUIVALENT	MFR
	C1	59.99.0205	68 N	20% 63V CER	
	C2	59.99.0205	68 N	20% 63V CER	
	ZD1	50.04.1118	ZD6.2V	5% 40W Z	
	ZD1	50.04.1118	ZD6.2V		
	R1	57.02.5221	220	10% 25W	
	R2	57.02.5221	220	10% 25W	
	R3	57.02.5821	820	10% 25W	
	R4	57.02.5821	820	10% 25W	
	MP01	53.03.0170	3/10"	Adapter plug	

IND	DATE	NAME
④		
③		
②		
①		
○	14.3.80	Sc

STUDER	DC Network 1 BCN 50	1.228.739.00	PAGE 1 OF 1

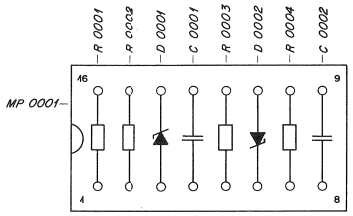

TLS INTERFACE RACK

TLS MASTER CONTROL ADAPTER PCB BOSCH BCN 50

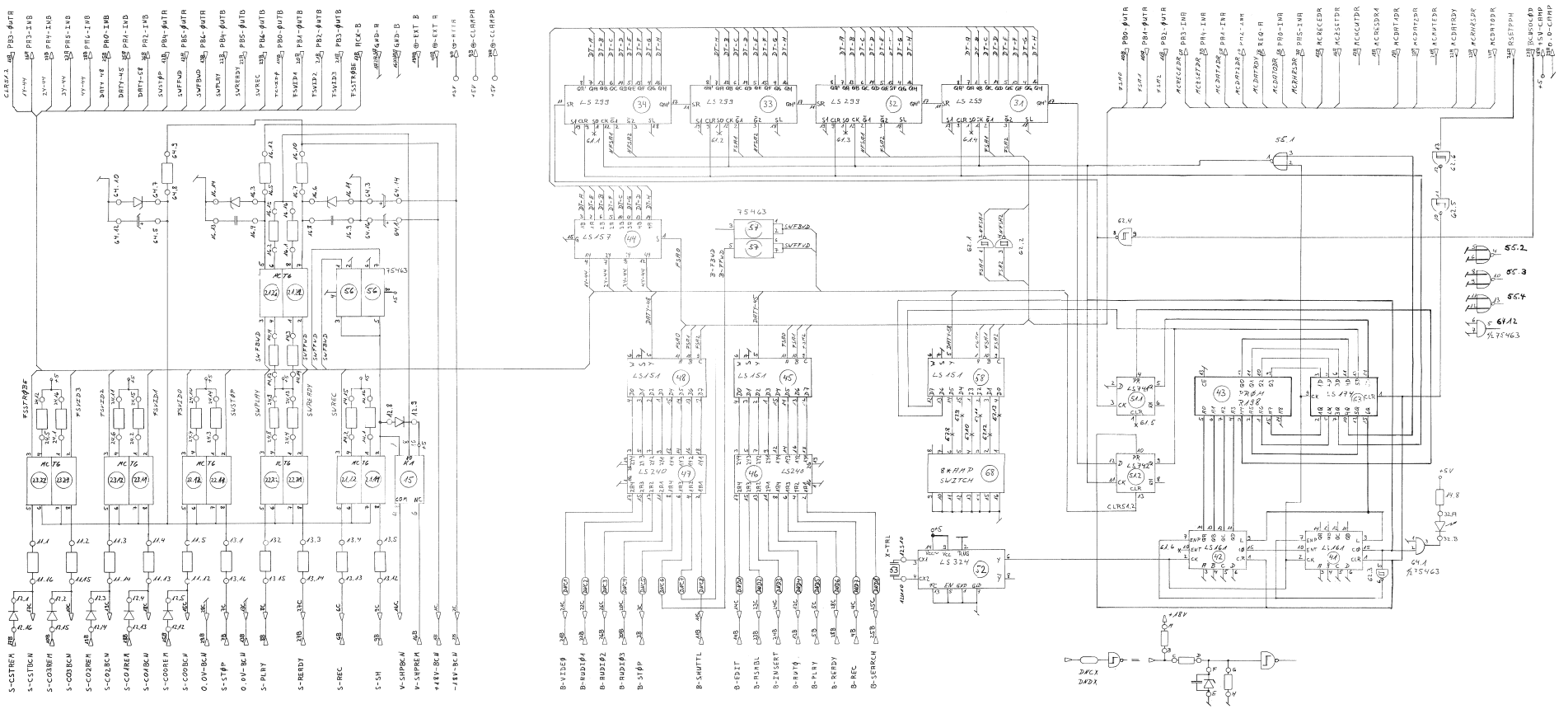

Stecker	Signalname	AWm	A	B	C	D	E	F	G	H
2A3+C	B-VIDEØ	DWC1	38.16	38.01	37.16	37.01	28.16	28.01	27.16	27.01
2B3+C	B-AUDIØ1	DWC2	38.15	38.02	37.15	37.02	28.15	28.02	27.15	27.02
2C3+C	B-AUDIØ2	DWC3	38.14	38.03	37.14	37.03	28.14	28.03	27.14	27.03
2D3+C	B-AUDIØ3	DWC4	38.13	38.04	37.13	37.04	28.13	28.04	27.13	27.04
3B+C	B-STOP	DWC5	38.12	38.05	37.12	37.05	28.12	28.05	27.12	27.05
55.2-3	B-FFWD	DWC6	38.11	38.06	37.11	37.06	28.11	28.06	27.11	27.06
55.2-5	B-FBWD	DWC7	38.10	38.07	37.10	37.07	28.10	28.07	27.10	27.07
41.3+C	B-SHUTTL	DWC8	38.09	38.08	37.09	37.08	28.09	28.08	27.09	27.08

Stecker	Signalname	AWm	A	B	C	D	E	F	G	H
1A3+C	B-EDIT	DWD1	36.16	36.01	35.16	35.01	26.16	26.01	25.16	25.01
2B3+C	B-ASMBL	DWD2	36.15	36.02	35.15	35.02	26.15	26.02	25.15	25.02
2A3+C	B-INSERT	DWD3	36.14	36.03	35.14	35.03	26.14	26.03	25.14	25.03
1C3+C	B-AUTO	DWD4	36.13	36.04	35.13	35.04	26.13	26.04	25.13	25.04
5C+C	B-PLAY	DWD5	36.12	36.05	35.12	35.05	26.12	26.05	25.12	25.05
2B1+C	B-READY	DWD6	36.11	36.06	35.11	35.06	26.11	26.06	25.11	25.06
4C+C	B-REC	DWD7	36.10	36.07	35.10	35.07	26.10	26.07	25.10	25.07
2A3+C	B-SEARCH	DWD8	36.09	36.08	35.09	35.08	26.09	26.08	25.09	25.08

BCN 40/50 CODE RECEIVER ASSEMBLY 1.228.643

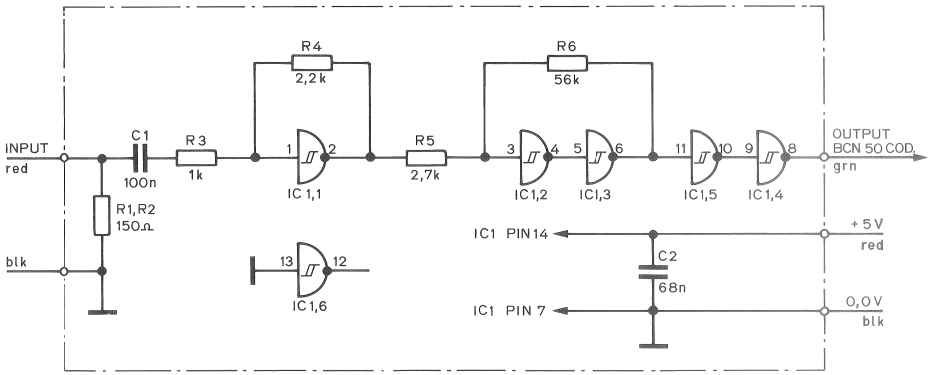

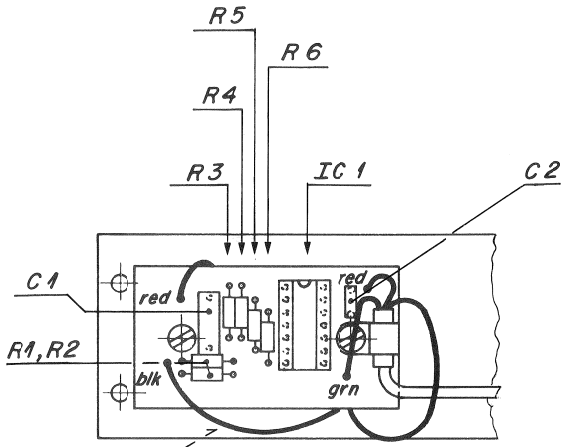

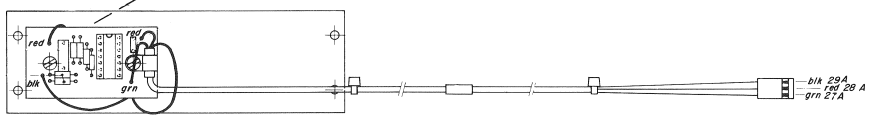

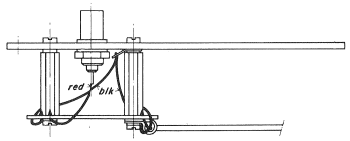

1.228.643-11

IND	POS NO	PART NO	VALUE	SPECIFICATIONS/EQUIVALENT	MFR
	C 01	59.05.2104	100 nF	10% 100V MPC	
	C 02	59.99.0205	68 nF	-20% 63V CER	
	IC 01	50.06.0004	SN74LS04	6-fach Inverter	
	R 01	57.39.1500	150 Ω	1% 0.25W MF	
	R 02	57.39.1500	150 Ω		
	R 03	57.11.4102	1 kΩ	5% 0.25W CSCH	
	R 04	57.11.4222	2.2 kΩ		
	R 05	57.11.4272	2.7 kΩ		
	R 06	57.11.4563	56 kΩ		

IND	DATE	NAME
④		
③		
②		
①		
○	6.5.80	Meier/gv

STUDER | BCN 40/50 CODE RES | 1.228.643.00 | PAGE 1 OF 1

TLS INTERFACE RACK

CONNECTOR TO MASTER AND MASTER REMOTE CONTROL 1.228.647

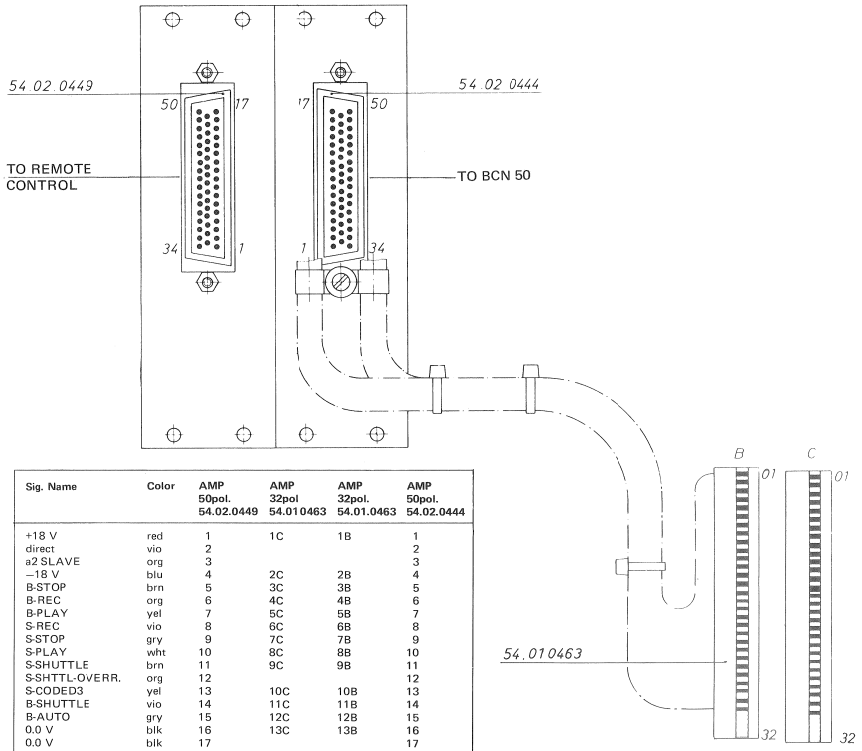

Sig. Name	Color	AMP 50pol. 54.02.0449	AMP 32pol 54.010463	AMP 32pol. 54.01.0463	AMP 50pol. 54.02.0444
+18 V	red	1	1C	1B	1
direct	vio	2			2
a2 SLAVE	org	3			3
–18 V	blu	4	2C	2B	4
B-STOP	brn	5	3C	3B	5
B-REC	org	6	4C	4B	6
B-PLAY	yel	7	5C	5B	7
S-REC	vio	8	6C	6B	8
S-STOP	gry	9	7C	7B	9
S-PLAY	wht	10	8C	8B	10
S-SHUTTLE	brn	11	9C	9B	11
S-SHTTL-OVERR.	org	12			12
S-CODED3	yel	13	10C	10B	13
B-SHUTTLE	vio	14	11C	11B	14
B-AUTO	gry	15	12C	12B	15
0.0 V	blk	16	13C	13B	16
0.0 V	blk	17			17
+18 V	red	18			18
B-EDIT	wht	19	14C	14B	19
S-CODEDO	brn	20	15C	15B	20
TRACKING 2	org	21			21
TRACKING 1	yel	22			22
0-SHTTLE-POT.	vio	23			23
V-SHTTLE-POT.	gry	24	16C	16B	24
S-CODEDSTR.	wht	25	17C	17B	25
B-IN	brn	26			26
B-OUT	org	27			27
S-CODED1	yel	28	18C	18B	28
S-CODED2	vio	29	19C	19B	29
B-AUDIO 3	gry	30	20C	20B	30
B-VIDEO	wht	31	21C	21B	31
B-AUDIO 1	brn	32	22C	22B	32
B-ASMBL	org	33	23C	23B	33
B-INSERT	yel	34	24C	24B	34
B-SEARCH	vio	35	25C	25B	35
B-AUDIO 2	gry	36	26C	26B	36
S-READY	wht	37	27C	27B	37
B-READY	brn	38	28C	28B	38
CAPSTAN SERVO	org	39			39
CONTR TRACK	yel	40			40
HEAD SERVO	vio	41			41
INTERLOCK	gry	42			42
0.0 V	blk	43			43
+ INST	wht	44			44
CODINGSWA	brn	45			45
CODINGSWB	org	46			46
CODINGSWC	yel	47			47
direct	blu	48			48
direct	vio	49			49
0.0 V	blk	50	29C	29B	50

CABLE MASTER-INTERFACE RACK 1.228.635

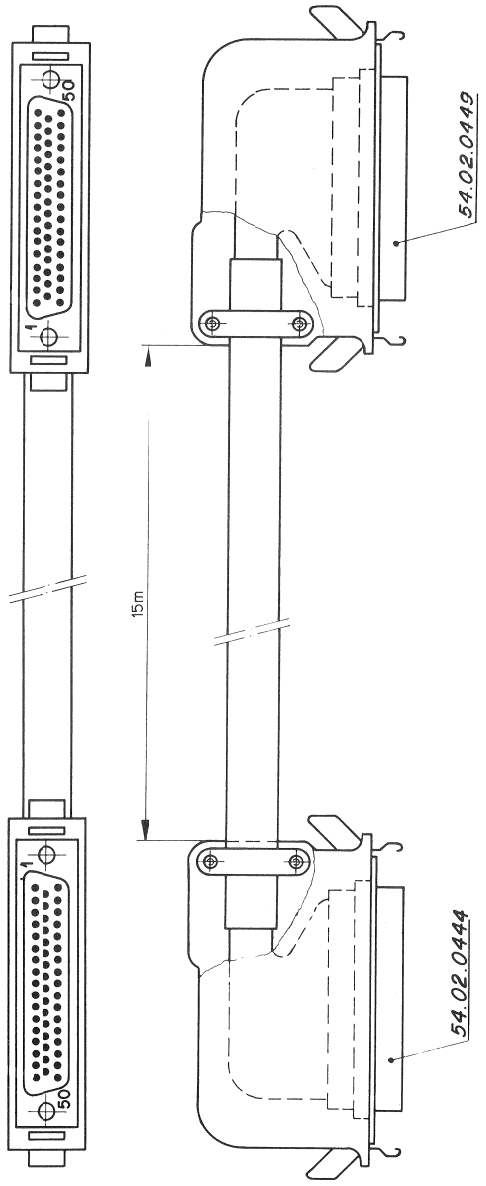

SIG.NAME	COLOR	AMP 54.02.0444 PIN NR.	AMP 54.02.0449 PIN NR.
+ 18V	wht	1	1
	brn	2	2
a2 SLAVE	grn	3	3
- 18V	yel	4	4
B-STOP	yel	5	5
B-REC	pnk	6	6
B-PLAY	blu	7	7
S-REC	red	8	8
S-STOP	blk	9	9
S-PLAY	vio	10	10
S-SHUTTLE	gry/pnk	11	11
S-SHTT_-OVERR	blu/red	12	12
S-CODED 3	wht/grn	13	13
B-SHUTTLE	brn/grn	14	14
B-AUTO	wht/yel	15	15
0,0V	yel/brn	16	16
0,0V	wht/gry	17	17
+ 18V	gry/brn	18	18
B-EDIT	wht/pnk	19	19
S-CODED 0	pnk/brn	20	20
TRACKING 2	wht/blu	21	21
TRACKING 1	brn/blu	22	22
0-SHTT_E-POT	wht/red	23	23
V-SHTTLE-POT	brn/red	24	24
S-SODED-STR	wht/blk	25	25
B-IN	brn/blk	26	26
B-OUT	gry/grn	27	27
S-CODED 1	yel/gry	28	28
S-CODED 2	pnk/grn	29	29
B-AUDIO 3	yel/pnk	30	30
B-VIDEO	grn/blu	31	31
B-AUDIO 1	grn/blu	32	32
B-ASMBL	grn/red	33	33
B-INSERT	yel/red	34	34
B-SEARCH	grn/blk	35	35
B-AUDIO 2	yel/blk	36	36
S-READY	gry/blu	37	37
B-READY	pnk/blu	38	38
CAPSTAN SERVO	gry/red	39	39
CONTRTRACK	pnk/red	40	40
HEAD SERVO	gry/blk	41	41
INTERLOCK	pnk/blk	42	42
0,0V	blu/blk	43	43
+ INST	red/blk	44	44
CODING SW A	wht/brn/blk	45	45
CODING SW B	yel/grn/blk	46	46
CODING SE C	gry/pnk/blk	47	47
	blu/red/blk	48	48
UNUSED	wht/grn/blk	49	49
0,0V	grn/brn/blk	50	50

7.7
MASTER CONTROL SET TO SONY BVH 1000 PS

TLS INTERFACE RACK

SURVEY OF INTERFACE RACK (SONY BVH 1000 PS)

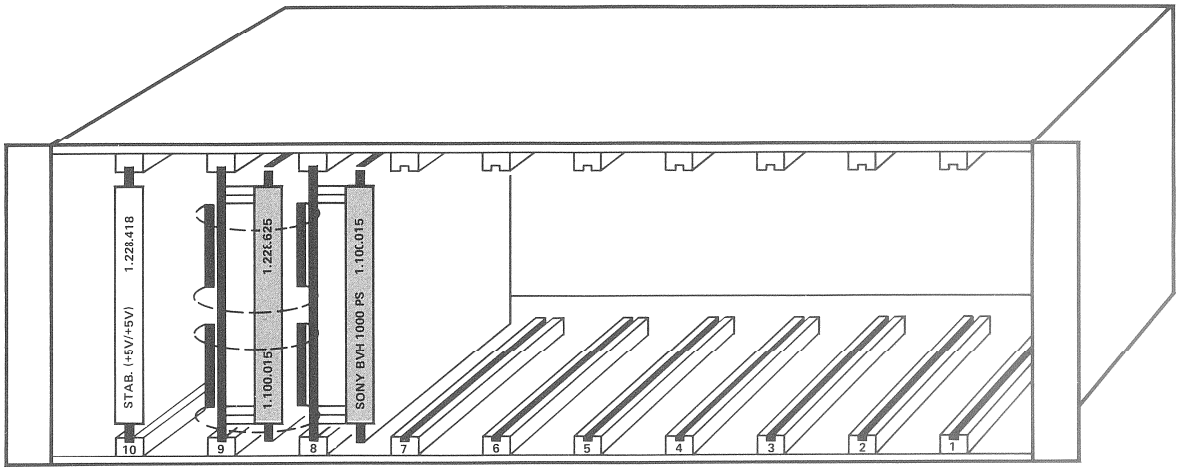

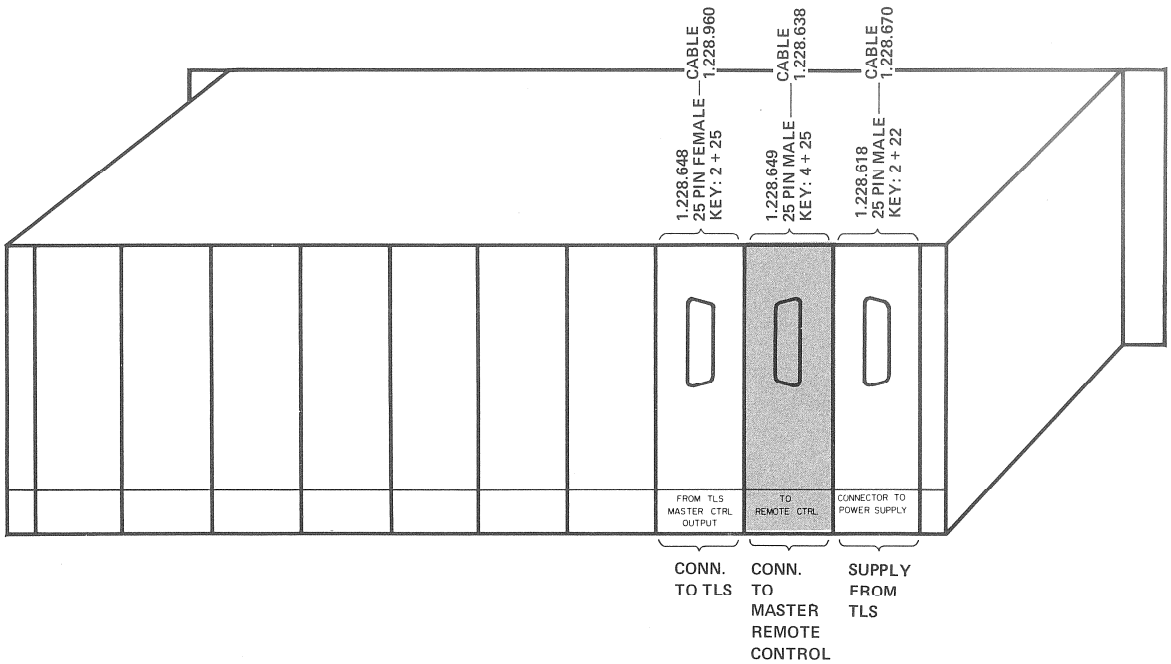

TLS MASTER CONTROL PROCESSOR PCB 1.228.625

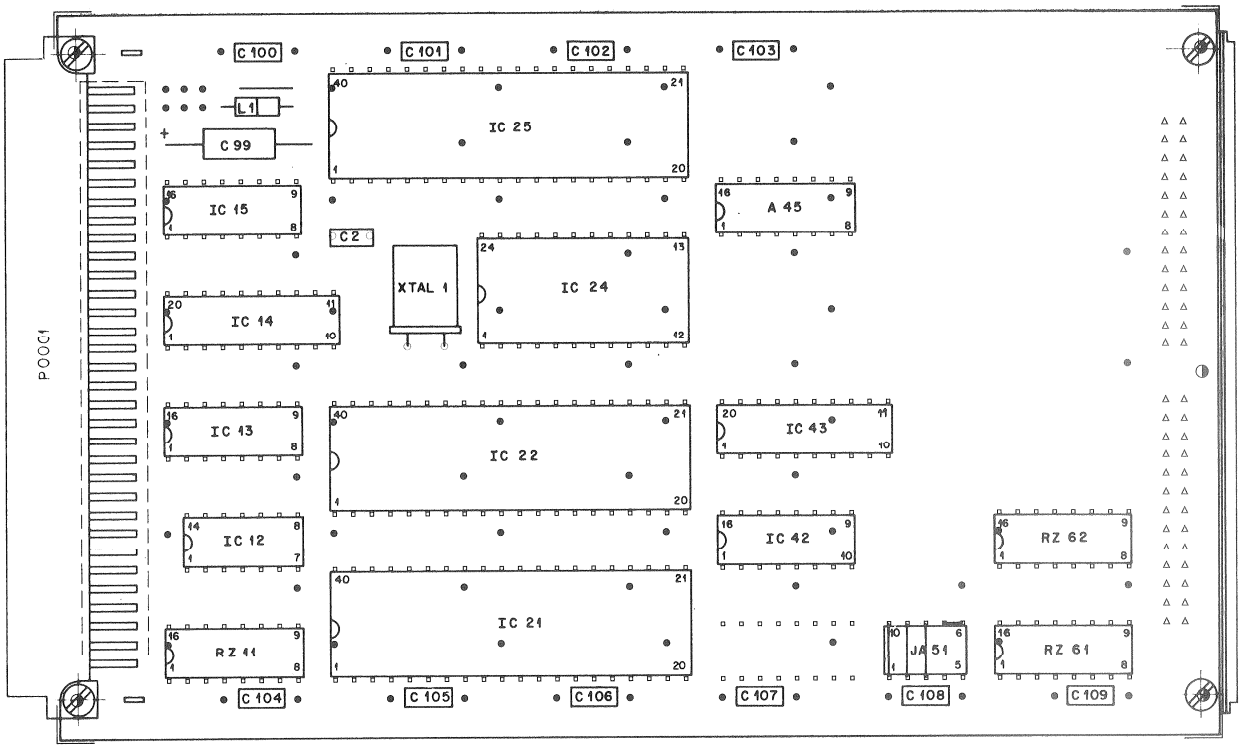

IND	POS NO	PART NO	VALUE	SPECIFICATIONS/EQUIVALENT	MFR
	C 02	59.34.1120	12 P	5% NP O CER	
	C 99	59.99.0202	39 U	20% 10V TA	
	C100	59.99.0205	68 N	-20% 63V CER	
	C101	"			
	C102	"			
	C103	"			
	C104	"			
	C105	"			
	C106	"			
	C107	"			
	C108	"			
	C109	59.99.0205	68 N	-20% 63V CER	
	A 45	1.228.733.00		POWER ON ASSEMBLY	
	IC 12	50.06.0008	SN74LS08N	Quad 2-Inp And Gate	
	IC 13	50.06.0133	SN74LS133N	13-Input Nand Gate	
	IC 14	50.06.0240	SN74LS240N	Octal Inverter Driver	
	IC 15	1.025.016.10	32 * 8Bit	PROM	
	IC 21	50.16.0102	MC68B21P	2MHz PIA	
	IC 22	50.05.0276	MC 6802P	MPU	
	IC 24	1.025.019.20	1024*8 Bit	PROM	
	IC 25	50.16.0102	MC68B21P	2MHz PIA	
	IC 42	50.06.0161	SN74LS161A	4-Bit binary Counter	
	IC 43	50.06.0240	SN74LS240N	Octal Inverter Driver	
	P 01	54.01.0354	3 * 32	Wrap Plug	
	RZ 11	57.85.3332	15*3,3 K	2%	
	RZ 61	57.80.0101	14*220+ 330 Ω	2%	

IND	DATE	NAME
④		
③		
②		
①		
○	5.7.79	Rohner/gv

STUDER | TLS MASTER CONTROL PROCESSOR 2 | 1.228.625.00 | PAGE 1 OF 2

IND	POS NO	PART NO	VALUE	SPECIFICATIONS/EQUIVALENT	MFR
	RZ 62	57.88.3101	8*100 Ω	2%	
	Y 01	89.01.0551	6.000000MHz	±100ppm, CL 30pF Crystal	

IND	DATE	NAME
④		
③		
②		
①		
○	5.7.79	Rohner/gv

STUDER | TLS MASTER CONTROL PROCESSOR 2 | 1.228.625.00 | PAGE 2 OF 2

POWER ON ASSEMBLY 1.228.733

SEE SECTION 7.1 PAGE 7/6

TLS INTERFACE RACK

TLS MASTER CONTROL PROCESSOR PCB 1.228.625

FFONT PIN NR.	SIGNAL NAME	ATTENUATOR NAME	PIN A	PIN B	PIN C	PIN D	PIN E	RECEIVER PIN
5B	PA0 - INA	DNA 1	61.1	62.1	62.16	41.1	41.16	43.2
5A	PA1 - INA	DNA 2	61.3	62.3	62.14	41.3	41.14	43.4
6B	PA2 - INA	DNA 3	61.5	62.5	62.12	41.5	41.12	43.6
6A	PA3 - INA	DNA 4	61.7	62.7	62.10	41.7	41.10	43.8
7B	PA4 - INA	DNA 5	61.9	62.9	62.9	41.9	41.9	43.11
7A	PA5 - INA	DNA 6	61.11	62.11	62.11	41.11	41.11	43.13
8B	PA6 - INA	DNA 7	61.13	62.13	62.13	41.13	41.13	43.15
2B	REQ - A	DNA 8	61.15	62.15	62.15	41.15	41.15	43.17

ADDRESS ALLOCATION (DECODING PROM)		
	POS	BASE ADDRESS
RAM 1K	INTERN	0000 - 03 FF
PIA PORT A	21	8000 - 8003
PIA PORT B	25	8004 - 8007
PROM	24	D000 - DFFF

POS	PACKAGE POSITION	PIN 1 LAYOUT POSITION	TYPE
11	16	11A 02	15.3K3
12	14	11B 08	74LS08
13	16	11A 14	74LS133
14	20	11A 20	74LS240
15	16	11A 26	74S288/R161 ①
21	40	11K 02	MC 6821
22	40	11K 11	MC6802
24	24	11T 20	2758/2716 OR EQUIV. ①
25	40	11K 29	MC6821
41	16	12H 02	DISCR.ASSY
42	16	12H 08	74LS161
43	20	12H 14	74LS240 ②
45	16	12H 26	DISCR.ASSY
61	16	12Z 02	15 220/330
62	16	12Z 08	8 R

① FACTORY PART
② MOTOROLA AND FAIRCHILD ONLY

IC43 = MOTOROLA OR FCH ONLY

TLS INTERFACE RACK

TLS MASTER CONTROL ADAPTER PCB SONY BVH 1000 PS

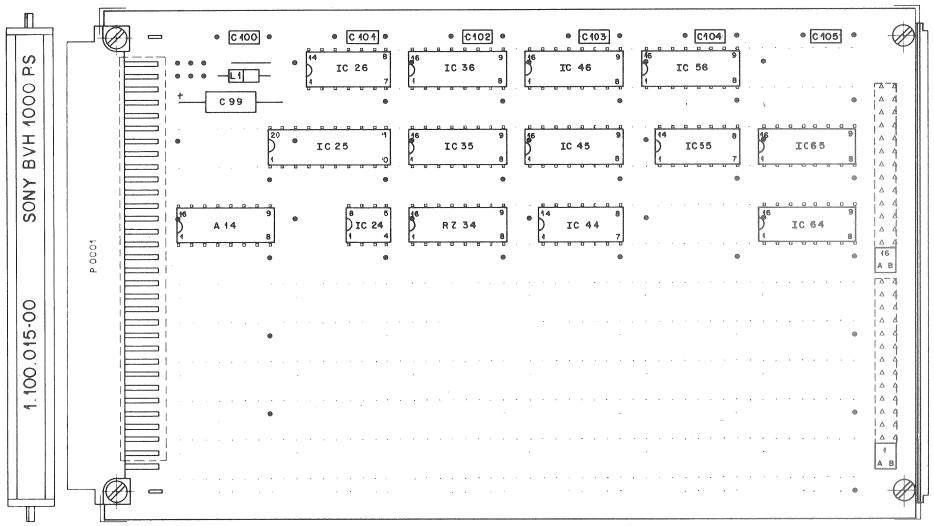

IND	POS NO	PART NO	VALUE	SPECIFICATIONS/EQUIVALENT	MFR
	C 99	59.99.0202	39 U	20% 10V TA	
	C100	59.99.0205	68 N	20% 63V CER	
	C101	59.99.0205	68 N	20% 63V CER	
	C102	59.99.0205	68 N	20% 63V CER	
	C103	59.99.0205	68 N	20% 63V CER	
	C104	59.99.0205	68 N	20% 63V CER	
	C105	59.99.0205	68 N	20% 63V CER	
	A14	1.228.737.00		INPUT NETWORK SONY BVH 1000 PS	
	IC24	50.15.0101	MC1472P	SN75475P	
	IC25	50.06.0244	SN74LS244	Octal Buffer	
	IC26	50.06.0074	SN74LS74	Dual D Flip Flop	
	IC35	1.025.019.40	PROM	32 * 8 BIT, 3-state	
	IC36	50.06.0163	SN74LS163	Synchronous 4 bit binary Counter	
	IC44	50.06.0000	SN74LS00	Quad 2-input NAND	
	IC45	1.025.019.50	PROM	512 * 4 BIT, 3-state	
	IC46	50.06.0161	SN74LS161	Synchronous 4 bit binary Counter	
	IC55	50.06.0074	SN74LS74	Dual D Flip Flop	
	IC56	50.06.0161	SN74LS161	Synchronous 4 bit binary Counter	
	IC64	50.06.0166	SN74LS166	8 Bit Shift Register	
	IC65	50.06.0166	SN74LS166	8 Bit Shift Register	
	L 1	61.99.0124		Ferritpearls D 3,5 * 3	
	P 1	54.01.0354	3 * 32Wrap	96 pol Wrap Plug, male	
	RZ34	57.85.3222	15 * 2k2	Resistor Array DIP	

IND	DATE	NAME
4		
3		
2		
1		
0	12.7.79	Ro

STUDER | TLS MC CTRL SONY BVH 1000 PS | 1.100.015.00 | PAG: 1 OF 1

INPUT NETWORK SONY BVH 1000PS 1.228.737.00

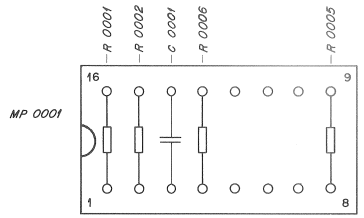

IND	POS NO	PART NO	VALUE	SPECIFICATIONS/EQUIVALENT	MFR
	C 01	59.31.4102	1 N	20% 50V	
	R 01	57.02.5221	220	10% .25W	
	R 02	57.02.5331	330	10% .25W	
	R 05	57.02.5820	82	10% .25W	
	R 06	57.02.5820	82	10% .25W	
	MP 01	53.01.0170	3/10"	Adapter Plug	

IND	DATE	NAME
4		
3		
2		
1		
0	20.6.79	Rohner/gv

STUDER | INPUT NETWORK SONY BVH 1000PS | 1.228.737.00 | PAGE 1 OF 1

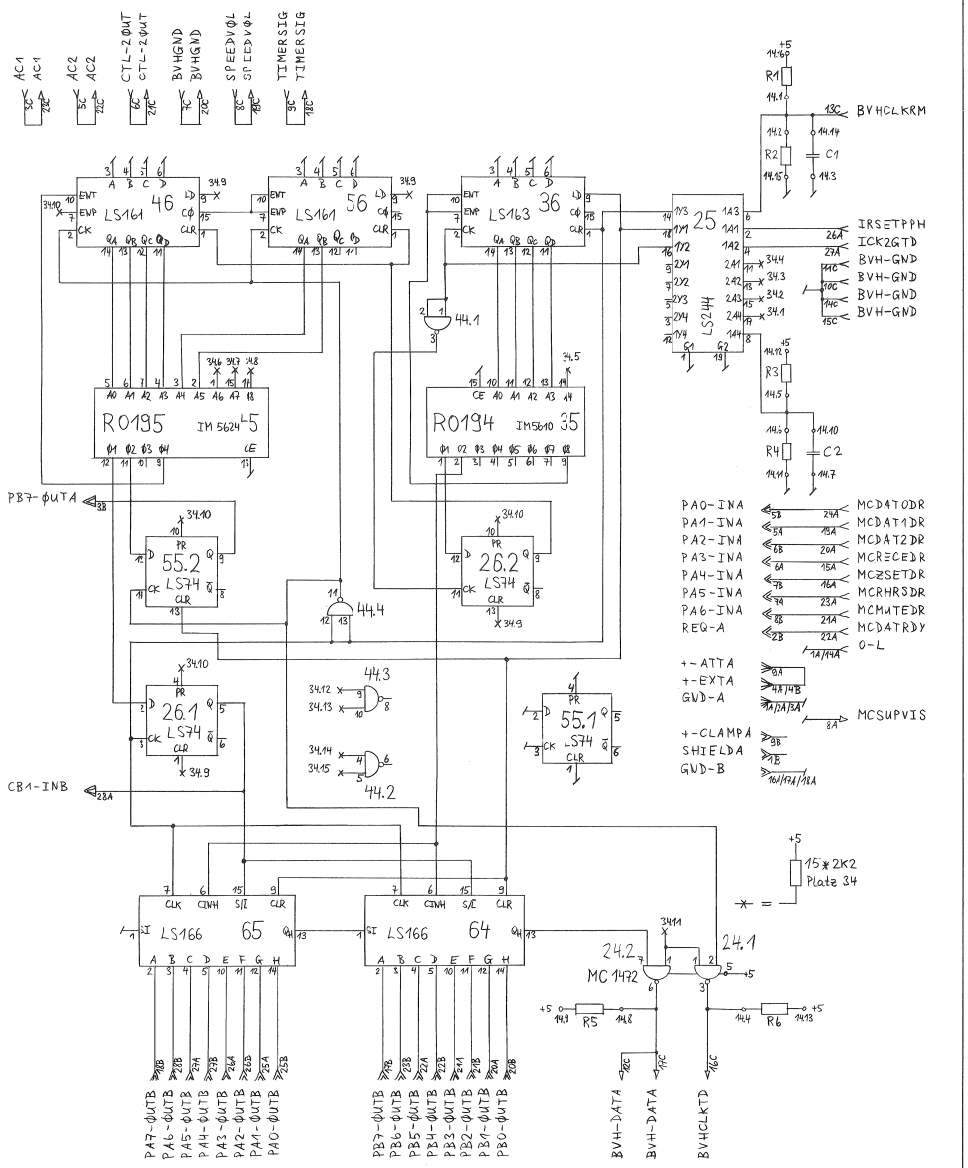

TLS INTERFACE RACK

CONNECTOR TO MASTER REMOTE CONTROL 1.228.649

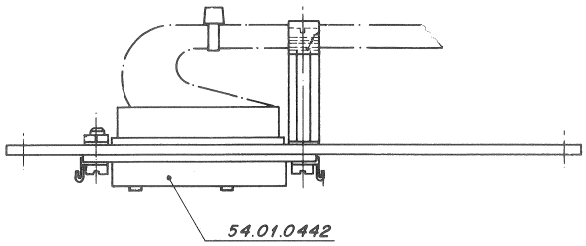

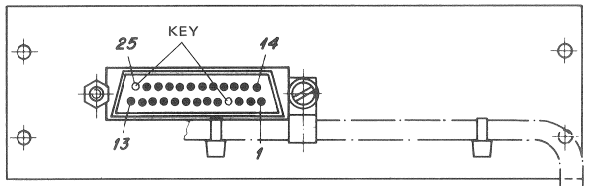

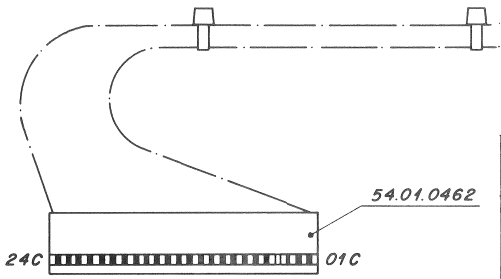

GR99 EL8

Sign. Name	Color	Start	End
	brn	1	1 C
	red	2	2 C
	org	3	3 C
KEY		4	
	grn	5	5 C
	blu	6	6 C
	vio	7	7 C
	grn	8	8 C
	wht	9	9 C
	blk	10	10 C
	brn	11	11 C
	red	12	12 C
	org	13	13 C
	yel	14	14 C
	grn	15	15 C
	blu	16	16 C
	vio	17	17 C
	gry	18	18 C
	wht	19	19 C
	blk	20	20 C
	brn	21	21 C
	red	22	22 C
	org	23	23 C
	yel	24	24 C
KEY		25	

CABLE MASTER REMOTE CONTROL-INTERFACE RACK 1.228.638

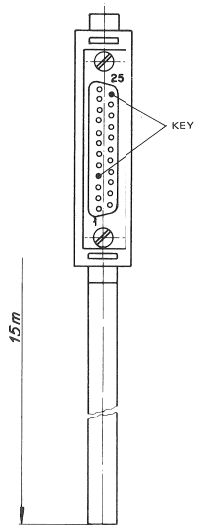

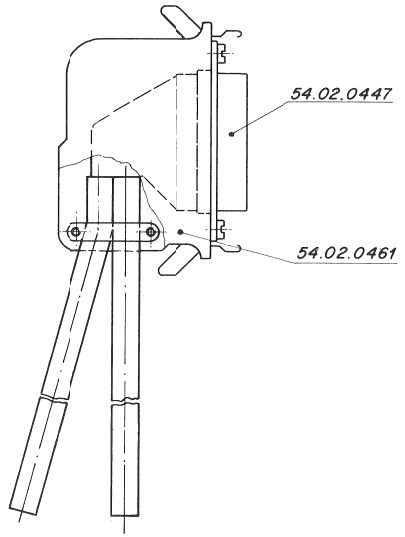

SIG. NAME	COLOR	AMP 54.02.0447 PIN NR.	SONY BVH 1000 REM.CONTROL PIN NR.	SONY BVH 1000 TAPE DECK PIN NR.
		1		
		2		
AC	wht	3	10	
KEY		4		
AC	blu	5	9	
CTL-2OUT	wht	6	8	
BVHGND	org	7	7	
SPEEDVOL	wht	8	6	
TIMSIGR	grn	9	3	
BVHGND	wht	10	2	
BVHGND	brn	11	4	
BVHDATA	wht	12	5	
BVHCLKRM	gry	13	1	
BVHGND	wht	14		2
BVHGND	blu	15		4
BVHCLKTD	wht	16		1
BVHDATA	org	17		5
TIMSIGR	wht	18		3
SPEEDVOL	grn	19		6
BVHGND	wht	20		7
CTL 2OUT	brn	21		8
AC	wht	22		9
AC	gry	23		10
		24		
KEY		25		

7.8
MASTER CONTROL SET TO JVC CR 8500 LE

SURVEY OF INTERFACE RACK (JVC CR 8500 LE) 1.100.016

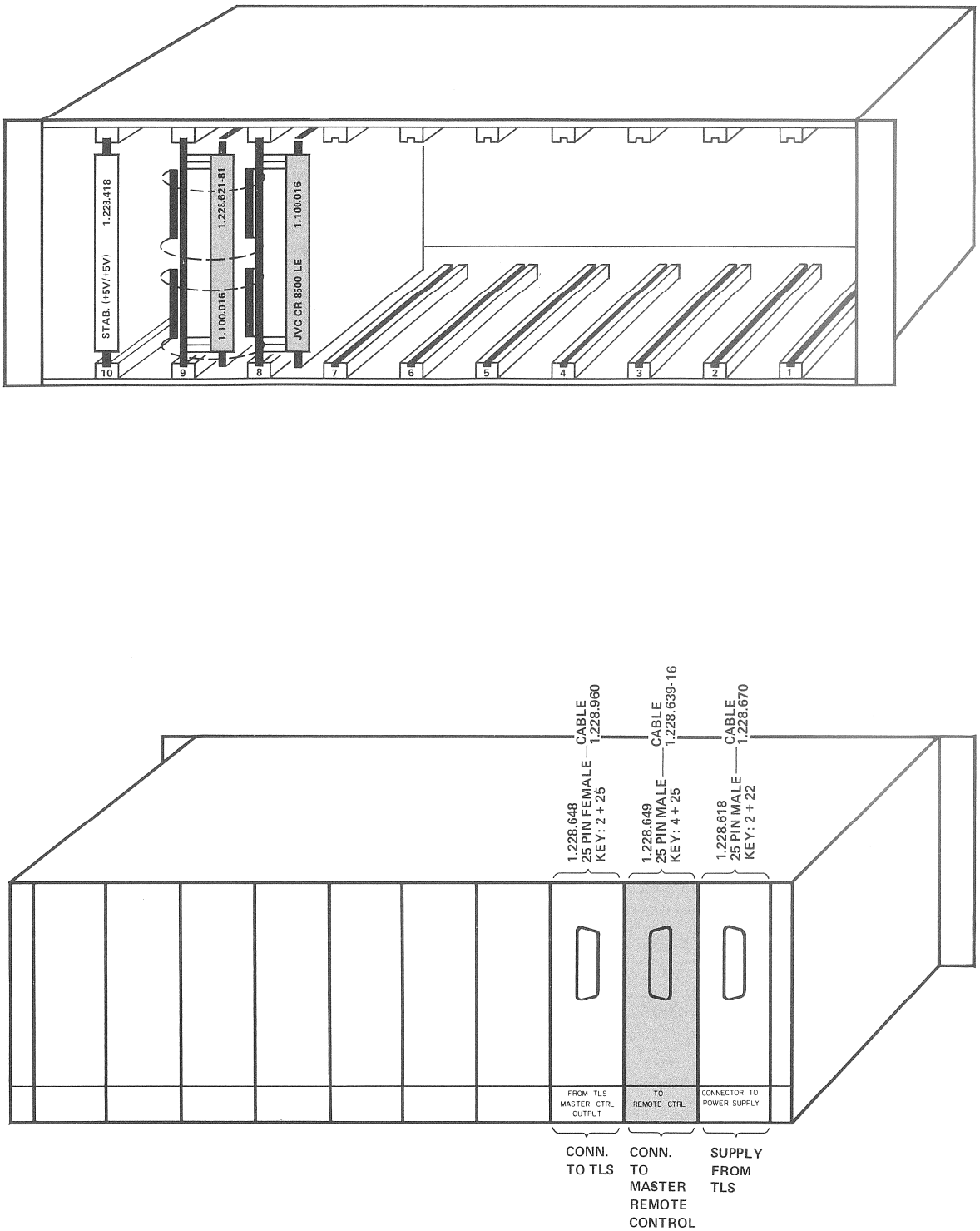

TLS INTERFACE RACK

TLS MASTER CONTROL PROCESSOR PCB 1.228.621

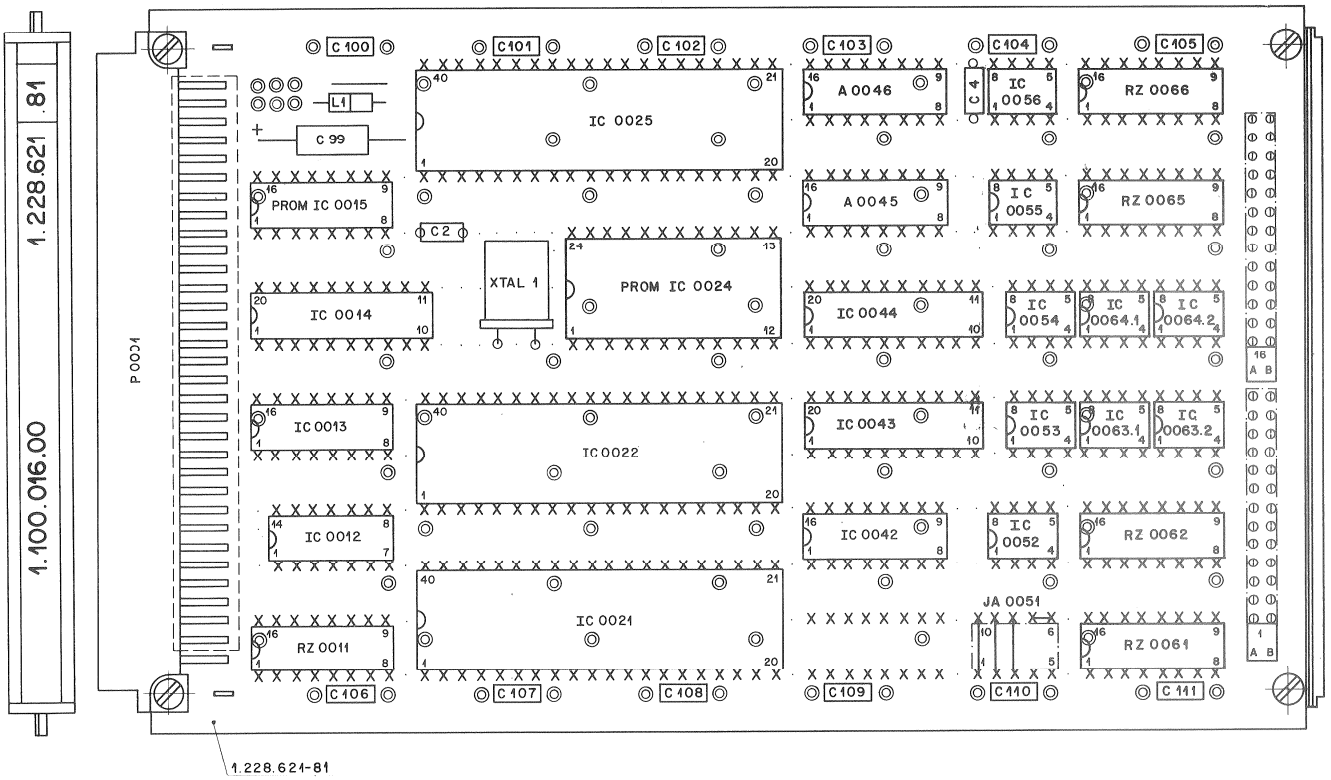

IND	POS NO	PART NO	VALUE	SPECIFICATIONS/EQUIVALENT	MFR
	A45	1.228.733.00		PWRON ASSEMBLY TLS IF PROCESSOR	
	A46	1.228.735.00		8 * 3,3 V-68 nF ARRAY	
	C2	59.34.1120	12 p	5%, NPO, CER	
	C4	59.99.0205	68 N	20%, 63V, CER	
	C99	59.99.0202	39 U	20%, 10V, TA	
	C100	59.99.0205	68 N	20%, 63V, CER	
	C101	59.99.0205	68 N	20%, 63V, CER	
	C102	59.99.0205	68 N	20%, 63V, CER	
	C103	59.99.0205	68 N	20%, 63V, CER	
	C104	59.99.0205	68 N	20%, 63V, CER	
	C105	59.99.0205	68 N	20%, 63V, CER	
	C106	59.99.0205	68 N	20%, 63V, CER	
	C107	59.99.0205	68 N	20%, 63V, CER	
	C108	59.99.0205	68 N	20%, 63V, CER	
	C109	59.99.0205	68 N	20%, 63V, CER	
	C110	59.99.0205	68 N	20%, 63V, CER	
	C111	59.99.0205	68 N	20%, 63V, CER	
	IC12	50.06.0008	SN74LS08	Quad 2-input AND Gate	
	IC13	50.06.0133	SN74LS133	13-input NAND Gate	
	IC14	50.06.0240	SN74LS240	Octal inverting Receiver	
	IC15	1.025.016.10	PROM	32 * 8 Bit, 3-state	
	IC21	50.05.0270	MC6821P	Peripheral Interface Adapter	
	IC22	50.05.0276	MC6802P	Microprocessing Unit	
	IC24	1.025.019.60	PROM	1024 * 8 Bit, 3-state	
	IC25	50.05.0270	MC6821P	Peripheral Interface Adapter	
	IC42	50.06.0161	SN74LS161	Synchronous 4 bit binary Counter	
	IC43	50.06.0240	SN74LS240	Octal inverting Receiver	
	IC44	50.06.0240	SN74LS240	Octal inverting Receiver	

IND	DATE	NAME	
④			
③			
②			
①			
○	10.7.79	Ro	(Zeichnung Blatt 1)

STUDER | TLS MC PROCESSOR JVC CR8500LE | 1.100.016.00 | PAGE 1 OF 3

IND	POS NO	PART NO	VALUE	SPECIFICATIONS/EQUIVALENT	MFR
	IC52	50.15.0101	MC1472P	SN75475P Dual Nand Driver	
	IC53	50.15.0101	MC1472	SN75475P Dual Nand Driver	
	IC54	50.15.0101	MC1472	SN75475P Dual Nand Driver	
	IC55	50.15.0101	MC1472	SN75475P Dual Nand Driver	
	IC56	50.05.0158	NE555N	MC1455P Timing Circuit	
	IC63.1	50.15.0101	MC1472	SN75475P Dual Nand Driver	
	IC63.2	50.15.0101	MC1472	SN75475P Dual Nand Driver	
	IC64.1	50.15.0101	MC1472	SN75475P Dual Nand Driver	
	IC64.2	50.15.0101	MC1472	SN75475P Dual Nand Driver	
	L 1	61.99.0124		Ferritpearls D 3,5 * 3	
	P 1	54.01.0354	3 * 32 P	Wrap Leiste 96 p, male	
	RZ11	57.85.3332	15 * 3,3k	2% Resistor Array DIP	
	RZ61	57.80.0101	14*330/220E	2% Resistornetwork Array DIP	
	RZ62	57.88.3101	8 * 100E	2% Resistor Array DIP	
	RZ65	57.88.3101	8 * 100E	2% Resistor Array DIP	
	RZ66	57.85.3472	15 * 4,7k	2% Resistor Array DIP	
	XTAL1	89.01.0378	4.00000MHZ	± 100 ppM, C_L 20 pF	

IND	DATE	NAME	
④			
③			
②			
①			
○	10.7.79	Ro	(Zeichnung Blatt 1)

STUDER | TLS MC PROCESSOR JVC CR8500LE | 1.100.016.00 | PAGE 2 OF 3

POWER ON ASSEMBLY 1.228.733
SEE SECTION 7.1 PAGE 7/6

ASSEMBLY 1.228.735
SEE PAGE 7/24

TLS INTERFACE RACK

TLS MASTER CONTROL ADAPTER PCB JVC CR 8500 LE

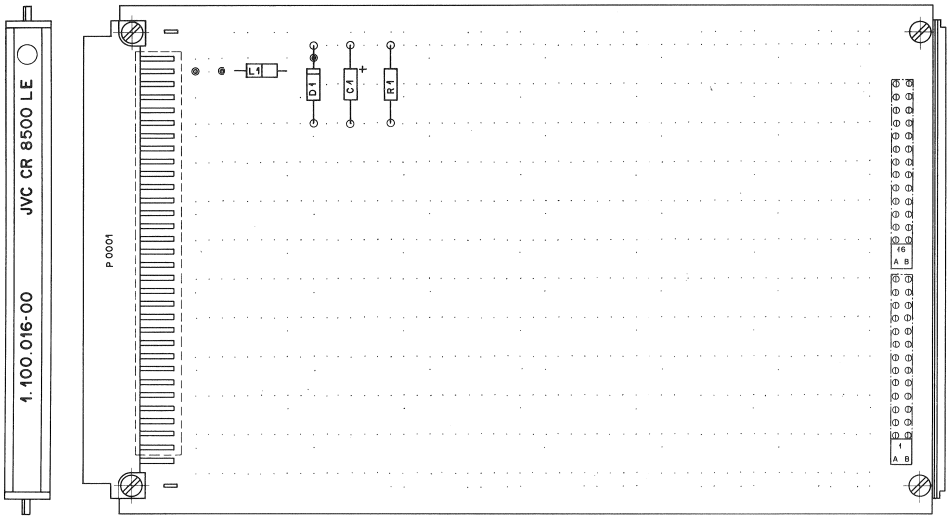

IND	POS NO	'ART NO	VALUE	SPECIFICATIONS/EQUIVALENT	MFR
	C 1	59.95.0201	6,8 U	20%, 35V, TA	
	D 1	50.04.1117	BZX83C12	U_z = 12V, 5%, 400mW; ZPD12	
	L 1	61.95.0124		Ferritpearls D 3,5 * 3	
	R 1	57.02.5102	1k	10%, 0,25W, CMA	

IND	DATE	NAME	
④			
③			
②			
①			
○	11.7.79	Ro	(Zeichnung Blatt 2)

STUDER | TLS MC AD BOARD JVC CR8500LE | 1.100.016.00 | PAGE 3 OF 3

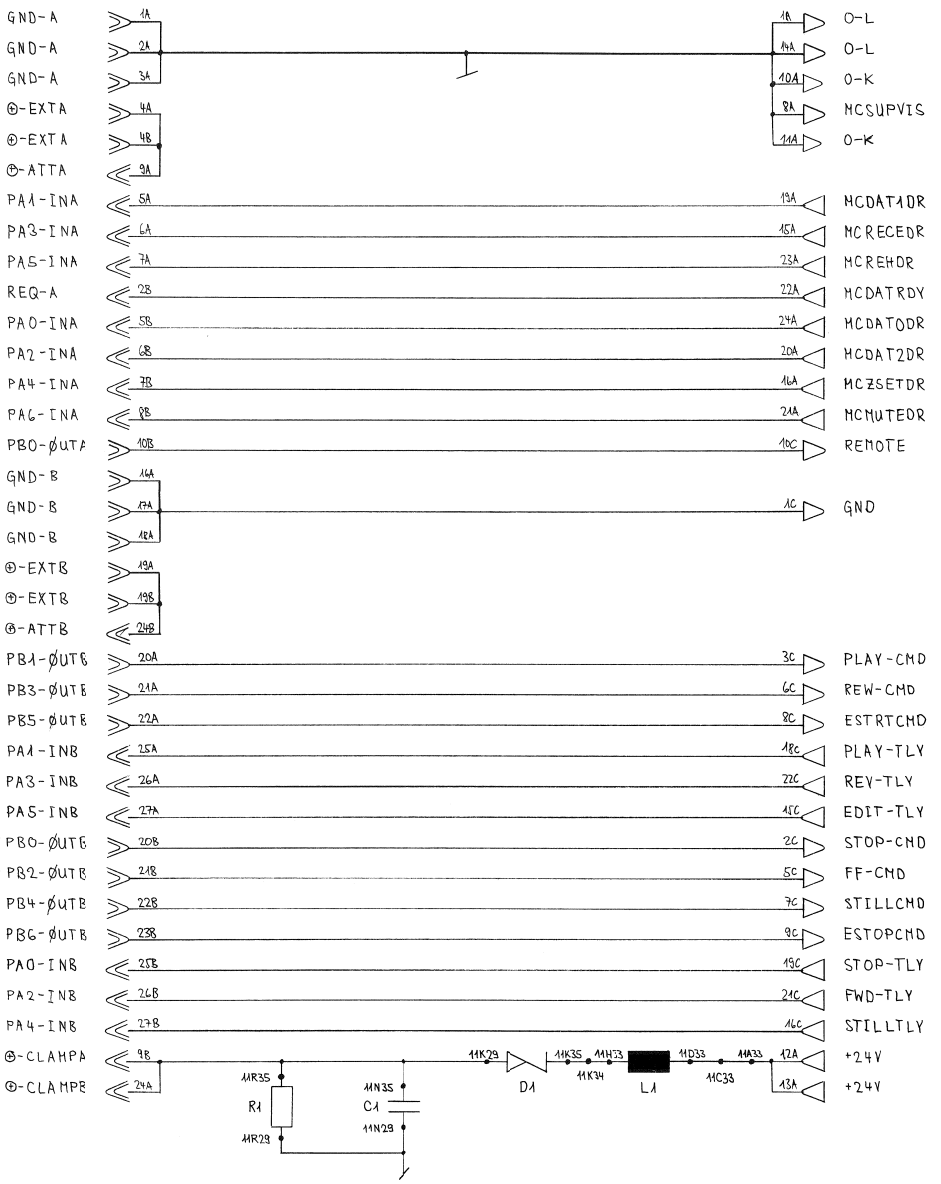

CONNECTOR TO MASTER REMOTE CONTROL 1.228.649

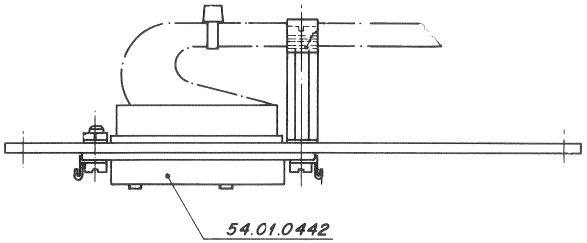

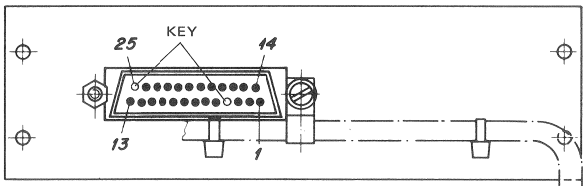

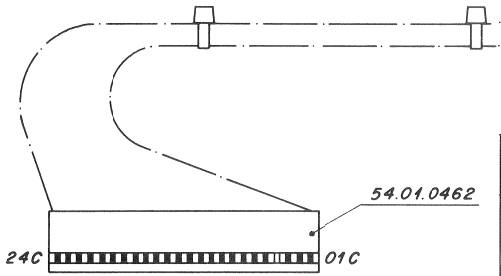

GR 99 EL8

Sign. Name	Color	Start	End
	brn	1	1 C
	red	2	2 C
	org	3	3 C
KEY		4	
	grn	5	5 C
	blu	6	6 C
	vio	7	7 C
	grn	8	8 C
	wht	9	9 C
	blk	10	10 C
	brn	11	11 C
	red	12	12 C
	org	13	13 C
	yel	14	14 C
	grn	15	15 C
	blu	16	16 C
	vio	17	17 C
	gry	18	18 C
	wht	19	19 C
	blk	20	20 C
	brn	21	21 C
	red	22	22 C
	org	23	23 C
	yel	24	24 C
KEY		25	

CABLE MASTER REMOTE CONTROL-INTERFACE RACK 1.228.639–16

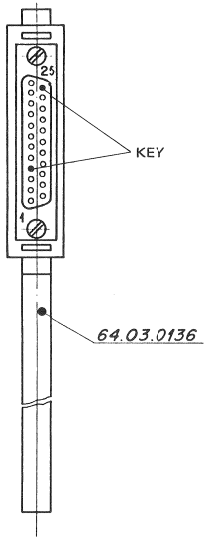

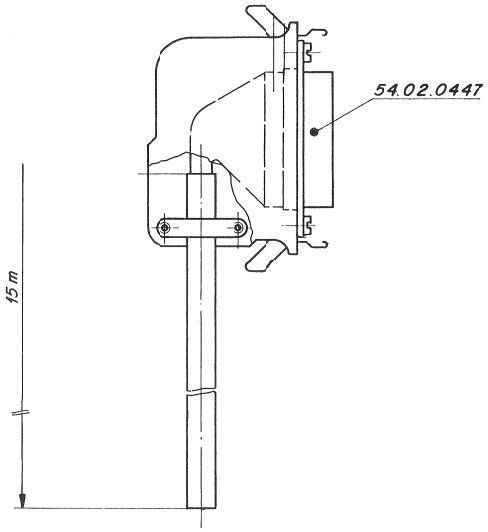

SIG.NAME	COLOR	AMP 54.02.0447 PIN.NR.	IVC CR8500LE TAPE DECK PIN NR.
GND	wht	1	1
STOPCMD	blu	2	3
PLAYCMD	wht	3	4
KEY		4	
FFCMD	org	5	5
REWCMD	wht	6	6
STILLCMD	grn	7	10
ESTRTCMD	wht	8	12
ESTOPCMD	brn	9	13
REMOTE	wht	10	15
UNUSED	gry	11	
UNUSED	red	12	
UNUSED	blu	13	
UNUSED	red	14	
EDITTLY	org	15	22
STILLTLY	red	16	23
UNUSED	grn	17	
PLAYTLY	red	18	27
STOPTLY	brn	19	28
UNUSED	red	20	
FWDTLY	gry	21	41
REVTLY	blk	22	42
UNUSED	blu	23	
UNUSED	blk	24	
KEY		25	

7.9
TLS ADDRESS START

TLS INTERFACE RACK

SURVEY OF INTERFACE RACK WITH ADDRESS START

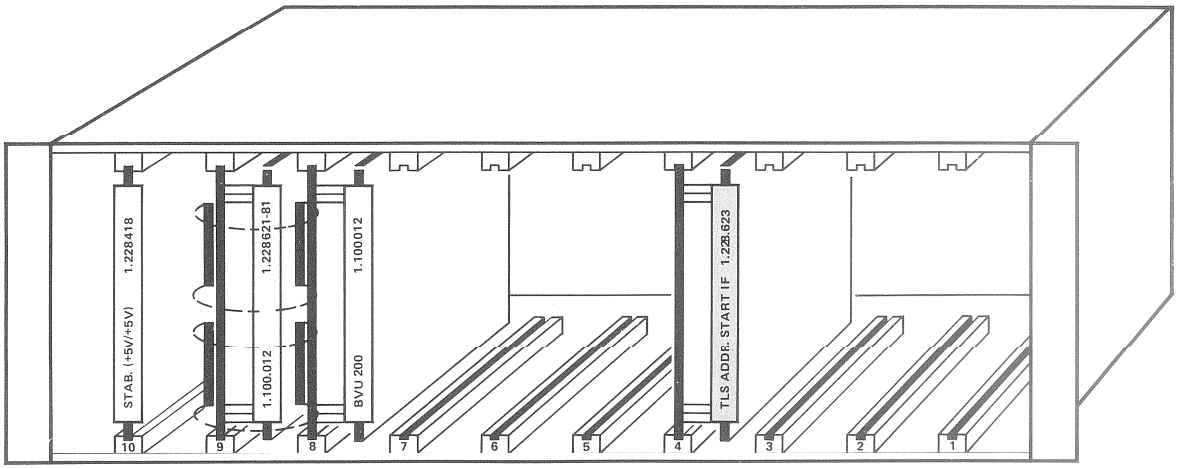

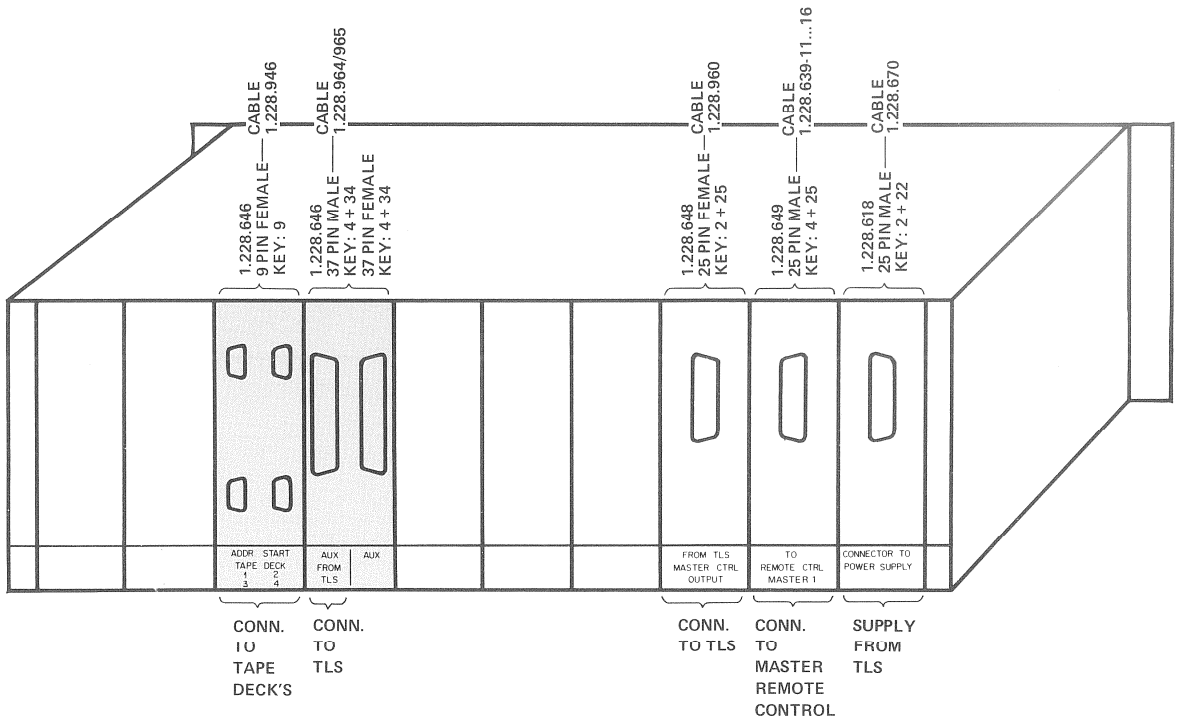

TLS ADDRESS START INTERFACE PCB 1.228.623

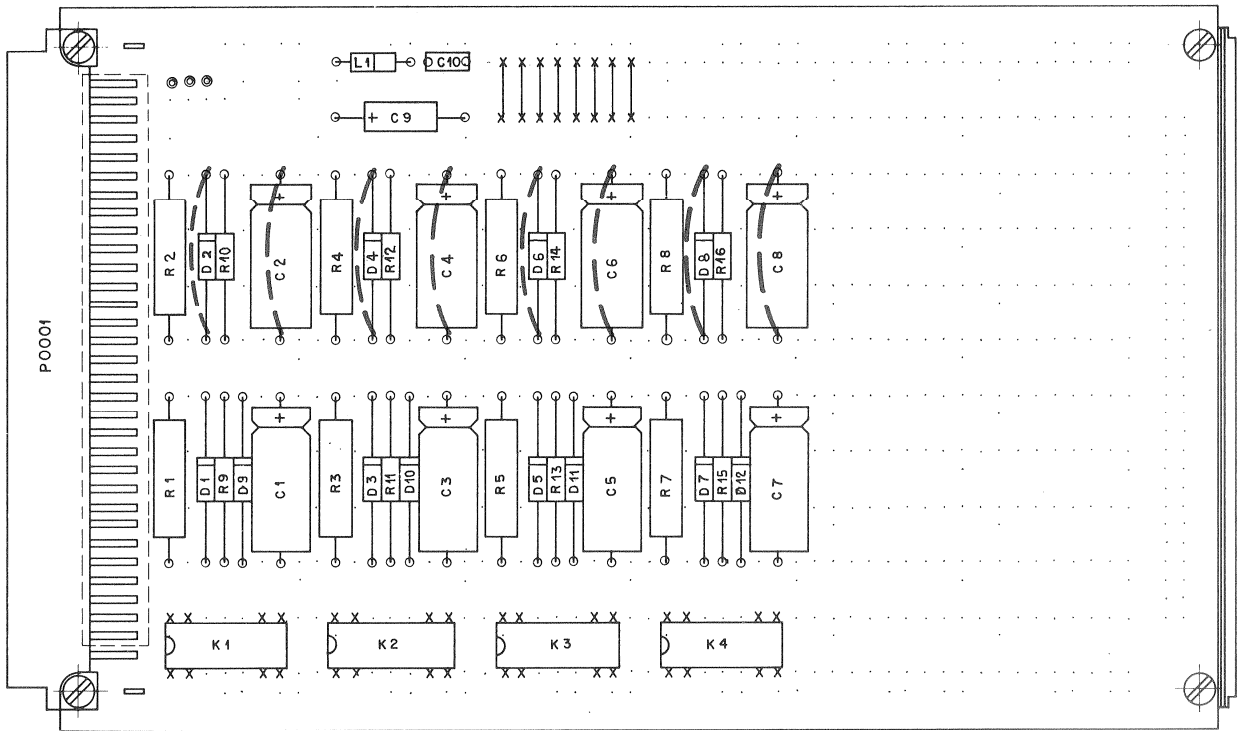

IND	POS NO	PART NO	VALUE	SPECIFICATIONS/EQUIVALENT	MFR
	C 01	59.25.5101	100 U	-10% 35V EL	
	C 02	59.25.5101	100 U		
	C 03	59.25.5101	100 U		
	C 04	59.25.5101	100 U		
	C 05	59.25.5101	100 U		
	C 06	59.25.5101	100 U		
	C 07	59.25.5101	100 U		
	C 08	59.25.5101	100 U		
	C 09	59.99.0201	6,8 U	20% 35V TA	
	C 10	59.99.0205	60 N	-20% 63V CER	
	D 01	50.04.0122	1 N 4001	SI	
	D 02	50.04.0122	1 N 4001		
	D 03	50.04.0122	1 N 4001		
	D 04	50.04.0122	1 N 4001		
	D 05	50.04.0122	1 N 4001		
	D 06	50.04.0122	1 N 4001		
	D 07	50.04.0122	1 N 4001		
	D 08	50.04.0122	1 N 4001		
	D 09	50.04.0122	1 N 4001		
	D 10	50.04.0122	1 N 4001		
	D 11	50.04.0122	1 N 4001		
	D 12	50.04.0122	1 N 4001		
	K 01	56.02.1006	24V-1*U	28V/.25A DIL14	
	K 02	56.02.1006	24V-1*U		
	K 03	56.02.1006	24V-1*U		
	K 04	56.02.1006	24V-1*U		

IND	DATE	NAME	
④			EL = Electrolytic
③			TA = Tantalum
②			CER = Ceramic
①			
○	6.4.79	MS/gv	

IND	POS NO	PART NO	VALUE	SPECIFICATIONS/EQUIVALENT	MFR
	L 01	61.99.0124	3,5 * 3	Ferrite bead	
	P 01	54.01.0394	3 * 32	Euro Wrap	
	R 01	57.56.5471	470	5% 4 W DR	
	R 02	57.56.5471	470		
	R 03	57.56.5471	470		
	R 04	57.56.5471	470		
	R 05	57.56.5471	470		
	R 06	57.56.5471	470		
	R 07	57.56.5471	470		
	R 08	57.56.5471	470		
	R 09	57.02.5103	10 k	10% .25W CMA	
	R 10	57.02.5103	10 k		
	R 11	57.02.5103	10 k		
	R 12	57.02.5103	10 k		
	R 13	57.02.5103	10 k		
	R 14	57.02.5103	10 k		
	R 15	57.02.5103	10 k		
	R 16	57.02.5103	10 k		

IND	DATE	NAME
④		
③		
②		
①		
○	6.4.79	MS/gv

TLS INTERFACE RACK

TLS ADDRESS START INTERFACE PCB 1.228.623

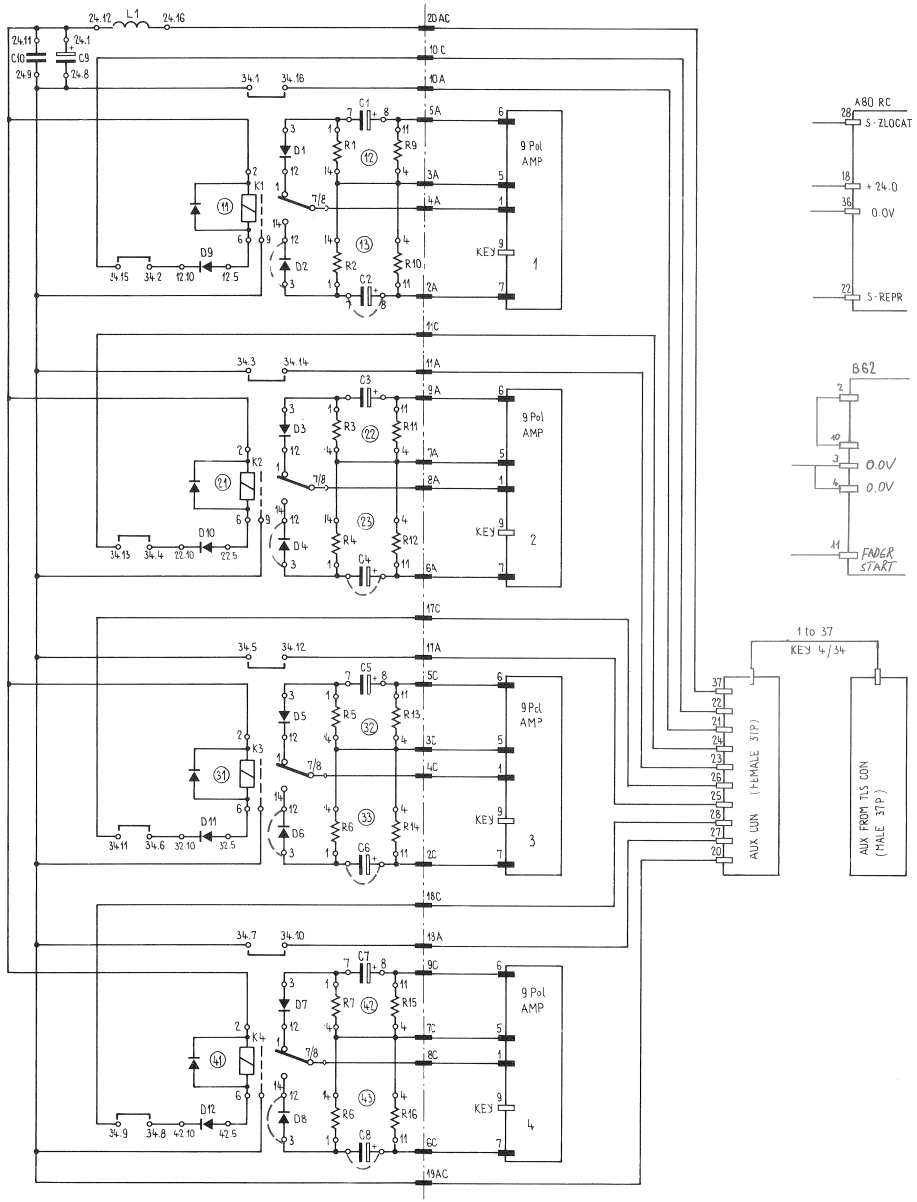

CABLE ADDRESS START INTERFACE RACK-EFFECT MACHINE 1.228.636

Sig. Name	Color	AMP 54.020445 Pin Nr.	Micro-Ribbon 54.02.0143 Pin Nr.
0.0 V	wht	1	36
	blu	–	–
	wht	–	–
	org	–	–
+24 V	wht	5	18
S-ZLOCAT	grn	6	28
S-REPR	wht	7	22
	brn	–	–
Key	wht	9	–
	grn		

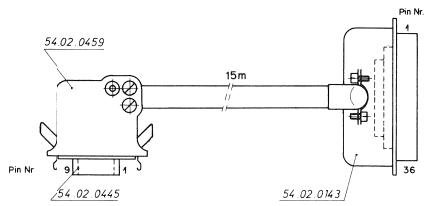

Modifcation for using the addresstart interface A80/RC for B62 / A62

1.) Use addresstart Interface 1.228.623 A80/RC including addresstartcables 1.228.636 A80/RC.

2.) Replace Remote plug A80/RC by remote plug 862 (Studer-No.: 54.02.0226). The following contacts are used:

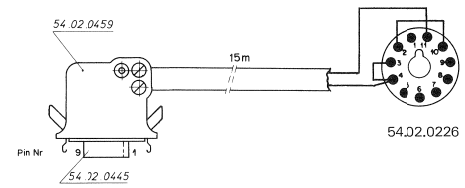

3.) The Pins 5 and 6 in the AMP-plug are not used for B62. We recommend to cut the wire and leave the pins in the socket.

Sig. Name	Color	AMP 54.020445 Pin Nr.	Amphenol 54.02.0226 Pin. Nr.
0.0 V	wht	1	3
	blu	–	
	wht	–	
	org	–	
	wht	5	
	grn	6	
FADER ST	wht	7	11
	brn	–	
Key	wht	9	
	grn		

4.) Modify the interface according to the following schematics. Working contacts of each relay are used only whichs means that for

addresstart 1 D2 / C2
addresstart 2 D4 / C4
addresstart 3 D6 / C6
addresstart 4 D8 / C8

have to be bridged.

5.) Please note that at the entry point the machine goes in play and stops at the exit point. Rewinding automatically is not possible, because of the lack of the zerolocator.

TLS INTERFACE RACK

CONNECTOR ASSEMBLY TLS ADDRESS START 1.228.646

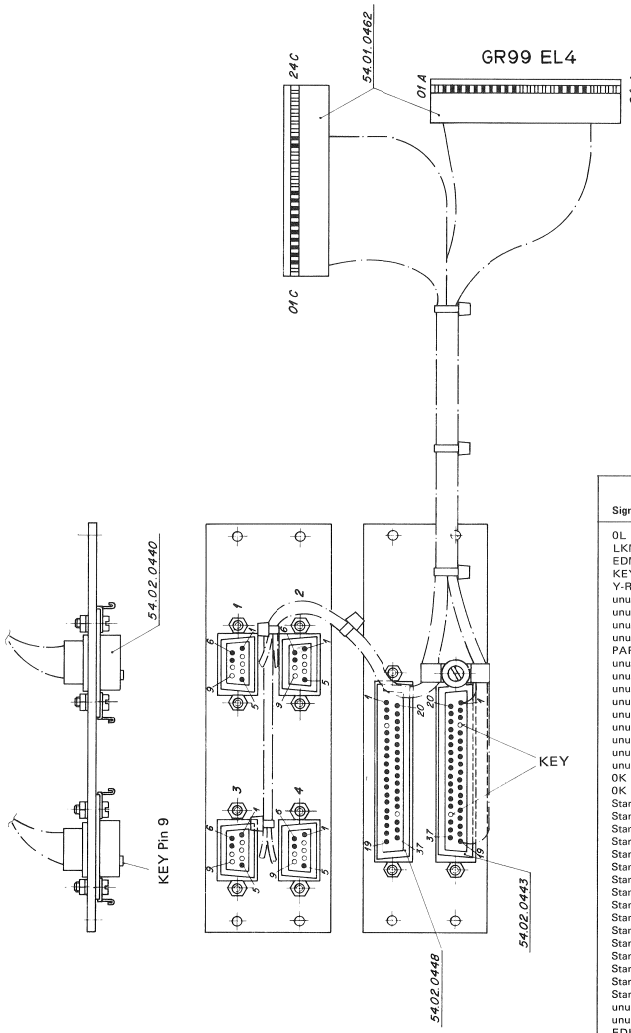

Sig. Name	Color	Start	End
	ADDR START 1		
+0.0 V	brn	1	4A
+24 V	grn	5	3A
S–Z–Loc	blu	6	5A
S–Repr	vio	7	2A
KEY		9	
	ADDR START 2		
+0.0 V	red	1	8A
+24 V	org	5	7A
S–Z-Loc	yel	6	9A
S–Repr	wht	7	6A
KEY		9	
	ADDR START 3		
0.0V	brn	1	4C
+24V	grn	5	3C
S–Z–Loc	blu	6	5C
S–Repr	vio	7	2C
KEY		9	
	ADDR START 4		
0.0V	brn	1	8C
+24V	grn	5	7C
S–Z–Loc	blu	6	9C
S–Repr	vio	7	6C
KEY		9	

Sign. Name	Color	Start	End	
0L	brn	1	1	
LKMODEDR	red	2	2	
EDMODEDR	org	3	3	
KEY		4		
Y-REC-M	grn	5	5	
unused	blu	6	6	
unused	vio	7	7	
unused	gry	8	8	
unused	wht	9	9	
PARKEDDR	blk	10	10	
unused	brn	11	11	
unused	red	12	12	
unused	org	13	13	
unused	yel	14	14	
unused	grn	15	15	
unused	blu	16	16	
unused	vio	17	17	
unused	gry	18	18	
unused	wht	19	19	
0K	blu	20	20	
0K	blu	20		19A
Start 1A	brn	21	21	
Start 1A	brn	21		10A
Start 1B	red	22	22	
Start 1B	red	22		10C
Start 2A	org	23	23	
Start 2A	org	23		11A
Start 2B	yel	24	24	
Start 2B	yel	24		11C
Start 3A	grn	25	25	
Start 3A	grn	25		17A
Start 3B	blu	26	26	
Start 3B	blu	26		17C
Start 4A	vio	27	27	
Start 4A	vio	27		18A
Start 4B	gry	28	28	
Start 4B	gry	28		18C
unused	wht	29	29	
unused	blk	30	30	
EDLEADDR	brn	31	31	
SNCPLTDR	red	32	32	
SYNCBDR	org	33	33	
KEY		34		
0.0 – TLS	grn	35	35	
+24M	blu	36	36	
+24S	vio	37	37	
+24S	vio	37		20A

CABLE INTERFACE RACK AUX-TLS AUX 1.228.964/965

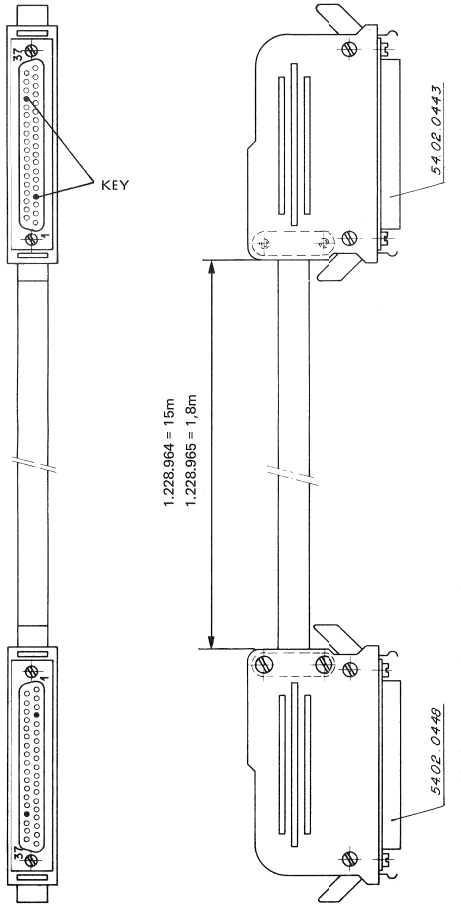

Sign. Name	Color	Male 54.02.0448 Start	Female 54.02.0443 End
0L	wht *	1	1
LRMODEDR	blu *	2	2
EDMODEDR	wht *	3	3
KEY	(org) *	4	4
Y REC M	wht *	5	5
unused	grn *	6	6
unused	wht *	7	7
unused	brn *	8	8
unused	wht *	9	9
PARKEDDR	gry *	10	10
unused	red *	11	11
unused	blu *	12	12
unused	red *	13	13
unused	org *	14	14
unused	red *	15	15
unused	grn *	16	16
unused	red *	17	17
unused	brn *	18	18
unused	red *	19	19
0K	gry *	20	20
Start 1A	blk *	21	21
Start 1B	blu *	22	22
Start 2A	blk *	23	23
Start 2B	org *	24	24
Start 3A	blk *	25	25
Start 3B	grn *	26	26
Start 4A	blk *	27	27
Start 4B	brn *	28	28
unused	blk *	29	29
unused	gry *	30	30
EDLEADDR	yel *	31	31
SNCPLTDR	blu *	32	32
SYNCBDR	yel *	33	33
KEY	(org) *	34	34
0.0 TLS	yel *	35	35
+24M	grn *	36	36
+24S	yel * (brn)	37	37
	(ye) * (gry)		

*TWISTED PAIRS AMONGST CABLES

7.10
EXTERNAL FREQUENCY CONVERTER 1.228.601

BLOCKDIAGRAM

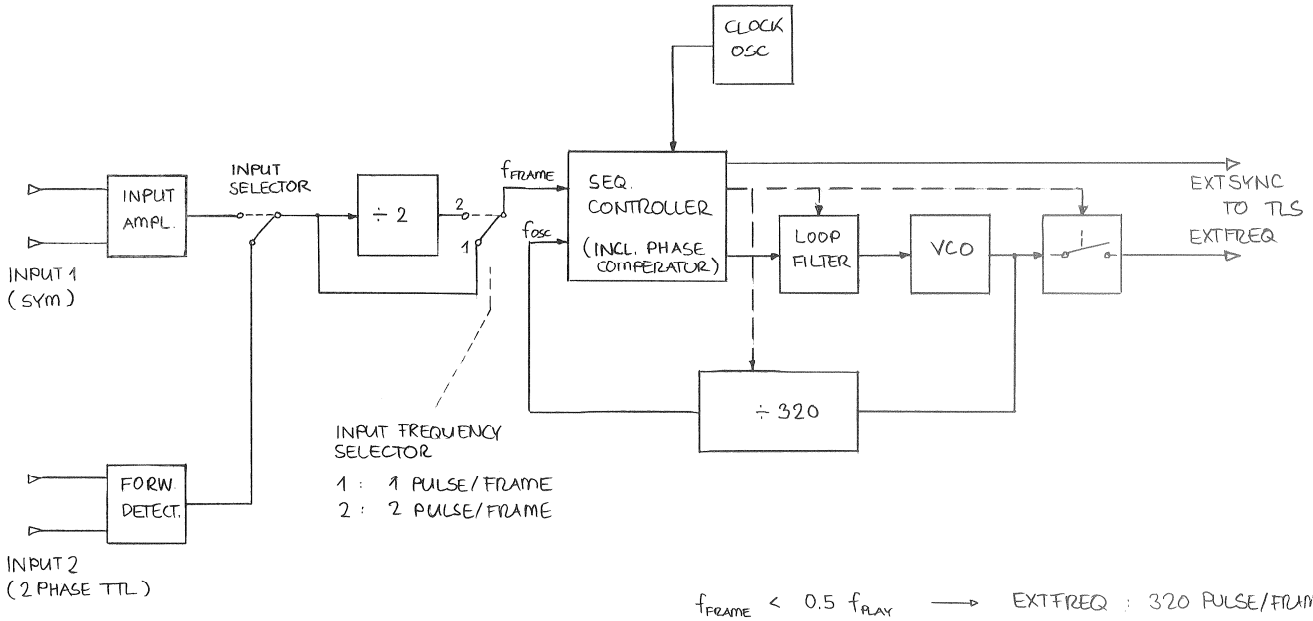

EXTERNAL FREQUENCY CONVERTER PCB 1.228.601

INC.	POS.NO.	PART NO.	VALUE	SPECIFICATIONS / EQUIVALENT	MANUF.
	C.....1	59.05.2683	68 nF	10%, 100V, MPC	
	C.....2	59.32.3472	4.7 nF	-20%...+100%, 40V, KER	
	C.....3	59.02.F683	68 nF	5%, 250V, MPC	
	C.....4	59.05.1334	330 nF	10%, 63V, MPC	
	C.....5	59.11.4472	4.7 nF	2.5%, 160V, PC	
	C.....6	59.32.4102	1 nF	20%, 50V, KER	
	C.....7	59.30.5150	15 uF	-20%, 20V, TA	
	C.....8	59.30.3330	33 uF	-20%, 10V, TA	
	C.....9	59.99.0205	68 nF	-20%, 63V, KER	
	C....10	59.99.0205	68 nF	-20%, 63V, KER	
	C....11	59.99.0205	68 nF	-20%, 63V, KER	
	C....12	59.99.0205	68 nF	-20%, 63V, KER	
	C....13	59.99.0205	68 nF	-20%, 63V, KER	
	C....14	59.32.3103	10 nF	-20%, 40V, KER	
	C....15	59.32.3103	10 nF	-20%, 40V, KER	
	D.....1	50.04.1107	ZD 3.3V	5%, 400 mW	
	D.....2	50.04.1107	ZD 3.3V	5%, 400 mW	
	D.....3	50.04.1106	ZD 2.7V	5%, 400 mW	
	D.....4	50.04.0125	1N4448	Si	
	D.....5	50.04.0125	1N4448	Si	
	D.....6	50.04.0125	1N4448	Si	
	D.....7	50.04.1123	ZD 4.7V	5%, 400 mW	
	D.....8	50.04.1123	ZD 4.7V	5%, 400 mW	
	D.....9	50.04.1123	ZD 4.7V	5%, 400 mW	
	IC....1	50.05.0286	LM 358	Low Power Dual OpAmp	NS,
	IC....2	50.07.0046	MC 14046	4046BPC PLL	Mot
	IC....3	50.06.0113	SN74LS113		
	IC....4	50.06.0109	SN74LS109		
	IC....5	50.06.0160	SN74LS160		
	IC....6	50.06.0161	SN74LS161		
	IC....7	1.025.025.20	R0252-0	PLL SEQUENCER PROM (32*8)	ST
	IC....8	50.06.0273	SN74LS273		
	IC....9	50.06.0032	SN74LS32		
	IC....10	50.06.0014	SN74LS14		
	IC....11	50.06.0074	SN74LS74		

INC.	POS.NO.	PART NO.	VALUE	SPECIFICATIONS / EQUIVALENT	MANUF.
	Q.....1	50.03.0479	BC550B	BC237B , Ic=100mA npn	
	R.....1	57.11.4681	680 Ohm	5%, 0.25W	
	R.....2	57.11.4331	330 Ohm	5%, 0.25W	
	R.....3	57.11.4331	330 Ohm	5%, 0.25W	
	R.....4	57.11.4471	470 Ohm	5%, 0.25W	
	R.....5	57.11.4472	4.7 kOhm	5%, 0.25W	
	R.....6	57.11.4224	220 kOhm	5%, 0.25W	
	R.....7	57.11.4223	22 kOhm	5%, 0.25W	
	R.....8	57.11.4332	3.3 kOhm	5%, 0.25W	
	R.....9	57.11.4224	220 kOhm	5%, 0.25W	
	R....10	57.11.4224	220 kOhm	5%, 0.25W	
	R....11	57.11.4472	4.7 kOhm	5%, 0.25W	
	R....12	57.11.4154	150 kOhm	5%, 0.25W	
	R....13	57.11.4471	470 Ohm	5%, 0.25W	
	R....14	57.11.4104	100 kOhm	5%, 0.25W	
	R....15	57.11.4683	68 kOhm	5%, 0.25W	
	R....16	57.39.1502	15 kOhm	1%, 0.25W, MF	
	R....17	57.11.4334	330 kOhm	5%, 0.25W	
	R....18	57.11.4681	680 Ohm	5%, 0.25W	
	R....19	57.11.4102	1 kOhm	5%, 0.25W	
	R....20	57.11.4102	1 kOhm	5%, 0.25W	
	R....21	57.11.4102	1 kOhm	5%, 0.25W	
	S.....1	54.01.0021		Brueckenstecker RM 2.54	
	S.....2	54.01.0021		Brueckenstecker RM 2.54	
	S.....3	54.01.0021		Brueckenstecker RM 2.54	
	T.....1	1.022.414.00		Eingangstrafo 1:1	

TA = Tantal, PC = Polycarb, MPC = metallized Polycarb, KER = ceramic

Manufacturer: NS = National Semiconductors, TI = Texas Instruments
Fc = Fairchild, Mot = Motorola, St = Studer

S1 : SELECTABLE INPUT IMPEDANCE

S2 : SELECTABLE INPUT FREQUENCY FOR NOMINAL SPEED

S3 : SELECTABLE INPUT LEVEL : TTL LEVEL (5V) OR 1V SYMETRICAL INPUT

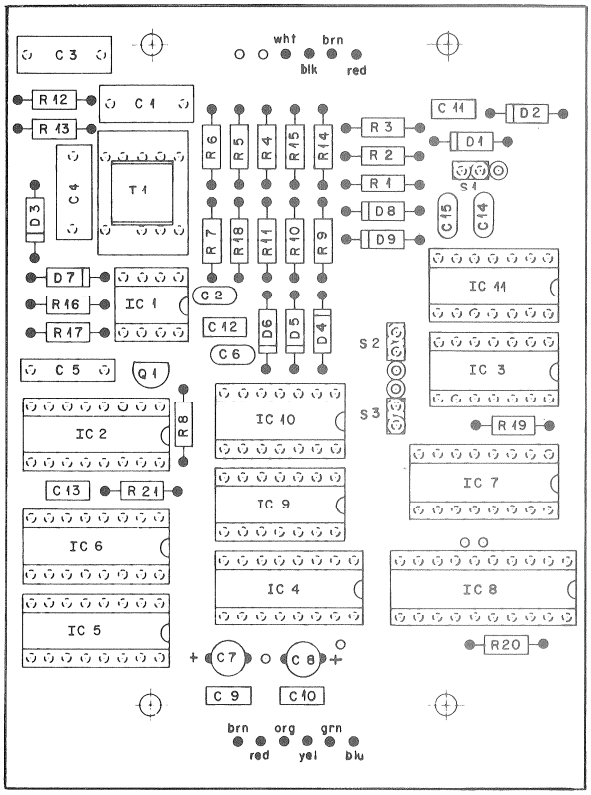

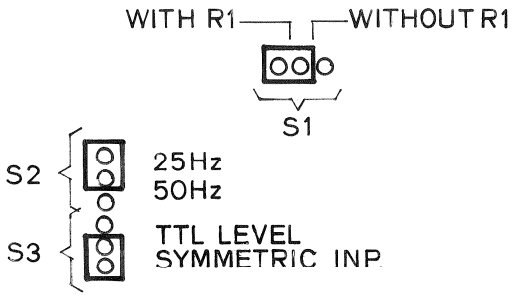

EXTERNAL FREQUENCY CONVERTER PCB 1.228.601

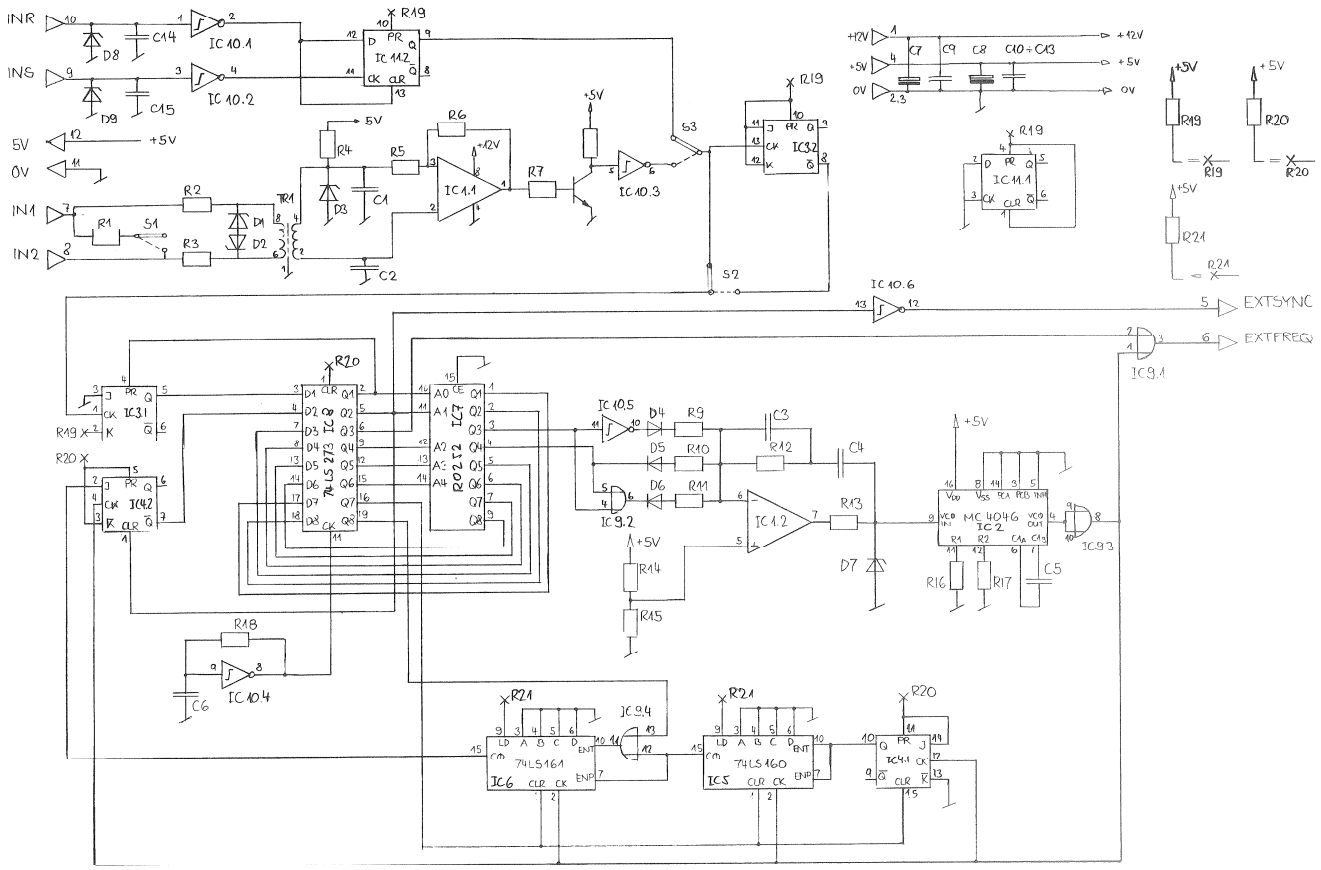

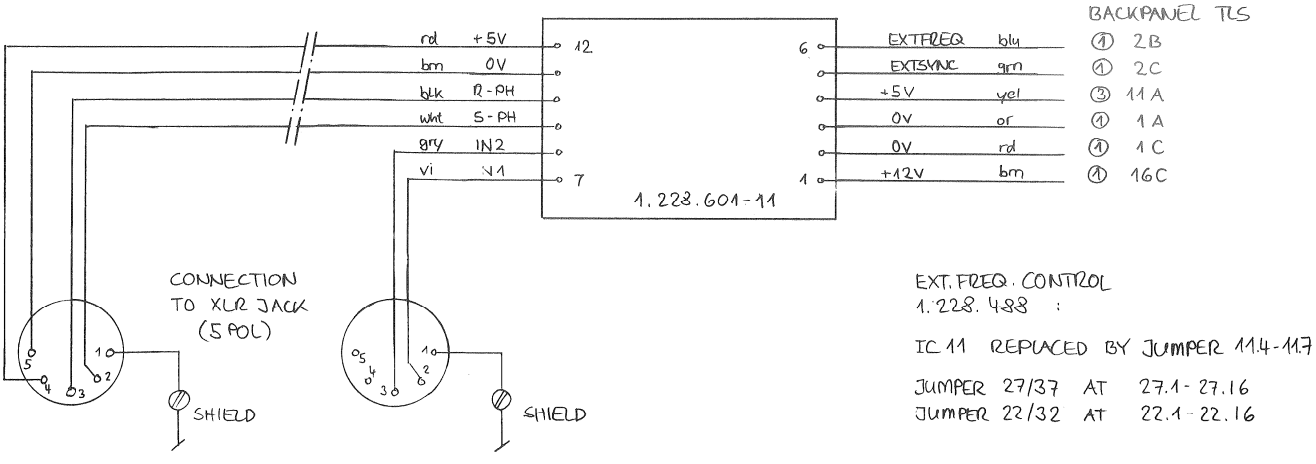

b) TTL INPUT WIRED

a) SYM. INPUT WIRED

EXT. FREQ. CONTROL
1.228.488 :

IC 11 REPLACED BY JUMPER 11.4-11.7

JUMPER 27/37 AT 27.1 - 27.16
JUMPER 22/32 AT 22.1 - 22.16

CONNECTIONS TO TLS AND EXT. FREQUENCY INPUT JACK

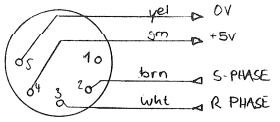

PLUG CONNECTION
FOR SONDOR
PULSE GENERATOR
OMA 3

EXTERNAL FREQUENCY CONVERTER UNIT

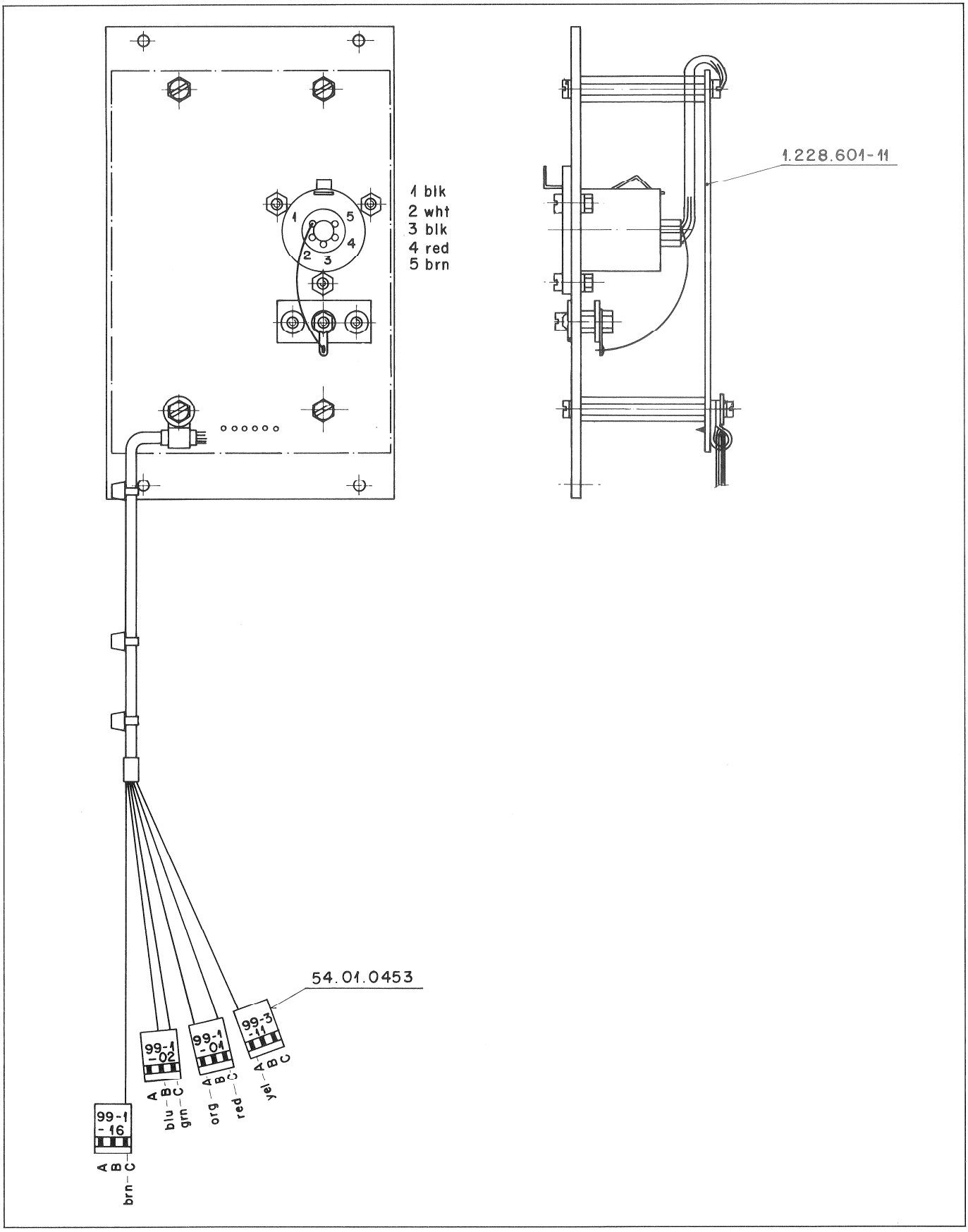

A80 LOCATOR | A80 MASTER-CONTROL | A800

MASTER (CODE SOURCE)

AUDIO TRANSPORTS

A800

A80/OTHERS

7.3 ... 7.8

SECTION 7.3 ... 7.8:
VIDEO TRANSPORTS

SECTION 7.2:
SWITCH SET
1.228.373

7

SECTION 7.1: INTERFACE RACK
1.228.890

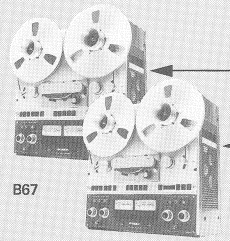

B67

7.9

7.9

7.9

7.9

SECTION 7.9:
ADDRESS START INTERFACE
1.228.374 (1.228.623)

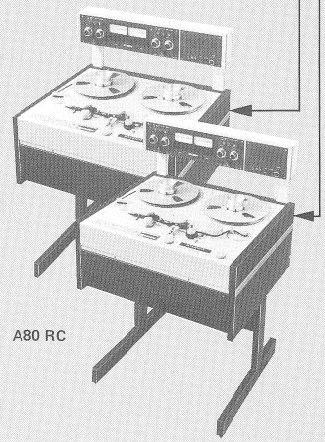

A80 RC

25/50

8000

SECTION 7.10:
EXTERNAL FREQUENCY
CONTROLLER 1.228.601

SPROCKET
FILM TRANSPORT

STATION SYNC
FREQUENCY, CODE

SLAVE PROCESSOR RACK

SECTION 2: SCHEMATIC DIAGRAMS
RACK LOCATIONS 1-20, LAYOUTS,
PARTS LIST, JUMPER SETTING

SECTION 3: CIRCUIT DESCRIPTION
RACK LOCATIONS 1-20

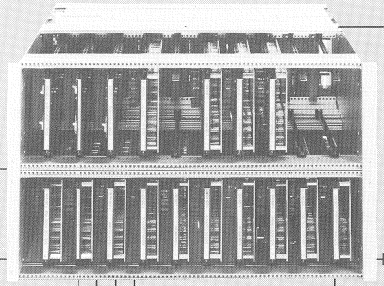

SECTION 4:
BACK PANELS
ORGANIZATION
AND
WIRING GR 99

(REAR OF RACK)
SECTION 5:
CONNECTION
FIELDS
RACK ELEMENTS
UPPER PART GR 98,
LOWER PART GR 97

SLAVE PERIPHERAL EQUIPMENTS

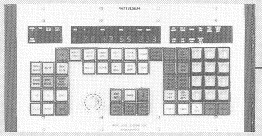

6.1

SECTION 6.1: MAIN PROGRAMMER
1.228.460 (461)

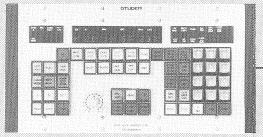

6.1

SECTION 6.1: MAIN PROGRAMMER
1.228.460 (461)

6.3

SECTION 6.3: PARALLEL/ SERIAL
CONVERTER
1.228.490

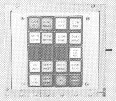

6.6

SECTION 6.6: BASIC PROGRAMMER
1.228.380

6.4

SECTION 6.4: POWER SUPPLY
1.228.150

6.2

SECTION 6.2: CODE CHANNEL REMOTE CONTROL
1.228.328

6.5

SECTION 6.5: POWER SUPPLY
1.228.170

SLAVE TRANSPORTS

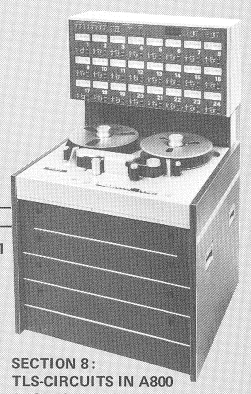

8

8.1

SECTION 8:
TLS-CIRCUITS IN A800
1.180.086

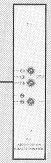

SECTION 8.1:
CODE CHANNEL
REMOTE CONTROL A800
1.328.140

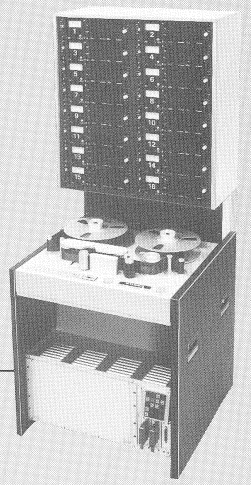

9

SECTION 9:
TLS-MODIFICATIONS AND CIRCUITS
IN A80 VU MK II / MK III

☒ INDICATES PARAGRAPH OF CABLE DESCRIPTION

CONTENTS / TLS CIRCUITS IN A800

SECTION	PAGE	PART NUMBER	DESCRIPTION
8.1.	**8/3**		**FUNCTION DIAGRAMS AND CABELING A800 / TLS**
	8/3		DATA INTERCHANGE TLS / A800
	8/3		CODE SIGNAL OVERVIEW TLS / A800
	8/4		CABELING A800 / A800 / TLS (WITH PARALLEL SERIAL CONVERTER 1.228.490)
	8/5		CABELING VIDEO/A800 / TLS
	8/6	1.328.140	CODE CHANNEL REMOTE CONTROL
	8/6	1.328.142	SWITCH BOARD CODE CHANNEL REMOTE
	8/7	1.328.151	CODE CHANNEL REMOTE CONTROL CABLE
8.2.	**8/8**		**DESCRIPTION AND DIAGRAMS OF TLS CIRCUITS**
	8/8		POWER AND DATA SUPPLY OF TLS CIRCUITS
	8/9	1.228.431–83/82	CODE RECORD AMPLIFIER PCB GR40 EL1
	8/13	1.228.432–81	CODE READ AMPLIFIER PCB GR40 EL2
	8/16		ADJUSTMENT OF CODE READ AMPLIFIER 1.228.432 AND CODE RECORD AMPLIFIER 1.228.431–82/83
	8/17	1.228.432–00	CODE READ AMPLIFIER PCB GR40 EL2
	8/21	1.228.433–81/00	TLS TRANSMITTER / RECEIVER PCB GR40 EL3
▲	8/25	1.228.434–83/82	TLS MASTER INTERFACE PCB A800 GR40 EL4
	8/29	1.228.434–81	TLS MASTER INTERFACE PCB A800 GR40 EL4
8.3.	**8/33**		**TLS VENTILATION UNITS**
	8/33	1.228.955	VENTILATION UNIT (RACK VERSION)
	8/34	1.228.956	VENTILATION UNIT (TROLLEY VERSION)

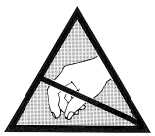

ALL PCBs MARKED WITH THIS SIGN ▲
CONTAIN COMPONENTS SENSITIVE TO
STATIC CHARGES.
PLEASE, REFER TO PREFACE BEFORE
YOU REMOVE THESE BOARDS.

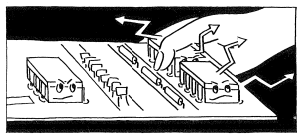

8.1.

FUNCTION DIAGRAMS AND CABELING A800 / TLS

DATA INTERCHANGE TLS / A800

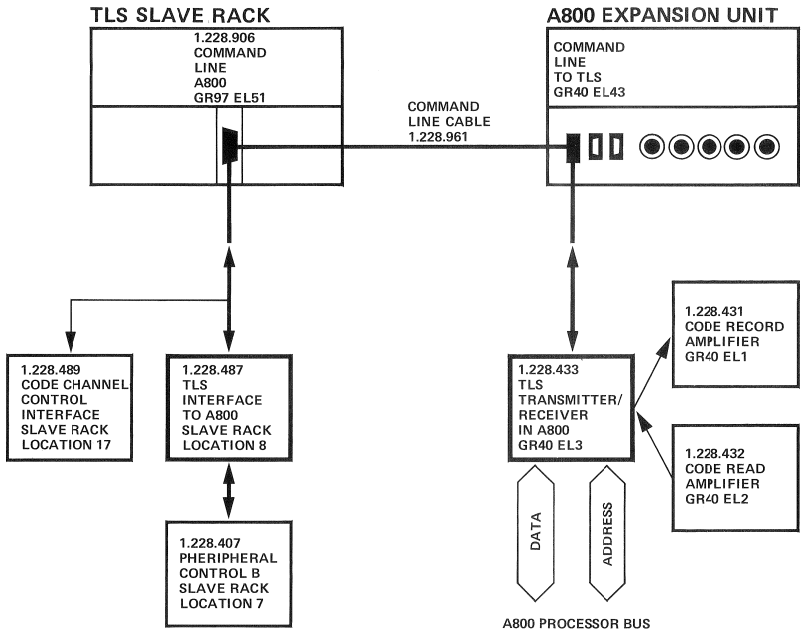

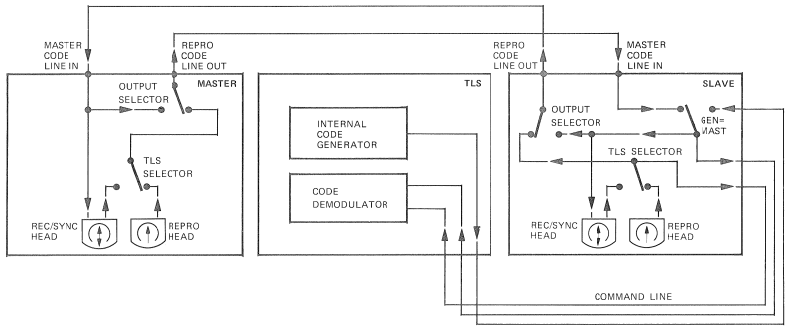

CODE SIGNAL OVERVIEW TLS / A800

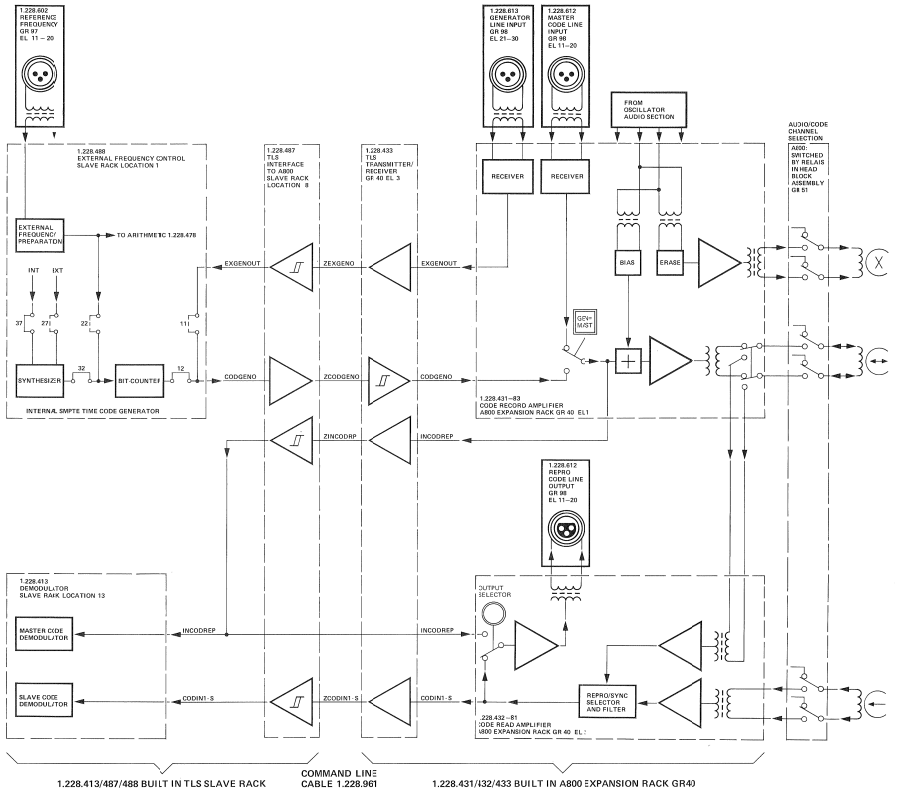

CABELING A800 / A800 /TLS (WITH PARALLEL SERIAL CONVERTER 1.228.490)

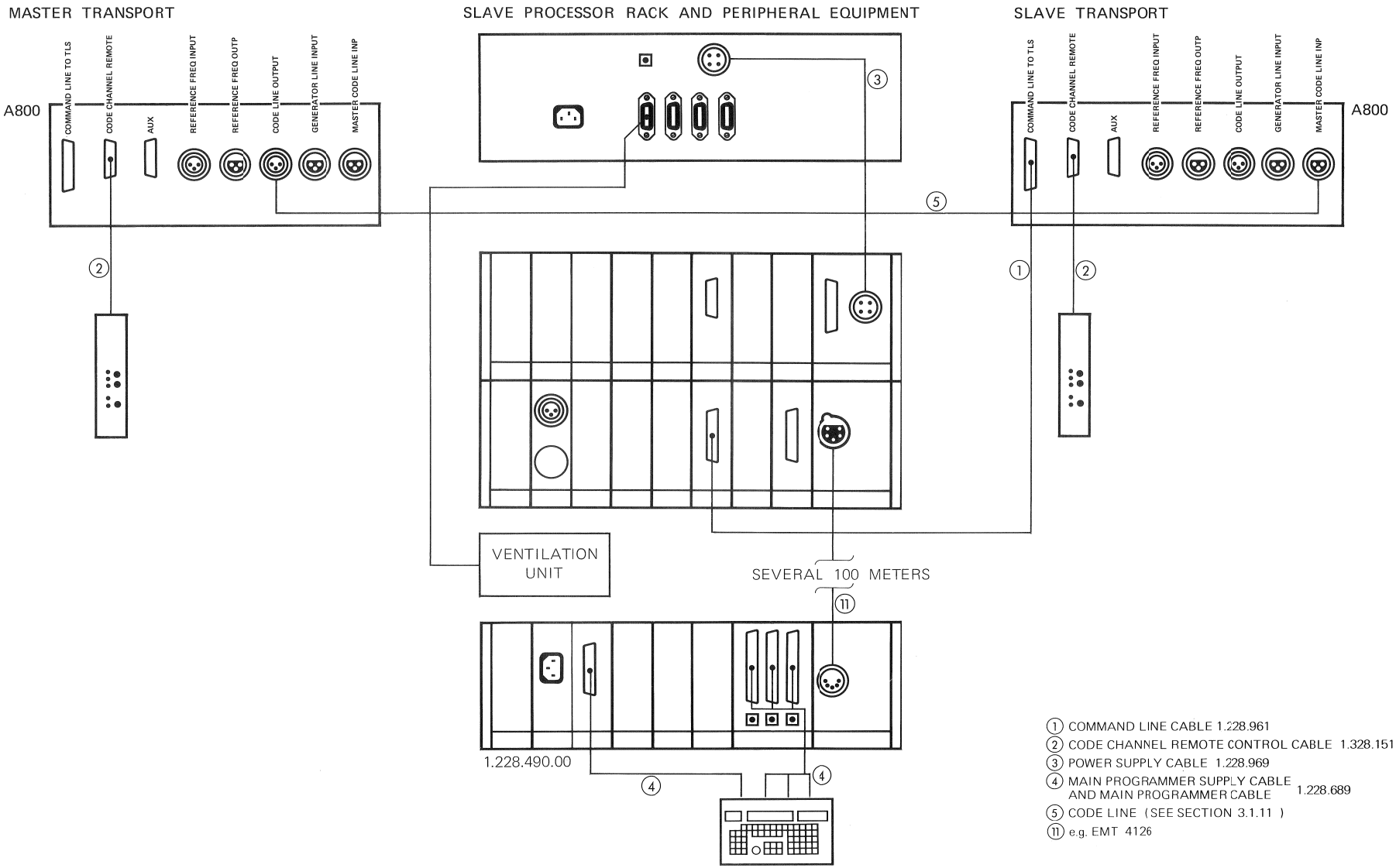

CABELING VIDEO / A800 / TLS

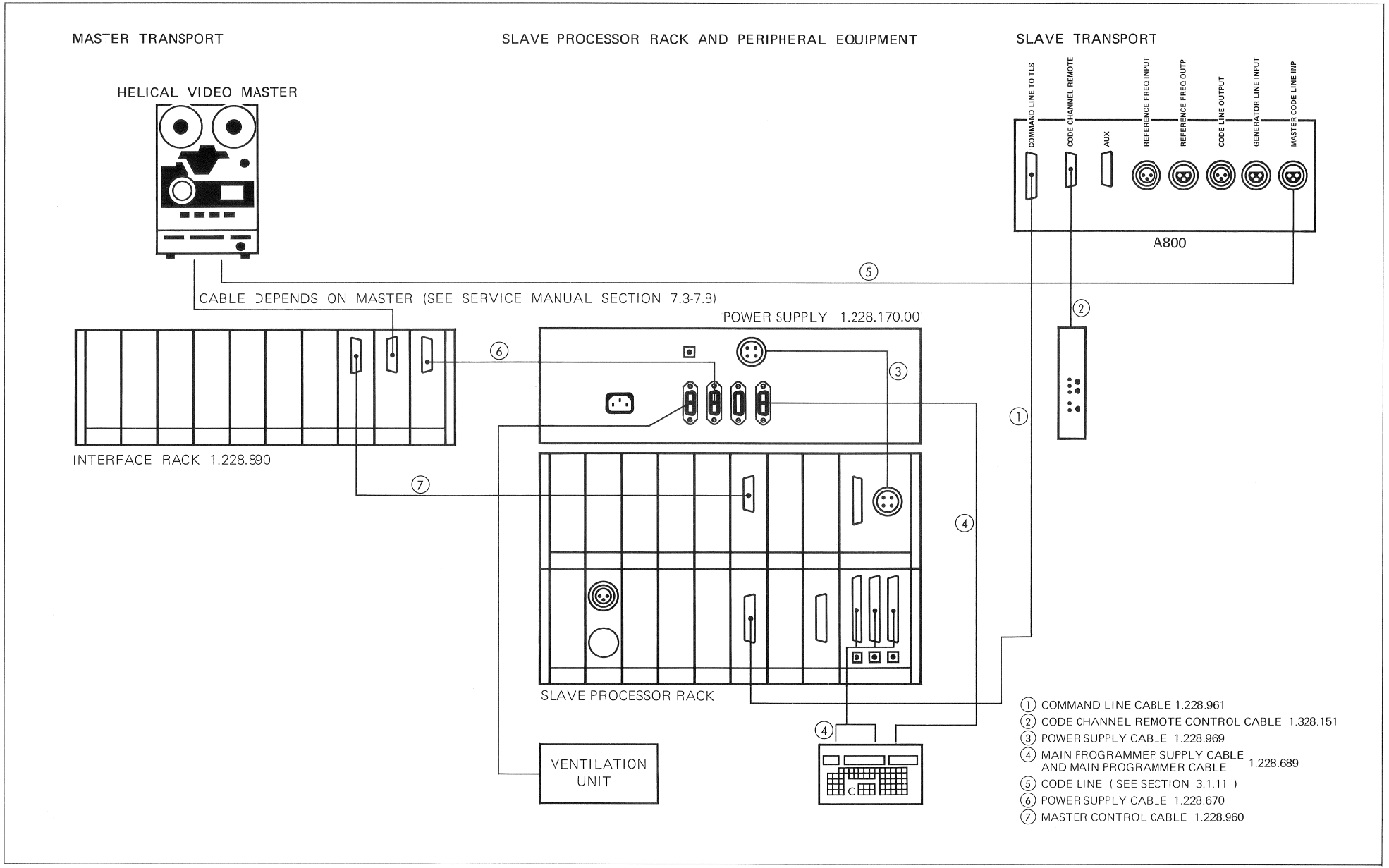

CODE CHANNEL REMTOE CONTROL 1.328.140

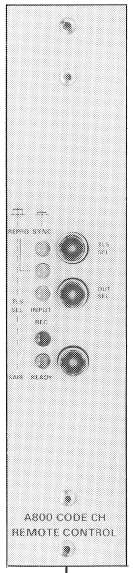

1.328.151

TO CODE CHANNEL
REMOTE CONNECTOR
GR40 EL42
(EXPANSION RACK)

SWITCH BOARD CODE CHANNEL REMOTE 1.328.142

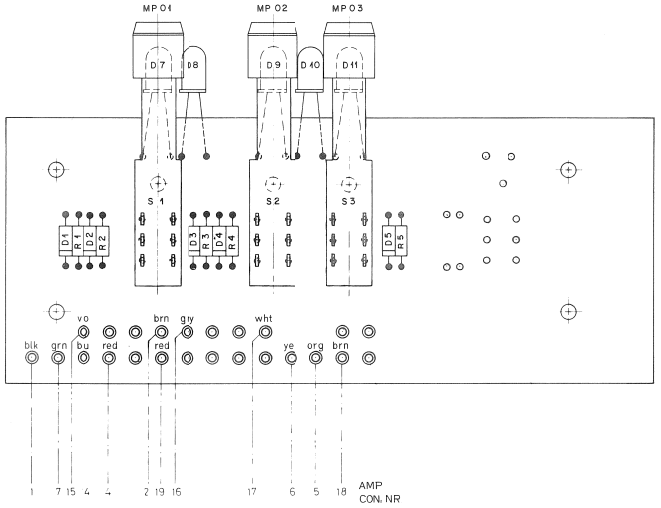

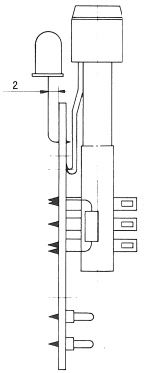

POS NO	ART NO	VALUE	SPECIFICATION	EQUIVALENT	MFR
D 01	50.04.0125	1 N 4448		SI	
D 02	50.04.0125	1 N 4448			
D 03	50.04.0125	1 N 4448			
D 04	50.04.0125	1 N 4448			
D 05	50.04.0125	1 N 4448			
D 07	50.04.2113	MV 5253 GN		LED	
D 08	50.04.2111	MV 5753 RT			
D 09	50.04.2112	MV 5353 GB			
D 10	50.04.2112	MV 5353 GB			
D 11	50.04.2112	MV 5353 GB			
MP 01	55.03.0305		Anzeigeknopf gr/gn		
MP 02	55.03.0309		/bl		
MP 03	55.03.0304		/gb		
			/rt		
J 01	54.02.0471	1,5 x 5 5	Steckerstift		
R 01	57.02.5820	82	10% .25W	CMA	
R 02	57.02.5101	100			
R 03	57.02.5121	120			
R 04	57.02.5121	120			
R 05	57.02.5121	120			
S 01	55.03.0302	2 * U	Taste RAST	LOET	
S 02	55.03.0302	2 * U			
S 03	55.03.0302	2 * U			

	INC	DATE	NAME
	128	3.4.78	MS/gv

STUDER | CODE CH REMOTE A 800 | 1.328.142 | PAGE 1 of 1

SWITCH BOARD CODE CHANNEL REMOTE 1.328.142

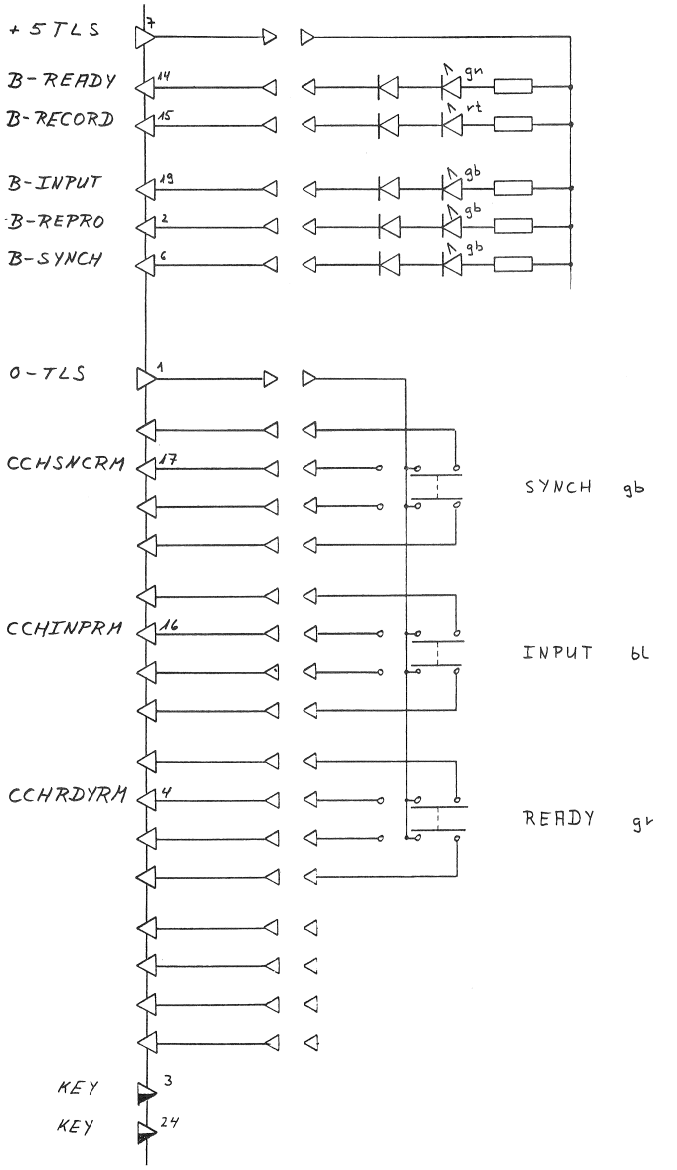

CODE CHANNEL REMOTE CONTROL CABLE 1.328.151

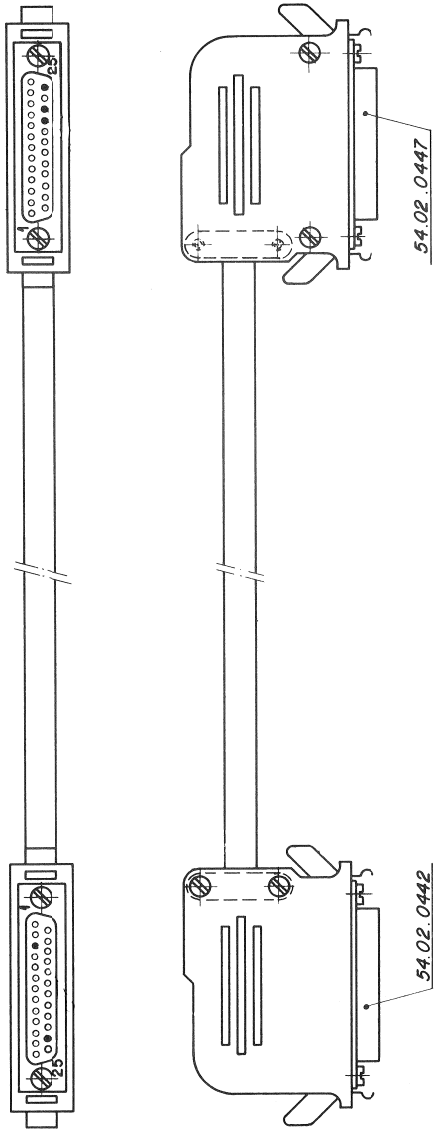

SIGNAL NAME	COLOR	CONNECTOR 54.02.0442 25 POL	CONNECTOR 54.02.0447 25 POL
0 LTLS	wht ★	1	1
+5 LED	blu ★	7	7
B–REPRO	wht ★	2	2
CCHRDYRM	org ★	4	4
B–EXTREC	wht ★	5	5
B–SYNC	grn ★	6	6
B–READDY	wht ★	14	14
B–RECORD	brn ★	15	15
CCHINPRM	wht ★	16	16
CCHSNCRM	gry ★	17	17
EXTRECRM	red ★	18	18
B–INPUT	blu ★	19	19
TWISTED ★			

8.2.

DESCRIPTION AND DIAGRAMS OF TLS CIRCUITS

POWER AND DATA SUPPLY OF TLS CIRCUITS

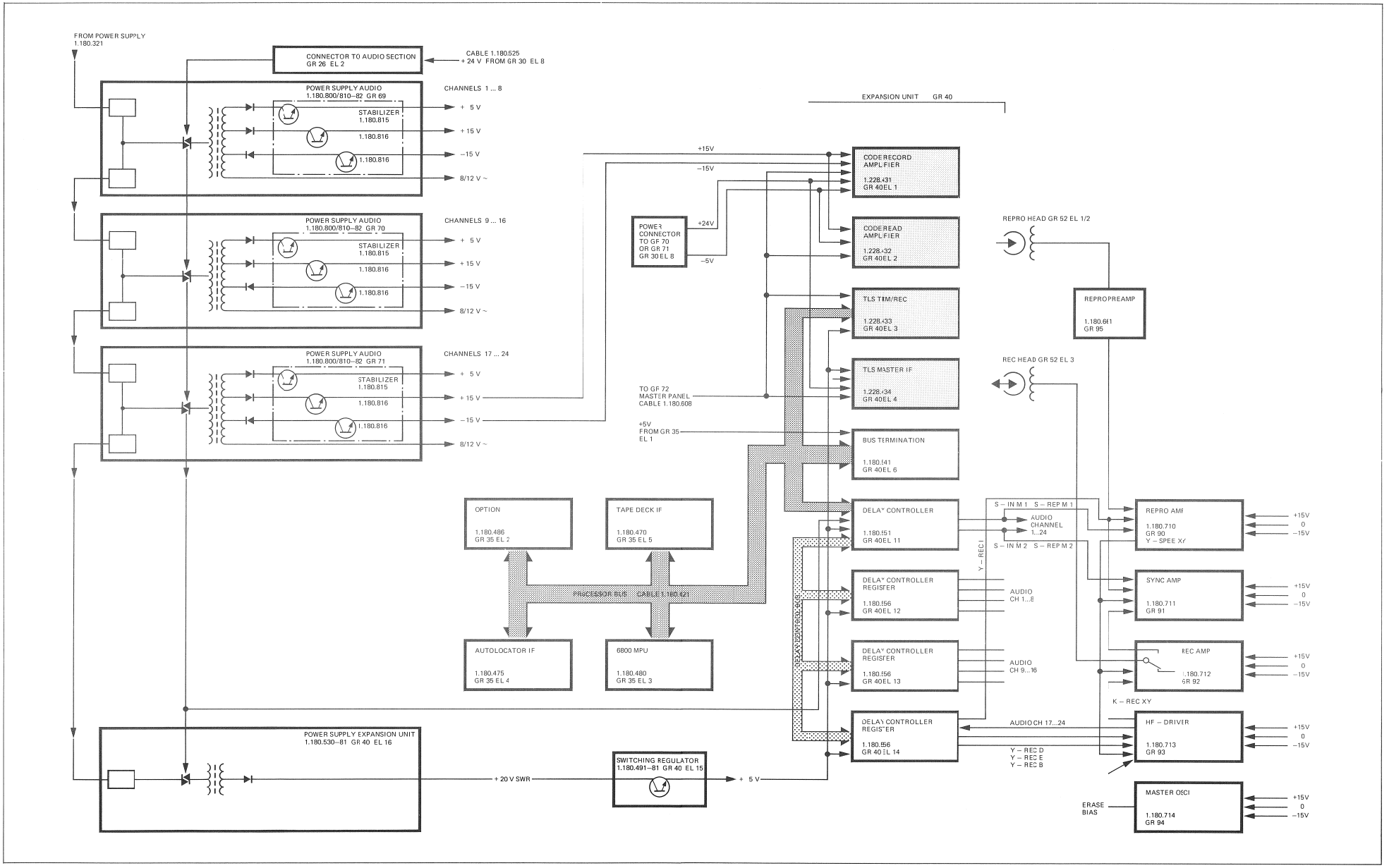

CODE RECORD AMPLIFIER PCB 1.228.431–83/82 GR40 EL1

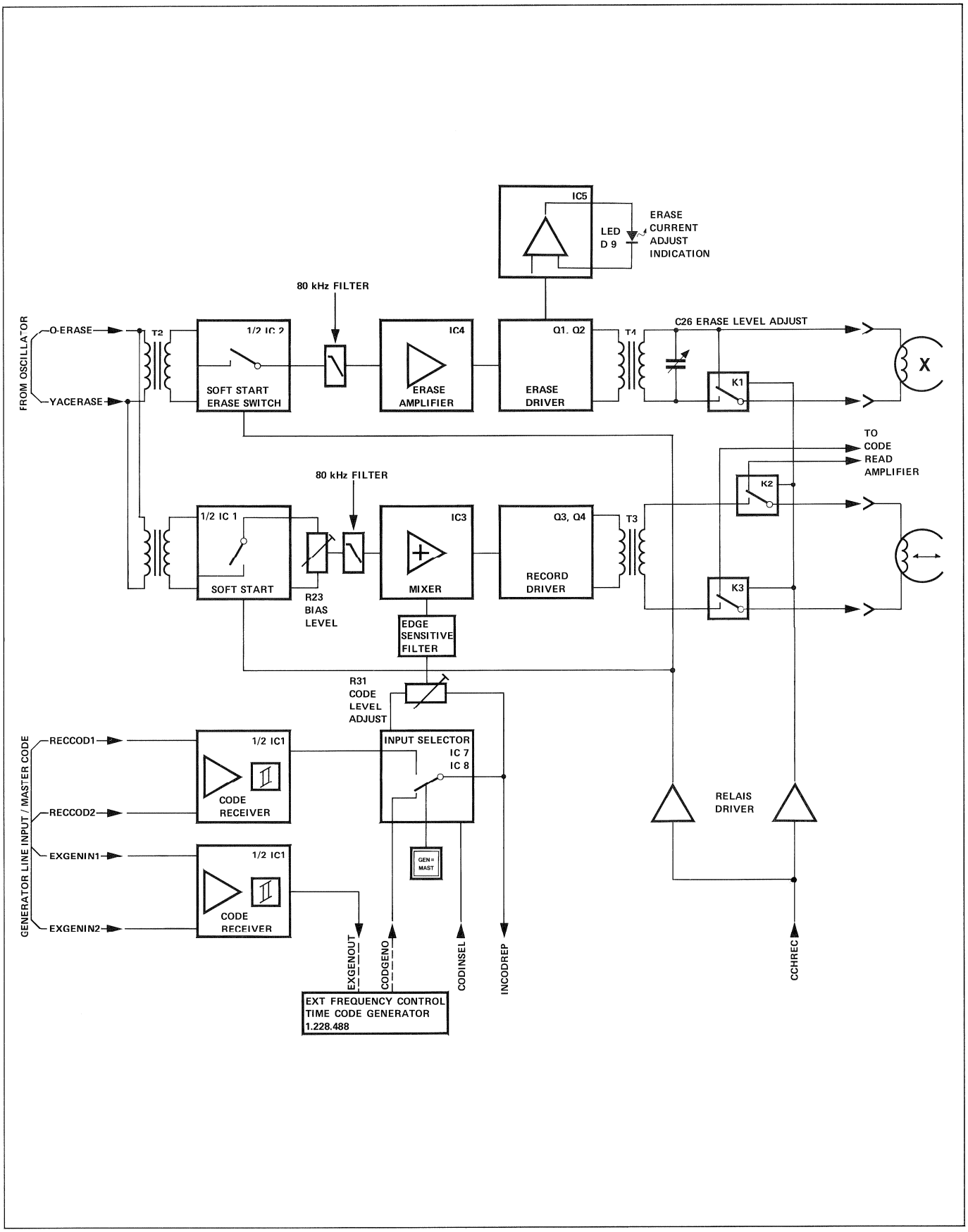

CODE RECORD AMPLIFIER PCB 1.228.431–83/82 GR40 EL1

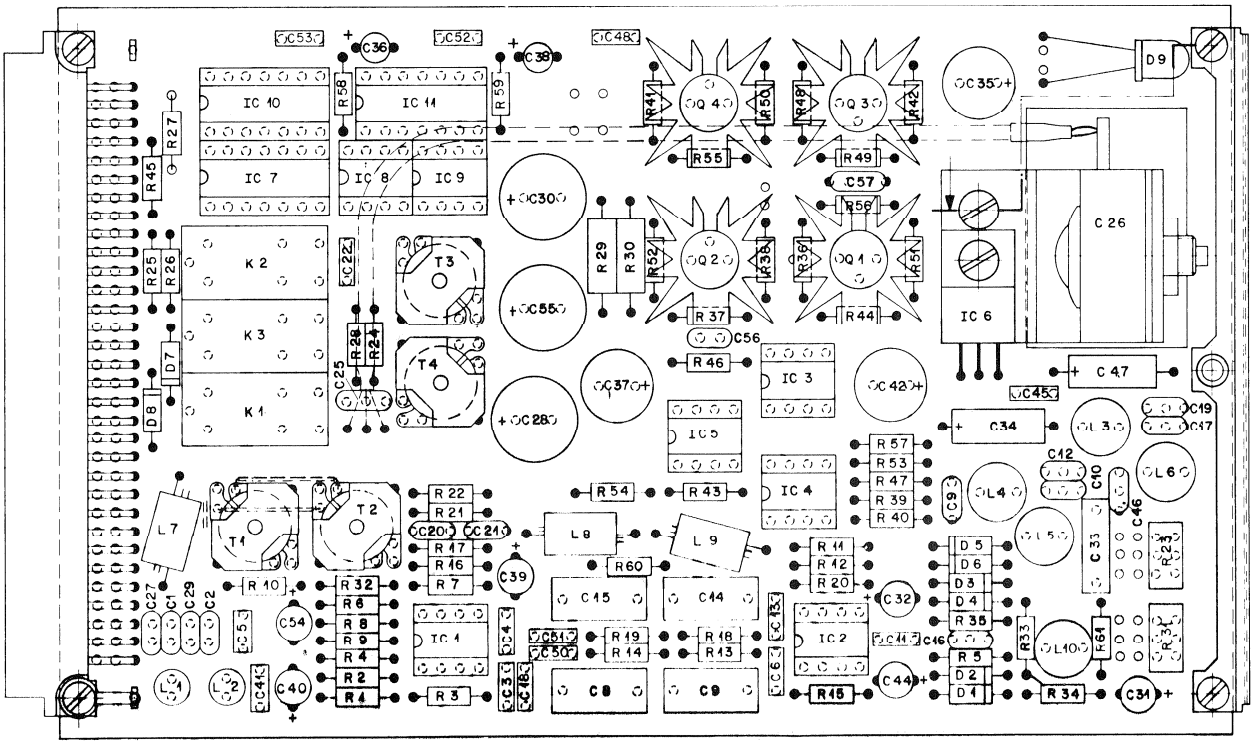

1.228.431 CODE AUFNAHMEVERSTÄRKER

Die Codequelle kann mittels Jumper gewählt werden:

– Interner Generator
– Externer Generator
– Master Code

Der Pegel des Code kann mit R31 eingestellt werden. In IC3 wird der Code mit dem Bias Signal (80 kHz) gemischt. Der Bias wird weich eingeschaltet wenn das Signal YRECECCH logisch 0 ist; dasselbe geschieht mit dem Löschkreis. Beide Signale, Lösch- und Biassignal sowie die NF werden in einer Gegentakt-Stufe verstärkt und den entsprechenden Köpfen zugeführt. Mit C26 kann der Löschstrom eingestellt werden: Die LED auf dem Print hört auf zu glimmen wenn der Löschstrom das Minimum erreicht hat. Die Köpfe werden mittels Relais abgeschaltet wenn die Aufnahmefunktion inaktiv ist.

Wichtige Signale

aktiviert die Aufnahme	Y–REC–CCH
AC-Signal 80kHz (240kHz / Ind.–82)	Y–AC–BIAS
AC-Signal 80kHz	Y–AC–ERASE
zeigt den Code, wenn der interne Generator läuft	CODGENO
logisch 0, wenn der interne Generator Master ist	CODINSEL
Signal von einem externen Codegenerator	EXGENIN
Code von der Mastermaschine	RECCOD
zeigt den Code, wenn er vom Sync-Kanal gelesen wird	SYNCH 1
zeigt den Code vom Master oder vom internen Generator	INCODREP

1.228.431 CODE RECORD AMPLIFIER

Code input is selectable:

– int. generator
– ext. generator
– Master code

The code level is adjustable with R31 and in IC3 is mixed together with 80 kHz Bias frequency. Bias is softly switched on when YRECECCH is low; the same happens with the erase circuit. Both signals erase and Bias + NF signal are amplified in a push/pull stage and fed to their heads. With C26 the erase-current is adjustable and the Led on the printed board stops glooming when the current is minimized. The heads are switched off by relais when recording is disactivated.

Important signals

activates Recording	Y–REC–CCH
AC-Signal 80kHz (240kHz / Ind.–82)	Y–AC–BIAS
AC-Signal 80kHz	Y–AC–ERASE
Shows code when int. Gen. is running	CODGENO
Low when int. Gen. = Master	CODINSEL
Signal from external Generator	EXGENIN
Code from master machine	RECCOD
Shows code when read from synch-channel	SYNCH 1
Shows code from Master or int. Gen.	INCODREP

CODE RECORD AMPLIFIER PCB 1.228.431–83/82 GR40 EL1

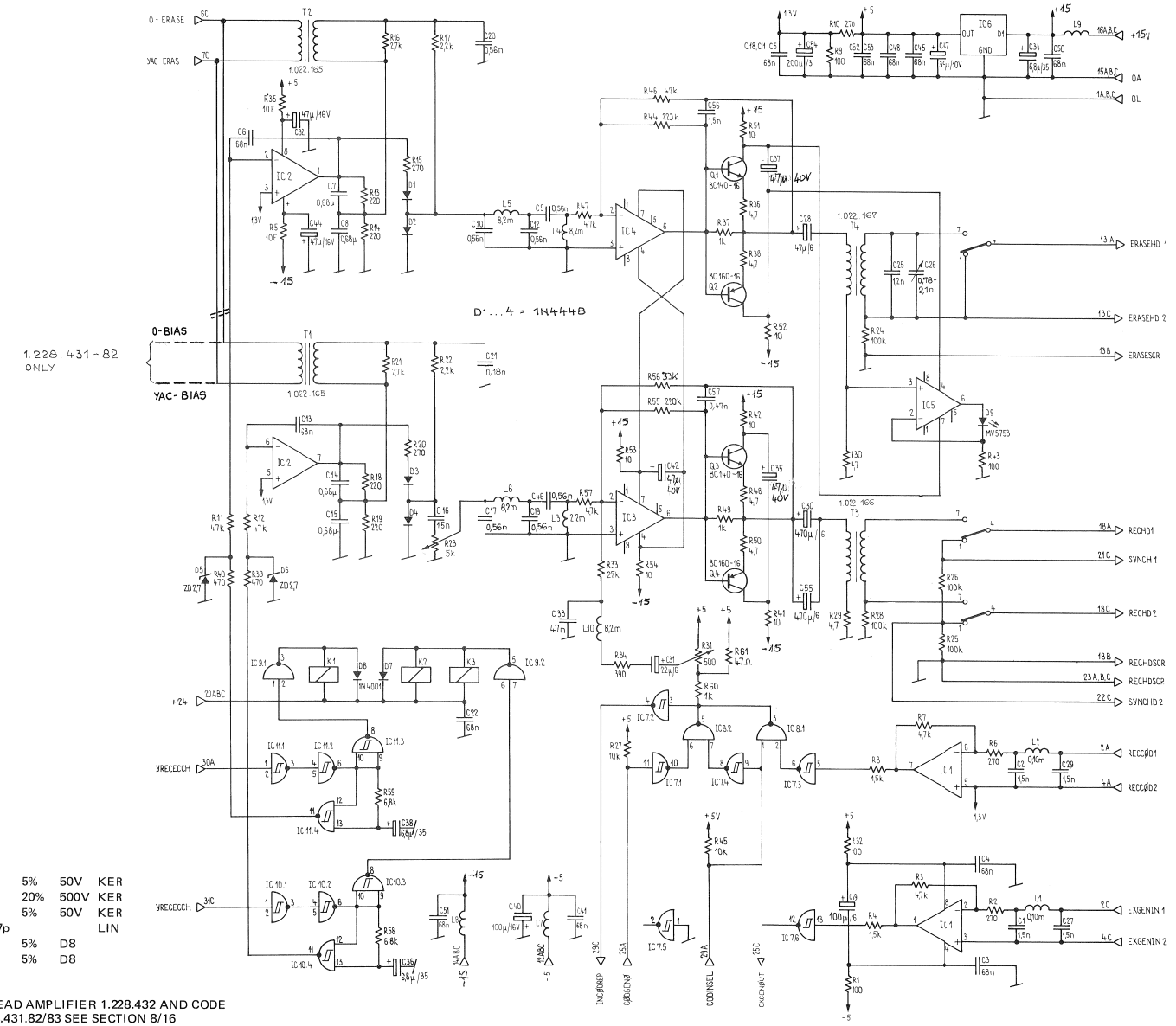

1.228.431–82 :

C17	59.34.2181	180p	5%	50V	KER
C20	59.32.0561	560p	20%	500V	KER
C46	59.34.2181	180p	5%	50V	KER
IC05	50.09.0102	LF357p			LIN
L03	62.02.1222	2.2M	5%	D8	
L06	62.02.1222	2.2M	5%	D8	
R33	57.02.5103	10k			

ADJUSTMENT OF CODE READ AMPLIFIER 1.228.432 AND CODE RECORD AMPLIFIER 1.228.431.82/83 SEE SECTION 8/16

CIRCUIT 1.228.431–83
LAYOUT 1.228.711–12

CODE RECORD AMPLIFIER PCB 1.228.431–83/82 GR40 EL1

POS NO	PART NO	VALUE	SPECIFICATIONS	EQUIVALENT	MFR
C 01	59.32.4152	1.5 N	20% 63V KER		
C 02	59.32.4152	1.5 N			
C 03	59.99.0205	68 N	-20% 63V KER		
C 04	59.99.0205	68 N			
C 05	59.99.0205	68 N			
C 06	59.99.0205	68 N			
C 07	59.02.0684	680 N	5% 63V MPC		
C 08	59.02.0684	680 N			
C 09	59.32.0561	560 P	20% 500V KER		
C 10	59.32.0561	560 P			
(2) C 11	59.99.0205	68 N	-20% 63V KER		
C 12	59.32.0561	560 P	20% 500V KER		
C 13	59.99.0205	68 N	-20% 63V KER		
C 14	59.02.0684	680 N	5% 63V MPC		
C 15	59.02.0684	680 N			
C 16	59.32.4152	1.5 N	20% 63V KER		
5) C 17	59.32.0561	560 P	20% 500V KER		
(2) C 18	59.99.0205	68 N	-20% 63V KER		
5) C 19	59.32.0561	560 P	20% 500V KER		
C 20	59.32.0561	560 P	20% 500V KER		
C 21	59.34.2181	180 P	5% 50V KER		
C 22	59.99.0205	68 N	20% 63V KER		
(3) C 23					
(3) C 24					
C 25	59.32.1122	1.2 N	10% 500V KER		
C 26	59.19.0103	780P-2.1N	500V TRI		
C 27	59.32.4152	1.5 N	20% 63V KER		
C 28	59.30.4470	47 U	-20% 16V TA		
C 29	59.32.4152	1.5 N	20% 63V KER		
C 30	59.22.2471	470 U	-10% 6 V EL		
C 31	59.30.2220	22 U	-20% 6.3V TA		
C 32	59.30.4470	47 U	-20% 16V TA		
(3) C 33	59.31.6473	47 N	10% 100V MPETP		
C 34	59.99.0201	6.8 U	20% 35V TA		
C 35	59.22.6470	47 U	-10% 40V EL		
C 36	59.36.4689	6.8 U	20% 25V TA		
C 37	59.22.6470	47 U	-10% 40V EL		
C 38	59.36.4689	6.8 U	20% 25V TA		
C 39	59.30.4101	100 U	-10% 16V EL		
C 40	59.30.4101	100 U			
C 41	59.99.0205	68 N	-20% 63V KER		
C 42	59.22.6470	47 U	-10% 40V EL		
C 43					
C 44	59.30.4470	47 U	-20% 16V TA		
C 45	59.99.0205	68 N	-20% 63V KER		
5) C 46	59.32.0561	560 P	20% 500V KER		
C 47	59.99.0202	39 U	20% 10V TA		
C 48	59.99.0205	68 N	-20% 63V KER	(7)10.2.82	Vo
				(6)10.6.81	Vo.
C 50	59.99.0205	68 N	-20% 63V KER	(5)4.11.80	Vo. .83
C 51	59.99.0205	68 N			

IND	DATE	NAME
⑧	16.6.80	Vo
⑦	31.8.79	HF
⑥	9.2.79	B2
⑤	13.4.78	B1 HF
○	12.4.78	MS/gv

STUDER CODE REC. AMP. A 800-M 1.228.431-83 PAGE 1 of 4

POS NO	PART NO	VALUE	SPECIFICATIONS	EQUIVALENT	MFR
C 52	59.99.0205	68 N	-20% 63V KER		
C 53	59.99.0205	68 N			
C 54	59.30.1221	220 U	-20% 3V TA		
C 55	59.22.2471	470 U	-10% 6.3V EL		
C 56	59.32.4152	1.5 N	20% 63V KER		
C 57	59.34.5471	470 P	5% N1500 KER		
D 01	50.04.0125	1 N 4448			
D 02	50.04.0125	1 N 4448			
D 03	50.04.0125	1 N 4448			
D 04	50.04.0125	1 N 4448			
D 05	50.04.1106	2.7 V	5% .40W Z		
D 06	50.04.1106	2.7 V	5% .40W Z		
D 07	50.04.0122	1 N 4001		SI	
D 08	50.04.0122	1 N 4001		SI	
D 09	50.04.2111	MV5753RT		LED	
IC01	50.05.0245	RC4558P		LIN RC4558DN	
IC02	50.05.0245	RC4558P		LIN RC4558DN	
4) IC03	50.09.0102	LF 357 P		LIN	
4) IC04	50.09.0102	LF 357 P		LIN	
6)4) IC05	50.09.0103	TL 071 CP	DIP 8 Bi-JFET	LF 351 N	
IC06	50.05.0221	LM340T-5		V.REG 1C7805CP	
IC07	50.06.0014	SN74LS140N		TTL	
IC08	50.05.0227	SN75462P		DRIV LM7546	
IC09	50.05.0227	SN75462P		DRIV LM7546	
IC10	50.06.0132	SN74LS132N		TTL	
IC11	50.06.0132	SN74LS132N		TTL	
K 01	56.02.1001	24 V-	.1A 1U Au		
K 02	56.02.1001	24 V-			
K 03	56.02.1001	24 V-			
L 01	62.02.1101	100 U	10% D6		
L 02	62.02.1101	100 U	10% D6		
5) L 03	62.02.1822	8.2 M	5% D8		
L 04	62.02.1822	8.2 M	5% D8		
L 05	62.02.1822	8.2 M	5% D8		
5) L 06	62.02.1822	8.2 M	5% D8		
L 07	62.01.0115		Breitbanddrossel		
L 08	62.01.0115		Breitbanddrossel	(7)10.2.82	Vo.
L 09	62.01.0115		Breitbanddrossel	(6)10.6.81	Vo.
L 10	62.02.1822	8.2 M	5% D8	(5)4.11.80	Vo. .83

IND	DATE	NAME
⑧	16.6.80	Vo
⑦	31.8.79	HF
⑥	9.2.79	B2
⑤	13.4.78	B1 HF
○	12.4.78	MS/gv

STUDER CODE REC. AMP. A 800-M 1.228.431-83 PAGE 2 of 4

POS NO	PART NO	VALUE	SPECIFICATIONS	EQUIVALENT	MFR
Q 01	50.03.0316	BC 140-16		NPN	
Q 02	50.03.0315	BC 160-16		PNP	
Q 03	50.03.0316	BC 140-16		NPN	
Q 04	50.03.0315	BC 160-16		PNP	
R 01	57.02.5101	100	10% .25W CMA		
R 02	57.02.5271	270			
R 03	57.11.4472	4.7 k			
R 04	57.11.4152	1.5 k			
R 05	57.02.5100	10			
R 06	57.02.5271	270			
R 07	57.11.4472	4.7 k			
R 08	57.11.4152	1.5 k			
R 09	57.02.5101	100			
R 10	57.02.5271	270			
R 11	57.11.4473	47 k			
R 12	57.11.4473	47 k			
R 13	57.02.5221	220			
R 14	57.02.5221	220			
R 15	57.02.5271	270			
R 16	57.11.4272	2.7 k			
R 17	57.11.4222	2.2 k			
R 18	57.02.5221	220			
R 19	57.02.5221	220			
R 20	57.02.5271	270			
R 21	57.11.4272	2.7 k			
R 22	57.11.4222	2.2 k			
R 23	58.01.7502	5 k	10% .5W PMG		
R 24	57.11.4104	100 k	10% .25W CMA		
R 25	57.11.4104	100 k			
R 26	57.11.4104	100 k			
R 27	57.11.4103	10 k			
R 28	57.11.4104	100 k			
R 29	57.03.5479	4,7	10% .5W CMA		
R 30	57.03.5479	4,7			
R 31	58.01.7501	500	10% .5W PMG		
R 32	57.02.5101	100	10% .25W CMA		
5) R 33	57.11.4273	27 k			
R 34	57.02.5391	390			
R 35	57.02.5100	10			
R 36	57.02.5479	4.7			
R 37	57.02.5102	1 k			
R 38	57.02.5479	4.7			
R 39	57.02.5471	470			
R 40	57.02.5471	470			
R 41	57.02.5100	10			
R 42	57.02.5100	10			
R 43	57.02.5101	100		(6) 10.6.81	Vo.
R 44	57.11.4224	220 k		(5) 4.11.80	Vo. .83

IND	DATE	NAME
⑧	16.6.80	Vo
⑦	31.8.79	HF
⑥	9.2.79	B2
⑤	13.4.78	B1 HF
○	12.4.78	MS/gv

STUDER CODE REC. AMP. A 80G-M 1.228.431-83 PAGE 3 of 4

POS NO	PART NO	VALUE	SPECIFICATIONS	EQUIVALENT	MFR
R 45	57.11.4103	10 k	1C% .25W CMA		
(2) R 46	57.11.4473	47 k			
R 47	57.11.4472	4.7 k			
R 48	57.02. 479	4.7			
R 49	57.02.5102	1 k			
R 50	57.02.5479	4.7			
R 51	57.02.5100	10			
R 52	57.02.5100	10			
R 53	57.02.5100	10			
R 54	57.02.5100	10			
R 55	57.11.4224	220 k			
7] R 56	57.11.4333	33 k			
R 57	57.11.4472	4.7 k			
R 58	57.11.4682	6.8 k			
R 59	57.11.4682	6.8 k			
(2) R 60	57.02.5102	1 k			
(2) R 61	57.02.5470	47			
S 01	54.01.0358	Leiste	3 * 32 Pol. LOET		
T 01	1.022.165		Eingangstrafo 1:1		
T 02	1.022.165		Eingangstrafo 1:1		
T 03	1.022.166		Ausgangstrafo 1:15		
T 04	1.022.167		Ausgangstrafo 1:8		
TP	29.21.6002		Lötöse		
XIC	53.03.0166	8 - Pol.		DIL	
XIC	53.03.0167	14 - Pol.		DIL	
XIC	53.03.0168	16 - Pol.		DIL	
				(7)10.2.82	Vo
				(6)10.6.81	Vo.
				(5) 4.11.80	Vo. .83

IND	DATE	NAME
⑧	16.6.80	Vo
⑦	31.8.79	HF
⑥	9.2.79	B2
⑤	13.4.78	B1 HF
○	12.4.78	MS/gv

STUDER CODE REC. AMP. A 80G-M 1.228.431-83 PAGE 4 of 4

CODE READ AMPLIFIER PCB 1.228.432–81 GR40 EL2

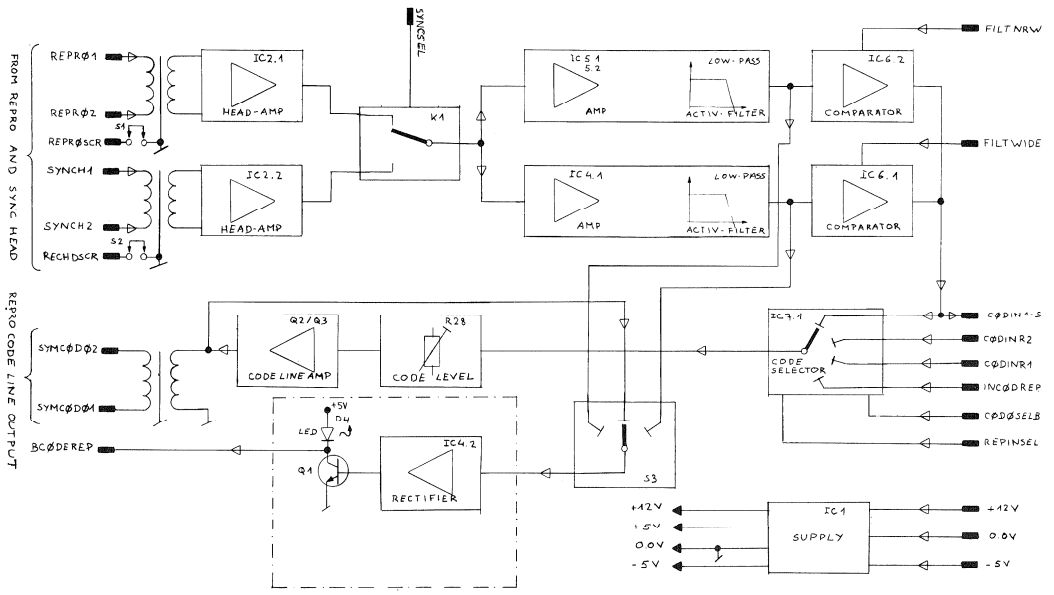

IND.	POS.NO.	PART NO.	VALUE	SPECIFICATIONS / EQUIVALENT	MANUF.
	C.....1	59.34.4680	68pF	63V 5% KER	
	C.....2	59.26.0470	47uF	6,3V 20% SAL	
	C.....3	59.02.5223	22nF	250V 5% MPC	
	C.....4	59.11.6222	2,2nF	400V 5% PC	
	C.....5	59.26.1471	470uF	6,3V -10% +50% El	
	C.....6			not used	
	C.....7	59.99.0205	68nF	100V -20% +80% KER	
	C.....8	59.99.0205	68nF	100V -20% +80% KER	
	C.....9	59.99.0205	68nF	100V -20% +80% KER	
	C....10	59.99.0205	68nF	100V -20% +80% KER	
	C....11	59.26.0470	47uF	6,3V 20% SAL	
	C....12	59.34.4680	68pF	63V 5% KER	
	C....13	59.34.4680	68pF	63V 5% KER	
	C....14	59.34.1120	12pF	63V 5% KER	
	C....15	59.11.3103	10nF	160V 5% PC	
	C....16	59.22.5101	100uF	25V -10% +50% El	
	C....17	59.32.4102	1nF	50V 20% KER	
	C....18	59.34.1150	15pF	63V 5% KER	
	C....19	59.22.5101	100uF	25V -10% +50% El	
	C....20	59.99.0205	68nF	100V -20% +80% KER	
	C....21	59.26.1220	22uF	10V 20% SAL	
	C....22	59.99.0205	68nF	100V -20% +80% KER	
	C....23	59.99.0205	68nF	100V -20% +80% KER	
	C....26	59.11.6102	1nF	400V 5% PC	
	C....25	59.11.6561	560pF	400V 5% PC	
	C....26	59.26.1479	4,7uF	10V 20% SAL	
	C....27	59.26.1220	22uF	10V 20% SAL	
	C....28	59.11.6681	680pF	400V 5% PC	
	C....29	59.22.5101	100uF	25V -10% +50% El	
	C....30	59.11.6332	3,3nF	400V 5% PC	
	C....31	59.99.0205	68nF	100V -20% +80% KER	
	C....32	59.31.0334	330nF	63V 20% MPE	
	C....33			not used	
	C....34	59.22.5470	47uF	25V -10% +50% El	
	C....35	59.99.0205	68nF	100V -20% +80% KER	
	C....36	59.22.5470	47uF	25V -10% +50% El	
	C....37	59.99.0205	68nF	100V -20% +80% KER	

IND.	POS.NO.	PART NO.	VALUE	SPECIFICATIONS / EQUIVALENT	MANUF.
	C....38	59.22.5101	100uF	25V -10% +50% El	
	C....39	59.22.5101	100uF	25V -10% +50% El	
	C....40	59.11.6332	3,3nF	400V 5% PC	
	C....41	59.22.5101	100uF	25V -10% +50% El	
	C....42	59.22.5101	100uF	25V -10% +50% El	
	C....43	59.99.0205	68nF	100V -20% +80% KER	
	D.....1	50.04.0105	1N4004	400V 1,1V @ 1A	
	D.....2	50.04.0125	1N4448	75V 1V @ 100mA	
	D.....3	50.04.0125	1N4448	75V 1V @ 100MA	
	D.....4	50.04.2107	555-2007	LED red 5V 3mA	
	D.....5	50.04.1106		Zener Diode 2,7V 5% 0,4W	
	IC....1	50.05.0221	MC 7805	LM 340T Voltage Regulator 5V	Mot,NS
	IC....2	50.09.0106	NE 5532AN	XR 5532AN Dual OP Amp Low Noise	Sig,Ex
	IC....3	50.05.0204	SN 75464	DS 6314N Dual NOR Driver O.C.	TI ,NS
	IC....4	50.09.0105	NE 5532N	XR 5532N Dual OP Amp	Sig,Ex
	IC....5	50.09.0105	NE 5532N	XR 5532N Dual OP Amp	Sig,Ex
	IC....6	50.05.0220	711DC	LM 711CN Dual Comparator	Fc ,NS
	IC....7	50.06.0153	SN 74LS153	Dual 4 to 1 Dataselector	TI ,Sig
	K.....1	56.04.0170	SM D1005	Contactor 5V 2*U	ITT
	L.....1	62.01.0115		Choke Coil wideband	Ph
	L.....2			not used	
	L.....3	62.01.0115		Choke Coil wideband	Ph
	L.....4	62.01.0115		Choke Coil wideband	Ph
	L.....5	62.01.0115		Choke Coil wideband	Ph
	L.....6	62.01.0115		Choke Coil wideband	Ph
	Q.....1	1.010.247.50	BC550B	BC109C NPN	ITT,Sie,Mot
	Q.....2	1.010.247.50	BC550B	BC109C NPN	ITT,Sie,Mot
	Q.....3	1.010.246.50	BC560B	BC179B PNP	ITT,Sie,Mot
	R.....1	57.11.4334	330 kOhm	5% 0,25W	
	R.....2	57.11.4105	1 MOhm	5% 0,25W	
	R.....3	57.11.4102	1 kOhm	5% 0,25W	

IND.	POS.NO.	PART NO.	VALUE	SPECIFICATIONS / EQUIVALENT	MANUF.
	R.....4	57.11.4151	150 Ohm	5% 0,25W	
	R.....5	57.11.4333	33 kOhm	5% 0,25W	
	R.....6	57.11.4334	330 kOhm	5% 0,25W	
	R.....7	57.11.4183	18 kOhm	5% 0,25W	
	R.....8	57.11.4102	1 kOhm	5% 0,25W	
	R.....9	57.11.4223	22 kOhm	5% 0,25W	
	R....10	57.11.4222	2,2 kOhm	5% 0,25W	
	R....11	57.11.4153	15 kOhm	5% 0,25W	
	R....12	57.11.4102	1 kOhm	5% 0,25W	
	R....13	57.11.4332	3,3 kOhm	5% 0,25W	
	R....14	57.11.4472	4,7 kOhm	5% 0,25W	
	R....15	57.11.4152	1,5 kOhm	2% 0,25W	
	R....16	57.11.4181	180 Ohm	2% 0,25W	
	R....17	57.11.4183	18 kOhm	2% 0,25W	
	R....18	57.11.4103	10 kOhm	2% 0,25W	
	R....19	57.11.4181	180 Ohm	2% 0,25W	
	R....20	57.11.4682	6,8 kOhm	5% 0,25W	
	R....21	57.11.3303	30 kOhm	5% 0,25W	
	R....22	57.11.4331	330 Ohm	5% 0,25W	
	R....23	57.11.4121	120 Ohm	5% 0,25W	
	R....24	57.11.4181	180 Ohm	5% 0,25W	
	R....25	57.11.4332	3,3 kOhm	5% 0,25W	
	R....26	57.11.4332	3,3 kOhm	5% 0,25W	
	R....27	57.11.4181	180 Ohm	5% 0,25W	
	R....28	58.01.7103	10 kOhm	Potentiometer	
	R....29	57.11.4562	5,6 kOhm	5% 0,25W	
	R....30	57.11.4561	560 Ohm	5% 0,25W	
	R....31	57.11.4220	22 Ohm	5% 0,25W	
	R....32	57.11.4689	6,8 Ohm	5% 0,25W	
	R....33	57.11.4470	47 Ohm	5% 0,25W	
	R....34	57.11.4470	47 Ohm	5% 0,25W	
	R....35	57.11.4472	4,7 kOhm	5% 0,25W	
	R....36	57.11.4472	4,7 kOhm	5% 0,25W	
	R....37	57.11.4472	4,7 kOhm	5% 0,25W	
	R....38	57.11.4392	3,9 kOhm	5% 0,25W	
	R....39	57.11.4153	15 kOhm	5% 0,25W	
	R....40	57.11.4123	12 kOhm	5% 0,25W	

IND.	POS.NO.	PART NO.	VALUE	SPECIFICATIONS / EQUIVALENT	MANUF.
	R....41	57.11.4102	1 kOhm	5% 0,25W	
	R....42	57.11.4332	3,3 kOhm	5% 0,25W	
	R....43	57.11.4122	1,2 kOHM	5% 0,25W	
	R....44	57.11.4829	8,2 Ohm	2% 0,25W	
	R....45	57.11.4472	4,7 kOhm	5% 0,25W	
	S.....1	54.01.0021	65474-001	Jumper	Ph
	S.....2	54.01.0021	65474-001	Jumper	Ph
	S.....3	55.01.0154	7215APDB	single Pole 3-Position Switch	C&K
	TR....1	1.022.410.00		Input Transformer 1:6	St
	TR....2	1.022.413.00		Input Transformer 1:1,3	St
	TR....3	1.022.408.00		Code Output Transformer 1:1	St

TA = Tantal, PC = Polycarb, MPC = metallized Polycarb, KER = Ceramic
El = Electrolytic, SAL = solid Aluminium, MPE = metallized Polyester

Manufacturer: Di=Dialco, Mot=Motorola, NS=National Semiconductors
Sig=Signetics, Ex=Exar, TI=Texas Instrument
Fc=Fairchild, Ph=Philips, Sie=Siemens, St=Studer

GRIG 80/10/03

CODE READ AMPLIFIER PCB 1.228.432–81 GR40 EL2

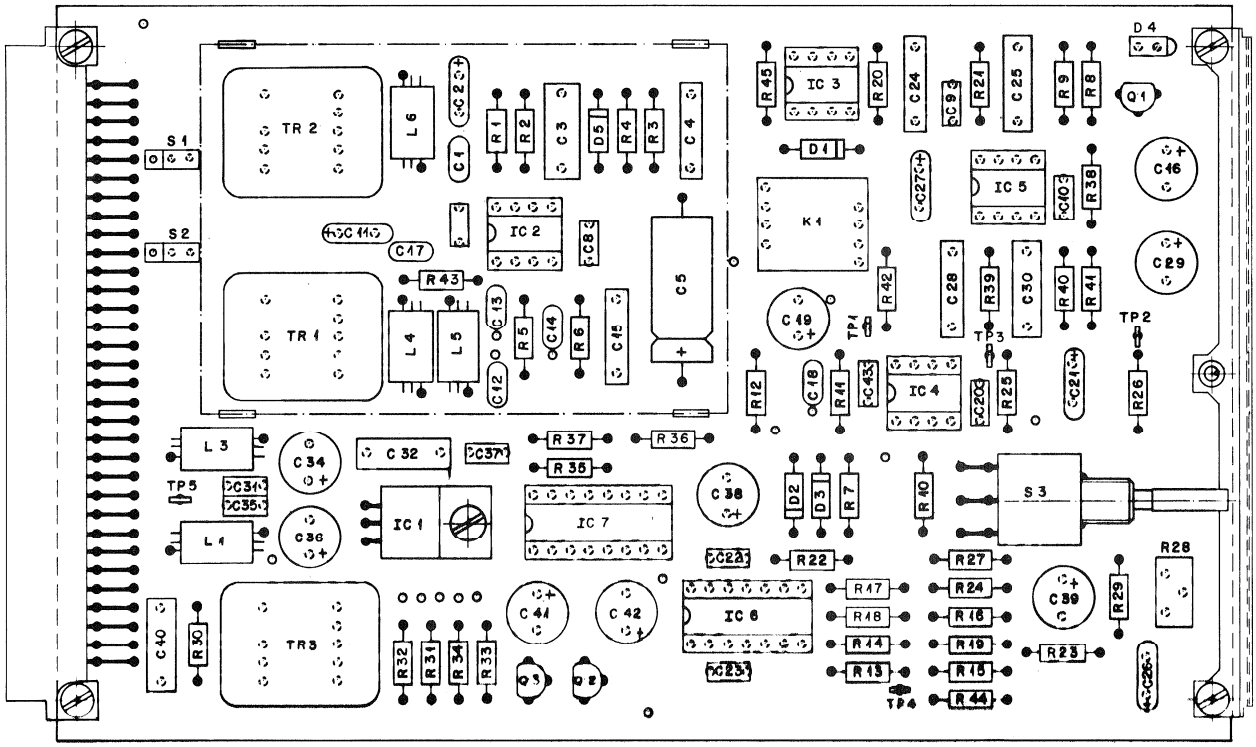

1.228.432 CODE LESE VERSTÄRKER

Die Signale vom Wiedergabe- und vom Aufnahmekopf werden symmetrisch den Kopfvorverstärkern zugeführt (IC2). Die Umschaltung von Wiedergabe auf Sync geschieht mittels eines Relais. TP1 zeigt das verstärkte Signal vor der Filterstufe. In der Position Filter wide beträgt die Bandbreite 200 kHz. Damit ist es möglich, auch während dem Umspulen Code zu lesen. Die Betriebsart Filter narrow ist hauptsächlich für die Wiedergabe vorgesehen und sorgt für eine gute Geräuschunterdrückung.
Der Ausgang Repro Code Line Out ist umschaltbar, der Pegel ist einstellbar mit R28. Signal auf dem Codekanal wird angezeigt durch die Level-LED. Ein Dreistufenschalter ermöglicht die Anzeige der folgenden 3 Betriebsarten:

a) Code am Ausgang
b) Code nach dem schmalen Filter
c) Code nach dem breiten Filter

Der Ausgang wird mit IC7 gewählt. Dieser Schaltkreis definiert, welcher Code am Ausgang Repro Code Line Out anliegt, d.h. das TLS kann zum Beispiel mit dem Code vom Sync-Verstärker arbeiten, während am Ausgang Repro Code Line Out das Codesignal vom Wiedergabekopf anliegt.

Wichtige Signale

Code Signal ab Wiedergabekopf	(AC)	REPRO 1/2
Code Signal ab Synckopf	(AC)	SYNCH 1/2
Repro Code Line Out Signal	(AC)	SYMCODO 1/2
Signal Codespur bespielt ja/nein	(DC)	B CODEREP
Code ab Wiedergabekanal	(DC)	REPROSEL
Code ab Synckopf	(DC)	SYNCHSEL
Filterwähler	(DC)	FILTNRW/FILTWIDE
Ausgang vom Code Leseverstärker zum TLS		CODIN 1 - S
Mastercode oder interner Generator Code von 1.228.431		INCODREP
Schaltsignale:		REPINSEL
Bsp. REPINSEL = Low, CODOSELB = High		CODOSELB
Code Signal CODIN 1 - S erscheint am Ausgang Y		

1.228.432 CODE READ AMPLIFIER

The signals from Repro and synch head are symmetrically fed into the head-preamplifiers (IC2). Repro or synch selection is done by a relais. TP1 shows the amplified signal before the filter stage. In Filter wide position the frequency response goes up to 200 kHz. This makes it possible to read code in wind-mode. Filter narrow position is mainly for play operation and enables a good noise suppression. The output at "repro code line out" can be selected, the level is adjustable with R28. Code is indicated by a red LED. A three-position switch enables indication of the following status:

a) Code at output normal position
b) Code at pos. filter narrow
c) Code at pos. filter wide

The output is selected by IC7. This circuit defines what kind of code "repro code line out" indicates. This means e.g. that the TLS can work with the code from the synch-amplifier and at the same time "code line out" reads from the repro-head.

Important signals

Code signal from repro head	(AC)
Code signal from synch head	(AC)
Repro code line out	(AC)
Signal for LED Code yes/no	(DC)
Select code repro channel	(DC)
Select code synch channel	(DC)
Filterselector	(DC)
Output form code read amplifier to TLS	
Mastercode or int. Gen. from 1.228.431	
Selectorsignals:	
e.g. REPINSEL = Low, CODOSELB = High	
then: Code Signal CODIN 1 - S appears at output Y	

CODE READ AMPLIFIER PCB 1.228.432–81 GR40 EL2

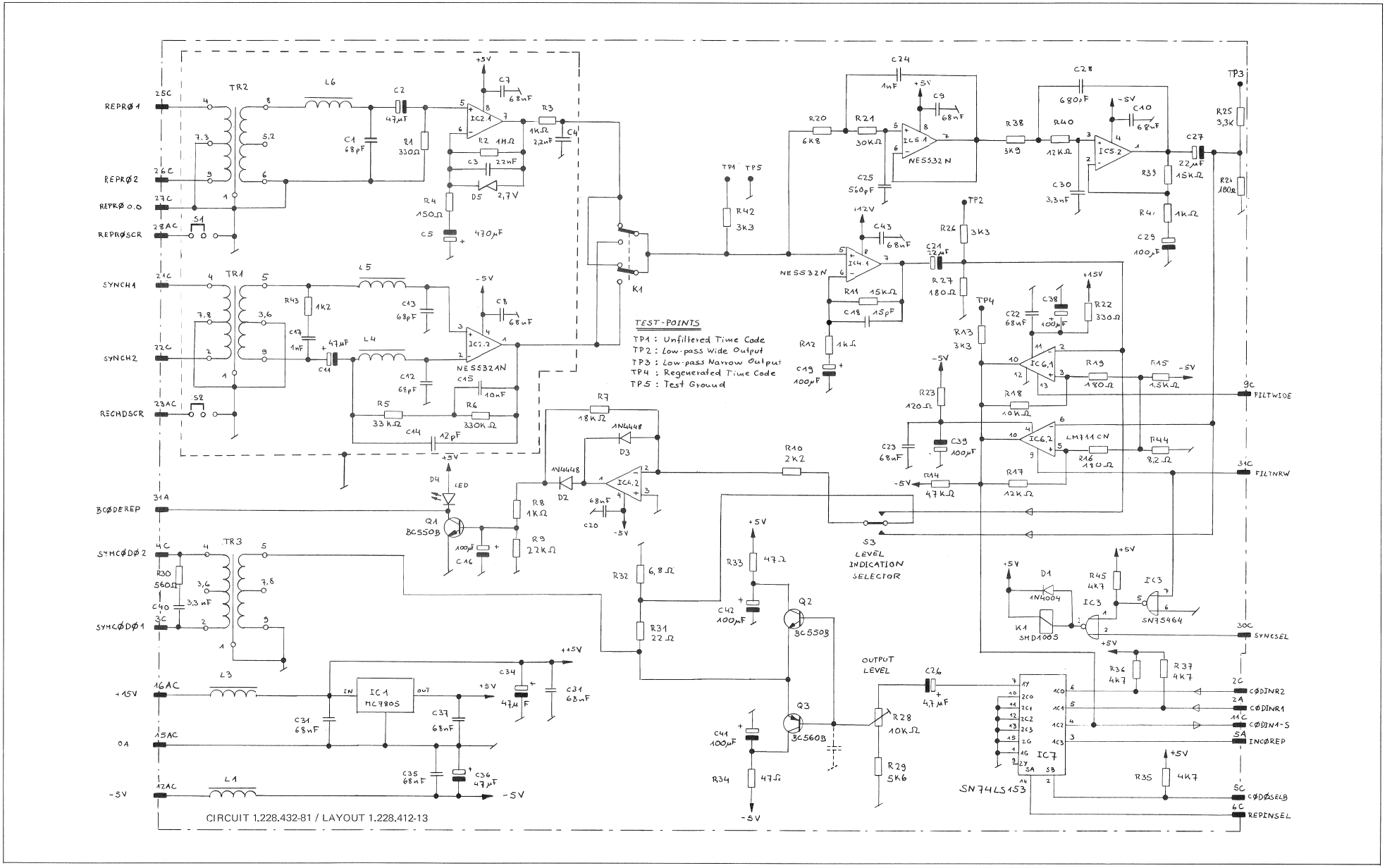

ADJUSTMENT OF CODE READ AMPLIFIER 1.228.432 AND CODE RECORD AMPLIFIER 1.228.431–82/83

Einstellung des Code Leseverstärkers 1.228.432 und des Code Aufnahmeverstärkers 1.228.431.82/83

Vorbereitungen

1.
Referenzband (200 nWb/m) auflegen und Maschine in Wiedergabe starten. Ausgangspegel auf TP2 oder TP3 des Code Leseverstärkers 1.228.432 messen. Die Voltmeteranzeige wird als Referenzpegel 0dB angenommen und sollte ca. 500mV$_{eff}$ betragen.

2.
Testband abnehmen und ein leeres Band auflegen.

Einstellung mit Hilfe des TLS 2000

1.
Jumperpositionen auf dem Print 1.228.488 External Frequency Control überprüfen:

Platz 12: Interner Generator = Master
Platz 11: Externer Generator = Master

Der Jumper muss auf Platz 12 gesteckt sein.

2.
Internen Codegenerator starten und GEN= MAST setzen.

3.
Codekanal in Aufnahme starten mit 38cm/s und auf Hinterbandkontrolle (Repro) schalten.

4.
Lampe NO MAST auf dem Main Programmer verlöscht.

5.
Mit dem Kondensator C26 auf dem Code Aufnahmeverstärker 1.228.431 die Leuchtintensität der Diode D9 aufs Minimum abstimmen (Löschpegel).

6.
Voltmeter an TP2 oder TP3 des Leseverstärkers 1.228.432 anschliessen und mit R31 auf dem Aufnahmeverstärker 1.228.431 den Pegel auf –10dB gegenüber dem Referenzpegel aus Punkt 1 der Vorbereitungen einstellen.

7.
Bias Potentiometer R23 auf dem Aufnahmeverstärker 1.228.431 an den linken Anschlag stellen und danach langsam im Uhrzeigersinn drehen, bis der Ausgangspegel das Maximum erreicht hat.

a) Wenn der Aufnahmeverstärker 1.228.431-82 eingesetzt ist, R23 zurückdrehen (Gegenuhrzeigersinn) bis der Pegel 0,5dB unter dem Maximum liegt (siehe Fig.

Adjustmen: of Code Read Amplifier 1.228.432 and Code Record Amplifier 1.228.431.82/83

Preparations

1.
A 200 nWb/m level reference tape is put on the machine, and the output level measured at TP2 or TP3 on code read amplifier 1.228.432. The voltmeter indication is defined as 0dB. (ca 500 mV$_{eff}$)

2.
Replace reference tape by an empty tape.

Adjustmen: with behalf of TLS 2000

1.
Check jumper positions on print 1.228.488:

Pos. 12: internal generator = master
Pos. 11: external generator = master

Make sure jumper is in position 12.

2.
Have internal generator of TLS run, and set generator = master.

3. Put code channel into record, 15 ips, Code channel in repro mode.

4.
Bulb "NO MASTER" on TLS must go off.

5.
Adjust capacitor C26 on code record amplifier 1.228.431 until Diode D9 shows minimal light (erase level).

6.
Measure TP2 or TP3 on 1.228.432 and adjust with R31 on 1.228.431 to –10dB level (reference para. 1).

7.
Turn bias potentiometer R23 on 1.228.431 slowly clockwise, until the level reaches its maximum.

a) Return to –0,5dB if Record Amp. 1.228.431.82 is inserted

b) Wenn der Aufnahmeverstärker 1.228.431-83 eingesetzt ist, R23 weiterdrehen (Uhrzeigersinn) bis der Pegel 0,5dB unter dem Maximum liegt (siehe Fig.

Bias-Einstellung:

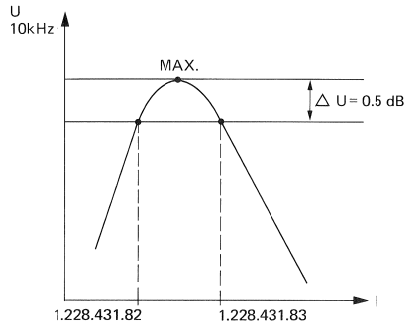

8.
R31 nachstellen bis der Pegel wieder –10dB gegenüber der Referenz aus Punkt 1 der Vorbereitungen beträgt.

9.
Ausgang REPRO CODE LINE OUT mit R59 auf dem Leseverstärker 1.228.432.00 resp. R28 auf dem Leseverstärker 1.228.432.81 auf 1V$_{pp}$ (ca. 500mV$_{eff}$) einstellen.

10.
Die Diode D4 auf dem Leseverstärker 1.228.432 zeigt an, dass der Verstärker Code liest.

11.
Der Schalter S3 hat folgende Bedeutung:

obere Stellung: D4 zeigt Code nach dem Breitbandfilter
mittlere Stellung: D4 zegt Code am Ausgang
untere Stellung: D4 zeigt Code nach dem Schmalbandfilter

b) Overbias by +0,5dE if Record Amp. 1.228.431.83 is inserted

Bias Adjustment:

8.
Readjus: R31 to –10dB.

9.
Adjust output "Repro Code Line Out" with R59 on 1.228.432.00 resp. R28 on Read amplifier 1.228.432.81 to 1V$_{pp}$ (approx. 500mV$_{eff}$)

10.
Diode D4 on 1.228.432 indicates whether the amplifier reads Code or not.

11.
Switch S3:

Upper position: D4 indicates code after (wide) band filter
Normal position: D4 indicates code at output
Lower position: D4 indicates code after (narrow) band filter

Einstellung mit Hilfe eines Sinusgenerators oder eines externen Codegenerators

1.
Generator an der Buchse MASTER CODE LINE IN anschliessen. Frequenz auf 4kHz und Pegel auf 1V$_{pp}$ einstellen.

2.
Voltmeter an TP2 oder TP3 des Leseverstärkers 1.228.432 anschliessen.

3.
Codekanal in Aufnahme starten mit 38cm/s und auf Hinterbandkontrolle (Repro) schalten.

4.
Die Leuchtintensität der Diode D9 auf dem Aufnahmeverstärker 1.228.431 mit Hilfe des Kondensators C26 aufs Minimum abgleichen.

5.
Voltmeter ablesen und mit R31 auf dem Aufnahmeverstärker 1.228.431 den Pegel auf –10dB gegenüber der Referenz aus Punkt 1 der Vorbereitungen stellen.

6.
Bias Potentiometer R23 auf dem Aufnahmeverstärker 1.228.431 an den linken Anschlag stellen und danach langsam im Uhrzeigersinn drehen, bis der Ausgangspegel das Maximum erreicht hat.

a) Wenn der Aufnahmeverstärker 1.228.431-82 eingesetzt ist, R23 zurückdrehen (Gegenuhrzeigersinn) bis der Pegel 0,5dB unter dem Maximum liegt (siehe Fig.

b) Wenn der Aufnahmeverstärker 1.228.431-83 eingesetzt ist, R23 weiterdrehen (Uhrzeigersinn) bis der Pegel 0,5dB unter dem Maximum liegt (siehe Fig.

7.
Ausgang REPRO CODE LINE OUT mit R59 auf dem Leseverstärker 1.228.432.00 resp R28 auf dem Leseverstärker 1.228.432.81 auf 1V$_{pp}$ (ca. 500mV$_{eff}$) einstellen.

Adjustment with behalf of a sine wave generator or an external time code generator

1.
Connect generator to the socket master "code line in". Adjust for a frequency of 4kHz and a level of 1V$_{pp}$.

2.
Connect voltmeter to TP2 or TP3 on code read amplifier 1.228.432.

3.
Put code channel into Record, Repro, 15 ips.

4.
Adjust capacitor C26 on code record amplifier unti Diode D9 shows minimal light.

5.
Measure TP2 or TP3 on code record amplifier 1.228.432 and adjust with R31 on 1.228.431 to –10dB level (reference paragraph 1).

6.
Turr Bias Potentiometer R23 on 1.228.431 slowly clockwise, until the level reaches its maximum:

a) Return to –0,5dB under maximum level if Record Amp. 1.228.431.82 is inserted. (see figure

b) Overbias to –0,5dE under maximum level if Record Amp. 1.228.431.83 is inserted. (see figure

7.
Adjust output "Repro code line out" with R28 (on code read amplifier 1.228.431.81) resp. R59 on code read amplifier 1.228.432.00 to 1V$_{pp}$. (approx. 500mV$_{eff}$)

CODE READ AMPLIFIER PCB 1.228.432–00 GR40 EL2

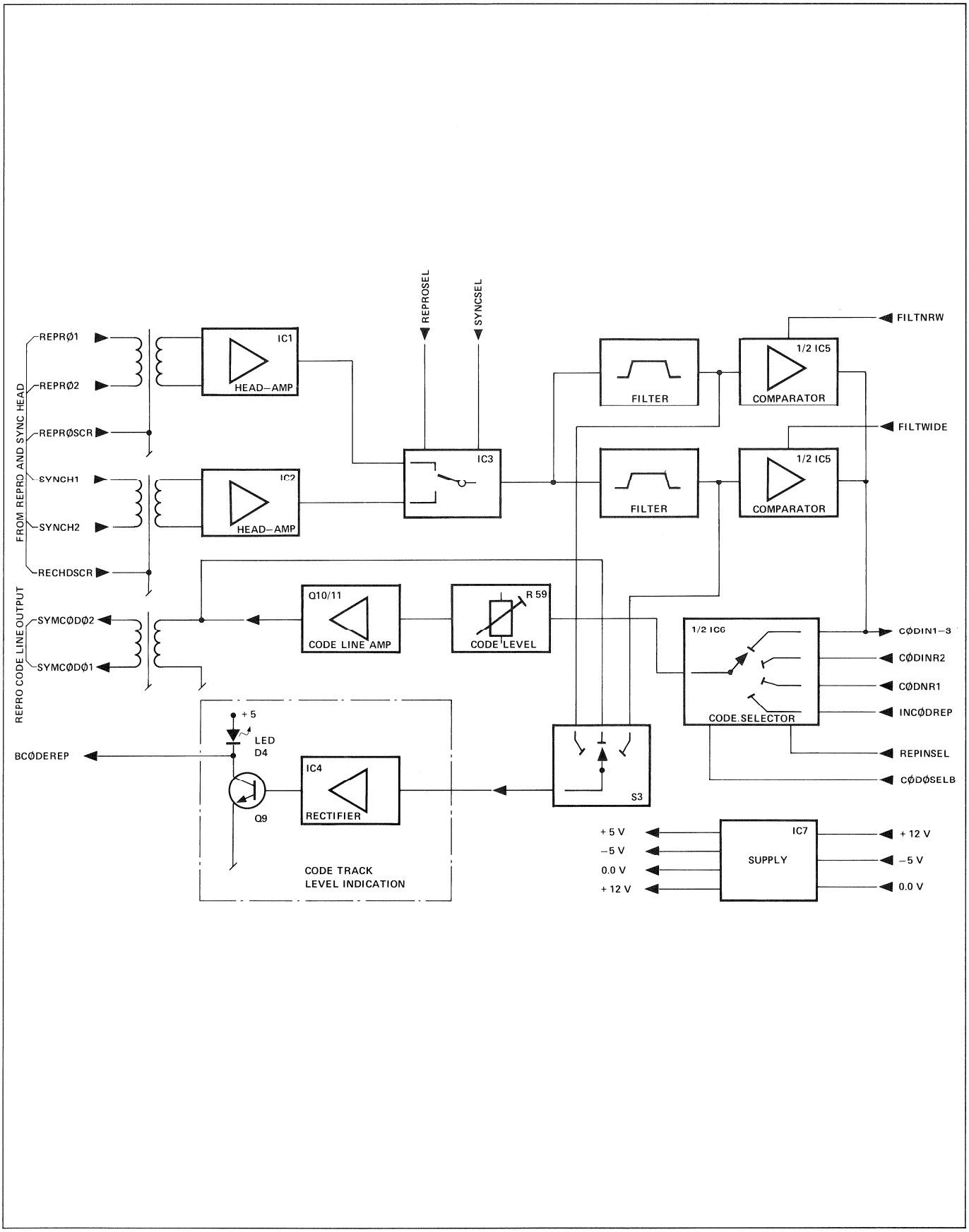

CODE READ AMPLIFIER PCB 1.228.432–00 GR40 EL2

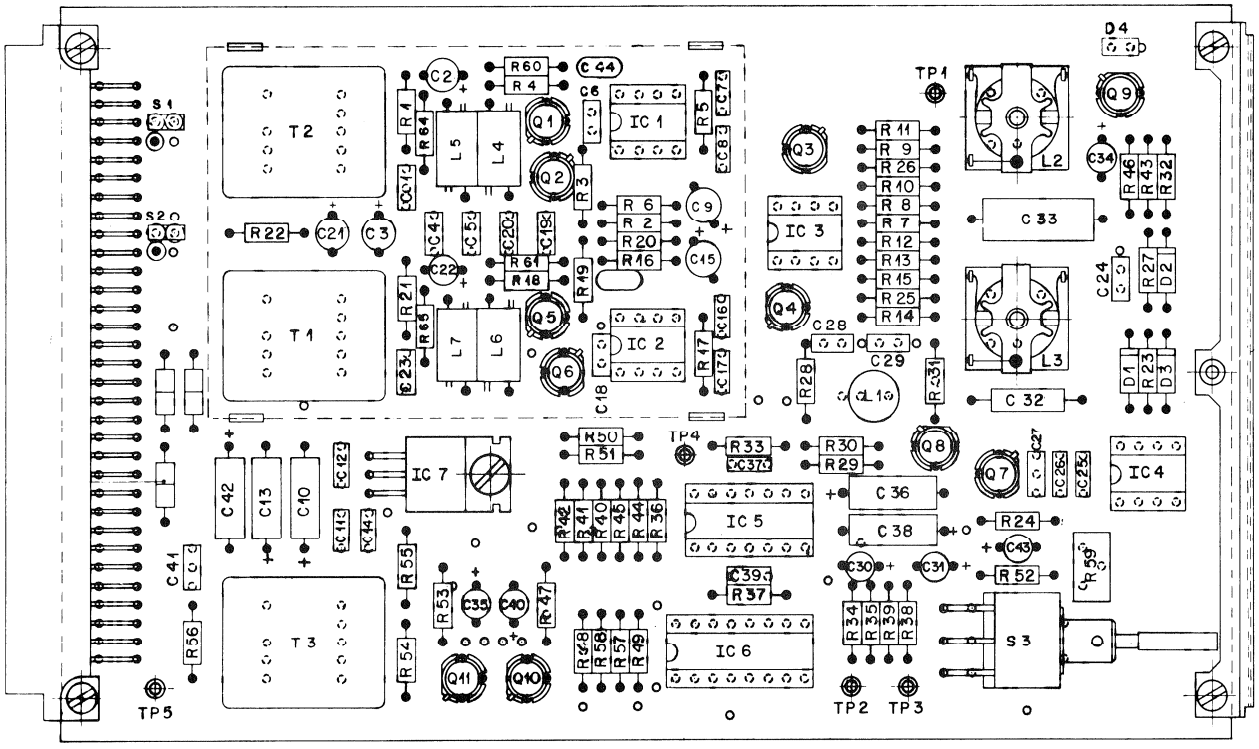

1.228.432 CODE LESE VERSTÄRKER

Die Signale vom Wiedergabe- und vom Aufnahmekopf werden symmetrisch den Kopfvorverstärkern zugeführt (IC1 und IC2). Die Umschaltung von Wiedergabe auf Sync geschieht mittels FET Schaltern. TP1 zeigt das verstärkte Signal vor der Filterstufe. In der Position Filter wide beträgt die Bandbreite 200 kHz. Damit ist es möglich, auch während dem Umspulen Code zu lesen. Die Betriebsart Filter narrow ist hauptsächlich für die Wiedergabe vorgesehen und sorgt für eine gute Geräuschunterdrückung.
Der Ausgang Repro Code Line Out ist umschaltbar, der Pegel ist einstellbar mit R59. Signal auf dem Codekanal wird angezeigt durch die Level-LED. Ein Dreistufenschalter ermöglicht die Anzeige der folgenden 3 Betriebsarten:

a) Code am Ausgang
b) Code nach dem schmalen Filter
c) Code nach dem breiten Filter

Der Ausgang wird mit IC6 gewählt. Dieser Schaltkreis definiert, welcher Code am Ausgang Repro Code Line Out anliegt, d.h. das TLS kann zum Beispiel mit dem Code vom Sync-Verstärker arbeiten, während am Ausgang Repro Code Line Out das Codesignal vom Wiedergabekopf anliegt.

Wichtige Signale

Code Signal ab Wiedergabekopf	(AC)
Code Signal ab Synckopf	(AC)
Repro Code Line Out Signal	(AC)
Signal Codespur bespielt ja/nein	(DC)
Code ab Wiedergabekanal	(DC)
Code ab Synckopf	(DC)
Filterwähler	(DC)

Ausgang vom Code Leseverstärker zum TLS
Mastercode oder interner Generator Code von 1.228.431
Schaltsignale:
Bsp. REPINSEL = Low, CODOSELB = High
Code Signal CODIN 1 - S erscheint am Ausgang Y

REPRO	1/2
SYNCH	1/2
SYMCODO	1/2
B CODEREP	
REPROSEL	
SYNCHSEL	
FILTNRW/FILTWIDE	
CODIN 1 - S	
INCODREP	
REPINSEL	
CODOSELB	

1.228.432 CODE READ AMPLIFIER

The signals from Repro and synch head are symmetrically fed into the head-preamplifiers (IC1 and IC2). Repro or synch selection is done by Fet switches. TP1 shows the amplified signal before the filter stage. In Filter wide position the frequency response goes up to 200 kHz. This makes it possible to read code in wind-mode. Filter narrow position is mainly for play operation and enables a good noise suppression. The output at "repro code line out" can be selected, the level is adjustable with R59. Code is indicated by a red LED. A three-position switch enables indication of the following status:

a) Code at output normal position
b) Code at pos. filter narrow
c) Code at pos. filter wide

The output is selected by IC6. This circuit defines what kind of code "repro code line out" indicates. This means e.g. that the TLS can work with the code from the synch-amplifier and at the same time "code line out" reads from the repro-head.

Important signals

Code signal from repro head	(AC)
Code signal from synch head	(AC)
Repro code line out	(AC)
Signal for LED Code yes/no	(DC)
Select code repro channel	(DC)
Select code synch channel	(DC)
Filterselector	(DC)

Output form code read amplifier to TLS
Mastercode or int. Gen. from 1.228.431
Selectorsignals:
e.g. REPINSEL = Low, CODOSELB = High
then: Code Signal CODIN 1 - S appears at output Y

CODE READ AMPLIFIER PCB 1.228.432–00 GP40 EL2

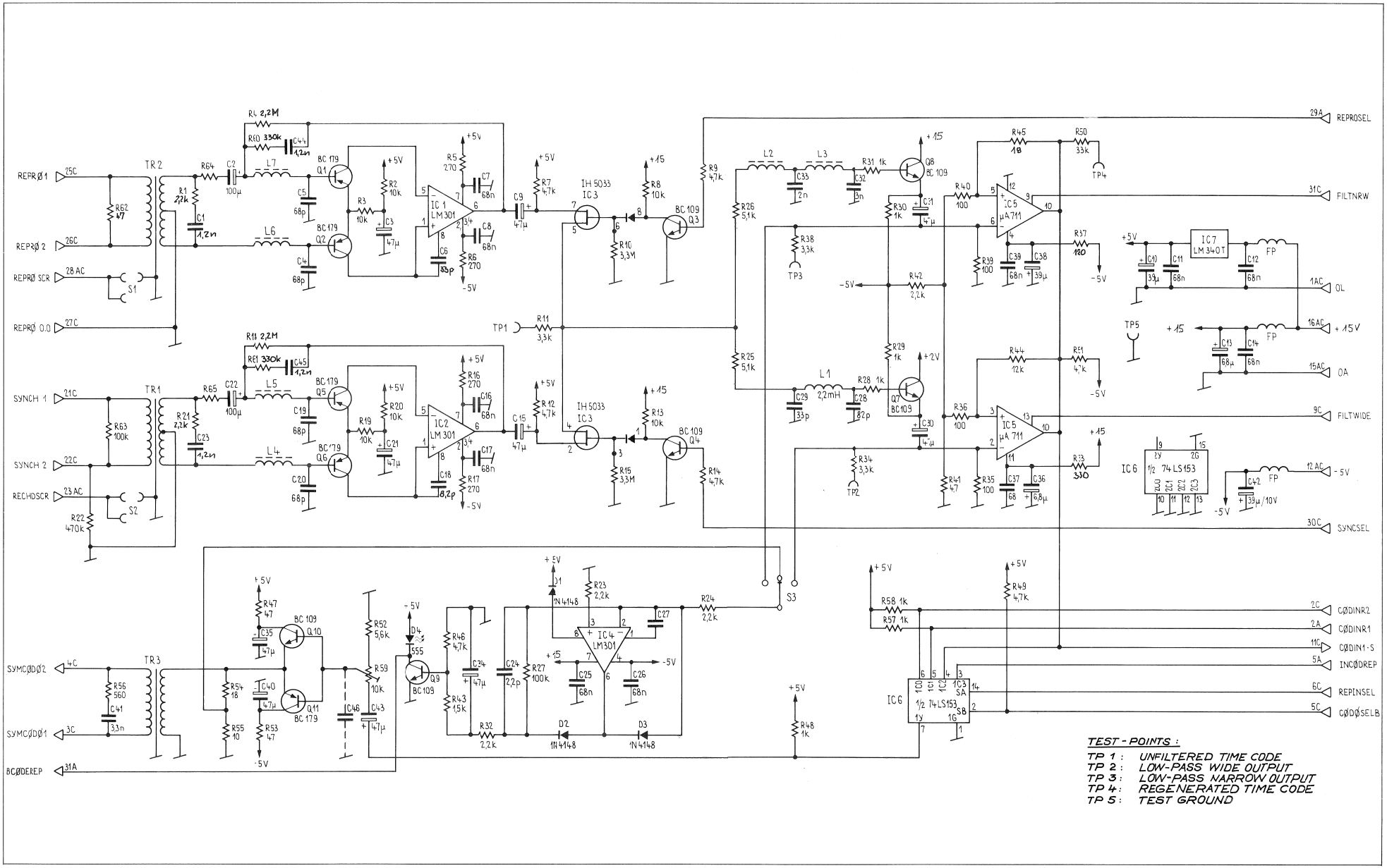

CODE READ AMPLIFIER PCB 1.228.432–00 GR40 EL2

	POS NO	PART NO	VALUE	SPECIFICATIONS	EQUIVALENT	MFR
	C C1	59.32.1122	1,2 N	20% 50V	KER	
	C C2	59.30.4101	100 U	10% 16V	TA	
	C C3	59.30.4470	47 U			
	C C4	59.99.0205	68 N	63V	KER	
	C C5	59.99.0205	68 N			
	C C6	59.34.2330	33 P	±5% 50V		
	C C7	59.99.0205	68 N	63V		
	C C8	59.99.0205	68 N			
	C C9	59.30.4470	47 U	16V	TA	
	C 10	59.99.0202	39 U	20% 10V		
	C 11	59.99.0205	68 N	63V	KER	
	C 12	59.99.0205	68 N			
	C 13	59.99.0201	6,8 U	20% 35V	TA	
	C 14	59.99.0205	68 N	63V	KER	
	C 15	59.30.4470	47 U	16V	TA	
	C 16	59.99.0205	68 N	63V	KER	
	C 17	59.99.0205	68 N			
(2)	C 18	59.34.1829	8,2 P	.5P NP 0		
	C 19	59.99.0205	68 N	63V		
	C 20	59.99.0205	68 N			
	C 21	59.30.4470	47 U	16V	TA	
	C 22	59.30.4101	100 U			
	C 23	59.32.1122	1,2 N	20% 50V	KER	
	C 24	59.34.0229	2,2 P	±5%		
	C 25	59.99.0205	68 N	63V		
	C 26	59.99.0205	68 N			
	C 27	59.34.4151	150 P	±5% 50V		
	C 28	59.34.4820	82 P			
	C 29	59.34.2330	33 P			
	C 30	59.30.4470	47 N	16V	TA	
	C 31	59.30.4470	47 N			
	C 32	59.12.7302	3 N	1% 63V	PS	
	C 33	59.12.7202	2 N			
	C 34	59.30.4470	47 U	16V	TA	
	C 35	59.30.4470	47 U			
	C 36	59.99.0201	6,8 U	20% 35V	TA	
	C 37	59.99.0205	68 N	63V	KER	
	C 38	59.99.0202	39 U	20% 10V	TA	
	C 39	59.99.0205	68 N	63V	KER	
	C 40	59.30.4470	47 U	16V	TA	
	C 41	59.32.2332	3,3 N	20% 50V	KER	
	C 42	59.99.0202	39 U	20% 10V	TA	
	C 43	59.30.4470	47 U	16V	TA	
	C 44	59.32.1122	1,2 N	50V	KER	
	C 45	59.32.1122	1,2 N			
	D C1	50.04.0125	1N4448		Si	
	D C2	50.04.0125	1N4448			
	D C3	50.04.0125	1N4448			
	D C4	50.04.2107	555-2007	LED, rot		

IND	DATE	NAME
	26.6.80 14.12.78 23.6.78	MS/gv

STUDER Code Read Amplifier A800 1.228.432 PAGE 1 of 4

	POS NO	PART NO	VALUE	SPECIFICATIONS	EQUIVALENT	MFR
	R 20	57.02.5103	10 k	10% .25W	CMA	
	R 21	57.02.5222	2,2 k			
	R 22			nicht Bestückt		
	R 23	57.02.5222	2,2 k			
	R 24	57.02.5222	2,2 k			
	R 25	57.39.5111	5,1 k	1% .25W	MF	
	R 26	57.39.5111	5,1 k			
	R 27	57.02.5104	100 k	10% .25W	CMA	
	R 28	57.02.5102	1 k			
	R 29	57.02.5102	1 k			
	R 30	57.02.5102	1 k			
	R 31	57.02.5102	1 k			
	R 32	57.02.5222	2,2 k			
	R 33	57.02.5331	330			
	R 34	57.02.5332	3,3 k			
	R 35	57.02.4101	100 E	5%		
	R 36	57.02.4101	100 E			
	R 37	57.02.5121	120	10%		
	R 38	57.02.5332	3,3 k			
	R 39	57.02.4101	100 E	5%		
	R 40	57.02.4101	100 E			
	R 41	57.02.4479	4,7 E			
	R 42	57.02.4222	2,2 k			
	R 43	57.02.5152	1,5 k	10%		
	R 44	57.02.4123	12 k	5%		
	R 45	57.02.4183	18 k			
	R 46	57.02.5472	4,7 k	10%		
	R 47	57.02.5470	47 E			
	R 48	57.02.5102	1 k			
	R 49	57.02.5472	4,7 k			
	R 50	57.02.5332	3,3 k			
	R 51	57.02.5472	4,7 k			
	R 52	57.02.5562	5,6 k			
	R 53	57.02.5470	47 E			
	R 54	57.02.5180	18 E			
	R 55	57.02.5100	10 E			
	R 56	57.02.5561	560			
	R 57	57.02.5102	1 k			
	R 58	57.02.5102	1 k			
	R 59	58.01.7.03	10 k	Trimmer		
	R 60	57.02.5334	330 k	10% .25W	CMA	
	R 61	57.02.5334	330 k			
	R 62	57.02.5470	47 E			
	R 64	57.02.4.01	100 E	5%		
	R 65	57.02.4.01	100 E	5%		
	S 01	54.01.0020	1 + 2	Kontaktstift		
	S 02	54.01.0021	1 + 2	Brückenstecker		
	S 03	55.01.0.54	3	Kippschalter		
	TP1-5	54.01.0471		Test - Punkt		

IND	DATE	NAME
	26.6.80 14.11.78 23.6.78	MS/gv

STUDER Code Read Amplifier A800 1.228.432 PAGE 3 of 4

	POS NO	PART NO	VALUE	SPECIFICATIONS	EQUIVALENT	MFR
	FP1-6	61.99.0124	3,5x3	Ferritperle		
	IC 1	50.05.0144	LM301AN	8P	DIP	
	IC 2	50.05.0144	LM301AN	8P	DIP	
	IC 3	50.05.0222	IH5033C	Dualswitch	LIN	
	IC 4	50.05.0144	LM301AN	8P	DIP	
	IC 5	50.05.0220	711 DC	Dual Comp.	LIN	
	IC 6	50.06.0153	SN74LS153N		TTL	
	IC 7	50.05.0221	MC7805C		LIN	
	L 01	62.02.1222	2,2 M	5% DB		
(1)	L 02	1.022.193.00	19,3 M	3% 100	SCHKE	
(1)	L 03	1.022.194.00	80 M			
	L 04	62.01.0115		Breitbanddrossel		
	L 05	62.01.0115		Breitbanddrossel		
	L 06	62.01.0115		Breitbanddrossel		
	L 07	62.01.0115		Breitbanddrossel		
	Q 01	50.03.0305	BC179B			
	Q 02	50.03.0305	BC179B			
	Q 03	50.03.0407	BC109C			
	Q 04	50.03.0407	BC109C			
	Q 05	50.03.0305	BC179B			
	Q 06	50.03.0305	BC179B			
	Q 07	50.03.0407	BC109C			
	Q 08	50.03.0407	BC109C			
	Q 09	50.03.0407	BC109C			
	Q 10	50.03.0407	BC109C			
	Q 11	50.03.0305	BC179B			
	R 01	57.02.5222	2,2 k	10% .25W	CMA	
	R 02	57.02.5103	10 k			
	R 03	57.02.5103	10 k			
	R 04	57.02.5225	2,2 M			
	R 05	57.02.5271	270			
	R 06	57.02.5271	270			
	R 07	57.02.5472	4,7 k			
	R 08	57.02.5103	10 k			
	R 09	57.02.5472	4,7 k			
	R 10			nicht Bestückt		
	R 11	57.02.5332	3,3 k			
	R 12	57.02.5472	4,7 k			
	R 13	57.02.5103	10 k			
	R 14	57.02.5472	4,7 k			
	R 15			nicht Bestückt		
	R 16	57.02.5271	270			
	R 17	57.02.5271	270			
	R 18	57.02.5225	2,2 M			
	R 19	57.02.5103	10 k			

IND	DATE	NAME
	26.6.80 14.12.78 23.6.78	MS/gv

STUDER Code Read Amplifier A800 1.228.432 PAGE 2 of 4

POS NO	PART NO	VALUE	SPECIFICATIONS	EQUIVALENT	MFR
TR 1	1.022.410.00	1 : 6	Eingangstrafo		
TR 2	1.022.413.00	1 : 1,3	Eingangstrafo		
TR 3	1.022.408.00	1 : 1	Ausgangstrafo		
XIC	53.03.0166	8-Pol.		DIP	
XIC	53.03.0167	14-Pol.		DIP	
XIC	53.03.0168	16-Pol.		DIP	
XQ	50.03.9921		Unterlage		

IND	DATE	NAME
	26.6.80 14.12.78 23.6.78	MS/gv

STUDER Code Read Amplifier A800 1.228.432 PAGE 4 of 4

TLS TRANSMITTER / RECEIVER PCB 1.228.433–81/00 GR40 EL3

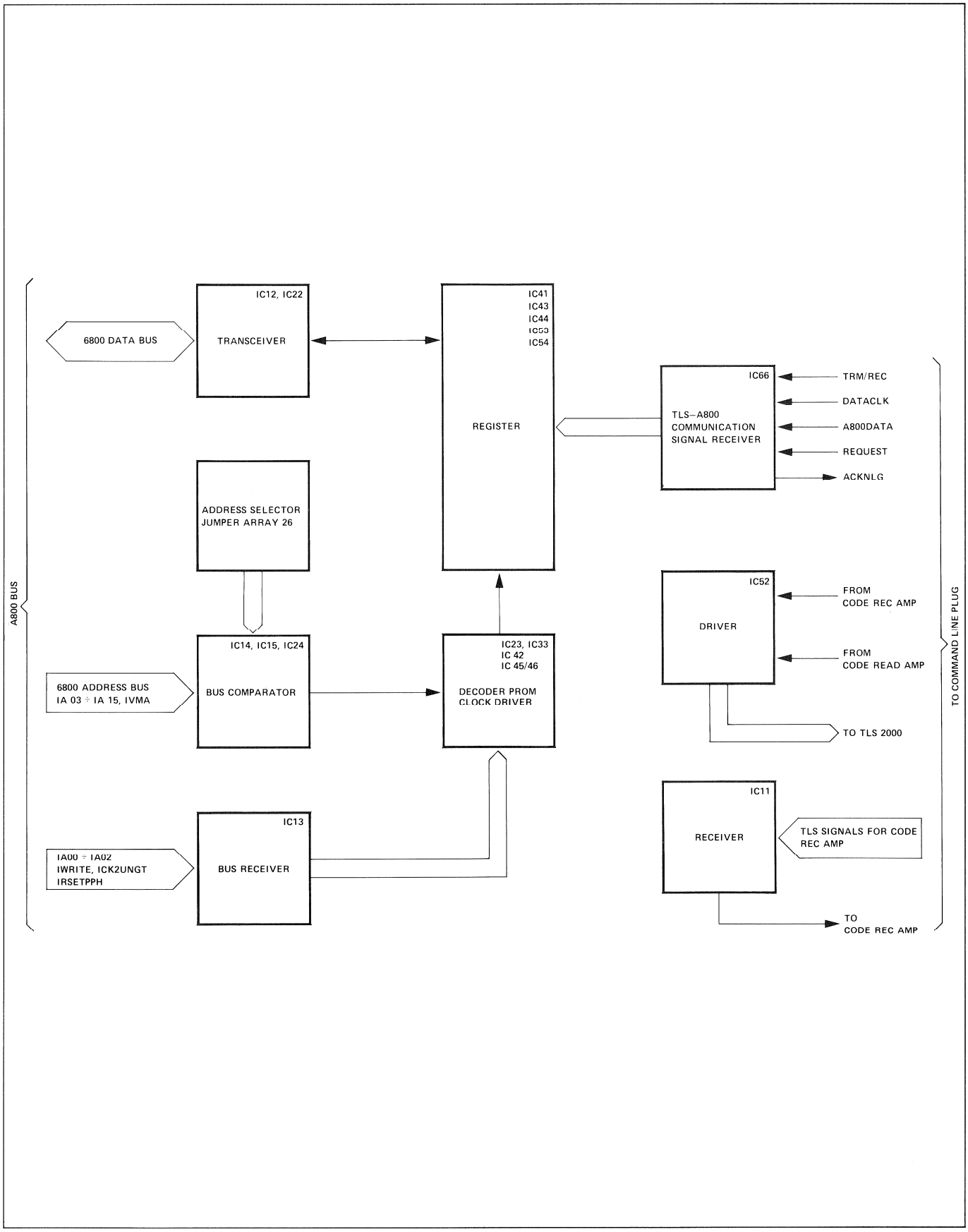

TLS TRANSMITTER / RECEIVER PCB 1.228.433–81/00 GR40 EL3

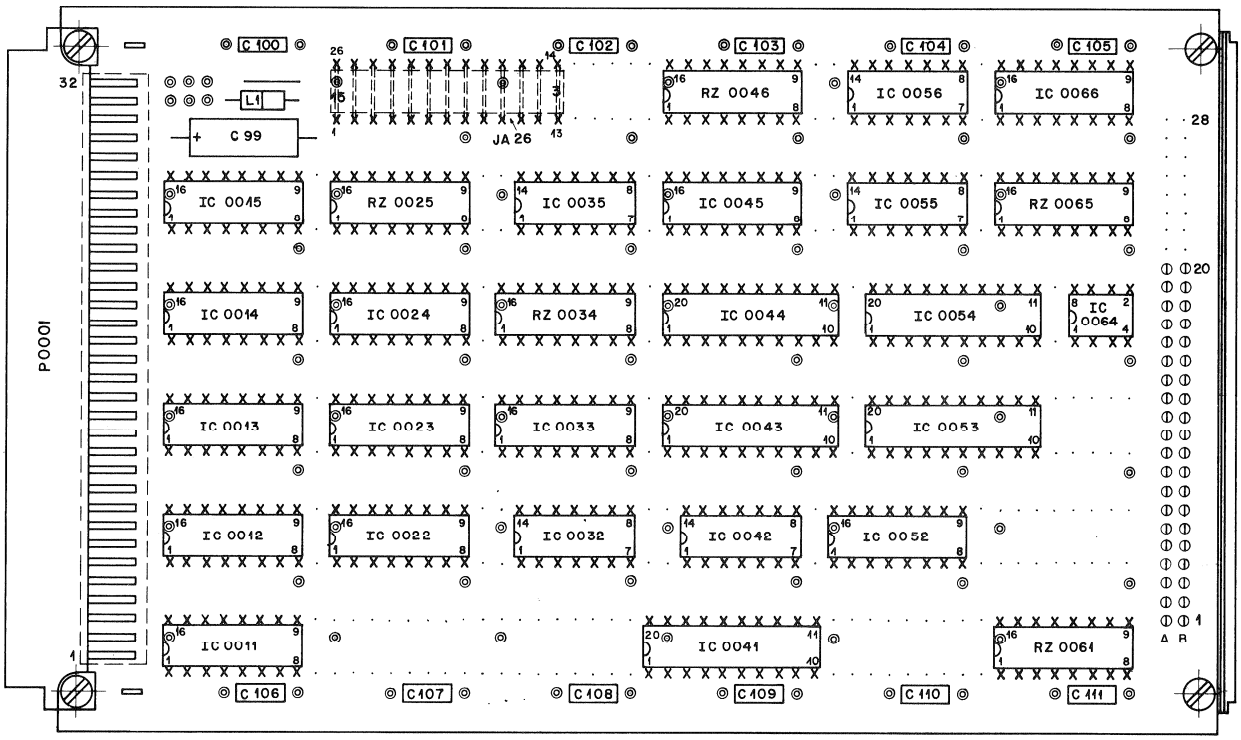

1.228.433.TLS SENDER/EMPFÄNGER

Der Sender/Empfänger ist mit dem TLS über das Command Line Kabel verbunden. Alle Befehle vom TLS kommen seriell (A800 Daten) und werden in Schieberegister eingelesen. Die Taktpulse für die Schieberegister werden entweder vom TLS oder von der A800 geliefert, je nachdem welchen Zustand die Signale ACKNLG/REQUEST aufweist.
Der Datenaustausch kann in beiden Richtungen erfolgen, abhängig vom Signal TRM/REC. Dieses Signal wird gesetzt, wenn Daten zur Übermittlung bereitstehen, sei das nun beim TLS oder bei der A800. Die Adressen auf dem Adress-Bus der A800 werden mit einer Referenz verglichen, sobald die Einschwingvorgänge abgeklungen sind (Signal VMA). Nur wenn die Adresse mit der Referenz übereinstimmt, wird die Übertragung aktiviert. Das Ablaufprogramm für die gesamte Datenübertragung ist in den beiden ROMs RO148/RO149 gespeichert.

1.228.433 TLS TRANSMITTER/RECEIVER

The transmitter/receiver board is connected with the TLS by the command line. All the TLS commands arrive serially (A800 data) and are clocked into shift registers. The clock pulses for the shift registers are produced either from the TLS or from A800 depending on the status of the signals ACKNLG/REQUEST.
The data transfer can be executed in both directions depending on the signal TRM/REC. This signal is set when data from TLS or from A800 are ready to be transferred. The addresses appearing on the address-bus A800 are compared with the reference as soon as steady state is signalized (VMA). Only if the address corresponds with the reference, the circuit is activated. The procedure for the whole data transfer is stored in the two memories RO149/RO148.

Funktion	Signalname Signal name A800	TLS	Function
Ausgang vom Codeleseverstärker	CODIN 1 - S	ZCODIN 1 - S	Output from code read amplifier
Ausgang des externen Generators	EXGENOUT	ZEXGENO	Output external generator
Mastercode vom Codeaufnahmeverstärker	INCODREP	ZINCODRP	Mastercode from code rec. amplifier
Ausgang des internen Codegenerators	CODGENO	ZCODGENO	Int. Generator
Logisch 0 wenn int. Generator = Master	CODINSEL	ZCODINSL	Low when int. generator = master
Kontrolle, ob das TLS aktiv ist	A800 SUPV	A800 SUPV	Check if TLS active
Definiert die Richtung der Datenübertragung	TRM/REC	TRM/REC	Defines direction of data transfer
Serielle Datenübermittlung	A800 DATA	A800 DATA	Serial data transfer
Clockfrequenz für die Datenübertragung	DATACLK	DATACLK	Clock frequency for data transmission
Daten bereit für die Übertragung A800 - TLS	ACKNLG	ACKNLG	Data ready A800 - TLS
Daten bereit für die Übertragung TLS - A800	REQUEST	REQUEST	Data ready TLS - A800
Überwachung des Command Line Kabels A800 - TLS	PROCSUV	PROCSUV	Check comm. line A800 - TLS

TLS TRANSMITTER / RECEIVER PCB 1.228.433–81/00 GR40 EL3

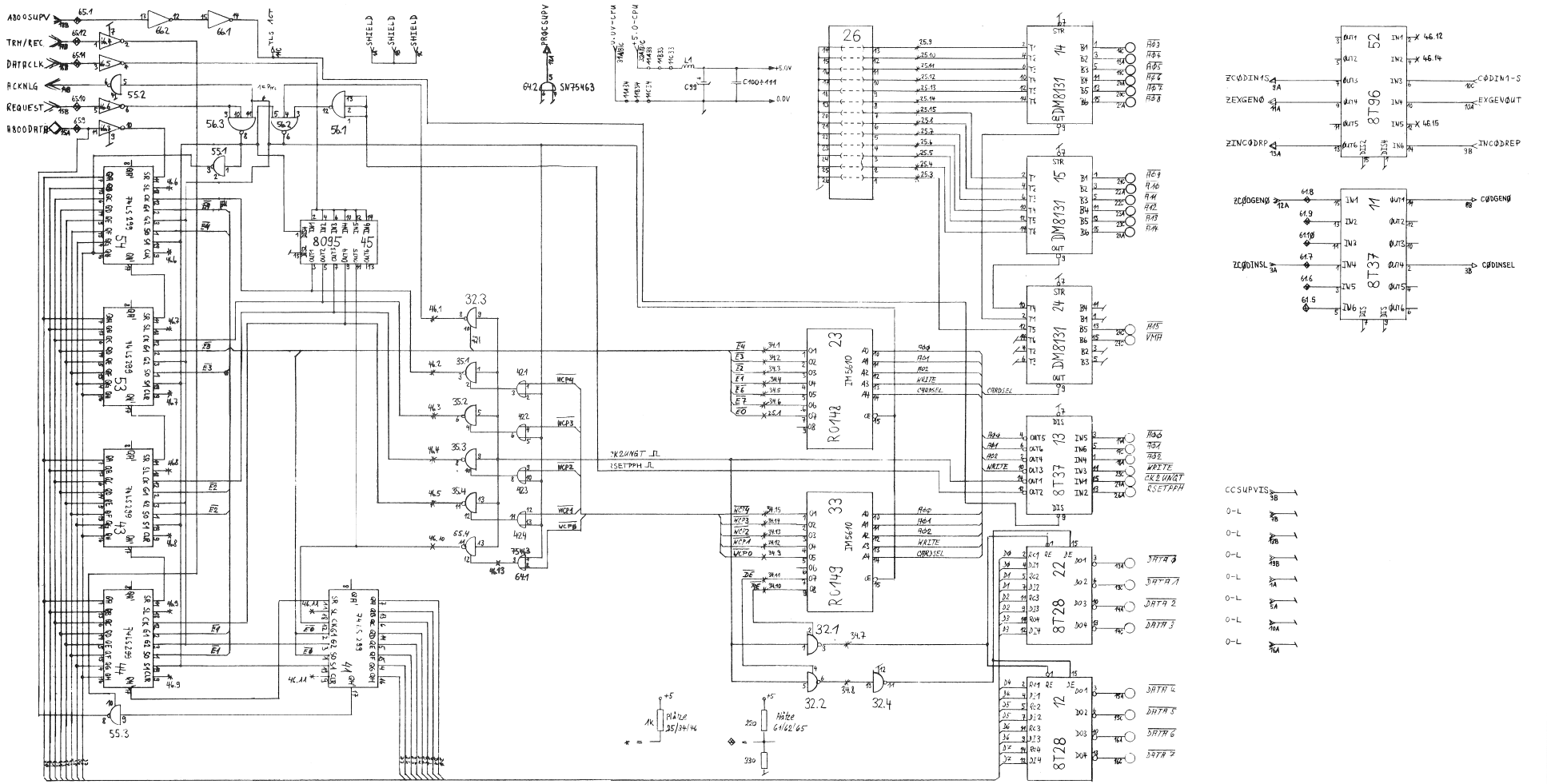

TLS TRANSMITTER/RECEIVER PCB 1.228.433–81/00 GR40 EL3

```
*   S T U D E R   *   POSITION LIST OF  ARTS 1.228.433.81   *   78/12/14   *                PAGE  1 OF  1   *
*****************************************************************************************************************
*   EXPANSION UNIT                    *   TLS TRANSM / RECEIVER IN A800    *                    81/06/25-1   *

                    IM STAMM NICHT VORHANDEN = ' *'

POSITION      PART NO. DESCRIPTION OF PART                POSITION      PART NO. DESCRIPTION OF PART
RD. POS.M                                                 RD. POS.M
--------- ------------ ---------------------------       --------- ------------ ---------------------------
C   0099    59.99.0201 C    6.8  U , 20%,  35V , TA      P   0001    54.01.0354 P   LEISTE  3 * 32 POL  WRAP
C   0100    59.99.0205 C     68  N ,-20%,  63V , KER     RZ  0025    57.85.3102 RZ  15*1 K ,  2%,        DIL16
C   0101    59.99.0205 C     68  N ,-20%,  63V , KER     RZ  0034    57.85.3102 RZ  15*1 K ,  2%,        DIL16
C   0102    59.99.0205 C     68  N ,-20%,  63V , KER     RZ  0046    57.85.3102 RZ  15*1 K ,  2%,        DIL16
C   0103    59.99.0205 C     68  N ,-20%,  63V , KER     RZ  0061    57.80.0101 RZ  14*330/220,2%,       DIL16
C   0104    59.99.0205 C     68  N ,-20%,  63V , KER     RZ  0065    57.80.0101 RZ  14*330/220,2%,       DIL16
C   0105    59.99.0205 C     68  N ,-20%,  63V , KER
C   0106    59.99.0205 C     68  N ,-20%,  63V , KER
C   0107    59.99.0205 C     68  N ,-20%,  63V , KER
C   0108    59.99.0205 C     68  N ,-20%,  63V , KER
C   0109    59.99.0205 C     68  N ,-20%,  63V , KER
C   0110    59.99.0205 C     68  N ,-20%,  63V , KER
C   0111    59.99.0205 C     68  N ,-20%,  63V , KER
IC  0011    50.05.0217 IC  N 8T37B,                    TTL
IC  0012    50.05.0260 IC     8T28        ,            TTL-3
IC  0013    50.05.0217 IC  N 8T37B,                    TTL
IC  0014    50.05.0263 DM 8131                           *
IC  0015    50.05.0263 DM 8131                           *
IC  0022    50.05.0260 IC     8T28        ,            TTL-3
IC  0023  1.025.014.80 R0148                            *
IC  0024    50.05.0263 DM 8131                           *
IC  0032    50.05.0264 8 T 09                            *
IC  0033  1.025.014.90 R0149                            *
IC  0035    50.05.0264 8 T 09                            *
IC  0041    50.06.0299 SN74LS299                         *
IC  0042    50.06.0032 IC  SN 74 LS  32 N              TTL
IC  0043    50.06.0299 SN74LS299                         *
IC  0044    50.06.0299 SN74LS299                         *
IC  0045    50.05.0216 IC  N 8 T 95B,                ,TTL-3
IC  0052    50.05.0224 IC  N 8T96B,                   TTL-3
IC  0053    50.06.0299 SN74LS299                         *
IC  0054    50.06.0299 SN74LS299                         *
IC  0055    50.05.0264 8 T 09                            *
IC  0056    50.05.0110 IC  SN 7410-N,FLH 111  ,TTL
IC  0064    50.05.0203 IC  SN 75463P,LM 3613 N, DRIV
IC  0066    50.05.0217 IC  N 8T37B,                    TTL
```

TLS MASTER INTERFACE A800 1.228.434–83/82 GR40 EL4

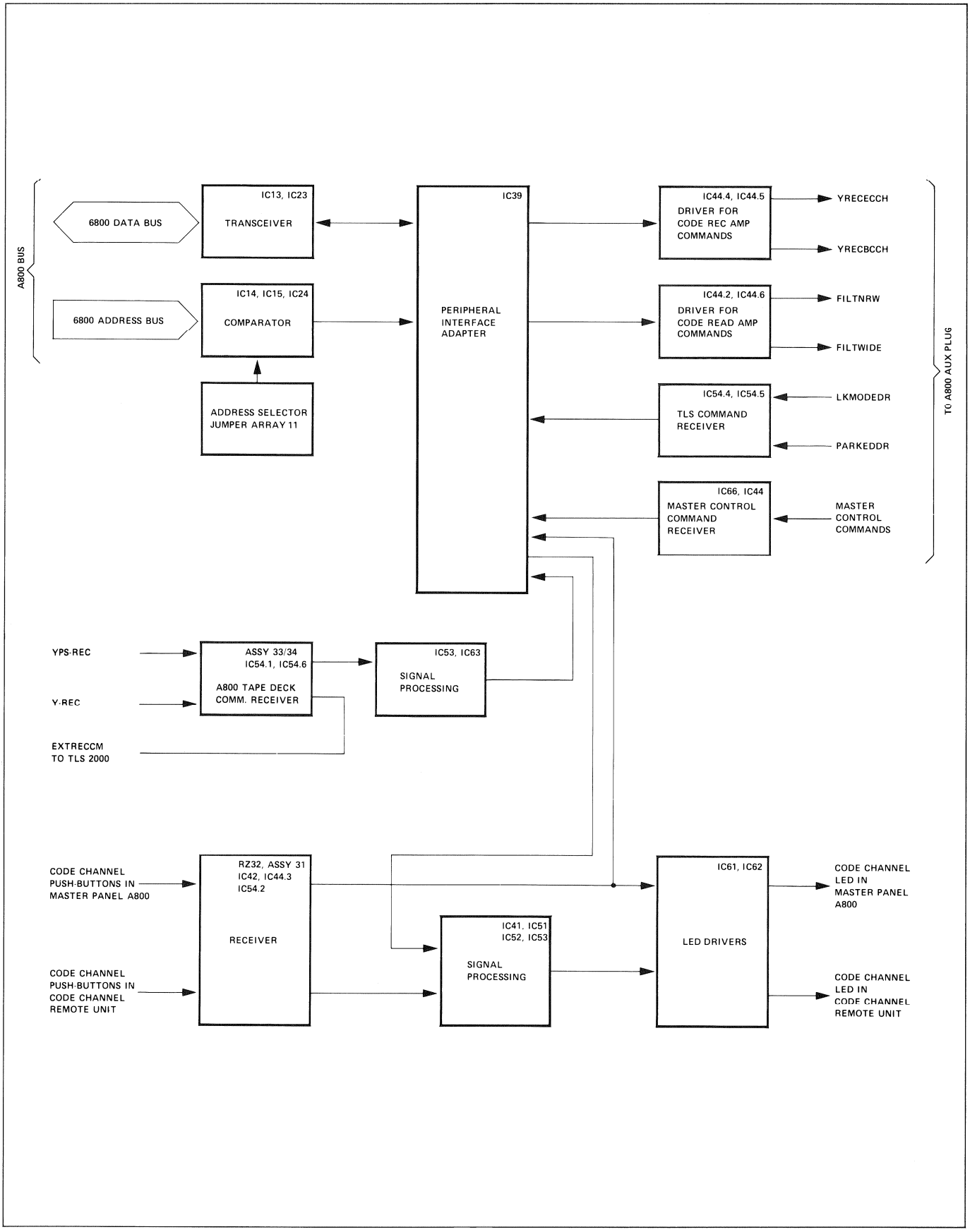

TLS MASTER INTERFACE A800 1.228.434–83/82 GR40 EL4

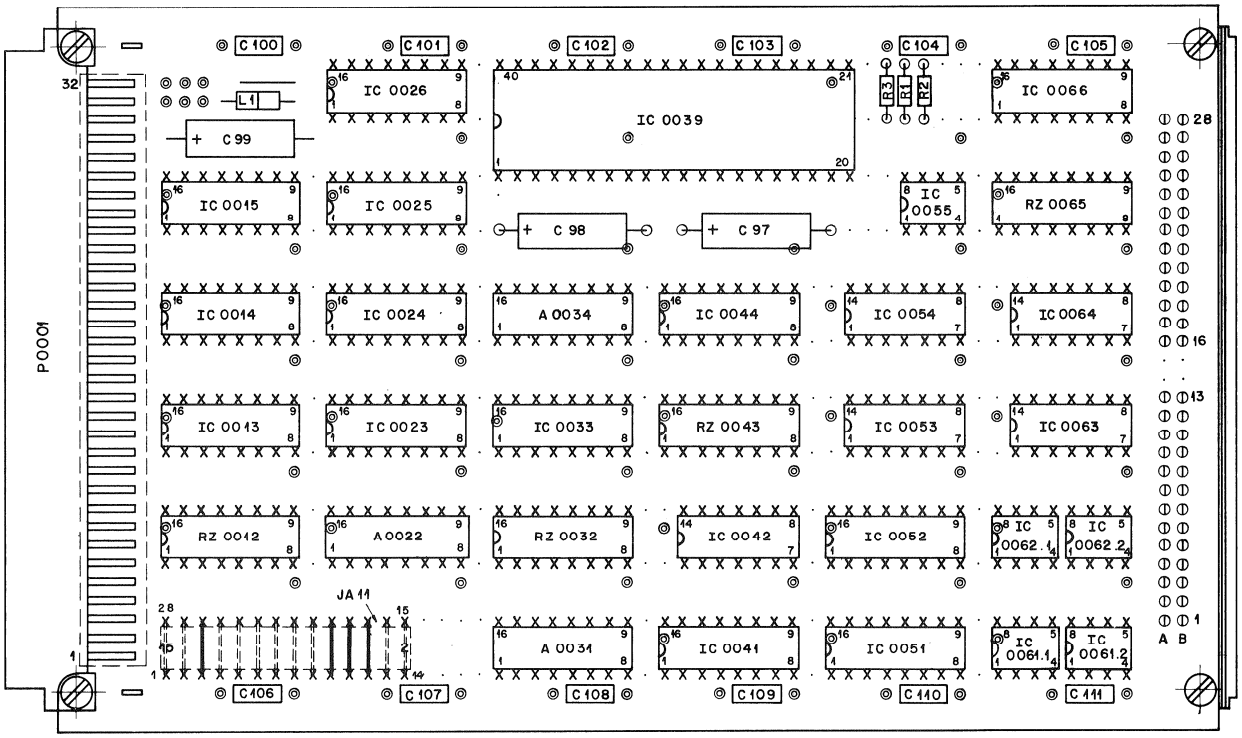

1.228.434 TLS MASTER INTERFACE A800

Das TLS Interface erfüllt zwei wichtige Funktionen

1. Überwachung des Codekanals
2. Master Control-Funktion

Dank diesem Schaltkreis ist die A800 in der Lage, Code zu lesen und aufzuzeichnen. Das TLS E-Prom auf der CPU der A800 wird benötigt, sobald die Interfacekarte eingesteckt wird:

Auf dem Print 1.228.434 finden wir ein Signal MST ACT, welches anzeigt, dass die Interfacekarte eingesteckt ist. Von diesem Zeitpunkt an durchläuft der Prozessor eine zusätzliche Programmschleife, welche die Kommunikation mit den TLS Interfaces besorgt.

Sobald der Adress Bus den richtigen Wert anzeigt, werden die Übertragungskreise aktiviert und der Datenaustausch freigegeben.

Master Control Befehle werden vom IC39 entgegengenommen und dem Prozessor zur Ausführung übermittelt. Die Code Kanal-Steuerung geschieht hauptsächlich durch das Interface selbst. Das entsprechende Programm ist in PROM 0150 gespeichert. Die Eingang/Ausgang-Umschaltung des IC39 wird von der CPU gesteuert.

Wichtige Signale

Reset Puls	RSETPPH
Master Control freigegeben	MCSUPVIS
Master Control Daten bereit - A800	MCDATRDY
Unterbrechungsanforderung	IRQ
Kontrolle, ob die Adresse gültig ist	VMA
Taktpuls ungetastet	CK2UNGT
Prozessor-Signal Aufnahme	YPS–REC
Tasten-Signal Aufnahme	Y–REC
TLS angeschlossen	MST–ACT
Master Maschine angeschlossen	MPWRON

1.228.434 TLS MASTER INTERFACE A800

The TLS Interface handles two important functions

1. Code channel control
2. Master control

This board enables the A800 to read and record time code. The TLS E-Prom on the CPU A800 is needed as soon as the interface is inserted:

On Print 1.228.434 there is a signal MST ACT which indicates that the interface is connected. From this moment on the processor runs an additional loop which includes the communication with the TLS interfaces.

As soon as the address bus indicates the right value, the data transceivers are activated and data transfer is enabled.

Master control commands are accepted by IC39 and sent to the MPU for execution. The code channel control is mainly done by the interface itself. The program for this procedure is stored in Prom 0150. The input-output operation of IC39 is controlled by the CPU.

Important signals

Reset pulse	RSETPPH
Master control enable	MCSUPVIS
Master control data ready - A800	MCDATRDY
Interrupt request	IRQ
Check if address valid	VMA
Clock pulse ungated	CK2UNGT
processor-signal Rec	YPS–REC
push button-signal Rec	Y–REC
TLS connected	MST–ACT
Master machine connected	MPWRON

TLS MASTER INTERFACE A800 1.228.434–83/82 GR40 EL4

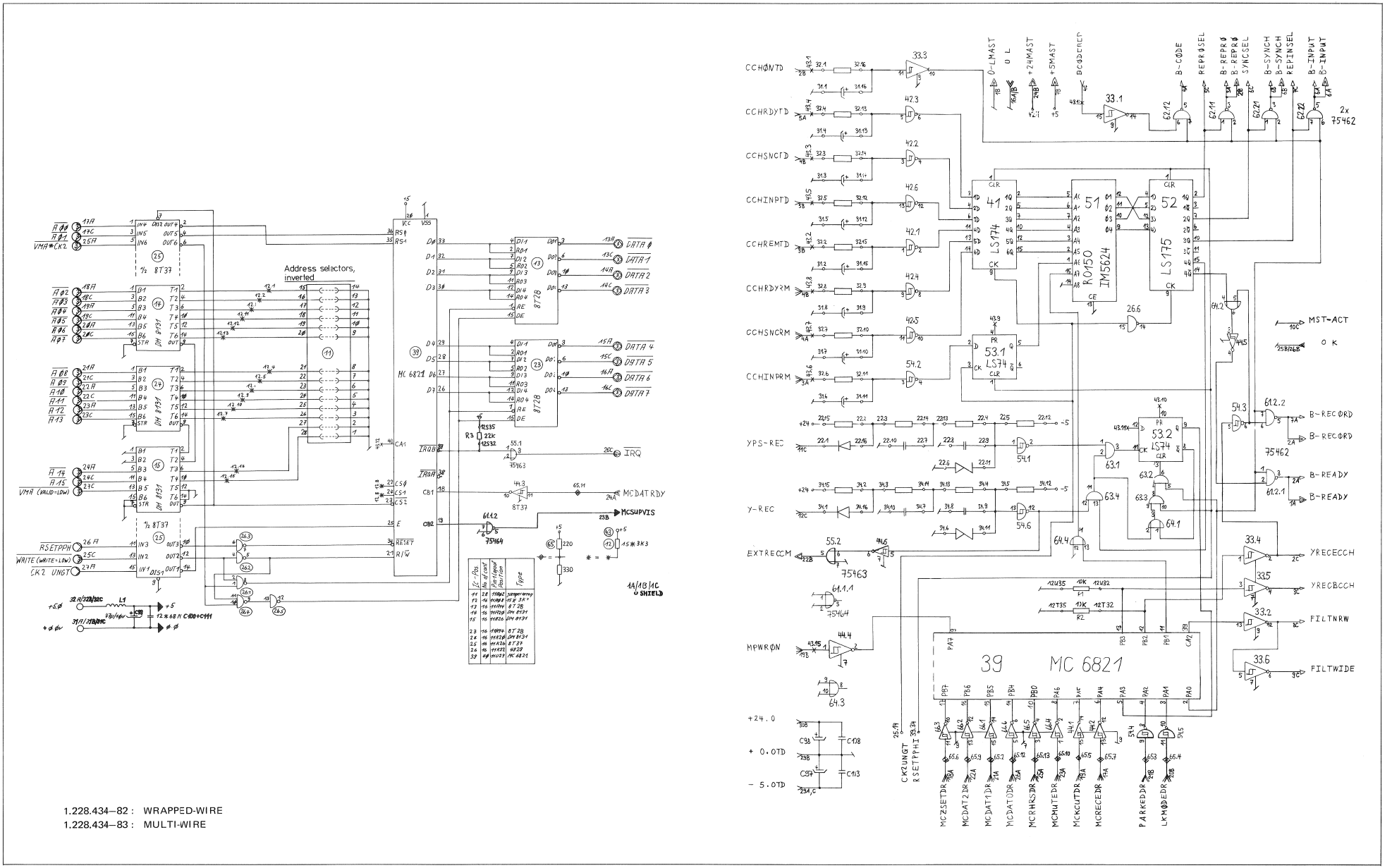

1.228.434–82 : WRAPPED-WIRE
1.228.434–83 : MULTI-WIRE

TLS MASTER INTERFACE A800 1.228.434-83/82 GR40 EL4

```
*   S T U D E R   *   POSITION LIST OF PARTS 1.228.434.83/82*              *                PAGE  1 OF  1   *
*****************************************************************************************************
*   EXPANSION UNIT                        TLS MASTER INTERFACE A800        *                81/06/25-3      *
```

POSITION RD.	POS.M	PART NO.	DESCRIPTION OF PART
A	0022	1.228.541.00	ASSEMBLY 08-14
A	0031	1.228.577.00	ASSEMBLY 17-34
A	0034	1.228.541.00	ASSEMBLY 08-14
C	0037	59.99.0202	C 39 U , 20%, 10V , TA
C	0038	59.99.0201	C 6.8 U , 20%, 35V , TA
C	0039	59.99.0202	C 39 U , 20%, 10V , TA
C	0100	59.99.0205	C 68 N ,-20%, 63V , KER
C	0101	59.99.0205	C 68 N ,-20%, 63V , KER
C	0102	59.99.0205	C 68 N ,-20%, 63V , KER
C	0103	59.99.0205	C 68 N ,-20%, 63V , KER
C	0104	59.99.0205	C 68 N ,-20%, 63V , KER
C	0105	59.99.0205	C 68 N ,-20%, 63V , KER
C	0106	59.99.0205	C 68 N ,-20%, 63V , KER
C	0107	59.99.0205	C 68 N ,-20%, 63V , KER
C	0108	59.99.0205	C 68 N ,-20%, 63V , KER
C	0109	59.99.0205	C 68 N ,-20%, 63V , KER
C	0110	59.99.0205	C 68 N ,-20%, 63V , KER
C	0111	59.99.0205	C 68 N ,-20%, 63V , KER
IC	0013	50.05.0260	IC 8T28 , TTL-3
IC	0014	50.05.0263	IC DM 8131 N TTL
IC	0015	50.05.0263	IC DM 8131 N TTL
IC	0023	50.05.0260	IC 8T28 , TTL-3
IC	0024	50.05.0263	IC DM 8131 N TTL
IC	0025	50.05.0217	IC N 8T37A, TTL
IC	0026	50.05.0126	IC SN 4029-N,FLH 251 ,TTL
IC	0033	50.05.0217	IC N 8T37A, TTL
IC	0039	50.05.0270	IC MC 6821P PIA NMOS
IC	0041	50.06.0174	IC SN 74 LS 174 N TTL
IC	0042	50.06.0014	IC SN 74 LS 14 N TTL
IC	0044	50.05.0217	IC N 8T37A, TTL
IC	0051	1.025.015.00	PROM R 0150
IC	0052	50.06.0175	IC SN 74 LS 175 N TTL
IC	0053	50.06.0074	IC SN 74 LS 74 N TTL
IC	0054	50.06.0014	IC SN 74 LS 14 N TTL
IC	0055	50.05.0203	IC SN 75463P,LM 3613 N, DRIV
IC	0061.2	50.05.0227	IC SN75462P ,LM 75462 , DRIV
IC	0062	50.05.0227	IC SN75462P ,LM 75462 , DRIV
IC	0063	50.06.0008	IC SN 74 LS 08 N TTL
IC	0064	50.06.0032	IC SN 74 LS 32 N TTL
IC	0066	50.05.0217	IC N 8T37A, TTL
P	0001	54.01.0354	P LEISTE 3 * 32 POL WRAP
R	0001	57.02.5103	R 10 K , 10%, .25W , CMA
R	0002	57.02.5103	R 10 K , 10%, .25W , CMA
R	0003	57.02.5223	R 22 K , 10%, .25W , CMA
RZ	0012	57.85.3332	RZ 15*3.3K, 2%, DIL16
RZ	0032	57.88.3101	RZ 8*100 2% DIL
RZ	0043	57.85.3103	RZ 15*10K , 2%, DIL
RZ	0065	57.80.0101	RZ 14*330/220,2%, DIL16
② IC	0061.1	50.05.0204	IC SN75464P,LM75464 DRIV

```
*   S T U D E R   *   POSITION LIST OF PARTS 1.228.541.00
*************************************************************
*   TAPE LOCK SYSTEM 2000              *   ASS.08-14
```

POSITION RD.	POS.M	PART NO.	DESCRIPTION OF PART
C	0033	59.99.0205	C 68 N ,-20%, 63V , KER
C	0034	59.32.3103	C 10 N ,+80% 40=, KER
D	0033	50.04.0125	D 1N 4448 SI
D	0034	50.04.1107	D 3.3 V, 5%, .40 W,Z,PLANAR
MP	0001	53.03.0170	MP ADAPTOR PLUG 2*8*0.3 DIL
R	0065	57.02.5332	R 3.3 K , 10%, .25W , CMA
R	0066	57.02.5222	R 2.2 K , 10%, .25W , CMA
R	0067	57.02.5222	R 2.2 K , 10%, .25W , CMA
R	0068	57.02.5472	R 4.7 K , 10%, .25W , CMA

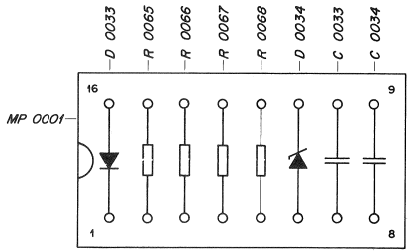


```
*   S T U D E R   *   POSITION LIST OF PARTS 1.228.577.00
*************************************************************
*   TAPE LOCK SYSTEM 2000              *   ASS.17-34
```

POSITION RD.	POS.M	PART NO.	DESCRIPTION OF PART
C	0008	59.99.0203	C 3.3 U , 20%, 10V , TA
C	0009	59.99.0203	C 3.3 U , 20%, 10V , TA
C	0010	59.99.0203	C 3.3 U , 20%, 10V , TA
C	0011	59.99.0203	C 3.3 U , 20%, 10V , TA
C	0012	59.99.0203	C 3.3 U , 20%, 10V , TA
C	0013	59.99.0203	C 3.3 U , 20%, 10V , TA
C	0014	59.99.0203	C 3.3 U , 20%, 10V , TA
C	0015	59.99.0203	C 3.3 U , 20%, 10V , TA
MP	0001	53.03.0170	MP ADAPTOR PLUG 2*8*0.3 DIL

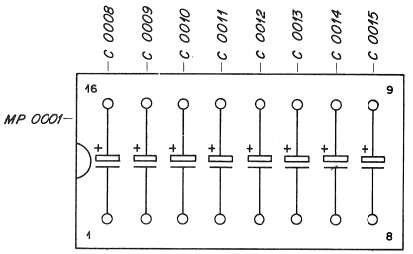

TLS MASTER INTERFACE 1.228.434–81 GR40 EL4

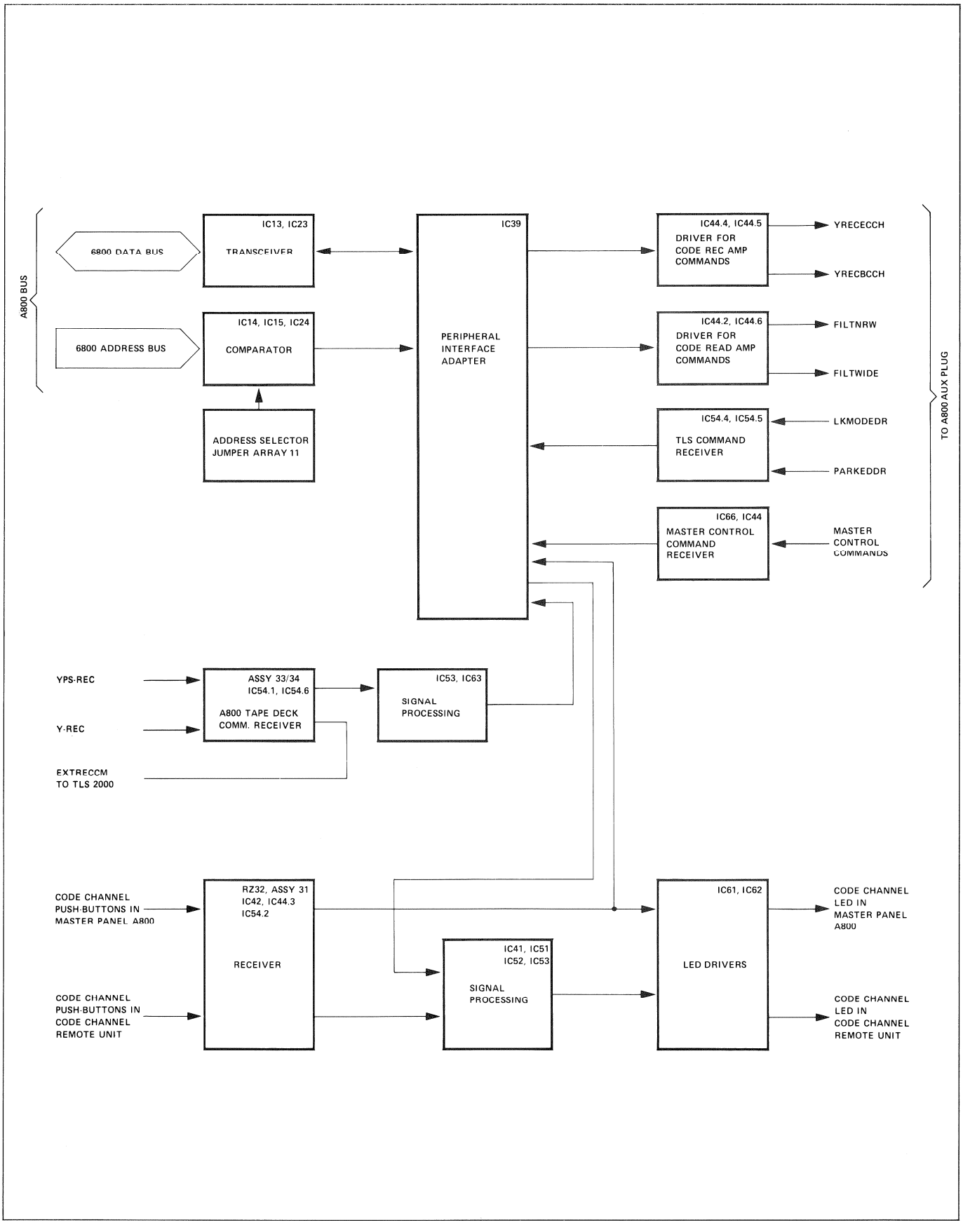

TLS MASTER INTERFACE 1.228.434–81 GR40 EL4

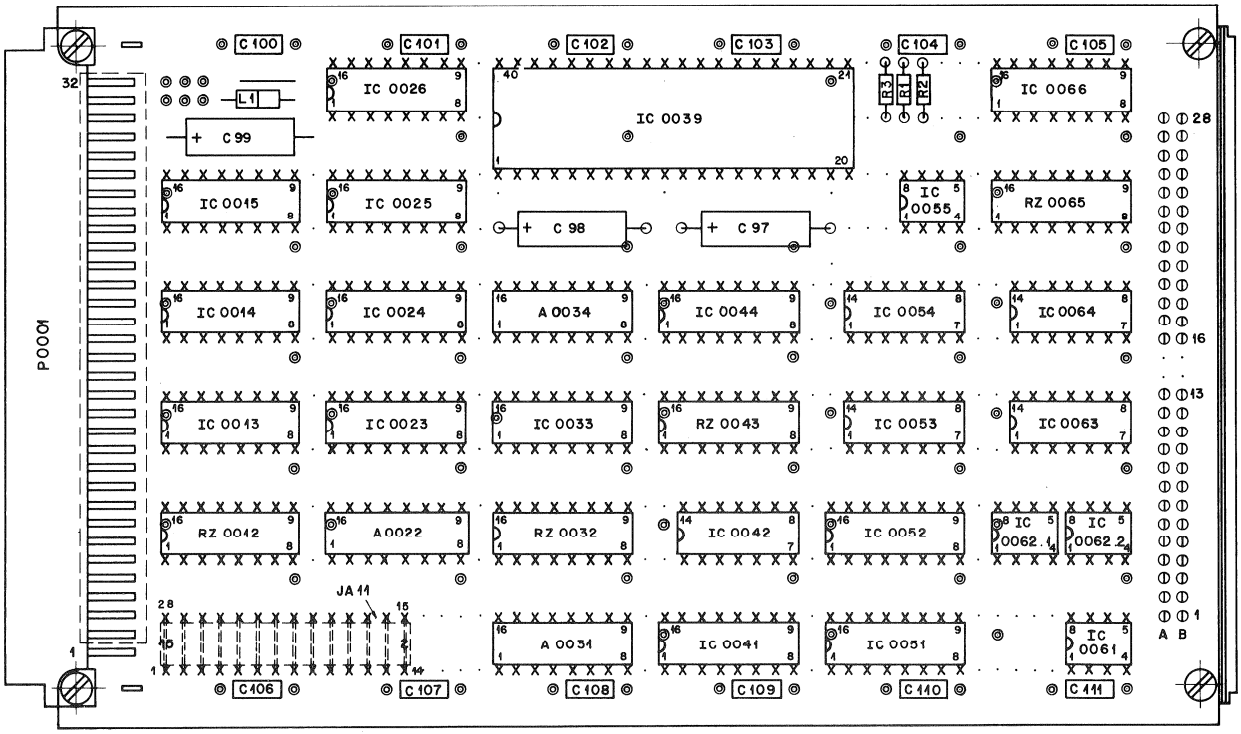

* S T U D E R * POSITION LIST OF PARTS 1.228.434.81 * 78/10/25 * PAGE 1 OF 1 *

* EXPANSION UNIT * TLS MASTER INTERFACE A800 * 78/09/26-1 *

POSITION RD.	POS.M	PART NO.	DESCRIPTION OF PART
A	0022	1.228.541.00	ASSEMBLY 08-14
A	0031	1.228.577.00	ASSEMBLY 17-34
A	0034	1.228.541.00	ASSEMBLY 08-14
C	0097	59.99.0202	C 39 U , 20%, 10V , TA
C	0098	59.99.0201	C 6.8 U , 20%, 35V , TA
C	0099	59.99.0202	C 39 U , 20%, 10V , TA
C	0100	59.99.0205	C 68 N ,-20%, 63V , KER
C	0101	59.99.0205	C 68 N ,-20%, 63V , KER
C	0102	59.99.0205	C 68 N ,-20%, 63V , KER
C	0103	59.99.0205	C 68 N ,-20%, 63V , KER
C	0104	59.99.0205	C 68 N ,-20%, 63V , KER
C	0105	59.99.0205	C 68 N ,-20%, 63V , KER
C	0106	59.99.0205	C 68 N ,-20%, 63V , KER
C	0107	59.99.0205	C 68 N ,-20%, 63V , KER
C	0108	59.99.0205	C 68 N ,-20%, 63V , KER
C	0109	59.99.0205	C 68 N ,-20%, 63V , KER
C	0110	59.99.0205	C 68 N ,-20%, 63V , KER
C	0111	59.99.0205	C 68 N ,-20%, 63V , KER
IC	0013	50.05.0260	IC 8T28 , TTL-3
IC	0014	50.05.0263	IC DM 8131 N TTL
IC	0015	50.05.0263	IC DM 8131 N TTL
IC	0023	50.05.0260	IC 8T28 , TTL-3
IC	0024	50.05.0263	IC DM 8131 N TTL
IC	0025	50.05.0217	IC N 8T37B, TTL
IC	0026	50.05.0126	IC SN 4929-N,FLH 251 ,TTL
IC	0033	50.05.0217	IC N 8T37B, TTL
IC	0039	50.05.0270	IC MC 6821P PIA NMOS
IC	0041	50.06.0174	IC SN 74 LS 174 N TTL
IC	0042	50.06.0014	IC SN 74 LS 14 N TTL
IC	0044	50.05.0217	IC N 8T37B, TTL
IC	0051	1.025.015.00	PROM R 0150
IC	0052	50.06.0175	IC SN 74 LS 175 N TTL
IC	0053	50.06.0074	IC SN 74 LS 74 N TTL
IC	0054	50.06.0014	IC SN 74 LS 14 N TTL
IC	0055	50.05.0203	IC SN 75463P,LM 3613 N, DRIV
IC	0061	50.05.0227	IC SN75462P ,LM 75462 , DRIV

POSITION RD.	POS.M	PART NO.	DESCRIPTION OF PART
IC	00621	50.05.0227	IC SN75462P ,LM 75462 , DRIV
IC	00622	50.05.0227	IC SN75462P ,LM 75462 , DRIV
IC	0063	50.06.0008	IC SN 74 LS 08 N TTL
IC	0064	50.06.0032	IC SN 74 LS 32 N TTL
IC	0066	50.05.0217	IC N 8T37B, TTL
P	0001	54.01.0354	P LEISTE 3 * 32 POL WRAP
R	0001	57.02.5103	R 10 K , 10%, .25W , CMA
R	0002	57.02.5103	R 10 K , 10%, .25W , CMA
R	0003	57.02.5223	R 22 K , 10%, .25W , CMA
RZ	0012	57.85.3332	RZ 15*3.3K, 2%, DIL16
RZ	0032	57.88.3101	RZ 8*100 2% DIL
RZ	0043	57.85.3103	RZ 15*10K , 2%, DIL
RZ	0065	57.80.0101	RZ 14*330/220,2%, DIL16

TLS MASTER INTERFACE 1.228.434–81 GR40 EL4

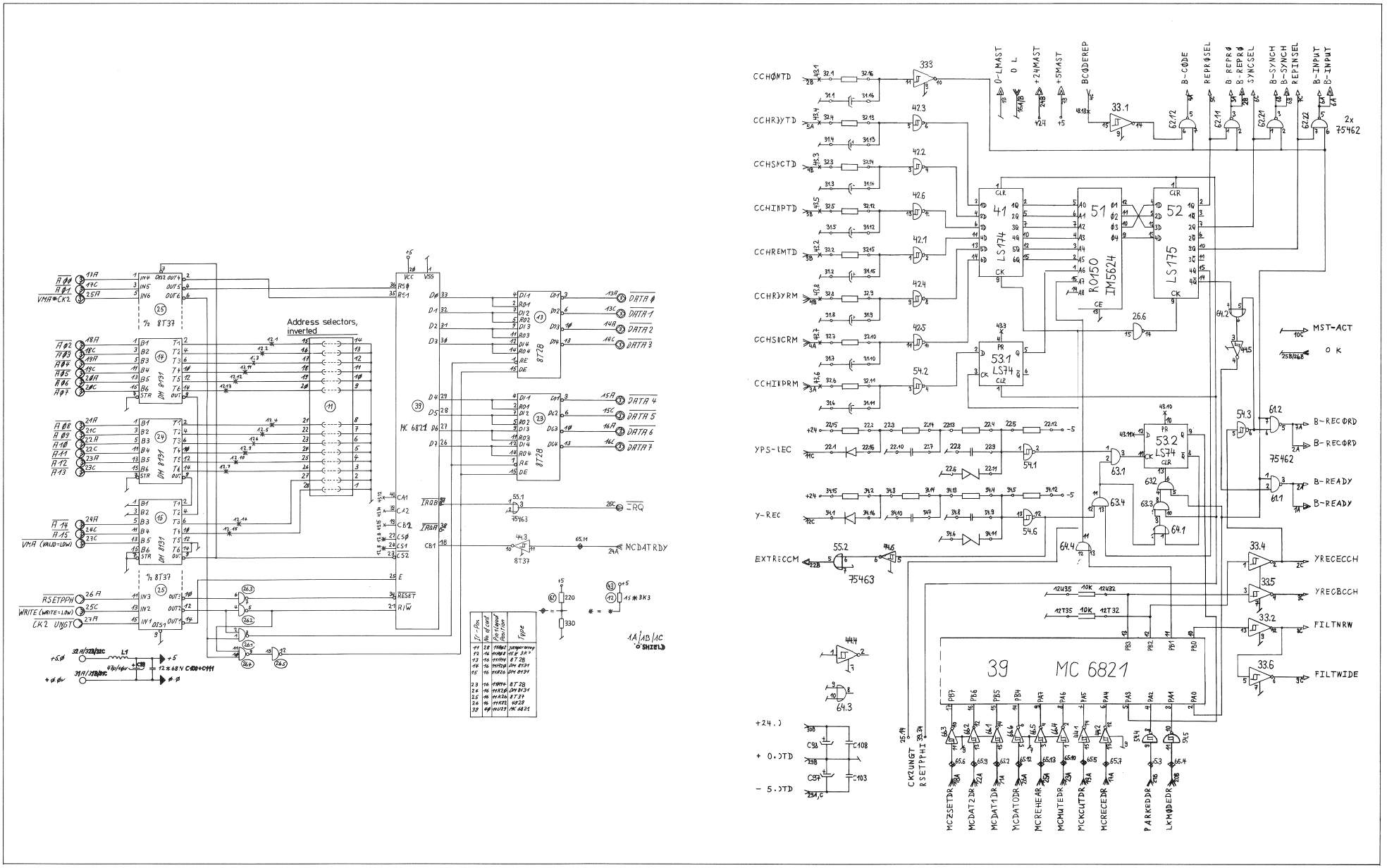

TLS MASTER INTERFACE 1.228.434–81 GR40 EL4

```
*   S T U D E R   *   POSITION LIST OF PARTS 1.228.541.00
*****************************************************************
*   TAPE LOCK SYSTEM 2000              *   ASS.08-14

POSITION       PART NO. DESCRIPTION OF PART
RD. POS.M
---------- ------------ ------------------------------
C    0033    59.99.0205 C    68  N ,-20%,  63V , KER
C    0034    59.32.3103 C    10  N ,+80%   40=,  KER
D    0033    50.04.0125 D   1N 4448              SI
D    0034    50.04.1107 D   3.3 V,  5%, .40 W,Z,PLANAR
MP   0001    53.03.0170 MP ADAPTOR PLUG 2*8*0.3  DIL
R    0065    57.02.5332 R   3.3  K , 10%, .25W , CMA
R    0066    57.02.5222 R   2.2  K , 10%, .25W , CMA
R    0067    57.02.5222 R   2.2  K , 10%, .25W , CMA
R    0068    57.02.5472 R   4.7  K , 10%, .25W , CMA
```

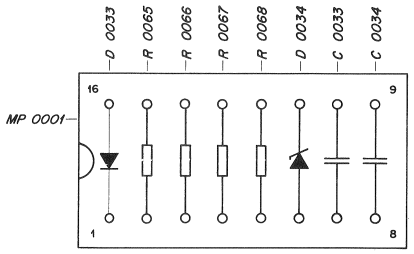


```
*   S T U D E R   *   POSITION LIST OF PARTS 1.228.577.00
*****************************************************************
*   TAPE LOCK SYSTEM 2000              *   ASS.17-34

POSITION       PART NO. DESCRIPTION OF PART
RD. POS.M
---------- ------------ ------------------------------
C    0008    59.99.0203 C   3.3  U , 20%,  10V , TA
C    0009    59.99.0203 C   3.3  U , 20%,  10V , TA
C    0010    59.99.0203 C   3.3  U , 20%,  10V , TA
C    0011    59.99.0203 C   3.3  U , 20%,  10V , TA
C    0012    59.99.0203 C   3.3  U , 20%,  10V , TA
C    0013    59.99.0203 C   3.3  U , 20%,  10V , TA
C    0014    59.99.0203 C   3.3  U , 20%,  10V , TA
C    0015    59.99.0203 C   3.3  U , 20%,  10V , TA
MP   0001    53.03.0170 MP ADAPTOR PLUG 2*8*0.3  DIL
```

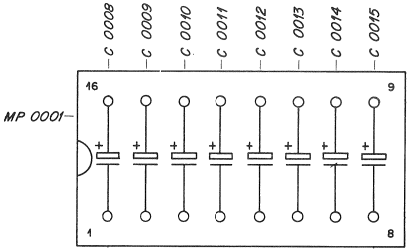

8.3.
TLS VENTILATION UNITS

VENTILATION UNIT (RACK VERSION) 1.228.955

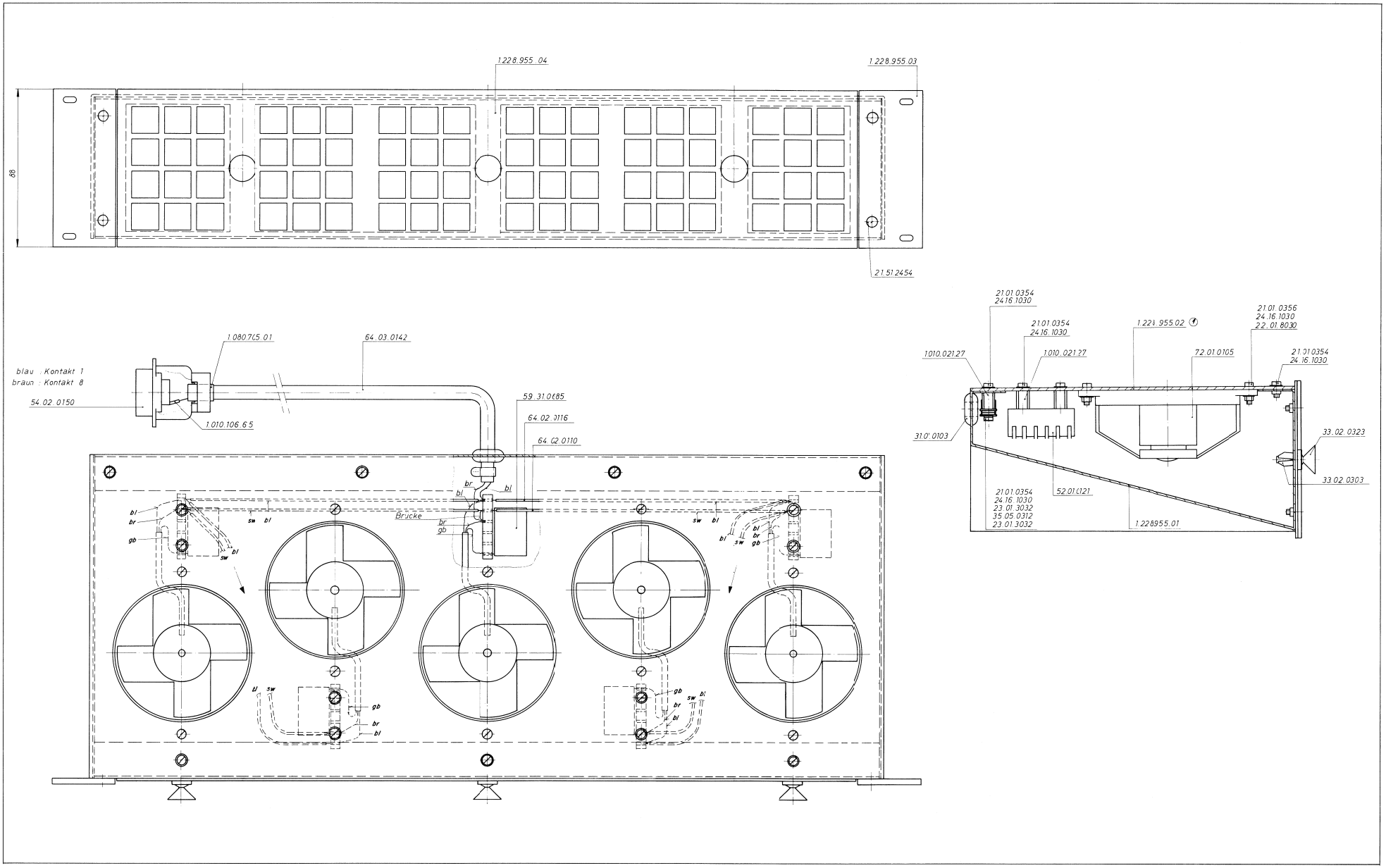

VENTILATION UNIT (TROLLEY VERSION) 1.228.956

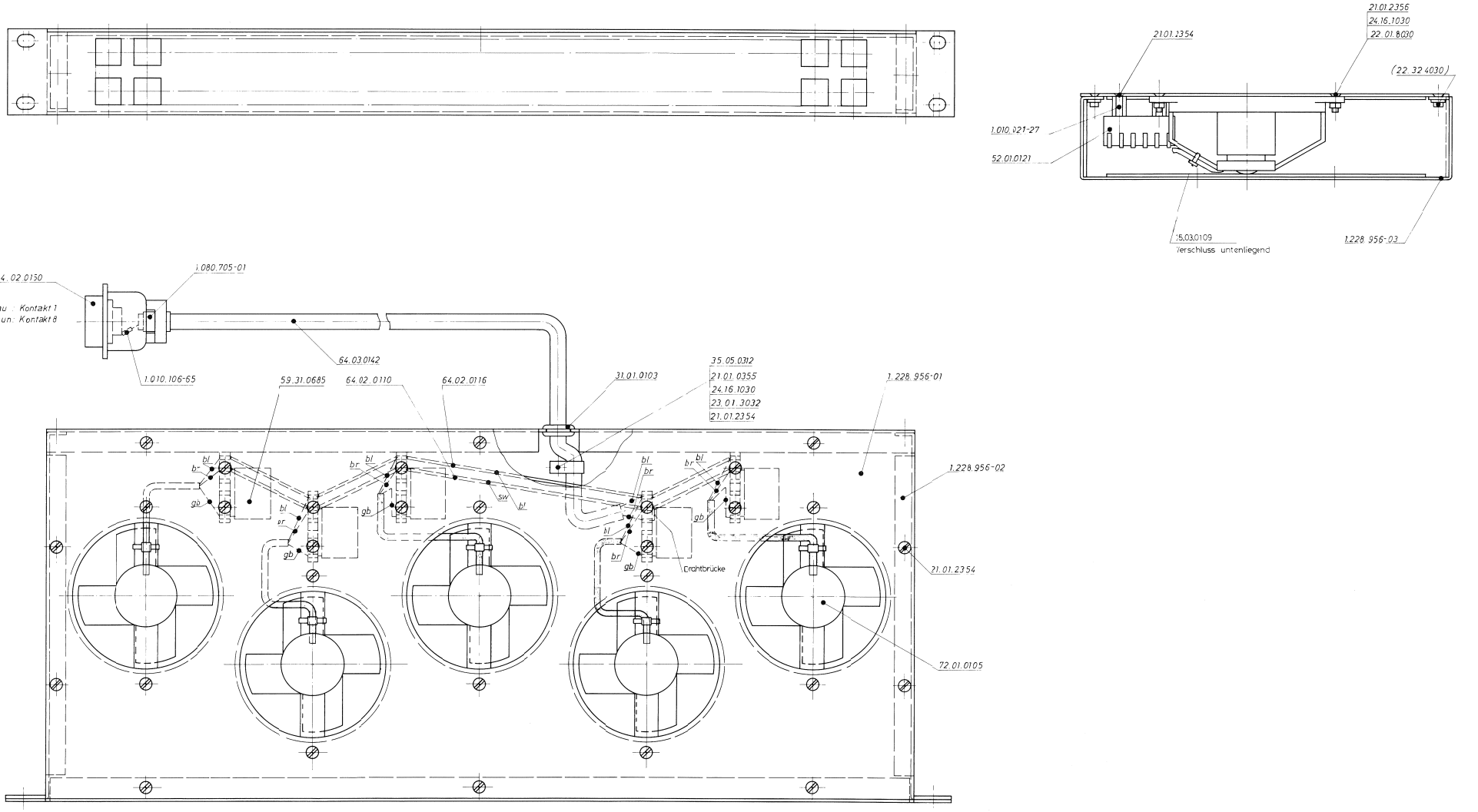

A80 LOCATOR | A80 MASTER-CONTROL | A800

MASTER (CODE SOURCE)

AUDIO TRANSPORTS

A800

A80/OTHERS

7.3 ... 7.8

SECTION 7.3 ... 7.8:
VIDEO TRANSPORTS

SECTION 7.2:
SWITCH SET
1.228.373

7

SECTION 7.1: INTERFACE RACK
1.228.890

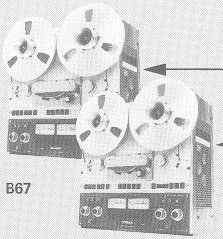

B67

7.9

7.9

7.9

7.9

SECTION 7.9:
ADDRESS START INTERFACE
1.228.374 (1.228.623)

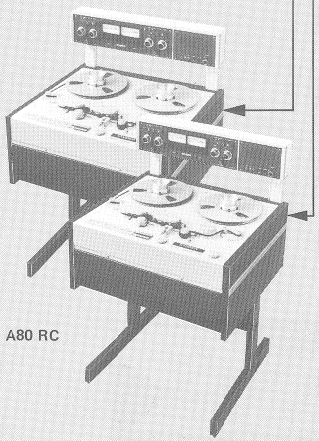

A80 RC

25/50

8000

SECTION 7.10:
EXTERNAL FREQUENCY
CONTROLLER 1.228.601

SPROCKET
FILM TRANSPORT

STATION SYNC
FREQUENCY, CODE

SLAVE PROCESSOR RACK

SECTION 2: SCHEMATIC DIAGRAMS
RACK LOCATIONS 1-20, LAYOUTS,
PARTS LIST, JUMPER SETTING

SECTION 3: CIRCUIT DESCRIPTION
RACK LOCATIONS 1-20

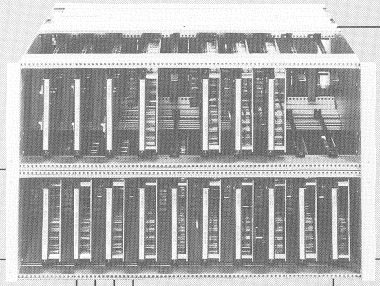

SECTION 4:
BACK PANELS
ORGANIZATION
AND
WIRING GR 99

(REAR OF RACK)
SECTION 5:
CONNECTION
FIELDS
RACK ELEMENTS
UPPER PART GR 98,
LOWER PART GR 97

SLAVE PERIPHERAL EQUIPMENTS

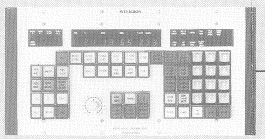

6.1

SECTION 6.1: MAIN PROGRAMMER
1.228.460 (461)

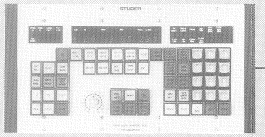

6.1

SECTION 6.1: MAIN PROGRAMMER
1.228.460 (461)

6.3

SECTION 6.3: PARALLEL/ SERIAL
CONVERTER
1.228.490

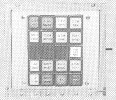

6.6

SECTION 6.6: BASIC PROGRAMMER
1.228.380

6.4

SECTION 6.4: POWER SUPPLY
1.228.150

6.2

SECTION 6.2: CODE CHANNEL REMOTE CONTROL
1.228.328

6.5

SECTION 6.5: POWER SUPPLY
1.228.170

SLAVE TRANSPORTS

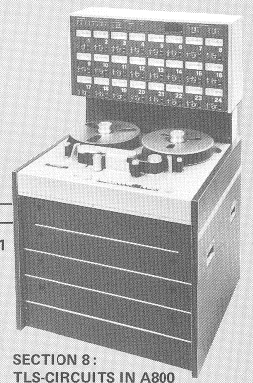

8

8.1

SECTION 8:
TLS-CIRCUITS IN A800
1.180.086

SECTION 8.1:
CODE CHANNEL
REMOTE CONTROL A800
1.328.140

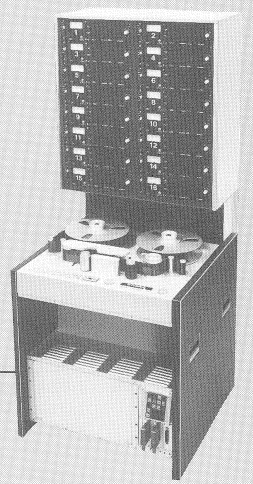

9

SECTION 9:
TLS-MODIFICATIONS AND CIRCUITS
IN A80 VU MK II / MK III

☒ INDICATES PARAGRAPH OF CABLE DESCRIPTION

SECTION	PAGE	PART NUMBER	DESCRIPTION
9.1	**9/3**		**SURVEY OF A 80VU/TLS 2000 WIRING**
	9/3		BLOCK DIAGRAM
	9/4		SUMMARY OF TLS-MODULS IN A 80VU
	9/5		SIGNAL PATH A 80VU/TLS 2000 VERSION
	9/6	1.228.661	SWITCH BOX / STANDARD
	9/7	1.228.662/663/664	SWITCH BOX / 4/8, 8/16, 16/24 CHANNEL
	9/8	1.228.650/651	POWER LINE CABLE, MALE / FEMALE
	9/8	1.228.670	POWER SUPPLY CABLE
	9/9	1.228.671	HEAD CHANNEL SUPPLY CABLE
	9/10	1.228.673	A80 AUDIO CHANNEL POWER CABLE
	9/11	1.228.675	A80 TRANSFORMER POWER CABLE
	9/12	1.228.676	A80 AUDIO CHANNEL CABLE
9.2	**9/13**		**TAPE TRANSPORT CONTROL MODIFICATIONS A 80VU/TLS 2000 VERSION**
	9/13		BLOCK DIAGRAM
	9/14		REMOTE CONTROL CONNECTORS
	9/15	1.080.733	KICK START INHIBIT OPTION
	9/16	1.228.674	CAPSTAN CABLE
	9/17	1.228.672	REMOTE MODE CABLE
	9/18	1.080.144	TAPE END SENSOR PCB
	9/19		CONTROL UNIT CARD CHASSIS A 80VU/TLS 2000
	9/20	1.180.376	CAPSTAN SERVO PCB
	9/22	1.081.372	ADDITIONAL CAPSTAN PCB
	9/25	1.080.397/398	INTERFACE PCB A 80VU/TLS 2000 7,5/15", 15/30"
9.3	**9/28**		**POWER SUPPLY MODIFICATIONS A 80VU/TLS 2000 VERSION**
	9/28		BLOCK DIAGRAM
	9/29	1.080.323	POWER SUPPLY UNIT A 80VU/TLS 2000
	9/30	1.080.710	DISTRIBUTION PANEL A 80VU/TLS 2000
	9/31	1.080.715	CHANNEL SUPPLY TRANSFORMER UNIT A 80
	9/32	1.228.956	VENTILATING UNIT
9.4	**9/33**		**WIRING OF MODIFIED TAPE TRANSPORT CONTROL RACK**
	9/33		LOCATION PIN LIST
	9/41		SIGNAL WIRE LIST
9.5	**9/47**		**AUDIO MODIFICATIONS A 80VU/TLS 2000 VERSION**
	9/47		BOARDS LOCATION / VU-METER UNIT
	9/48	1.080.801–81	HF-DRIVER PCB
	9/48	1.080.771	–BIAS DRIVER PCB
	9/50	1.081.801	HF-DRIVER PCB
	9/50	1.081.804	– INVERTER PCB
	9/52	1.080.789	RECORD DRIVER AMPLIFIER PCB (EARLIER VERSION/CODE CHANNEL ONLY)
	9/54	1.080.798	CONTROL EQUIPMENT
	9/56	1.081.803	CONTROL EQUIPMENT
	9/58	1.228.384	REHEARSE SET A 80
9.6	**9/59**		**A80VU MODIFIED AS TLS 2000 MASTER**
	9/59	1.228.711–83	CODE RECORD AMPLIFIER PCB A 80-MASTER
	9/63 ▲	1.228.412–81	CODE READ AMPLIFIER PCB
	9/67	1.228.714–00	TLS INTERFACE PCB MASTER
	9/73	1.228.744	TLS MASTER-SLAVE INTERCONNECTOR CABLE
	9/74	1.228.745	ADAPTER REMOTE CONTROL CABLE
	9/75	1.228.751	MASTER-AUX CONNECTOR
	9/76	1.228.752	MASTER REMOTE MODE CONTROL
	9/77	1.228.753	MASTER TO LOCATOR CONNECTOR
	9/78		LOCATION PIN LIST / A80 MASTER : PROCESSOR BACK PANEL
	9/82		SIGNAL WIRE LIST / A80 MASTER : PROCESSOR BACK PANEL

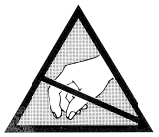

ALL PCBs MARKED WITH THIS SIGN ▲
CONTAIN COMPONENTS SENSITIVE TO
STATIC CHARGES.
PLEASE, REFER TO PREFACE BEFORE
YOU REMOVE THESE BOARDS.

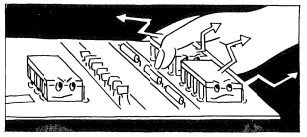

9.1
SURVEY OF A 80VU/TLS 2000 WIRING

A80 LOCATOR | A80 MASTER-CONTROL

BLOCK DIAGRAM

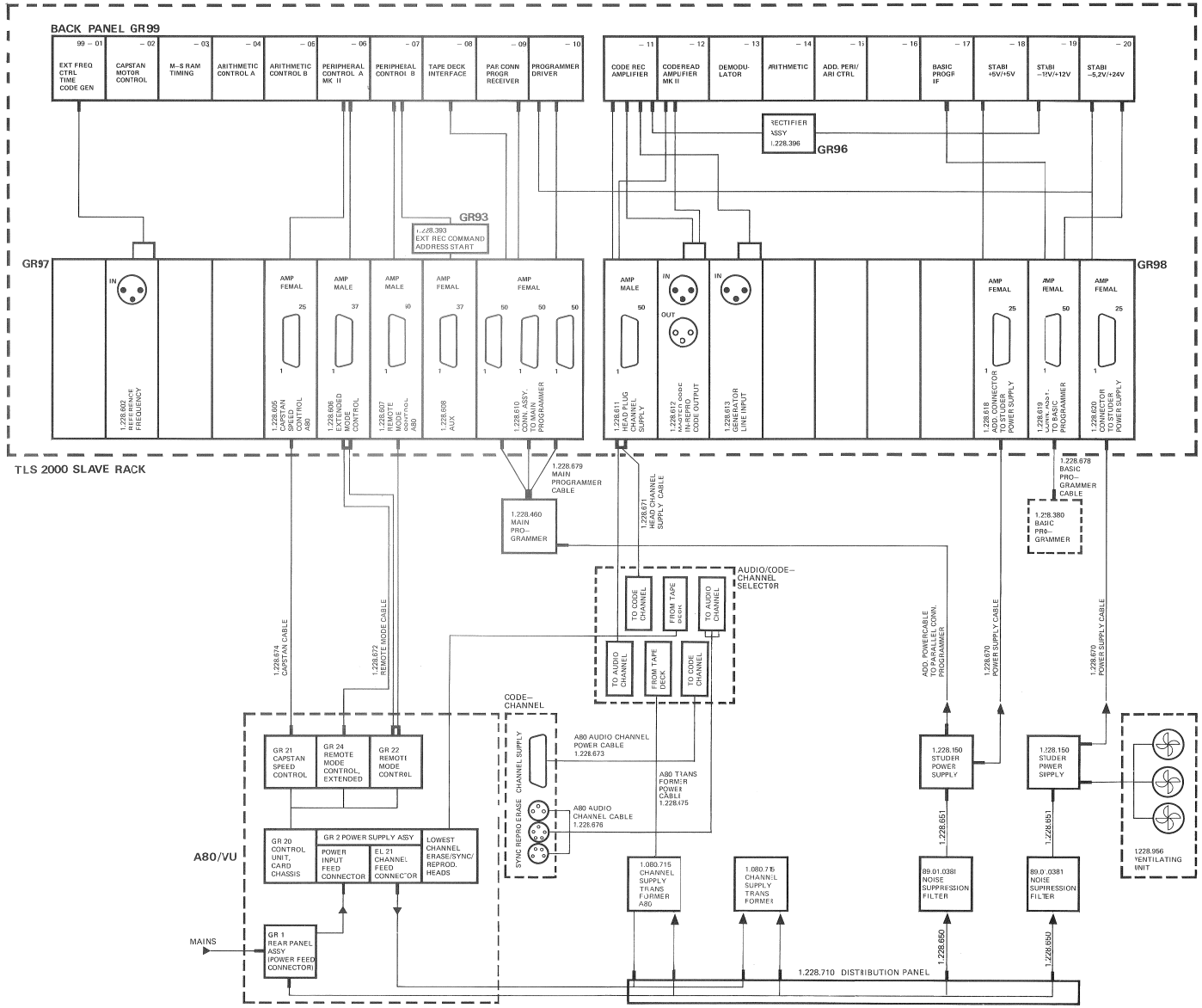

A80 LOCATOR | A80 MASTER-CONTROL

SUMMARY OF TLS - MODULS IN A80VU

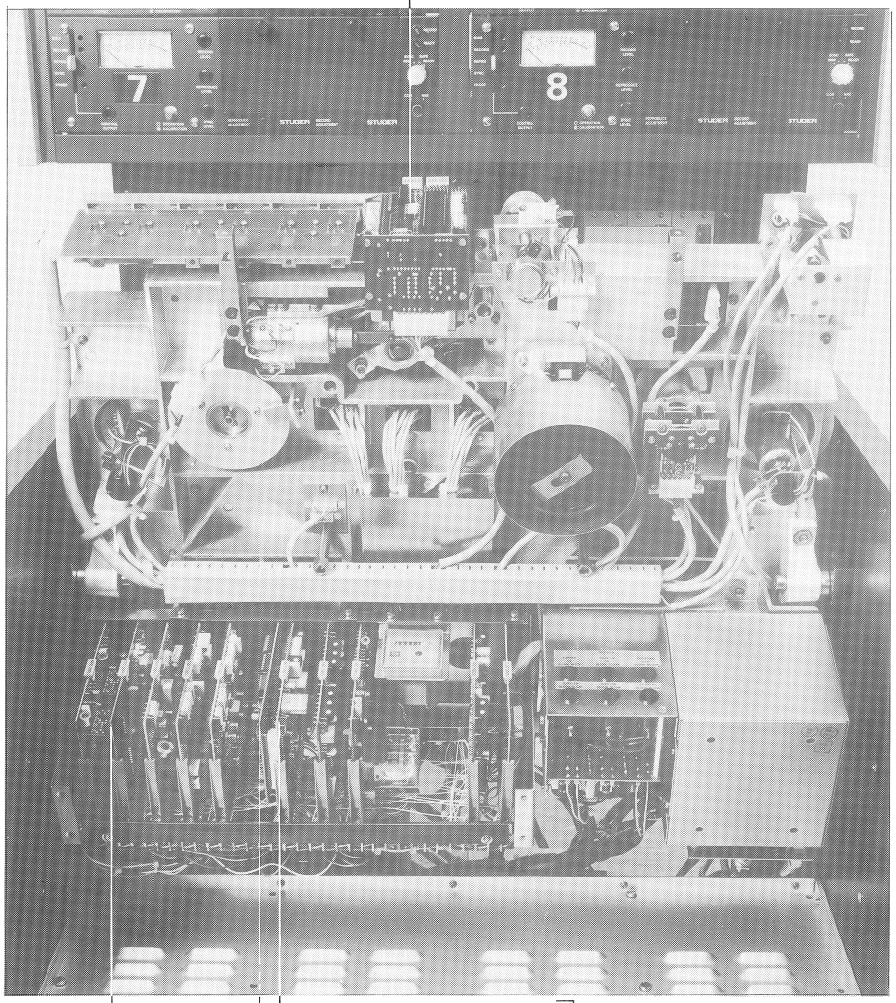

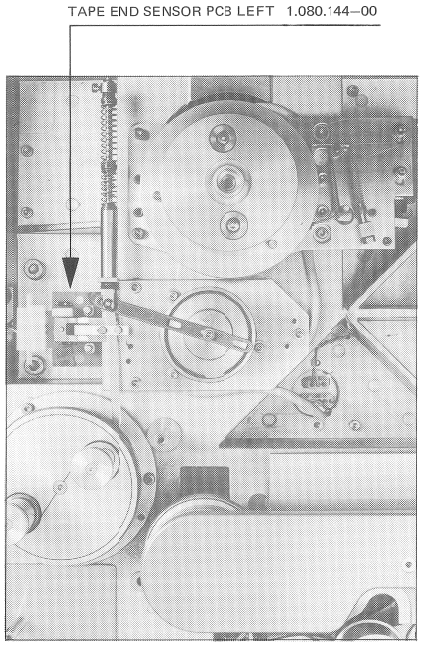

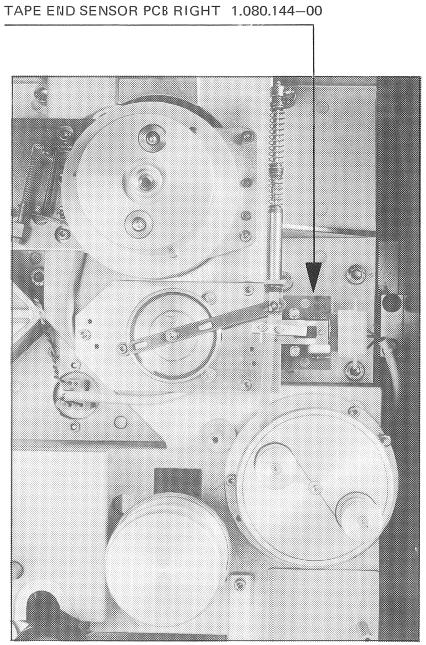

A80 LOCATOR | A80 MASTER-CONTROL

SIGNAL PATH A 80VU/TLS 2000 VERSION

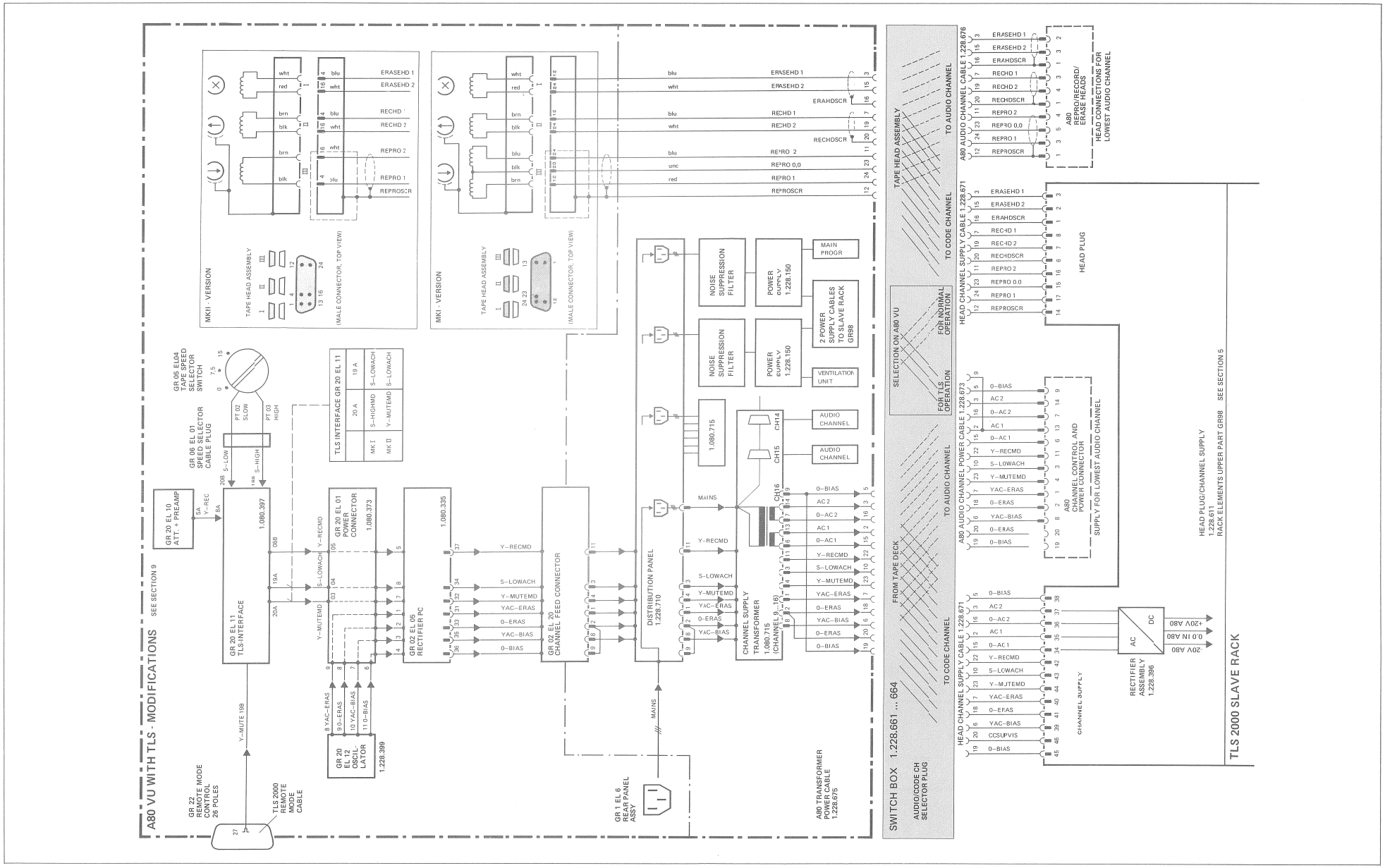

A80 LOCATOR | A80 MASTER-CONTROL

SWITCH BOX / STANDARD 1.228.661

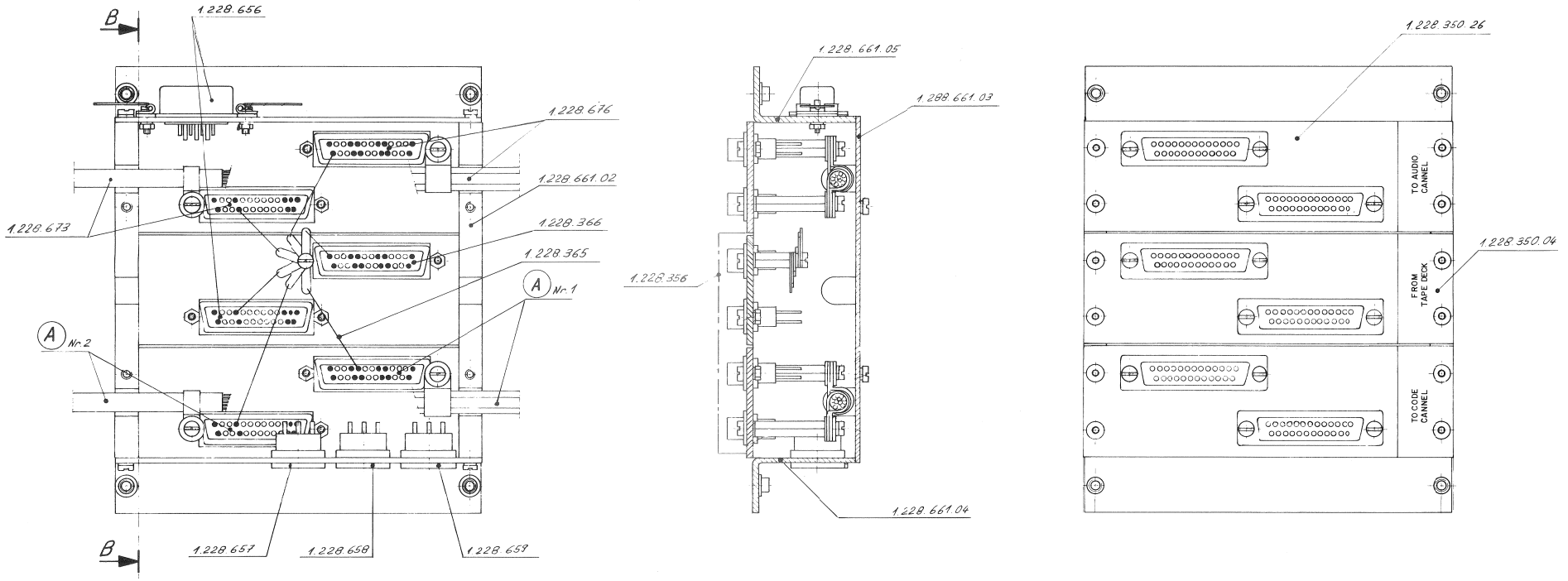

Plug Nr.	Pin Nr./Color												
1.228.336	2	3	6	7	10	11	12	15	16	19	20	23	24
1.228.657	yel	blu						wht	yel				
1.228.658			yel	blu						wht	yel		
1.228.659					yel	blu	yel					wht	red

A80 LOCATOR | A80 MASTER-CONTROL

SWITCH BOX / 4/8, 8/16, 16/24 CHANNEL 1.228.662/663/664

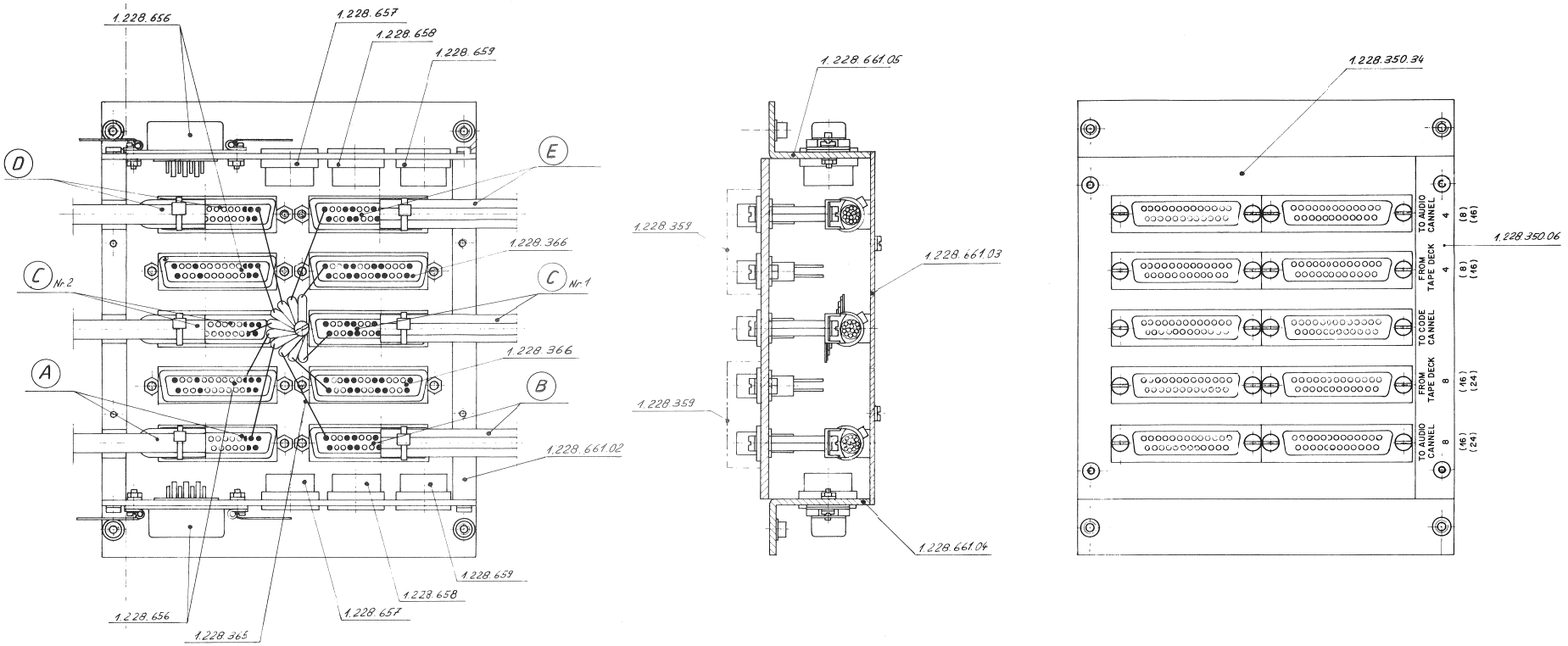

		A	B	C	D	E
Version	Switch Box Nr.	Audio Channel Power Cable	Audio Channel Cable	Head Channel Supply Cable	Audio CH-Power Cable	Audio CH-Cable
4/8 Channels	1.228.662	1.228.673	1.228.676	1.228.671	1.228.682	1.228.685
8/16 Channels	1.228.663	1.228.673	1.228.676	1.228.671	1.228.683	1.228.686
16/24 Channels	1.228.664	1.228.682	1.228.685	1.228.671	1.228.682	1.228.685

PLUG Nr.	Pin Nr./Color												
1.228.366	2	3	6	7	10	11	12	15	16	19	20	23	24
1.228.657	yel	blu						wht	yel				
1.228.658			yel	blu						wht	yel		
1.228.659					yel	blu	yel					wht	red

A80 LOCATOR | A80 MASTER-CONTROL

POWER LINE CABLE, MALE/FEMALE 1.228.650/651

1.228.650

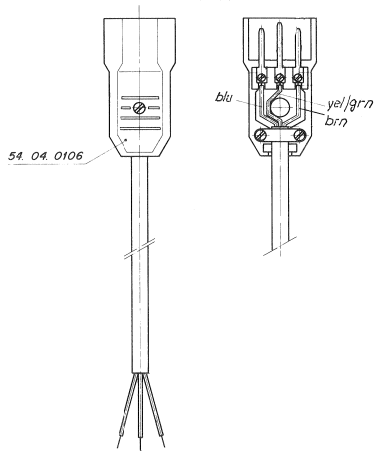

1.228.651

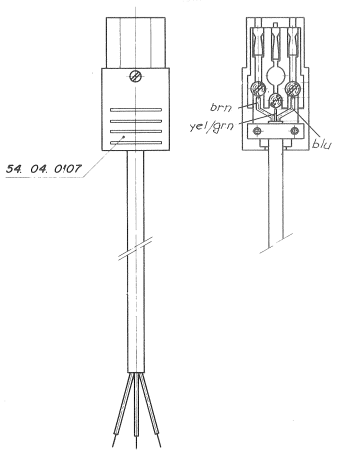

POWER SUPPLY CABLE 1.228.670

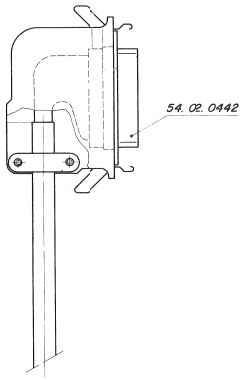

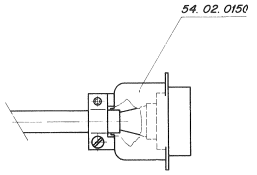

	AMP female 54. 02. 0442	Micro Ribbon 54. 02. 0150	
Fonte	Pin Nr.	Pin Nr.	Sig. Name.
wht*	1	6	- 10 V
blu	3	13	- 10 V
wht*	4	13	- 10 V
org	5	2	0.0 V
wht*	6	2	0.0 V
grn	7	3	0.0 V
wht*	8	3	0.0 V
brn	9	3	0.0 V
wht*	19	4	+ 10 V
gry	16	4	+ 10 V
red*	12	10	0.0 V
blu	13	10	0.0 V
red*	14	1	24 V ~
org*	15	8	24 V ~
red*	10	9	0.0 V
grn	11	9	0.0 V
red*	18	11	+ 10 V
brn*	17	5	+ 10 V
red*	20	12	+ 10 V
gry*	21	12	+ 10 V
blk	23	7	+ 31 V
blu*	24	14	+ 31 V
blk*(brg) (blk*grn) (blk*brn) (blk*gry)	25	14	+ 31 V
	2		(Key)
	22		(Key)

A80 LOCATOR | A80 MASTER-CONTROL

HEAD CHANNEL SUPPLY CABLE 1.228.671

TLS 2000 SLAVE RACK

1.228.611
HEAD PLUG
CHANNEL
SUPPLY

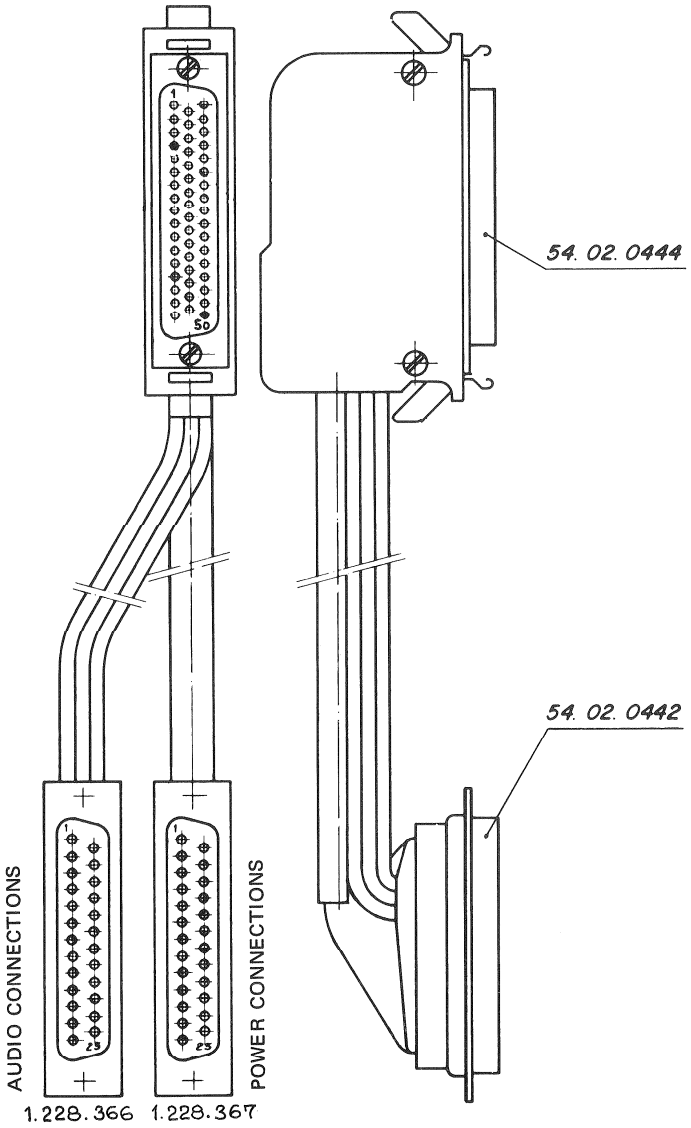

AUDIO/CODE CHANNEL SELECTION

"TO CODE
CHANNEL"

AMP female 54.02.0444		AMP female 54.02.0442 AUDIO CONN. Nr. 1	AMP female 54.02.0442 POWER CONN. Nr. 2	
Color	Pin Nr.	Pin Nr.	Pin Nr.	Sig. Name
yel	1	16		ERAHDSCR
unc	2	15		ERASEHD2
blu	3	3		ERASEHD1
yel	6	20		RECHDSCR
unc	7	19		RECHD2
blu	8	7		RECHD1
yel	14	12		REPRØSCR
unc	15	23		REPRØ 0.0
blu	16	11		REPRØ 2
red	17	24		REPRØ 1
wht	34		15	0–AC1
blu	35		2	AC1MØD
wht	36		16	0–AC2
org	37		3	AC2MØD
wht	38		5	0–BIAS
brn	39		6	YAC–BIAS
wht	40		7	YAC–ERAS
gry	41		18	0–ERAS
red	42		22	Y–RECMD
blu	CUT		CUT	
wht	43		10	S–LOWACH
grn	44		23	S–MUTEMD
red	45		19	0–BIAS
org	46		20	CCSUPVIS
	4			(Key)
	50			(Key)

AMP 54.02.0444
SHORTCIRCUIT BETWEEN:

18–19–20–21–5–22–23–24–25–9–26–10–27–11–28–12–29–13–30–31–32–33

AMP 54.02.0442 AUDIO CONN.
SHORTCIRCUIT BETWEEN:

1–14–4–17–5–18–8–21–9–22–13–25

AMP 54.02.0442 POWER CONN.
SHORTCIRCUIT BETWEEN:

1–14–4–17–11–24–12–25–13

A80 LOCATOR | A80 MASTER-CONTROL

A 80 AUDIO CHANNEL POWER CABLE 1.228.673

A/C CHANNEL SELECTION

TO AUDIO CHANNEL

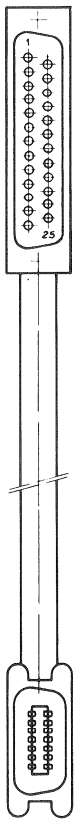

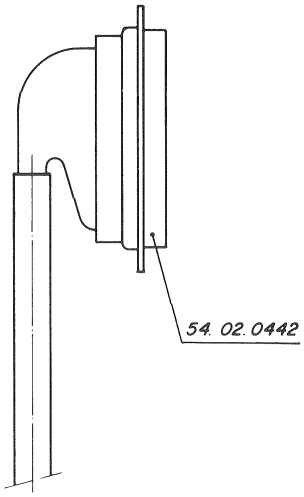

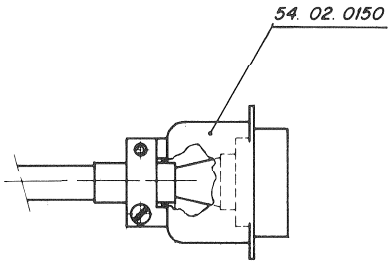

A80
AUDIO-
CHANNEL
AMPLIFIER
16

Micro Ribbon 54.02.0150		AMP female 54.02.0442	
Color	Pin Nr.	Pin Nr.	Sig. Name
wht	6	15	0–AC1
blu	13	2	AC1
wht	7	16	0–AC2
org	14	3	AC2
wht	9	5	0–BIAS
brn	8	6	YAC–BIAS
wht	1	7	YAC–ERAS
gry	2	18	0–ERAS
red	11	22	Y–RECMD
blu	CUT	CUT	
wht	3	10	S–LOWACH
grn	4	23	Y–MUTEMD
red	9	19	0–BIAS
org	2	20	0–ERAS

MICRO RIBBON 54.02.0150:
SHORTCIRCUIT BETWEEN PIN 2 AND 9

AMP 54.02.0442: CONNECTED TO GROUND
13–25–12–24–11–17–4–14–1

A80 LOCATOR | A80 MASTER-CONTROL

A80 TRANSFORMER POWER CABLE 1.228.675

A/C CHANNEL SELECTION

FROM TAPE DECK

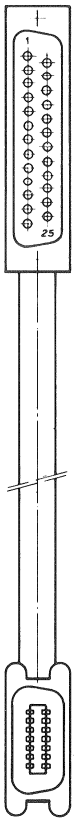

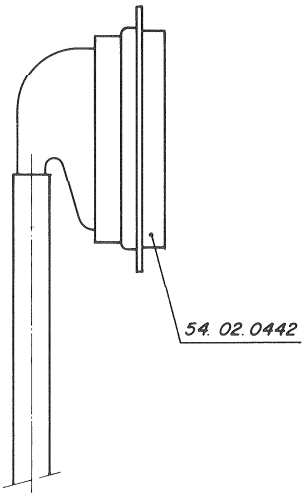

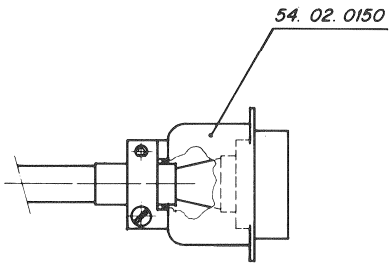

1.080.715
CHANNEL SUPPLY
TRANSFORMER

Micro Ribbon 54.02.0150		AMP female 54.02.0442	
Color	Pin Nr.	Pin Nr.	Sig. Name
wht blu	6 13	15 2	0–AC1 AC1
wht org	7 14	16 3	0–AC2 AC2
wht brn	9 8	5 6	0–BIAS YAC–BIAS
wht gry	1 2	7 18	YAC–ERAS 0–ERAS
red blu	11 CUT	22 CUT	Y–RECMD
wht grn	3 4	10 23	S–LOWACH Y–MUTEMD
red org	9 2	19 20	0–BIAS CCSUPVIS

AMP 54.02.0442: CONNECTED TO GROUND

13–25–12–24–11–17–4–14–1

A80 LOCATOR | A80 MASTER-CONTROL

A80 AUDIO CHANNEL CABLE 1.228.676

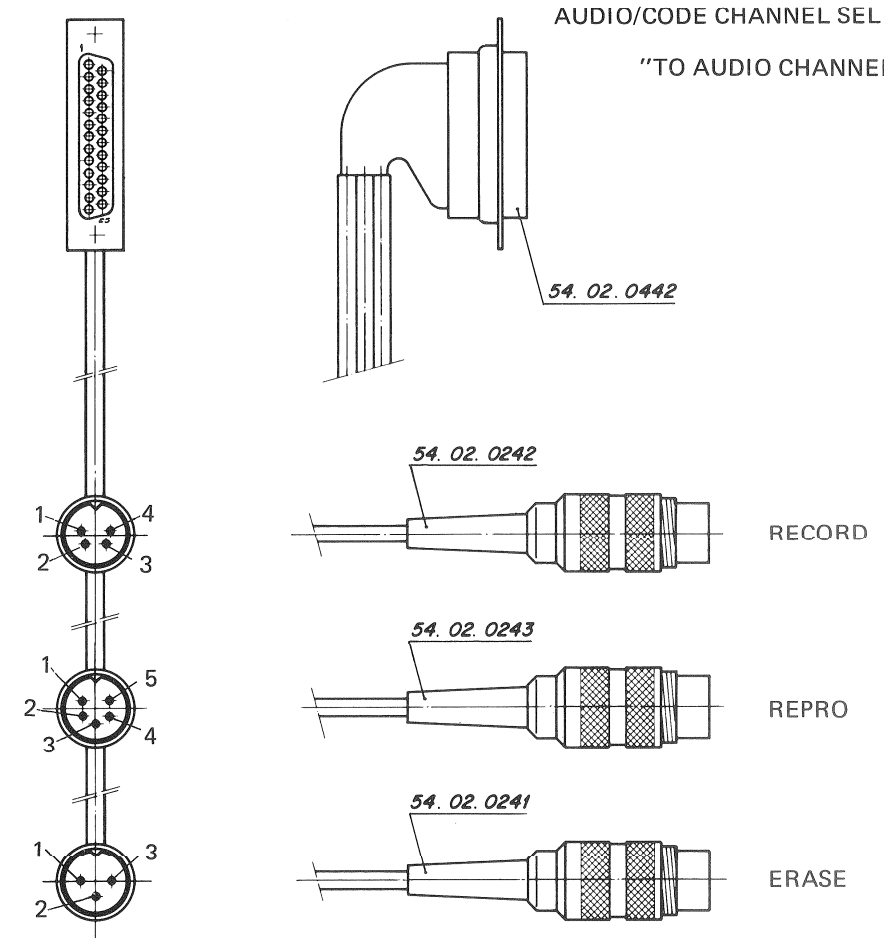

A80 AUDIO CHANNEL AMPLIFIER 16

	Plug 3 poles	Plug 4 poles	Plug 5 poles	AMP female	
	ERASE	RECORD	REPRO	"TO AUDIO CHANNEL"	
	54.02.0241	54.02.0242	54.02.0243	54.02.0442	
Color	Pin Nr.	Pin Nr.	Pin Nr.	Pin Nr.	Sig. Name
yel	1			16	ERAHDSCR
unc	3			3	ERASEHD2
blu	2			15	ERASEHD1
yel		1		20	RECHDSCR
unc		4		19	RECHD2
blu		3		7	RECHD1
yel			1	12	REPRØSCR
unc			5	23	REPRØ 0.0
blu			4	11	REPRØ2
red			3	24	REPRØ1

AMP 54.02.0442

SHORTCIRCUIT BETWEEN: 1–14–4–17–5–18
8–21–9–22–25–13

9.3

TAPE TRANSPORT CONTROL MODIFICATIONS A 80VU/TLS 2000 VERSION

A80 LOCATOR | A80 MASTER-CONTROL

BLOCK DIAGRAM

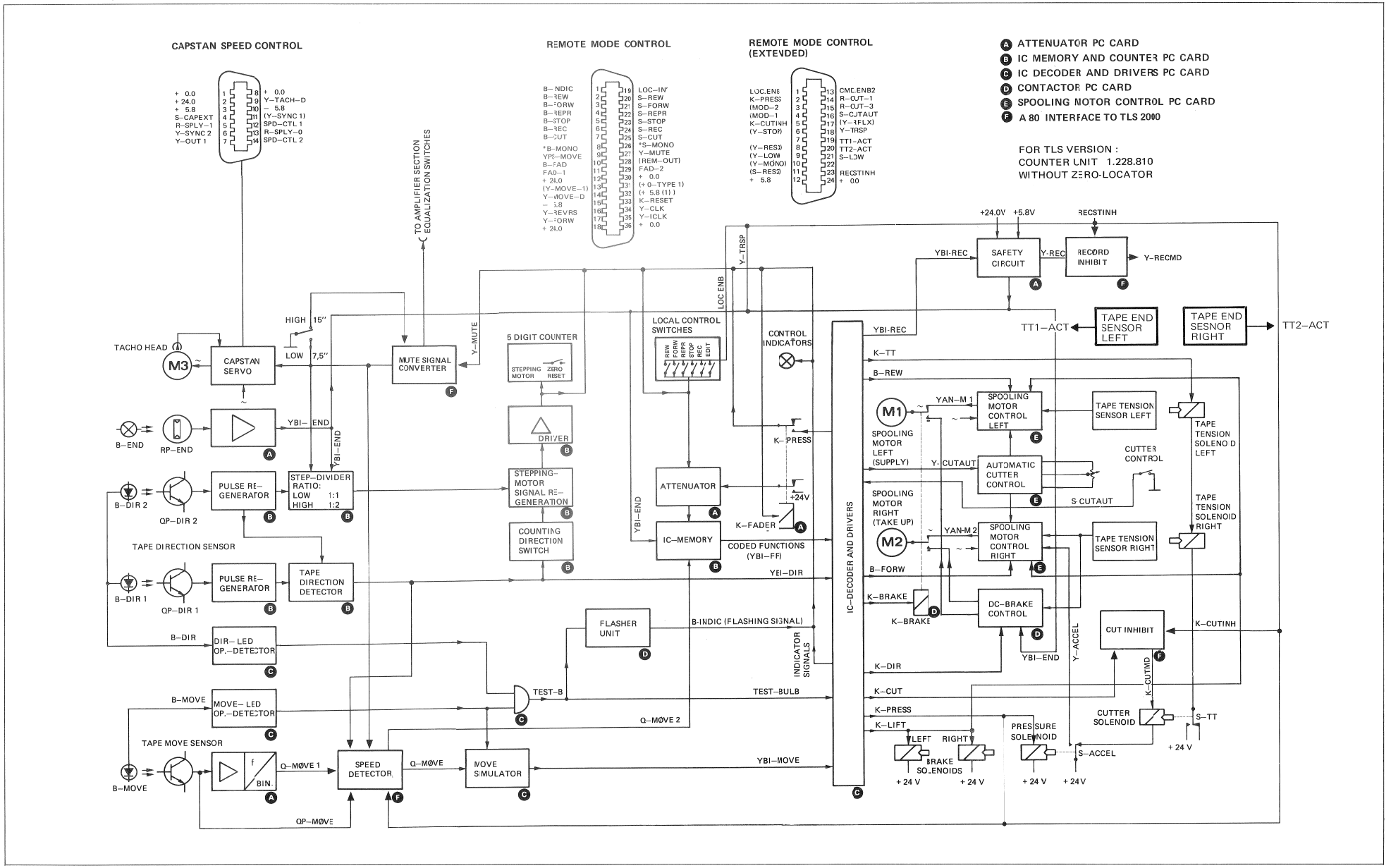

A80 LOCATOR | A80 MASTER-CONTROL

REMOTE CONTROL CONNECTORS

GR 22
REMOTE MODE CONTROL

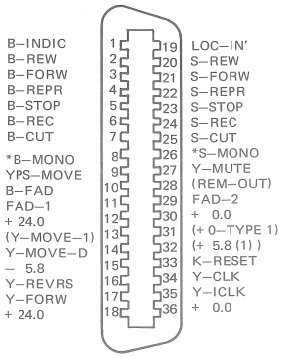

GR 24
REMOTE MODE CONTROL (EXTENDED)

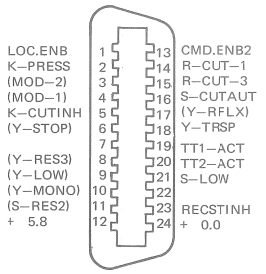

GR 21
CAPSTAN SPEED CONTROL

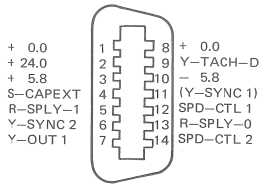

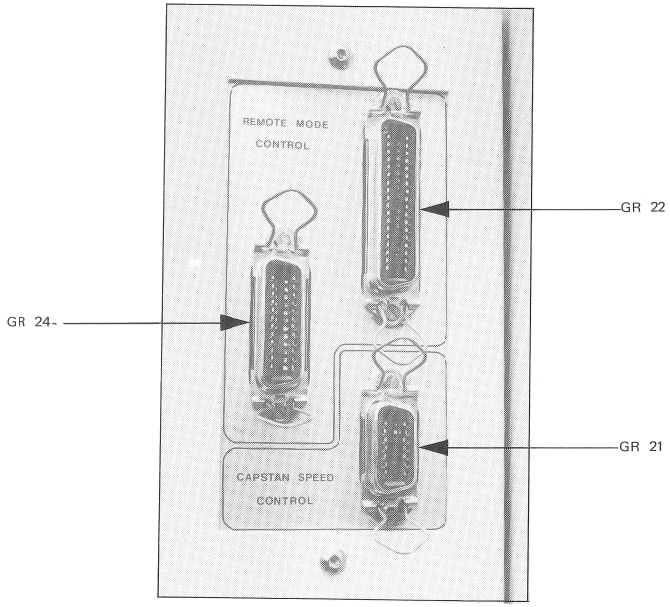

A80 LOCATOR | A80 MASTER-CONTROL

KICK START INHIBIT OPTION

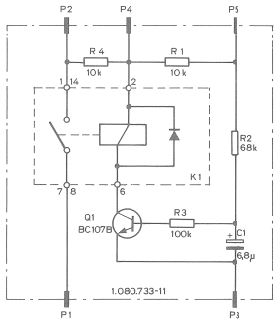

P1 : STOP = 24V
PLAY WITH AND WITHOUT TAPE = 0V
P2 : STOP + PLAY WITH TAPE = 24V
PLAY WITHOUT TAPE = 0V
P3 : 0V
P4 : 24V
P5 : PLAY WITH TAPE = 0V
PLAY WITHOUT TAPE = 24V

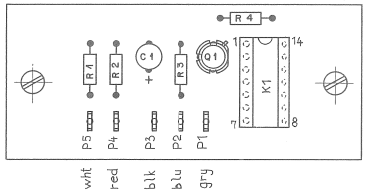

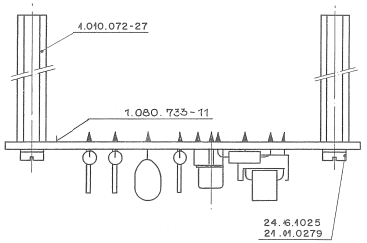

POS NO	PART NO	VALUE	SPECIFICATIONS	EQUIVALENT	MFR
C 01	59.10.6689	6.8 U	-20% 35V TA		
K 01	56.02.1004	24 V=	10W 1*A DIL 14		
Q 01	50.03.0408	BC 107 B	NPN		
R 01	57.02.5103	10 k	10% .25W CMA		
R 02	57.02.5683	68 k			
R 03	57.02.5104	100 k			
R 04	57.02.5103	10 k			

			2.2.78	Wo/gc
			DATE	NAME
STUDER	Kickstart Inhibit	1.080.733		PAGE 1 of 1

A80 LOCATOR | A80 MASTER-CONTROL

CAPSTAN CABLE 1.228.674

TLS 2000 SLAVE RACK
1.228.605
CAPSTAN SPEED
CONTROL A80

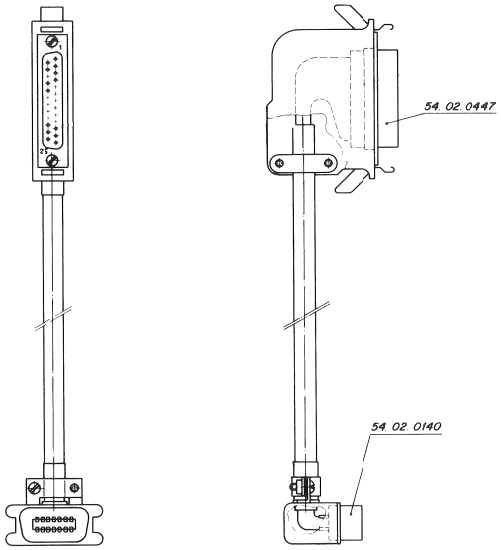

A80 SLAVE
GR 21
CAPSTAN SPEED
CONTROL

	Micro Ribbon 54.02.0140	AMP 54.02.0447	
Color	Pin Nr.	Pin Nr.	Sig. Name
wht	1	1	+0.0CAP1
blu	2	2	+24CAP1
wht	3	14	+5.8CAP1
org	4	23	S-CAPEXT
wht	5	17	R-SPLY-1
grn	6	12	Y-SYNC2
wht	7	4	Y-ØUT1
brn	8	13	+0.0CAP2
wht	9	5	Y-TACH-D
gry	10	15	−5.8CAP1
red	11	11	Y-SYNC1
blu	12	24	SPD-CTL1
red	13	16	R-SPLY-0
org	14	25	SPD-CTL2
		3	(Key)
		22	(Key)

A80 LOCATOR | A80 MASTER-CONTROL

REMOTE MODE CABLE 1.228.672

	A80 SLAVE		TLS 2000 SLAVE RACK		
	Micro Ribbon 36-pol. 54.02.0143	Micro Ribbon 24-pol. 54.02.0159	AMP female 50-pol. 54.02.0444	AMP female 37-pol. 54.02.0443	
Color	Pin Nr.	Pin Nr.	Pin Nr.	Pin Nr.	Sig. Name
					B-INDIC
wht	2		3		B-REW
blu	3		4		B-FØRW
wht	4		5		B-REPR
org	5		6		B-STØP
wht	6		7		B-REC
grn	7		8		B-CUT
wht	8		9		B-MØNØ
brn	9		29		YPS-MØVE
wht	10		10		B-FAD
gry	11		43		FAD-1
red/blu	12		26		+24 MC2
red	13		27		Y-MØVE-1
org	14		28		Y-MØVE-0
red/grn	15		17		–5.8 MC1
red	16		13		Y-REVRS
brn	17		14		Y-FØRW
red/grn	18		15		+24 MC1
					LØC-IN'
blk	20		36		S-REW
blu	21		37		S-FØRW
blk	22		38		S-REPR
org	23		39		S-STØP
blk	24		40		S-REC
grn	25		41		S-CUT
blk	26		42		S-MØNØ (R)
brn	27		24		Y-MUTE
					REM-ØUT
blk	29		44		FAD-2
gry (yel/blu)	30		11		+0.0 MC2
(yel/org) yel	31		33		+0-TYPE (1)
grn	33		45		K-RESET
yel/brn	34		46		Y-CLK
yel	35		47		Y-ICLK
gry (vio/blu)	36		50		+0.0 MC4
	21 pairs double-core (64.03.0137)				
			2		(Key)
			48		(Key)
wht/blu*		1	35		LØC-ENB
wht/org*		2	22		K-PRESS
wht §		3		5	MØD-2
blu §		4		4	MØD-1
gry §		5		25	K-CUTINH
blk §		6		16	Y-STØP
grn §		8		6	Y-RES 3
wht/grn*		9	21		Y-LØW
wht/brn*		10	25		Y-MØNØ
yel §		11		24	S-RES 2
red § brn §		12		18	+5.8 EMC'
wht/gry*		13	18		CMD.ENB2
vio § shielded		14		22	R-CUT-1
unc § shielded		15		23	R-CUT-3
org §		16		21	S-CUTAU'
wht blu §		17		33	Y-RFLX
wht red §		18		34	Y-TRSP
wht yel §		19		35	TT1-ACT
wht grn §		20		36	TT2-ACT
red/blu*		21	20		S-LØW
red/org*		23	23		RECSTINH
wht blk §		24		1	+0.0 EMC'
shield		cut-off		1	
shield		cut-off		1	
				3	(Key)
				37	(Key)

* 7 pairs double-core (64.03.0140)
§ cable no 64.03.0139

TLS 2000 SLAVE RACK

1.228.607 REMOTE MODE CONTROL A80

1.228.606 EXTENDED MODE CONTROL A80

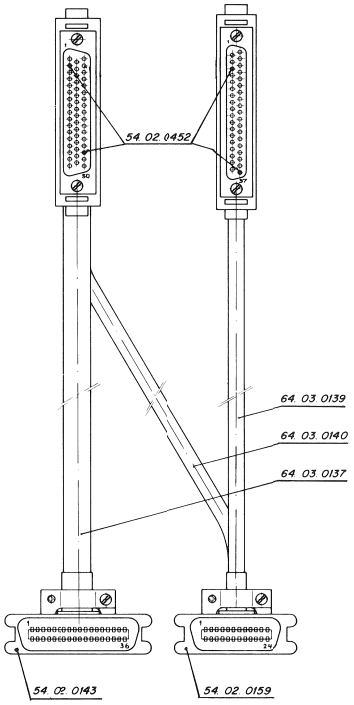

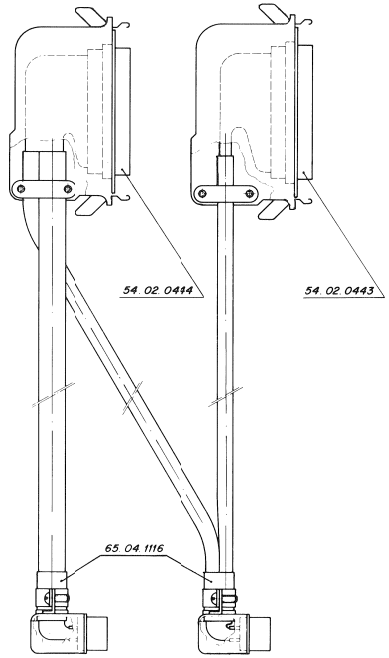

A80 SLAVE GR 22 REMOTE MODE CONTROL

GR 24 REMOTE MODE CONTROL

A80 LOCATOR | A80 MASTER-CONTROL

TAPE END SENSOR PCB 1.080.144–00

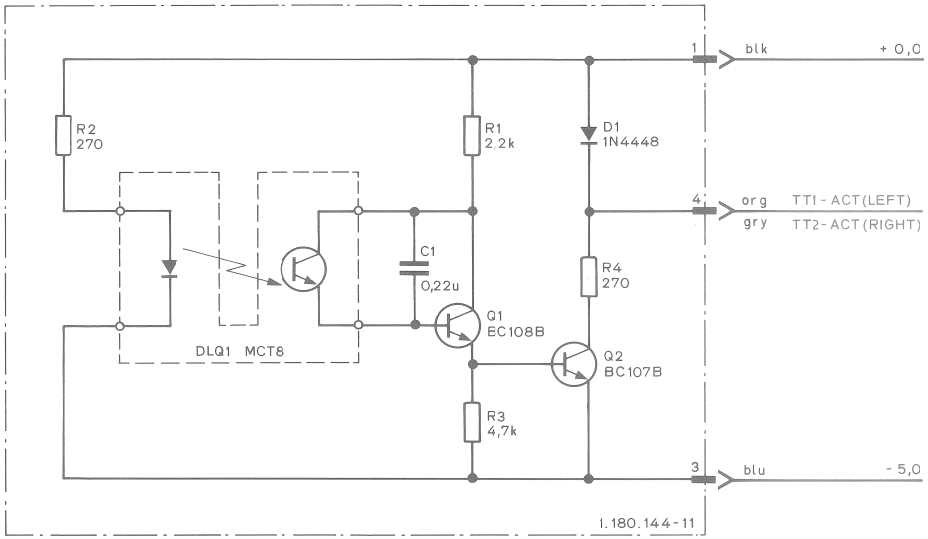

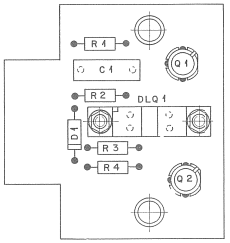

TAPE END SENSOR PCB LEFT
1.080.144–00

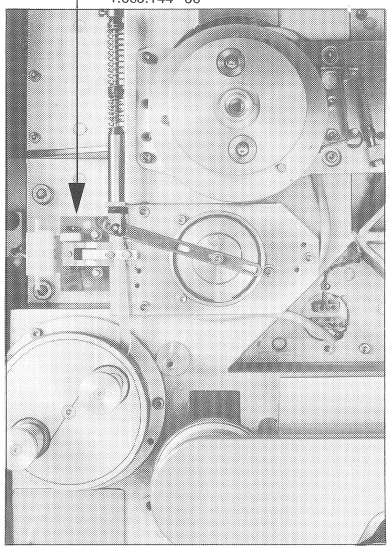

TAPE END SENSOR PCB RIGHT
1.080.144–00

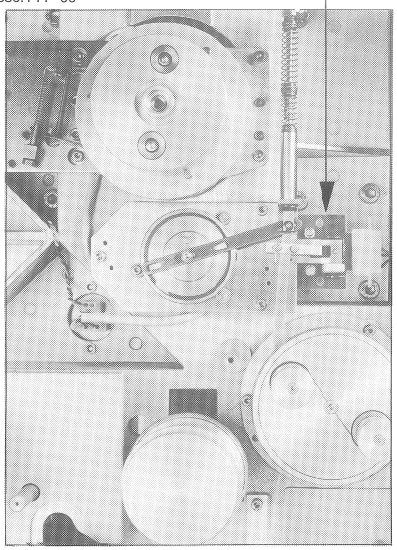

IND	POS NO	PART NO	VALUE	SPECIFICATIONS/EQUIVALENT	MFI
2 3)	C 01	59.11.1224	0,22 U	20% 100V PPTP	
	D 01	50.34.0125	1N4448	Si	
	DLQ 1	50.34.2106	MCT 8	Slotted optical switch	
	Q 01	50.33.0409	BC108B	NPN	
1)	Q 02	50.03.0408	BC107B	NPN	
	R 01	57.11.4222	2,2 k	5% .25W CF	
	R 02	57.11.4271	270		
	R 03	57.11.4472	4,7 k		
	R 04	57.11.4271	270		

IND	DATE	NAME
④		
③	4.1.79	Ba/
②	6.10.78	Ba/
①	8.2.77	Ya/
○	29.6.76	Ba/gv

STUDER | TAPE END SENSOR | 1.080.144 | PAGE 1 of 1

A80 LOCATOR | A80 MASTER-CONTROL

CONTROL UNIT CARD CHASSIS A 80VU/TLS 2000

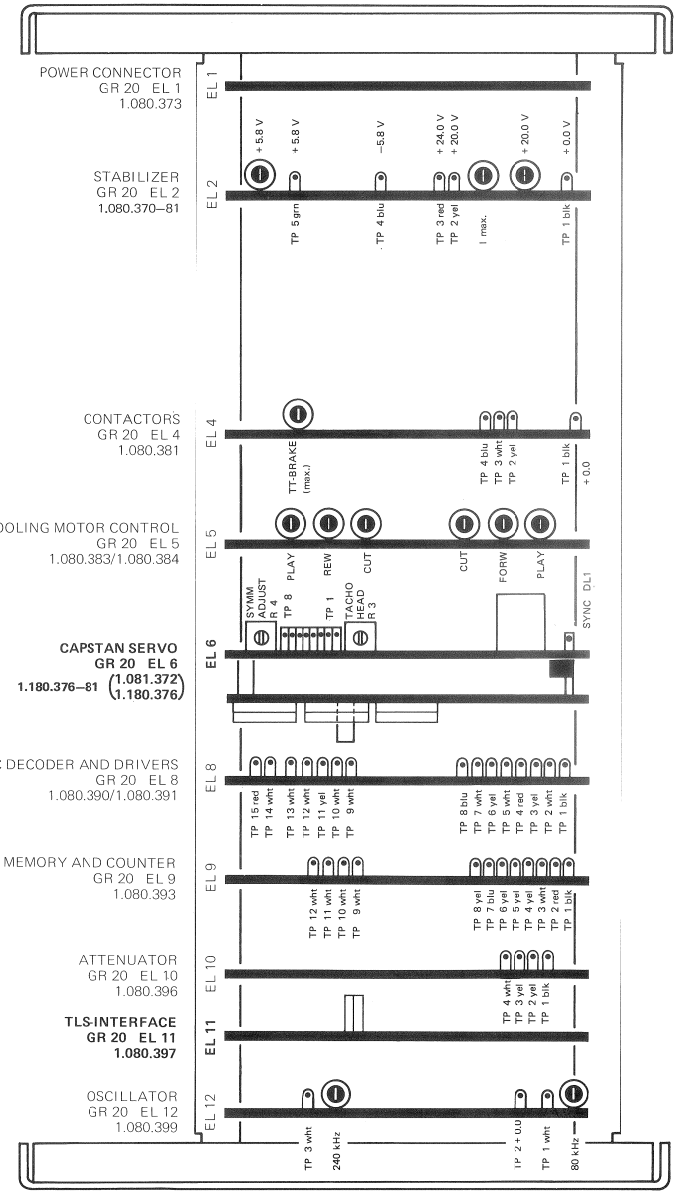

	A80 VU MK II + III WITHOUT TLS2000	A80 VU MK II + III/TLS2000 MASTER CONTROL	A80 VU MK II + III/TLS2000 MASTER CONTROL + DELAY
CAPSTAN SERVO PCB	1.080.372/374	1.180.376 } 1.180.376–81	1.180.376 } 1.180.376–81
ADDITIONAL CAPSTAN PCB	———	1.081.372 }	1.081.372 }
INTERFACE PCB 7.5/15", 15/30"	———	1.080.397/398	1.080.397/398
TAPE END SENSOR PCB	———	1.080.144	1.080.144
COUNTER UNIT	1.228.830	1.228.810 (WITHOUT 0-LOC)	1.228.810 (WITHOUT 0-LOC)
HF-DRIVER AMPLIFIER PCB	1.080.801-81 INCLUDED	1.081.801–00 INCLUDED	1.081.801–81 INCLUDED
– BIAS DRIVER PCB	1.080.771	1.080.771	1.080.771 AND
– INVERTER PCB	———	———	1.081.804
RECORD DRIVER AMPLIFIER PCB (EARLIER VERSION/CODE CHANNEL ONLY)	———	1.080.789	———
SWITCHING CODE PCB	1.081.815 (OR OTHERS)	1.081.815 (INDISPENSABLE)	1.081.815 (INDISPENSABLE)
CONTROL EQUIPMENT PCB	1.080.803	1.080.798	1.081.803

A80 LOCATOR | A80 MASTER-CONTROL

CAPSTAN SERVO PCB 1.180.376

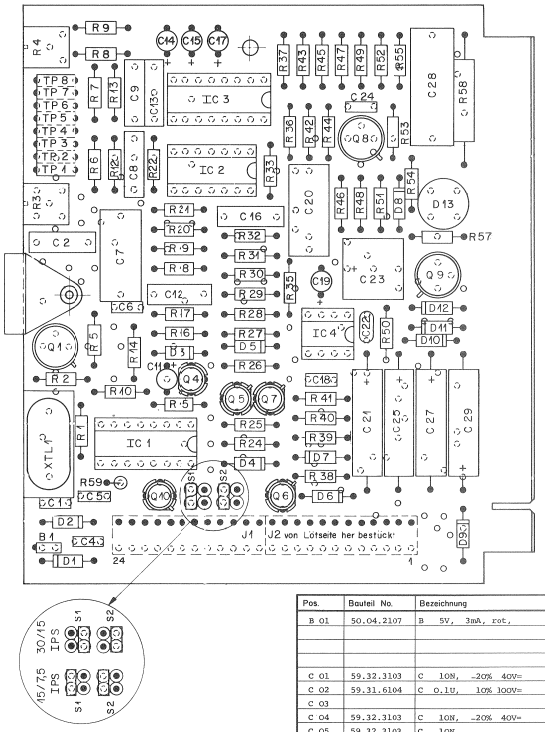

Pos.	Bauteil No.	Bezeichnung	Stk.	Bemerkung
B 01	50.04.2107	B 5V, 3mA, rot, LED	1	
C 01	59.32.3103	C 10N, -20% 40V= KER	1	
C 02	59.31.6104	C 0.1U, 10% 100V= MPETP	1	
C 03				
C 04	59.32.3103	C 10N, -20% 40V= KER	1	
C 05	59.32.3103	C 10N,	1	
C 06	59.32.1471	C 470P, 10% 500V=	1	
C 07	59.31.6105	C 1U, 100V= MPETP	1	
C 08	59.31.6223	C 22N,	1	
C 09	59.31.6223	C 22N,	1	
C 10				
C 11	59.36.5319	C 3.3U, -20% 35V= TA	1	
C 12	59.31.6224	C 0.22U, 10% 100V= MPETP	1	
C 13	59.31.6223	C 22N,	1	
C 14	59.36.4479	C 4.7U, 20% 25V= TA	1	
C 15	59.36.4109	C 1U	1	
C 16	59.31.9682	C 6.8N 1% 160V= PETP	1	
C 17	59.36.4109	C 1U 20% 25V= TA	1	
C 18	59.32.3103	C 10N -20% 40V= KER	1	
C 19	59.36.4109	C 1U 20% 25V= TA	1	
C 20	59.31.6105	C 1U 10% 100V= MPETP	1	
C 21	59.25.4470	C 47U -10% 25V= EL	1	
C 22	59.32.0101	C 100P 20% 500V= KER	1	
C 23	59.10.2331	C 330U 6.3V= TA	1	
C 24	59.32.3103	C 10N -20% 40V= KER	1	
C 25	59.25.4470	C 47U -10% 25V= EL	1	
C 26				
C 27	59.25.4470	C 47U -10% 25V= EL	1	
C 28	59.99.0450	C 0.47U 10% 150V MP	1	
C 29	59.25.4470	C 47U -10% 25V= EL	1	

Aenderungen ① 11.1.77 ② 27.11.80 ③ ④ ⑤

STUDER REGENSDORF ZÜRICH — Positionsliste — Capstan Servo

Erstellt: 29.4.76 Siki/gv
Geprüft:
Blatt: 1 Blätter: 5

Kopie für: Ersatz für: Ersetzt durch: 1.180.376

Pos.	Bauteil No.	Bezeichnung	Stk.	Bemerkung
D 01	50.04.0125	D 1 N 4448 SI	1	
D 02	50.04.0122	D 1 N 4001	1	
D 03	50.04.0125	D 1 N 4448 SI	1	
D 04	50.04.0125	D 1 N 4448	1	
D 05	50.04.0125	D 1 N 4448	1	
D 06	50.04.0125	D 1 N 4448	1	
D 07	50.04.0125	D 1 N 4448	1	
D 08	50.04.0125	D 1 N 4448	1	
D 09	50.04.1119	D 15V, 5%, .4W Z	1	
D 10	50.04.0125	D 1 N 4448 SI	1	
D 11	50.04.1117	D 12V, 5%, .4W Z	1	
D 12	50.04.0125	D 1 N 4448 SI	1	
D 13	70.01.0223	D Gleichrichter BY159/400 SI	1	
IC 1	50.05.0157	IC TDA 1000	1	
IC 2	50.05.0199	IC LM324N DIP-14 LIN	1	
IC 3	50.05.0152	IC TCA 561	1	
IC 4	50.05.0158	IC NE 555V TIMER	1	
J 01	54.01.0215	Buchsenleiste 12-Pol.	1	
J 02	54.01.0215	Buchsenleiste 12-Pol.	1	
MP 1	28.21.1360	Rohrniete	1	
MP 2	1.010.0031.33	Griff	1	
MP 3	1.180.376.01	Nummernschild	1	
MP 4	1.180.376.11	Capstan-Printplatte	1	
MP 5	1.081.376.02	Isolierplatte	1	

Aenderungen ① 11.1.77 ② 27.11.80 ③ ④ ⑤

STUDER REGENSDORF ZÜRICH — Positionsliste — Capstan Servo

Erstellt: 29.4.76 Siki/gv
Geprüft:
Blatt: 2 Blätter: 5

Kopie für: Ersatz für: Ersetzt durch: 1.180.376

Pos.	Bauteil No.	Bezeichnung	Stk.	Bemerkung
R 58	57.56.4100	R 10, 12% 5W DR	1	
R 59	57.02.4102	R 1K, 5% .25W CM	1	
TP1....8	54.01.0306	Buchsenleiste 8-Pol.	1	
XD 1	50.03.5918	Unterlage (TO5)	4	
XIC 1	53.03.0168	XIC DIL 16-Pol	2	
XIC 2	53.03.0167	XIC DIL 14-Pol	1	
XIC 3	53.03.0166	XIC DIL 8-Pol	1	
XQ 1	50.03.5921	XQ Spreizsockel TO18/TO5	4	
XTL 1	89.01.0370	XTL Quarz 1.633400 MHz	1	

Aenderungen ① 11.1.77 ② 27.11.80 ③ ④ ⑤

STUDER REGENSDORF ZÜRICH — Positionsliste — Capstan Servo

Erstellt: 29.4.76 Siki/gv
Geprüft:
Blatt: 5 Blätter: 5

Kopie für: Ersatz für: Ersetzt durch: 1.180.376

Pos.	Bauteil No.	Bezeichnung	Stk.	Bemerkung
Q 01	50.03.0316	Q BC 140-16 NPN	1	
Q 02				
Q 03				
Q 04	50.03.0409	Q BC 108 B NPN	1	
Q 05	50.03.0409	Q BC 108 B	1	
Q 06	50.03.0408	Q BC 107 B	1	
Q 07	50.03.0409	Q BC 108 B	1	
Q 08	50.03.0316	Q BC 140-16	1	
Q 09	50.03.0316	Q BC 140-16	1	
Q 10	50.03.0409	Q BC 108 B	1	
R 01	57.41.4103	R 10K, 5%, .25W CSCH	1	
R 02	57.41.4332	R 3.3K,	1	
R 03	58.01.7502	R 5K, 10% .5W PMG	1	
R 04	58.01.7501	R 500,	1	
R 05	57.41.4222	R 2.2K, 5% .25W CSCH	1	
R 06	57.41.4103	R 10K,	1	
R 07	57.41.4223	R 22K,	1	
R 08	57.41.4221	R 220,	1	①②
R 09	57.41.4561	R 560,	1	①②
R 10	57.41.4102	R 1K,	1	
R 11				
R 12	57.41.4221	R 220,	1	
R 13	57.41.4103	R 10K,	1	
R 14	57.41.4683	R 68K,	1	
R 15	57.41.4681	R 680,	1	
R 16	57.41.4101	R 100,	1	
R 17	57.41.4473	R 47K,	1	
R 18	57.02.4185	R 1.8M, 5% CM	1	
R 19	57.41.4103	R 10K, CSCH	1	
R 20	57.41.4103	R 10K,	1	
R 21	57.41.4334	R 330K,	1	
R 22	57.41.4124	R 120K,	1	

Aenderungen ① 11.1.77 ② 27.11.80 ③ ④ ⑤

STUDER REGENSDORF ZÜRICH — Positionsliste — Capstan Servo

Erstellt: 29.4.76 Siki/gv
Geprüft:
Blatt: 3 Blätter: 5

Kopie für: Ersatz für: Ersetzt durch: 1.180.376

Pos.	Bauteil No.	Bezeichnung	Stk.	Bemerkung
R 23				
R 24	57.41.4333	R 33K, 5%, .25W CSCH	1	①
R 25	57.41.4472	R 4.7K,	1	
R 26	57.41.4223	R 22K,	1	
R 27	57.41.4822	R 8.2K,	1	
R 28	57.41.4822	R 8.2K,	1	
R 29	57.41.4472	R 4.7K,	1	
R 30	57.41.4103	R 10K,	1	
R 31	57.41.4103	R 10K,	1	
R 32	57.41.4103	R 10K,	1	
R 33	57.41.4391	R 390,	1	
R 34				
R 35	57.41.4472	R 4.7K,	1	
R 36	57.41.4272	R 2.7K,	1	
R 37	57.41.4102	R 1K,	1	
R 38	57.41.4223	R 22K,	1	
R 39	57.41.4334	R 330K,	1	
R 40	57.41.4103	R 10K,	1	
R 41	57.41.4181	R 180,	1	
R 42	57.41.4472	R 4.7K,	1	
R 43	57.41.4101	R 100,	1	
R 44	57.41.4332	R 3.3K,	1	
R 45	57.41.4271	R 270,	1	
R 46	57.41.4473	R 47K,	1	
R 47	57.41.4102	R 1K,	1	
R 48	57.41.4103	R 10K,	1	
R 49	57.41.4102	R 1K,	1	
R 50	57.41.4152	R 1.5K,	1	
R 51	57.41.4821	R 820,	1	
R 52	57.41.4105	R 1M,	1	
R 53	57.41.4100	R 10,	1	
R 54	57.41.4473	R 47K,	1	
R 55	57.41.4333	R 33K,	1	
R 56				
R 57	57.41.4473	R 47K,	1	①

Aenderungen ① 11.1.77 ② 27.11.80 ③ ④ ⑤

STUDER REGENSDORF ZÜRICH — Positionsliste — Capstan Servo

Erstellt: 29.4.76 Siki/gv
Geprüft:
Blatt: 4 Blätter: 5

Kopie für: Ersatz für: Ersetzt durch: 1.180.376

A80 LOCATOR | A80 MASTER-CONTROL

CAPSTAN SERVO PCB 1.180.376

CAPSTAN SERVO UNIT 1.180.376–81
CONSIST OF :
1.180.376–00 CAPSTAN SERVO PCB AND
1.081.372 ADDITIONAL CAPSTAN PCB

ADDITIONAL CAPSTAN PCB

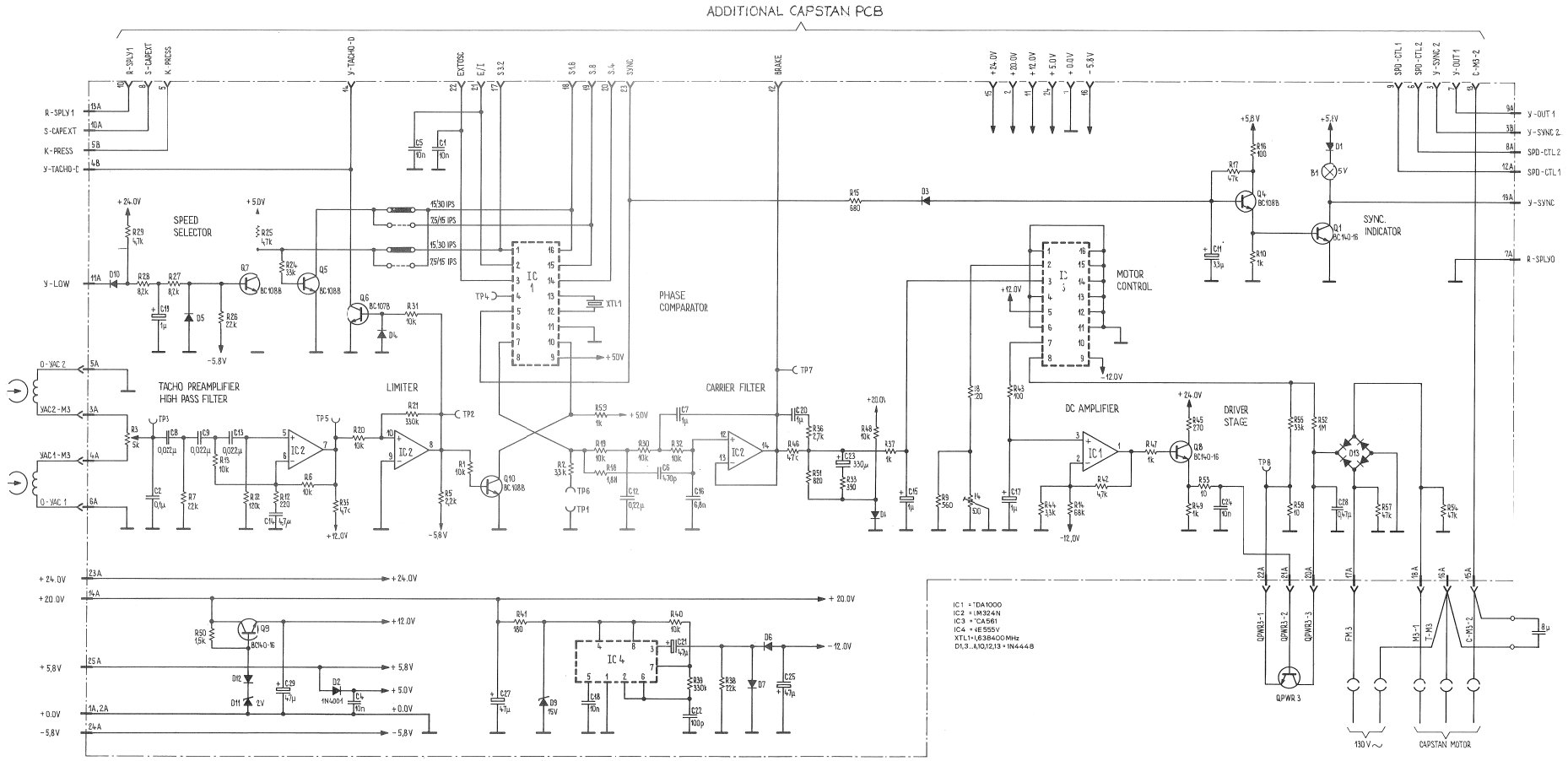

A80 LOCATOR | A80 MASTER-CONTROL

ADDITIONAL CAPSTAN PCB 1.081.372

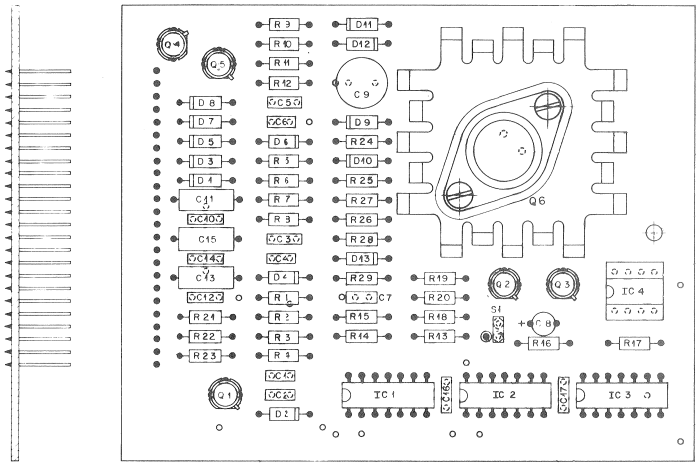

Pos.	Bauteil No.	Bezeichnung	Stk.	Bemerkung
C 01	59.32.3103	C 10N ±20% 50V~ KER	1	
C 02	59.32.3103	C 10N	1	
C 03	59.32.3103	C 10N	1	
C 04	59.32.3103	C 10N	1	
C 05	59.32.3103	C 10N	1	
C 06	59.32.3103	C 10N	1	
1) C 07	59.34.4820	C 82P	1	
C 08	59.30.6689	C 6,8µ 30V~ TA	1	
C 09	59.30.4101	C 100µ 16V~	1	
C 10	59.99.0205	C 68N 63V~ KER	1	
C 11	59.99.0201	C 6,8µ 20% 35V~ TA	1	
C 12	59.99.0205	C 68N 63V~ KER	1	
C 13	59.99.0202	C 39µ 10V~	1	
C 14	59.99.0205	C 68N 63V~	1	
C 15	59.99.0202	C 39µ 10V~	1	
C 16	59.99.0205	C 68N 63V~	1	
C 17	59.99.0205	C 68N	1	
D 01	50.04.0125	D 1 N 4448	1	
D 02	50.04.1107	D ZE 3,3V	1	
D 03	50.04.0125	D 1 N 4448	1	
D 04	50.04.1107	D ZE 3,3V	1	
D 05	50.04.0125	D 1 N 4448	1	
D 06	50.04.1107	D ZE 3,3V	1	
D 07	50.04.1505	D ZE 30V 5% 1,3W	1	
D 08	50.04.1505	D ZE 30V 5% 1,3W	1	
D 09	50.04.0125	D 1N4446	1	
D 10	50.04.1107	D ZE 3,3V	1	
D 11	50.04.0125	D 1 N 4448	1	
D 12	50.04.0125	D *	1	
D 13	50.04.0105	D 1 N 4004 400V~	1	
IC 1	50.06.0132	IC 74 LS 132	1	

Aenderungen ① 10.5.76 ② ③ ④ ⑤

STUDER REGENSDORF ZÜRICH — Positionsliste — Capstan-Zusatzprint TLS 2000

Erstellt 30.10.75 Schum/gv | Geprüft: | Blatt: 1 Blätter: 3

Kopie für: | Ersatz für: | Ersetzt durch:

1.081 372

Pos.	Bauteil No.	Bezeichnung	Stk.	Bemerkung
IC 2	50.06.0011	IC 74 LS 14	1	
IC 3	50.05.0198	IC 9601	1	
IC 4	50.05.0201	IC 75463	1	
Q 1	50.03.0408	Q BC 107 B	1	
Q 2	50.03.0408	Q BC 107 B	1	
Q 3	50.03.0408	Q BC 107 B	1	
Q 4	50.03.0408	Q BC 107 B	1	
Q 5	50.03.0408	Q BC 107 B	1	
Q 6	50.03.0471	Q 2 SC 782	1	
R 01	57.02.5331	R 3,3K 10% 0,25W CMA	1	
R 02	57.02.5221	R 2,2K	1	
R 03	57.02.5221	R 2,2K	1	
R 04	57.02.5471	R 4,7K	1	
R 05	57.02.5331	R 3,3K	1	
R 06	57.02.5221	R 2,2K	1	
R 07	57.02.5221	R 2,2K	1	
R 08	57.02.5471	R 4,7K	1	
R 09	57.02.5331	R 3,3K	1	
R 10	57.02.5221	R 2,2K	1	
R 11	57.02.5221	R 2,2K	1	
R 12	57.02.5471	R 4,7K	1	
R 13	57.02.5101	R 1 K	1	
R 14	57.02.5101	R 1 K	1	
R 15	57.02.5271	R 270	1	
R 16	57.02.5221	R 22 K	1	
R 17	57.02.5101	R 1 K	1	
R 18	57.02.5151	R 1,5K	1	
R 19	57.02.5101	R 1 K	1	
R 20	57.02.5101	R 1 K	1	
R 21	57.02.5151	R 1,5K	1	
R 22	57.02.5101	R 1 K	1	

Aenderungen ① ② ③ ④ ⑤

STUDER REGENSDORF ZÜRICH — Positionsliste — Capstn-Zusatzprint- TLS 200

Erstellt 30.10.75 Schum/gv | Geprüft: | Blatt: 2 Blätter: 3

Kopie für: | Ersatz für: | Ersetzt durch:

1.081.372

Pos.	Bauteil No.	Bezeichnung	Stk.	Bemerkung
R 23	57.02.5102	R 1I 10% 0,25W CMA	1	
R 24	57.02.5104	R 10K	1	
R 25	57.02.5123	R 12 K	1	
R 26	57.02.5102	R 1 K	1	
R 27	57.02.5153	R 15 K	1	
R 28	57.02.5102	R 1 K	1	
R 29	57.02.5569	R 5,(	1	
S 1	54.01.0021	S Brückenstecker	1	
S 2	54.01.0020	S Kontaktstift	3	
XIC	53.03.0166	XIC DIP 8	1	
XIC	53.03.0167	XIC DIP 14	3	
XQ	50.03.9920	XQ Transistor-Unterlage	1	
TP1-24	54.01.0322	TP 24-Pol. Steckerleiste	2	

Aenderungen ① ② ③ ④ ⑤

STUDER REGENSDORF ZÜRICH — Positionsliste — Capstan-Zusatzprint TLS 2000

Erstellt 30.10.75 Schum/gv | Geprüft: | Blatt: 3 Blätter: 3

Kopie für: | Ersatz für: | Ersetzt durch:

1.081.372

A80 LOCATOR | A80 MASTER-CONTROL

ADDITIONAL CAPSTAN PCB 1.081.372

CAPSTAN SERVO UNIT 1.180.376–81
CONSIST OF :
1.180.376–00 CAPSTAN SERVO PCB AND
1.081.372 ADDITIONAL CAPSTAN PCB

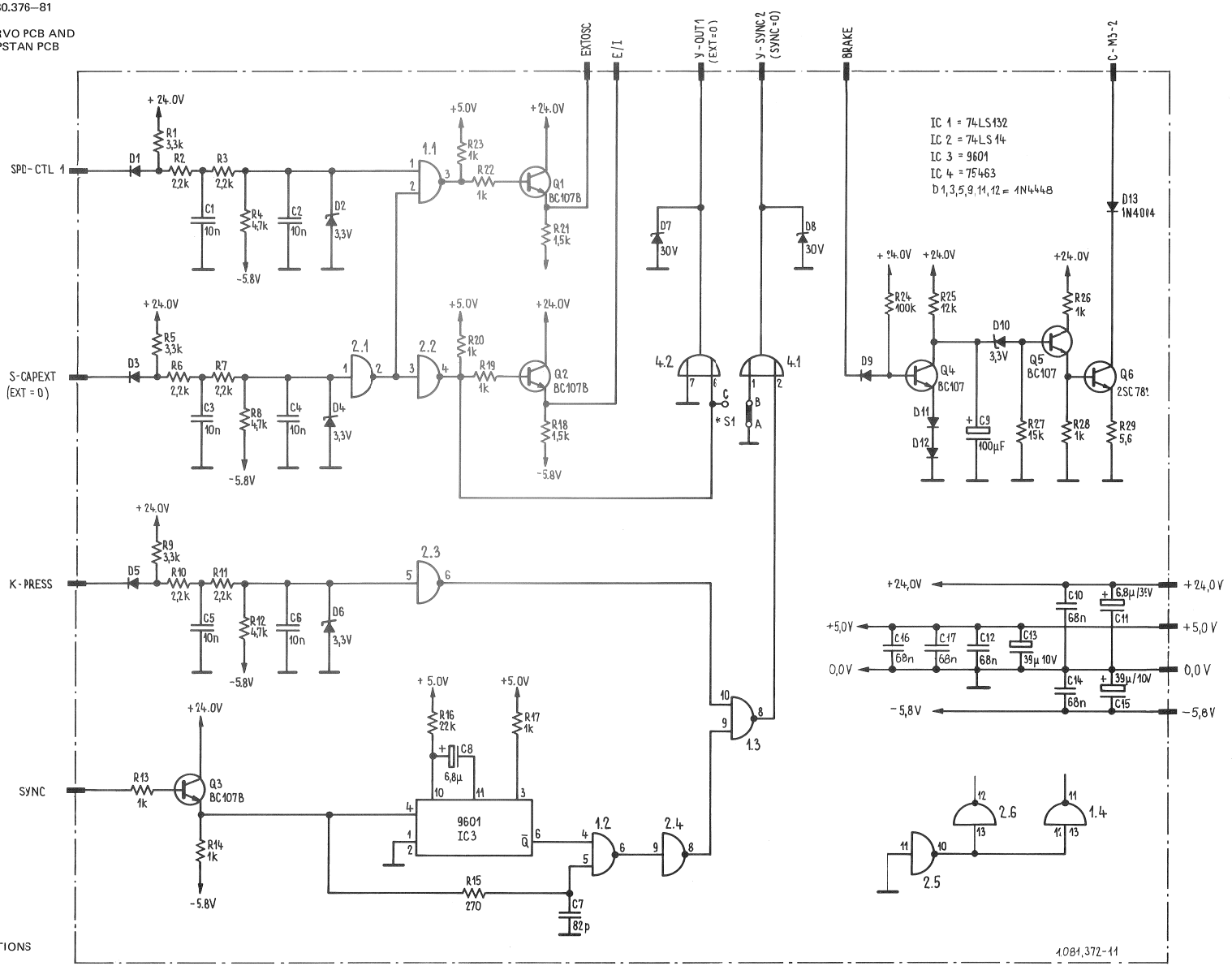

* DESCRIPTION OF S1 POSITIONS
SEE SECTION 9/24

CAPSTAN SERVO PCB 1.180.376 / ADDITIONAL CAPSTAN PCB 1.081.372

CAPSTAN SERVO 1.180.376 GR 20 EL 6
Die Bandmaschine A80/VU-TLS 2000 ist mit einem Capstan Servo 1.180.376 ausgerüstet.

TONMOTOR-REGELUNG
Die Tonmotor-Einheit enthält zwei um 180 Grad versetzte Abtastköpfe. Diese Anordnung dient zur Kompensation von drehzahlabhängigen Tonhöhenschwankungen von 6,66 bzw. 13,33 Hz, welche durch minimale Exzentrizität oder Teilungsfehler im Nutenraster (verbleibende Ungenauigkeiten innerhalb sehr enger Bearbeitungstoleranzen) hervorgerufen werden können.

ABGLEICH:
Zuerst wird der Abtastkopf auf der Steckerseite eingestellt. Beide Nylonschrauben lösen und den Abtastkopf so einstellen, dass ein Luftspalt von 0,5mm verbleibt. (Ein zu schmaler Luftspalt verursacht mechanische Pfeifstörungen).

Den Einstell-Regler R3 (TACHO HEAD) in die Mittelstellung drehen. An die Ausgänge der Abtastköpfe ein Zweistrahl-Oszilloskop anschliessen. (Steckerleiste Capstan Servo 1.180.376, Anschlussstifte 3A/5A bzw. 4A/6A)
Bei der niedrigen nominellen Bandgeschwindigkeit soll das Tacho-Signal mindestens 50mV effektiv (ca. 150mV Spitze-Spitze) betragen. Bei zu geringem Signal ist der Luftspalt zu verkleinern. Den zweiten Abtastkopf anschliessend auf gleiche Amplitude und identische Phasenlagen einstellen.

Wichtig:
Das Verhältnis von Tacho-Signal zu überlagerter Brummspannung soll mindestens 20dB (10 : 1) betragen.

Volle Spule auflegen und Band einfahren. An den Testpunkten TP1 und TP6 ein Oszilloskop anschliessen.
Auf die höhere Bandgeschwindigkeit schalten und Taste PLAY drücken. Den Einstell-Regler R4, SYMM. ADJ., bis zum Anschlag gegen Uhrzeigerrichtung, danach langsam in Uhrzeigerrichtung drehen. Bei einer bestimmten Stellung des Potentiometers beginnt der Tonmotor zu laufen. Auf dem Bildschirm des Oszilloskop erscheint ein Rechtecksignal, dessen Amplitude ca. 5V beträgt. Gleichzeitig leuchtet die Synchron-Anzeige (LED B1 auf, und damit zeigt sie den Einsatz der phasenstarren Drehzahl-Regelung an.
Der Einstell-Regler R4, SYMM. ADJ., ist jetzt so einzustellen, dass das Rechtecksignal symmetrisch wird.

CAPSTAN SERVO 1.180.376 GR 20 EL 6
The Taperecorder A80/VU-TLS 2000 is equipped with the Capstan Servo PCB 1.180.376

CAPSTAN MOTOR SERVO BALANCING
The capstan drive unit comprises two scanning heads offset by 180°. This arrangement serves to compensate speed-related wow and flutter which can be caused by minimal eccentricity or division inaccuracy in the groove pattern (residual inaccuracy within very close machining tolerances).

ADJUSTMENT:
First, adjust the scanning head facing the plug. Loosen both nylon screws and calibrate scanning head so, that an air gap of 0.5mm remains (a smaller air gap will cause mechanical whistling noises).

Turn potentiometer screw at R3 (TACHO HEAD) towards center position. Connect a Dual trace oscilloscope to the outputs of the scanning heads (plug strip for Capstan Servo 1.180.376, connection 3A/5A resp. 4A/6A).
At the lower nominal tape speed, the tacho signal should measure at least 50mV RMS (150mV pp).
If the signal is too weak, the air gap must be reduced. Connect the second scanning head and adjust for identical amplitude and phase.

Important:
The ratio tacho signal to superposed ripple voltage should reach at least 20dB (10 : 1).

Mount full reel and thread tape. Connect a Dual trace scope to the testpoints TP1 and TP6. Switch the machine to the fast tapespeed and depress the PLAY button. Turn trimmer R4 (SYMM.ADJ.), counterclockwise to the end. Then turn it slowly clockwise. At a certain position the capstan motor will start turning. A square wave signal will appear on the scope. The amplitude measures about 5V. At the same time the LED B1 lights up and shows that the phaselocked speed control is operating.
Adjust trimmer R4 (SYMM.ADJ.) so that the square wave signal on the scope gets symmetrical.

Die eingangs erwähnten Tonhöhenschwankungen können mit dem Einstell-Regler R3, TACHO HEAD-Symmetrie, kompensiert werden.
(Einstellung bei der niedrigen Bandgeschwindigkeit vornehmen).

Die Kompensation an R3 ist nur messbar, wenn alle anderen Komponenten im Bandlauf weniger Tonhöhenschwankungen verursachen.

Achtung:
Die Brückenstecker müssen entsprechend der gewünschten Bandgeschwindigkeit gesteckt werden.

CAPSTAN ZUSATZPRINT 1.081.372 GR 20 EL 6
Der Zusatzprint ist mit dem Capstan Servo 1.081.376 fest zusammengeschraubt.
Er bildet das Irterface für den Capstan Servo und besteht aus:
- Interface - Schaltungen für die Signale EXTOSC und E/I für den Phase Comparator (Capstan servo).
- Verknüpfung von S-CAPEXT, K-PRESS und SYNC zu den Signalen Y-OUT 1 und Y-SYNC 2.
- Brückenstecker S1.
- Bremsschaltung für den Capstan Motor.

Lage der Brückerstecker:
S1 Mit (B-C) oder ohne (B-A) Verknüpfung des Signals Y-SYNC 2 mit S-CAPEXT (Capstan-Steuerung extern).

The previously mentioned wow and flutter can be compensated with potentiometer R3 (TACHO HEAD). (Adjust with the lower tape speed).

Compensation at R3 is only measurable if all other components of the tape transport system produce a lesser amount of wow and flutter.

Attention:
The jumpers must be set according to the required tapespeed.

CAPSTAN ADDITIONAL PCB I.081.372 GR 20 EL 6
It serves as an Interface for the capstan servo and consists of:

- Interface circuits for the signals EXTOSC and E/I for the phase comparator (capstan servo).
- Linkage of S-CAPEXT, K-PRESS and SYNC to the signals Y-OUT1 and Y-SYNC2.
- Jumper S1.
- Braking circuit for the capstan motor.

S1 with (B-C) or without (B-A) linkage of the signal Y-SYNC 2 with S-CAPEXT (external capstan control).

DIAGRAMS TO TP's OF CAPSTAN SERVO PCB 1.180.376

SHOWN FOR 7,5 ips
15 ips : DOUBLED FREQUENCY (EXCEPTION : TP8)

TP1 GROUND

TP2 x = 200 µs/H
y = 5V/H DC

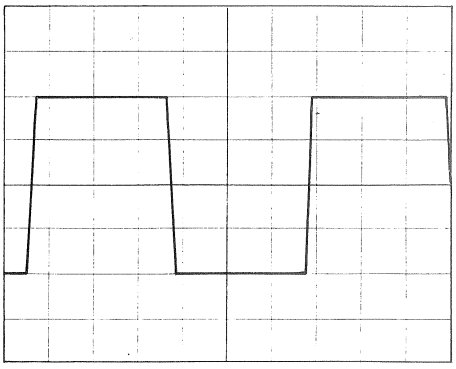

TP3 x = 200 µs/H
y = 50 mV/H DC
FOR 15 ips : U= 100 mV

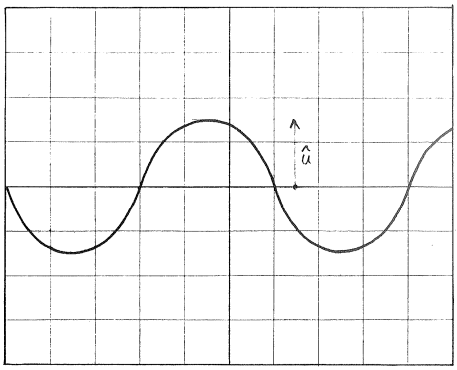

TP4 x = 50 µs/H
y = 2 V/H DC
f = 3,2 kHz

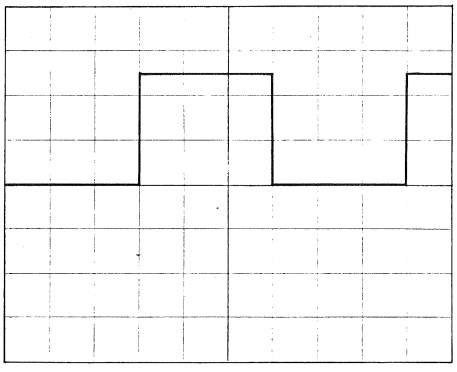

DIAGRAMS TO TP's OF CAPSTAN SERVO PCB 1.180.376

TP5 x = 200 µs/H
y = 1 V/H DC
Ca. 6 Vpp DEPENDS ON TAPE SPEED, AIR GAP OF TACHO SENSORS AND POSITION OF R3.

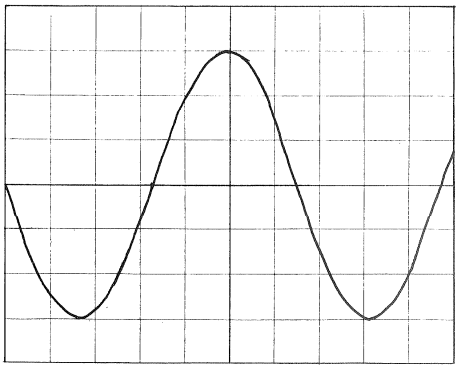

TP6 x = 200 µs/H
y = 2 V/H DC
ADJUST TO SYMMETRICAL WAVEFORM WITH THE AID OF R4 (PLAY MODE WITH MOUNTED TAPE). SEARCH FOR BEST COMPROMISE BETWEEN BOTH TAPE SPEEDS.

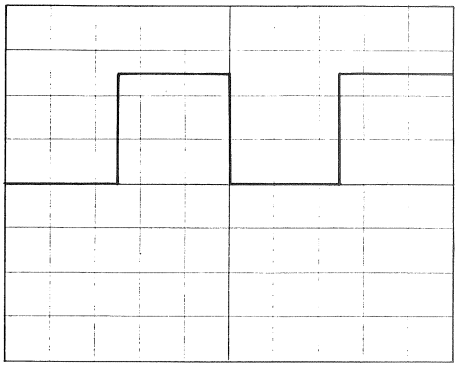

TP7 x = 200 µs/H
y = 1 V/H DC
DC WITH Ca. 100 mVpp RIPPLE

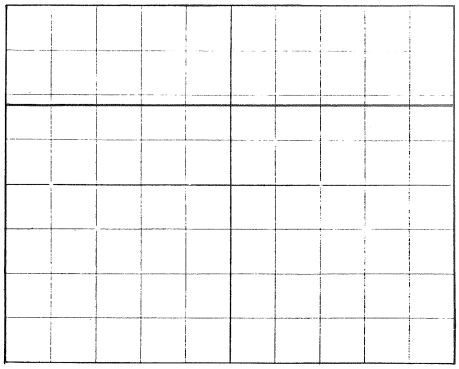

TP8 x = 2 ms/H
y = 0,5 V/H DC
VOLTAGE DEPENDS ON MOMENT OF LOAD OF THE MOTOR.

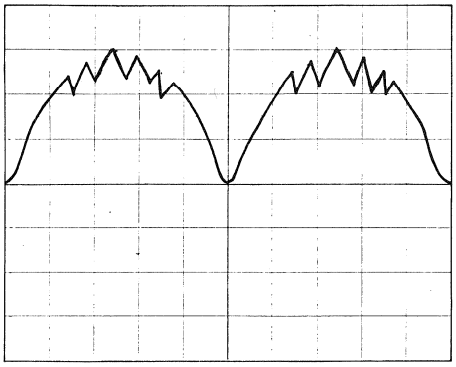

A80 LOCATOR | A80 MASTER-CONTROL

INTERFACE PCB A 80VU/TLS 2000 7,5/15", 15/30" 1.080.397/398

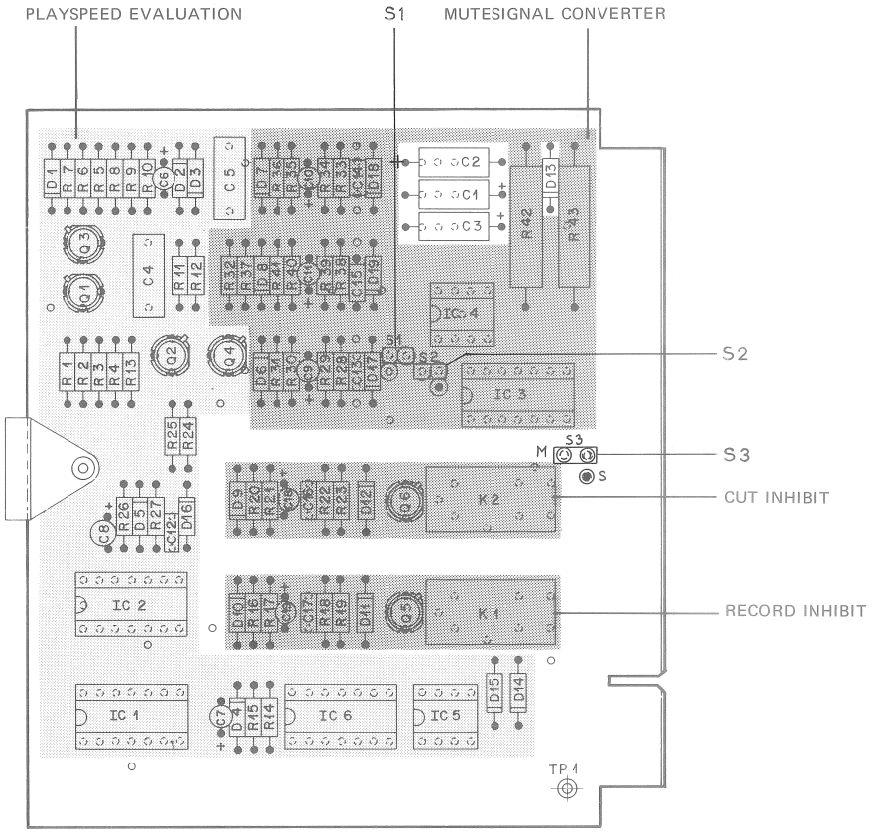

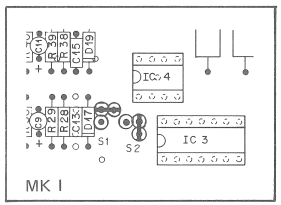

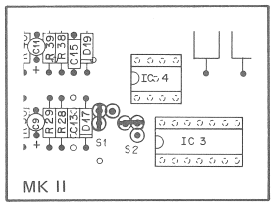

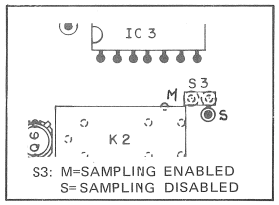

A80 LOCATOR | A80 MASTER-CONTROL

INTERFACE PCB A 80VU/TLS 2000 7,5/15", 15/30" 1.080.397/398

1.080.398 : C4+C5 = 100n 59.02.2104

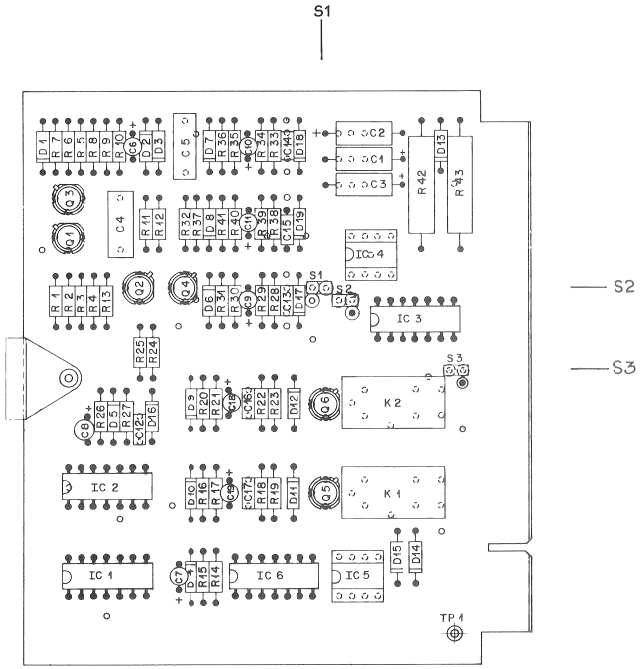

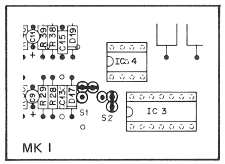

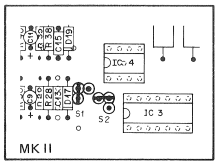

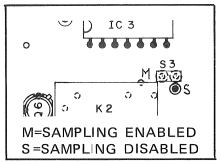

Pos.	Bauteil No.	Bezeichnung	Stk.	Bemerkung
C 01	59.99.0201	C 6.8 U, 20% 35V TA	1	
C 02	59.99.0202	C 39 U, 10V	1	
C 03	59.99.0202	C 39 U,	1	
3) C 04	59.02.2154	C .15 U, 5% 100V MPC	1	
3) C 05	59.02.2154	C .15 U,	1	
C 06	59.36.3339	C 3.3 U, 20% 16V TA	1	
C 07	59.30.3330	C 30 U, 10V	1	
C 08	59.30.0689	C 6.8 U, 16V	1	
C 09	59.30.0689	C 6.8 U,	1	
C 10	59.30.0689	C 6.8 U,	1	
C 11	59.30.0689	C 6.8 U,	1	
C 12	59.99.0205	C 68 N, 63V KER	1	
C 13	59.99.0205	C 68 N,	1	
C 14	59.99.0205	C 68 N,	1	
C 15	59.99.0205	C 68 N,	1	
C 16	59.99.0205	C 68 N,	1	
C 17	59.99.0205	C 68 N,	1	
C 18	59.30.0109	C 1 U, 20% 35V TA	1	
C 19	59.30.0109	C 1 U,	1	
D 01	50.04.0125	D 1N 4448 SI	1	
D 02	50.04.0125	D	1	
D 03	50.04.0125	D	1	
D 04	50.04.0125	D	1	
D 05	50.04.0125	D	1	
D 06	50.04.0125	D	1	
D 07	50.04.0125	D	1	
D 08	50.04.0125	D	1	
D 09	50.04.0125	D	1	
D 10	50.04.0125	D	1	
D 11	50.04.0122	D 1N 4001	1	
D 12	50.04.0122	D	1	
D 13	50.04.0122	D	1	
D 14	50.04.1506	D 30 V, 5%, 1.3W Z	1	

Aenderungen ①16.8.76 ②47.11.76 He ③14.1.80 ④ ⑤

STUDER REGENSDORF ZÜRICH — Positionsliste 7.5"-15"

A 80 Interface to TLS 2000

Erstellt: 4.1.76 MS/gv
Geprüft:
Blatt: 1 Blätter: 4

Kopie für: Ersatz für: Ersetzt durch:

1.080.397

Pos.	Bauteil No.	Bezeichnung	Stk.	Bemerkung
D 15	50.04.1506	D 30 V, 5%, 1.3W Z	1	
D 16	50.04.1107	D 3.3V, .40W, Z-PLANAR	1	
D 17	50.04.1107	D 3.3V,	1	
D 18	50.04.1107	D 3.3V,	1	
D 19	50.04.1107	D 3.3V,	1	
IC 1	50.06.0132	IC SN 74 LS 13! N TTL	1	
IC 2	50.06.0132	IC SN 74 LS 13! N TTL	1	
IC 3	50.06.0132	IC SN 74 LS 13! N TTL	1	
IC 4	50.05.0204	IC SN 75464 P	1	
IC 5	50.05.0204	IC SN 75464 P	1	
IC 6	50.05.0198	IC 9601 PC	1	
K 01	56.02.1201	K 1 U, .1A, 24V-, AU	1	
K 02	56.02.1201	K 1 U,	1	
Q 01	50.03.0109	Q BC 108 B NPN	1	
Q 02	50.03.0109	Q BC 108 B	1	
Q 03	50.03.0109	Q BC 108 B	1	
Q 04	50.03.0109	Q BC 108 B	1	
Q 05	50.03.0108	Q BC 107 B	1	
Q 06	50.03.0108	Q BC 107 B	1	
R 01	57.02.5103	R 10K, 10% .25W, CMA	1	
R 02	57.02.5471	R 470 ,	1	
R 03	57.02.5471	R 470 ,	1	
R 04	57.02.5103	R 10K,	1	
R 05	57.02.5123	R 22K,	1	
R 06	57.02.5132	R 3.3K,	1	
R 07	57.02.5472	R 4.7K,	1	

Aenderungen ①16.8.76 ②47.11.76 He ③14.1.80 ④ ⑤

STUDER REGENSDORF ZÜRICH — Positionsliste 7.5"-15"

A 80 Interface to TLS 2000

Erstellt: 4.5.76 MS/gv
Geprüft:
Blatt: 2 Blätter: 4

Kopie für: Ersatz für: Ersetzt durch:

1.080.397

Pos.	Bauteil No.	Bezeichnung	Stk.	Bemerkung
R 08	57.02.5102	R 1K, 10%, .25W, CMA	1	
(1) R 09	57.02.5220	R 22E ,	1	
R 10	57.02.5682	R 6.8K,	1	
R 11	57.02.5105	R 1M,	1	
R 12	57.02.5823	R 82K,	1	
R 13	57.02.5222	R 2.2K,	1	
R 14	57.02.5102	R 1K,	1	
R 15	57.02.5223	R 22K,	1	
R 16	57.02.5332	R 3.3K,	1	
R 17	57.02.5222	R 2.2K,	1	
R 18	57.02.5222	R 2.2K,	1	
R 19	57.02.5472	R 4.7K,	1	
R 20	57.02.5332	R 3.3K,	1	
R 21	57.02.5222	R 2.2K,	1	
R 22	57.02.5222	R 2.2K,	1	
R 23	57.02.5472	R 4.7K,	1	
R 24	57.02.5472	R 4.7K,	1	
R 25	57.02.5222	R 2.2K,	1	
R 26	57.02.5222	R 2.2K,	1	
R 27	57.02.5332	R 3.3K,	1	
R 28	57.02.5472	R 4.7K,	1	
R 29	57.02.5222	R 2.2K,	1	
R 30	57.02.5222	R 2.2K,	1	
R 31	57.02.5332	R 3.3K,	1	
R 32	57.02.5103	R 10K,	1	
R 33	57.02.5472	R 4.7K,	1	
R 34	57.02.5222	R 2.2K,	1	
R 35	57.02.5222	R 2.2K,	1	
R 36	57.02.5332	R 3.3K,	1	
R 37	57.02.5103	R 10K,	1	
R 38	57.02.5472	R 4.7K,	1	
R 39	57.02.5222	R 2.2K,	1	
R 40	57.02.5222	R 2.2K,	1	
R 41	57.02.5332	R 3.3K,	1	
R 42	57.56.4331	R 330 , 5W DR	1	

Aenderungen ①16.8.76 ②47.11.76 He ③14.1.80 ④ ⑤

STUDER REGENSDORF ZÜRICH — Positionsliste 7.5"-15"

A 80 Interface to TLS 2000

Erstellt: 4.5.76 MS/gv
Geprüft:
Blatt: 3 Blätter: 4

Kopie für: Ersatz für: Ersetzt durch:

1.080.397

Pos.	Bauteil No.	Bezeichnung	Stk.	Bemerkung
(1) R 43	57.56.4331	R 330 10%, 5W, DR	1	
(2) S 01	54.01.0021	S Brückenstecker	3	
(2) S 02	54.01.0020	S Kontaktsitft	9	
XIC	53.03.0166	XIC DIP 8-Pol.	2	
XIC	53.03.0167	XIC DIP 14-Pol.	4	
TP1	54.01.0471	TP Rundsteckstift	1	
XQ	50.03.9921	XQ Unterlage	6	

Aenderungen ①16.8.76 ②47.11.76 He ③14.1.80 ④ ⑤

STUDER REGENSDORF ZÜRICH — Positionsliste 7.5"-15"

A 80 Interface to TLS 2000

Erstellt: 4.5.76 MS/gv
Geprüft:
Blatt: 4 Blätter: 4

Kopie für: Ersatz für: Ersetzt durch:

1.080.397

A80 LOCATOR | A80 MASTER-CONTRO..

INTERFACE PCB A 80VU/TLS 2000 7,5/15", 15/30" 1.080.397/398

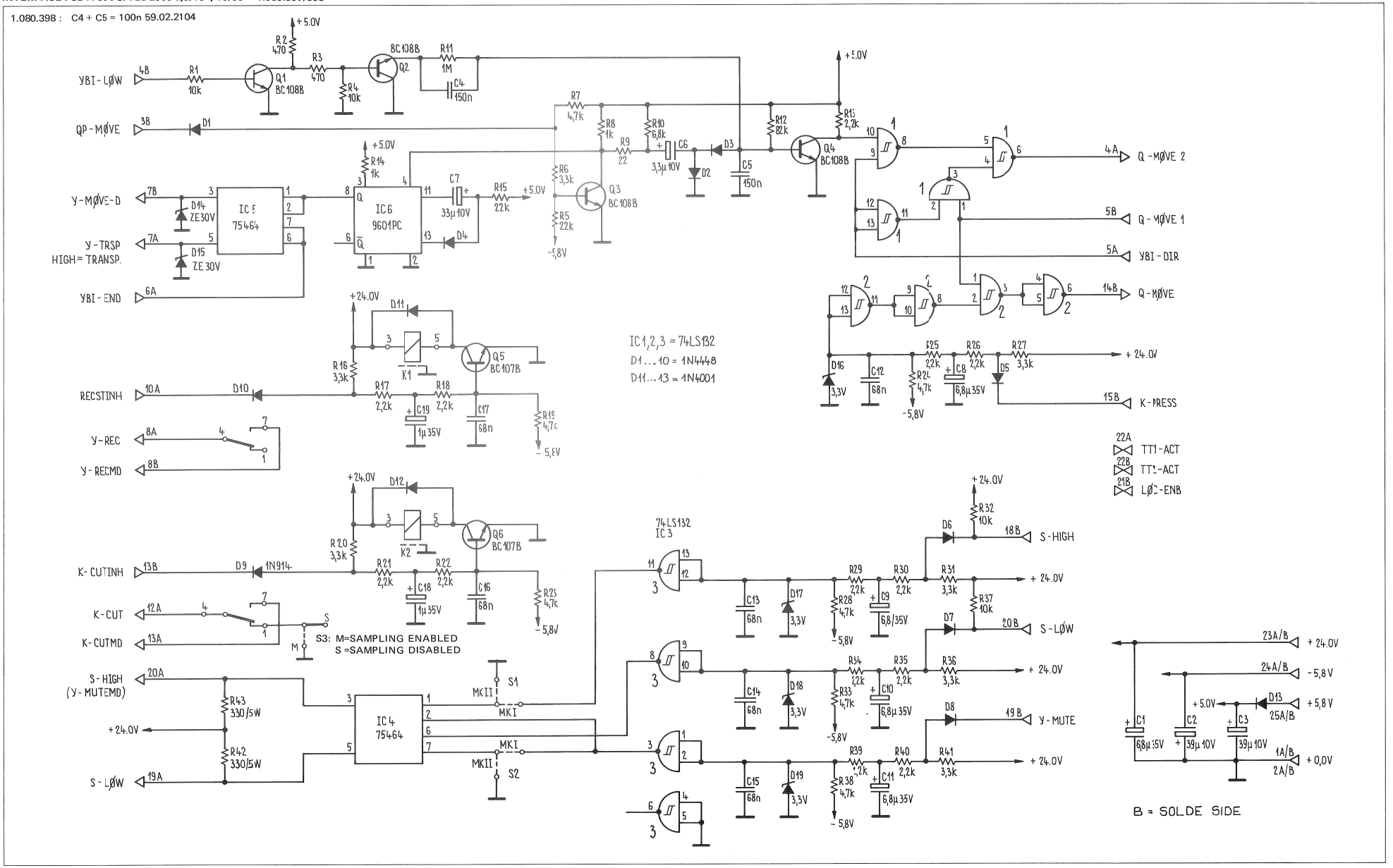

9.3

POWER SUPPLY MODIFICATIONS A 80VU/TLS 2000 VERSION

A80 LOCATOR | A80 MASTER-CONTROL

BLOCK DIAGRAM

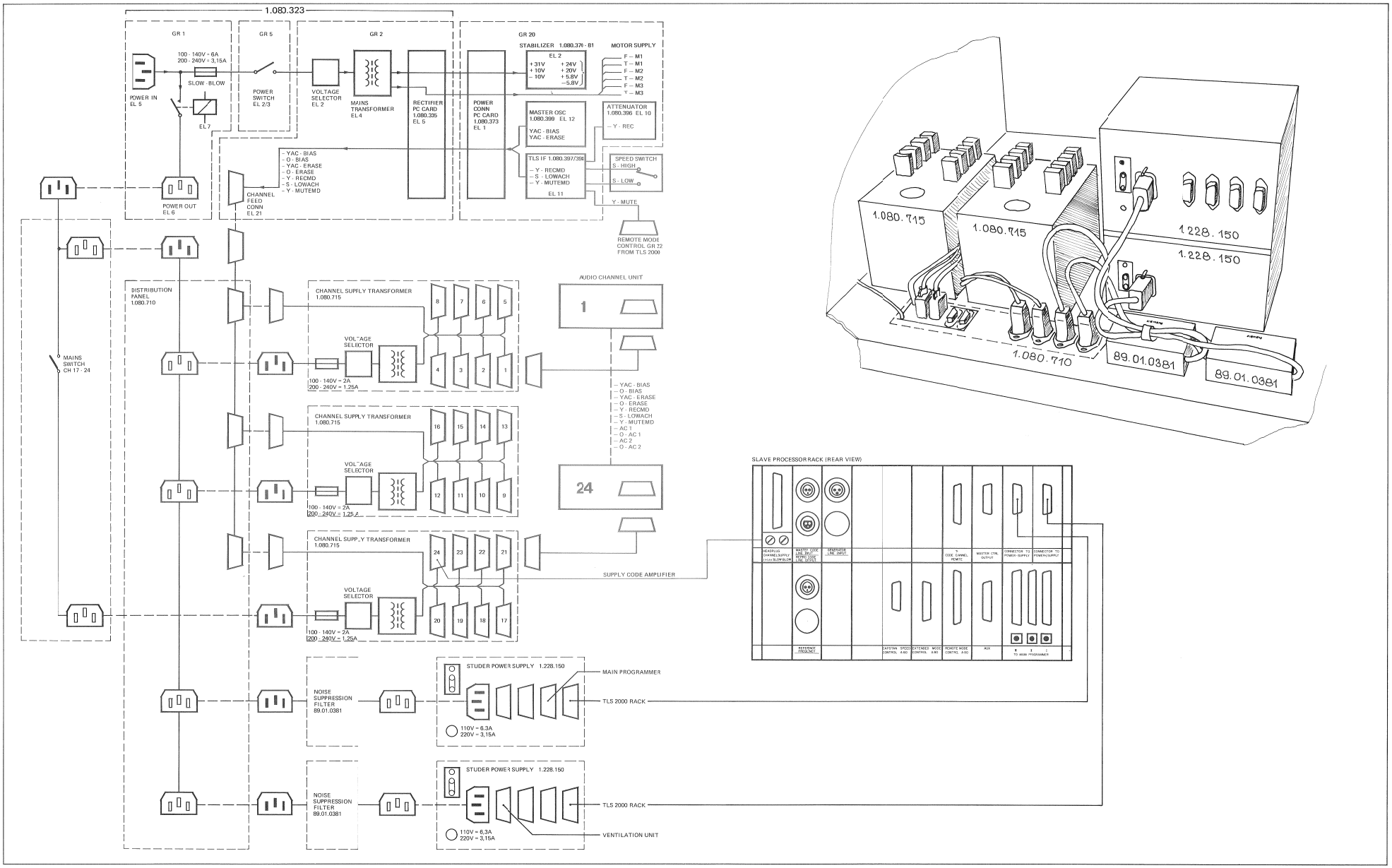

A80 LOCATOR | A80 MASTER-CONTROL

POWER SUPPLY UNIT A 80VU/TLS 2000 1.080.323

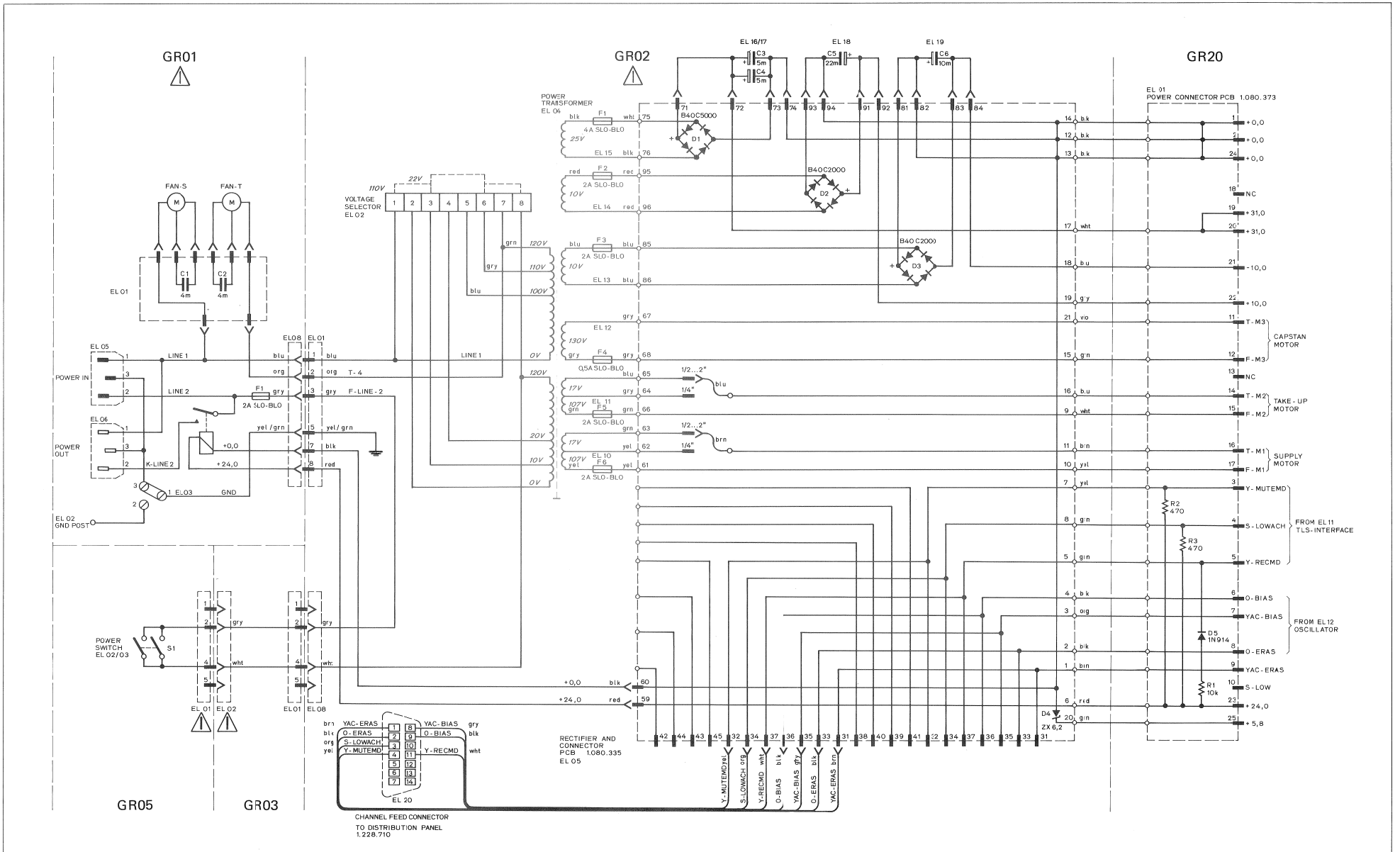

A80 LOCATOR | A80 MASTER-CONTROL

DISTRIBUTION PANEL A 80VU/TLS 2000 1.080.710

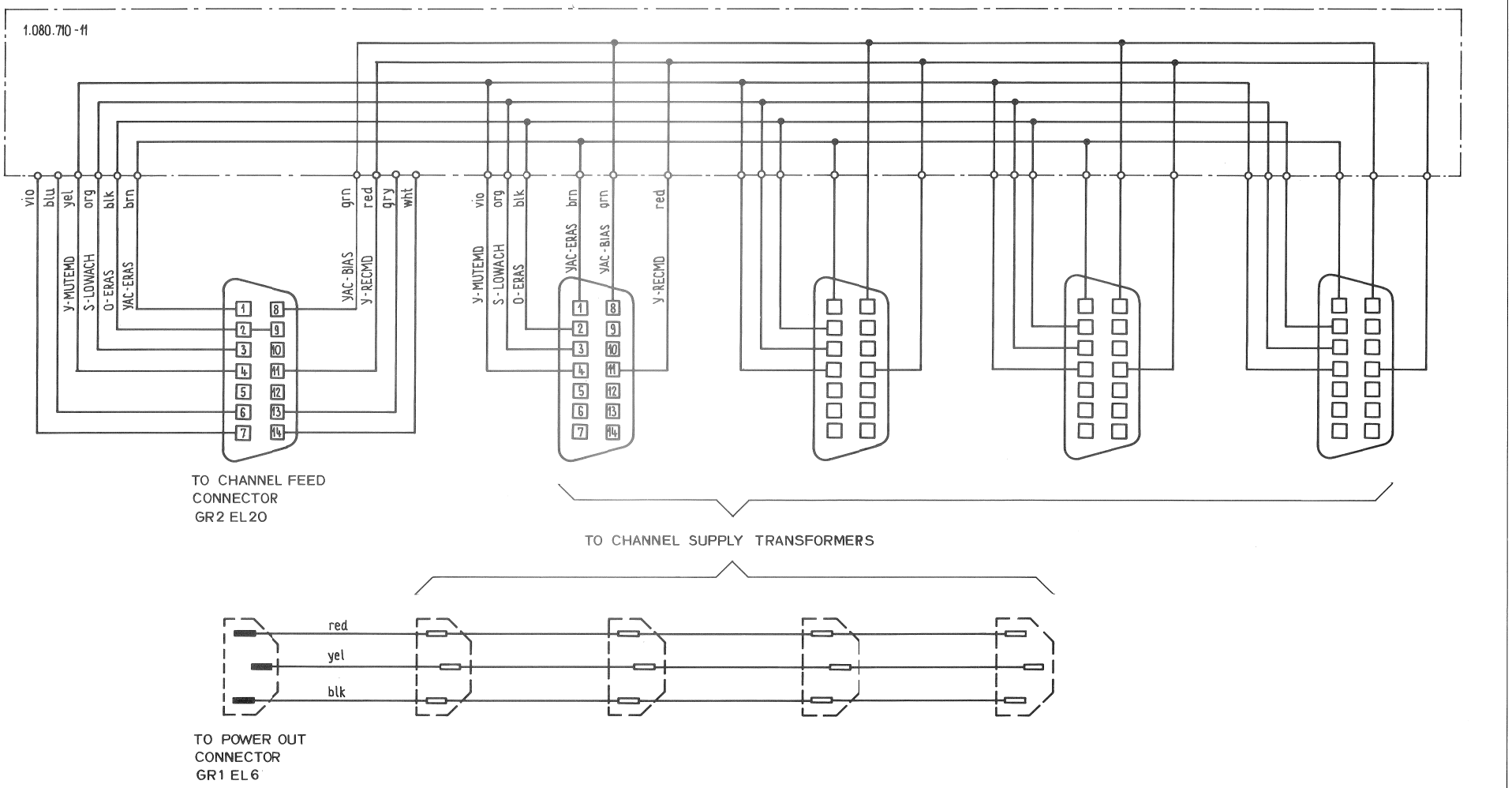

A80 LOCATOR | A80 MASTER-CONTROL

CHANNEL SUPPLY TRANSFORMER UNIT A 80 1.080.715

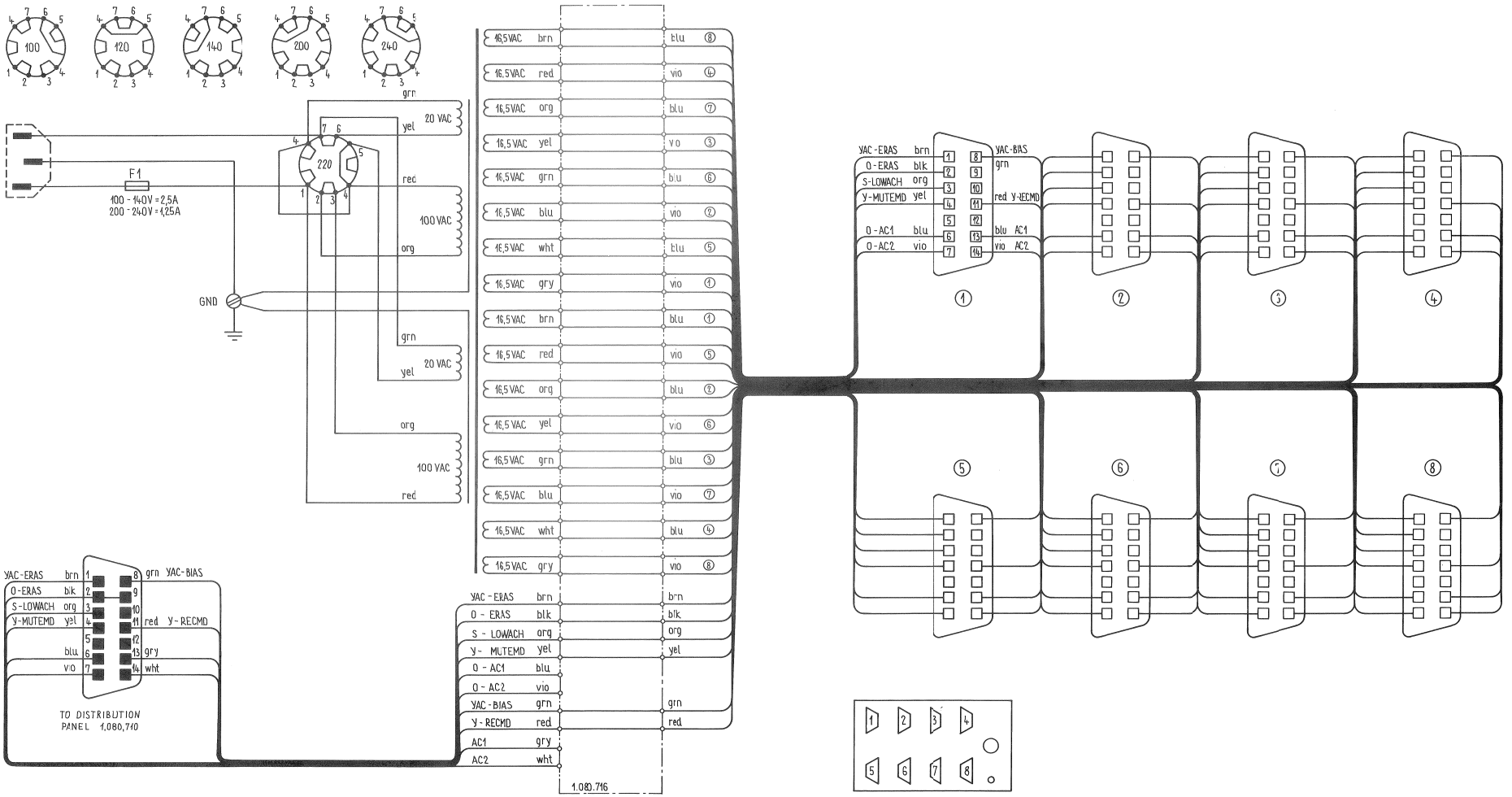

A80 LOCATOR | A80 MASTER-CONTROL

VENTILATING UNIT 1.228.956

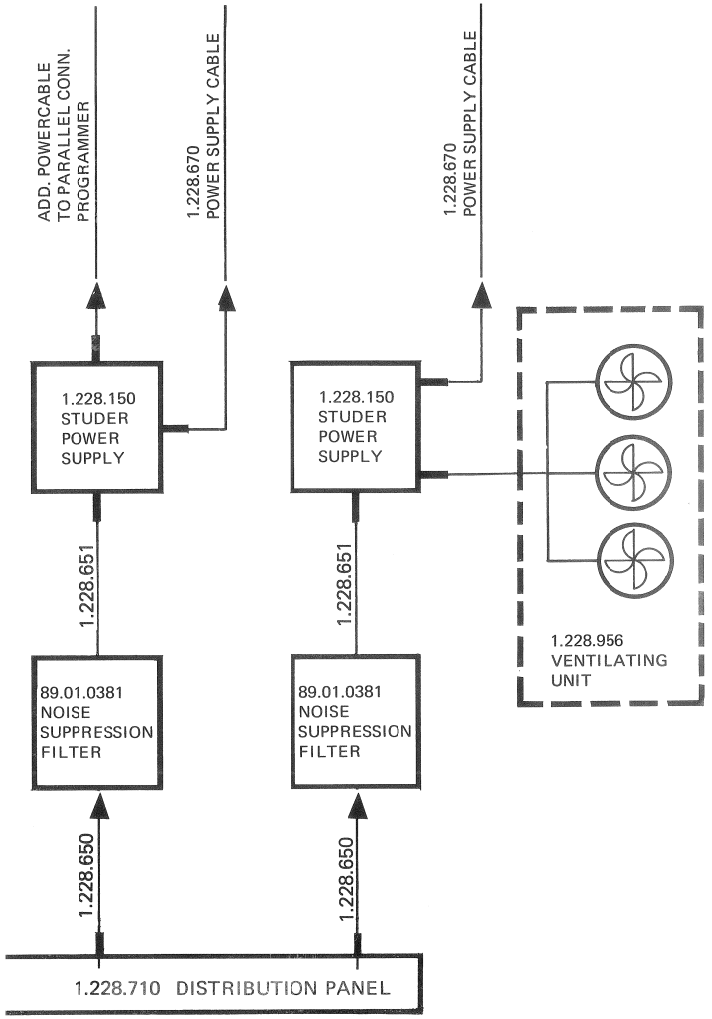

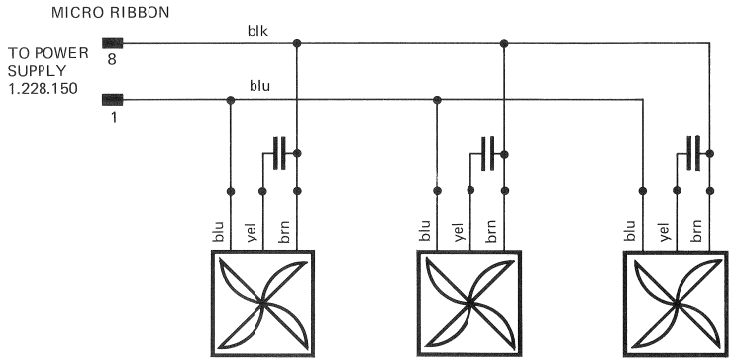

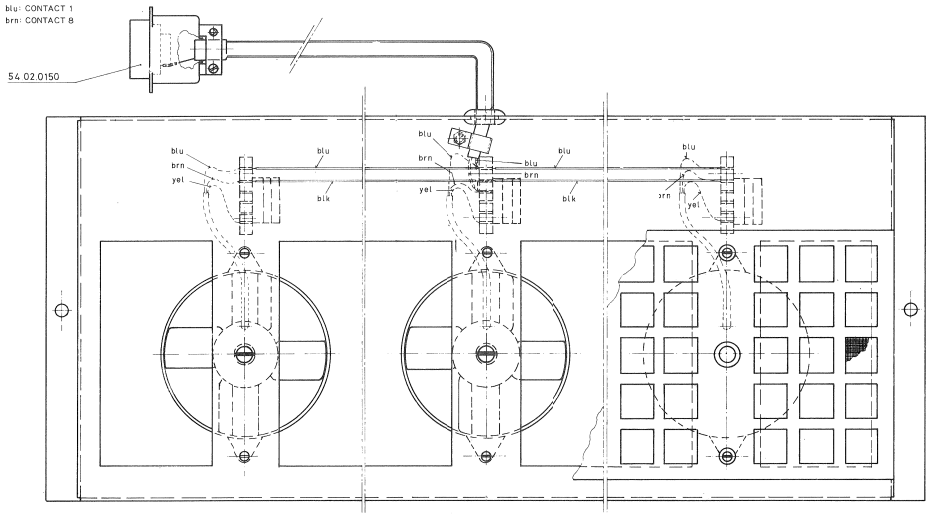

POWER SUPPLY CABLE 1.228.150 SEE SECTION 6/52

```
 ******  *******  *    *  ******   *******  ******                          *        *  ***  ******   ***  *     *   *****
*      *    *     *    *  *     *  *        *     *                         *        *  *    *     *   *   **    *  *     *
*      *    *     *    *  *     *  *        *     *                         *        *  *    *     *   *   * *   *  *
 *****     *     *    *  *     *  *****    ******          *******          *   *    *  *    ******    *   *  *  *  *   ***
      *    *     *    *  *     *  *        *  *             *******           * *  *  *  *    *         *   *   * *  *      *
      *    *     *    *  *     *  *        *   *             *******            * * * *   *    *         *   *    **  *     *
******     *      *****   ******   *******  *    *                              *   *    ***  *    *    ***  *     *   *****
```

```
**************************************************************************************************************************
                                                                                                          PAGE  1    OF   24

TITLE:   TLS 2000 PROF. TAPE TRANSPORT DECK *** STUDER A-80/MCH ***                  INDEX: 0       DATE OF ORIGIN: 76/11/18
         ************************************************************  ************  ********       DATE OF PROC.: 76/11/18


                                                                                                    TOTAL GROUPS:          25
                                                                                                    TOTAL ELEMENTS:        79
                                                                                                    TOTAL PINS:           801
                                                                                                    TOTAL UNUSED PINS:    118
                                                                                                    MULTIPLE PINS:          0

                                                                                                    GROUP NODE          = *
                                                                                                    INTER GROUP NODE    = #
                                                                                                    DIRECT WIRE TO #    = <
                                                                                                    WIRING NOT COMPUTED = @
```

```
**************************************************************************************************************************
*   S T U D E R   *      L O C A T I O N     P I N     L I S T       *    76/11/18 * 13:07      *   P A G E      2    *
**************************************************************************************************************************
TLS 2000 PROF. TAPE TRANSPORT DECK *** STUDER A-80/MCH ***                                      76/11/18
```

GR: 01
REAR PANEL ASSEMBLY
****

EL: 01 FAN FEED PC BOARD (MCH)

TYPE	PT	LV	SIG.NAME	COLOR	F	X	Y
Y	01	1	LINE1	6			
Y	02	1	T-4	3			

EL: 02 GROUND POST, EXTERNAL

TYPE	PT	LV	SIG.NAME	COLOR	F	X	Y
L	01	1	GND EXT	0			

EL: 03 GROUND SELECTOR

TYPE	PT	LV	SIG.NAME	COLOR	F	X	Y
L	01	1	GROUND	4/5			
L	02	1	GND MAIN	4/5			
L	03	1	GND EXT	0			

EL: 04 MAIN FUSE, TAPE DECK

TYPE	PT	LV	SIG.NAME	COLOR	F	X	Y
L	01	2	LINE2	7			
L	02	2	F-LINE2	8			

EL: 05 POWER INPUT CONNECTOR

TYPE	PT	LV	SIG.NAME	COLOR	F	X	Y
L	01	2	LINE1	6			
L	02	2	LINE2	7			
L	03	2	GND MAIN	4/5			

EL: 06 POWER OUTPUT CONNECTOR (MCH)

TYPE	PT	LV	SIG.NAME	COLOR	F	X	Y
L	01	2	LINE1	6			
L	02	2	K-LINE2	7			
L	03	2	GND MAIN	4/5			

EL: 07 POWER FEED CONTACTOR (MCH)

TYPE	PT	LV	SIG.NAME	COLOR	F	X	Y
L	01	1	+ 0.0(1)	0			
L	02	1	+24.0(1)	2			
L	03	1	LINE2	7			
L	04	1	K-LINE2	7			

GR: 01 (CONTINUATION)
REAR PANEL ASSEMBLY
****

EL: 08 POWER FEED CONNECTOR, MAINS

TYPE	PT	LV	SIG.NAME	COLOR	F	X	Y
F	01	1	LINE1	6			
F	02	1	T-4	3			
F	03	1	F-LINE2	8			
	04	1					
F	05	1	GROUND	4/5			
	06	1					
F	07	1	+ 0.0(1)	0			
F	08	1	+24.0(1)	2			

GR: 02
POWER SUPPLY ASSEMBLY
****

EL: 01 POWER INPUT FEED CONNECTOR

TYPE	PT	LV	SIG.NAME	COLOR	F	X	Y
M	01	1	LINE1	6			
M	02	1	T-4	3			
M	03	1	F-LINE2	8			
	04	1					
M	05	1	GROUND	4/5			
	06	1					
M	07	1	+ 0.0(1)	0			
M	08	1	+24.0(1)	2			

EL: 02 VOLTAGE SELECTOR TERMINAL BLOCK

TYPE	PT	LV	SIG.NAME	COLOR	F	X	Y
L	01	3*	LINE1	6			
L	02	2	T-5	1			
L	03	2	T-6	4			
L	04	2	T-7	6			
L	05	2	T-2	0			
L	06	2	T-3	8			
L	07	3*	T-4	3			
L	08	2*	S-LINE2	9			

EL: 03 SCREEN CHASSIS CONNECTION

TYPE	PT	LV	SIG.NAME	COLOR	F	X	Y
LS	01	1	SCREEN	0			

EL: 04 POWER TRANSFORMER

TYPE	PT	LV	SIG.NAME	COLOR	F	X	Y
L	01	1	LINE1	6			
L	02	1	T-2	0			
L	03	1	T-3	8			
L	04	1	T-4	(5)			
L	05	1	T-5	1			
L	06	1	T-6	4			
L	07	1	T-7	6			
L	08	1	S-LINE2	9			
L	09	1	SCREEN	0			
L	10	1	T-10	0			
L	11	1	T-11	0			
L	12	1	T-12	2			
L	13	1	T-13	2			
L	14	1	T-14	6			
L	15	1	T-15	6			
L	16	1	T-16	4			
L	17	1	T-17	4			
L	18	1	T-18	5			
L	19	1	T-19	5			

```
*****************************************************************************************************************
*  S T U D E R  *      L O C A T I O N     P I N     L I S T       *  76/11/18 * 13:07      *  P A G E      3   *
*****************************************************************************************************************
TLS 2000 PROF. TAPE TRANSPORT DECK *** STUDER A-80/MCH ***                                  76/11/10
```

GR: 02 (CONTINUATION)
POWER SUPPLY ASSEMBLY
****

EL: 04 (CONTINUATION)

TYPE	PT	LV	SIG.NAME	COLOR	F	X	Y
L	20	1	T-20	8			
L	21	1	T-21	6			
L	22	1	T-22	8			
L	23	1	T-23	8			
L	24	1	T-24	0			
L	25	1	T-25	0			
L	26	1	T-26	1			
L	27	1	T-27	1			
L	28	1	T-28	2			
L	29	1	T-29	2			
L	30	1	T-30	9			
L	31	1	T-31	9			

EL: 05 RECTIFIER & CONNECTOR PC CARD

TYPE	PT	LV	SIG.NAME	COLOR	F	X	Y
L	01	1	YAC-ERAS	1			
L	02	1	0-ERAS	0			
L	03	1	YAC-BIAS	3			
L	04	1	0-BIAS	0			
L	05	1	Y-RECMD	5			
L	06	1@	+24.0	2			
L	07	1@	Y-MUTEMD	4			
L	08	1@	S-LOWACH				
L	09	1	F-M2	9			
L	10	1	F-M1	4			
L	11	1	T-M1	1			
L	12	1@	+ 0.0	0			
L	13	1@	+ 0.0	0			
L	14	1@	+ 0.0	0			
L	15	1	F-M3	5			
L	16	1	T-M2	6			
L	17	1@	+31.0	9			
L	18	1	-10.0	6			
L	19	1	+10.0	8			
L	20	1@	+ 5.8	5			
L	21	1@	T-M3	7	(1)		
Y	31	2*	YAC-ERAS	1			
Y	32	2*	Y-MUTEMD	4			
Y	33	2*	0-ERAS	0			
Y	34	2*	S-LOWACH	3			
Y	35	2*	YAC-BIAS	8			
Y	36	2*	0-BIAS	0			
Y	37	2*	Y-RECMD	9			
Y	38	1	0-AC1	6			
Y	39	1	0-AC2	7			
Y	40	1	AC1	6			
Y	41	1	AC2	7			
Y	42	1	0-AC3	6			
Y	43	1	0-AC4	7			

./.

GR: 02 (CONTINUATION)
POWER SUPPLY ASSEMBLY
****

EL: 05 (CONTINUATION)

TYPE	PT	LV	SIG.NAME	COLOR	F	X	Y
Y	44	1	AC3	6			
Y	45	1	AC4	7			
L	51	1	T-24	0			
L	52	1	T-25	0			
L	53	1	T-26	1			
L	54	1	T-27	1			
L	55	1	T-28	2			
L	56	1	T-29	2			
L	57	1	T-30	9			
L	58	1	T-31	9			
Y	59	1	+24.0(1)	2			
Y	60	1	+ 0.0(1)	0			
L	61	1	F-M1(0)	4			
L	62	1	T-17	4			
L	63	1	T-18	5			
L	64	1	T-20	8			
L	65	1	T-21	6			
L	66	1	F-M2(0)	5			
L	67	1	T-23	8			
L	68	1	F-M3(0)	8			
Y	69	1N	M5-1	9			
Y	70	1N	M5-2	9			
Y	71	1	+31.0(0)	9			
Y	72	1	+31.0(0)	9			
Y	73	1	+ 0.0(2)	0			
Y	74	1	+ 0.0(2)	0			
L	75	1	F(+24.0)	9			
L	76	1	T-11	0			
Y	77	1	T-17/18	1			
L	78	1	T-17/18	1			
Y	79	1	T-20/21	6			
L	80	1	T-20/21	6			
Y	81	1	+ 0.0(3)	0			
Y	82	1	+ 0.0(3)	0			
Y	83	1	-10.0(0)	6			
Y	84	1	-10.0(0)	6			
L	85	1	F(- 5.8)	6			
L	86	1	T-15	6			
Y	91	1	+10.0(0)	8			
Y	92	1	+10.0(0)	8			
Y	93	1	+ 0.0(4)	0			
Y	94	1	+ 0.0(4)	0			
L	95	1	F(+ 5.8)	2			
L	96	1	T-13	2			

EL: 06 GROUND CHASSIS CONNECTION

TYPE	PT	LV	SIG.NAME	COLOR	F	X	Y
LS	01	1	GROUND	4/5			

GR: 02 (CONTINUATION)
POWER SUPPLY ASSEMBLY
****

EL: 08 POWER SWITCH FEED, RECEPTACLE

TYPE	PT	LV	SIG.NAME	COLOR	F	X	Y
	01	1					
F	02	1	F-LINE2	8			
	03	1					
F	04	1	S-LINE2	9			
	05	1					

EL: 10 FUSE, SUPPLY MOTOR

TYPE	PT	LV	SIG.NAME	COLOR	F	X	Y
L	01	1	F-M1(0)	4			
L	02	1	T-16	4			

FL: 11 FUSE, TAKE-UP MOTOR

TYPE	PT	LV	SIG.NAME	COLOR	F	X	Y
L	01	1	F-M2(0)	5			
L	02	1	T-19	5			

EL: 12 FUSE, CAPSTAN

TYPE	PT	LV	SIG.NAME	COLOR	F	X	Y
L	01	1	F-M3(0)	8			
L	02	1	T-22	8			

EL: 13 FUSE, - 5.8 V

TYPE	PT	LV	SIG.NAME	COLOR	F	X	Y
L	01	1	F(- 5.8)	6			
L	02	1	T-14	6			

EL: 14 FUSE, + 5.8 V

TYPE	PT	LV	SIG.NAME	COLOR	F	X	Y
L	01	1	F(+ 5.8)	2			
L	02	1	T-12	2			

EL: 15 FUSE, +24.0 V

TYPE	PT	LV	SIG.NAME	COLOR	F	X	Y
L	01	1	F(+24.0)	9			
L	02	1	T-10	0			

```
*****************************************************************************************************************
*  S T U D E R  *      L O C A T I O N     P I N     L I S T       *  76/11/18 * 13:07      *  P A G E      4   *
*****************************************************************************************************************
TLS 2000 PROF. TAPE TRANSPORT DECK *** STUDER A-80/MCH ***                                  76/11/18
```

GR: 02 (CONTINUATION)
POWER SUPPLY ASSEMBLY
****

EL: 16 CHARGE CAPACITOR, +24.0 V (1)

TYPE	PT	LV	SIG.NAME	COLOR	F	X	Y
L	01	3*	+31.0(0)	9			
L	02	3*	+ 0.0(2)	0			

EL: 17 CHARGE CAPACITOR, +24.0 V (2)

TYPE	PT	LV	SIG.NAME	COLOR	F	X	Y
L	01	1	+31.0(0)	9			
L	02	1	+ 0.0(2)	0			

EL: 18 CHARGE CAPACITOR, + 5.8 V

TYPE	PT	LV	SIG.NAME	COLOR	F	X	Y
L	01	2*	+10.0(0)	8			
L	02	2*	+ 0.0(4)	0			

EL: 19 CHARGE CAPACITOR, - 5.8 V

TYPE	PT	LV	SIG.NAME	COLOR	F	X	Y
L	01	2*	+ 0.0(3)	0			
L	02	2*	-10.0(0)	6			

EL: 20 CHANNEL FEED CONNECTOR

TYPE	PT	LV	SIG.NAME	COLOR	F	X	Y
L	01	1	YAC-ERAS	1			
L	02	1	0-ERAS	0			
L	03	1	S-LOWACH	3			
L	04	1	Y-MUTEMD	4			
L	05	1					
L	06	1	0-AC1	6			
L	07	1	0-AC2	7			
L	08	1	YAC-BIAS	8			
L	09	1	0-BIAS	0			
L	10	1					
L	11	1	Y-RECMD	9			
L	12	1					
L	13	1	AC1	6			
L	14	1	AC2	7			

GR: 03
CABLE FROM POWER SUPPLY TO MAIN SWITCH
****

EL: 01 EXTENSION CABLE, SUPPLY SIDE

TYPE	PT	LV	SIG.NAME	COLOR	F	X	Y
	01	1					
M	02	1	F-LINE2	8			
	03	1					
M	04	1	S-LINE2	9			
	05	1					

EL: 02 EXTENSION CABLE, SWITCH SIDE

TYPE	PT	LV	SIG.NAME	COLOR	F	X	Y
	01	1					
F	02	1	F-LINE2	8			
	03	1					
F	04	1	S-LINE2	9			
	05	1					

GR: 04
PWR TRANSISTORS & PHASE SHIFT CAPACITORS
****

EL: 01 TAKE-UP MOTOR CAPACITOR, ADD.

TYPE	PT	LV	SIG.NAME	COLOR	F	X	Y
L	01	2	M2-2	7			
L	02	2	C-M2-2	8			

EL: 03 DC CHASSIS CONNECTION

TYPE	PT	LV	SIG.NAME	COLOR	F	X	Y
SL	01	1@	+ 0.0	0			

EL: 04 +24.0 V STABILIZER TRANSISTOR

TYPE	PT	LV	SIG.NAME	COLOR	F	X	Y
H	01	1	+24.0	2			
H	02	1	QPWR7-2	1			
L	03	2D	+31.0	9			

EL: 05 TAKE-UP MOTOR TRANSISTOR PAIR

TYPE	PT	LV	SIG.NAME	COLOR	F	X	Y
L	01	2	QPWR2-1	1			
L	02	2	QPWR2-2	4			
L	03	2	QPWR2-3	9			

EL: 06 SUPPLY MOTOR CAPACITOR, ADD.

TYPE	PT	LV	SIG.NAME	COLOR	F	X	Y
L	01	2	M1-2	4			
L	02	2	C-M1-2	5			

EL: 07 CAPSTAN MOTOR CAPACITOR

TYPE	PT	LV	SIG.NAME	COLOR	F	X	Y
L	01	1	T-M3	1			
L	02	1	C-M3-2	8			

EL: 08 +20.0 V STABILIZER TRANSISTOR

TYPE	PT	LV	SIG.NAME	COLOR	F	X	Y
H	01	1	+20.0	2			
H	02	1	QPWR6-2	6			
L	03	1@	+24.0	2			

```
*****************************************************************************************************************************
*  S T U D E R  *      L O C A T I O N    P I N    L I S T      *  76/11/18 * 13:07     *  P A G E     5   *
*****************************************************************************************************************************
TLS 2000 PROF. TAPE TRANSPORT DECK *** STUDER A-80/MCH ***                                  76/11/18

GR: 04   (CONTINUATION)
PWR TRANSISTORS & PHASE SHIFT CAPACITORS
****************************************

EL: 09  + 5.8 V STABILIZER TRANSISTOR
-------------------------------------
TYPE PT  LV SIG.NAME COLOR F    X     Y
---- --- -- -------- ----- - ----- -----
H    01  1  QPWR5-1  5
H    02  1  QPWR5-2  7
L    03  1  QPWR5-3  9

EL: 10  - 5.8 V STABILIZER TRANSISTOR
-------------------------------------
TYPE PT  LV SIG.NAME COLOR F    X     Y
---- --- -- -------- ----- - ----- -----
H    01  1  QPWR4-1  1
H    02  1  QPWR4-2  8
L    03  1  QPWR4-3  6

EL: 11  CAPSTAN MOTOR CONTROL TRANSISTOR
----------------------------------------
TYPE PT  LV SIG.NAME COLOR F    X     Y
---- --- -- -------- ----- - ----- -----
H    01  1  QPWR3-1  4
H    02  1  QPWR3-2  9
L    03  1  QPWR3-3  7

EL: 12  SUPPLY MOTOR TRANSISTOR PAIR
------------------------------------
TYPE PT  LV SIG.NAME COLOR F    X     Y
---- --- -- -------- ----- - ----- -----
L    01  2  QPWRJ-1  2
L    02  2  QPWRJ-2  5
L    03  2  QPWRJ-3  8

EL: 13  TAKE-UP MOTOR CAPACITOR, MAIN
-------------------------------------
TYPE PT  LV SIG.NAME COLOR F    X     Y
---- --- -- -------- ----- - ----- -----
L    01  1  M2-2     7
L    02  1  C-M2-2   8

EL: 14  SUPPLY MOTOR CAPACITOR, MAIN
------------------------------------
TYPE PT  LV SIG.NAME COLOR F    X     Y
---- --- -- -------- ----- - ----- -----
L    01  1  M1-2     4
L    02  1  C-M1-2   5

GR: 05
TAPE SPEED & POWER SWITCH ASSEMBLY
**********************************

EL: 01  POWER SWITCH FEED, JACK
-------------------------------
TYPE PT  LV SIG.NAME COLOR F    X     Y
---- --- -- -------- ----- - ----- -----
     01  1
M    02  1  F-LINE2  8
     03  1
M    04  1  S-LINE2  9
     05  1

EL: 02  POWER SWITCH, REAR
--------------------------
TYPE PT  LV SIG.NAME COLOR F    X     Y
---- --- -- -------- ----- - ----- -----
L    01  1  F-LINE2  8
     02  1
L    03  1  S-LINE2  9

EL: 03  POWER SWITCH, FRONT
---------------------------
TYPE PT  LV SIG.NAME COLOR F    X     Y
---- --- -- -------- ----- - ----- -----
L    01  1  F-LINE2  8
     02  1
L    03  1  S-LINE2  9

EL: 04  TAPE SPEED SELECTOR SWITCH
----------------------------------
TYPE PT  LV SIG.NAME COLOR F    X     Y
---- --- -- -------- ----- - ----- -----
L    01  1  + 0.0    0
L    02  1  S-LOW    5
L    03  1  S-HIGH   4

EL: 05  SPEED SELECTOR FEED, JACK
---------------------------------
TYPE PT  LV SIG.NAME COLOR F    X     Y
---- --- -- -------- ----- - ----- -----
F    01  1  + 0.0    0
F    02  1  S-LOW    5
F    03  1  S-HIGH   4

GR: 06
SPEED SELECTOR
**************

EL: 01  SPEED SELECTOR, CABLE PLUG
----------------------------------
TYPE PT  LV SIG.NAME COLOR F    X     Y
---- --- -- -------- ----- - ----- -----
M    01  1@ + 0.0    0
M    02  1  S-LOW    5
M    03  1  S-HIGH   4

*****************************************************************************************************************************
*  S T U D E R  *      L O C A T I O N    P I N    L I S T      *  76/11/18 * 13:07     *  P A G E     6   *
*****************************************************************************************************************************
TLS 2000 PROF. TAPE TRANSPORT DECK *** STUDER A-80/MCH ***                                  76/11/18

GR: 07
SUPPLY MOTOR
************

EL: 01  SUPPLY MOTOR (M1)
-------------------------
TYPE PT  LV SIG.NAME COLOR F    X     Y
---- --- -- -------- ----- - ----- -----
F    01  1  M1-1     1
     02  1
F    03  1  M1-2     4
     04  1
F    05  1  C-M1-2   5

GR: 08
BRAKE LIFT SOLENOID, LEFT
*************************

EL: 01  BRAKE LIFT SOLENOID, LEFT
---------------------------------
TYPE PT  LV SIG.NAME COLOR F    X     Y
---- --- -- -------- ----- - ----- -----
F    01  1@ +24.0    2
F    02  1  K-LIFT   3
     03  1

GR: 09
BRAKE LIFT SOLENOID, RIGHT
**************************

EL: 01  BRAKE LIFT SOLENOID, RIGHT
----------------------------------
TYPE PT  LV SIG.NAME COLOR F    X     Y
---- --- -- -------- ----- - ----- -----
F    01  1@ +24.0    2
F    02  1  K-LIFT   3
     03  1
```

```
*****************************************************************************************************************************
*   S T U D E R   *     L O C A T I O N     P I N     L I S T     *   76/11/18 * 13:07     *   P A G E      7    *
*****************************************************************************************************************************
TLS 2000 PROF. TAPE TRANSPORT DECK *** STUDER A-80/MCH ***                                              76/11/18
```

GR: 10
TAKE-UP MOTOR

EL: 01 TAKE-UP MOTOR (M2)

TYPE	PT	LV	SIG.NAME	COLOR	F	X	Y
F	01	1	M2-1	6			
	02	1					
F	03	1	C-M2-2	8			
	04	1					
F	05	1	M2-2	7			

GR: 11
TAPE TENSION CONTROL, LEFT

EL: 01 TAPE TENSION CONTROL ASSY, LEFT

TYPE	PT	LV	SIG.NAME	COLOR	F	X	Y
M	01	1@	+20.0	3			
M	02	1	R-TT1	1			
M	03	1@	+ 0.0	0			
M	04	1	K-TT1/2	7			
M	05	1	S-TT	4			

GR: 12
TAPE TENSION CONTROL, RIGHT

EL: 01 TAPE TENSION CONTROL ASSY, RIGHT

TYPE	PT	LV	SIG.NAME	COLOR	F	X	Y
M	01	1@	+20.0	3			
M	02	1	R-TT2	2			
M	03	1@	+ 0.0	0			
M	04	1	K-TT	9			
M	05	1	K-TT1/2	7			

```
*****************************************************************************************************************************
*   S T U D E R   *     L O C A T I O N     P I N     L I S T     *   76/11/18 * 13:07     *   P A G E      8    *
*****************************************************************************************************************************
TLS 2000 PROF. TAPE TRANSPORT DECK *** STUDER A-80/MCH ***                                              76/11/18
```

GR: 13
OPTICAL TAPE END SENSOR

EL: 01 OPTICAL TAPE END SENSOR

TYPE	PT	LV	SIG.NAME	COLOR	F	X	Y
M	01	1	+16.0	3			
M	02	1	+0-END	0			
M	03	1	RP-END	8			
	04	1					
F	05	1	B-END	7			

GR: 14
TAPE MOVE & DIRECTION SENSOR

EL: 01 TAPE MOVE SENSOR

TYPE	PT	LV	SIG.NAME	COLOR	F	X	Y
P	01	1@	+24.0	2			
P	02	1@	+ 5.8	5			
P	03	1	QP-MOVE	4			
P	04	1	+0-MOVE	0			
P	05	1					
P	06	1	R-MOVE	6			

EL: 02 TAPE DIRECTION SENSOR

TYPE	PT	LV	SIG.NAME	COLOR	F	X	Y
P	01	1@	+24.0	2			
P	02	1@	+ 5.8	5			
P	03	1	QP-DIR2	7			
P	04	1	+0-DIR1	0			
P	05	1	QP-DIR1	8			
P	06	1	R-DIR	9			

GR: 15
PRESSURE ROLLER ASSEMBLY

EL: 01 PRESSURE ROLLER ASSEMBLY

TYPE	PT	LV	SIG.NAME	COLOR	F	X	Y
F	01	1@	+24.0	2			
M	02	1	K-PRESS	8			
M	03	1	Y-ACCEL	6			
M	04	1	K-CUTMO	5			
M	05	1	S-TT	4			

```
*****************************************************************************************************************************
*   S T U D E R   *      L O C A T I O N     P J N     L I S T       *   76/11/18 * 13:07      *   P A G E      9    *
*****************************************************************************************************************************
TLS 2000 PROF. TAPE TRANSPORT DECK *** STUDER A-80/MCH ***                                    76/11/18
```

GR: 16
CAPSTAN MOTOR

EL: 01 CAPSTAN MOTOR ASSEMBLY

TYPE	PT	LV	SIG.NAME	COLOR	F	X	Y
M	01	1	M3-1	6			
M	02	1	T-M3	1			
M	03	1	C-M3-2	8			
M	04	1	0-YAC1	0			
M	05	1	YAC1-M3	4			
	06	1					
M	07	1	0-YAC2	0			
M	08	1	YAC2-M3.	5			

GR: 17
LOCAL COMMAND SWITCHES

EL: 01 COMMAND SWITCHES, LOCAL

TYPE	PT	LV	SIG.NAME	COLOR	F	X	Y
P	01	1	R-INDIC	9			
P	02	1	R-CUT	6			
P	03	1	R-REC	5			
P	04	1	R-STOP	1			
P	05	1	R-REPR	4			
P	06	1	R-FORW	3			
P	07	1	R-REW	2			
P	08	1	S-STOP	1			
P	09	1	S-REW	2			
P	10	1	S-FORW	3			
P	11	1	S-REPR	4			
P	12	1	S-REC	5			
P	13	1	S-CUT	6			
P	14	1	LOC-IN'	7			
P	15	1	LOC.ENR	8			

GR: 18
LOCAL TAPE TIMER

EL: 01 TAPE TIMER ASSEMBLY

TYPE	PT	LV	SIG.NAME	COLOR	F	X	Y
P	01	1@	- 5.8	6			
P	02	1@	+ 0.0	0			
P	03	1	K-RESET	1			
P	04	1@	+24.0	2			
P	05	1	Y-CLK	3			
P	06	1	Y-REVRS	4			
P	07	1	Y-TCLK	5			
P	08	1	Y-FORW	6			
P	09	1@	+ 5.8	5			

```
*****************************************************************************************************************************
*   S T U D E R   *      L O C A T I O N     P J N     L I S T       *   76/11/18 * 13:07      *   P A G E     10    *
*****************************************************************************************************************************
TLS 2000 PROF. TAPE TRANSPORT DECK *** STUDER A 80/MCH ***                                    76/11/18
```

GR: 19
CUTTER CONTROL

EL: 01 CUTTER CONTROL ASSEMBLY

TYPE	PT	LV	SIG.NAME	COLOR	F	X	Y
M	01	1	R-CUT-1	5			
M	02	1@	+20.0	3			
F	03	1	R-CUT-3	7			
M	04	1	S-CUTAUT	1			
M	05	1	+0-CUTAU	0			

GR: 20
CARD CHASSIS

EL: 01 POWER CONNECTOR PC CARD

TYPE	PT	LV	SIG.NAME	COLOR	F	X	Y
WTL	01	3D	+ 0.0	0			
WTL	02	3D	+ 0.0	0			
WTL	03	3	Y-MUTEMD				
WTL	04	3	S-LOWACH				
WT	05	3	Y-RECMD				
TL	06	3	0-RIAS	0			
TL	07	3	YAC-RIAS	3			
TL	08	3	0-ERAS	0			
TL	09	3	YAC-ERAS	1			
WTL+	10	3	S-LOW	5			
WTL	11	3	T-M3	(7)			
WTL	12	3	F-M3	(5)			
WTL	13	3					
WTL	14	3	T-M2	(6)			
WTL	15	3	F-M2	(9)			
WTL	16	3	T-M1	(1)			
WTL	17	3	F-M1	(4)			
WTL	18	3					
WTL	19	3#	+31.0	9			
WTL	20	3	+31.0	9			
WTL	21	3	-10.0	(6)			
WTL	22	3	+10.0	(8)			
WTL	23	3	+24.0	(2)			
WTL	24	3	+ 0.0	(0)			
WTL	25	3	+ 5.8	(5)			

EL: 02 +24/+20/+6/-6V STABIL. PC CARD

TYPE	PT	LV	SIG.NAME	COLOR	F	X	Y
WT	01	3	+ 0.0				
WT	02	3	+ 0.0				
WT	03	3	QPWR6-2	6			
WT	04	3					
WT	05	3N	+31.0(N)				
WT	06	3	+31.0				
WT	07	3	QPWR7-2	1			
WT	08	3	QPWR7-2				
WT	09	3	+20.0	3			
WT	10	3	+20.0				
WT	11	3	+24.0				
WT	12	3	+24.0	2			
WT	13	3	S-HIGH	4			
WT	14	3	- 5.8	(6)			
WT	15	3	QPWR4-3	6			
WT	16	3	QPWR4-2	8			
WT	17	3	QPWR4-1	1			
WT	18	3	-10.0				
WT	19	3	+ 0.0				
WT	20	3	+ 0.0				
WT	21	3	+10.0				

./.

GR: 20 (CONTINUATION)
CARD CHASSIS

EL: 02 (CONTINUATION)

TYPE	PT	LV	SIG.NAME	COLOR	F	X	Y
WT	22	3	QPWR5-3	9			
	22K	0	KEY				
WT	23	3	QPWR5-2	7			
WT	24	3	QPWR5-1	5			
WT	25	3	+ 5.8				

EL: 03 TIME ELAPSE METER, CABLE PLUG

TYPE	PT	LV	SIG.NAME	COLOR	F	X	Y
F	01	1@	+24.0	2			
	02	1					
F	03	1@	K-LIFT	(0)			

EL: 04 CONTACTOR PC CARD

TYPE	PT	LV	SIG.NAME	COLOR	F	X	Y
WT	01	3	+ 0.0				
WT	02	3	+ 0.0				
WT	03	3	+24.0	2			
WT	04	3	+24.0	2			
WT	05	3	YAN-M2				
WT	06	3#	M2-2	7			
	06K	0	KEY				
WT	07	3	F-M2				
WT	08	3	M2-1	6			
WT +	09	3#	C-M2-2	8			
WT	10	3#	M1-2	4			
WT	11	3	YAN-M1				
WT	12	3	M1-1	1			
WT	13	3	F-M1				
WT +	14	3#	C-M1-2	5			
WT	15	3	K-BRAKE				
WT	16	3	K-DIR				
WT	17	3	+20.0	3			
WT	18	3	R-TT2	2			
WT	19	3	YBI-END				
WT	20	3	TEST-R				
WT	21	3	R-INDIC	9			
WT	22	3					
WT	23	3	+24.0				
WT	24	3	- 5.8				
WT	25	3	+ 5.8				

EL: 05 SPOOLING MOTOR CONTROL PC CARD

TYPE	PT	LV	SIG.NAME	COLOR	F	X	Y
WT	01	3	+ 0.0	0			
WT	02	3	+ 0.0	0			

./.

```
*****************************************************************************************************************
*   S T U D E R   *      L O C A T I O N     P I N     L I S T       *   76/11/18 * 13:07      *   P A G E    11   *
*****************************************************************************************************************
TLS 2000 PROF. TAPE TRANSPORT DECK *** STUDER A-80/MCH ***                                    76/11/18
```

GR: 20 (CONTINUATION)
CARD CHASSIS

EL: 05 (CONTINUATION)

TYPE	PT	LV	SIG.NAME	COLOR	F	X	Y
WT	03	3	QPWR2-1	1			
WT	04	3	QPWR2-2	4			
WT	05	3	B-FORW				
WT	06	3	T-M2				
WT	07	3	YAN-M2				
WT	08	3	QPWR2-3	9			
WT	09	3	R-TT2				
WT	10	3	Y-ACCEL	6			
WT	11	3	YRJ-MOVE				
WT	12	3	Y-CUTAUT				
	12K	0	KEY				
WT	13	3	R-CUT-3	7			
WT	14	3	K-LIFT				
WT	15	3	R-CUT-1	5			
WT	16	3	R-TT1	1			
WT	17	3	B-REW				
WT	18	3	T-M1				
WT	19	3	YAN-M1				
WT	20	3	QPWR1-3	8			
WT	21	3	QPWR1-2	5			
WT	22	3	QPWR1-1	2			
WT	23	3	+20.0	3			
WT	24	3	- 5.8				
WT	25	3					

EL: 06 CAPSTAN SERVO PC CARD

TYPE	PT	LV	SIG.NAME	COLOR	F	X	Y
WT	01A	3					
WT	01B	3	+ 0.0	0			
WT	02A	3					
WT	02B	3	+ 0.0	0			
	02K	0	KEY				
T	03A	3	Y-SYNC	2	3		
WT	03B	3	YAC2-M3	5			
T	04A	3	Y-TACH-D	1			
WT	04B	3	YAC1-M3	4			
WT	05A	3	K-PRESS				
WT	05B	3	0-YAC2	0			
WT	06A	3					
WT	06B	3	0-YAC1	0			
WT	07A	3					
WT	07B	3	R-SPLY-0				
WT	08A	3					
WT	08B	3	SPD-CTL2				
WT	09A	3					
WT	09B	3	Y-OUT	1			
WT	10A	3					
WT	10B	3	S-CAPEXT	8			
WT	11A	3					

./

GR: 20 (CONTINUATION)
CARD CHASSIS

EL: 06 (CONTINUATION)

TYPE	PT	LV	SIG.NAME	COLOR	F	X	Y
WT	11B	3	S-LOW				
WT	12A	3					
WT	12B	3	SPD-CTL1				
WT +	13A	3	K-CUTMD	5			
WT	13B	3	R-SPLY-1	7			
WT	14A	3					
WT	14B	3	+20.0	3			
WT	15A	3					
WT +	15B	3#	C-M3-2	8			
WT	16A	3					
WT +	16B	3#	T-M3	1			
WT	17A	3					
WT	17B	3	F-M3				
WT	18A	3					
WT	18B	3	M3-1	6			
WT	19A	3					
WT	19B	3					
WT	20A	3					
WT	20B	3	QPWR3-3	7			
WT	21A	3					
WT	21B	3	QPWR3-2	9			
WT	22A	3					
WT	22B	3	QPWR3-1	4			
WT	23A	3	+24.0				
WT	23B	3	+24.0	2			
WT	24A	3	- 5.8				
WT	24B	3	- 5.8				
WT	25A	3	+ 5.8				
WT	25B	3	+ 5.8				

EL: 09 IC DECODER PC CARD

TYPE	PT	LV	SIG.NAME	COLOR	F	X	Y
WT	01A	3	+ 0.0				
WT	01B	3	+ 0.0				
WT	02A	3	+ 0.0				
WT	02B	3	+ 0.0				
WT	03A	3					
WT	03B	3	YRJ-MOVE				
WT	04A	3					
WT	04B	3	Q-MOVE				
WT	05A	3					
WT	05B	3	YRJ-CUT				
WT	06A	3	R-DIR	9			
WT	06B	3	YRJ-FF0				
WT	07A	3	R-MOVE	6			
WT	07B	3	YRJ-FF2				
WT	08A	3	R-REPR	4			
WT	08B	3	K-CUT				
WT	09A	3					

./.

GR: 20 (CONTINUATION)
CARD CHASSIS

EL: 08 (CONTINUATION)

TYPE	PT	LV	SIG.NAME	COLOR	F	X	Y
WT	09B	3	YRJ-FF3				
WT	10A	3					
WT	10B	3	YRJ-FF1				
	10K	0	KEY				
WT	11A	3					
WT	11B	3	YRJ-FF4				
WT	12A	3#	R-REW	2			
WT	12B	3	R-STOP	1			
WT	13A	3					
WT	13B	3#	R-FORW	3			
WT	14A	3					
WT	14B	3	Y-CUTAUT				
WT	15A	3	K-PRESS	8			
WT	15B	3	TEST-R				
WT +	16A	3#	S-TT	4			
WT	16B	3	+ 0.0				
WT +	17A	3#	K-TT1/2	7			
WT	17B	3N	YRJ-'1'				
WT	18A	3#	R-CUT	6			
WT	18B	3	K-BRAKE				
WT	19A	3					
WT	19B	3	YRJ-DIR				
WT	20A	3	K-DIR				
WT	20B	3#	K-LIFT	3			
WT	21A	3	+0-CUTAU	0			
WT	21B	3	S-CUTAUT	1			
WT	22A	3	K-TT	9			
WT	22B	3	YRJ-REC				
WT	23A	3	+24.0	2			
WT	23B	3	+24.0	2			
WT	24A	3	- 5.8	6			
WT	24B	3	- 5.8				
WT	25A	3	+ 5.8	5			
WT	25B	3	+ 5.8				

EL: 09 IC MEMORY & COUNTER PC CARD

TYPE	PT	LV	SIG.NAME	COLOR	F	X	Y
WT	01A	3	+ 0.0	0			
WT	01B	3	+ 0.0				
WT	02A	3	+ 0.0				
WT	02B	3	+ 0.0				
WT	03A	3	YRJ-END				
WT	03B	3					
WT	04A	3	YPS-REC				
WT	04B	3	YRJ-CUT				
WT	05A	3	YRJ-FF1				
WT	05B	3	Q-MOVE2				
WT	06A	3	YPS-STOP				
WT	06B	3N	YRJ-MOV2				

./.

```
*****************************************************************************************************************
*   S T U D E R   *      L O C A T I O N     P I N     L I S T       *   76/11/18 * 13:07      *   P A G E    12   *
*****************************************************************************************************************
TLS 2000 PROF. TAPE TRANSPORT DECK *** STUDER A-80/MCH ***                                    76/11/18
```

GR: 20 (CONTINUATION)
CARD CHASSIS

EL: 09 (CONTINUATION)

TYPE	PT	LV	SIG.NAME	COLOR	F	X	Y
WT	07A	3	YPS-REPR				
WT	07B	3	YRJ-FF0				
WT	08A	3	YPS-FORW				
WT	08B	3	YRJ-FF2				
WT	09A	3	YPS-REW				
WT	09B	3	YRJ-FF3				
WT	10A	3	YPS-CUT				
WT	10B	3	YRJ-FF4				
WT	11A	3					
WT	11B	3	YRJ-FAD				
WT	12A	3	+0-DIR1	0			
WT	12B	3	QP-DIR1	8			
WT	13A	3N	+0-DIR2				
WT	13B	3	QP-DIR2	7			
WT	14A	3					
WT	14B	3					
WT	15A	3					
WT	15B	3	Y-ICLK	5			
WT	16A	3	Y-FORW	6			
WT	16B	3					
WT	17A	3N	+0-CLK				
WT	17B	3N	YRJ-CLK				
WT	18A	3					
WT	18B	3	YRJ-DIR				
WT	19A	3					
WT	19B	3					
WT +	20A	3	K-RESET	1			
WT	20B	3					
	20K	0	KEY				
WT	21A	3	B-REC	5			
WT	21B	3	YRJ-LOW				
WT	22A	3	Y-CLK	3			
WT	22B	3	Y-REVRS	4			
WT	23A	3	+24.0	2			
WT	23B	3	+24.0	2			
WT	24A	3					
WT	24B	3					
WT	25A	3	+ 5.8				
WT	25B	3	+ 5.8	5			

EL: 10 ATTENUATOR & PREAMP. PC CARD

TYPE	PT	LV	SIG.NAME	COLOR	F	X	Y
WT	01A	3	+ 0.0	0			
WT	01B	3	+ 0.0	0			
WT	02A	3	+ 0.0				
WT	02B	3	+ 0.0				
WT	03A	3	+0-MOVE	0			
WT	03B	3	QP-MOVE	4			
WT	04A	3	+0-END	0			

./.

GR: 20 (CONTINUATION)
CARD CHASSIS

EL: 10 (CONTINUATION)

TYPE	PT	LV	SIG.NAME	COLOR	F	X	Y
WT	04B	3	RP-END	8			
WT	05A	3	Y-REC				
WT	05B	3	Q-MOVE1				
WT	06A	3	YRJ-REC				
WT	06B	3	YRJ-END				
WT	07A	3	K-PRESS				
WT	07B	3	+16.0	3			
WT	08A	3	R-FAD	1			
WT	08B	3	YPS-REC				
WT +	09A	3	LOC-IN'	7			
WT	09B	3	R-CUT				
WT	10A	3					
WT	10B	3	S-CUT	6			
WT	11A	3					
WT	11B	3	S-REC	5			
WT	12A	3					
WT	12B	3	YPS-REPR				
WT	13A	3	FAD-2	9			
WT	13B	3	S-REPR	4			
WT	14A	3					
WT	14B	3	YPS-FORW				
WT	15A	3	FAD-1	8			
WT	15B	3	S-FORW	3			
WT	16A	3	YPS-MOVE				
WT	16B	3	YPS-REW				
	16K	0	KEY				
WT	17A	3	YPS-STOP				
WT	17B	3	S-REW	2			
WT	18A	3	S-LOW				
WT	18B	3	S-STOP	1			
WT	19A	3					
WT	19B	3	YPS-CUT				
WT	20A	3					
WT	20B	3	YRJ-FAD				
WT	21A	3	YRJ-LOW				
WT	21B	3	CMD.ENB2	4			
WT	22A	3					
WT	22B	3	R-END	7			
WT	23A	3	+24.0	2			
WT	23B	3	+24.0	2			
WT	24A	3	- 5.8				
WT	24B	3	- 5.8				
WT	25A	3	+ 5.8				
WT	25B	3	+ 5.8	5			

EL: 11 A-80 INTERFACE TO TLS 2000

TYPE	PT	LV	SIG.NAME	COLOR	F	X	Y
WT	01A	3	+ 0.0				
WT	01B	3	+ 0.0				

./.

GR: 20 (CONTINUATION)
CARD CHASSIS

EL: 11 (CONTINUATION)

TYPE	PT	LV	SIG.NAME	COLOR	F	X	Y
WT	02A	3	+ 0.0				
WT	02B	3	+ 0.0				
WT	03A	3					
WT	03B	3	QP-MOVE				
WT	04A	3	Q-MOVE2				
WT	04B	3	YRJ-LOW				
	04K	0	KEY				
WT	05A	3	YRJ-DIR				
WT	05B	3	Q-MOVE1				
WT	06A	3	YRJ-END				
WT	06B	3					
WT	07A	3	Y-TRSP	7			
WT	07B	3	Y-MOVE-D	9			
WT	08A	3	Y-REC				
WT	08B	3	Y-RECMD				
WT	09A	3					
WT	09B	3					
WT	10A	3	RECSTINH	9			
WT	10B	3					
WT	11A	3					
WT	11B	3					
WT	12A	3	K-CUT				
WT	12B	3					
WT	13A	3	K-CUTMD				
WT	13B	3	K-CUTINH	4			
WT	14A	3					
WT	14B	3	Q-MOVE				
WT	15A	3					
WT	15B	3	K-PRESS	8			
WT	16A	3					
WT	16B	3					
WT	17A	3					
WT	17B	3					
WT	18A	3					
WT	18B	3	S-HIGH				
WT	19A	3	S-LOWACH				
WT	19B	3	Y-MUTE	4			
WT	20A	3	Y-MUTEMD				
WT	20B	3	S-LOW	4			
WT	21A	3					
WT +	21B	3	LOC.ENB	8			
WT +	22A	3	TT1-ACT	3			
WT +	22B	3	TT2-ACT	8			
WT	23A	3	+24.0				
WT	23B	3	+24.0				
WT	24A	3	- 5.8				
WT	24B	3	- 5.8				
WT	25A	3	+ 5.8				
WT	25B	3	+ 5.8				

GR: 20 (CONTINUATION)
CARD CHASSIS

EL: 12 ERASE & BIAS OSCILLATOR PC CARD

TYPE	PT	LV	SIG.NAME	COLOR	F	X	Y
WT	01	3	+ 0.0				
WT	02	3	+ 0.0				
WT	03	3					
WT	04	3					
WT	05	3					
WT	06	3					
WT	07	3					
T	08	3	YAC-ERAS	1			
	08K	0	KEY				
T	09	3	0-ERAS	0			
T	10	3	YAC-BIAS	3			
T	11	3	0-BIAS	0			
WT	12	3					
WT	13	3					
WT	14	3					
WT	15	3					
WT	16	3					
WT	17	3					
WT	18	3					
WT	19	3					
WT	20	3					
WT	21	3					
WT	22	3					
WT	23	3	+24.0				
WT	24	3					
WT	25	3	+ 5.8				

EL: 13 RUSS BARS, UPPER

TYPE	PT	LV	SIG.NAME	COLOR	F	X	Y
WL	01	9@	+24.0	2			
W	02	9@	+ 5.8				

EL: 14 RUSS BARS, LOWER

TYPE	PT	LV	SIG.NAME	COLOR	F	X	Y
W	01	9@	+ 0.0				
W	02	9@	- 5.8				

GR: 21
CAPSTAN SPEED CONTROL CONNECTOR

EL: 01 CAPSTAN SPEED CONTROL CONNECTOR

TYPE	PT	LV	SIG.NAME	COLOR	F	X	Y
L	01	1@	+ 0.0	0			
L	02	1@	+24.0	2			
L	03	1@	+ 5.8	5			
L	04	1	S-CAPEXT	8			
L	05	1	R-SPLY-1	7			
L	06	1	Y-SYNC 2	3			
L	07	1	Y-OUT 1	4			
L	08	1@	+ 0.0	0			
L	09	1	Y-TACH-D	1			
L	10	1@	- 5.8	6			
L	11	1N	Y-SYNC 1				
L	12	1	SPD-CTL1	9			
L	13	1	R-SPLY-0	0			
L	14	1	SPD-CTL2	1			

GR: 22
MODE CONTROL CONNECTOR, REMOTE

EL: 01 MODE CONTROL CONNECTOR, REMOTE

TYPE	PT	LV	SIG.NAME	COLOR	F	X	Y
L	01	1	R-INDIC	9			
L	02	1	R-REW	2			
L	03	1	R-FORW	3			
L	04	1	R-REPR	4			
L	05	1	R-STOP	1			
L	06	1	R-REC	5			
L	07	1	R-CUT	6			
L	08	1R	R-MONO	3			
L	09	1	YPS-MOVE	7			
L	10	1	R-FAN	1			
L	11	1	FAN-1	8			
L	12	1@	+24.0	2			
L	13	1N	Y-MOVE-1				
L	14	1	Y-MOVE-D	9			
L	15	1@	- 5.8	6			
L	16	1	Y-REVRS	4			
L	17	1	Y-FORW	6			
L	18	1@	+24.0	2			
L	19	1	LOC-IN'	7			
L	20	1	S-REW	2			
L	21	1	S-FORW	3			
L	22	1	S-REPR	4			
L	23	1	S-STOP	1			
L	24	1	S-REC	5			
L	25	1	S-CUT	6			
L	26	1R	S-MONO	1			
L	27	1	Y-MUTE	4			
L	28	1N	REM-OUT				
L	29	1	FAN-2	9			
L	30	1@	+ 0.0	0			
L	31	1N	+0-TYPE1				
L	32	1N	+ 5.8(1)				
L	33	1	K-RESET	1			
L	34	1	Y-CLK	3			
L	35	1	Y-TCLK	5			
L	36	1@	+ 0.0	0			

GR: 24
EXTENDED MODE CONTROL CONNECTOR, REMOTE

EL: 01 EXTENDED MODE CONTROL, REMOTE

TYPE	PT	LV	SIG.NAME	COLOR	F	X	Y
L	01	1	LOC.ENR	5			
L	02	1	K-PRESS	8			
L	03	1N	MOD-2				
L	04	1N	MOD-1				
L	05	1	K-CUTINH	4			
L	06	1N	Y-STOP				
L	07	1					
L	08	1N	Y-RES3				
L	09	1N	Y-LOW				
L	10	1N	Y-MONO				
L	11	1N	S-RES2				
L	12	1@	+ 5.8	5			
L	13	1	CMD.ENR2	4			
L	14	1	R-CUT-1	5			
L	15	1	R-CUT-3	7			
L	16	1	S-CUTAUT	1			
L	17	1N	Y-RFLX				
L	18	1	Y-TRSP	7			
L	19	1	TT1-ACT	3			
L	20	1	TT2-ACT	8			
L	21	1	S-LOW	4			
L	22	1					
L	23	1	RECSTINH	9			
L	24	1@	+ 0.0	0			

GR: 25
TAPE END SENSOR, LEFT

EL: 01 TAPE END SENSOR LEFT

TYPE	PT	LV	SIG.NAME	COLOR	F	X	Y
P	01	1@	+ 0.0	0			
P	03	1@	- 5.8	6			
P	04	1@	TT1-ACT	3			

GR: 26
TAPE END SENSOR, RIGHT

EL: 01 TAPE END SENSOR RIGHT

TYPE	PT	LV	SIG.NAME	COLOR	F	X	Y
P	01	1@	+ 0.0	0			
P	03	1@	- 5.8	6			
P	04	1@	TT2-ACT	8			

```
*****************************************************************************************************************************
*   S T U D E R   *     L O C A T I O N     S U M M A R Y     *   76/11/18 * 13:07    *  P A G E    15   *
*****************************************************************************************************************************
TLS 2000 PROF. TAPE TRANSPORT DECK *** STUDER A-80/MCH ***                              76/11/18
```

GR #	USED PINS	UNUSED PINS	TOTAL PINS	COD. KEYS	ELE-MNTS	DESCRIPTION OF GROUP	PART # OF GR
01	24	2	26	0	8	REAR PANEL ASSEMBLY	
02	158	8	166	0	10	POWER SUPPLY ASSEMBLY	
03	4	6	10	0	2	CABLE FROM POWER SUPPLY TO MAIN SWITCH	
04	32	0	32	0	13	PWR TRANSISTORS & PHASE SHIFT CAPACITORS	
05	12	5	17	0	5	TAPE SPEED & POWER SWITCH ASSEMBLY	
06	3	0	3	0	1	SPEED SELECTOR	
07	3	2	5	0	1	SUPPLY MOTOR	
08	2	1	3	0	1	BRAKE LIFT SOLENOID, LEFT	
09	2	1	3	0	1	BRAKE LIFT SOLENOID, RIGHT	
10	3	2	5	0	1	TAKE-UP MOTOR	
11	5	0	5	0	1	TAPE TENSION CONTROL, LEFT	
12	5	0	5	0	1	TAPE TENSION CONTROL, RIGHT	
13	4	1	5	0	1	OPTICAL TAPE END SENSOR	
14	11	1	12	0	2	TAPE MOVE & DIRECTION SENSOR	
15	5	0	5	0	1	PRESSURE ROLLER ASSEMBLY	
16	7	1	8	0	1	CAPSTAN MOTOR	
17	15	0	15	0	1	LOCAL COMMAND SWITCHES	
18	9	0	9	0	1	LOCAL TAPE TIMER	
19	5	0	5	0	1	CUTTER CONTROL	
20	296	86	382	9	13	CARD CHASSIS	
21	14	0	14	0	1	CAPSTAN SPEED CONTROL CONNECTOR	
22	36	0	36	0	1	MODE CONTROL CONNECTOR, REMOTE	
24	22	2	24	0	1	EXTENDED MODE CONTROL CONNECTOR, REMOTE	
25	3	0	3	0	1	TAPE END SENSOR, LEFT	
26	3	0	3	0	1	TAPE END SENSOR, RIGHT	
TOT.	683	118	801	9	79	DISTRIBUTED IN 25 GROUPS	

```
*****************************************************************************************************************************
*  S T U D E R  *  S I G N A L  W I R E  L I S T          *  76/11/18 * 13:07    *  P A G E   16  *
*****************************************************************************************************************************
TLS 2000 PROF. TAPE TRANSPORT DECK *** STUDER A-80/MCH ***                        76/11/18
```

SIG.NAME	COLOR	TYPE	GR	EL	PT	S	DESCRIPTION OF ELEMENT
0-AC1	6	Y	02	05	38		RECTIFIER & CONNECTOR PC CARD
		L	02	20	06		CHANNEL FEED CONNECTOR
0-AC2	7	Y	02	05	39		RECTIFIER & CONNECTOR PC CARD
		L	02	20	07		CHANNEL FEED CONNECTOR
0-AC3	6	Y	02	05	42		RECTIFIER & CONNECTOR PC CARD
0-AC4	7	Y	02	05	43		RECTIFIER & CONNECTOR PC CARD
0-BIAS	0	L	02	05	04		RECTIFIER & CONNECTOR PC CARD
		Y	02	05	36	*	RECTIFIER & CONNECTOR PC CARD
		L	02	20	09		CHANNEL FEED CONNECTOR
		TL	20	01	06		POWER CONNECTOR PC CARD
		T	20	12	11		ERASE & BIAS OSCILLATOR PC CARD
0-ERAS	0	L	02	05	02		RECTIFIER & CONNECTOR PC CARD
		Y	02	05	33	*	RECTIFIER & CONNECTOR PC CARD
		L	02	20	02		CHANNEL FEED CONNECTOR
		TL	20	01	08		POWER CONNECTOR PC CARD
		T	20	12	09		ERASE & BIAS OSCILLATOR PC CARD
0-YAC1	0	M	16	01	04		CAPSTAN MOTOR ASSEMBLY
		WT	20	06	06B		CAPSTAN SERVO PC CARD
0-YAC2	0	M	16	01	07		CAPSTAN MOTOR ASSEMBLY
		WT	20	06	05B		CAPSTAN SERVO PC CARD
+ 0.0	0	L	02	05	12	@	RECTIFIER & CONNECTOR PC CARD
		L	02	05	13	@	RECTIFIER & CONNECTOR PC CARD
		L	02	05	14	@	RECTIFIER & CONNECTOR PC CARD
		SL	04	03	01	@	DC CHASSIS CONNECTION
		L	05	04	01		TAPE SPEED SELECTOR SWITCH
		F	05	05	01		SPEED SELECTOR FEED, JACK
		M	06	01	01	@	SPEED SELECTOR, CABLE PLUG
		M	11	01	03	@	TAPE TENSION CONTROL ASSY, LEFT
		M	12	01	03	@	TAPE TENSION CONTROL ASSY, RIGHT
		P	18	01	02	@	TAPE TIMER ASSEMBLY
		WTL	20	01	01	D	POWER CONNECTOR PC CARD
		WTL	20	01	02	D	POWER CONNECTOR PC CARD
		WTL	20	01	24		POWER CONNECTOR PC CARD
		WT	20	02	01		+24/+20/+6/-6V STABIL. PC CARD
		WT	20	02	02		+24/+20/+6/-6V STABIL. PC CARD
		WT	20	02	19		+24/+20/+6/-6V STABIL. PC CARD
		WT	20	02	20		+24/+20/+6/-6V STABIL. PC CARD
		WT	20	04	01		CONTACTOR PC CARD
		WT	20	04	02		CONTACTOR PC CARD
		WT	20	05	01		SPOOLING MOTOR CONTROL PC CARD
		WT	20	05	02		SPOOLING MOTOR CONTROL PC CARD
		WT	20	06	01B		CAPSTAN SERVO PC CARD
		WT	20	06	02B		CAPSTAN SERVO PC CARD
		WT	20	08	01A		IC DECODER PC CARD
		WT	20	08	01B		IC DECODER PC CARD
		WT	20	08	02A		IC DECODER PC CARD
		WT	20	08	02B		IC DECODER PC CARD
		WT	20	08	16B		IC DECODER PC CARD
(CONT.)		WT	20	09	01A		IC MEMORY & COUNTER PC CARD
		WT	20	09	01B		IC MEMORY & COUNTER PC CARD
		WT	20	09	02A		IC MEMORY & COUNTER PC CARD
		WT	20	09	02B		IC MEMORY & COUNTER PC CARD
		WT	20	10	01A		ATTENUATOR & PREAMP. PC CARD
		WT	20	10	01B		ATTENUATOR & PREAMP. PC CARD
		WT	20	10	02A		ATTENUATOR & PREAMP. PC CARD
		WT	20	10	02B		ATTENUATOR & PREAMP. PC CARD
		WT	20	11	01A		A-80 INTERFACE TO TLS 2000
		WT	20	11	01B		A-80 INTERFACE TO TLS 2000
		WT	20	11	02A		A-80 INTERFACE TO TLS 2000
		WT	20	11	02B		A-80 INTERFACE TO TLS 2000
		WT	20	12	01		ERASE & BIAS OSCILLATOR PC CARD
		WT	20	12	02		ERASE & BIAS OSCILLATOR PC CARD
		W	20	14	01	#	RUSS BARS, LOWER
		L	21	01	01	@	CAPSTAN SPEED CONTROL CONNECTOR
		L	21	01	08	@	CAPSTAN SPEED CONTROL CONNECTOR
		L	22	01	30	@	MODE CONTROL CONNECTOR, REMOTE
		L	22	01	36	@	MODE CONTROL CONNECTOR, REMOTE
		L	24	01	24	@	EXTENDED MODE CONTROL, REMOTE
		P	25	01	01	@	TAPE END SENSOR LEFT
		P	26	01	01	@	TAPE END SENSOR RIGHT
+ 0.0(1)	0	L	01	07	01		POWER FEED CONTACTOR (MCH)
		F	01	08	07		POWER FEED CONNECTOR, MAINS
		M	02	01	07		POWER INPUT FEED CONNECTOR
		Y	02	05	60		RECTIFIER & CONNECTOR PC CARD
+ 0.0(2)	0	Y	02	05	73		RECTIFIER & CONNECTOR PC CARD
		Y	02	05	74		RECTIFIER & CONNECTOR PC CARD
		L	02	16	02	*	CHARGE CAPACITOR, +24.0 V (1)
		L	02	17	02		CHARGE CAPACITOR, +24.0 V (2)
+ 0.0(3)	0	Y	02	05	81		RECTIFIER & CONNECTOR PC CARD
		Y	02	05	82		RECTIFIER & CONNECTOR PC CARD
		L	02	19	01	*	CHARGE CAPACITOR, - 5.8 V
+ 0.0(4)	0	Y	02	05	93		RECTIFIER & CONNECTOR PC CARD
		Y	02	05	94		RECTIFIER & CONNECTOR PC CARD
		L	02	18	02	*	CHARGE CAPACITOR, + 5.8 V
+ 5.8	5	L	02	05	20	@	RECTIFIER & CONNECTOR PC CARD
		P	14	01	02	@	TAPE MOVE SENSOR
		P	14	02	02	@	TAPE DIRECTION SENSOR
		P	18	01	09	@	TAPE TIMER ASSEMBLY
		WTL	20	01	25		POWER CONNECTOR PC CARD
		WT	20	02	25		+24/+20/+6/-6V STABIL. PC CARD
		WT	20	04	25		CONTACTOR PC CARD
		WT	20	06	25A		CAPSTAN SERVO PC CARD
		WT	20	06	25B		CAPSTAN SERVO PC CARD
		WT	20	08	25A		IC DECODER PC CARD
		WT	20	08	25B		IC DECODER PC CARD
		WT	20	09	25A		IC MEMORY & COUNTER PC CARD
		WT	20	09	25B		IC MEMORY & COUNTER PC CARD
		WT	20	10	25A		ATTENUATOR & PREAMP. PC CARD
		WT	20	10	25B		ATTENUATOR & PREAMP. PC CARD

./.

```
*****************************************************************************************************************************
*  S T U D E R  *  S I G N A L  W I R E  L I S T          *  76/11/18 * 13:07    *  P A G E   17  *
*****************************************************************************************************************************
TLS 2000 PROF. TAPE TRANSPORT DECK *** STUDER A-80/MCH ***                        76/11/18
```

SIG.NAME	COLOR	TYPE	GR	EL	PT	S	DESCRIPTION OF ELEMENT
(CONT.)		WT	20	11	25A		A-80 INTERFACE TO TLS 2000
		WT	20	11	25B		A-80 INTERFACE TO TLS 2000
		WT	20	12	25		ERASE & BIAS OSCILLATOR PC CARD
		W	20	13	02	#	RUSS BARS, UPPER
		L	21	01	03	@	CAPSTAN SPEED CONTROL CONNECTOR
		L	24	01	12	@	EXTENDED MODE CONTROL, REMOTE
+ 5.8(1)		L	22	01	32	N	MODE CONTROL CONNECTOR, REMOTE
+0-CLK		WT	20	09	17A	N	IC MEMORY & COUNTER PC CARD
+0-CUTAU	0	M	19	01	05		CUTTER CONTROL ASSEMBLY
		WT	20	08	21A		IC DECODER PC CARD
+0-DIR1	0	P	14	02	04		TAPE DIRECTION SENSOR
		WT	20	09	12A		IC MEMORY & COUNTER PC CARD
+0-DIR2		WT	20	09	13A	N	IC MEMORY & COUNTER PC CARD
+0-END	0	M	13	01	02		OPTICAL TAPE END SENSOR
		WT	20	10	04A		ATTENUATOR & PREAMP. PC CARD
+0-MOVE	0	P	14	01	04		TAPE MOVE SENSOR
		WT	20	10	03A		ATTENUATOR & PREAMP. PC CARD
+0-TYPE1		L	22	01	31	N	MODE CONTROL CONNECTOR, REMOTE
+10.0	8	L	02	05	19		RECTIFIER & CONNECTOR PC CARD
		WTL	20	01	22		POWER CONNECTOR PC CARD
		WT	20	02	21		+24/+20/+6/-6V STABIL. PC CARD
+10.0(0)	8	Y	02	05	91		RECTIFIER & CONNECTOR PC CARD
		Y	02	05	92		RECTIFIER & CONNECTOR PC CARD
		L	02	18	01	*	CHARGE CAPACITOR, + 5.8 V
+16.0	3	M	13	01	01		OPTICAL TAPE END SENSOR
		WT	20	10	07B		ATTENUATOR & PREAMP. PC CARD
+20.0	3	H	04	08	01		+20.0 V STABILIZER TRANSISTOR
		M	11	01	01	@	TAPE TENSION CONTROL ASSY, LEFT
		M	12	01	01	@	TAPE TENSION CONTROL ASSY, RIGHT
		M	19	01	02	@	CUTTER CONTROL ASSEMBLY
		WT	20	02	09		+24/+20/+6/-6V STABIL. PC CARD
		WT	20	02	10		+24/+20/+6/-6V STABIL. PC CARD
		WT	20	04	17		CONTACTOR PC CARD
		WT	20	05	23		SPOOLING MOTOR CONTROL PC CARD
		WT	20	06	14B		CAPSTAN SERVO PC CARD
+24.0	2	L	02	05	06	@	RECTIFIER & CONNECTOR PC CARD
		H	04	04	01		+24.0 V STABILIZER TRANSISTOR
		L	04	08	03	@	+20.0 V STABILIZER TRANSISTOR
		F	08	01	01	@	BRAKE LIFT SOLENOID, LEFT
		F	09	01	01	@	BRAKE LIFT SOLENOID, RIGHT
		P	14	01	01	@	TAPE MOVE SENSOR
		P	14	02	01	@	TAPE DIRECTION SENSOR
		F	15	01	01	@	PRESSURE ROLLER ASSEMBLY
(CONT.)		P	18	01	04	@	TAPE TIMER ASSEMBLY
		WTL	20	01	23		POWER CONNECTOR PC CARD
		WT	20	02	11		+24/+20/+6/-6V STABIL. PC CARD
		WT	20	02	12		+24/+20/+6/-6V STABIL. PC CARD
		F	20	03	01	@	TIME ELAPSE METER, CABLE PLUG
		WT	20	04	03		CONTACTOR PC CARD
		WT	20	04	04		CONTACTOR PC CARD
		WT	20	04	23		CONTACTOR PC CARD
		WT	20	06	23A		CAPSTAN SERVO PC CARD
		WT	20	06	23B		CAPSTAN SERVO PC CARD
		WT	20	08	23A		IC DECODER PC CARD
		WT	20	08	23B		IC DECODER PC CARD
		WT	20	09	23A		IC MEMORY & COUNTER PC CARD
		WT	20	09	23B		IC MEMORY & COUNTER PC CARD
		WT	20	10	23A		ATTENUATOR & PREAMP. PC CARD
		WT	20	10	23B		ATTENUATOR & PREAMP. PC CARD
		WT	20	11	23A		A-80 INTERFACE TO TLS 2000
		WT	20	11	23B		A-80 INTERFACE TO TLS 2000
		WT	20	12	23		ERASE & BIAS OSCILLATOR PC CARD
		WL	20	13	01	#	RUSS BARS, UPPER
		L	21	01	02	@	CAPSTAN SPEED CONTROL CONNECTOR
		L	22	01	12	@	MODE CONTROL CONNECTOR, REMOTE
		L	22	01	18	@	MODE CONTROL CONNECTOR, REMOTE
+24.0(1)	2	L	01	07	02		POWER FEED CONTACTOR (MCH)
		F	01	08	08		POWER FEED CONNECTOR, MAINS
		M	02	01	08		POWER INPUT FEED CONNECTOR
		Y	02	05	59		RECTIFIER & CONNECTOR PC CARD
+31.0	9	L	02	05	17	@	RECTIFIER & CONNECTOR PC CARD
		L	04	04	03	D	+24.0 V STABILIZER TRANSISTOR
		WTL	20	01	19	#	POWER CONNECTOR PC CARD
		WTL	20	01	20		POWER CONNECTOR PC CARD
		WT	20	02	06		+24/+20/+6/-6V STABIL. PC CARD
+31.0(N)		WT	20	02	05	N	+24/+20/+6/-6V STABIL. PC CARD
+31.0(0)	9	Y	02	05	71		RECTIFIER & CONNECTOR PC CARD
		Y	02	05	72		RECTIFIER & CONNECTOR PC CARD
		L	02	16	01	*	CHARGE CAPACITOR, +24.0 V (1)
		L	02	17	01		CHARGE CAPACITOR, +24.0 V (2)
- 5.8	6	P	18	01	01	@	TAPE TIMER ASSEMBLY
		WT	20	02	14		+24/+20/+6/-6V STABIL. PC CARD
		WT	20	04	24		CONTACTOR PC CARD
		WT	20	05	24		SPOOLING MOTOR CONTROL PC CARD
		WT	20	06	24A		CAPSTAN SERVO PC CARD
		WT	20	06	24B		CAPSTAN SERVO PC CARD
		WT	20	08	24A		IC DECODER PC CARD
		WT	20	08	24B		IC DECODER PC CARD
		WT	20	10	24A		ATTENUATOR & PREAMP. PC CARD
		WT	20	10	24B		ATTENUATOR & PREAMP. PC CARD
		WT	20	11	24A		A-80 INTERFACE TO TLS 2000
		WT	20	11	24B		A-80 INTERFACE TO TLS 2000
		W	20	14	02	#	RUSS BARS, LOWER
		L	21	01	10	@	CAPSTAN SPEED CONTROL CONNECTOR

./.

SIG.NAME	COLOR	TYPE	GR	EL	PT	S	DESCRIPTION OF ELEMENT
(CONT.)		L	22	01	15	@	MODE CONTROL CONNECTOR, REMOTE
		P	25	01	03	@	TAPE END SENSOR LEFT
		P	24	01	03	@	TAPE END SENSOR RIGHT
-10.0	6	L	02	05	18		RECTIFIER & CONNECTOR PC CARD
		WTL	20	01	21		POWER CONNECTOR PC CARD
		WT	20	02	18		+24/+20/+6/-6V STABIL. PC CARD
-10.0(0)	6	Y	02	05	83		RECTIFIER & CONNECTOR PC CARD
		Y	02	05	84		RECTIFIER & CONNECTOR PC CARD
		L	02	19	02	*	CHARGE CAPACITOR, - 5.8 V
AC1	6	Y	02	05	40		RECTIFIER & CONNECTOR PC CARD
		L	02	20	13		CHANNEL FEED CONNECTOR
AC2	7	Y	02	05	41		RECTIFIER & CONNECTOR PC CARD
		L	02	20	14		CHANNEL FEED CONNECTOR
AC3	6	Y	02	05	44		RECTIFIER & CONNECTOR PC CARD
AC4	7	Y	02	05	45		RECTIFIER & CONNECTOR PC CARD
B-CUT	6	P	17	01	02		COMMAND SWITCHES, LOCAL
		WT	20	08	18A	*	IC DECODER PC CARD
		WT	20	10	09R		ATTENUATOR & PREAMP. PC CARD
		L	22	01	07		MODE CONTROL CONNECTOR, REMOTE
B-DIR	9	P	14	02	06		TAPE DIRECTION SENSOR
		WT	20	08	06A		IC DECODER PC CARD
B-END	7	F	13	01	05		OPTICAL TAPE END SENSOR
		WT	20	10	22R		ATTENUATOR & PREAMP. PC CARD
B-FAD	1	WT	20	10	08A		ATTENUATOR & PREAMP. PC CARD
		L	22	01	10		MODE CONTROL CONNECTOR, REMOTE
B-FORW	3	P	17	01	06		COMMAND SWITCHES, LOCAL
		WT	20	05	05		SPOOLING MOTOR CONTROL PC CARD
		WT	20	08	13R	#	IC DECODER PC CARD
		L	22	01	03		MODE CONTROL CONNECTOR, REMOTE
B-INDIC	9	P	17	01	01		COMMAND SWITCHES, LOCAL
		WT	20	04	21		CONTACTOR PC CARD
		L	22	01	01		MODE CONTROL CONNECTOR, REMOTE
B-MONO	3	L	22	01	08	R	MODE CONTROL CONNECTOR, REMOTE
B-MOVE	6	P	14	01	06		TAPE MOVE SENSOR
		WT	20	08	07A		IC DECODER PC CARD
B-REC	5	P	17	01	03		COMMAND SWITCHES, LOCAL
		WT	20	09	21A		IC MEMORY & COUNTER PC CARD
		L	22	01	06		MODE CONTROL CONNECTOR, REMOTE
B-REPR	4	P	17	01	05		COMMAND SWITCHES, LOCAL
		WT	20	08	08A		IC DECODER PC CARD
(CONT.)		L	22	01	04		MODE CONTROL CONNECTOR, REMOTE
B-REW	2	P	17	01	07		COMMAND SWITCHES, LOCAL
		WT	20	05	17		SPOOLING MOTOR CONTROL PC CARD
		WT	20	08	12A	#	IC DECODER PC CARD
		L	22	01	02		MODE CONTROL CONNECTOR, REMOTE
B-STOP	1	P	17	01	04		COMMAND SWITCHES, LOCAL
		WT	20	08	12B		IC DECODER PC CARD
		L	22	01	05		MODE CONTROL CONNECTOR, REMOTE
C-M1-2	5	L	04	06	02		SUPPLY MOTOR CAPACITOR, ADD.
		L	04	14	02		SUPPLY MOTOR CAPACITOR, MAIN
		F	07	01	05		SUPPLY MOTOR (M1)
		WT +	20	04	14	#	CONTACTOR PC CARD
C-M2-2	8	L	04	01	02		TAKE-UP MOTOR CAPACITOR, ADD.
		L	04	13	02		TAKE-UP MOTOR CAPACITOR, MAIN
		F	10	01	03		TAKE-UP MOTOR (M2)
		WT +	20	04	09	#	CONTACTOR PC CARD
C-M3-2	8	L	04	07	02		CAPSTAN MOTOR CAPACITOR
		M	16	01	03		CAPSTAN MOTOR ASSEMBLY
		WT +	20	06	15R	#	CAPSTAN SERVO PC CARD
CMD.ENB2	4	WT	20	10	21R		ATTENUATOR & PREAMP. PC CARD
		L	24	01	13		EXTENDED MODE CONTROL, REMOTE
F(+ 5.8)	2	L	02	05	95		RECTIFIER & CONNECTOR PC CARD
		L	02	14	01		FUSE, + 5.8 V
F(+24.0)	9	L	02	05	75		RECTIFIER & CONNECTOR PC CARD
		L	02	15	01		FUSE, +24.0 V
F(- 5.8)	6	L	02	05	85		RECTIFIER & CONNECTOR PC CARD
		L	02	13	01		FUSE, - 5.8 V
F-LINE2	8	L	01	04	02		MAIN FUSE, TAPE DECK
		F	01	08	03		POWER FEED CONNECTOR, MAINS
		M	02	01	03		POWER INPUT FEED CONNECTOR
		F	02	08	02		POWER SWITCH FEED, RECEPTACLE
		M	03	01	02		EXTENSION CABLE, SUPPLY SIDE
		F	03	02	02		EXTENSION CABLE, SWITCH SIDE
		M	05	01	02		POWER SWITCH FEED, JACK
		L	05	02	01		POWER SWITCH, REAR
		L	05	03	01		POWER SWITCH, FRONT
F-M1	4	L	02	05	10		RECTIFIER & CONNECTOR PC CARD
		WTL	20	01	17		POWER CONNECTOR PC CARD
		WT	20	04	13		CONTACTOR PC CARD
F-M1(0)	4	L	02	05	61		RECTIFIER & CONNECTOR PC CARD
		L	02	10	01		FUSE, SUPPLY MOTOR
F-M2	9	L	02	05	09		RECTIFIER & CONNECTOR PC CARD
		WTL	20	01	15		POWER CONNECTOR PC CARD

./.

SIG.NAME	COLOR	TYPE	GR	EL	PT	S	DESCRIPTION OF ELEMENT
(CONT.)		WT	20	04	07		CONTACTOR PC CARD
F-M2(0)	5	L	02	05	66		RECTIFIER & CONNECTOR PC CARD
		L	02	11	01		FUSE, TAKE-UP MOTOR
F-M3	5	L	02	05	15		RECTIFIER & CONNECTOR PC CARD
		WTL	20	01	12		POWER CONNECTOR PC CARD
		WT	20	06	17R		CAPSTAN SERVO PC CARD
F-M3(0)	8	L	02	05	68		RECTIFIER & CONNECTOR PC CARD
		L	02	12	01		FUSE, CAPSTAN
FAD-1	8	WT	20	10	15A		ATTENUATOR & PREAMP. PC CARD
		L	22	01	11		MODE CONTROL CONNECTOR, REMOTE
FAD-2	9	WT	20	10	13A		ATTENUATOR & PREAMP. PC CARD
		L	22	01	29		MODE CONTROL CONNECTOR, REMOTE
GND EXT	0	L	01	02	01		GROUND POST, EXTERNAL
		L	01	03	03		GROUND SELECTOR
GND MAIN	4/5	L	01	03	02		GROUND SELECTOR
		L	01	05	03		POWER INPUT CONNECTOR
		L	01	06	03		POWER OUTPUT CONNECTOR (MCH)
GROUND	4/5	L	01	03	01		GROUND SELECTOR
		F	01	08	05		POWER FEED CONNECTOR, MAINS
		M	02	01	05		POWER INPUT FEED CONNECTOR
		LS	02	06	01		GROUND CHASSIS CONNECTION
K-BRAKE		WT	20	04	15		CONTACTOR PC CARD
		WT	20	08	18R		IC DECODER PC CARD
K-CUT		WT	20	08	08R		IC DECODER PC CARD
		WT	20	11	12A		A-80 INTERFACE TO TLS 2000
K-CUTINH	4	WT	20	11	13R		A-80 INTERFACE TO TLS 2000
		L	24	01	05		EXTENDED MODE CONTROL, REMOTE
K-CUTMD	5	M	15	01	04		PRESSURE ROLLER ASSEMBLY
		WT +	20	06	13A		CAPSTAN SERVO PC CARD
		WT	20	11	19A		A-80 INTERFACE TO TLS 2000
K-DIR		WT	20	04	16		CONTACTOR PC CARD
		WT	20	08	20A		IC DECODER PC CARD
K-LIFT	3	F	08	01	02		BRAKE LIFT SOLENOID, LEFT
		F	09	01	02		BRAKE LIFT SOLENOID, RIGHT
		F	20	03	03	@	TIME ELAPSE METER, CARLE PLUG
		WT	20	05	14		SPOOLING MOTOR CONTROL PC CARD
		WT	20	08	20R	#	IC DECODER PC CARD
K-LINE2	7	L	01	06	02		POWER OUTPUT CONNECTOR (MCH)
		L	01	07	04		POWER FEED CONTACTOR (MCH)
K-PRESS	8	M	15	01	02		PRESSURE ROLLER ASSEMBLY
(CONT.)		WT	20	06	05A		CAPSTAN SERVO PC CARD
		WT	20	08	15A		IC DECODER PC CARD
		WT	20	10	07A		ATTENUATOR & PREAMP. PC CARD
		WT	20	11	15R		A-80 INTERFACE TO TLS 2000
		L	24	01	02		EXTENDED MODE CONTROL, REMOTE
K-RESET	1	P	18	01	03		TAPE TIMER ASSEMBLY
		WT +	20	09	20A		IC MEMORY & COUNTER PC CARD
		L	22	01	33		MODE CONTROL CONNECTOR, REMOTE
K-TT	9	M	12	01	04		TAPE TENSION CONTROL ASSY, RIGHT
		WT	20	08	22A		IC DECODER PC CARD
K-TT1/2	7	M	11	01	04		TAPE TENSION CONTROL ASSY, LEFT
		M	12	01	05		TAPE TENSION CONTROL ASSY, RIGHT
		WT +	20	08	17A	#	IC DECODER PC CARD
LINE1	6	Y	01	01	01		FAN FEED PC BOARD (MCH)
		L	01	05	01		POWER INPUT CONNECTOR
		L	01	06	01		POWER OUTPUT CONNECTOR (MCH)
		F	01	08	01		POWER FEED CONNECTOR, MAINS
		M	02	01	01		POWER INPUT FEED CONNECTOR
		L	02	02	01	*	VOLTAGE SELECTOR TERMINAL BLOCK
		L	02	04	01		POWER TRANSFORMER
LINE2	7	L	01	04	01		MAIN FUSE, TAPE DECK
		L	01	05	02		POWER INPUT CONNECTOR
		L	01	07	03		POWER FEED CONTACTOR (MCH)
LOC.ENB	8	P	17	01	15		COMMAND SWITCHES, LOCAL
		WT +	20	11	21R		A-80 INTERFACE TO TLS 2000
		L	24	01	01		EXTENDED MODE CONTROL, REMOTE
LOC-IN'	7	P	17	01	14		COMMAND SWITCHES, LOCAL
		WT +	20	10	09A		ATTENUATOR & PREAMP. PC CARD
		L	22	01	19		MODE CONTROL CONNECTOR, REMOTE
MOD-1		L	24	01	04	N	EXTENDED MODE CONTROL, REMOTE
MOD-2		L	24	01	03	N	EXTENDED MODE CONTROL, REMOTE
M1-1	1	F	07	01	01		SUPPLY MOTOR (M1)
		WT	20	04	12		CONTACTOR PC CARD
M1-2	4	L	04	06	01		SUPPLY MOTOR CAPACITOR, ADD.
		L	04	14	01		SUPPLY MOTOR CAPACITOR, MAIN
		F	07	01	03		SUPPLY MOTOR (M1)
		WT	20	04	10	#	CONTACTOR PC CARD
M2-1	6	F	10	01	01		TAKE-UP MOTOR (M2)
		WT	20	04	08		CONTACTOR PC CARD
M2-2	7	L	04	01	01		TAKE-UP MOTOR CAPACITOR, ADD.
		L	04	13	01		TAKE-UP MOTOR CAPACITOR, MAIN
		F	10	01	05		TAKE-UP MOTOR (M2)
		WT	20	04	06	#	CONTACTOR PC CARD

./.

SIG.NAME	COLOR	TYPE	GR	EL	PT	S	DESCRIPTION OF ELEMENT
M3-1	6	M	16	01	01		CAPSTAN MOTOR ASSEMBLY
		WT	20	06	18R		CAPSTAN SERVO PC CARD
M5-1	9	Y	02	05	69	N	RECTIFIER & CONNECTOR PC CARD
M5-2	9	Y	02	05	70	N	RECTIFIER & CONNECTOR PC CARD
Q-MOVE		WT	20	08	04R		IC DECODER PC CARD
		WT	20	11	14R		A-80 INTERFACE TO TLS 2000
Q-MOVE1		WT	20	10	05R		ATTENUATOR & PREAMP. PC CARD
		WT	20	11	05R		A-80 INTERFACE TO TLS 2000
Q-MOVE2		WT	20	09	05R		IC MEMORY & COUNTER PC CARD
		WT	20	11	04A		A-80 INTERFACE TO TLS 2000
QP-DIR1	8	P	14	02	05		TAPE DIRECTION SENSOR
		WT	20	09	12R		IC MEMORY & COUNTER PC CARD
QP-DIR2	7	P	14	02	03		TAPE DIRECTION SENSOR
		WT	20	09	13R		IC MEMORY & COUNTER PC CARD
QP-MOVE	4	P	14	01	03		TAPE MOVE SENSOR
		WT	20	10	03R		ATTENUATOR & PREAMP. PC CARD
		WT	20	11	03R		A-80 INTERFACE TO TLS 2000
QPWR1-1	2	L	04	12	01		SUPPLY MOTOR TRANSISTOR PAIR
		WT	20	05	22		SPOOLING MOTOR CONTROL PC CARD
QPWR1-2	5	L	04	12	02		SUPPLY MOTOR TRANSISTOR PAIR
		WT	20	05	21		SPOOLING MOTOR CONTROL PC CARD
QPWR1-3	8	L	04	12	03		SUPPLY MOTOR TRANSISTOR PAIR
		WT	20	05	20		SPOOLING MOTOR CONTROL PC CARD
QPWR2-1	1	L	04	05	01		TAKE-UP MOTOR TRANSISTOR PAIR
		WT	20	05	03		SPOOLING MOTOR CONTROL PC CARD
QPWR2-2	4	L	04	05	02		TAKE-UP MOTOR TRANSISTOR PAIR
		WT	20	05	04		SPOOLING MOTOR CONTROL PC CARD
QPWR2-3	9	L	04	05	03		TAKE-UP MOTOR TRANSISTOR PAIR
		WT	20	05	08		SPOOLING MOTOR CONTROL PC CARD
QPWR3-1	4	H	04	11	01		CAPSTAN MOTOR CONTROL TRANSISTOR
		WT	20	06	22R		CAPSTAN SERVO PC CARD
QPWR3-2	9	H	04	11	02		CAPSTAN MOTOR CONTROL TRANSISTOR
		WT	20	06	21R		CAPSTAN SERVO PC CARD
QPWR3-3	7	L	04	11	03		CAPSTAN MOTOR CONTROL TRANSISTOR
		WT	20	06	20R		CAPSTAN SERVO PC CARD
QPWR4-1	1	H	04	10	01		- 5.8 V STABILIZER TRANSISTOR
		WT	20	02	17		+24/+20/+6/-6V STABIL. PC CARD
QPWR4-2	8	H	04	10	02		- 5.8 V STABILIZER TRANSISTOR
		WT	20	02	16		+24/+20/+6/-6V STABIL. PC CARD
QPWR4-3	6	L	04	10	03		- 5.8 V STABILIZER TRANSISTOR
		WT	20	02	15		+24/+20/+6/-6V STABIL. PC CARD
QPWR5-1	5	H	04	09	01		+ 5.8 V STABILIZER TRANSISTOR
		WT	20	02	24		+24/+20/+6/-6V STABIL. PC CARD
QPWR5-2	7	H	04	09	02		+ 5.8 V STABILIZER TRANSISTOR
		WT	20	02	23		+24/+20/+6/-6V STABIL. PC CARD
QPWR5-3	9	L	04	09	03		+ 5.8 V STABILIZER TRANSISTOR
		WT	20	02	22		+24/+20/+6/-6V STABIL. PC CARD
QPWR6-2	6	H	04	08	02		+20.0 V STABILIZER TRANSISTOR
		WT	20	02	03		+24/+20/+6/-6V STABIL. PC CARD
QPWR7-2	1	H	04	04	02		+24.0 V STABILIZER TRANSISTOR
		WT	20	02	07		+24/+20/+6/-6V STABIL. PC CARD
		WT	20	02	08		+24/+20/+6/-6V STABIL. PC CARD
R-CUT-1	5	M	19	01	01		CUTTER CONTROL ASSEMBLY
		WT	20	05	15		SPOOLING MOTOR CONTROL PC CARD
		L	24	01	14		EXTENDED MODE CONTROL, REMOTE
R-CUT-3	7	F	19	01	03		CUTTER CONTROL ASSEMBLY
		WT	20	05	13		SPOOLING MOTOR CONTROL PC CARD
		L	24	01	15		EXTENDED MODE CONTROL, REMOTE
R-SPLY-0		WT	20	06	07B		CAPSTAN SERVO PC CARD
		L	21	01	13		CAPSTAN SPEED CONTROL CONNECTOR
R-SPLY-1	7	WT	20	06	13B		CAPSTAN SERVO PC CARD
		L	21	01	05		CAPSTAN SPEED CONTROL CONNECTOR
R-TT1	1	M	11	01	02		TAPE TENSION CONTROL ASSY, LEFT
		WT	20	05	16		SPOOLING MOTOR CONTROL PC CARD
R-TT2	2	M	12	01	02		TAPE TENSION CONTROL ASSY, RIGHT
		WT	20	04	18		CONTACTOR PC CARD
		WT	20	05	09		SPOOLING MOTOR CONTROL PC CARD
RECSTINH	9	WT	20	11	10A		A-80 INTERFACE TO TLS 2000
		L	24	01	23		EXTENDED MODE CONTROL, REMOTE
REM-OUT		L	22	01	28	N	MODE CONTROL CONNECTOR, REMOTE
RP-END	8	M	13	01	03		OPTICAL TAPE END SENSOR
		WT	20	10	04B		ATTENUATOR & PREAMP. PC CARD
S-CAPEXT	8	WT	20	06	10B		CAPSTAN SERVO PC CARD
		L	21	01	04		CAPSTAN SPEED CONTROL CONNECTOR
S-CUT	6	P	17	01	13		COMMAND SWITCHES, LOCAL
		WT	20	10	10B		ATTENUATOR & PREAMP. PC CARD

./.

SIG.NAME	COLOR	TYPE	GR	EL	PT	S	DESCRIPTION OF ELEMENT
(CONT.)		L	22	01	25		MODE CONTROL CONNECTOR, REMOTE
S-CUTAUT	1	M	19	01	04		CUTTER CONTROL ASSEMBLY
		WT	20	08	21R		IC DECODER PC CARD
		L	24	01	16		EXTENDED MODE CONTROL, REMOTE
S-FORW	3	P	17	01	10		COMMAND SWITCHES, LOCAL
		WT	20	10	15R		ATTENUATOR & PREAMP. PC CARD
		L	22	01	21		MODE CONTROL CONNECTOR, REMOTE
S-HIGH	4	L	05	04	03		TAPE SPEED SELECTOR SWITCH
		F	05	05	03		SPEED SELECTOR FEED, JACK
		M	06	01	03		SPEED SELECTOR, CABLE PLUG
		WT	20	02	13		+24/+20/+6/-6V STABIL. PC CARD
		WT	20	11	18R		A-80 INTERFACE TO TLS 2000
S-LINE2	9	L	02	02	08	*	VOLTAGE SELECTOR TERMINAL BLOCK
		L	02	04	08		POWER TRANSFORMER
		F	02	08	04		POWER SWITCH FEED, RECEPTACLE
		M	03	01	04		EXTENSION CABLE, SUPPLY SIDE
		F	03	02	04		EXTENSION CABLE, SWITCH SIDE
		M	05	01	04		POWER SWITCH FEED, JACK
		L	05	02	03		POWER SWITCH, REAR
		L	05	03	03		POWER SWITCH, FRONT
S-LOW	5	L	05	04	02		TAPE SPEED SELECTOR SWITCH
		F	05	05	02		SPEED SELECTOR FEED, JACK
		M	06	01	02		SPEED SELECTOR, CABLE PLUG
		WTL+	20	01	10		POWER CONNECTOR PC CARD
		WT	20	06	11R		CAPSTAN SERVO PC CARD
		WT	20	10	18A		ATTENUATOR & PREAMP. PC CARD
		WT	20	11	20R		A-80 INTERFACE TO TLS 2000
		L	24	01	21		EXTENDED MODE CONTROL, REMOTE
S-LOWACH		L	02	05	08	@	RECTIFIER & CONNECTOR PC CARD
		Y	02	05	34	*	RECTIFIER & CONNECTOR PC CARD
		L	02	20	03		CHANNEL FEED CONNECTOR
		WTL	20	01	04		POWER CONNECTOR PC CARD
		WT	20	11	19A		A-80 INTERFACE TO TLS 2000
S-MONO	1	L	22	01	26	R	MODE CONTROL CONNECTOR, REMOTE
S-REC	5	P	17	01	12		COMMAND SWITCHES, LOCAL
		WT	20	10	11R		ATTENUATOR & PREAMP. PC CARD
		L	22	01	24		MODE CONTROL CONNECTOR, REMOTE
S-REPR	4	P	17	01	11		COMMAND SWITCHES, LOCAL
		WT	20	10	13R		ATTENUATOR & PREAMP. PC CARD
		L	22	01	22		MODE CONTROL CONNECTOR, REMOTE
S-RES2		L	24	01	11	N	EXTENDED MODE CONTROL, REMOTE
S-REW	2	P	17	01	09		COMMAND SWITCHES, LOCAL
		WT	20	10	17R		ATTENUATOR & PREAMP. PC CARD
		L	22	01	20		MODE CONTROL CONNECTOR, REMOTE
S-STOP	1	P	17	01	08		COMMAND SWITCHES, LOCAL
		WT	20	10	18B		ATTENUATOR & PREAMP. PC CARD
		L	22	01	23		MODE CONTROL CONNECTOR, REMOTE
S-TT	4	M	11	01	05		TAPE TENSION CONTROL ASSY, LEFT
		M	15	01	05		PRESSURE ROLLER ASSEMBLY
		WT +	20	08	16A	#	IC DECODER PC CARD
SCREEN	0	LS	02	03	01		SCREEN CHASSIS CONNECTION
		L	02	04	09		POWER TRANSFORMER
SPD-CTL1		WT	20	06	12B		CAPSTAN SERVO PC CARD
		L	21	01	12		CAPSTAN SPEED CONTROL CONNECTOR
SPD-CTL2		WT	20	06	08B		CAPSTAN SERVO PC CARD
		L	21	01	14		CAPSTAN SPEED CONTROL CONNECTOR
T-M1	1	L	02	05	11		RECTIFIER & CONNECTOR PC CARD
		WTL	20	01	16		POWER CONNECTOR PC CARD
		WT	20	05	18		SPOOLING MOTOR CONTROL PC CARD
T-M2	6	L	02	05	16		RECTIFIER & CONNECTOR PC CARD
		WTL	20	01	14		POWER CONNECTOR PC CARD
		WT	20	05	06		SPOOLING MOTOR CONTROL PC CARD
T-M3	7 (1)	L	02	05	21	@	RECTIFIER & CONNECTOR PC CARD
		L	04	07	01		CAPSTAN MOTOR CAPACITOR
		M	16	01	02		CAPSTAN MOTOR ASSEMBLY
		WTL	20	01	11		POWER CONNECTOR PC CARD
		WT +	20	06	16R	#	CAPSTAN SERVO PC CARD
T-10	0	L	02	04	10		POWER TRANSFORMER
		L	02	15	02		FUSE, +24.0 V
T-11	0	L	02	04	11		POWER TRANSFORMER
		L	02	05	76		RECTIFIER & CONNECTOR PC CARD
T-12	2	L	02	04	12		POWER TRANSFORMER
		L	02	14	02		FUSE, + 5.8 V
T-13	2	L	02	04	13		POWER TRANSFORMER
		L	02	05	96		RECTIFIER & CONNECTOR PC CARD
T-14	6	L	02	04	14		POWER TRANSFORMER
		L	02	13	02		FUSE, - 5.8 V
T-15	6	L	02	04	15		POWER TRANSFORMER
		L	02	05	86		RECTIFIER & CONNECTOR PC CARD
T-16	4	L	02	04	16		POWER TRANSFORMER
		L	02	10	02		FUSE, SUPPLY MOTOR
T-17	4	L	02	04	17		POWER TRANSFORMER
		L	02	05	62		RECTIFIER & CONNECTOR PC CARD
T-17/18	1	Y	02	05	77		RECTIFIER & CONNECTOR PC CARD

./.

* STUDER * SIGNAL WIRE LIST * 76/11/18 * 13:07 * PAGE 22 *

TLS 2000 PROF. TAPE TRANSPORT DECK *** STUDER A-80/MCH *** 76/11/18

SIG.NAME	COLOR	TYPE	GR EL PT	S	DESCRIPTION OF ELEMENT
(CONT.)		L	02 05 78		RECTIFIER & CONNECTOR PC CARD
T-18	5	L	02 04 18		POWER TRANSFORMER
		L	02 05 63		RECTIFIER & CONNECTOR PC CARD
T-19	5	L	02 04 19		POWER TRANSFORMER
		L	02 11 02		FUSE, TAKE-UP MOTOR
T-2	0	L	02 02 05		VOLTAGE SELECTOR TERMINAL BLOCK
		L	02 04 02		POWER TRANSFORMER
T-20	8	L	02 04 20		POWER TRANSFORMER
		L	02 05 64		RECTIFIER & CONNECTOR PC CARD
T-20/21	6	Y	02 05 79		RECTIFIER & CONNECTOR PC CARD
		L	02 05 80		RECTIFIER & CONNECTOR PC CARD
T-21	6	L	02 04 21		POWER TRANSFORMER
		L	02 05 65		RECTIFIER & CONNECTOR PC CARD
T-22	8	L	02 04 22		POWER TRANSFORMER
		L	02 12 02		FUSE, CAPSTAN
T-23	8	L	02 04 23		POWER TRANSFORMER
		L	02 05 67		RECTIFIER & CONNECTOR PC CARD
T-24	0	L	02 04 24		POWER TRANSFORMER (ST)
		L	02 05 51		RECTIFIER & CONNECTOR PC CARD
T-25	0	L	02 04 25		POWER TRANSFORMER (ST)
		L	02 05 52		RECTIFIER & CONNECTOR PC CARD
T-26	1	L	02 04 26		POWER TRANSFORMER (ST)
		L	02 05 53		RECTIFIER & CONNECTOR PC CARD
T-27	1	L	02 04 27		POWER TRANSFORMER (ST)
		L	02 05 54		RECTIFIER & CONNECTOR PC CARD
T-28	2	L	02 04 28		POWER TRANSFORMER (ST)
		L	02 05 55		RECTIFIER & CONNECTOR PC CARD
T-29	2	L	02 04 29		POWER TRANSFORMER (ST)
		L	02 05 56		RECTIFIER & CONNECTOR PC CARD
T-3	8	L	02 02 06		VOLTAGE SELECTOR TERMINAL BLOCK
		L	02 04 03		POWER TRANSFORMER
T-30	9	L	02 04 30		POWER TRANSFORMER (ST)
		L	02 05 57		RECTIFIER & CONNECTOR PC CARD
T-31	9	L	02 04 31		POWER TRANSFORMER (ST)
		L	02 05 58		RECTIFIER & CONNECTOR PC CARD
T-4	3	Y	01 01 02		FAN FEED PC BOARD (MCH)
		F	01 08 02		POWER FEED CONNECTOR, MAINS
		M	02 01 02		POWER INPUT FEED CONNECTOR
(CONT.)		L	02 02 07	*	VOLTAGE SELECTOR TERMINAL BLOCK
		L	02 04 04		POWER TRANSFORMER
T-5	1	L	02 02 02		VOLTAGE SELECTOR TERMINAL BLOCK
		L	02 04 05		POWER TRANSFORMER
T-6	4	L	02 02 03		VOLTAGE SELECTOR TERMINAL BLOCK
		L	02 04 06		POWER TRANSFORMER
T-7	6	L	02 02 04		VOLTAGE SELECTOR TERMINAL BLOCK
		L	02 04 07		POWER TRANSFORMER
TEST-B		WT	20 04 20		CONTACTOR PC CARD
		WT	20 08 15B		IC DECODER PC CARD
TT1-ACT	3	WT +	20 11 22A		A-80 INTERFACE TO TLS 2000
		L	24 01 19		EXTENDED MODE CONTROL, REMOTE
		P	26 01 04	@	TAPE END SENSOR LEFT
TT2-ACT	8	WT +	20 11 22B		A-80 INTERFACE TO TLS 2000
		L	24 01 20		EXTENDED MODE CONTROL, REMOTE
		P	26 01 04	@	TAPE END SENSOR RIGHT
Y-ACCEL	6	M	15 01 03		PRESSURE ROLLER ASSEMBLY
		WT	20 05 10		SPOOLING MOTOR CONTROL PC CARD
Y-CLK	3	P	18 01 05		TAPE TIMER ASSEMBLY
		WT	20 09 22A		IC MEMORY & COUNTER PC CARD
		L	22 01 34		MODE CONTROL CONNECTOR, REMOTE
Y-CUTAUT		WT	20 05 12		SPOOLING MOTOR CONTROL PC CARD
		WT	20 08 14B		IC DECODER PC CARD
Y-FORW	6	P	18 01 08		TAPE TIMER ASSEMBLY
		WT	20 09 16A		IC MEMORY & COUNTER PC CARD
		L	22 01 17		MODE CONTROL CONNECTOR, REMOTE
Y-ICLK	5	P	18 01 07		TAPE TIMER ASSEMBLY
		WT	20 09 15B		IC MEMORY & COUNTER PC CARD
		L	22 01 35		MODE CONTROL CONNECTOR, REMOTE
Y-LOW		L	24 01 09	N	EXTENDED MODE CONTROL, REMOTE
Y-MONO		L	24 01 10	N	EXTENDED MODE CONTROL, REMOTE
Y-MOVE-D	9	WT	20 11 07B		A-80 INTERFACE TO TLS 2000
		L	22 01 14		MODE CONTROL CONNECTOR, REMOTE
Y-MOVE-J		L	22 01 13	N	MODE CONTROL CONNECTOR, REMOTE
Y-MUTE	4	WT	20 11 19B		A-80 INTERFACE TO TLS 2000
		L	22 01 27		MODE CONTROL CONNECTOR, REMOTE
Y-MUTEMD	4	L	02 05 07	@	RECTIFIER & CONNECTOR PC CARD
		Y	02 05 32	*	RECTIFIER & CONNECTOR PC CARD
		L	02 20 04		CHANNEL FEED CONNECTOR

./.

* STUDER * SIGNAL WIRE LIST * 76/11/18 * 13:07 * PAGE 23 *

TLS 2000 PROF. TAPE TRANSPORT DECK *** STUDER A-80/MCH *** 76/11/18

SIG.NAME	COLOR	TYPE	GR EL PT	S	DESCRIPTION OF ELEMENT
(CONT.)		WTL	20 01 03		POWER CONNECTOR PC CARD
		WT	20 11 20A		A-80 INTERFACE TO TLS 2000
Y-OUT	1	WT	20 06 09B		CAPSTAN SERVO PC CARD
		L	21 01 07		CAPSTAN SPEED CONTROL CONNECTOR
Y-REC		WT	20 10 05A		ATTENUATOR & PREAMP. PC CARD
		WT	20 11 08A		A-80 INTERFACE TO TLS 2000
Y-RECMD	5	L	02 05 05		RECTIFIER & CONNECTOR PC CARD
		Y	02 05 37	*	RECTIFIER & CONNECTOR PC CARD
		L	02 20 11		CHANNEL FEED CONNECTOR
		WT	20 01 05		POWER CONNECTOR PC CARD
		WT	20 11 08B		A-80 INTERFACE TO TLS 2000
Y-RES3		L	24 01 08	N	EXTENDED MODE CONTROL, REMOTE
Y-REVRS	4	P	18 01 06		TAPE TIMER ASSEMBLY
		WT	20 09 22B		IC MEMORY & COUNTER PC CARD
		L	22 01 16		MODE CONTROL CONNECTOR, REMOTE
Y-RFLX		L	24 01 17	N	EXTENDED MODE CONTROL, REMOTE
Y-STOP		L	24 01 06	N	EXTENDED MODE CONTROL, REMOTE
Y-SYNC 1		L	21 01 11	N	CAPSTAN SPEED CONTROL CONNECTOR
Y-SYNC 2	3	T	20 06 03A		CAPSTAN SERVO PC CARD
		L	21 01 06		CAPSTAN SPEED CONTROL CONNECTOR
Y-TACH-D	1	T	20 06 04A		CAPSTAN SERVO PC CARD
		L	21 01 09		CAPSTAN SPEED CONTROL CONNECTOR
Y-TRSP	7	WT	20 11 07A		A-80 INTERFACE TO TLS 2000
		L	24 01 18		EXTENDED MODE CONTROL, REMOTE
YAC-BIAS	3	L	02 05 03		RECTIFIER & CONNECTOR PC CARD
		Y	02 05 35	*	RECTIFIER & CONNECTOR PC CARD
		L	02 20 08		CHANNEL FEED CONNECTOR
		TL	20 01 07		POWER CONNECTOR PC CARD
		T	20 12 10		ERASE & BIAS OSCILLATOR PC CARD
YAC-ERAS	1	L	02 05 01		RECTIFIER & CONNECTOR PC CARD
		Y	02 05 31	*	RECTIFIER & CONNECTOR PC CARD
		L	02 20 01		CHANNEL FEED CONNECTOR
		TL	20 01 09		POWER CONNECTOR PC CARD
		T	20 12 08		ERASE & BIAS OSCILLATOR PC CARD
YAC1-M3	4	M	16 01 05		CAPSTAN MOTOR ASSEMBLY
		WT	20 06 04B		CAPSTAN SERVO PC CARD
YAC2-M3	5	M	16 01 08		CAPSTAN MOTOR ASSEMBLY
		WT	20 06 03B		CAPSTAN SERVO PC CARD
YAN-M1		WT	20 04 11		CONTACTOR PC CARD
		WT	20 05 19		SPOOLING MOTOR CONTROL PC CARD
YAN-M2		WT	20 04 05		CONTACTOR PC CARD
		WT	20 05 07		SPOOLING MOTOR CONTROL PC CARD
YBI-'L'		WT	20 08 17B	N	IC DECODER PC CARD
YBI-CLK		WT	20 09 17B	N	IC MEMORY & COUNTER PC CARD
YBI-CUT		WT	20 08 05B		IC DECODER PC CARD
		WT	20 09 04B		IC MEMORY & COUNTER PC CARD
YBI-DIR		WT	20 08 19B		IC DECODER PC CARD
		WT	20 09 18B		IC MEMORY & COUNTER PC CARD
		WT	20 11 05A		A-80 INTERFACE TO TLS 2000
YBI-END		WT	20 04 19		CONTACTOR PC CARD
		WT	20 09 03A		IC MEMORY & COUNTER PC CARD
		WT	20 10 06B		ATTENUATOR & PREAMP. PC CARD
		WT	20 11 06A		A-80 INTERFACE TO TLS 2000
YBI-FAD		WT	20 09 11B		IC MEMORY & COUNTER PC CARD
		WT	20 10 20B		ATTENUATOR & PREAMP. PC CARD
YBI-FF0		WT	20 08 06B		IC DECODER PC CARD
		WT	20 09 07B		IC MEMORY & COUNTER PC CARD
YBI-FF1		WT	20 08 10B		IC DECODER PC CARD
		WT	20 09 05A		IC MEMORY & COUNTER PC CARD
YBI-FF2		WT	20 08 07B		IC DECODER PC CARD
		WT	20 09 08B		IC MEMORY & COUNTER PC CARD
YBI-FF3		WT	20 08 09B		IC DECODER PC CARD
		WT	20 09 09B		IC MEMORY & COUNTER PC CARD
YBI-FF4		WT	20 08 11B		IC DECODER PC CARD
		WT	20 09 10B		IC MEMORY & COUNTER PC CARD
YBI-LOW		WT	20 09 21B		IC MEMORY & COUNTER PC CARD
		WT	20 10 21A		ATTENUATOR & PREAMP. PC CARD
		WT	20 11 04B		A-80 INTERFACE TO TLS 2000
YBI-MOVE		WT	20 05 11		SPOOLING MOTOR CONTROL PC CARD
		WT	20 08 03B		IC DECODER PC CARD
YBI-MOV2		WT	20 09 06B	N	IC MEMORY & COUNTER PC CARD
YBI-REC		WT	20 08 22B		IC DECODER PC CARD
		WT	20 10 06A		ATTENUATOR & PREAMP. PC CARD
YPS-CUT		WT	20 09 10A		IC MEMORY & COUNTER PC CARD
		WT	20 10 19B		ATTENUATOR & PREAMP. PC CARD
YPS-FORW		WT	20 09 08A		IC MEMORY & COUNTER PC CARD
		WT	20 10 14B		ATTENUATOR & PREAMP. PC CARD
YPS-MOVE		WT	20 10 16A		ATTENUATOR & PREAMP. PC CARD

./.

```
*****************************************************************************************************************************
*   S T U D E R   *    S I G N A L     W I R E     L I S T          *    76/11/18 * 13:07      *   P A G E     24    *
*****************************************************************************************************************************
TLS 2000 PROF. TAPE TRANSPORT DECK *** STUDER A-80/MCH ***                                  76/11/18
```

SIG.NAME	COLOR	TYPE	GR	EL	PT	S	DESCRIPTION OF ELEMENT
(CONT.)		L	22	01	09		MODE CONTROL CONNECTOR, REMOTE
YPS-REC		WT	20	09	04A		IC MEMORY & COUNTER PC CARD
		WT	20	10	08B		ATTENUATOR & PREAMP. PC CARD
YPS-REPR		WT	20	09	07A		IC MEMORY & COUNTER PC CARD
		WT	20	10	12B		ATTENUATOR & PREAMP. PC CARD
YPS-REW		WT	20	09	09A		IC MEMORY & COUNTER PC CARD
		WT	20	10	16B		ATTENUATOR & PREAMP. PC CARD
YPS-STOP		WT	20	09	06A		IC MEMORY & COUNTER PC CARD
		WT	20	10	17A		ATTENUATOR & PREAMP. PC CARD

9.5
AUDIO MODIFICATIONS A 80VU/TLS 2000 VERSION

A80 LOCATOR | A80 MASTER-CONTROL

BOARDS LOCATION / VU-METER UNIT

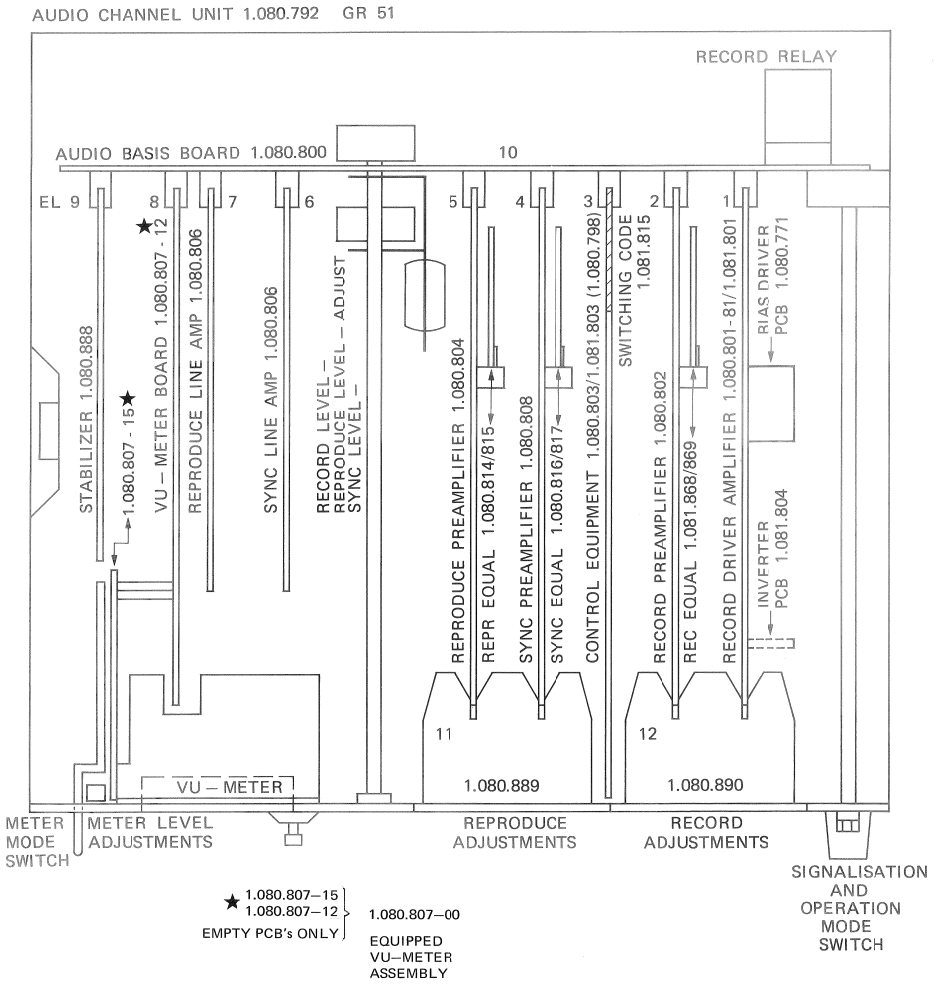

	A80 VU MK II + III WITHOUT TLS2000	A80 VU MK II + III/TLS2000 MASTER CONTROL	A80 VU MK II + III/TLS2000 MASTER CONTROL + DELAY
CAPSTAN SERVO PCB	1.080.372/374	1.180.376 } 1.180.376–81	1.180.376 } 1.180.376–81
ADDITIONAL CAPSTAN PCB	———	1.081.372 }	1.081.372 }
INTERFACE PCB 7.5/15", 15/30"	———	1.080.397/398	1.080.397/398
TAPE END SENSOR PCB	———	1.080.144	1.080.144
COUNTER UNIT	1.228.830	1.228.810 (WITHOUT 0-LOC)	1.228.810 (WITHOUT 0-LOC)
HF-DRIVER AMPLIFIER PCB	1.080.801-81 INCLUDED	1.081.801–00 INCLUDED	1.081.801–81 INCLUDED
– BIAS DRIVER PCB	1.080.771	1.080.771	1.080.771 AND
– INVERTER PCB	———	———	1.081.804
RECOFD DRIVER AMPLIFIER PCB (EARLIER VERSION/CODE CHANNEL ONLY)	———	1.080.789	———
SWITCHING CODE PCB	1.081.815 (OR OTHERS)	1.081.815 (INDISPENSABLE)	1.081.815 (INDISPENSABLE)
CONTFOL EQUIPMENT PCB	1.080.803	1.080.798	1.081.803

A80 LOCATOR | A80 MASTER-CONTROL

HF-DRIVER 1.080.801–81 / BIAS DRIVER 1.080.771

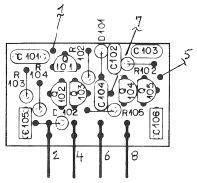

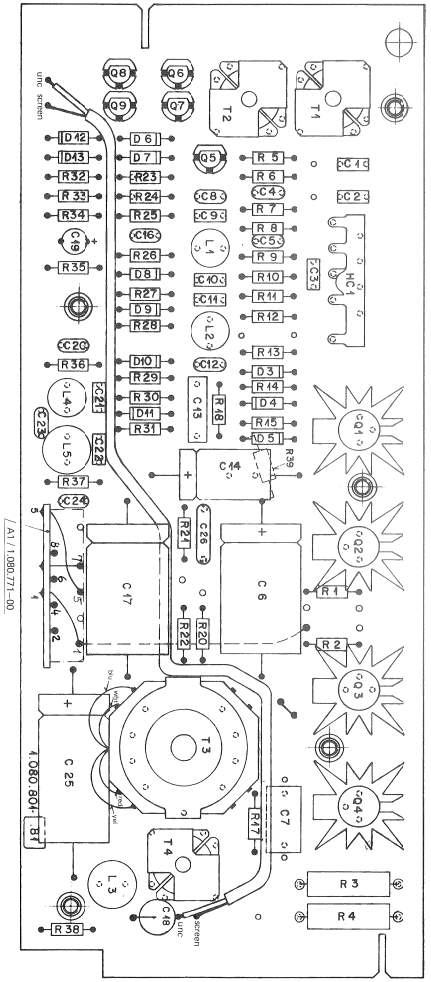

IND.	POS.NO.	PART NO.	VALUE	SPECIFICATIONS / EQUIVALENT	MANUF.
	A.....1	1.080.771.00		Bias Driver	ST
	C.....1	59.32.3103	10 nF	80%, 40V	
	C.....2	59.32.3103	10 nF	80% 40V	
	C.....3	59.34.0339	3.3 pF		
	C.....4	59.34.0479	4.7 pF	5%, 50V	
	C.....5	59.32.1152	1.5 nF	10%, 500V	
	C.....6	59.25.3102	1.0 mF	50%, 16V	
	C.....7	59.31.6684	.68 uF	10%, MPETP	
	C.....8	59.32.1125	1.5 nF	500V	
	C.....9	59.99.0196	560 pF	5%, 100V	
	C.....10	59.99.0194	56 pF	2%, 63V	
	C.....11	59.99.0196	560 pF	5%, 100V	
	C.....12	59.32.1152	1.5 nF	10%, 500V	
	C.....13	59.31.6104	.1 uF	MPETP	
	C.....14	59.25.6470	47 uF	63V	
	C.....16	59.32.1152	1.5 nF	10%, 500V	
	C.....17	59.25.3102	1.0 mF	50%, 16V	
	C.....18	59.04.9821	820 pF	10%, 500V,PP	
	C.....19	59.26.2100	10 uF	20%, 16V,Sal	Ph
	C.....20	59.32.1152	1.5 nF	10%, 500V	
	C.....21	59.99.0192	180 pF	2%, 63V	
	C.....22	59.99.0192	180 pF		
	C.....23	59.34.1150	15 pF	5%, NP0	
	C.....24	59.32.1152	1.5 nF	10%, 500V	
	C.....25	59.25.1222	2.2 mF	6.3V	
	C.....26	59.32.1152	1.5 nF	10%	
	D.....1			not used	
	D.....2			not used	
	D.....3	50.04.0125	1N4448		Ph,Tr
	D.....4	50.04.0125	1N4448		Ph,Tr
	D.....5	50.04.0125	1N4448		Ph,Tr
	D.....6	50.04.0125	1N4448		Ph,Tr
	D.....7	50.04.0125	1N4448		Ph,Tr
	D.....8	50.04.0125	1N4448		Ph,Tr
	D.....9	50.04.0125	1N4448		Ph,Tr

IND.	POS.NO.	PART NO.	VALUE	SPECIFICATIONS / EQUIVALENT	MANUF.
	D....10	50.04.0125	1N4448		Ph,Tr
	D....11	50.04.0125	1N4448		Ph,Tr
	D....12	50.04.0125	1N4448		Ph,Tr
	D....13	50.04.0125	1N4448		Ph,Tr
	HC....1	1.010.101.50	A 101		St
	L.....1	62.02.1822	8.2 mH	5%	
	L.....2	62.02.1822	8.2 mH	5%	
	L.....3	62.02.1222	2.2 mH	5%	
	L.....4	62.02.1822	8.2 mH		
	L.....5	62.02.1222	2.2 mH		
	Q.....1	50.03.0315	BC160-16	PTP	
	Q.....2	50.03.0316	BC140-16	npn	
	Q.....3	50.03.0316	BC140-16	npn	
	Q.....4	50.03.0315	BC160-16	ptp	
	Q.....5	50.03.0331	2 N 5639	ND FET	Mot,Sx
	Q.....6	50.03.0331	2 N 5639	ND FET	Mot,Sx
	Q.....7	50.03.0331	2 N 5639	ND FET	Mot,Sx
	Q.....8	50.03.0331	2 N 5639	ND FET	Mot,Sx
	Q.....9	50.03.0331	2 N 5639	ND FET	Mot,Sx
	R.....1	57.11A229	2.2 Ohm		
	R.....2	57.11A229	2.2 Ohm		
	R.....3	57.5A5479	4.7 Ohm	1W	
	R.....4	57.5A5479	4.7 Ohm	1W	
	R.....5	57.41A272	2.7 kOhm		
	R.....6	57.41A473	47 kOhm		
	R.....7	57.41A105	1 MOhm		
	R.....8	57.41A222	2.2 kOhm		
	R.....9	57.41A472	4.7 kOhm		
	R....10	57.41A101	100 Ohm		
	R....11	57.41A331	330 Ohm		
	R....12	57.41A223	22 kOhm		
	R....13	57.41A101	100 Ohm		
	R....14	57.41A102	1 kOhm		

IND.	POS.NO.	PART NO.	VALUE	SPECIFICATIONS / EQUIVALENT	MANUF.
	R....15	57.41A101	100 Ohm		
	R....17	57.41A479	4.7 Ohm		
	R....18	57.41A222	2.2 kOhm		
	R....20	57.41A101	100 Ohm		
	R....21	57.41A101	100 Ohm		
	R....22	57.41A183	18 kOhm		
	R....23	57.41A104	100 kOhm		
	R....24	57.41A104	100 kOhm		
	R....25	57.41A473	47 kOhm		
	R....26	57.41A222	2.2 kOhm		
	R....27	57.41A334	330 kOhm		
	R....28	57.41A334	330 kOhm		
	R....29	57.41A334	330 kOhm		
	R....30	57.41A334	330 kOhm		
	R....31	57.41A332	3.3 kOhm		
	R....32	57.41A104	100 kOhm		
	R....33	57.41A104	100 kOhm		
	R....34	57.41A473	47 kOhm		
	R....35	57.41A153	15 kOhm		
	R....36	57.41A222	2.2 kOhm		
	R....37	57.41A472	4.7 kOhm		
	R....38	57.41A339	3.3 kOhm		
	R....39	57.11A106	10 MOhm		
	T.....1	1.022.156.00		Inputtransformer 80/240 kHz	St
	T.....2	1.022.156.00		Inputtransformer 80/240 kHz	St
	T.....3	1.022.159.00		Outputtransformer 240 kHz	St
	T.....4	1.022.157.00		Outputtransformer 80 kHz	St

MPETP=Metalized Polyesterfilm, PP=Polyprpylen, sal=Solid Aluminium

Manufacturer: Mot=Motorola, Ph=Philips, Sie=Siemens, Sx=Siliconix
St=Studer, TrnTransitron

ORIG 81/02/25

IND.	POS.NO.	PART NO.	VALUE	SPECIFICATIONS / EQUIVALENT	MANUF.
	C....1C1	59.26.2100	10 uF	16V, Sal	Ph
	C....1C2	59.34.0339	3.3 pF	Ce	
	C....1C3	59.34.0339	3.3 pF	Ce	
	C....1C4	59.34.1100	10 pF	Ce	
	C....1C5	59.99.0205	68 nF	Ce	
	C....1C6	59.99.0205	68 nF	Ce	
	D....1C1	50.04.0125	1N4448		
	D....1C2	50.04.0125	1N4448		
	Q....1C1	50.03.0497	BC550	BC550-C npn	St,ITT,Sie,Mot,Ph
	Q....1C2	50.03.0497	BC550	BC550-C npn	St,ITT,Sie,Mot,Ph
	Q....1C3	50.03.0497	BC550	BC550-C npn	St,ITT,Sie,Mot,Ph
	Q....1C4	50.03.0496	BC560	BC560-C pnp	St,ITT,Sie,Mot,Ph
	Q....1C5	50.03.0496	BC560	BC560-C pnp	St,ITT,Sie,Mot,Ph
	R....1C1	57.11.4391	390 Ohm		
	R....1C2	57.11.4392	3.9 kOhm		
	R....1C3	57.11.4682	6.8 kOhm		
	R....1C4	57.11.4332	3.3 kOhm		
	R....1C5	57.11.4223	22 kOhm		

Ce=Ceramic, Sal=Solid aluminium

Manufacturer: Mot=Motorola, Ph=Philips, Sie=Siemens, St=Studer

ORIG 81/02/25

A80 LOCATOR | A80 MASTER-CONTROL

HF-DRIVER 1.080.801–81 / BIAS DRIVER 1.080.771

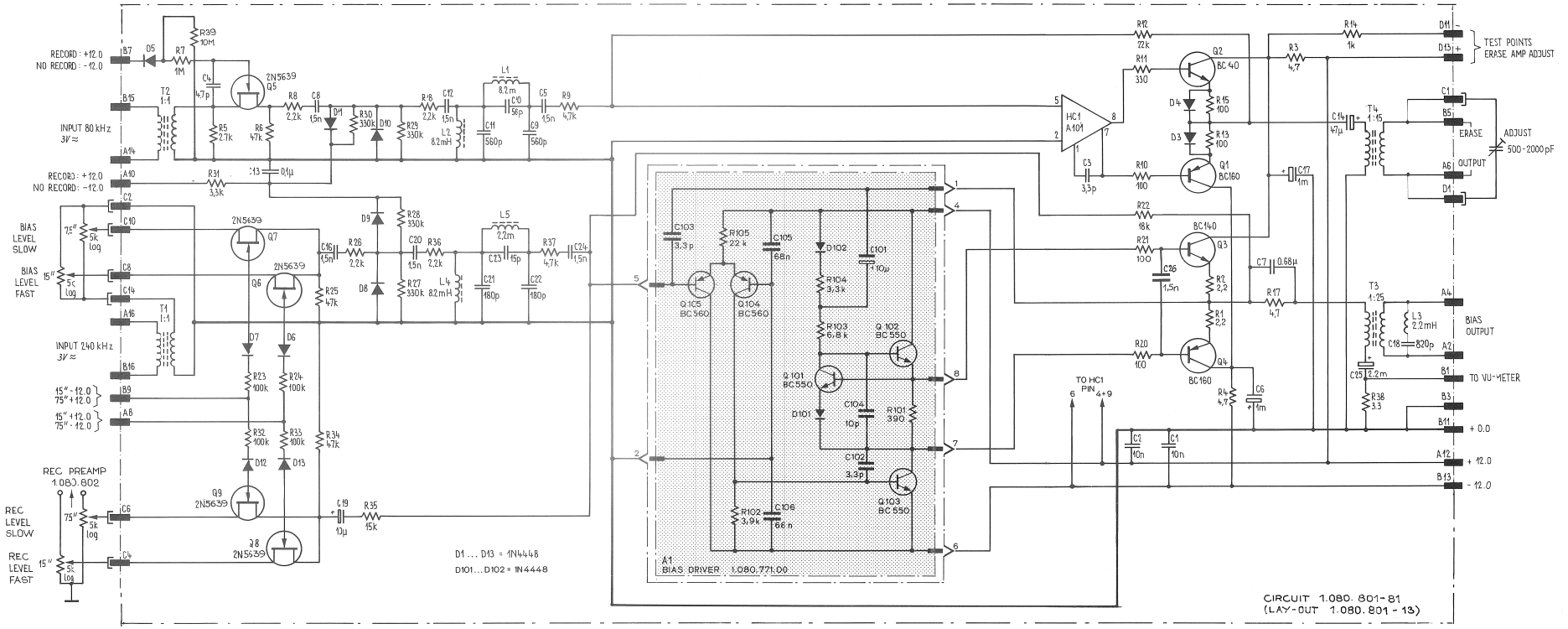

A80 LOCATOR | A80 MASTER-CONTROL

HF – DRIVER PCB 1.081.801–81 (INVERTER PCB 1.081.804

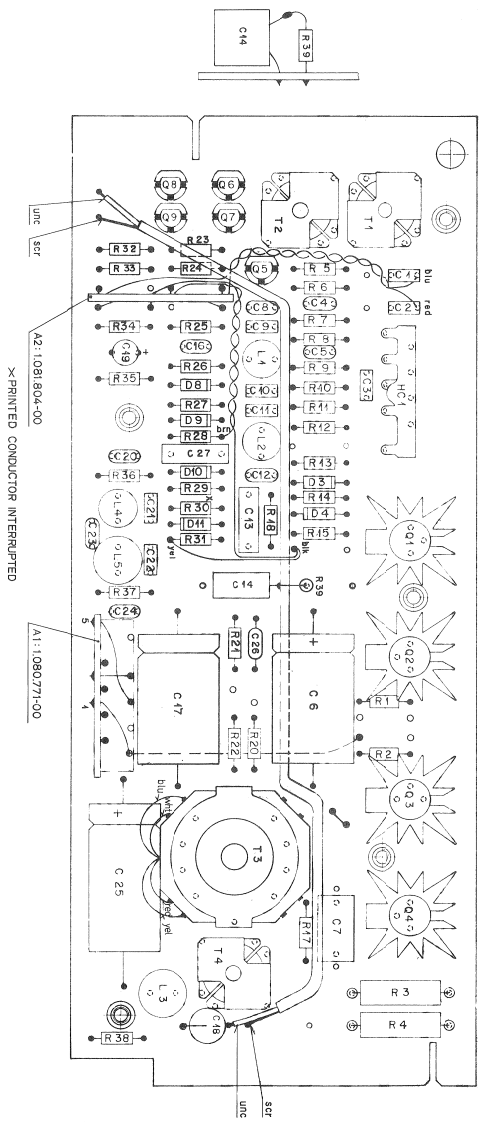

INVERTER PCB 1.081.804–00

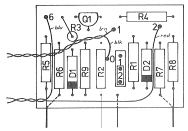

Pos.	Bauteil No.	Bezeichnung	Stk.	Bemerkung
D1	50.04.0125	DIODE IN 4448		
D2	50.04.0125	" IN 4448		
Q1	50.03.0436	Transistor BC 237		
R1	57.11.4392	Widerstand 3,9K		
R2	" 4473	47K		
R3	" 4682	6.8K		
R4	" 4473	47K		
R5	" 4104	100K		
R6	" 4104	100K		
R7	" 4104	100K		
R8	" 4104	100K		
R9	" 4473	47K		

Aenderungen	①	②	③	④	⑤
STUDER REGENSDORF ZORICH	Positionsliste zu Inverter PCB			Erstellt: 11. 11. 81 IA, Geprüft: Blatt: 1 Blätter: 1	
Kopie für:		Ersatz für: Ersetzt durch:		1.081.804	

BIAS DRIVER PCB 1.080.771–00

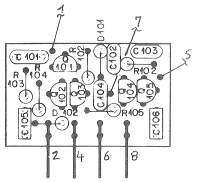

IND.	POS.NO.	PART NO.	VALUE	SPECIFICATIONS / EQUIVALENT	MANUF.
	C...101	59.26.2100	10 uF	16V, Sal	Ph
	C...102	59.34.0339	3.3 pF	Ce	
	C...103	59.34.0339	3.3 pF	Ce	
	C...104	59.34.1100	10 pF	Ce	
	C...105	59.99.0205	68 nF	Ce	
	C...106	59.99.0205	68 nF	Ce	
	D...101	50.04.0125	1N4448		
	D...102	50.04.0125	1N4448		
	Q...101	50.03.0497	BC550	BC550-C npn	St,ITT,Sie,Mot,Ph
	Q...102	50.03.0497	BC550	BC550-C npn	St,ITT,Sie,Mot,Ph
	Q...103	50.03.0497	BC550	BC550-C npn	St,ITT,Sie,Mot,Ph
	Q...104	50.03.0496	BC560	BC560-C pnp	St,ITT,Sie,Mot,Ph
	Q...105	50.03.0496	BC560	BC560-C pnp	St,ITT,Sie,Mot,Ph
	R...101	57.11.4391	390 Ohm		
	R...102	57.11.4392	3.9 kOhm		
	R...103	57.11.4682	6.8 kOhm		
	R...104	57.11.4332	3.3 kOhm		
	R...105	57.11.4223	22 kOhm		

Ce=Ceramic, Sal=Solid aluminium

Manufacturer: Mot=Motorola, Ph=Philips, Sie=Siemens, St=Studer

DRIG 81/02/25

STUDER 81/03/31 GAE BIAS DRIVER 1.080.771.00 PAGE 1

IND	POS NO	PART NO	VALUE	SPECIFICATIONS/EQUIVALENT	MFR
	R 6	57.41.4173	47 kOhm		
	R 7	57.41.4175	4.7 MOhm		
	R 8	57.41.4122	2.2 kOhm		
	R 9	57.41.4172	4.7 kOhm		
	R10	57.41.4.01	100 Ohm		
	R11	57.41.4131	330 Ohm		
	R12	57.41.4123	22 kOhm		
	R13	57.41.4.01	100 Ohm		
	R14	57.41.4.02	1 kOhm		
	R15	57.41.4.01	100 Ohm		
	R17	57.41.4179	4.7 Ohm		
	R18	57.41.4122	2.2 kOhm		
	R20	57.41.4.01	100 Ohm		
	R21	57.41.4.01	100 Ohm		
	R22	57.41.4.83	18 kOhm		
	R23	57.11.6175	4.7 MOhm		
	R24	57.11.6175	4.7 MOhm		
	R25	57.41.4173	47 kOhm		
	R26	57.41.4122	2.2 kOhm		
	R27	57.41.4134	330 kOhm		
	R28	57.41.4134	330 kOhm		
	R29	57.41.4134	330 kOhm		
	R30	57.41.4134	330 kOhm		
	R31	57.41.4132	3.3 kOhm		
	R32	57.11.6175	4.7 MOhm		
	R33	57.11.6175	4.7 mOhm		
	R34	57.41.4173	47 kOhm		
	R35	57.41.4.53	15 kOhm		
	R36	57.41.4122	2.2 kOhm		
	R37	57.41.4172	4.7 kOhm		

IND	DATE	NAME	
4			MPETP = Metalized Polyesterfilm
3			PP = Polyprpylen Sal = Solid aluminium
2			Mot = Motorola, Ph = Philips, Sie = Siemens,
1			Sx = Siliconix, St = Studer, Tr = Transitron
◯	4.3.1981	Th	

STUDER | HF-DRIVER PCB | PL | 1.081.80. | PAGE 3 OF 4

IND	POS NO	PART NO	VALUE	SPECIFICATIONS/EQUIVALENT	MFR
	A 1	..080.771.00		Bias Driver	ST
	A 2	..081.804.00		Inverter PCB	
	C 1	59.32.3103	10 nF	80% 40V	
	C 2	59.32.3103	10 nF	80% 40V	
	C 3	59.34.0339	3.3 pF		
	C 4	59.34.0479	4.7 pF	5% 50V	
	C 5	59.32.1152	1.5 nF	10% 500V	
	C 6	59.25.3102	1.0 mF	50% 16V	
	C 7	59.31.6684	0.68uF	10% MPETP	
	C 8	59.32.1125	1.5 nF	500V	
	C 9	59.99.0196	560 pF	5% 100V	
	C10	59.99.0194	56 pF	2% 63V	
	C11	59.99.0196	560 pF	5% 100V	
	C12	59.32.1152	1.5 nF	10% 500V	
	C13	59.31.6104	0.1 uF	MPETP	
	C14	59.31.0474	0.47uF	20% 63V	
	C17	59.25.3002	1.0 mF	50% 16V	
	C18	59.04.9821	820 pF	10% 500V PP	
	C19	59.26.2100	10 uF	20% 16V Sal	Ph
	C20	59.32.1152	1.5 nF	10% 500V	
	C21	59.99.0192	180 pF	2% 63V	
	C22	59.99.0192	180 pF		
	C23	59.34.1150	15 pF	5% NPO	
	C24	59.32.1152	1.5 nF	10% 500V	
	C25	59.25.1222	2.2 nF	6.3V	
	C26	59.32.1152	1.5 nF	10%	
	C27	59.31.1104	0.1 uF	20% 100V	
	D 1			not used	
	D 2			not used	

IND	DATE	NAME	
4			MPETP = Metalized Polyesterfilm
3			PP = Polyprpylen Sal = Solid Aluminium
2			Mot = Motorola, Ph = Philips, Sie = Siemens,
1			Sx = Siliconix, St = Studer, Tr = Transitron
◯	4.3.1981	Th	

STUDER | HF-DRIVER PCB | PL | 1.081.801 | PAGE 1 OF 4

IND	POS NO	PART NO	VALUE	SPECIFICATIONS/EQUIVALENT	MFR
	D 3	50.04.0125	1N4448		Ph,Tr
	D 4	50.04.0125	1N4448		Ph,Tr
	D 8	50.04.0125	1N4448		Ph,Tr
	D 9	50.04.0125	1N4448		Ph,Tr
	D10	50.04.0125	1N4448		Ph,Tr
	D11	50.04.0125	1N4448		Ph,Tr
	HC1	1.010.10L50	A 101		St
	L 1	62.02.1822	8.2 mH	5%	
	L 2	62.02.1822	8.2 mH	5%	
	L 3	62.02.1222	2.2 mH		
	L 4	62.02.1822	8.2 mH		
	L 5	62.02.1222	2.2 mH		
	Q 1	50.03.0315	BC160-16	pnp	
	Q 2	50.03.0316	BC140-16	npn	
	Q 3	50-03-0316	BC140-16	npn	
	Q 4	50.03.0315	BC160-16	pnp	
	Q 5	50.03.0331	2 N 5639	ND FET	MotSx
	Q 6	50.03.0331	2 N 5639	ND FET	MotSx
	Q 7	50.03.0331	2 N 5639	ND FET	MotSx
	Q 8	50.03.0331	2 N 5639	ND FET	MotSx
	Q 9	50.03.0331	2 N 5639	ND FET	MotSx
	R 1	57.11.4229	2,2 Ohm		
	R 2	57.11.4229	2.2 Ohm		
	R 3	57.56.5179	4.7 Ohm	1W	
	R 4	57.56.5179	4.7 Ohm	1W	
	R 5	57.41.4172	2.7 kOhm		

IND	DATE	NAME	
4			MPETP = Metalized Polyesterfilm
3			PP = Polyprpylen Sal = Solid aluminium
2			Mot = Motorola, Ph = Philips, S.e = Siemens,
1			Sx = Siliconix, St = Studer, Tr = Transitron
◯	4.3.1981	Th	

STUDER | HF-DRIVER PCB | PL | 1.081.80. | PAGE 2 OF 4

IND	POS NO	PART NO	VALUE	SPECIFICATIONS/EQUIVALENT	MFR
	R38	57.41.4339	3.3 kOhm		
	R39	57.11.6150	15 Ohm		
	T 1	1 022.156.00		Inputtransformer 80/240 kHz	St
	T 2	1 022.156.00		Inputtransformer 80/240 kHz	St
	T 3	1 022.153.00		Outputtransformer 240 kHz	St
	T 4	1 022.157.00		Outputtransformer 80 kHz	St

IND	DATE	NAME	
4			MPETP = Metalized Polyesterfilm
3			PP = Polyprpylen Sal = Solid Aluminium
2			Mot = Motorola, Ph = Philips, Sie = Siemens,
1			Sx = Siliconix, St = Studer, Tr = Transitron
◯	4.3.1981	Th	

STUDER | HF-DRIVER PCB | PL | 1.081.801 | PAGE 4 OF 4

A80 LOCATOR | A80 MASTER-CONTROL

HF – DRIVER PCB 1.081.801–81 (INVERTER PCB 1.081.804)

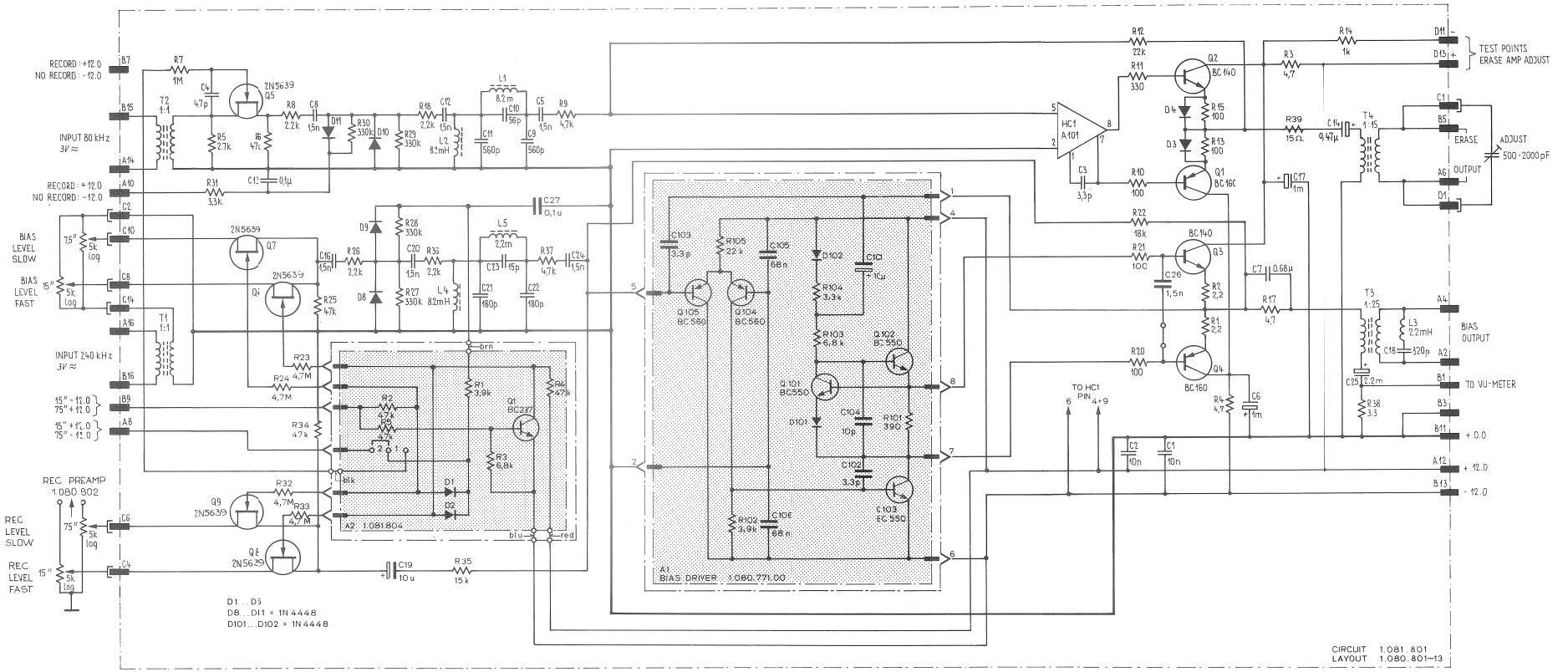

A80 LOCATOR | A80 MASTER-CONTROL

RECORD DRIVER AMPLIFIER PCB (EARLIER VERSION/CODE CHANNEL ONLY) 1.080.789

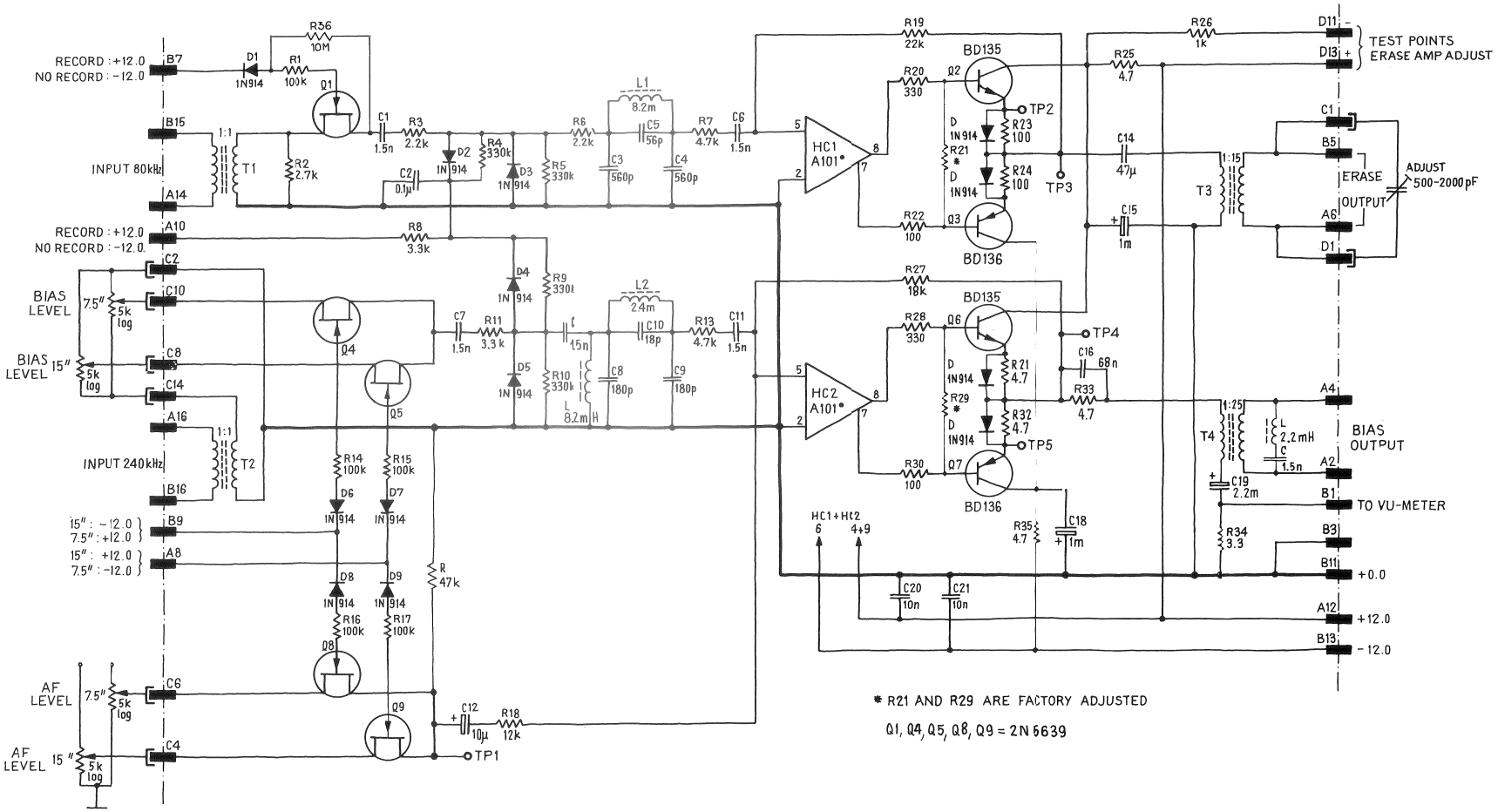

A80 LOCATOR | A80 MASTER-CONTROL

CONTROL EQUIPMENT 1.080.798

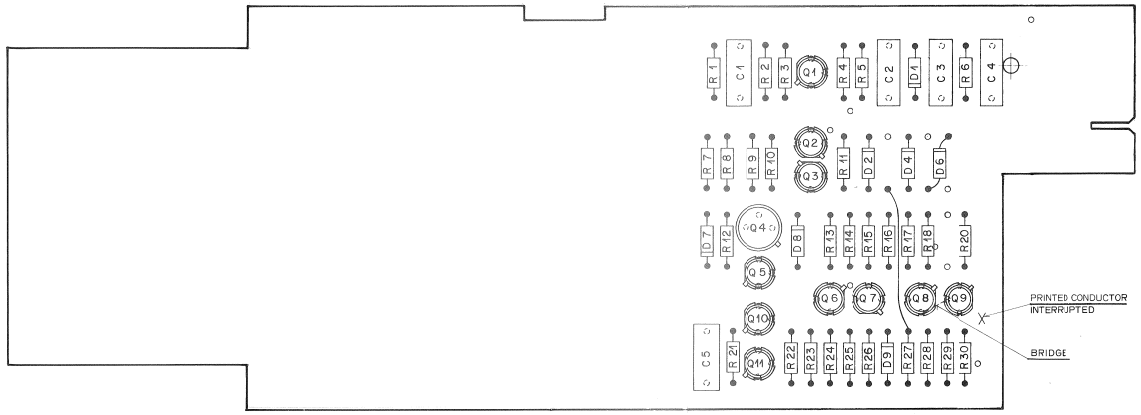

Pos.	Bauteil No.	Bezeichnung	Stk.	Bemerkung
C 01	59.31.0334	C .33 µ, 20%, 63V, MPETP	1	
C 02	59.31.4103	C 10 n, 160V, PETP	1	
C 03	59.31.4103	C 10 n,	1	
C 04	59.31.4103	C 10 n,	1	
C 05	59.31.0334	C .33 µ, 63V, MPETP	1	
D 01	50.04.0125	D 1 N 4448 SI	1	
D 02	50.04.1121	D 24 V, 5%, .40W, Z	1	
D 03				
D 04	50.04.0125	D 1 N 4448 SI	1	
D 05				
D 06	50.04.0125	D 1 N 4448 SI	1	
D 07	50.04.0125	D 1 N 4448	1	
D 08	50.04.1109	D 20 V, 5%, 40W Z	1	
D 09	50.04.0125	D 1 N 4448 SI	1	
Q 01	50.03.0306	Q BC 178 B PNP	1	
Q 02	50.03.0306	Q BC 178 B	1	
Q 03	50.03.0409	Q BC 108 B NPN	1	
Q 04	50.03.0315	Q BC 160-16 PNP	1	
Q 05	50.03.0409	Q BC 108 B NPN	1	
Q 06	50.03.0306	Q BC 178 B PNP	1	
Q 07	50.03.0306	Q BC 178 B	1	
Q 08	50.03.0306	Q BC 178 B	1	
Q 09	50.03.0306	Q BC 178 B	1	
Q 10	50.03.0409	Q BC 108 B NPN	1	
Q 11	50.03.0409	Q BC 108 B	1	

Aenderungen ① ② ③ ④ ⑤

STUDER REGENSDORF ZÜRICH — Positionsliste — Steuerprint TLS

Erstellt: 14.6.76 P.B./gv
Geprüft: 14. JUNI 1976 R.
Blatt: 1 Blätter 2

Kopie für:
Ersatz für:
Ersetzt durch:
1.080.798

Pos.	Bauteil No.	Bezeichnung	Stk.	Bemerkung
R 01	57.41.4104	R 100 Ω, 5%, .25W, CSCH	1	
R 02	57.41.4224	R 220 Ω,	1	
R 03	57.41.4102	R 1,0 Ω,	1	
R 04	57.41.4333	R 33 Ω,	1	
R 05	57.41.4333	R 33 Ω,	1	
R 06	57.41.4333	R 33 Ω,	1	
R 07	57.41.4104	R 100 Ω,	1	
R 08	57.41.4223	R 22 Ω,	1	
R 09	57.41.4103	R 10 Ω,	1	
R 10	57.41.4103	R 10 Ω,	1	
R 11	57.41.4333	R 33 Ω,	1	
R 12	57.41.4563	R 56 Ω,	1	
R 13	57.41.4333	R 33 Ω,	1	
R 14	57.41.4103	R 10 Ω,	1	
R 15	57.41.4104	R 100 Ω,	1	
R 16	57.41.4103	R 10 Ω,	1	
R 17	57.41.4103	R 10 Ω,	1	
R 18	57.41.4103	R 10 Ω,	1	
R 19				
R 20	57.41.4103	R 10 Ω,	1	
R 21	57.41.4224	R 220 Ω,	1	
R 22	57.41.4222	R 2.2 Ω,	1	
R 23	57.41.4682	R 6.8 Ω,	1	
R 24	57.41.4333	R 33 Ω,	1	
R 25	57.41.4333	R 33 Ω,	1	
R 26	57.41.4223	R 22 Ω,	1	
R 27	57.41.4392	R 3.9 Ω,	1	
R 28	57.41.4220	R 22 ,	1	
R 29	57.41.4223	R 22 K,	1	
R 30	57.41.4223	R 22 K,	1	

Aenderungen ① ② ③ ④ ⑤

STUDER REGENSDORF ZÜRICH — Positionsliste — Steuerprint TLS

Erstellt: 14.6.76 P.B./gv
Geprüft: 14. JUNI 1976 R.
Blatt: 2 Blätter 2

Kopie für:
Ersatz für:
Ersetzt durch:
1.080.798

A80 LOCATOR | A80 MASTER-CONTROL

CONTROL EQUIPMENT 1.080.798

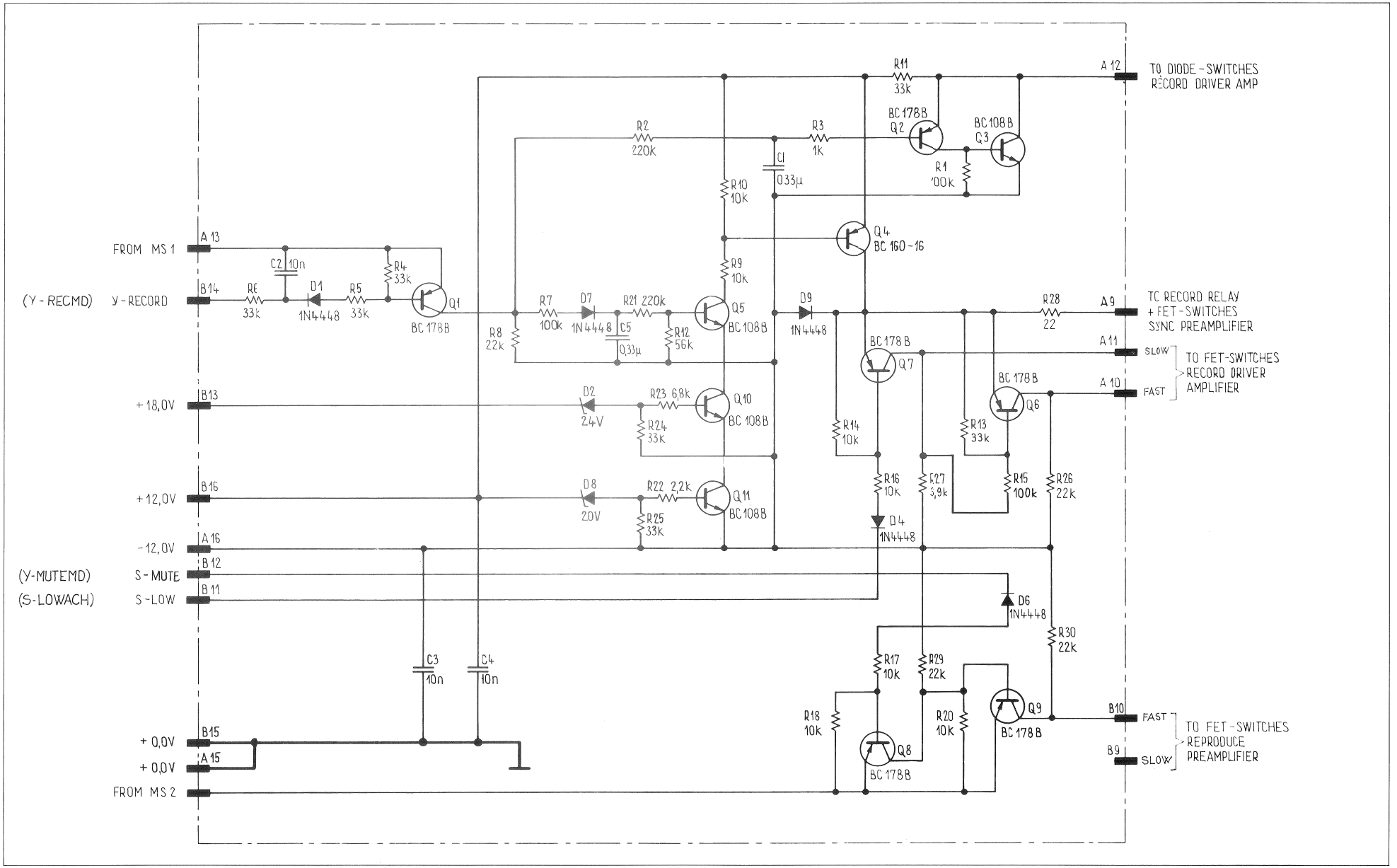

A80 LOCATOR | A80 MASTER-CONTROL

CONTROL EQUIPMENT 1.081.803

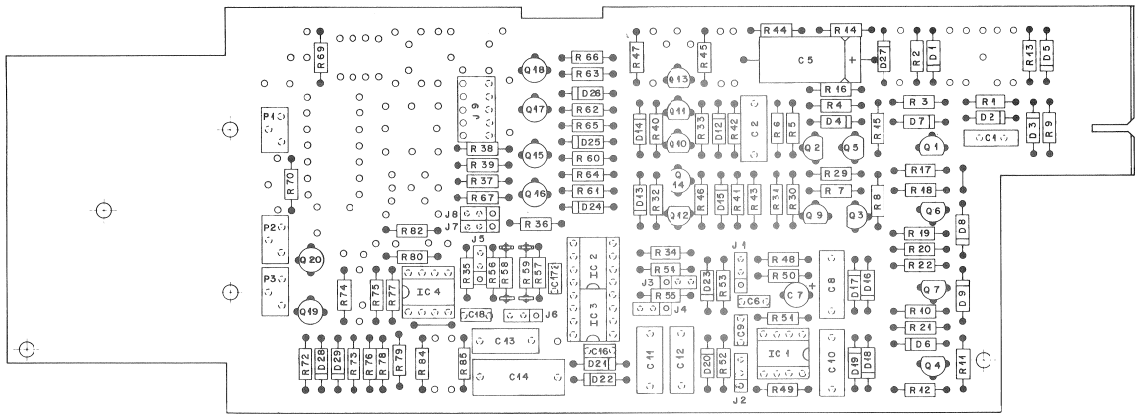

Pos.	Bauteil No.	Bezeichnung	Stk.	Bemerkung
R 38	57.11.4223	22 k 2%	1	
R 39	57.11.4472	4,7k 2%	1	
R 40	57.11.4223	22 k 2%	1	
R 41	57.11.4223	22 k 2%	1	
R 42	57.11.4223		1	
R 43	57.11.4223		1	
R 44	57.11.4103	10 k 2%	1	
R 45	57.11.4223	22 k 2%	1	
R 46	57.11.4103	10 k 2%	1	
R 47	57.11.4223	22 k 2%	1	
R 48	57.11.4184	180k 2%	1	
R 49	57.11.4184		1	
R 50	57.11.4332	3,3k 2%	1	
R 51	57.11.4332		1	
R 52	57.11.4223	22 k 2%	1	
R 53	57.11.4223		1	
R 54	57.11.3334	330k 1%	1	
R 55	57.11.3334		1	
R 56	57.11.3334		1	
R 57	57.11.3334		1	
R 58	57.11.4105	1 M 2%	1	
R 59	57.11.4105		1	
R 60	57.11.4471	470 2%	1	
R 61	57.11.4471		1	
R 62	57.11.4471		1	
R 63	57.11.4471		1	
R 64	57.11.4334	330k 2%	1	
R 65	57.11.4334		1	
R 66	57.11.4334		1	
R 67	57.11.4392	3,9 k 2%	1	
R 69	57.11.4103	10 k 2%	1	
R 70	57.11.4223	22 k 2%	1	
R 72	57.11.4334	330k 2%	1	

Aenderungen 1 2 3 4 5

STUDER REGENSDORF ZURICH — **Positionsliste** — Relay Control Logic PCB

Erstellt: Geprüft: Blatt: 4 Blätter: 5

Kopie für: Ersatz für: Ersetzt durch: 1.081.803

Pos.	Bauteil No.	Bezeichnung	Stk.	Bemerkung
C 01	59.06.0103	C 10 N ± 10% 100V PETP	1	
C 02	59.06.0104	C 0,1 U ± 10% 100V PETP	1	
C 05	59.25.3221	C 220 U ~ 10% 16V ELKO	1	
C 06	59.99.0205	C 68 N +80-20% 63V CER	1	
C 07	59.26.1220	C 22 U ~ 20% 10V ELSAL	1	
C 08	59.06.5154	C 0,15U ± 5% 100V PETP	1	
C 09	59.99.0205	C 68 N +80-20% 63V CER	1	
C 10	59.06.5154	C 0,15U ± 5% 100V PETP	1	
C 11	59.02.5683	C 68 N +80-20% 63V CER	1	
C 12		C 0,22U ± 2% 63V	1	S'I
C 13		C 0,33U ± 2% 63V	1	S'I
C 14	59.99.0508	C 1 U ± 2% 63V	1	
C 15	59.99.0205	C 68 N +80-20% 63V CER	1	
C 16	59.99.0205		1	
C 17	59.99.0205		1	
C 18	59.99.0205		1	
D 01	50.04.0125	D 1N 4448 SI	1	
D 02	50.04.0125		1	
D 03	50.04.0125		1	
D 04	50.04.0125		1	
D 05	50.04.0125		1	
D 06	50.04.0125		1	
D 07	50.04.0125		1	
D 08	50.04.0125		1	
D 09	50.04.0125		1	
D 12	50.04.0125		1	
D 13	50.04.0125		1	
D 14	50.04.0125		1	
D 15	50.04.0125		1	
D 16	50.04.0125		1	
D 17	50.04.0125		1	
D 18	50.04.0125		1	
D 19	50.04.0125		1	
D 20	50.04.0125		1	

Aenderungen 1 2 3 4 5

STUDER REGENSDORF ZURICH — **Positionsliste** — Delay Control Logic PCB

Erstellt: Thomsen 15.1.82 Geprüft: Blatt: 1 Blätter: 5

Kopie für: Ersatz für: Ersetzt durch: 1.081.803

Pos.	Bauteil No.	Bezeichnung	Stk.	Bemerkung
D 21	50.04.0125	D 1N 4448 SI	1	
D 22	50.04.0125		1	
D 23	50.04.0125		1	
D 24	50.04.0125		1	
D 25	50.04.0125		1	
D 26	50.04.0125		1	
D 27	50.04.1121	D 24V 0,4W Z	1	
D 28	50.04.0125	D 1N 4448 SI	1	
D 29	50.04.0125		1	
IC 01	50.05.0245	RC 4558 LIN	1	
IC 02	50.05.0158	NE 555 TIMER	1	
IC 03	50.05.0158		1	
IC 04	50.05.0245	RC 4558 LIN	1	
P 01	58.01.7502	5 K 10% 0,5W P-CERMET	1	
P 02	58.01.7502		1	
P 03	58.01.7502		1	
Q 01	50.03.0515	BC 560 B PNP	1	
Q 02	50.03.0436	BC 550 B NPN	1	
Q 03	50.03.0515	BC 560 B PNP	1	
Q 04	50.03.0515		1	
Q 05	50.03.0436	BC 550 B NPN	1	
Q 06	50.03.0515	BC 560 B PNP	1	
Q 07	50.03.0515		1	
Q 09	50.03.0436	BC 550 B NPN	1	
Q 10	50.03.0515	BC 560 B PNP	1	
Q 11	50.03.0515		1	
Q 12	50.03.0436	BC 550 B NPN	1	
Q 13	50.03.0436		1	
Q 14	50.03.0436		1	
Q 15	50.03.0329	P 1228 E PD-FET	1	
Q 16	50.03.0329		1	
Q 17	50.03.0329		1	

Aenderungen 1 2 3 4 5

STUDER REGENSDORF ZURICH — **Positionsliste** — Delay Control Logic PCB

Erstellt: Geprüft: Blatt: 2 Blätter: 5

Kopie für: Ersatz für: Ersetzt durch: 1.081.803

Pos.	Bauteil No.	Bezeichnung	Stk.	Bemerkung
Q 18	50.03.0329	P 1228 E PD-FET	1	
Q 19	50.03.0329		1	
Q 20	50.03.0350	E 112 ND-FET	1	
R 01	57.11.4331	33 k 2% 0,25W MF	1	
R 02	57.11.4331		1	
R 03	57.11.4151	15 k 2%	1	
R 04	57.11.4221	2,2k 2%	1	
R 05	57.11.4331	33 k 2%	1	
R 06	57.11.4151	15 k 2%	1	
R 07	57.11.4151		1	
R 08	57.11.4103	10 k 2%	1	
R 09	57.11.4220	22 k 2%	1	
R 10	57.11.4153	15 k 2%	1	
R 11	57.11.4153		1	
R 12	57.11.4103	10 k 2%	1	
R 13	57.11.4221	2,2k 2%	1	
R 14	57.11.4221		1	
R 15	57.11.4221		1	
R 16	57.11.4221		1	
R 17	57.11.4151	15 k 2%	1	
R 18	57.11.4103	10 k 2%	1	
R 19	57.11.4151	15 k 2%	1	
R 20	57.11.4331	33 k 2%	1	
R 21	57.11.4103	10 k 2%	1	
R 22	57.11.4151	15 k 2%	1	
R 29	57.11.4331	33 k 2%	1	
R 30	57.11.4103	10 k 2%	1	
R 31	57.11.4821	8,2k 2%	1	
R 32	57.11.4223	22 k 2%	1	
R 33	57.11.4223		1	
R 34	57.11.4471	4,7k 2%	1	
R 35	57.11.3113	11 k 1%	1	
R 36	57.11.4331	39 k 2%	1	
R 37	57.11.4331	39 k 2%	1	

Aenderungen 1 2 5 4 5

STUDER REGENSDORF ZURICH — **Positionsliste** — Delay Control Logic PCB

Erstellt: Geprüft: Blatt: 3 Blätter: 5

Kopie für: Ersatz für: Ersetzt durch: 1.081.80:

Pos.	Bauteil No.	Bezeichnung	Stk.	Bemerkung
R 73	57.11.4334	330k 2%	1	
R 74	57.11.4682	6,8k 2%	1	
R 75	57.11.4103	10 k 2%	1	
R 76	57.11.4683	68 k 2%	1	
R 77	57.11.4223	22 k 2%	1	
R 78	57.11.4822	8,2k 2%	1	
R 79	57.11.4103	10 k 2%	1	
R 80	57.11.3103	10 k 1%	1	
R 81				NACH BEDARF
R 82	57.11.3103	10 k 1%	1	
R 83				NACH BEDARF
R 84	57.11.3103	10 k 1%	1	
R 85	57.11.3103		1	
R 86				NACH BEDARF

Aenderungen 1 2 3 4 5

STUDER REGENSDORF ZURICH — **Positionsliste** — Delay Control Logic PCB

Erstellt: Geprüft: Blatt: 5 Blätter: 5

Kopie für: Ersatz für: Ersetzt durch: 1.081.803

A80 LOCATOR | **A80** MASTER-CONTROL

CONTROL EQUIPMENT 1.081.803

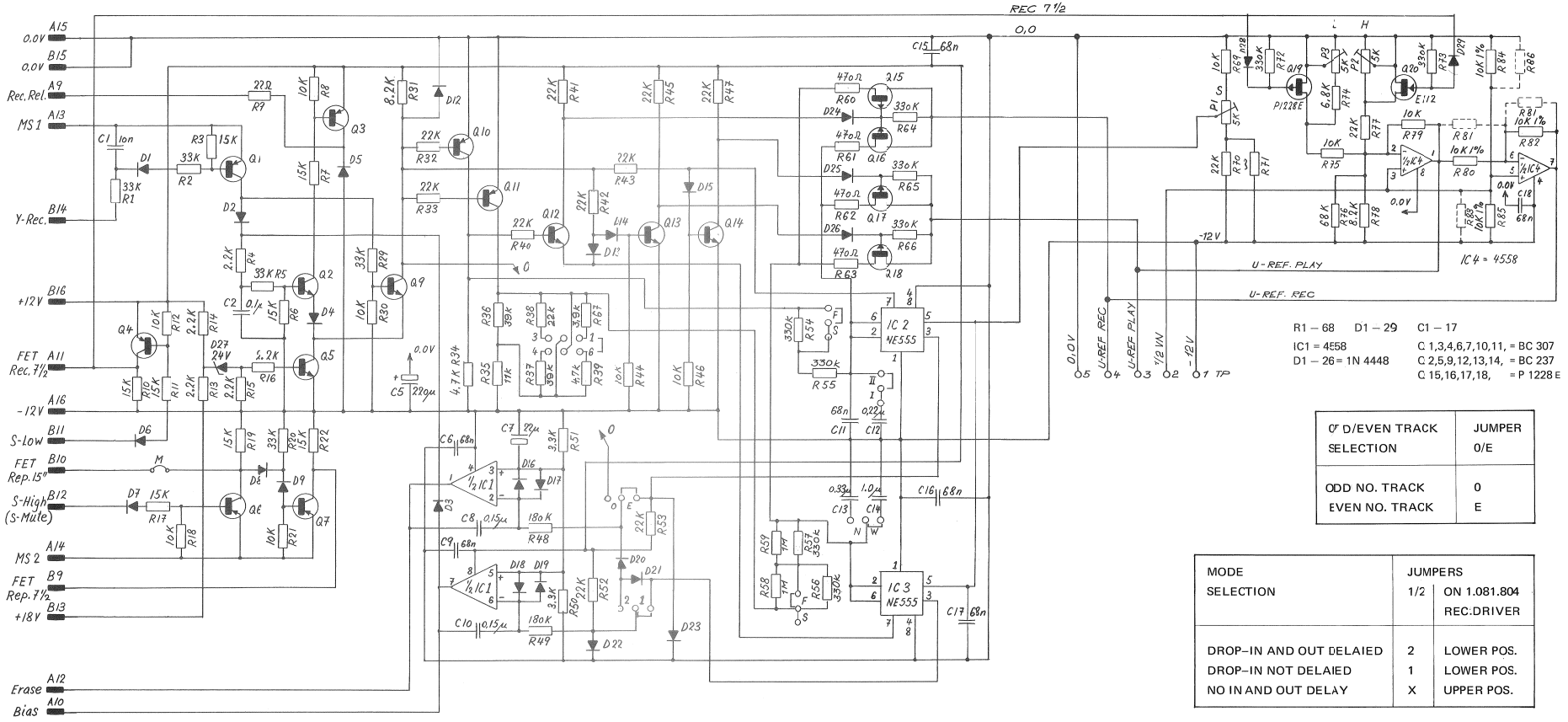

ODD/EVEN TRACK SELECTION	JUMPER 0/E
ODD NO. TRACK	0
EVEN NO. TRACK	E

MODE SELECTION	JUMPERS 1/2	ON 1.081.804 REC:DRIVER
DROP–IN AND OUT DELAIED	2	LOWER POS.
DROP–IN NOT DELAIED	1	LOWER POS.
NO IN AND OUT DELAY	X	UPPER POS.

TYPE OF HEAD BLOCK	MACHINE SPEEDS	R58 R59	JUMPERS N/W	S/F	I/II	1...6	DROP–IN TIME DELAY MSEC LOW SPEED ★	HIGH SPEED ★
SHORT,IN–LINE EH	7 1/2/15		N	SS	I	3–4	158 (9,6)	79 (4.8)
WIDE, IN–LINE EH	7 1/2/15	1M	W	SS	I	1–6	360 (9,6)	180 (4.8)
WIDE, SEPARATE EH	7 1/2/15		W	SS	II	2–3	490 (14,8)	245 (7.4)
SHORT, IN LINE EH	15/30		N	FF	I	2–3	79 (4,8)	39,5 (2.4)
WIDE, IN–LINE EH	15/30	1M	W	FF	I	2–5	180 (4,8)	90 (2.4)
WIDE, SEPARATE EH	15/30		W	FF	II	1–2	245 (7,4)	122.5 (3.7)

★ DROP–OUT DELAY TIMES ARE TO BE CALCULATED BY ADDING THE FIGURES IN BRACKETS TO THE STIPULATED DROP–IN DELAY TIMES. THE DROP–OUT DELAY TIMES HAVE TO BE GREATER OWING TO THE TWO GAPS OF THE ERASE HEADS. DURING THE DROP–IN SEQUENCE THE TRAILING GAP OF THE ERASE HEADS FORME THE REFERENCE FOR THE DELAY TIME, WHEREAS DURING THE DROP–OUT SEQUENCE IT IS THE LEADING GAP.
THE TIME DIFFERENCE IS SELECTED BY MEANS OF JUMPER 1–6.

A80 LOCATOR | A80 MASTER-CONTROL

REHEARSE SET A 80 1.228.384

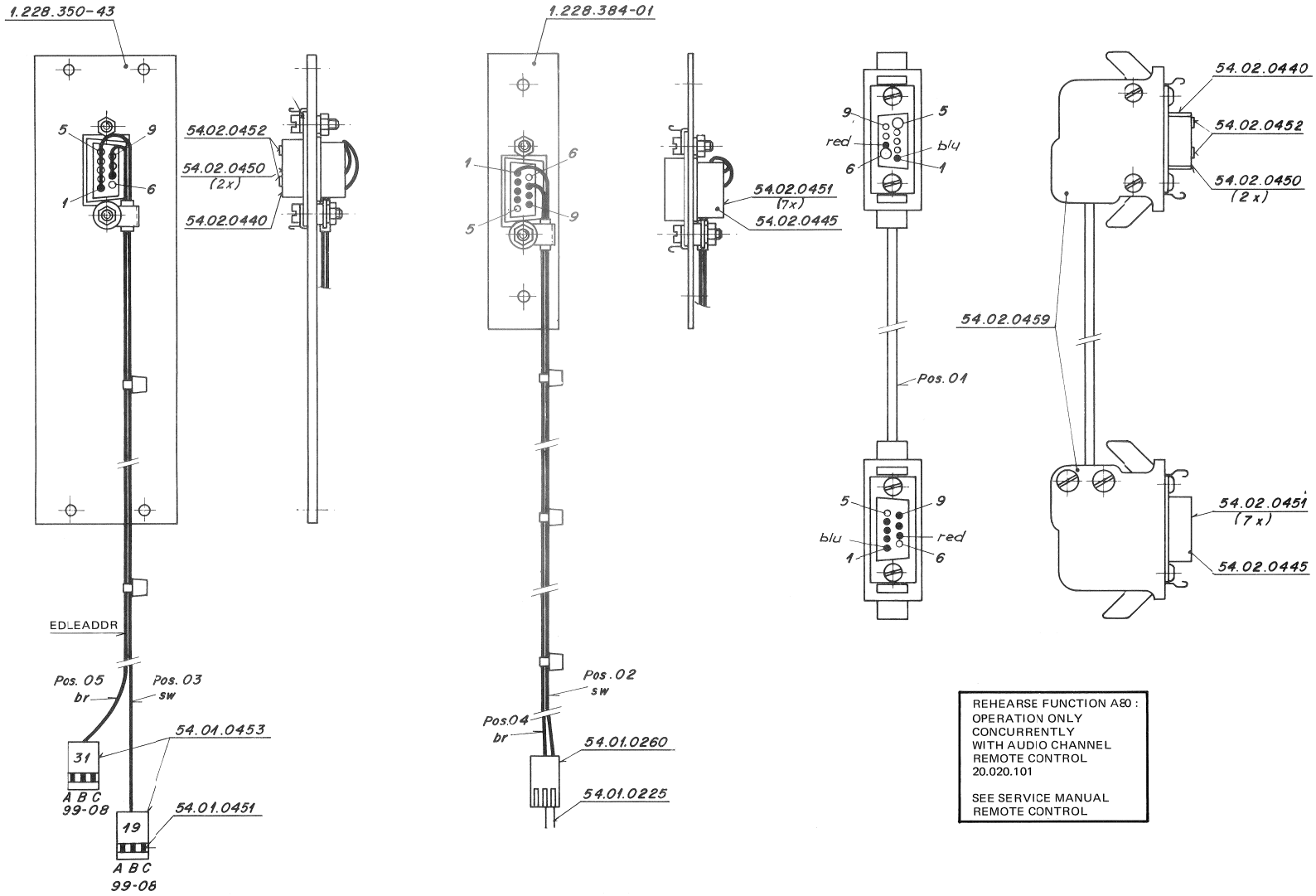

9.6

A 80VU MODIFIED AS TLS 2000 MASTER

A80
MASTER

CODE RECORD AMPLIFIER PCB A 80 MASTER 1.228.711–83

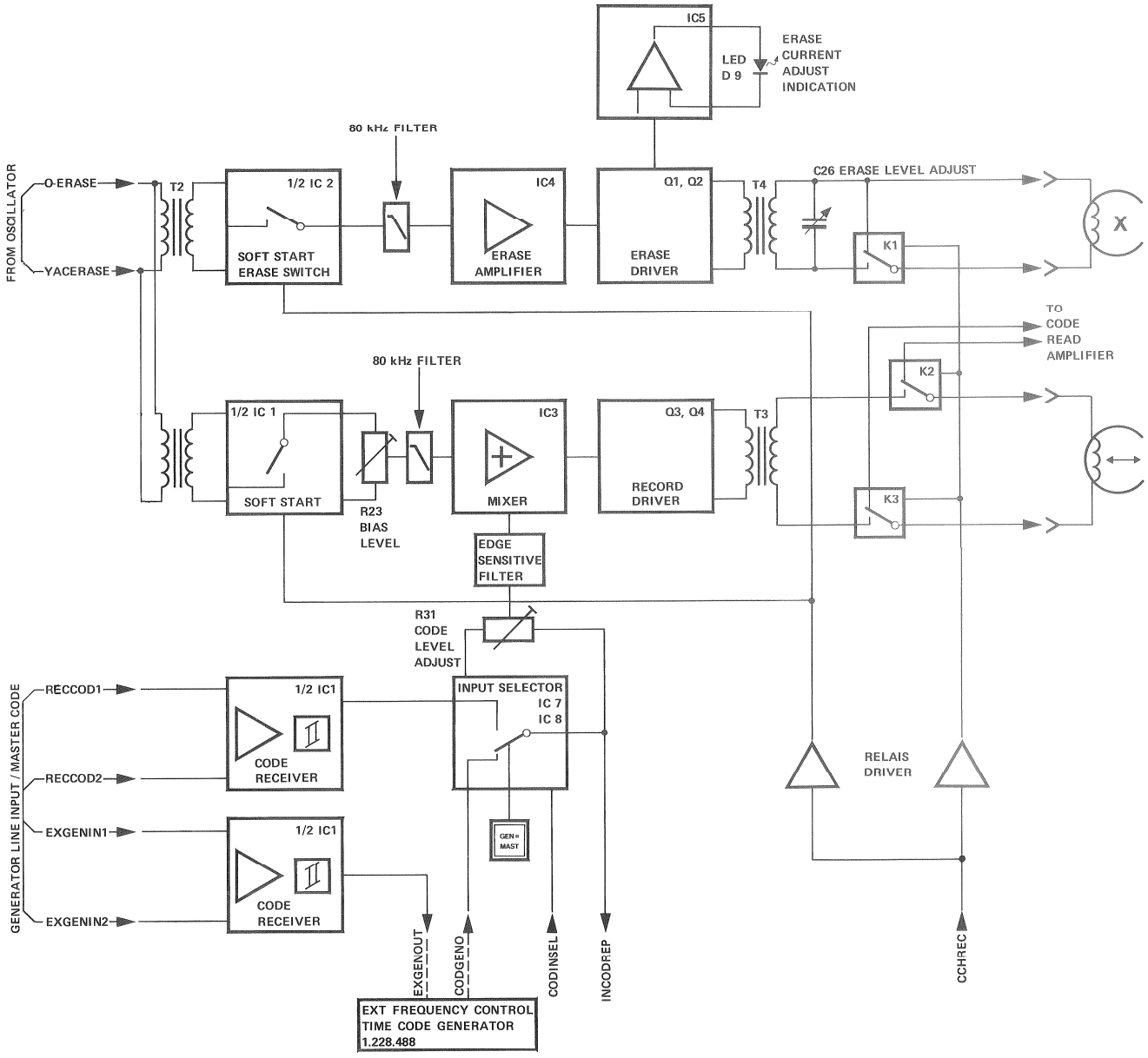

A80
MASTER

CODE RECORD AMPLIFIER PCB A 80 - MASTER 1.228.711–83

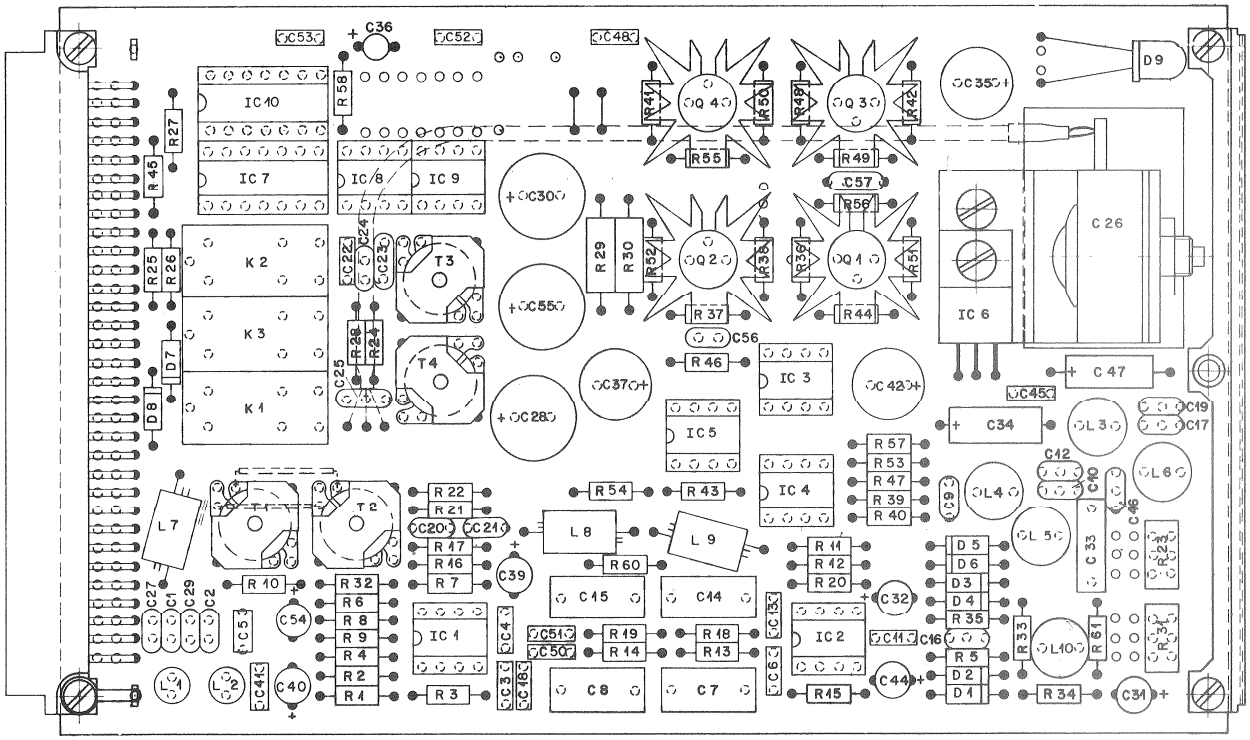

A80
MASTER

CODE RECORD AMPLIFIER PCB A 80 - MASTER 1.228.711–83

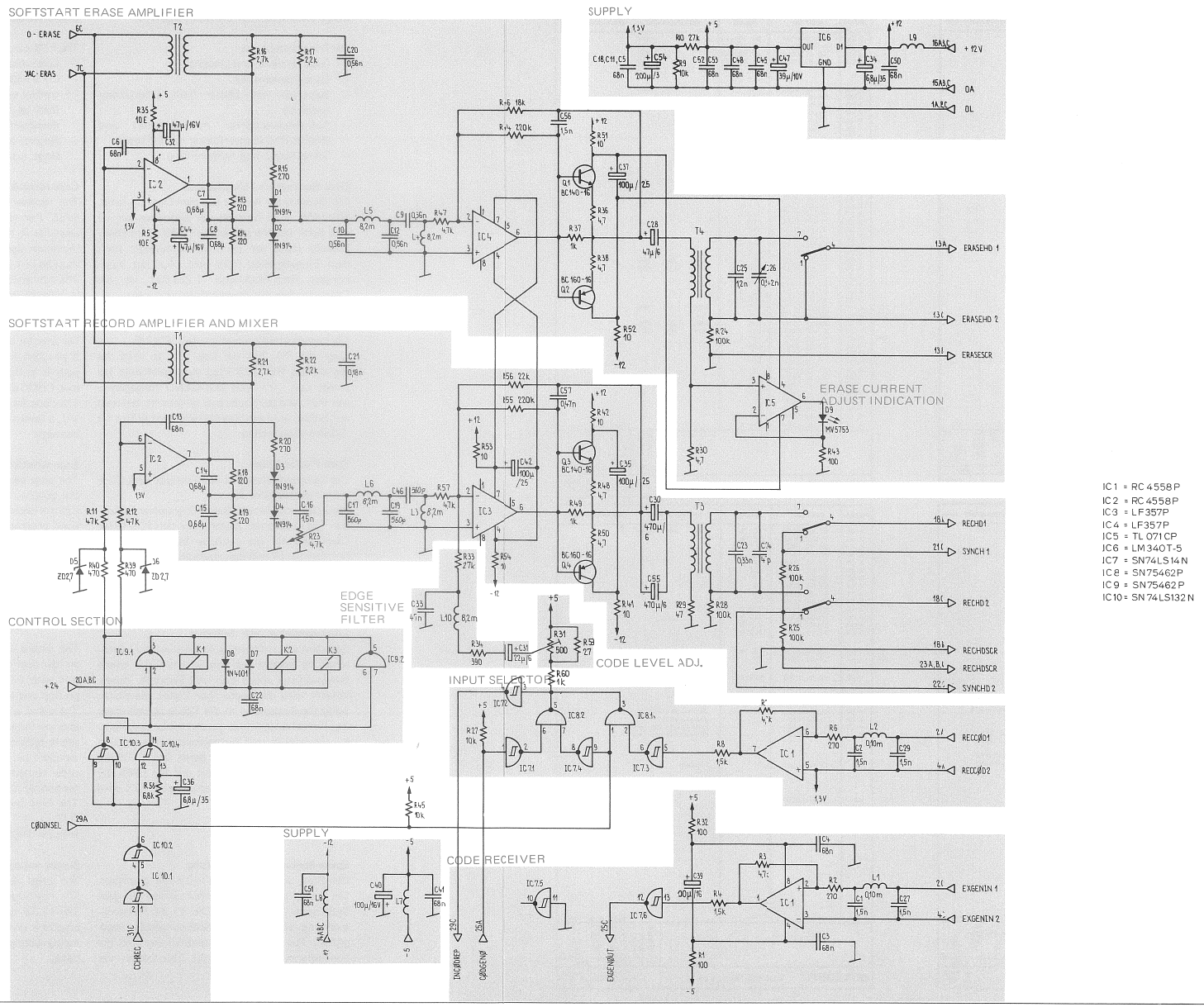

CODE RECORD AMPLIFIER PCB A 80 - MASTER 1.228.711–83

POS NO	PART NO	VALUE	SPECIFICATIONS	EQUIVALENT	MFR
C 01	59.32.4152	1.5 N	20% 63V	KER	
C 02	59.32.4152	1.5 N			
C 03	59.99.0205	68 N	-20% 63V	KER	
C 04	59.99.0205	68 N			
C 05	59.99.0205	68 N			
C 06	59.99.0205	68 N			
C 07	59.02.0684	680 N	5% 63V	MPC	
C 08	59.02.0684	680 N			
C 09	59.32.0561	560 P	20% 500V	KER	
C 10	59.32.0561	560 P			
C 11	59.99.0205	68 N	-20% 63V	KER	
C 12	59.32.0561	560 P	20% 500V	KER	
C 13	59.99.0205	68 N	-20% 63V	KER	
C 14	59.02.0684	680 N	5% 63V	MPC	
C 15	59.02.0684	680 N			
C 16	59.32.4152	1.5 N	20% 63V	KER	
(4) C 17	59.32.0561	560 P	20% 500V	KER	
C 18	59.99.0205	68 N	-20% 63V	KER	
(4) C 19	59.32.0561	560 P	20% 500V	KER	
C 20	59.32.0561	560 P	20% 500V	KER	
C 21	59.34.2181	180 P	5% 50V	KER	
C 22	59.99.0205	68 N	20% 63V	KER	
C 23	59.34.4331	330 P	5% 50V	KER	
C 24	59.34.2470	47 P	5% N750	KER	
C 25	59.32.1122	1.2 N	10% 500V	KER	
C 26	59.19.0103	760P-2.1N	500V	TRI	
C 27	59.32.4152	1.5 N	20% 63V	KER	
C 28	59.30.4470	47 U	-20% 16V	TA	
C 29	59.32.4152	1.5 N	20% 63V	KER	
C 30	59.22.2471	470 U	-10% 6 V	EL	
C 31	59.30.2220	22 U	-20% 6.3V	TA	
C 32	59.30.4470	47 U	-20% 16V	TA	
(2) C 33	59.31.6473	47 N	±10% 100V	MPETP	
C 34	59.99.0201	6.8 U	20% 35V	TA	
C 35	59.22.5101	100 U	-10% 25V	EL	
C 36	59.36.4689	6.8 U	20% 25V	TA	
C 37	59.22.5101	100 U	-10% 25V	EL	
C 38					
(1) C 39	59.30.4101	100 U	-10% 16V	TA	
(1) C 40	59.30.4101	100 U			
C 41	59.99.0205	68 N	-20% 63V	KER	
C 42	59.22.5101	100 U	-10% 25V	EL	
C 43					
C 44	59.30.4470	47 U	-20% 16V	TA	
C 45	59.99.0205	68 N	-20% 63V	KER	
(4) C 46	59.32.0561	560 P	20% 500V	KER	
C 47	59.99.0202	47 U	20% 10V	TA	
C 48	59.99.0205	68 N	-20% 63V	KER	
C 49					
C 50	59.99.0205	68 N	-20% 63V	KER	
C 51	59.99.0202	68 N			

(5) 10.6.81 Vo.

A	4.11.80	Vc	83
B	16.6.80	Vo	
C	9.2.79	B2	
D	13.4.78	B1	
E	9.3.78		
IND	DATE	NAME	

STUDER CODE REC. AMP. A 80-M 1.228.711-83 PAGE 1 of 4

POS NO	PART NO	VALUE	SPECIFICATIONS	EQUIVALENT	MFR
Q 01	50.03.0316	BC 140-16		NPN	
Q 02	50.03.0315	BC 160-16		PNP	
Q 03	50.03.0316	BC 140-16		NPN	
Q 04	50.03.0315	BC 160-16		PNP	
R 01	57.02.5101	100	10% .25W	CMA	
R 02	57.02.5271	270			
R 03	57.02.5472	4.7 k			
R 04	57.02.5152	1.5 k			
R 05	57.02.5100	10			
R 06	57.02.5271	270			
R 07	57.02.5472	4.7 k			
R 08	57.02.5152	1.5 k			
R 09	57.02.5101	100			
R 10	57.02.5271	270			
R 11	57.02.5473	47 k			
R 12	57.02.5473	47 k			
R 13	57.02.5221	220			
R 14	57.02.5221	220			
R 15	57.02.5271	270			
R 16	57.02.5272	2.7 k			
R 17	57.02.5222	2.2 k			
R 18	57.02.5221	220			
R 19	57.02.5221	220			
R 20	57.02.5271	270			
R 21	57.02.5273	27 k			
R 22	57.02.5222	2.2 k			
R 23	58.01.7502	5 k	10% .5W	PMG	
R 24	57.02.5104	100 k	10% .25W	CMA	
R 25	57.02.5104	100 k			
R 26	57.02.5104	100 k			
R 27	57.02.5103	10 k			
R 28	57.02.5104	100 k			
(1) R 29	57.03.5479	4.7	10% .5W	CMA	
(1) R 30	57.03.5479	4.7			
R 31	58.01.7501	500	10% .5W	PMG	
R 32	57.02.5101	100	10% .25W	CMA	
(4) R 33	57.02.5273	27 k			
R 34	57.02.5391	390			
R 35	57.02.5100	10			
R 36	57.02.5479	4.7			
R 37	57.02.5102	1 k			
R 38	57.02.5479	4.7			
R 39	57.02.5471	470			
R 40	57.02.5471	470			
R 41	57.02.5100	10			
R 42	57.02.5100	10			
R 43	57.02.5101	100			
R 44	57.02.5224	220 k			

(5) 10.6.81 Vo.

A	4.11.80	Vc	83
B	16.6.80	Vo	
C	9.2.79	B2	
D	13.4.78	B1	
E	9.3.78		
IND	DATE	NAME	

STUDER CODE REC. AMP. A 80-M 1.228.711-83 PAGE 3 of 4

POS NO	PART NO	VALUE	SPECIFICATIONS	EQUIVALENT	MFR
C 52	59.99.0205	68 N	-20% 63V	KER	
C 53	59.99.0205	68 N			
C 54	59.30.1221	220 U	-20% 3V	TA	
C 55	59.22.2471	470 U	-10% 6.3V	EL	
C 56	59.32.4152	1.5 N	20% 63V	KER	
C 57	59.34.5471	470 P	5% N1500	KER	
D 01	50.04.0125	1 N 4448			
D 02	50.04.0125	1 N 4448			
D 03	50.04.0125	1 N 4448			
D 04	50.04.0125	1 N 4448			
D 05	50.04.1106	2.7 V	5% .4OW	Z	
D 06	50.04.1106	2.7 V	5% .4OW	Z	
D 07	50.04.0122	1 N 4001		SI	
D 08	50.04.0122	1 N 4001		SI	
D 09	50.04.2111	MV5753RT		LED	
IC01	50.05.0245	RC4558P		LIN	RC4558DN
IC02	50.05.0245	RC4558P		LIN	RC4558DN
3) IC03	50.09.0102	LF 357 P		LIN	
3) IC04	50.09.0102	LF 357 P		LIN	
5) 3) IC05	50.09.0103	TL 071 CP	DIP 8	Bi-JFET	LF 351 4
IC06	50.05.0221	LM340T-5		V.REG	IC7805CP
IC07	50.06.0014	SN74LS14N		TTL	
IC08	50.05.0227	SN75462P		DRIV	LM75462
IC09	50.05.0227	SN75462P		DRIV	LM75462
IC10	50.06.0132	SN74LS132N		TTL	
K 01	56.02.1001	24 V-	.1A 1U	Au	
K 02	56.02.1001	24 V-			
K 03	56.02.1001	24 V-			
L 01	62.02.1101	100 U	10% 36		
L 02	62.02.1101	100 U	10% 36		
(4) L 03	62.02.1822	8.2 M	5% 3B		
L 04	62.02.1822	8.2 M	5% 3B		
L 05	62.02.1822	8.2 M	5% 3B		
(4) L 06	62.02.1822	8.2 M	5% 3B		
L 07	62.01.0115		Breitbanddrossel		
L 08	62.01.0115		Breitbanddrossel		
L 09	62.01.0115		Breitbanddrossel		
L 10	62.02.1822	8.2 M	5% 3B		

(5) 10.6.81 Vo.

A	4.11.80	Vc	83
B	16.6.80	Vo	
C	9.2.79	B2	
D	13.4.78	B1	
E	9.3.78		
IND	DATE	NAME	

STUDER CODE REC. AMP. A 80-M 1.228.711-83 PAGE 2 of 4

POS NO	PART NO	VALUE	SPECIFICATIONS	EQUIVALENT	MFR
R 45	57.02.5103	10 k	10% .25W	CMA	
R 46	57.02.5183	18 k			
R 47	57.02.5472	4.7 k			
R 48	57.02.5479	4.7			
R 49	57.02.5102	1 k			
R 50	57.02.5479	4.7			
R 51	57.02.5100	10			
R 52	57.02.5100	10			
R 53	57.02.5100	10			
R 54	57.02.5100	10			
R 55	57.02.5224	220 k			
R 56	57.02.5223	22 k			
R 57	57.02.5472	4.7 k			
R 58	57.02.5682	6.8 k			
(2) R 60	57.02.5102	1 k			
(2) R 61	57.02.5470	47			
S 01	54.01.0358	Leiste	3 * 32 Pol.	LOET	
T 01	1.022.165		Eingangstrafo 1:1		
T 02	1.022.165		Eingangstrafo 1:1		
T 03	1.022.166		Ausgangstrafo 1:15		
T 04	1.022.167		Ausgangstrafo 1:8		
TF	29.21.6002		Lötöse		
XIC	53.03.0166	8 - Pol.		DIL	
XIC	53.03.0167	14 - Pol.		DIL	
XIC	53.03.0168	16 - Pol.		DIL	

(1) 10.6.81 Vo.

A	4.11.80	Vc	83
B	16.6.80	Vo	
C	9.2.79	B2	
D	13.4.78	B1	
E	9.3.78		
IND	DATE	NAME	

STUDER CODE REC. AMP. A 80-M 1.228.711-83 PAGE 4 of 4

CODE RECORD AMPLIFIER 1.228.711

Der Print besteht aus:
- Code Reciever und Umschaltteil
- Code-Flankenfilter
- Steuerteil vom Master Basic Programmer bedienbar
- Aufnahmeverstärker mit Softstart und Mischstufe/Löschverstärker mit Softstart
- Speise Spannungs-Aufbereitung

Code Receiver und Umschaltteil

Der Receiverteil besteht aus dem Dual Op Amp. MC 1458. Aus Gründen der Störsicherheit ist eine Seite des Verstärkers auf 1,3V angehoben. Deshalb muss der minimale Signalpegel nach dem Eingangstrafo 1,3V sein. Auf der zugehörigen Rack-Rückwand 1.228.612 ist die Cannonbuchse mit Eingangstrafo zu finden.

Der Umschaltteil besteht aus den IC's 7/8.
Liegt am Pin 29A ein Log "1", so wird das Signal vom RECCOD Pfad durchgeschaltet, bei einem Log "0" wird CODGENO freigegeben. Mit R31 wird der Codepegel eingestellt. Bezogen auf 0dBm wird ein Pegelbereich von 0dBm bis -20dBm überstrichen.

Code-Flankenfilter

Das nachgeschaltete Flankenfilter gibt dem Code die vorgeschriebene Form.
Steuerteil vom Master Basic-Programmer bedienbar. Der Steuerteil besteht aus den IC's 9/10. Diese sind für die zeitliche Verzögerung von Softstart und Kopfrelais zuständig.

Aufnahmeverstärker mit Softstart und Mischstufe
Löschverstärker mit Softstart

Die identisch aufgebaute Aufnahme- und Löschschaltung besteht aus dem Softstart IC2, einem Bandpassfilter sowie Vor- und Endstufe. Ausgekoppelt wird das Signal über Trafos, die gleichzeitig die Anpassung an die Köpfe übernehmen. Aus Sicherheitsgründen werden die beiden Signale, Löschstrom und Aufnahmestrom, zusätzlich noch von Relais geschaltet deren Driver IC9 ist. Die Codeanteilmischung mit der HF (240kHz) geschieht an IC3. Mit Potentiometer R23 wird der Bias Level eingestellt.
Impuls Diagram

Speise-Spannungs-Aufbereitung

Der Print wird mit +24V/+12V/-5V gespiesen. Die zusätzlich benötigten +5V werden mit dem Stabilisator IC6 erzeugt. Die +1,3V Referenzspannung wird an einem Spannungsteiler abgegriffen. Zur Störspitzenunterdrückung sind die Speisespannungseingänge mit Ferritperlen versehen.

CODE RECORD AMPLIFIER 1.228.711

The PCB consists of:
- Code receiver and selector section
- Code edge sensitivity filter
- control section (can be operated by the master basic programmer
- Record amplifier with softstart and mixer stage, erase amplifier with softstart

Code receiver and selector section

The receiver consists of a Dual-Op-Amp MC 1458. For reliability reasons, one side of the amplifier is raised to 1.3V. For this reason, the minimum signal level after the input transformer must be > 1.3V.
The connecting plug with the input transformer is located at the associated rack back panel 1.228.612.

The selector section comprises ICs 7 and 8.
If pin 29A is high, the signal from the RECCOD path is switched through. However when it is low, CODGENO is enabled.
The code level is set by R31. Relative to 0dBm VU, a level ranging from 0dBm to −20dBm can be swept.

Edge sensitivity filter

The edge sensitivity filter, serially connected to the output, gives the code the required shape. Control section can be operated by the master basic programmer. The control section consists of the ICs 9 and 10.
They manage the time delay of softstart and head relay.

Record amplifier with softstart and mixer stage
Erase amplifier with softstart

The record and erase amplifiers, which feature an identical design, comprise the soft start circuit with IC2, a band-pass filter, as well as a preamp and a power stage.
The signal is coupled out via transformers which also perform the adaptation to the heads. For safety reasons, the erase and record currents are switched by relays driven by IC9. Mixing of the code content with the bias (240kHz) is performed by IC3.
The bias level is adjusted with potentiometer R23.
Impulse diagram

Supply voltage preparation

The print is supplied with +24V/+12V/−5V. The +5V supply is generated with stabilizer IC6. The +1.3V reference voltage is picked off from a voltage divider. To suppress pulse spikes, the supply voltage inputs are equipped with ferrite beads.

A80 LOCATOR | A80 MASTER-CONTROL | A80 MASTER

CODE READ AMPLIFIER PCB 1.228.412–81

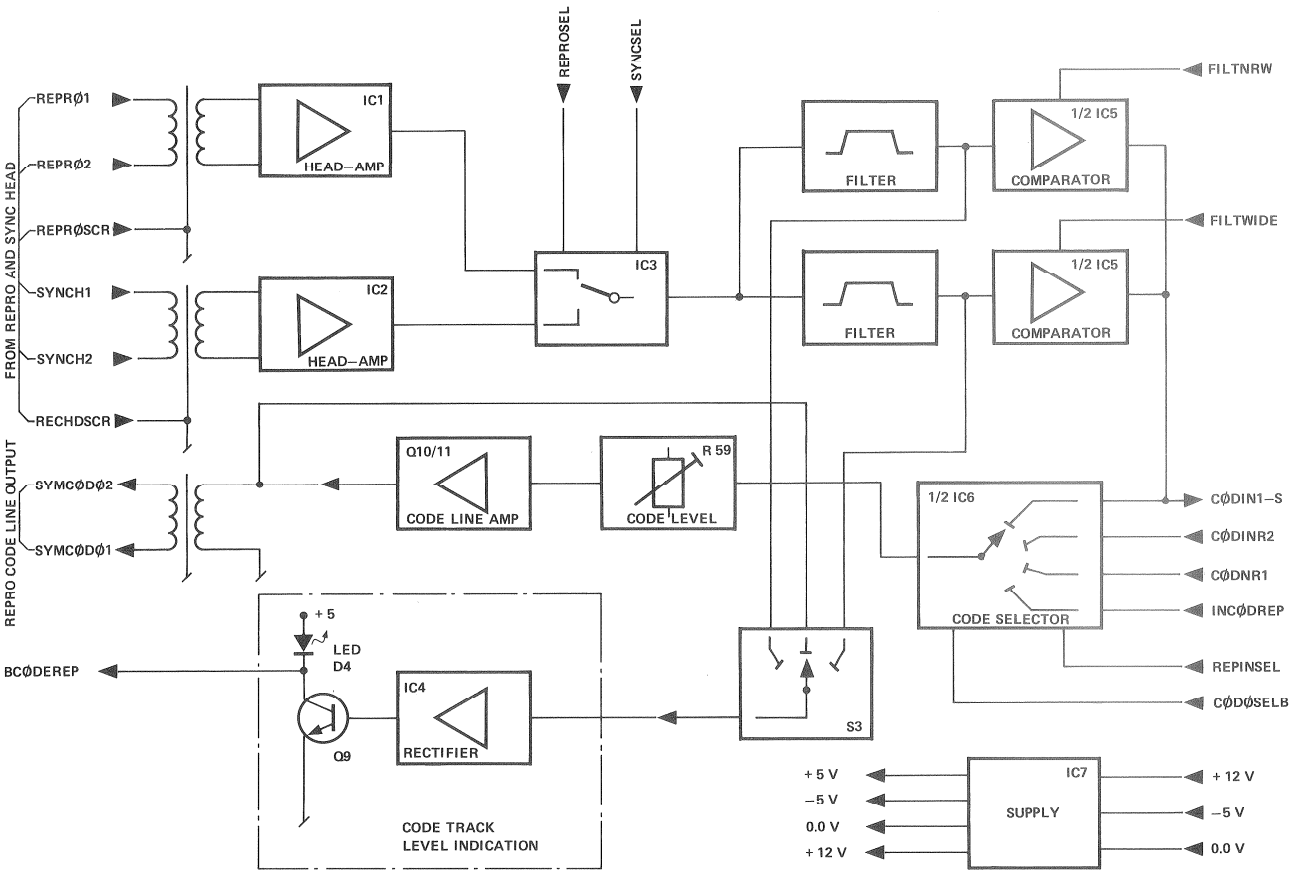

A80 LOCATOR	A80 MASTER-CONTROL	A80 MASTER

CODE READ AMPLIFIER PCB 1.228.412–81

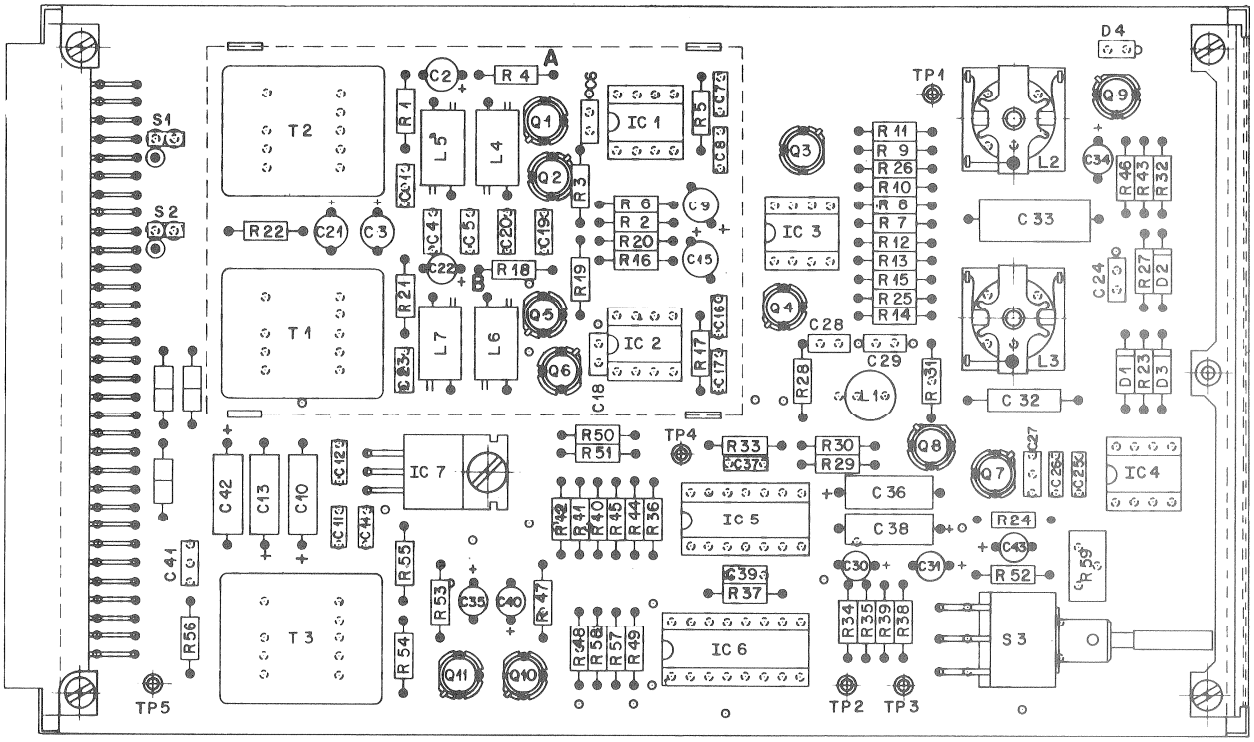

A80 LOCATOR | A80 MASTER-CONTROL | A80 MASTER

CODE READ AMPLIFIER PCB 1.228.412–81

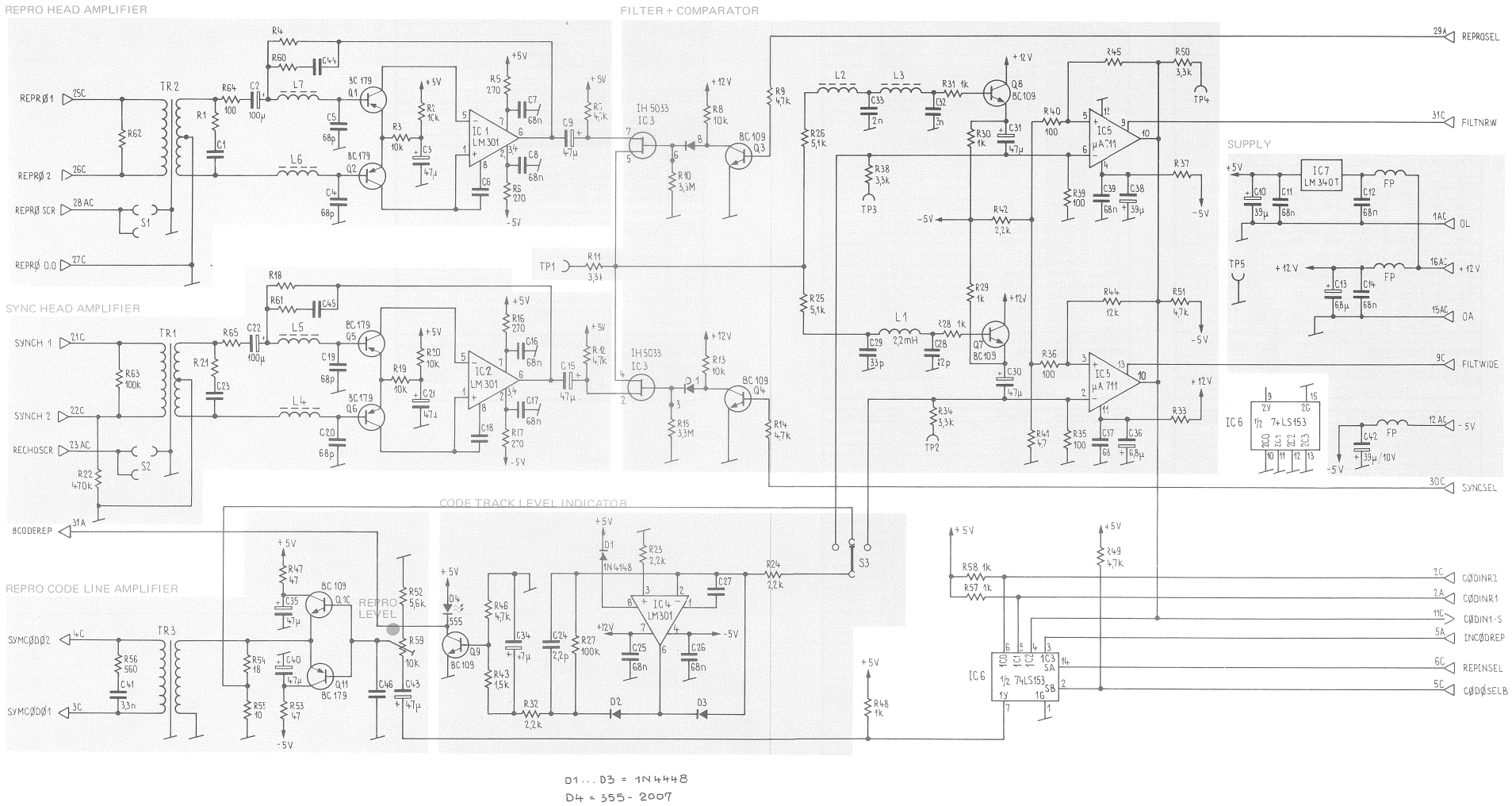

A80 LOCATOR | A80 MASTER-CONTROL | A80 MASTER

CODE READ AMPLIFIER PCB 1.228.412-81

Pos.	Bauteil No.	Bezeichnung	Stk.	Bemerkung
C 01	59.32.1122	C 1.2N, 20% 50V, KER	1	
C 02	59.30.4101	C 100U, 10% 16V TA	1	
C 03	59.30.4470	C 47U,	1	
C 04	59.99.0205	C 68N, 63V KER	1	
C 05	59.99.0205	C 68N,	1	
(1) C 06	59.34.1689	C 6,8P, ± 5% 50V	1	
C 07	59.99.0205	C 68N, 63V	1	
C 08	59.99.0205	C 68N,	1	
C 09	59.30.4470	C 47U, 16V TA	1	
C 10	59.99.0202	C 39U, 20% 10V	1	
C 11	59.99.0205	C 68N, 63V KER	1	
C 12	59.99.0205	C 68N,	1	
C 13	59.99.0201	C 6.8U, 20% 35V TA	1	
C 14	59.99.0205	C 68N, 63V KER	1	
C 15	59.30.4470	C 47U, 16V TA	1	
C 16	59.99.0205	C 68N, 63V KER	1	
C 17	59.99.0205	C 68N,	1	
(1) C 18	59.34.1150	C 15P, ± 5% 50V	1	
C 19	59.99.0205	C 68N, 63V	1	
C 20	59.99.0205	C 68N,	1	
C 21	59.30.4470	C 47U, 16V TA	1	
C 22	59.30.4101	C 100U,	1	
C 23	59.32.1122	C 1.2N, 20% 50V KER	1	
C 24	59.34.0229	C 2.2P, ± 5%	1	
C 25	59.99.0205	C 68N, 63V	1	
C 26	59.99.0205	C 68N,	1	
C 27	59.34.4151	C 150P, ± 5% 50V	1	
C 28	59.34.4820	C 82P,	1	
C 29	59.34.2330	C 33P,	1	
C 30	59.30.4470	C 47N, 16V TA	1	
C 31	59.30.4470	C 47N,	1	
C 32	59.12.7302	C 3N, 1% 63V PS	1	
C 33	59.12.7202	C 2N,	1	
C 34	59.30.4470	C 47U, 16V TA	1	
C 35	59.30.4470	C 47U,	1	

Aenderungen ①23.8.78 st ②14.12.78 ##③ ④ ⑤

STUDER REGENSDORF ZURICH — Positionsliste — Code Read Amplifier

Erstellt: 4.5.76 MS/gv | Geprüft: | Blatt: 1 Blätter: 5

Kopie für: | Ersatz für: | Ersetzt durch: | 1.228.412-81

Pos.	Bauteil No.	Bezeichnung	Stk.	Bemerkung
L 06	62.01.0115	L Breitbanddrossel	1	
L 07	62.01.0115	L Breitbanddrossel	1	
Q 01	50.03.0305	Q BC 179 B	1	
Q 02	50.03.0305	Q BC 179 B	1	
Q 03	50.03.0407	Q BC 109 C	1	
Q 04	50.03.0407	Q BC 109 C	1	
Q 05	50.03.0305	Q BC 179 B	1	
Q 06	50.03.0305	Q BC 179 B	1	
Q 07	50.03.0407	Q BC 109 C	1	
Q 08	50.03.0407	Q BC 109 C	1	
Q 09	50.03.0407	Q BC 109 C	1	
Q 10	50.03.0407	Q BC 109 C	1	
Q 11	50.03.0305	Q BC 179 B	1	
R 01	57.02.5222	R 2.2K, 10% .25W CMA	1	
R 02	57.02.5103	R 10K,	1	
R 03	57.02.5103	R 10K,	1	
(1) R 04	57.02.5225	R 2,2M,	1	
R 05	57.02.5271	R 270 ,	1	
R 06	57.02.5271	R 270 ,	1	
R 07	57.02.5472	R 4.7K,	1	
R 08	57.02.5103	R 10K,	1	
R 09	57.02.5472	R 4.7K,	1	
R 10	57.02.5335	R 3.3M,	1	
R 11	57.02.5332	R 3.3K,	1	
R 12	57.02.5472	R 4.7K,	1	
R 13	57.02.5103	R 10K,	1	
R 14	57.02.5472	R 4.7K,	1	
R 15	57.02.5335	R 3.3M,	1	
R 16	57.02.5271	R 270	1	
R 17	57.02.5271	R 270	1	
(1) R 18	57.02.5225	R 2,2M,	1	

Aenderungen ①23.8.78 st ②14.12.78 ##③ ④ ⑤

STUDER REGENSDORF ZURICH — Positionsliste — Code Read Amplifier

Erstellt: 4.5.76 MS/gv | Geprüft: | Blatt: 3 Blätter: 5

Kopie für: | Ersatz für: | Ersetzt durch: | 1.228.412-81

Pos.	Bauteil No.	Bezeichnung	Stk.	Bemerkung
R 54	57.02.1180	R 18E , 1% .25W CMA	1	
R 55	57.02.1100	R 10E ,	1	
R 56	57.02.1561	R 560 ,	1	
R 57	57.02.1102	R 1K,	1	
R 58	57.02.1102	R 1K,	1	
R 59	58.01.1103	R 10K, Trimmer	1	
(1) R 60	57.02.1334	R 330K, 1% .25W CMA	1	
(1) R 61	57.02.1334	R 330K,	1	
S 01	54.01.4020	S 1 + 2 Kontaktstift	6	
S 02	54.01.4021	S 1 + 2 Brückenstecker	2	
S 03	55.01.4154	S 3 Kippschalter	1	
TP1-5	54.01.0471	Test - Punkt	5	
TR 1	1.022.410.00	Eingangstrafo 1:6	1	
TR 2	1.022.410.00	Eingangstrafo 1:6	1	
TR 3	1.022.408.00	Ausgangstrafo 1 : 1	1	
XIC	53.03.4166	XIC DIP 8-Pol.	4	
XIC	53.03.4167	XIC DIP 14-Pol.	1	
XIC	53.03.4168	XIC DIP 16-Pol	1	
XQ	50.03.5921	XQ Unterlage	1.	

Aenderungen ①23.8.78 st ②14.12.78 ##③ ④ ⑤

STUDER REGENSDORF ZURICH — Positionsliste — Code Read Amplifier

Erstellt: 4.5.76 MS/gv | Geprüft: | Blatt: 5 Blätter: 5

Kopie für: | Ersatz für: | Ersetzt durch: | 1.228.412-81

Pos.	Bauteil No.	Bezeichnung	Stk.	Bemerkung
C 36	59.99.0201	C 6.8U, 20%, 35V, TA	1	
C 37	59.99.0205	C 68N, 63V, KER	1	
C 38	59.99.0202	C 39U, 20% 10V TA	1	
C 39	59.99.0205	C 68N, 63V KER	1	
C 40	59.30.4470	C 47U, 15V TA	1	
C 41	59.32.2332	C 3.3N, 20%, 50V KER	1	
C 42	59.99.0202	C 39U, 20% 10V TA	1	
C 43	59.30.4470	C 47U, 15V TA	1	
(1) C 44	59.32.1122	C 1,2N, 50V KER	1	
(1) C 45	59.32.1122	C 1,2N,	1	
D 01	50.04.0125	D 1 N 4448 SI	1	
D 02	50.04.0125	D	1	
D 03	50.04.0125	D	1	
D 04	50.04.2107	D 555-2007 LED, rot	1	
FP1-6	61.99.0124	FP Ferritperle D 3.5x3	6	
IC 1	50.05.0144	IC LM 301 AN 8P DIP	1	
IC 2	50.05.0144	IC LM 301 AN 8P DIP	1	
IC 3	50.05.0222	IC EH 5033 C, Dualswitch, LIN	1	
IC 4	50.05.0144	IC LM 301 AN 8P DIP	1	
IC 5	50.05.0220	IC 711 DC, Dual Comp. LIN	1	
IC 6	50.06.0153	IC SN 74 LS 153 N, TTL	1	
IC 7	50.05.0221	IC MC 7805 C, LIN	1	
L 01	62.02.1222	L 2.2M, 5% D8	1	
(2) L 02	1.022.193.00	L 19.3M, 3% 100 SCHKE	1	
(2) L 03	1.022.194.00	L 80M	1	
L 04	62.01.0115	L Breitbanddrossel	1	
L 05	62.01.0115	L Breitbanddrossel	1	

Aenderungen ①23.8.78 st ②14.12.78 ##③ ④ ⑤

STUDER REGENSDORF ZURICH — Positionsliste — Code Read Amplifier

Erstellt: 4.5.76 MS/gv | Geprüft: | Blatt: 2 Blätter: 5

Kopie für: | Ersatz für: | Ersetzt durch: | 1.228.412-81

Pos.	Bauteil No.	Bezeichnung	Stk.	Bemerkung
R 19	57.02.5103	R 10K, 10%, .25W CMA	1	
R 20	57.02.5103	R 10K,	1	
R 21	57.02.5222	R 2.2K,	1	
R 22	57.02.5474	R 470K,	1	
R 23	57.02.5222	R 2.2K,	1	
R 24	57.02.5222	R 2.2K,	1	
R 25	57.39.5111	R 5.1K, 1%, .25W MF	1	
R 26	57.39.5111	R 5.1K,	1	
R 27	57.02.5104	R 100K, 10% CMA	1	
R 28	57.02.5102	R 1K,	1	
R 29	57.02.5102	R 1K,	1	
R 30	57.02.5102	R 1K,	1	
R 31	57.02.5102	R 1K,	1	
R 32	57.02.5222	R 2.2K,	1	
R 33	57.02.5680	R 68E ,	1	
R 34	57.02.5332	R 3.3K,	1	
R 35	57.02.4101	R 100E, 5%.	1	
R 36	57.02.4101	R 100E,	1	
R 37	57.02.5121	R 120 , 10%	1	
R 38	57.02.5332	R 3.3K,	1	
R 39	57.02.4101	R 100E, 5%	1	
R 40	57.02.4101	R 100E	1	
R 41	57.02.4479	R 4.7E,	1	
R 42	57.02.4222	R 2.2K,	1	
R 43	57.02.5152	R 1.5K, 10%	1	
R 44	57.02.4123	R 12K, 5%	1	
R 45	57.02.4183	R 18K,	1	
R 46	57.02.5472	R 4.7K, 10%	1	
R 47	57.02.5470	R 47E,	1	
R 48	57.02.5102	R 1K,	1	
R 49	57.02.5472	R 4.7K,	1	
R 50	57.02.5332	R 3.3K,	1	
R 51	57.02.5472	R 4.7K,	1	
R 52	57.02.5562	R 5.6K,	1	
R 53	57.02.5470	R 47E ,	1	

Aenderungen ①23.8.78 st ②14.12.78 ##③ ④ ⑤

STUDER REGENSDORF ZURICH — Positionsliste — Code Read Amplifier

Erstellt: 4.5.76 MS/gv | Geprüft: | Blatt: 4 Blätter: 5

Kopie für: | Ersatz für: | Ersetzt durch: | 1.228.412-81

A80
MASTER

TLS INTERFACE PCB MASTER 1.228.714–00

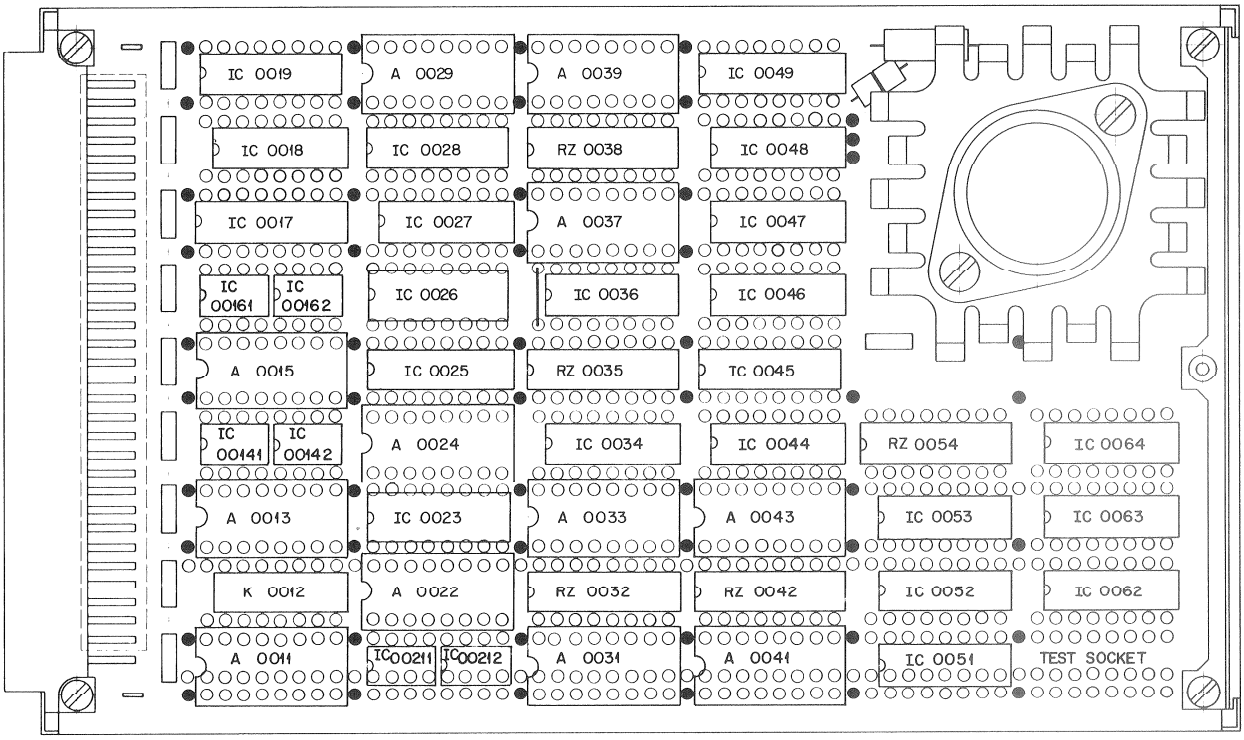


```
*   S T U D E R   *   POSITION LIST OF PARTS 1.228.714.00   *   76/11/09   *                PAGE  1 OF  1   *
*****************************************************************************************************************
*   A80 MODIFIED AS TLS 2000 MASTE   *   TLS INTERFACE MASTER                  *                 76/11/03-0   *

POSITION      PART NO. DESCRIPTION OF PART                    POSITION      PART NO. DESCRIPTION OF PART
RD. POS.M                                                     RD. POS.M
--------- ------------ ------------------------------       --------- ------------ ------------------------------
A   0011  1.228.721.00 AMTD 14 - 11                         IC  0062    50.06.0074 IC  SN 74 LS  74 N        TTL
A   0013  1.228.722.00 AMTD 14 - 13                         IC  0063    50.06.0074 IC  SN 74 LS  74 N        TTL
A   0015  1.228.723.00 AMTD 14 - 15                         IC  0064    50.06.0074 IC  SN 74 LS  74 N        TTL
A   0022  1.228.724.00 AMTD 14 - 22                         K   0001    56.02.1005 K    24V=,  10 W, 1*R  , DIL14
A   0024  1.228.725.00 AMTD 14 - 24                         P   0001    54.01.0354 P   LEISTE  3 * 32 POL  WRAP
A   0029  1.228.726.00 AMTD 14 - 29                         RZ  0017    57.80.0101 RZ  14*330/220,2%,        DIL16
A   0031  1.228.727.00 AMTD 14 - 31                         RZ  0032    57.88.3222 RZ  8*2K2 ,   2%,        DIL16
A   0033  1.228.728.00 AMTD 14 - 33                         RZ  0035    57.85.3472 RZ  15*4.7K,  2%,        DIL
A   0037  1.228.729.00 AMTD 14 - 37                         RZ  0038    57.88.3222 RZ  8*2K2 ,   2%,        DIL16
A   0039  1.228.730.00 AMTD 14 - 39                         RZ  0042    57.88.3222 RZ  8*2K2 ,   2%,        DIL16
A   0041  1.228.731.00 AMTD 14 - 41                         RZ  0054    57.85.3332 RZ  15*3.3K,  2%,        DIL16
A   0043  1.228.732.00 AMTD 14 - 43
IC  00141   50.05.0203 IC  SN 75463P,LM 3613 N,DRIV
IC  00142   50.05.0203 IC  SN 75463P,LM 3613 N,DRIV
IC  00161   50.05.0203 IC  SN 75463P,LM 3613 N,DRIV
IC  00162   50.05.0203 IC  SN 75463P,LM 3613 N,DRIV
IC  0018    50.06.0008 IC  SN 74 LS  08 N        TTL
IC  0019    50.06.0157 IC  SN 74 LS 157 N        TTL
IC  00211   50.05.0227 IC  SN75462P ,LM 75462 ,DRIV
IC  00212   50.05.0227 IC  SN75462P ,LM 75462 ,DRIV
IC  0023    50.05.0208 IC  9602 PC  ,           ,TTL
IC  0025    50.05.0217 IC  N 8T37B,             TTL
IC  0026  1.228.714.51 PROM R0043
IC  0027    50.06.0004 IC  SN 74 LS  04 N        TTL
IC  0028    50.05.0217 IC  N 8T37B,             TTL
IC  0034    50.06.0014 IC  SN 74 LS  14 N        TTL
IC  0036    50.06.0014 IC  SN 74 LS  14 N        TTL
IC  0044    50.06.0000 IC  SN 74 LS  00 N        TTL
IC  0045    50.06.0138 IC  SN74LS138N           ,TTL
IC  0046    50.06.0074 IC  SN 74 LS  74 N        TTL
IC  0047    50.06.0032 IC  SN 74 LS  32 N        TTL
IC  0048    50.06.0074 IC  SN 74 LS  74 N        TTL
IC  0049    50.05.0131 IC  SN 74111N,FLJ 351  ,TTL
IC  0051    50.06.0032 IC  SN 74 LS  32 N        TTL
IC  0052    50.06.0032 IC  SN 74 LS  32 N        TTL
IC  0053    50.06.0008 IC  SN 74 LS  08 N        TTL
```

A80
MASTER

TLS INTERFACE PCB MASTER 1.228.714–00

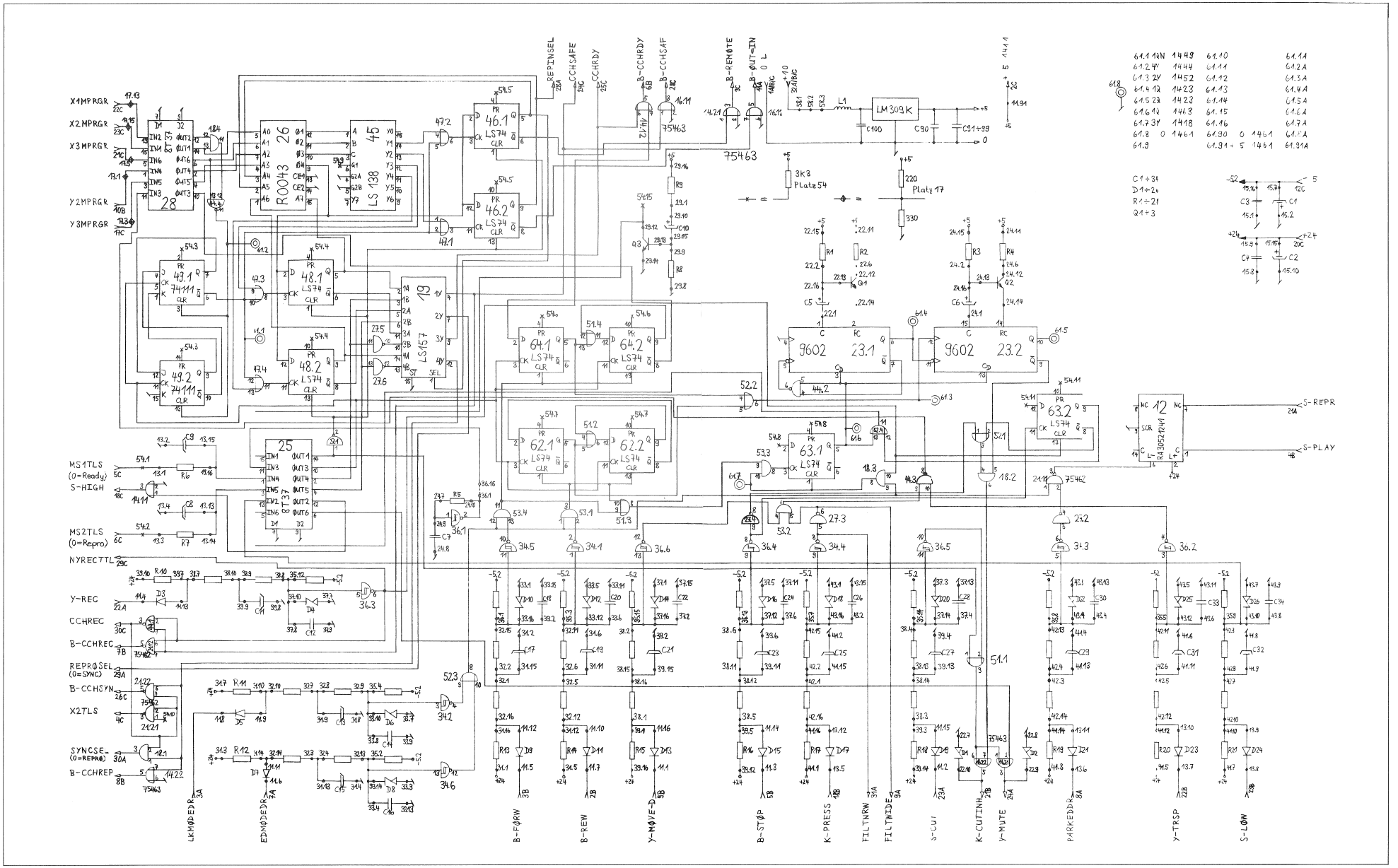

A80
MASTER

TLS INTERFACE PCB MASTER 1.228.714–00

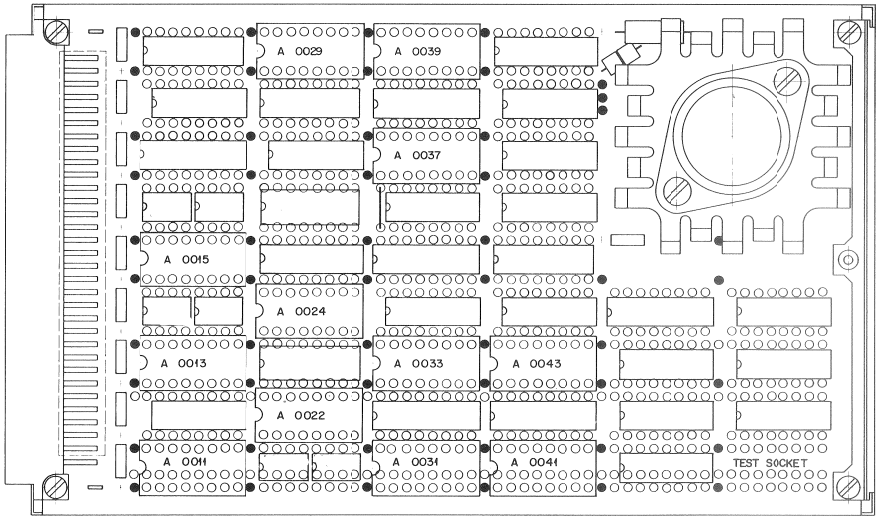


```
*  S T U D E R  *  POSITION LIST OF PARTS 1.228.714.00  *  76/11/09  *                    PAGE 1 OF 1  *
*****************************************************************************************************
*  A80 MODIFIED AS TLS 2000 MASTE  *  TLS INTERFACE MASTER                *          76/11/03-0  *

POSITION      PART NO. DESCRIPTION OF PART          POSITION      PART NO. DESCRIPTION OF PART
RD. POS.M                                           RD. POS.M
---------  ----------- ------------------------     ---------  ----------- ------------------------
A   0011  1.223.721.00 AMTD 14 - 11
A   0013  1.223.722.00 AMTD 14 - 13
A   0015  1.223.723.00 AMTD 14 - 15
A   0022  1.228.724.00 AMTD 14 - 22
A   0024  1.223.725.00 AMTD 14 - 24
A   0029  1.223.726.00 AMTD 14 - 29
A   0031  1.223.727.00 AMTD 14 - 31
A   0033  1.223.728.00 AMTD 14 - 33
A   0037  1.223.729.00 AMTD 14 - 37
A   0039  1.223.730.00 AMTD 14 - 39
A   0041  1.228.731.00 AMTD 14 - 41
A   0043  1.223.732.00 AMTD 14 - 43
```

```
*  S T U D E R  *  POSITION LIST OF  RTS 1.228.721.00
*****************************************  ******************
*  A80 MODIFIED AS TLS 2000 MASTE  *  AMTD14-11

POSITION      PART NO. DESCRIPTION OF PART
RD. POS.M
---------  ----------- ------------------------------
D   0003  50.04.0125 D   1 N 4448              , SI
D   0005  50.04.0125 D   1 N 4448              , SI
D   0007  50.04.0125 D   1 N 4448              , SI
D   0009  50.04.0125 D   1 N 4448              , SI
D   0011  50.04.0125 D   1 N 4448              , SI
D   0013  50.04.0125 D   1 N 4448              , SI
D   0015  50.04.0125 D   1 N 4448              , SI
D   0019  50.04.0125 D   1 N 4448              , SI
MP  0001  53.03.0170 MP ADAPTOR PLUG 2*8*0.3  DIL
```

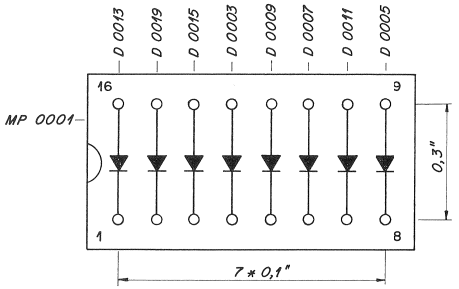


```
*  S T U D E R  *  POSITION LIST OF  RTS 1.228.722.00
*****************************************  ******************
*  A80 MODIFIED AS TLS 2000 MASTE  *  AMTD14-13

POSITION      PART NO. DESCRIPTION OF PART
RD. POS.M
---------  ----------- ------------------------------
C   0008  59.36.3339 C   3.3  F , 20%,  16V-, TA
C   0009  59.36.3339 C   3.3  F , 20%,  16V-, TA
D   0017  50.04.0125 D   1N 4448              , SI
D   0021  50.04.0125 D   1N 4448              , SI
D   0023  50.04.0125 D   1N 4448              , SI
D   0024  50.04.0125 D   1N 4448              , SI
MP  0001  53.03.0170 MP ADAPTOR PLUG 2*8*0.3  DIL
R   0006  57.02.3101 R   100    , 10%, .25W , CMA
R   0007  57.02.3101 R   100    , 10%, .25W , CMA
```

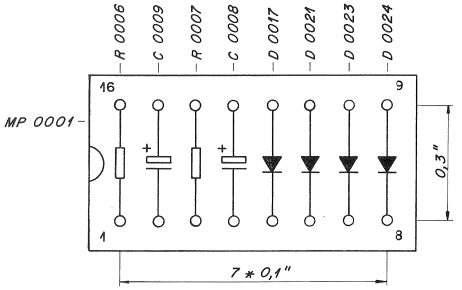


```
*  S T U D E R  *  POSITION LIST OF  RTS 1.228.723.00
*****************************************  ******************
*  A80 MODIFIED AS TLS 2000 MASTE  *  AMTD14-15

POSITION      PART NO. DESCRIPTION OF PART
RD. POS.M
---------  ----------- ------------------------------
C   0001  59.99.0202 C    39  J , 20%,  10V , TA
C   0002  59.99.0201 C   6.8  J , 20%,  35V , TA
C   0003  59.99.0205 C    68  N ,-20%,  63V , KER
C   0004  59.99.0205 C    68  N ,-20%,  63V , KER
MP  0001  53.03.0170 MP ADAPTOR PLUG 2*8*0.3  DIL
```

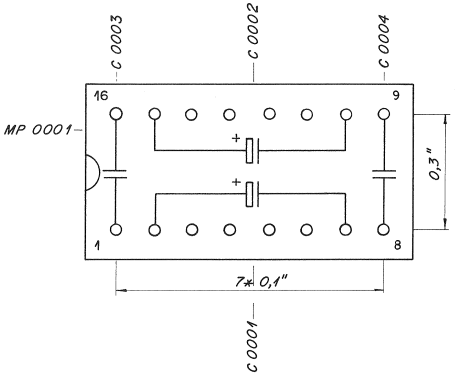

A80
MASTER

TLS INTERFACE PCB MASTER 1.228.714–00

* S T U D E R * POSITION LIST OF RTS 1.228.724.00
* A80 MODIFIED AS TLS 2000 MASTE * AMTD14-22

IM STAMM NICHT VORHANDEN = ' *'

POSITION RD. POS.M	PART NO.	DESCRIPTION OF PART
C 0005	59.36.3100	10µF 16V
D 0001	50.04.1506 D	30 V , 5%, 1.3W , Z
D 0002	50.04.1506 D	30 V , 5%, 1.3W , Z
MP 0001	53.03.0170 MP	ADAPTOR PLUG 2*8*0.3 DIL
Q 0001	50.03.0407 Q	BC 109C, NPN
R 0001	57.02.5105 R	1.0 M , 10%, .25W , CMA
R 0002	57.02.5103 R	10 K , 10%, .25W , CMA

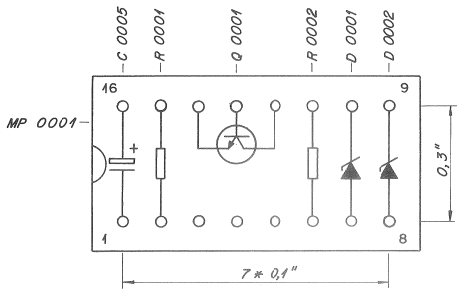

* S T U D E R * POSITION LIST OF ARTS 1.228.727.00
* A80 MODIFIED AS TLS 2000 MASTE * AMTD14-31

POSITION RD. POS.M	PART NO.	DESCRIPTION OF PART
C 0013	59.36.4689 C	6.8 U , 20%, 25V , TA
C 0015	59.36.4689 C	6.8 U , 20%, 25V , TA
C 0017	59.36.4689 C	6.8 U , 20%, 25V , TA
C 0019	59.36.4689 C	6.8 U , 20%, 25V , TA
MP 0001	53.03.0170 MP	ADAPTOR PLUG 2*8*0.3 DIL
R 0011	57.02.5332 R	3.3 K , 10%, .25W , CMA
R 0012	57.02.5332 R	3.3 K , 10%, .25W , CMA
R 0013	57.02.5332 R	3.3 K , 10%, .25W , CMA
R 0014	57.02.5332 R	3.3 K , 10%, .25W , CMA

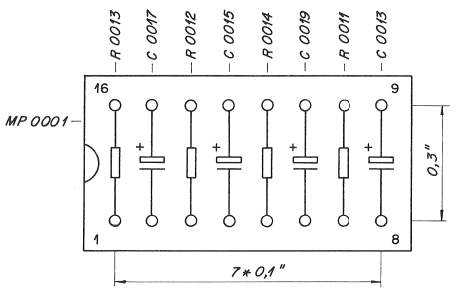

* S T U D E R * POSITION LIST OF ARTS 1.228.725.00
* A80 MODIFIED AS TLS 2000 MASTE * AMTD14-24

POSITION RD. POS.M	PART NO.	DESCRIPTION OF PART
C 0006	59.36.3339	3.3µF 16V
C 0007	59.32.4162 C	1 N , 20%, 63V , KER
MP 0001	53.03.0170 MP	ADAPTOR PLUG 2*8*0.3 DIL
Q 0002	50.03.0407 Q	BC 109C, NPN
R 0003	57.02.5105 R	1.0 M , 10%, .25W , CMA
R 0004	57.02.5103 R	10 K , 10%, .25W , CMA
R 0005	57.02.5102 R	1.0 K , 10%, .25W , CMA

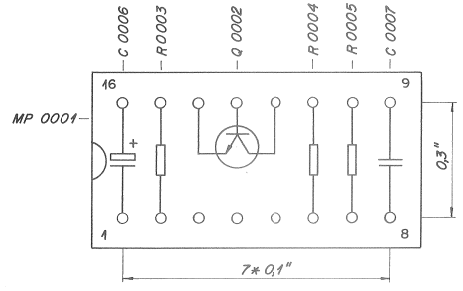

* S T U D E R * POSITION LIST OF ARTS 1.228.728.00
* A80 MODIFIED AS TLS 2000 MASTE * AMTD14-33

POSITION RD. POS.M	PART NO.	DESCRIPTION OF PART
C 0014	59.99.0205 C	68 N ,-20%, 63V , KER
C 0016	59.99.0205 C	68 N ,-20%, 63V , KER
C 0018	59.99.0205 C	68 N ,-20%, 63V , KER
C 0020	59.99.0205 C	68 N ,-20%, 63V , KER
D 0006	50.04.1107 D	3.3 V, 5%, .40 W,Z,PLANAR
D 0008	50.04.1107 D	3.3 V, 5%, .40 W,Z,PLANAR
D 0010	50.04.1107 D	3.3 V, 5%, .40 W,Z,PLANAR
D 0012	50.04.1107 D	3.3 V, 5%, .40 W,Z,PLANAR
MP 0001	53.03.0170 MP	ADAPTOR PLUG 2*8*0.3 DIL

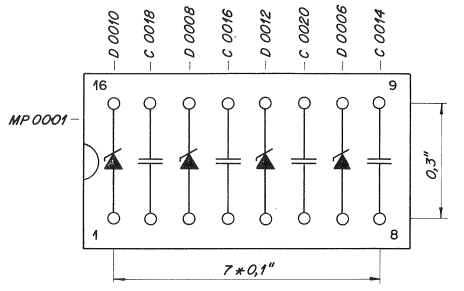

* S T U D E R * POSITION LIST OF RTS 1.228.726.00
* A80 MODIFIED AS TLS 2000 MASTE * AMTD14-29

POSITION RD. POS.M	PART NO.	DESCRIPTION OF PART
C 0010	59.99.0202 C	39 U , 20%, 10V , TA
MP 0001	53.03.0170 MP	ADAPTOR PLUG 2*8*0.3 DIL
Q 0003	50.03.0409 Q	BC 108B, NPN
R 0008	57.02.5103 R	10 K , 10%, .25W , CMA
R 0009	57.02.5103 R	10 K , 10%, .25W , CMA

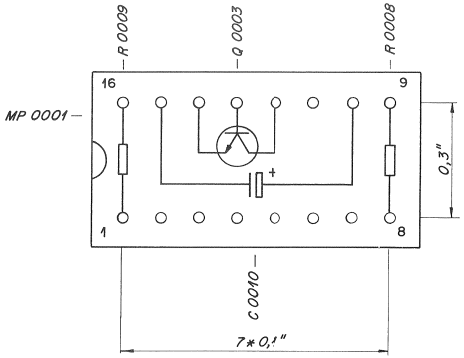

* S T U D E R * POSITION LIST OF RTS 1.228.729.00
* A80 MODIFIED AS TLS 2000 MASTE * AMTD14-37

POSITION RD. POS.M	PART NO.	DESCRIPTION OF PART
C 0012	59.99.0205 C	68 N ,-20%, 63V , KER
C 0022	59.99.0205 C	68 N ,-20%, 63V , KER
C 0024	59.99.0205 C	68 N ,-20%, 63V , KER
C 0028	59.99.0205 C	68 N ,-20%, 63V , KER
D 0004	50.04.1107 D	3.3 V, 5%, .40 W,Z,PLANAR
D 0014	50.04.1107 D	3.3 V, 5%, .40 W,Z,PLANAR
D 0016	50.04.1107 D	3.3 V, 5%, .40 W,Z,PLANAR
D 0026	50.04.1107 D	3.3 V, 5%, .40 W,Z,PLANAR
MP 0001	53.03.0170 MP	ADAPTOR PLUG 2*8*0.3 DIL

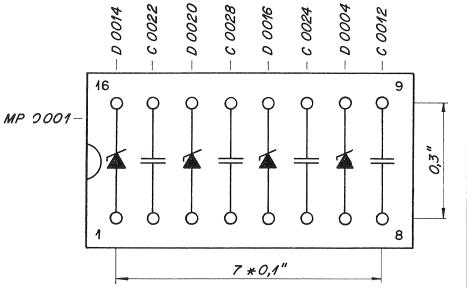

A80
MASTER

TLS INTERFACE PCB MASTER 1.228.714–00

```
*   S T U D E R   *   POSITION LIST      ARTS 1.228.730.00
*************************************  **********************
*   A80 MODIFIED AS TLS 2000 MASTE   *   AMTD14-39

POSITION       PART NO. DESCRIPTION OF PART
RD. POS.M
---------- ------------ ------------------------------
C    0011    59.36.4689 C    6.8  U , 20%,  25V , TA
C    0021    59.36.4689 C    6.8  U , 20%,  25V , TA
C    0023    59.36.5100 C     10  U , 20%,  35V- , TA
C    0027    59.36.4689 C    6.8  U , 20%,  25V , TA
MP   0001    53.03.0170 MP ADAPTOR PLUG 2*8*0.3  DIL
R    0010    57.02.5332 R    3.3  K , 10%, .25W , CMA
R    0015    57.02.5332 R    3.3  K , 10%, .25W , CMA
R    0016    57.02.5332 R    3.3  K , 10%, .25W , CMA
R    0018    57.02.5332 R    3.3  K , 10%, .25W , CMA
```

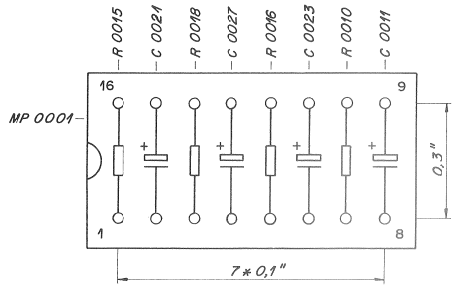


```
*   S T U D E R   *   POSITION LIST OF   RTS 1.228.731.00
*************************************  ******************
*   A80 MODIFIED AS TLS 2000 MASTE   *   AMTD14-41

POSITION       PART NO. DESCRIPTION OF PART
RD. POS.M
---------- ------------ ------------------------------
C    0025    59.36.4689 C    6.8  U , 20%,  25V , TA
C    0029    59.36.4689 C    6.8  U , 20%,  25V , TA
C    0031    59.36.4689 C    6.8  U , 20%,  25V , TA
C    0032    59.36.4689 C    6.8  U , 20%,  25V , TA
MP   0001    53.03.0170 MP ADAPTOR PLUG 2*8*0.3  DIL
R    0017    57.02.5332 R    3.3  K , 10%, .25W , CMA
R    0019    57.02.5332 R    3.3  K , 10%, .25W , CMA
R    0020    57.02.5332 R    3.3  K , 10%, .25W , CMA
R    0021    57.02.5332 R    3.3  K , 10%, .25W , CMA
```

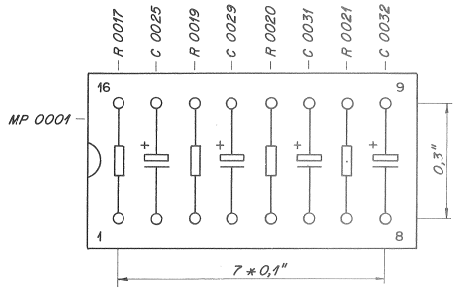


```
*   S T U D E R   *   POSITION LIST OF   RTS 1.228.732.00
*************************************  ******************
*   A80 MODIFIED AS TLS 2000 MASTE   *   AMTD14-43

POSITION       PART NO. DESCRIPTION OF PART
RD. POS.M
---------- ------------ ------------------------------
C    0026    59.99.0205 C     68  N ,-20%,  63V , KER
C    0030    59.99.0205 C     68  N ,-20%,  63V , KER
C    0033    59.99.0205 C     68  N ,-20%,  63V , KER
C    0034    59.99.0205 C     68  N ,-20%,  63V , KER
D    0018    50.04.1107 D    3.3 V,  5%, .40 W,Z,PLANAR
D    0022    50.04.1107 D    3.3 V,  5%, .40 W,Z,PLANAR
D    0025    50.04.1107 D    3.3 V,  5%, .40 W,Z,PLANAR
D    0026    50.04.1107 D    3.3 V,  5%, .40 W,Z,PLANAR
MP   0001    53.03.0170 MP ADAPTOR PLUG 2*8*0.3  DIL
```

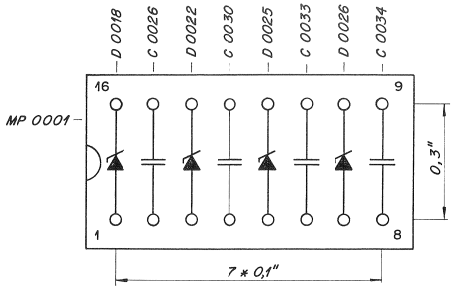

A80
MASTER

TLS MASTER - SLAVE INTERCONNECTOR CABLE 1.228.744

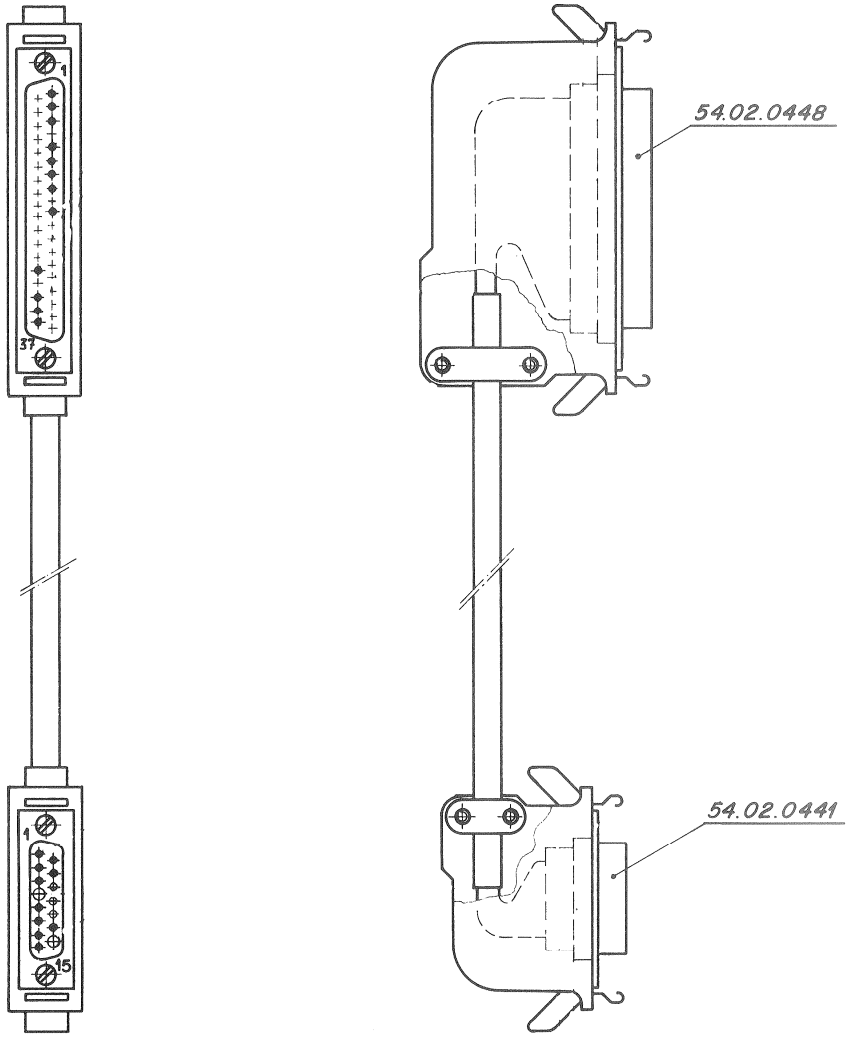

Sig. Name	Color	AMP 37 pol. male	AMP 15 pol. female
0L	blk	01	01
PARKEDDR	brn	10	10
LKMODEDR	red	02	02
EDMODEDR	org	03	03
0L	yel	35	09
Y-REC-M	grn	05	05
+24-M	vio	36	14
RES	blu	06	06
RES	gry	07	07
RES	wht	08	08
(Key)		04	04
(Key)		34	15

A80
MASTER

ADAPTER REMOTE CONTROL CABLE 1.228.745

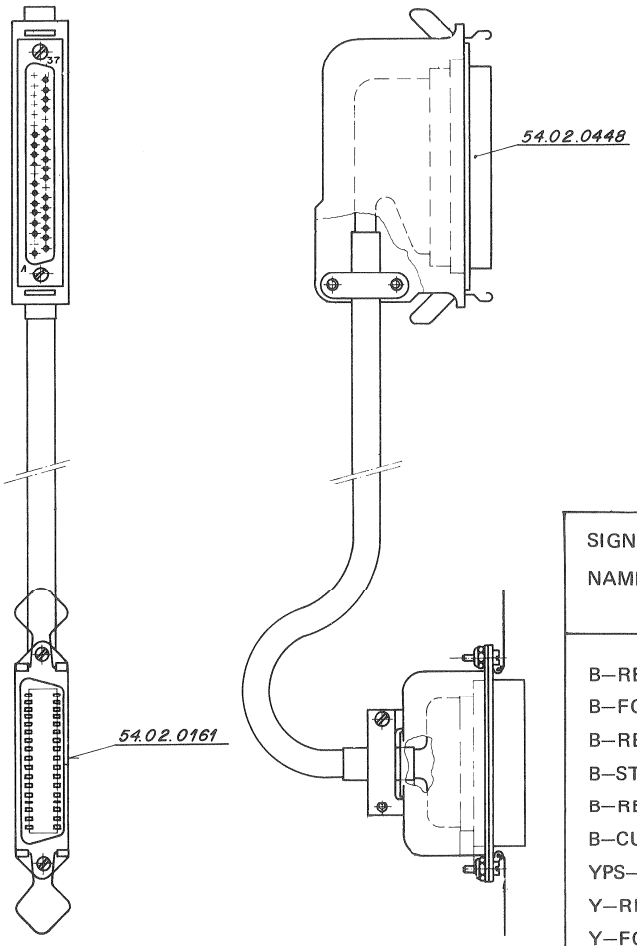

SIGNAL NAME	COLOR	CONNECTOR 54.02.0161 36–POL (FEMALE)	CONNECTOR 54.02.0448 37–POL (MALE)
B–REW	wht ★	2	1
B–FORW	blu ★	3	3
B–REPR	wht ★	4	4
B–STOP	org ★	5	5
B–REC	wht ★	6	6
B–CUT	grn ★	7	7
YPS–MOVE	wht ★	9	8
Y–REVRS	brn ★	16	10
Y–FORW	wht ★	17	11
+ 24V TDCT	gry ★	18	12
LOC–IN	red ★	19	13
S–REW	blu ★	20	20
S–FORW	red ★	21	21
S–PLAY	org ★	22	22
S–STOP	red ★	23	23
S–REC	grn ★	24	24
S–CUT	red ★	25	25
0.0–TC	brn ★	30	27
+0–TYPE	red ★	31	28
K–RESET	gry ★	33	29
Y–CLK	blk ★	34	30
Y–ICLK	blu ★	35	31
0.0–CT	blk ★	36	32
S–HIGH	org ★	27	35
B–INDIC	blk/brn	1	17
+ 24.0V	blk ★	12	18
– 5.8V	grn ★	15	19

★TWISTED

A80
MASTER

MASTER-AUX CONNECTOR 1.228.751

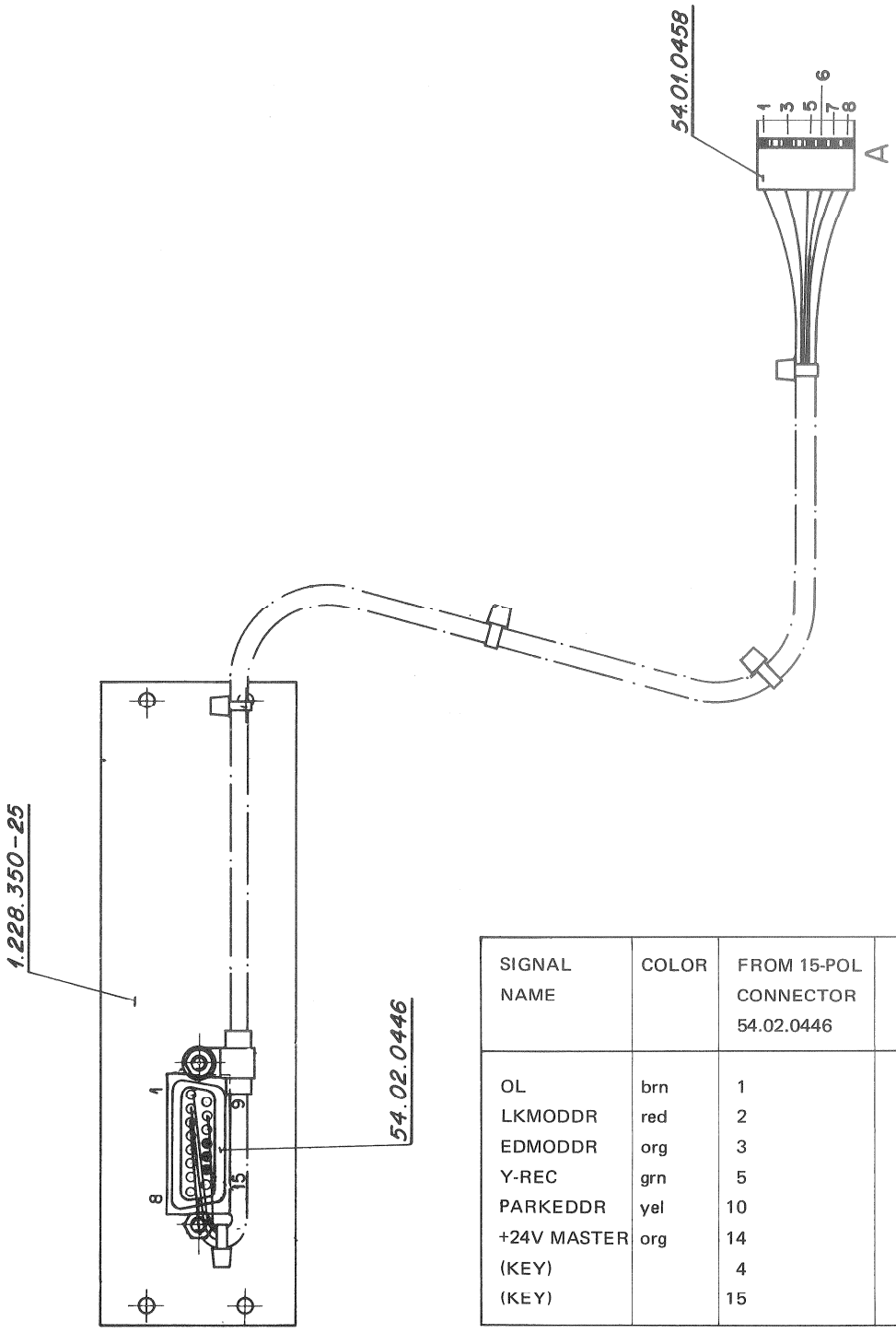

SIGNAL NAME	COLOR	FROM 15-POL CONNECTOR 54.02.0446	TO 8-POL CONNECTOR 54.01.04
OL	brn	1	1
LKMODDR	red	2	2
EDMODDR	org	3	3
Y-REC	grn	5	6
PARKEDDR	yel	10	8
+24V MASTER	org	14	5
(KEY)		4	
(KEY)		15	

A80
MASTER

MASTER REMOTE MODE CONTROL 1.228.752

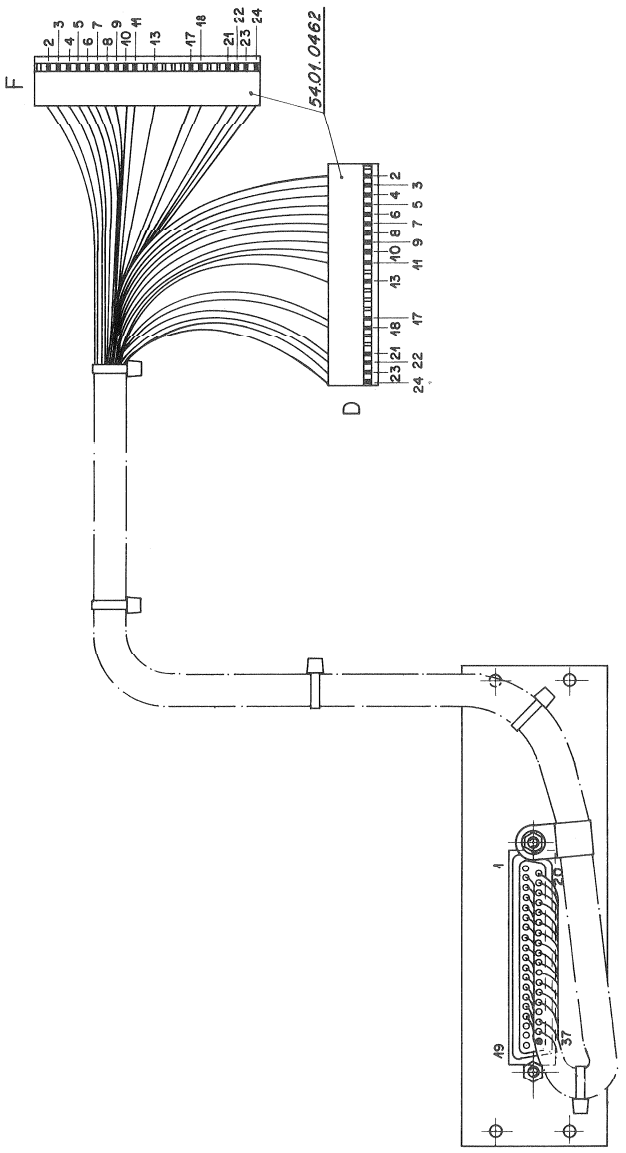

SIGNAL NAME	COLOR	FROM 37-POL CONNECTOR 54.02.0448	TO 24-POL CONNECTOR 54.01.0462	
		1		
B-REW	brn	2	2	
B-FORW	red	3	3	
B-REPR	org	4	4	
B-STOP	yel	5	5	
B-REC	vio	6	6	
B-CUT	gry	7	7	
YPS-MOVE	brn	8	8	
Y-MOVE-D	red	9	9	
Y-REVRS	org	10	10	F
Y-FORW	yel	11	11	
+24 VTDCT	wht	12	13	
LOC - IN'	yel	13	17	
K-PRESS	vio	14	18	
K-CUTINH	gry	15	21	
Y-TRPS	brn	16	22	
B-INDIC		17	23	
- 5.8		19	24	
+ 24.0		18	24	
S-REW	vio	20	2	
S-FORW	gry	21	3	
S-REPR	brn	22	4	
S-STOP	red	23	5	
S-REC	org	24	6	
S-CUT	yel	25	7	
Y-MUTE	vio	26	8	
0.0-TC	blk	27	9	
+0 - TYPE	gry	28	10	D
K-RESET	brn	29	11	
Y-CLK	red	30	13	
Y-ICLK	org	31	17	
0.0 - CT	blk	32	18	
CMD-ENB2	brn	33	21	
		34		
S-LOW	red	35	22	
0.0 EMC1	blk	36	23	
		37		

A80
MASTER

MASTER TO LOCATOR CONNECTOR 1.228.753

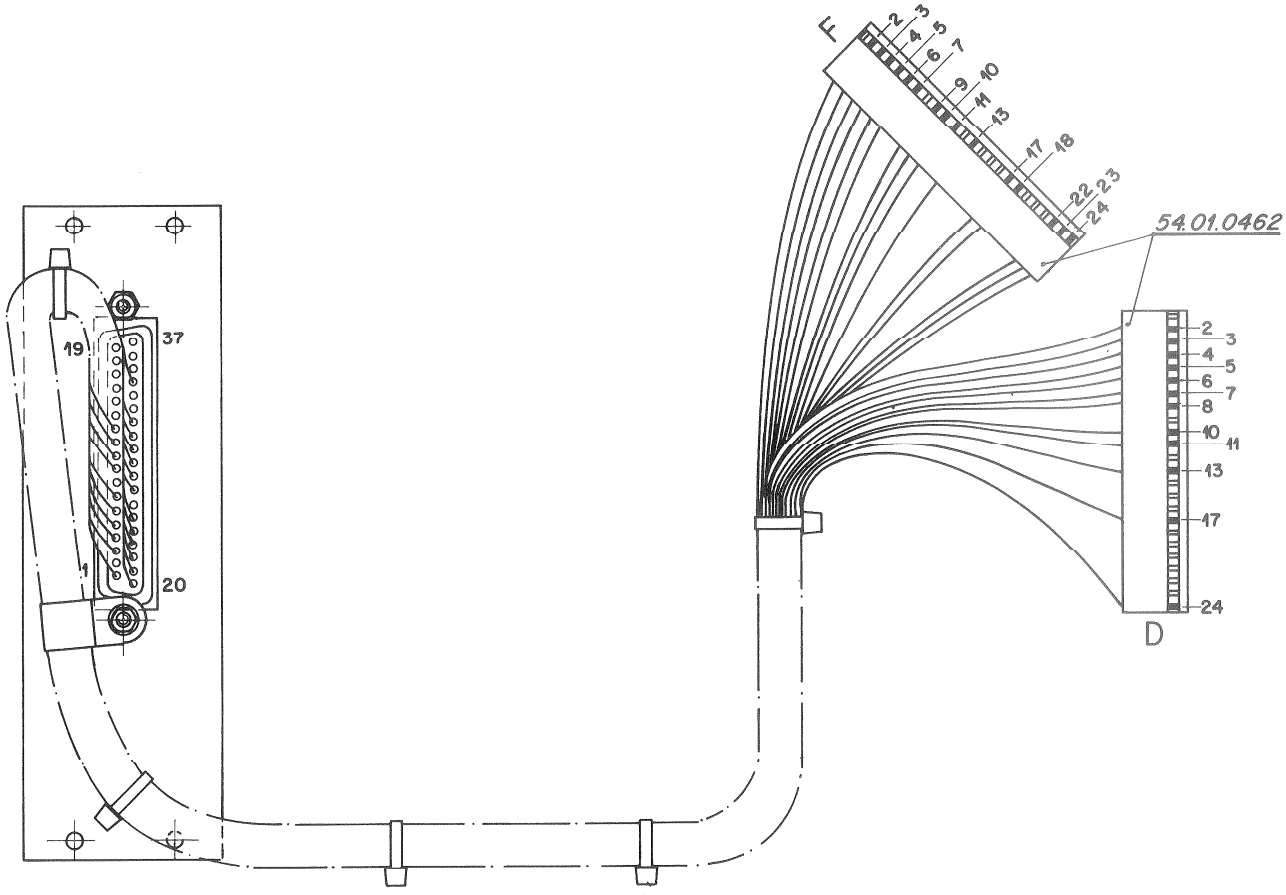

SIGNAL	COLOR	FROM 37-POL CONNECTOR 54.02.0443	TO 24-POL CONNECTOR 54.01.0462	
B-REW	brn	1	2	
(KEY)	–	2	–	
B-FORW	red	3	3	
B-REPR	org	4	4	
B-STOP	yel	5	5	
B-REC	vio	6	6	
B-CUT	gry	7	7	D
YPS-MOVE	brn	8	8	
Y-REVRS	red	10	10	
Y-FORW	org	11	11	
+24V TDCT	wht	12	13	
LOC-IN'	yel	13	17	
+24,0	blk	18	24	
S-REW	vio	20	2	
S-FORW	gry	21	3	
S-PLAY	brn	22	4	
S-STOP	red	23	5	
S-REC	org	24	6	
S-CUT	yel	25	7	
0,0-TC	blk	27	9	
+/- TYPE	vio	28	10	F
K-RESET	gry	29	11	
Y-CLK	brn	30	13	
Y-ICLK	red	31	17	
0,0-CT	blk	32	18	
(KEY)	–	33	–	
S-HIGH	org	35	22	
B-INDIC	brn	17	23	
- 5,0V	grn	19	24	

```
 ******  *******  *     *  ******   *******  ******                          *         *  ***  ******   ***  *     *   *****
*           *     *     *  *     *  *        *     *                         *         *   *  *     *   *   **    *  *     *
*           *     *     *  *     *  *        *     *                         *         *   *  *     *   *   * *   *  *
 *****      *     *     *  *     *  *****    ******          *******         *    *    *   *  ******    *   *  *  *  *  ***
      *     *     *     *  *     *  *        *   *                          *  *   *   *   *  *   *     *   *   * *  *     *
*     *     *     *     *  *     *  *        *    *                          * * * *    *   *  *    *    *   *    **  *     *
 *****      *      *****   ******   *******  *     *                          *   *     ***  *     *  ***  *     *   *****
```

PAGE 1 OF 16

TITLE: A80 MASTER: PROCESSOR BACK PANEL — 1.228.799.00 — INDEX: 4 — DATE OF ORIGIN: 79/12/14 — DATE OF PROC.: 82/01/22

TOTAL GROUPS: 1
TOTAL ELEMENTS: 6
TOTAL PINS: 768
TOTAL UNUSED PINS: 364
MULTIPLE PINS: 0

GROUP NODE = *
INTER GROUP NODE = #
DIRECT WIRE TO # = <
WIRING NOT COMPUTED = @

GR: 99 1.228.799.00 W0018
PROCESSOR BACK PANEL MASTER

EL: 11 J 111 JACK 3*32 54.01.0355

TYPE	PT	LV	SIG.NAME	COLOR	F	X	Y
W	01A	3	0	L			
W	01B	3	0	L			
W	01C	3	0	L			
W	02A	3	RECCOD1				
W	02B	3					
W	02C	3					
W	03A	3	RECCODTM				
W	03B	3					
W	03C	3					
W	04A	3	RECCOD2				
W	04B	3					
W	04C	3					
W	05A	3	Y-REC				
W	05B	3	S-LCWACH				
W	05C	3	Y-MUTEMD				
W	06A	3	YAC-BIAS				
W	06B	3	O-ERASE				
W	06C	3	O-ERASE				
W	07A	3	O-BIAS				
W	07B	3					
W	07C	3	YAC-ERAS				
W	08A	3	AC1				
W	08B	3					
W	08C	3	AC2				
W	09A	3	O-AC1				
W	09B	3					
W	09C	3	O-AC2				
W	10A	3	AC1				
W	10B	3					
W	10C	3	AC2				
W	11A	3	O-AC1				
W	11B	3					
W	11C	3	O-AC2				
W	12A	3	- 5				
W	12B	3	- 5				
W	12C	3	- 5				
W	13A	3	ERASEHD1				
W	13B	3	ERAHDSCR				
W	13C	3	ERASEHD2				
W	14A	3	-12				
W	14B	3	-12				
W	14C	3	-12				
W	15A	3	0	A			
W	15B	3	0	A			
W	15C	3	0	A			
W	16A	3	+12				
W	16B	3	+12				
W	16C	3	+12				
W	17A	3					
W	17B	3					
W	17C	3					

./.

GR: 99 (CONTINUATION)
PROCESSOR BACK PANEL MASTER

EL: 11 (CONTINUATION)

TYPE	PT	LV	SIG.NAME	COLOR	F	X	Y
W	18A	3	RECHD1				
W	18B	3	RECHDSCR				
W	18C	3	RECHD2				
W	19A	3	0	K			
W	19B	3	0	K			
W	19C	3	0	K			
W	20A	3	+24				
W	20B	3	+24				
W	20C	3	+24				
W	21A	3					
W	21B	3					
W	21C	3	SYNCH1				
W	22A	3					
W	22B	3					
W	22C	3	SYNCH2				
W	23A	3	RECHDSCR				
W	23B	3	RECHDSCR				
W	23C	3	RECHDSCR				
W	24A	3					
W	24B	3					
W	24C	3					
W	25A	3					
W	25B	3					
W	25C	3					
W	26A	3					
W	26B	3					
W	26C	3					
W	27A	3					
W	27B	3					
W	27C	3					
W	28A	3					
W	28B	3					
W	28C	3					
W	29A	3					
W	29B	3					
W	29C	3	INCODREP				
W	30A	3					
W	30B	3					
W	30C	3					
W	31A	3					
W	31B	3					
W	31C	3	CCHREC				
W	32A	3	+10				
W	32B	3	+10				
W	32C	3	+10				

GR: 99 (CONTINUATION)
PROCESSOR BACK PANEL MASTER

EL: 12 J 121 JACK 3*32 54.01.0355

TYPE	PT	LV	SIG.NAME	COLOR	F	X	Y
W	01A	3	0	L			
W	01B	3	0	L			
W	01C	3	0	L			
W	02A	3	CODINR1				
W	02B	3					
W	02C	3	CODINR2				
W	03A	3					
W	03B	3					
W	03C	3	SYMCOD01				
W	04A	3					
W	04B	3					
W	04C	3	SYMCOD02				
W	05A	3	INCODREP				
W	05B	3					
W	05C	3	CODOSELB				
W	06A	3					
W	06B	3					
W	06C	3	REPINSEL				
W	07A	3					
W	07B	3					
W	07C	3					
W	08A	3					
W	08B	3					
W	08C	3					
W	09A	3					
W	09B	3					
W	09C	3	FILTWIDE				
W	10A	3					
W	10B	3					
W	10C	3					
W	11A	3					
W	11B	3					
W	11C	3	MCODETTL				
W	12A	3	- 5				
W	12B	3	- 5				
W	12C	3	- 5				
W	13A	3					
W	13B	3					
W	13C	3					
W	14A	3	-12				
W	14B	3	-12				
W	14C	3	-12				
W	15A	3	0	A			
W	15B	3	0	A			
W	15C	3	0	A			
W	16A	3	+12				
W	16B	3	+12				
W	16C	3	+12				
W	17A	3					
W	17B	3					
W	17C	3					

./.

GR: 99 (CONTINUATION)
PROCESSOR BACK PANEL MASTER

EL: 12 (CONTINUATION)

TYPE	PT	LV	SIG.NAME	COLOR	F	X	Y
W	18A	3					
W	18B	3					
W	18C	3					
W	19A	3		0 K			
W	19B	3		0 K			
W	19C	3		0 K			
W	20A	3	+24				
W	20B	3	+24				
W	20C	3	+24				
W	21A	3					
W	21B	3					
W	21C	3	SYNCH1				
W	22A	3		0 L			
W	22B	3					
W	22C	3	SYNCH2				
W	23A	3	RECHDSCR				
W	23B	3	RECHDSCR				
W	23C	3	RECHDSCR				
W	24A	3					
W	24B	3					
W	24C	3					
W	25A	3					
W	25B	3					
W	25C	3	REPRO1				
W	26A	3					
W	26B	3					
W	26C	3	REPRO2				
W	27A	3					
W	27B	3					
W	27C	3	REPROO.O				
W	28A	3	REPROSCR				
W	28B	3	REPROSCR				
W	28C	3	REPROSCR				
W	29A	3	REPROSEL				
W	29B	3					
W	29C	3					
W	30A	3					
W	30B	3					
W	30C	3	SYNCSEL				
W	31A	3					
W	31B	3					
W	31C	3	FILTNRW				
W	32A	3	+10				
W	32B	3	+10				
W	32C	3	+10				

GR: 99 (CONTINUATION)
PROCESSOR BACK PANEL MASTER

EL: 14 J 141 JACK 3*32 54.01.0355

TYPE	PT	LV	SIG.NAME	COLOR	F	X	Y
W	01A	3@		0 L			
W	01B	3@		0 L			
W	01C	3@		0 L			
W	01D	3		0 L			
W	01E	3		0 L			
W	01F	3		0 L			
W	02A	3					
W	02B	3	B-REW				
W	02C	3	+ 5 1411				
W	02D	3	S-REW				
W	02E	3					
W	02F	3	B-REW				
W	03A	3	LKMODEDR				
W	03B	3	B-FORW				
W	03C	3	B-REMOTE				
W	03D	3	S-FORW				
W	03E	3					
W	03F	3	B-FORW				
W	04A	3					
W	04B	3	S-PLAY				
W	04C	3	X2TLS				
W	04D	3	S-REPR				
W	04E	3					
W	04F	3	B-REPR				
W	05A	3	+24				
W	05B	3	B-STOP				
W	05C	3	MS1TLS				
W	05D	3	S-STOP				
W	05E	3					
W	05F	3	B-STOP				
W	06A	3	Y-REC				
W	06B	3	B-CCHRDY				
W	06C	3	MS2TLS				
W	06D	3	S-REC				
W	06E	3					
W	06F	3	B-REC				
W	07A	3	EDMODEDR				
W	07B	3	B-CCHREC				
W	07C	3					
W	07D	3	S-CUT				
W	07E	3					
W	07F	3	B-CUT				
W	08A	3	PARKEDDR				
W	08B	3	B-CCHREP				
W	08C	3					
W	08D	3	Y-MUTE				
W	08E	3					
W	08F	3	YPS-MOVE				
W	09A	3	FILTWIDE				
W	09B	3	Y-MOVE-D				
W	09C	3					

./.

GR: 99 (CONTINUATION)
PROCESSOR BACK PANEL MASTER

EL: 14 (CONTINUATION)

TYPE	PT	LV	SIG.NAME	COLOR	F	X	Y
W	09D	3	0.0-TC				
W	09E	3					
W	09F	3	Y-MOVE-D				
W	10A	3					
W	10B	3	Y2MPRGR				
W	10C	3					
W	10D	3	+0-TYPE				
W	10E	3					
W	10F	3	Y-REVRS				
W	11A	3	B-OUT=IN				
W	11B	3					
W	11C	3					
W	11D	3	K-RESET				
W	11E	3					
W	11F	3	Y-FORW				
W	12A	3@	- 5				
W	12B	3@	- 5				
W	12C	3@	- 5				
W	12D	3	- 5				
W	12E	3	- 5				
W	12F	3	- 5				
W	13A	3					
W	13B	3					
W	13C	3					
W	13D	3	Y-CLK				
W	13E	3					
W	13F	3	+24VTDCT				
W	14A	3@	-12				
W	14B	3@	-12				
W	14C	3@	-12				
W	14D	3	-12				
W	14E	3	-12				
W	14F	3	-12				
W	15A	3@		0 A			
W	15B	3@		0 A			
W	15C	3@		0 A			
W	15D	3		0 A			
W	15E	3		0 A			
W	15F	3		0 A			
W	16A	3@	+12				
W	16B	3@	+12				
W	16C	3@	+12				
W	16D	3	+12				
W	16E	3	+12				
W	16F	3	+12				
W	17A	3					
W	17B	3					
W	17C	3	Y3MPRGR				
W	17D	3	Y-ICLK				
W	17E	3					
W	17F	3	LOC-IN'				

./.

GR: 99 (CONTINUATION)
PROCESSOR BACK PANEL MASTER

EL: 14 (CONTINUATION)

TYPE	PT	LV	SIG.NAME	COLOR	F	X	Y
W	18A	3					
W	18B	3	K-PRESS				
W	18C	3	S-HIGH				
W	18D	3	0.0-CT				
W	18E	3					
W	18F	3	K-PRESS				
W	19A	3@		0 K			
W	19B	3@		0 K			
W	19C	3@		0 K			
W	19D	3		0 K			
W	19E	3		0 K			
W	19F	3		0 K			
W	20A	3@	+24				
W	20B	3@	+24				
W	20C	3@	+24				
W	20D	3	+24				
W	20E	3	+24				
W	20F	3	+24				
W	21A	3	S-REPR				
W	21B	3	K-CUTINH				
W	21C	3	X3MPRGR				
W	21D	3	CMD.ENB2				
W	21E	3					
W	21F	3	K-CUTINH				
W	22A	3	Y-REC				
W	22B	3	Y-TRSP				
W	22C	3	X1MPRGR				
W	22D	3	S-LCW				
W	22E	3					
W	22F	3	Y-TRSP				
W	23A	3	S-CUT				
W	23B	3	S-LCW				
W	23C	3	X2MPRGR				
W	23D	3	0.0EMC1				
W	23E	3					
W	23F	3	B-INDIC				
W	24A	3	Y-MUTE				
W	24B	3					
W	24C	3	CCHSAFE				
W	24D	3	+24.0				
W	24E	3					
W	24F	3	- 5.8				
W	25A	3					
W	25B	3					
W	25C	3	CCHRDY				
W	25D	3					
W	25E	3					
W	25F	3					
W	26A	3					
W	26B	3					
W	26C	3	B-CCHSYN				

./.

GR: 99 (CONTINUATION)
PROCESSOR BACK PANEL MASTER

EL: 14 (CONTINUATION)

TYPE	PT	LV	SIG.NAME	COLOR	F	X	Y
W	26D	3					
W	26E	3					
W	26F	3					
W	27A	3					
W	27B	3					
W	27C	3					
W	27D	3					
W	27E	3					
W	27F	3					
W	28A	3	REPINSEL				
W	28B	3					
W	28C	3	B-CCHSAF				
W	28D	3					
W	28E	3					
W	28F	3					
W	29A	3	REPROSEL				
W	29B	3					
W	29C	3	NYRECTTL				
W	29D	3					
W	29E	3					
W	29F	3					
W	30A	3	SYNCSEL				
W	30B	3					
W	30C	3	CCHREC				
W	30D	3					
W	30E	3					
W	30F	3					
W	31A	3	FILTNRW				
W	31B	3					
W	31C	3					
W	31D	3					
W	31E	3					
W	31F	3					
W	32A	3@	+10				
W	32B	3@	+10				
W	32C	3@	+10				
W	32D	3	+10				
W	32E	3	+10				
W	32F	3	+10				

EL: 15 J 152 JACK 3*32 54.01.0355

TYPE	PT	LV	SIG.NAME	COLOR	F	X	Y
W	01D	3		0 L			
W	01E	3		0 L			
W	01F	3		0 L			
W	02D	3	B-REW				
W	02E	3					
W	02F	3	S-REW				
W	03D	3	B-FORW				

./.

GR: 99 (CONTINUATION)
PROCESSOR BACK PANEL MASTER

EL: 15 (CONTINUATION)

TYPE	PT	LV	SIG.NAME	COLOR	F	X	Y
W	03E	3					
W	03F	3	S-FORW				
W	04D	3	B-REPR				
W	04E	3					
W	04F	3	S-PLAY				
W	05D	3	B-STOP				
W	05E	3					
W	05F	3	S-STOP				
W	06D	3	B-REC				
W	06E	3					
W	06F	3	S-REC				
W	07D	3	B-CUT				
W	07E	3					
W	07F	3	S-CUT				
W	08D	3	YPS-MOVE				
W	08E	3					
W	08F	3					
W	09D	3					
W	09E	3					
W	09F	3	0.0-TC				
W	10D	3	Y-REVRS				
W	10E	3					
W	10F	3	+0-TYPE				
W	11D	3	Y-FORW				
W	11E	3					
W	11F	3	K-RESET				
W	12D	3	- 5				
W	12E	3	- 5				
W	12F	3	- 5				
W	13D	3	+24VTDCT				
W	13E	3					
W	13F	3	Y-CLK				
W	14D	3	-12				
W	14E	3	-12				
W	14F	3	-12				
W	15D	3		0 A			
W	15E	3		0 A			
W	15F	3		0 A			
W	16D	3	+12				
W	16E	3	+12				
W	16F	3	+12				
W	17D	3	LOC-IN'				
W	17E	3					
W	17F	3	Y-ICLK				
W	18D	3					
W	18E	3					
W	18F	3	0.0-CT				
W	19D	3		0 K			
W	19E	3		0 K			
W	19F	3		0 K			
W	20D	3	+24				

./.

```
*****************************************************************************************************************************
*   S T U D E R   *      L O C A T I O N     P I N     L I S T       *    82/01/22 * 16:17      *   P A G E      7    *
*****************************************************************************************************************************
A80 MASTER: PROCESSOR BACK PANEL                          1.228.799.00              79/12/14


GR: 99   (CONTINUATION)
PROCESSCR BACK PANEL MASTER
****************************************

EL: 20   (CONTINUATION)
-----------------------------------------
TYPE PT  LV SIG.NAME COLOR F    X      Y
---- --- -- -------- ----- - ----- -----
W    28A 3
W    28B 3
W    28C 3
W    28D 3
W    28E 3
W    28F 3  B-CCHSAF
W    29A 3
W    29B 3
W    29C 3
W    29D 3
W    29E 3
W    29F 3  B-REMOTE
W    30A 3
W    30B 3
W    30C 3
W    30D 3  B-RES19
W    30E 3
W    30F 3  B-RES15
W    31A 3
W    31B 3
W    31C 3
W    31D 3  B-RES20
W    31E 3
W    31F 3  B-RES16
W    32A 3  +10
W    32B 3  +10
W    32C 3  +10
W    32D 3  +10
W    32E 3  +10
W    32F 3  +10
```

```
*****************************************************************************************************************************
*   S T U D E R   *      L O C A T I O N     S U M M A R Y       *    82/01/22 * 16:17      *   P A G E      8    *
*****************************************************************************************************************************
A80 MASTER: PROCESSOR BACK PANEL                          1.228.799.00              79/12/14


 GR  USED    UNUSED  TOTAL   CCD.  ELE-
 #    PINS    PINS    PINS   KEYS  MNTS  DESCRIPTICN OF GROUP                    PART # OF GR
--  ------  ------  ------  ----  ----  --------------------------------------  ------------
99     404     364     768     0     6  PROCESSOR BACK PANEL MASTER             1.228.799.00
--  ------  ------  ------  ----  ----  --------------------------------------  ------------
TOT.   404     364     768     0     6    DISTRIBUTED IN  1 GROUPS
     ======  ======  ======  ====  ====
```

GR: 99 (CONTINUATION)
PROCESSOR BACK PANEL MASTER

EL: 15 (CONTINUATION)

TYPE	PT	LV	SIG.NAME	COLOR	F	X	Y
W	20E	3	+24				
W	20F	3	+24				
W	21D	3					
W	21E	3					
W	21F	3					
W	22D	3					
W	22E	3					
W	22F	3	S-HIGH				
W	23D	3					
W	23E	3					
W	23F	3	B-INDIC				
W	24D	3	+24.0				
W	24E	3					
W	24F	3	- 5.8				
W	25D	3					
W	25E	3					
W	25F	3					
W	26D	3					
W	26E	3					
W	26F	3					
W	27D	3					
W	27E	3					
W	27F	3					
W	28D	3					
W	28E	3					
W	28F	3					
W	29D	3					
W	29E	3					
W	29F	3					
W	30D	3					
W	30E	3					
W	30F	3					
W	31D	3					
W	31E	3					
W	31F	3					
W	32D	3	+10				
W	32E	3	+10				
W	32F	3	+10				

EL: 19 J 191 JACK 3*32 54.01.0355

TYPE	PT	LV	SIG.NAME	COLOR	F	X	Y
W	01A	3	0 L				
W	01B	3	0 L				
W	01C	3	0 L				
W	02A	3					
W	02B	3					
W	02C	3					
W	03A	3					
W	03B	3					

./.

GR: 99 (CONTINUATION)
PROCESSOR BACK PANEL MASTER

EL: 19 (CONTINUATION)

TYPE	PT	LV	SIG.NAME	COLOR	F	X	Y
W	03C	3					
W	04A	3	-20V A80				
W	04B	3	-20V A80				
W	04C	3	-20V A80				
W	05A	3					
W	05B	3					
W	05C	3					
W	06A	3					
W	06B	3					
W	06C	3					
W	07A	3	+20V A80				
W	07B	3	+20V A80				
W	07C	3	+20V A80				
W	08A	3					
W	08B	3					
W	08C	3					
W	09A	3					
W	09B	3					
W	09C	3					
W	10A	3	0.0INA80				
W	10B	3	0.0INA80				
W	10C	3	0.0INA80				
W	11A	3					
W	11B	3					
W	11C	3					
W	12A	3	- 5				
W	12B	3	- 5				
W	12C	3	- 5				
W	13A	3					
W	13B	3					
W	13C	3					
W	14A	3	-12				
W	14B	3	-12				
W	14C	3	-12				
W	15A	3	0 A				
W	15B	3	0 A				
W	15C	3	0 A				
W	16A	3	+12				
W	16B	3	+12				
W	16C	3	+12				
W	17A	3					
W	17B	3					
W	17C	3					
W	18A	3					
W	18B	3					
W	18C	3					
W	19A	3	0 K				
W	19B	3	0 K				
W	19C	3	0 K				
W	20A	3	+24				
W	20B	3	+24				

./.

GR: 99 (CONTINUATION)
PROCESSOR BACK PANEL MASTER

EL: 19 (CONTINUATION)

TYPE	PT	LV	SIG.NAME	COLOR	F	X	Y
W	20C	3	+24				
W	21A	3					
W	21B	3					
W	21C	3					
W	22A	3					
W	22B	3					
W	22C	3					
W	23A	3					
W	23B	3					
W	23C	3					
W	24A	3					
W	24B	3					
W	24C	3					
W	25A	3					
W	25B	3					
W	25C	3					
W	26A	3					
W	26B	3					
W	26C	3					
W	27A	3					
W	27B	3					
W	27C	3					
W	28A	3					
W	28B	3					
W	28C	3					
W	29A	3					
W	29B	3					
W	29C	3					
W	30A	3					
W	30B	3					
W	30C	3					
W	31A	3					
W	31B	3					
W	31C	3					
W	32A	3	+10				
W	32B	3	+10				
W	32C	3	+10				

EL: 20 J 201 JACK 3*32 54.01.0355

TYPE	PT	LV	SIG.NAME	COLOR	F	X	Y
W	01A	3	0 L				
W	01B	3	0 L				
W	01C	3	0 L				
W	01D	3	0 L				
W	01E	3	0 L				
W	01F	3	0 L				
W	02A	3					
W	02B	3					
W	02C	3					

./.

GR: 99 (CONTINUATION)
PROCESSOR BACK PANEL MASTER

EL: 20 (CONTINUATION)

TYPE	PT	LV	SIG.NAME	COLOR	F	X	Y
W	02D	3	B-RES18				
W	02E	3					
W	02F	3	B-RES14				
W	03A	3					
W	03B	3					
W	03C	3					
W	03D	3	B-RES17				
W	03E	3					
W	03F	3	B-RES09				
W	04A	3	-10V 150				
W	04B	3	-10V 150				
W	04C	3	-10V 150				
W	04D	3	B-RES13				
W	04E	3					
W	04F	3	B-RES10				
W	05A	3					
W	05B	3					
W	05C	3					
W	05D	3	0 L				
W	05E	3					
W	05F	3	B-CCHRDY				
W	06A	3					
W	06B	3					
W	06C	3					
W	06D	3	0 L				
W	06E	3					
W	06F	3	B-CCHREC				
W	07A	3	+31V 150				
W	07B	3	+31V 150				
W	07C	3	+31V 150				
W	07D	3	0 L				
W	07E	3					
W	07F	3	B-CCHREP				
W	08A	3					
W	08B	3					
W	08C	3					
W	08D	3	BPSUPVIS				
W	08E	3					
W	08F	3	B-RES05				
W	09A	3					
W	09B	3					
W	09C	3					
W	09D	3					
W	09E	3					
W	09F	3	Y2MPRGR				
W	10A	3	0.0IN150				
W	10B	3	0.0IN150				
W	10C	3	0.0IN150				
W	10D	3					
W	10E	3					
W	10F	3	Y1MPRGR				

./.

GR: 99 (CONTINUATION)
PROCESSOR BACK PANEL MASTER

EL: 20 (CONTINUATION)

TYPE	PT	LV	SIG.NAME	COLOR	F	X	Y
W	11A	3					
W	11B	3					
W	11C	3					
W	11D	3					
W	11E	3					
W	11F	3	S20TTL				
W	12A	3	- 5				
W	12B	3	- 5				
W	12C	3	- 5				
W	12D	3	- 5				
W	12E	3	- 5				
W	12F	3	- 5				
W	13A	3					
W	13B	3					
W	13C	3					
W	13D	3					
W	13E	3					
W	13F	3	X5MPRGR				
W	14A	3	-12				
W	14B	3	-12				
W	14C	3	-12				
W	14D	3	-12				
W	14E	3	-12				
W	14F	3	-12				
W	15A	3	0 A				
W	15B	3	0 A				
W	15C	3	0 A				
W	15D	3	0 A				
W	15E	3	0 A				
W	15F	3	0 A				
W	16A	3	+12				
W	16B	3	+12				
W	16C	3	+12				
W	16D	3	+12				
W	16E	3	+12				
W	16F	3	+12				
W	17A	3					
W	17B	3					
W	17C	3					
W	17D	3					
W	17E	3					
W	17F	3	Y3MPRGR				
W	18A	3					
W	18B	3					
W	18C	3					
W	18D	3					
W	18E	3					
W	18F	3	X4MPRGR				
W	19A	3	0 K				
W	19B	3	0 K				
W	19C	3	0 K				

./.

GR: 99 (CONTINUATION)
PROCESSOR BACK PANEL MASTER

EL: 20 (CONTINUATION)

TYPE	PT	LV	SIG.NAME	COLOR	F	X	Y
W	19D	3	0 K				
W	19E	3	0 K				
W	19F	3	0 K				
W	20A	3	+24				
W	20B	3	+24				
W	20C	3	+24				
W	20D	3	+24				
W	20E	3	+24				
W	20F	3	+24				
W	21A	3					
W	21B	3					
W	21C	3					
W	21D	3					
W	21E	3					
W	21F	3	X3MPRGR				
W	22A	3					
W	22B	3					
W	22C	3					
W	22D	3					
W	22E	3					
W	22F	3	X1MPRGR				
W	23A	3					
W	23B	3					
W	23C	3					
W	23D	3					
W	23E	3					
W	23F	3	X2MPRGR				
W	24A	3					
W	24B	3					
W	24C	3					
W	24D	3					
W	24E	3					
W	24F	3	B-RES12				
W	25A	3					
W	25B	3					
W	25C	3					
W	25D	3					
W	25E	3					
W	25F	3	B-RES11				
W	26A	3					
W	26B	3					
W	26C	3					
W	26D	3					
W	26E	3					
W	26F	3	B-CCHSYN				
W	27A	3					
W	27B	3					
W	27C	3					
W	27D	3					
W	27E	3					
W	27F	3	B-OUT-IN				

./.

* STUDER * UNUSED PINS * 82/01/22 * 16:17 * PAGE 11 *

A80 MASTER: PROCESSOR BACK PANEL 1.228.799.00 79/12/14

	DESCRIPTION OF ELEMENT		GR	EL	PT
J	201 JACK 3*32	54.01.0355	99	20	26B
J	201 JACK 3*32	54.01.0355	99	20	26C
J	202 JACK 3*32	54.01.0355	99	20	26D
J	202 JACK 3*32	54.01.0355	99	20	26E
J	201 JACK 3*32	54.01.0355	99	20	27A
J	201 JACK 3*32	54.01.0355	99	20	27B
J	201 JACK 3*32	54.01.0355	99	20	27C
J	202 JACK 3*32	54.01.0355	99	20	27D
J	202 JACK 3*32	54.01.0355	99	20	27E
J	201 JACK 3*32	54.01.0355	99	20	28A
J	201 JACK 3*32	54.01.0355	99	20	28B
J	201 JACK 3*32	54.01.0355	99	20	28C
J	202 JACK 3*32	54.01.0355	99	20	28D
J	202 JACK 3*32	54.01.0355	99	20	28E
J	201 JACK 3*32	54.01.0355	99	20	29A
J	201 JACK 3*32	54.01.0355	99	20	29B
J	201 JACK 3*32	54.01.0355	99	20	29C
J	202 JACK 3*32	54.01.0355	99	20	29D
J	202 JACK 3*32	54.01.0355	99	20	29E
J	201 JACK 3*32	54.01.0355	99	20	30A
J	201 JACK 3*32	54.01.0355	99	20	30B
J	201 JACK 3*32	54.01.0355	99	20	30C
J	202 JACK 3*32	54.01.0355	99	20	30E
J	201 JACK 3*32	54.01.0355	99	20	31A
J	201 JACK 3*32	54.01.0355	99	20	31B
J	201 JACK 3*32	54.01.0355	99	20	31C
J	202 JACK 3*32	54.01.0355	99	20	31E

* STUDER * SIGNAL WIRE LIST * 82/01/22 * 16:17 * PAGE 12 *

A80 MASTER: PROCESSOR BACK PANEL 1.228.799.00 79/12/14

SIG.NAME	COLOR	TYPE	GR	EL	PT	S	DESCRIPTION OF ELEMENT		SIG.NAME	COLOR	TYPE	GR	EL	PT	S	DESCRIPTION OF ELEMENT	
0 A		W	99	11	15A	J	111 JACK 3*32	54.01.0355	(CONT.)		W	99	12	22A	J	121 JACK 3*32	54.01.0355
		W	99	11	15B	J	111 JACK 3*32	54.01.0355			W	99	14	01A @	J	141 JACK 3*32	54.01.0355
		W	99	11	15C	J	111 JACK 3*32	54.01.0355			W	99	14	01B @	J	141 JACK 3*32	54.01.0355
		W	99	12	15A	J	121 JACK 3*32	54.01.0355			W	99	14	01C @	J	141 JACK 3*32	54.01.0355
		W	99	12	15B	J	121 JACK 3*32	54.01.0355			W	99	14	01D	J	142 JACK 3*32	54.01.0355
		W	99	12	15C	J	121 JACK 3*32	54.01.0355			W	99	14	01E	J	142 JACK 3*32	54.01.0355
		W	99	14	15A @	J	141 JACK 3*32	54.01.0355			W	99	14	01F	J	142 JACK 3*32	54.01.0355
		W	99	14	15B @	J	141 JACK 3*32	54.01.0355			W	99	15	01D	J	152 JACK 3*32	54.01.0355
		W	99	14	15C @	J	141 JACK 3*32	54.01.0355			W	99	15	01E	J	152 JACK 3*32	54.01.0355
		W	99	14	15D	J	142 JACK 3*32	54.01.0355			W	99	15	01F	J	152 JACK 3*32	54.01.0355
		W	99	14	15E	J	142 JACK 3*32	54.01.0355			W	99	19	01A	J	191 JACK 3*32	54.01.0355
		W	99	14	15F	J	142 JACK 3*32	54.01.0355			W	99	19	01B	J	191 JACK 3*32	54.01.0355
		W	99	15	15D	J	152 JACK 3*32	54.01.0355			W	99	19	01C	J	191 JACK 3*32	54.01.0355
		W	99	15	15E	J	152 JACK 3*32	54.01.0355			W	99	20	01A	J	201 JACK 3*32	54.01.0355
		W	99	15	15F	J	152 JACK 3*32	54.01.0355			W	99	20	01B	J	201 JACK 3*32	54.01.0355
		W	99	19	15A	J	191 JACK 3*32	54.01.0355			W	99	20	01C	J	201 JACK 3*32	54.01.0355
		W	99	19	15B	J	191 JACK 3*32	54.01.0355			W	99	20	01D	J	202 JACK 3*32	54.01.0355
		W	99	19	15C	J	191 JACK 3*32	54.01.0355			W	99	20	01E	J	202 JACK 3*32	54.01.0355
		W	99	20	15A	J	201 JACK 3*32	54.01.0355			W	99	20	01F	J	202 JACK 3*32	54.01.0355
		W	99	20	15B	J	201 JACK 3*32	54.01.0355			W	99	20	05D	J	202 JACK 3*32	54.01.0355
		W	99	20	15C	J	201 JACK 3*32	54.01.0355			W	99	20	06D	J	202 JACK 3*32	54.01.0355
		W	99	20	15D	J	202 JACK 3*32	54.01.0355			W	99	20	07D	J	202 JACK 3*32	54.01.0355
		W	99	20	15E	J	202 JACK 3*32	54.01.0355									
		W	99	20	15F	J	202 JACK 3*32	54.01.0355	+ 5 1411		W	99	14	02C	J	141 JACK 3*32	54.01.0355
0 K		W	99	11	19A	J	111 JACK 3*32	54.01.0355	+0-TYPE		W	99	14	10D	J	142 JACK 3*32	54.01.0355
		W	99	11	19B	J	111 JACK 3*32	54.01.0355			W	99	15	10F	J	152 JACK 3*32	54.01.0355
		W	99	11	19C	J	111 JACK 3*32	54.01.0355									
		W	99	12	19A	J	121 JACK 3*32	54.01.0355	+10		W	99	11	32A	J	111 JACK 3*32	54.01.0355
		W	99	12	19B	J	121 JACK 3*32	54.01.0355			W	99	11	32B	J	111 JACK 3*32	54.01.0355
		W	99	12	19C	J	121 JACK 3*32	54.01.0355			W	99	11	32C	J	111 JACK 3*32	54.01.0355
		W	99	14	19A @	J	141 JACK 3*32	54.01.0355			W	99	12	32A	J	121 JACK 3*32	54.01.0355
		W	99	14	19B @	J	141 JACK 3*32	54.01.0355			W	99	12	32B	J	121 JACK 3*32	54.01.0355
		W	99	14	19C @	J	141 JACK 3*32	54.01.0355			W	99	12	32C	J	121 JACK 3*32	54.01.0355
		W	99	14	19D	J	142 JACK 3*32	54.01.0355			W	99	14	32A @	J	141 JACK 3*32	54.01.0355
		W	99	14	19E	J	142 JACK 3*32	54.01.0355			W	99	14	32B @	J	141 JACK 3*32	54.01.0355
		W	99	14	19F	J	142 JACK 3*32	54.01.0355			W	99	14	32C @	J	141 JACK 3*32	54.01.0355
		W	99	15	19D	J	152 JACK 3*32	54.01.0355			W	99	14	32D	J	142 JACK 3*32	54.01.0355
		W	99	15	19E	J	152 JACK 3*32	54.01.0355			W	99	14	32E	J	142 JACK 3*32	54.01.0355
		W	99	15	19F	J	152 JACK 3*32	54.01.0355			W	99	14	32F	J	142 JACK 3*32	54.01.0355
		W	99	19	19A	J	191 JACK 3*32	54.01.0355			W	99	15	32D	J	152 JACK 3*32	54.01.0355
		W	99	19	19B	J	191 JACK 3*32	54.01.0355			W	99	15	32E	J	152 JACK 3*32	54.01.0355
		W	99	19	19C	J	191 JACK 3*32	54.01.0355			W	99	15	32F	J	152 JACK 3*32	54.01.0355
		W	99	20	19A	J	201 JACK 3*32	54.01.0355			W	99	19	32A	J	191 JACK 3*32	54.01.0355
		W	99	20	19B	J	201 JACK 3*32	54.01.0355			W	99	19	32B	J	191 JACK 3*32	54.01.0355
		W	99	20	19C	J	201 JACK 3*32	54.01.0355			W	99	19	32C	J	191 JACK 3*32	54.01.0355
		W	99	20	19D	J	202 JACK 3*32	54.01.0355			W	99	20	32A	J	201 JACK 3*32	54.01.0355
		W	99	20	19E	J	202 JACK 3*32	54.01.0355			W	99	20	32B	J	201 JACK 3*32	54.01.0355
		W	99	20	19F	J	202 JACK 3*32	54.01.0355			W	99	20	32C	J	201 JACK 3*32	54.01.0355
											W	99	20	32D	J	202 JACK 3*32	54.01.0355
0 L		W	99	11	01A	J	111 JACK 3*32	54.01.0355			W	99	20	32E	J	202 JACK 3*32	54.01.0355
		W	99	11	01B	J	111 JACK 3*32	54.01.0355			W	99	20	32F	J	202 JACK 3*32	54.01.0355
		W	99	11	01C	J	111 JACK 3*32	54.01.0355									
		W	99	12	01A	J	121 JACK 3*32	54.01.0355	+12		W	99	11	16A	J	111 JACK 3*32	54.01.0355
		W	99	12	01B	J	121 JACK 3*32	54.01.0355			W	99	11	16B	J	111 JACK 3*32	54.01.0355
		W	99	12	01C	J	121 JACK 3*32	54.01.0355			W	99	11	16C	J	111 JACK 3*32	54.01.0355

-/-

```
**********************************************************************************************************************************
*  S T U D E R  *  U N U S E D  P I N S                          *  82/01/22 * 16:17     *  P A G E      9  *
**********************************************************************************************************************************
A80 MASTER: PROCESSOR BACK PANEL                          1.228.799.00          79/12/14

DESCRIPTION OF ELEMENT          GR EL PT    DESCRIPTION OF ELEMENT          GR EL PT    DESCRIPTION OF ELEMENT          GR EL PT
------------------------------ -- -- ---  ------------------------------ -- -- ---  ------------------------------ -- -- ---
J  111 JACK 3*32  54.01.0355 99 11 02B  J  121 JACK 3*32  54.01.0355 99 12 10A  J  141 JACK 3*32  54.01.0355 99 14 17B
J  111 JACK 3*32  54.01.0355 99 11 02C  J  121 JACK 3*32  54.01.0355 99 12 10B  J  142 JACK 3*32  54.01.0355 99 14 17E
J  111 JACK 3*32  54.01.0355 99 11 03B  J  121 JACK 3*32  54.01.0355 99 12 10C  J  141 JACK 3*32  54.01.0355 99 14 18A
J  111 JACK 3*32  54.01.0355 99 11 03C  J  121 JACK 3*32  54.01.0355 99 12 11A  J  142 JACK 3*32  54.01.0355 99 14 18E
J  111 JACK 3*32  54.01.0355 99 11 04B  J  121 JACK 3*32  54.01.0355 99 12 11B  J  142 JACK 3*32  54.01.0355 99 14 21E
J  111 JACK 3*32  54.01.0355 99 11 04C  J  121 JACK 3*32  54.01.0355 99 12 13A  J  142 JACK 3*32  54.01.0355 99 14 22E
J  111 JACK 3*32  54.01.0355 99 11 07B  J  121 JACK 3*32  54.01.0355 99 12 13B  J  142 JACK 3*32  54.01.0355 99 14 23E
J  111 JACK 3*32  54.01.0355 99 11 08B  J  121 JACK 3*32  54.01.0355 99 12 13C  J  141 JACK 3*32  54.01.0355 99 14 24B
J  111 JACK 3*32  54.01.0355 99 11 09B  J  121 JACK 3*32  54.01.0355 99 12 17A  J  142 JACK 3*32  54.01.0355 99 14 24E
J  111 JACK 3*32  54.01.0355 99 11 10B  J  121 JACK 3*32  54.01.0355 99 12 17B  J  141 JACK 3*32  54.01.0355 99 14 25A
J  111 JACK 3*32  54.01.0355 99 11 11B  J  121 JACK 3*32  54.01.0355 99 12 17C  J  141 JACK 3*32  54.01.0355 99 14 25B
J  111 JACK 3*32  54.01.0355 99 11 17A  J  121 JACK 3*32  54.01.0355 99 12 18A  J  142 JACK 3*32  54.01.0355 99 14 25D
J  111 JACK 3*32  54.01.0355 99 11 17B  J  121 JACK 3*32  54.01.0355 99 12 18B  J  142 JACK 3*32  54.01.0355 99 14 25E
J  111 JACK 3*32  54.01.0355 99 11 17C  J  121 JACK 3*32  54.01.0355 99 12 18C  J  142 JACK 3*32  54.01.0355 99 14 25F
J  111 JACK 3*32  54.01.0355 99 11 21A  J  121 JACK 3*32  54.01.0355 99 12 21A  J  141 JACK 3*32  54.01.0355 99 14 26A
J  111 JACK 3*32  54.01.0355 99 11 21B  J  121 JACK 3*32  54.01.0355 99 12 21B  J  141 JACK 3*32  54.01.0355 99 14 26B
J  111 JACK 3*32  54.01.0355 99 11 22A  J  121 JACK 3*32  54.01.0355 99 12 22B  J  142 JACK 3*32  54.01.0355 99 14 26D
J  111 JACK 3*32  54.01.0355 99 11 22B  J  121 JACK 3*32  54.01.0355 99 12 24A  J  142 JACK 3*32  54.01.0355 99 14 26E
J  111 JACK 3*32  54.01.0355 99 11 24A  J  121 JACK 3*32  54.01.0355 99 12 24B  J  142 JACK 3*32  54.01.0355 99 14 26F
J  111 JACK 3*32  54.01.0355 99 11 24B  J  121 JACK 3*32  54.01.0355 99 12 24C  J  141 JACK 3*32  54.01.0355 99 14 27A
J  111 JACK 3*32  54.01.0355 99 11 24C  J  121 JACK 3*32  54.01.0355 99 12 25A  J  141 JACK 3*32  54.01.0355 99 14 27B
J  111 JACK 3*32  54.01.0355 99 11 25A  J  121 JACK 3*32  54.01.0355 99 12 25B  J  141 JACK 3*32  54.01.0355 99 14 27C
J  111 JACK 3*32  54.01.0355 99 11 25B  J  121 JACK 3*32  54.01.0355 99 12 26A  J  142 JACK 3*32  54.01.0355 99 14 27D
J  111 JACK 3*32  54.01.0355 99 11 25C  J  121 JACK 3*32  54.01.0355 99 12 26B  J  142 JACK 3*32  54.01.0355 99 14 27E
J  111 JACK 3*32  54.01.0355 99 11 26A  J  121 JACK 3*32  54.01.0355 99 12 27A  J  142 JACK 3*32  54.01.0355 99 14 27F
J  111 JACK 3*32  54.01.0355 99 11 26B  J  121 JACK 3*32  54.01.0355 99 12 27B  J  141 JACK 3*32  54.01.0355 99 14 28B
J  111 JACK 3*32  54.01.0355 99 11 26C  J  121 JACK 3*32  54.01.0355 99 12 29B  J  142 JACK 3*32  54.01.0355 99 14 28D
J  111 JACK 3*32  54.01.0355 99 11 27A  J  121 JACK 3*32  54.01.0355 99 12 29C  J  142 JACK 3*32  54.01.0355 99 14 28E
J  111 JACK 3*32  54.01.0355 99 11 27B  J  121 JACK 3*32  54.01.0355 99 12 30A  J  142 JACK 3*32  54.01.0355 99 14 28F
J  111 JACK 3*32  54.01.0355 99 11 27C  J  121 JACK 3*32  54.01.0355 99 12 30B  J  141 JACK 3*32  54.01.0355 99 14 29B
J  111 JACK 3*32  54.01.0355 99 11 28A  J  121 JACK 3*32  54.01.0355 99 12 31A  J  142 JACK 3*32  54.01.0355 99 14 29D
J  111 JACK 3*32  54.01.0355 99 11 28B  J  121 JACK 3*32  54.01.0355 99 12 31B  J  142 JACK 3*32  54.01.0355 99 14 29E
J  111 JACK 3*32  54.01.0355 99 11 28C                                          J  142 JACK 3*32  54.01.0355 99 14 29F
J  111 JACK 3*32  54.01.0355 99 11 29A  J  141 JACK 3*32  54.01.0355 99 14 02A  J  141 JACK 3*32  54.01.0355 99 14 30B
J  111 JACK 3*32  54.01.0355 99 11 29B  J  142 JACK 3*32  54.01.0355 99 14 02E  J  142 JACK 3*32  54.01.0355 99 14 30D
J  111 JACK 3*32  54.01.0355 99 11 30A  J  142 JACK 3*32  54.01.0355 99 14 03E  J  142 JACK 3*32  54.01.0355 99 14 30E
J  111 JACK 3*32  54.01.0355 99 11 30B  J  141 JACK 3*32  54.01.0355 99 14 04A  J  142 JACK 3*32  54.01.0355 99 14 30F
J  111 JACK 3*32  54.01.0355 99 11 30C  J  142 JACK 3*32  54.01.0355 99 14 04E  J  141 JACK 3*32  54.01.0355 99 14 31B
J  111 JACK 3*32  54.01.0355 99 11 31A  J  142 JACK 3*32  54.01.0355 99 14 05E  J  141 JACK 3*32  54.01.0355 99 14 31C
J  111 JACK 3*32  54.01.0355 99 11 31B  J  142 JACK 3*32  54.01.0355 99 14 06E  J  142 JACK 3*32  54.01.0355 99 14 31D
                                        J  141 JACK 3*32  54.01.0355 99 14 07C  J  142 JACK 3*32  54.01.0355 99 14 31E
J  121 JACK 3*32  54.01.0355 99 12 02B  J  142 JACK 3*32  54.01.0355 99 14 07E  J  142 JACK 3*32  54.01.0355 99 14 31F
J  121 JACK 3*32  54.01.0355 99 12 03A  J  141 JACK 3*32  54.01.0355 99 14 08C
J  121 JACK 3*32  54.01.0355 99 12 03B  J  142 JACK 3*32  54.01.0355 99 14 08E  J  152 JACK 3*32  54.01.0355 99 15 02E
J  121 JACK 3*32  54.01.0355 99 12 04A  J  141 JACK 3*32  54.01.0355 99 14 09C  J  152 JACK 3*32  54.01.0355 99 15 03E
J  121 JACK 3*32  54.01.0355 99 12 04B  J  142 JACK 3*32  54.01.0355 99 14 09E  J  152 JACK 3*32  54.01.0355 99 15 04E
J  121 JACK 3*32  54.01.0355 99 12 05B  J  141 JACK 3*32  54.01.0355 99 14 10A  J  152 JACK 3*32  54.01.0355 99 15 05E
J  121 JACK 3*32  54.01.0355 99 12 06A  J  141 JACK 3*32  54.01.0355 99 14 10C  J  152 JACK 3*32  54.01.0355 99 15 06E
J  121 JACK 3*32  54.01.0355 99 12 06B  J  142 JACK 3*32  54.01.0355 99 14 10E  J  152 JACK 3*32  54.01.0355 99 15 07E
J  121 JACK 3*32  54.01.0355 99 12 07A  J  141 JACK 3*32  54.01.0355 99 14 11B  J  152 JACK 3*32  54.01.0355 99 15 08E
J  121 JACK 3*32  54.01.0355 99 12 07B  J  141 JACK 3*32  54.01.0355 99 14 11C  J  152 JACK 3*32  54.01.0355 99 15 08F
J  121 JACK 3*32  54.01.0355 99 12 07C  J  142 JACK 3*32  54.01.0355 99 14 11E  J  152 JACK 3*32  54.01.0355 99 15 09D
J  121 JACK 3*32  54.01.0355 99 12 08A  J  141 JACK 3*32  54.01.0355 99 14 13A  J  152 JACK 3*32  54.01.0355 99 15 09E
J  121 JACK 3*32  54.01.0355 99 12 08B  J  141 JACK 3*32  54.01.0355 99 14 13B  J  152 JACK 3*32  54.01.0355 99 15 10E
J  121 JACK 3*32  54.01.0355 99 12 08C  J  141 JACK 3*32  54.01.0355 99 14 13C  J  152 JACK 3*32  54.01.0355 99 15 11E
J  121 JACK 3*32  54.01.0355 99 12 09A  J  142 JACK 3*32  54.01.0355 99 14 13E  J  152 JACK 3*32  54.01.0355 99 15 13E
J  121 JACK 3*32  54.01.0355 99 12 09B  J  141 JACK 3*32  54.01.0355 99 14 17A  J  152 JACK 3*32  54.01.0355 99 15 17E
                                  ./.                                  ./.                                  ./.
```

```
**********************************************************************************************************************************
*  S T U D E R  *  U N U S E D  P I N S                          *  82/01/22 * 16:17     *  P A G E     10  *
**********************************************************************************************************************************
A80 MASTER: PROCESSOR BACK PANEL                          1.228.799.00          79/12/14

DESCRIPTION OF ELEMENT          GR EL PT    DESCRIPTION OF ELEMENT          GR EL PT    DESCRIPTION OF ELEMENT          GR EL PT
------------------------------ -- -- ---  ------------------------------ -- -- ---  ------------------------------ -- -- ---
J  152 JACK 3*32  54.01.0355 99 15 18D  J  191 JACK 3*32  54.01.0355 99 19 17B  J  201 JACK 3*32  54.01.0355 99 20 08A
J  152 JACK 3*32  54.01.0355 99 15 18E  J  191 JACK 3*32  54.01.0355 99 19 17C  J  201 JACK 3*32  54.01.0355 99 20 08B
J  152 JACK 3*32  54.01.0355 99 15 21D  J  191 JACK 3*32  54.01.0355 99 19 18A  J  201 JACK 3*32  54.01.0355 99 20 08C
J  152 JACK 3*32  54.01.0355 99 15 21E  J  191 JACK 3*32  54.01.0355 99 19 18B  J  202 JACK 3*32  54.01.0355 99 20 08E
J  152 JACK 3*32  54.01.0355 99 15 21F  J  191 JACK 3*32  54.01.0355 99 19 18C  J  201 JACK 3*32  54.01.0355 99 20 09A
J  152 JACK 3*32  54.01.0355 99 15 22D  J  191 JACK 3*32  54.01.0355 99 19 21A  J  201 JACK 3*32  54.01.0355 99 20 09B
J  152 JACK 3*32  54.01.0355 99 15 22E  J  191 JACK 3*32  54.01.0355 99 19 21B  J  201 JACK 3*32  54.01.0355 99 20 09C
J  152 JACK 3*32  54.01.0355 99 15 23D  J  191 JACK 3*32  54.01.0355 99 19 21C  J  202 JACK 3*32  54.01.0355 99 20 09D
J  152 JACK 3*32  54.01.0355 99 15 23E  J  191 JACK 3*32  54.01.0355 99 19 22A  J  202 JACK 3*32  54.01.0355 99 20 09E
J  152 JACK 3*32  54.01.0355 99 15 24E  J  191 JACK 3*32  54.01.0355 99 19 22B  J  202 JACK 3*32  54.01.0355 99 20 10D
J  152 JACK 3*32  54.01.0355 99 15 25D  J  191 JACK 3*32  54.01.0355 99 19 22C  J  202 JACK 3*32  54.01.0355 99 20 10E
J  152 JACK 3*32  54.01.0355 99 15 25E  J  191 JACK 3*32  54.01.0355 99 19 23A  J  201 JACK 3*32  54.01.0355 99 20 11A
J  152 JACK 3*32  54.01.0355 99 15 25F  J  191 JACK 3*32  54.01.0355 99 19 23B  J  201 JACK 3*32  54.01.0355 99 20 11B
J  152 JACK 3*32  54.01.0355 99 15 26D  J  191 JACK 3*32  54.01.0355 99 19 23C  J  201 JACK 3*32  54.01.0355 99 20 11C
J  152 JACK 3*32  54.01.0355 99 15 26E  J  191 JACK 3*32  54.01.0355 99 19 24A  J  202 JACK 3*32  54.01.0355 99 20 11D
J  152 JACK 3*32  54.01.0355 99 15 26F  J  191 JACK 3*32  54.01.0355 99 19 24B  J  202 JACK 3*32  54.01.0355 99 20 11E
J  152 JACK 3*32  54.01.0355 99 15 27D  J  191 JACK 3*32  54.01.0355 99 19 24C  J  201 JACK 3*32  54.01.0355 99 20 13A
J  152 JACK 3*32  54.01.0355 99 15 27E  J  191 JACK 3*32  54.01.0355 99 19 25A  J  201 JACK 3*32  54.01.0355 99 20 13B
J  152 JACK 3*32  54.01.0355 99 15 27F  J  191 JACK 3*32  54.01.0355 99 19 25B  J  201 JACK 3*32  54.01.0355 99 20 13C
J  152 JACK 3*32  54.01.0355 99 15 28D  J  191 JACK 3*32  54.01.0355 99 19 25C  J  202 JACK 3*32  54.01.0355 99 20 13D
J  152 JACK 3*32  54.01.0355 99 15 28E  J  191 JACK 3*32  54.01.0355 99 19 26A  J  202 JACK 3*32  54.01.0355 99 20 13E
J  152 JACK 3*32  54.01.0355 99 15 28F  J  191 JACK 3*32  54.01.0355 99 19 26B  J  201 JACK 3*32  54.01.0355 99 20 17A
J  152 JACK 3*32  54.01.0355 99 15 29D  J  191 JACK 3*32  54.01.0355 99 19 26C  J  201 JACK 3*32  54.01.0355 99 20 17B
J  152 JACK 3*32  54.01.0355 99 15 29E  J  191 JACK 3*32  54.01.0355 99 19 27A  J  201 JACK 3*32  54.01.0355 99 20 17C
J  152 JACK 3*32  54.01.0355 99 15 29F  J  191 JACK 3*32  54.01.0355 99 19 27B  J  202 JACK 3*32  54.01.0355 99 20 17D
J  152 JACK 3*32  54.01.0355 99 15 30D  J  191 JACK 3*32  54.01.0355 99 19 27C  J  202 JACK 3*32  54.01.0355 99 20 17E
J  152 JACK 3*32  54.01.0355 99 15 30E  J  191 JACK 3*32  54.01.0355 99 19 28A  J  201 JACK 3*32  54.01.0355 99 20 18A
J  152 JACK 3*32  54.01.0355 99 15 30F  J  191 JACK 3*32  54.01.0355 99 19 28B  J  201 JACK 3*32  54.01.0355 99 20 18B
J  152 JACK 3*32  54.01.0355 99 15 31D  J  191 JACK 3*32  54.01.0355 99 19 28C  J  201 JACK 3*32  54.01.0355 99 20 18C
J  152 JACK 3*32  54.01.0355 99 15 31E  J  191 JACK 3*32  54.01.0355 99 19 29A  J  202 JACK 3*32  54.01.0355 99 20 18D
J  152 JACK 3*32  54.01.0355 99 15 31F  J  191 JACK 3*32  54.01.0355 99 19 29B  J  202 JACK 3*32  54.01.0355 99 20 18E
                                        J  191 JACK 3*32  54.01.0355 99 19 29C  J  201 JACK 3*32  54.01.0355 99 20 21A
J  191 JACK 3*32  54.01.0355 99 19 02A  J  191 JACK 3*32  54.01.0355 99 19 30A  J  201 JACK 3*32  54.01.0355 99 20 21B
J  191 JACK 3*32  54.01.0355 99 19 02B  J  191 JACK 3*32  54.01.0355 99 19 30B  J  201 JACK 3*32  54.01.0355 99 20 21C
J  191 JACK 3*32  54.01.0355 99 19 02C  J  191 JACK 3*32  54.01.0355 99 19 30C  J  202 JACK 3*32  54.01.0355 99 20 21D
J  191 JACK 3*32  54.01.0355 99 19 03A  J  191 JACK 3*32  54.01.0355 99 19 31A  J  202 JACK 3*32  54.01.0355 99 20 21E
J  191 JACK 3*32  54.01.0355 99 19 03B  J  191 JACK 3*32  54.01.0355 99 19 31B  J  201 JACK 3*32  54.01.0355 99 20 22A
J  191 JACK 3*32  54.01.0355 99 19 03C  J  191 JACK 3*32  54.01.0355 99 19 31C  J  201 JACK 3*32  54.01.0355 99 20 22B
J  191 JACK 3*32  54.01.0355 99 19 05A                                          J  201 JACK 3*32  54.01.0355 99 20 22C
J  191 JACK 3*32  54.01.0355 99 19 05B  J  201 JACK 3*32  54.01.0355 99 20 02A  J  202 JACK 3*32  54.01.0355 99 20 22D
J  191 JACK 3*32  54.01.0355 99 19 05C  J  201 JACK 3*32  54.01.0355 99 20 02B  J  202 JACK 3*32  54.01.0355 99 20 22E
J  191 JACK 3*32  54.01.0355 99 19 06A  J  201 JACK 3*32  54.01.0355 99 20 02C  J  201 JACK 3*32  54.01.0355 99 20 23A
J  191 JACK 3*32  54.01.0355 99 19 06B  J  202 JACK 3*32  54.01.0355 99 20 02E  J  201 JACK 3*32  54.01.0355 99 20 23B
J  191 JACK 3*32  54.01.0355 99 19 06C  J  201 JACK 3*32  54.01.0355 99 20 03A  J  201 JACK 3*32  54.01.0355 99 20 23C
J  191 JACK 3*32  54.01.0355 99 19 08A  J  201 JACK 3*32  54.01.0355 99 20 03B  J  202 JACK 3*32  54.01.0355 99 20 23D
J  191 JACK 3*32  54.01.0355 99 19 08B  J  201 JACK 3*32  54.01.0355 99 20 03C  J  202 JACK 3*32  54.01.0355 99 20 23E
J  191 JACK 3*32  54.01.0355 99 19 08C  J  202 JACK 3*32  54.01.0355 99 20 03E  J  201 JACK 3*32  54.01.0355 99 20 24A
J  191 JACK 3*32  54.01.0355 99 19 09A  J  202 JACK 3*32  54.01.0355 99 20 04E  J  201 JACK 3*32  54.01.0355 99 20 24B
J  191 JACK 3*32  54.01.0355 99 19 09B  J  201 JACK 3*32  54.01.0355 99 20 05A  J  201 JACK 3*32  54.01.0355 99 20 24C
J  191 JACK 3*32  54.01.0355 99 19 09C  J  201 JACK 3*32  54.01.0355 99 20 05B  J  202 JACK 3*32  54.01.0355 99 20 24D
J  191 JACK 3*32  54.01.0355 99 19 11A  J  201 JACK 3*32  54.01.0355 99 20 05C  J  202 JACK 3*32  54.01.0355 99 20 24E
J  191 JACK 3*32  54.01.0355 99 19 11B  J  202 JACK 3*32  54.01.0355 99 20 05E  J  201 JACK 3*32  54.01.0355 99 20 25A
J  191 JACK 3*32  54.01.0355 99 19 11C  J  201 JACK 3*32  54.01.0355 99 20 06A  J  201 JACK 3*32  54.01.0355 99 20 25B
J  191 JACK 3*32  54.01.0355 99 19 13A  J  201 JACK 3*32  54.01.0355 99 20 06B  J  201 JACK 3*32  54.01.0355 99 20 25C
J  191 JACK 3*32  54.01.0355 99 19 13B  J  201 JACK 3*32  54.01.0355 99 20 06C  J  202 JACK 3*32  54.01.0355 99 20 25D
J  191 JACK 3*32  54.01.0355 99 19 13C  J  202 JACK 3*32  54.01.0355 99 20 06E  J  202 JACK 3*32  54.01.0355 99 20 25E
J  191 JACK 3*32  54.01.0355 99 19 17A  J  202 JACK 3*32  54.01.0355 99 20 07E  J  201 JACK 3*32  54.01.0355 99 20 26A
                                  ./.                                  ./.                                  ./.
```

* STUDER * SIGNAL WIRE LIST * 82/01/22 * 16:17 * PAGE 15 *

A80 MASTER: PROCESSOR BACK PANEL 1.228.799.00 79/12/14

SIG.NAME	COLOR	TYPE	GR	EL	PT	S	DESCRIPTION OF ELEMENT	
FILTNRW		W	99	12	31C	J	121 JACK 3*32	54.01.0355
		W	99	14	31A	J	141 JACK 3*32	54.01.0355
FILTWIDE		W	99	12	09C	J	121 JACK 3*32	54.01.0355
		W	99	14	09A	J	141 JACK 3*32	54.01.0355
INCCDREP		W	99	11	29C	J	111 JACK 3*32	54.01.0355
		W	99	12	05A	J	121 JACK 3*32	54.01.0355
K-CUTINH		W	99	14	21B	J	141 JACK 3*32	54.01.0355
		W	99	14	21F	J	142 JACK 3*32	54.01.0355
K-PRESS		W	99	14	18B	J	141 JACK 3*32	54.01.0355
		W	99	14	18F	J	142 JACK 3*32	54.01.0355
K-RESET		W	99	14	11D	J	142 JACK 3*32	54.01.0355
		W	99	15	11F	J	152 JACK 3*32	54.01.0355
LKMCDEDR		W	99	14	03A	J	141 JACK 3*32	54.01.0355
LOC-IN*		W	99	14	17F	J	142 JACK 3*32	54.01.0355
		W	99	15	17D	J	152 JACK 3*32	54.01.0355
MCODETTL		W	99	12	11C	J	121 JACK 3*32	54.01.0355
MS1TLS		W	99	14	05C	J	141 JACK 3*32	54.01.0355
MS2TLS		W	99	14	06C	J	141 JACK 3*32	54.01.0355
NYRECTTL		W	99	14	29C	J	141 JACK 3*32	54.01.0355
PARKEDDR		W	99	14	08A	J	141 JACK 3*32	54.01.0355
RECCCDTM		W	99	11	03A	J	111 JACK 3*32	54.01.0355
RECCOD1		W	99	11	02A	J	111 JACK 3*32	54.01.0355
RECCCD2		W	99	11	04A	J	111 JACK 3*32	54.01.0355
RECHDSCR		W	99	11	18B	J	111 JACK 3*32	54.01.0355
		W	99	11	23A	J	111 JACK 3*32	54.01.0355
		W	99	11	23B	J	111 JACK 3*32	54.01.0355
		W	99	11	23C	J	111 JACK 3*32	54.01.0355
		W	99	12	23A	J	121 JACK 3*32	54.01.0355
		W	99	12	23B	J	121 JACK 3*32	54.01.0355
		W	99	12	23C	J	121 JACK 3*32	54.01.0355
RECHD1		W	99	11	18A	J	111 JACK 3*32	54.01.0355
RECHD2		W	99	11	18C	J	111 JACK 3*32	54.01.0355
REPINSEL		W	99	12	06C	J	121 JACK 3*32	54.01.0355
		W	99	14	28A	J	141 JACK 3*32	54.01.0355
REPROSCR		W	99	12	28A	J	121 JACK 3*32	54.01.0355
		W	99	12	28B	J	121 JACK 3*32	54.01.0355
(CONT.)		W	99	12	28C	J	121 JACK 3*32	54.01.0355
REPROSEL		W	99	12	29A	J	121 JACK 3*32	54.01.0355
		W	99	14	29A	J	141 JACK 3*32	54.01.0355
REPROO.O		W	99	12	27C	J	121 JACK 3*32	54.01.0355
REPRO1		W	99	12	25C	J	121 JACK 3*32	54.01.0355
REPRO2		W	99	12	26C	J	121 JACK 3*32	54.01.0355
S-CUT		W	99	14	07D	J	142 JACK 3*32	54.01.0355
		W	99	14	23A	J	141 JACK 3*32	54.01.0355
		W	99	15	07F	J	152 JACK 3*32	54.01.0355
S-FORW		W	99	14	03D	J	142 JACK 3*32	54.01.0355
		W	99	15	03F	J	152 JACK 3*32	54.01.0355
S-HIGH		W	99	14	18C	J	141 JACK 3*32	54.01.0355
		W	99	15	22F	J	152 JACK 3*32	54.01.0355
S-LOW		W	99	14	22D	J	142 JACK 3*32	54.01.0355
		W	99	14	23B	J	141 JACK 3*32	54.01.0355
S-LOWACH		W	99	11	05B	J	111 JACK 3*32	54.01.0355
S-PLAY		W	99	14	04B	J	141 JACK 3*32	54.01.0355
		W	99	15	04F	J	152 JACK 3*32	54.01.0355
S-REC		W	99	14	06D	J	142 JACK 3*32	54.01.0355
		W	99	15	06F	J	152 JACK 3*32	54.01.0355
S-REPR		W	99	14	04D	J	142 JACK 3*32	54.01.0355
		W	99	14	21A	J	141 JACK 3*32	54.01.0355
S-REW		W	99	14	02D	J	142 JACK 3*32	54.01.0355
		W	99	15	02F	J	152 JACK 3*32	54.01.0355
S-STOP		W	99	14	05D	J	142 JACK 3*32	54.01.0355
		W	99	15	05F	J	152 JACK 3*32	54.01.0355
SYMCODO1		W	99	12	03C	J	121 JACK 3*32	54.01.0355
SYMCODO2		W	99	12	04C	J	121 JACK 3*32	54.01.0355
SYNCH1		W	99	11	21C	J	111 JACK 3*32	54.01.0355
		W	99	12	21C	J	121 JACK 3*32	54.01.0355
SYNCH2		W	99	11	22C	J	111 JACK 3*32	54.01.0355
		W	99	12	22C	J	121 JACK 3*32	54.01.0355
SYNCSEL		W	99	12	30C	J	121 JACK 3*32	54.01.0355
		W	99	14	30A	J	141 JACK 3*32	54.01.0355
S20TTL		W	99	20	11F	J	202 JACK 3*32	54.01.0355

./.

* STUDER * SIGNAL WIRE LIST * 82/01/22 * 16:17 * PAGE 16 *

A80 MASTER: PROCESSOR BACK PANEL 1.228.799.00 79/12/14

SIG.NAME	COLOR	TYPE	GR	EL	PT	S	DESCRIPTION OF ELEMENT	
X1MPRGR		W	99	14	22C	J	141 JACK 3*32	54.01.0355
		W	99	20	22F	J	202 JACK 3*32	54.01.0355
X2MPRGR		W	99	14	23C	J	141 JACK 3*32	54.01.0355
		W	99	20	23F	J	202 JACK 3*32	54.01.0355
X2TLS		W	99	14	04C	J	141 JACK 3*32	54.01.0355
X3MPRGR		W	99	14	21C	J	141 JACK 3*32	54.01.0355
		W	99	20	21F	J	202 JACK 3*32	54.01.0355
X4MPRGR		W	99	20	18F	J	202 JACK 3*32	54.01.0355
X5MPRGR		W	99	20	13F	J	202 JACK 3*32	54.01.0355
Y-CLK		W	99	14	13D	J	142 JACK 3*32	54.01.0355
		W	99	15	13F	J	152 JACK 3*32	54.01.0355
Y-FORW		W	99	14	11F	J	142 JACK 3*32	54.01.0355
		W	99	15	11D	J	152 JACK 3*32	54.01.0355
Y-ICLK		W	99	14	17D	J	142 JACK 3*32	54.01.0355
		W	99	15	17F	J	152 JACK 3*32	54.01.0355
Y-MOVE-D		W	99	14	09B	J	141 JACK 3*32	54.01.0355
		W	99	14	09F	J	142 JACK 3*32	54.01.0355
Y-MUTE		W	99	14	08D	J	142 JACK 3*32	54.01.0355
		W	99	14	24A	J	141 JACK 3*32	54.01.0355
Y-MUTEMD		W	99	11	05C	J	111 JACK 3*32	54.01.0355
Y-REC		W	99	11	05A	J	111 JACK 3*32	54.01.0355
		W	99	14	06A	J	141 JACK 3*32	54.01.0355
		W	99	14	22A	J	141 JACK 3*32	54.01.0355
Y-REVRS		W	99	14	10F	J	142 JACK 3*32	54.01.0355
		W	99	15	10D	J	152 JACK 3*32	54.01.0355
Y-TRSP		W	99	14	22B	J	141 JACK 3*32	54.01.0355
		W	99	14	22F	J	142 JACK 3*32	54.01.0355
YAC-BIAS		W	99	11	06A	J	111 JACK 3*32	54.01.0355
YAC-ERAS		W	99	11	07C	J	111 JACK 3*32	54.01.0355
YPS-MCVE		W	99	14	08F	J	142 JACK 3*32	54.01.0355
		W	99	15	08D	J	152 JACK 3*32	54.01.0355
Y1MPRGR		W	99	20	10F	J	202 JACK 3*32	54.01.0355
Y2MPRGR		W	99	14	10B	J	141 JACK 3*32	54.01.0355
		W	99	20	09F	J	202 JACK 3*32	54.01.0355
Y3MPRGR		W	99	14	17C	J	141 JACK 3*32	54.01.0355
		W	99	20	17F	J	202 JACK 3*32	54.01.0355
0.0-CT		W	99	14	18D	J	142 JACK 3*32	54.01.0355
		W	99	15	18F	J	152 JACK 3*32	54.01.0355
0.0-TC		W	99	14	09D	J	142 JACK 3*32	54.01.0355
		W	99	15	09F	J	152 JACK 3*32	54.01.0355
0.0EMC1		W	99	14	23D	J	142 JACK 3*32	54.01.0355
0.0INA80		W	99	19	10A	J	191 JACK 3*32	54.01.0355
		W	99	19	10B	J	191 JACK 3*32	54.01.0355
		W	99	19	10C	J	191 JACK 3*32	54.01.0355
0.0IN150		W	99	20	10A	J	201 JACK 3*32	54.01.0355
		W	99	20	10B	J	201 JACK 3*32	54.01.0355
		W	99	20	10C	J	201 JACK 3*32	54.01.0355
0-AC1		W	99	11	09A	J	111 JACK 3*32	54.01.0355
		W	99	11	11A	J	111 JACK 3*32	54.01.0355
0-AC2		W	99	11	09C	J	111 JACK 3*32	54.01.0355
		W	99	11	11C	J	111 JACK 3*32	54.01.0355
0-BIAS		W	99	11	07A	J	111 JACK 3*32	54.01.0355
0-ERASE		W	99	11	06B	J	111 JACK 3*32	54.01.0355
		W	99	11	06C	J	111 JACK 3*32	54.01.0355

SIG.NAME	COLOR	TYPE	GR	EL	PT	S	DESCRIPTION OF ELEMENT	
(CONT.)		W	99	12	16A	J	121 JACK 3*32	54.01.0355
		W	99	12	16B	J	121 JACK 3*32	54.01.0355
		W	99	12	16C	J	121 JACK 3*32	54.01.0355
		W	99	14	16A @	J	141 JACK 3*32	54.01.0355
		W	99	14	16B @	J	141 JACK 3*32	54.01.0355
		W	99	14	16C @	J	141 JACK 3*32	54.01.0355
		W	99	14	16D	J	142 JACK 3*32	54.01.0355
		W	99	14	16E	J	142 JACK 3*32	54.01.0355
		W	99	14	16F	J	142 JACK 3*32	54.01.0355
		W	99	15	16D	J	152 JACK 3*32	54.01.0355
		W	99	15	16E	J	152 JACK 3*32	54.01.0355
		W	99	15	16F	J	152 JACK 3*32	54.01.0355
		W	99	19	16A	J	191 JACK 3*32	54.01.0355
		W	99	19	16B	J	191 JACK 3*32	54.01.0355
		W	99	19	16C	J	191 JACK 3*32	54.01.0355
		W	99	20	16A	J	201 JACK 3*32	54.01.0355
		W	99	20	16B	J	201 JACK 3*32	54.01.0355
		W	99	20	16C	J	201 JACK 3*32	54.01.0355
		W	99	20	16D	J	202 JACK 3*32	54.01.0355
		W	99	20	16E	J	202 JACK 3*32	54.01.0355
		W	99	20	16F	J	202 JACK 3*32	54.01.0355
+20V A80		W	99	19	07A	J	191 JACK 3*32	54.01.0355
		W	99	19	07B	J	191 JACK 3*32	54.01.0355
		W	99	19	07C	J	191 JACK 3*32	54.01.0355
+24		W	99	11	20A	J	111 JACK 3*32	54.01.0355
		W	99	11	20B	J	111 JACK 3*32	54.01.0355
		W	99	11	20C	J	111 JACK 3*32	54.01.0355
		W	99	12	20A	J	121 JACK 3*32	54.01.0355
		W	99	12	20B	J	121 JACK 3*32	54.01.0355
		W	99	12	20C	J	121 JACK 3*32	54.01.0355
		W	99	14	05A	J	141 JACK 3*32	54.01.0355
		W	99	14	20A @	J	141 JACK 3*32	54.01.0355
		W	99	14	20B @	J	141 JACK 3*32	54.01.0355
		W	99	14	20C @	J	141 JACK 3*32	54.01.0355
		W	99	14	20D	J	142 JACK 3*32	54.01.0355
		W	99	14	20E	J	142 JACK 3*32	54.01.0355
		W	99	14	20F	J	142 JACK 3*32	54.01.0355
		W	99	15	20D	J	152 JACK 3*32	54.01.0355
		W	99	15	20E	J	152 JACK 3*32	54.01.0355
		W	99	15	20F	J	152 JACK 3*32	54.01.0355
		W	99	19	20A	J	191 JACK 3*32	54.01.0355
		W	99	19	20B	J	191 JACK 3*32	54.01.0355
		W	99	19	20C	J	191 JACK 3*32	54.01.0355
		W	99	20	20A	J	201 JACK 3*32	54.01.0355
		W	99	20	20B	J	201 JACK 3*32	54.01.0355
		W	99	20	20C	J	201 JACK 3*32	54.01.0355
		W	99	20	20D	J	202 JACK 3*32	54.01.0355
		W	99	20	20E	J	202 JACK 3*32	54.01.0355
		W	99	20	20F	J	202 JACK 3*32	54.01.0355
+24.0		W	99	14	24D	J	142 JACK 3*32	54.01.0355
		W	99	15	24D	J	152 JACK 3*32	54.01.0355
+24VTDCT		W	99	14	13F	J	142 JACK 3*32	54.01.0355

./.

SIG.NAME	COLOR	TYPE	GR	EL	PT	S	DESCRIPTION OF ELEMENT	
(CONT.)		W	99	15	13D	J	152 JACK 3*32	54.01.0355
+31V 150		W	99	20	07A	J	201 JACK 3*32	54.01.0355
		W	99	20	07B	J	201 JACK 3*32	54.01.0355
		W	99	20	07C	J	201 JACK 3*32	54.01.0355
- 5		W	99	11	12A	J	111 JACK 3*32	54.01.0355
		W	99	11	12B	J	111 JACK 3*32	54.01.0355
		W	99	11	12C	J	111 JACK 3*32	54.01.0355
		W	99	12	12A	J	121 JACK 3*32	54.01.0355
		W	99	12	12B	J	121 JACK 3*32	54.01.0355
		W	99	12	12C	J	121 JACK 3*32	54.01.0355
		W	99	14	12A @	J	141 JACK 3*32	54.01.0355
		W	99	14	12B @	J	141 JACK 3*32	54.01.0355
		W	99	14	12C @	J	141 JACK 3*32	54.01.0355
		W	99	14	12D	J	142 JACK 3*32	54.01.0355
		W	99	14	12E	J	142 JACK 3*32	54.01.0355
		W	99	14	12F	J	142 JACK 3*32	54.01.0355
		W	99	15	12D	J	152 JACK 3*32	54.01.0355
		W	99	15	12E	J	152 JACK 3*32	54.01.0355
		W	99	15	12F	J	152 JACK 3*32	54.01.0355
		W	99	19	12A	J	191 JACK 3*32	54.01.0355
		W	99	19	12B	J	191 JACK 3*32	54.01.0355
		W	99	19	12C	J	191 JACK 3*32	54.01.0355
		W	99	20	12A	J	201 JACK 3*32	54.01.0355
		W	99	20	12B	J	201 JACK 3*32	54.01.0355
		W	99	20	12C	J	201 JACK 3*32	54.01.0355
		W	99	20	12D	J	202 JACK 3*32	54.01.0355
		W	99	20	12E	J	202 JACK 3*32	54.01.0355
		W	99	20	12F	J	202 JACK 3*32	54.01.0355
- 5.8		W	99	14	24F	J	142 JACK 3*32	54.01.0355
		W	99	15	24F	J	152 JACK 3*32	54.01.0355
-10V 150		W	99	20	04A	J	201 JACK 3*32	54.01.0355
		W	99	20	04B	J	201 JACK 3*32	54.01.0355
		W	99	20	04C	J	201 JACK 3*32	54.01.0355
-12		W	99	11	14A	J	111 JACK 3*32	54.01.0355
		W	99	11	14B	J	111 JACK 3*32	54.01.0355
		W	99	11	14C	J	111 JACK 3*32	54.01.0355
		W	99	12	14A	J	121 JACK 3*32	54.01.0355
		W	99	12	14B	J	121 JACK 3*32	54.01.0355
		W	99	12	14C	J	121 JACK 3*32	54.01.0355
		W	99	14	14A @	J	141 JACK 3*32	54.01.0355
		W	99	14	14B @	J	141 JACK 3*32	54.01.0355
		W	99	14	14C @	J	141 JACK 3*32	54.01.0355
		W	99	14	14D	J	142 JACK 3*32	54.01.0355
		W	99	14	14E	J	142 JACK 3*32	54.01.0355
		W	99	14	14F	J	142 JACK 3*32	54.01.0355
		W	99	15	14D	J	152 JACK 3*32	54.01.0355
		W	99	15	14E	J	152 JACK 3*32	54.01.0355
		W	99	15	14F	J	152 JACK 3*32	54.01.0355
		W	99	19	14A	J	191 JACK 3*32	54.01.0355
		W	99	19	14B	J	191 JACK 3*32	54.01.0355
		W	99	19	14C	J	191 JACK 3*32	54.01.0355

./.

SIG.NAME	COLOR	TYPE	GR	EL	PT	S	DESCRIPTION OF ELEMENT	
(CONT.)		W	99	20	14A	J	201 JACK 3*32	54.01.0355
		W	99	20	14B	J	201 JACK 3*32	54.01.0355
		W	99	20	14C	J	201 JACK 3*32	54.01.0355
		W	99	20	14D	J	202 JACK 3*32	54.01.0355
		W	99	20	14E	J	202 JACK 3*32	54.01.0355
		W	99	20	14F	J	202 JACK 3*32	54.01.0355
-20V A80		W	99	19	04A	J	191 JACK 3*32	54.01.0355
		W	99	19	04B	J	191 JACK 3*32	54.01.0355
		W	99	19	04C	J	191 JACK 3*32	54.01.0355
AC1		W	99	11	08A	J	111 JACK 3*32	54.01.0355
		W	99	11	10A	J	111 JACK 3*32	54.01.0355
AC2		W	99	11	08C	J	111 JACK 3*32	54.01.0355
		W	99	11	10C	J	111 JACK 3*32	54.01.0355
B-CCHRDY		W	99	14	06B	J	141 JACK 3*32	54.01.0355
		W	99	20	05F	J	202 JACK 3*32	54.01.0355
B-CCHREC		W	99	14	07B	J	141 JACK 3*32	54.01.0355
		W	99	20	06F	J	202 JACK 3*32	54.01.0355
B-CCHREP		W	99	14	08B	J	141 JACK 3*32	54.01.0355
		W	99	20	07F	J	202 JACK 3*32	54.01.0355
B-CCHSAF		W	99	14	28C	J	141 JACK 3*32	54.01.0355
		W	99	20	28F	J	202 JACK 3*32	54.01.0355
B-CCHSYN		W	99	14	26C	J	141 JACK 3*32	54.01.0355
		W	99	20	26F	J	202 JACK 3*32	54.01.0355
B-CUT		W	99	14	07F	J	142 JACK 3*32	54.01.0355
		W	99	15	07D	J	152 JACK 3*32	54.01.0355
B-FORW		W	99	14	03B	J	141 JACK 3*32	54.01.0355
		W	99	14	03F	J	142 JACK 3*32	54.01.0355
		W	99	15	03D	J	152 JACK 3*32	54.01.0355
B-INDIC		W	99	14	23F	J	142 JACK 3*32	54.01.0355
		W	99	15	23F	J	152 JACK 3*32	54.01.0355
B-OUT=IN		W	99	14	11A	J	141 JACK 3*32	54.01.0355
		W	99	20	27F	J	202 JACK 3*32	54.01.0355
B-REC		W	99	14	06F	J	142 JACK 3*32	54.01.0355
		W	99	15	06D	J	152 JACK 3*32	54.01.0355
B-REMOTE		W	99	14	03C	J	141 JACK 3*32	54.01.0355
		W	99	20	29F	J	202 JACK 3*32	54.01.0355
B-REPR		W	99	14	04F	J	142 JACK 3*32	54.01.0355
		W	99	15	04D	J	152 JACK 3*32	54.01.0355
B-RES05		W	99	20	08F	J	202 JACK 3*32	54.01.0355

SIG.NAME	COLOR	TYPE	GR	EL	PT	S	DESCRIPTION OF ELEMENT	
B-RES09		W	99	20	03F	J	202 JACK 3*32	54.01.0355
B-RES10		W	99	20	04F	J	202 JACK 3*32	54.01.0355
B-RES11		W	99	20	25F	J	202 JACK 3*32	54.01.0355
B-RES12		W	99	20	24F	J	202 JACK 3*32	54.01.0355
B-RES13		W	99	20	04D	J	202 JACK 3*32	54.01.0355
B-RES14		W	99	20	02F	J	202 JACK 3*32	54.01.0355
B-RES15		W	99	20	30F	J	202 JACK 3*32	54.01.0355
B-RES16		W	99	20	31F	J	202 JACK 3*32	54.01.0355
B-RES17		W	99	20	03D	J	202 JACK 3*32	54.01.0355
B-RES18		W	99	20	02D	J	202 JACK 3*32	54.01.0355
B-RES19		W	99	20	30D	J	202 JACK 3*32	54.01.0355
B-RES20		W	99	20	31D	J	202 JACK 3*32	54.01.0355
B-REW		W	99	14	02B	J	141 JACK 3*32	54.01.0355
		W	99	14	02F	J	142 JACK 3*32	54.01.0355
		W	99	15	02D	J	152 JACK 3*32	54.01.0355
B-STOP		W	99	14	05B	J	141 JACK 3*32	54.01.0355
		W	99	14	05F	J	142 JACK 3*32	54.01.0355
		W	99	15	05D	J	152 JACK 3*32	54.01.0355
BPSUPVIS		W	99	20	08D	J	202 JACK 3*32	54.01.0355
CCHRDY		W	99	14	25C	J	141 JACK 3*32	54.01.0355
CCHREC		W	99	11	31C	J	111 JACK 3*32	54.01.0355
		W	99	14	30C	J	141 JACK 3*32	54.01.0355
CCHSAFE		W	99	14	24C	J	141 JACK 3*32	54.01.0355
CMD.ENB2		W	99	14	21D	J	142 JACK 3*32	54.01.0355
CODINR1		W	99	12	02A	J	121 JACK 3*32	54.01.0355
CODINR2		W	99	12	02C	J	121 JACK 3*32	54.01.0355
CODOSELB		W	99	12	05C	J	121 JACK 3*32	54.01.0355
EDMODECR		W	99	14	07A	J	141 JACK 3*32	54.01.0355
ERAHDSCR		W	99	11	13B	J	111 JACK 3*32	54.01.0355
ERASEHD1		W	99	11	13A	J	111 JACK 3*32	54.01.0355
ERASEHD2		W	99	11	13C	J	111 JACK 3*32	54.01.0355