TEAC®

A-2340R

4CHANNEL SIMUL TRAK STEREO TAPE DECK

SERVICE MANUAL

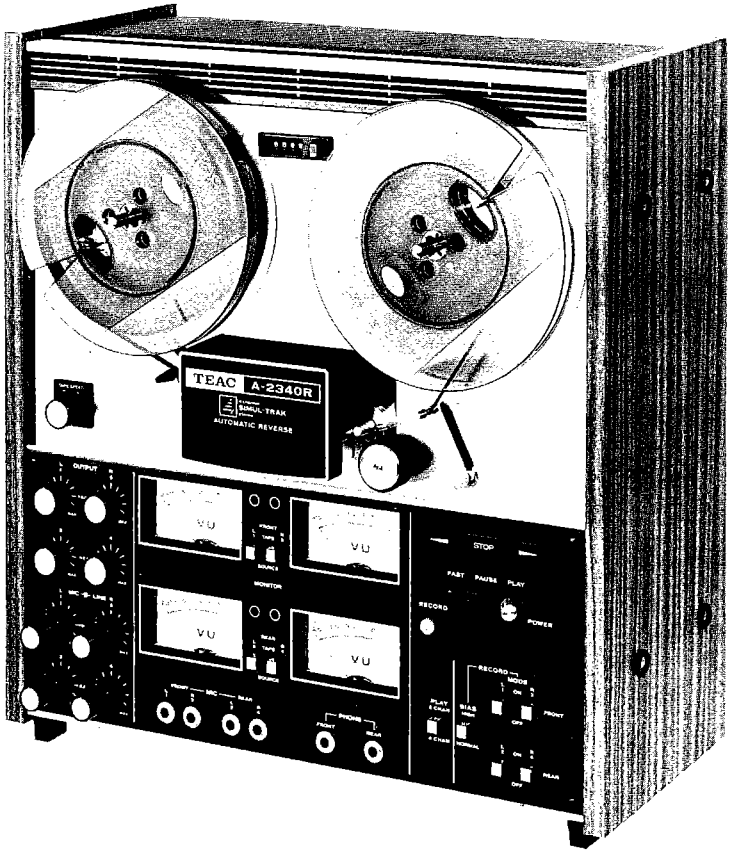

TEAC CORPORATION

SALES OFFICE: SHINJUKU BUILDING
1-8-1, NISHI-SHINJUKU, SHINJUKU, TOKYO

TEAC HONGKONG LIMITED MAIN OFFICE: ROOM NO. 1105
MELBOURNE PLAZA, 33 QUEEN'S ROAD
CENTRAL, HONG KONG

U.S. DISTRIBUTOR: TEAC CORPORATION OF AMERICA
7733 TELEGRAPH ROAD
MONTEBELLO, CALIFORNIA 90640
U.S.A.

EUROPEAN DISTRIBUTOR: TEAC EUROPE B.V.
KABELWEG 45-47, AMSTERDAM-W. 2,
HOLLAND

MT2350E100

PRINTED IN JAPAN 0273 SYU1

1. GENERAL DESCRIPTION

The TEAC A-2340R is a semi-professional tape deck capable of four channel, stereophonic and monophonic recording and playback, with 2 channel manual or automatic reverse play. It offers operating speeds of 7-1/2ips and 3-3/4ips. The basic design of the A-2340 is highly similar to that of the A-2340R, therefore information in this service manual may be applied to the A-2340.

This service manual provides adjustment and alignment procedures, schematic diagrams and parts replacement information and the proper procedures for obtaining necessary repair parts.

If adjustments or repair procedures are not clear or seem difficult to accomplish or should you desire more detailed technical information, please contact your nearest TEAC dealer, TEAC Corporation or Affiliation Corporations, addresses of which are printed in this manual.

INDEX

2. SERVICE DATA

MECHANICAL

TYPE:	Four track 4 channel stereophonic Four track 2 channel stereophonic Four track 1 channel monophonic
HEADS:	Three: Erase (Ferrite), Record, Playback (Permalloy)
REEL SIZE:	7" maximum NAB reel
TAPE WIDTH:	Standard 1/4 inch tape
TAPE SPEED:	7-1/2ips and 3-3/4ips
MOTORS:	Two 6-pole eddy current motors for reel drive 4/8 pole hysteresis synchronous capstan motor.
WOW AND FLUTTER:	0.12% at 7-1/2ips 0.15% at 3-3/4ips Wow and flutter measured according to weighted NAB standard using TEAC flutter free tape.
FAST WINDING TIME:	Approx. 90 seconds or less for 1,200 feet.
OPPERATING POSITION:	Horizontal or vertical
POWER REQUIREMENTS:	100/117/200/220/240 V AC 50/60Hz 140W
WEIGHT:	44 lbs (20 kg) net.

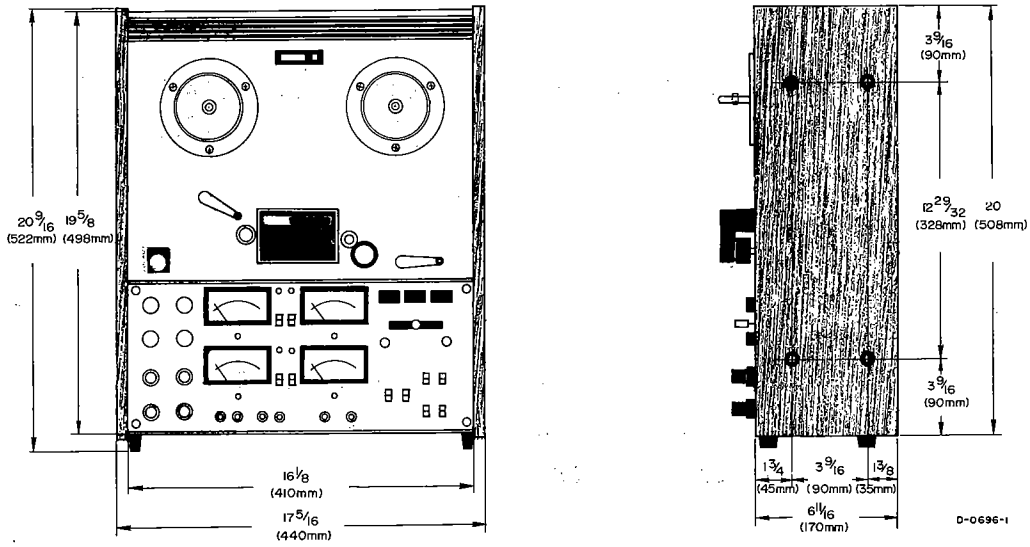

Fig. 2-1 Demensions -A-2340R-

ELECTRICAL

TRANSISTORS:	2SC1000(BL) × 2 2SC 693(GU) × 4 2SA6661(S) × 2 2SC644(T) × 2 2SC828(S) × 10 2SC971× 2 2SC536(F) × 2
DIODES:	FR2-06 × 4 FR2-10 × 4
FREQUENCY RESPONSE:	7-1/2ips 40Hz∿18kHz ±3dB 3-3/4ips 50Hz∿10kHz ±3dB
INPUT:	MIC: 0.3mV/10kΩ LINE: 0.1V/100kΩ
OUTPUT:	LINE: approx. 0.3V/10kΩ or more HEADPHONE: 0.3mW/8Ω
SIGNAL TO NOISE RATIO:	7-1/2ips 48dB or higher 3-3/4ips 46dB or higher at playback
BIAS FREQUENCY:	100±5kHz push-pull oscillator
CROSSTALK REJECTION:	35dB or more adjacent track at 100 Hz
CHANNEL SEPARATION:	45dB or more channel to channel at 1kHz
ERASE EFFICIENCY:	60dB or more at 7-1/2ips

NOTE

As a result of continuing changes and improvements during the production run, minor differences may be found between early and later machines. Refer to manual change sheets for information concerning modifications.

3. EQUIPMENT REQUIRED

FOR MECHANICAL MEASUREMENT

SPRING SCALE:	0∿4kg (0∿8 lbs) #5086025000 0∿300g (0∿10 0z) #5086026000
TEST TAPE:	TEAC YTT-2003 (7-1/2ips) TEAC YTT-2002 (3-3/4ips)
FLUTTER METER:	Meguro Model MK665B (preferred) or Sentinel FL-3D-1
DIGITAL FREQ. COUNTER:	Capable of 0 to 5kHz indication
TOOLS:	General, 2mm nut driver #5086014000, Hex head, Allen wrench #5086021000

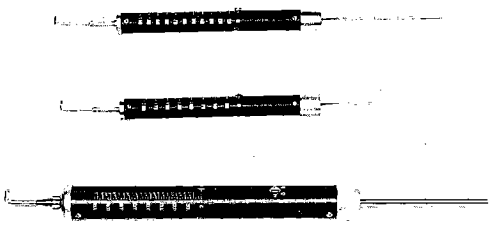

Fig. 3-1 Spring Scale

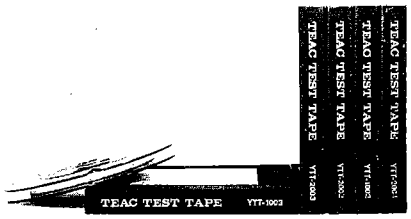

Fig. 3-2 TEAC Test Tape

FOR ELECTRICAL MEASUREMENT

TEST TAPE:	TEAC YTT-1003 for 7-1/2ips TEAC YTT-1002 for 3-3/4ips
EMPTY REEL:	TEAC RE-702 (2" hub) TEAC RE-701 (4" hub)
TEST SET:	TEAC M-826A test set (Level meter)
BAND PASS FILTER:	TEAC M-206A (1kHz)
VTVM:	hp model 4302B or equip
RESISTOR:	Non inductive type 8 ohm/1W
OSCILLOSCOPE:	General purpose

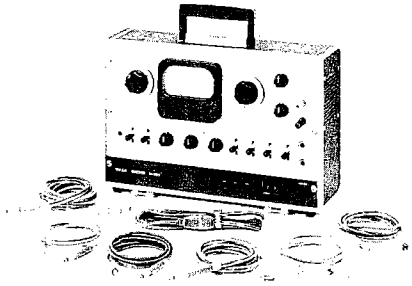

Fig. 3-3 TEAC Test Set

NOTE

Use of the TEAC M-826A test set is recommended. This set incorporates an AC VTVM, Audio Oscillator, Channel Selecting switch, Variable Attenuator, Monitor Speaker and Cables.

TEAC M-826A measures the RMS value of the voltage (0 dB = 0.775 V). Characteristics of this test set are similar to the standard VU-meter.

4. PARTIAL DISASSEMBLY

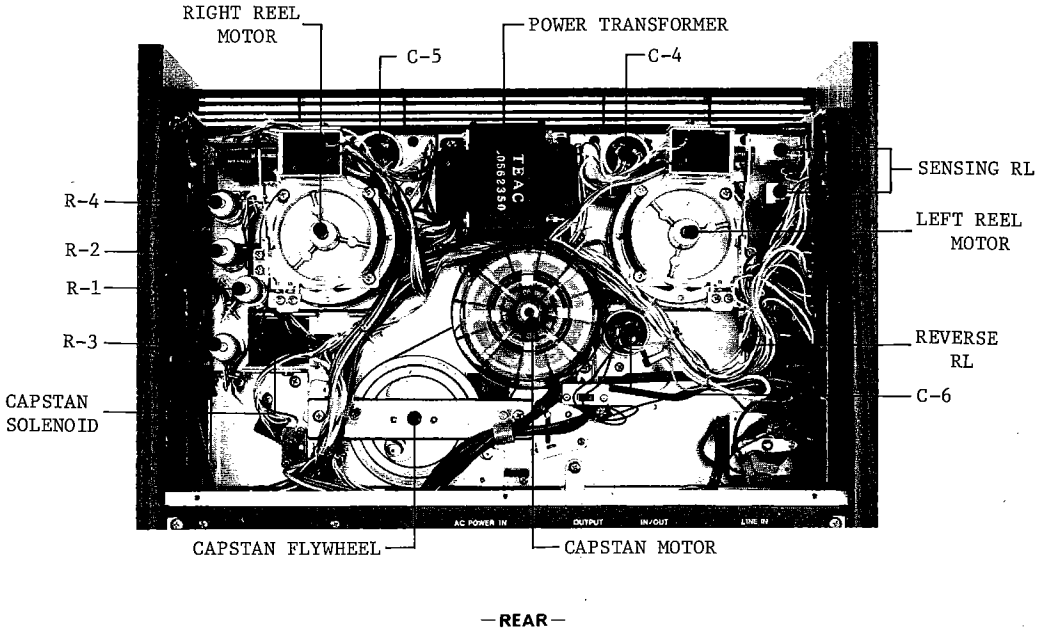

Fig. 4-1 Tape Transport Parts Location

REMOVING WOODEN SIDES AND REAR PANEL

See illustration for complete disassembly instructions.

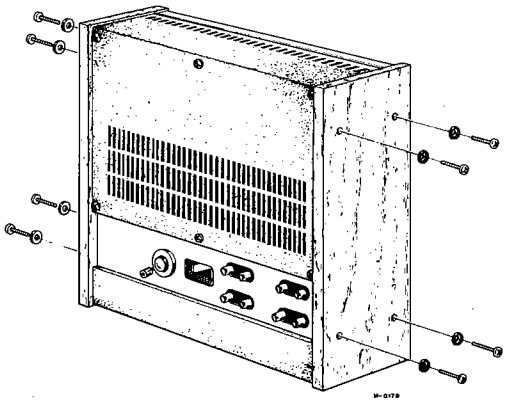

Fig. 4-2 Wood Sides

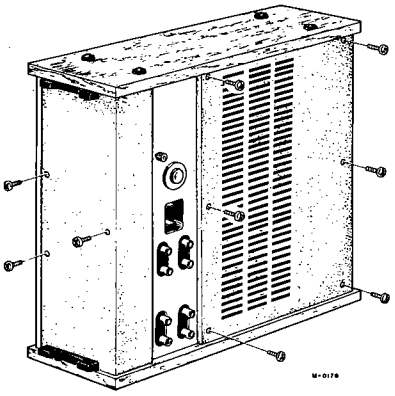

Fig. 4-3 Rear Panel and Bottom Plate

Most amplifier checks and adjustments can be made from the bottom with the plate removed.
These adjustments should be performed by experienced technicians, and then only when going through the complete test and check procedures on the unit which is being tested.

HEAD REPLACEMENT

CAUTION

Power to the unit must be switched off when removing the heads, this will prevent transient pulses from passing through the heads causing strong magnetization or damage to the delicate windings. After head replacement, thorough demagnetization is recommended.

NOTE

The heads of the A-2340R can be changed either as a complete assembly or individually as required.

HEAD ASSEMBLY REPLACEMENT

To change the head assembly as a unit, remove the two mounting screws, (one on each end).
Note the positions of the wires on the circuit board before unsoldering.
Solder the wires of the new assembly in exactly the same positions.

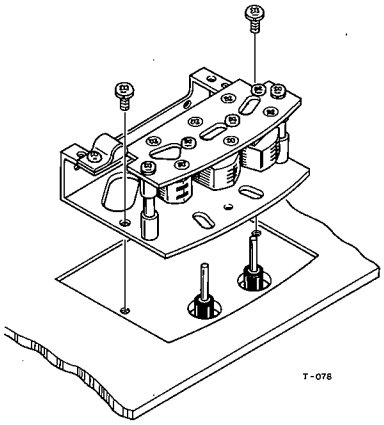

Fig. 4-4 Head Assembly Removal

HEAD REPLACEMENT

To replace a single head, a special 2mm nut driver is required. Remove the two nuts on the defective head through the access hole provided, this releases the head from the mounting plate. Note the position of the wires on the circuit board. Connect the new head in the same manner.
Replace the mounting securing the new head to the plate, perform head alignment before operation.
Head installation mounting provides for left or right positioning. After installing heads, determine proper position while recording or playing back a tape.

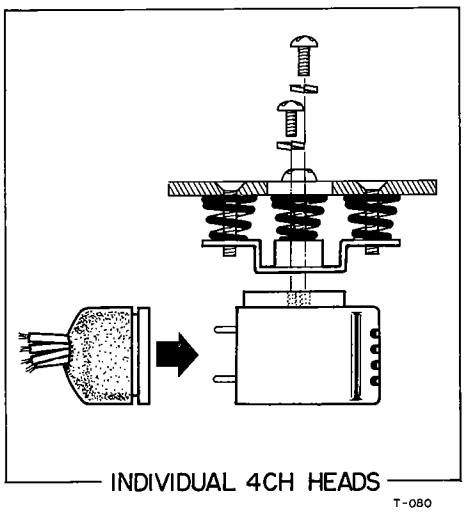

Fig. 4-5 Head Replacement

REMOVAL OF CAPSTAN MOTOR

1. Remove the three screws holding the capstan motor.
2. Unsolder the six wires connecting the capstan motor.
3. Remove the four screws holding the capstan motor.
4. Loosen the two set screws (hex head) in pulley and lift off pulley.

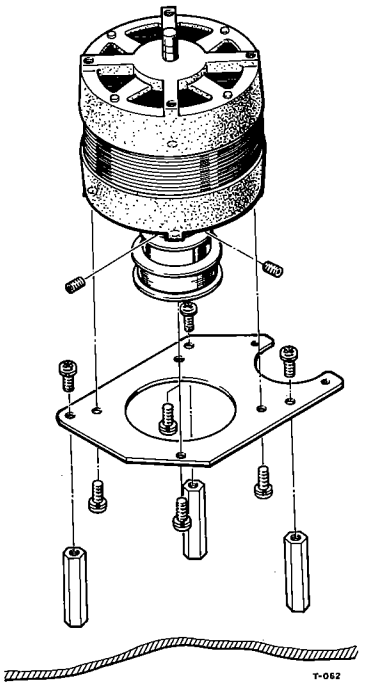

Fig. 4-6 Capstan Motor Removal

REMOVAL OF CAPSTAN ASSEMBLY

1. Unscrew capstan cover (front panel).
2. Remove two screws from rear bracket, allow bracket to drop toward floor of case.
3. Remove capstan belt.
4. Loosen two screws in capstan assy flywheel. Remove flywheel.
5. Remove three screws in capstan assy.
6. Gently move capstan assy up and down until it slides out of panel.

NOTE

A clearance of 0.01" must be maintained between the flywheel and capstan assembly.

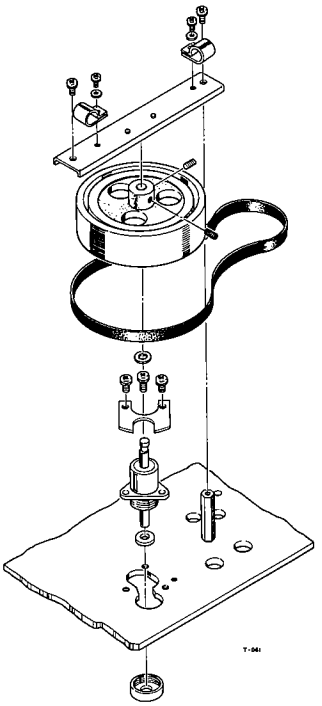

Fig. 4-7 Capstan Assy Removal

REMOVAL OF TENSION ARMS LEFT & RIGHT

See illustration for complete disassembly instructions.

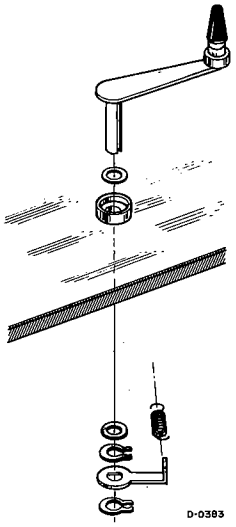

LEFT

IMPORTANT
After reassembly check clearance to ascertain that arm moves freely and is not binding.

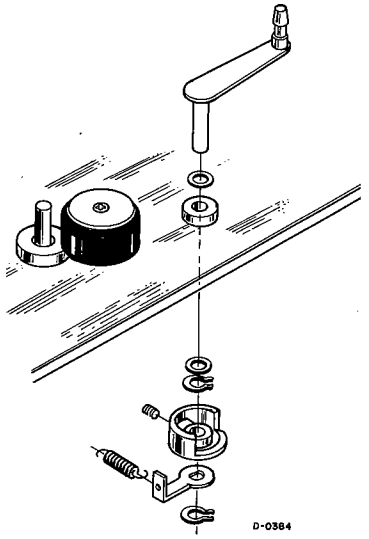

RIGHT

REMOVAL OF REEL MOTOR ASSY

1. Loosen 2 hex screws in brake drum, lift off brake drum.
2. Remove 4 screws securing the brake assembly to the motor.
3. Remove reel turntable, remove 4 screws securing motor to front panel.

NOTE
Reel motor assemblies are mirror images of each other, these assemblies are not interchangeable.

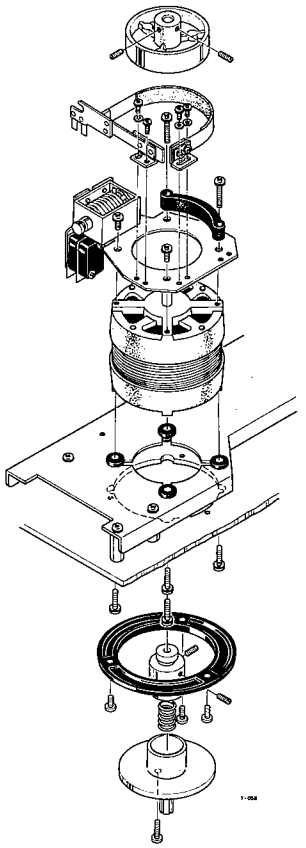

Fig. 4-8 Reel Motor Removal

5. HEAD ALIGNMENT
—MECHANICAL—

NOTE

Head alignment is adjusted at the factory to very critical tolerances. Normally HEAD ASSEMBLY replacement will require only minor alignment or adjustments.
Complete readjustment should only be necessary after an individual head is replaced.
The adjustments are made as follows:

ERASE HEAD SECTION

The erase head pole should be above the edge of a threaded tape by the width of heavy pencil line.

RECORD HEAD SECTION

The record head pole should be above the edge of a threaded tape by the width of thin pencil line.

PLAYBACK HEAD -FORWARD-

The pole of the playback head should be even with the top of a threaded tape.

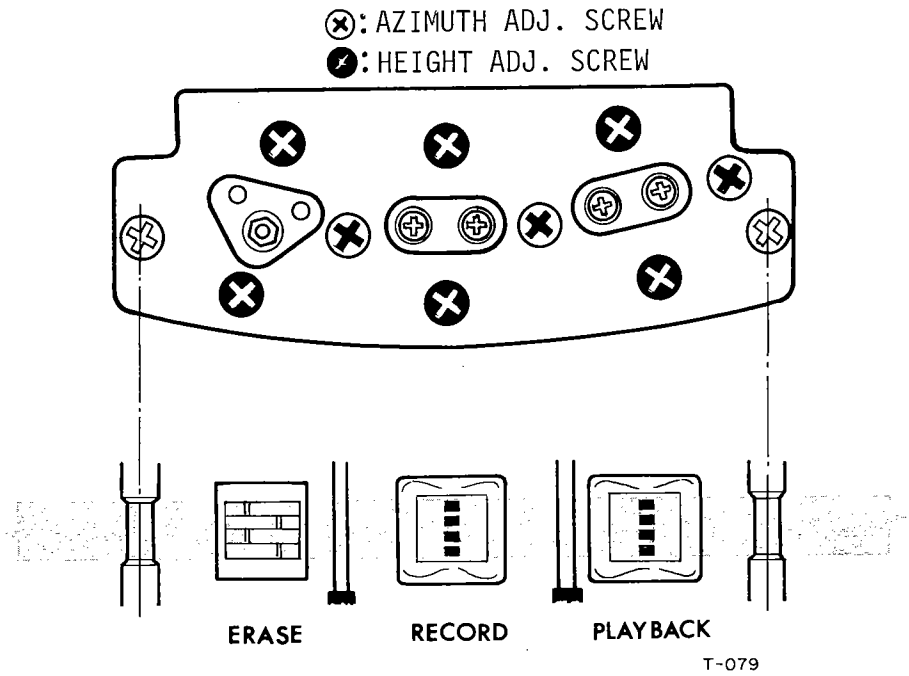

Fig. 5-1 Head Alignment and Adjustment Screws.

NOTE

Azimuth adjustments are given in the section on MEASUREMENTS and ADJUSTMENTS -ELECTRICAL-.

MECHANICAL MIS-ALIGNMENT OF THE HEADS -EXAMPLES-

ALIGNMENT - The physical positioning of a tape head relative to the tape itself. Alignment in all respects must conform to rigid requirements in order for a unit to function properly.

AZIMUTH - The angle of a tape heads pole-piece slot relative to the direction of tape travel.

NOTE

In order for a tape unit to work at its best, with its own tapes as well as ones made on other units, its play and record heads must be aligned to correct the four possible errors as illustrated to the right.

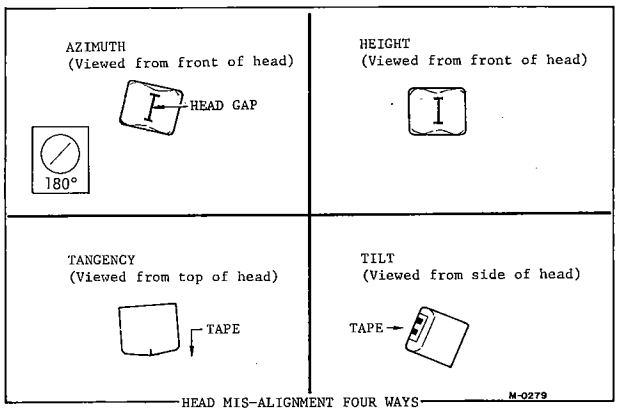

Fig. 5-2 Head Mis-Alignment Four Ways

HEAD WIRING

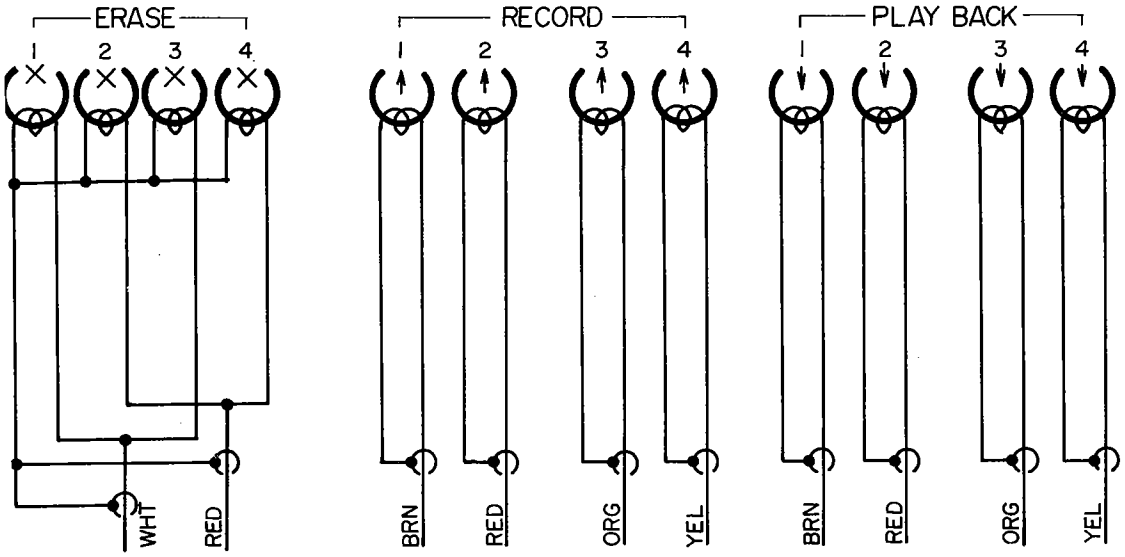

Fig. 5-3 Head Wiring

6. MEASUREMENT AND ADJUSTMENT
—MECHANICAL—

The TEAC A-2340R uses a highly reliable three motor drive system and should require a minimum of mechanical maintenance or adjustment.
These adjustments are made at the factory. Readjustment should only be required after many hours of operation or component replacement.

PINCH ROLLER PRESSURE

NOTE

Pinch roller pressure is supplied by the pinch roller spring arm and it is most important that the solenoid plunger be fully bottomed before taking pressure measurement.

Procedure for Check and Adjustment

1. Load tape or block the shut-off arm in the ON position.
2. Attach a suitable spring scale to the pinch roller shaft.
3. Place the unit in the PLAY mode (▶), and holding the spring scale as illustrated, slowly draw it away from the pinch roller.
4. Do not allow the string to rub against the pinch roller.
5. Note the reading on the spring scale at the instant the pinch roller stops rotating.
6. The scale should indicate 2.1∿2.3 kg. Optimum value is 2.2 kg.
7. If needed adjust solenoid limit position so that the gap between capstan shaft and pinch roller is approximately 7mm when solenoid is not actuated. Limit is adjusted by loosening the mounting screw (A) (mount slot is elongated), slide limit until proper gap is obtained.

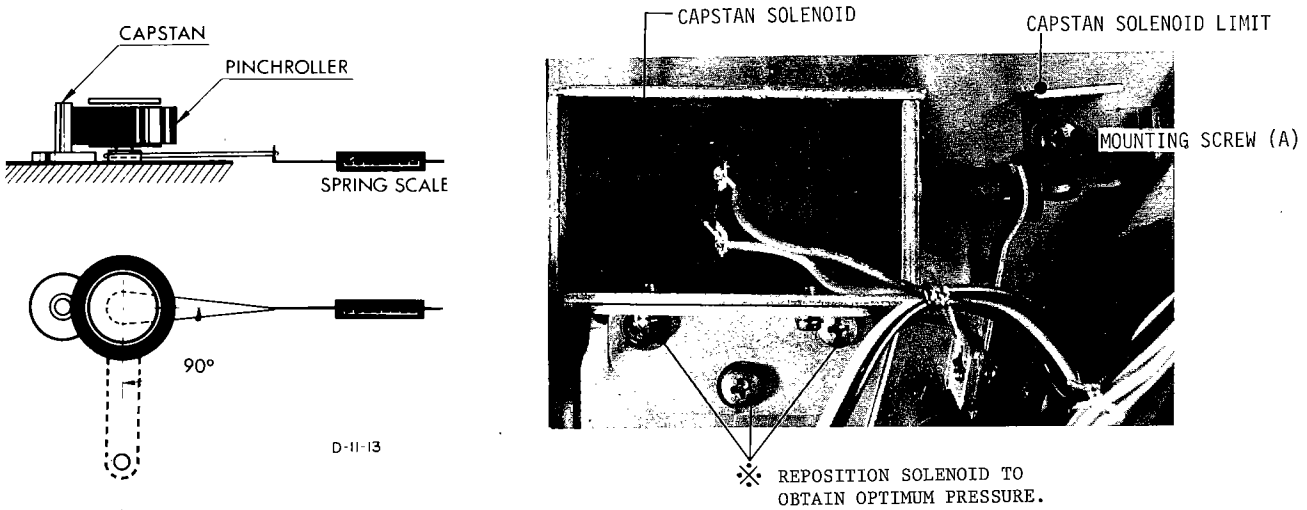

Fig. 6-1 Pressure Measurement -Pinch Roller-

TORQUE ADJUSTMENT PROCEDURE

IMPORTANT

Be sure the full required line voltage is applied and that the unit is set to the proper line frequency.

1. Measure the back tension of the left reel motor and the take-up torque of the right reel motor.
2. Adjust R-1 (50Ω) if measurement value of right or left reel motor exceeds the specified limits. (Coarse adjustment)
3. After adjusting R-1, adjust R-2 to bring back tension and take-up torque to exact specified limits.

NOTE

Adjustments will interact. Several adjustments may be required to bring both motors within specifications.

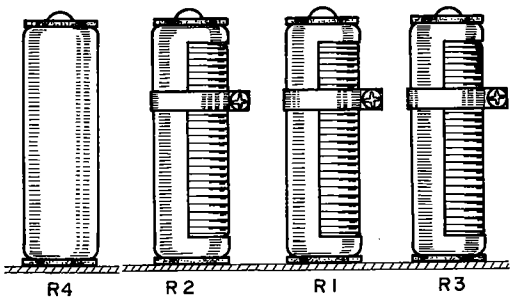

R4 BRAKE SOLENOID (FIXED)

R2 TAKE-UP TORQUE

R1 BALANCE

R3 FAST WIND BACK TENSION

Fig. 6-2 Adjustment Parts Location

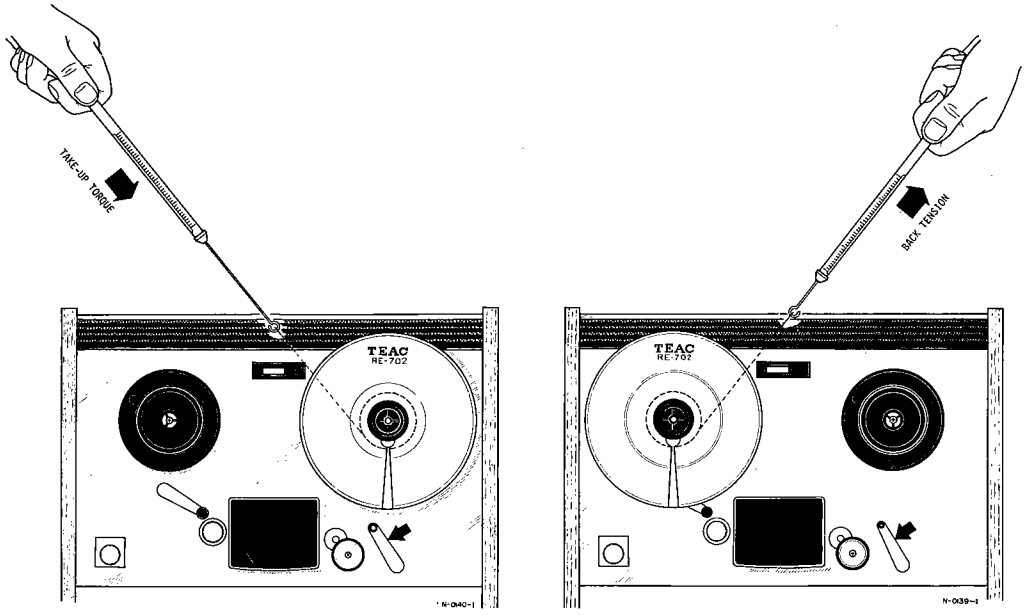

Fig. 6-3 Torque Measurement

TORQUE MEASUREMENT PROCEDURE

BACK TENSION

1. Block the shut-off arm in the ON position.
2. Place an empty 7" reel with a 2" diameter hub on left reel table.
3. Rotate the reel and wind several turns of string around the hub. Attach spring scale to string.
4. Place the unit in the (▶) play mode.
5. Pull the scale away from the reel against the motor torque, with a steady smooth motion.
6. Note the scale reading while it is in steady motion.
7. Make sure the string does not rub against the reel flanges.
8. The reading should be approximately 180∿220g-cm (2.8∿3.1 oz-inch).

TAKE-UP TORQUE

1. Place the empty reel and attached spring scale on the right reel table.
2. Place the unit in the (▶) play mode.
3. Allow the rotation of the reel to slowly draw the scale toward the hub.
4. Hold the spring scale with enough force to allow a steady reading.
5. It should be approximately 360∿400g-cm(4.1∿4.8 oz-inch).

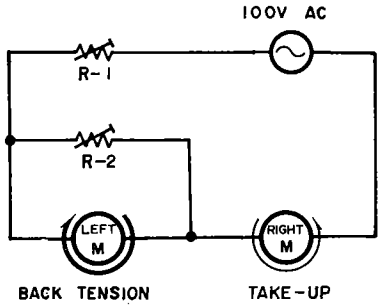

REWIND BACK TENSION

1. Load a full 1,800ft reel of tape on the right reel table.
2. Place the empty reel with 2" hub on the left reel table.
3. Place the unit in the fast rewind mode.
4. At this time observe the right tension arm. Adjust R-3 so that the arm moves approx. 1" to the right and remains there.

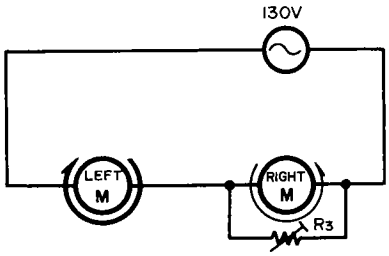

NOTE

The brake torque is actuated mechanically. Pressure is set by the variable spring force.
While making this measurement and adjustment, be careful not to bend the brake bands.
As brake torque will change with cleaning, brake drums and brake shoes should be cleaned only when absolutely necessary. If cleaning is required, use TEAC cleaner TZ-251B only. After cleaning operate the machine for many days befor performing the procedures below.

Brake adjustments are made with no power connected to the equipment.

Procedure for Check and Adjustment

1. Place an empty 2" hub reel on the left reel table, and fasten one end of a 30" length of string to the reel anchor.
2. Wind several turns of string counterclockwise around the hub and attach a suitable spring scale to the free end of the string. Slowly draw the spring scale away from the reel, making sure that the string does not rub against the reel flanges.
3. Take a reading only when the reel is in steady motion since the force required to overcome static friction will produce a false, excessively high initial reading.
4. The reading should be 1.8 kg-cm ±0.1 kg (25 oz-inch).
5. If adjustment is required, loosen the two screws shown and position the brake for optimum torque.
6. The adjustment of the right brake is the same, with the exception that rotations are clockwise.

NOTE

The difference in readings between the right and left brakes should be kept witnin 50 g-cm (0.7 oz-inch).

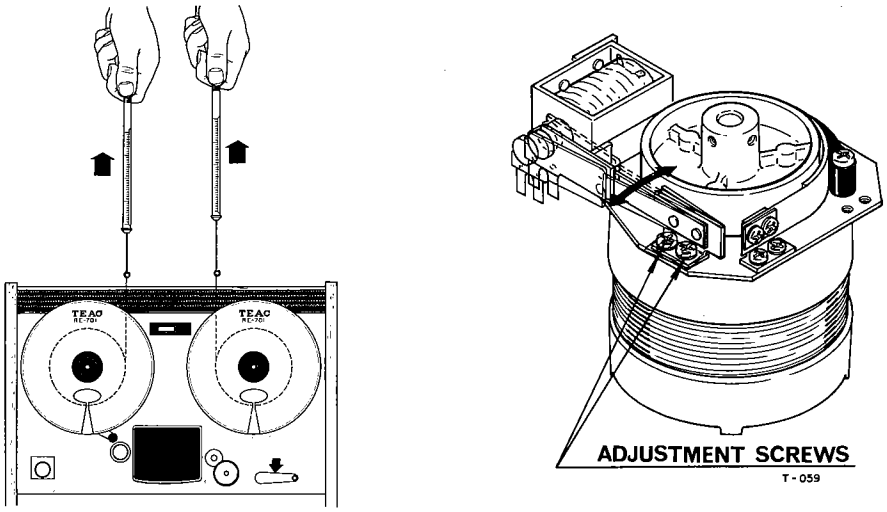

Fig. 6-4 Torque Measurement and Adjustment Location
-Brake-

REEL HEIGHT ADJUSTMENT

Reel height adjustment is required only if a motor has been replaced or if tape rubs excessively against the reel. Adjustment is accomplished by FINE ADJ. screw in the reel turntable. Reel turntable height should be adjusted using standard 7" reels. With a tape threaded on the machine, position the reel height for smooth tape travel.

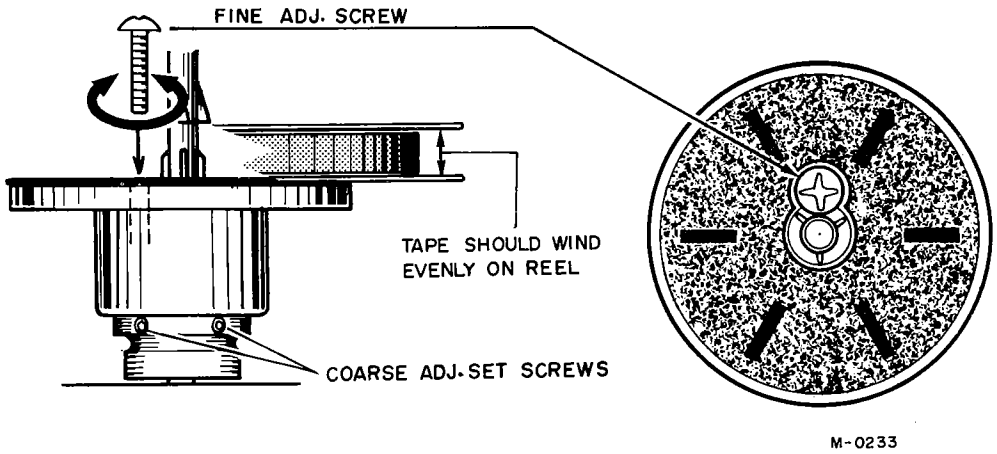

Fig. 6-5 Reel Height Adjustment Location

FLUTTER

Flutter should be measured in playback mode using a TEAC flutter free tape YTT-2003.2002 and Meguro model MK665B flutter meter. Measurement of flutter should be made in accordance with NAB standards.
Values obtained with different standards or equipment cannot be compared.
Flutter should not exceed. 7-1/2ips: 0.20%
3-3/4ips: 0.25%

These figures apply to any tape position and direction (such as full take-up reel, full supply reel or about mid point).

TAPE SPEED

The tape speed should be measured using TEAC flutter free tape, model YTT-2003.2002. These tapes contain a highly accurate 3 kHz tone.
Connect a digital frequency counter to either line OUTPUT jack.
The indicated frequency should be 3 kHz ±0.7% for all speeds.

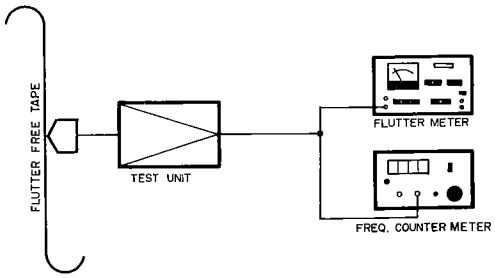

Fig. 6-6 Test Equipment Set-up

Unit must be set to the power line frequency available. Improper frequency setting will result in a 20% error between the tape speed and reel motors torque.

NOTE

US model is preset to 117V AC and 60 Hz. No frequency conversion is required. If it should be necessary to convert the A-2340R deck to operate from a power source of different voltage or frequency, it may be easily accomplished as follows:

Voltage Conversion:

The A-2340R may be set for 100,117, 200, 220 or 240 volts. To change the voltage unscrew the fuse in the center of the voltage selector plug. Pull out the plug and reinsert it so the desired voltage shows in the cut-out. Reinstall the fuse.

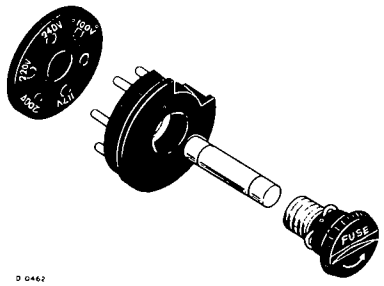

Fig. 6-7 Voltage Conversion

Frequency Conversion:

1. Remove the power cord and all connecting cables.
2. Take off tape deck rear cover by removing the six screws holding it.
3. To convert the unit from 50 to 60 Hz operation reposition the capstan belt as shown in the illustration below.
4. Slide frequency selector switch inside the rear of the tape deck must be switched to the frequency of the power line.
5. Reinstall rear cover.

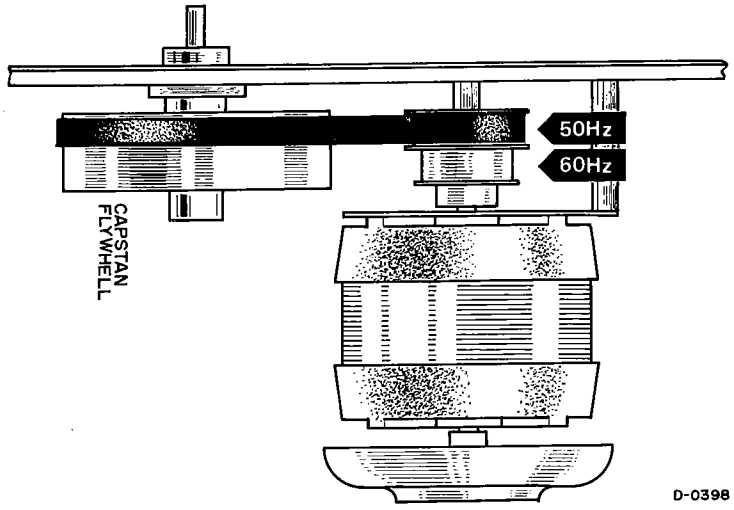

Fig. 6-8 Frequency Conversion

7. MEASUREMENT AND ADJUSTMENT
—ELECTRICAL—

GENERAL NOTICE

Outlined procedures refer only to FRONT channels, the same procedures also apply to REAR channels.

Before performing maintenance on this unit, thoroughly clean and demagnetize the entire tape path.
TEAC maintenance equipment to be used:

TEAC TZ-261 A/B for cleaning

TEAC TZ-255 A/B for oiling

TEAC E-1 for demagnetizing

Place MONITOR switches(L1-R3, L2-R4) in TAPE position, place TAPE SPEED control at H(high), place PLAY switch in 4 CHAN position.

Power supply check and adjustment.
Check the voltage at VR-1 and adjust to +23V DC if required. (Refer to control board on the schematic diagram).

Procedures for checks and adjustments, unless otherwise indicated, are for the left channel at a tape speed of 7-1/2ips. The same procedures are to be applied to the other channels and again for both channels at 3-3/4ips.
All controls mentioned in this book will be printed in bold letters and will be exactly as they appear on the unit.

Double designated symbol numbers refer to left channel/right channel.

Only FRONT adjustments are illustrated, REAR adjustments are identical.

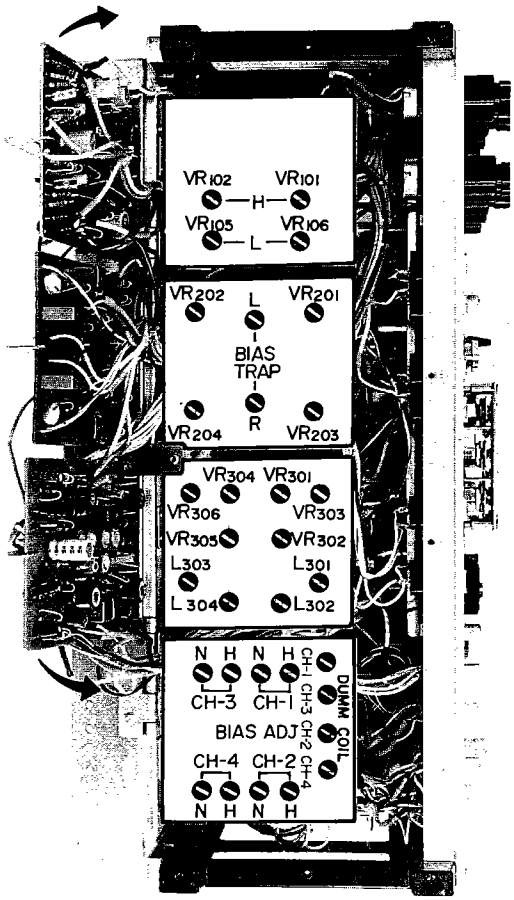

T-085

Fig. 7-1 Adjustment Location

L CHANNEL	R CHANNEL	LOCATION
VR101	VR102	PLAYBACK EQ. (HIGH)
VR105	VR106	PLAYBACK EQ. (LOW)
VR201	VR203	PLAYBACK LEVEL
VR505	VR506	REV PLAYBACK LEVEL
VR202	VR204	PLAYBACK METER LEVEL
VR303	VR306	REC METER LEVEL
VR301	VR304	SOURCE MONITOR LEVEL
L 301	L 303	REC EQ.
VR302	VR305	RECORD LEVEL
L 302	L 304	BIAS TRAP
VC501	VC503	BIAS NORMAL ADJ.
VC502	VC504	BIAS HIGH ADJ.

PLAYBACK HEAD AZIMUTH ADJUSTMENT

Coarse Adjustment

1. Connect a level meter to either OUTPUT jack.
2. Thread a TEAC test tape YTT-1003 on the unit.
3. Play the 15 kHz test tone in section 2 of the test tape.
4. Slowly rotate the aximuth screw until maximum indication is obtain on the level meter.

NOTE

If during playback, a slight pressure on the heads results in a rise of the reading of the level meter, head alignment adjustments should be accomplished.

Fine Adjustment

CAUTION

After coarse adjustment, do not make large corrections, turn azimuth screw 1/4 turn or less.

5. It is absolutely essential to accomplish the coarse adjustment before using this method to avoid phase errors larger than 45°.
6. Connect the test equipment as shown in Fig. 7-2.
7. Play a 10 kHz signal and adjust the azimuth screw until the oscilloscope shows that the signals are less than 45° in phase.
8. Secure the screw with a drop of LOCTITE.

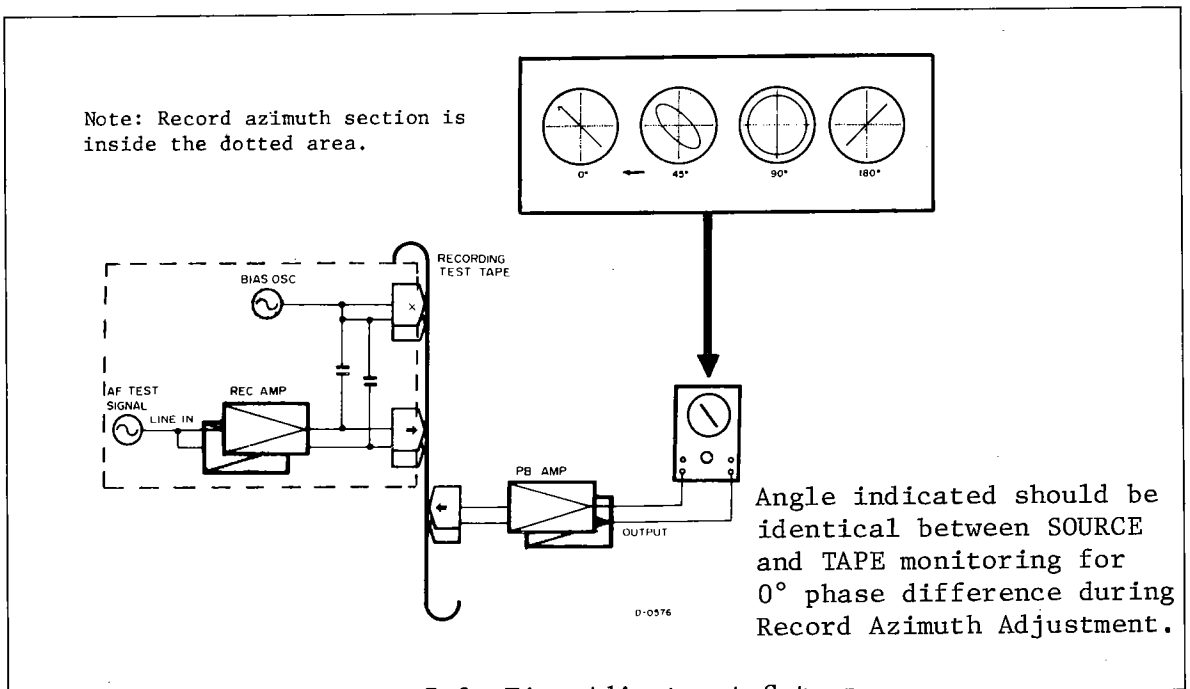

Fig. 7-2 Fine Adjustment Set-up
-Head Azimuth-

SPECIFIED OUTPUT LEVEL SET

Connect a 10kΩ load to the OUTPUT jacks when not using TEAC M-826A (0 dB = 0.775V) output meter.

1. Play the 400 Hz tone is section 1 of the test tape. This tone is recorded at operating reference level (1% of the THD level).
   THD: Third Harmonic Distortion
2. Turn the OUTPUT controls fully clockwise, and adjust VR-201/203 for -2 dB reading on level meter.
3. Then retard OUTPUT controls until a -8 dB is obtained on the level meter at the OUTPUT jacks.
4. Align the reference marks of the 4 OUTPUT controls so that they are positioned alike. This will be at approximately the two o'clock position.

IMPORTANT
This is the specified output level set. Do not disturb this setting until the remaining adjustments have been completed.

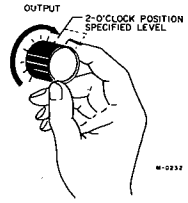

Fig. 7-3 Output Level Setting

REVERSE LEVEL CHECK

5. Place the unit in the REVERSE mode (◄).
6. Adjust VR 505/506 to obtain a specified output level of -2 dB at OUTPUT jacks.
7. Retard OUTPUT controls to obtain a level of approximately -8 dB at OUTPUT jacks.
8. Leave controls as set. Begin Forward playback and VU meter should indicate -8 dB ±0.5 dB all channel.

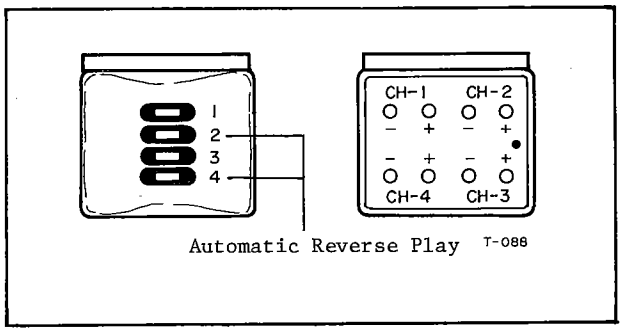

4 CH Head Configuration

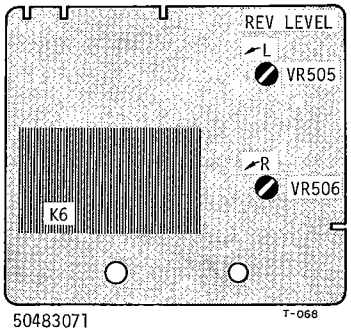

Reverse PC Board

VU METER CALIBRATION

1. While playing the 400 Hz tone (1% THD) in section 1 of the test tape.
2. With MONITOR switches FRONT and REAR in the TAPE position, adjust VR-202/204 for a reading of 0 VU on the VU meters.

FREQUENCY RESPONSE

5. Set TAPE SPEED to H (high) position. Using test tape YTT-1003, play the test tones from 15 kHz down to 40 Hz (recorded at 10 dB below operating reference level).
6. Compare the readings obtained on the level meter with the response limits given in figure 7-4.
7. In case of any deviation in the response curve, check head azimuth alignment, clean the heads, then adjust VR-101/102 for the best response.
8. Set TAPE SPEED to L (low) using test tape YTT-1002. Adjust VR-105/106 as in H (high) position.

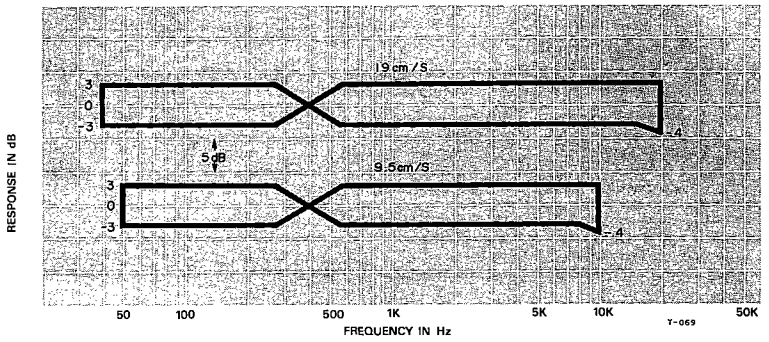

Fig. 7-4 Frequency Response Limits -Playback-

SIGNAL TO NOISE RATIO

IMPORTANT

OUTPUT control should be at specified output level. The signal to noise ratio must meet factory standards. The values given are obtained using an unweighted level meter while the supply and take-up motors have voltage applied but are not rotating. The values are with reference to a 3% THD peak recording level.

1. Thread a tape on the unit, leaving the tape outside the capstan and pinch roller. Tension arm should be in ON position.
2. Place the unit in the PLAY mode (▶) (the tape will not move).
3. The level meter connected to the OUTPUT jacks should indicate -56 dB or less.
4. This corresponds to a signal to noise ratio of 48 dB (difference between residual noise -56 dB and specified output level -8 dB for 1% THD).

   For a 3% THD signal to noise ratio, 6 dB is added, giving 56 dB (3% THD is 6 dB above 1% THD level).

MONITOR PERFORMANCE

MINIMUM INPUT LEVEL

LINE Input

With OUTPUT controls at specified output level

1. Connect an AF oscillator to the LINE IN jacks.
2. Apply a 400 Hz signal at -18 dB.
3. Place the MONITOR switches FRONT and REAR in the SOURCE position and turn the LINE controls fully clockwise.
4. Adjust VR 301/304 to obtain a specified output level of -8 dB at OUTPUT jacks.

MIC Input

5. After adjusting VR 301/304, apply a 400 Hz signal at -70 dB to the MIC IN jacks.
6. Rotate the MIC controls fully clockwise.
7. The output should be -8 dB (specified output level).

SPECIFIED INPUT LEVEL SET

With OUTPUT controls at specified output level

8. Apply a 400 Hz signal at -8 dB to the LINE IN jacks.
9. Adjust the line controls for -8 dB at the OUTPUT jacks.

NOTE

Do not disturb the specified input level position of these controls until the remaining checks and adjustments are completed. The difference between the channels must not exceed ±2 dB as indicated on the level meter. If they are not within limits, check the amplifier gain and the LINE control settings.

VU METER CALIBRATION -RECORD-

10. With the same 400 Hz signal at -8 dB applied and the MONITOR switches FRONT and REAR in SOURCE, adjust VR 303/306 for 0 VU on the VU meters.

RECORD PERFORMANCE

Before making any adjustments on the record amplifier, be sure that all tests in the HEAD ALIGNMENT, PLAYBACK and MONITOR PERFORMANCE sections have been accomplished and that all adjustments are correct.
Optimum recording performance (bias levels, recording levels and frequency response) is dependent upon tape characterisitcs. The TEAC A-2340R is factory set for SCOTCH #150/203 tape. Service data is based upon the use of SCOTCH #203 or equivalent tape.

BIAS TRAP ADJUSTMENT

The bias trap tank circuit keeps the bias signal from reaching the record and monitor amplifier and under normal "no signal" conditions, voltage should not be present at the OUTPUT jacks.

1. Place BIAS switch in HIGH position, MONITOR switch in TAPE position and all RECORD MODE switches ON. Place tape mode lever at PAUSE position. Depress RECORD and (►) buttons.
2. Connect a VTVM to the junction of C-308/L-302. Adjust L-302 for minimum reading.

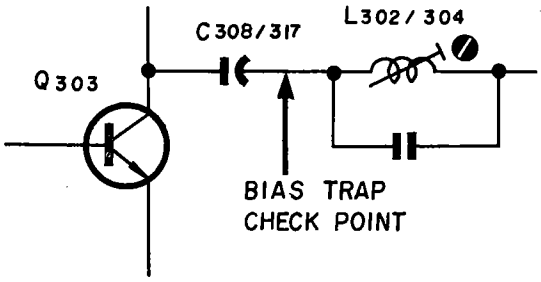

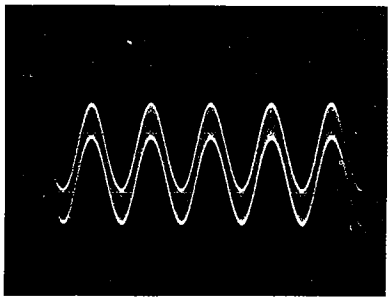

Fig. 7-5 Bias Trap Check point and Bias Leakage

BIAS ADJUSTMENT

NOTE

Adjust BIAS trap (L-302/304) before adjusting BIAS levels. These adjustments are only made at 7-1/2 ips tape speed. The bias oscillator frequency is 100 ±5 kHz.

NORMAL Position

1. Thread a record test tape (Scotch 150) on the unit. Place BIAS switch in NORMAL position.
2. Place MONITOR switches in TAPE position, PAUSE lever at PLAY.
3. Apply a 400 Hz signal at -8 dB at the LINE IN jacks.
4. Adjust VC-501/503 for a peak on the level meter.
5. Turn the capacitors clockwise until a decrease of 0.5 dB is obtained.

HIGH Position

1. Thread a record test tape (Scotch 203) on the unit. Place BIAS switch to HIGH position.
2. Adjust VC-502/504 as in NORMAL position.

RECORD LEVEL SET

1. Using Scotch 203 tape, BIAS switch at HIGH position. Apply a 400 Hz signal at -8 dB at the LINE IN jacks.
2. OUTPUT controls must be at specified output level setting (-8 dB at OUTPUT jacks).
3. Place unit in record mode, MONITOR switches in the TAPE position.
4. Adjust VR-302/305 for a reading of 0 VU on the VU meters. (-8 dB at the OUTPUT jacks).

OVERALL FREQUENCY RESPONSE

IMPORTANT

To avoid saturation of the tape these checks should be made at least 20 dB below the specified input level. Any bias signal feeding into the test equipment should be filtered out by adjusting the external bias trap. A broad band VTVM may be used at the output for this adjustment.

-BIAS switch in NORMAL position-

1. Thread the unit with a record test tape (Scotch 150). Set TAPE SPEED selector to H (7-1/2ips).
2. Adjust the AF oscillator to obtain an output level of -23 dB at OUTPUT jacks.
3. Apply a signal swept from 50 Hz to 18 kHz to the unit while recording on the test tape. With MONITOR switch at TAPE position monitor the output at the level meter. See figure 7-9 for proper response limits.
4. Repeat the above procedures for L (3-3/4ips), using a signal swept from 50 Hz to 15 kHz.

NOTE

If response is not uniform the heads should be checked for accumulated dirt or tape oxide.

If heads are clean, the equalization coils L-301 and L-303 should be adjusted (both speeds).

-BIAS switch in HIGH position-

1. Thread the unit with a record test tape (Scotch 203).
2. Repeat the overall response check at both tape speeds. The record equalization should give the proper frequency response.

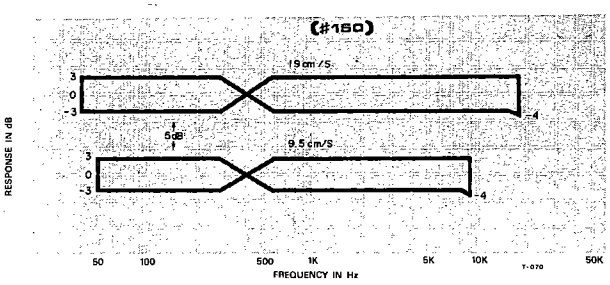

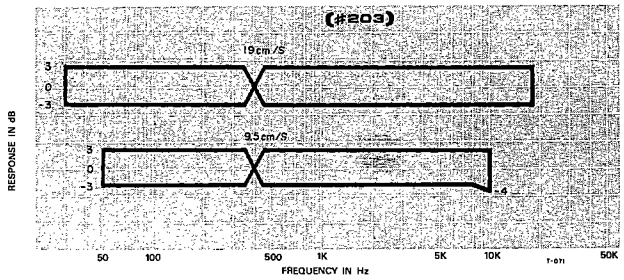

Fig. 7-6 Frequency Response Limits -Record-

ERASE EFFICIENCY

NOTE

To measure erase efficiency, a 1 kHz band pass filter (TEAC M204 CL filter) must be used.

Due to the high level of this signal, it is recommended that only a short recording be made (approximately 30 seconds) to prevent damage to the VU meter.

1. Apply a 1 kHz signal at 0 dB to the LINE IN jacks.
2. Place the unit in record mode and record this signal.
3. Rewind the recording to the beginning and remove the AF oscillator from the LINE IN jacks.
4. Place the unit in record mode and record over this portion of tape again.
5. Rewind the tape to the starting point and connect a level meter to the LINE OUT jack through the 1 kHz band pass filter.
6. Play the erased portion of the tape.
7. The level meter should indicate -60 dB or less.

LEVEL VARIATION

1. Thread a blank reel of High Output (SCOTCH 203), and select 7-1/2ips.
2. Record a variety of frequencies, such as 400 Hz, 2 kHz, 5 kHz, 8 kHz, 10 kHz, etc., at the specified input setting with the BIAS switch HIGH.
   Record approximately 30 seconds at each frequency.
3. During playback, the output level should not vary more than 0.5 dB at 400 Hz, 1 dB at 5 kHz to 10 kHz.
4. Repeat steps 2 and 3 with the deck at 3-3/4ips. The tolerances are the same.

HEADPHONE OUTPUT CHECK

1. Apply a 400 Hz signal at -8 dB to LINE jacks.
2. Place OUTPUT controls at specified level setting. Place MONITOR switches at SOURCE position.
3. Connect two, 8Ω non inductive resistors across the headphone output. Connect the level meter across each resistor in turn.
4. Level meter should indicate -24 dB ±2 dB for FRONT or REAR jack, L or R channel.

8. PREVENTIVE MAINTENANCE

TEAC TZ-261
Cleaner

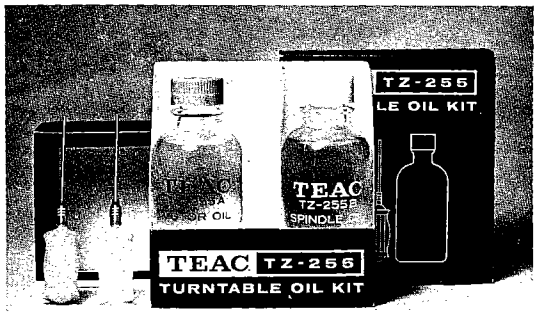

TEAC TZ-255
Oil Kit

Fig. 8-1 TEAC Maintenance Equipment

CLEANING

When excess oxide accumulates on the surface of components where tape passes, normal operation and characteristics cannot be expected. Periodic cleaning should be done with proper cleaning materials. Refer to Operating Instructions.

DEMAGNETIZATION

Metal parts in contact with the tape will become magnetized after long periods of use (except erase head). Magnetization of record/playback heads causes noise in recording and reproduction and heads should be demagnetized at every 50 hours of use, and before any important recording is done. Refer to Operating Instructions.

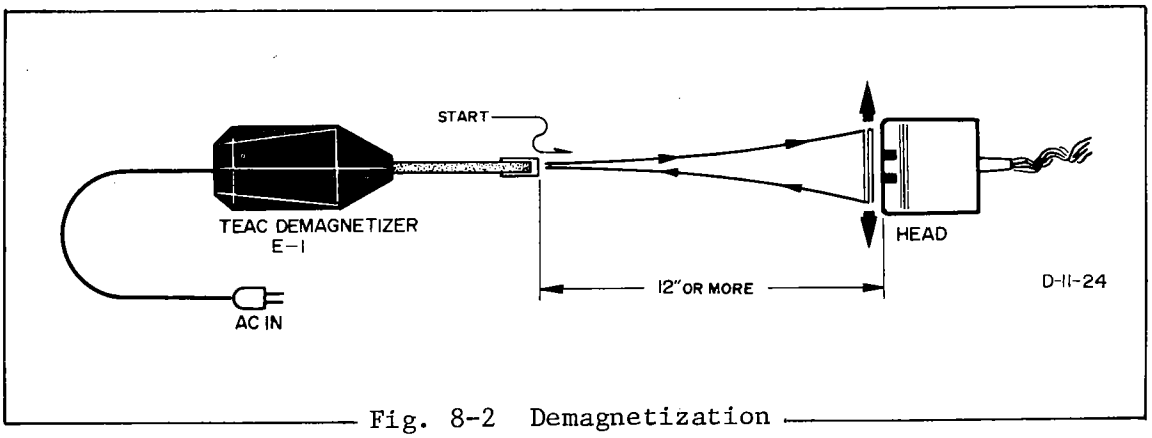

Fig. 8-2 Demagnetization

LUBRICATION

Under normal operating conditions, lubrication is required only once each year. Before lubricating, clean the drive belt and drive pulleys. Operate the deck for 30 minutes to 1 hour immediately prior to oiling. After oiling, keep the deck in the upright position for 3 to 4 hours to allow thorough absorption of the oil.

Approximately once each year or after 2000 hours of use, apply TEAC TZ-255 Lubricating Oil to the following places only:

Pinch roller shaft bearings ..... 1 drop
Capstan motor shaft bearings ..... 2 drops
Remove the dust cap and washer for access to the felt.

Both reel motors .... 0.3 cc maximum to each oiling tube
Capstan motor .... 0.5 cc maximum to each oiling tube.

NOTE: Apply 3 for 4 drops at a time through the oiling tubes. As the felt material within the motor absorbs oil, the oil level can be observed in the tube. When the level stops lowering, no more oil is needed. Do not attempt to force oil into the motors. Do not exceed the maximum.

WARNING: Excessive oiling will scatter oil inside the deck. This oil will cause drive belt slippage and other difficulties. Check for spillage and clean all parts inside the deck before operating after lubrication. Check for oil emission after operation before returning deck to the customer.

Reel motors
part No. 7104104000

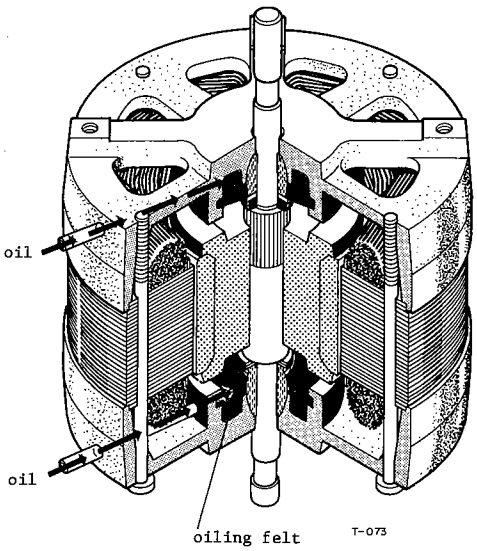

Capstan motor
part No. 5070134000

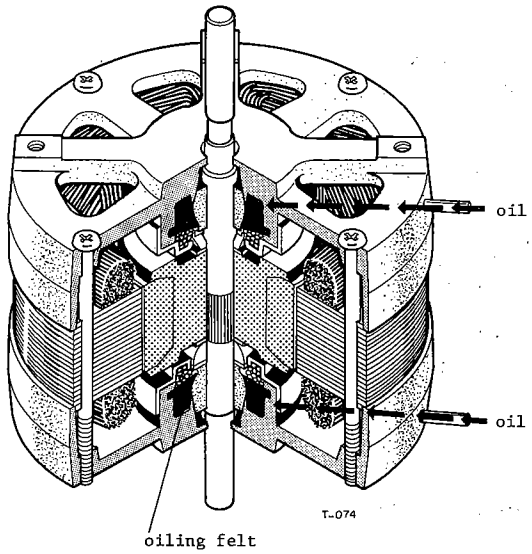

Fig. 8-3 Motor Construction and Oiling points

9. TROUBLE SHOOTING

NOTE

The following guide lists specific difficulties that could occur in the A-2340R.
Several possible causes are listed for each malfunction.
Visually inspect the unit for any damage such as broken or burned components or wiring, loose connections, etc.

MALFUNCTION	POSSIBLE SOURCE OF TROUBLE	CORRECTIVE PROCEDURE
Capstan fails to turn	Belt off or slipping, line fuse (F-1), auto-shut off switch (SW-2), speed select switch (SW-8).	Refer to schematic diagram and repair or replace the defective components.
Pinch roller fails to contact capstan in play mode	AC voltage Selector position, stop switch (SW-3), rewind relay (K-1), capstan solenoid.	The normal DC resistance of the capstan solenoid is 1.3k ohms. Refer to schematic diagram and repair or replace the defective components.
Right reel does not rotate in the play mode	Resistor(R-2), rewind relay (K-1), capacitor(C-4)	Refer to schematic diagram and repair or replace the defective components.
Left reel does not rotate in play mode	Resistor(R-3), rewind relay (K-1), capacitor(C-5)	Refer to schematic diagram and repair or replace the defective components.
Left reel operates with low torque	Resistor(R-6), tension switch	Repair or replace defective components.
Both reel motors fail to operate	Operating relay(K-1)	Clean contacts on or replace relay.
Recorder does not operate in forward play	Remote control jumper plug missing or loose, stop switch(SW-8), operate relay (K-1), brake solenoid, diode(DC 24V)	Normal DC resistance of the brake solenoid is 1.3k ohms. Refer to schematic diagram and repair or replace the defective components.
Playback noise or hum	Faulty conncetions, head selector switch, faulty playback head, faulty amplifier	Repair or replace defective components.

MALFUNCTION	POSSIBLE SOURCE OF TROUBLE	CORRECTIVE PROCEDURE
Noise or hum during record	Magnetized head, faulty connections, mic level set to maximum, faulty record amplifier, record relay (K-401).	Demagnetize and clean head, repair or replace defective components.
Wow & flutter	Defective tape, dirty or defective pinch roller, oily or defective belt, reel motor tension.	Clean or replace defective components. Adjust motor tension.
Incorrect tape speed	Drive belt in wrong position. pressure.	Reposition drive belt. Adjust pinch roller pressure.
Brake does not release	Defective brake solenoid	The D.C. resistance of the brake solenoid should be 1.3k ohms. Replace solenoid.
Fast foward or rewind mode inoperative	Rewind relay(K-3)	Refer to schematic diagram and repair or replace the defective components.
No record and/or no erase	Record head dirty, erase head dirty, operate relay (K-1), record switch (SW-6), record relay (K-401), record amplifier, bias oscillator, record head, erase head.	Refer to schematic diagram and repair or replace the defective components. For record amplifier troubleshooting refer to voltage chart.
No playback	Playback head dirty, amplifier to deck connections, monitor switch(SW-501), playback amplifier.	Refer to playback amplifier voltage chart.

Should you have any questions concerning this manual, please contact Instruction Manual Project Department. Your query will receive personal attention.

Address: TEAC Corporation
Sales Office
Instruction Manual Project Dept.
Shinjuku Building
1-8-1, Nishi-Shinjuku,
Shinjuku-Ku, Tokyo, 160,
Japan

10. PACKING FOR SHIPMENT

SHIPPING INSTRUCTIONS

If the unit is to be returned to a TEAC factory service Center for repair, carefully pack as shown below.

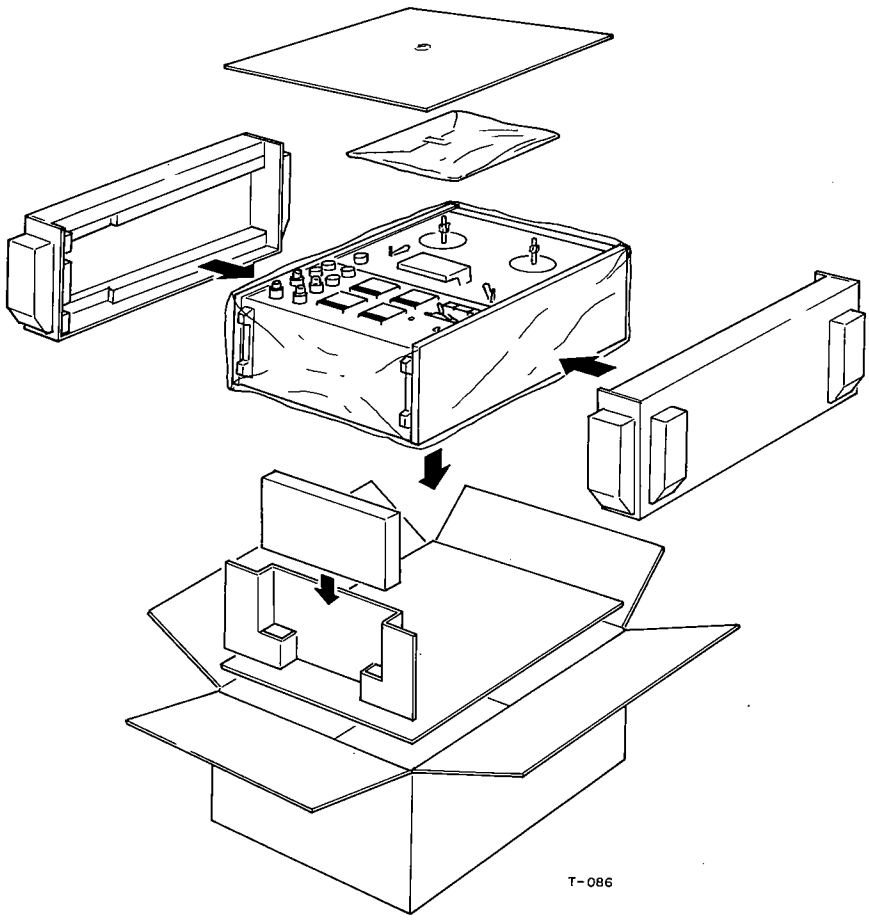

WARRANTY

Your TEAC equipment has been manufactured under the strictest quality control and is covered by warranty under normal operation. However, warranty terms may vary with the country (area) in which it was purchased and for different models of equipment.
The warranty terms are fully described on the warranty card. Please read the card for complete details. Include a copy of the warranty in the package when you return the equipment to an Authorized Service Center.

LIST OF LINE VOLTAGE AND CYCLE AROUND THE WORLD

Name of the country	Cycle	Voltage	Name of the country	Cycle	Voltage	Name of the country	Cycle	Voltage
Argentina	50	220	Guatemala	60	120,(220)	New zealand	50	230
Algeria	50	127,220	Germany	50	110,120,127,220	Norway	50	220
Austria	50	230,240	Hungary	50	220	Okinawa	60	100
Australia	50	220	Honduras	60	110	Pakistan	50	220,230
Brazil	50/60	110,115,125,227, 220	Haiti	(50)/60	115,(220)	Panama	60	110,(115),(120)
			Iran	50	220	Philippines	60	110,(220)
Belgium	50	110,127,220	Iraq	50	220	Peru	(50)/60	(110),200
Burma	50	230	India	50	230	Portugal	50	120,220
Canada	60	110,115,120	Indonesia	50	110,117	Poland	50	220
Cuba	60	110	Israel	50	230	China	50/60	110,220
Costa Rica	60	120	Italy	50	110,(120),(127) (150),(160),220	Rep.of Vietnam	50	120,127
Colombia	60	110,(115),(120)				Rumania	50	(110),220
Chile	50/(60)	(110),220	Jamaica	50	110	Saudi Arabia	50/60	120,230
Czechoslovakia	50	220	Japan	50/60	100	Sierra Leone	50	230
Denmark	50	220	Korea	60	100	Syria	50	115,200
Dominica	60	110	Kenya	50	240	Switzerland	50	220
England	50	(200),(210),(230), 240	Lebanon	50	110,220	Sweden	50	(117),220
			Luxembourg	50	110,220	Spain	50	120,127
Ecuador	60	(110),120,127	Malaya	50	230	Soviet Union	50	127
El Salvador	60	110	Mexico	50/60	120,127	Thailand	50	220
Egypt	50	110,220	Monaco	50	220	Tunisia	50	110,115,220
Formosa	60	110	Morocco	50	115,127,220	Turkey	50	110,220
Finland	50	220	Netherland	50	125,127,150,220	U.S.A.	60	115,120
France	50	110,(115),(120), (127),220	Nigeria	50	230	Urguay	50	220
			Nicaragua	60	120	Venezuela	(50)/60	120
						Yugoslavia	50	220

TEAC®

A-2340R

PARTS LIST

REPLACEMENT INFORMATION

Replacement parts are available through your nearest TEAC Authorized Service Center or directly from the TEAC office.
Changes are constantly being made to make TEAC products better and more reliable.
Therefore, when ordering parts, always include the following information:

MODEL *SERIAL NO.* *REF. NO.* *PARTS NO.* *DESCRIPTION*

MONTH OF ISSUE : March, 1973
LATEST REVISION NO.: E-558

TEAC CORPORATION

MT2350E100

EXPLODED VIEW 1
A-2340R

TRIM PARTS

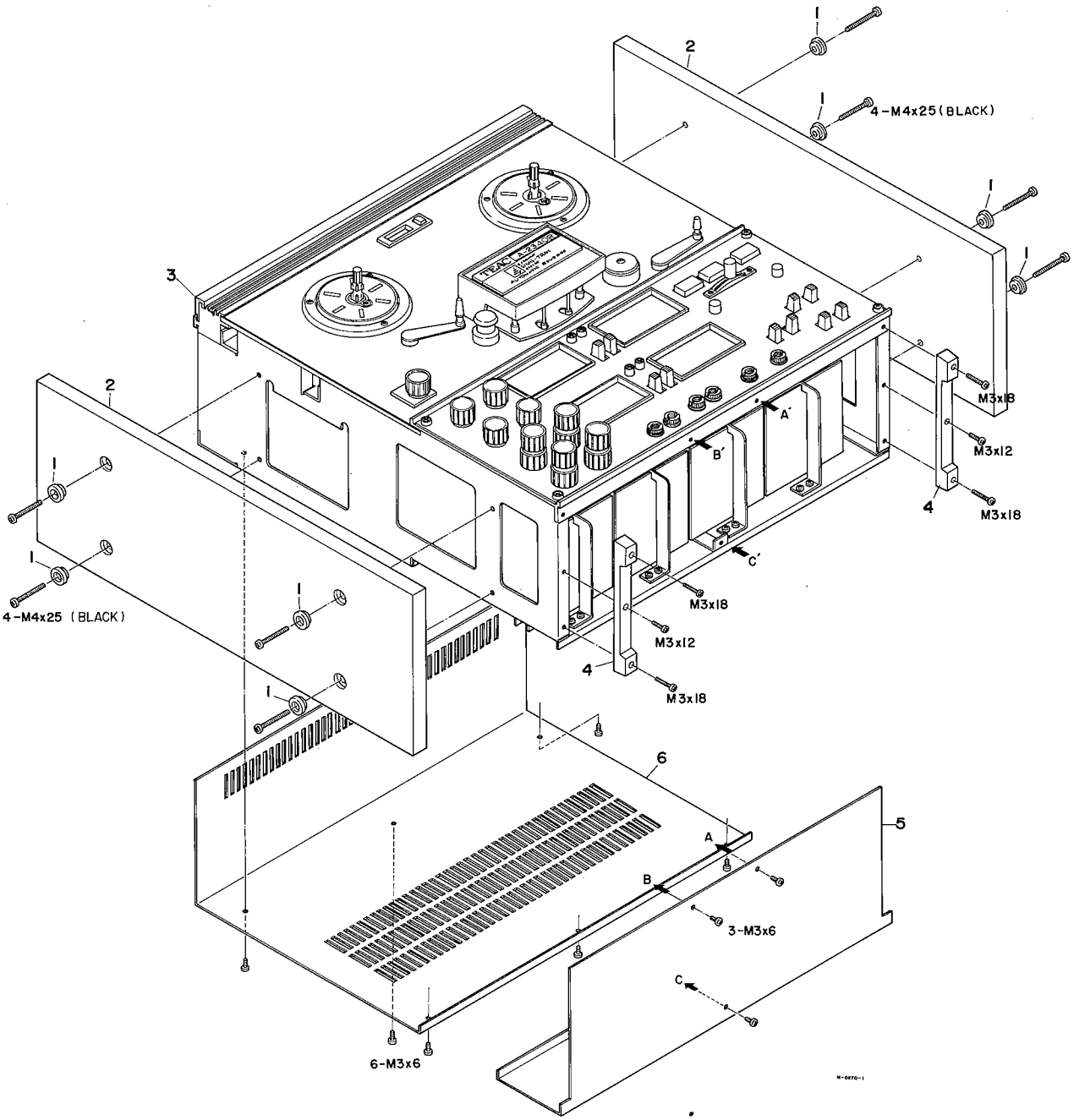

TRIM PARTS

REF. NO.	TEAC PARTS NO.	DESCRIPTION	REVISION 1st	REVISION 2nd
1-1	50276930	Washer, Trim		
1-2	50288350	Wooden Plate		
1-3	50112980	Grille, Top (Assy)		
1-4	50277980	Leg, Case		
1-5	50288660	Cover, Bottom (Assy)		
1-6	50288290	Cover, Rear (Assy)		

EXPLODED VIEW 2
A-2340R

MAIN CHASSIS

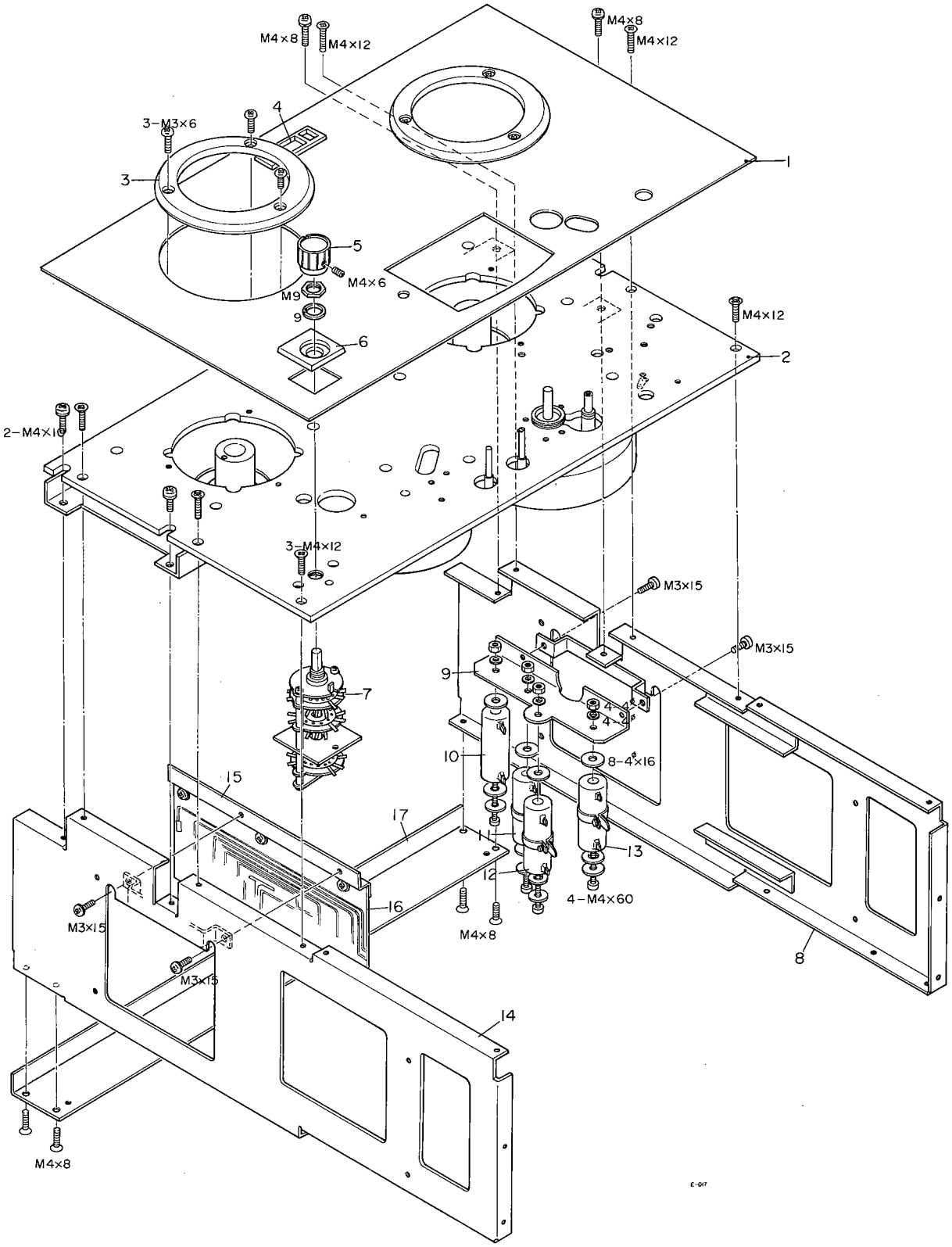

MAIN CHASSIS

REF. NO.	TEAC PARTS NO.	DESCRIPTION	REVISION 1st	REVISION 2nd
2- 1	50114140	Panel, Trim		
2- 2	50112674	Panel, Chassis		
2- 3	50161940	Reel Protector		
2- 4	50277020	Escutcheon, Counter (Cover)		
2- 5	50253390	Knob, Upper		
2- 6	50263171	Name Plate [TAPE SPEED]		
2- 7	50442700	SW, Rotary (TAPE SPEED) (SW6)		
2- 8	50113981	Panel, Side, R		
2- 9	50330110	Plate, Resistor		
2-10	50522310	Resistor, Wire Wound, 100Ω 20H (R4)		
2-11	50524120	Resistor, Wire Wound, 1KΩ 20HA (R2)		
2-12	50522210	Resistor, Wire Wound, 50Ω 20HA (R1)		
2-13	50524201	Resistor, Wire Wound, 100Ω 20HA (R3)		
2-14	50114280	Panel, Side, L		
2-15	50330840	Angle, PC Board, A		
2-16	50491281	PC Board Assy, Reverse		
2-17	50235311	Angle, Rear Cover		

HEAD ASSY

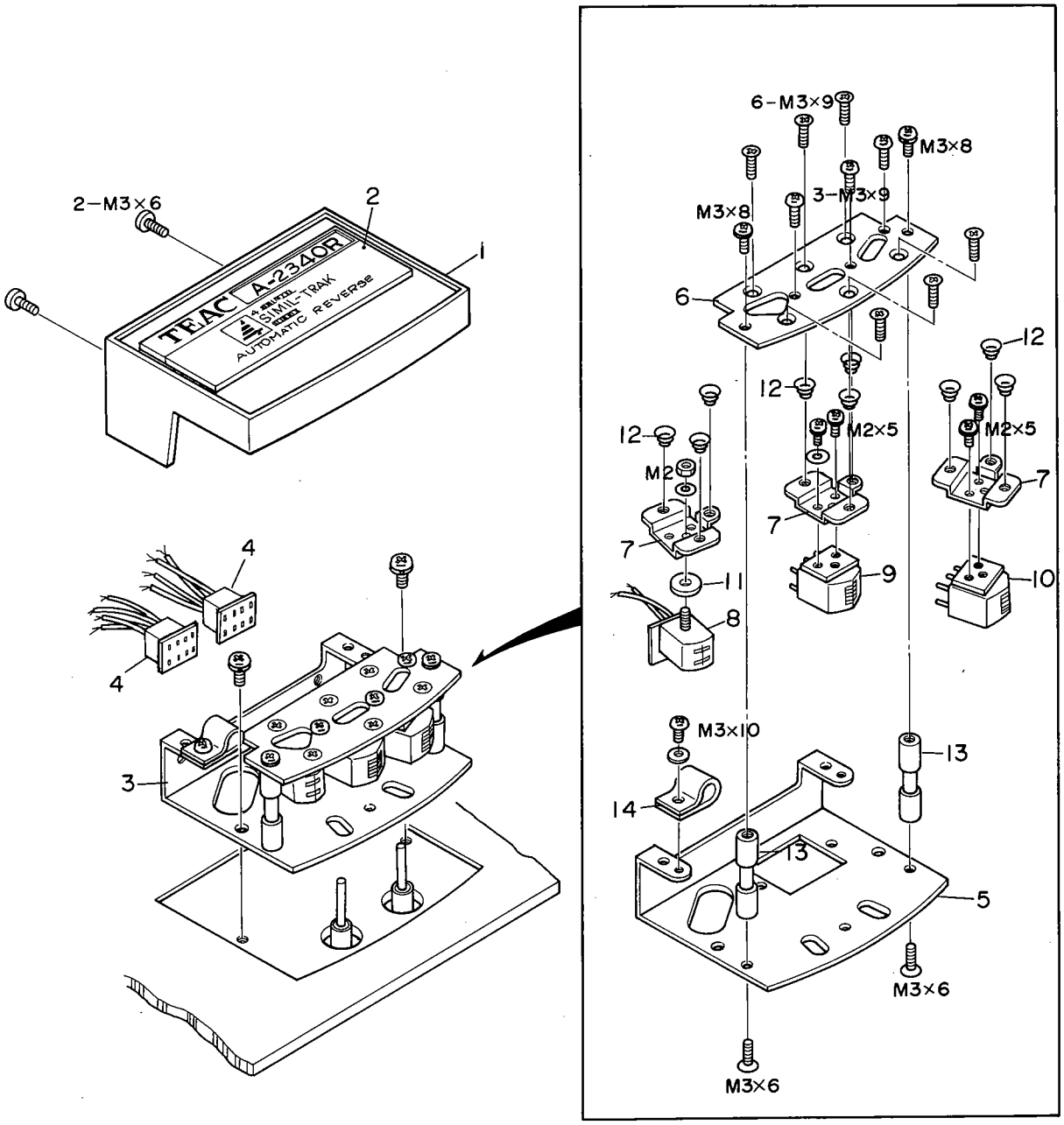

E-018

HEAD ASSY

REF. NO.	TEAC PARTS NO.	DESCRIPTION	REVISION 1st	REVISION 2nd
3- 1	50136550	Head Housing		
3- 2	50136730	Name Plate [A-2340R]		
3- 3	50136740	Head Assy		
3- 4	51220010	Connector, Head		
3- 5	50136561	Plate, Housing Base, C		
3- 6	50134400	Plate, Head Base		
3- 7	50134370	Plate, ERP Head		
3- 8	50664110	Head, Erase (4T-4CH)		
3- 9	50664410	Head, Record (4T-4CH)		
3-10	50664420	Head, PB (4T-4CH)		
3-11	50136591	Spacer, Erase Head		
3-12	50220500	Spring, Head, B		
3-13	50182672	Pin, Guide		
3-14	50276290	Clamp, Wire (Small)		

LEFT TENSION ARM

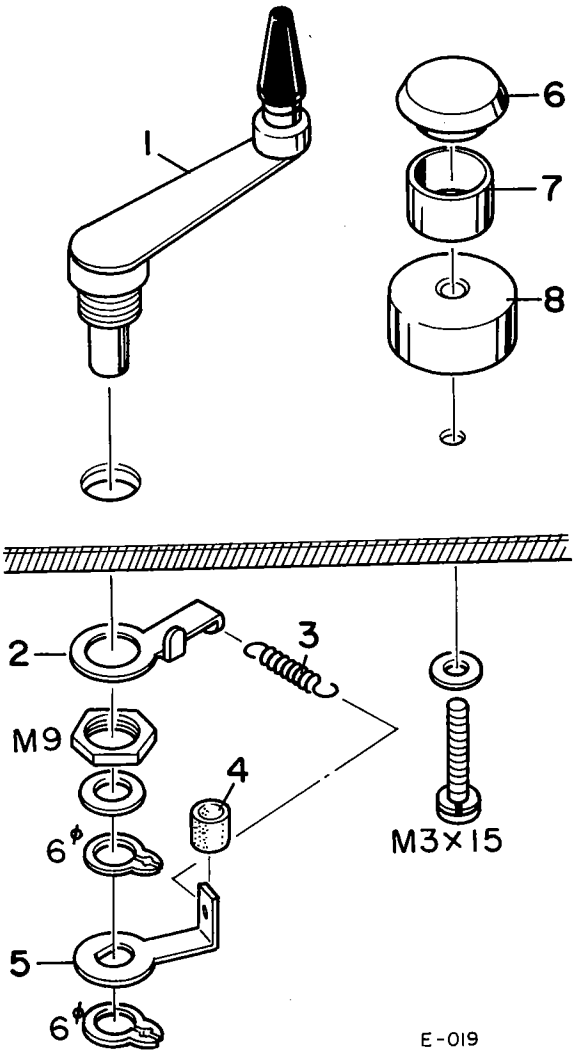

REF. NO.	TEAC PARTS NO.	DESCRIPTION	REVISION 1st	REVISION 2nd
4- 1	50180560	Tension Arm Assy, Left		
4- 2	50276870	Hook, Spring, Left		
4- 3	50221110	Spring, B, Tension Arm L		
4- 4	50276990	Collar, Rubber		
4- 5	50182750	Limit Stop, Left		
4- 6	50123910	Cap, Guide Ring		
4- 7	50123930	Ring, Guide		
4- 8	50123921	Guide Ring Base		

RIGHT TENSION ARM

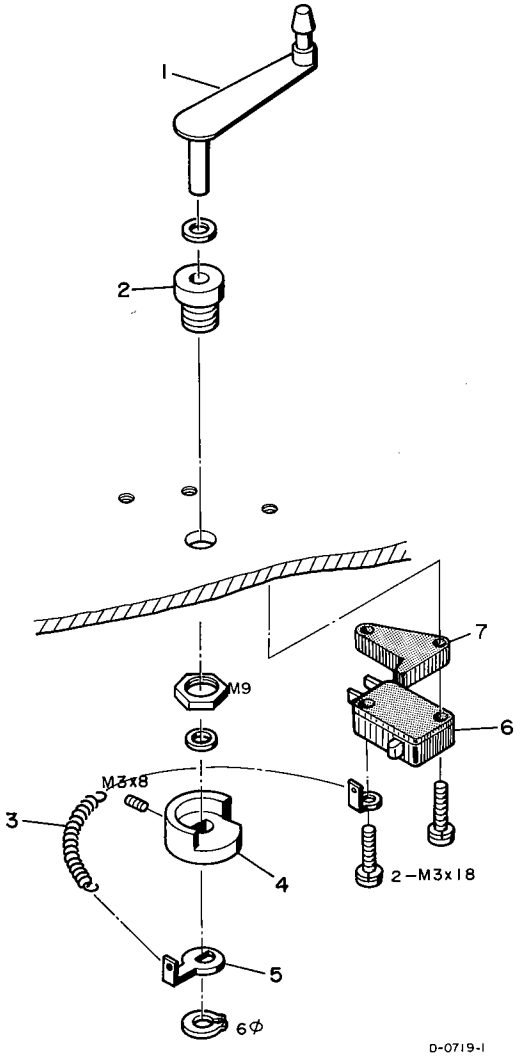

REF. NO.	TEAC PARTS NO.	DESCRIPTION	REVISION 1st	REVISION 2nd
5- 1	50180432	Tension Arm Assy, Right		
5- 2	50182701	Bushing, Arm, A		
5- 3	50221122	Spring, C, Tension Arm R		
5- 4	50182990	Drum, Tension Arm		
5- 5	50276860	Hook, Spring, Right		
5- 6	50446180	SW, Micro (V-1A44) (SW2)		
5- 7	50182730	Limit Stop, Right		

EXPLODED VIEW 6
A-2340R

REEL MOTOR ASSY

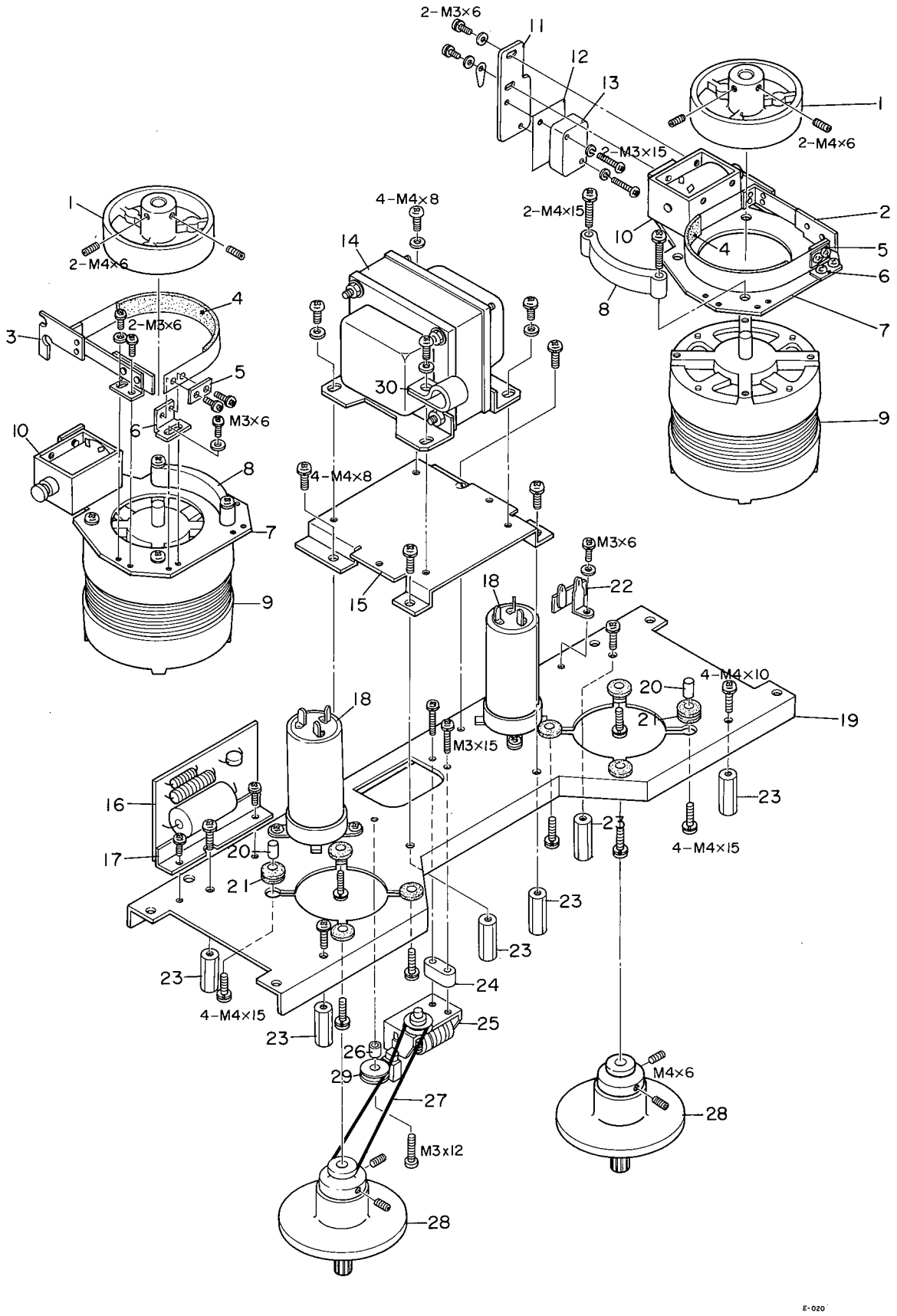

E-020

REEL MOTOR ASSY

REF. NO.	TEAC PARTS NO.	DESCRIPTION	REVISION 1st	REVISION 2nd
6- 1	50173560	Drum, Brake		
6- 2	50170210	Brake Band Assy, D		
6- 3	50170143	Brake Band Assy, B		
6- 4	50171382	Felt, Brake		
6- 5	50170150	Plate, Band Pressure		
6- 6	50170160	Angle, Band		
6- 7	50173650	Plate, Reel Motor		
6- 8	50172550	Brake Retainer		
6- 9	71041040	Motor, Reel		
6-10	50616370	Solenoid, Brake		
6-11	50173690	Bracket, Micro SW		
6-12	50332680	Insulator Plate, Micro SW		
6-13	50446180	SW, Micro (V-1A44)(SW10)		
6-14	50562491	Transformer, Power (or 50562371)		
6-15	50236650	Plate, Power Transformer		
6-16	50500500	PC Board Assy, Rectifier		
6-17	50332571	Angle, PC Board		
6-18	50545940	Capacitor, MP, 3.9+0.9μF AC250V(C4·5)		
6-19	50233923	Chassis, Reel Motor		
6-20	50162760	Spacer, Rubber Cushion		
6-21	50162960	Cushion, Rubber, B		
6-22	50452080	Terminal Strip 1L-1P, Left		
6-23	50161950	Stand-off, Reel Motor		
6-24	50276950	Spacer, Counter		
6-25	50585090	Counter, Tape		
6-26	50163100	Shaft, Belt Tension Pulley		
6-27	50276940	Belt, Counter		
6-28	50160332	Reel Table Assy		
6-29	50162940	Pulley, Belt Tension		
6-30	50276280	Clamp, Wire, A (Large)		

NOTE:
The Reel Table Assy is assembled with very accurate adjustments performed during the assembly process. We no longer list the individual pieces because separate replacement of them would be meaningless. Therefore, we ask you to order the entire assembly for replacement.

CAPSTAN DRIVE ASSY

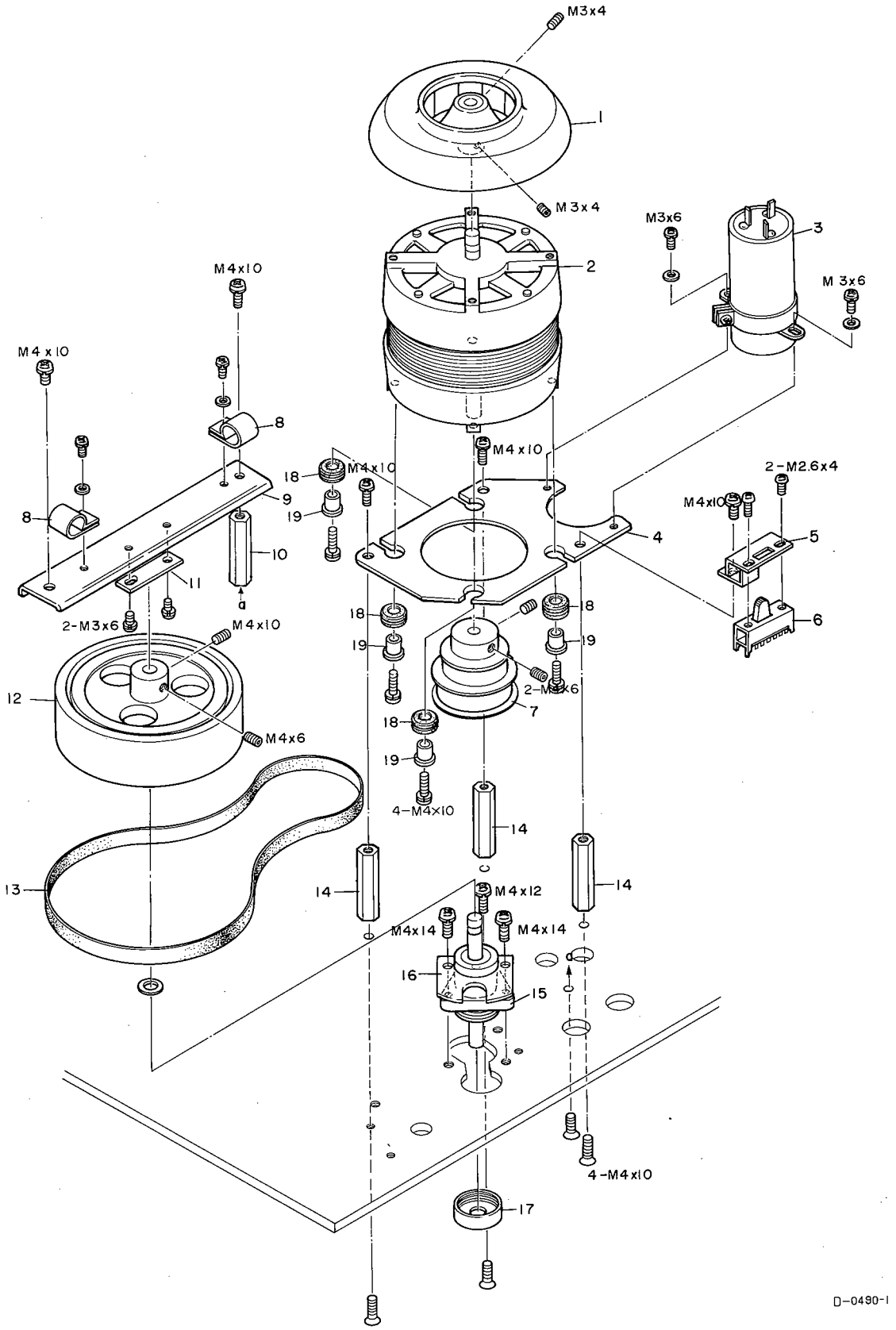

CAPSTAN DRIVE ASSY

REF. NO.	TEAC PARTS NO.	DESCRIPTION	REVISION 1st	REVISION 2nd
7- 1	50123980	Fan		
7- 2	50701341	Motor, Capstan		
7- 3	50545650	Capacitor, MP, 2+0.8μF AC250V (C6)		
7- 4	50237520	Plate, Capstan Motor		
7- 5	50276910	Bracket, Slide SW		
7- 6	50444170	SW, Slide (SW9)		
7- 7	50124003	Pulley, Motor (50Hz/60Hz)		
7- 8	50276280	Clamp, Wire, A (Large)		
7- 9	50277151	Angle, Thrust		
7-10	50123860	Stand-off, Flywheel		
7-11	50277231	Plate, Thrust		
7-12	50123801	Flywheel, Capstan		
7-13	50123830	Belt, Capstan		
7-14	50123850	Stand-off, Capstan Motor		
7-15	50120440	Capstan Assy		
7-16	50142190	Plate, Arm Support		
7-17	50123971	Cap, Dust		
7-18	50706211	Cushion, Rubber		
7-19	50332790	Spacer, Rubber Cushion		

LIFTER AND PINCH ROLLER

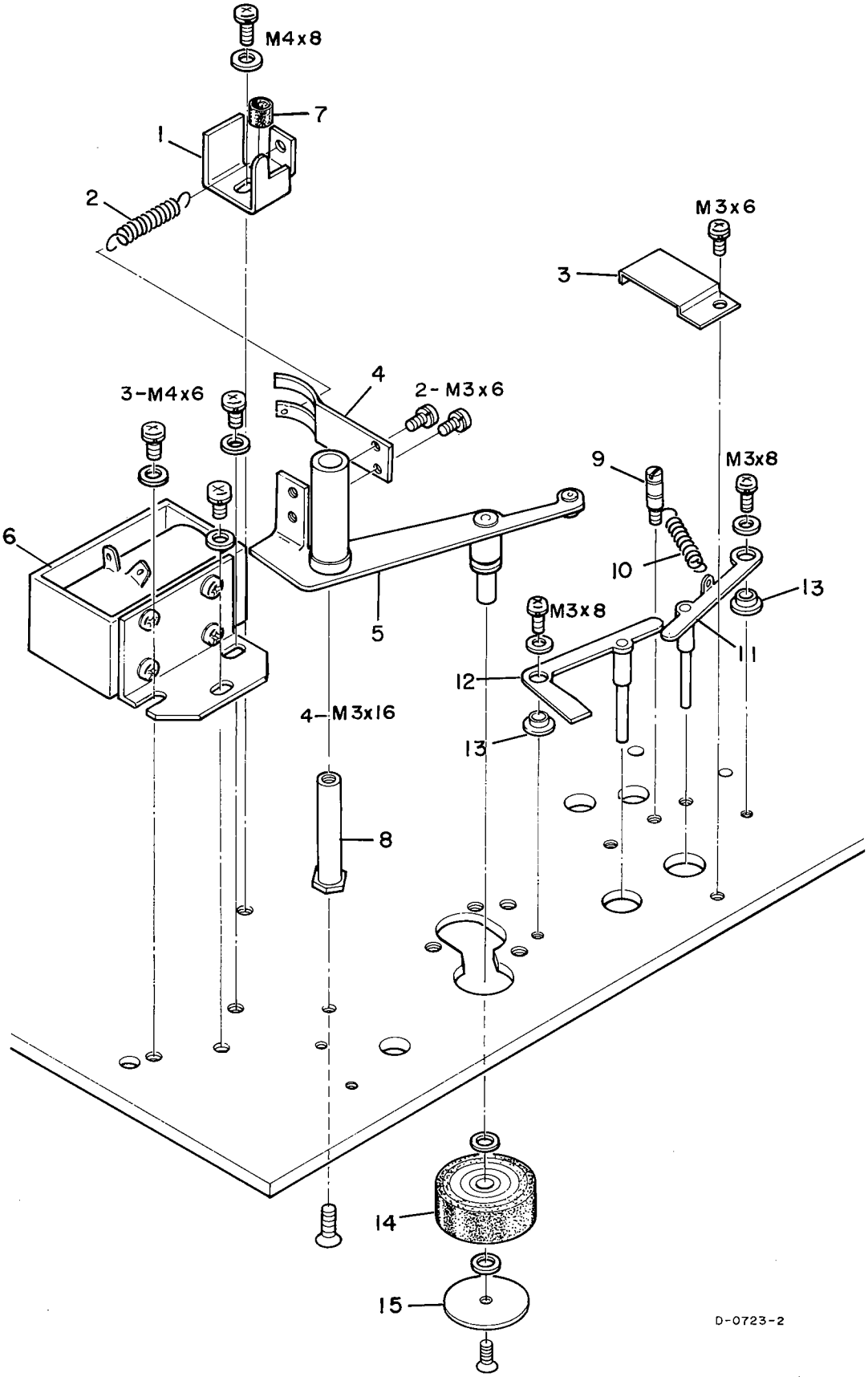

LIFTER AND PINCH ROLLER

REF. NO.	TEAC PARTS NO.	DESCRIPTION	REVISION 1st	REVISION 2nd
8- 1	50141841	Limit Stop, Pinch Roller		
8- 2	50220441	Spring, Return		
8- 3	50152453	Plate, Lifter		
8- 4	50221151	Spring, Pressure		
8- 5	50140235	Arm, Pinch Roller (Assy)		
8- 6	50616360	Solenoid, Pinch Roller (Assy)		
8- 7	50275690	Cushion, Rubber		
8- 8	50141821	Shaft, Roller Arm		
8- 9	50123140	Pin, Lifter Spring		
8-10	50221100	Spring, A		
8-11	50150252	Arm, Lifter (Assy), B		
8-12	50150242	Arm, Lifter (Assy), A		
8-13	50152501	Shaft, Lifter Arm		
8-14	50141751	Pinch Roller		
8-15	50141760	Cap, Pinch Roller		

PREAMPLIFIER CHASSIS
FORWARD SECTION

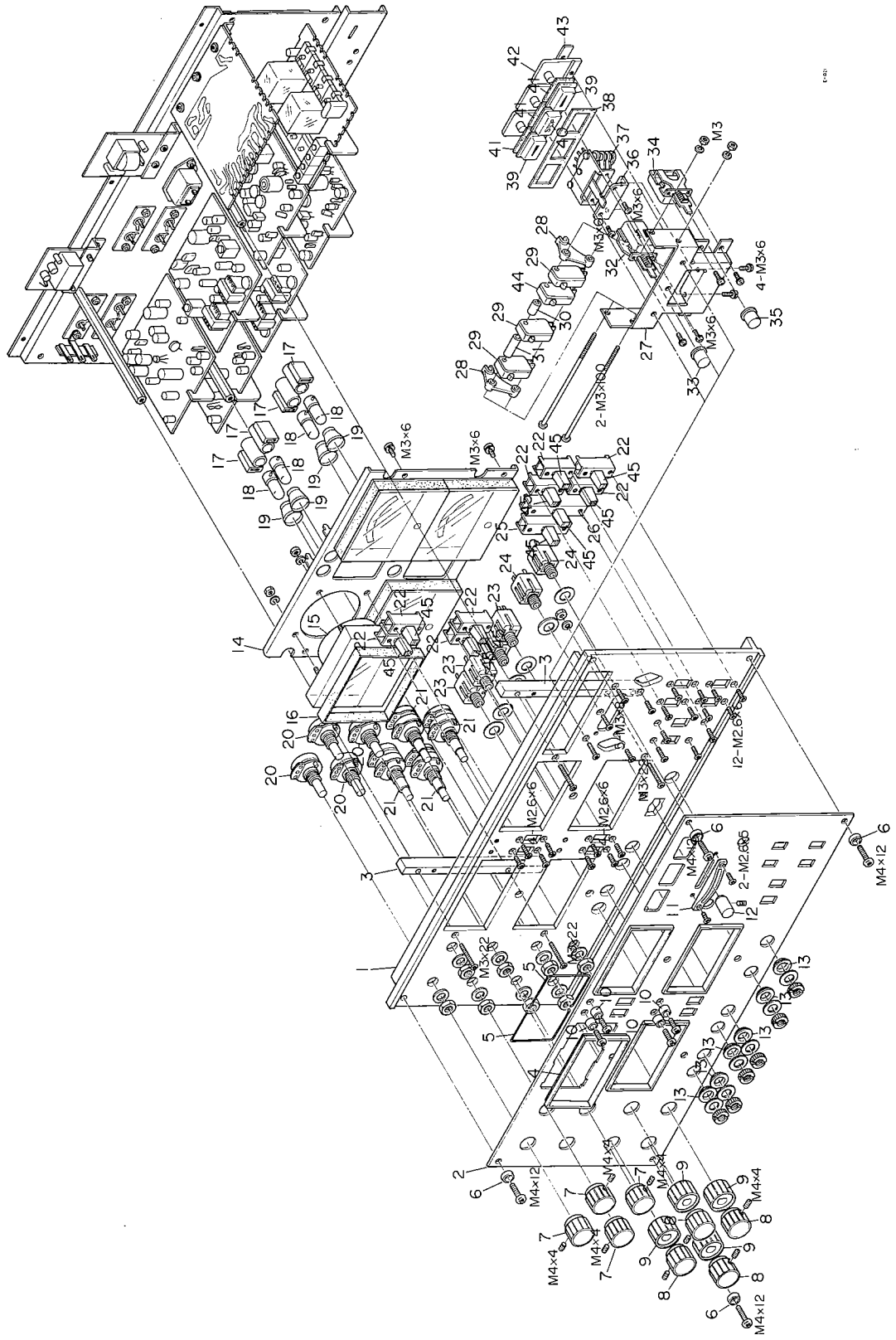

PREAMPLIFIER CHASSIS
FORWARD SECTION

REF. NO.	TEAC PARTS NO.	DESCRIPTION	REVISION 1st	REVISION 2nd
9- 1	50236322	Panel, Ampl.		
9- 2	50114290	Panel, Ampl. Trim		
9- 3	50236420	VU Meter Retainer		
9- 4	50236500	Escutcheon, VU Meter		
9- 5	50236511	Clamp, Meter Escutcheon		
9- 6	50277111	Washer, Trim		
9- 7	50253390	Knob, Upper		
9- 8	50253770	Knob, A		
9- 9	50253401	Knob, Lower		
9-10	50236430	Escutcheon, Record lamp		
9-11	50449900	Cover, Lever SW		
9-12	50253470	Knob, D		
9-13	50332650	Washer, Insulator		
9-14	50236341	Plate, VU Meter		
9-15	50581380	VU Meter		
9-16	50939110	VU Meter Band		
9-17	50415250	Socket, Lamp		
9-18	50414580	Lamp, Bayonet Type (8V)		
9-19	50419070	Cover, Lamp		
9-20	50535140	VR, 2 Gang, 10kΩ×2 (OUTPUT) (incl. hdw.)		
9-21	50535150	VR, 2 Gang, (MIC/LINE) (incl. hdw.) (Outer Shaft 100kΩA, Inner 10kΩA)		
9-22	50440000	SW, Slide (RECORD MODE, MONITOR)		
9-23	50430240	Jack, Phone, Single (MIC)		
9-24	50432450	Jack, Phone, 3 cond. (PHONE)		
9-25	50444450	SW, Slide (PLAY) (S710)		
9-26	50444460	SW, Slide (RECORD BIAS) (S709)		
9-27	50277782	Plate, Control Base		
9-28	50277540	Base Plate Holder		
9-29	50446090	SW, Micro (V-1A)		
9-30	50241950	Spacer, B (Micro SW)		
9-31	50241121	Spacer, A (Micro SW)		
9-32	50443410	SW, Push (Non Lock) (RECORD) (SW6)		
9-33	50253130	Button, B (Red) (RECORD)		
9-34	50443210	SW, Push (Lock) (POWER) (SW1)		
9-35	50253120	Button, A (Black) (POWER)		
9-36	50277771	Plate, Rotary SW		
9-37	50442350	SW, Rotary (Lever Type) (SW7)		
9-38	50277160	Rubber Protector		
9-39	50253210	Button, Control, Transport		
9-40	50253200	Button, Stop, B		
9-41	50277240	Rubber Plate Collar		
9-42	50253113	Button Base		
9-43	50277010	Plate, Control		
9-44	50446180	SW, Micro (V-1A44) (SW15)		
9-45	50279991	Cap, Slide SW		

EXPLODED VIEW 10
A-2340R

PREAMPLIFIER CHASSIS
REAR SECTION

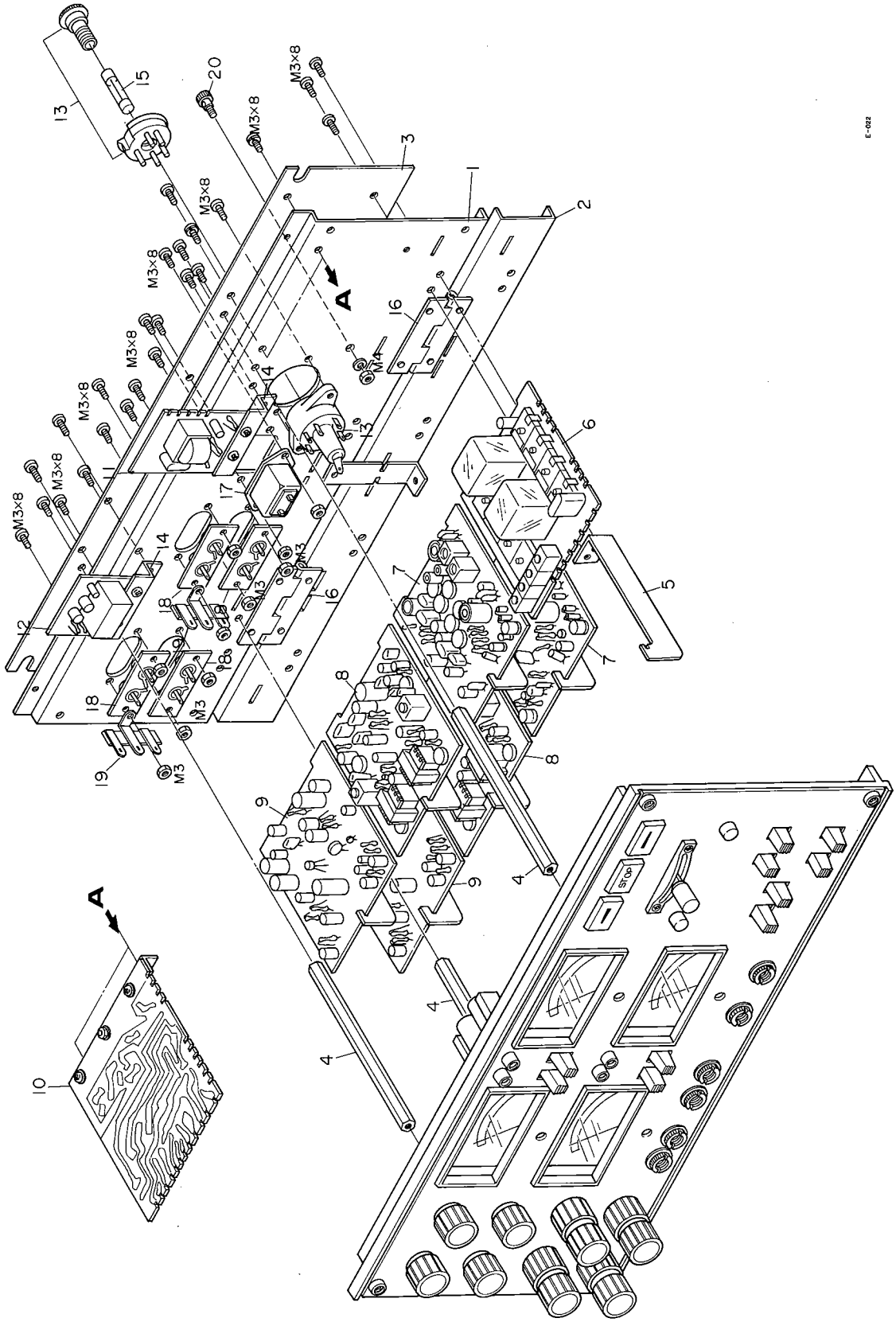

PREAMPLIFIER CHASSIS
REAR SECTION

REF. NO.	TEAC PARTS NO.	DESCRIPTION	REVISION 1st	REVISION 2nd
10- 1	50236442	Chassis, Ampl., A		
10- 2	50236451	Chassis, Ampl., B		
10- 3	50237440	Panel, Rear Trim		
10- 4	50236490	Stand-off, Ampl. Chassis		
10- 5	50233760	Plate, PC Board		
10- 6	50491290	PC Board Assy, Bias Adjust		
10- 7	50491342	PC Board Assy, Record and Meter Ampl.		
10- 8	50491370	PC Board Assy, Line and Phone Ampl.		
10- 9	50491332	PC Board Assy, Mic and PB EQ Ampl.		
10-10	50490510	PC Board Assy, Control Relay		
10-11	50490830	PC Board Assy, Bias Oscillator		
10-12	50491320	PC Board Assy, Rev•Fwd Mode Select Relay		
10-13	50412143	Voltage Selector, with Fuse		
10-14	50332511	Angle, PC Board		
10-15	50411140	Fuse, 2A		
10-16	50236480	Hinge		
10-17	50432950	Socket, AC		
10-18	50434631	Jack, Pin, 2P		
10-19	50452060	Terminal Strip, 1L-2P		
10-20	50454071	Post, Grounding		

STANDARD ACCESSORIES

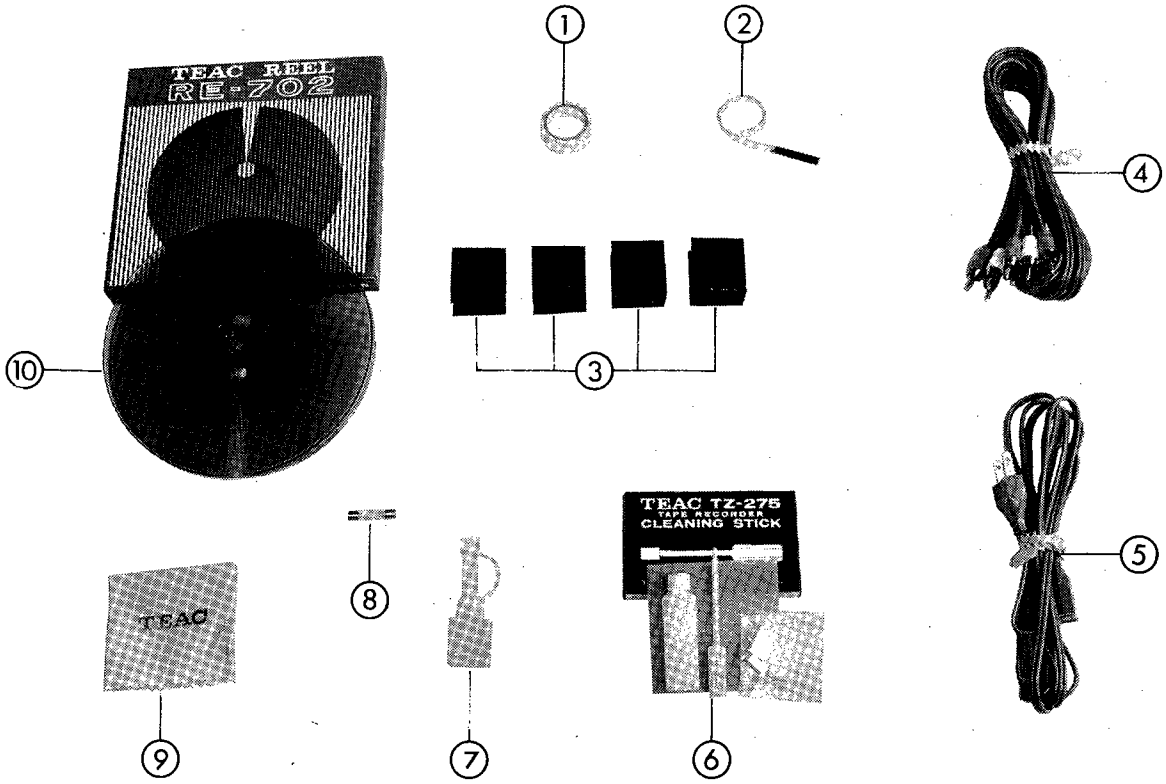

REF. NO.	TEAC PARTS NO.	DESCRIPTION	REVISION 1st	REVISION 2nd
11- 1	50629620	Splicing Tape		
11- 2	50272880	Sensing Tape		
11- 3	50276971	Rubber Feet (for horizontal use), ×4		
11- 4	50471250	Input Output Connection Cords, ×2		
11- 5	50470501	AC Power Cord		
11- 6	57100300	Cleaning Stick (TZ-275)		
11- 7	50291860	Oil and Applicator		
11- 8	50411140	Fuse, 2A		
11- 9	50291350	Silicone Cloth		
11-10	50850081	Empty Reel, 7 inch, Small Hub (RE-702)		

PRINTED CIRCUIT BOARD PARTS LIST

A-2340R

REPLACEMENT INFORMATION

Replacement parts are available through your nearest TEAC Authorized Service Center or directly from the TEAC office.
Changes are constantly being made to make TEAC products better and more reliable.
Therefore, when ordering parts, always include the following information:

MODEL *SERIAL NO.* *REF. NO.* *PARTS NO.* *DESCRIPTION*

MONTH OF ISSUE : March, 1973
LATEST REVISION NO.: E-558

TEAC CORPORATION

MT2350E100

PC BOARD-1-
A-2340R

MIC AND PLAYBACK EQ. AMPLIFIER

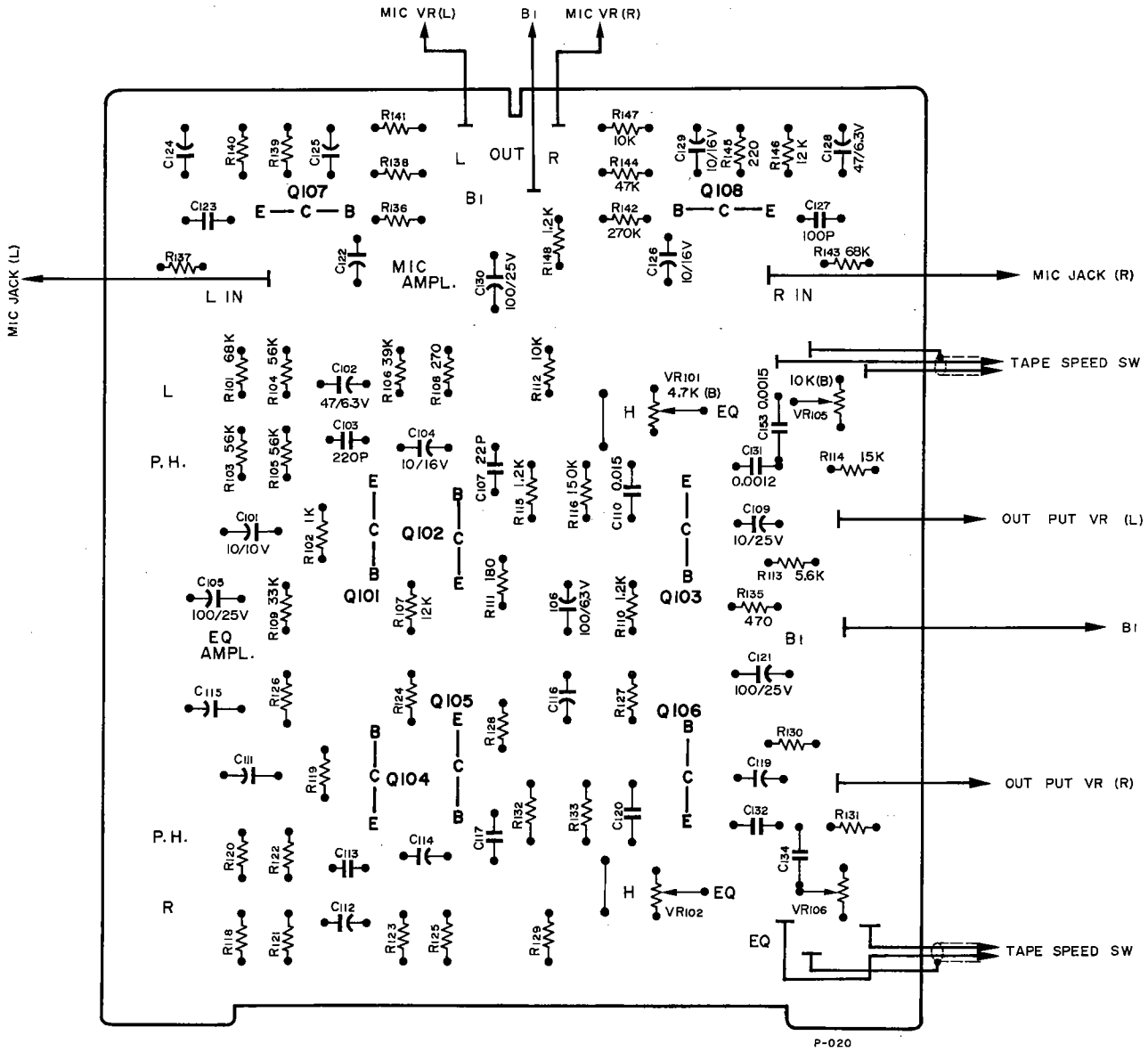

MIC AND PLAYBACK EQ. AMPLIFIER

CIRCUIT REF.NO.	TEAC PARTS NO.	DESCRIPTION	REVISION 1st	2nd	3rd
	50491332	PC Board Assy			
	50483752	PC Board			
		SILICON TRANSISTORS			
Q101/104	50424340	2SC1000-BL			
Q102/105	50423650	2SA494-Y			
Q103/106	50423830	2SC536-F			
Q107/108	50423870	2SC693-G			
		CARBON RESISTORS			
		ALL RESISTORS ARE IN OHMS, 10% TOLERANCE AND OF CARBON TYPE UNLESS OTHERWISE NOTED.			
R101/118	50515620	68k			
R102/119	50515340	1k			
R103/120	50515610	56k			
R104/121	50515610	56k			
R105/122	50515590	47k			
R106/123	50515580	39k			
R107/124	50515500	12k			
R108/125	50515270	270			
R109/126	50515570	33k			
R110/127	50515350	1.2k			
R111/128	50515250	180			
R112/129	50515490	10k			
R113/130	50515460	5.6k			
R114/131	50515510	15k			
R115/132	50515350	1.2k			
R116/133	50515680	220k			
R135	50515300	470			
R136/142	50515700	270k			
R137/143	50515620	68k			
R138/144	50515590	47k			
R139/145	50515260	220			
R140/146	50515500	12k			
R141/147	50515490	10k			
R148	50515350	1.2k			
		TRIMMER RESISTORS			
VR101/102	50533460	4.7kΩB 10φ			
VR105/106	50533480	10kΩB 10φ			
		CAPACITORS			
		ALL CAPACITORS ARE IN MICRO FARADS UNLESS OTHERWISE NOTED.			
C101/111	50546190	Tantalum 10/10V			
C102/112	50554030	Elec. 47/6.3V			
C103/113	50543420	High Q 220pF/50V			
C104/114	50555650	Elec. 10/16V			
C105/115	50554170	Elec. 100/25V			
C106/116	50554230	Elec. 100/6.3V			
C107/117	50543330	High Q 22pF/50V			
C109/119	50554040	Elec. 10/25V			
C110/120	50548420	Mylar 0.015/50V			
C121/130	50554170	Elec. 100/25V			
C122/126	50554050	Elec. 10/16V			
C123/127	50543400	High Q 100pF/50V			
C124/128	50554030	Elec. 47/6.3V			
C125/129	50554050	Elec. 10/16V			
C131/132	50549400	Mylar 0.0012/50V			
C133/134	50548120	Mylar 0.0015/50V			

PC BOARD-2-
A-2340R

LINE OUT AND PHONE AMPLIFIER

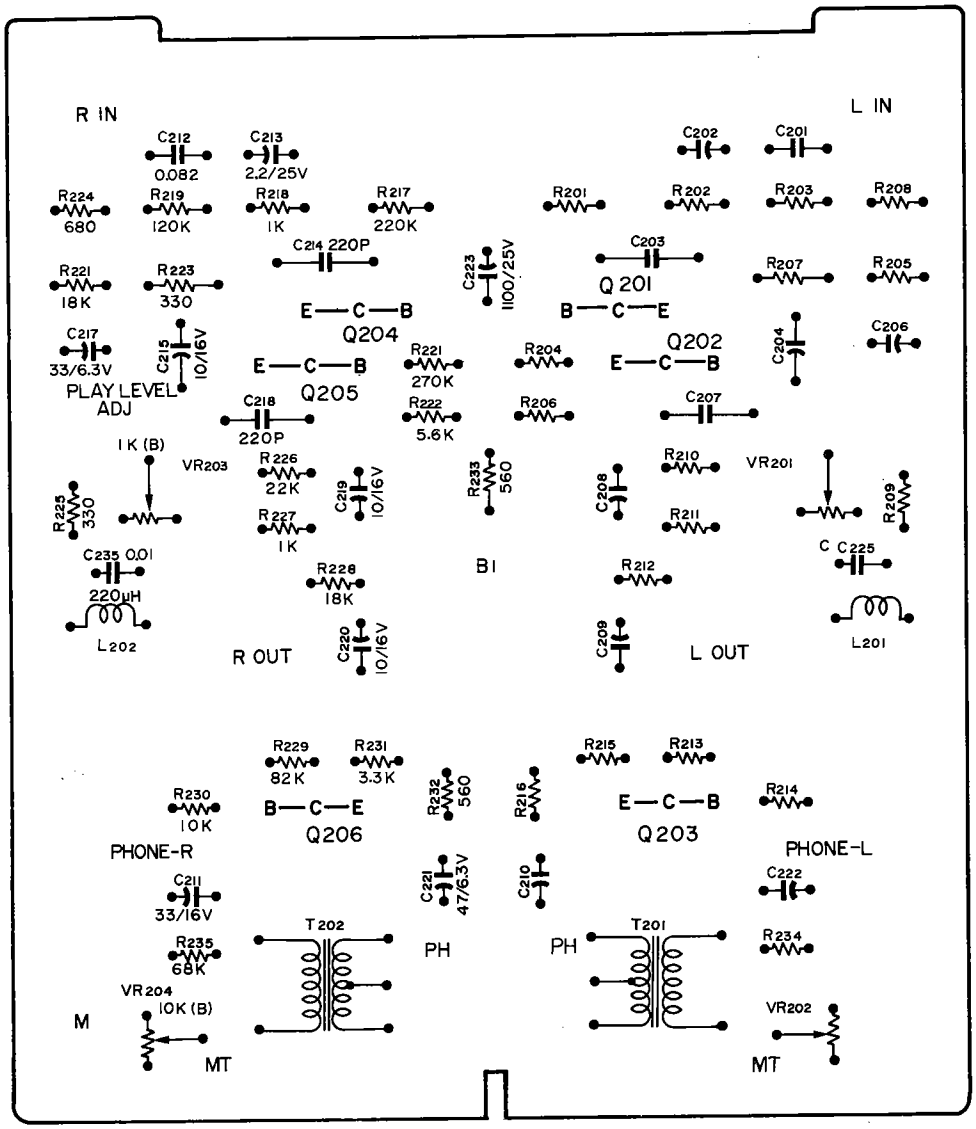

P-021

LINE OUT AND PHONE AMPLIFIER

CIRCUIT REF.NO.	TEAC PARTS NO.	DESCRIPTION	REVISION 1st	2nd	3rd
	50491370	PC Board Assy			
	50483180	PC Board			
		SILICON TRANSISTORS			
Q201/204	50423870	2SC693-G			
Q202/205	50423830	2SC536-F			
Q203/206	50423830	2SC536-F			
		CARBON RESISTORS			
		ALL RESISTORS ARE IN OHMS, 10% TOLERANCE AND OF CARBON TYPE UNLESS OTHERWISE NOTED.			
R201/217	50515680	220k			
R202/218	50515340	1k			
R203/219	50515650	120k			
R204/220	50515700	270k			
R205/221	50515520	18k			
R206/222	50515460	5.6k			
R207/223	50515280	330			
R208/224	50515320	680			
R209/225	50515280	330			
R210/226	50515540	22k			
R211/227	50515340	1k			
R212/228	50515520	18k			
R213/229	50515630	82k			
R214/230	50515490	10k			
R215/231	50515410	3.3k			
R216/232	50515310	560			
R233	50515310	560			
R234/235	50515620	68k			
		TRIMMER RESISTORS			
VR201/203	50533500	1kΩB 10ϕ			
VR202/204	50533480	10kΩB 10ϕ			
		CAPACITORS			
		ALL CAPACITORS ARE IN MICRO FARADS UNLESS OTHERWISE NOTED.			
C201/212	50548370	Mylar 0.082/50V			
C202/213	50549670	Elec. 2.2/25V (KU)			
C204/215	50543420	High Q 220pF/50V			
C205/216	50554250	Elec. 10/6.3V			
C206/217	50554240	Elec. 33/10V			
C207/218	50543420	High Q 220pF/50V			
C208/219	50554050	Elec. 10/16V			
C209/220	50554050	Elec. 10/16V			
C210/221	50554030	Elec. 47/6.3V			
C211/222	50554260	Elec. 33/16V			
C223	50554170	Elec. 100/25V			
C225/235	50548020	Mylar 0.01/50V			
		MISCELLANEOUS			
T201/202	50562141	Transformer, Headphone 3kΩ:8Ω			
L201/202	50566640	Coil, Choke 220μH			

PC BOARD-3-
A-2340R

METER AND RECORD EQ. AMPLIFIER

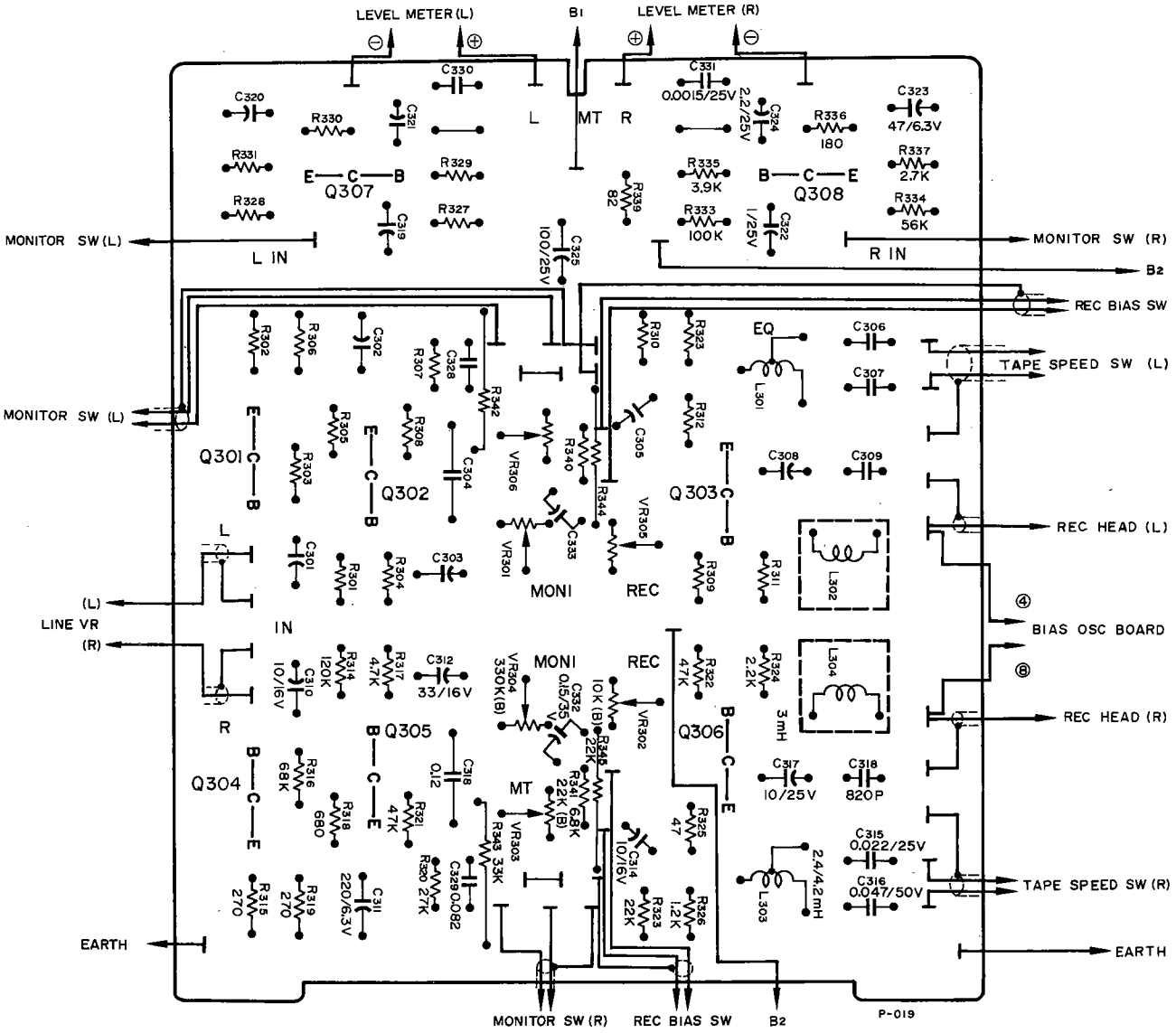

METER AND RECORD EQ. AMPLIFIER

CIRCUIT REF.NO.	TEAC PARTS NO.	DESCRIPTION	REVISION 1st	2nd	3rd
	50491342	PC Board Assy			
	50484381	PC Board			
		SILICON TRANSISTORS			
Q301/304	50423870	2SC693-G			
Q302/305	50424220	2SC828-S			
Q303/306	50424220	2SC828-S			
Q307/308	50424220	2SC828-S			
		CARBON RESISTORS			
ALL RESISTORS ARE IN OHMS, 10% TOLERANCE AND OF CARBON TYPE UNLESS OTHERWISE NOTED.					
R301/314	50515650	120k			
R302/315	50515270	270			
R303/316	50515620	68k			
R304/317	50515460	4.7k			
R305/318	50515320	680			
R306/319	50515270	270			
R307/320	50515560	27k			
R308/321	50515590	47k			
R309/322	50515590	47k			
R310/323	50515540	22k			
R311/324	50515380	2.2k			
R312/325	50515170	47			
R313/326	50515350	1.2k			
R327/333	50515640	100k			
R328/334	50515610	56k			
R329/335	50515430	3.9k			
R330/336	50515250	180			
R331/337	50515400	2.7k			
R339	50515210	82			
R340/341	50515490	6.8k			
R342/343	50515570	33k			
R344/345	50515540	22k			
		TRIMMER RESISTORS			
VR301/304	50533670	330kΩB 10φ			
VR302/305	50533480	10kΩB 10φ			
VR303/306	50533560	22kΩB 10φ			
		CAPACITORS			
ALL CAPACITORS ARE IN MICRO FARADS UNLESS OTHERWISE NOTED.					
C301/310	50554050	Elec. 10/16V			
C302/311	50554330	Elec. 220/6.3V			
C303/312	50554260	Elec. 33/6.3V			
C304/313	50549530	Mylar 0.12/50V			
C305/314	50554050	Elec. 10/16V			
C306/315	50548330	Mylar 0.027/50V			
C307/316	50548270	Mylar 0.047/50V			
C308/317	50546839	Dipped Tantalum 10/25V			
C309/318	50543440	Polyst. 820pF/50V			
C319/322	50554670	Elec. 1/25V			
C320/323	50554030	Elec. 47/6.3V			
C321/324	50554940	Elec. 2.2/25V			
C325	50554170	Elec. 100/25V			
C328/329	50549520	Mylar 0.082/50V			
C330/331	50548120	Mylar 0.0015/35V			
C332/333	50546651	Dipped Tantalum 0.15/35V			
		COILS			
L301/303	50566370	Record Compensation 2.4∿4.2mH			
L302/304	50566300	Trap 3mH			

BIAS OSCILLATOR

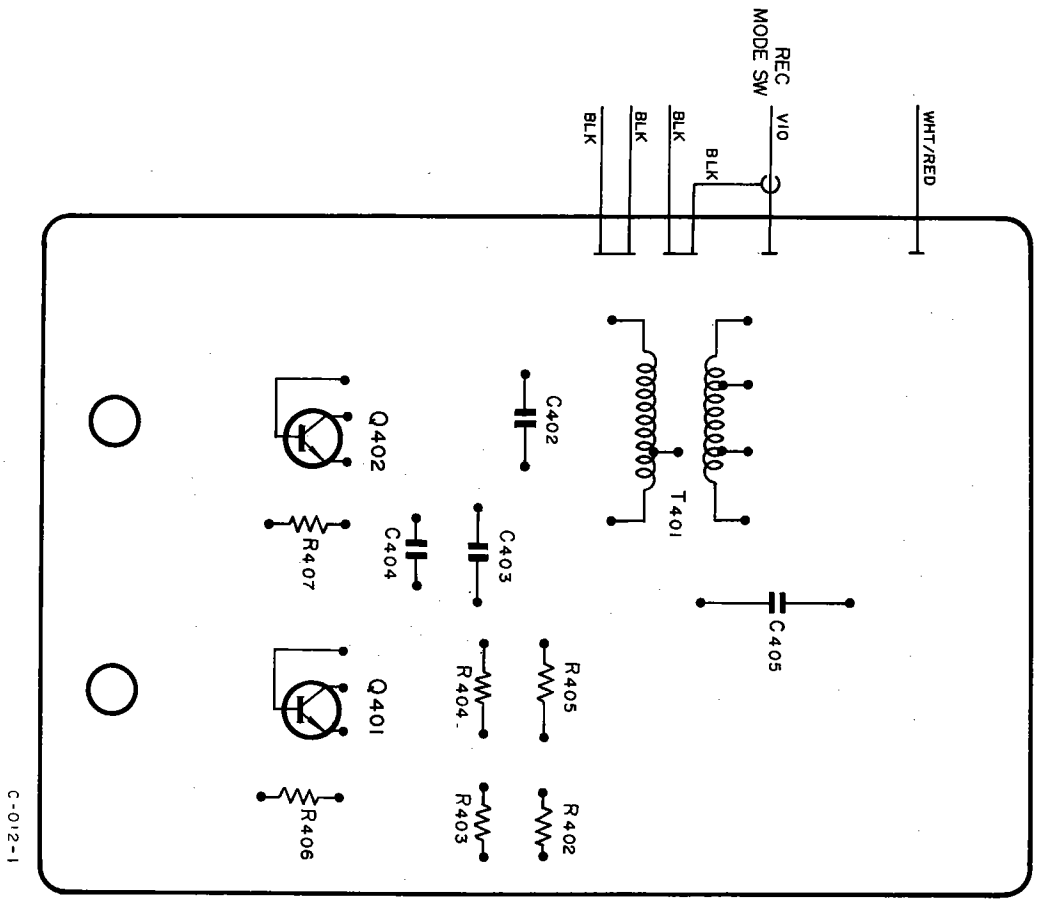

CIRCUIT REF.NO.	TEAC PARTS NO.	DESCRIPTION	REVISION 1st	REVISION 2nd
	50490830	PC Board Assy		
	50483321	PC Board		
T401	50563230	Coil, Oscillator		
Q401•402	50424450	Transistor, 2SC1226A-R		
R402	50514920	Resistor, Carbon 2.2kΩ 1/2W		
R403	50515220	Resistor, Carbon 100Ω 1/4W		
R404•405	50516440	Resistor, Carbon 4.7kΩ 1/2W		
R406•407	50516130	Resistor, Carbon 22Ω 1/2W		
C402•403	50548810	Capacitor, Mylar 0.0033μF/50V 5%		
C404	50548920	Capacitor, Mylar 0.0056μF/250V		
C405	50544040	Capacitor, Mica 4200pF/250V		
	50330930	Insulator Plate		
	50330940	Insulator Tube		

BIAS ADJUST ASSY

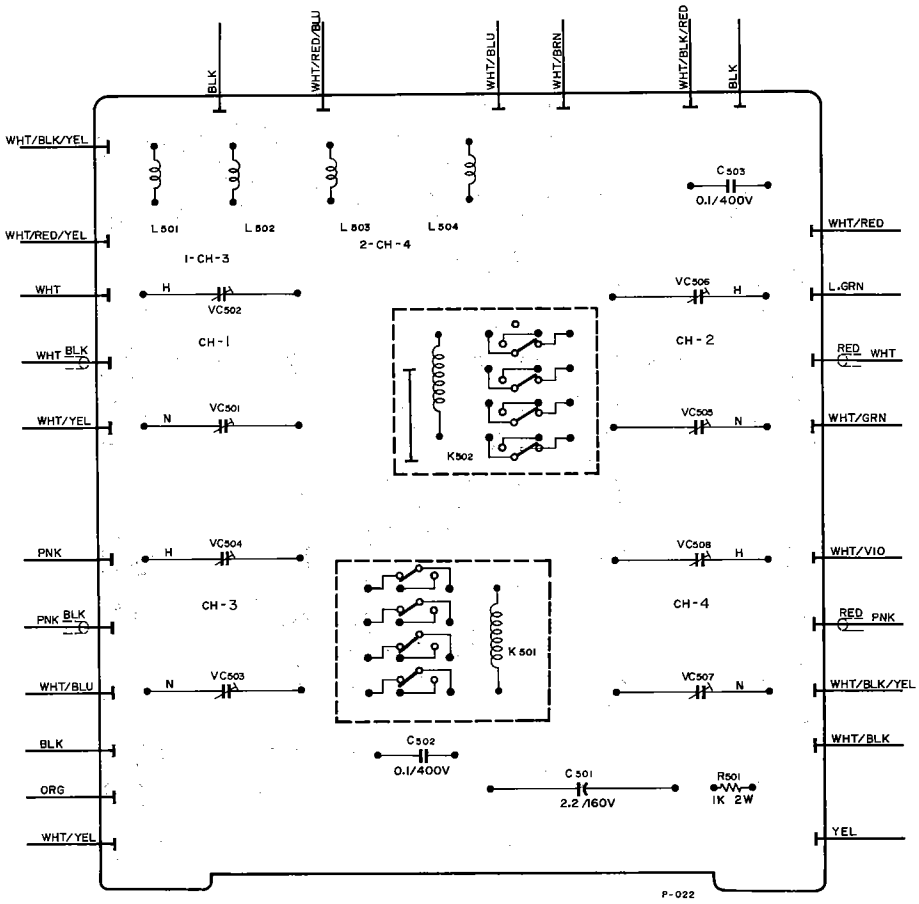

CIRCUIT REF.NO.	TEAC PARTS NO.		REVISION 1st	REVISION 2nd
	50491290	PC Board Assy		
	50484340	PC Board		
VC501∿508	50547070	Trimmer Capacitor, Max 80pF		
L501∿504	50566620	Coil, Dummy Load		
C501·502	50549920	Capacitor, Mylar 0.1μF/400V		
C503	50555210	Capacitor, Elec. 2.2μF/160V		
K501·502	50610730	Relay, 4T DC100V		
R501	50525870	Resistor, Metalized Oxide Film 1kΩ 2W		

PC BOARD -6-
A-2340R

CONTROL RELAY

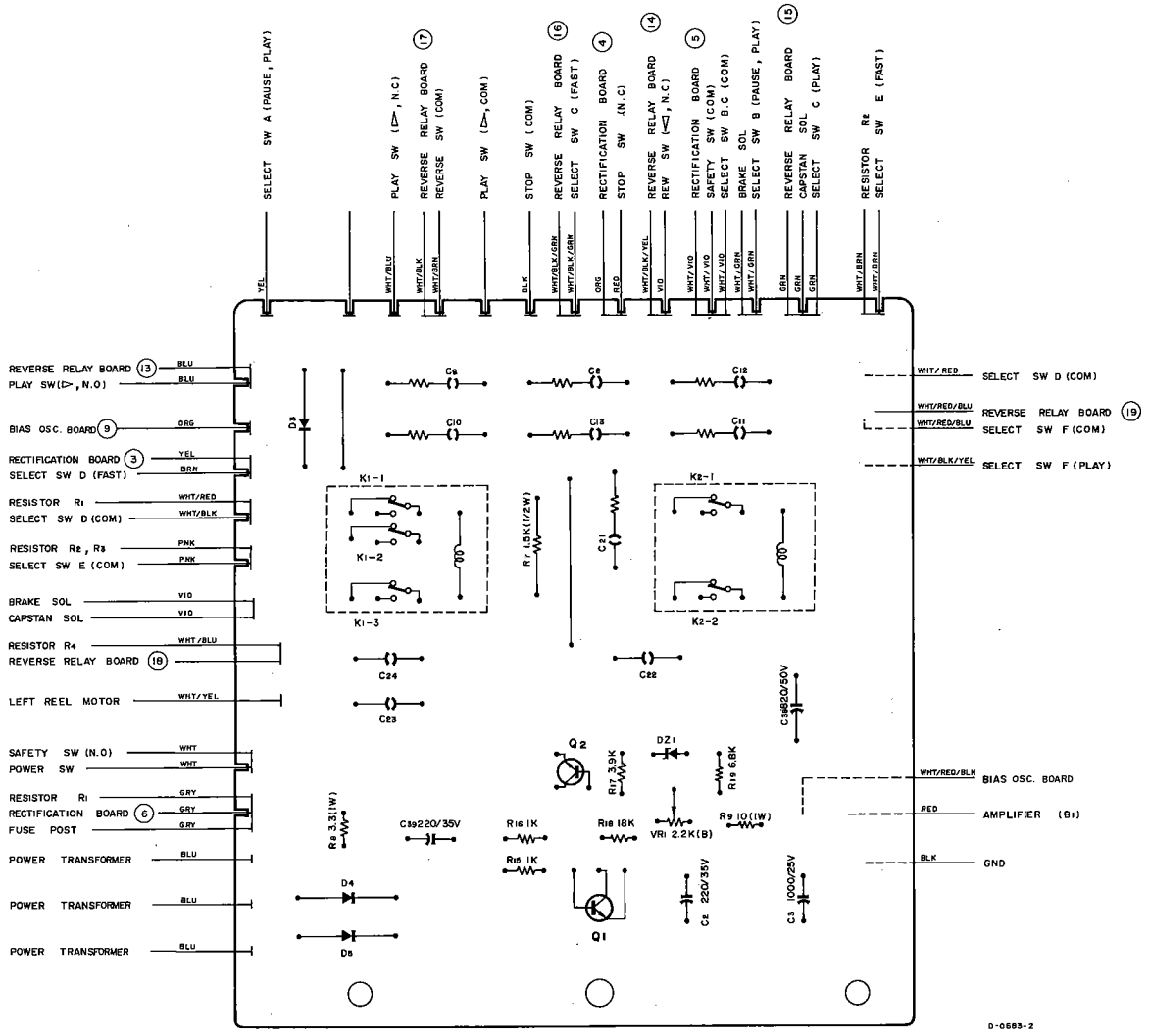

CONTROL RELAY

CIRCUIT REF.NO.	TEAC PARTS NO.		REVISION 1st	REVISION 2nd
	50490510	PC Board Assy		
	50483151	PC Board		
	RELAYS			
K1	50610730	4T, MY-4-0 DC100V		
K2	50610750	2T, MY-2-0 DC100V		
	SILICON TRANSISTORS			
Q1	50424270	2SD317-P		
Q2	50423510	2SC733-Y		
	DIODES			
D4•5	50422360	FR2-06		
D3	50422380	FR2-10		
DZ1	50422580	Zener 02Z 6.2A		
	RESISTORS			
R7	50574860	Carbon 1.5kΩ 1/2W		
R8	50525440	Wire Wound 3.3Ω 1W		
R9	50525100	Wire Wound 10Ω 1W		
R15•16	50515340	Carbon 1kΩ 1/4W		
R17	50515430	Carbon 3.9kΩ 1/4W		
R18	50515520	Carbon 18kΩ 1/4W		
R19	50515490	Carbon 6.8kΩ 1/4W		
	TRIMMER RESISTOR			
VR1	50533640	2.2kΩB 10ϕ		
	CAPACITORS			
C2	50554380	Elec. 220μF/35V		
C3	50554440	Elec. 1000μF/25V		
C8∿13	50529050	Spark Killer 0.1μF+120Ω/400V		
C21	50529050	Spark Killer 0.1μF+120Ω/400V		
C22•23•24	50549920	Mylar 0.1μF/400V		
C38	50557080	Elec. 820μF/50V		
C39	50554380	Elec. 220μF/35V		
	MISCELLANEOUS			
	50330930	Insulator Plate		
	50330940	Insulator Tube		
	50330950	Angle, PC Board, C		

PC BOARD-7-
A-2340R

REVERSE RELAY

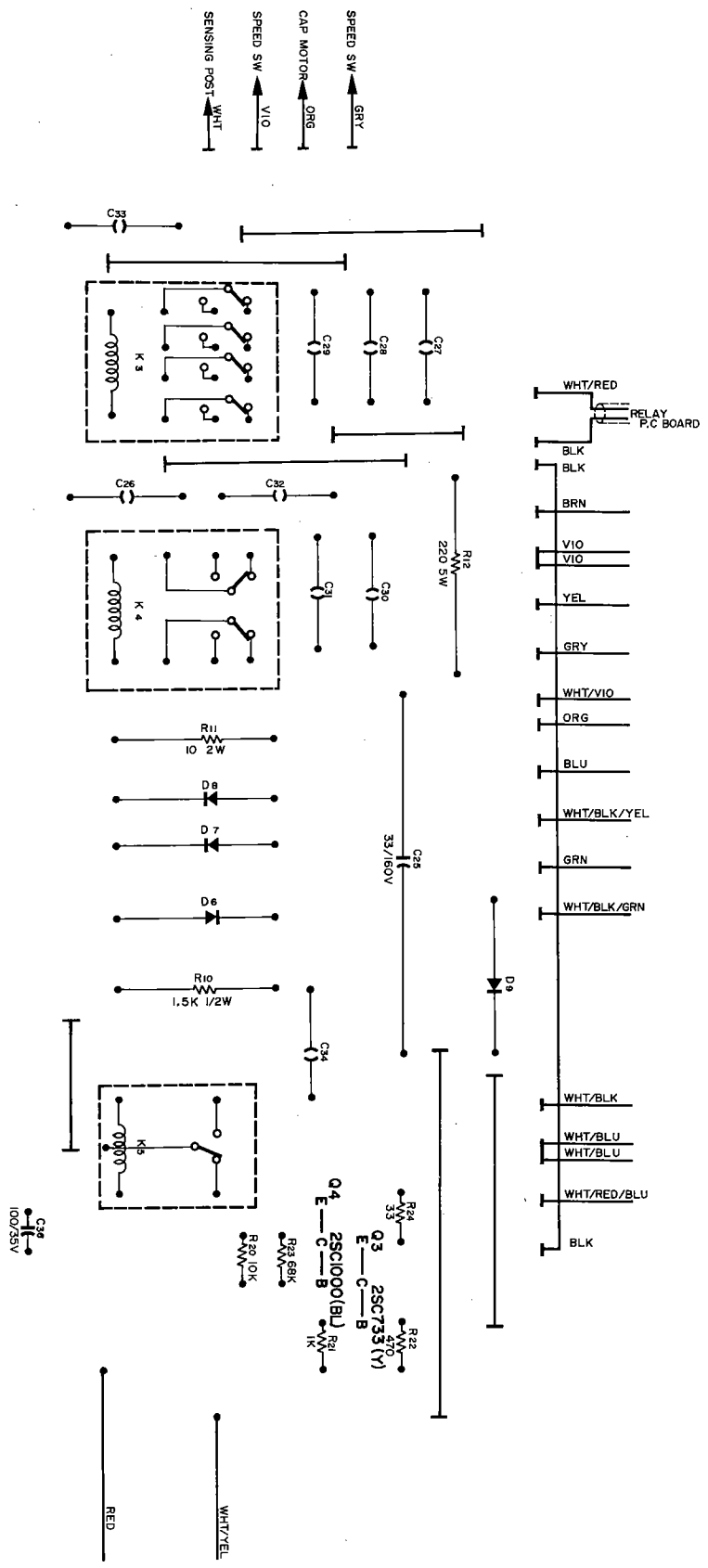

REVERSE RELAY

CIRCUIT REF.NO.	TEAC PARTS NO.		REVISION 1st	REVISION 2nd
	50491281	PC Board Assy		
	50483791	PC Board		
	RELAYS			
K3	50610730	4T, MY4-0 DC100V		
K4	50610750	2T, MY2-0 DC100V		
K5	50611150	1T, LC1-C DC24V		
	SILICON TRANSISTORS			
Q3	50423510	2SC733-Y		
Q4	50424240	2SC1000-BL		
	DIODES			
D6•9	50422360	FR2-06		
D7•8	50422370	FR2-08		
	RESISTORS			
R10	50574860	Carbon 1.5kΩ 1/2W 5%		
R11	50525810	Wire Wound 10Ω 2W		
R12	50526080	Wire Wound 220Ω 5W		
R14	50574740	Carbon 470Ω 1/2W 5%		
R20	50515490	Carbon 10kΩ 1/4W		
R21	50515340	Carbon 1kΩ 1/4W		
R22	50515300	Carbon 470Ω 1/4W		
R23	50515620	Carbon 68kΩ 1/4W		
R24	50515150	Carbon,33Ω 1/4W		
	CAPACITORS			
C25	50555510	Elec. 33μF/160V		
C36	50554630	Elec. 100μF/35V		
	50529050	Spark Killer 0.1μF+120Ω/400V		

RECTIFIER

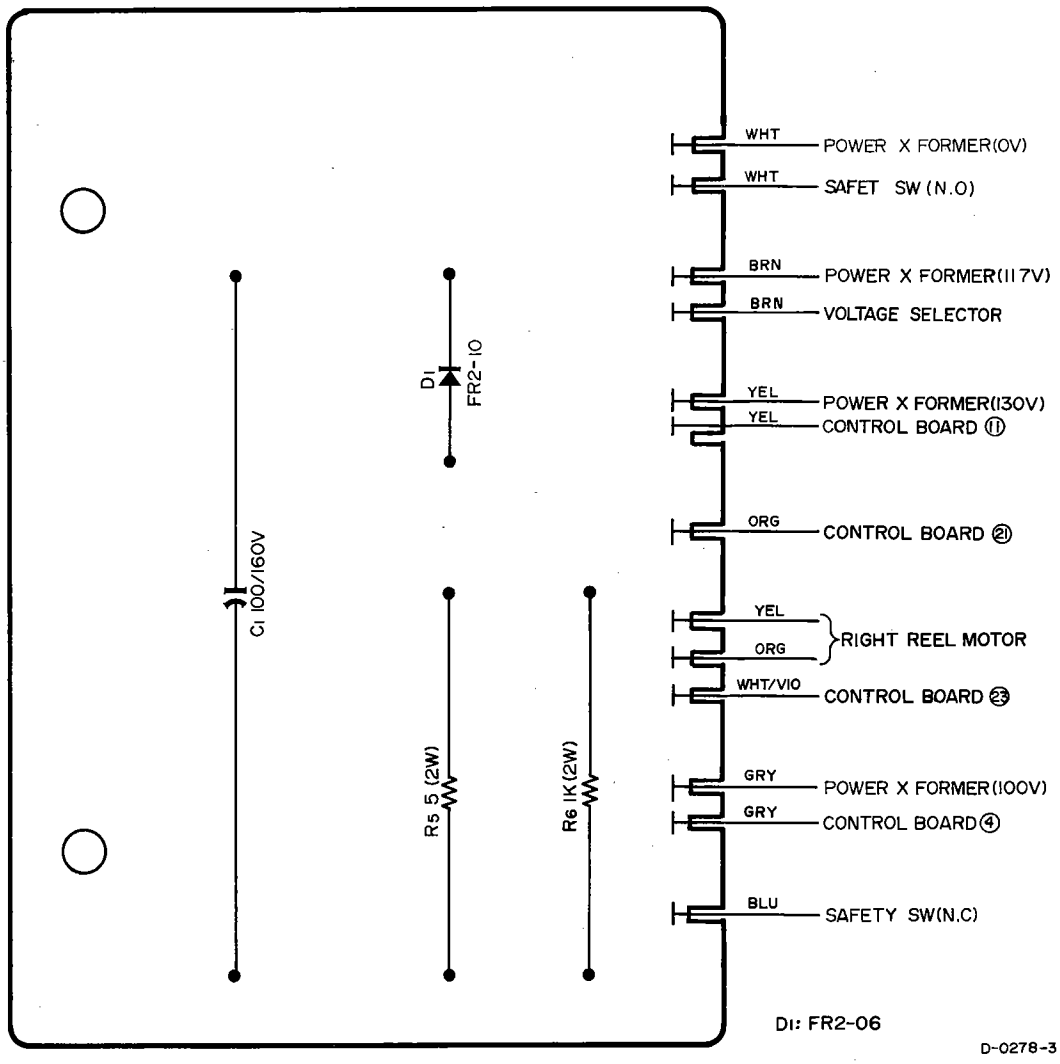

CIRCUIT REF.NO.	TEAC PARTS NO.	DESCRIPTION	REVISION 1st	REVISION 2nd
	50500500	PC Board Assy		
	50482400	PC Board		
D1	50422380	Diode FR2-10		
C1	50555250	Capacitor, Elec. 100μF/160V		
R5	50526030	Resistor, Wire Wound 5Ω 2W		
R6	50525870	Resistor, Metalized Oxide Film 1kΩ 2W		

REV-FWD MODE SELECT RELAY

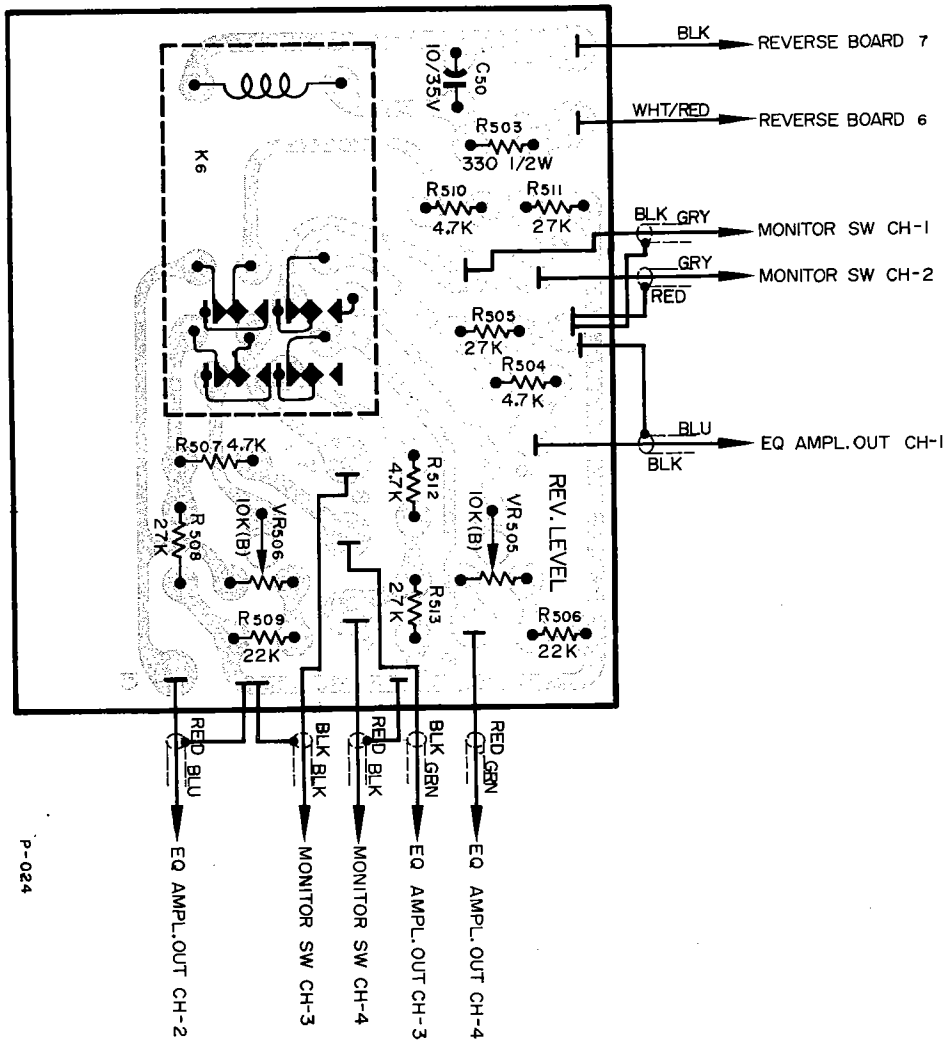

CIRCUIT REF.NO.	TEAC PARTS NO.	DESCRIPTION	REVISION 1st	REVISION 2nd
	50491320	PC Board Assy		
	50483092	PC Board		
K6	50611010	Relay, Sub Miniature		
R503	50574680	Resistor, Carbon 270Ω 1/2W R		
C501	50554510	Capacitor, Elec. 10μF/35V		
R504/507	50570260	Resistor, Carbon 4.7kΩ 1/4W		
R510/512	50570260	Resistor, Carbon 4.7kΩ 1/4W		
R505/508	50570440	Resistor, Carbon 27kΩ 1/4W		
R511/513	50570440	Resistor, Carbon 27kΩ 1/4W		
R506/509	50570420	Resistor, Carbon 22kΩ 1/4W		
VR505/506	50533480	Trimmer Resistor, 10kΩB 10ϕ		

MIC AND PLAYBACK EQ. AMPLIFIER

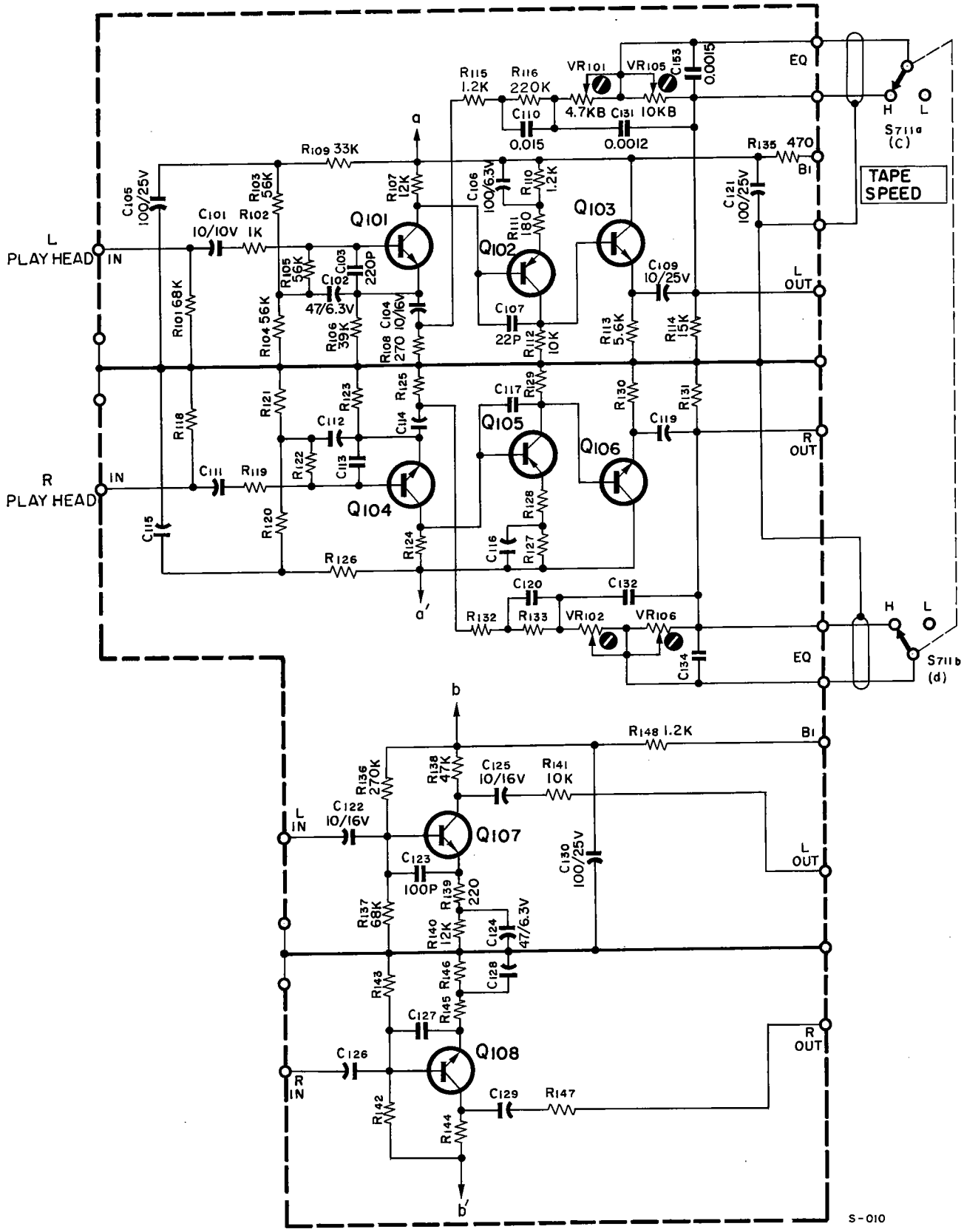

LINE OUT AND PHONE AMPLIFIER

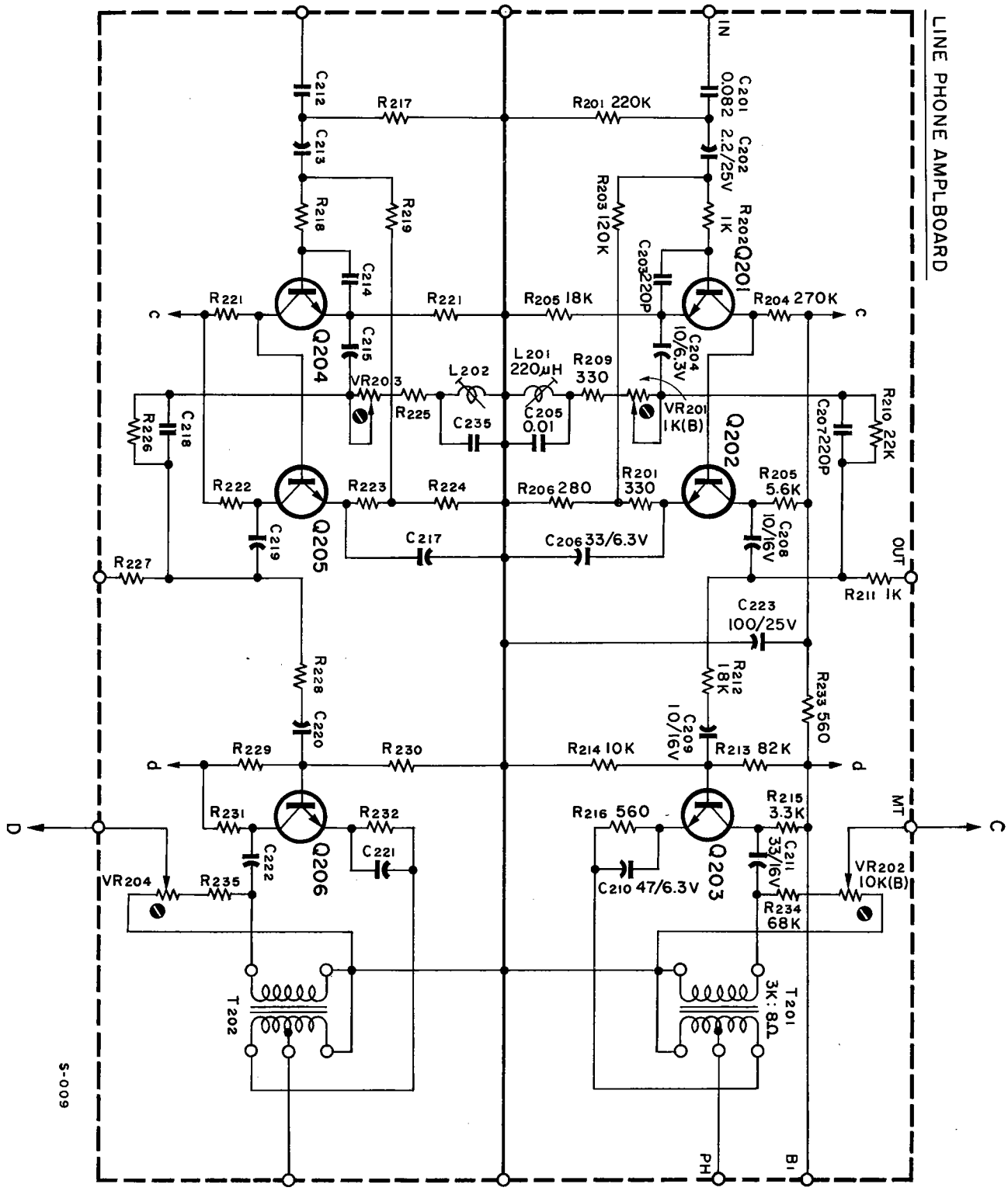

METER AND REC. EQ. AMPLIFIER

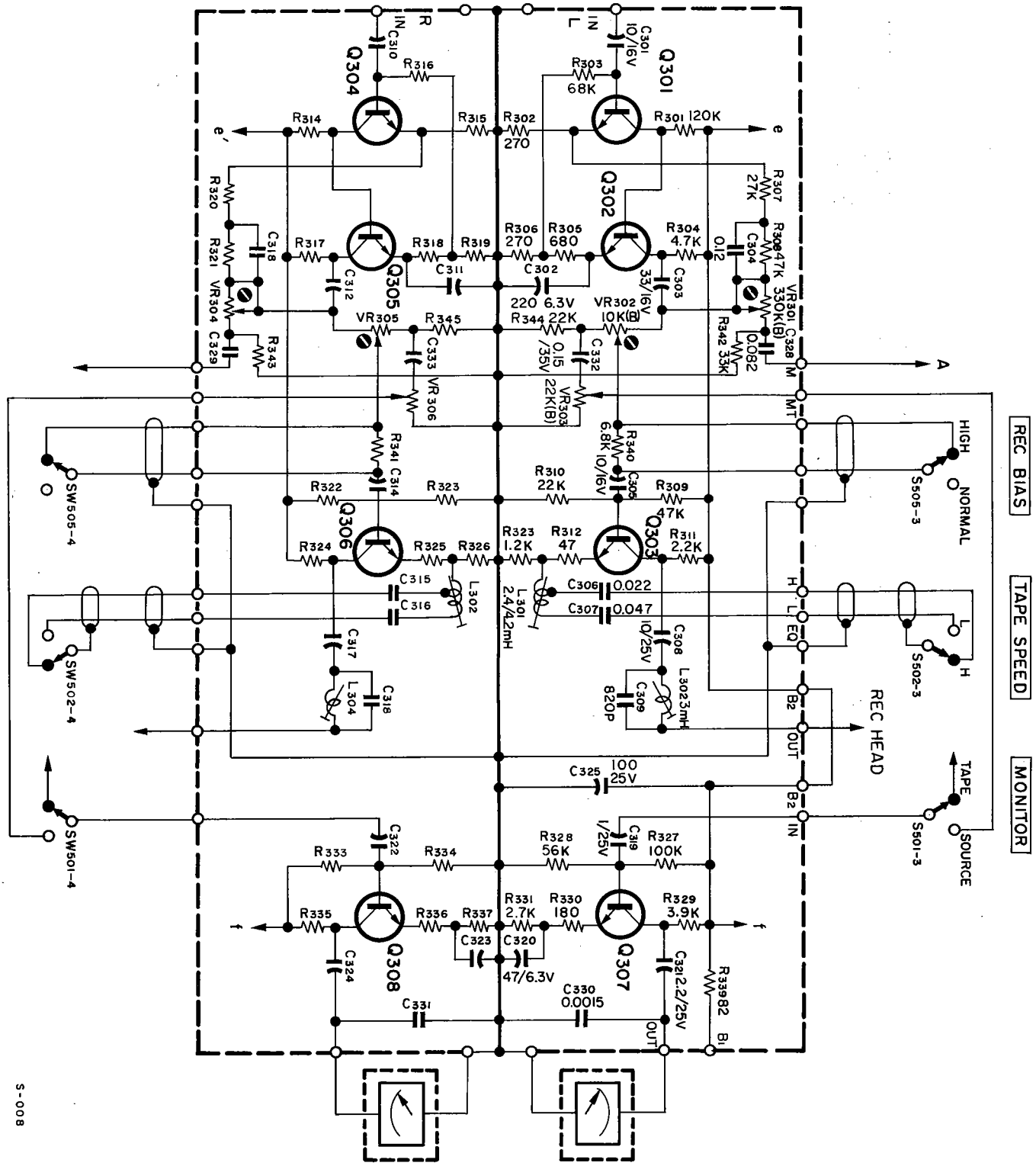

NOTES

CIRCUIT DC VOLTAGES OBTAINED WITH HIGH INPUT IMPEDANCE DC VTVM AND SHOULD BE WITHIN 20% AT RATED LINE VOLTAGE.
DC VOLTAGE READINGS WERE OBTAINED UNDER THE FOLLOWING CONDITIONS.

INPUT SIGNAL	NONE
MODE	STEREO RECORD

CIRCUIT SIGNAL LEVEL OBTAINED WITH HIGH INPUT AC VTVM AND SHOULD BE WITHIN 20% AT RATED LINE VOLTAGE

SIGNAL	400Hz OPERATING LEVEL
INPUT CONTROL	FULL CLOCKWISE
OUTPUT CONTROL	REFEREN E LEVEL
POTENTIOMETERS	OPTIMUM SETTING

: SCREWDRIVER ADJUSTMENT
: ON FRONT PANEL
: ON REAR PANEL
BLOCK DIAGRAM SHOWN IN THE LEFT CHANNEL ONLY

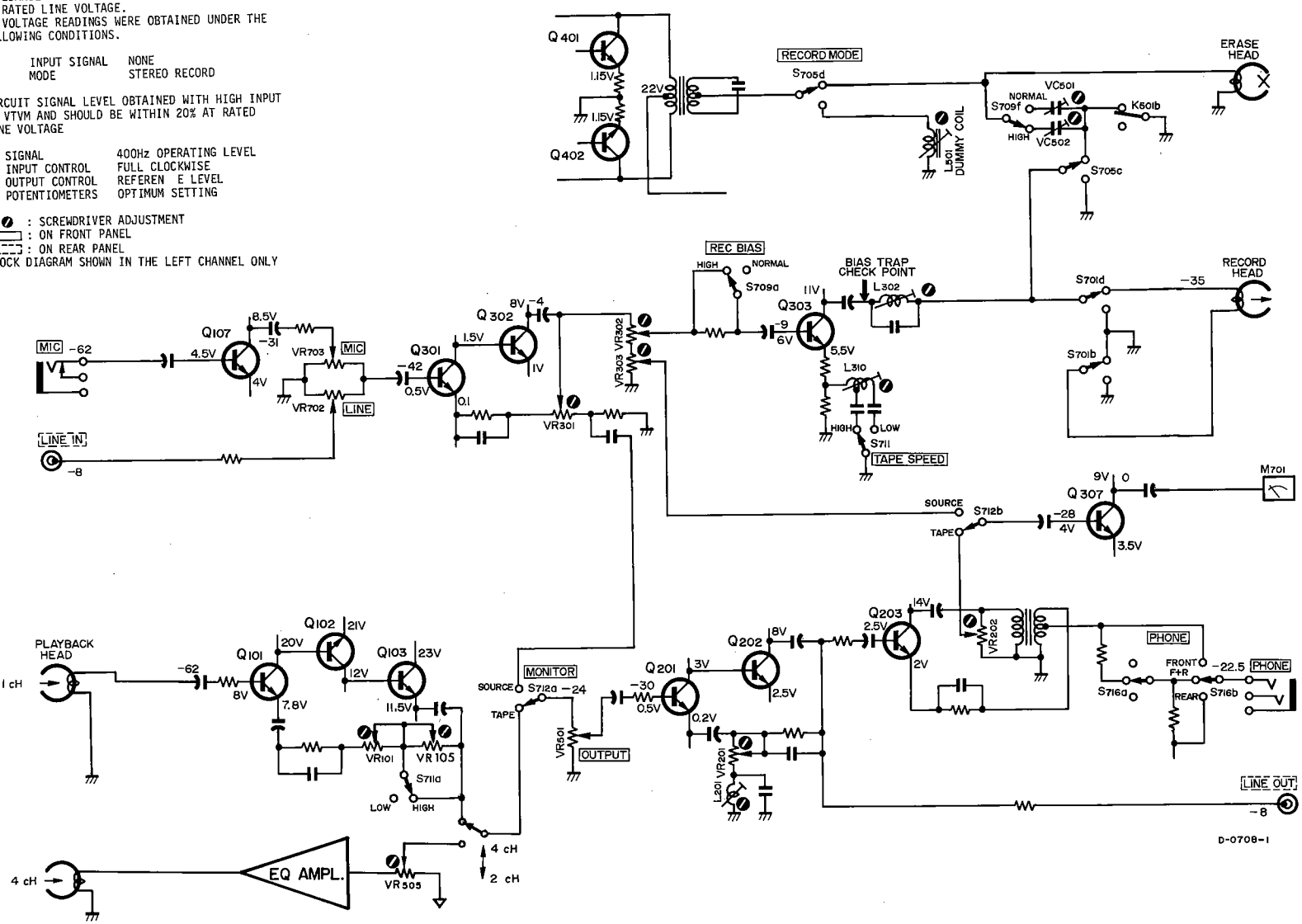

SIMPLIFIED CIRCUIT DIAGRAM

SIGNAL AND DC VOLTAGE CHART

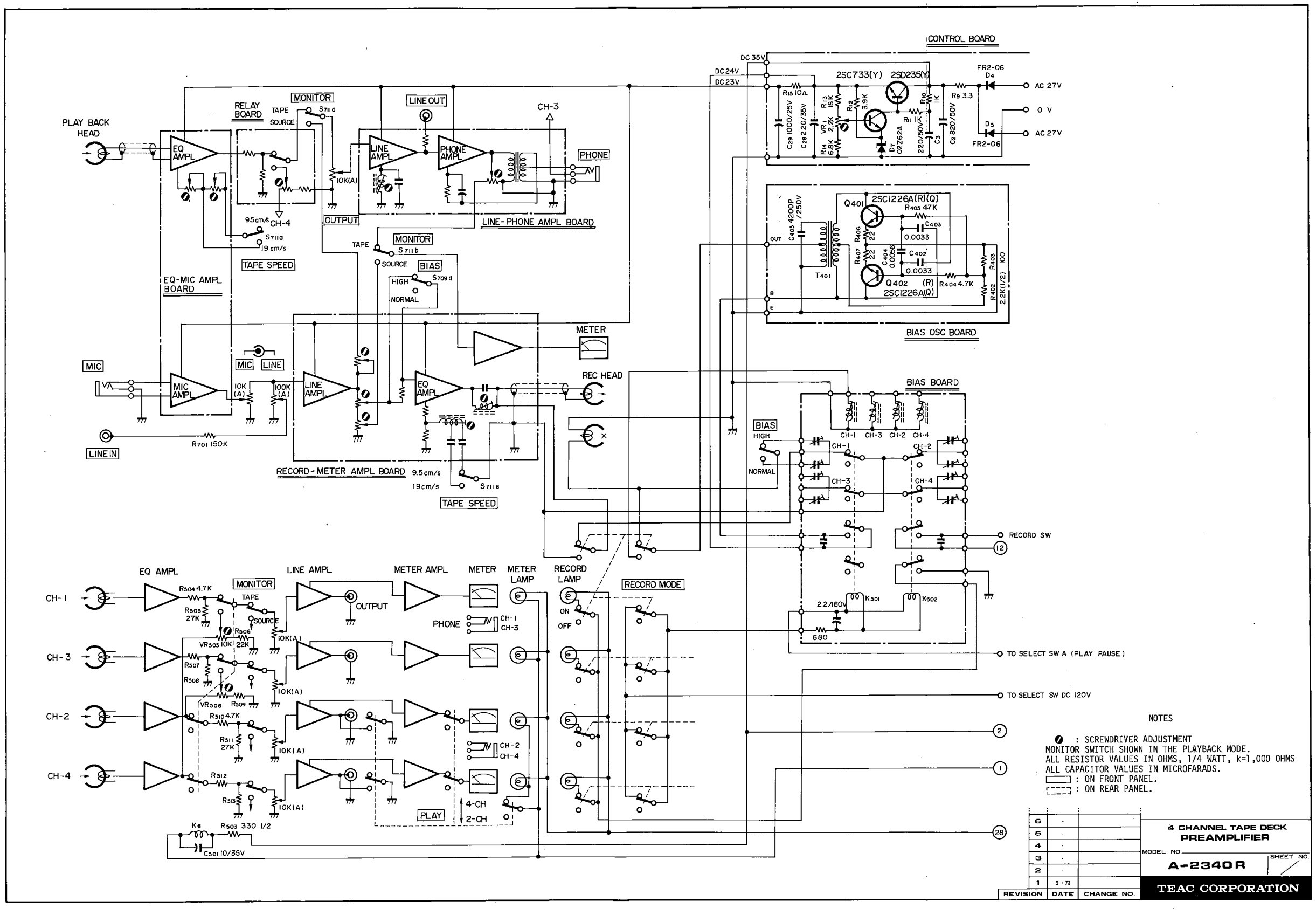

NOTES

: SCREWDRIVER ADJUSTMENT
MONITOR SWITCH SHOWN IN THE PLAYBACK MODE.
ALL RESISTOR VALUES IN OHMS, 1/4 WATT, k=1,000 OHMS
ALL CAPACITOR VALUES IN MICROFARADS.
: ON FRONT PANEL.
: ON REAR PANEL.

REVISION	DATE	CHANGE NO.
6		
5		
4		
3		
2		
1	3·73	

4 CHANNEL TAPE DECK PREAMPLIFIER

MODEL NO. **A-2340R**

SHEET NO.

TEAC CORPORATION

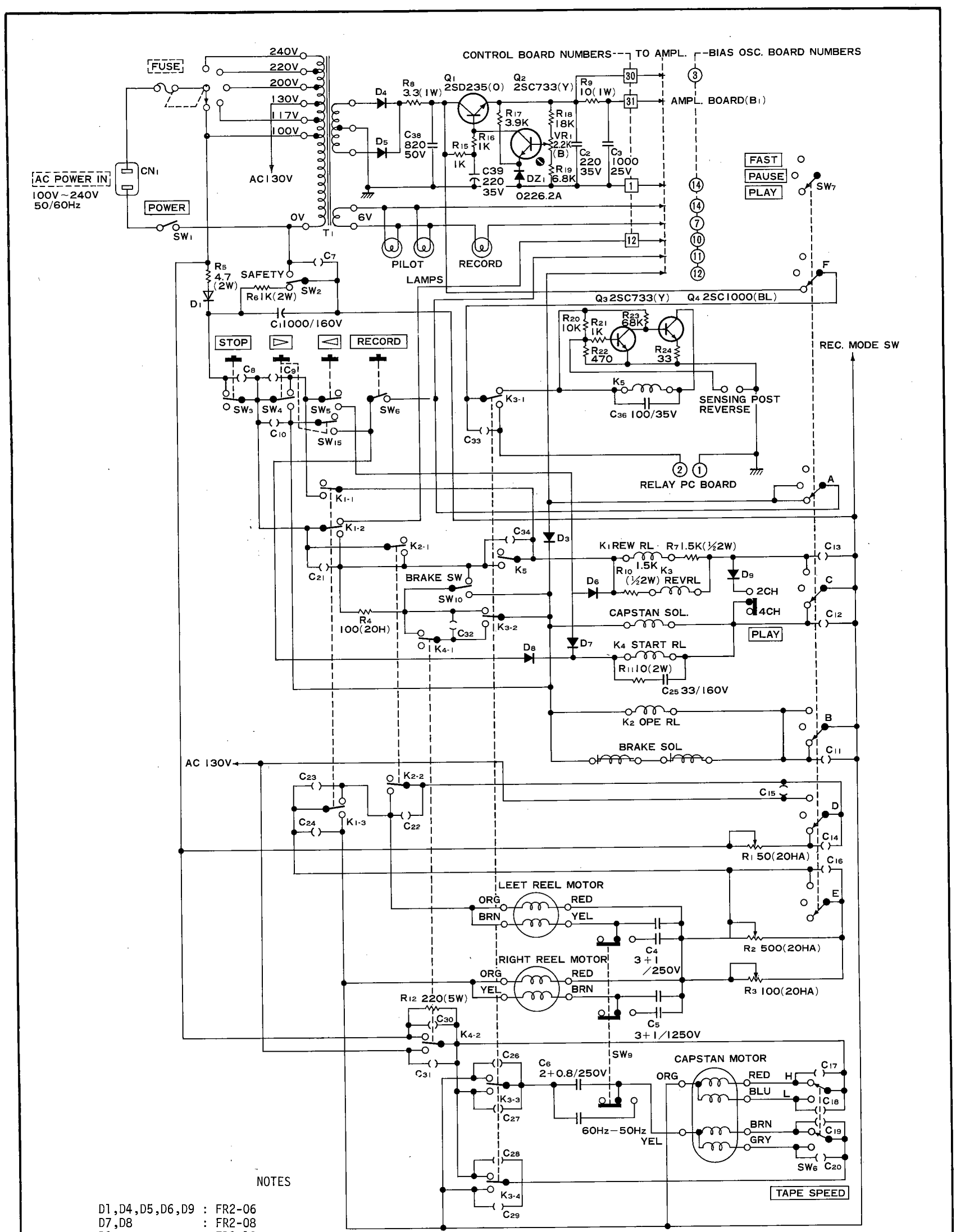

NOTES

D1,D4,D5,D6,D9 : FR2-06
D7,D8 : FR2-08
D3 : FR2-10
—()— : SPARK KILLER
▭ : ON FRONT PANEL
⬚ : ON REAR PANEL
ALL RELAYS SHOWN NOT ENERGIZED (STOP MODE).
S6 TAPE SPEED SWITCH SHOWN IN THE 7-1/2ips POSITION.
FREQUENCY CONVERSION SWITCH SHOWN IN THE 60Hz POSITION.
ALL CAPACITOR VALUES IN MICROFARADS.
ALL RESISTOR VALUES IN OHMS, k=1,000 OHMS

REVISION	DATE	CHANGE NO.
6	·	
5	·	
4	·	
3	·	
2	·	
1	3·73	

4 CHANNEL TAPE DECK
TAPE TRANSPORT
MODEL NO. **A-2340R**
SHEET NO.
TEAC CORPORATION