BASSMAN **10 (75w)**

Fender

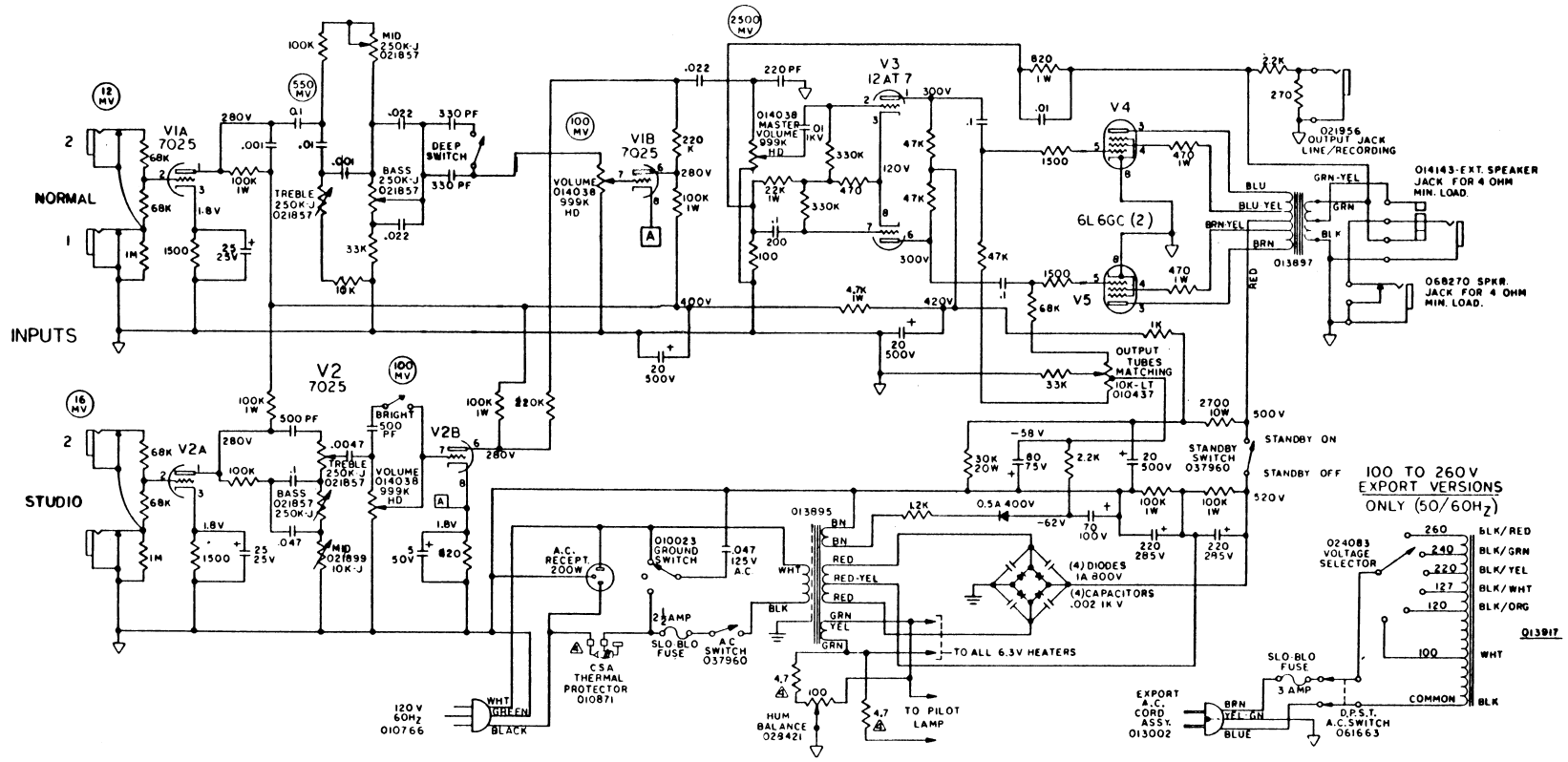

NOTE GROUND SWITCH .047 125V A.C. AND A.C. RECEPTACLE DELETED.

CAUTION:

500 VOLTS AVAILABLE. DISCONNECT POWER SUPPLY AND ALLOW AT LEAST 20 SECONDS FOR VOLTAGES TO BLEED OFF. BEFORE SERVICING AMPLIFIER.

▲ USED IN SOME VERSIONS.

○ DENOTES TYPICAL 300HZ SIGNAL FOR 10W OUTPUT WITH VOLUME MAX, BASS MAX. TREBLE MIN AND DEEP SWITCH IN UP POSITION.

3. WHEN INSTALLING NEW 6L6'S RESET O.T. MATCHING FOR MIN. HUM.
2. ALL CAPACITORS AT LEAST 600 VOLT RATING IF NOT SPECIFIED.
1. ALL RESISTORS 1/2 WATT, 10% TOLERANCE IF NOT SPECIFIED.

NOTED UNLESS OTHERWISE SPECIFIED

DWN	RON RICO	DATE 3/9/77	Fender / Rogers / Rhodes
CHK		DATE 3/11/77	CBS MUSICAL INSTRUMENTS — A DIVISION OF CBS, INC. FULLERTON, CALIFORNIA
APPD ENG		DATE / /	PART NAME SCHEMATIC BASSMAN TEN 70 WATT DOMESTIC AND EXPORT
APPD E.E.		DATE 7/18/77	RELEASE 65Y · SIZE D · PART NO. 014232 · REV A