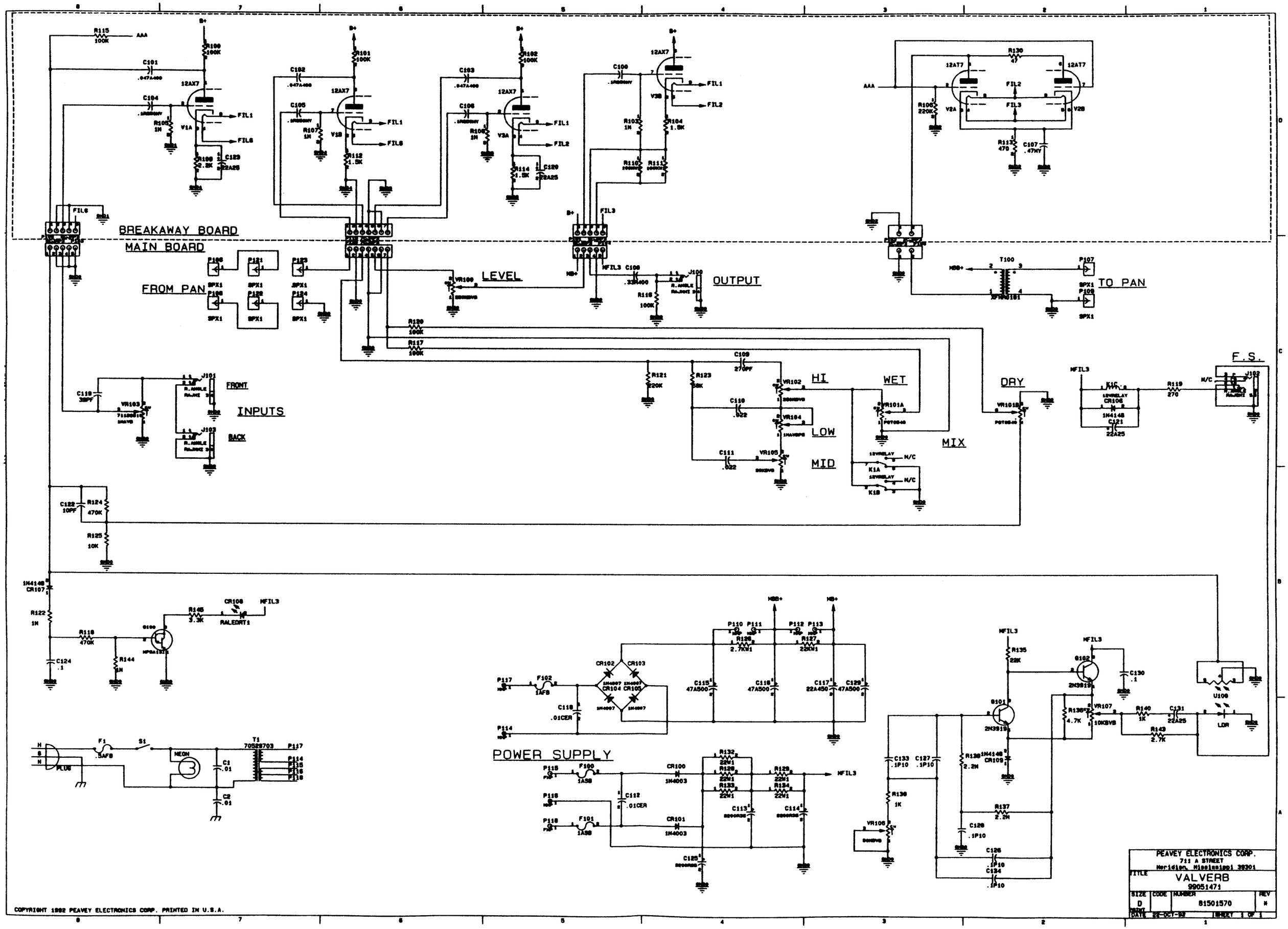

COPYRIGHT 1992 PEAVEY ELECTRONICS CORP. PRINTED IN U.S.A.