CIRCUIT OPERATION

Engine Coolant Temperature Gauge

The Engine Coolant Temperature Gauge Sensor (X114) has approximately 200 ohms resistance when the coolant temperature is low. As coolant temperature increases, the resistance of the sensor decreases. This varying resistance causes the current through the sensor to change and the gauge to register the temperature. When the coolant is hot, the resistance of the sensor is approximately 10 ohms.

Fuel Gauge

When the fuel tank level is low, the resistance of the fuel gauge sender is approximately 220 ohms. As the fuel level increases, the resistance of the sender decreases, causing the gauge to register the change. When the fuel tank is full, the resistance of the sender is approximately 10 ohms. When the fuel gauge sender's resistance falls below approximately 25 ohms (6 liters/1.5 US gallons), the fuel warning light will illuminate to warn the driver.

Speedometer

The Vehicle Speed Sensor (X190) sends a signal to the speedometer in the form of voltage pulses. The pulses are filtered by the Vehicle Speed Sensor Buffer (Z160) (if equipped). The voltage alternates between battery voltage and 0 volts 6 times per wheel revolution. If equipped, the speed sensor signal is also sent to the Seatbelt And Speed Warning Unit (Z156), Cruise Control ECU (Z121), Engine Control Module (Z132), Memory Seat ECU (Z146), Air Suspension ECU (Z165) and the Emissions Maintenance Reminder Unit (Z126).

Tachometer

The tachometer displays engine speed in rpm. Voltage pulses are taken from the Generator (Z106) and are generated when the engine drive belt turns the Generator pulley. The tachometer responds to the frequency of the voltage pulses, which increases proportionally to that of the engine speed.

E1 ETM

1993 RANGE ROVER

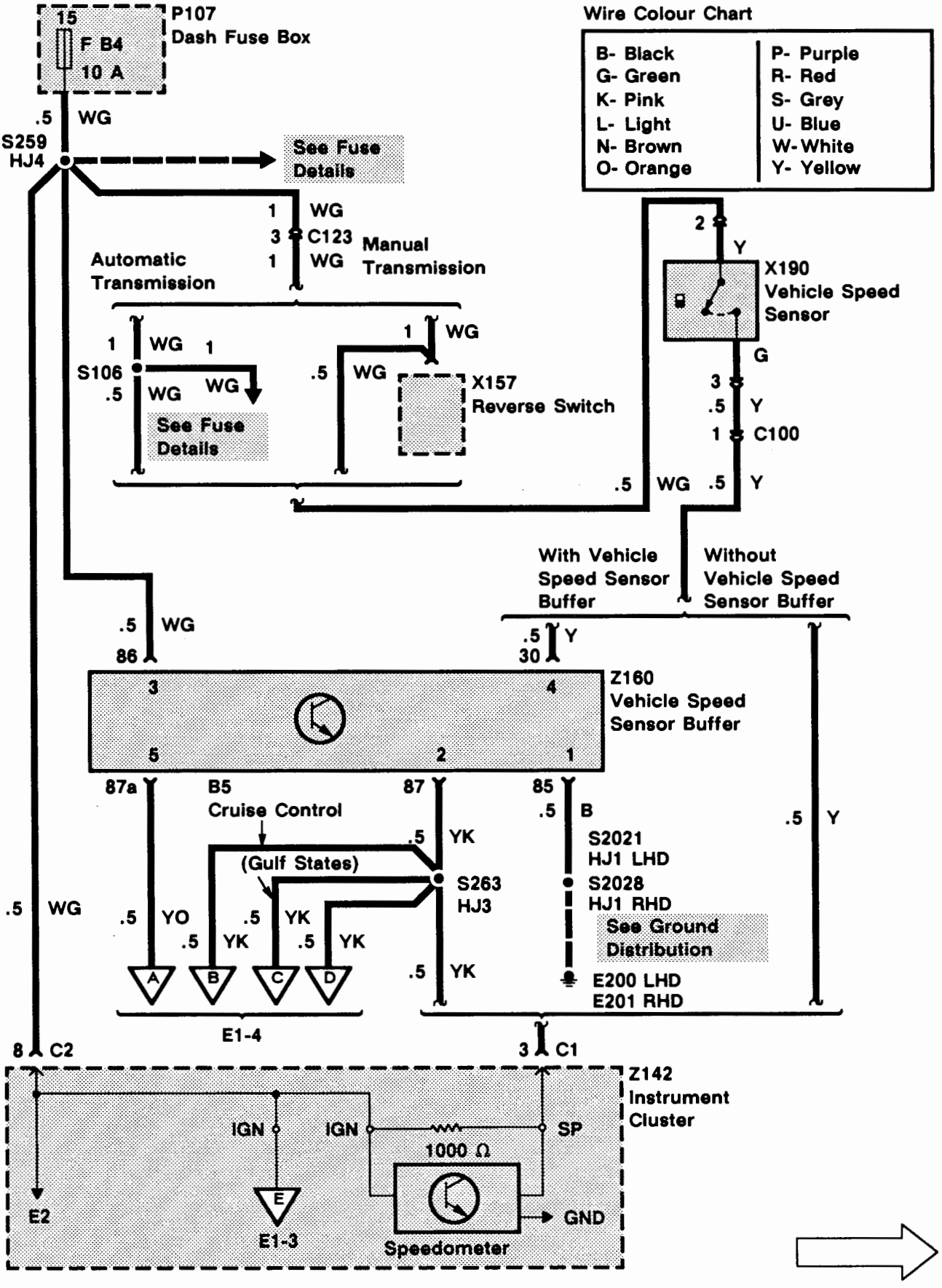

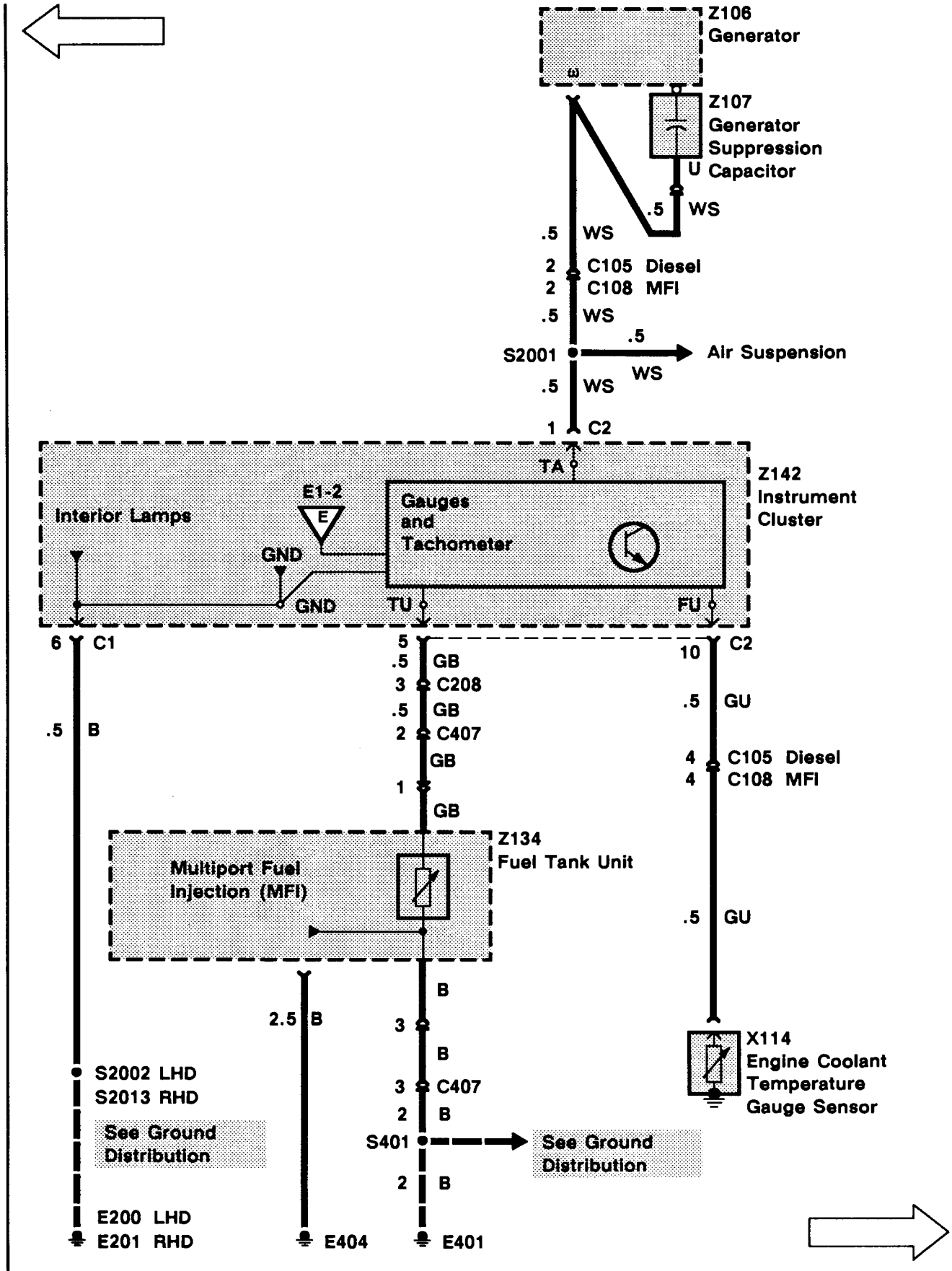
Z106
Generator
ω
Z107
Generator
Suppression
Capacitor
U
.5 WS
.5 WS
2 C105 Diesel
2 C108 MFI
.5 WS
S2001
.5
WS
Air Suspension
.5 WS
1 C2
TA
Z142
Instrument
Cluster
Interior Lamps
E1-2
E
GND
Gauges
and
Tachometer
GND
TU
FU
6 C1
5
10 C2
.5 GB
3 C208
.5 GB
2 C407
GB
1
GB
.5 B
.5 GU
4 C105 Diesel
4 C108 MFI
Z134
Fuel Tank Unit
Multiport Fuel
Injection (MFI)
.5 GU
B
2.5 B
3
B
X114
Engine Coolant
Temperature
Gauge Sensor
S2002 LHD
S2013 RHD
3 C407
2 B
See Ground
Distribution
S401
See Ground
Distribution
2 B
E200 LHD
E201 RHD
E404
E401

E1 ETM

1993 RANGE ROVER

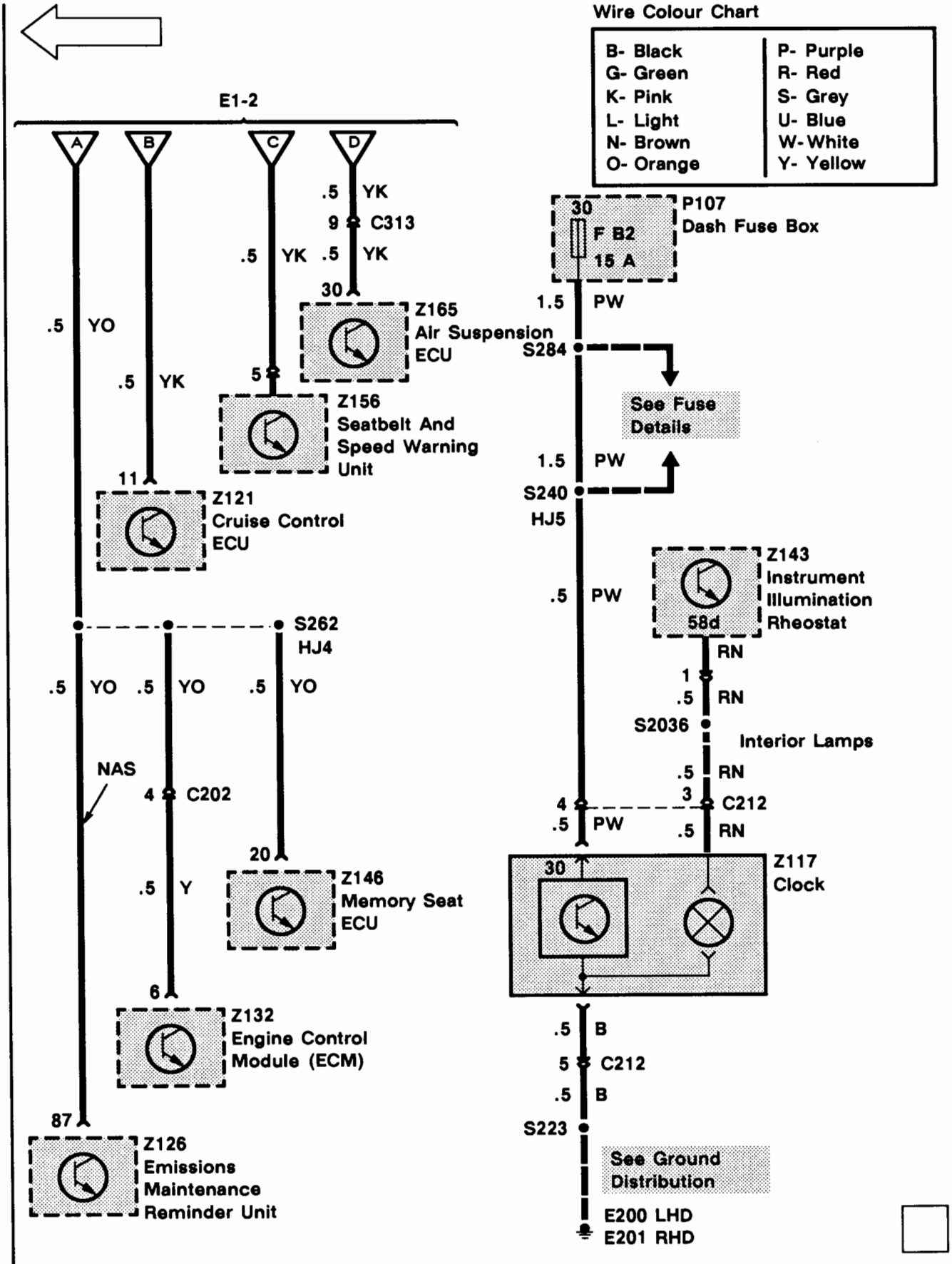

SYSTEM DIAGNOSIS

1. If no instruments operate, do Test A.
2. If the coolant temperature gauge reads hot with coolant cool, do Test B.
3. If the coolant temperature gauge reads cool with coolant hot, do Test B.
4. If the fuel gauge reads empty with fuel in the tank, do Test C.
5. If the fuel gauge reads full when the tank is empty, do Test C.
6. If the speedometer does not operate, do Test D.
7. If the tachometer does not operate, do Test E.

Test A

1A

CONDITIONS
- **Ignition Switch**
  Position: II

RESULTS
BAT VOLT

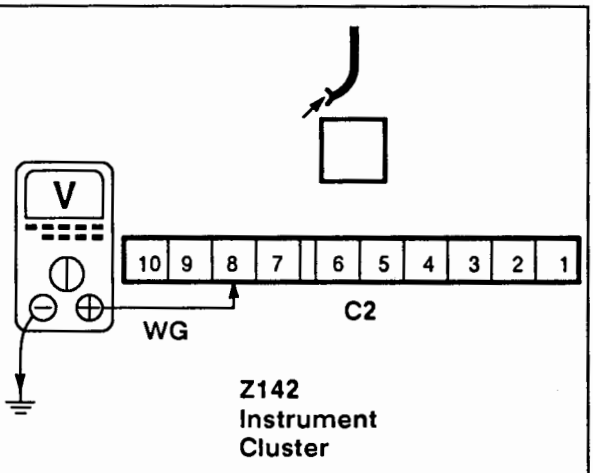

OK **PROBLEM CAUSE**
- **WG Wire**
- **F B4 Fuse**

OK → 2A

2A

CONDITIONS
- **Ignition Switch**
  Position: 0

RESULTS
0 Ω

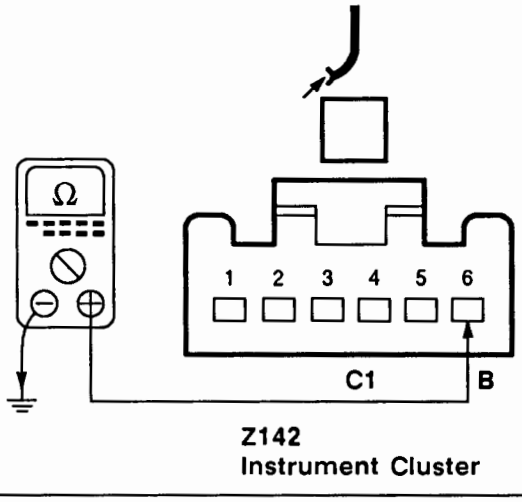

OK **PROBLEM CAUSE**
- **B Wire**

OK **PROBLEM CAUSE**
- **Instrument Cluster**

Test B

1B

CONDITIONS
- Ignition Switch
  Position: II

RESULTS
BAT VOLT

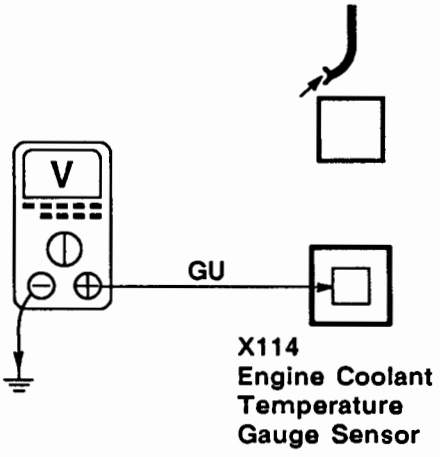

OK — PROBLEM CAUSE
- GU Wire
- Instrument Cluster
- Coolant Temperature Gauge

OK — PROBLEM CAUSE
- Engine Coolant Temperature Gauge Sensor

Test C

1C

CONDITIONS
- Ignition Switch
  Position: II

RESULTS
5V

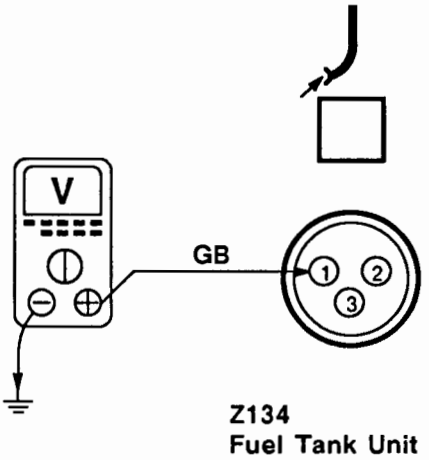

OK — PROBLEM CAUSE
- GB Wire
- Instrument Cluster
- Fuel Gauge

OK

2C

1C

2C

CONDITIONS
- Ignition Switch
  Position: II

RESULTS
5V

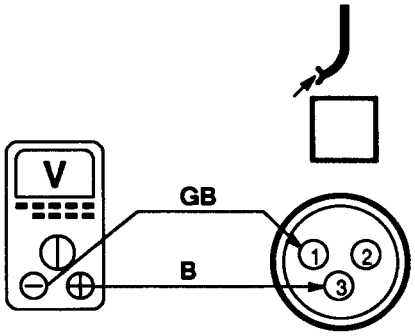

Z134
Fuel Tank Unit

OK — PROBLEM CAUSE
- B Wire

OK — PROBLEM CAUSE
- Fuel Tank Unit

Test D

1D

CONDITIONS
- Ignition Switch
  Position: II
- Gear Selector
  N
- Raise vehicle
- Turn a drive wheel by hand

RESULTS
0V – BAT VOLT
(6 times per revolution)

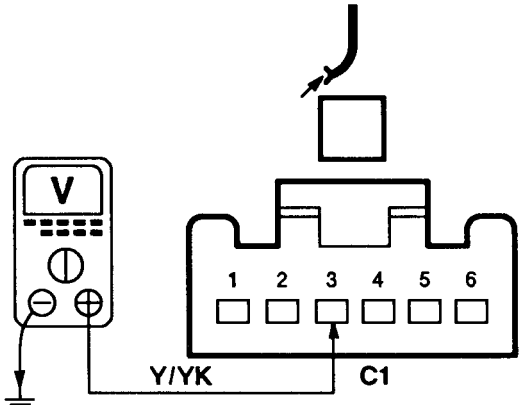

Z142
Instrument Cluster

OK — PROBLEM CAUSE
WITH VEHICLE SPEED SENSOR BUFFER

- Go to Test 2D

2D

WITHOUT VEHICLE SPEED SENSOR BUFFER

- Y Wire
- G Wire
- Vehicle Speed Sensor

OK — PROBLEM CAUSE
- Instrument Cluster
- Speedometer

1D

2D

CONDITIONS
- **Ignition Switch**
  Position: II

RESULTS
BAT VOLT

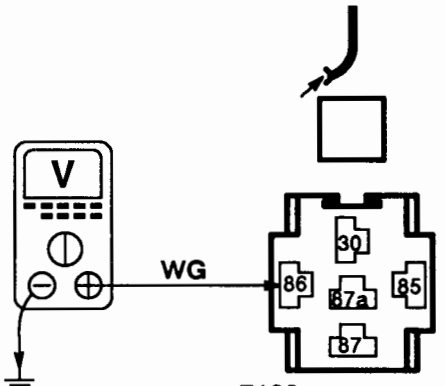

Z160
Vehicle Speed Sensor Buffer

OK **PROBLEM CAUSE**
- **WG Wire**
- **F B4 Fuse**

OK

3D

3D

CONDITIONS
- **Ignition Switch**
  Position: II

RESULTS
BAT VOLT

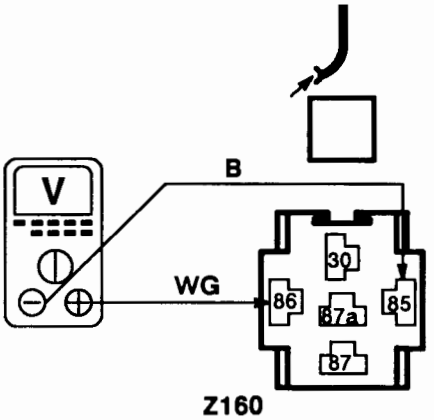

Z160
Vehicle Speed Sensor Buffer

OK **PROBLEM CAUSE**
- **B Wire**

OK

4D

3D

4D

CONDITIONS
- **Ignition Switch**
  Position: II
- **Gear Selector**
  N
- **Raise vehicle**
- **Turn a drive wheel by hand**

RESULTS
0V – BAT VOLT
(6 times per revolution)

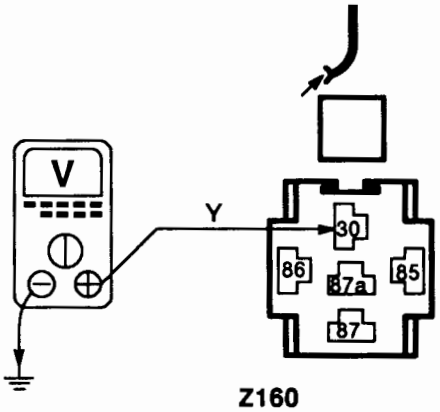

Z160
Vehicle Speed Sensor Buffer

OK

PROBLEM CAUSE
- **Y Wire**
- **WG Wire**
- **Vehicle Speed Sensor**

OK

5D

5D

CONDITIONS
- **Ignition Switch**
  Position: II
- **Gear Selector**
  N
- **Raise vehicle**
- **Turn a drive wheel by hand**

RESULTS
0V – BAT VOLT
(6 times per revolution)

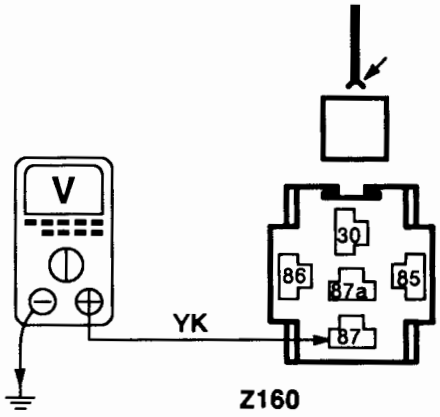

Z160
Vehicle Speed Sensor Buffer

OK

PROBLEM CAUSE
- **YK wire (short)**
- **YO wire (short)**
- **Component shorting YK or YO wires (see E1-4)**
- **Vehicle Speed Sensor Buffer**

OK

PROBLEM CAUSE
- **YK Wire**

Test E

1E

CONDITIONS
- **Ignition Switch**
  Position: II

RESULTS
- **Engine**
  ON = 7V

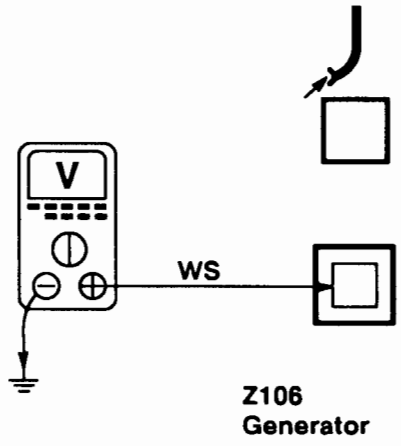

OK **PROBLEM CAUSE**
- **Generator**

OK **PROBLEM CAUSE**
- **WS Wire**
- **Instrument Cluster**
- **Tachometer**

KEY INFORMATION

CIRCUIT DIAGRAMS

- Circuit diagrams are arranged so that current flow is from the top of the diagram (current source) to the bottom of the diagram (ground).
- Only those components that work together in the circuit are shown. If only part of a component is used in the circuit, then only that part of the component is shown.
- Remember:

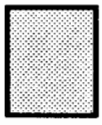

Entire component

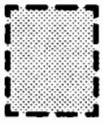

Part of a component

TERMINAL NUMBER	DESIGNATION
50	Battery voltage: Ignition Switch in position III
30	Battery voltage: supplied constantly
15	Battery voltage: Ignition Switch in position II or III
R	Battery voltage: Ignition Switch In positions I, II
31	Ground

See Introduction (i) for additional circuit diagram symbols.

DIAGNOSIS

- If the diagram is accompanied by text:

- Read the Circuit Operation before proceeding with the electrical diagnosis.
- Read the Troubleshooting Hints before performing the System Diagnosis.
- Tests follow the System Diagnosis.
- When performing the System Diagnosis, be certain that all components disconnected in previous steps are reconnected unless otherwise directed.

Component is disconnected. Backprobe harness connector

Component is connected. Backprobe harness connector

Component is disconnected. Probe component

Component is disconnected. Probe harness connector

Probe in-line connector

CIRCUIT OPERATION

Charge Warning Light

The charge warning light receives battery voltage with the Ignition Switch (X134) in position II. This warning light is grounded by the Generator (Z106) if the Generator is not producing normal power output or the Generator stops turning.

ABS Warning Light

The ABS warning light receives battery voltage with the Ignition Switch (X134) in position II. It is grounded by the Anti-Lock Brake System ECU (Z108) or the ABS Warning Relay (K103) in the event of an ABS problem.

Brake Warning Light

The brake warning light receives battery voltage with the Ignition Switch (X134) in position II. It is grounded by the Brake Fluid Level Switch (X111) when the brake fluid level is low. It may also be grounded through the Brake Fluid Level Switch (X111) and the brake fluid level switch diode when the Handbrake Switch (X191) is closed. The warning light is also grounded by the Anti-Lock Brake System ECU (Z108) or by the ABS Pressure Switch Unit (Z104) in the event of an ABS system problem. When the Ignition Switch (X134) is in position III, battery voltage is applied to the Brake Warning Light Check Relay (K106) (Australia). The relay is energized, applying ground to the brake warning light as a bulb check.

Oil Pressure Warning Light

The oil pressure warning light receives battery voltage with the Ignition Switch (X134) in position II. If the engine oil pressure is very low, the Oil Pressure Switch (X149) will apply ground to the warning light.

Transmission/Transfer Box Oil Temperature Warning Light

The transmission/transfer box oil temperature warning light is grounded by the Automatic Transmission Oil Temperature Switch (X108) when the temperature of the transmission fluid exceeds 130°C (266°F). The warning light is also grounded by the Transfer Box Oil Temperature Switch (X174) when the temperature of the transfer box fluid exceeds 145°C (266°F).

Check Engine Warning Light

The check engine warning light is grounded by the Engine Control Module (ECM) (Z132) when a diagnostic trouble code is set.

Brake Pad Wear Warning Light

When the Right Front or Right Rear Inboard Brake Pad (B129, B135) is in need of replacement, the brake pad wear warning light is grounded through the Right Front or Right Rear Inboard Brake Pad (B129, B135). The brake pad wear warning light is also grounded by the Handbrake Switch (X191) via the brake pad warning check diode as a bulb check.

Seatbelt And Speed Warning Unit (Z156)

The Seatbelt and Speed Warning Unit (Z156) receives a pulsing voltage from the Vehicle Speed Sensor Buffer (Z160). The driver's seat buckle provides a ground signal to this unit when the driver's seat belt is unbuckled.

Low Screen Wash Fluid Warning Light

The low screen wash fluid warning light is grounded by the Screen Wash Fluid Level Switch (X165) when the fluid reservoir requires filling.

Low Coolant Level Warning Light

The Instrument Cluster (Z142) receives battery voltage through the Engine Coolant Level Switch (X144) with the Ignition Switch (X134) in Position II and the engine coolant level OK. If the engine coolant level is low, the Engine Coolant Level Switch (X144) opens, removing voltage from the Instrument Cluster (Z142). The Instrument Cluster then lights the low coolant level warning light.

ETC Warning Light

The ETC warning light will be on for up to 60 seconds while the system is active. After 60 seconds of ETC operation, the ETC warning light will begin to flash to inform the driver that the system has been shut down to allow the brakes to cool. If the ETC warning light stays on continuously for more than 60 seconds, a fault in the system is indicated.

Engine Glow Plug Timer Warning Light (Diesel)

The diesel engine glow plug timer warning light is grounded by the Glow Plug Timer Unit (Z135) to indicate that the glow plugs are not yet warm enough to attempt engine starting.

E2 ETM

1993 RANGE ROVER

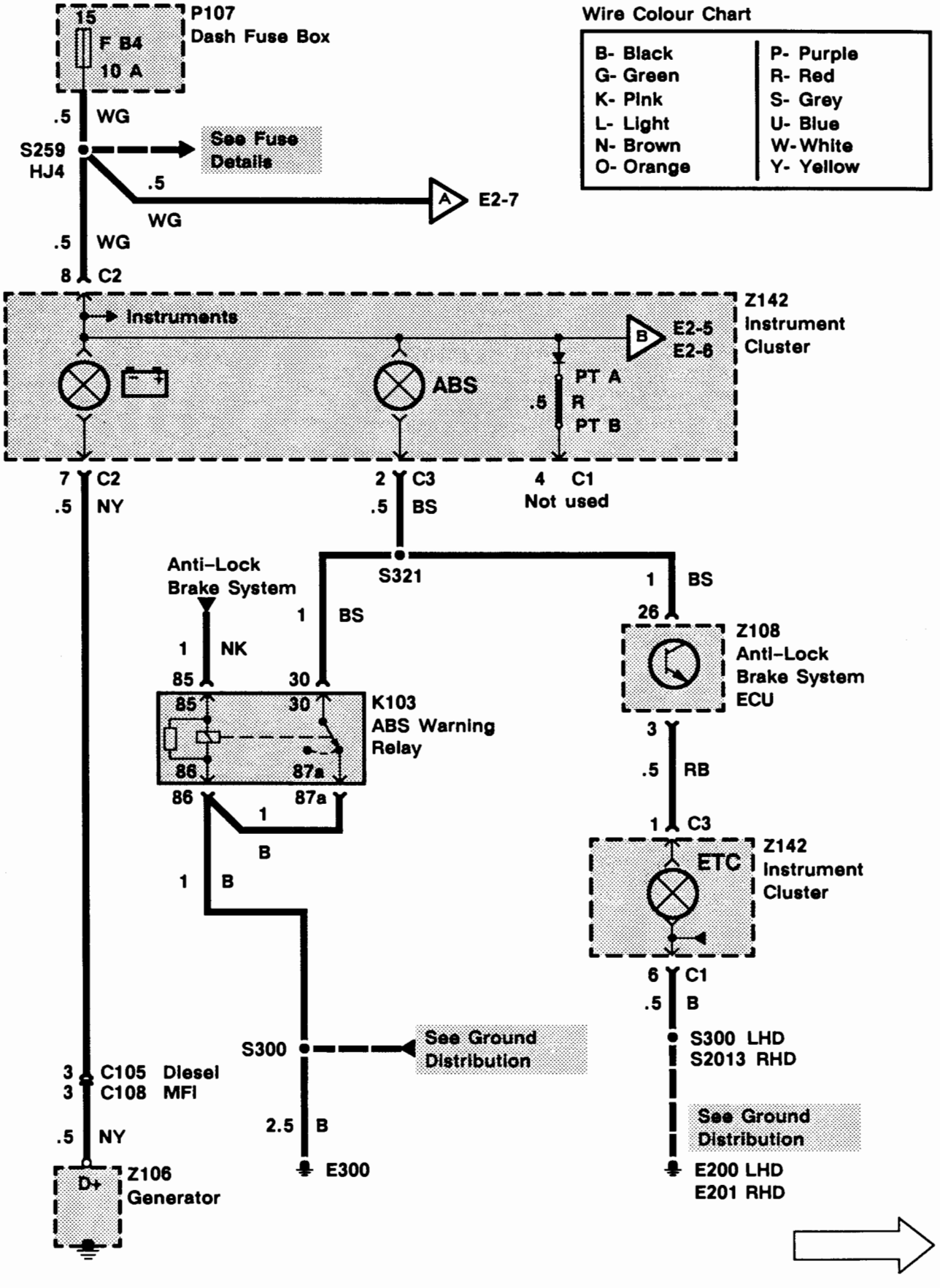

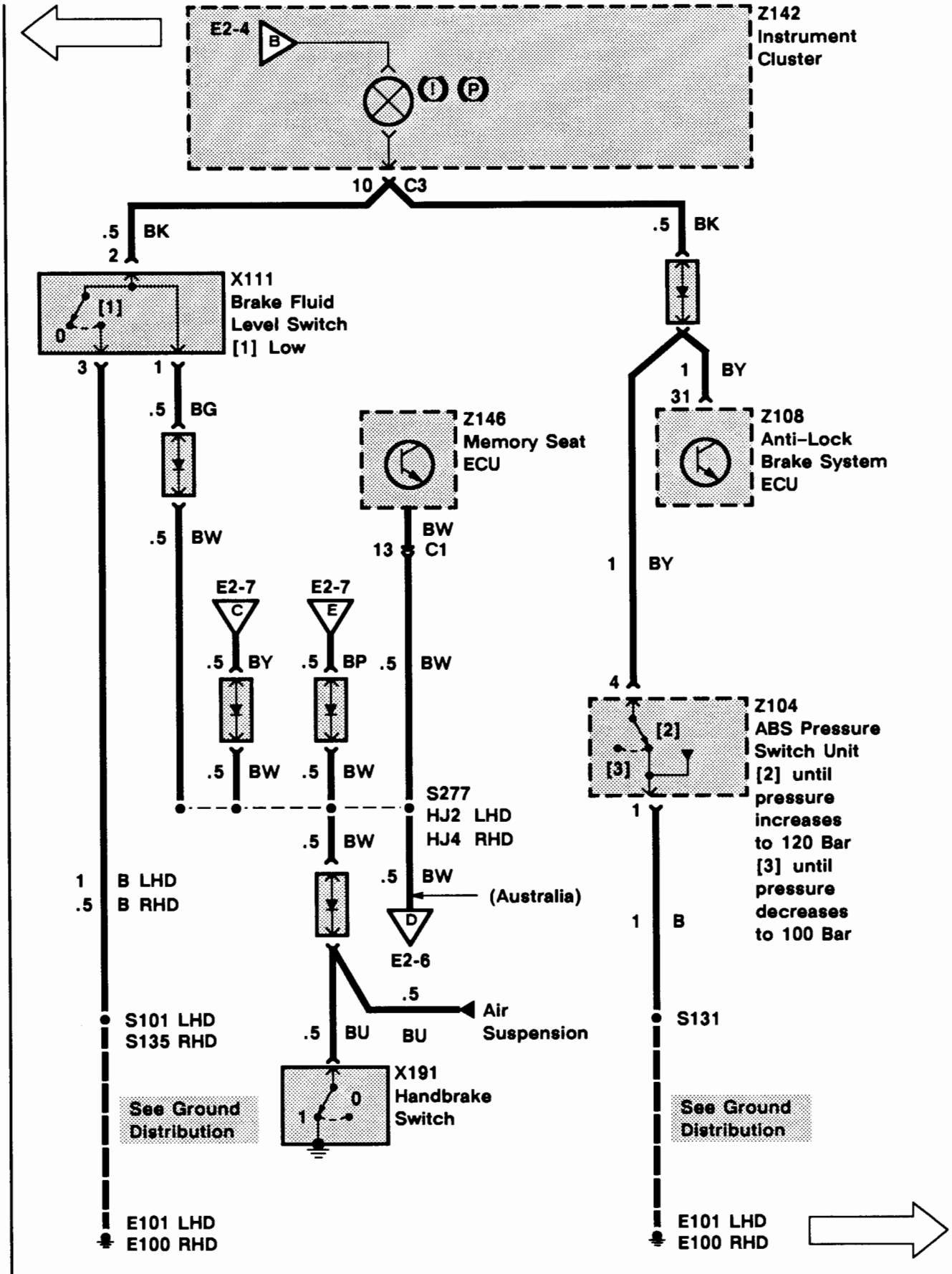
E2-4
B
Z142
Instrument
Cluster
10
C3
.5
BK
2
X111
Brake Fluid
Level Switch
[1] Low
[1]
0
3
1
.5
BG
.5
BW
Z146
Memory Seat
ECU
BW
13
C1
.5
BK
1
BY
31
Z108
Anti-Lock
Brake System
ECU
1
BY
E2-7
C
E2-7
E
.5
BY
.5
BP
.5
BW
.5
BW
.5
BW
S277
HJ2 LHD
HJ4 RHD
4
Z104
ABS Pressure
Switch Unit
[2] until
pressure
increases
to 120 Bar
[3] until
pressure
decreases
to 100 Bar
[2]
[3]
1
.5
BW
.5
BW
(Australia)
D
E2-6
1
B LHD
.5
B RHD
1
B
.5
Air
Suspension
S101 LHD
S135 RHD
.5
BU
BU
S131
X191
Handbrake
Switch
0
1
See Ground
Distribution
See Ground
Distribution
E101 LHD
E100 RHD
E101 LHD
E100 RHD

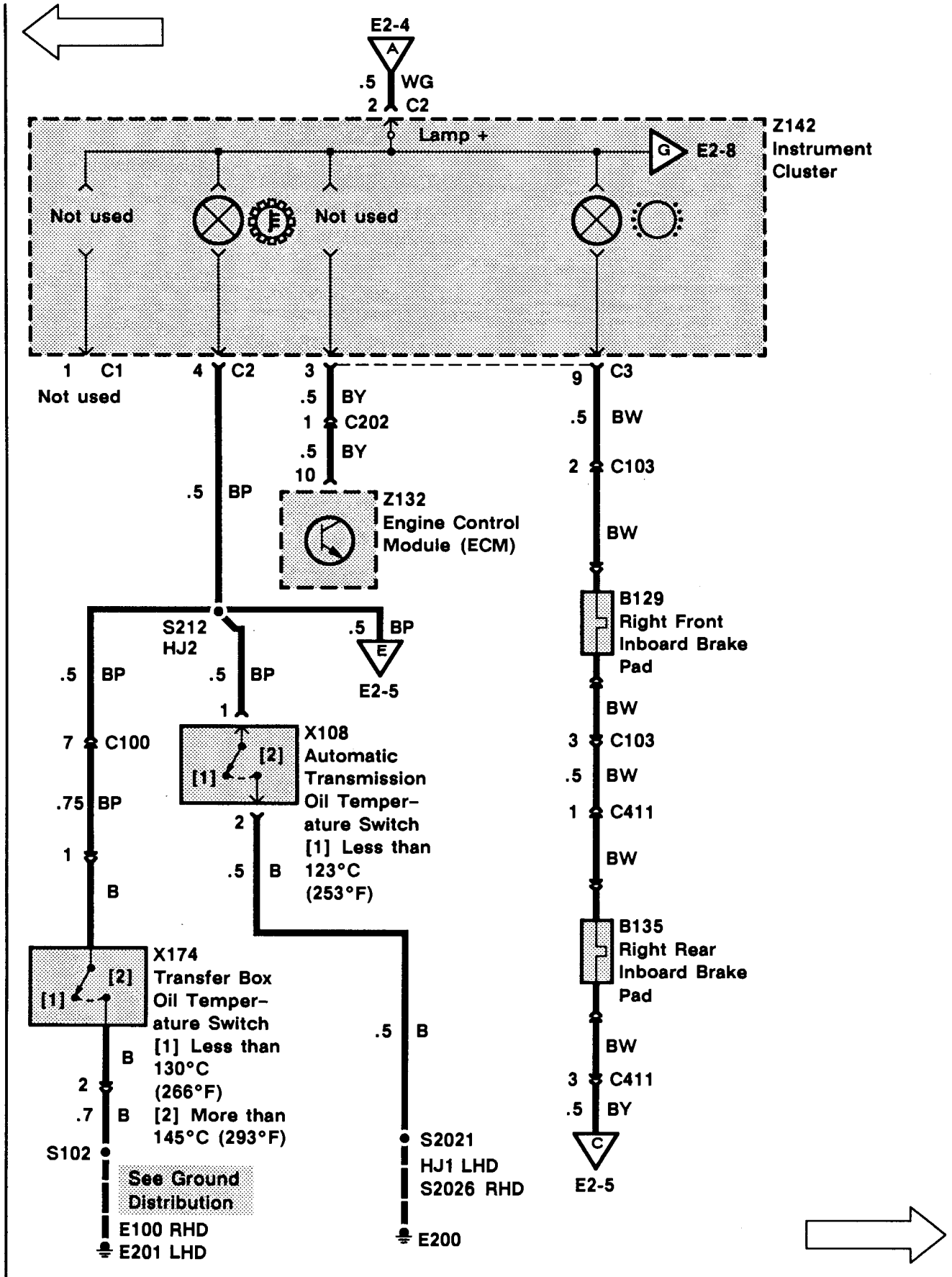
E2-4
A
.5 WG
2 C2
Lamp +
G
E2-8
Z142
Instrument
Cluster
Not used
Not used
1 C1
Not used
4 C2
3
.5 BY
1 C202
.5 BY
10
9 C3
.5 BW
2 C103
BW
.5 BP
Z132
Engine Control
Module (ECM)
B129
Right Front
Inboard Brake
Pad
S212
HJ2
.5 BP
E
E2-5
.5 BP
.5 BP
1
BW
7 C100
X108
Automatic
Transmission
Oil Temper-
ature Switch
[1] Less than
123°C
(253°F)
[1]
[2]
3 C103
.5 BW
.75 BP
2
1 C411
1
.5 B
BW
B
B135
Right Rear
Inboard Brake
Pad
X174
Transfer Box
Oil Temper-
ature Switch
[1] Less than
130°C
(266°F)
[2] More than
145°C (293°F)
[1]
[2]
.5 B
BW
B
2
3 C411
.7 B
.5 BY
S102
See Ground
Distribution
E100 RHD
E201 LHD
S2021
HJ1 LHD
S2026 RHD
E200
C
E2-5

E2 ETM

1993 RANGE ROVER

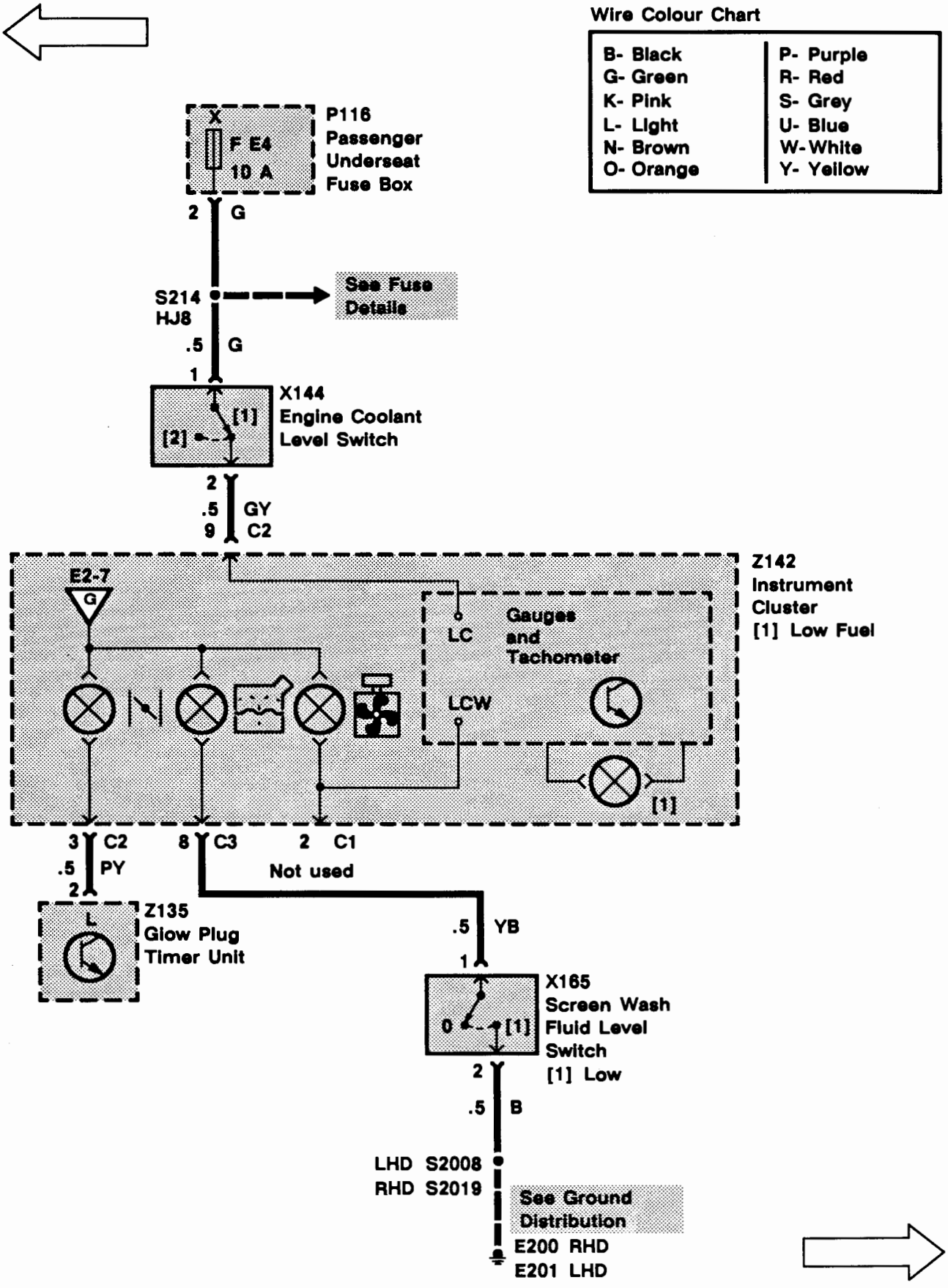

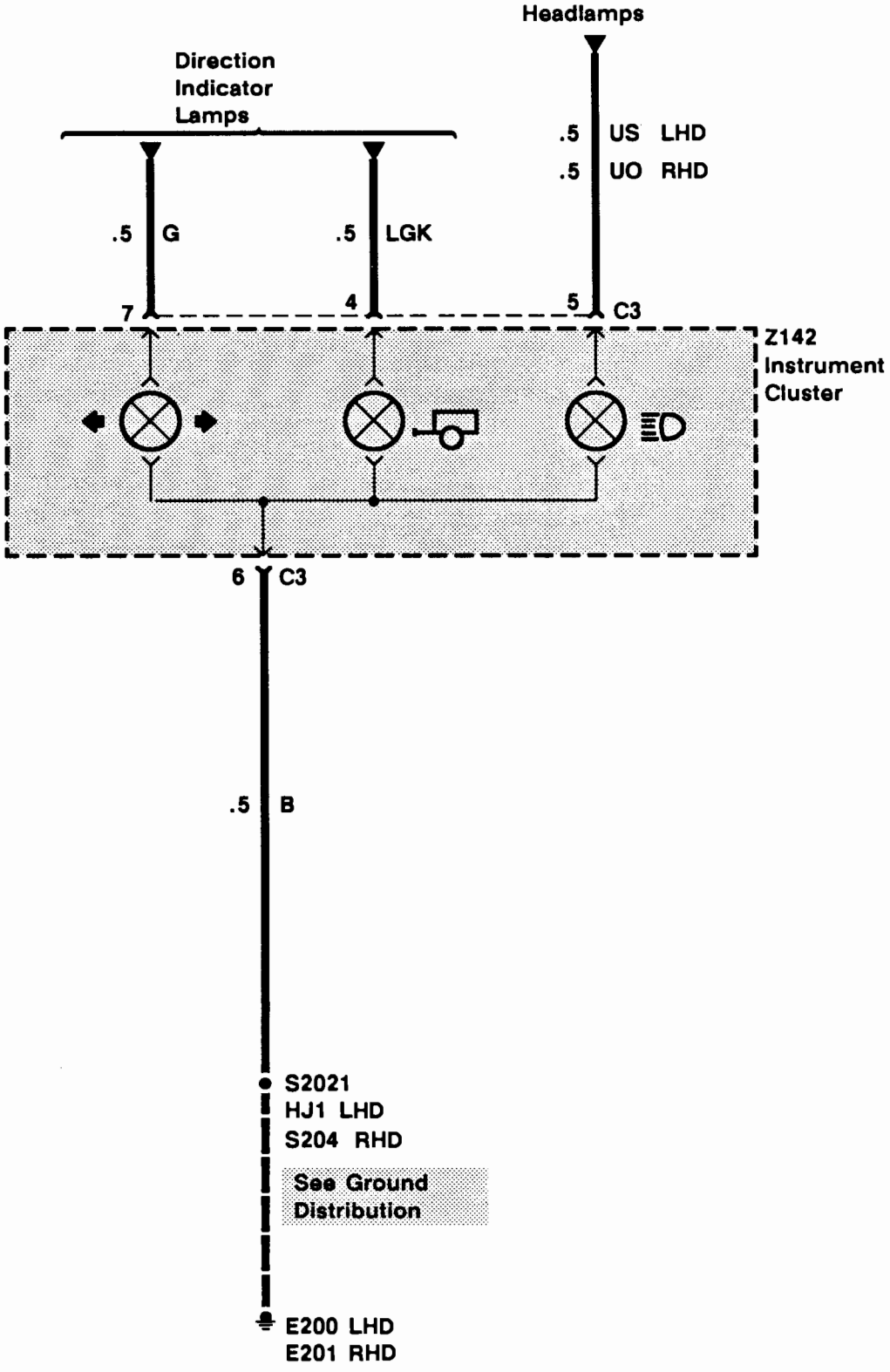
Headlamps
Direction Indicator Lamps
.5 US LHD
.5 UO RHD
.5 G
.5 LGK
7
4
5 C3
Z142 Instrument Cluster
6 C3
.5 B
S2021
HJ1 LHD
S204 RHD
See Ground Distribution
E200 LHD
E201 RHD

E2 ETM

1993 RANGE ROVER

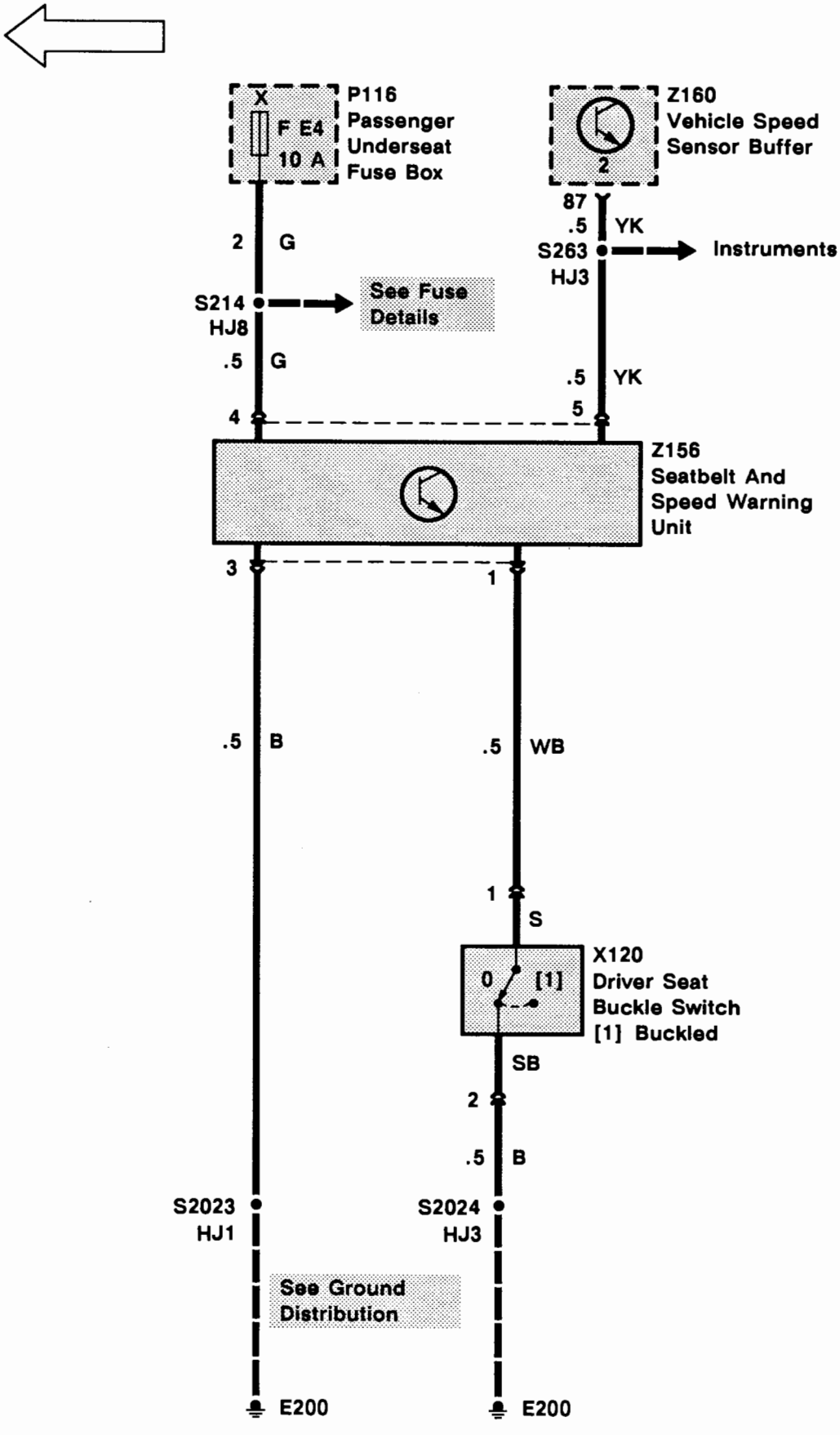

TROUBLESHOOTING HINTS

If more than one warning light is out, check power and ground wires common to all affected warning lights.

SYSTEM DIAGNOSIS

1. If the charge warning light does not operate, go to Section B1 or B2.
2. If the ABS warning light does not operate, go to Section D1.
3. If the oil pressure warning light remains illuminated with the oil pressure OK, do Test A.
4. If the brake warning light does not light with the Ignition Switch (X134) in position III, do Test B (Australia only).
5. If the check engine warning light does not operate properly, go to Section A1.
6. If the seat belt and speed alarm does not operate, do Test C.
7. If the ETC warning light does not operate, see section D1.
8. If a warning light exhibits any symptom not mentioned above, check the associated bulb, wires, switches and components.

Test A

1A

CONDITIONS
- Ignition Switch
  Position: II

RESULTS
BAT VOLT

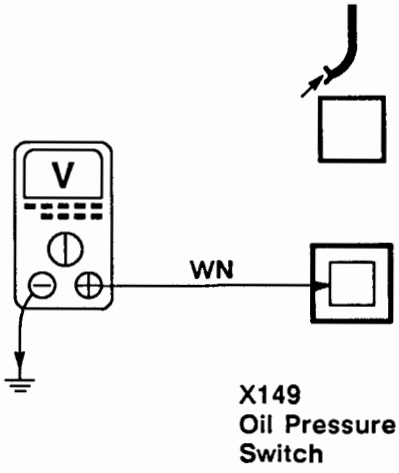

OK — PROBLEM CAUSE
- WN Wire
- Dim Dip Control Unit
- Heated Front Screen Timer Unit

OK — PROBLEM CAUSE
- Oil Pressure Switch

Test B

1B

CONDITIONS
- Ignition Switch
  Position: II

RESULTS
- Brake warning lamp
  ON

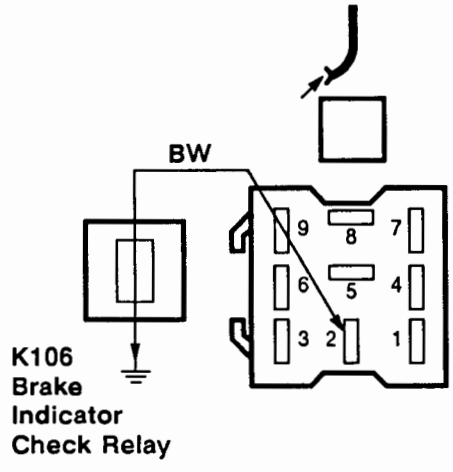

OK — PROBLEM CAUSE
- BW Wire
- Diode
- BK Wire
- BG Wire
- Brake Fluid Level Switch

OK

2B

1B

2B

CONDITIONS
- **Ignition Switch**
  Position: 0

RESULTS
Less than 2 ohms

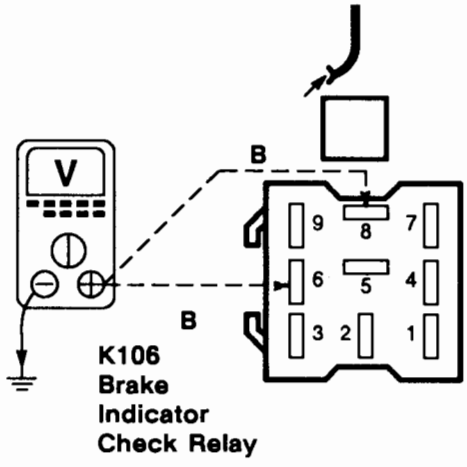

OK **PROBLEM CAUSE**
- **B Wire**

OK

3B

3B

CONDITIONS
- **Ignition Switch**
  Position: III

RESULTS
BAT VOLT

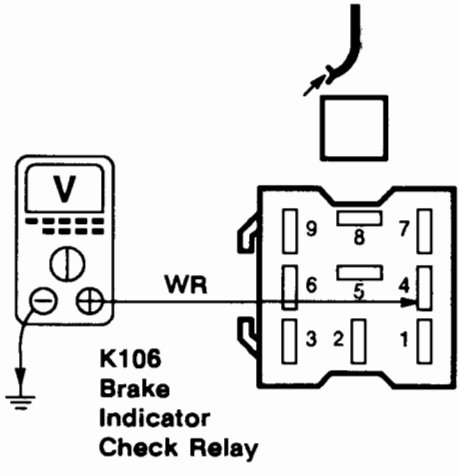

OK **PROBLEM CAUSE**
- **WR Wire**
- **Crank Fuse**

OK **PROBLEM CAUSE**
- **Brake Indicator Check Relay**

Test C

1C

CONDITIONS
- **Ignition Switch**
  Position: II

RESULTS
BAT VOLT

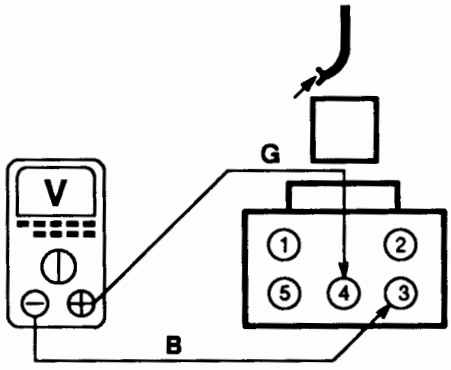

Z156
Seatbelt And Speed Warning Unit

OK — **PROBLEM CAUSE**
- **G Wire**
- **B Wire**

OK → 2C

1C

2C

CONDITIONS
- **Ignition Switch**
  Position: 0
- **Seat belt**
  Unbuckled

RESULTS
Less than 2 ohms

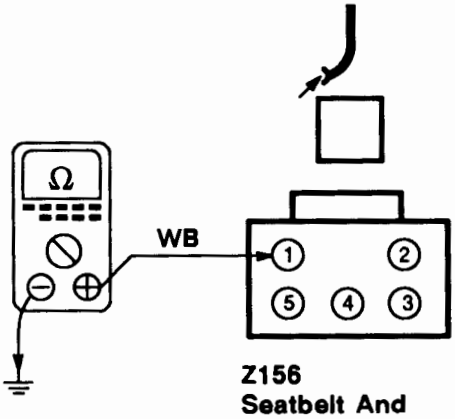

Z156
Seatbelt And Speed Warning Unit

OK — **PROBLEM CAUSE**
- **WB Wire**
- **B Wire**
- **Driver Seat Buckle Switch**

OK → 3C

2C

3C

CONDITIONS
- **Ignition Switch**
  Position: II

RESULTS
BAT VOLT

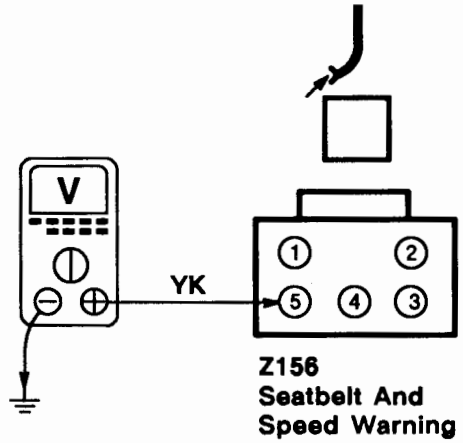

OK **PROBLEM CAUSE**
- **YK Wire**

OK **PROBLEM CAUSE**
- **Seatbelt And Speed Warning Unit**

KEY INFORMATION

CIRCUIT DIAGRAMS

- Circuit diagrams are arranged so that current flow is from the top of the diagram (current source) to the bottom of the diagram (ground).
- Only those components that work together in the circuit are shown. If only part of a component is used in the circuit, then only that part of the component is shown.
- Remember:

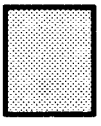

Entire component

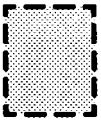

Part of a component

TERMINAL NUMBER	DESIGNATION
50	Battery voltage: Ignition Switch in position III
30	Battery voltage: supplied constantly
15	Battery voltage: Ignition Switch in position II or III
R	Battery voltage: Ignition Switch in positions I, II
31	Ground

See Introduction (i) for additional circuit diagram symbols.

DIAGNOSIS

- If the diagram is accompanied by text:

- Read the Circuit Operation before proceeding with the electrical diagnosis.
- Read the Troubleshooting Hints before performing the System Diagnosis.
- Tests follow the System Diagnosis.
- When performing the System Diagnosis, be certain that all components disconnected in previous steps are reconnected unless otherwise directed.

Component is disconnected. Backprobe harness connector

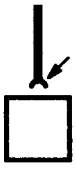

Component is connected. Backprobe harness connector

Component is disconnected. Probe component

Component is disconnected. Probe harness connector

Probe in-line connector

CIRCUIT OPERATION

Warning Lamps Check Unit (Z161)

The Warning Lamps Check Unit (Z161) applies ground and/or voltage to the following warning lights momentarily as a bulb check when the Ignition Switch (X134) is in position II: ABS, brake pad wear, check engine, high beam, low coolant level, low screen wash fluid, seat belt, transmission/transfer box oil temperature and brake, turn and trailer turn.

Audible Warning Unit (Z109)

The Audible Warning Unit (Z109) receives power at all times. It also receives battery voltage with the Ignition Switch (X134) in position II. It receives a ground signal from the Driver Seat Buckle Switch (X120) with the seat belt unbuckled. It receives a ground signal from the Driver Door Switch (X118) with the door open. It receives a voltage signal from the Ignition Key Switch (X177) with the key in the Ignition Switch (X134). It receives a ground signal from the Transfer Box Position Switch (X175) with the transfer box in positions H or N and a voltage signal via the transfer box resistor with the transfer box in position N. The Audible Warning Unit (Z109) sounds a warning tone if the key is in the Ignition Switch (X134) with the driver's door open, or with the transfer box in neutral or with the driver's seat belt unbuckled.

Charge Warning Light

The charge warning light receives battery voltage with the Ignition Switch (X134) in position II. It is grounded by the Alternator (Z106) if the Generator is not producing normal power output or the Generator stops turning.

ABS Warning Light

The ABS warning light receives battery voltage with the Ignition Switch (X134) in position II. This warning light is earthed by the Anti-Lock Brake System ECU (Z108) or the ABS Warning Relay (K103) in the event of an ABS problem. The Warning Lamps Check Unit (Z161) applies ground to the warning light momentarily as a bulb check when the Ignition Switch (X134) is moved to position II.

Brake Warning Light

The brake warning light receives battery voltage with the Ignition Switch (X134) in position II. It is grounded by the Brake Fluid Level Switch (X111) when the brake fluid level is low. It may also be grounded through the Brake Fluid Level Switch (X111) and the brake fluid level switch diode when the Handbrake Switch (X191) is closed. The warning light is also grounded by the Anti-Lock Brake System ECU (Z108) or by the ABS Pressure Switch Unit (Z104) in the event of an ABS system problem.

Low Engine Oil Level/Pressure Warning Light

The low engine oil level/pressure warning light warning light receives battery voltage with the Ignition Switch (X134) in position II. If the engine oil pressure is very low, the Oil Pressure Switch (X149) will apply ground to the warning light. The oil level detection system consists of an Engine Oil Level Sensor (X148) and Engine Oil Level Monitor Unit (Z127). When the Ignition Switch (X134) is initially put in position II, battery voltage is applied to the monitor unit. The monitor unit then sends a voltage signal to the Engine Oil Level Sensor (X148) and looks for a return of that voltage signal. If the signal is not returned, the Engine Oil Level Monitor Unit (Z127) flashes the low engine oil level/pressure warning light for 10 to 20 seconds by applying a pulsing ground signal to the warning light. If the ignition is switched to position II after being at position 0 for less that 15 to 30 seconds, the Engine Oil Level Monitor Unit (Z127) will ignore the Engine Oil Level Sensor (X148) and not flash the warning light even if the oil level is low.

Transmission/Transfer Box Oil Temperature Warning Light

The transmission/transfer box oil temperature warning light is grounded by the Automatic Transmission Oil Temperature Switch (X108) when the temperature of the transmission fluid exceeds 130°C (266°F). The warning light is also grounded by the Transfer Box Oil Temperature Switch (X174) when the temperature of the transfer box fluid exceeds 145°C (266°F). The Warning Lamps Check Unit (Z161) applies ground to the warning light momentarily as a bulb check when the Ignition Switch (X134) is moved to position II.

Check Engine Warning Light

The check engine warning light is grounded by the Engine Control Module (ECM) (Z132) when a fault code is set. The Warning Lamps Check Unit (Z161) applies ground to the warning light momentarily as a bulb check when the Ignition Switch (X134) is moved to position II.

Brake Pad Wear Warning Light

When the Right Front or Right Rear Inboard Brake Pad (B129, B135) is in need of replacement, the Brake Pad Wear Warning Light is grounded through the Right Front or Right Rear Inboard Brake Pad (B129, B135). The Warning Lamps Check Unit (Z161) applies ground to the warning light momentarily as a bulb check when the Ignition Switch (X134) is moved to position II.

Low Screen Wash Fluid Warning Light

The low screen wash fluid warning light is grounded by the Screen Wash Fluid Level Switch (X165) when the fluid reservoir requires filling. The Warning Lamps Check Unit (Z161) applies ground to the indicator momentarily as a bulb check when the Ignition Switch (X134) is moved to position II.

Service Engine Warning Light

The service engine warning light is controlled by the Emissions Maintenance Reminder Unit (Z126) and illuminates to indicate to the driver that it is time to check the vehicle's emissions system. The reminder unit receives battery power at all times. When the ignition is switched to position II, the reminder unit momentarily grounds the service engine warning light as a bulb check. While the vehicle is in motion, the reminder unit receives a vehicle speed signal in the form of a pulsing battery voltage. The reminder unit uses this signal to record distance travelled. When a specific distance is reached, the reminder unit grounds the service engine warning light.

Low Coolant Level Warning Light

The Instrument Cluster (Z142) receives battery voltage through the Low Coolant Level Switch (X144) with the Ignition Switch (X134) in position II and the engine coolant level OK. If the engine coolant level is low, the Low Coolant Level Switch (X144) opens, removing voltage from the Instrument Cluster. The Instrument Cluster then lights the low coolant level warning light. The Warning Lamps Check Unit (Z161) applies ground to the warning light momentarily as a bulb check when the Ignition Switch (X134) is moved to position II.

ETC Warning Light

The ETC warning light will be on for up to 60 seconds while the system is active. After 60 seconds of ETC operation, the ETC warning light will begin to flash to inform the driver that the system has been shut down to allow the brakes to cool. If the ETC warning light stays on continuously for more than 60 seconds, a fault in the system is indicated.

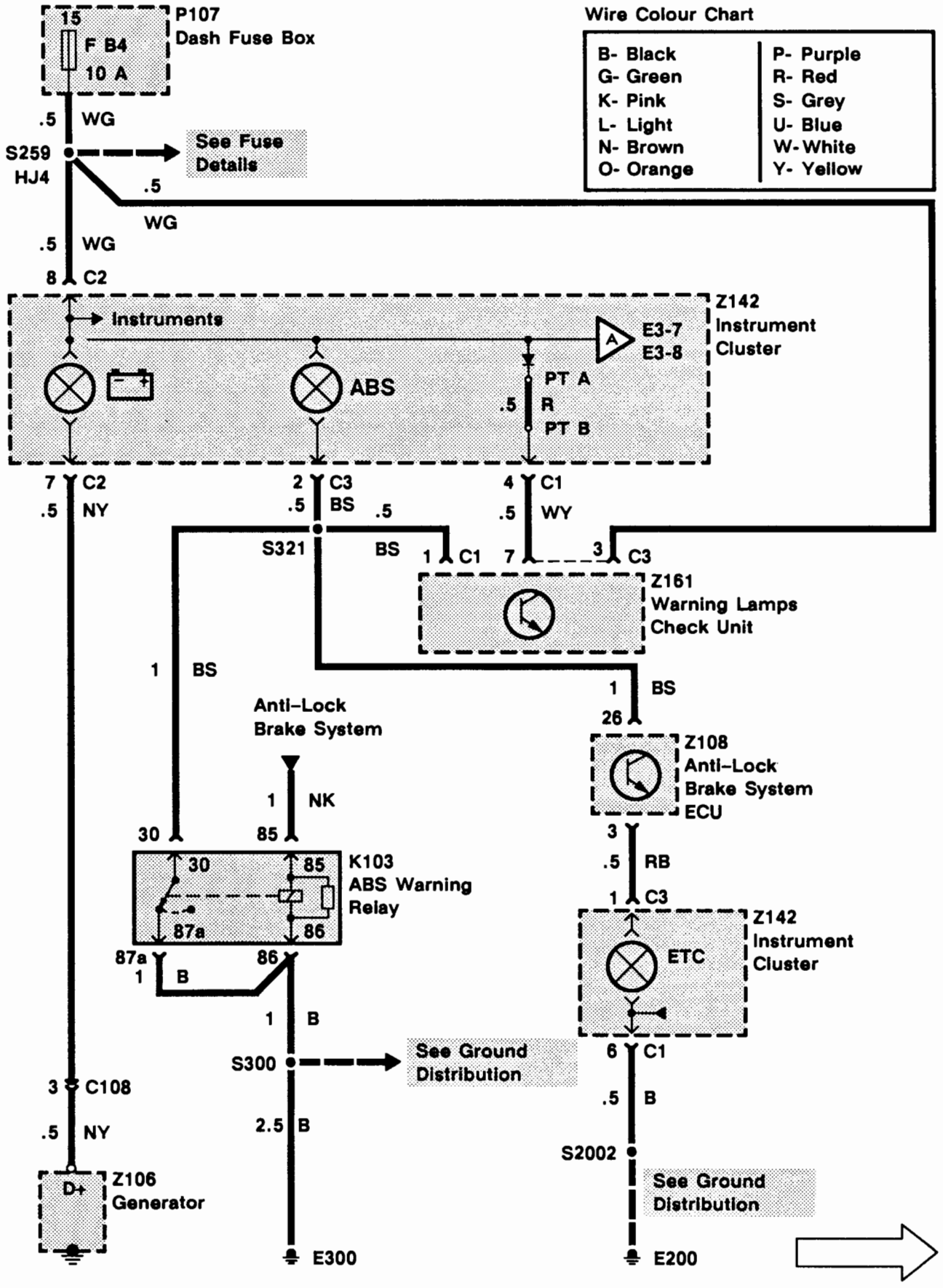
15
F B4
10 A
P107
Dash Fuse Box
.5 WG
S259
HJ4
See Fuse Details
.5
WG
.5 WG
8 C2
Wire Colour Chart
B- Black
G- Green
K- Pink
L- Light
N- Brown
O- Orange
P- Purple
R- Red
S- Grey
U- Blue
W- White
Y- Yellow
Instruments
ABS
E3-7
E3-8
Z142
Instrument Cluster
PT A
.5 R
PT B
7 C2
.5 NY
2 C3
.5 BS
.5
S321
BS
1 C1
4 C1
.5 WY
7
3 C3
Z161
Warning Lamps Check Unit
1 BS
1 BS
26
Anti-Lock Brake System
Z108
Anti-Lock Brake System ECU
1 NK
30
85
K103
ABS Warning Relay
30
85
87a
86
3
.5 RB
1 C3
Z142
Instrument Cluster
ETC
87a
1 B
86
1 B
S300
See Ground Distribution
6 C1
.5 B
3 C108
.5 NY
2.5 B
S2002
See Ground Distribution
D+
Z106
Generator
E300
E200

E3 ETM

1993 RANGE ROVER

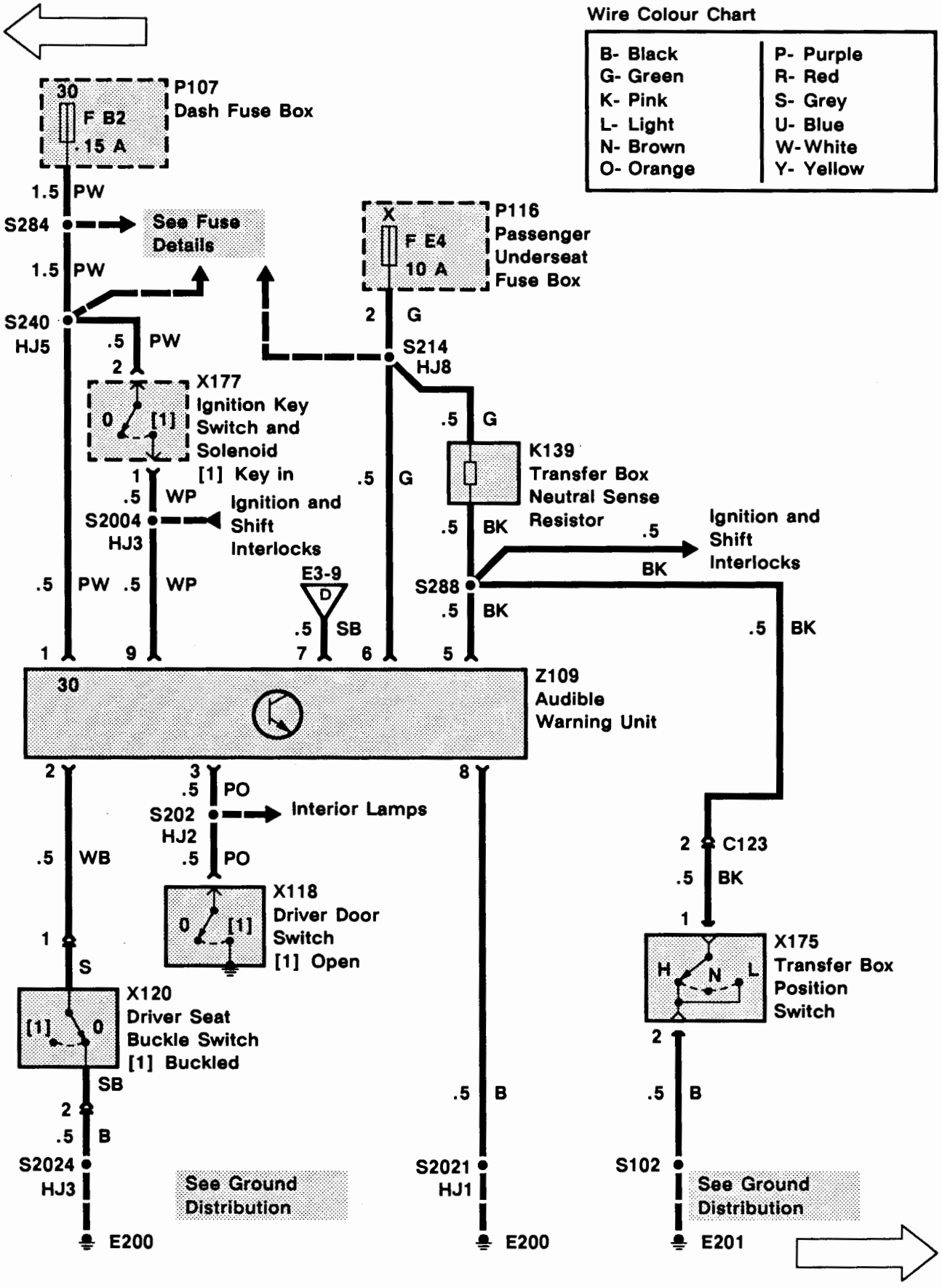

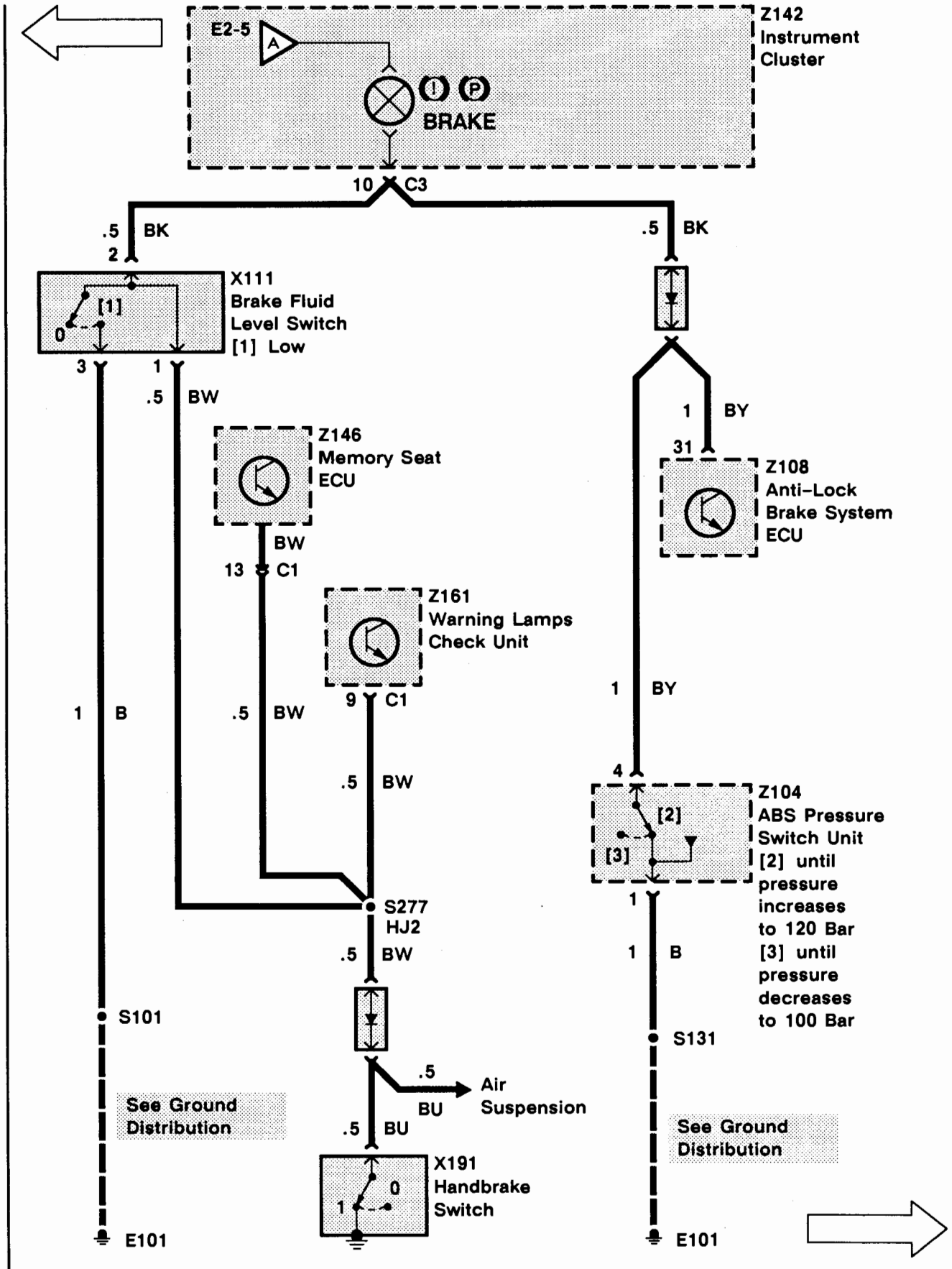
E2-5
A
BRAKE
Z142
Instrument
Cluster
10 C3
.5 BK
2
.5 BK
X111
Brake Fluid
Level Switch
[1] Low
[1]
0
3
1
.5 BW
Z146
Memory Seat
ECU
BW
13 C1
Z161
Warning Lamps
Check Unit
9 C1
1 BY
31
Z108
Anti-Lock
Brake System
ECU
1 BY
1 B
.5 BW
.5 BW
4
Z104
ABS Pressure
Switch Unit
[2] until
pressure
increases
to 120 Bar
[3] until
pressure
decreases
to 100 Bar
[2]
[3]
S277
HJ2
.5 BW
1
1 B
S101
S131
.5
BU
Air
Suspension
See Ground
Distribution
.5 BU
See Ground
Distribution
X191
Handbrake
Switch
0
1
E101
E101

E3 ETM

1993 RANGE ROVER

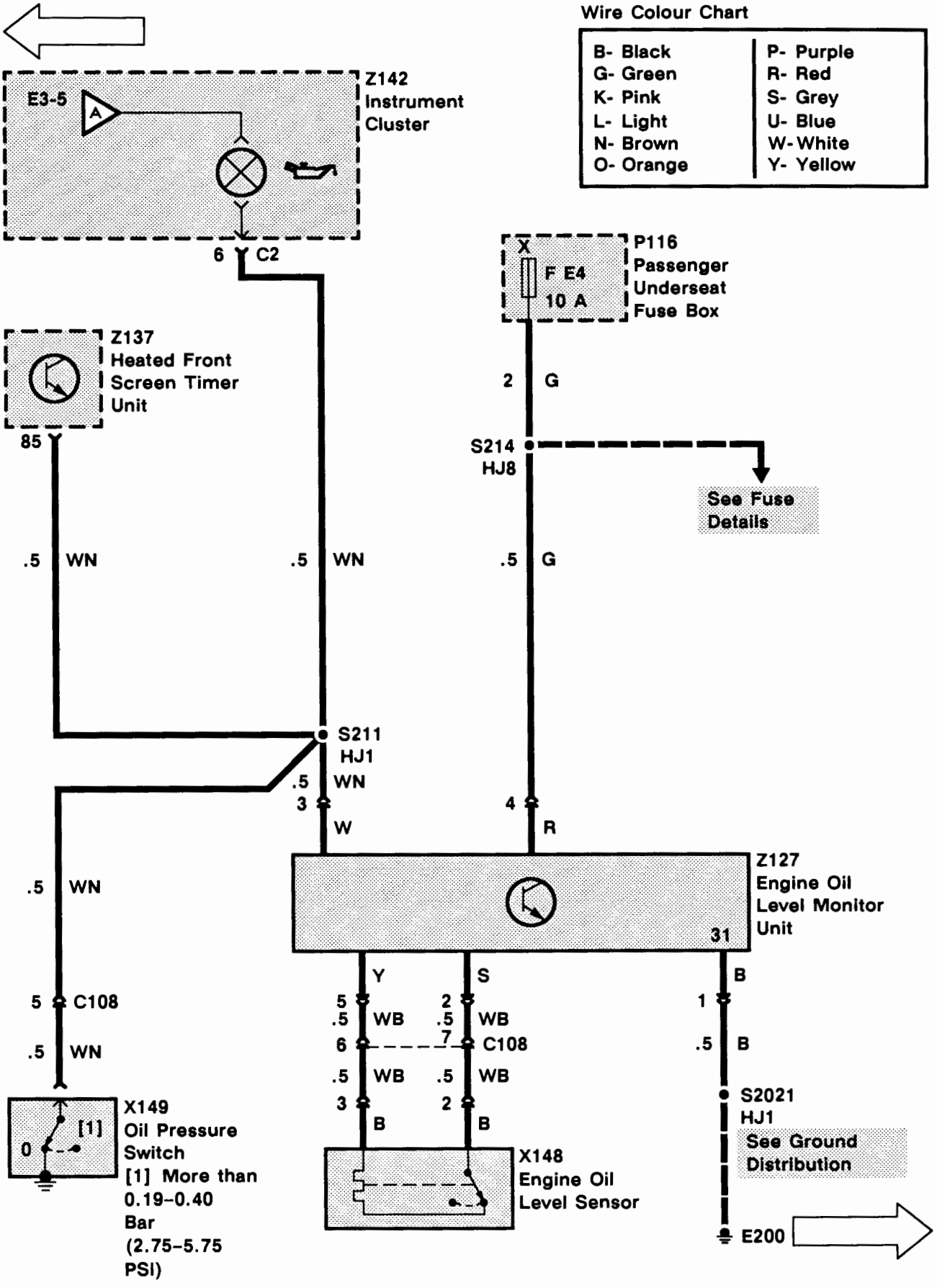

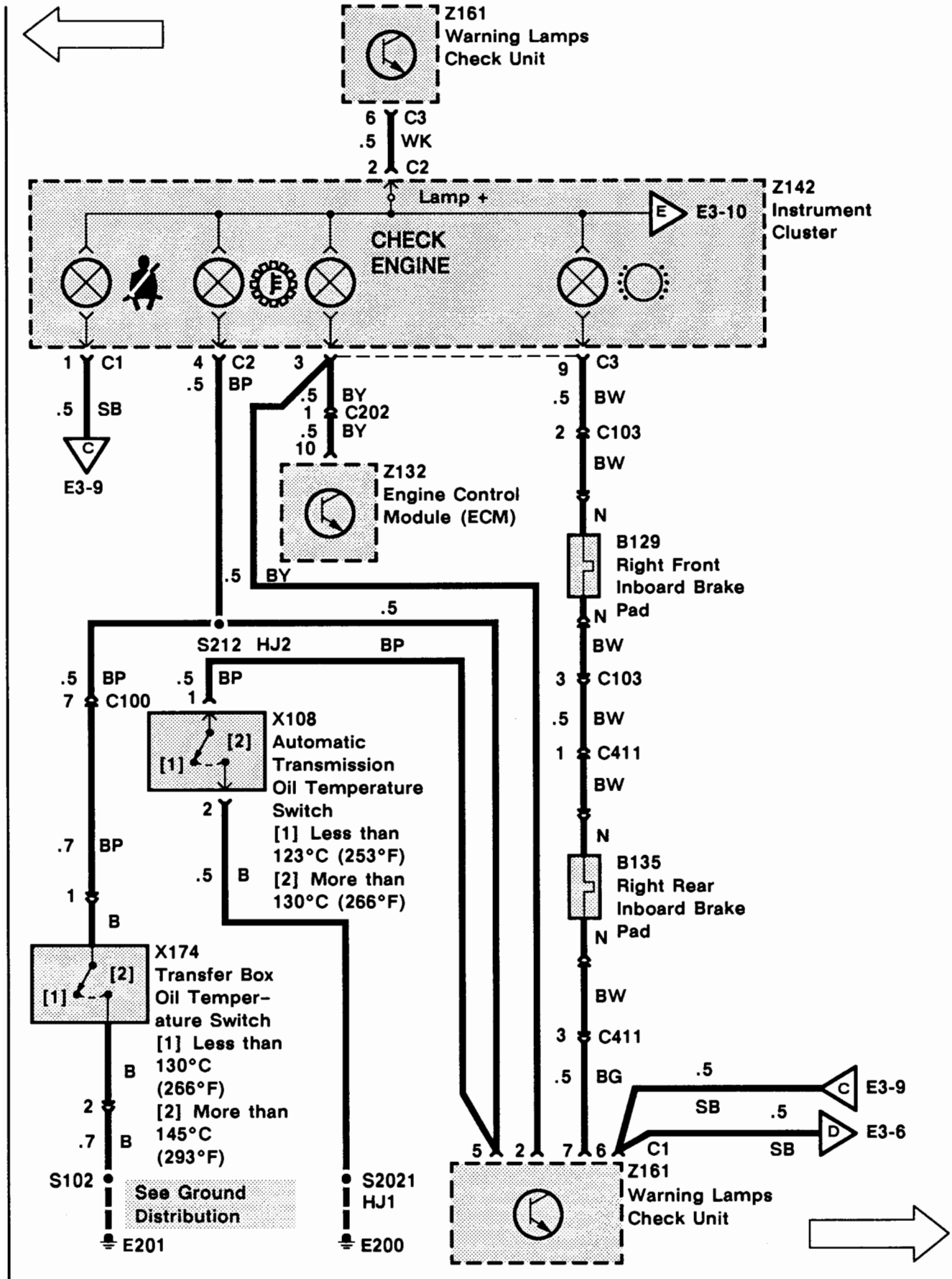
Z161
Warning Lamps
Check Unit
6 C3
.5 WK
2 C2
Lamp +
Z142
Instrument
Cluster
E3-10
CHECK
ENGINE
1 C1
.5 SB
E3-9
4 C2
.5 BP
3
.5 BY
1 C202
.5 BY
10
Z132
Engine Control
Module (ECM)
9 C3
.5 BW
2 C103
BW
N
B129
Right Front
Inboard Brake
Pad
N
BW
3 C103
.5 BW
1 C411
BW
N
B135
Right Rear
Inboard Brake
Pad
N
BW
3 C411
.5 BG
.5 BY
.5
S212 HJ2
BP
.5 BP
7 C100
.5 BP
1
X108
Automatic
Transmission
Oil Temperature
Switch
[1] Less than
123°C (253°F)
[2] More than
130°C (266°F)
2
.5 B
.7 BP
1
B
X174
Transfer Box
Oil Temper-
ature Switch
[1] Less than
130°C
(266°F)
[2] More than
145°C
(293°F)
B
2
.7 B
S102
See Ground
Distribution
E201
S2021
HJ1
E200
.5
SB
.5
C1
SB
E3-9
E3-6
5 2 7 6
Z161
Warning Lamps
Check Unit

E3 ETM

1993 RANGE ROVER

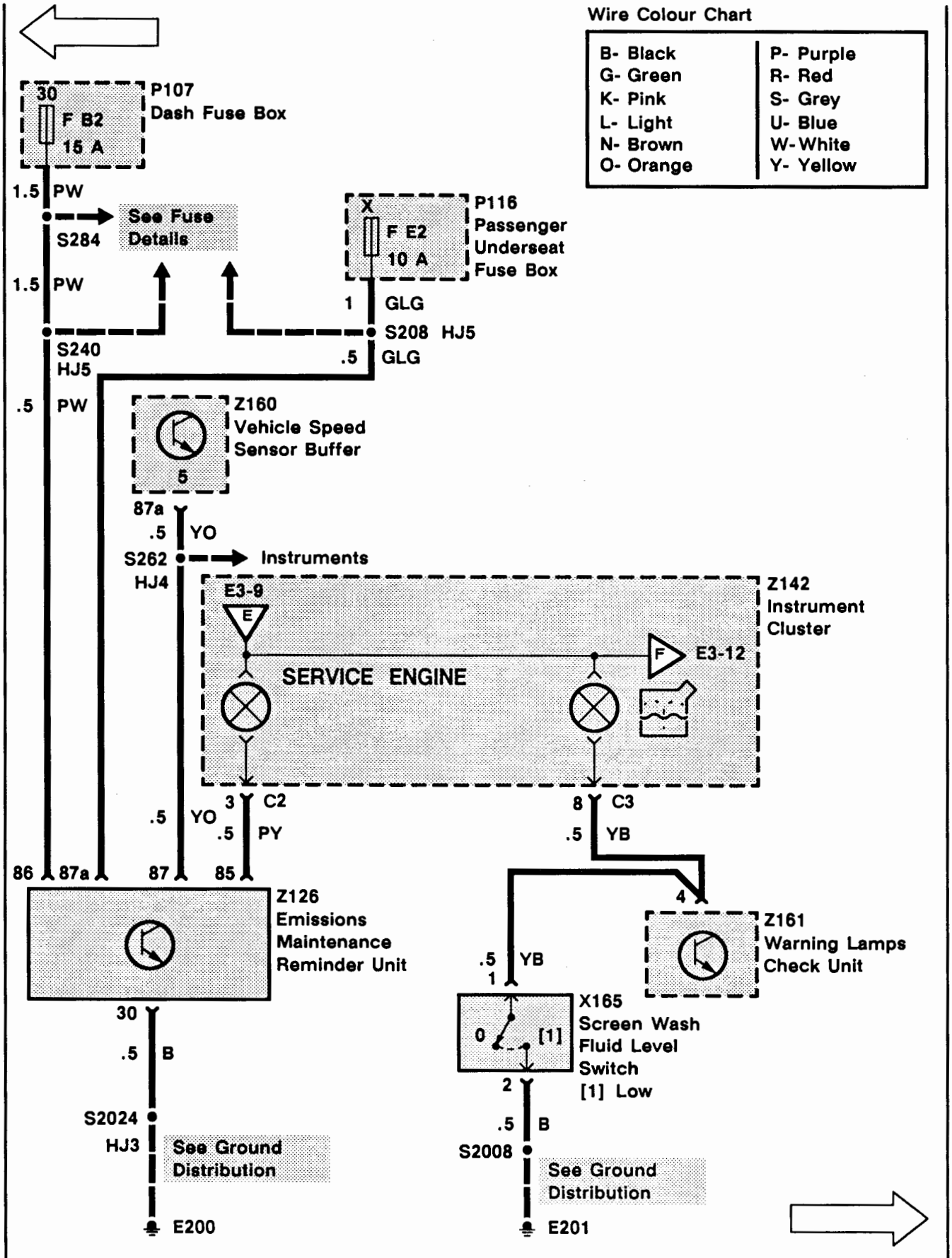

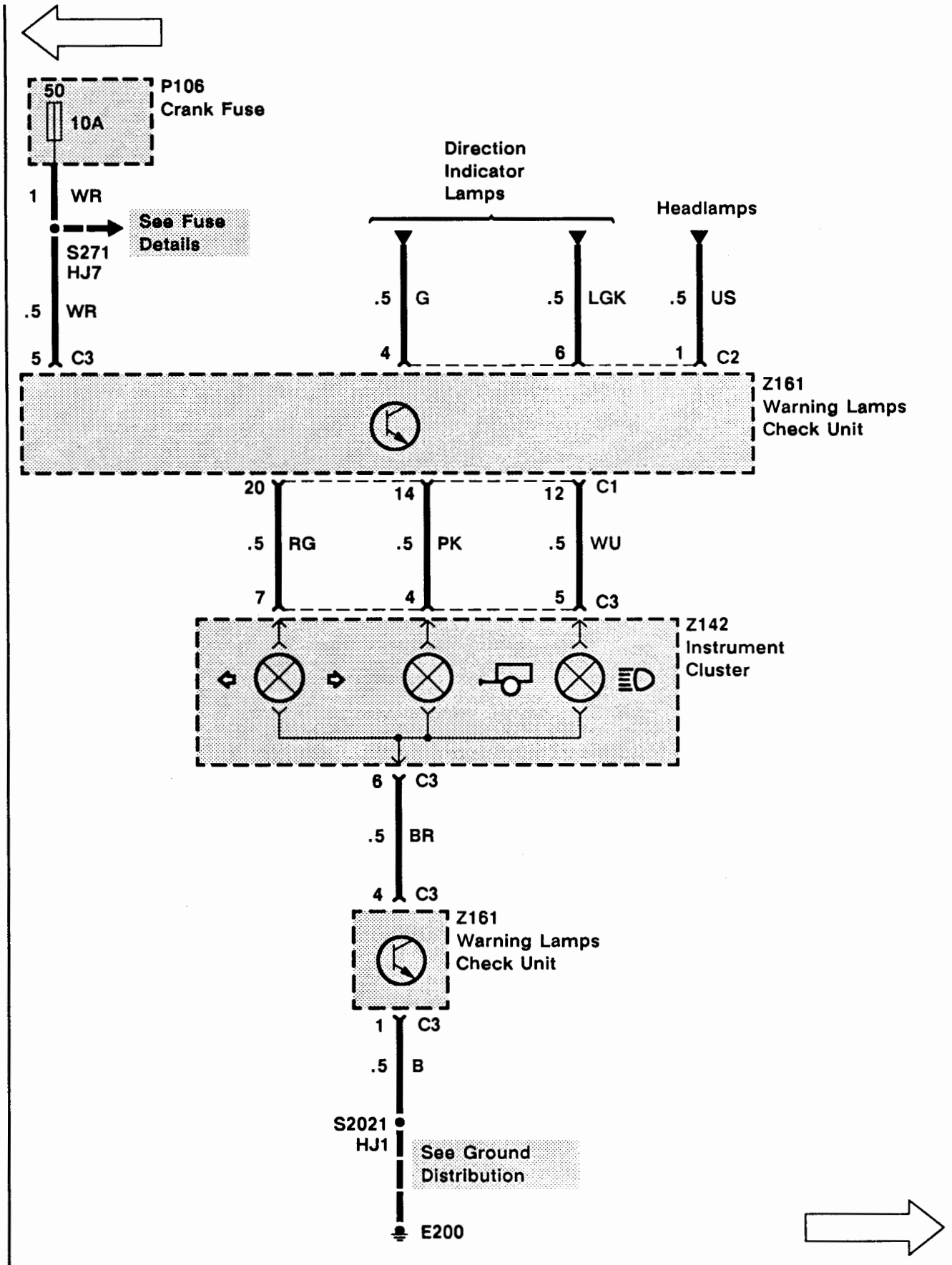
50
10A
P106
Crank Fuse
1
WR
See Fuse Details
S271
HJ7
.5
WR
5
C3
Direction Indicator Lamps
Headlamps
.5
G
.5
LGK
.5
US
4
6
1
C2
Z161
Warning Lamps
Check Unit
20
14
12
C1
.5
RG
.5
PK
.5
WU
7
4
5
C3
Z142
Instrument
Cluster
6
C3
.5
BR
4
C3
Z161
Warning Lamps
Check Unit
1
C3
.5
B
S2021
HJ1
See Ground Distribution
E200

TROUBLESHOOTING HINTS

1. If more than one warning light fails, check power and ground wires common to all affected warning lights.
2. If all warning lights bulbs checked by the Warning Lamps Check Unit (Z161) do not light with the Ignition Switch (X134) in position II, check the B wire and WG wire at the Warning Lamps Check Unit. If all are OK, check the Warning Lamps Check Unit.
3. If a single warning light that is grounded by the Warning Lamps Check Unit (Z161) during a bulb check does not light with the Ignition Switch (X134) in position II, check the bulb, wires and components common to the affected warning light control circuit. If everything is OK, check the Warning Lamps Check Unit.
4. If none of the audible warning tones operate, check the PW and B wires at the Audible Warning Unit (Z109). If all are OK, check the Audible Warning Unit.
5. If the seat belt tone is not heard, check the WB wire, B wire and Driver Seat Buckle Switch (X120). If all are OK, check the Audible Warning Unit (Z109).
6. If the driver's door open/key-in-ignition tone is not heard, check the Driver Door Switch (X118) by opening the driver's door and seeing that the interior lights come on. If OK, check the PW wire, WP wire and the Ignition Key Switch (X177). If all are OK, check the Audible Warning Unit (Z109).
7. If the transfer box neutral tone is heard at all times, check the BK wire, B wire and Transfer Box Position Switch (X175). If all are OK, check the Audible Warning Unit (Z109).

SYSTEM DIAGNOSIS

1. If the charge warning light does not operate, go to Section B1 or B2.
2. If the ABS warning light does not operate, go to Section D1.
3. If the low engine oil level/pressure warning light remains illuminated, with the oil pressure OK, do Test A.
4. If the low engine oil level/pressure warning light flashes with the oil level OK, do Test B.
5. If the low engine oil level/pressure warning light does not flash with the oil level low, do Test C.
6. If the check engine warning light does not operate properly, go to Section A1.
7. If no tone is heard when the transfer box is in position N, do Test D.
8. If the service engine warning light does not light at the specified emissions service interval, do Test E.
9. If the ETC warning light does not operate, go to Section D1.
10. If any warning light not mentioned above does not operate properly, check the associated wires, switches and components.

Test A

1A

CONDITIONS
- **Ignition Switch**
  Position: II

RESULTS
BAT VOLT

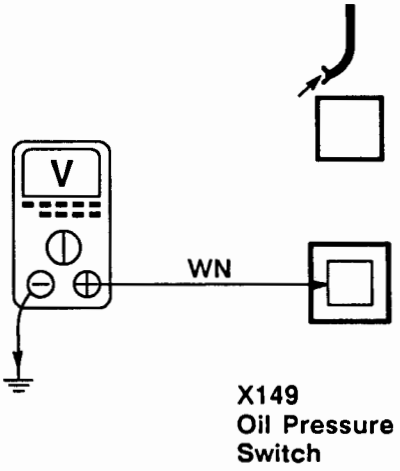

OK **PROBLEM CAUSE**
- WN Wire
- Engine Oil Level Monitor Unit
- Heated Front Screen Timer Unit

OK **PROBLEM CAUSE**
- Oil Pressure Switch

Test B

1B

CONDITIONS
- **Ignition Switch**
  Position: 0

RESULTS
Less than 10 ohms

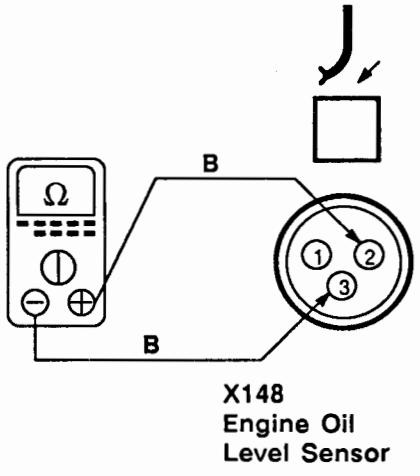

OK **PROBLEM CAUSE**
- Engine Oil Level Sensor

OK **PROBLEM CAUSE**
- WB Wire
- Engine Oil Level Monitor Unit

Test C

1C

CONDITIONS
- **Ignition Switch**
  Position: II

RESULTS
≈ 2V

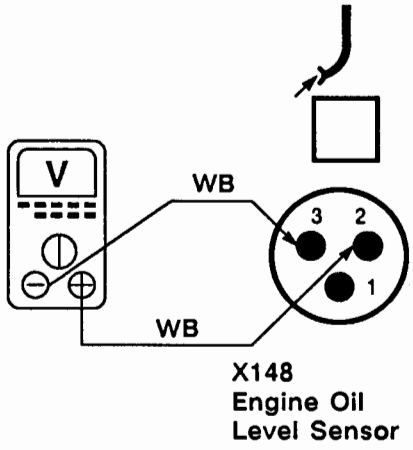

OK → 2C

OK → PROBLEM CAUSE
- Engine Oil Level Sensor

2C

CONDITIONS
- **Ignition Switch**
  Position: II

RESULTS
BAT VOLT

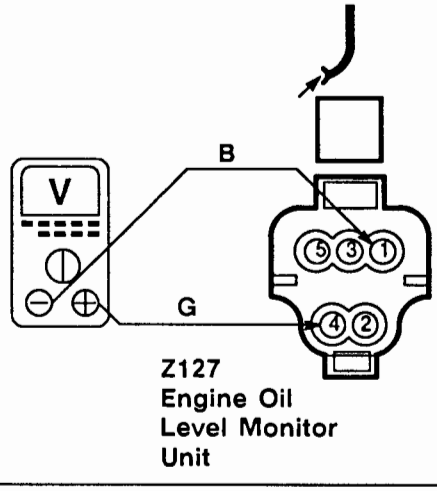

OK → PROBLEM CAUSE
- B Wire
- G Wire
- F E4 Fuse

OK → 3C

2C

3C

CONDITIONS
- **Ignition Switch**
  Position: II
- **Engine**
  Operates

RESULTS
BAT VOLT

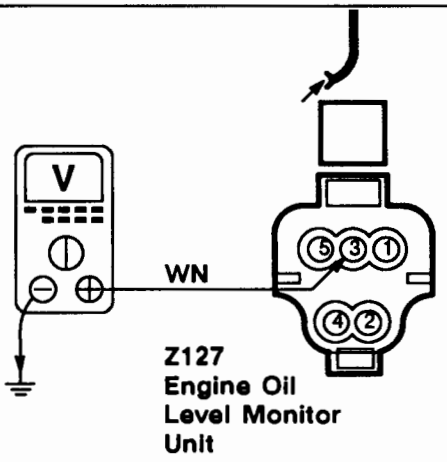

OK **PROBLEM CAUSE**
- **WN Wire**
- **Bulb**

OK **PROBLEM CAUSE**
- **Engine Oil Level Monitor Unit**

Test D

1D

CONDITIONS
- **Ignition Switch**
  Position: 0

RESULTS
- **Transfer box**
  N = More than 10K ohms

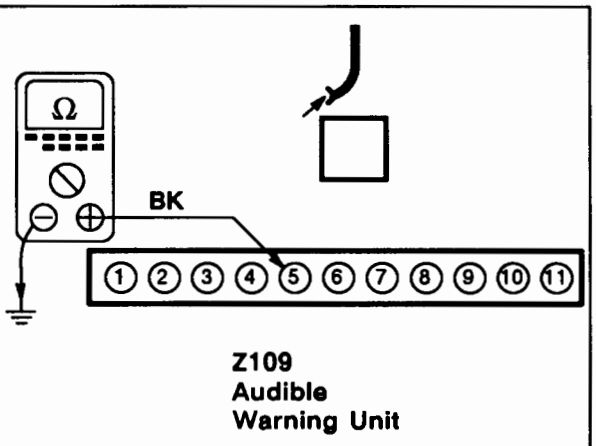

OK **PROBLEM CAUSE**
- **BK Wire**
- **Transfer Box Position Switch**

OK

2D

1D

2D

CONDITIONS
- **Ignition Switch**
  Position: II

RESULTS
- **Transfer Box Position Switch**
  N = BAT VOLT

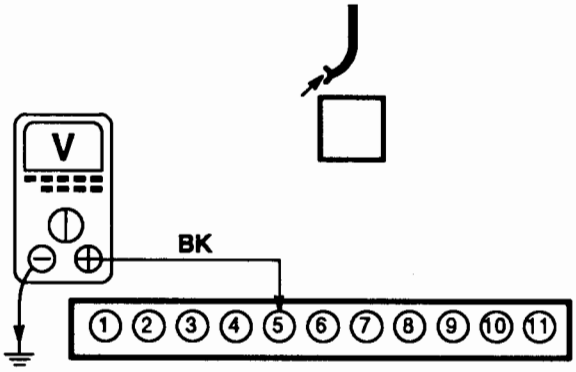

Z109
Audible
Warning Unit

OK **PROBLEM CAUSE**
- **G Wire**
- **Transfer Box Neutral Sense Resistor**

OK **PROBLEM CAUSE**
- **Audible Warning Unit**

Test E

1E

CONDITIONS
- **Ignition Switch**
  Position: 0

RESULTS
BAT VOLT

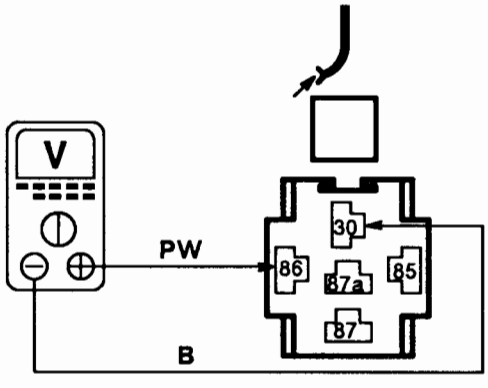

Z126
Emissions Maintenance
Reminder Unit

OK **PROBLEM CAUSE**
- **B Wire**
- **PW Wire**

OK

2E

1E

2E

CONDITIONS
- Ignition Switch
  Position: II

RESULTS
BAT VOLT

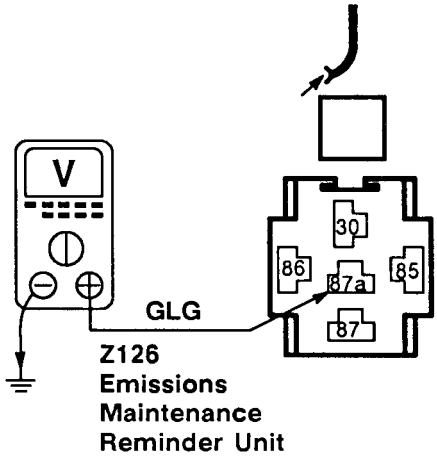

OK PROBLEM CAUSE
- GLG Wire

OK

3E

3E

CONDITIONS
- Ignition Switch
  Position: II

RESULTS
BAT VOLT

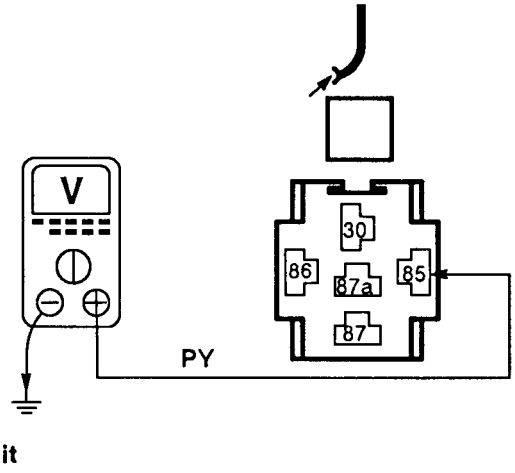

OK PROBLEM CAUSE
- PY Wire
- Bulb

OK

4E

3E

4E

CONDITIONS
- **Ignition Switch**
  Position: II

RESULTS
BAT VOLT

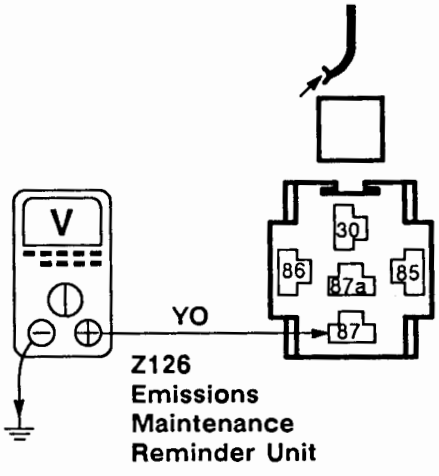

OK **PROBLEM CAUSE**
- YO Wire

OK **PROBLEM CAUSE**
- Emissions Maintenance Reminder Unit

CIRCUIT OPERATION

Audible Warning Unit (Z109)

The Audible Warning Unit (Z109) receives power at all times. It also receives battery voltage with the Ignition Switch (X134) in position II. It receives a ground signal from the Driver Seat Buckle Switch (X120) with the seat belt unbuckled. It receives a ground signal from the Driver Door Switch (X118) with the door open. It receives a voltage signal from the Ignition Key Switch (X177) with the key in the Ignition Switch (X134). It receives a ground signal from the Transfer Box Position Switch (X175) with the transfer box in positions H or N and a voltage signal via the transfer box resistor with the transfer box in position N. The Audible Warning Unit (Z109) sounds a warning tone if the key is in the Ignition Switch (X134) with the driver's door open, or with the transfer box in neutral or with the driver's seat belt unbuckled.

Charge Warning Light

The charge warning light receives battery voltage with the Ignition Switch (X134) in position II. It is grounded by the Generator (Z106) if the Generator is not producing normal power output or the Generator stops turning.

ABS Warning Light

The ABS warning light receives battery voltage with the Ignition Switch (X134) in position II. This warning light is grounded by the Anti-Lock Brake System ECU (Z108) or the ABS Warning Relay (K103) in the event of an ABS problem.

Brake Warning Light

The brake warning light receives battery voltage with the Ignition Switch (X134) in position II. It is grounded by the Brake Fluid Level Switch (X111) when the brake fluid level is low. It may also be grounded through the Brake Fluid Level Switch (X111) and the brake fluid level switch diode when the Handbrake Switch (X191) is closed. The warning light is also grounded by the Anti-Lock Brake System ECU (Z108) or by the ABS Pressure Switch Unit (Z104) in the event of an ABS system problem. When the ignition switch (X134) is in position III, battery voltage is applied to the Brake Indicator Check Relay (K106). The relay is energized, applying ground to the brake warning light as a bulb check.

Oil Pressure Warning Light

The oil pressure warning light receives battery voltage with the Ignition Switch (X134) in position II. If the engine oil pressure is very low, the Oil Pressure Switch (X149) will apply ground to the warning light.

Transmission/Transfer Box Oil Temperature Warning Light

The transmission/transfer box oil temperature warning light is grounded by the Automatic Transmission Oil Temperature Switch (X108) when the temperature of the transmission fluid exceeds 130°C (266°F). The warning light is also grounded by the Transfer Box Oil Temperature Switch (X174) when the temperature of the transfer box fluid exceeds 145°C (266°F).
When the Ignition Switch (X134) is in position III, battery voltage is applied to the Brake Indicator Check Relay (K106). The relay is energized, applying ground to the Transmission/Transfer Box Oil Temperature Warning Light as a bulb check.

Check Engine Warning Light

The check engine warning light is grounded by the Engine Control Module (ECM) (Z132) when a fault code is set.

Brake Pad Wear Warning Light

When the Right Front or Right Rear Inboard Brake Pad (B129, B135) is in need of replacement, the Brake Pad Wear Warning Light is grounded through the Right Front or Right Rear Inboard Brake Pad (B129, B135). When the Ignition Switch (X134) is in position III, battery voltage is applied to the Brake Indicator Check Relay (K106). The relay is energized, applying ground to the Brake Pad Wear Warning Light as a bulb check.

Low Screen Wash Fluid Warning Light

The low screen wash fluid warning light is grounded by the Screen Wash Fluid Level Switch (X165) when the fluid reservoir requires filling.

Service Engine Warning Light

The service engine warning light is controlled by the Emissions Maintenance Reminder Unit (Z126) and illuminates to indicate to the driver that it is time to check the vehicle's emissions system. The reminder unit receives battery power at all times. When the ignition is switched to position II, the reminder unit momentarily grounds the service engine warning light as a bulb check. While the vehicle is in motion, the reminder unit receives a vehicle speed signal in the form of a pulsing battery voltage. The reminder unit uses this signal to record distance travelled. When a specific distance is reached, the reminder unit grounds the service engine warning light.

Coolant Level Warning Light

The Instrument Cluster (Z142) receives battery voltage through the Engine Coolant Level Switch (X144) with the Ignition Switch (X134) in position II and the engine coolant level OK. If the engine coolant level is low, the Engine Coolant Level Switch (X144) opens, removing voltage from the Instrument Cluster. The Instrument Cluster then lights the coolant level warning light.

ETC Warning Light

The ETC warning light will be on for up to 60 seconds while the system is active. After 60 seconds of ETC operation, the ETC warning light will begin to flash to inform the driver that the system has been shut down to allow the brakes to cool. If the ETC warning light stays on continuously for more than 60 seconds, a fault in the system is indicated.

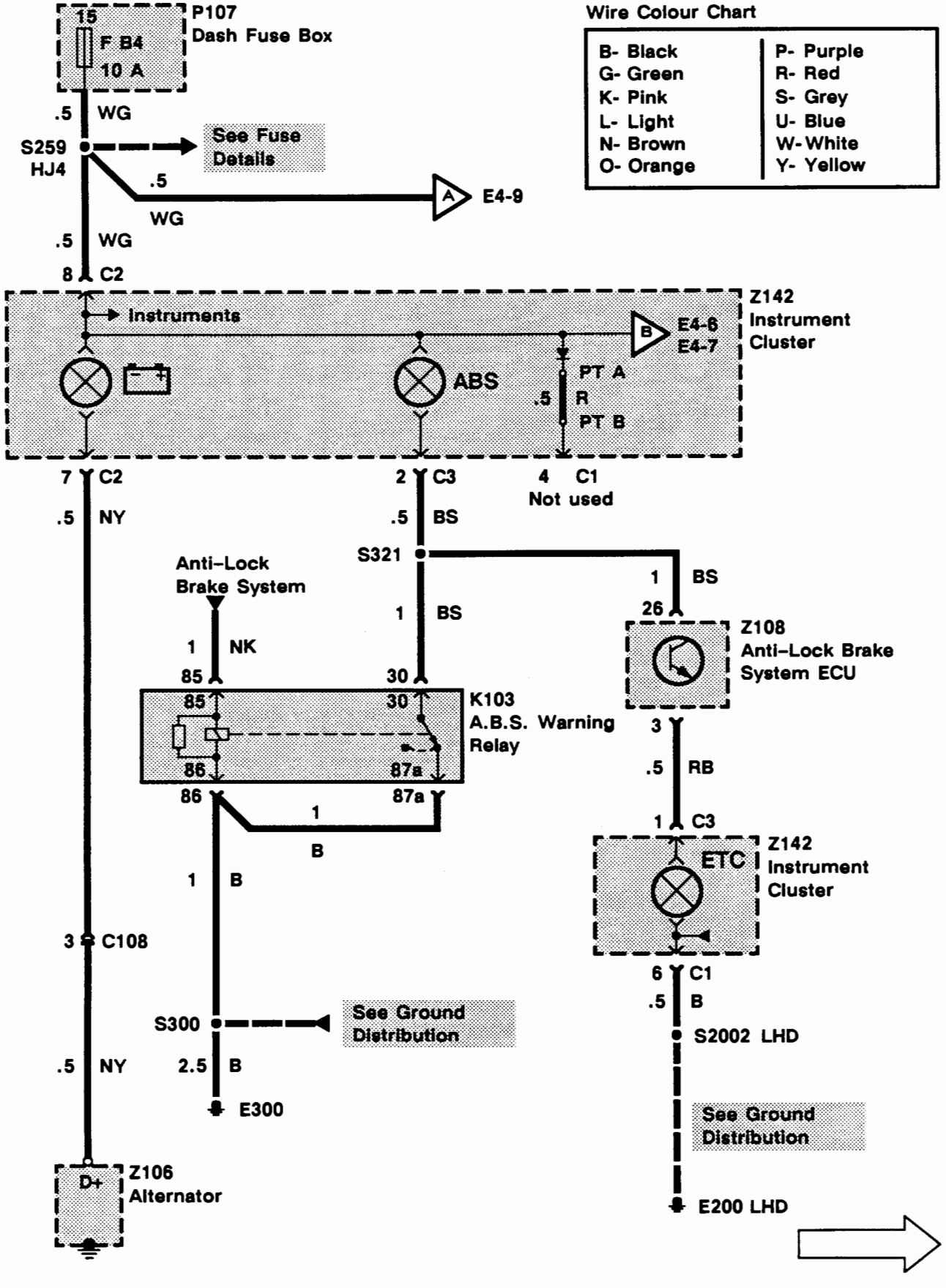

Wire Colour Chart

B- Black	P- Purple
G- Green	R- Red
K- Pink	S- Grey
L- Light	U- Blue
N- Brown	W- White
O- Orange	Y- Yellow

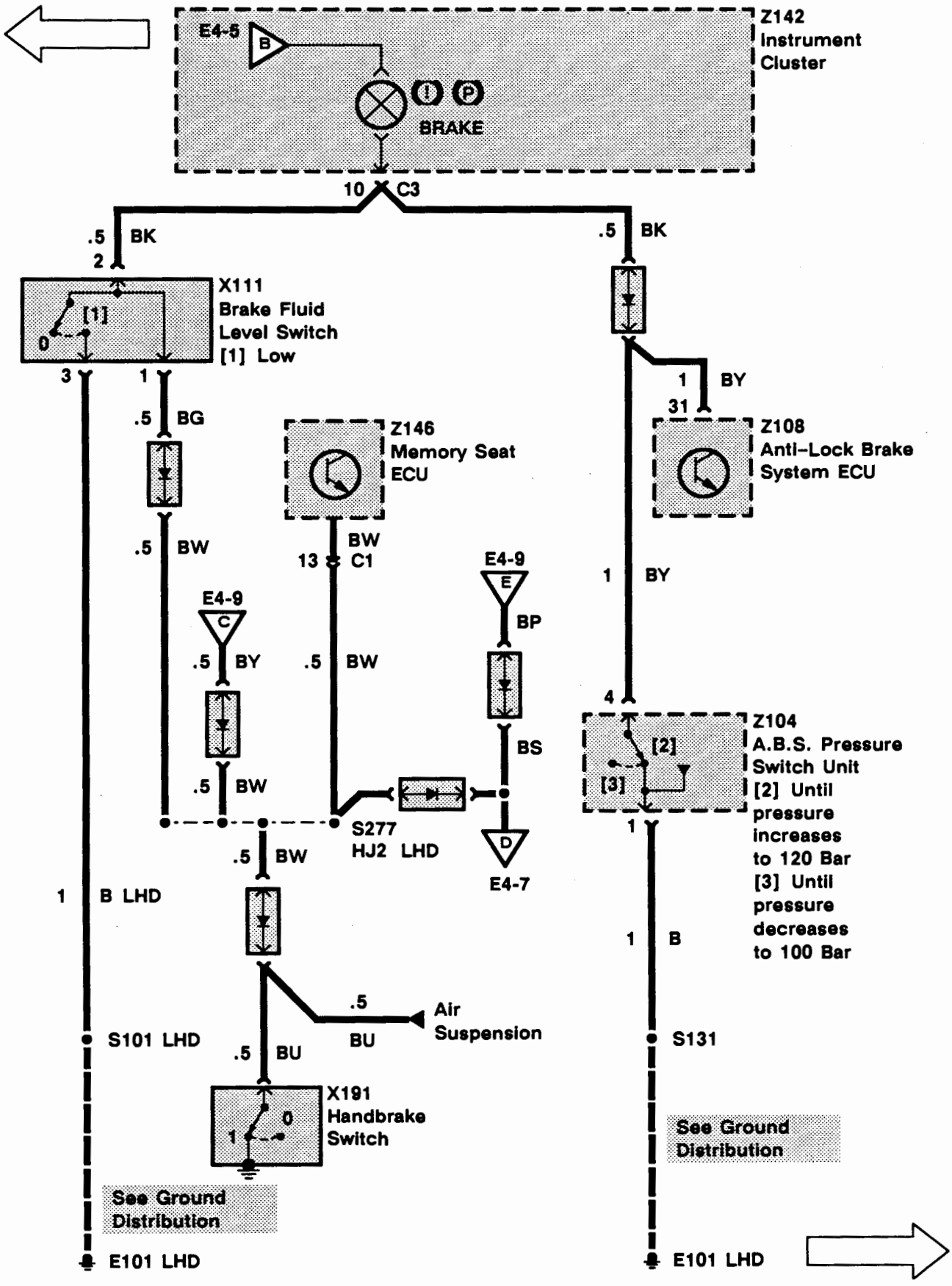
E4-5
B
BRAKE
Z142
Instrument
Cluster
10
C3
.5
BK
2
X111
Brake Fluid
Level Switch
[1] Low
[1]
0
3
1
.5
BG
.5
BW
Z146
Memory Seat
ECU
13
BW
C1
E4-9
C
.5
BY
.5
BW
.5
BW
E4-9
E
BP
BS
D
E4-7
S277
HJ2 LHD
.5
BW
1
B LHD
S101 LHD
.5
BU
.5
BU
Air
Suspension
X191
Handbrake
Switch
0
1
See Ground
Distribution
E101 LHD
.5
BK
1
BY
31
Z108
Anti-Lock Brake
System ECU
1
BY
4
Z104
A.B.S. Pressure
Switch Unit
[2] Until
pressure
increases
to 120 Bar
[3] Until
pressure
decreases
to 100 Bar
[2]
[3]
1
1
B
S131
See Ground
Distribution
E101 LHD

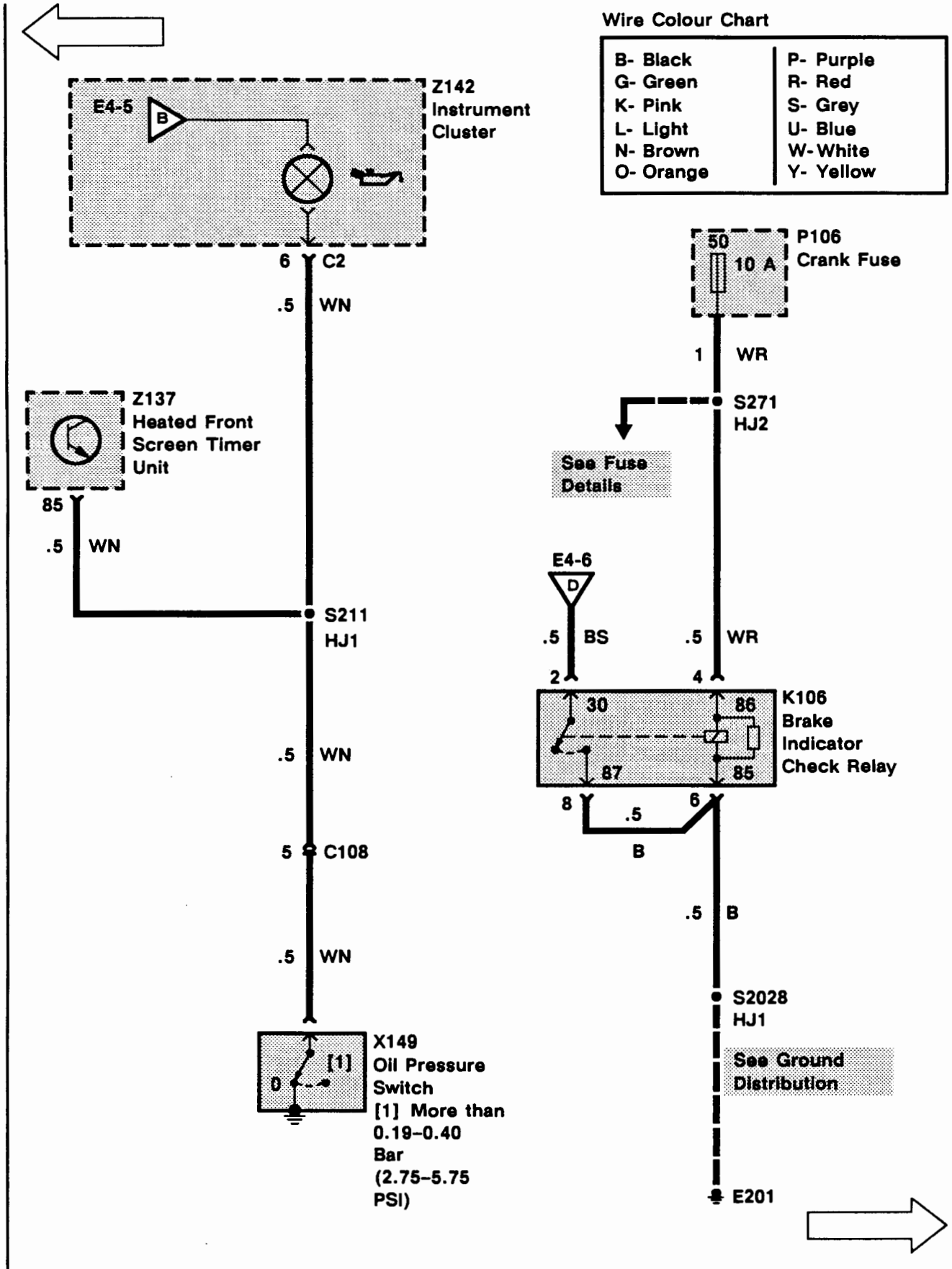
Wire Colour Chart
B- Black
G- Green
K- Pink
L- Light
N- Brown
O- Orange
P- Purple
R- Red
S- Grey
U- Blue
W- White
Y- Yellow
E4-5
B
Z142
Instrument
Cluster
6
C2
.5
WN
Z137
Heated Front
Screen Timer
Unit
85
.5
WN
S211
HJ1
.5
WN
5
C108
.5
WN
X149
Oil Pressure
Switch
[1]
0
[1] More than
0.19-0.40
Bar
(2.75-5.75
PSI)
50
10 A
P106
Crank Fuse
1
WR
S271
HJ2
See Fuse
Details
E4-6
D
.5
BS
.5
WR
2
4
30
86
87
85
K106
Brake
Indicator
Check Relay
8
6
.5
B
.5
B
S2028
HJ1
See Ground
Distribution
E201

E4 ETM

1994 RANGE ROVER

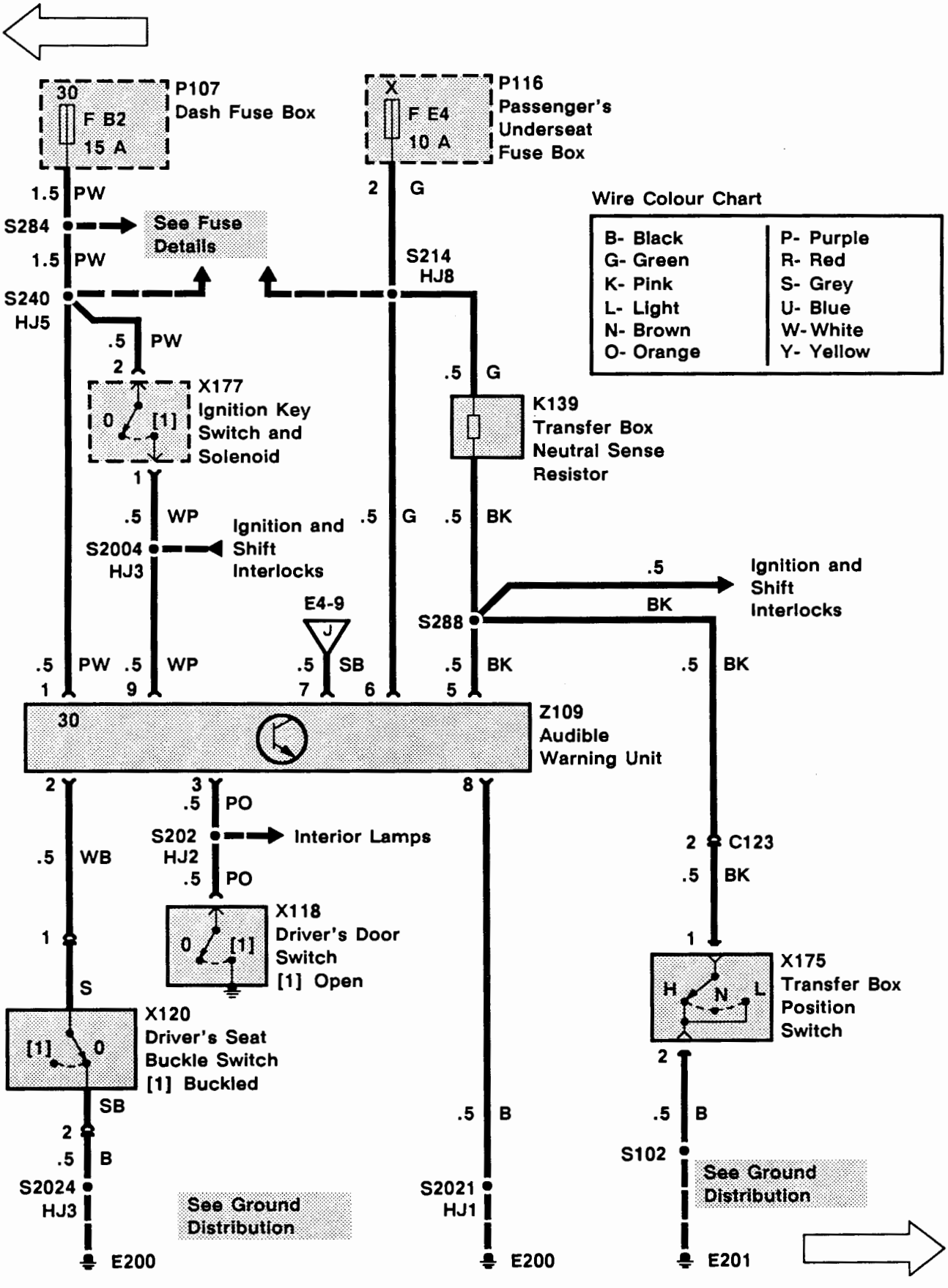

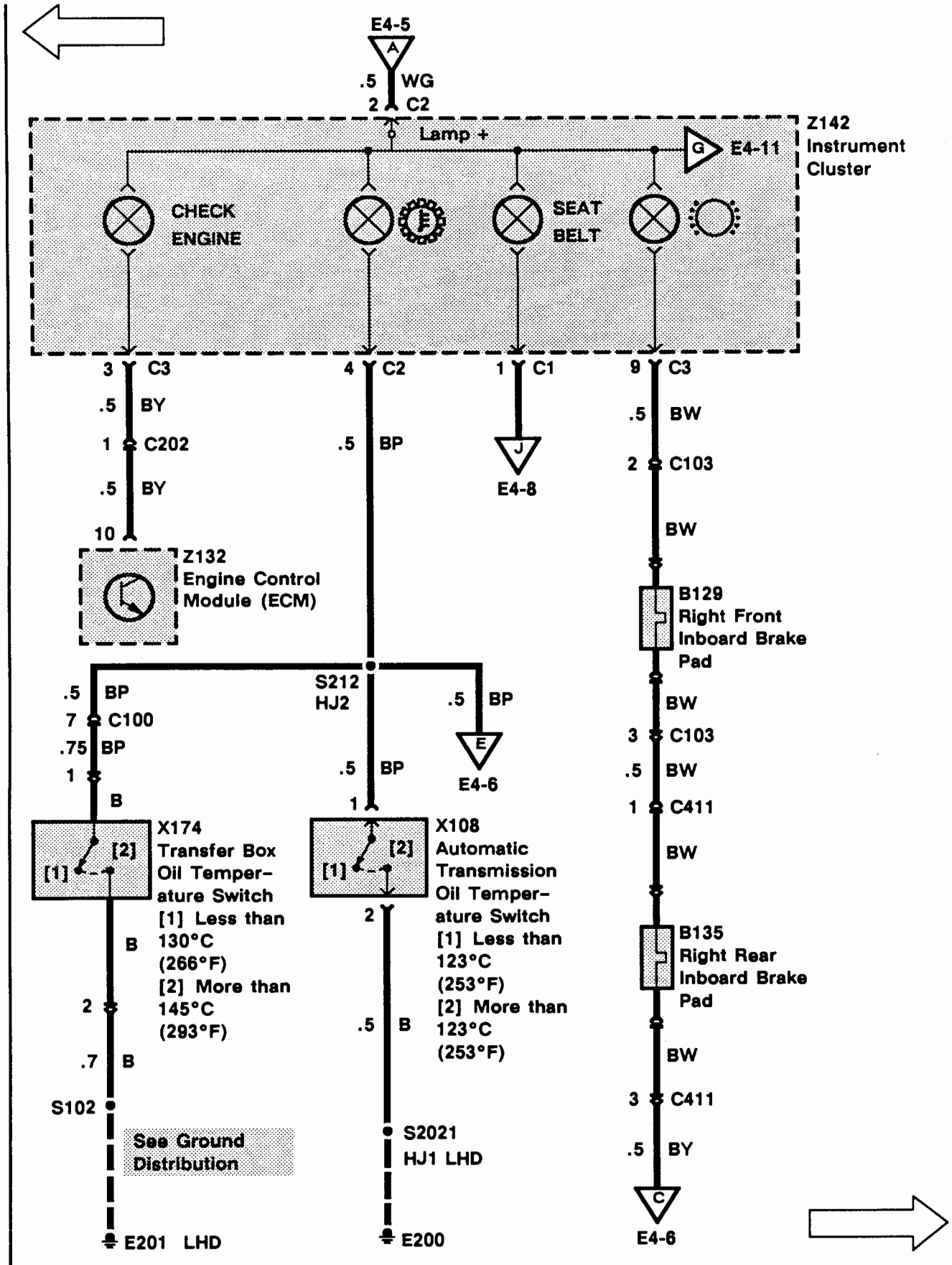
E4-5
A
.5 WG
2 C2
Lamp +
G
E4-11
Z142
Instrument
Cluster
CHECK
ENGINE
SEAT
BELT
3 C3
.5 BY
1 C202
.5 BY
10
Z132
Engine Control
Module (ECM)
4 C2
.5 BP
1 C1
J
E4-8
9 C3
.5 BW
2 C103
BW
B129
Right Front
Inboard Brake
Pad
BW
3 C103
.5 BW
1 C411
BW
B135
Right Rear
Inboard Brake
Pad
BW
3 C411
.5 BY
C
E4-6
.5 BP
7 C100
.75 BP
1
B
[1]
[2]
X174
Transfer Box
Oil Temper-
ature Switch
[1] Less than
130°C
(266°F)
[2] More than
145°C
(293°F)
B
2
.7 B
S102
See Ground
Distribution
E201 LHD
S212
HJ2
.5 BP
1
X108
Automatic
Transmission
Oil Temper-
ature Switch
[1] Less than
123°C
(253°F)
[2] More than
123°C
(253°F)
2
.5 B
S2021
HJ1 LHD
E200
.5 BP
E
E4-6

E4 ETM

1994 RANGE ROVER

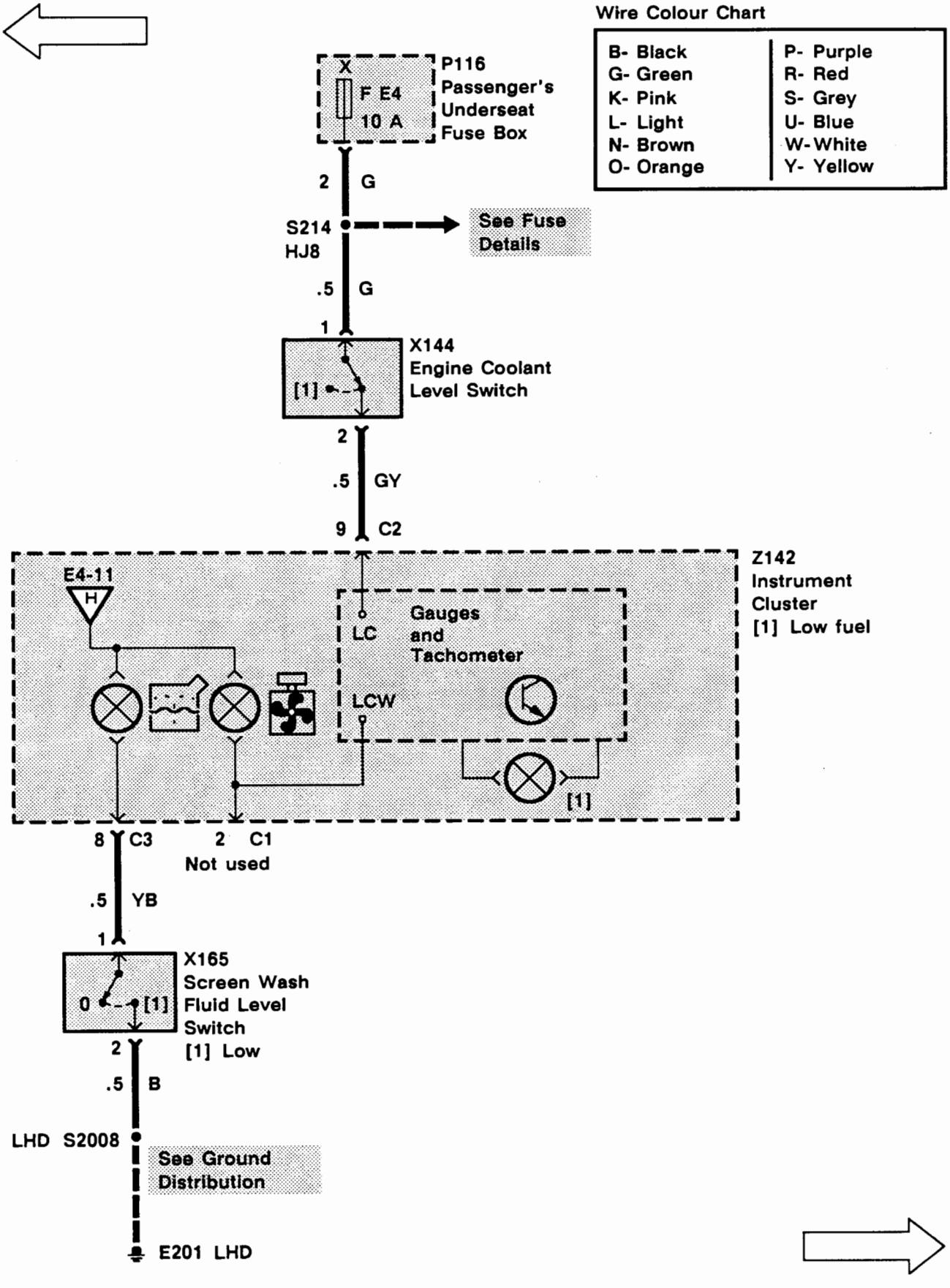

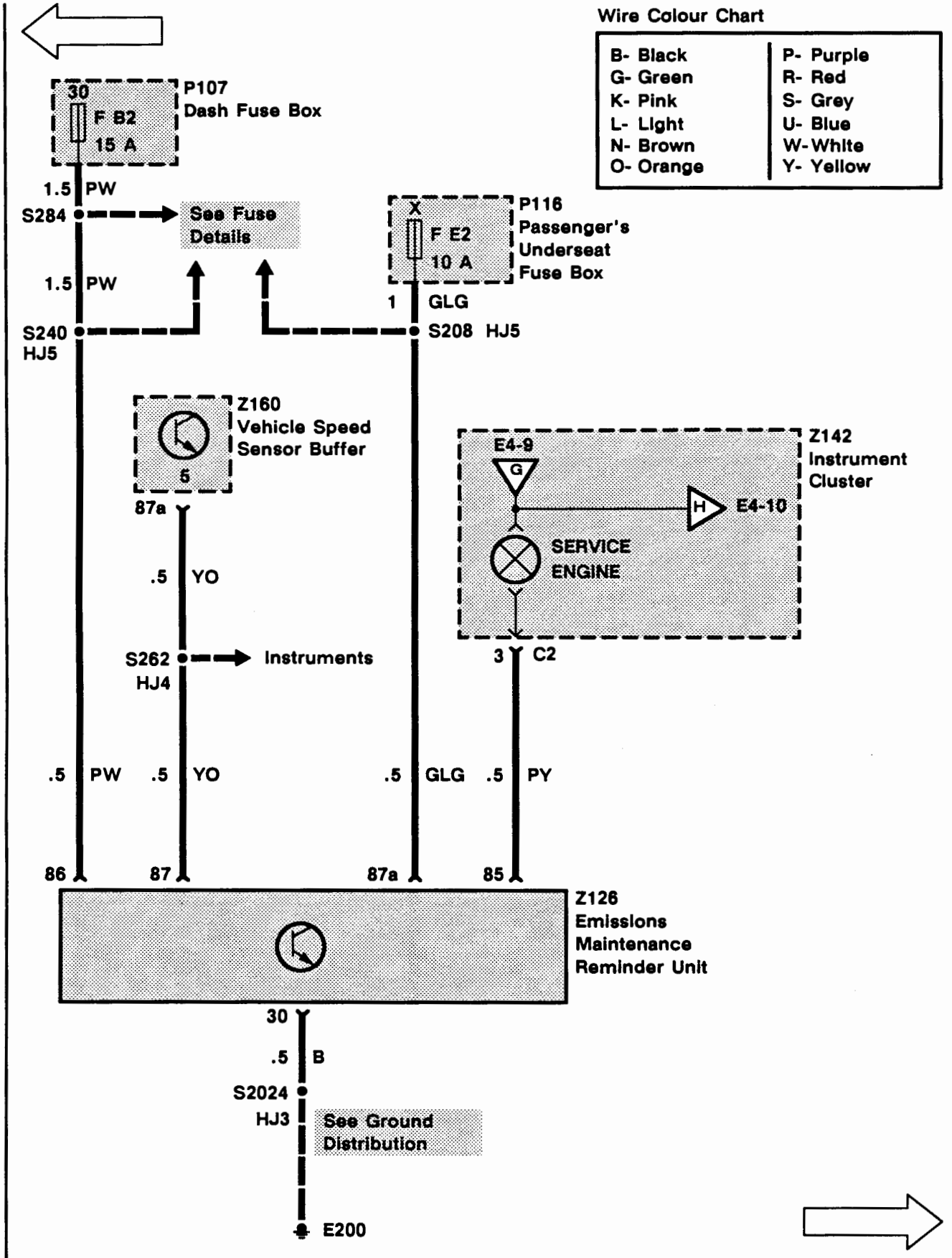
Wire Colour Chart
B- Black
G- Green
K- Pink
L- Light
N- Brown
O- Orange
P- Purple
R- Red
S- Grey
U- Blue
W- White
Y- Yellow
30
F B2
15 A
P107
Dash Fuse Box
1.5 PW
S284
See Fuse Details
1.5 PW
S240
HJ5
X
F E2
10 A
P116
Passenger's Underseat Fuse Box
1 GLG
S208 HJ5
Z160
Vehicle Speed Sensor Buffer
5
87a
.5 YO
S262
HJ4
Instruments
Z142
Instrument Cluster
E4-9
G
H
E4-10
SERVICE ENGINE
3 C2
.5 PW
.5 YO
.5 GLG
.5 PY
86
87
87a
85
Z126
Emissions Maintenance Reminder Unit
30
.5 B
S2024
HJ3
See Ground Distribution
E200

E4 ETM

1994 RANGE ROVER

Wire Colour Chart

B- Black	P- Purple
G- Green	R- Red
K- Pink	S- Grey
L- Light	U- Blue
N- Brown	W- White
O- Orange	Y- Yellow

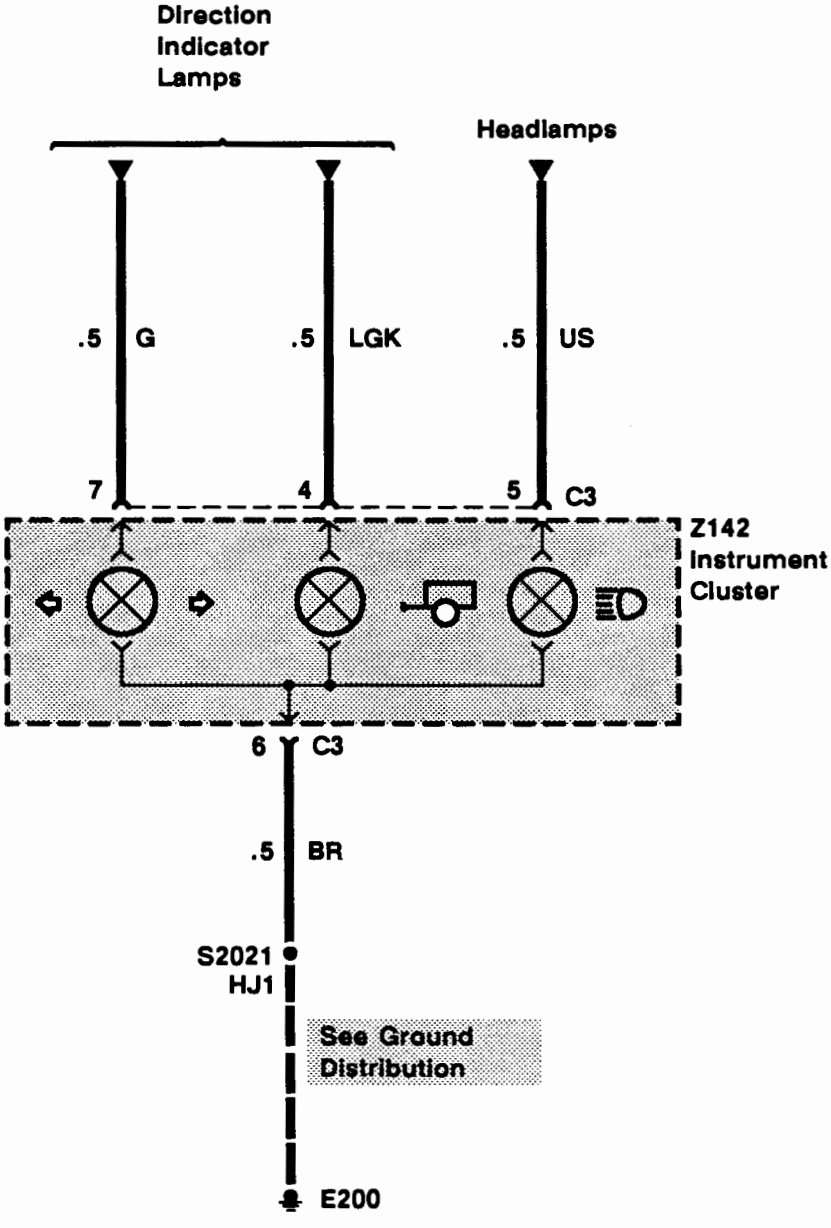

TROUBLESHOOTING HINTS

1. If more than one warning light fails, check power and ground wires common to all affected warning lights.
2. If the brake, brake pad wear and transmission/transfer box oil temperature warning lights that are checked during crank do not light with the Ignition Switch in position III, check the B, BS and WR wires at the Brake Indicator Check Relay (K106). If all are OK, check the Brake Indicator Check Relay.
3. If none of the audible warning tones operate, check the PW and B wires at the Audible Warning Unit (Z109). If all are OK, check the Audible Warning Unit.
4. If the seat belt tone is not heard, check the WB wire, B wire and Driver Seat Buckle Switch (X120). If all are OK, check the Audible Warning Unit (Z109).
5. If the driver's door open/key-in-ignition tone is not heard, check the Driver Door Switch (X118) by opening the driver's door and seeing that the interior lights come on. If OK, check the PW wire, WP wire and the Ignition Key Switch (X177). If all are OK, check the Audible Warning Unit (Z109).
6. If the transfer box neutral tone is heard at all times, check the BK wire, B wire and Transfer Box Position Switch (X175). If all are OK, check the Audible Warning Unit (Z109).

SYSTEM DIAGNOSIS

1. If the charge warning light does not operate, go to Section B1.
2. If the ABS warning light does not operate, go to Section D1.
3. If the low engine oil pressure warning light remains illuminated, with the oil pressure OK, do Test A.
4. If the check engine warning light does not operate properly, go to Section A1.
5. If no tone is heard when the transfer box is in position N, do Test B.
6. If the service engine warning light does not light at the specified emissions service interval, do Test C.
7. If the ETC warning light does not operate, go to Section D1.
8. If any warning light not mentioned above does not operate properly, check the associated wires, switches and components.

Test A

1A

CONDITIONS
- **Ignition Switch**
  Position: II

RESULTS
BAT VOLT

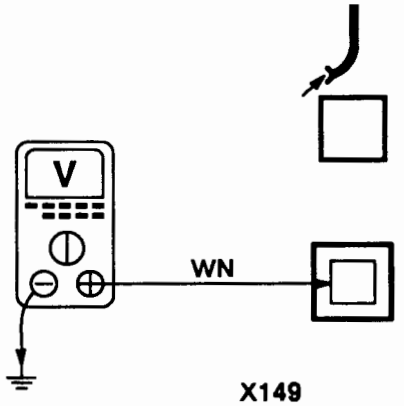

X149
Oil Pressure Switch

OK **PROBLEM CAUSE**
- **WN Wire**
- **Heated Front Screen Timer Unit**

OK **PROBLEM CAUSE**
- **Oil Pressure Switch**

Test B

1B

CONDITIONS
- **Ignition Switch**
  Position: 0

RESULTS
- **Transfer Box**
  N = More than 10K ohms

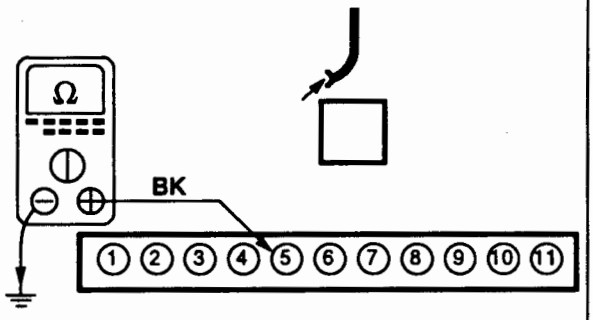

Z109
Audible Warning Unit

OK **PROBLEM CAUSE**
- **BK Wire**
- **Transfer Box Position Switch**

OK

2B

2C

CONDITIONS
- Ignition Switch
  Position: II

RESULTS
BAT VOLT

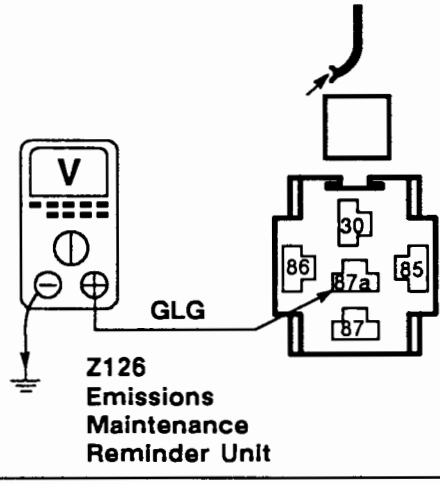

PROBLEM CAUSE
- GLG Wire

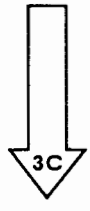

3C

CONDITIONS
- Ignition Switch
  Position: II

RESULTS
BAT VOLT

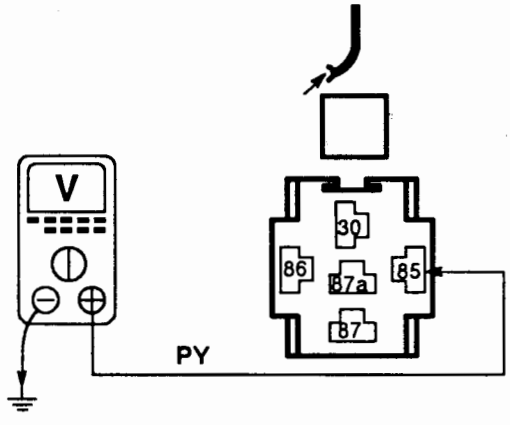

PROBLEM CAUSE
- PY Wire
- Bulb

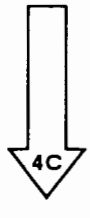

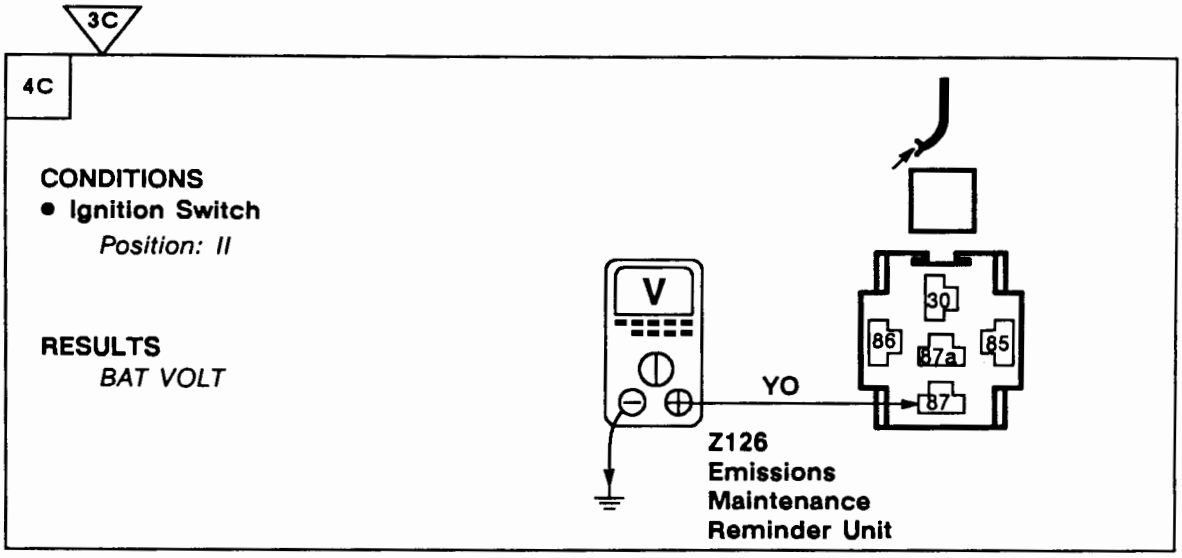

PROBLEM CAUSE
- YO Wire

PROBLEM CAUSE
- Emissions Maintenance Reminder Unit