cardiagn.com

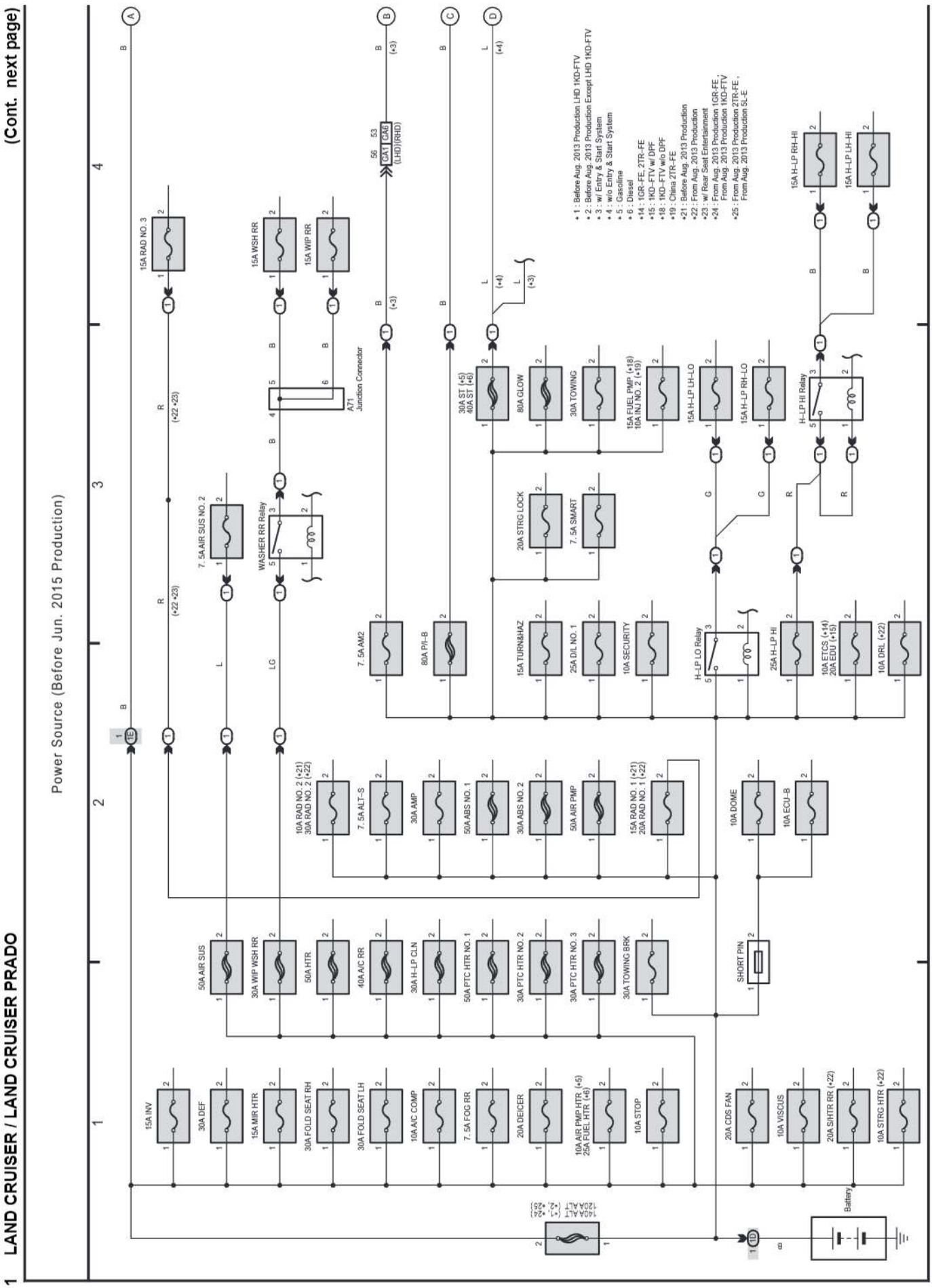

(Cont. next page)

Power Source (Before Jun. 2015 Production)

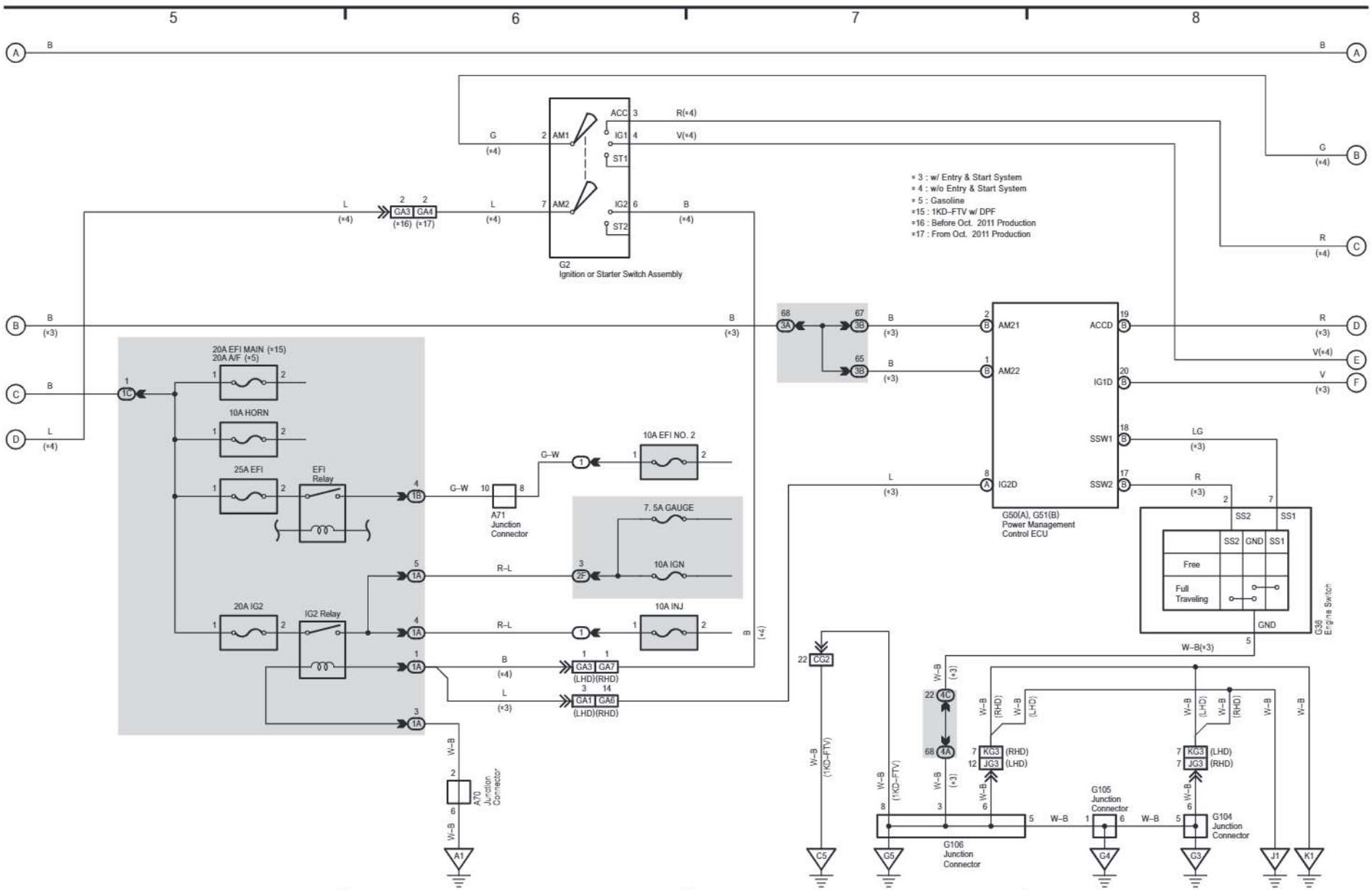

cardiagn.com

cardiagn.com

M OVERALL ELECTRICAL WIRING DIAGRAM

1 LAND CRUISER / LAND CRUISER PRADO (Cont'd)

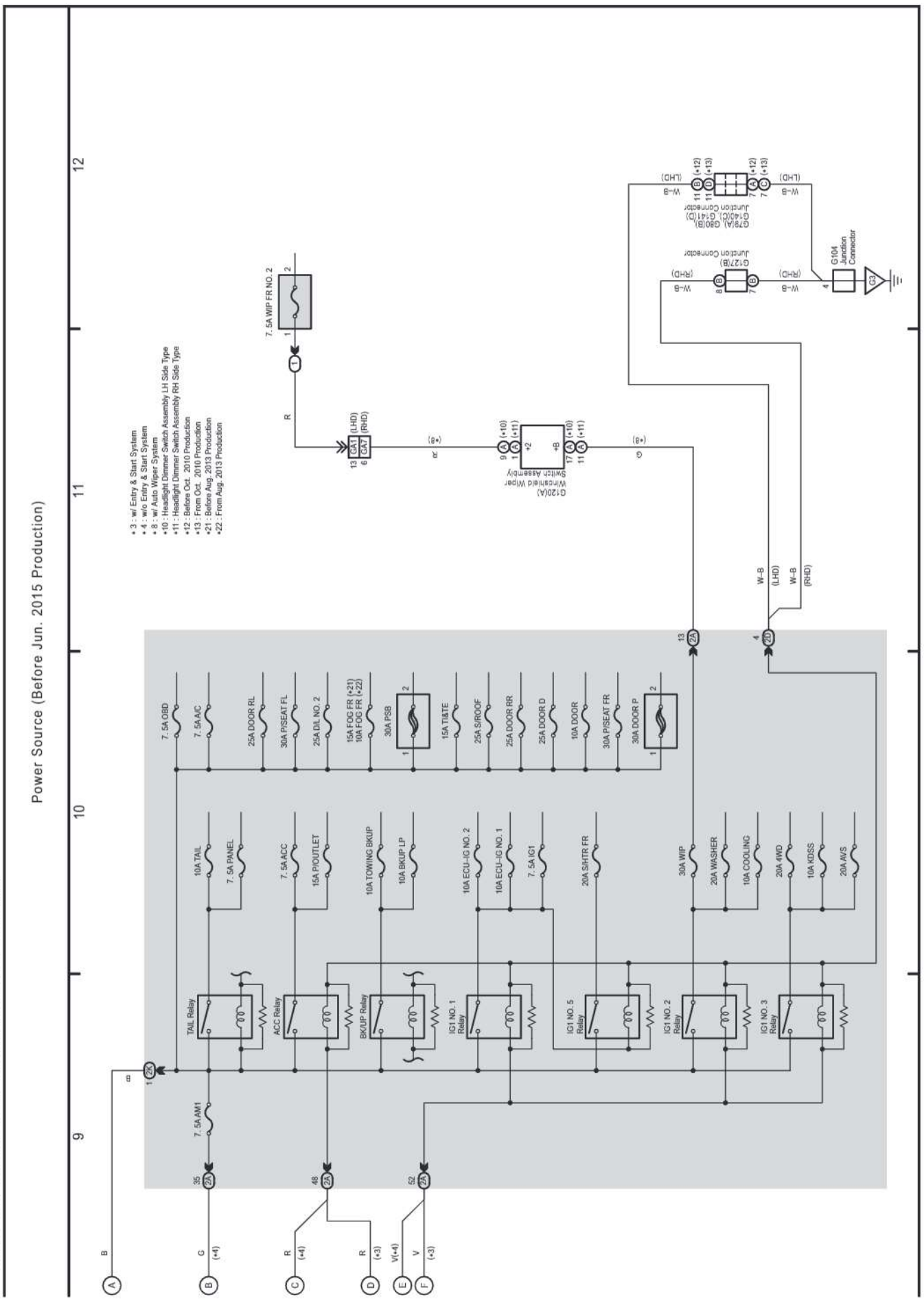

cardiagn.com

(Cont. next page)

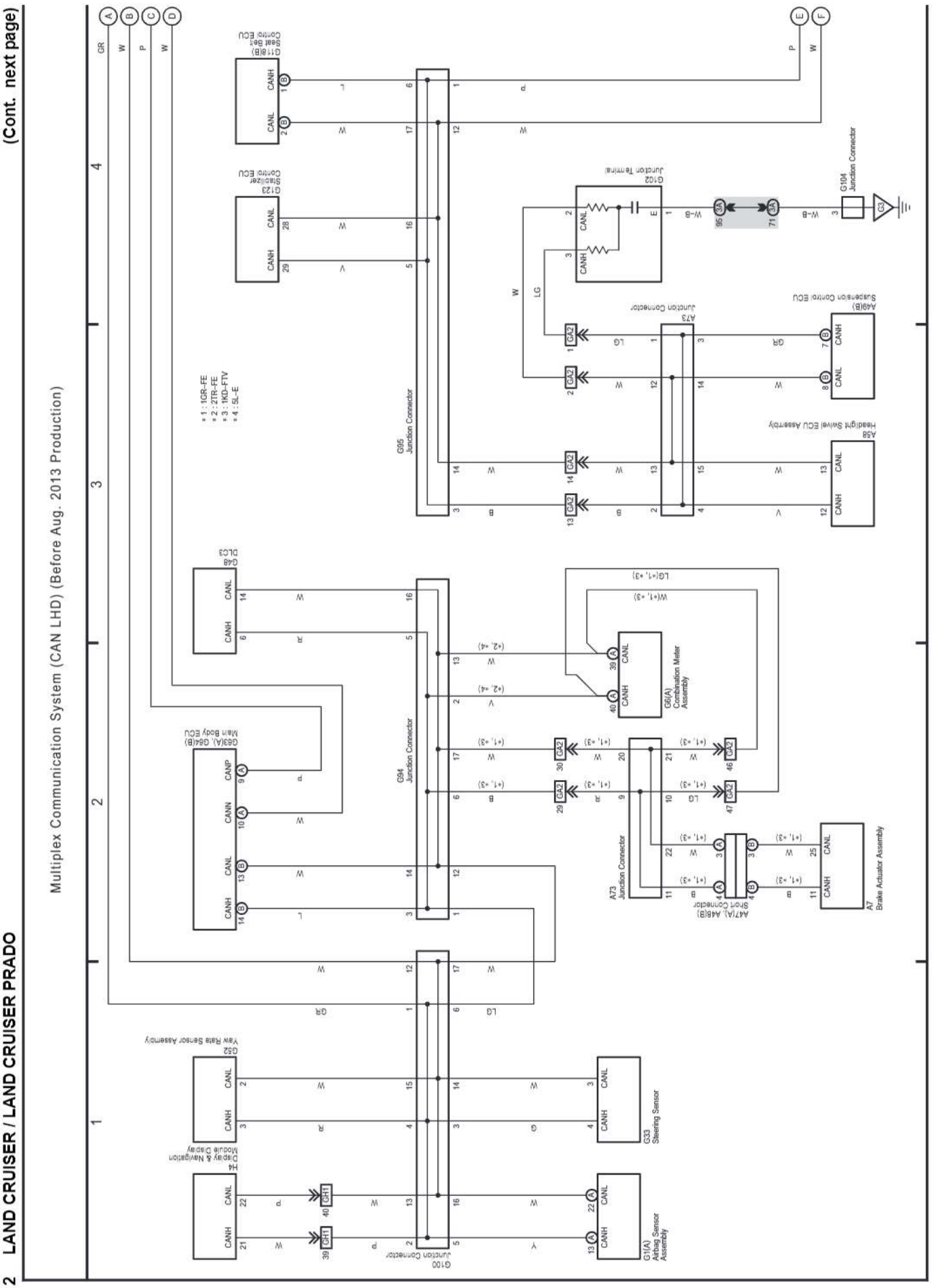

cardiagn.com

2 LAND CRUISER / LAND CRUISER PRADO (Cont'd)

(Cont. next page)

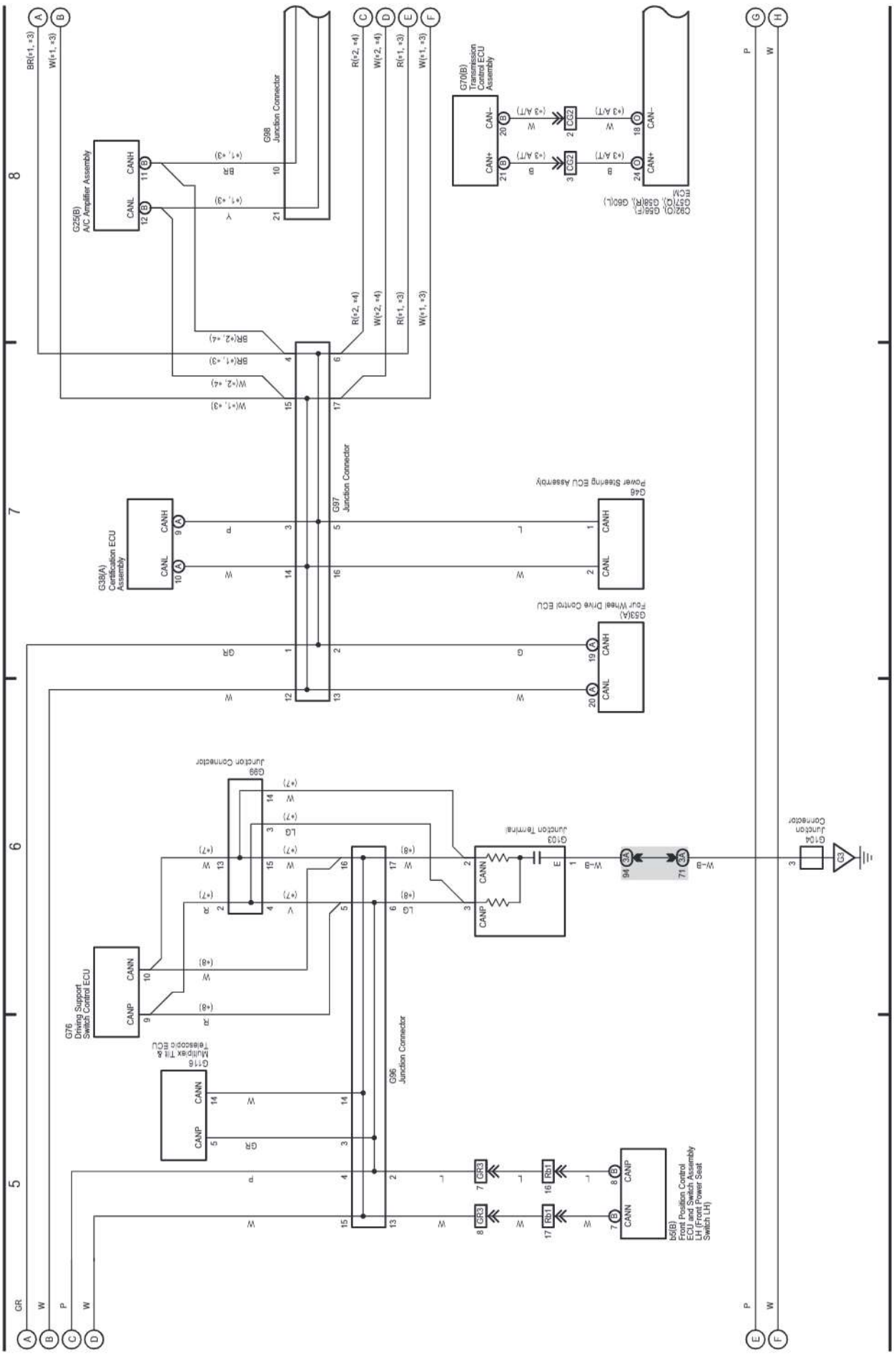

cardiagn.com

2 LAND CRUISER / LAND CRUISER PRADO (Cont'd)

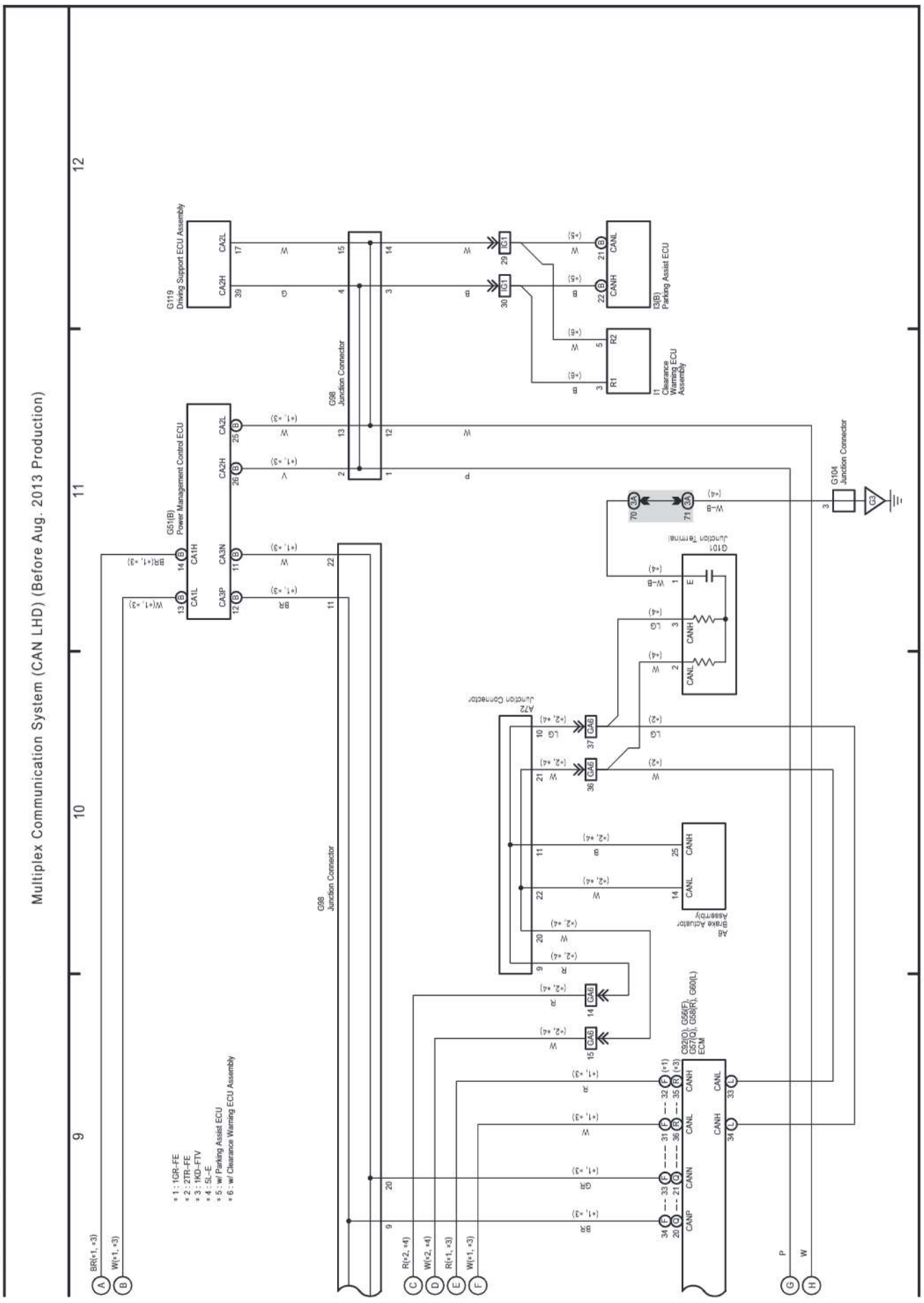

cardiagn.com

(Cont. next page)

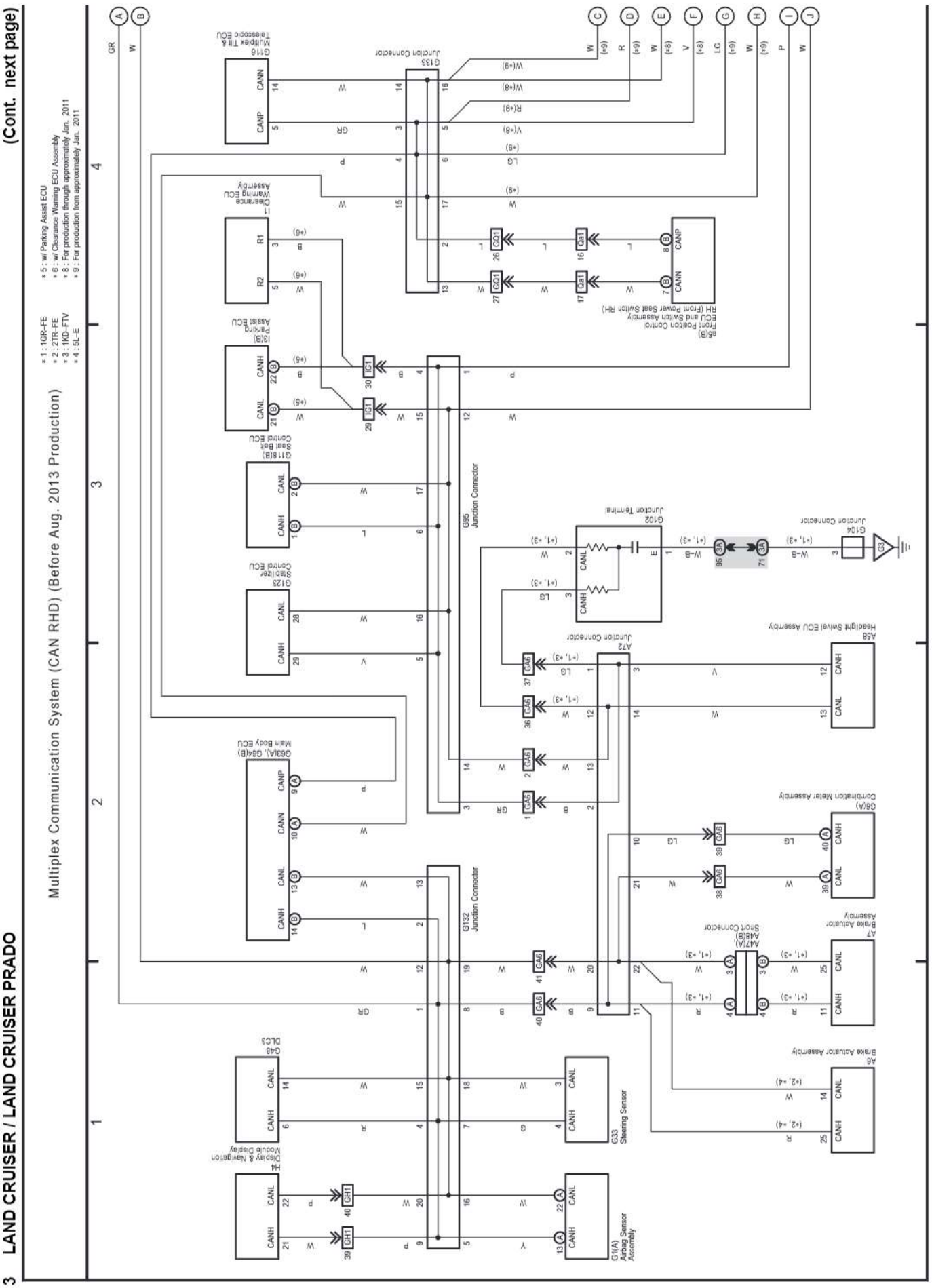

cardiagn.com

3 LAND CRUISER / LAND CRUISER PRADO (Cont'd)

(Cont. next page)

Multiplex Communication System (CAN RHD) (Before Aug. 2013 Production)

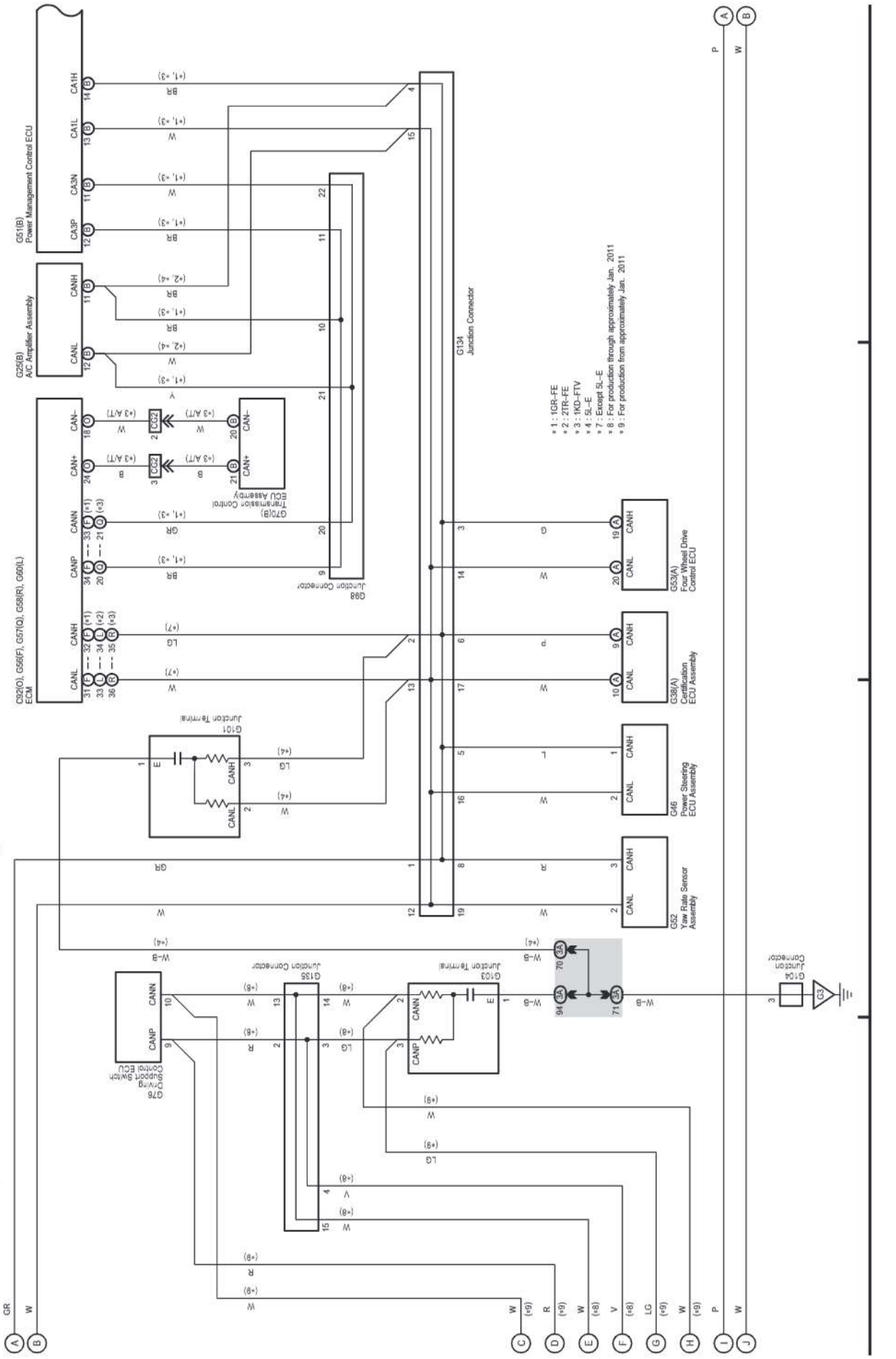

cardiagn.com

3 LAND CRUISER / LAND CRUISER PRADO (Cont'd)

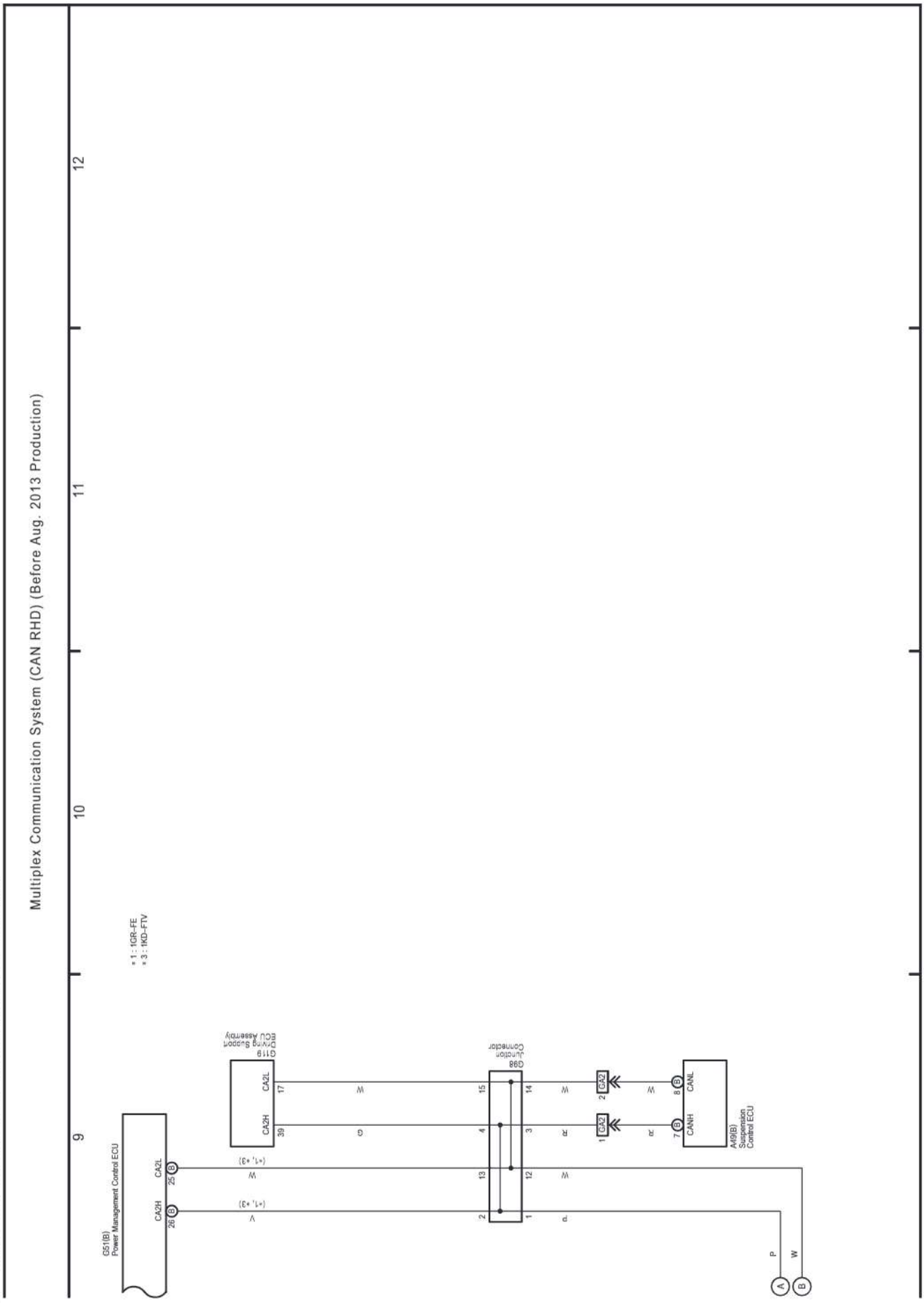

cardiagn.com

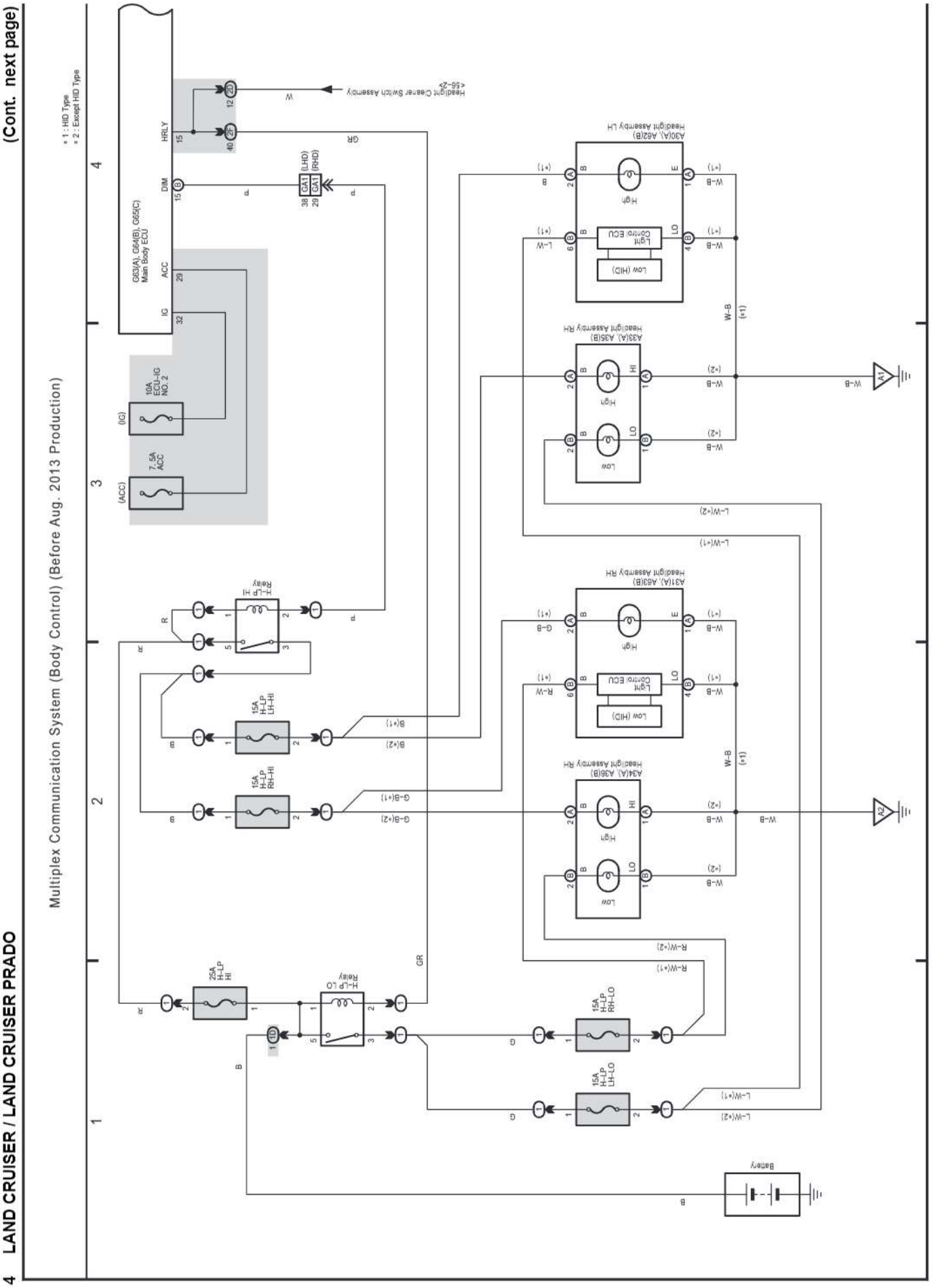

cardiagn.com

4 LAND CRUISER / LAND CRUISER PRADO (Cont'd)

(Cont. next page)

Multiplex Communication System (Body Control) (Before Aug. 2013 Production)

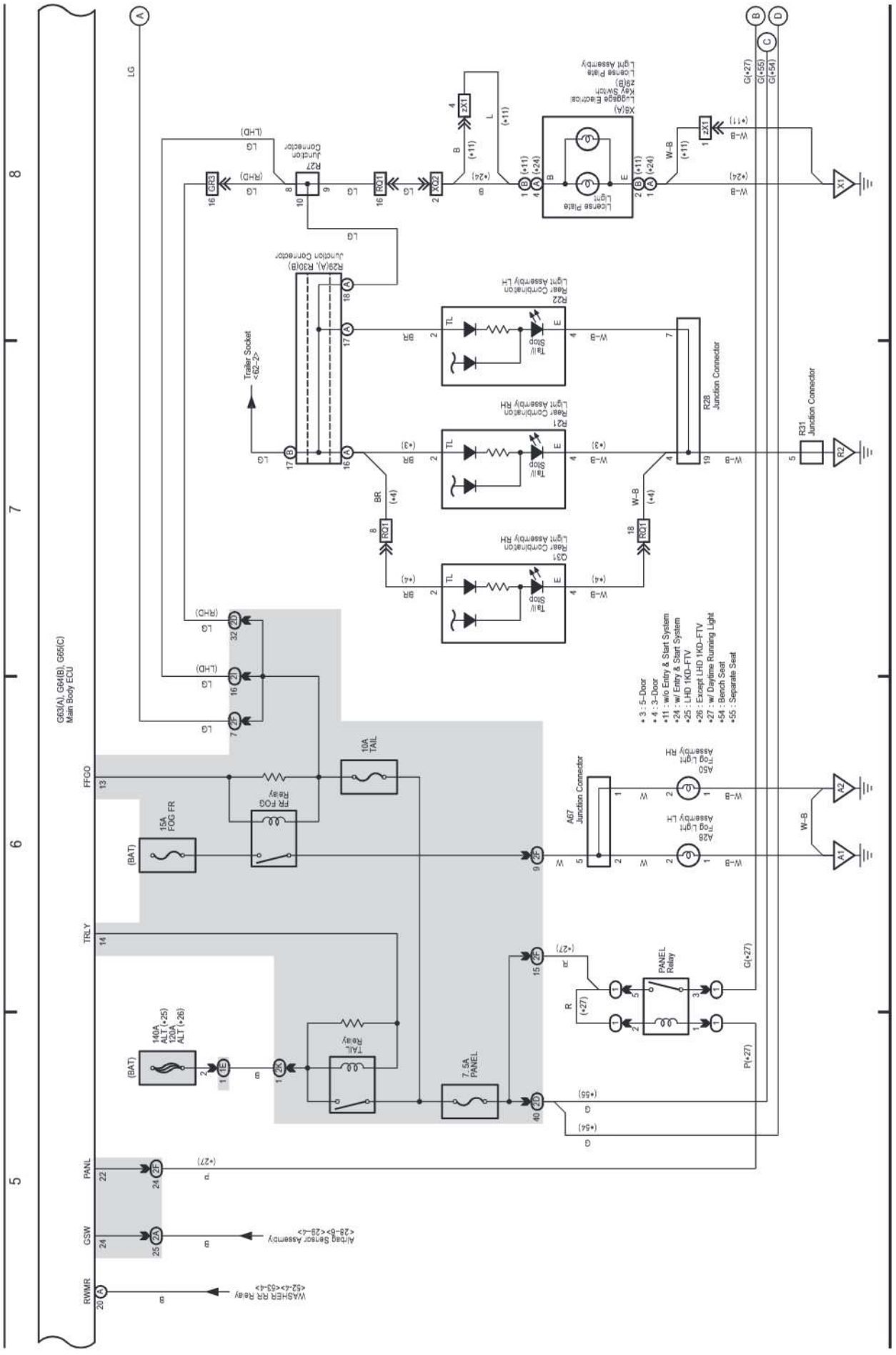

cardiagn.com

(Cont. next page)

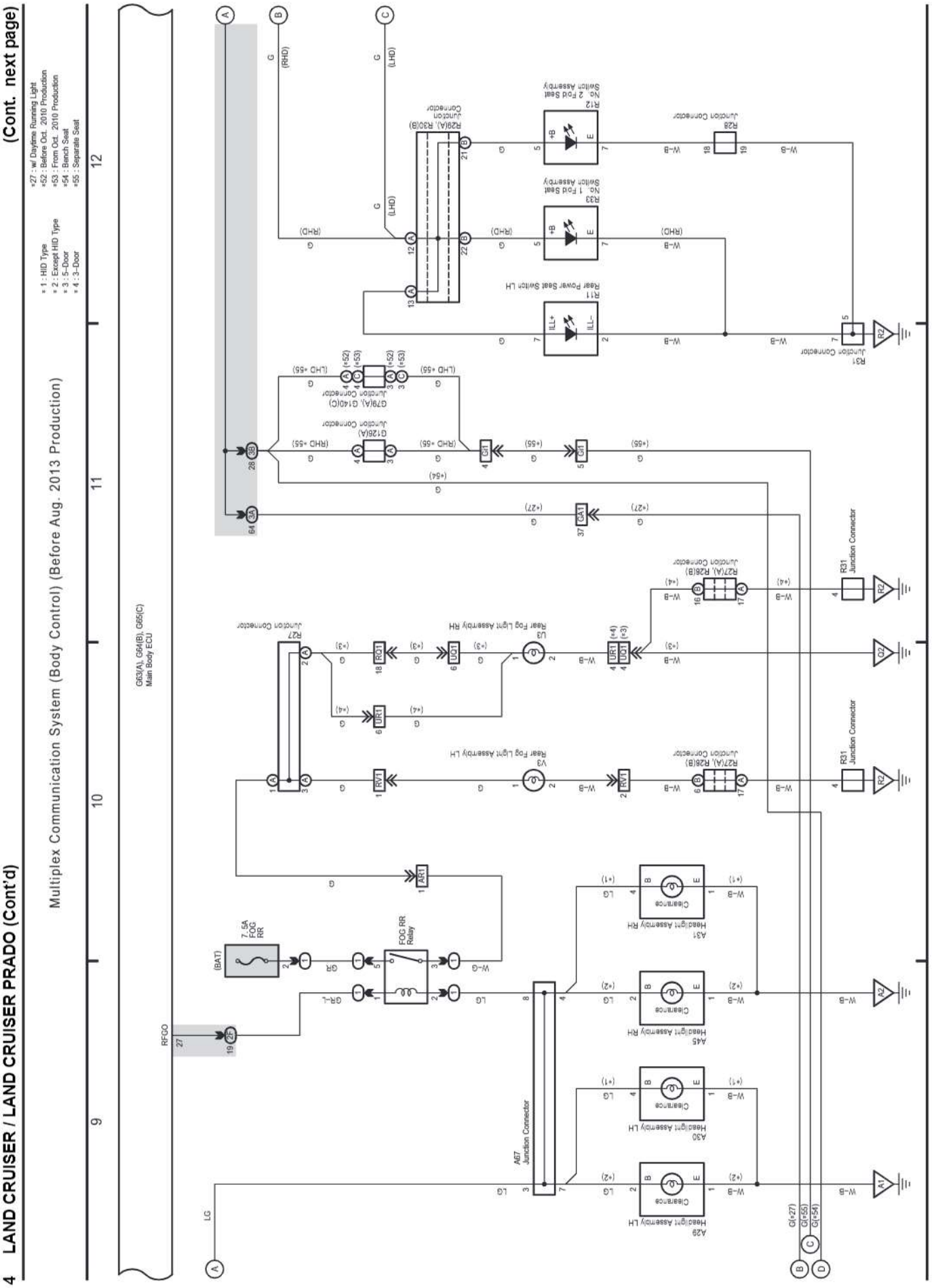

(Cont. next page)

Multiplex Communication System (Body Control) (Before Aug. 2013 Production)

*29 : w/ Clearance Warning Indicator Assembly
*30 : w/ Driving Support Switch Control ECU
*52 : Before Oct. 2010 Production
*53 : From Oct. 2010 Production

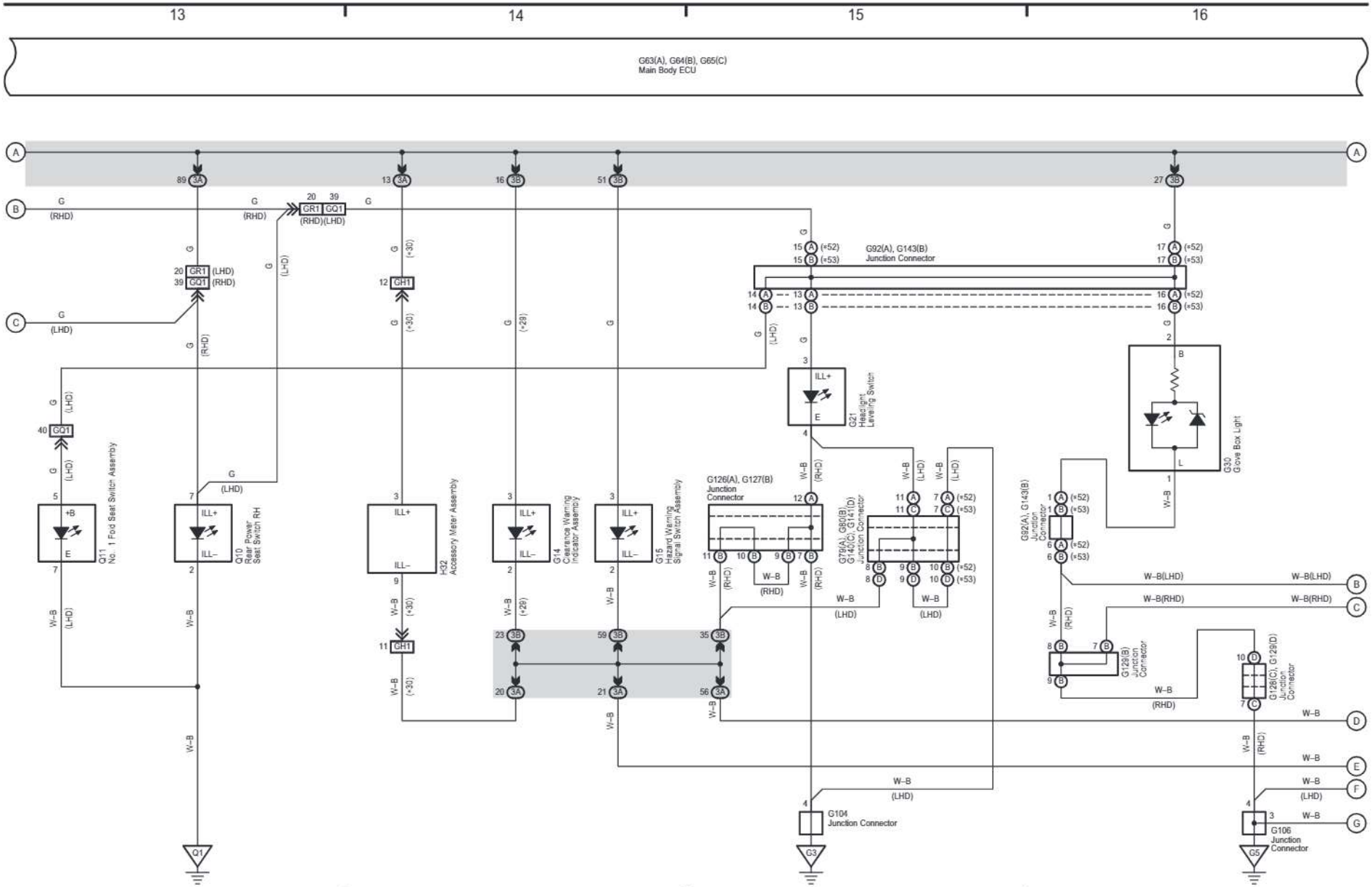

cardiagn.com

cardiagn.com

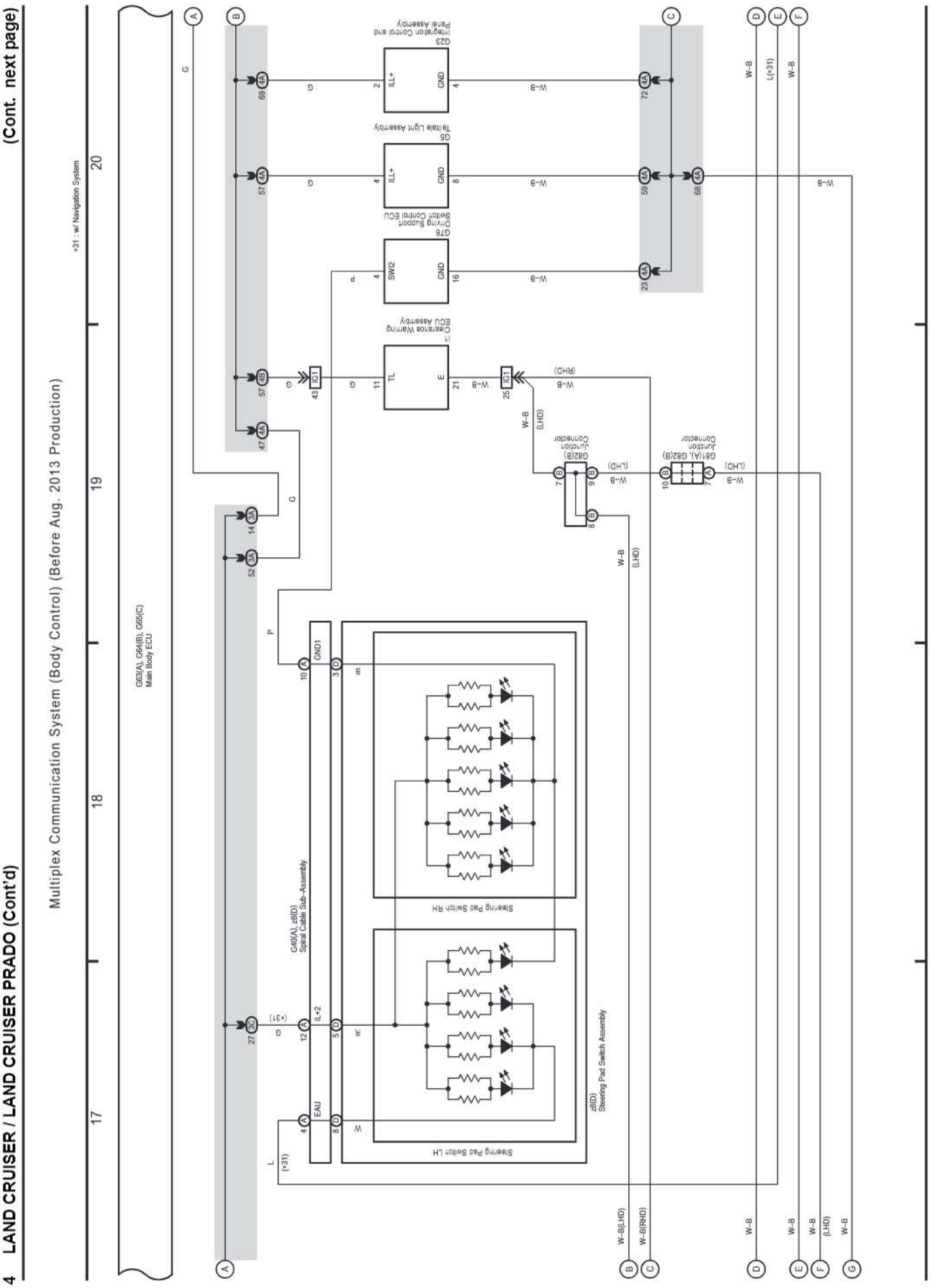

(Cont. next page)

Multiplex Communication System (Body Control) (Before Aug. 2013 Production)

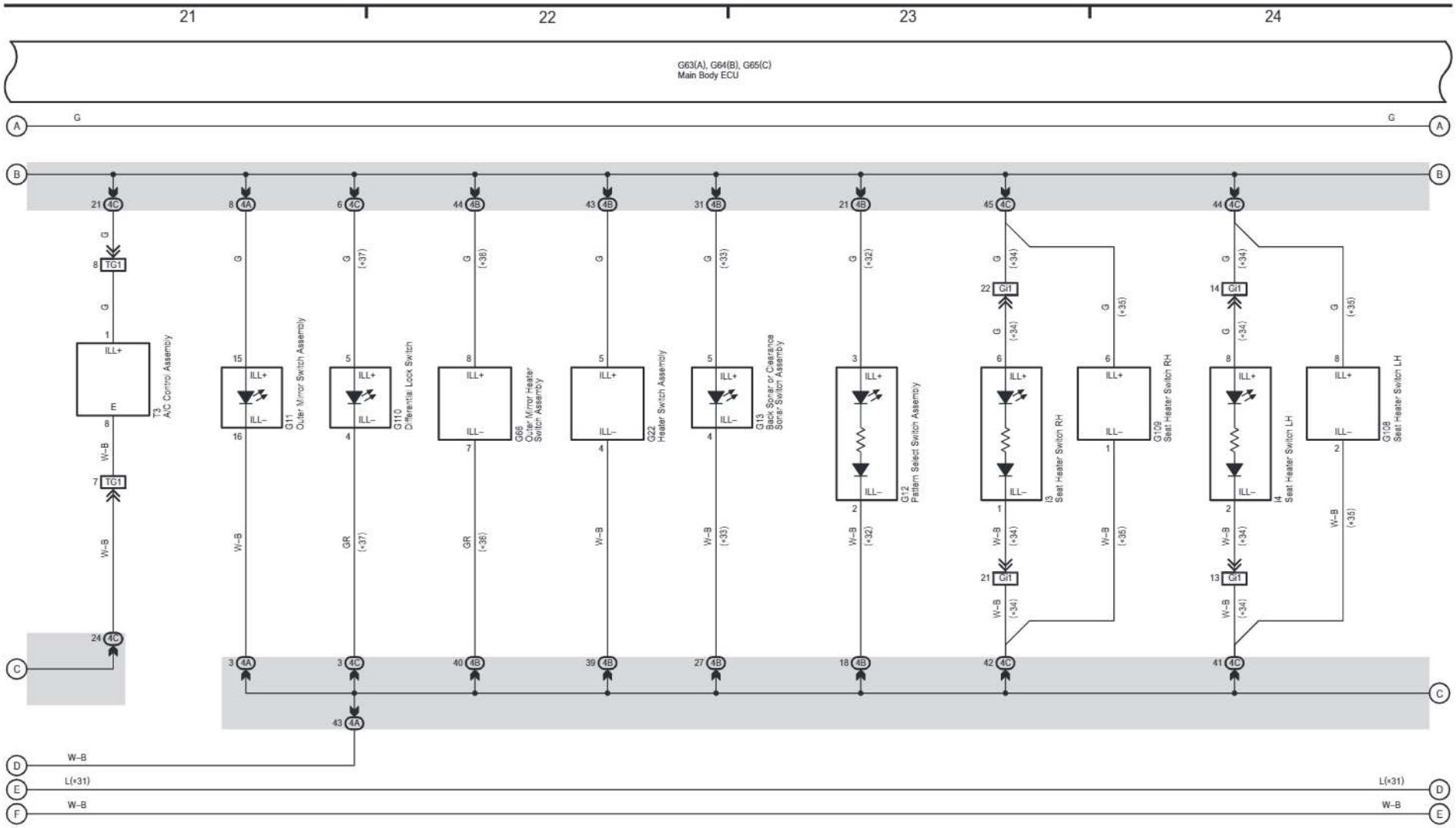

cardiagn.com

cardiagn.com

(Cont. next page)

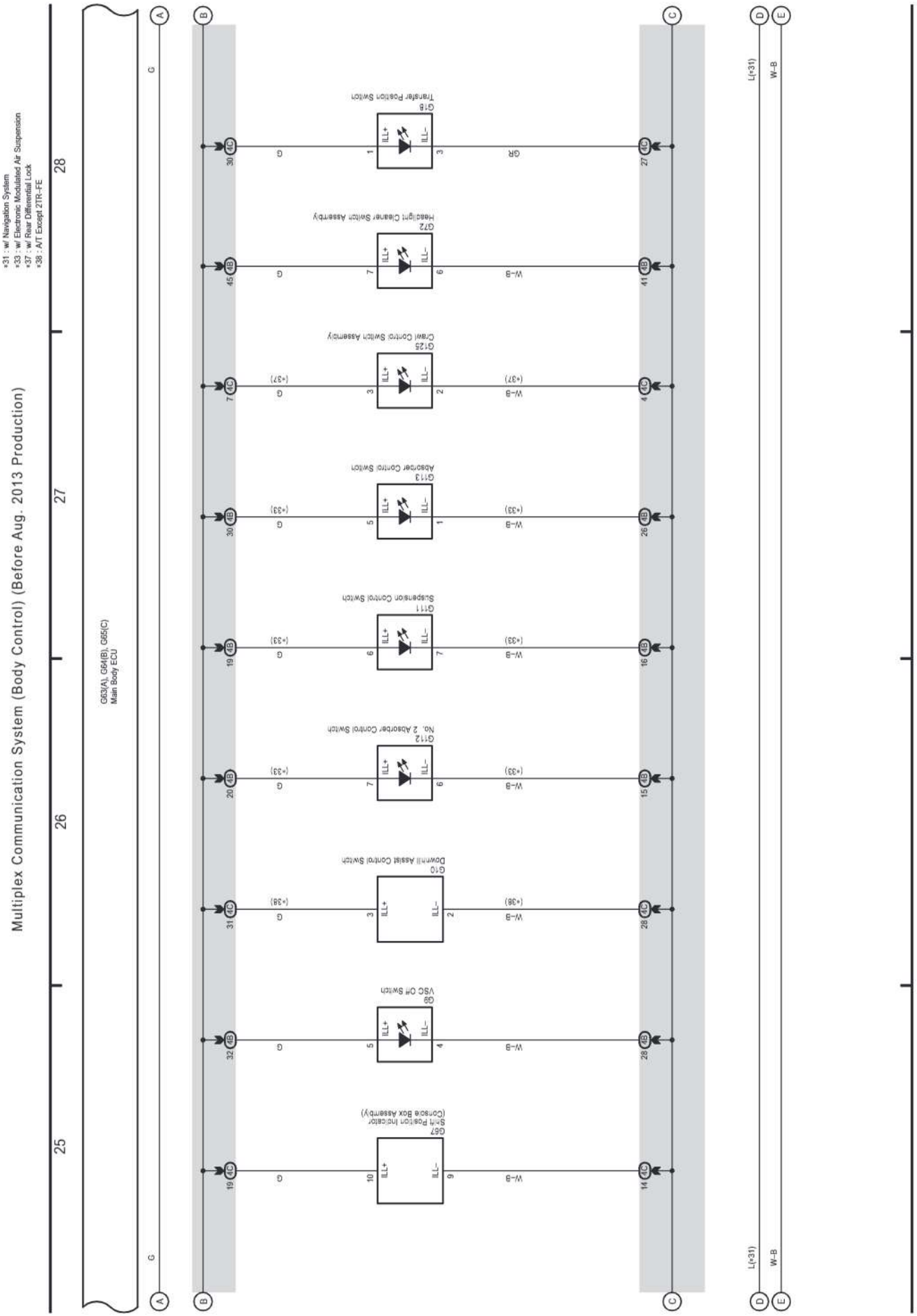

cardiagn.com

(Cont. next page)

Multiplex Communication System (Body Control) (Before Aug. 2013 Production)

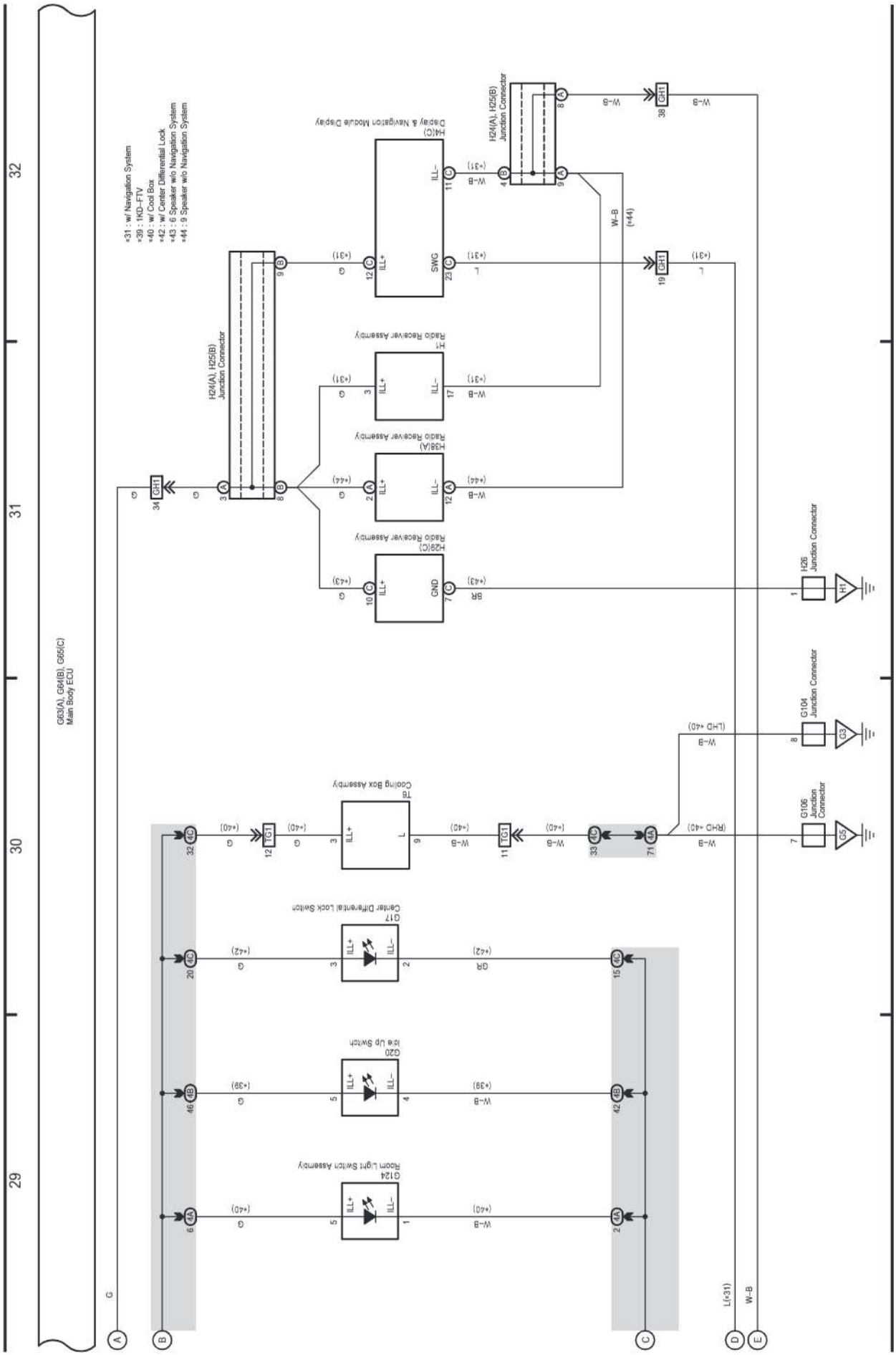

cardiagn.com

(Cont. next page)

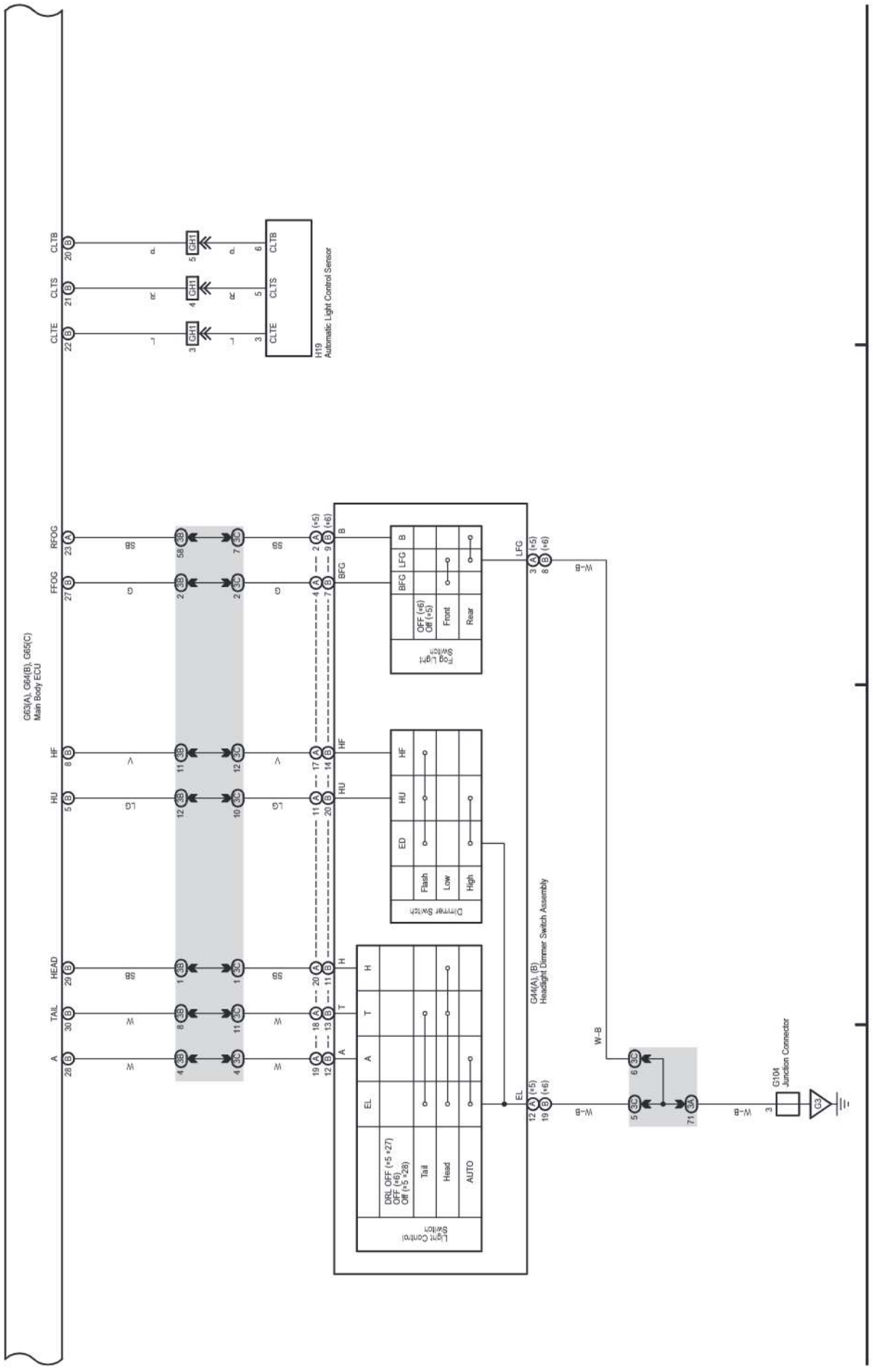

(Cont. next page)

Multiplex Communication System (Body Control) (Before Aug. 2013 Production)

*9 : w/ Automatic Glare-Resistant EC Mirror
*10 : w/ Theft Warning Siren Assembly
*11 : w/o Entry & Start System
*52 : Before Oct. 2010 Production
*53 : From Oct. 2010 Production

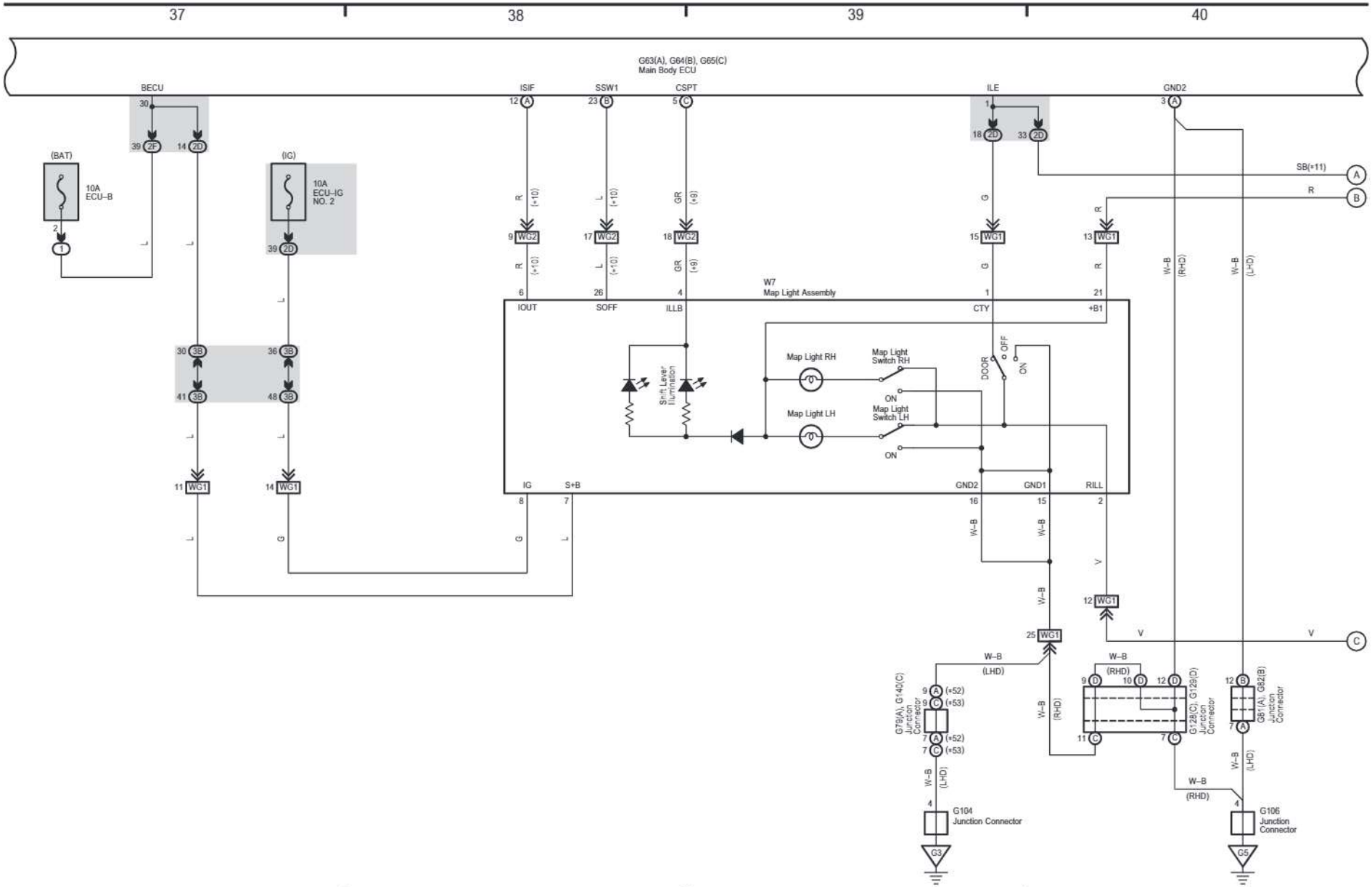

cardiagn.com

cardiagn.com

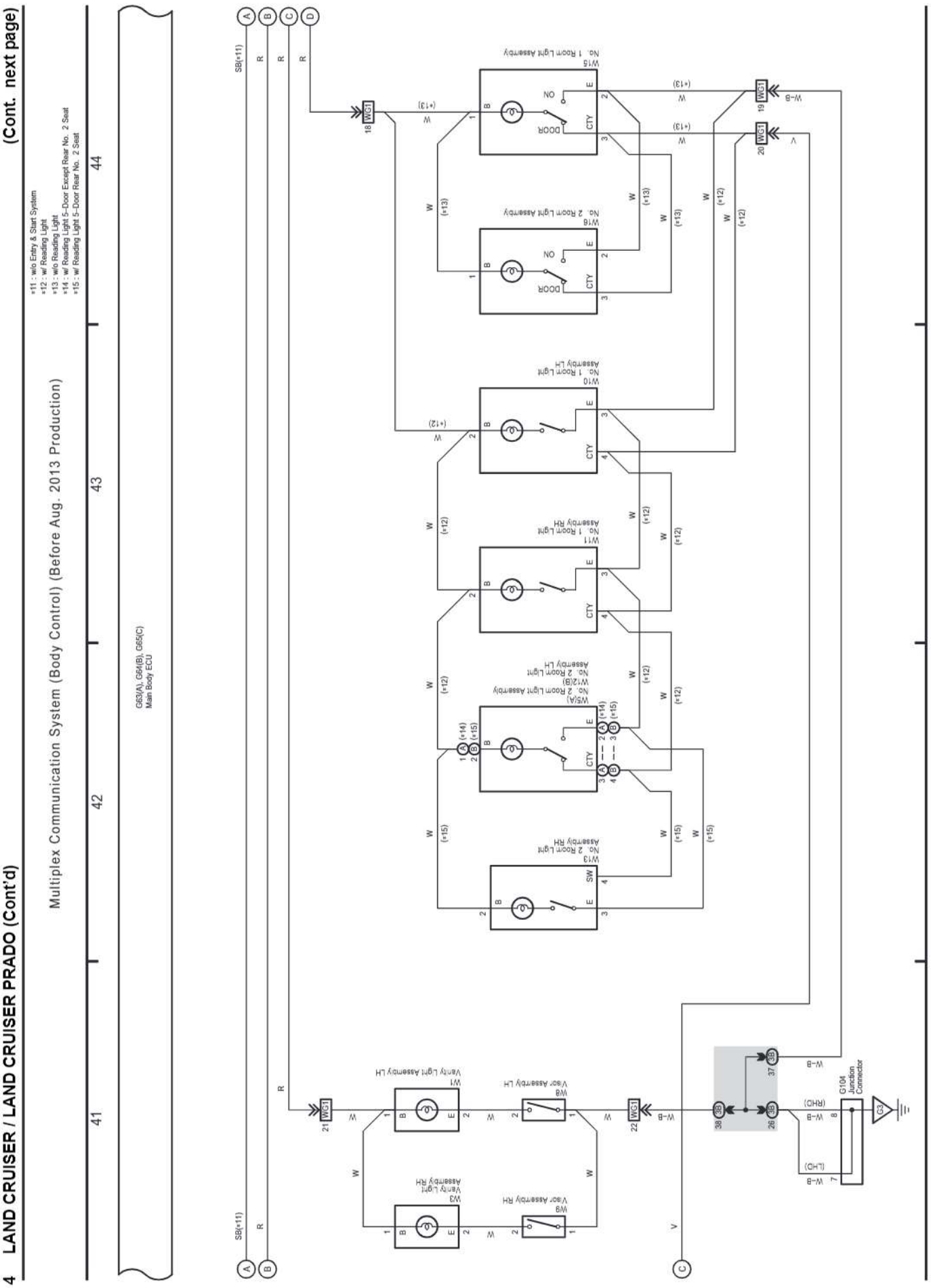

(Cont. next page)

Multiplex Communication System (Body Control) (Before Aug. 2013 Production)

*11 : w/o Entry & Start System
*16 : w/ Foot Light
*17 : w/ Door Pocket Illumination
*18 : w/o Door Pocket Illumination
*52 : Before Oct. 2010 Production
*53 : From Oct. 2010 Production

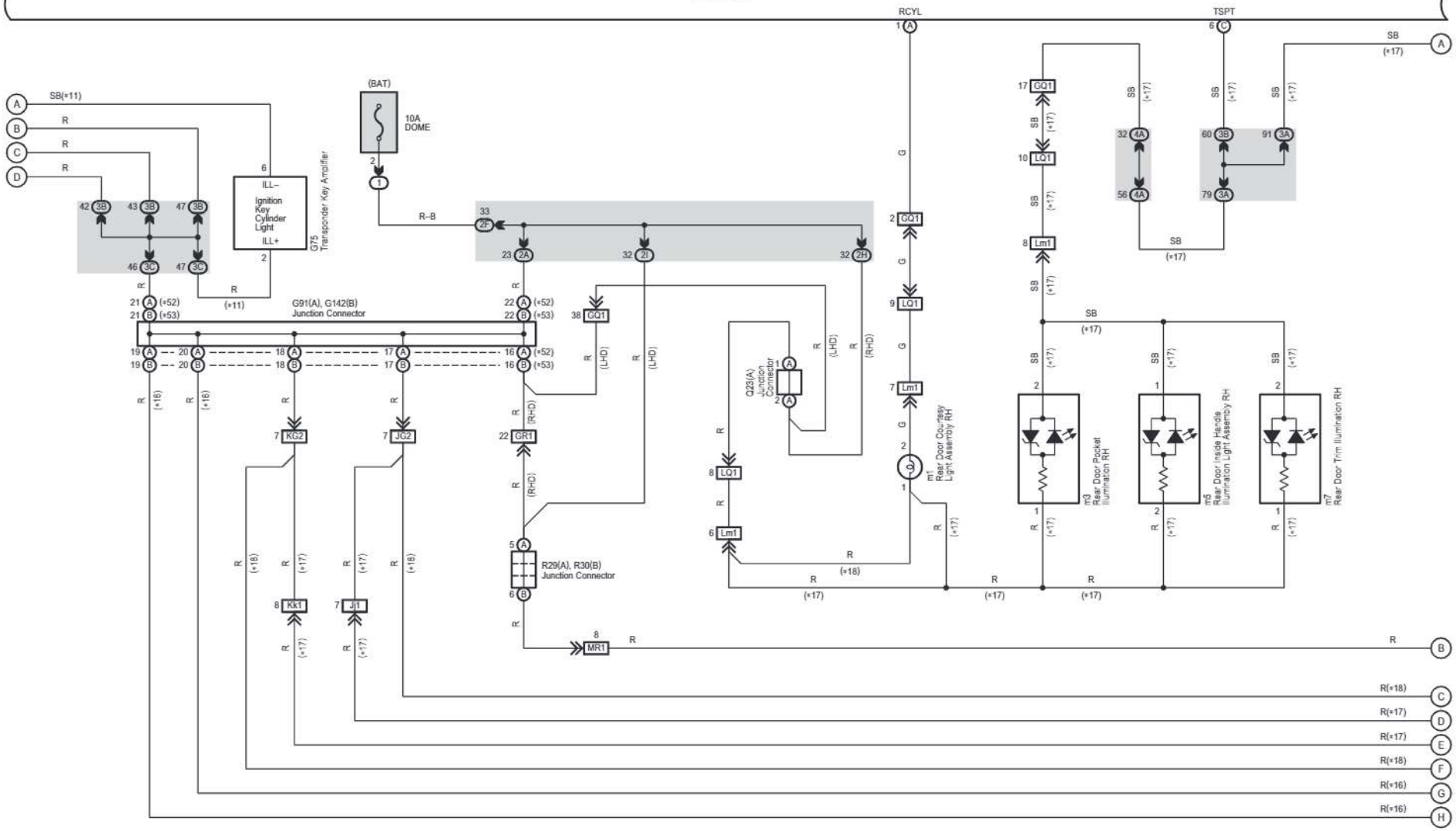

cardiagn.com

cardiagn.com

(Cont. next page)

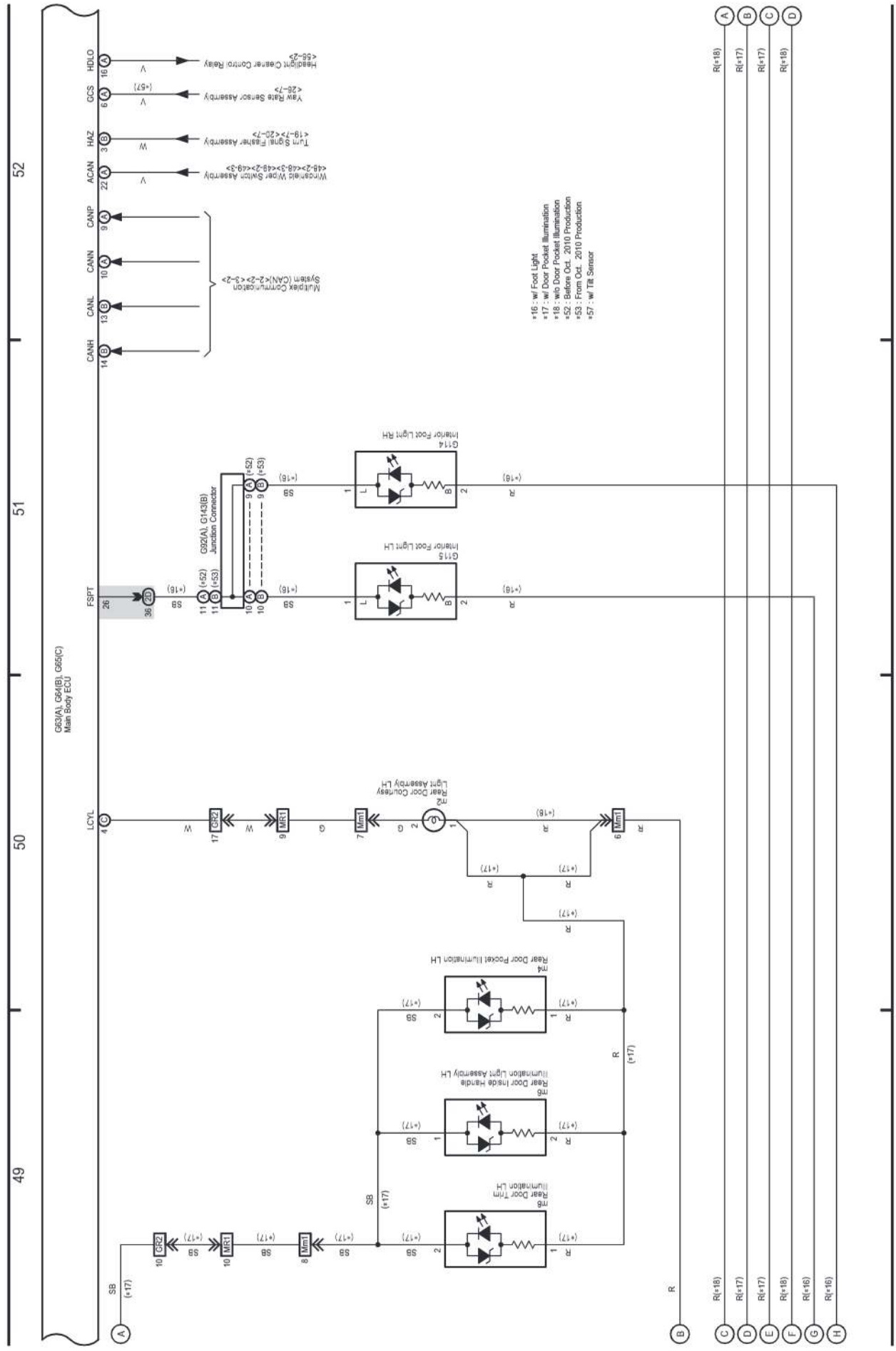

cardiagn.com

(Cont. next page)

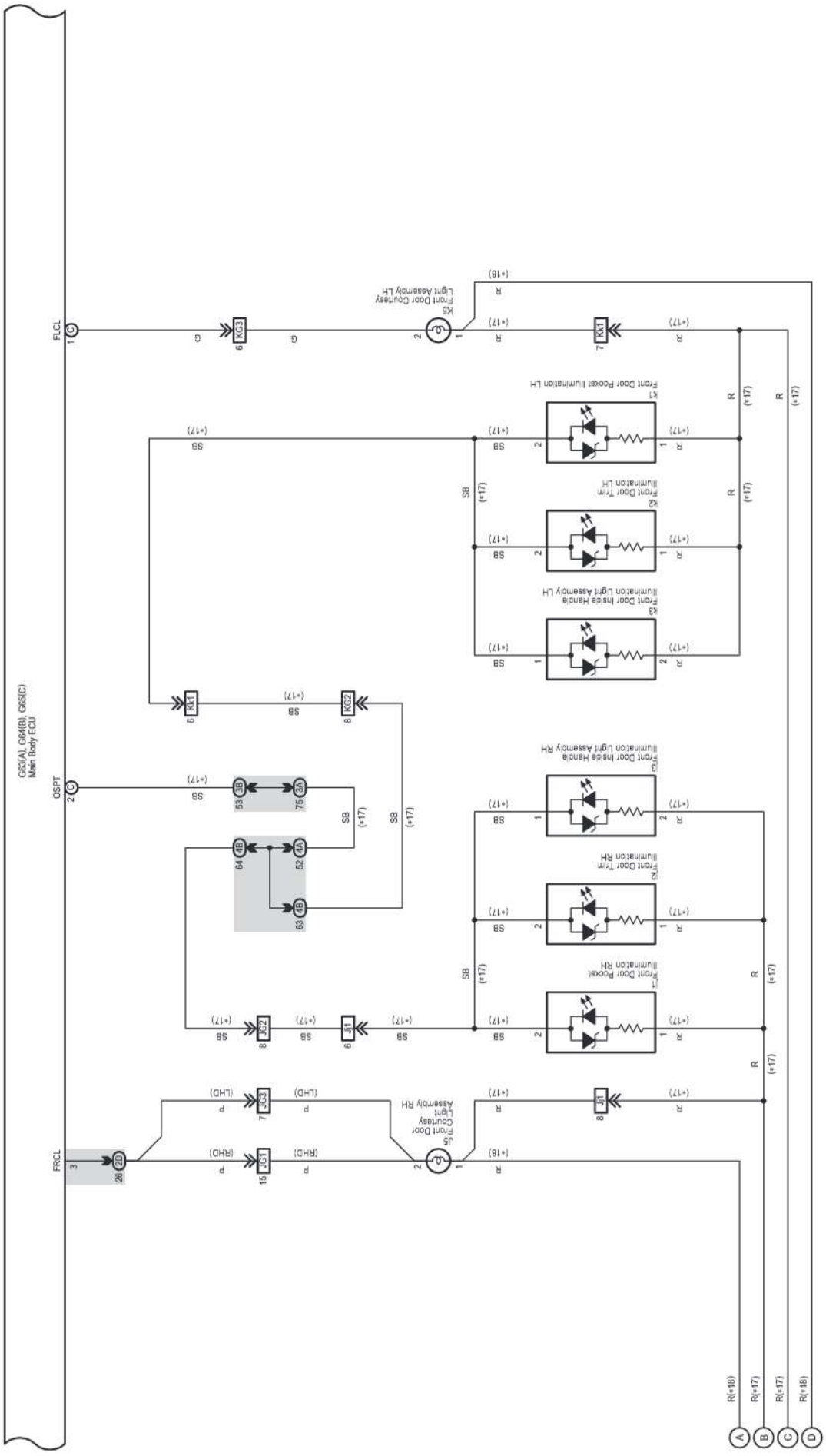

cardiagn.com

(Cont. next page)

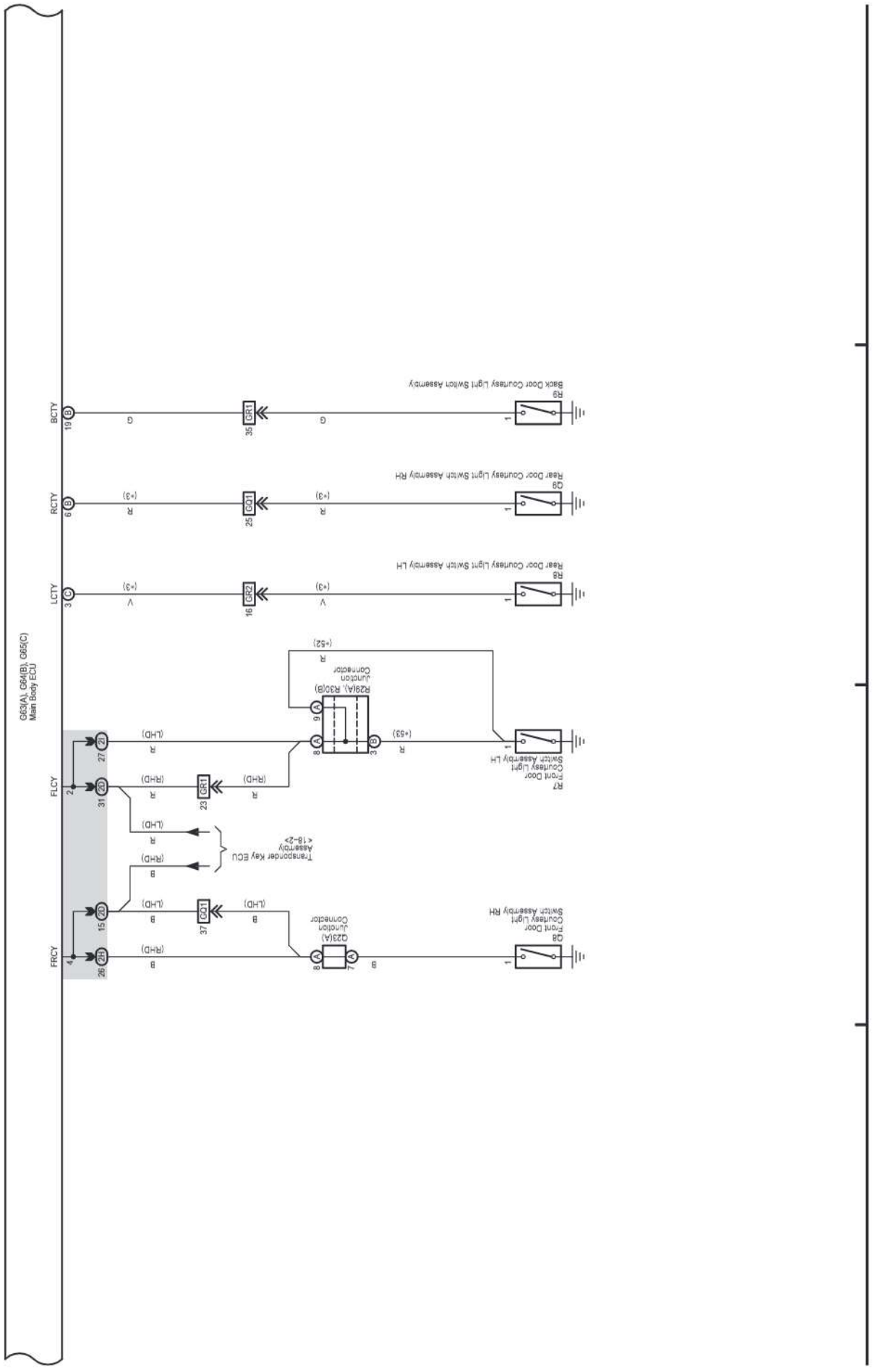

(Cont. next page)

Multiplex Communication System (Body Control) (Before Aug. 2013 Production)

*3 : 5-Door
*19 : w/ Double Locking
*20 : w/o Double Locking

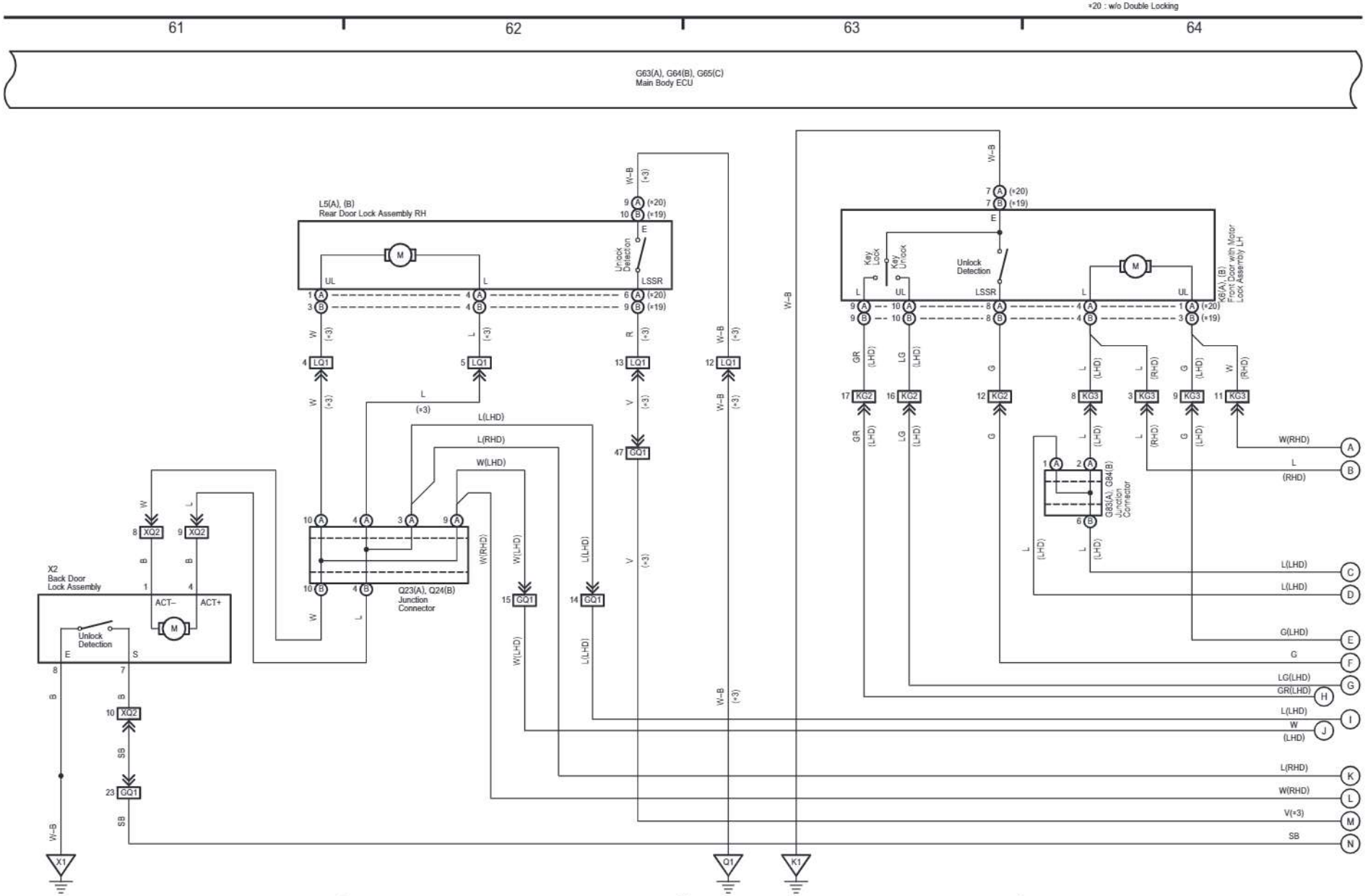

cardiagn.com

cardiagn.com

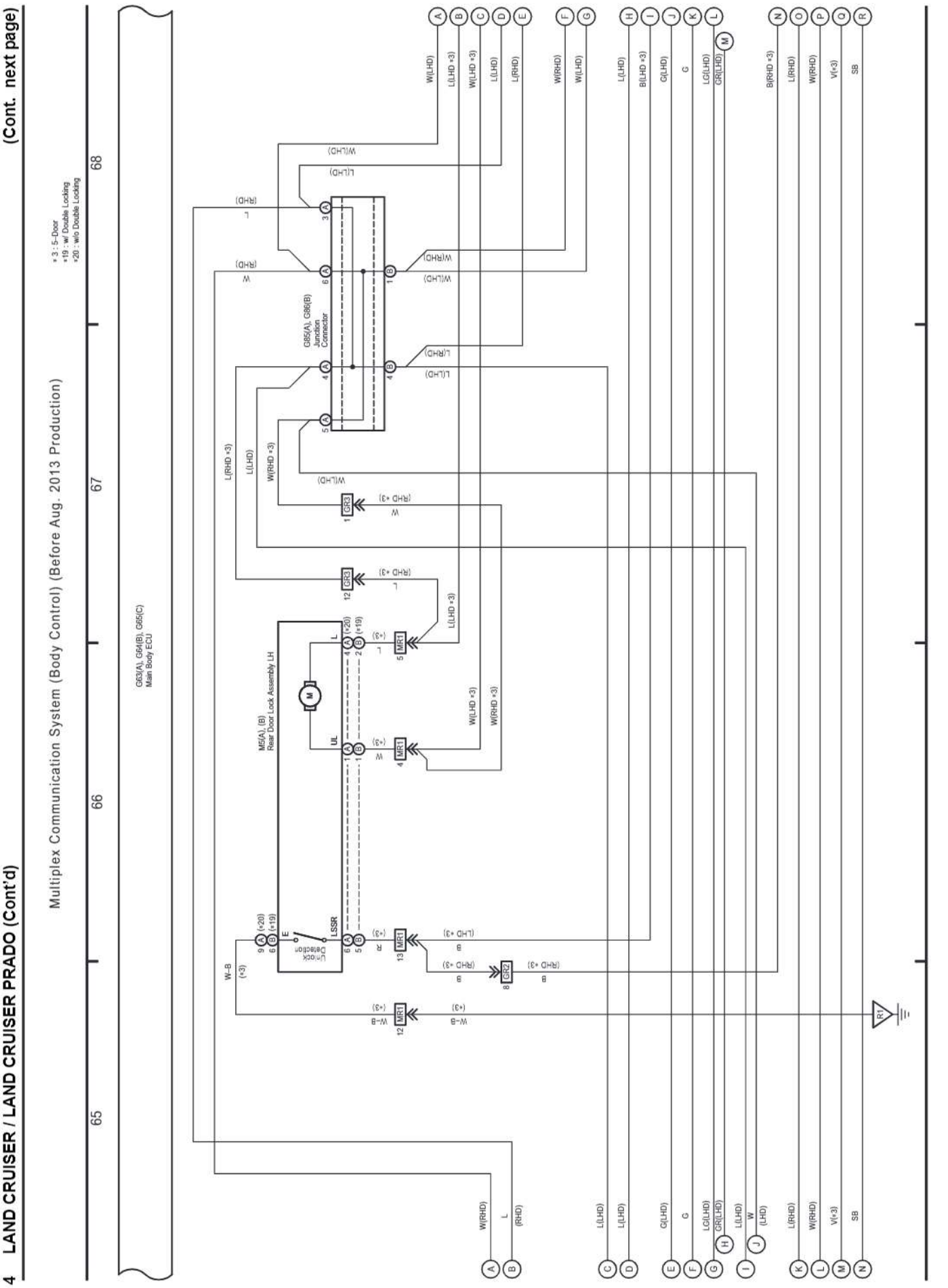

(Cont. next page)

Multiplex Communication System (Body Control) (Before Aug. 2013 Production)

*3 : 5-Door
*19 : w/ Double Locking
*20 : w/o Double Locking

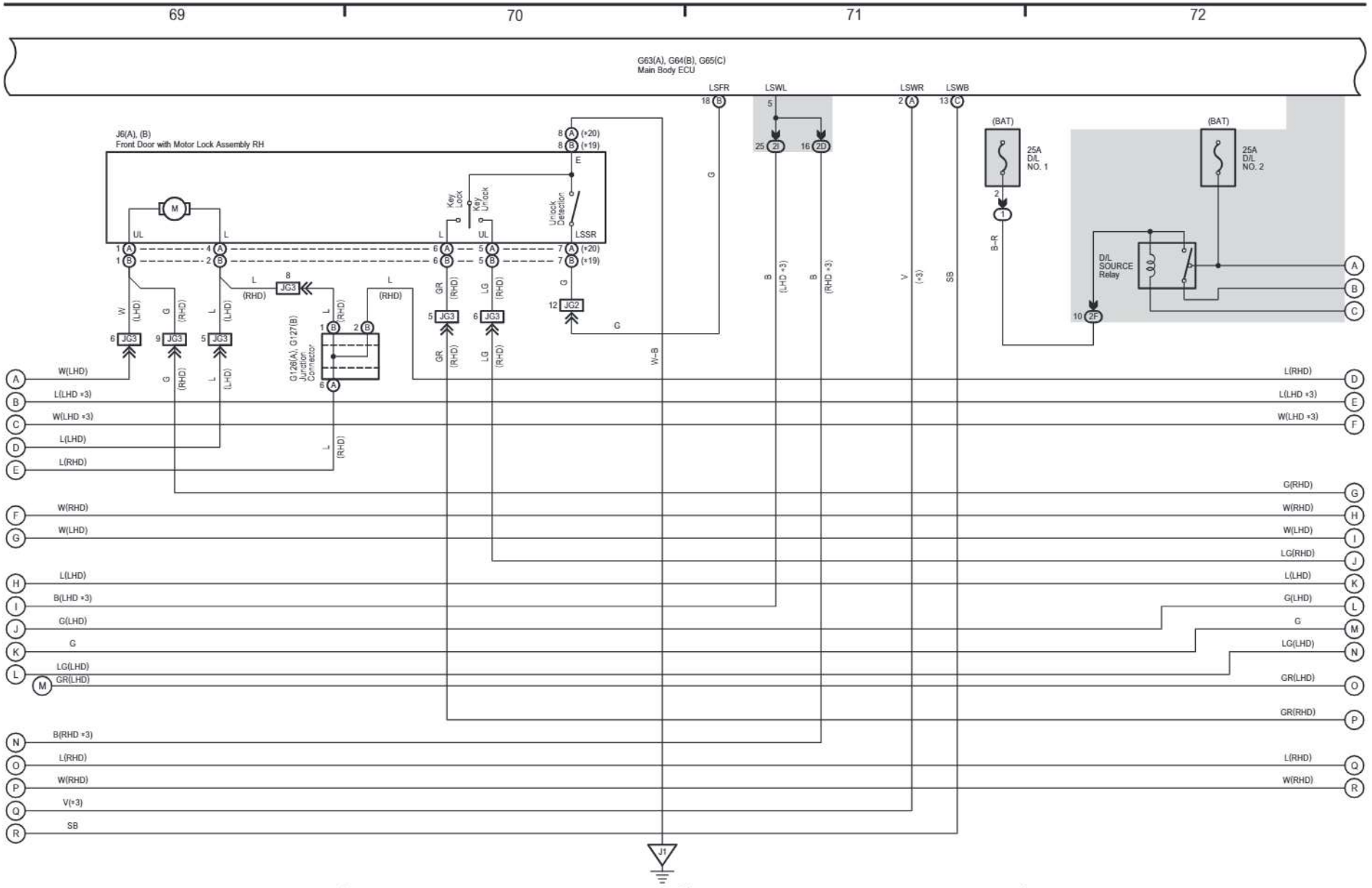

cardiagn.com

cardiagn.com

(Cont. next page)

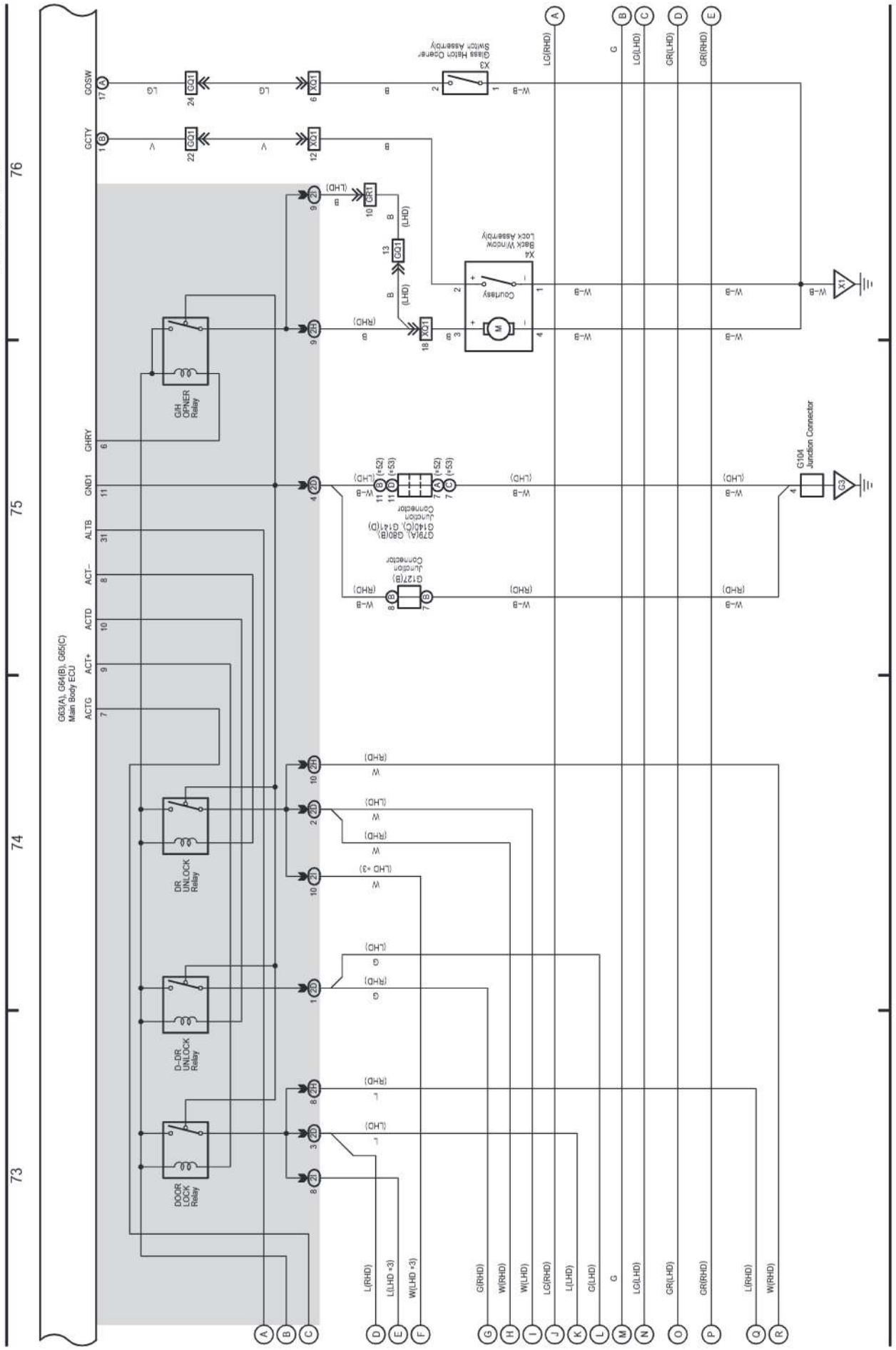

cardiagn.com

4 LAND CRUISER / LAND CRUISER PRADO (Cont'd)

(Cont. next page)

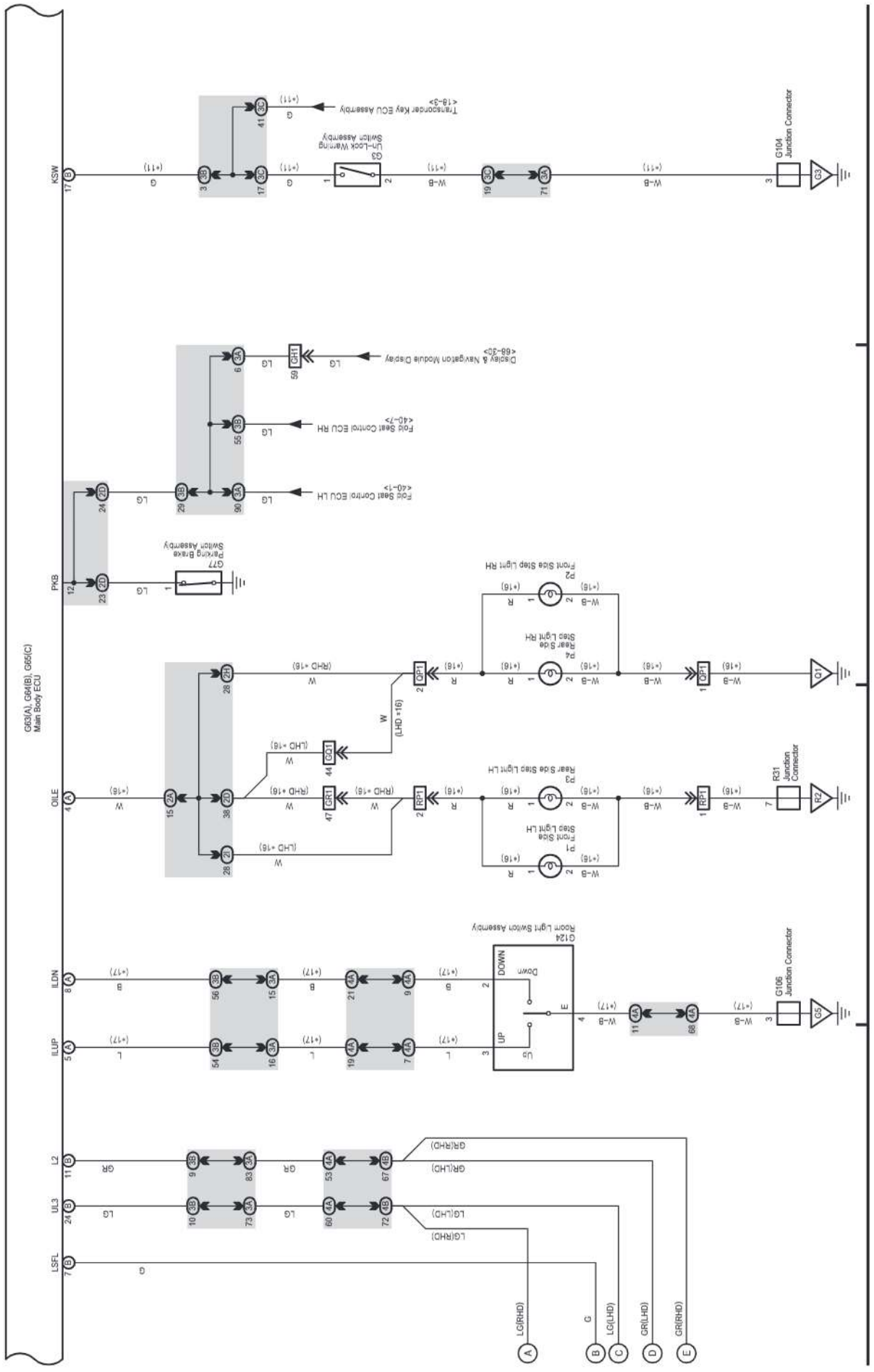

cardiagn.com

(Cont. next page)

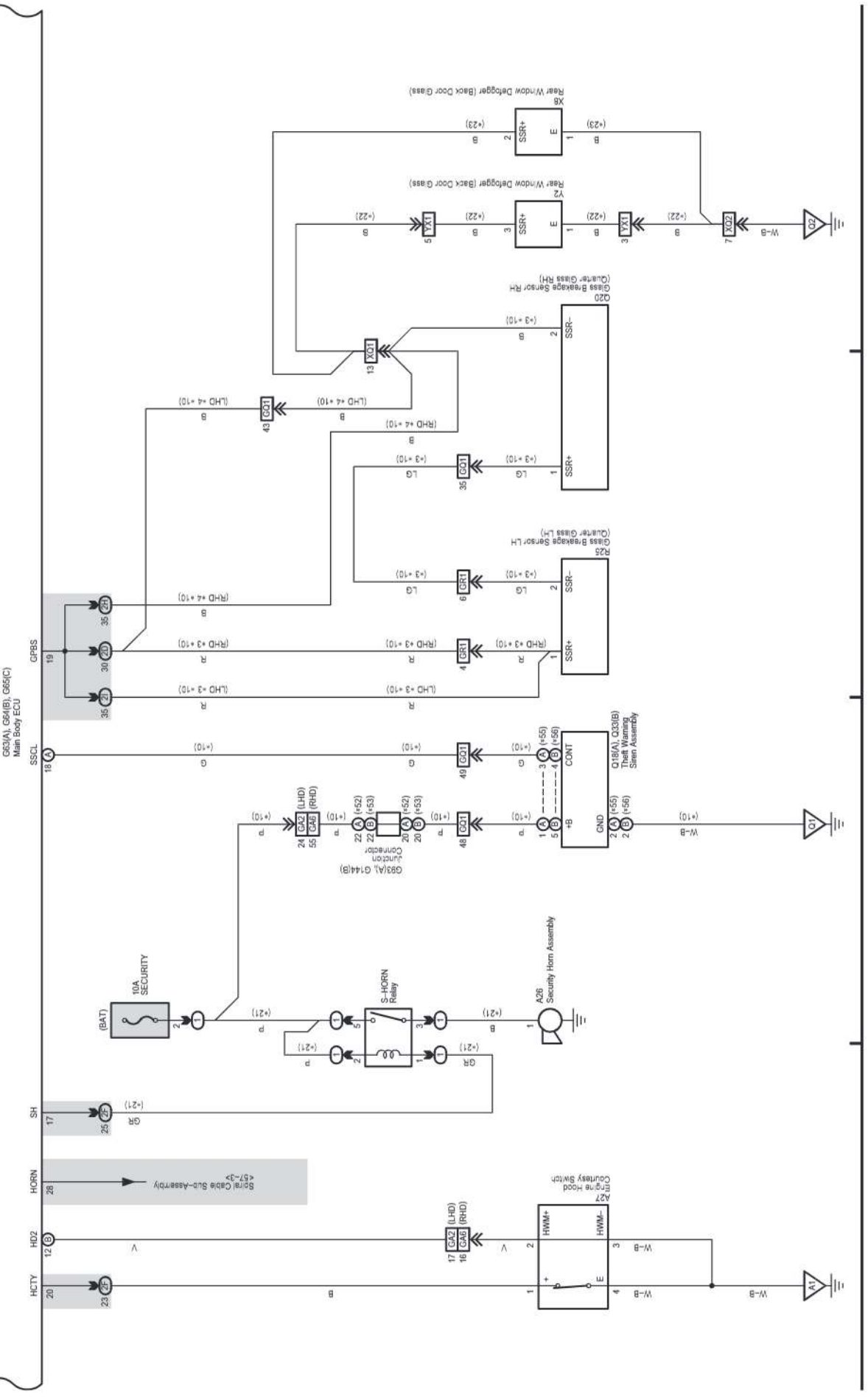

cardiagn.com

4 LAND CRUISER / LAND CRUISER PRADO (Cont'd)

(Cont. next page)

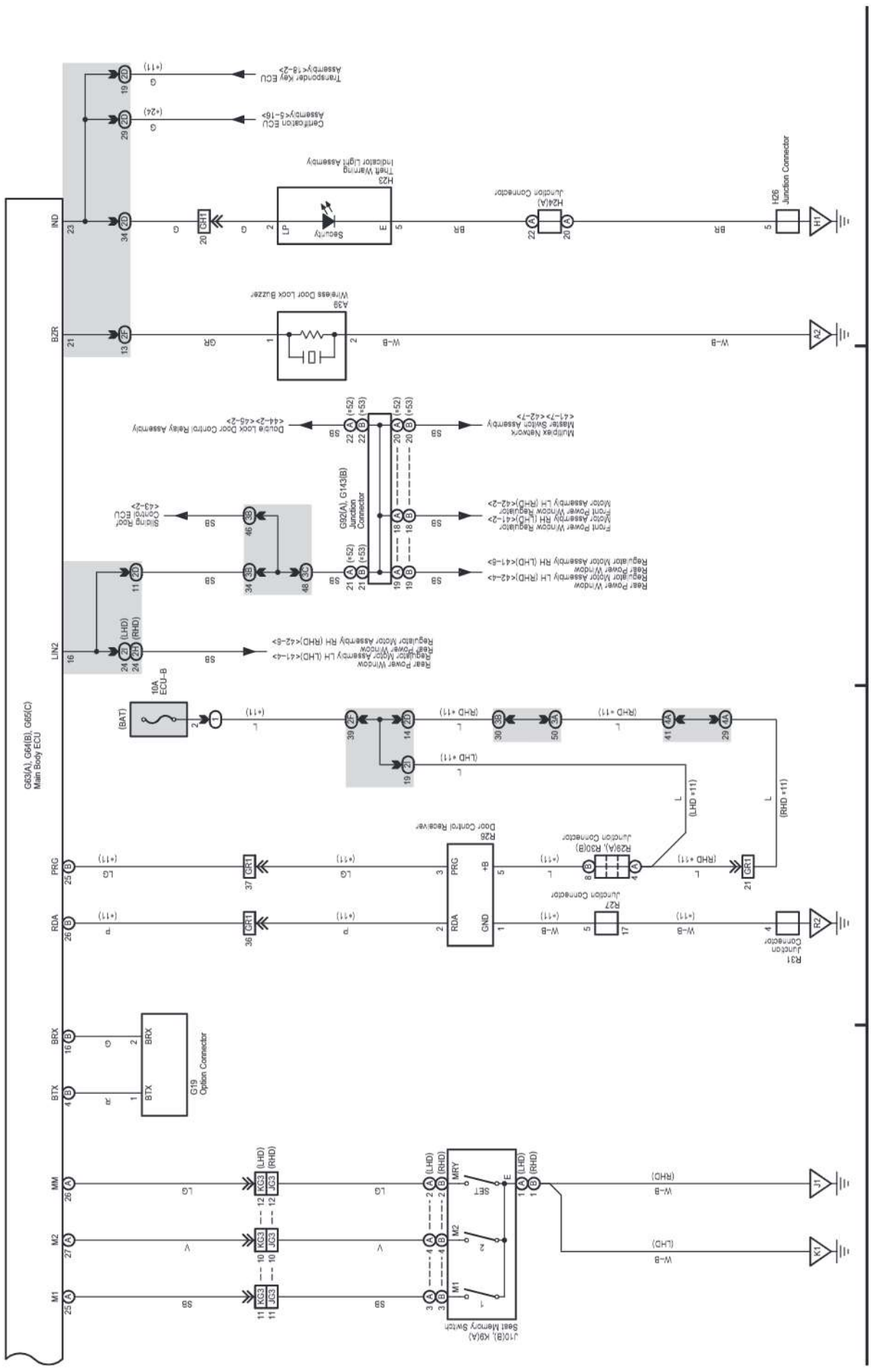

cardiagn.com

M OVERALL ELECTRICAL WIRING DIAGRAM

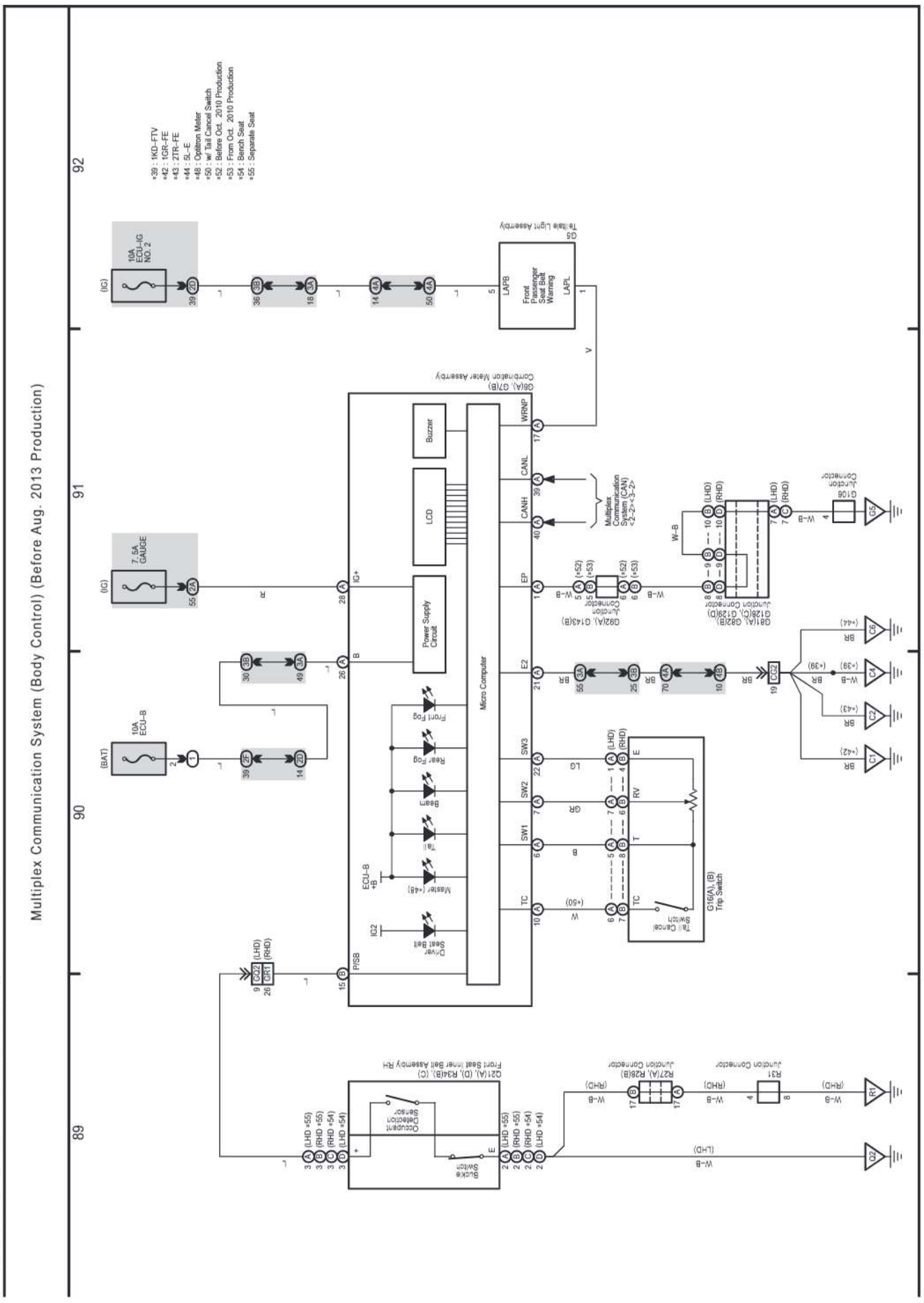
4 LAND CRUISER / LAND CRUISER PRADO (Cont'd)
Multiplex Communication System (Body Control) (Before Aug. 2013 Production)
89
90
91
92
*39 : 1KD-FTV
*42 : 1GR-FE
*43 : 2TR-FE
*44 : 5L-E
*48 : Optitron Meter
*50 : w/ Tail Cancel Switch
*52 : Before Oct. 2010 Production
*53 : From Oct. 2010 Production
*54 : Bench Seat
*55 : Separate Seat
10A ECU-IG NO. 2
7.5A GAUGE
10A ECU-B
Tailtale Light Assembly
G5
Front Passenger Seat Belt Warning
Combination Meter Assembly
G6(A), G7(B)
Buzzer
LCD
Power Supply Circuit
Micro Computer
Front Fog
Rear Fog
Beam
Tail
Master (*48)
ECU-B +B
IG2
Driver Seat Belt
WRNP
CANL
CANH
EP
E2
SW3
SW2
SW1
TC
Multiplex Communication System (CAN) <2-2>, <3-2>
G82(A), G143(B)
G81(A), G82(B), G128(C), G129(D)
G106
Junction Connector
Tail Cancel Switch
G16(A), (B) Trip Switch
Front Seat Inner Belt Assembly RH
G21(A), (D), R24(B), (C)
Occupant Detection Sensor
Buckle Switch
R27(A), R28(B)
R31
R1
C1
C2
C4
C6
C7
C8
C9
C10
C11
C12
C13
C14
C15
C16
C17
C18
C19
C20
C21
C22
C23
C24
C25
C26
C27
C28
C29
C30
C31
C32
C33
C34
C35
C36
C37
C38
C39
C40
C41
C42
C43
C44
C45

cardiagn.com

(Cont. next page)

5 LAND CRUISER / LAND CRUISER PRADO

Starting (w/ Entry & Start System) (Before Jun. 2015 Production), Steering Lock (w/ Entry & Start System) (Before Jun. 2015 Production), Engine Immobiliser System (w/ Entry & Start System) (Before Jun. 2015 Production), Entry & Start System (Before Jun. 2015 Production) and Wireless Door Lock Control (w/ Entry & Start System) (Before Jun. 2015 Production)

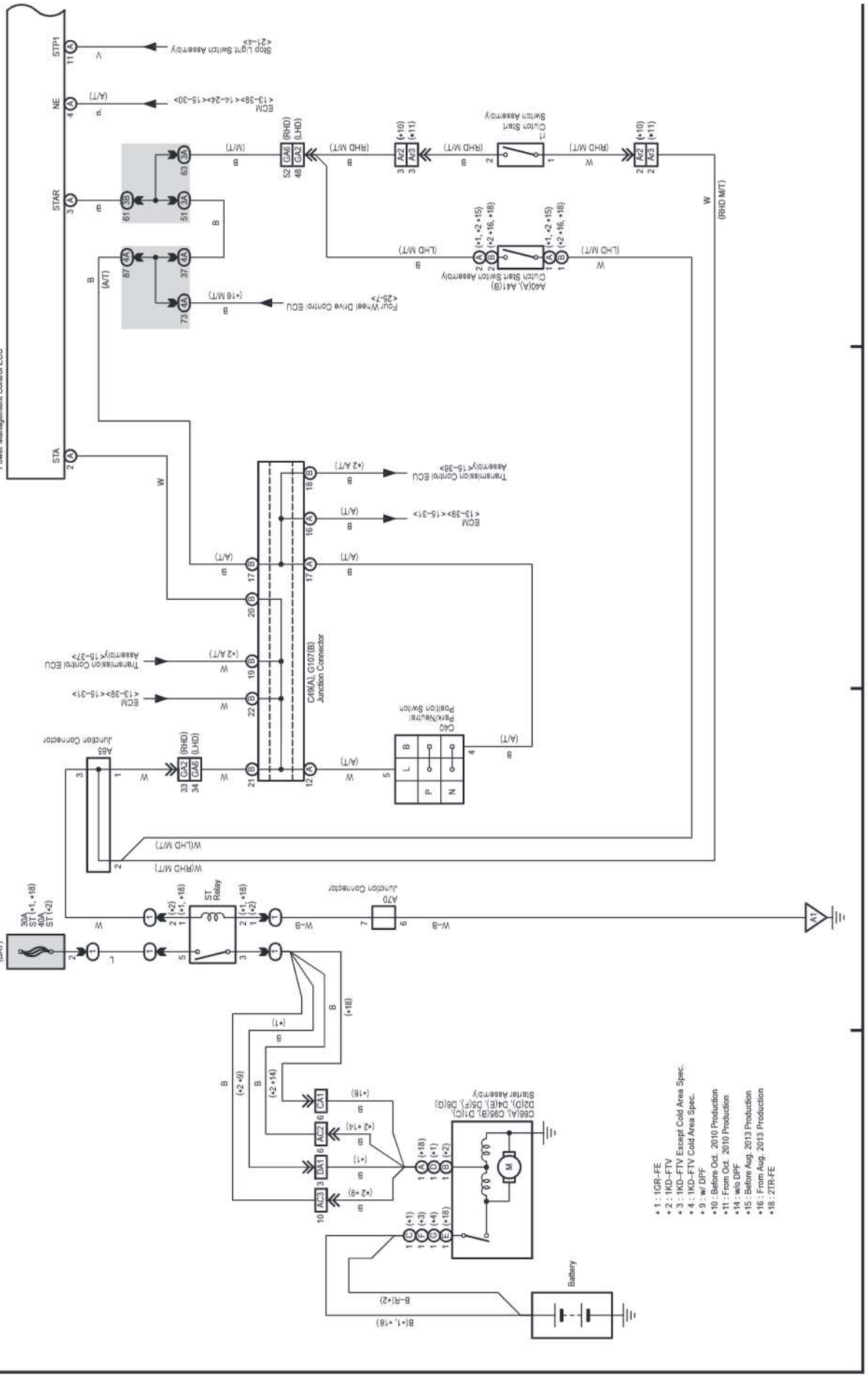

cardiagn.com

5 LAND CRUISER / LAND CRUISER PRADO (Cont'd)

(Cont. next page)

Starting (w/ Entry & Start System) (Before Jun. 2015 Production), Steering Lock (w/ Entry & Start System) (Before Jun. 2015 Production), Engine Immobiliser System (w/ Entry & Start System) (Before Jun. 2015 Production), Entry & Start System (Before Jun. 2015 Production) and Wireless Door Lock Control (w/ Entry & Start System) (Before Jun. 2015 Production)

*10 : Before Oct. 2010 Production
*11 : From Oct. 2010 Production
*15 : Before Aug. 2013 Production
*16 : From Aug. 2013 Production

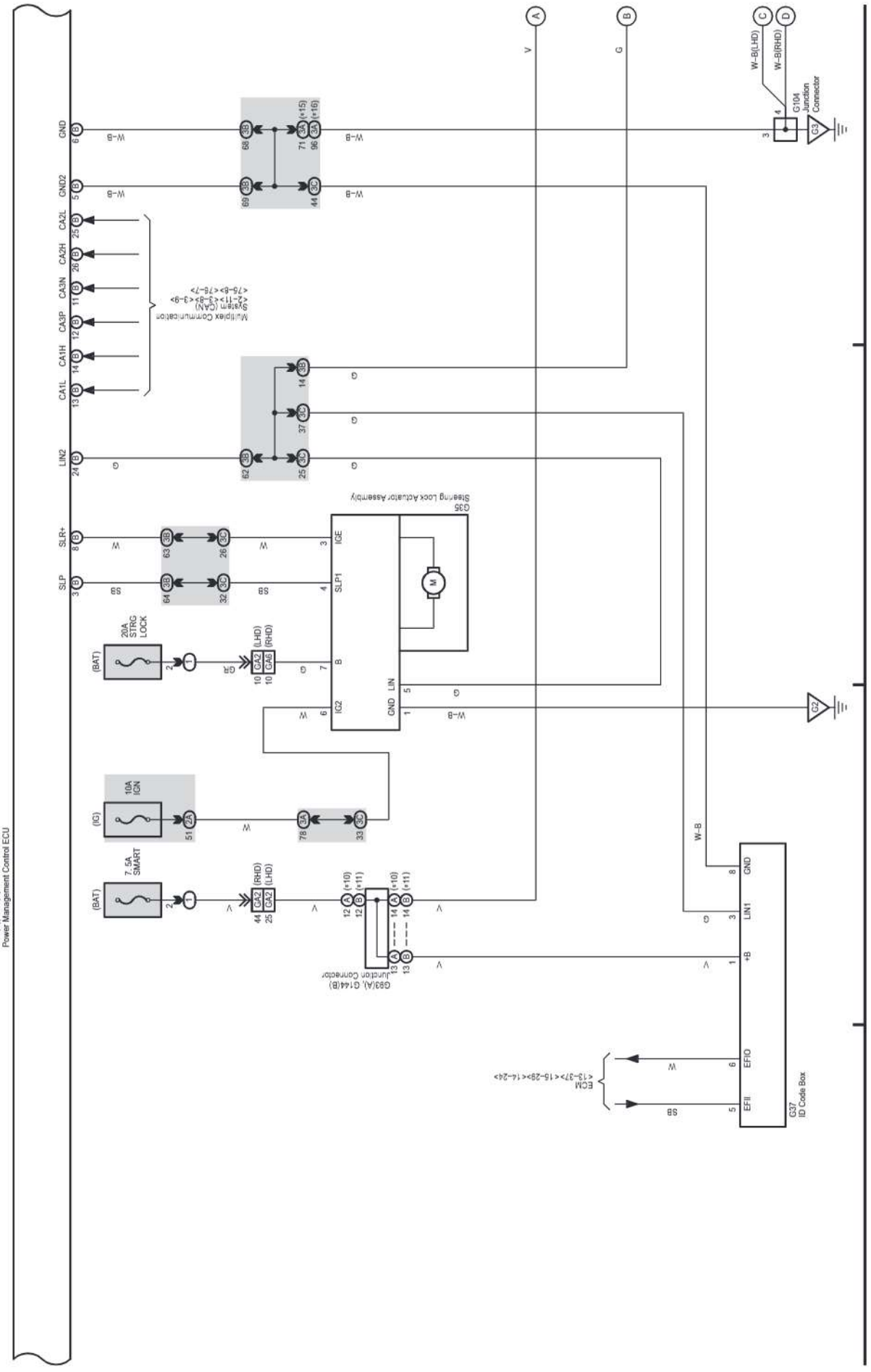

cardiagn.com

5 LAND CRUISER / LAND CRUISER PRADO (Cont'd)

(Cont. next page)

Starting (w/ Entry & Start System) (Before Jun. 2015 Production), Steering Lock (w/ Entry & Start System) (Before Jun. 2015 Production), Engine Immobiliser System (w/ Entry & Start System) (Before Jun. 2015 Production), Entry & Start System (Before Jun. 2015 Production) and Wireless Door Lock Control (w/ Entry & Start System) (Before Jun. 2015 Production)

*10 : Before Oct. 2010 Production
*11 : From Oct. 2010 Production

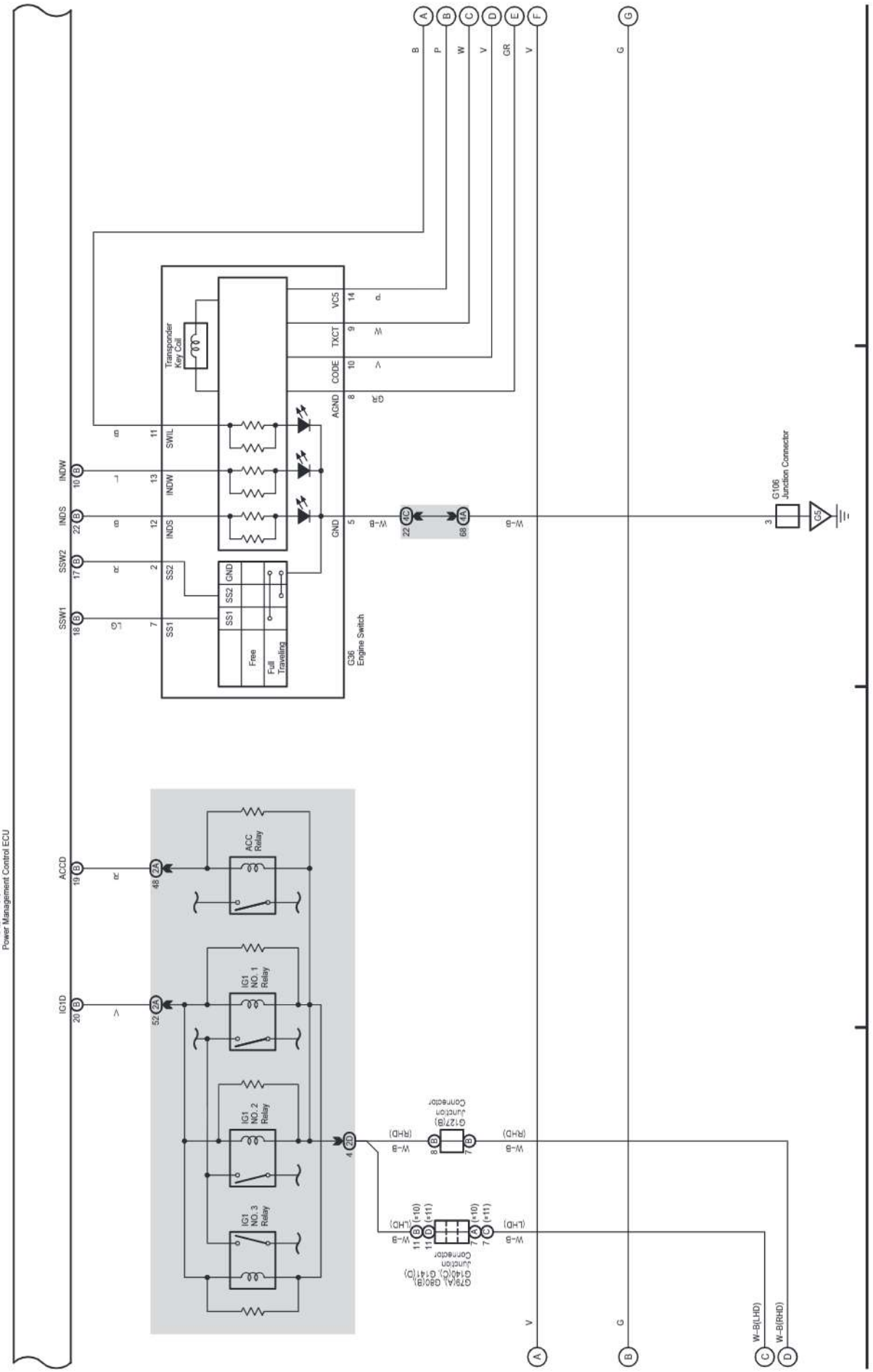

cardiagn.com

5 LAND CRUISER / LAND CRUISER PRADO (Cont'd)

(Cont. next page)

Starting (w/ Entry & Start System) (Before Jun. 2015 Production), Steering Lock (w/ Entry & Start System) (Before Jun. 2015 Production), Engine Immobiliser System (w/ Entry & Start System) (Before Jun. 2015 Production), Entry & Start System (Before Jun. 2015 Production) and Wireless Door Lock Control (w/ Entry & Start System) (Before Jun. 2015 Production)

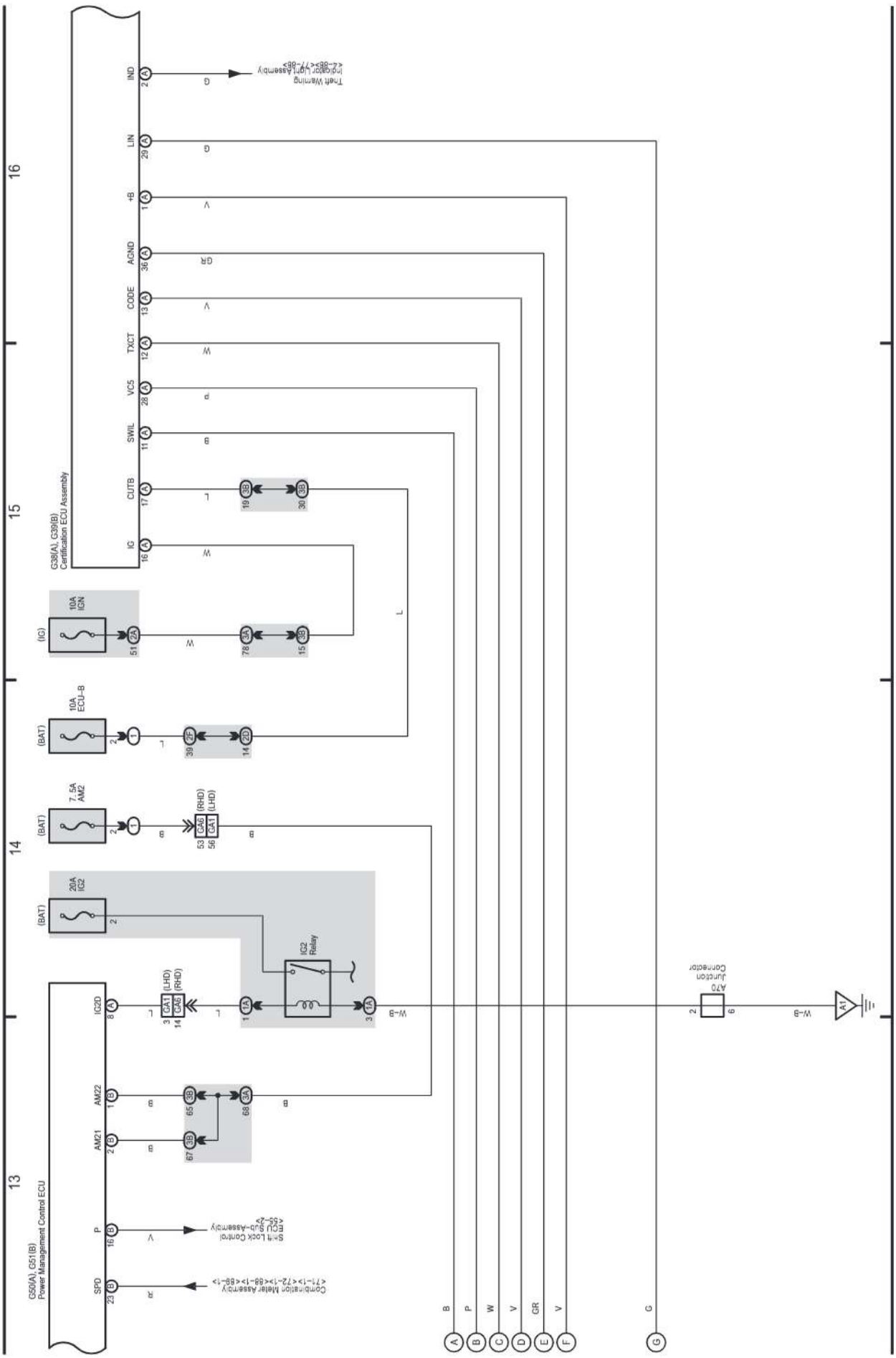

cardiagn.com

(Cont. next page)

Starting (w/ Entry & Start System) (Before Jun. 2015 Production), Steering Lock (w/ Entry & Start System) (Before Jun. 2015 Production), Engine Immobiliser System (w/ Entry & Start System) (Before Jun. 2015 Production), Entry & Start System (Before Jun. 2015 Production) and Wireless Door Lock Control (w/ Entry & Start System) (Before Jun. 2015 Production)

* 5 : 5-Door
* 6 : 3-Door
* 15 : Before Aug., 2013 Production
* 16 : From Aug., 2013 Production

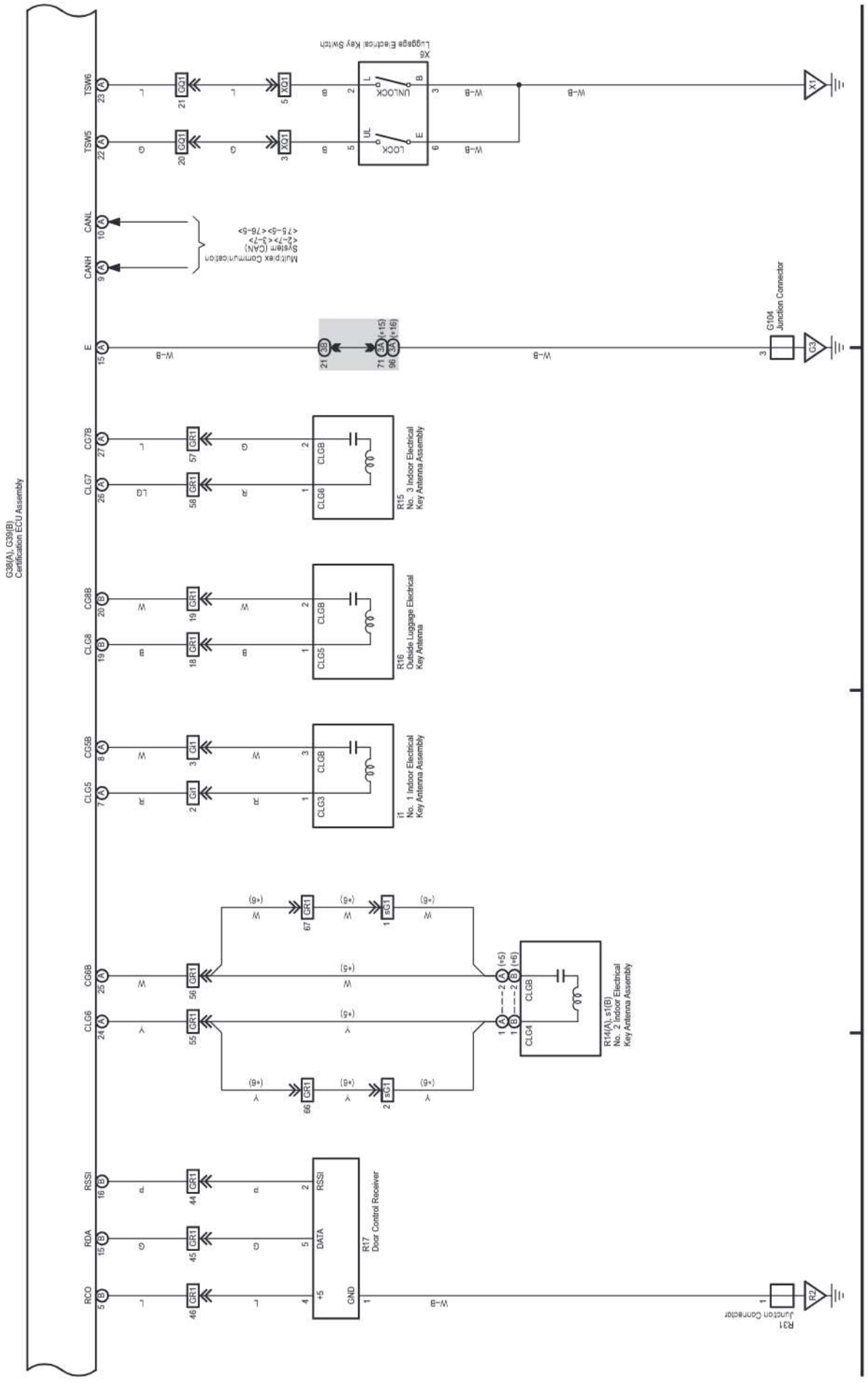

Starting (w/ Entry & Start System) (Before Jun. 2015 Production), Steering Lock (w/ Entry & Start System) (Before Jun. 2015 Production), Engine Immobiliser System (w/ Entry & Start System) (Before Jun. 2015 Production), Entry & Start System (Before Jun. 2015 Production) and Wireless Door Lock Control (w/ Entry & Start System) (Before Jun. 2015 Production)

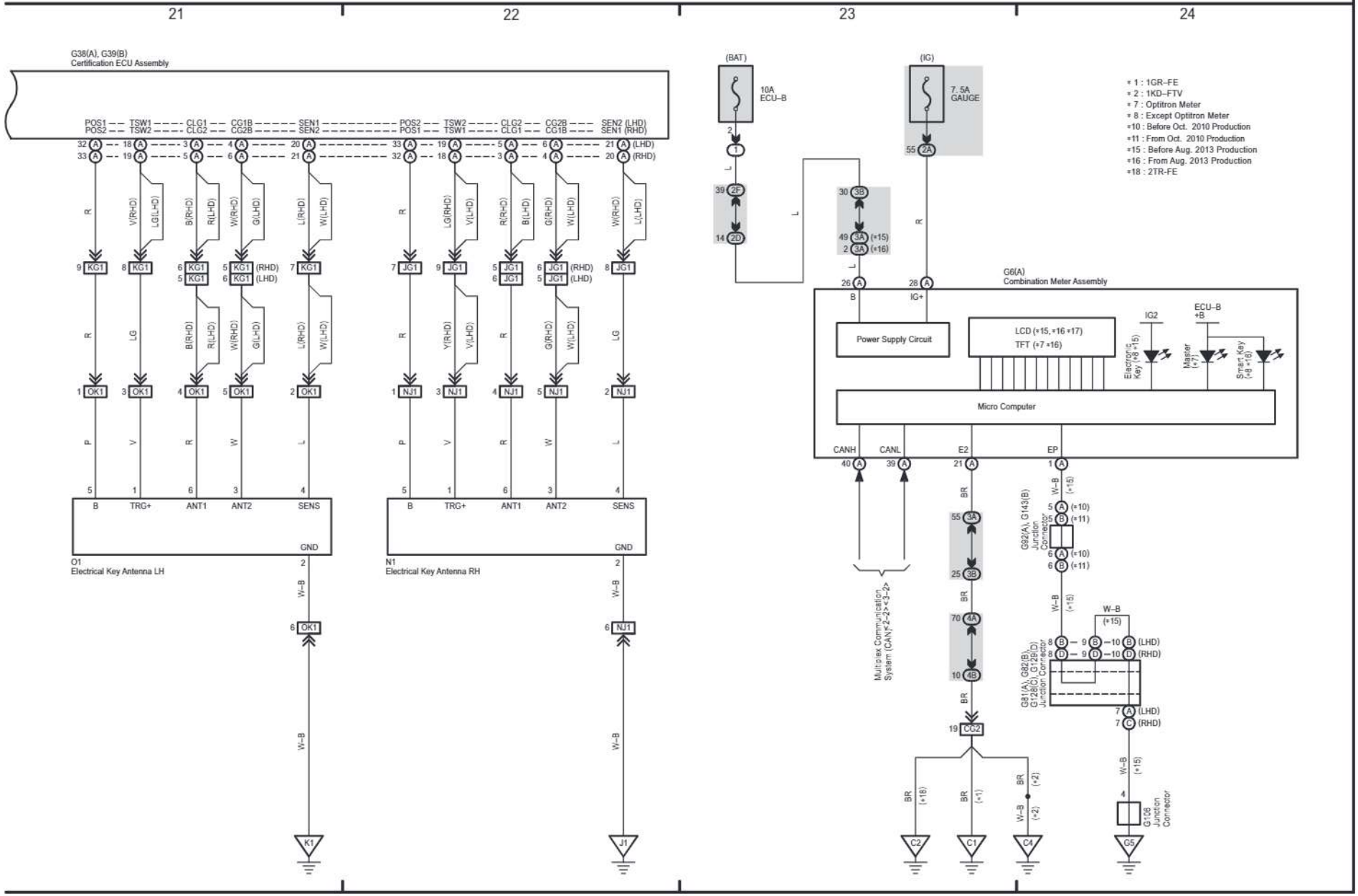

cardiagn.com

cardiagn.com

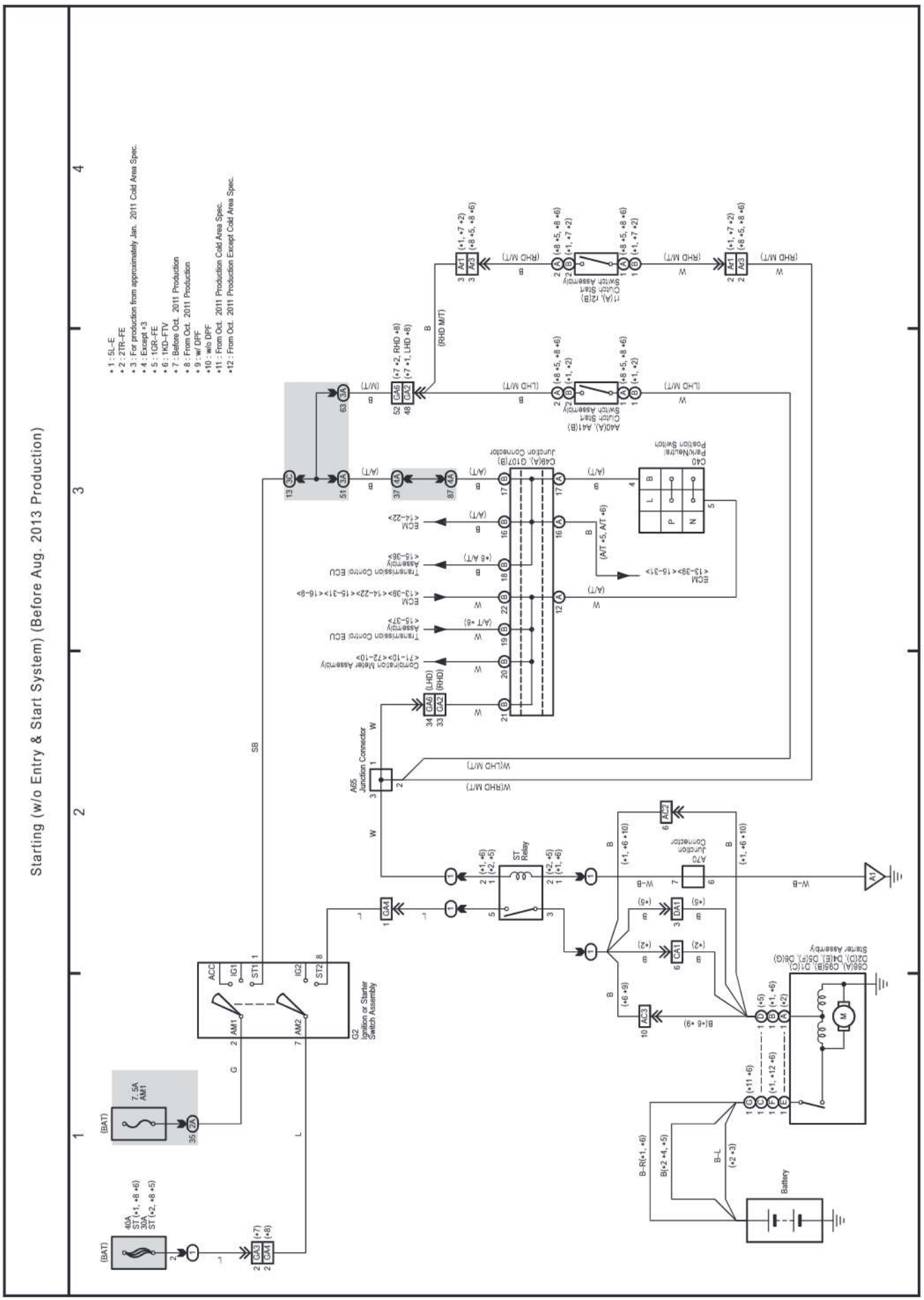

cardiagn.com

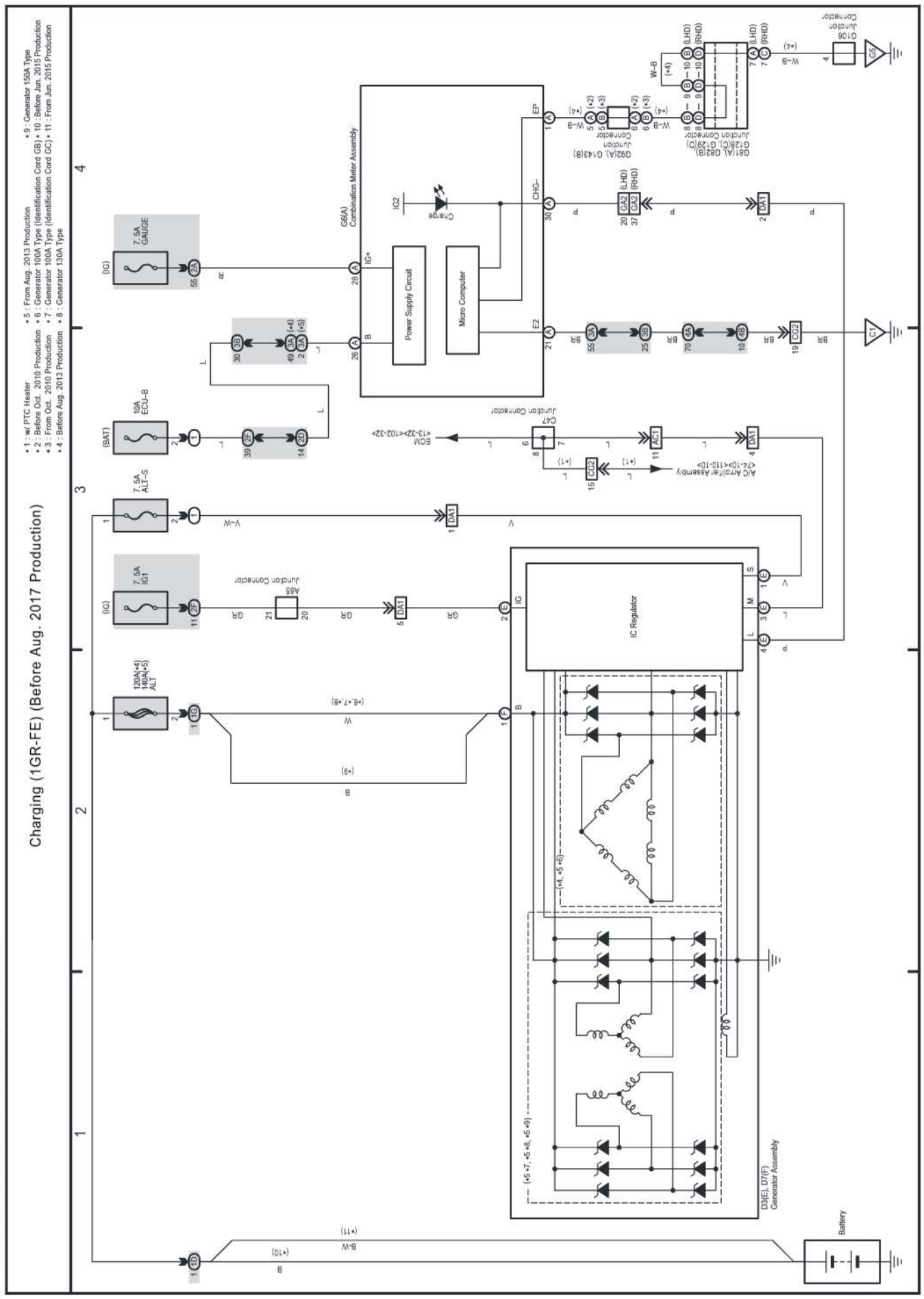

cardiagn.com

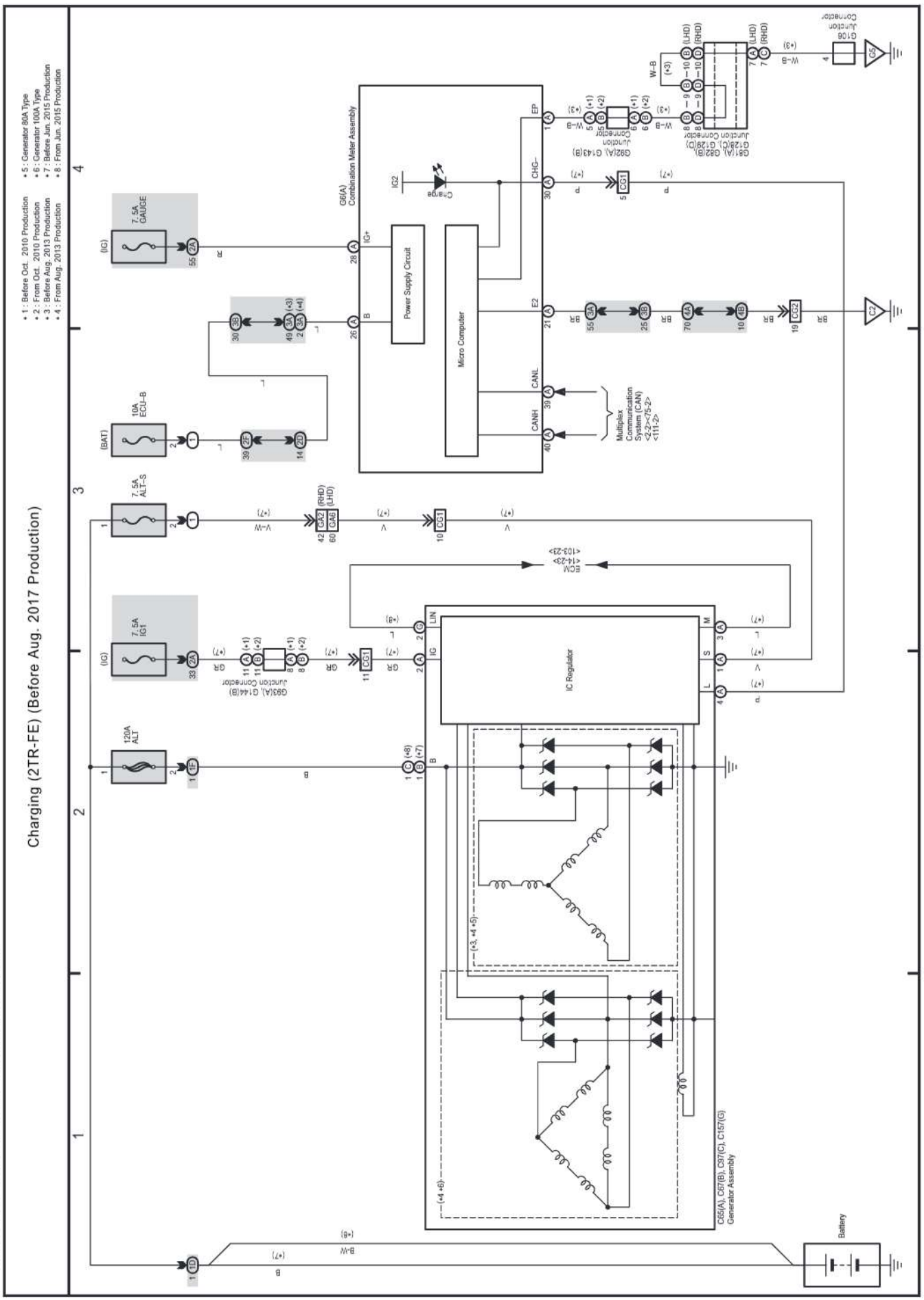

cardiagn.com

M OVERALL ELECTRICAL WIRING DIAGRAM

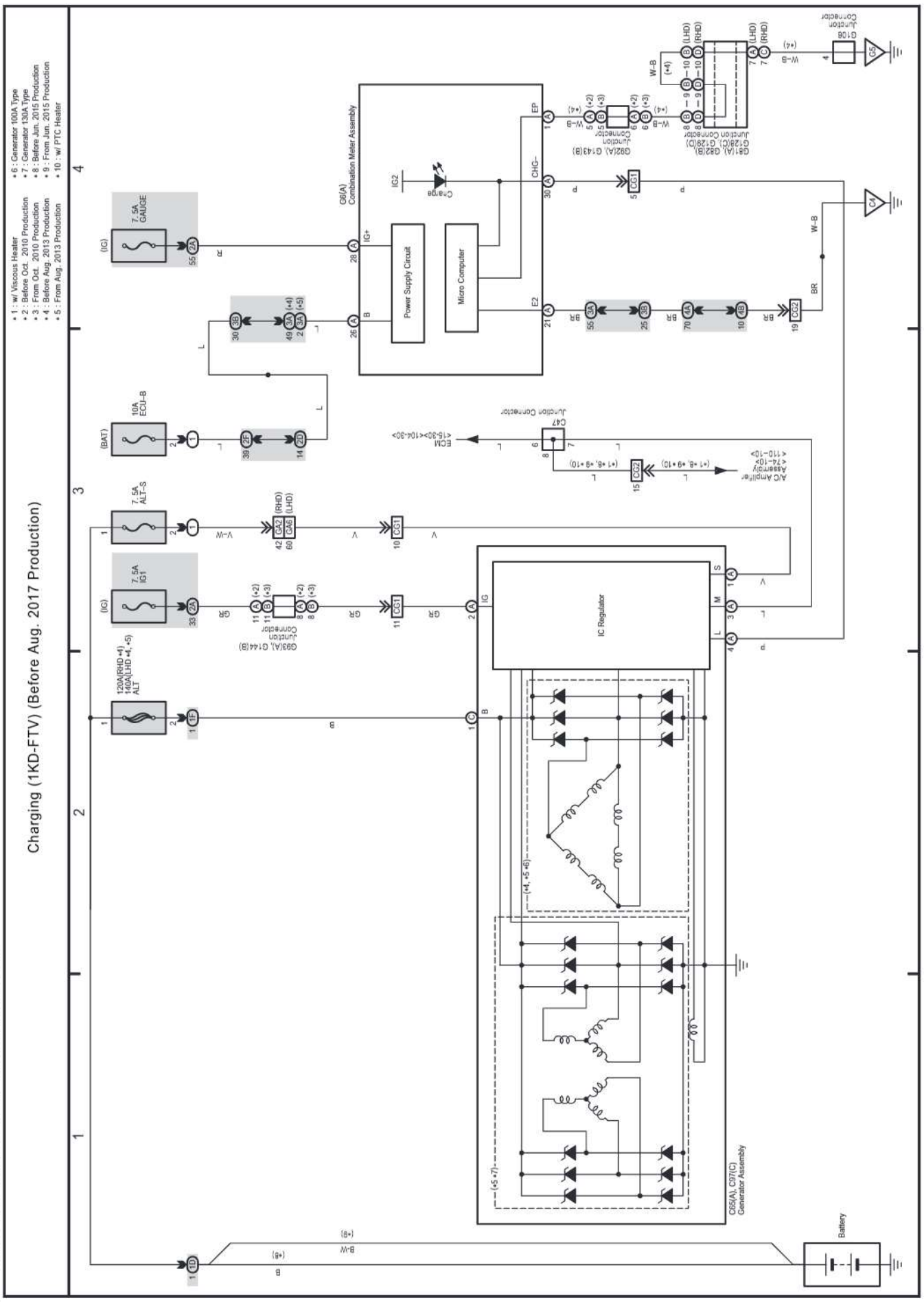

cardiagn.com

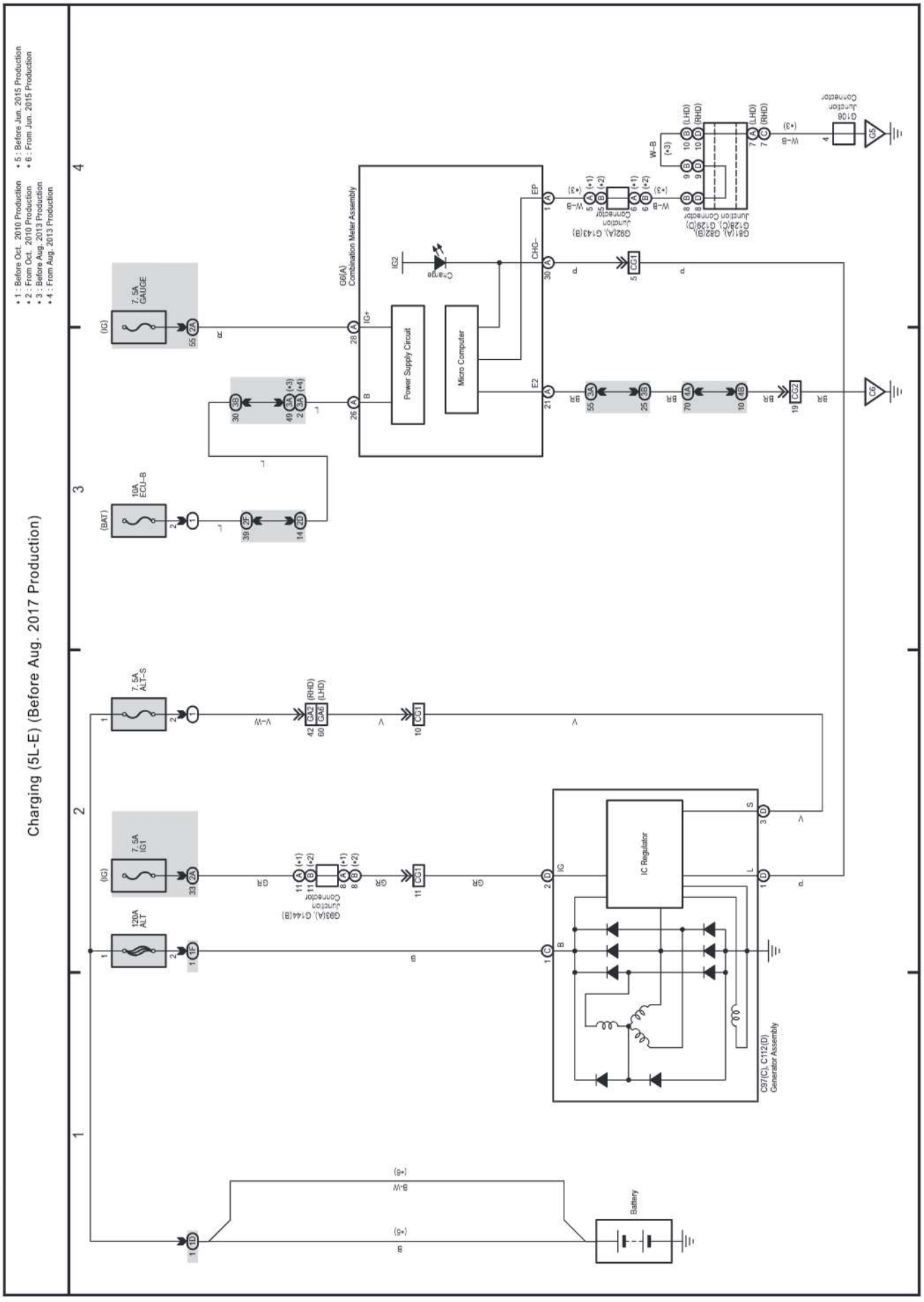

cardiagn.com

M OVERALL ELECTRICAL WIRING DIAGRAM

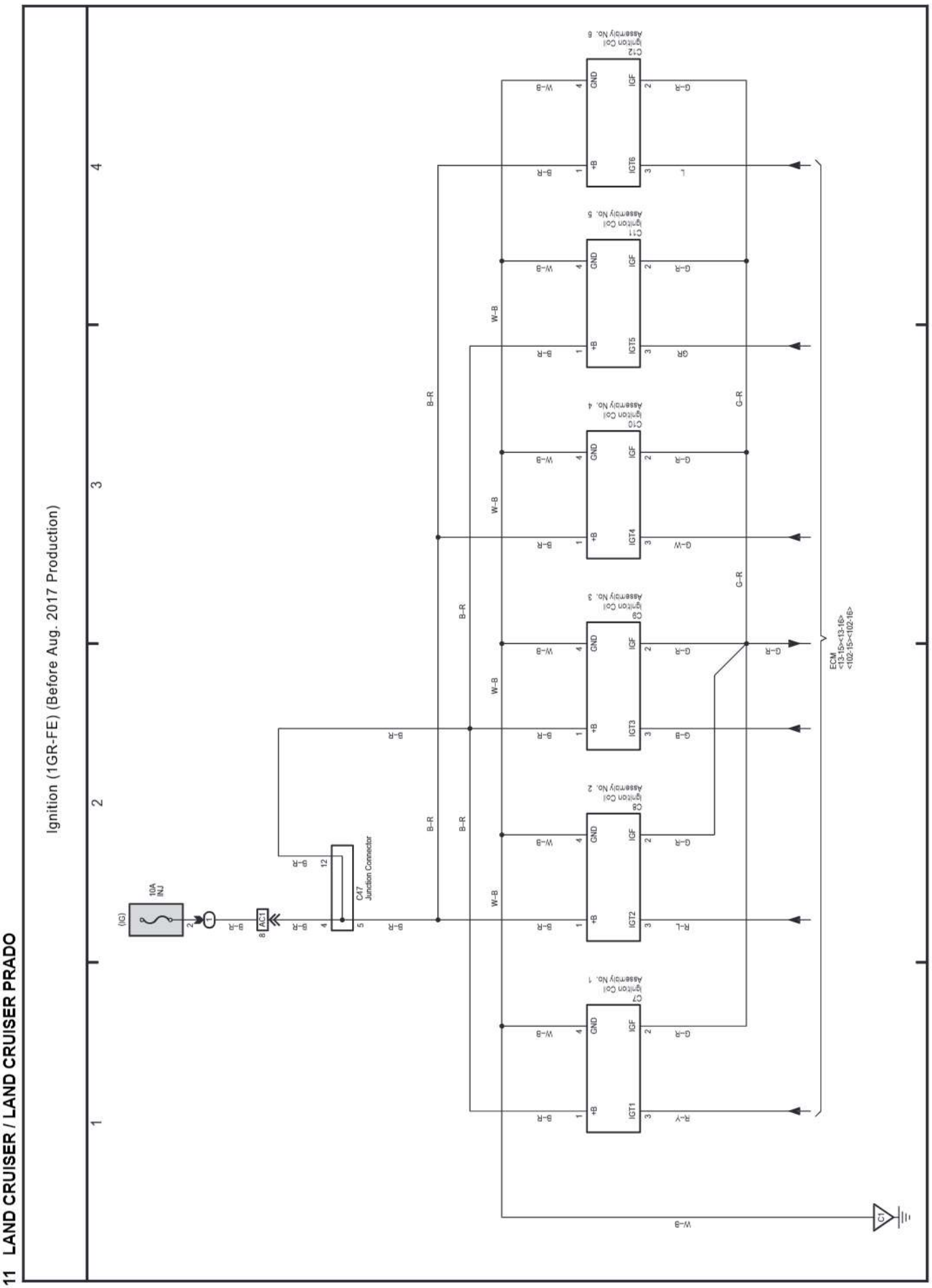

cardiagn.com

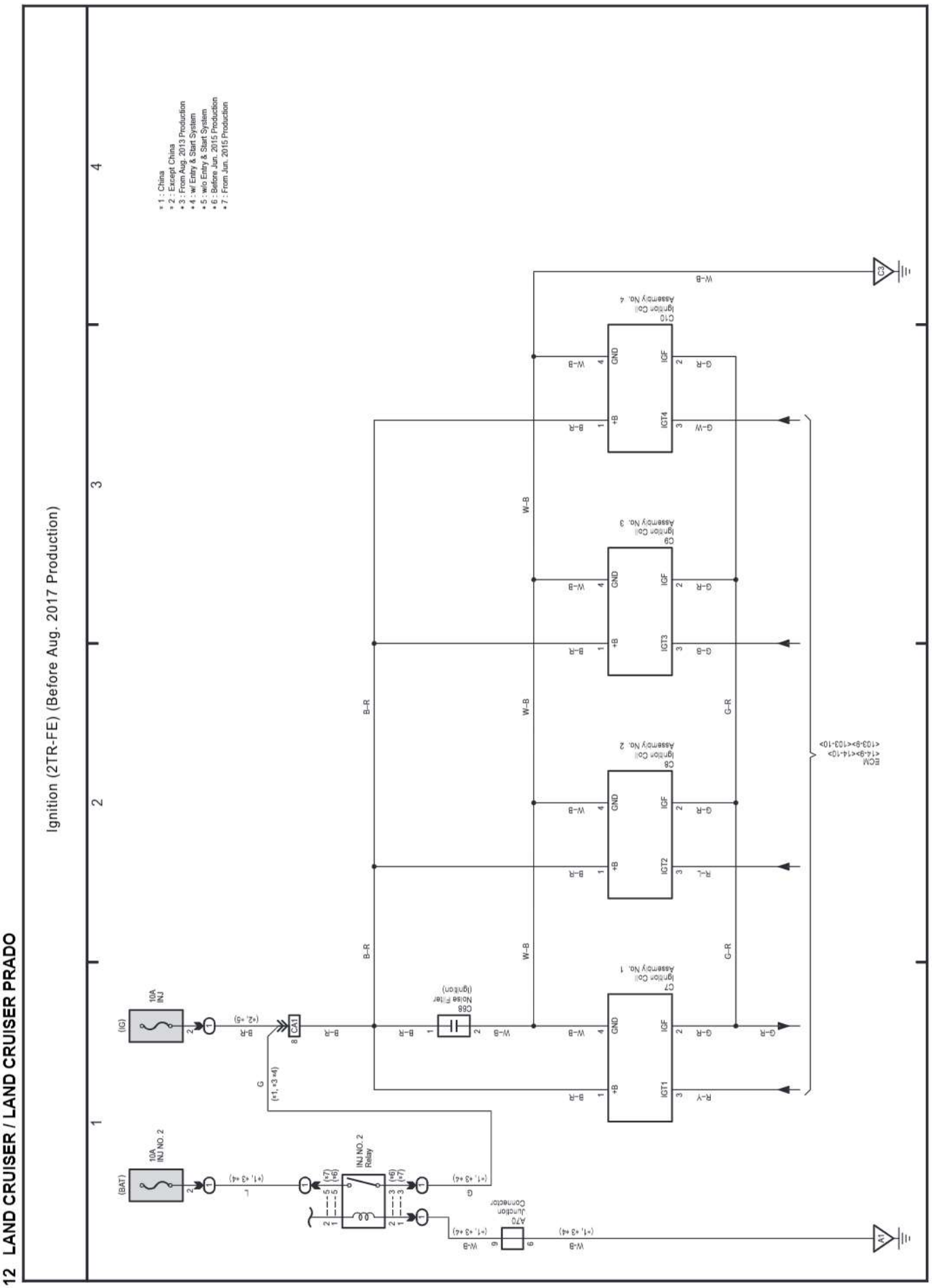

cardiagn.com

(Cont. next page)

Cruise Control (1GR-FE) (Before Jun. 2015 Production), Dynamic Radar Cruise Control (1GR-FE) (Before Jun. 2015 Production),
Engine Control (1GR-FE) (Before Jun. 2015 Production), ECT and A/T Indicator (1GR-FE) (Before Jun. 2015 Production)

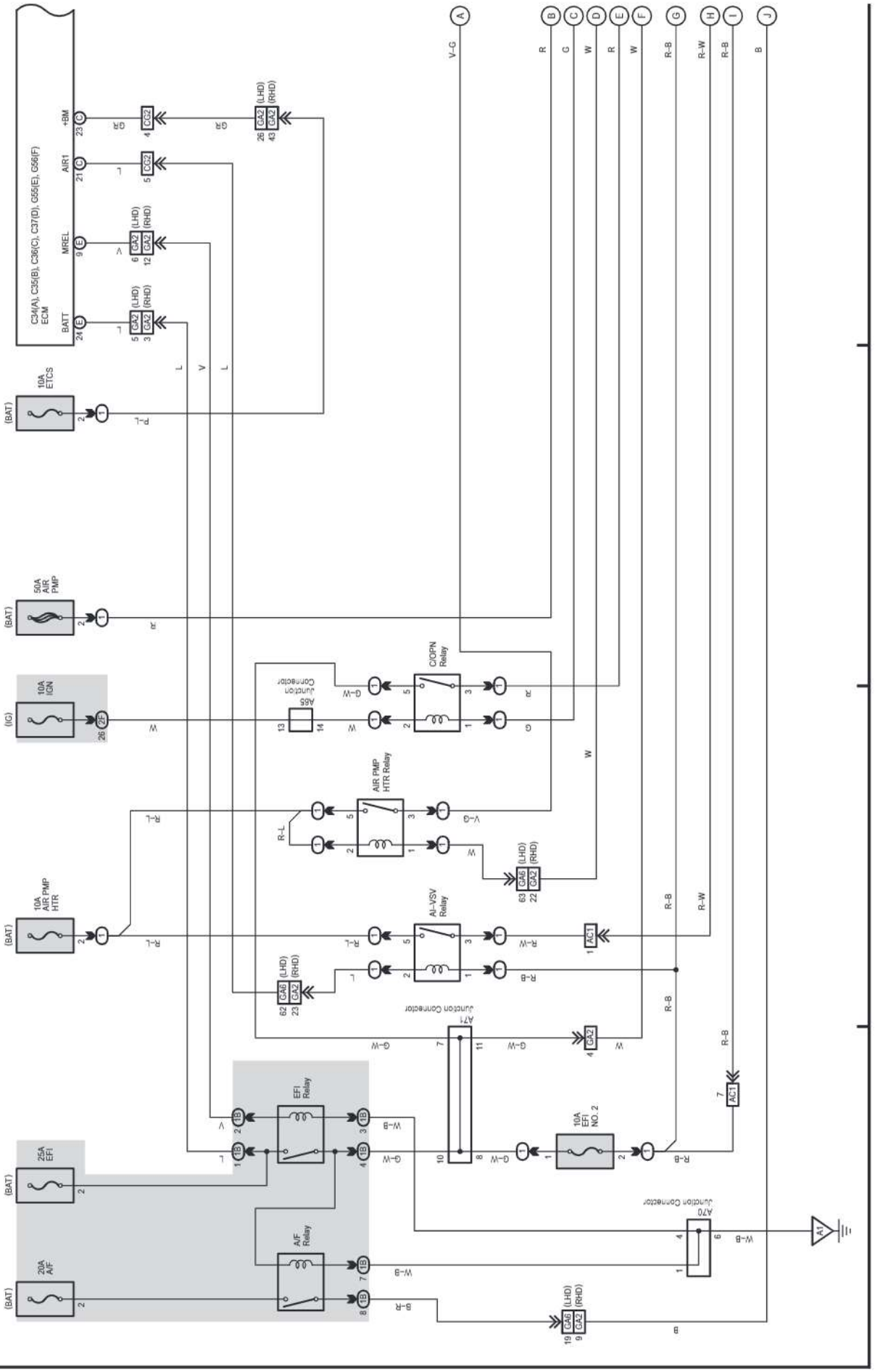

(Cont. next page)

Cruise Control (1GR-FE) (Before Jun. 2015 Production), Dynamic Radar Cruise Control (1GR-FE) (Before Jun. 2015 Production),
Engine Control (1GR-FE) (Before Jun. 2015 Production), ECT and A/T Indicator (1GR-FE) (Before Jun. 2015 Production)

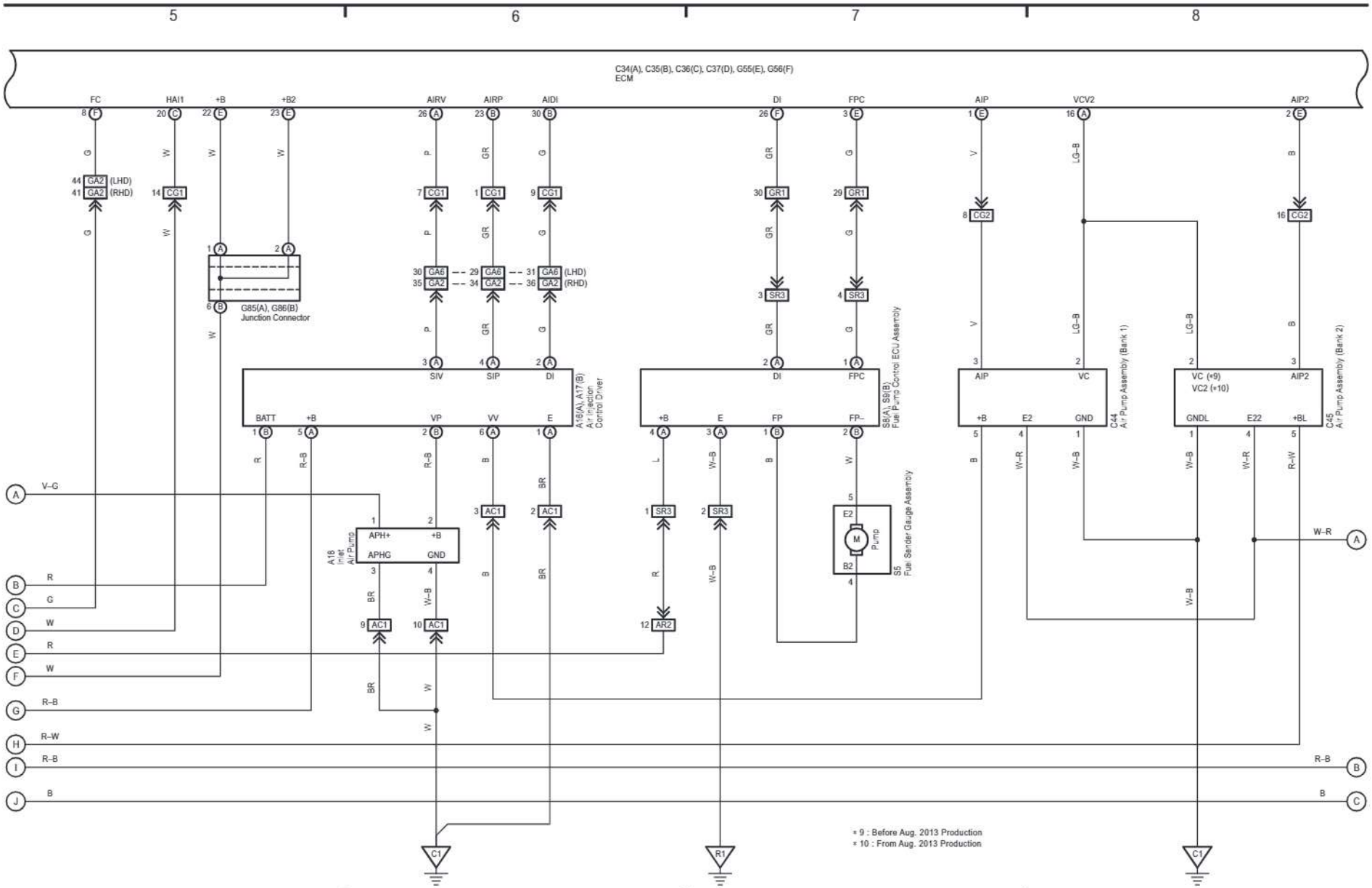

cardiagn.com

cardiagn.com

13 LAND CRUISER / LAND CRUISER PRADO (Cont'd)

(Cont. next page)

Cruise Control (1GR-FE) (Before Jun. 2015 Production), Dynamic Radar Cruise Control (1GR-FE) (Before Jun. 2015 Production),
Engine Control (1GR-FE) (Before Jun. 2015 Production), ECT and A/T Indicator (1GR-FE) (Before Jun. 2015 Production)

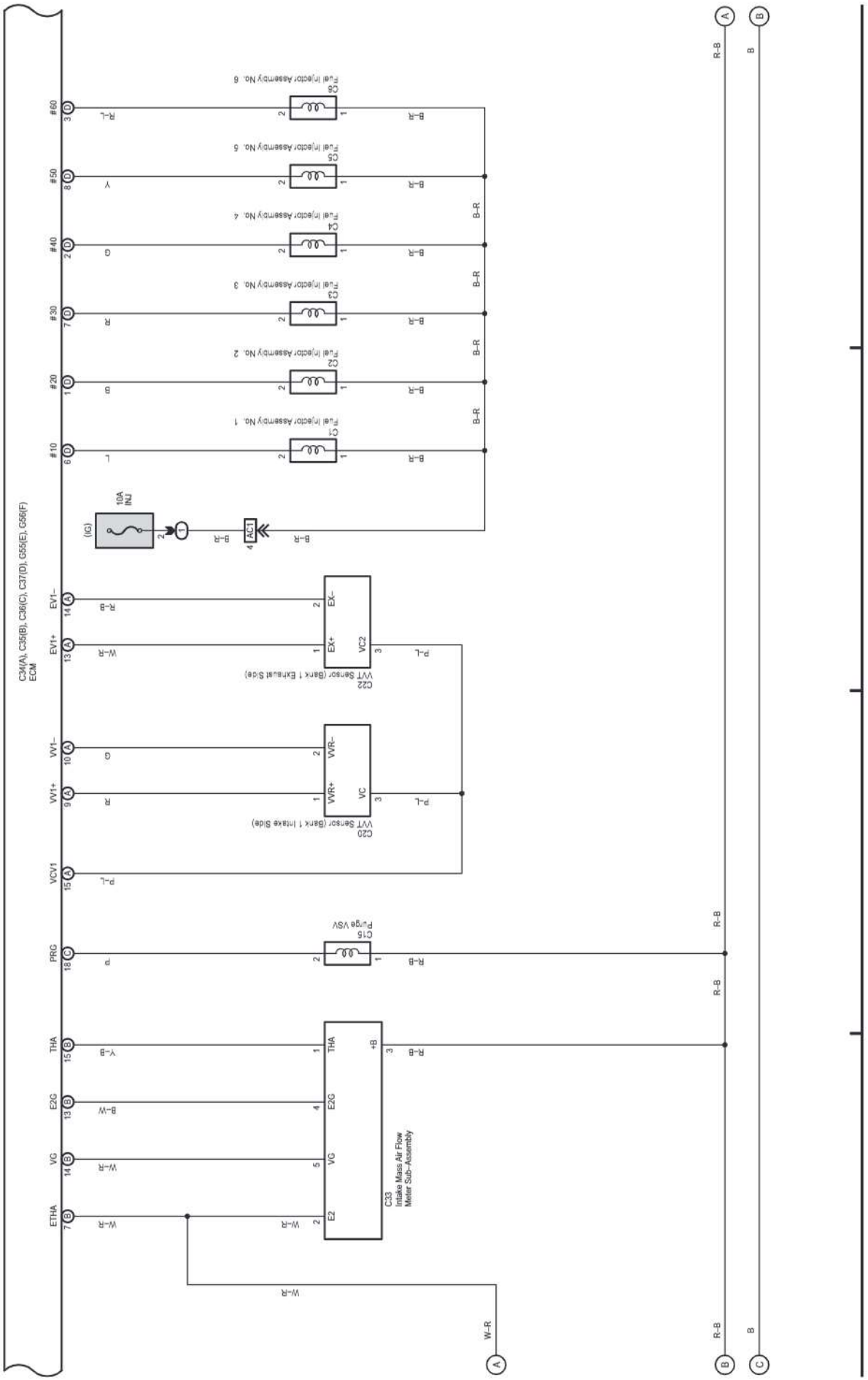

cardiagn.com

13 LAND CRUISER / LAND CRUISER PRADO (Cont'd)

(Cont. next page)

Cruise Control (1GR-FE) (Before Jun. 2015 Production), Dynamic Radar Cruise Control (1GR-FE) (Before Jun. 2015 Production),
Engine Control (1GR-FE) (Before Jun. 2015 Production), ECT and A/T Indicator (1GR-FE) (Before Jun. 2015 Production)

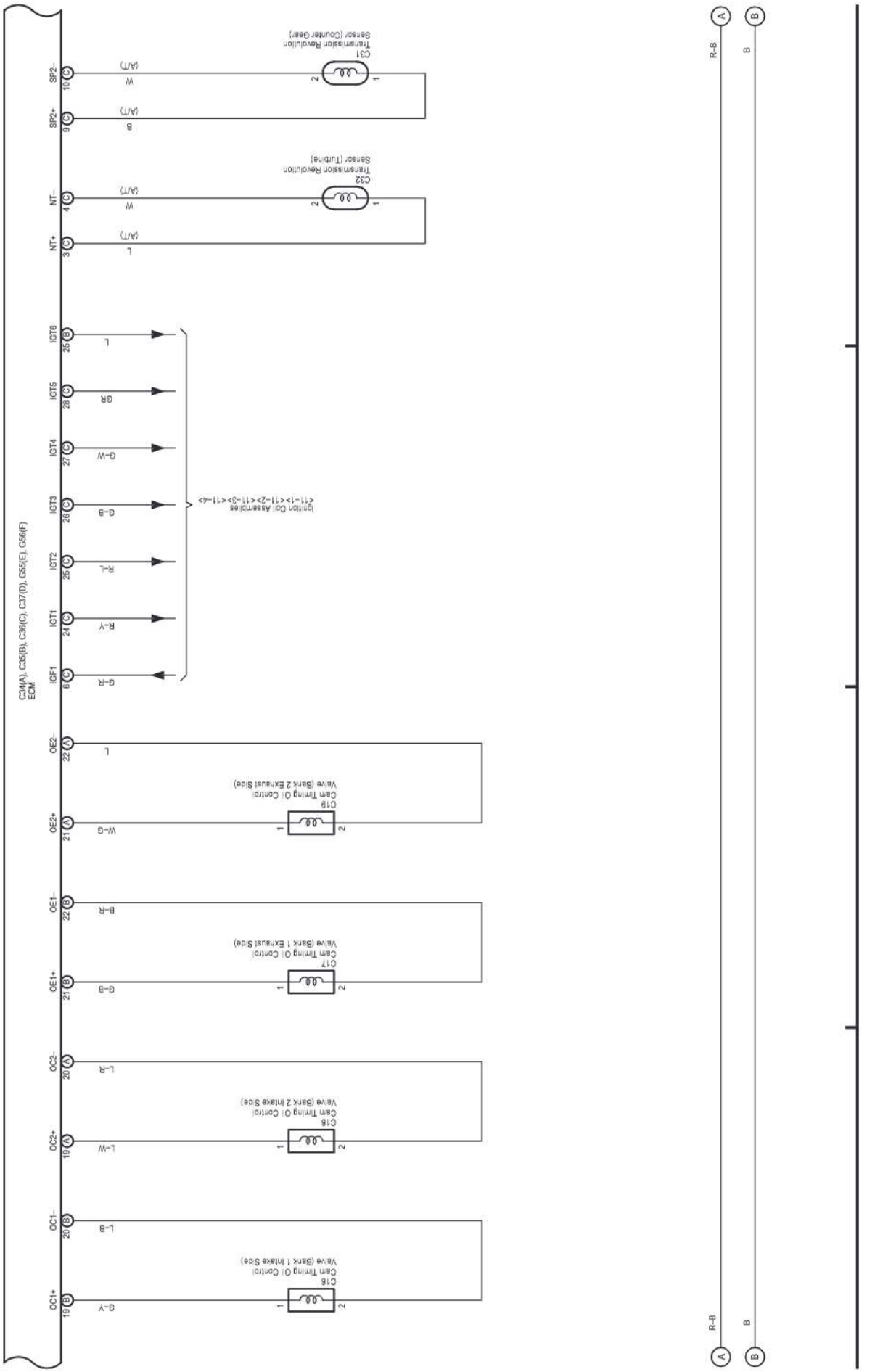

cardiagn.com

(Cont. next page)

Cruise Control (1GR-FE) (Before Jun. 2015 Production), Dynamic Radar Cruise Control (1GR-FE) (Before Jun. 2015 Production),
Engine Control (1GR-FE) (Before Jun. 2015 Production), ECT and A/T Indicator (1GR-FE) (Before Jun. 2015 Production)

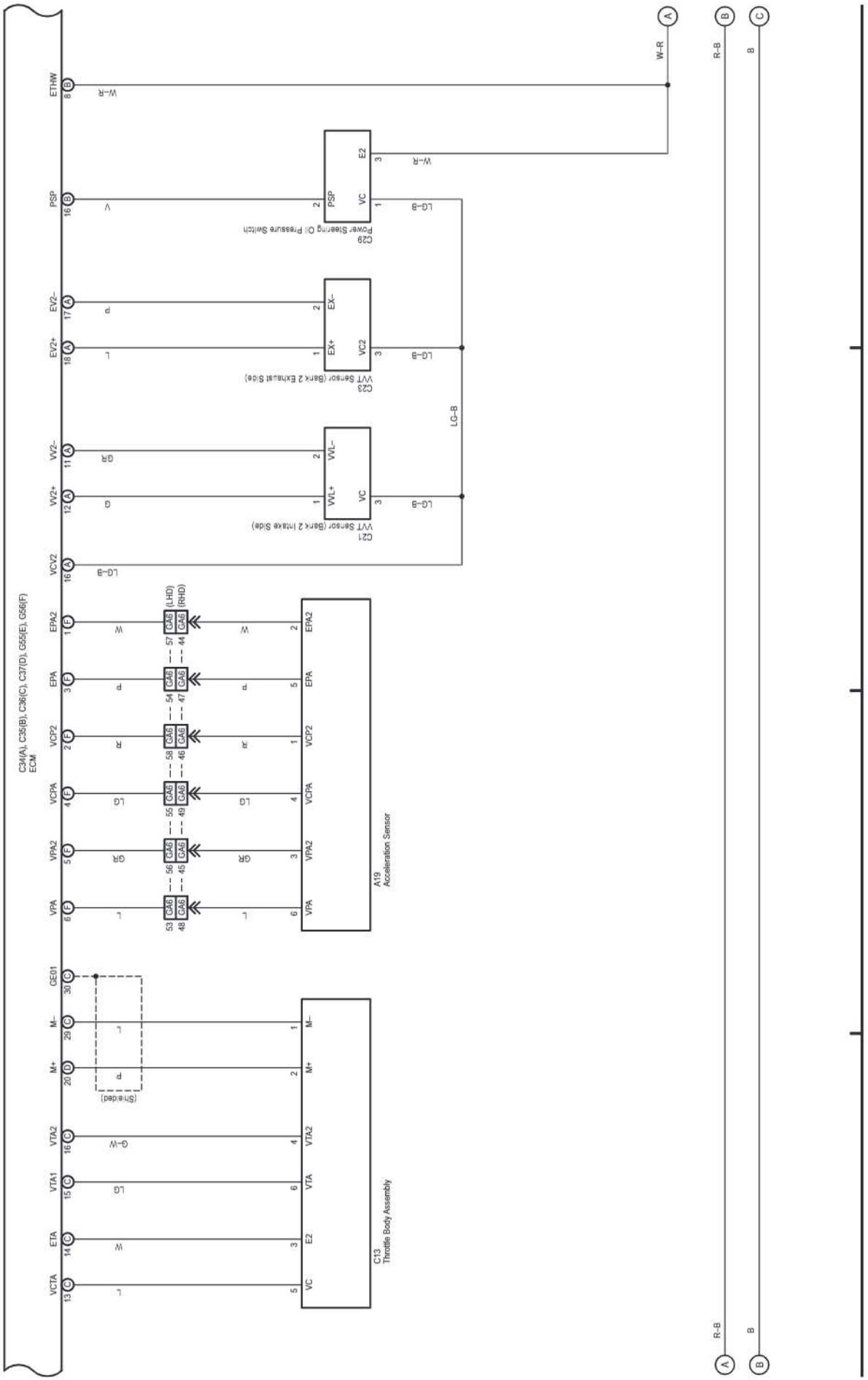

cardiagn.com

13 LAND CRUISER / LAND CRUISER PRADO (Cont'd)

(Cont. next page)

Cruise Control (1GR-FE) (Before Jun. 2015 Production), Dynamic Radar Cruise Control (1GR-FE) (Before Jun. 2015 Production),
Engine Control (1GR-FE) (Before Jun. 2015 Production), ECT and A/T Indicator (1GR-FE) (Before Jun. 2015 Production)

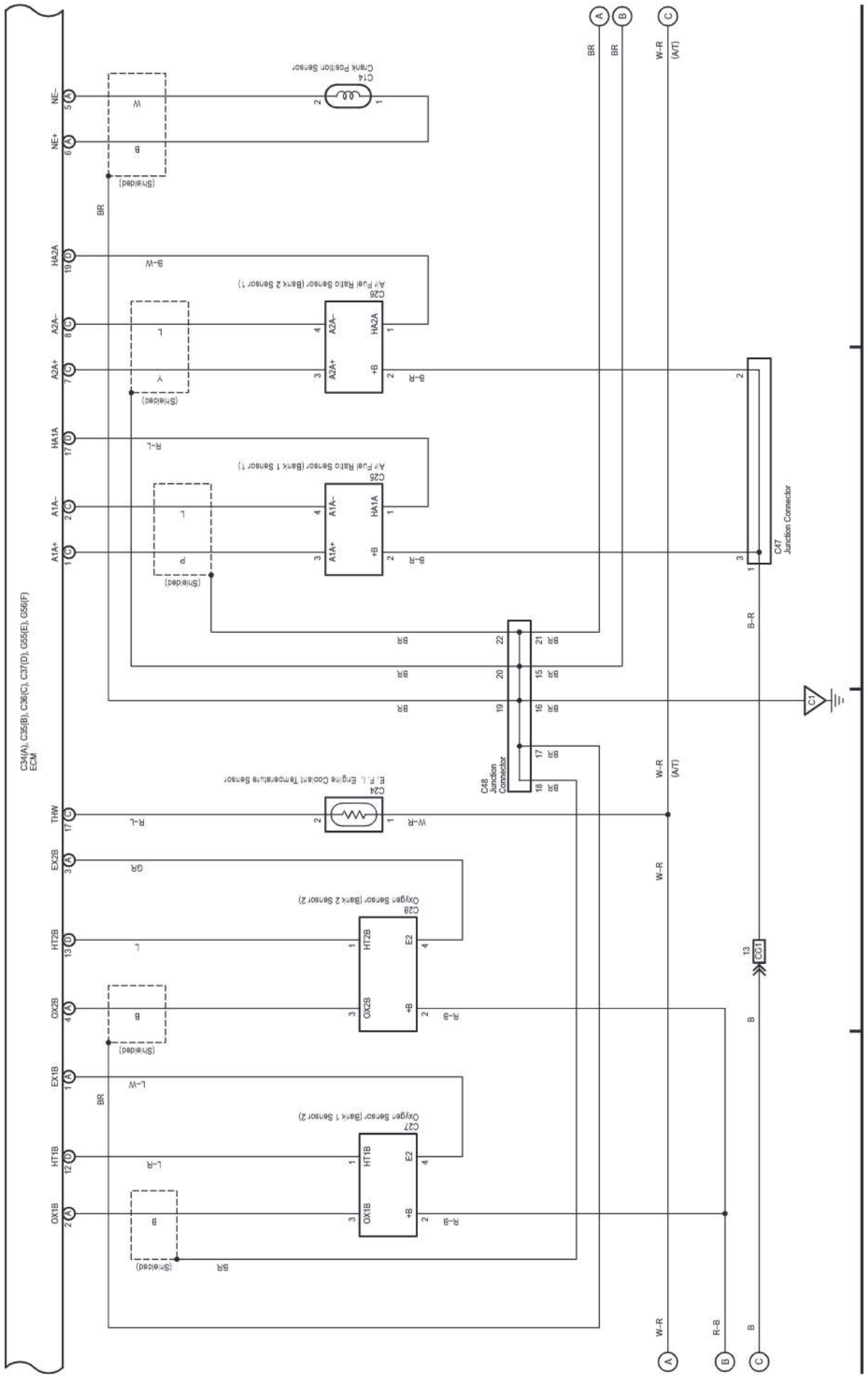

cardiagn.com

13 LAND CRUISER / LAND CRUISER PRADO (Cont'd)

(Cont. next page)

Cruise Control (1GR-FE) (Before Jun. 2015 Production), Dynamic Radar Cruise Control (1GR-FE) (Before Jun. 2015 Production),
Engine Control (1GR-FE) (Before Jun. 2015 Production), ECT and A/T Indicator (1GR-FE) (Before Jun. 2015 Production)

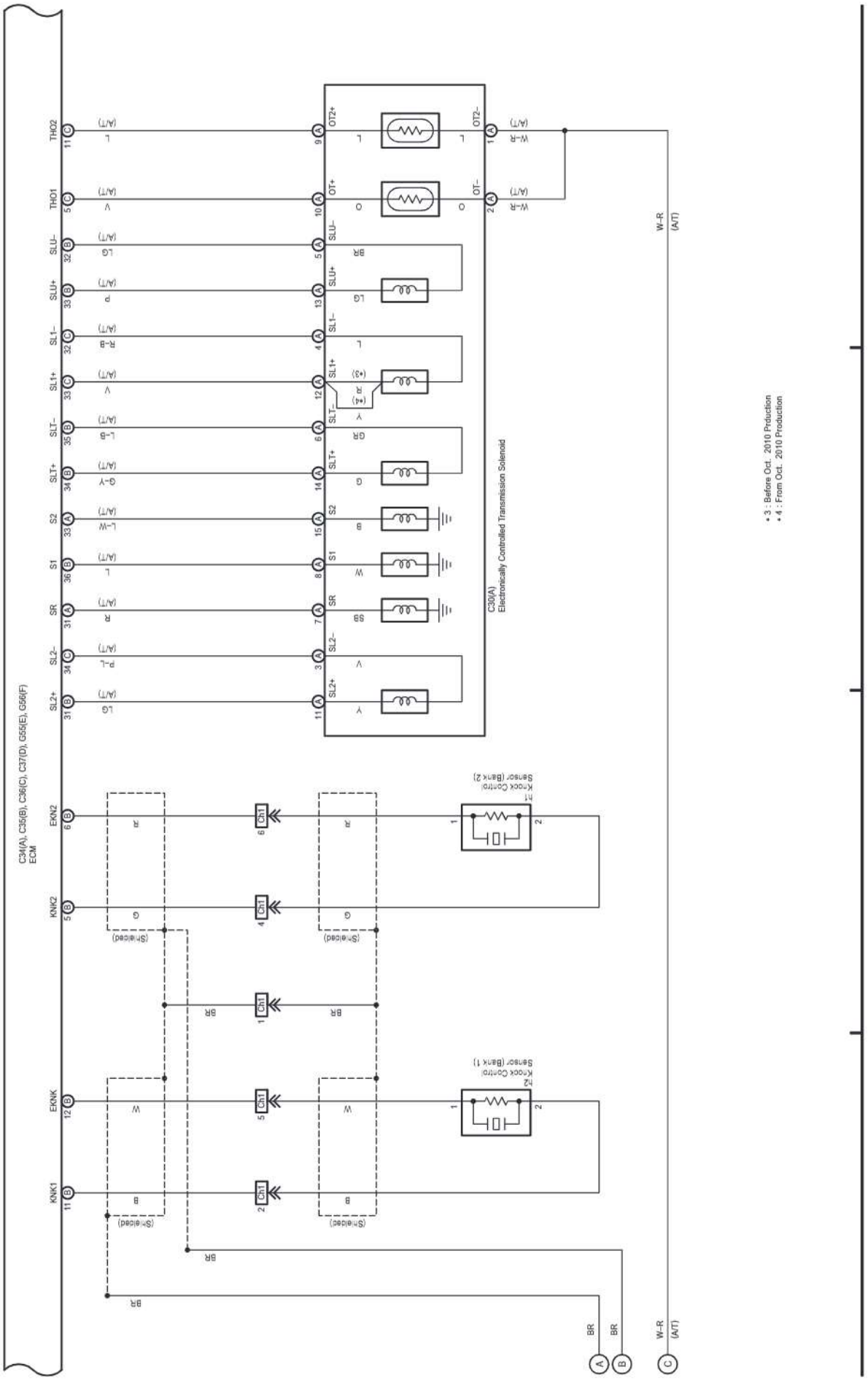

(Cont. next page)

Cruise Control (1GR-FE) (Before Jun. 2015 Production), Dynamic Radar Cruise Control (1GR-FE) (Before Jun. 2015 Production),
Engine Control (1GR-FE) (Before Jun. 2015 Production), ECT and A/T Indicator (1GR-FE) (Before Jun. 2015 Production)

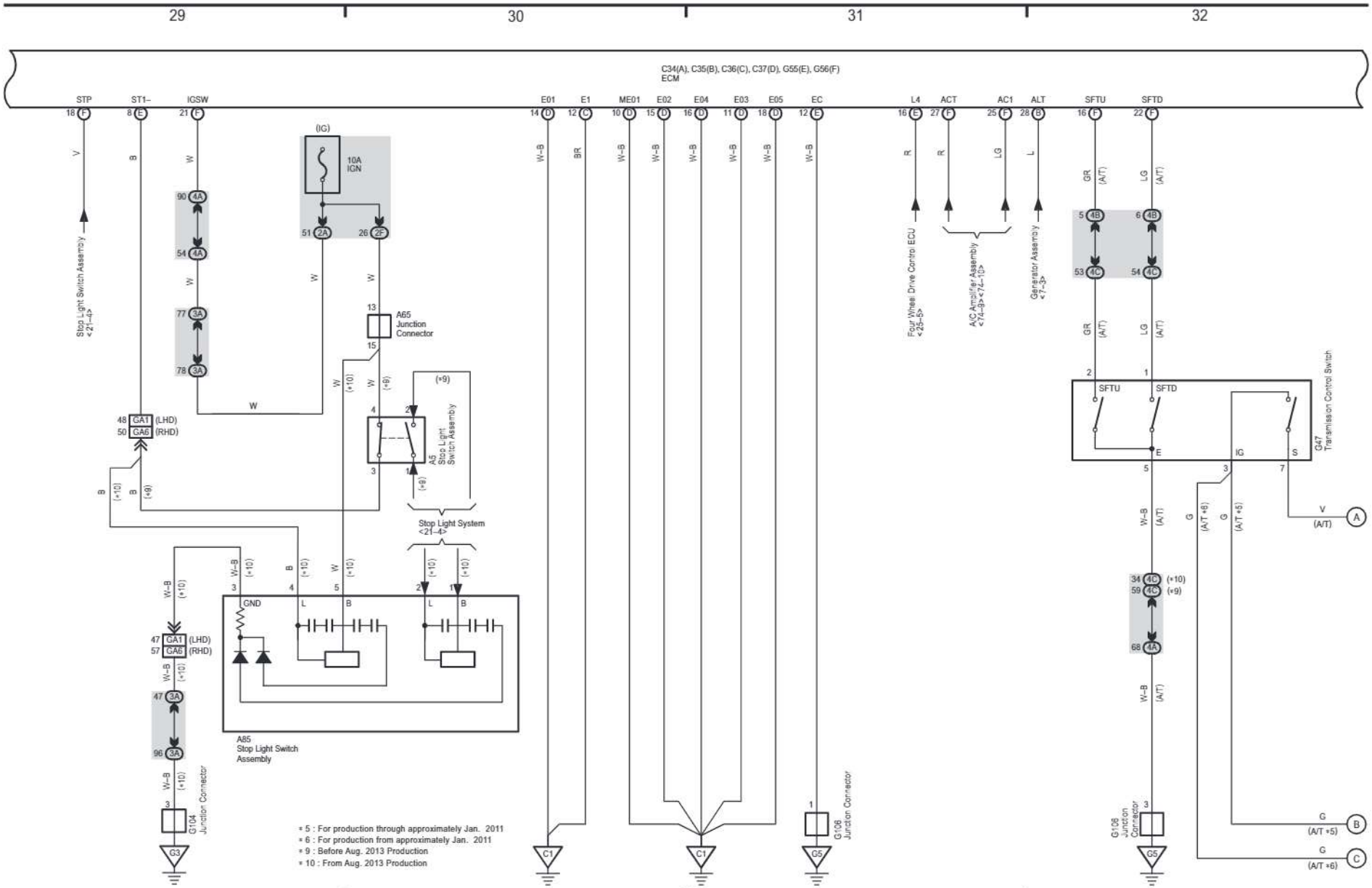

cardiagn.com

cardiagn.com

(Cont. next page)

Cruise Control (1GR-FE) (Before Jun. 2015 Production), Dynamic Radar Cruise Control (1GR-FE) (Before Jun. 2015 Production),
Engine Control (1GR-FE) (Before Jun. 2015 Production), ECT and A/T Indicator (1GR-FE) (Before Jun. 2015 Production)

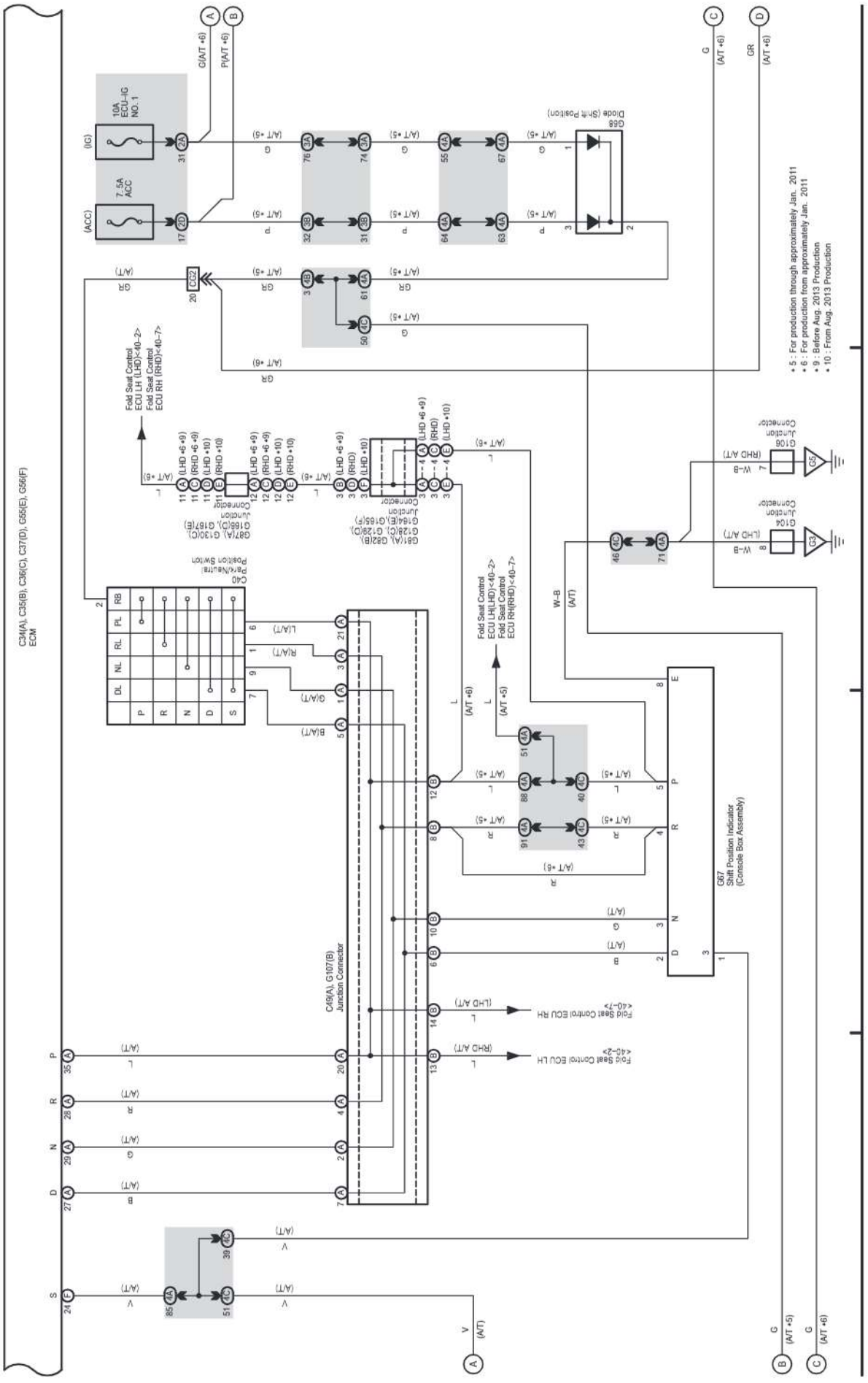

(Cont. next page)

Cruise Control (1GR-FE) (Before Jun. 2015 Production), Dynamic Radar Cruise Control (1GR-FE) (Before Jun. 2015 Production),
Engine Control (1GR-FE) (Before Jun. 2015 Production), ECT and A/T Indicator (1GR-FE) (Before Jun. 2015 Production)

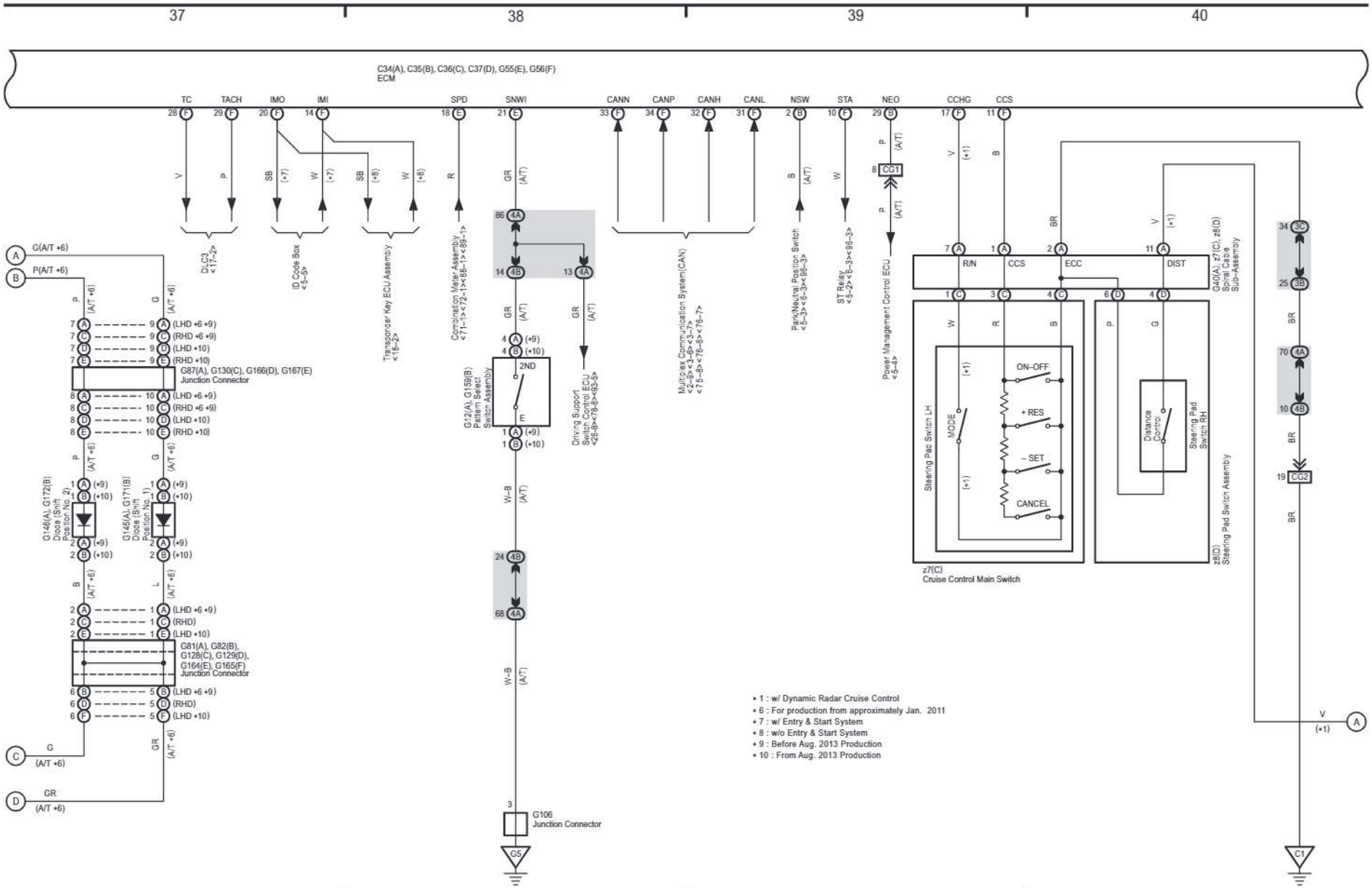

cardiagn.com

cardiagn.com

13 LAND CRUISER / LAND CRUISER PRADO (Cont'd)

(Cont. next page)

Cruise Control (1GR-FE) (Before Jun. 2015 Production), Dynamic Radar Cruise Control (1GR-FE) (Before Jun. 2015 Production), Engine Control (1GR-FE) (Before Jun. 2015 Production), ECT and A/T Indicator (1GR-FE) (Before Jun. 2015 Production)

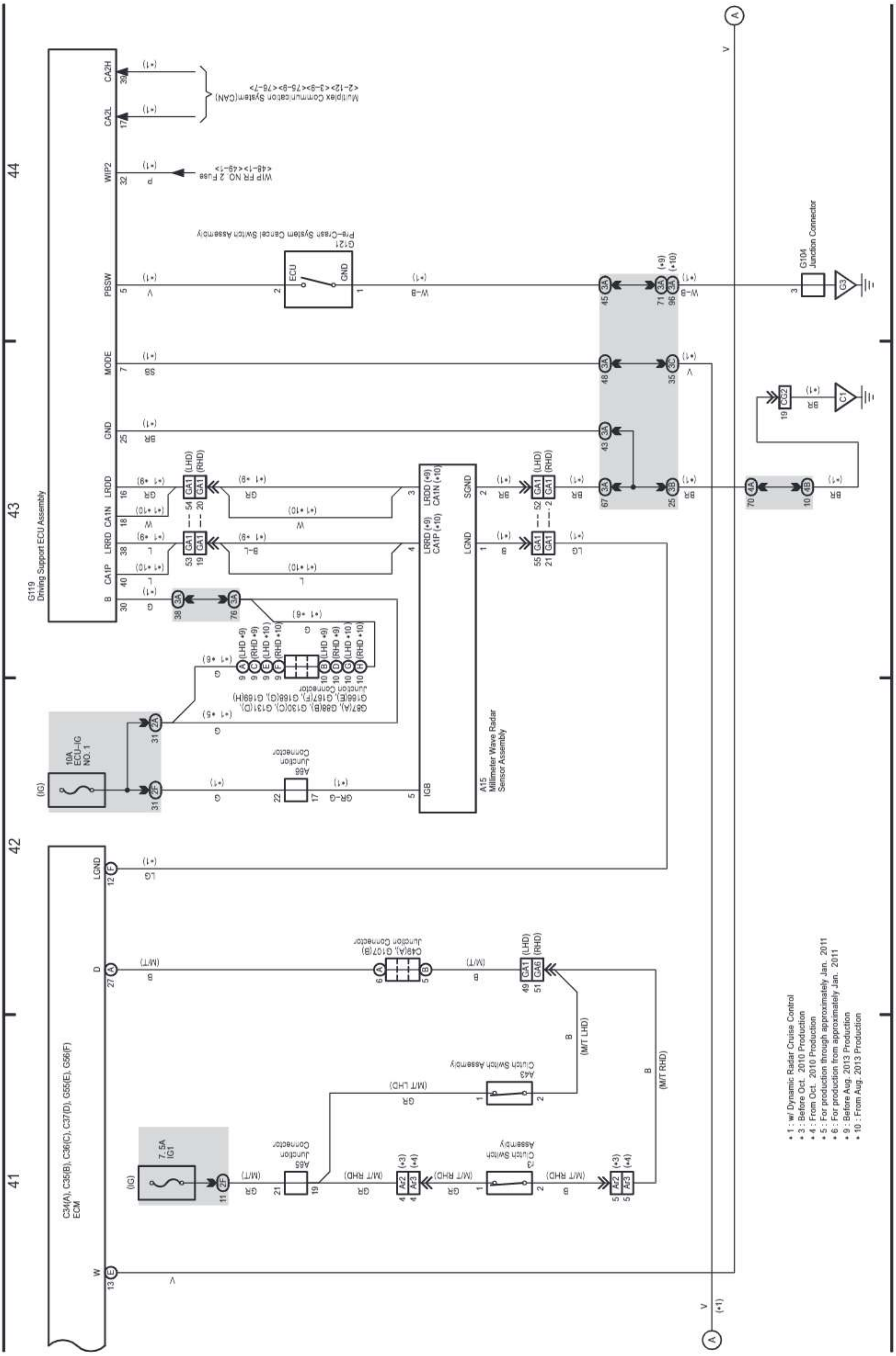

cardiagn.com

Cruise Control (1GR-FE) (Before Jun. 2015 Production), Dynamic Radar Cruise Control (1GR-FE) (Before Jun. 2015 Production),
Engine Control (1GR-FE) (Before Jun. 2015 Production), ECT and A/T Indicator (1GR-FE) (Before Jun. 2015 Production)

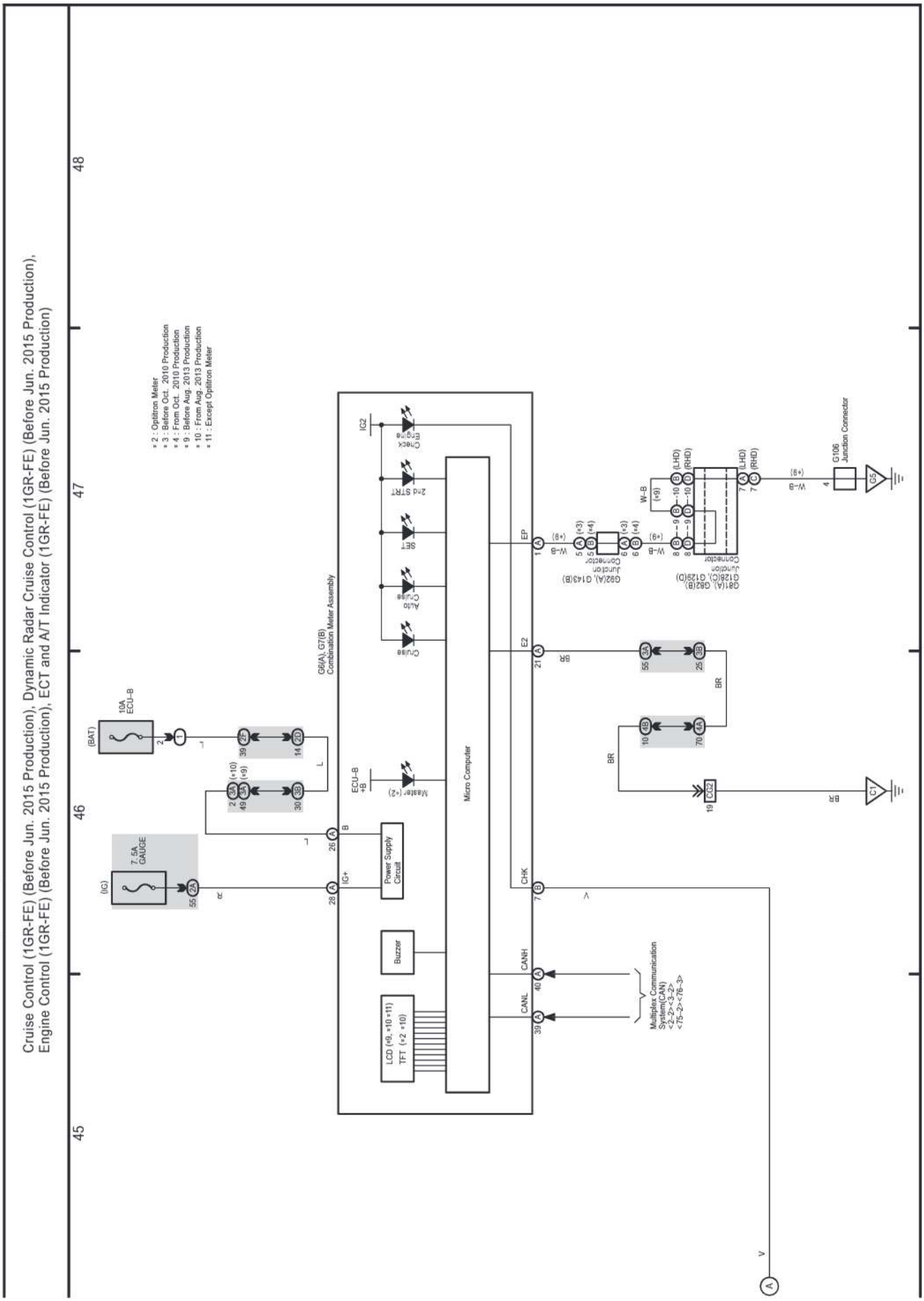

cardiagn.com

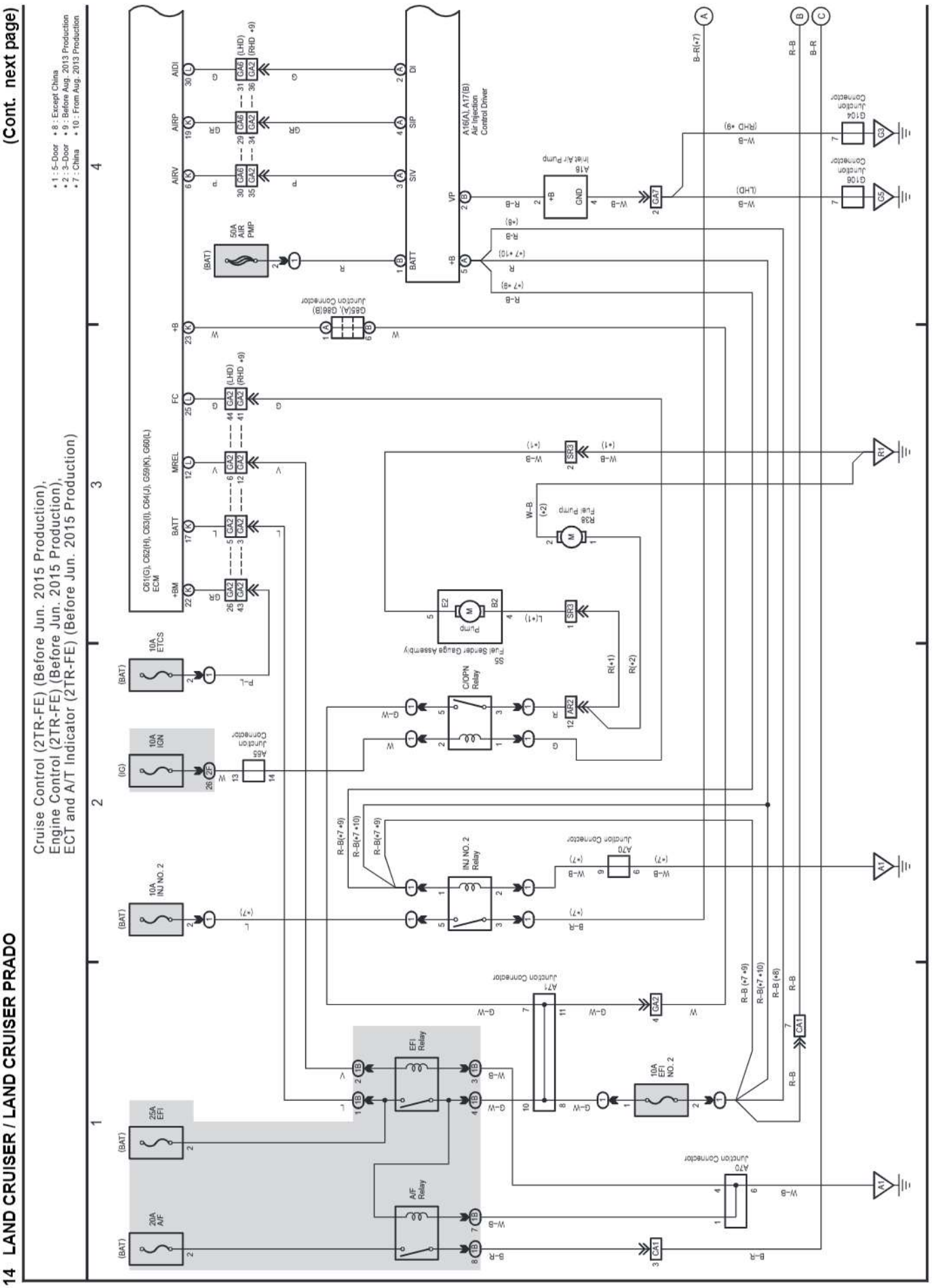

cardiagn.com

(Cont. next page)

Cruise Control (2TR-FE) (Before Jun. 2015 Production),
Engine Control (2TR-FE) (Before Jun. 2015 Production),
ECT and A/T Indicator (2TR-FE) (Before Jun. 2015 Production)

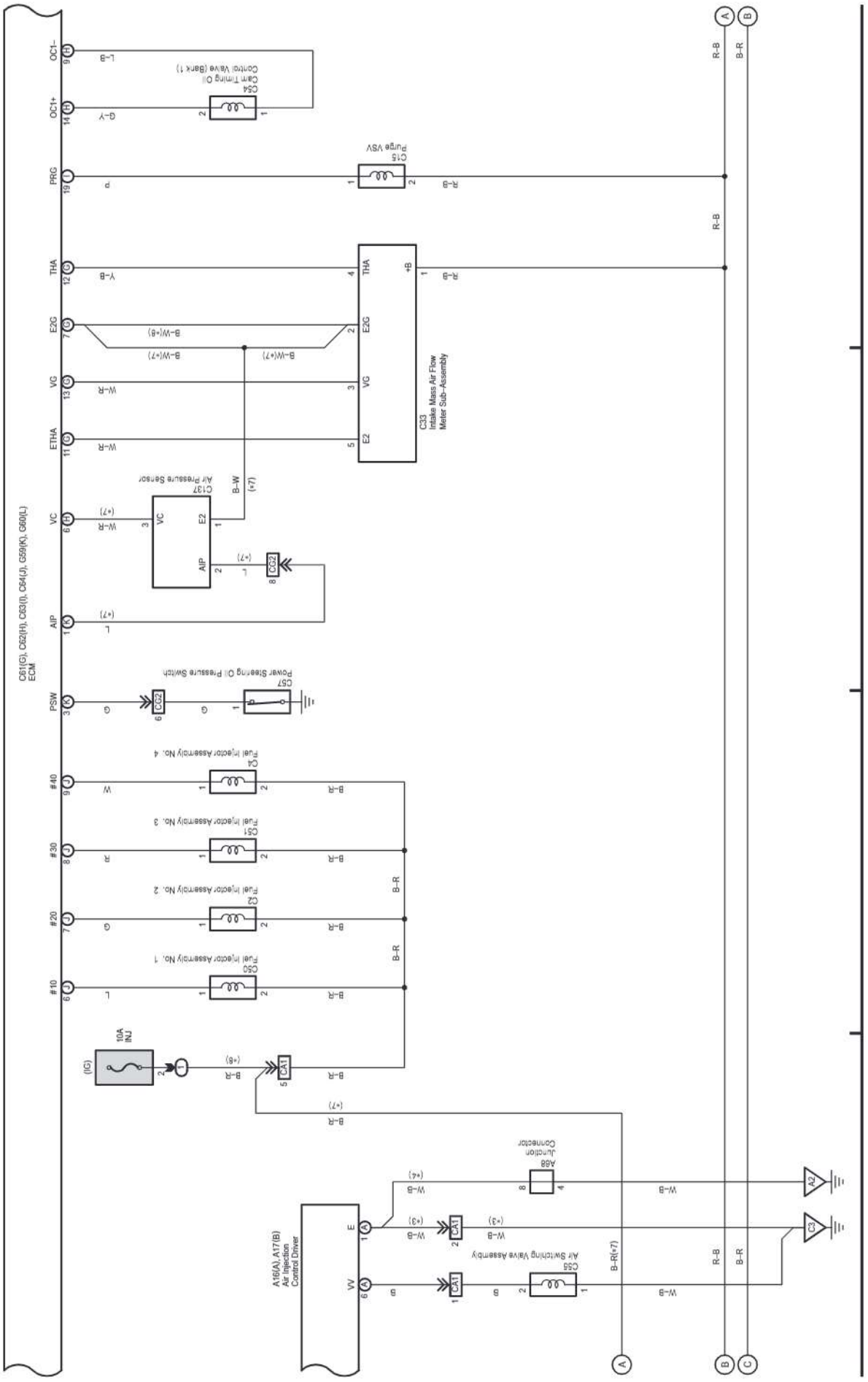

cardiagn.com

14 LAND CRUISER / LAND CRUISER PRADO (Cont'd)

(Cont. next page)

Cruise Control (2TR-FE) (Before Jun. 2015 Production),
Engine Control (2TR-FE) (Before Jun. 2015 Production),
ECT and A/T Indicator (2TR-FE) (Before Jun. 2015 Production)

*9 : Before Aug. 2013 Production
*10 : From Aug. 2013 Production

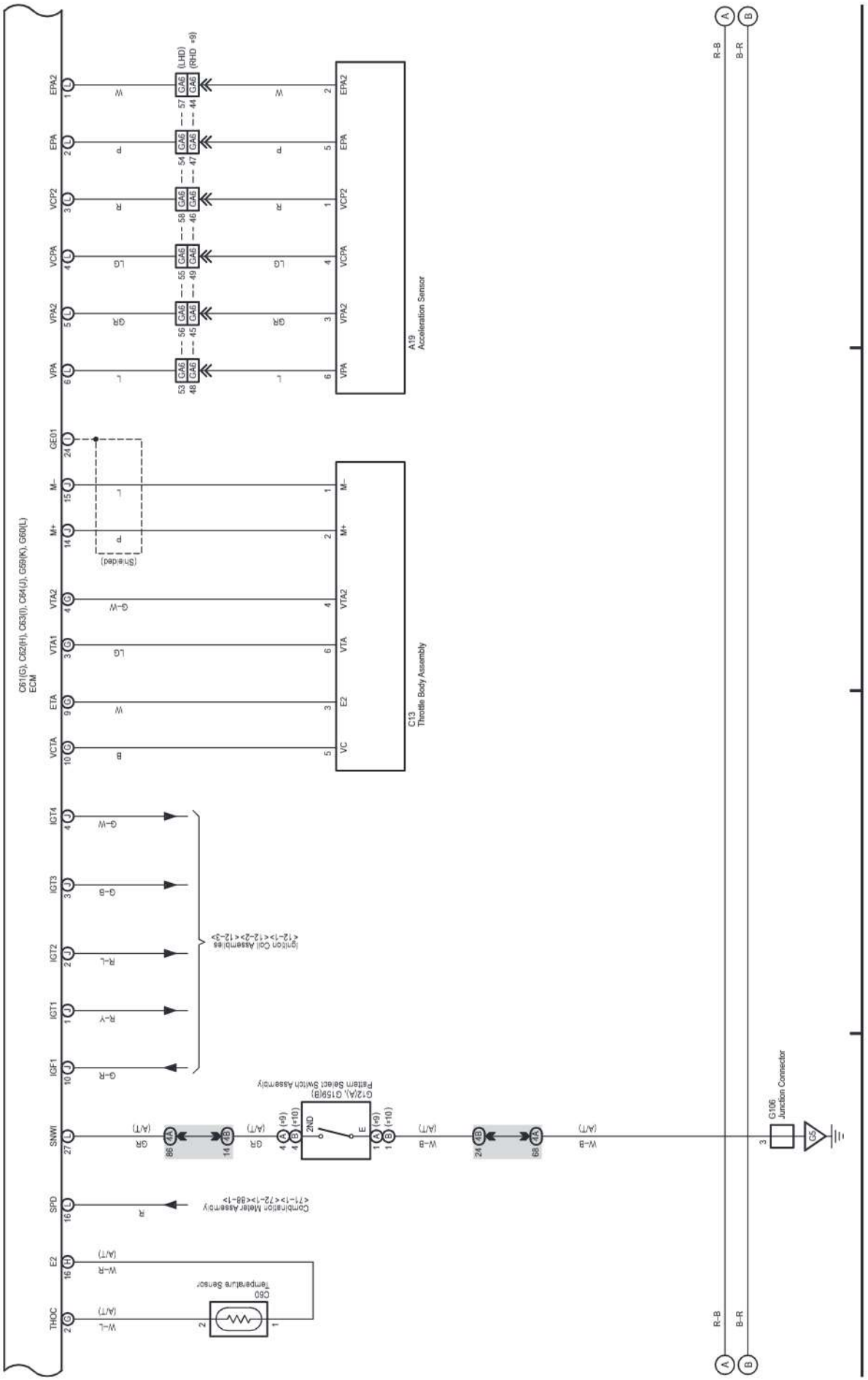

cardiagn.com

14 LAND CRUISER / LAND CRUISER PRADO (Cont'd)

(Cont. next page)

Cruise Control (2TR-FE) (Before Jun. 2015 Production),
Engine Control (2TR-FE) (Before Jun. 2015 Production),
ECT and A/T Indicator (2TR-FE) (Before Jun. 2015 Production)

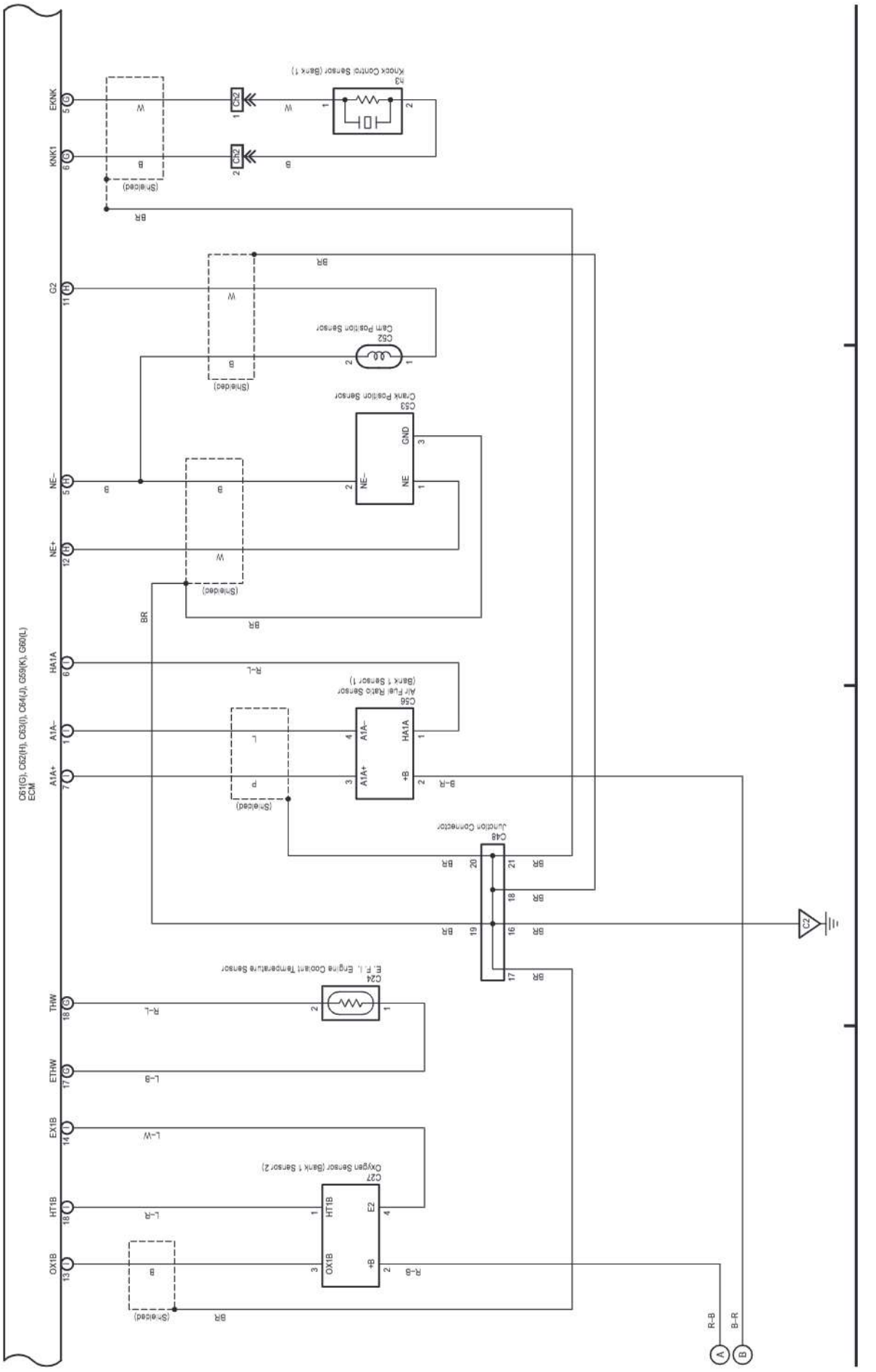

cardiagn.com

(Cont. next page)

Cruise Control (2TR-FE) (Before Jun. 2015 Production),
Engine Control (2TR-FE) (Before Jun. 2015 Production),
ECT and A/T Indicator (2TR-FE) (Before Jun. 2015 Production)

* 9 : Before Aug. 2013 Production
* 10 : From Aug. 2013 Production

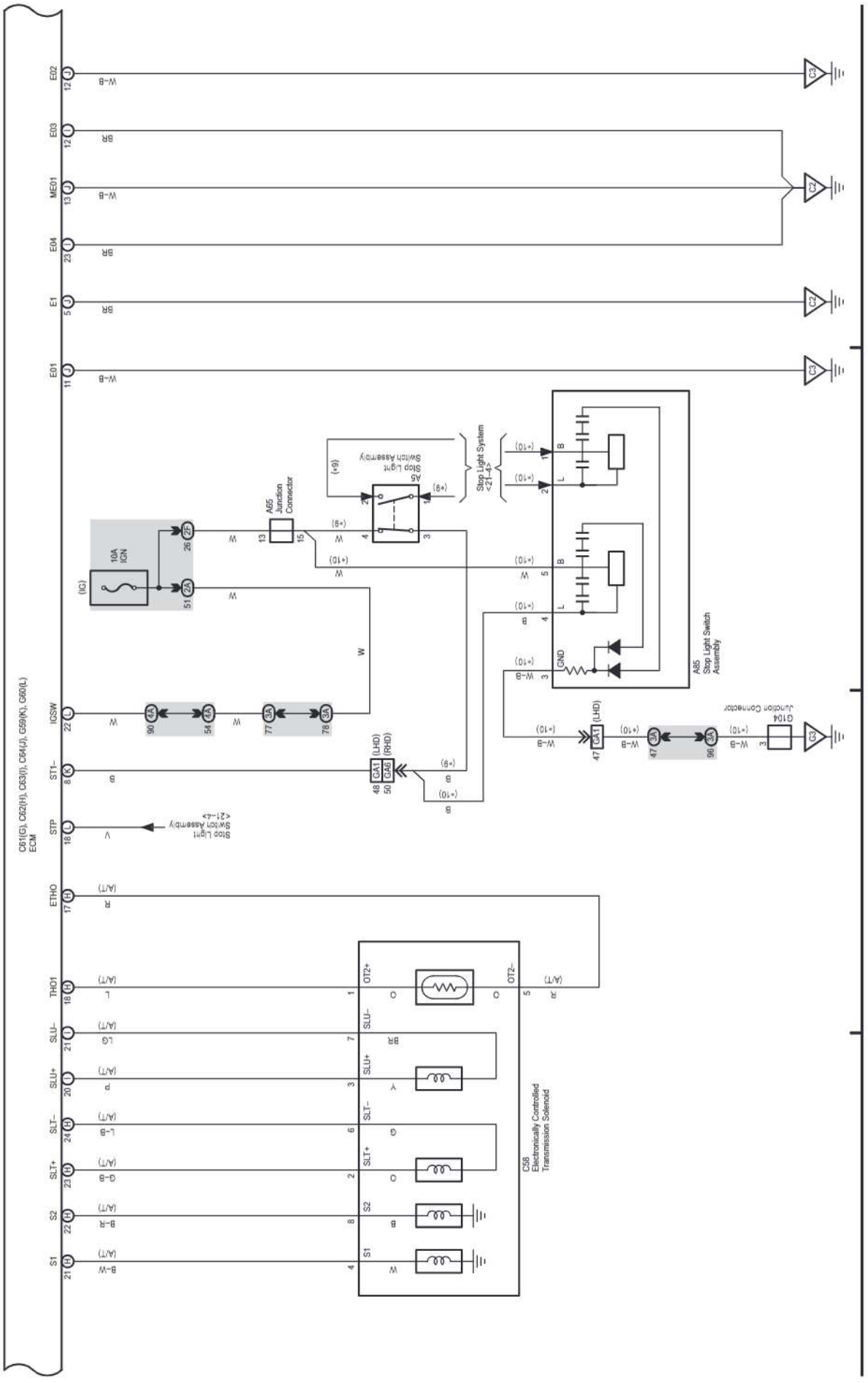

cardiagn.com

14 LAND CRUISER / LAND CRUISER PRADO (Cont'd)

(Cont. next page)

Cruise Control (2TR-FE) (Before Jun. 2015 Production),
Engine Control (2TR-FE) (Before Jun. 2015 Production),
ECT and A/T Indicator (2TR-FE) (Before Jun. 2015 Production)

*14 : w/ Entry & Start System
*15 : w/o Entry & Start System

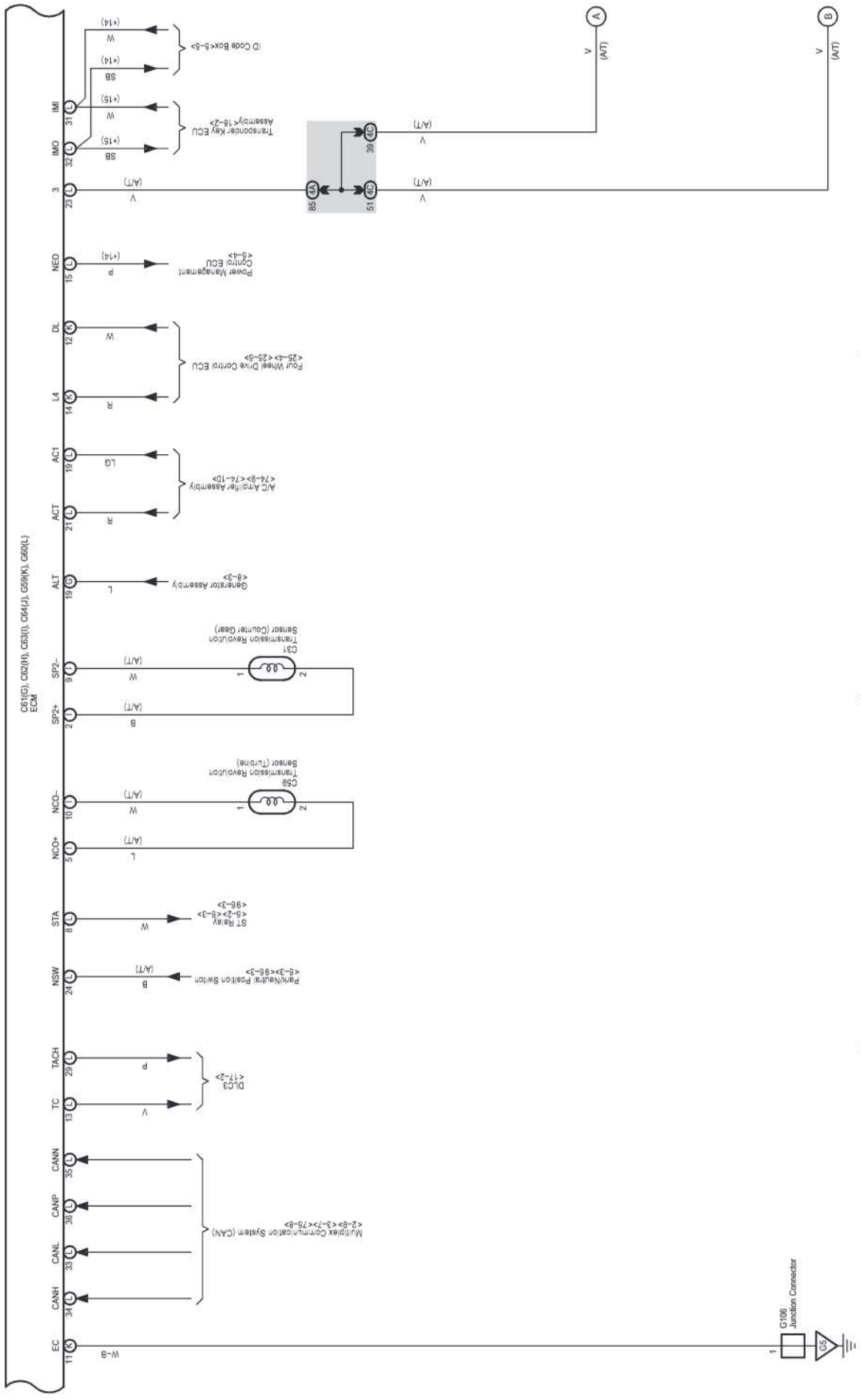

cardiagn.com

(Cont. next page)

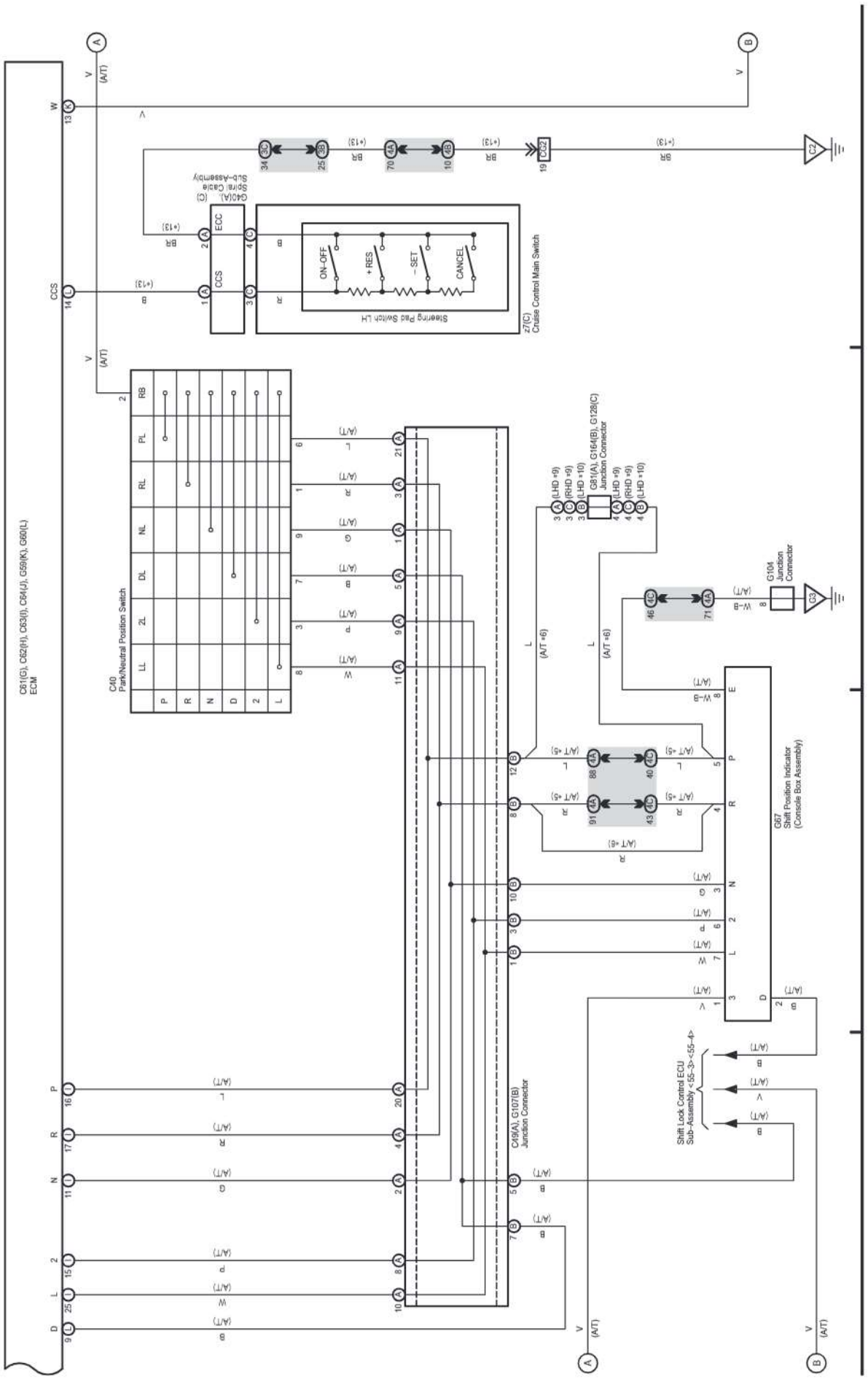

cardiagn.com

14 LAND CRUISER / LAND CRUISER PRADO (Cont'd)

Cruise Control (2TR-FE) (Before Jun. 2015 Production),
Engine Control (2TR-FE) (Before Jun. 2015 Production),
ECT and A/T Indicator (2TR-FE) (Before Jun. 2015 Production)

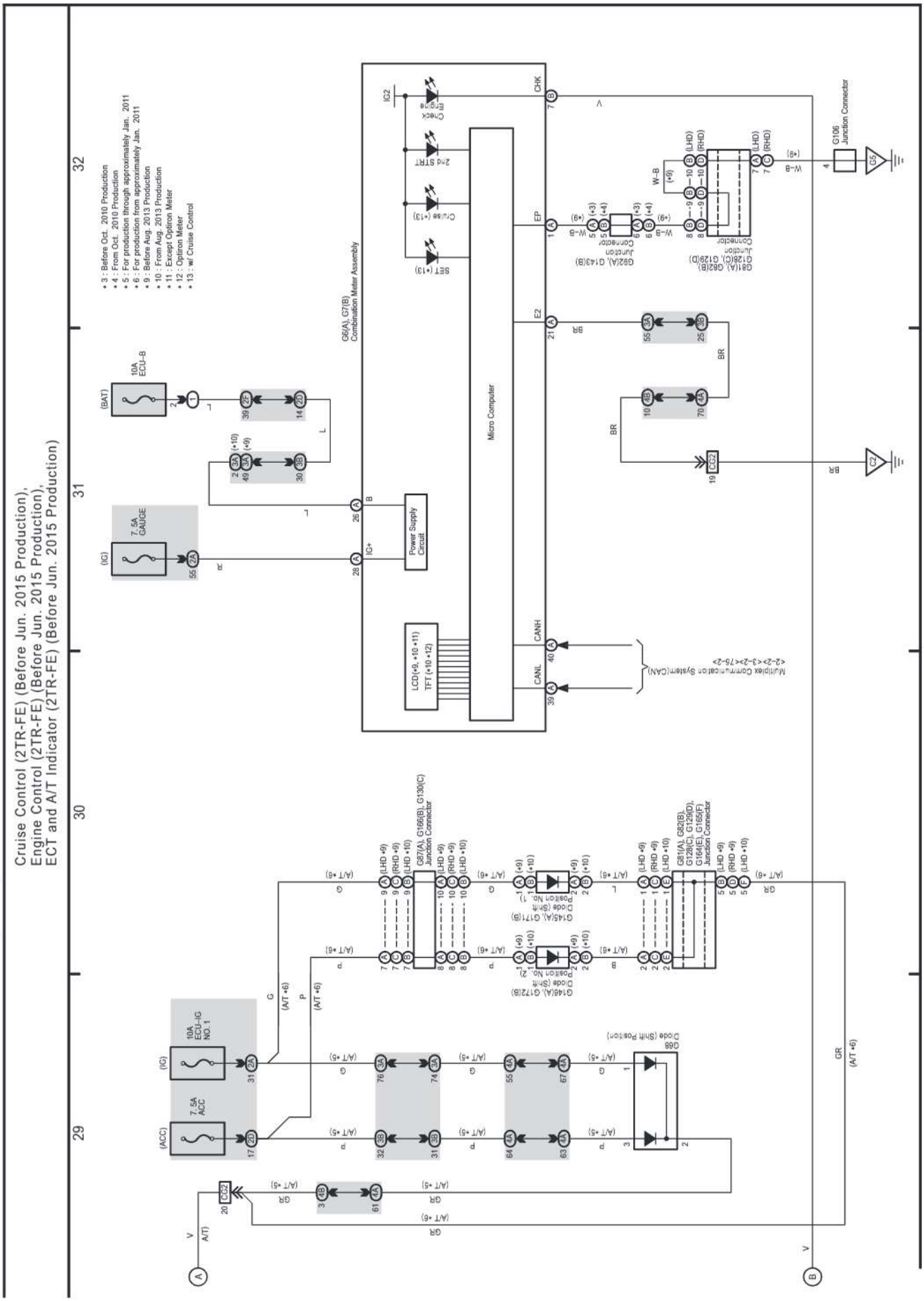

cardiagn.com

15 LAND CRUISER / LAND CRUISER PRADO

(Cont. next page)

Cruise Control (1KD-FTV) (Before Jun. 2015 Production), Dynamic Radar Cruise Control (1KD-FTV) (Before Jun. 2015 Production),
Engine Control (1KD-FTV) (Before Jun. 2015 Production), ECT and A/T Indicator (1KD-FTV) (Before Jun. 2015 Production)

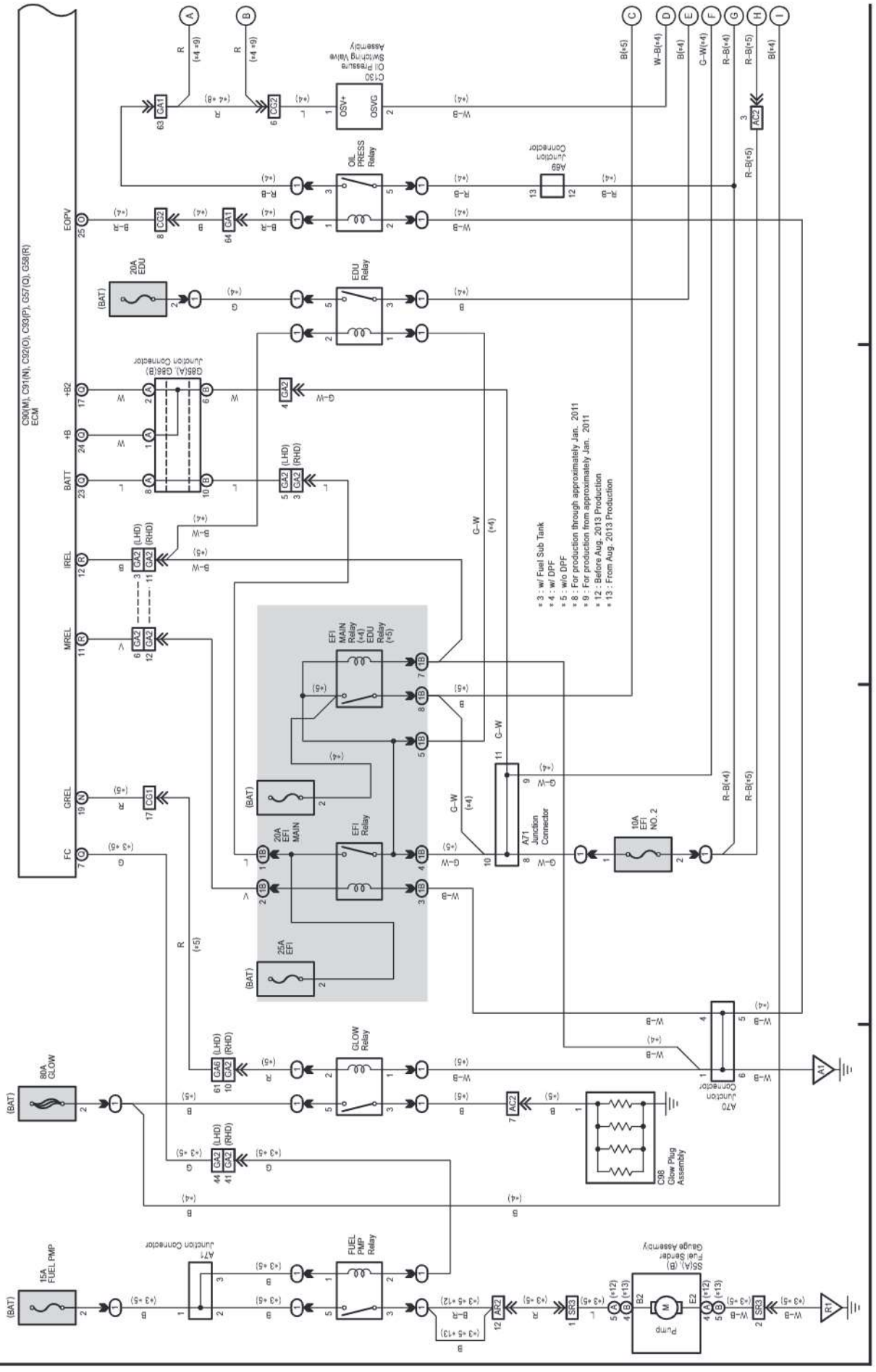

(Cont. next page)

Cruise Control (1KD-FTV) (Before Jun. 2015 Production), Dynamic Radar Cruise Control (1KD-FTV) (Before Jun. 2015 Production), Engine Control (1KD-FTV) (Before Jun. 2015 Production), ECT and A/T Indicator (1KD-FTV) (Before Jun. 2015 Production)

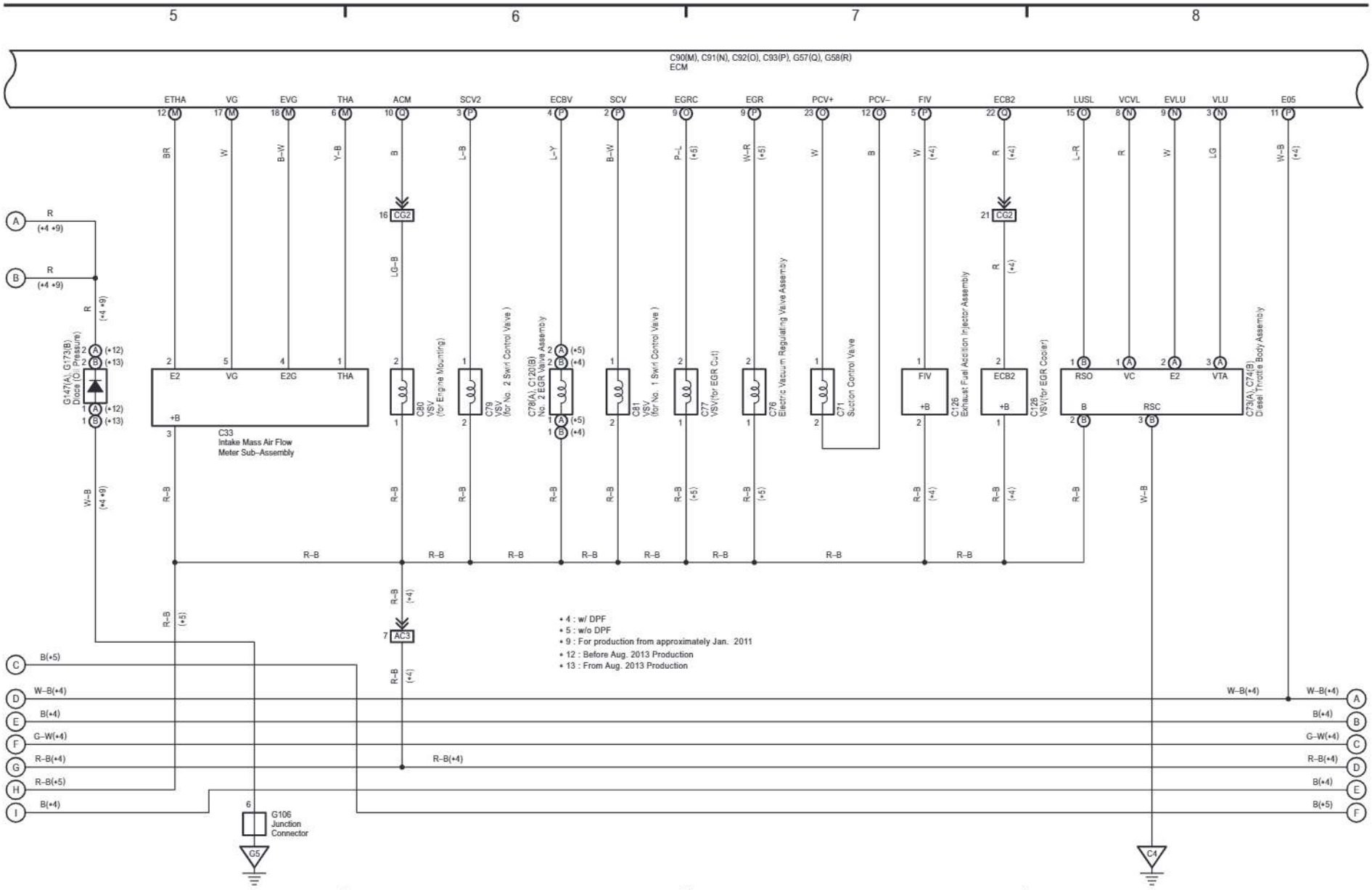

cardiagn.com

cardiagn.com

(Cont. next page)

Cruise Control (1KD-FTV) (Before Jun. 2015 Production), Dynamic Radar Cruise Control (1KD-FTV) (Before Jun. 2015 Production),
Engine Control (1KD-FTV) (Before Jun. 2015 Production), ECT and A/T Indicator (1KD-FTV) (Before Jun. 2015 Production)

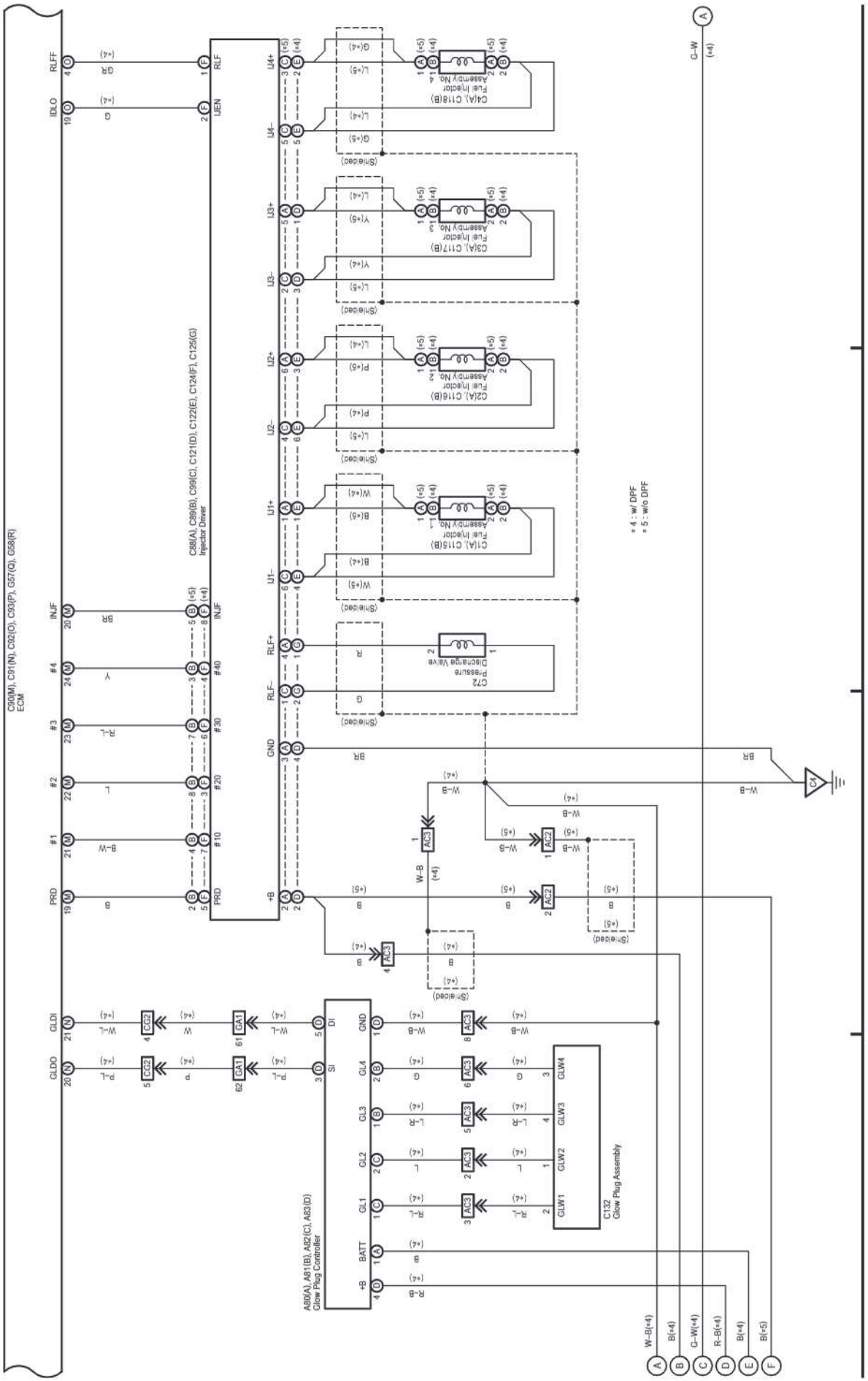

cardiagn.com

15 LAND CRUISER / LAND CRUISER PRADO (Cont'd)

(Cont. next page)

Cruise Control (1KD-FTV) (Before Jun. 2015 Production), Dynamic Radar Cruise Control (1KD-FTV) (Before Jun. 2015 Production),
Engine Control (1KD-FTV) (Before Jun. 2015 Production), ECT and A/T Indicator (1KD-FTV) (Before Jun. 2015 Production)

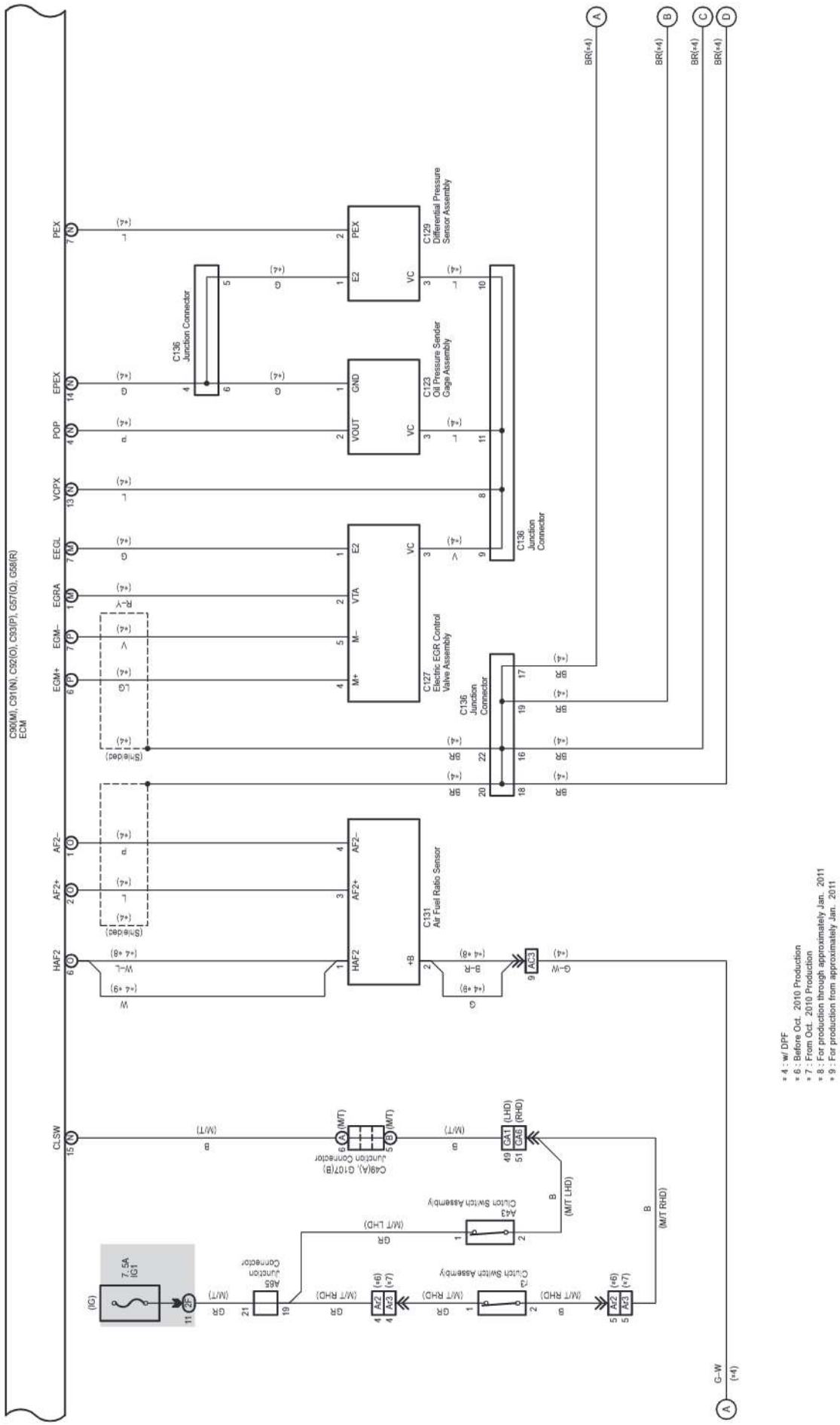

cardiagn.com

15 LAND CRUISER / LAND CRUISER PRADO (Cont'd)

(Cont. next page)

Cruise Control (1KD-FTV) (Before Jun. 2015 Production), Dynamic Radar Cruise Control (1KD-FTV) (Before Jun. 2015 Production),
Engine Control (1KD-FTV) (Before Jun. 2015 Production), ECT and A/T Indicator (1KD-FTV) (Before Jun. 2015 Production)

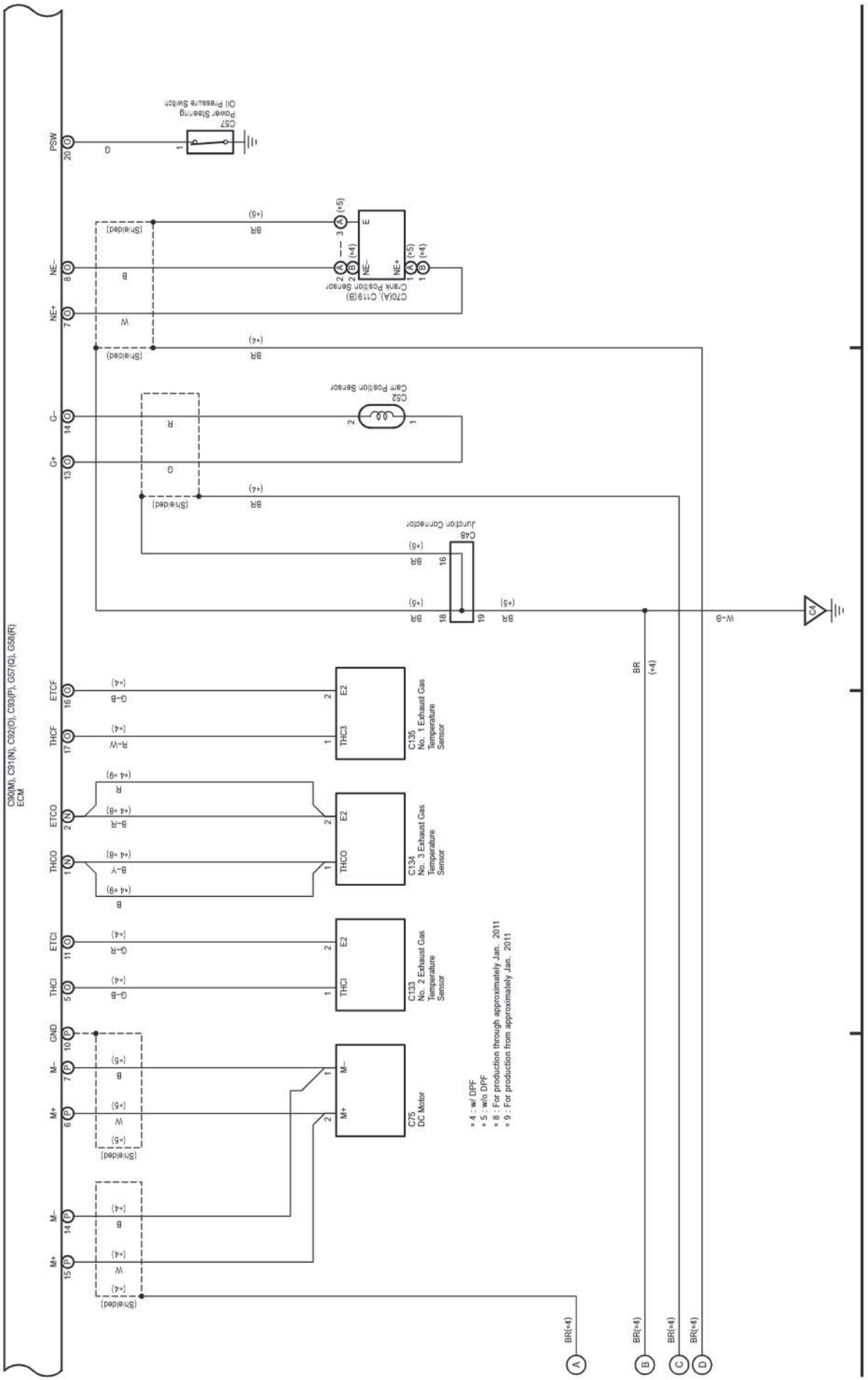

(Cont. next page)

Cruise Control (1KD-FTV) (Before Jun. 2015 Production), Dynamic Radar Cruise Control (1KD-FTV) (Before Jun. 2015 Production), Engine Control (1KD-FTV) (Before Jun. 2015 Production), ECT and A/T Indicator (1KD-FTV) (Before Jun. 2015 Production)

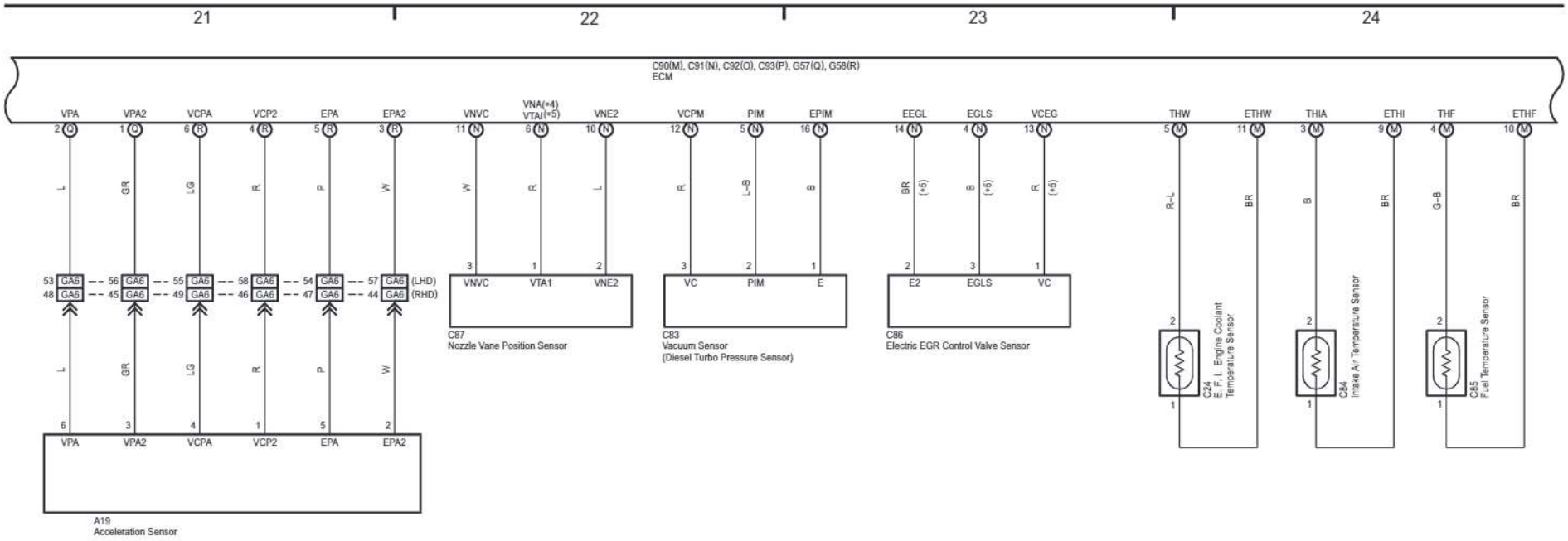

cardiagn.com

cardiagn.com

(Cont. next page)

Cruise Control (1KD-FTV) (Before Jun. 2015 Production), Dynamic Radar Cruise Control (1KD-FTV) (Before Jun. 2015 Production),
Engine Control (1KD-FTV) (Before Jun. 2015 Production), ECT and A/T Indicator (1KD-FTV) (Before Jun. 2015 Production)

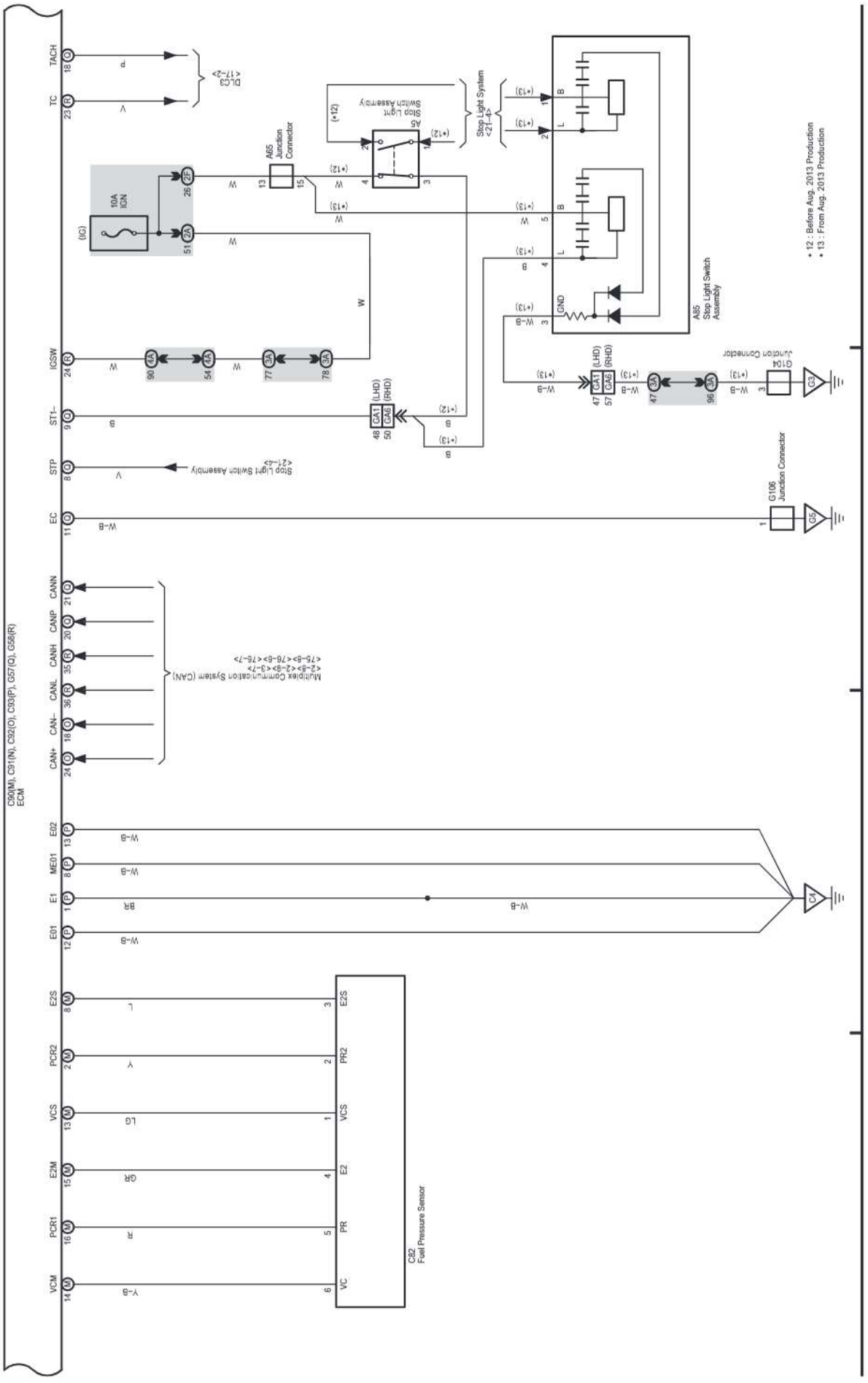

cardiagn.com

(Cont. next page)

Cruise Control (1KD-FTV) (Before Jun. 2015 Production), Dynamic Radar Cruise Control (1KD-FTV) (Before Jun. 2015 Production),
Engine Control (1KD-FTV) (Before Jun. 2015 Production), ECT and A/T Indicator (1KD-FTV) (Before Jun. 2015 Production)

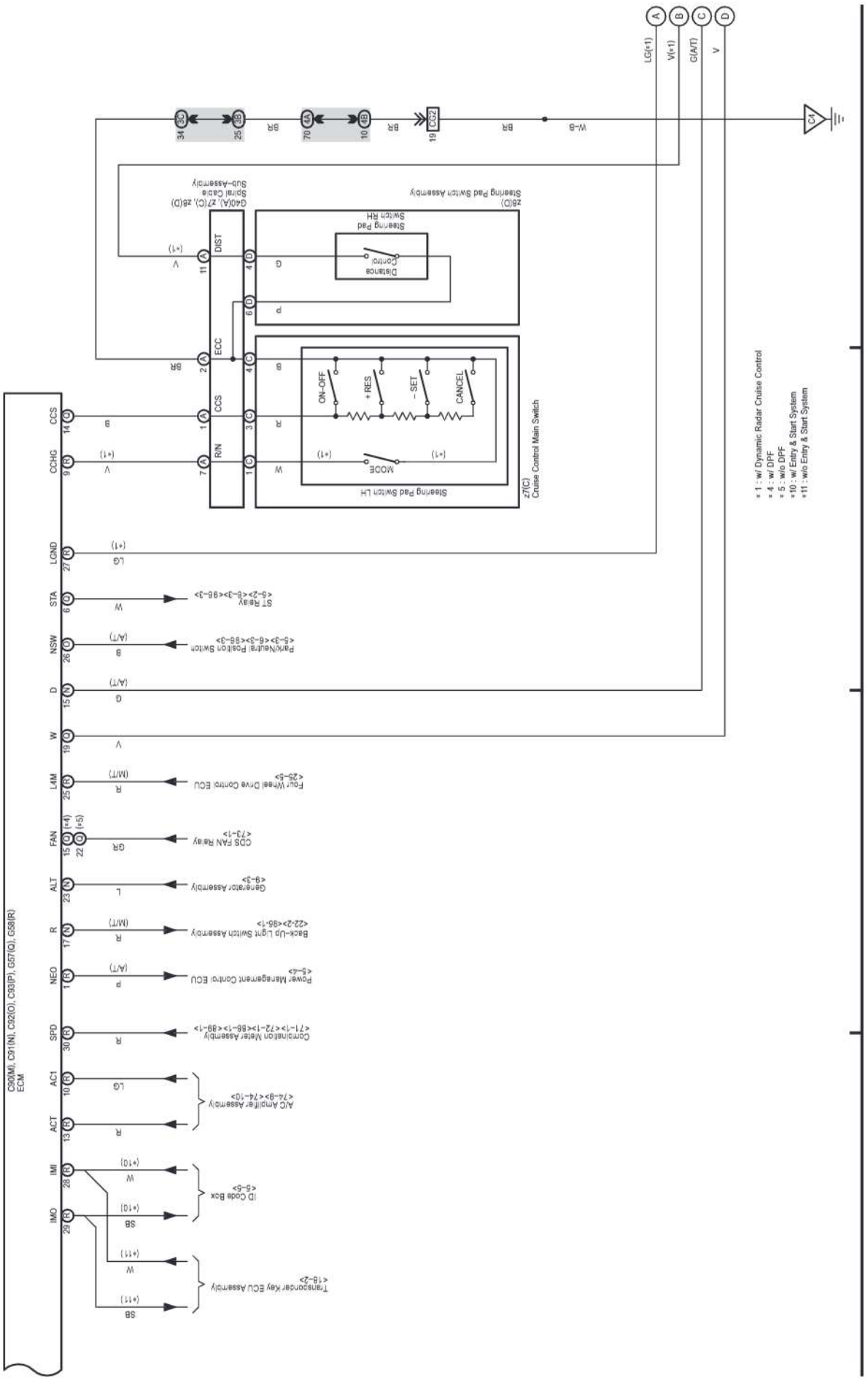

cardiagn.com

(Cont. next page)

Cruise Control (1KD-FTV) (Before Jun. 2015 Production), Dynamic Radar Cruise Control (1KD-FTV) (Before Jun. 2015 Production),
Engine Control (1KD-FTV) (Before Jun. 2015 Production), ECT and A/T Indicator (1KD-FTV) (Before Jun. 2015 Production)

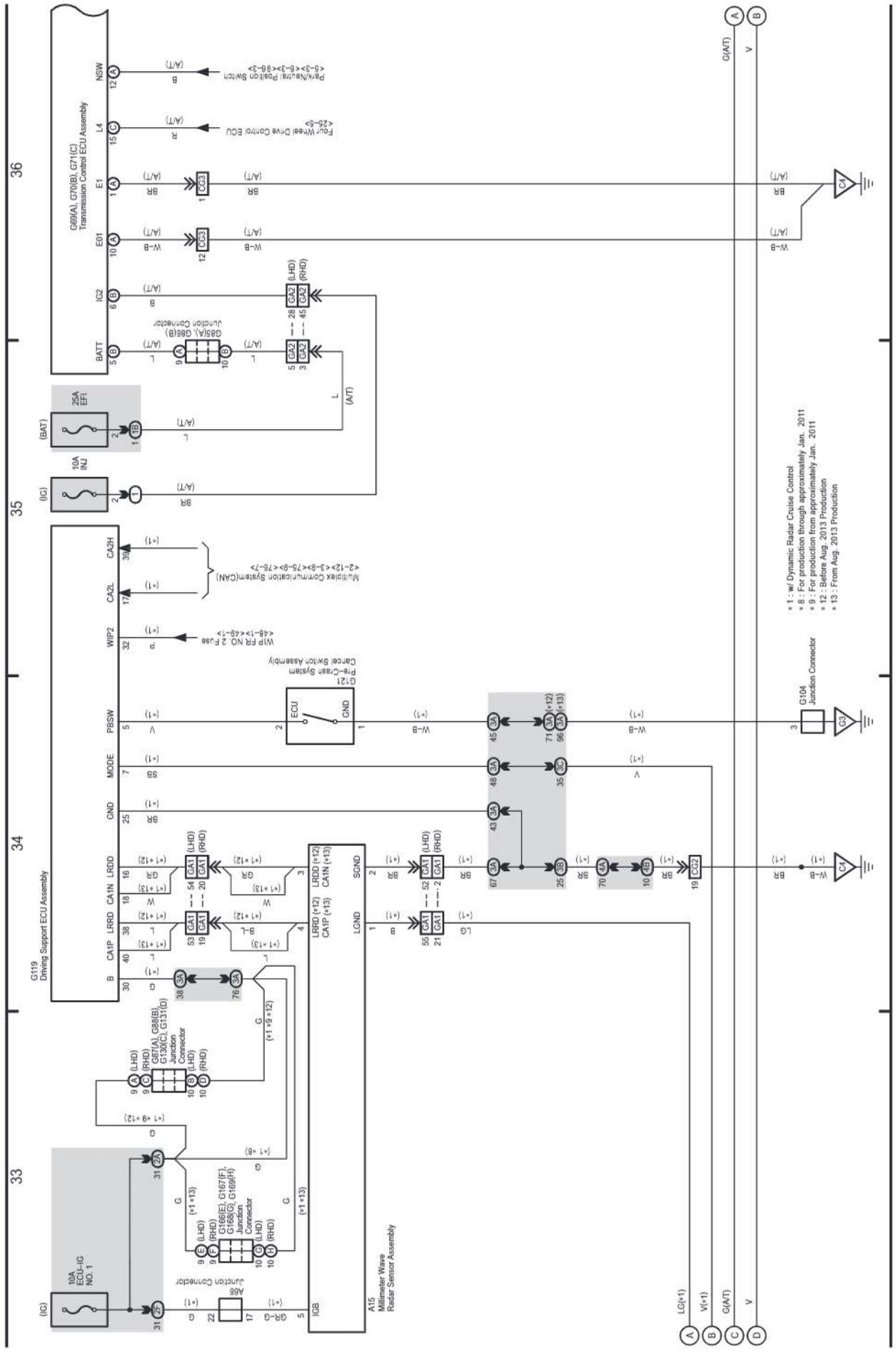

cardiagn.com

(Cont. next page)

Cruise Control (1KD-FTV) (Before Jun. 2015 Production), Dynamic Radar Cruise Control (1KD-FTV) (Before Jun. 2015 Production),
Engine Control (1KD-FTV) (Before Jun. 2015 Production), ECT and A/T Indicator (1KD-FTV) (Before Jun. 2015 Production)

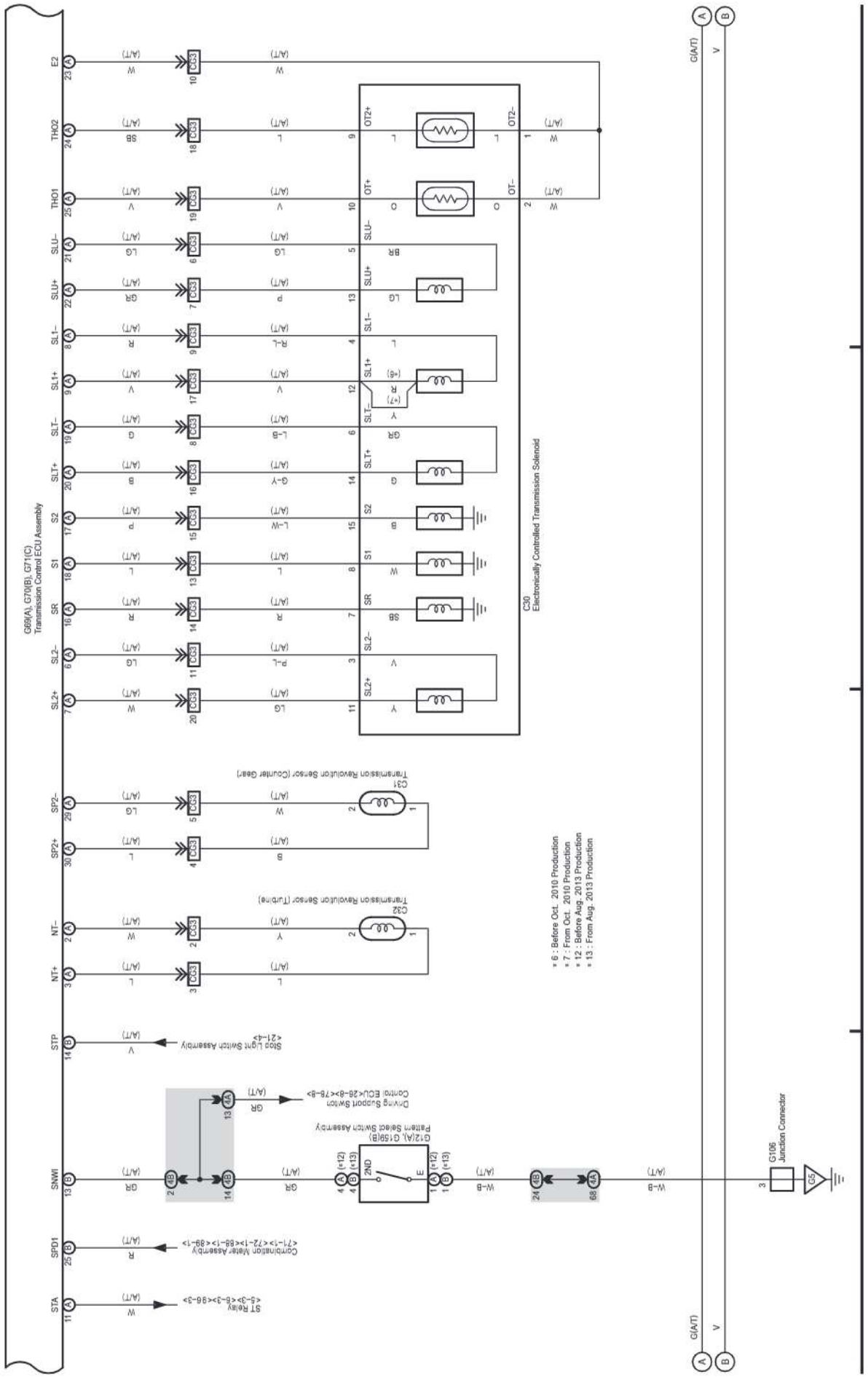

cardiagn.com

(Cont. next page)

Cruise Control (1KD-FTV) (Before Jun. 2015 Production), Dynamic Radar Cruise Control (1KD-FTV) (Before Jun. 2015 Production),
Engine Control (1KD-FTV) (Before Jun. 2015 Production), ECT and A/T Indicator (1KD-FTV) (Before Jun. 2015 Production)

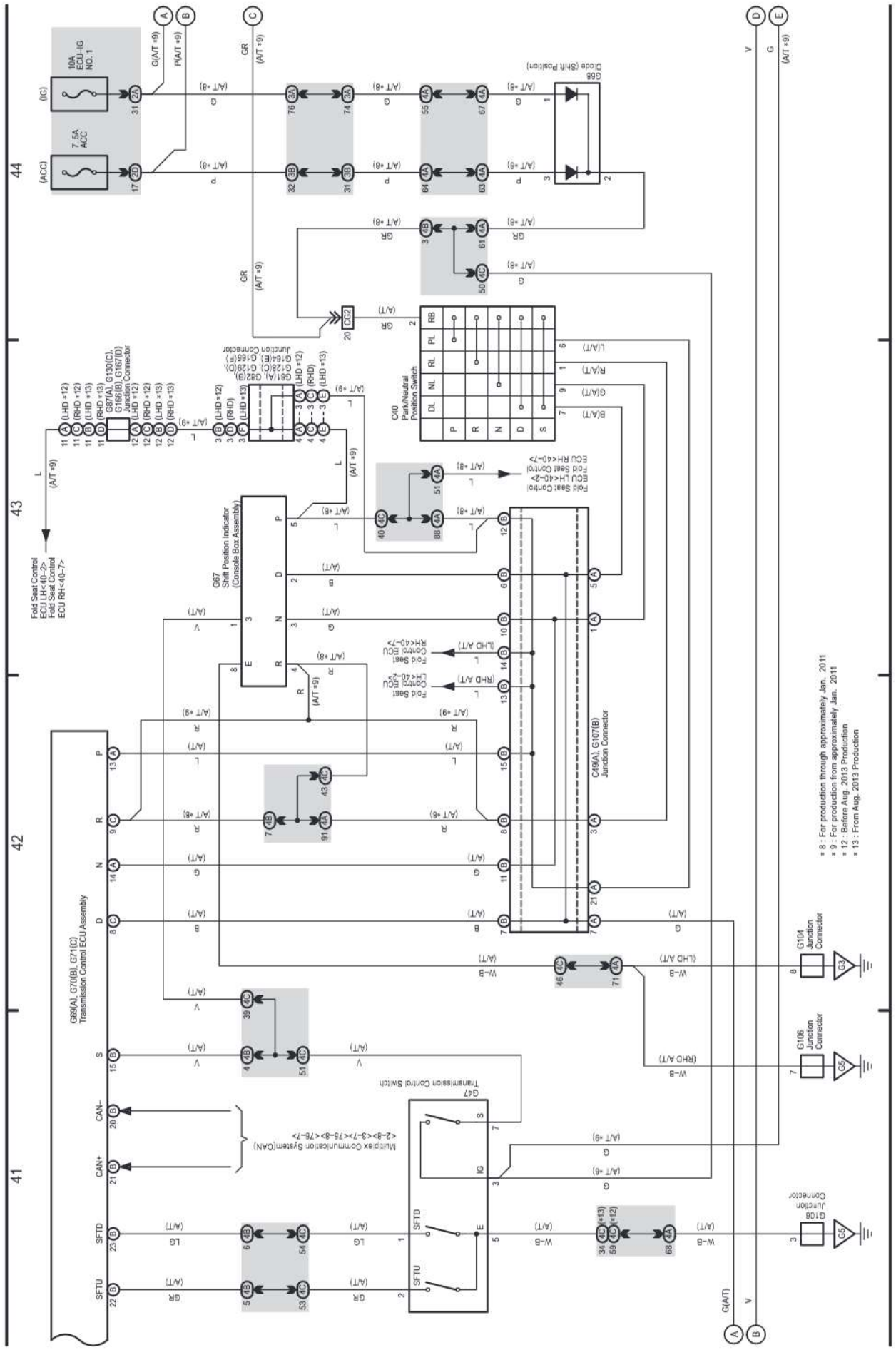

cardiagn.com

15 LAND CRUISER / LAND CRUISER PRADO (Cont'd)

Cruise Control (1KD-FTV) (Before Jun. 2015 Production), Dynamic Radar Cruise Control (1KD-FTV) (Before Jun. 2015 Production),
Engine Control (1KD-FTV) (Before Jun. 2015 Production), ECT and A/T Indicator (1KD-FTV) (Before Jun. 2015 Production)

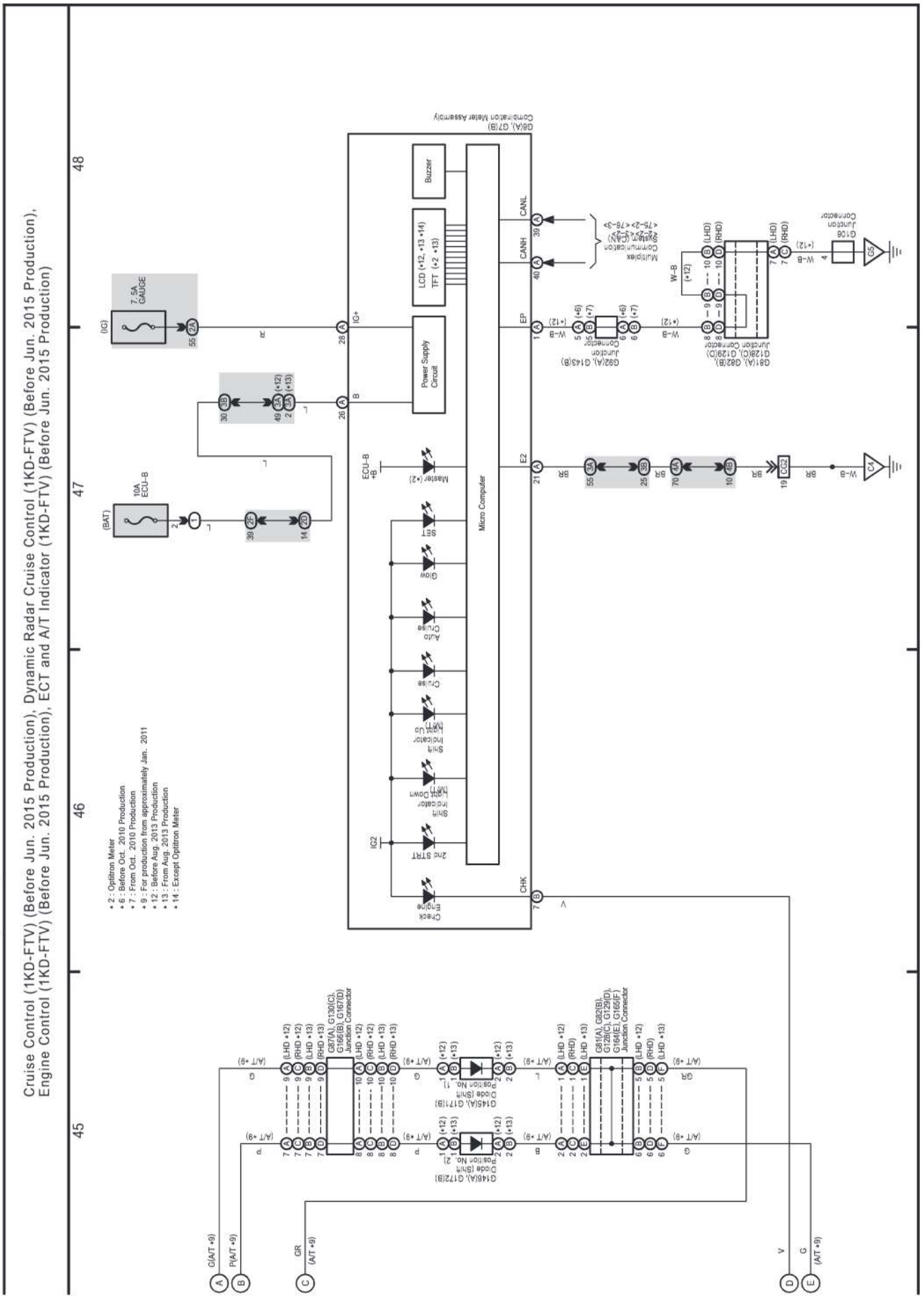

cardiagn.com

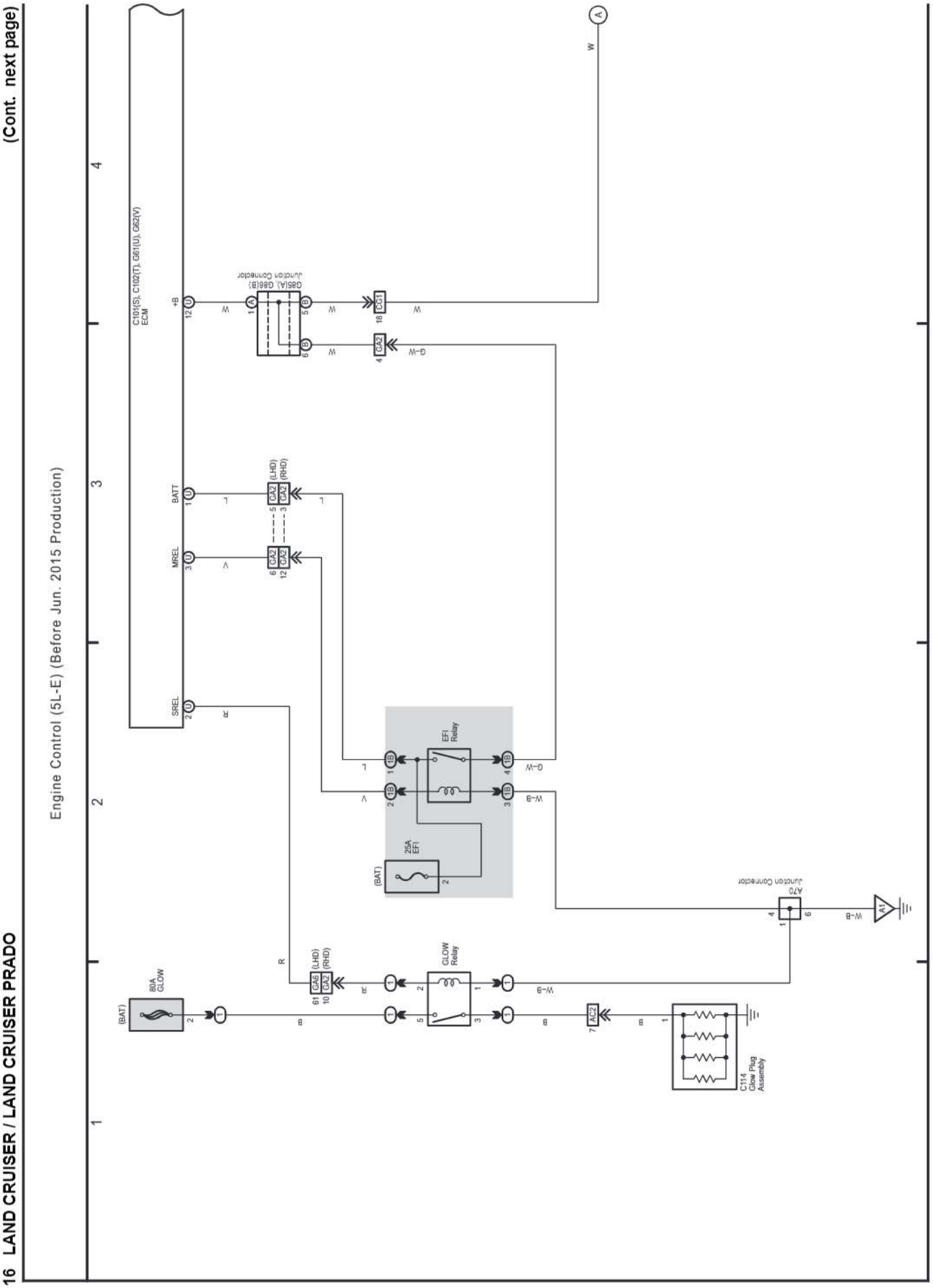

cardiagn.com

(Cont. next page)

Engine Control (5L-E) (Before Jun. 2015 Production)

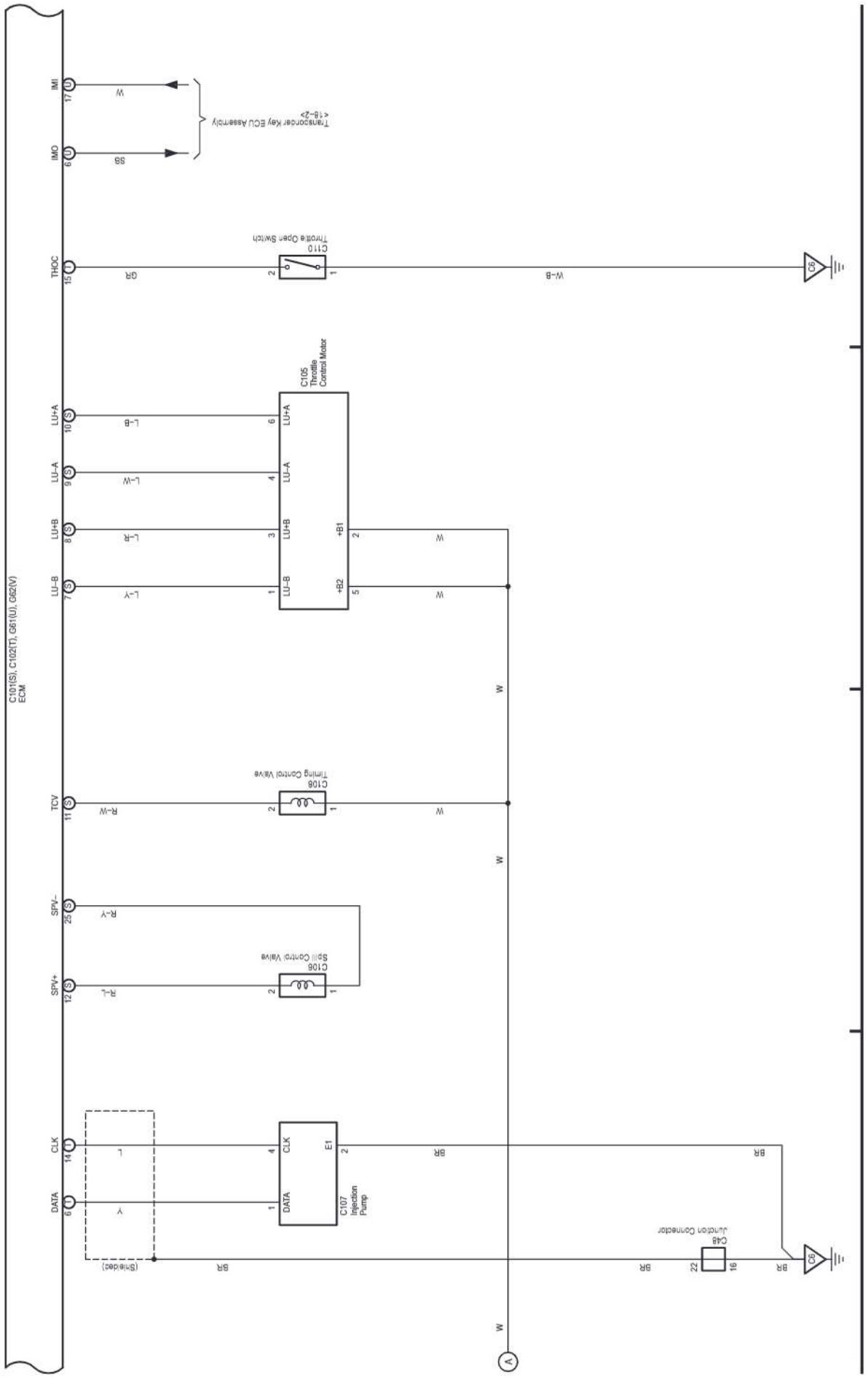

cardiagn.com

(Cont. next page)

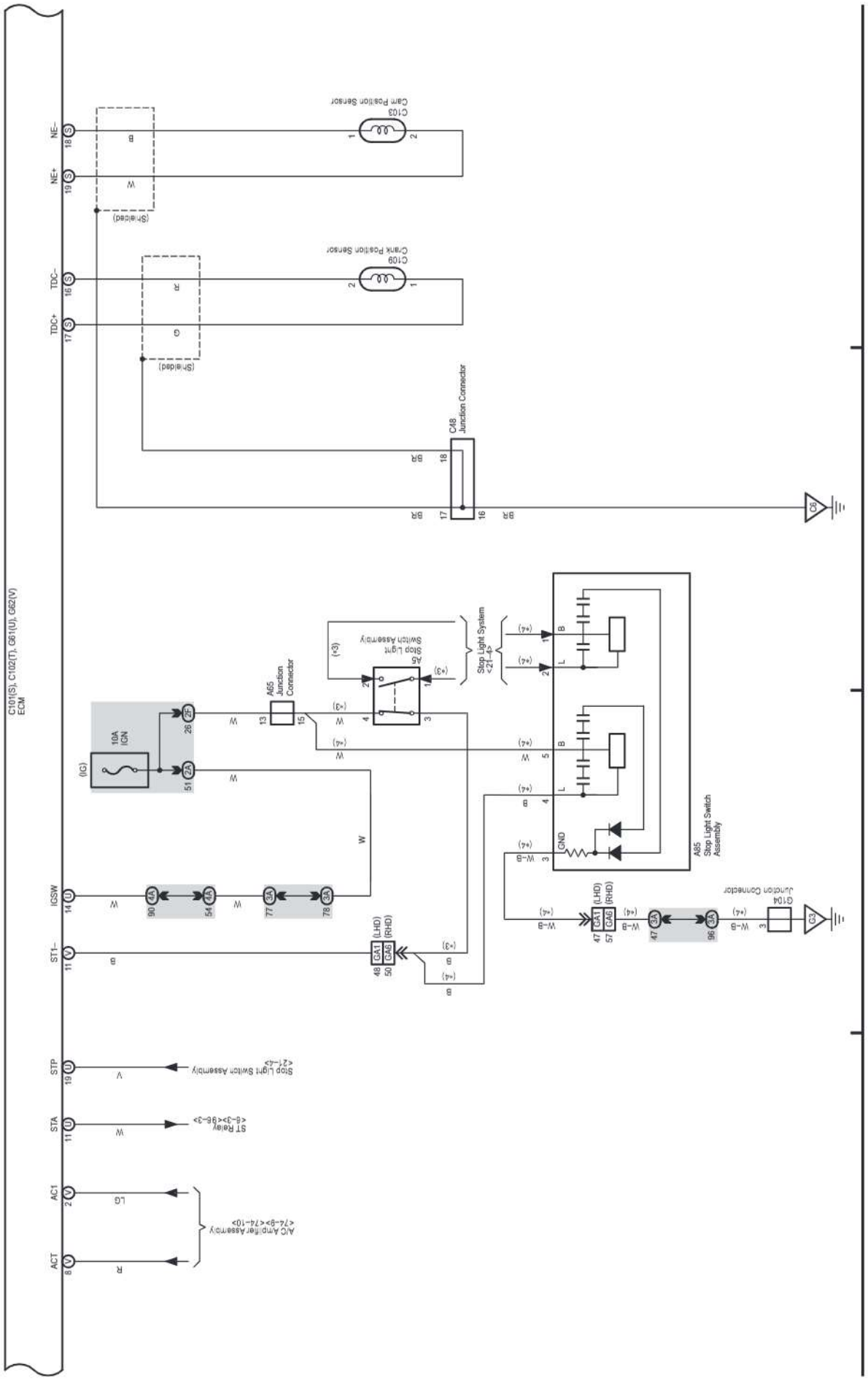

(Cont. next page)

Engine Control (5L-E) (Before Jun. 2015 Production)

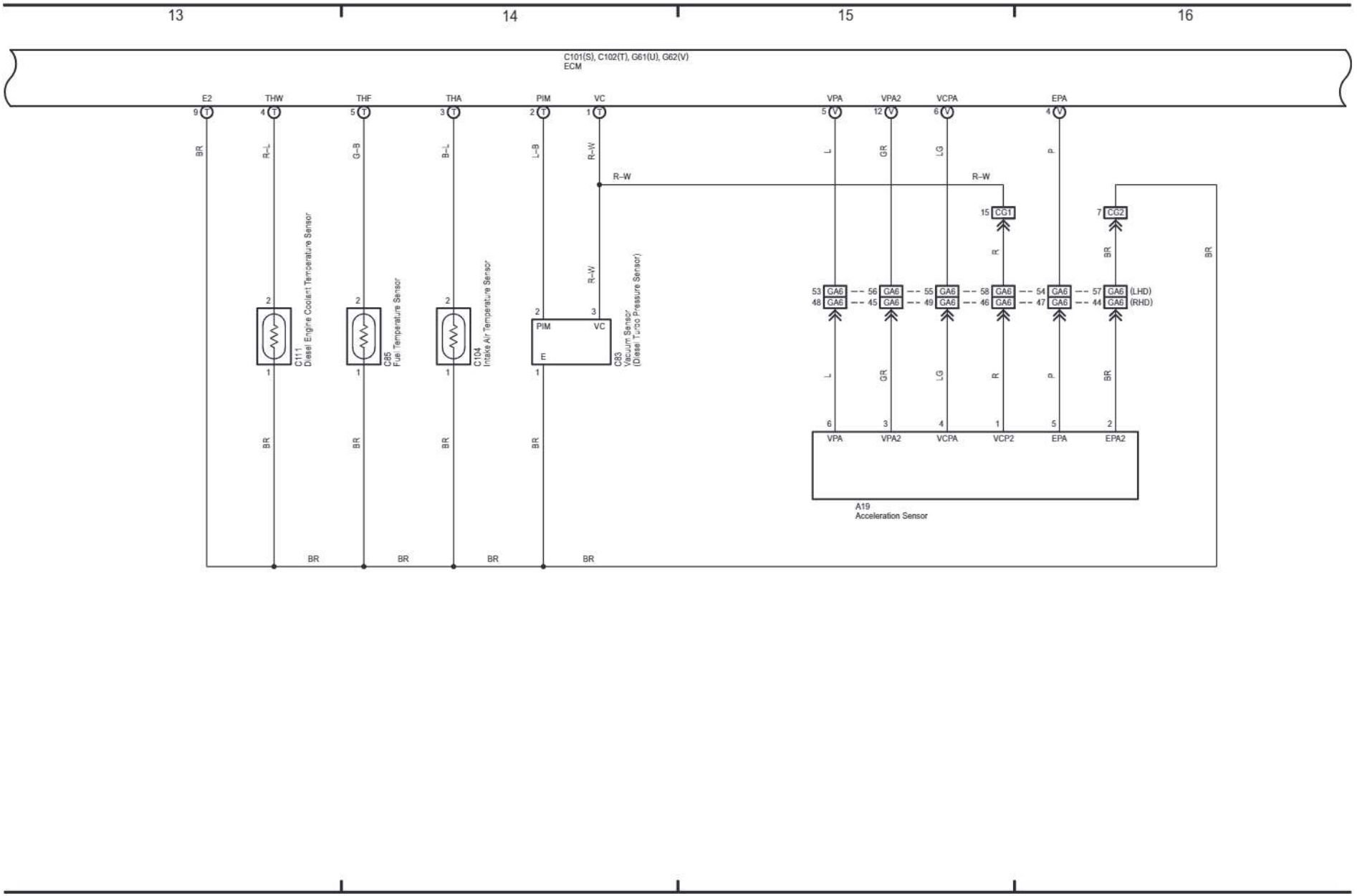

cardiagn.com

cardiagn.com

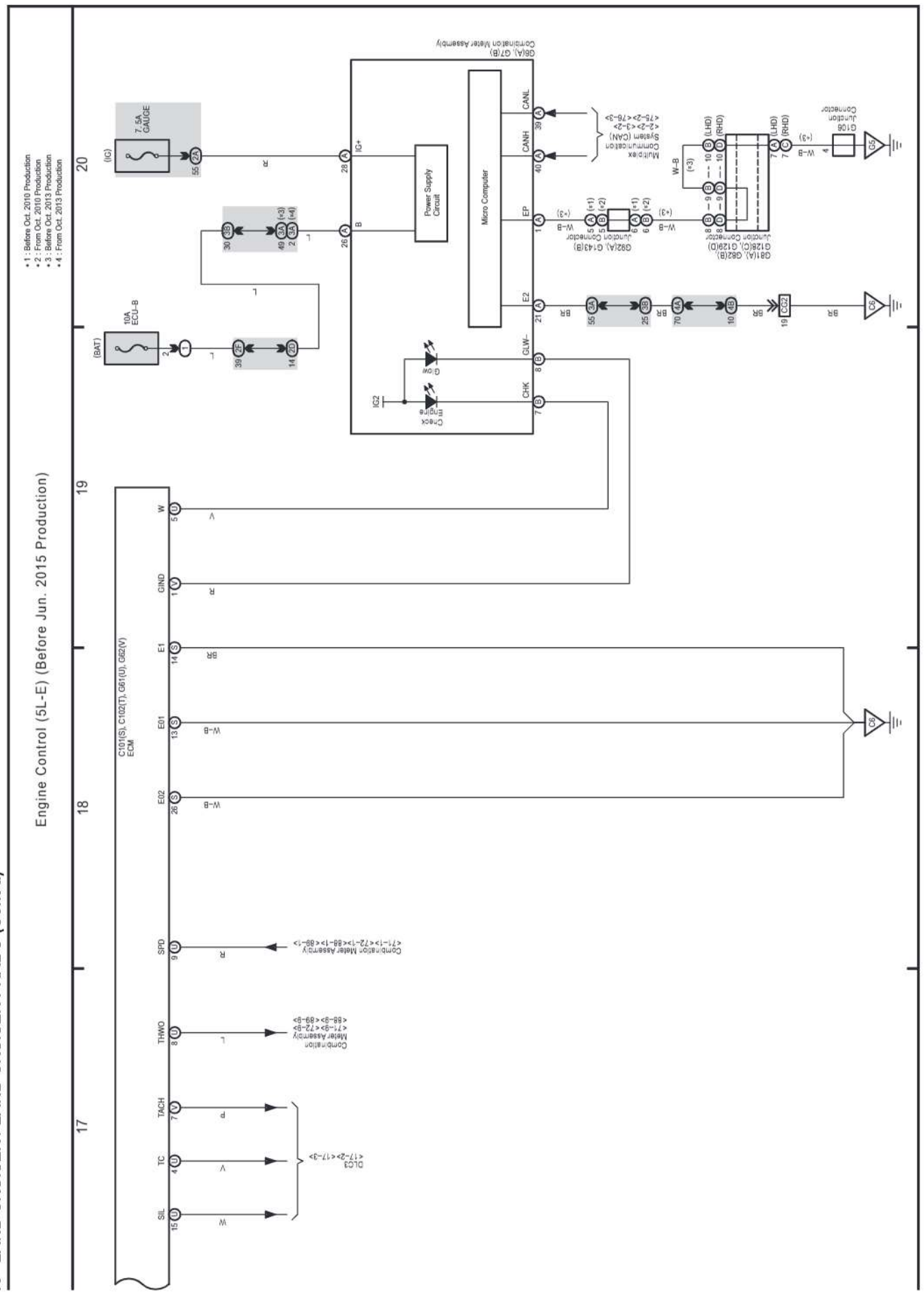

cardiagn.com

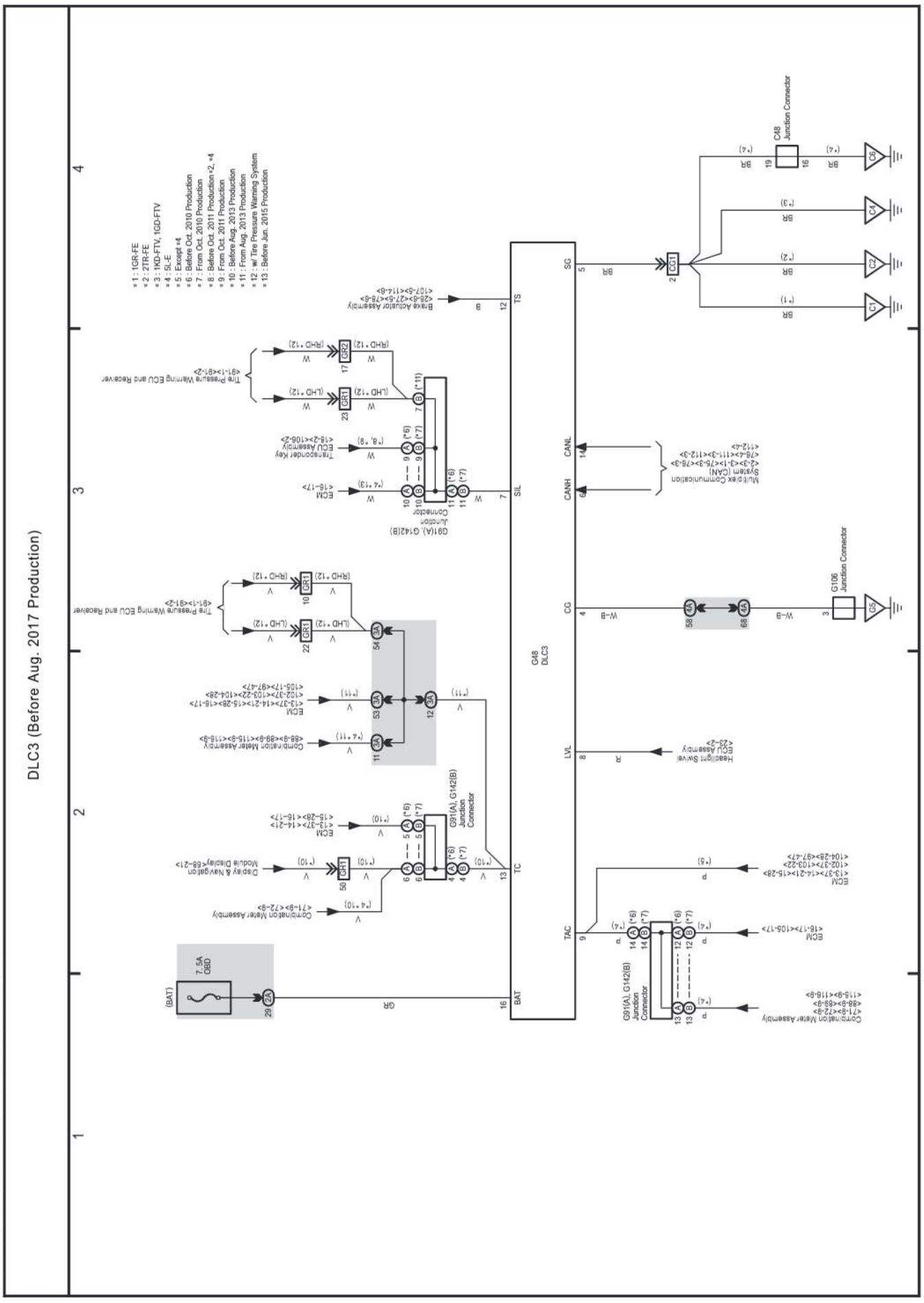

cardiagn.com

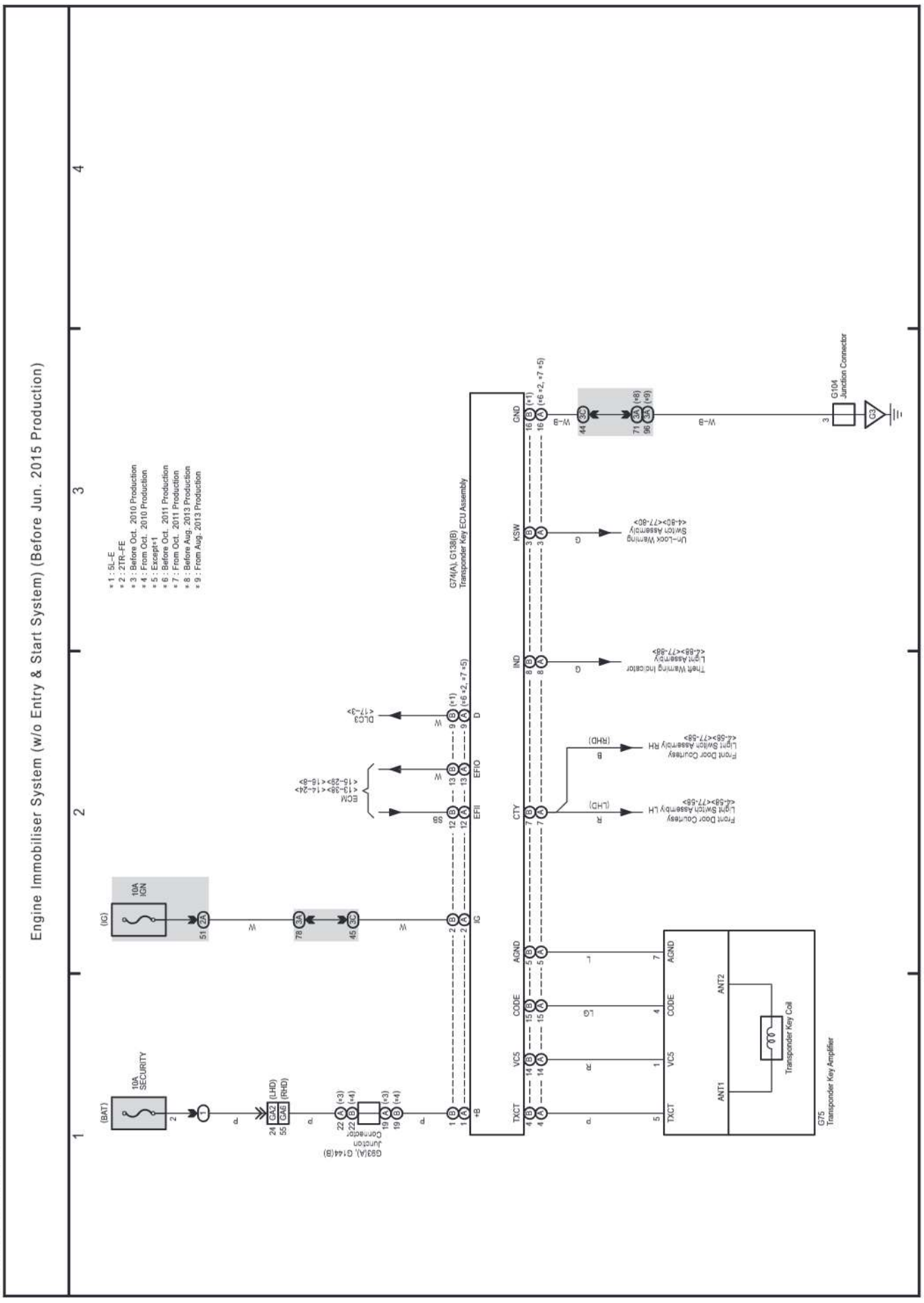

cardiagn.com

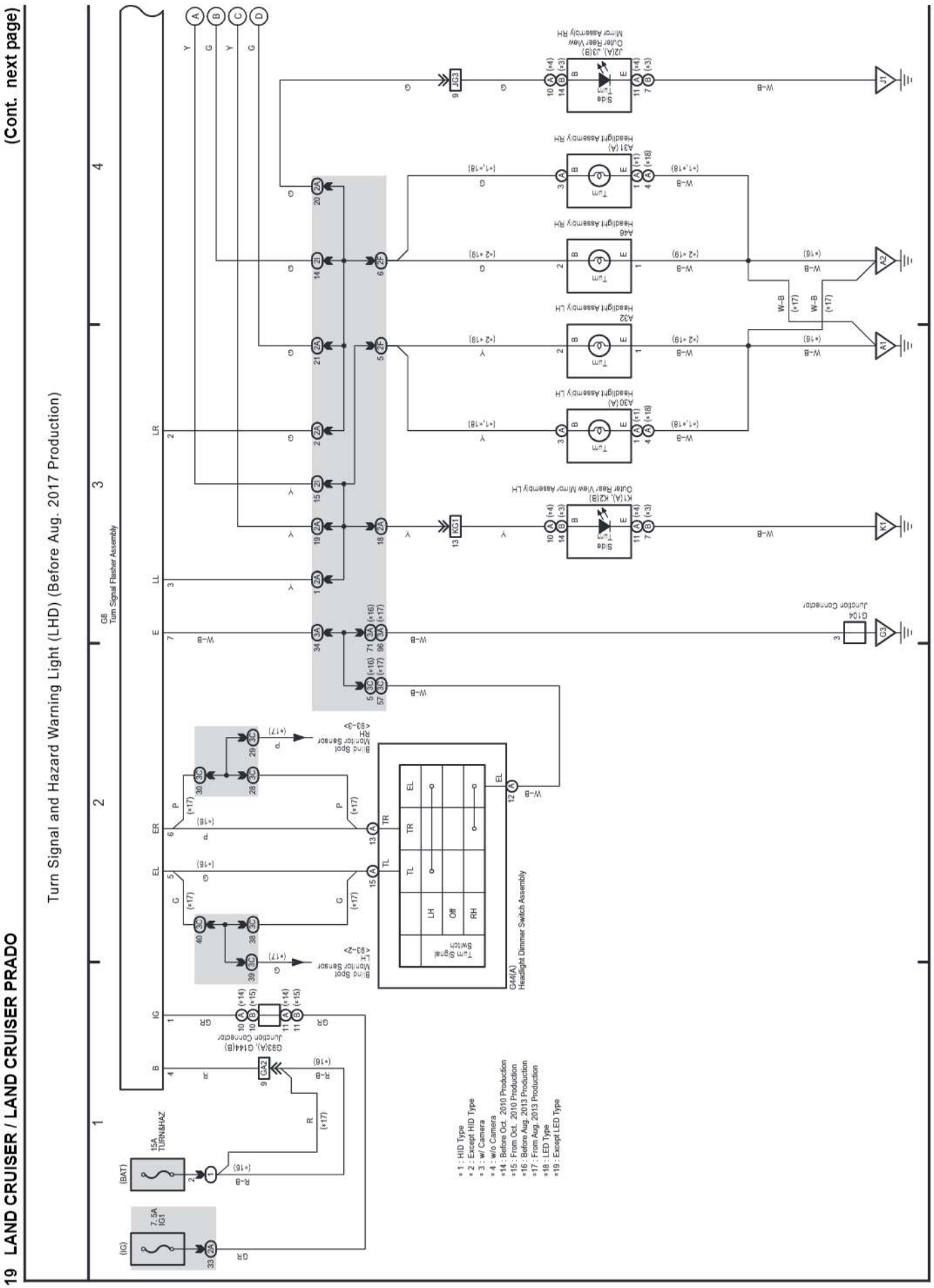

cardiagn.com

19 LAND CRUISER / LAND CRUISER PRADO (Cont'd)

Turn Signal and Hazard Warning Light (LHD) (Before Aug. 2017 Production)

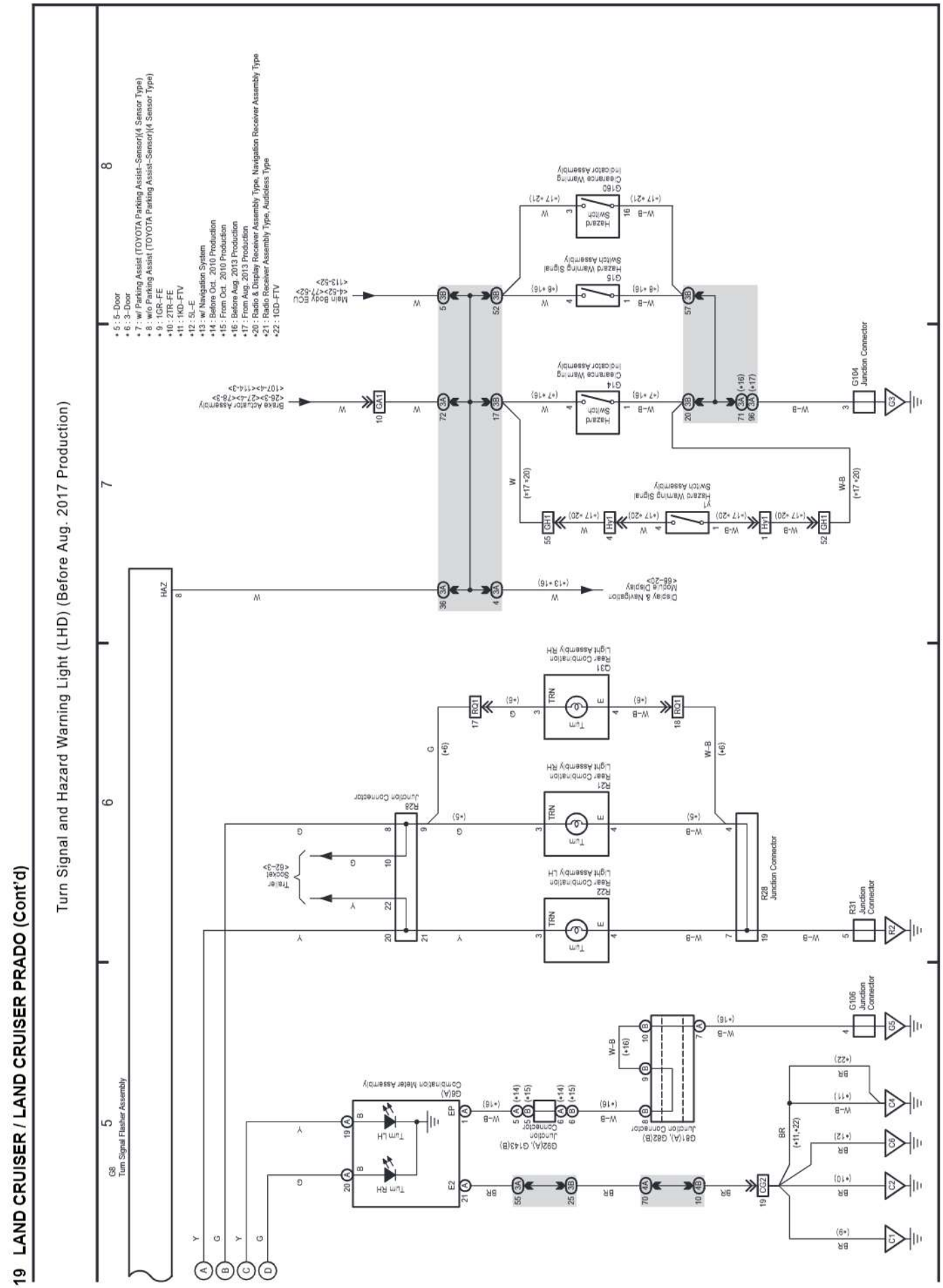

cardiagn.com

(Cont. next page)

Turn Signal and Hazard Warning Light (RHD) (Before Aug. 2017 Production)

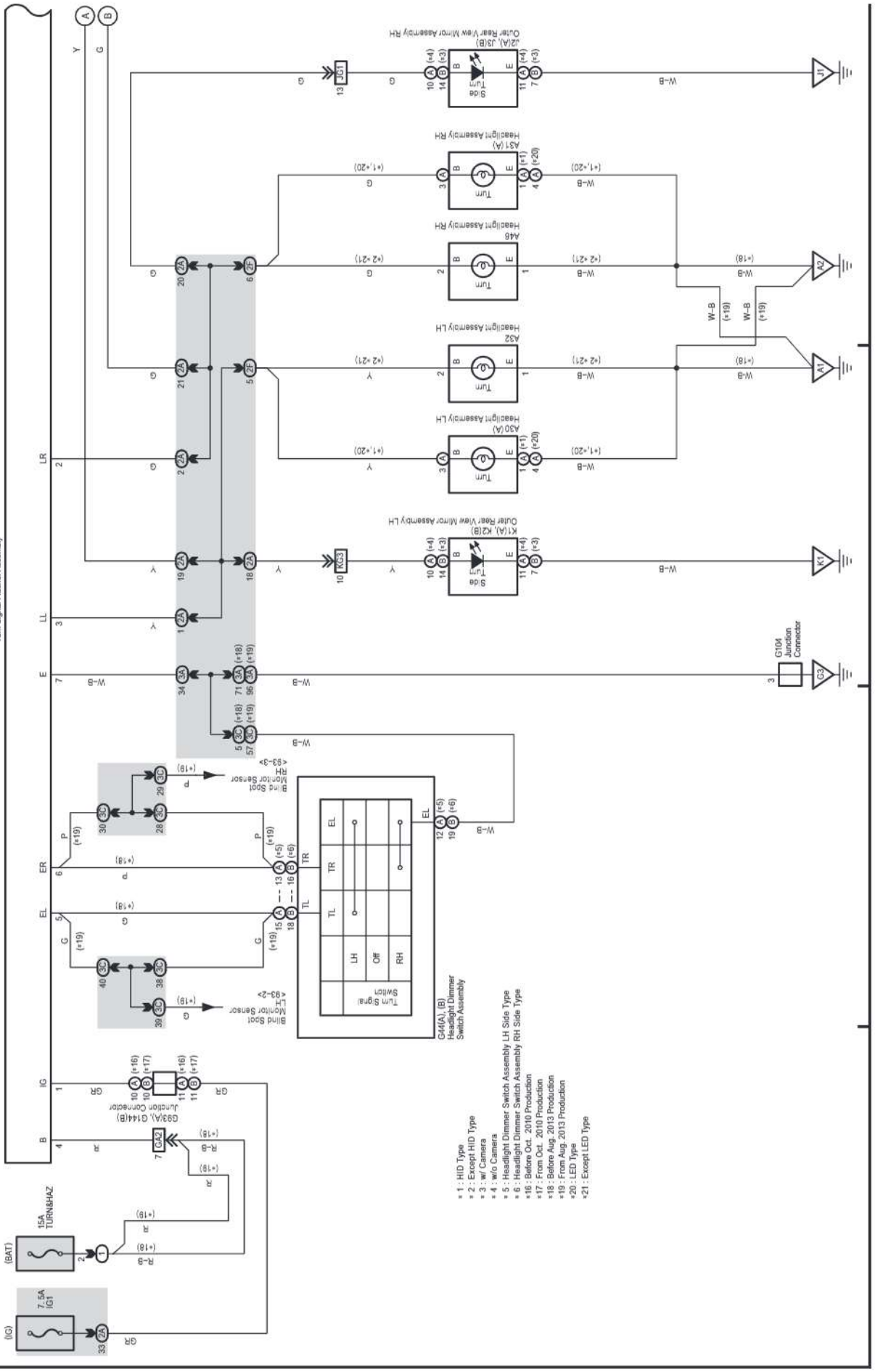

cardiagn.com

Turn Signal and Hazard Warning Light (RHD) (Before Aug. 2017 Production)

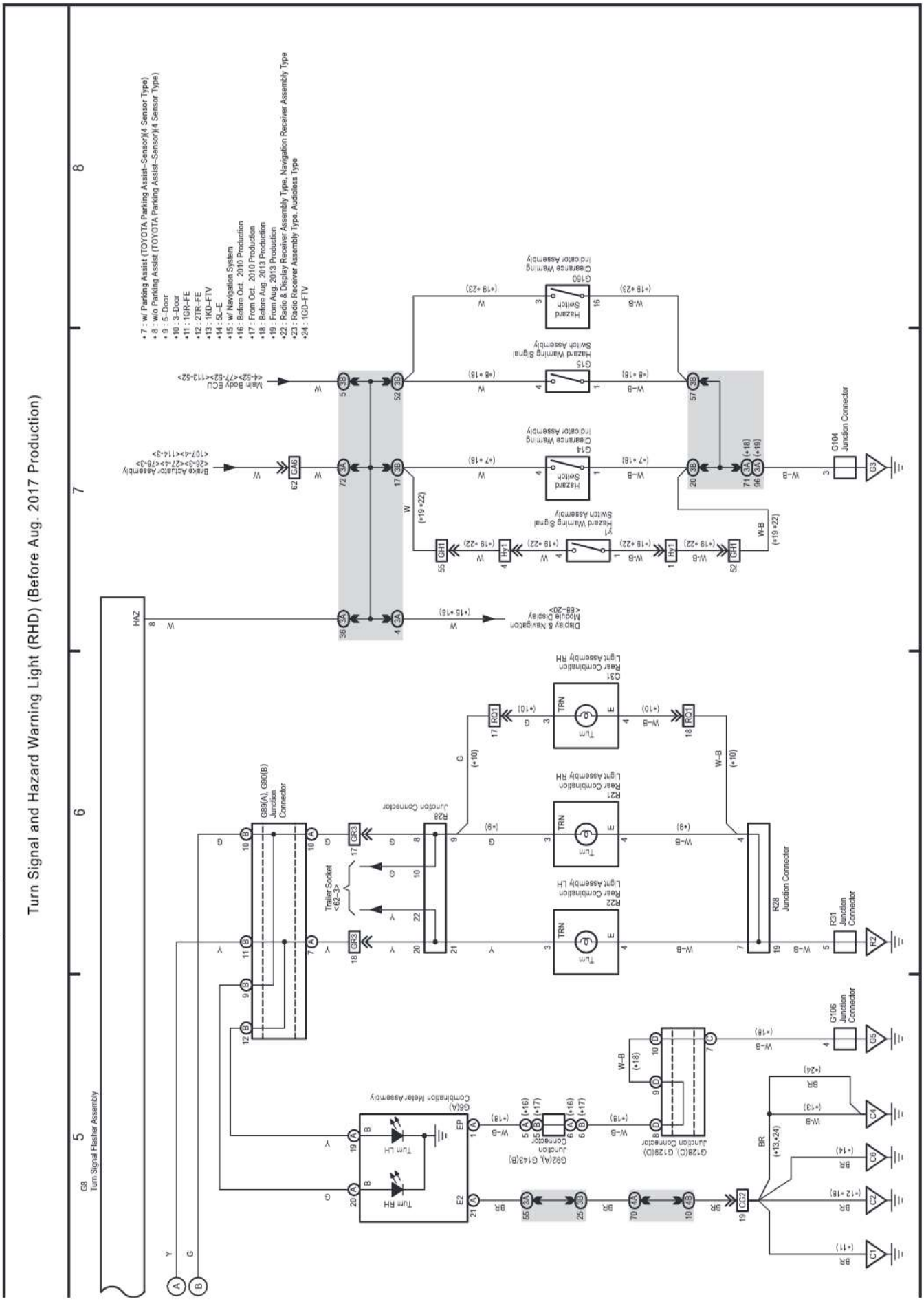

cardiagn.com

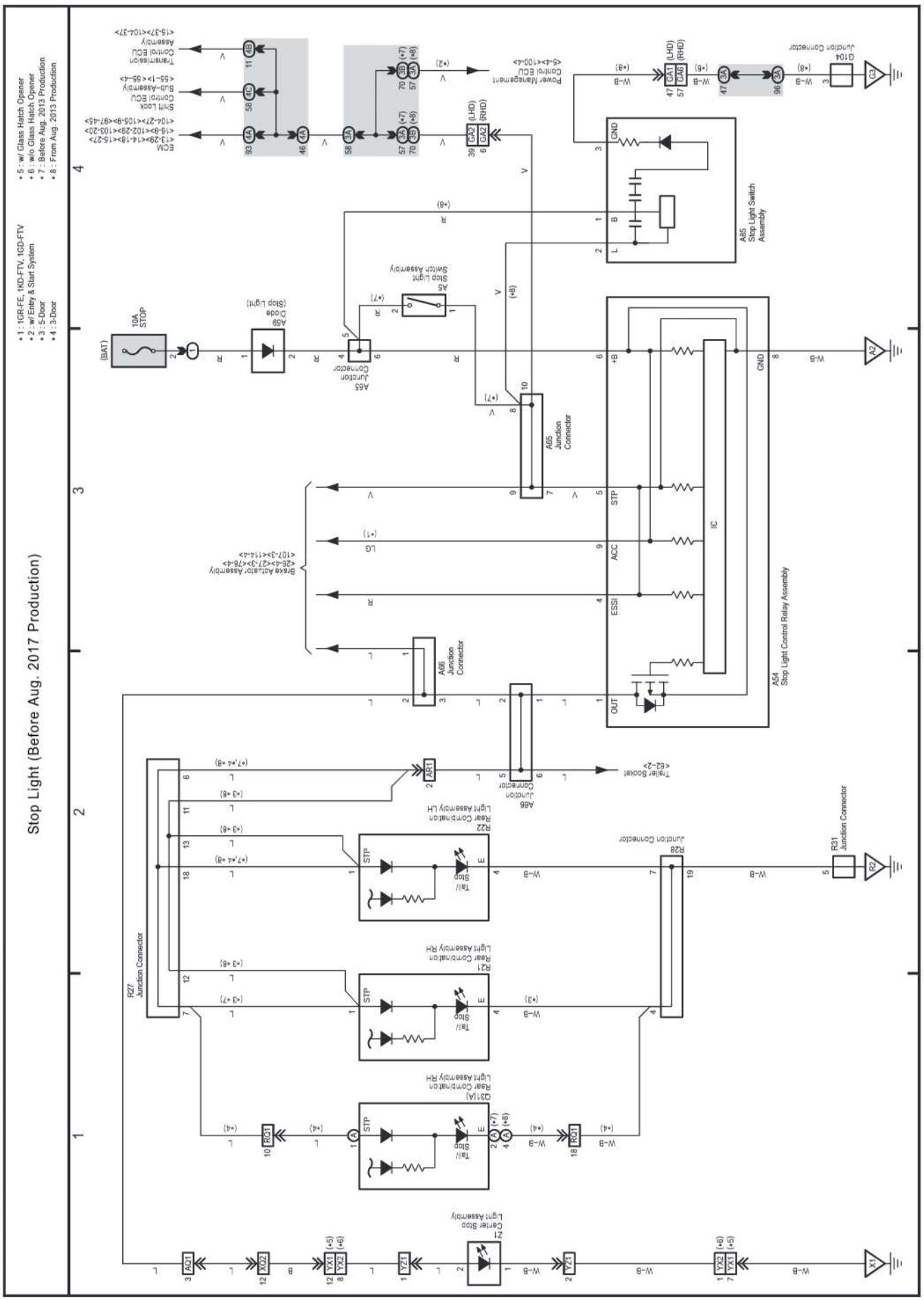

cardiagn.com

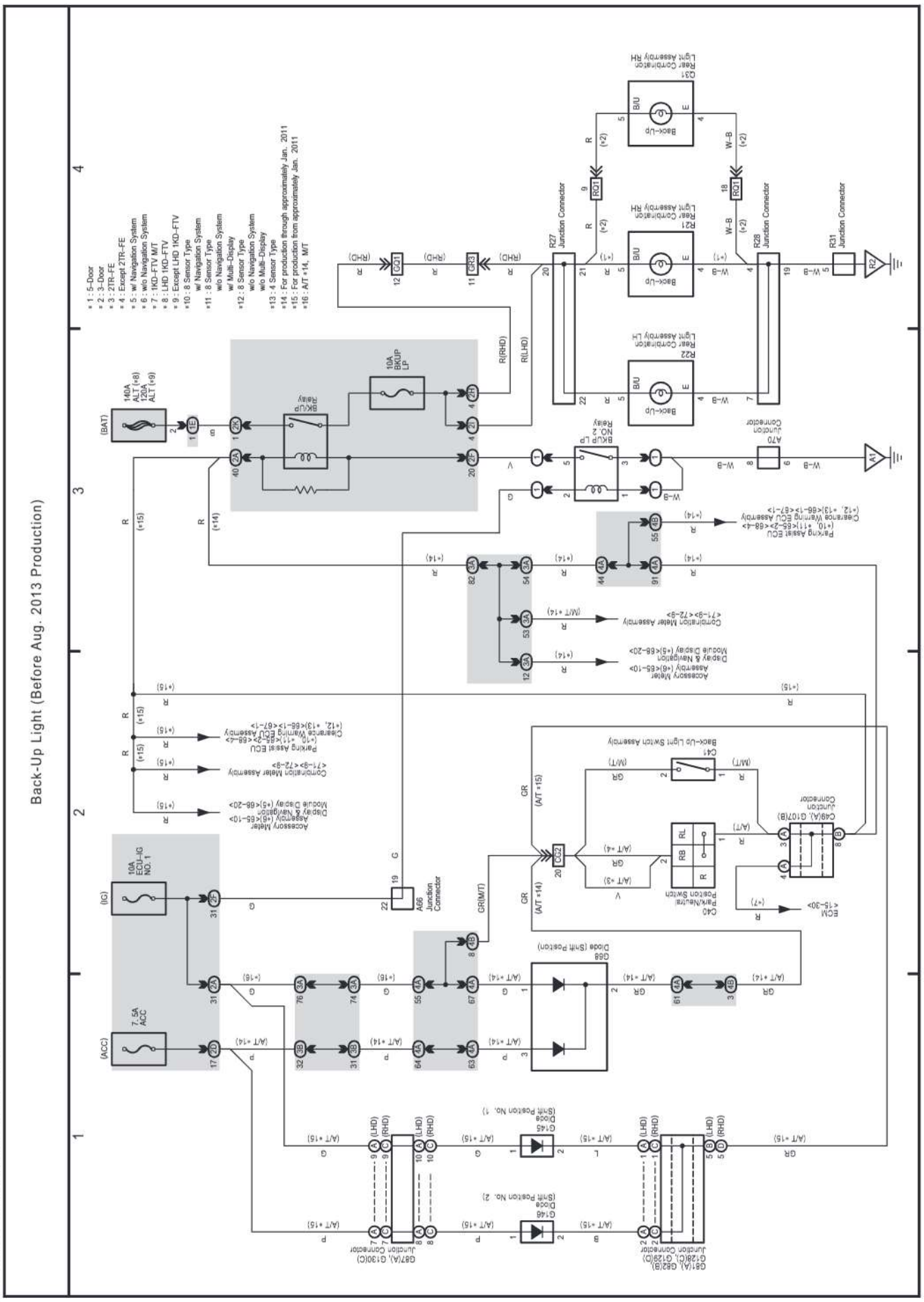

cardiagn.com

Adaptive Front-Lighting System (Before Aug. 2017 Production) and Headlight Beam Level Control (Automatic) (Before Aug. 2017 Production)

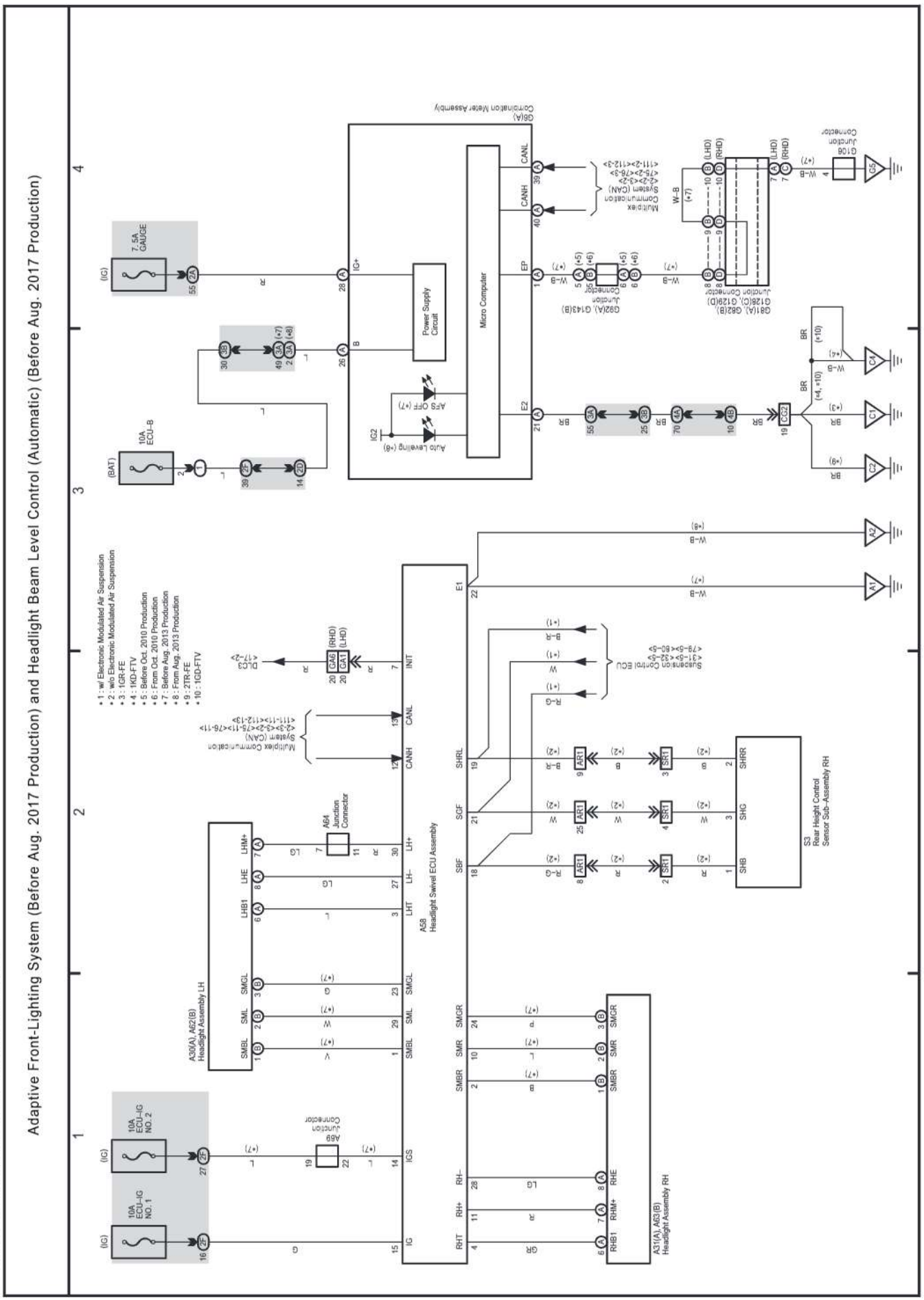

cardiagn.com

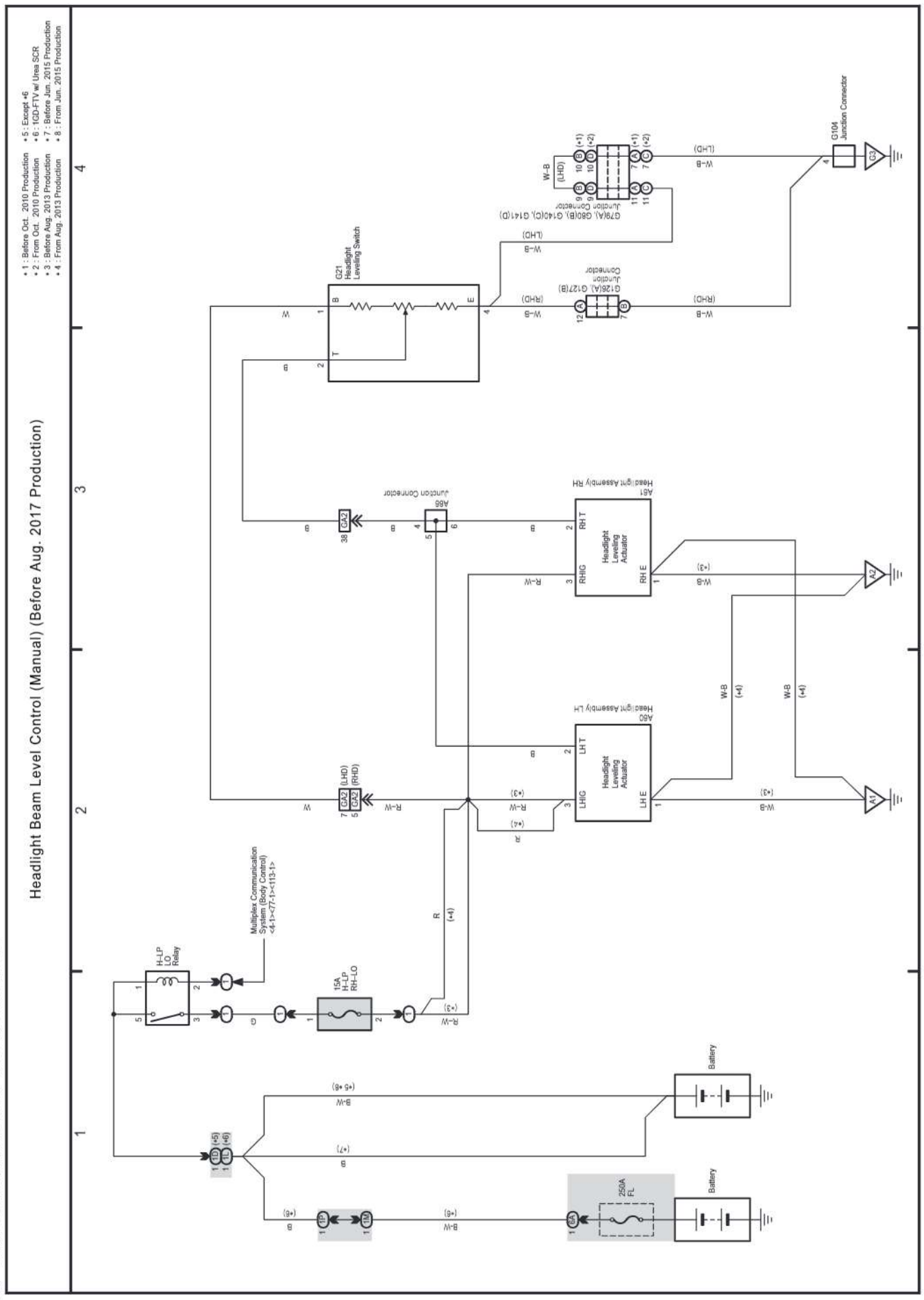

cardiagn.com

(Cont. next page)

4WD (Before Aug. 2017 Production) and Rear Differential Lock (Before Aug. 2017 Production)

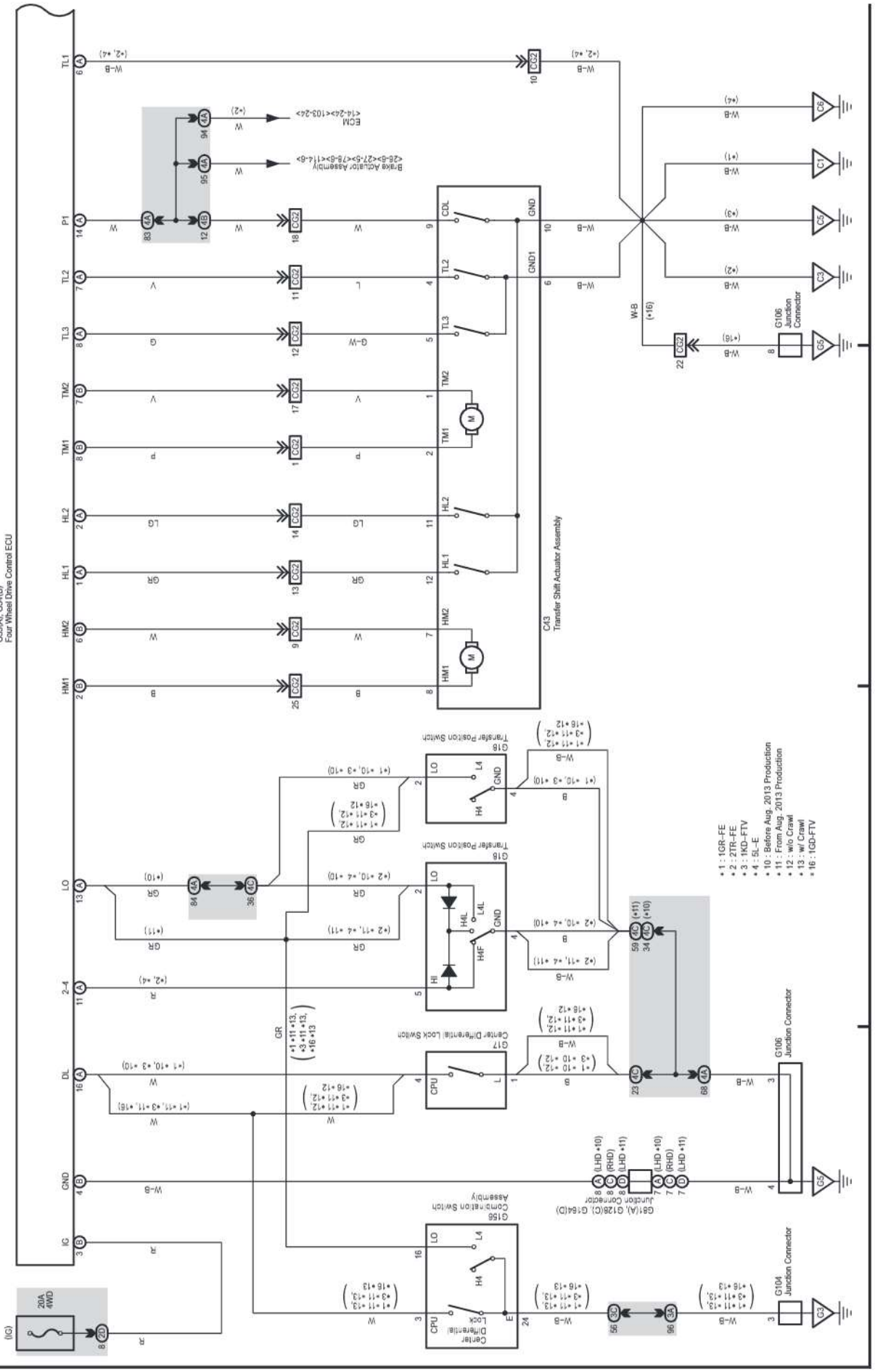

cardiagn.com

(Cont. next page)

25 LAND CRUISER / LAND CRUISER PRADO (Cont'd)

4WD (Before Aug. 2017 Production) and Rear Differential Lock (Before Aug. 2017 Production)

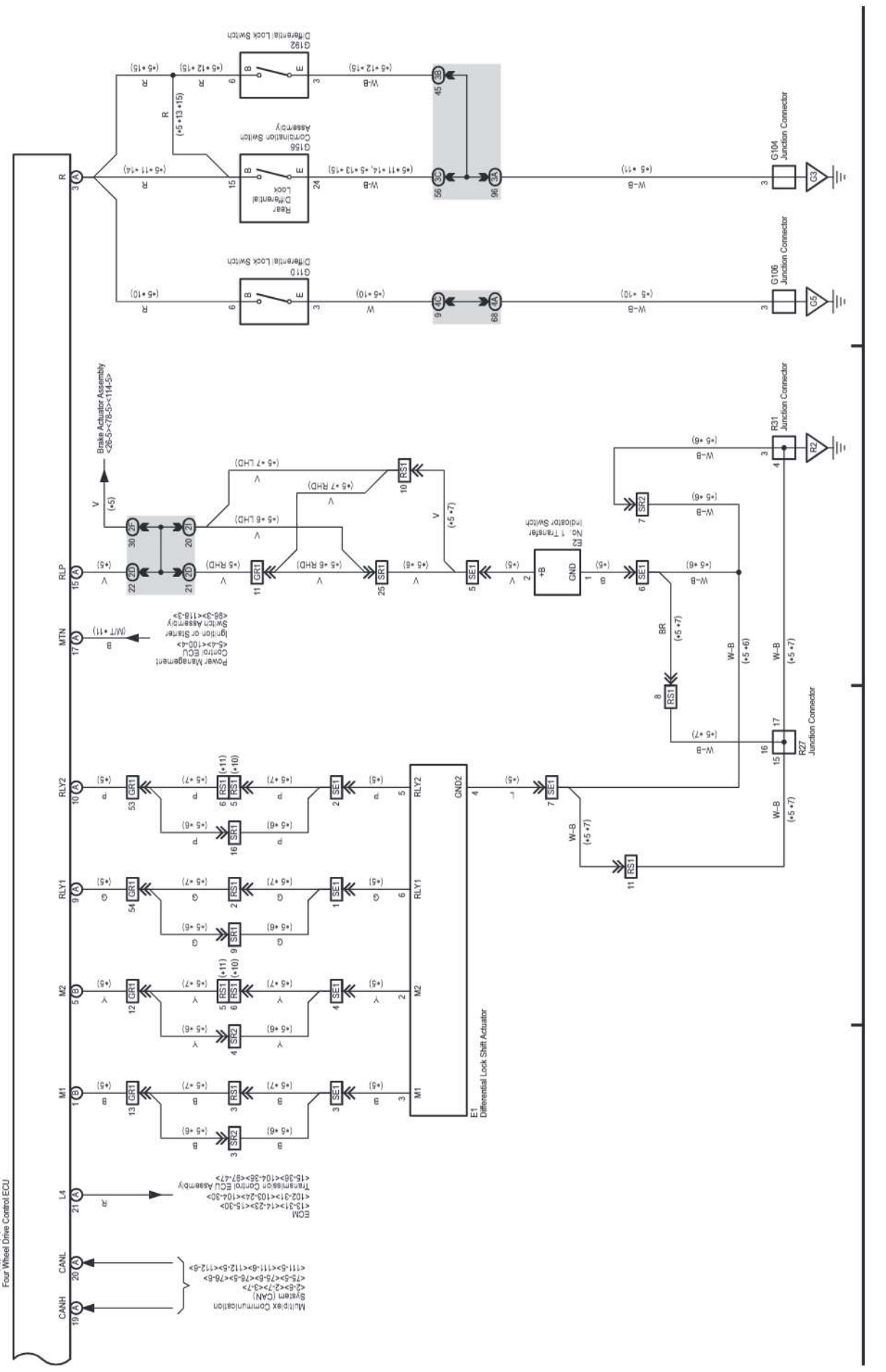

cardiagn.com

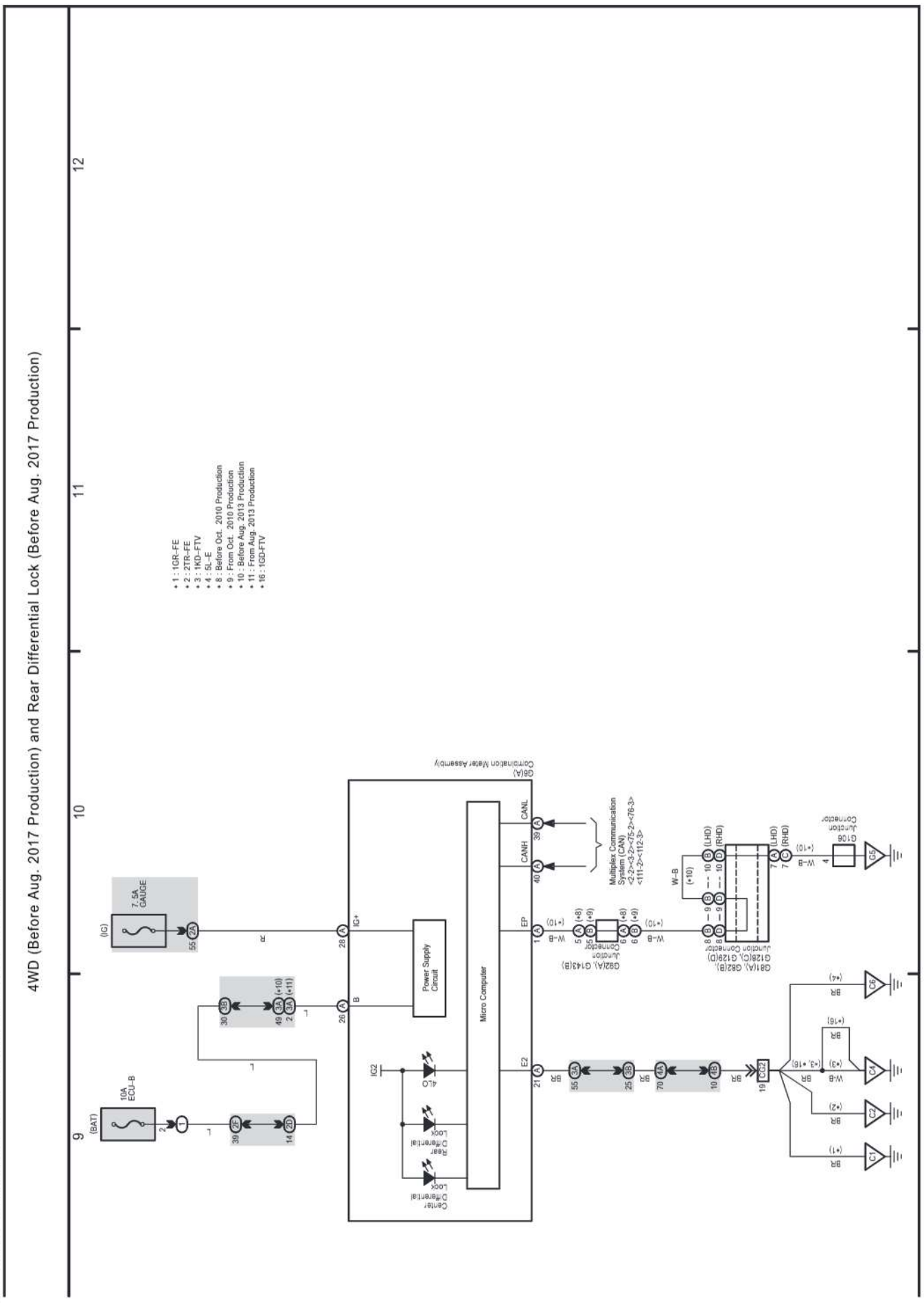

cardiagn.com

(Cont. next page)

ABS (1GR-FE, 1KD-FTV) (Before Aug. 2013 Production), A-TRC (Before Aug. 2013 Production), Crawl (Before Aug. 2013 Production), Downhill Assist Control (Before Aug. 2013 Production), Hill-Start Assist Control (Before Aug. 2013 Production), Multi-Terrain Select (Before Aug. 2013 Production) and VSC (1GR-FE, 1KD-FTV) (Before Aug. 2013 Production)

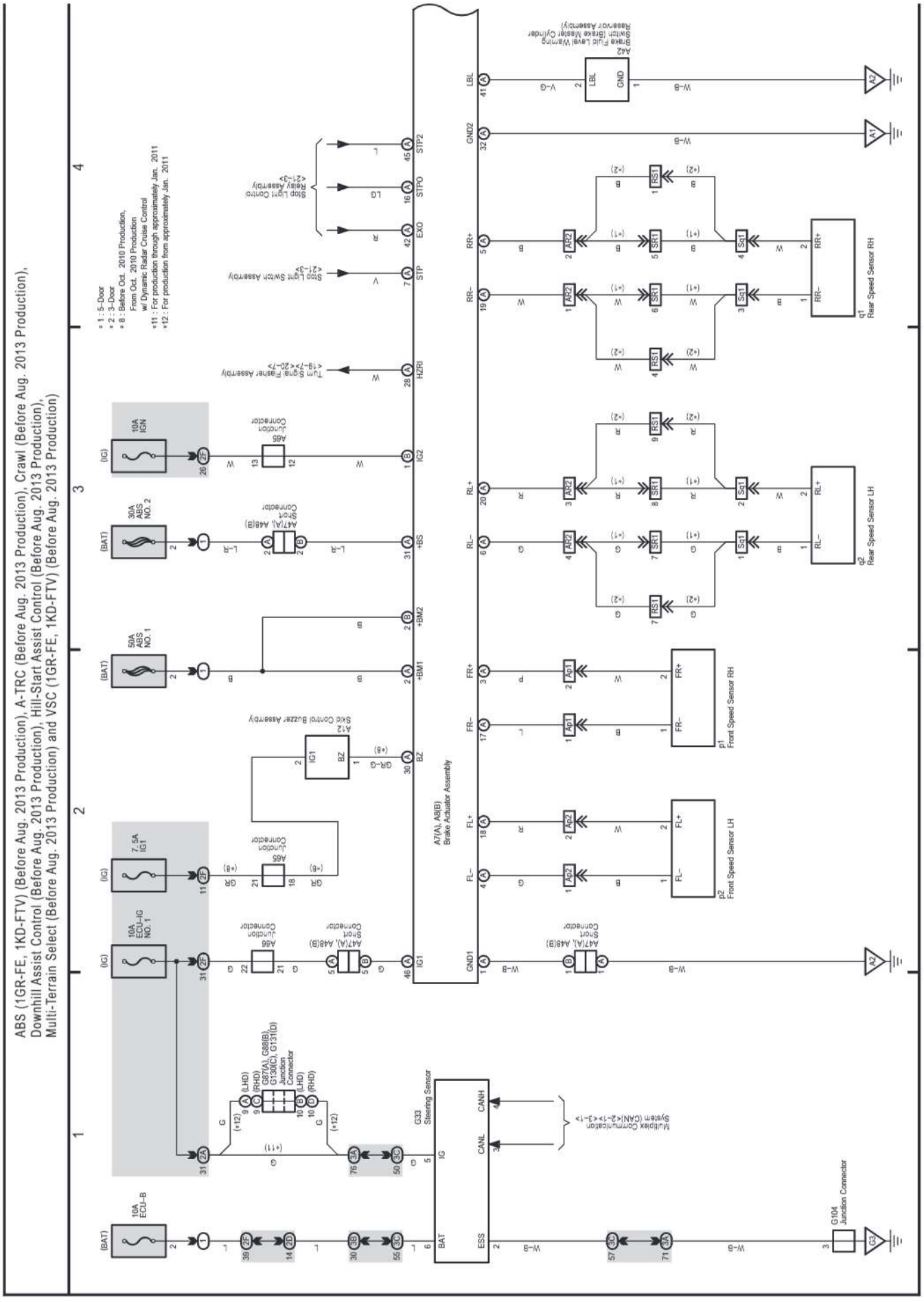

cardiagn.com

(Cont. next page)

26 LAND CRUISER / LAND CRUISER PRADO (Cont'd)

ABS (1GR-FE, 1KD-FTV) (Before Aug. 2013 Production), A-TRC (Before Aug. 2013 Production), Crawl (Before Aug. 2013 Production), Downhill Assist Control (Before Aug. 2013 Production), Hill-Start Assist Control (Before Aug. 2013 Production), Multi-Terrain Select (Before Aug. 2013 Production) and VSC (1GR-FE, 1KD-FTV) (Before Aug. 2013 Production)

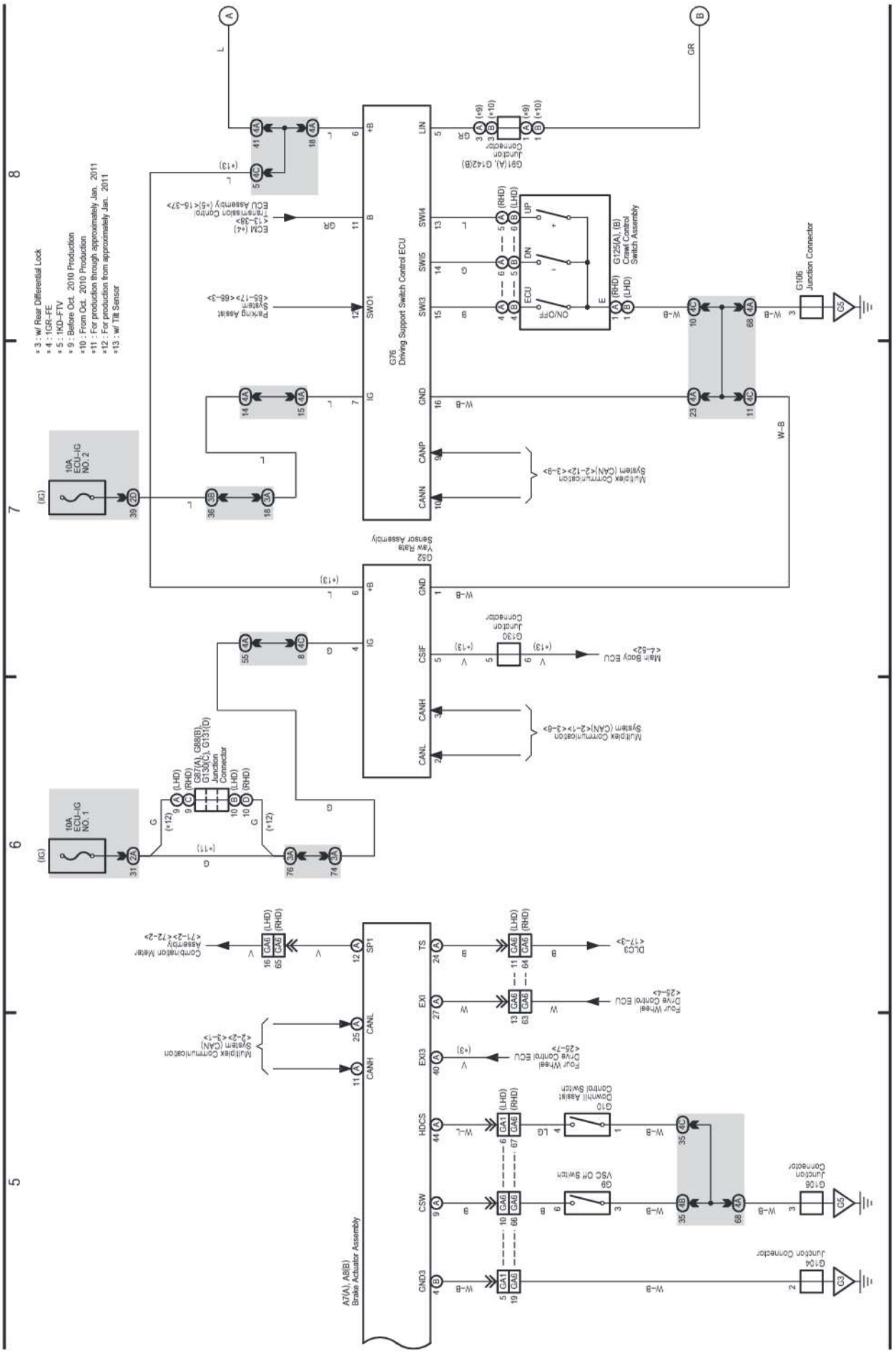

cardiagn.com

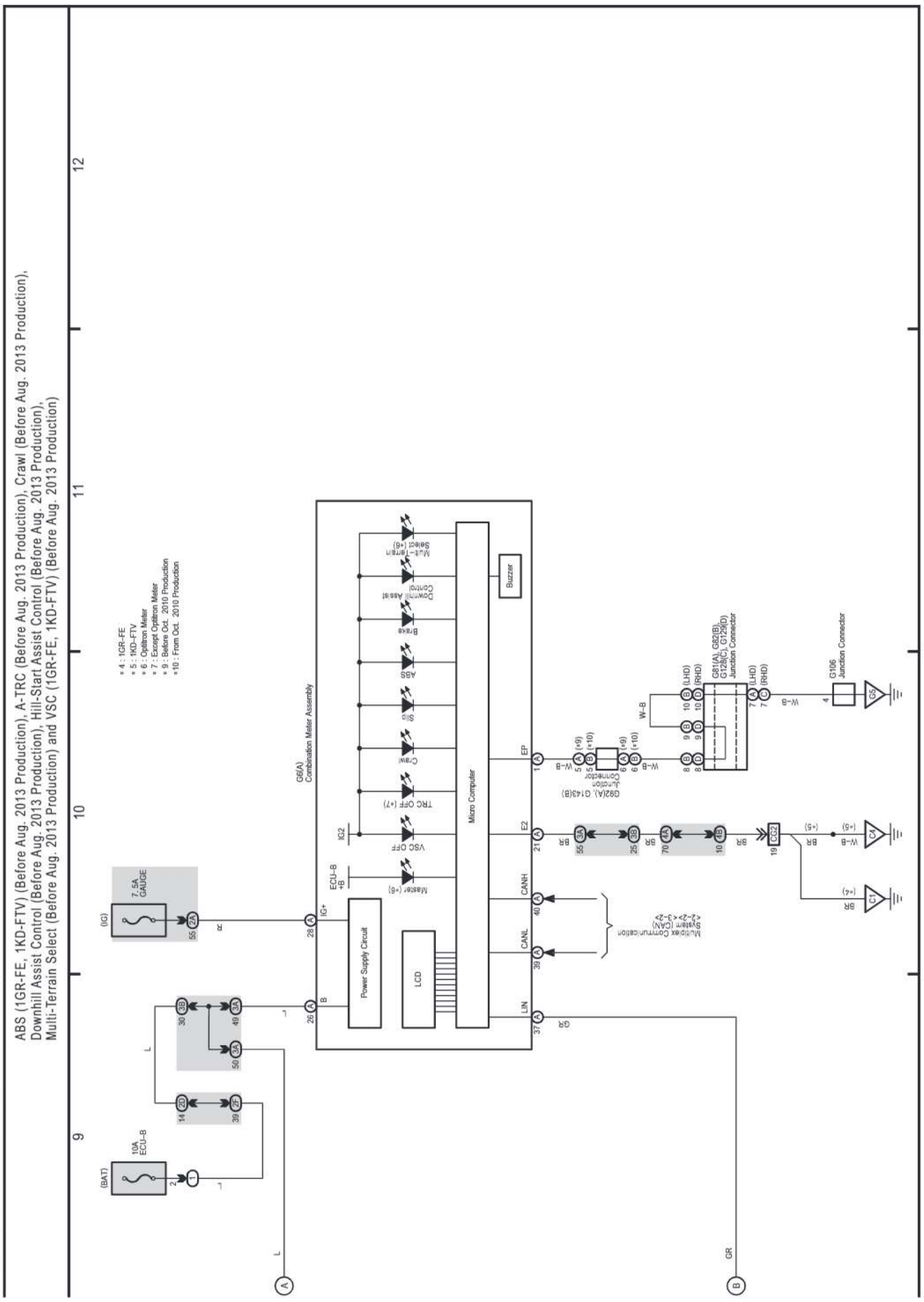

cardiagn.com

(Cont. next page)

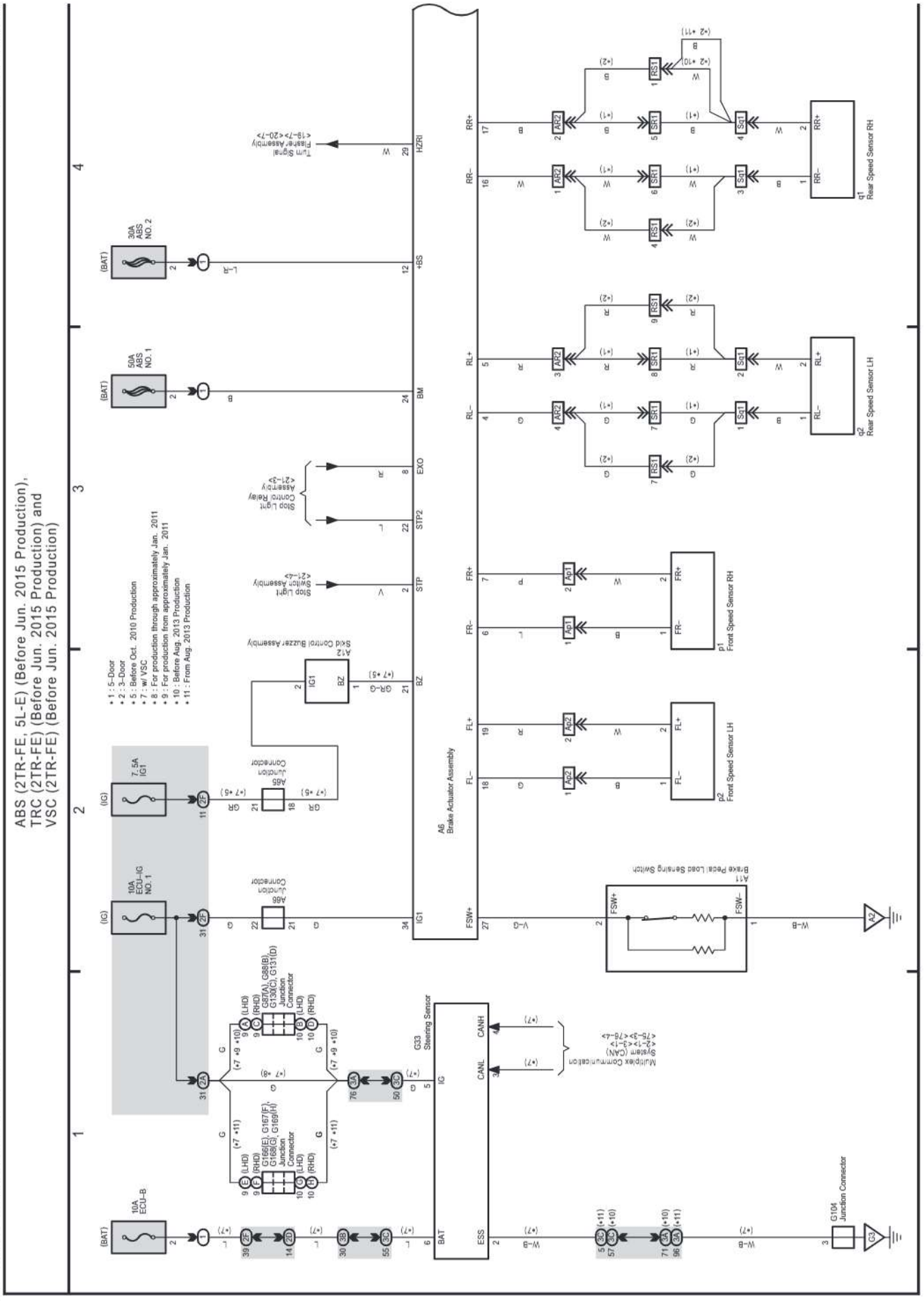

cardiagn.com

27 LAND CRUISER / LAND CRUISER PRADO (Cont'd)

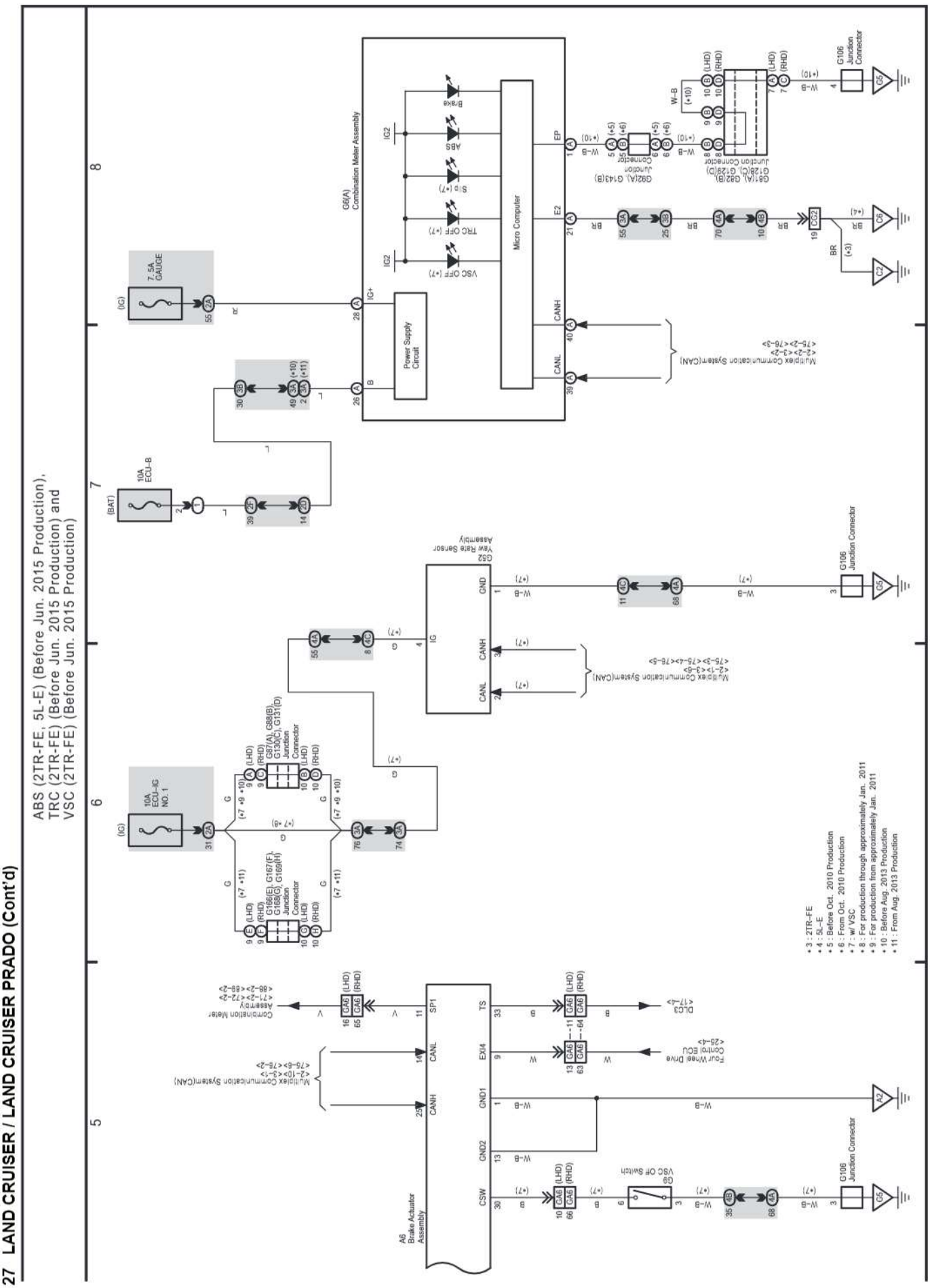

cardiagn.com

(Cont. next page)

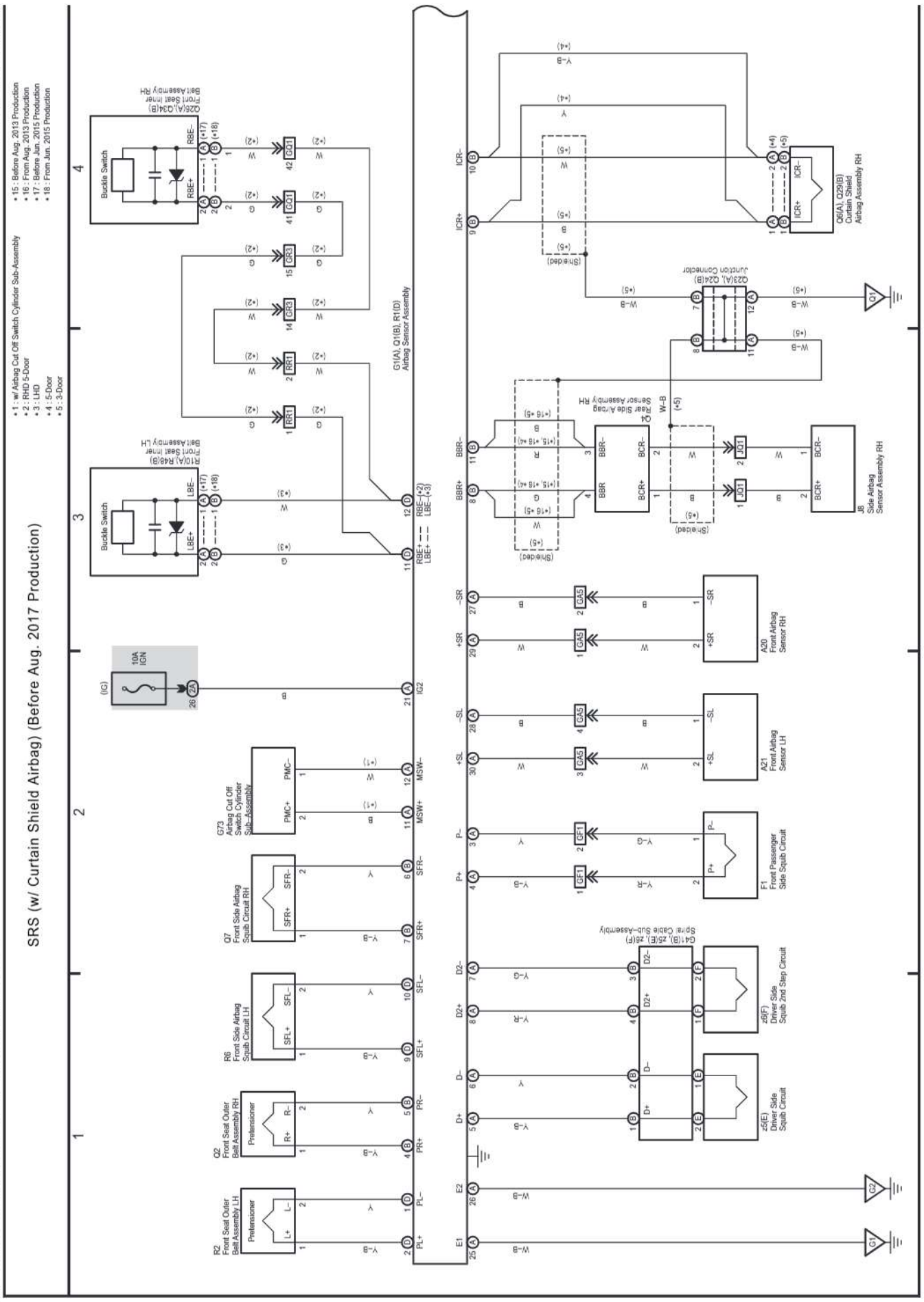

SRS (w/ Curtain Shield Airbag) (Before Aug. 2017 Production)

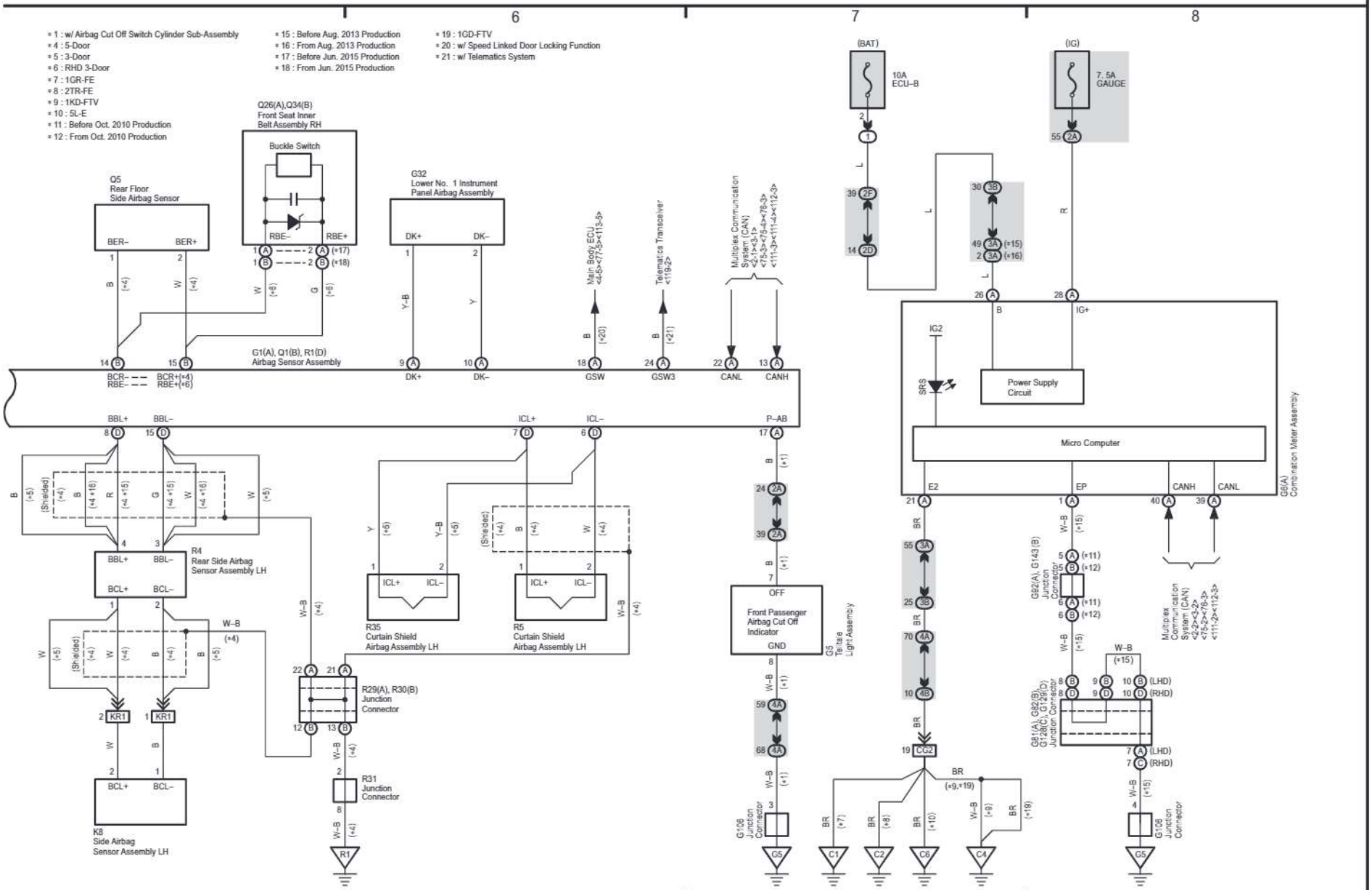

cardiagn.com

cardiagn.com

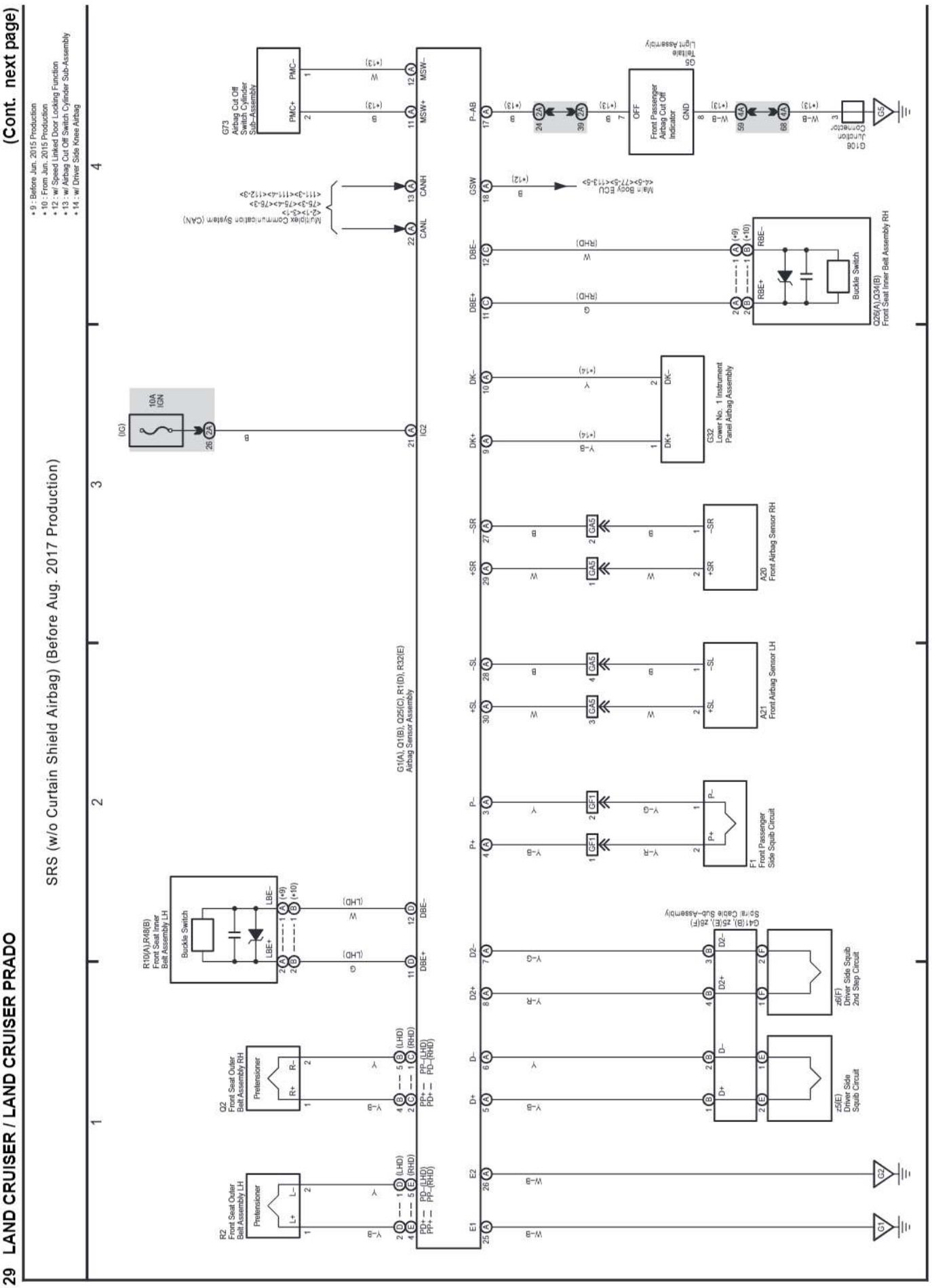

SRS (w/o Curtain Shield Airbag) (Before Aug. 2017 Production)

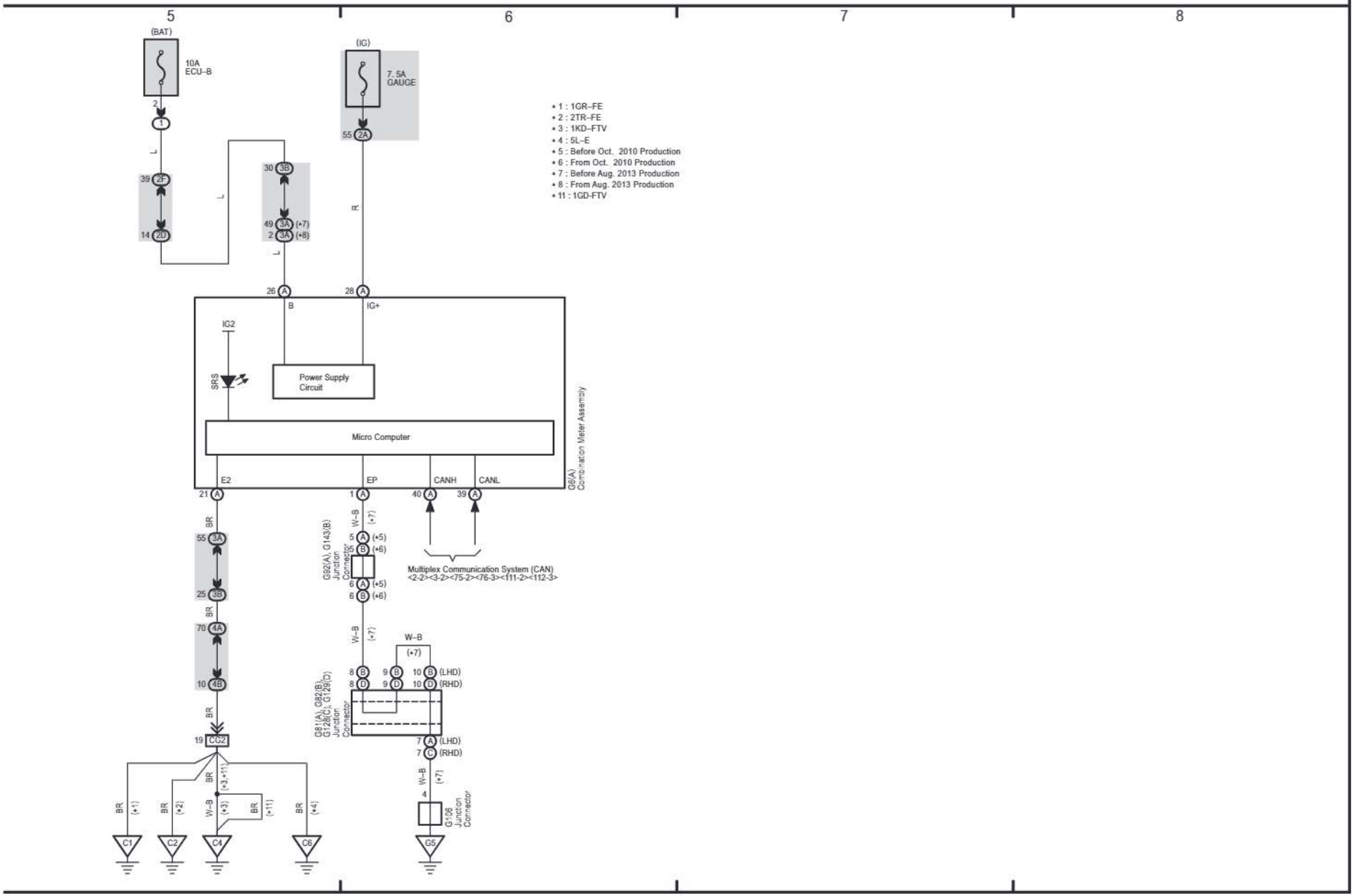

cardiagn.com

cardiagn.com

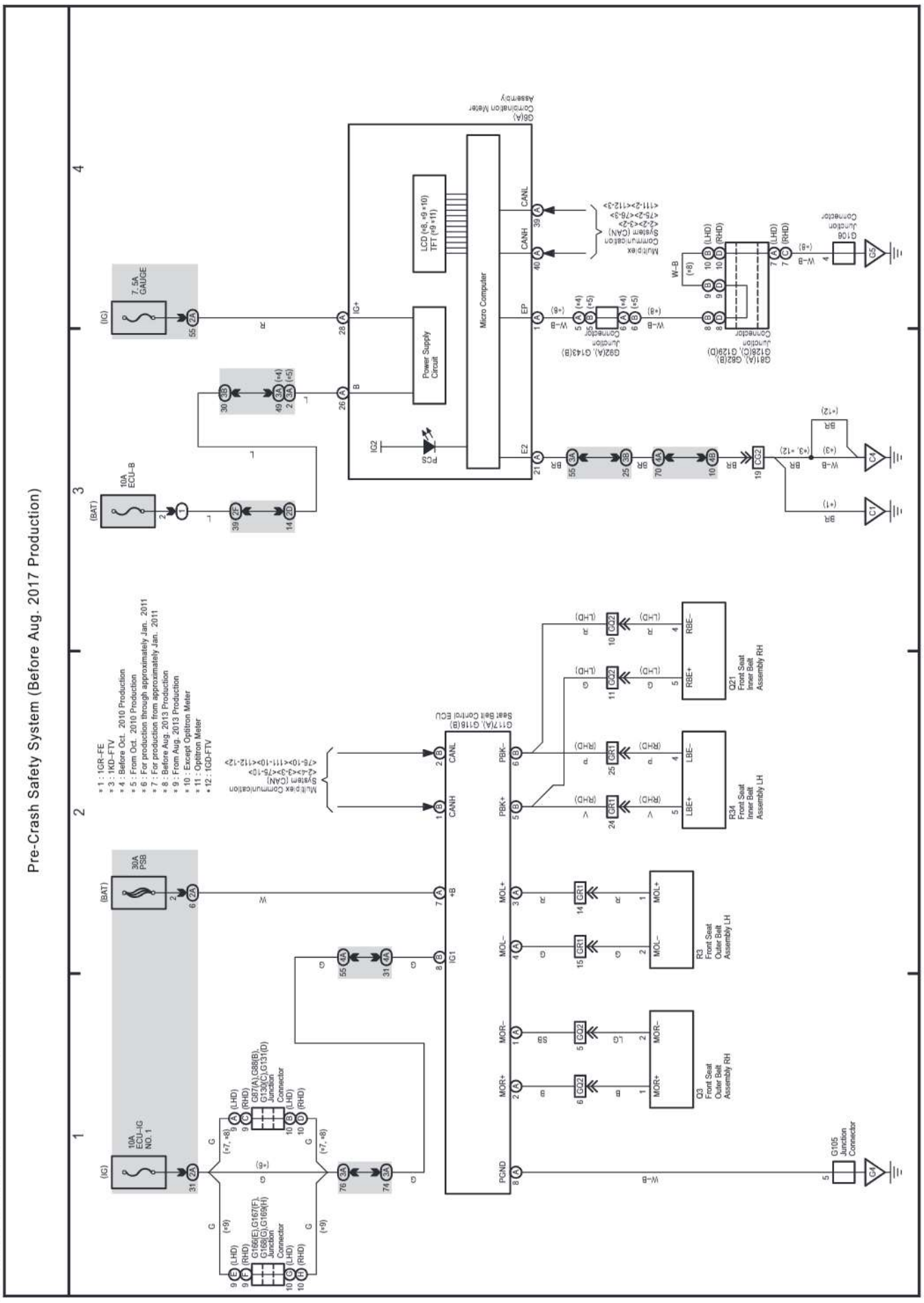

cardiagn.com

(Cont. next page)

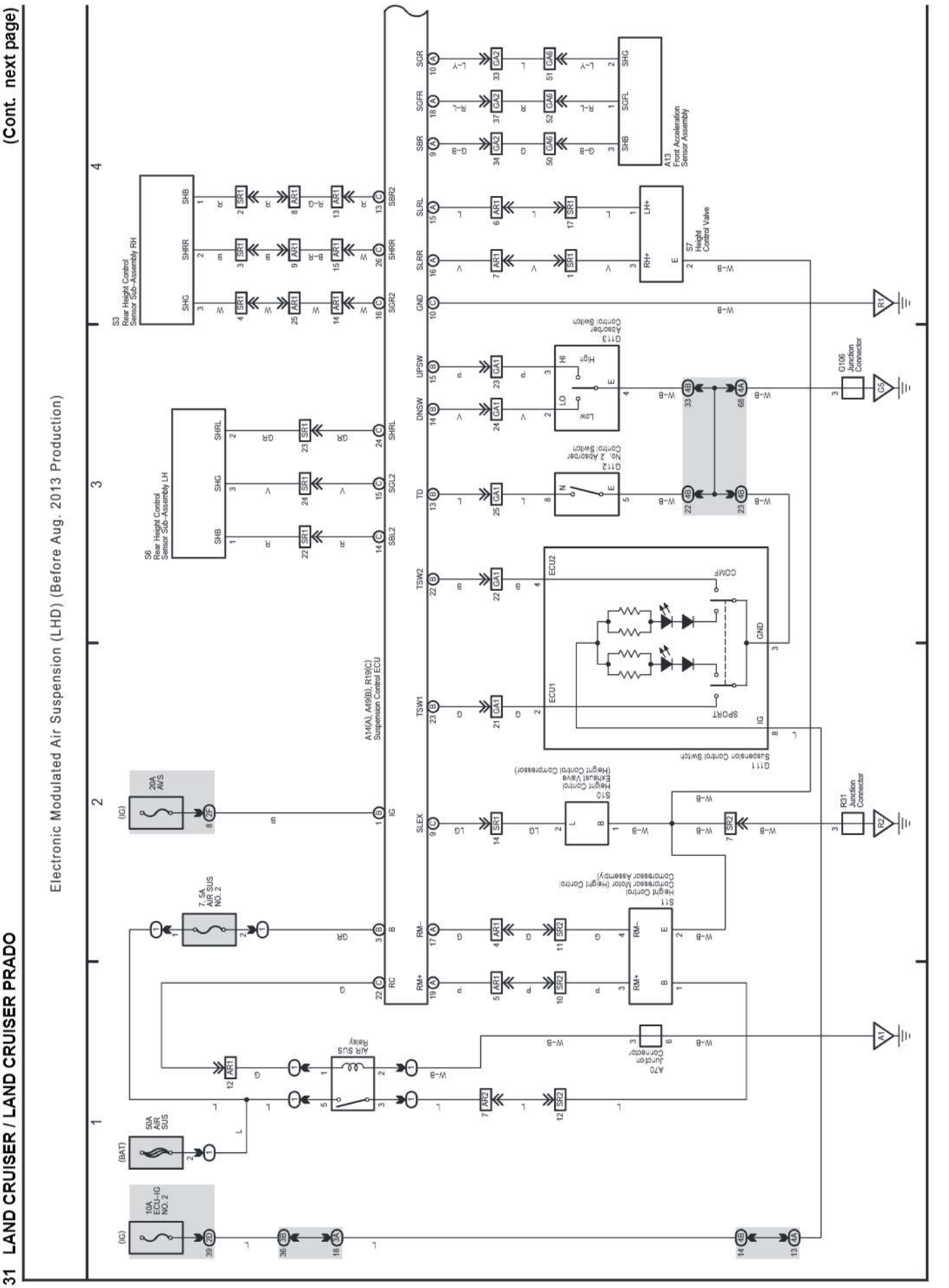

(Cont. next page)

Electronic Modulated Air Suspension (LHD) (Before Aug. 2013 Production)

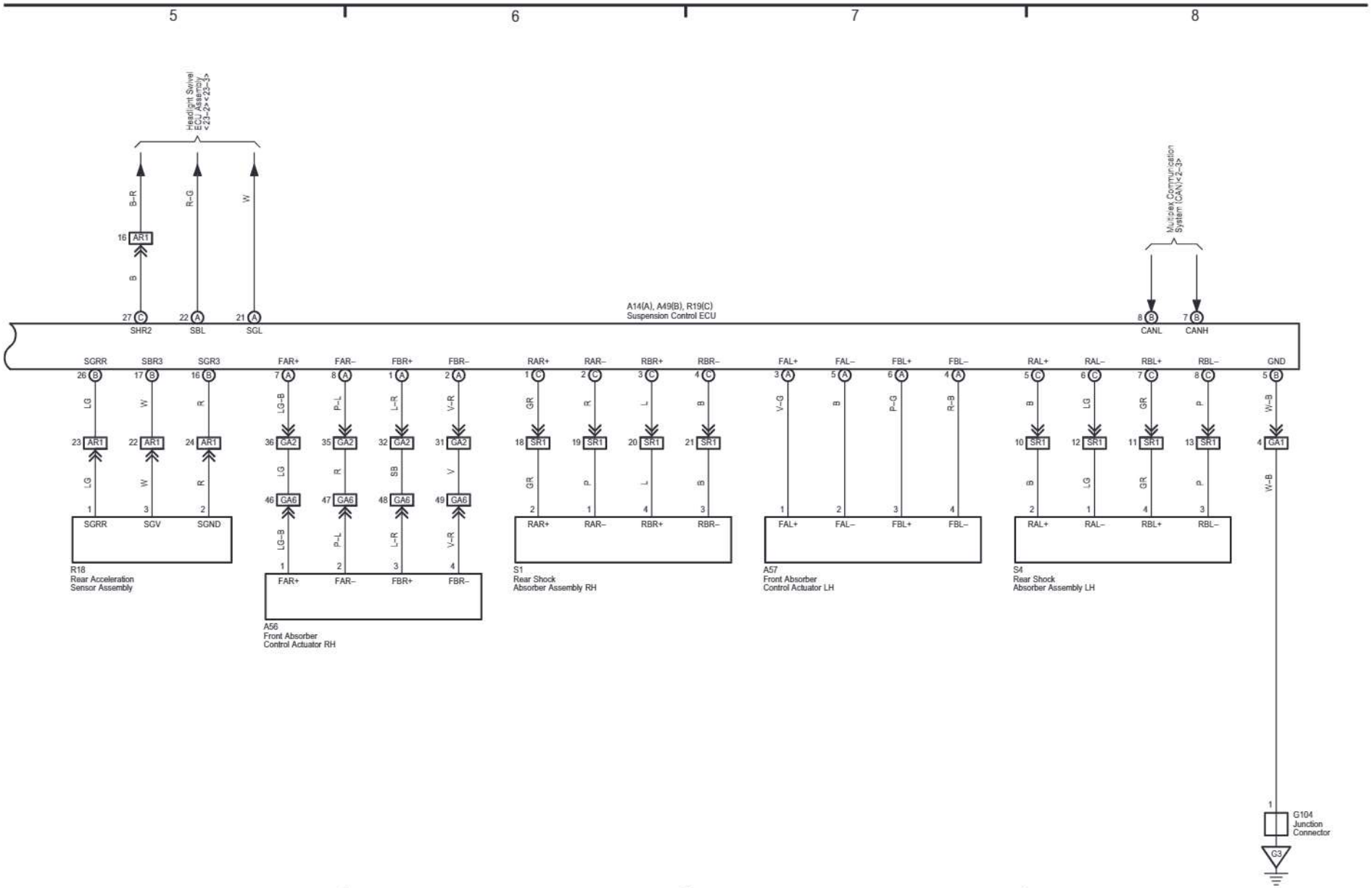

cardiagn.com

cardiagn.com

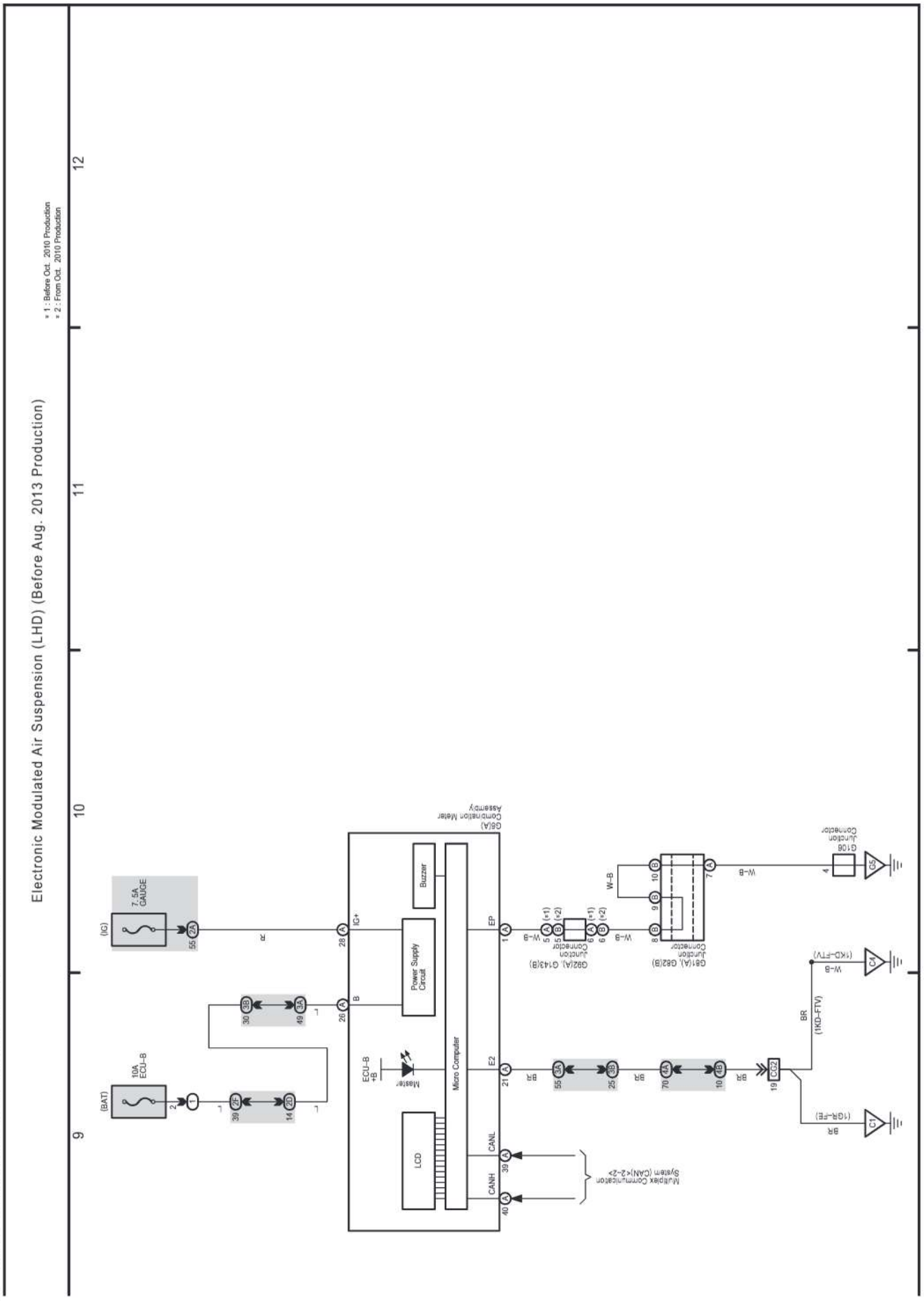

cardiagn.com

(Cont. next page)

Electronic Modulated Air Suspension (RHD) (Before Aug. 2013 Production)

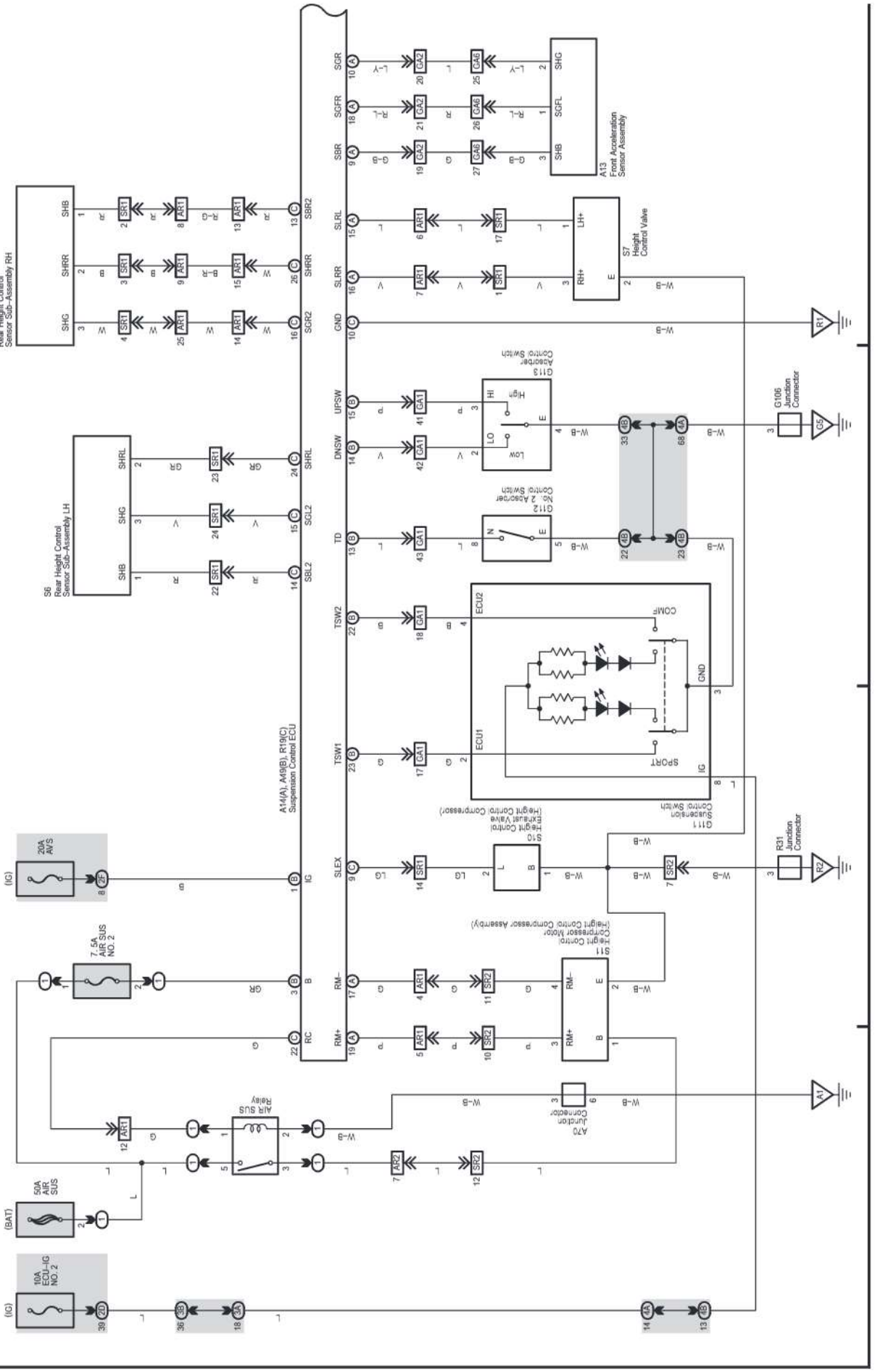

(Cont. next page)

Electronic Modulated Air Suspension (RHD) (Before Aug. 2013 Production)

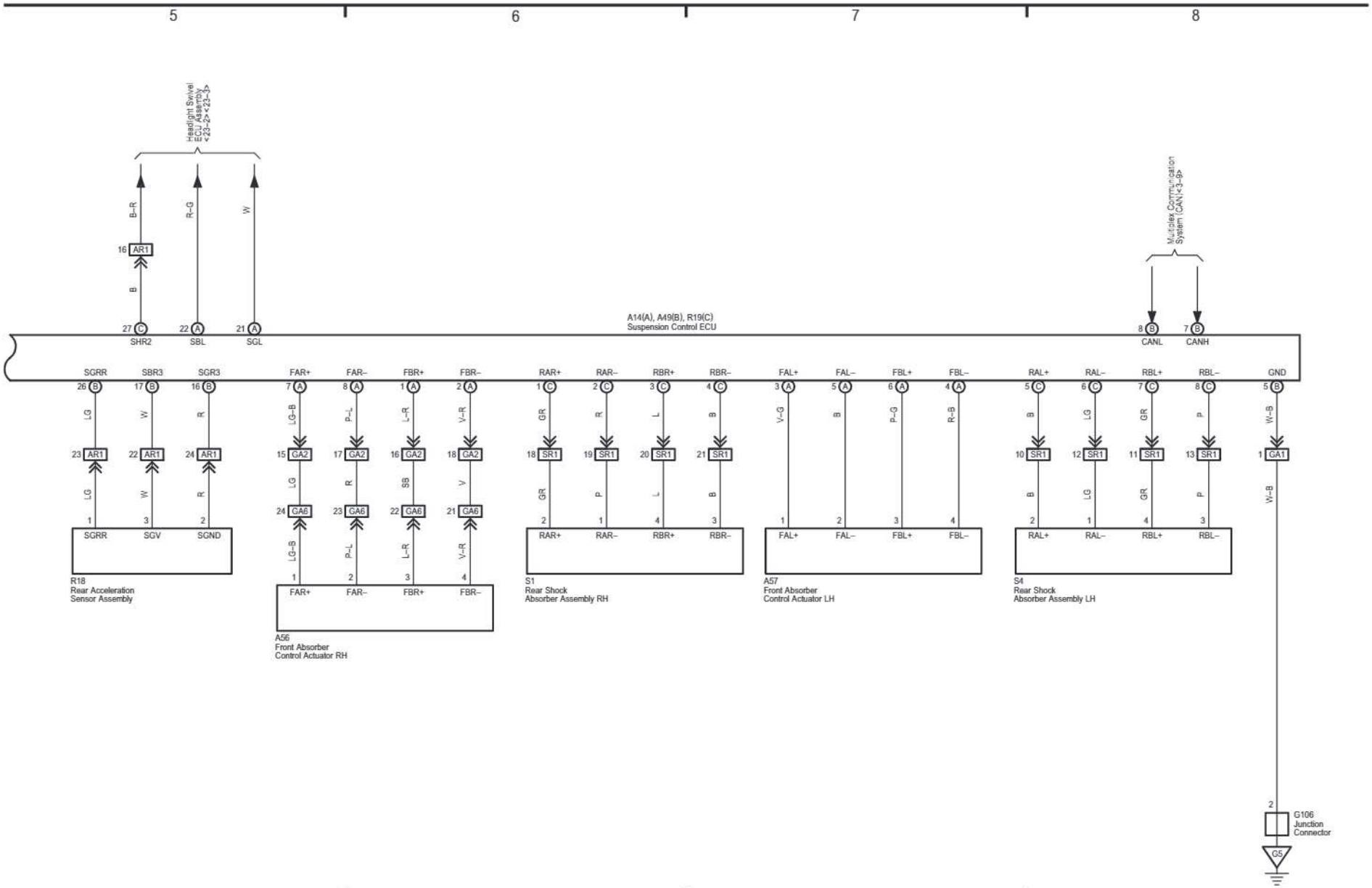

cardiagn.com

cardiagn.com

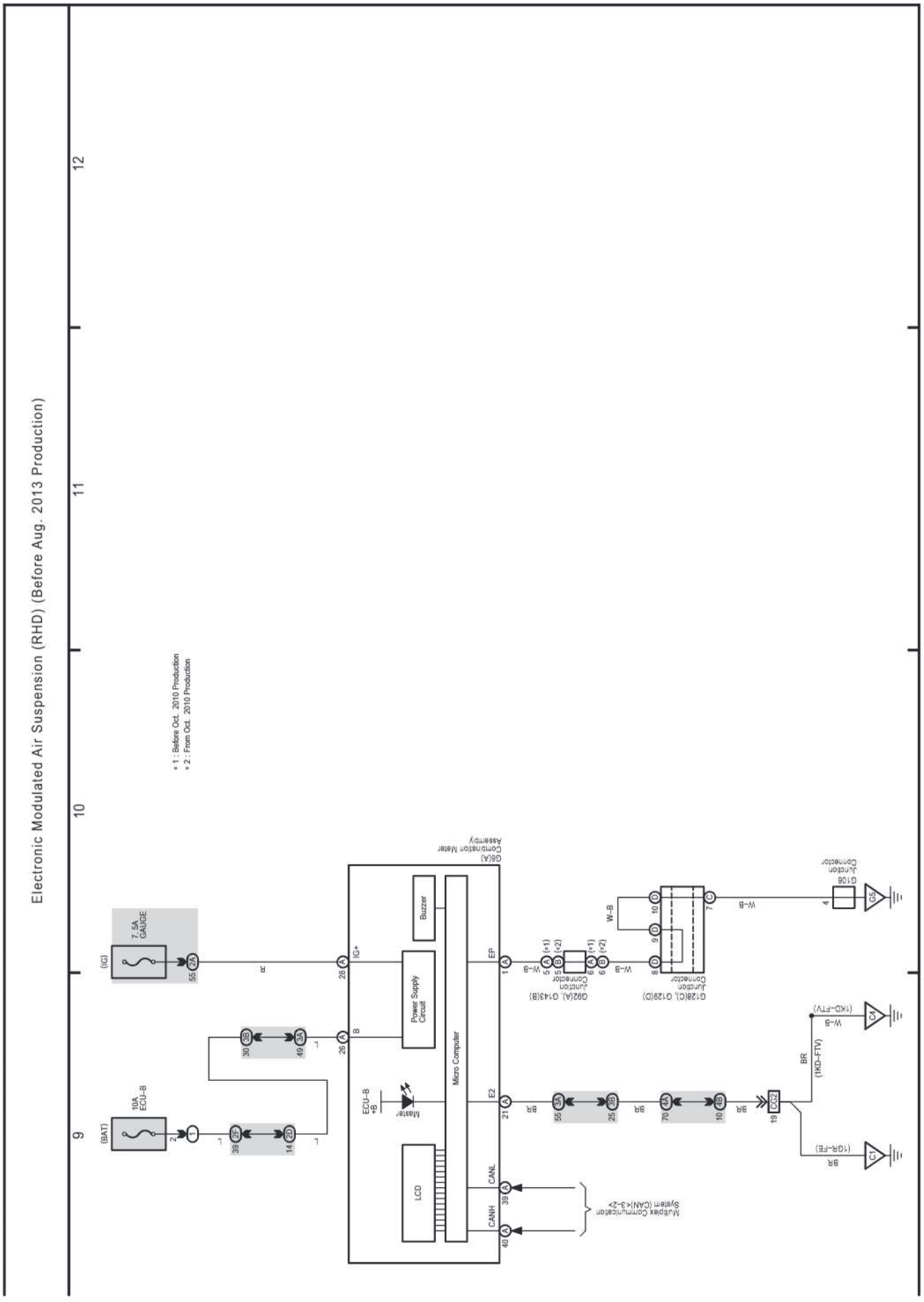

cardiagn.com

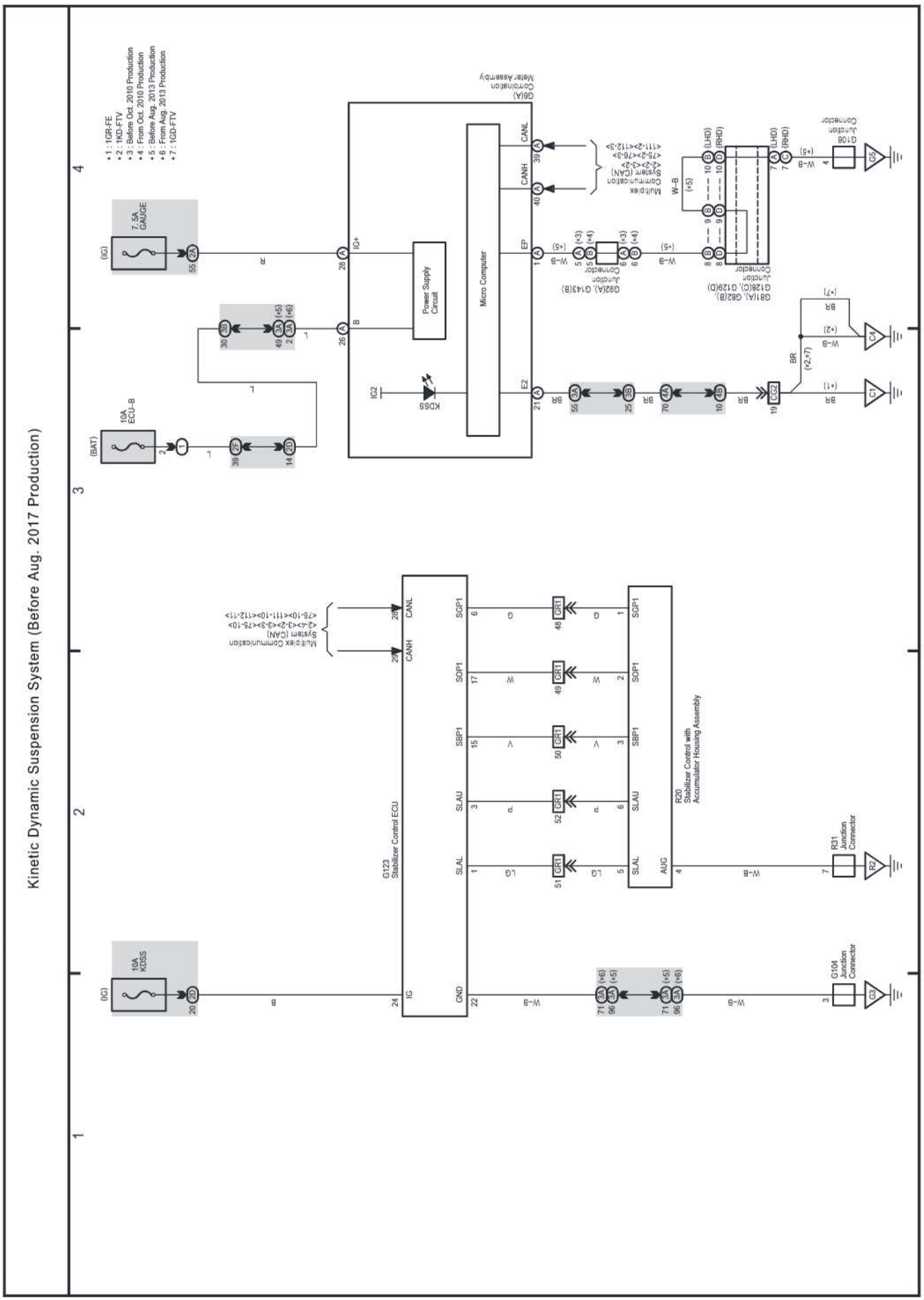

cardiagn.com

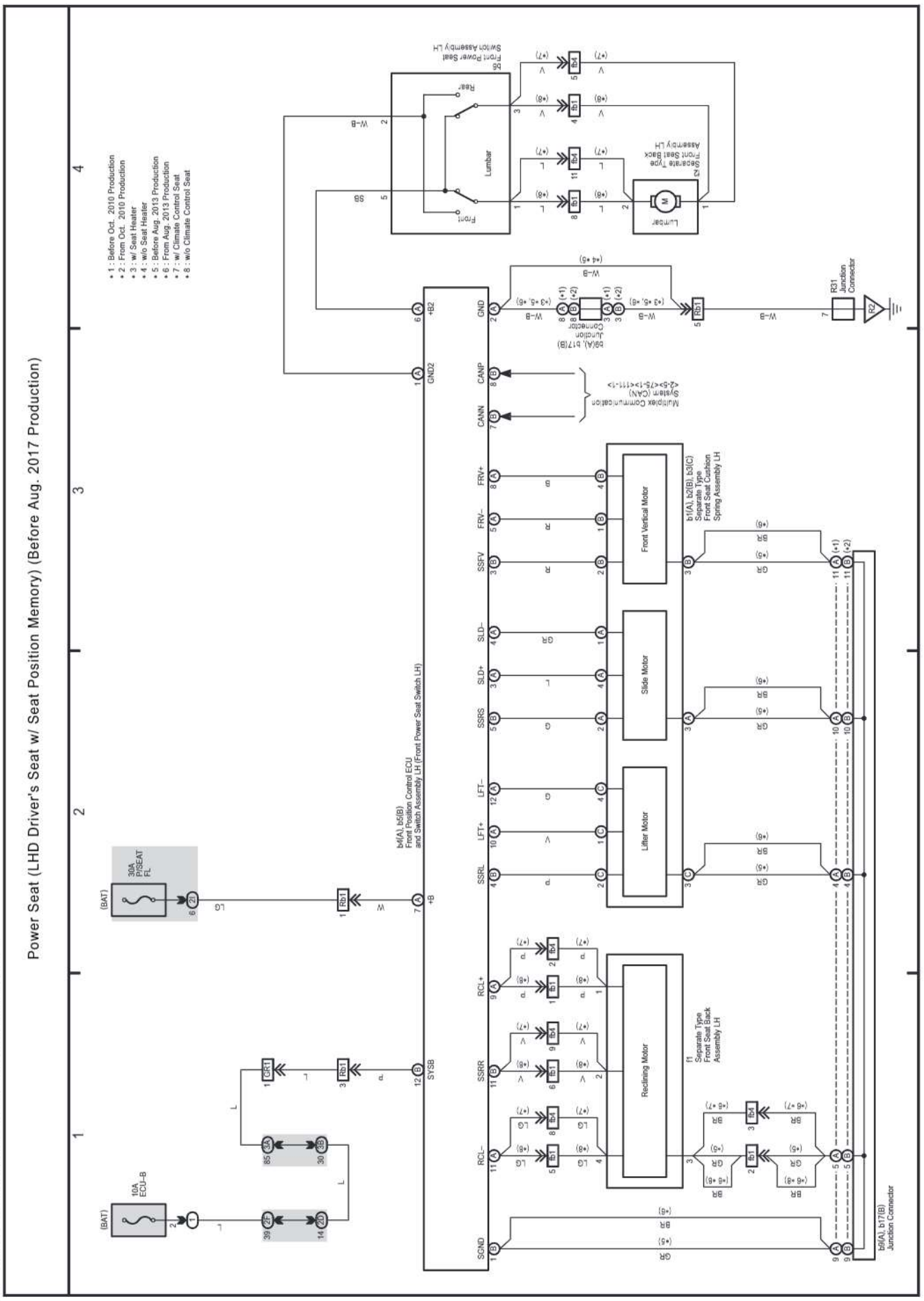

cardiagn.com

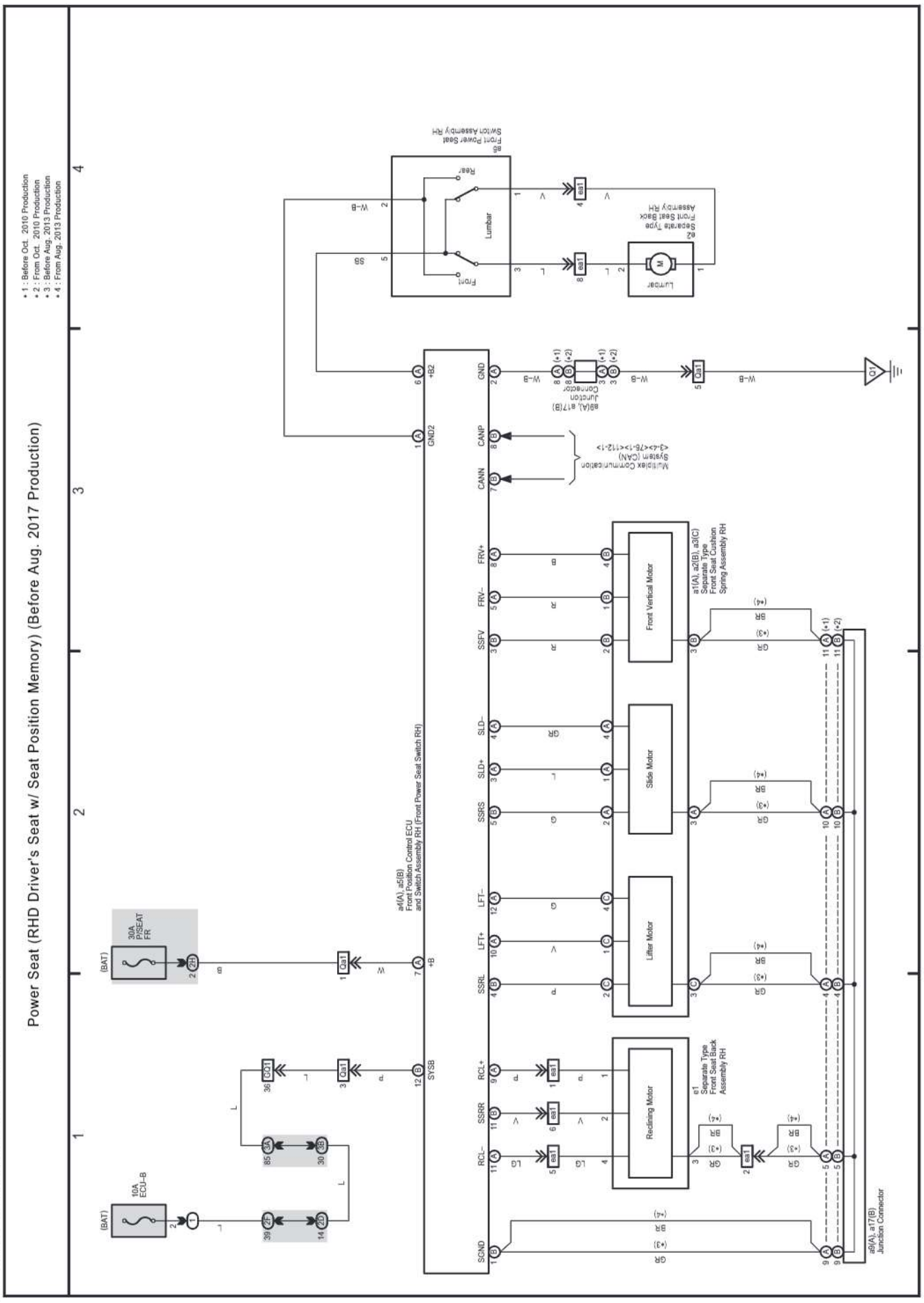

cardiagn.com

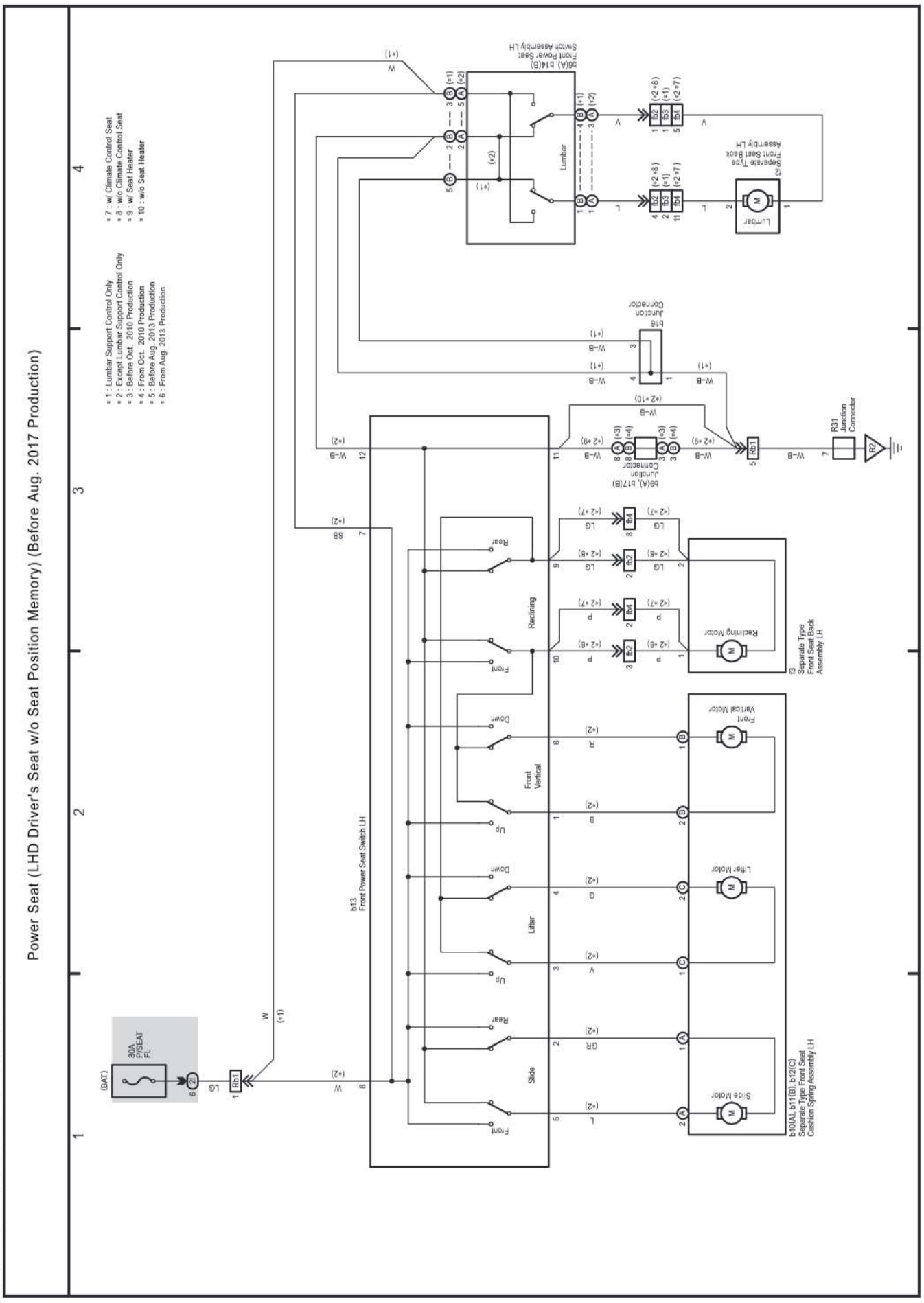

cardiagn.com

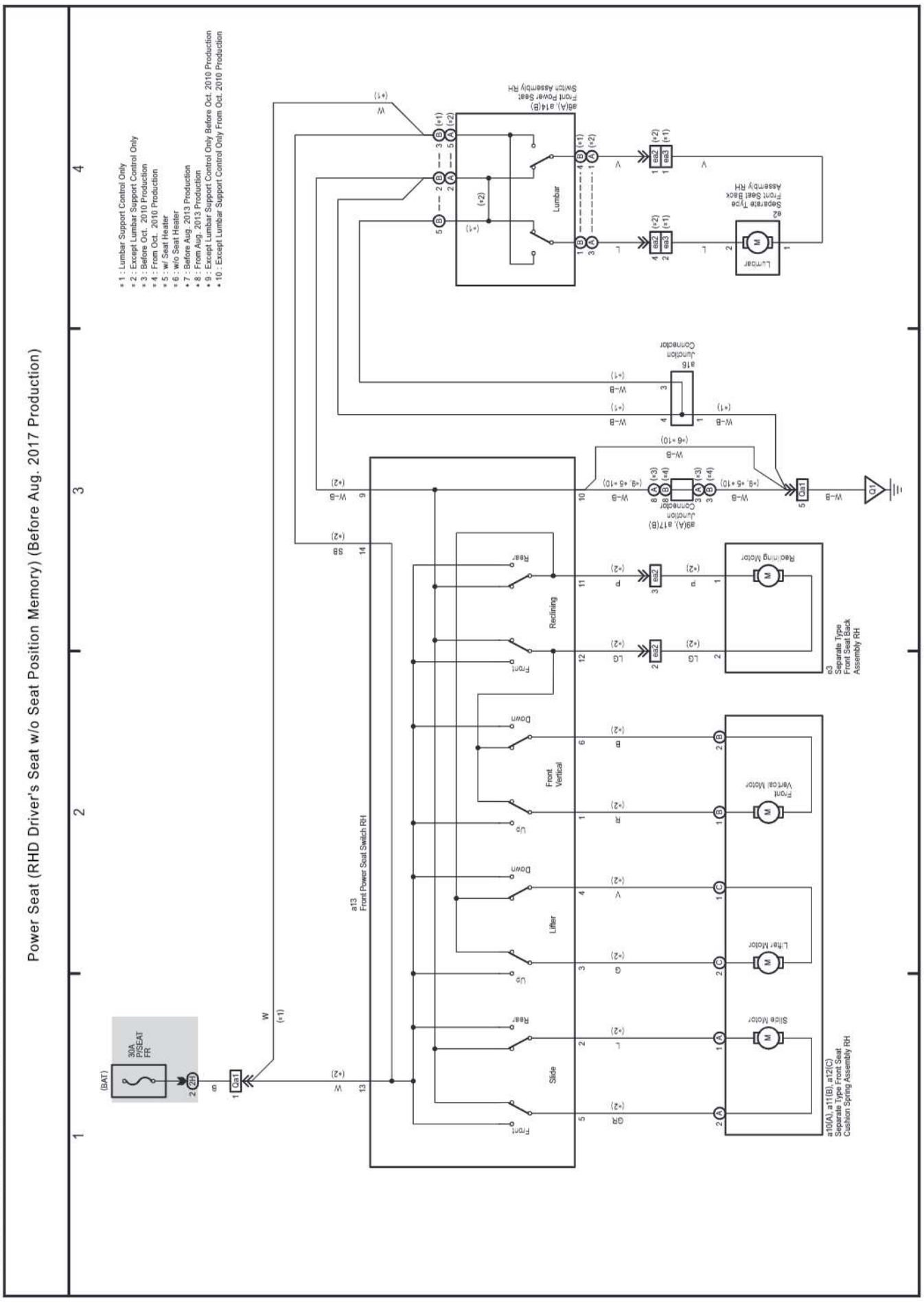

cardiagn.com

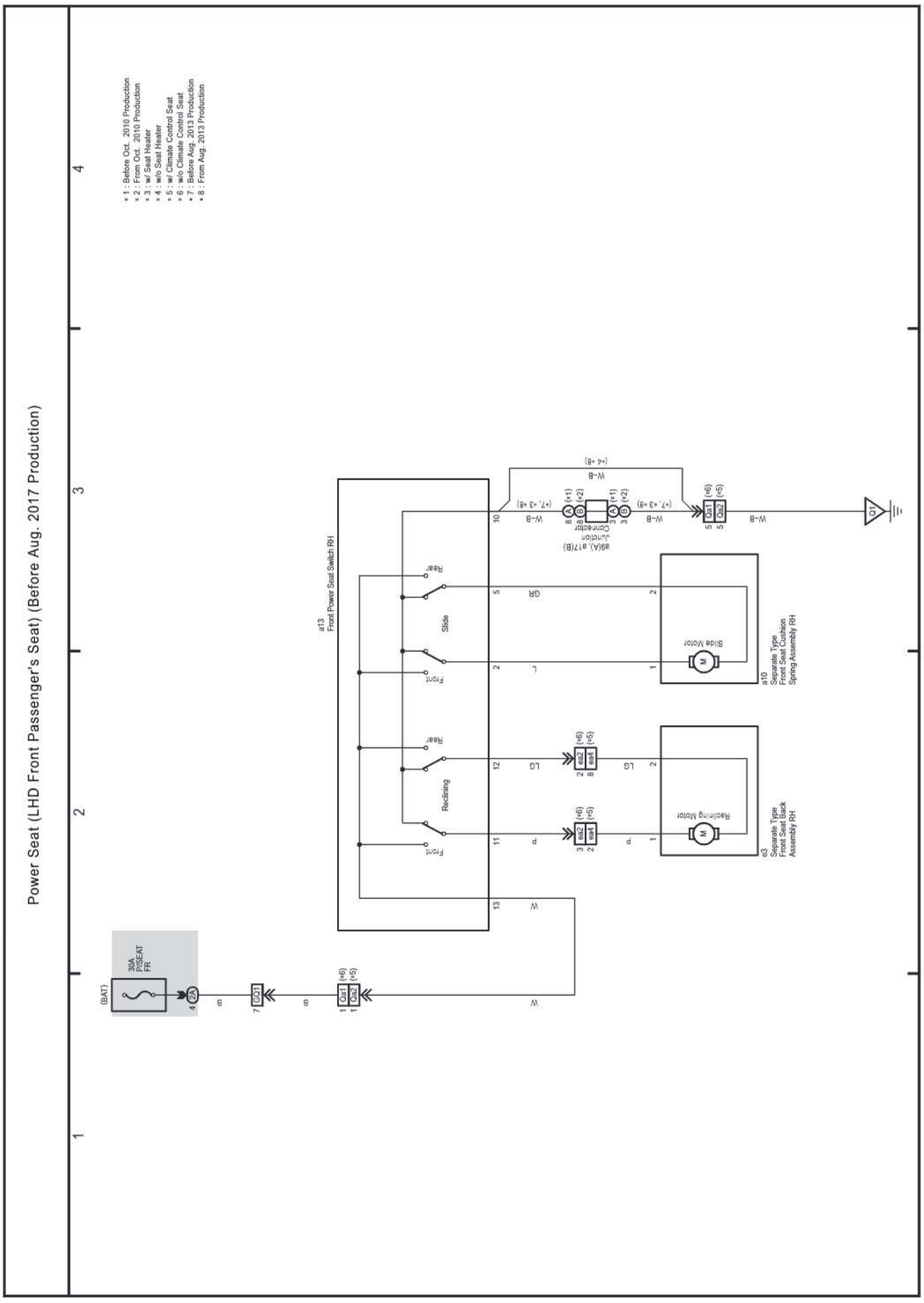

cardiagn.com

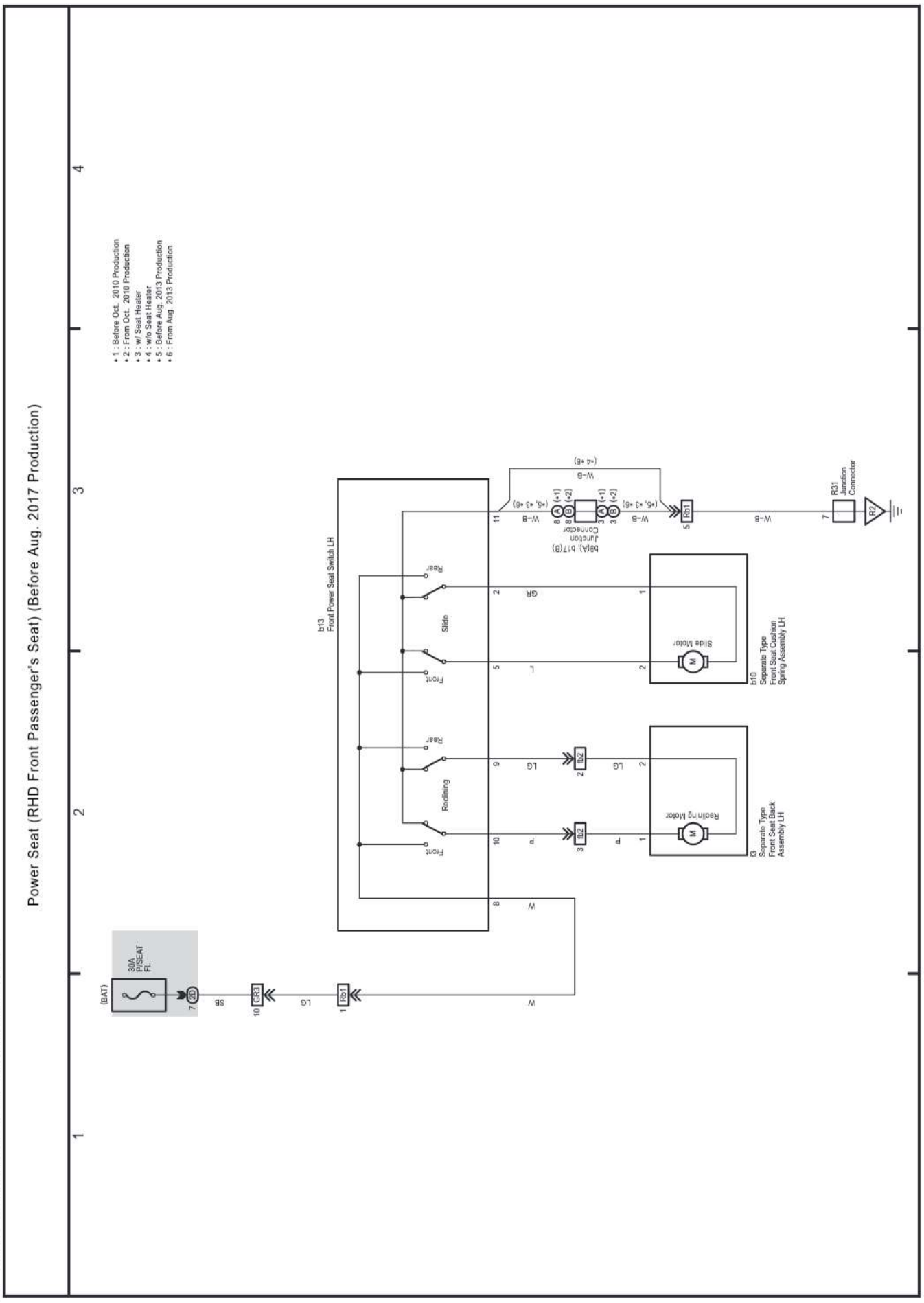

cardiagn.com

(Cont. next page)

Power Rear No. 2 Seat with Stowing Function (Before Aug. 2017 Production)

*1 : For production through approximately Jan. 2011
*2 : For production from approximately Jan. 2011
*3 : RHD A/T
*4 : LHD A/T

cardiagn.com

Power Rear No. 2 Seat with Stowing Function (Before Aug. 2017 Production)

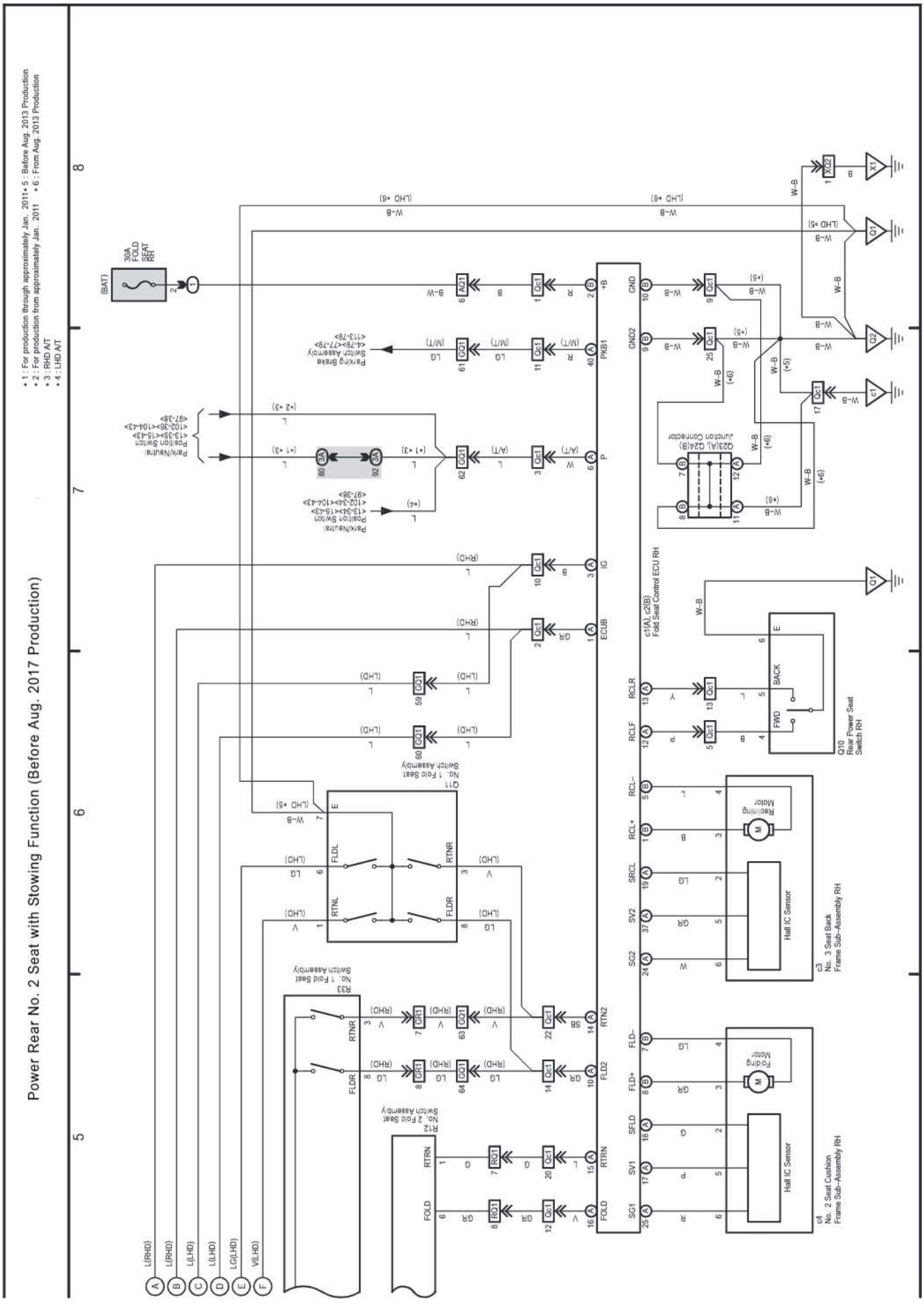

cardiagn.com

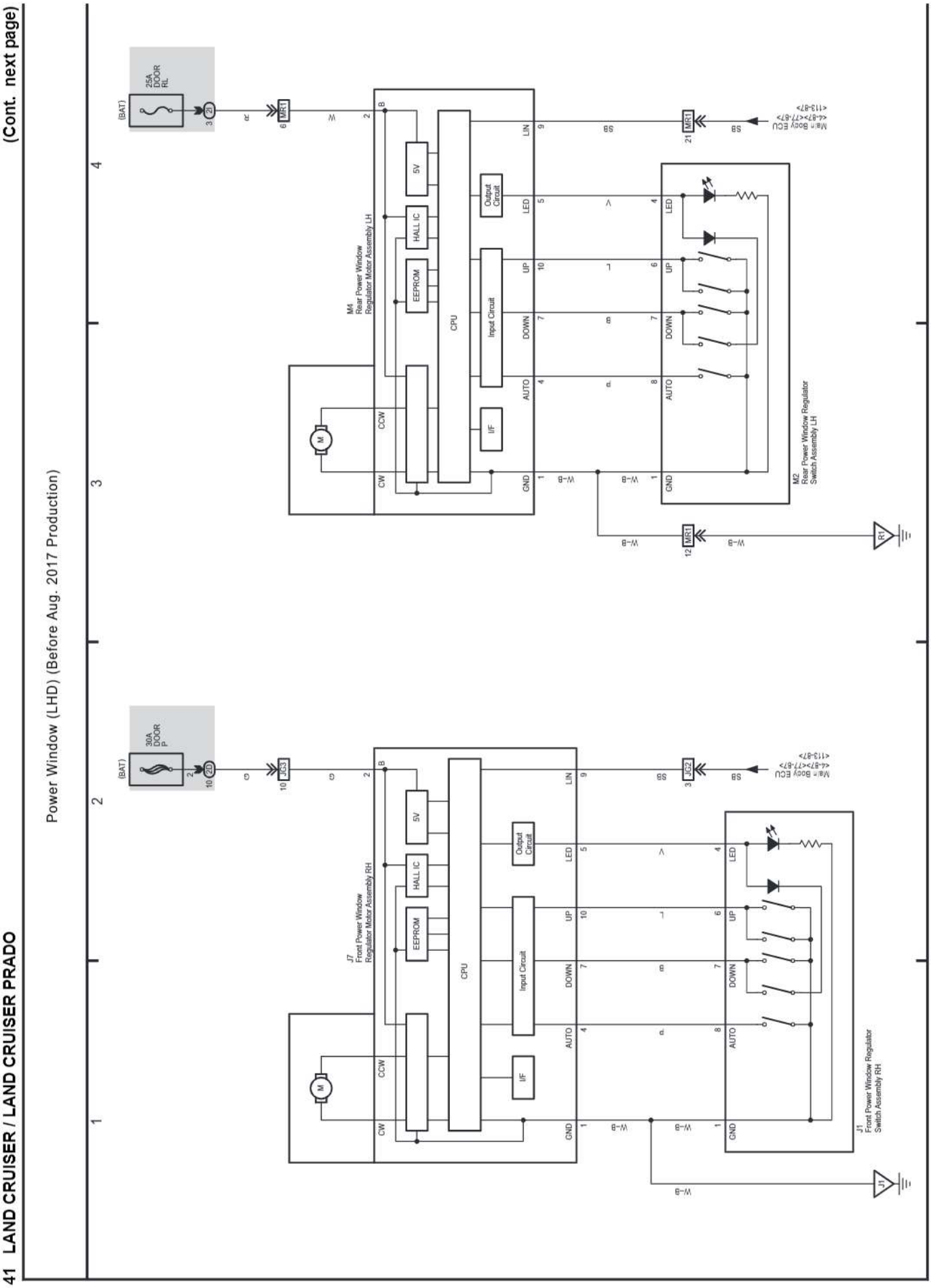

cardiagn.com

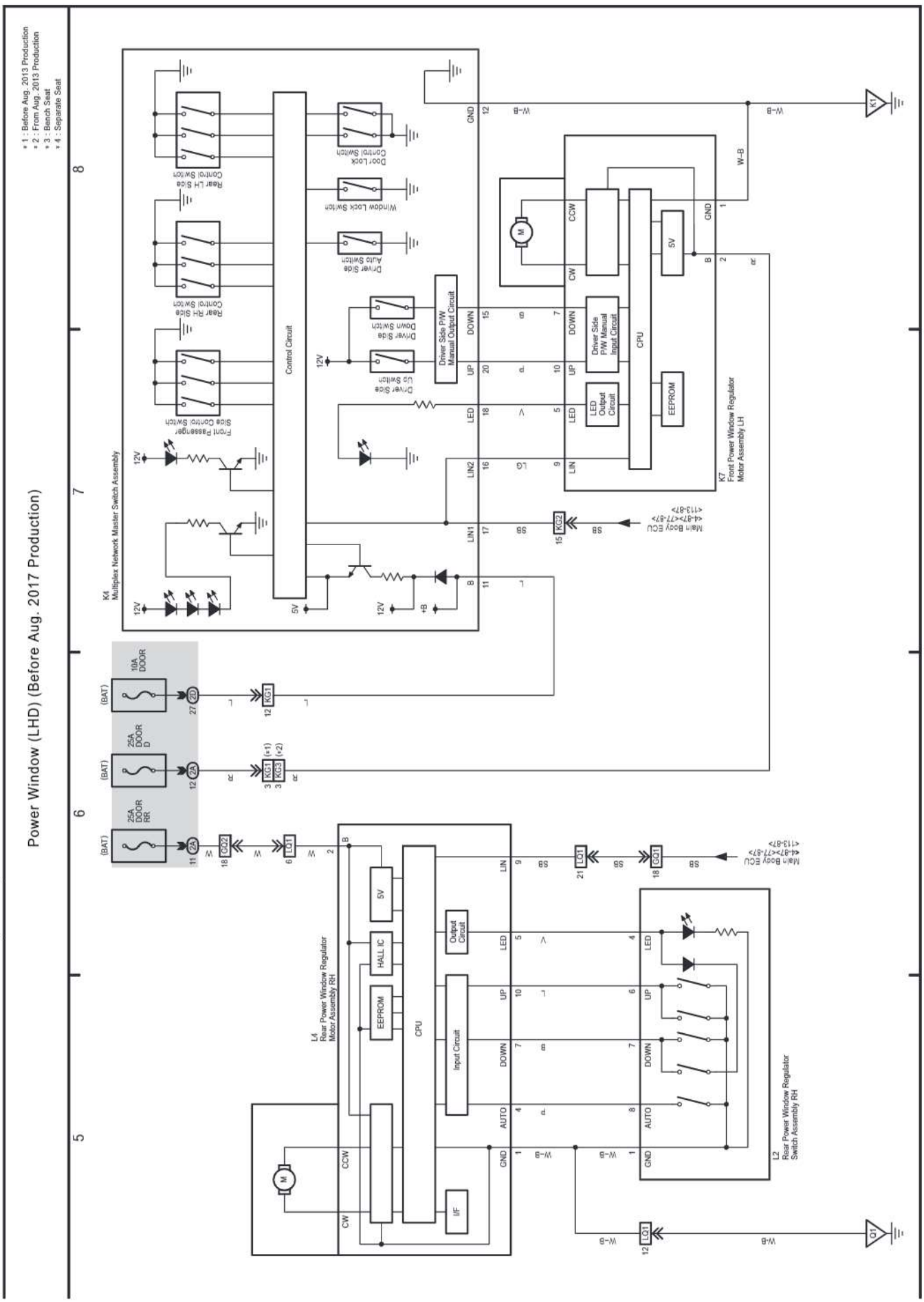

cardiagn.com

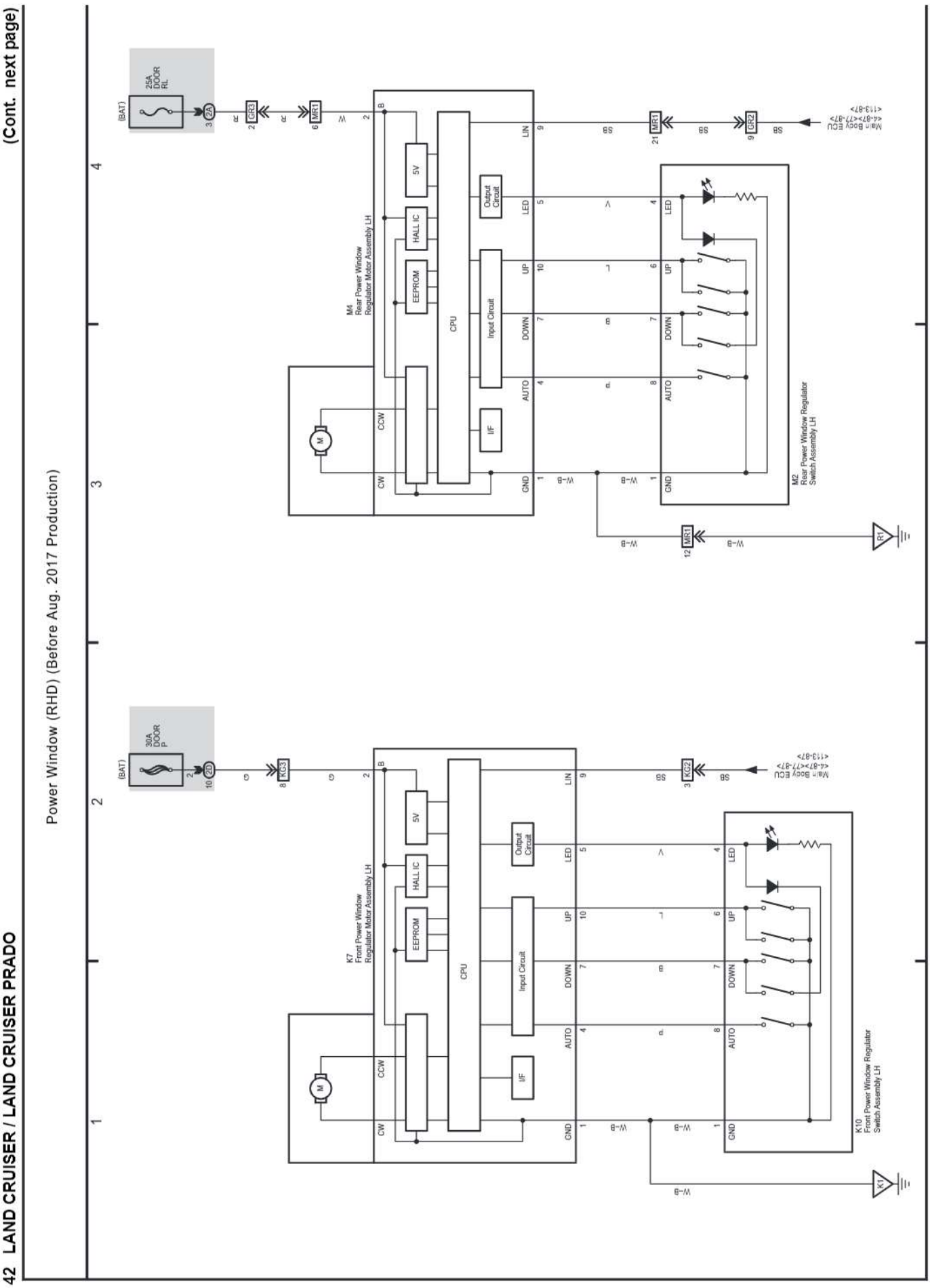

cardiagn.com

42 LAND CRUISER / LAND CRUISER PRADO (Cont'd)

Power Window (RHD) (Before Aug. 2017 Production)

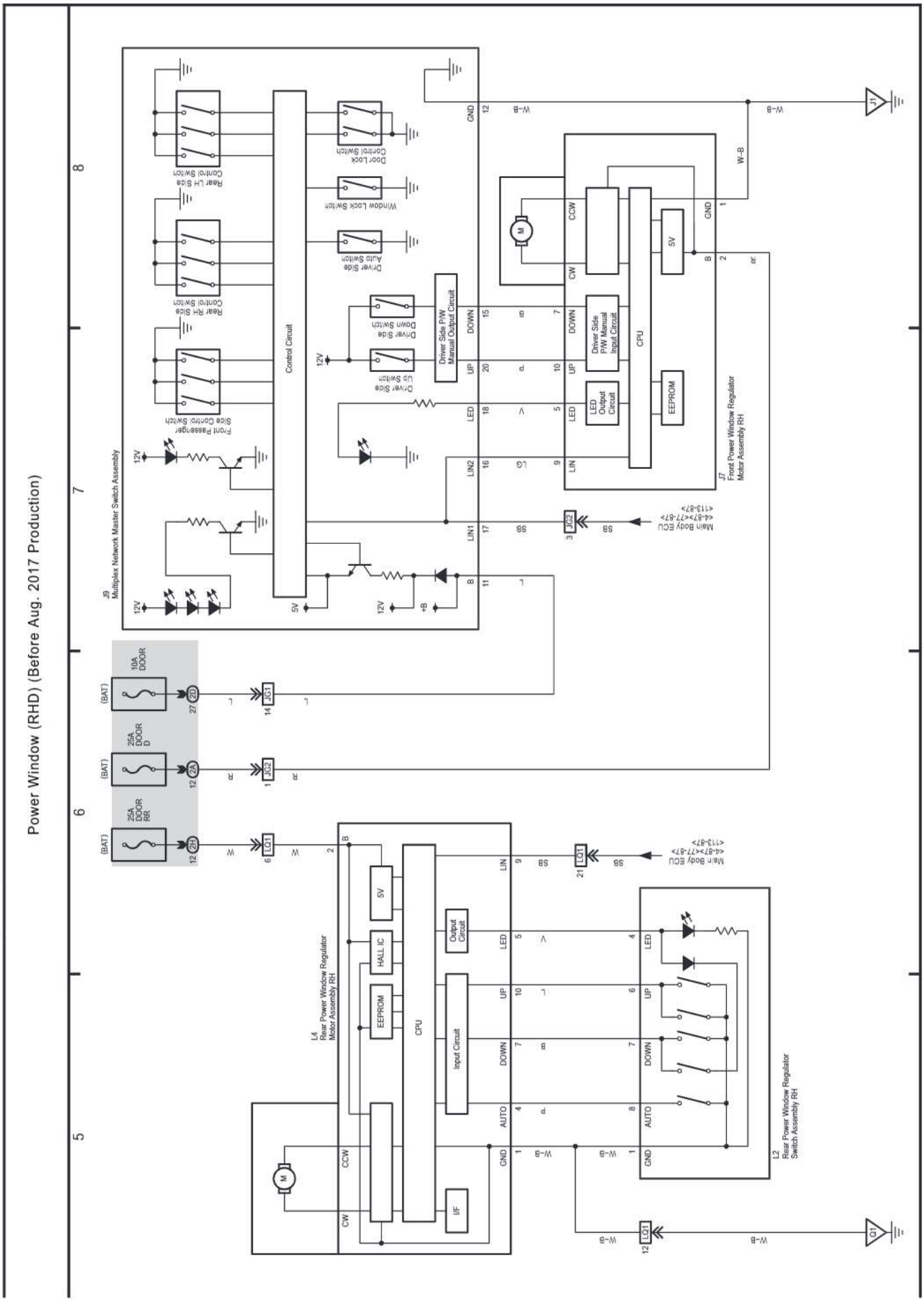

cardiagn.com

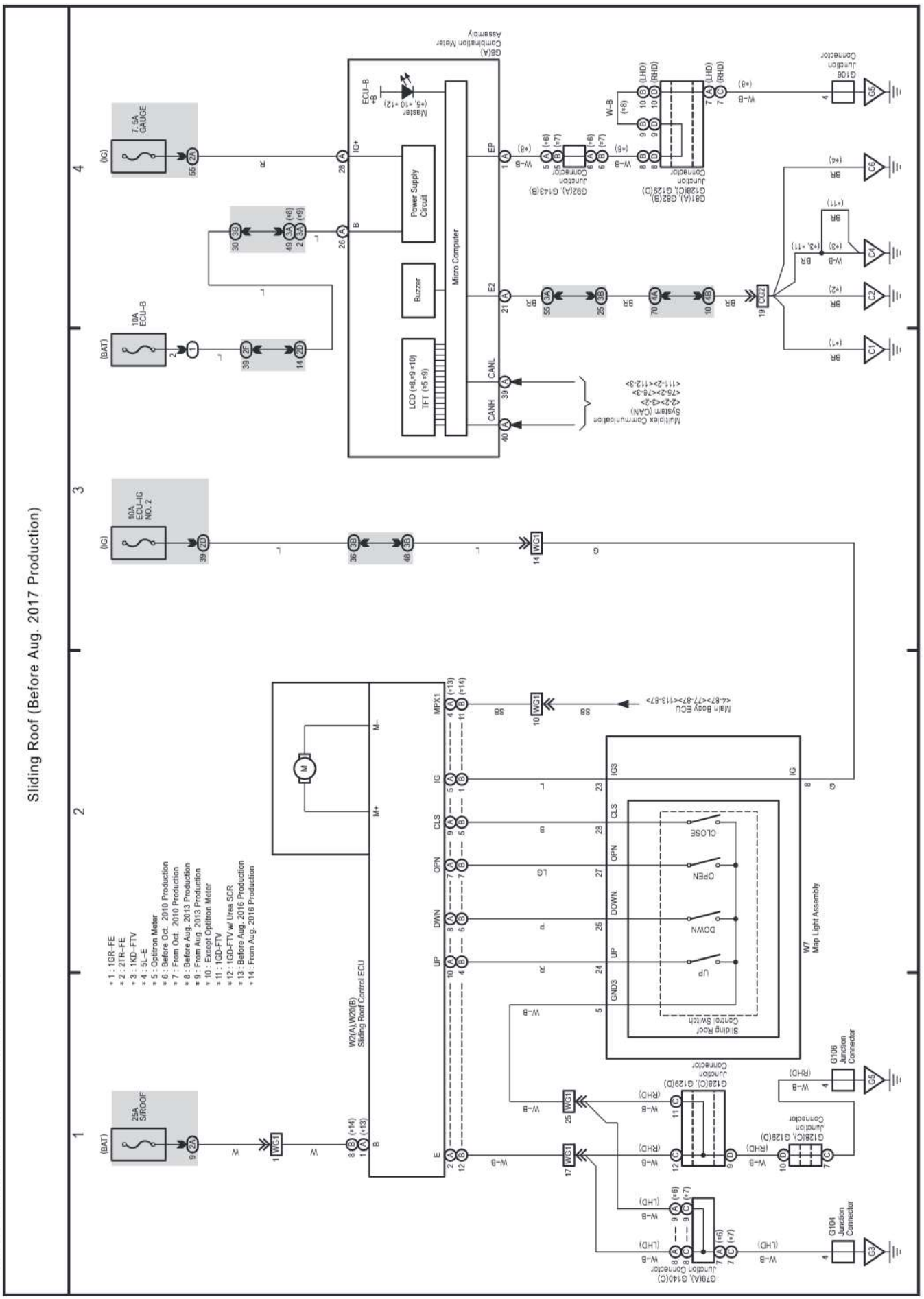

cardiagn.com

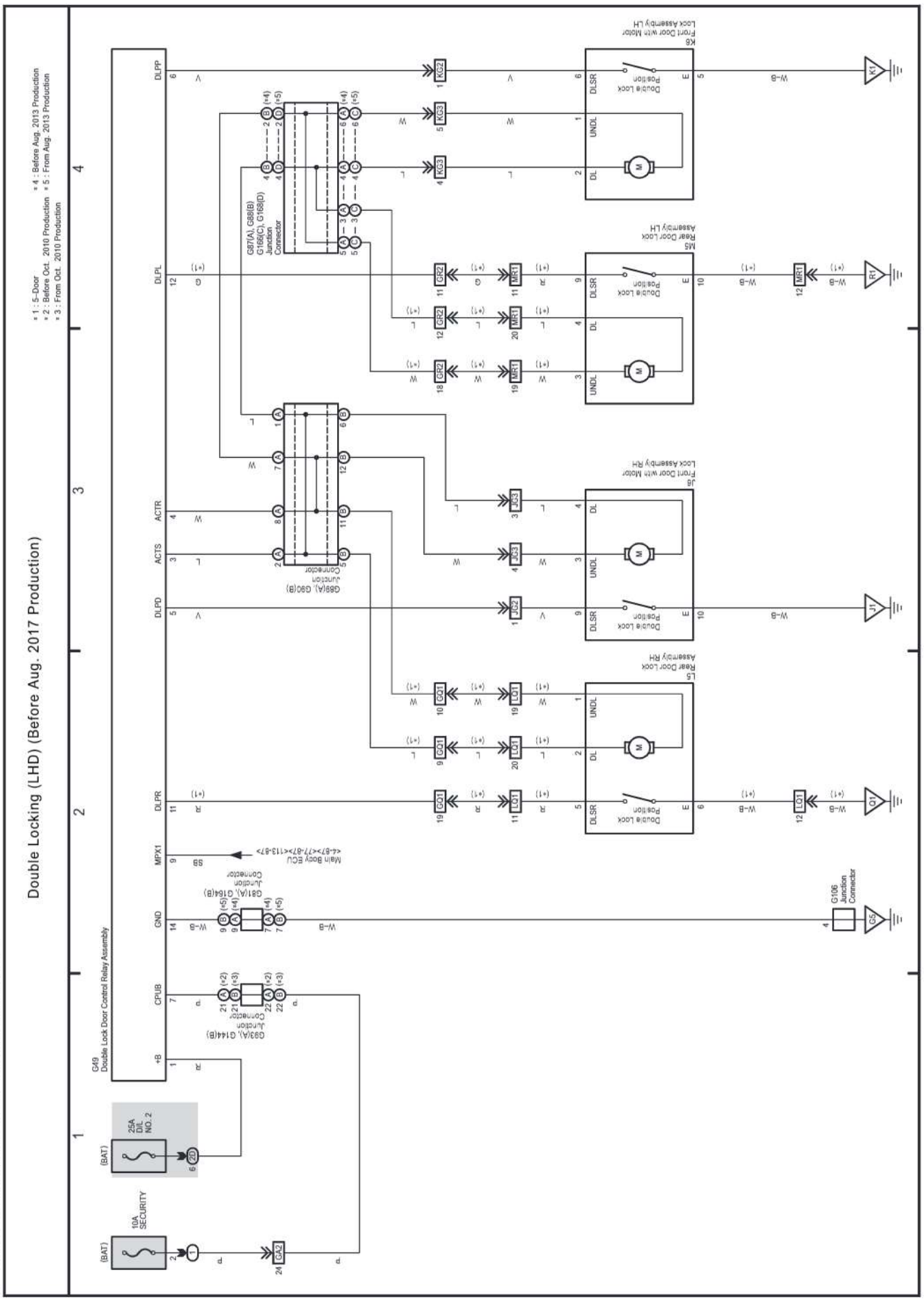

cardiagn.com

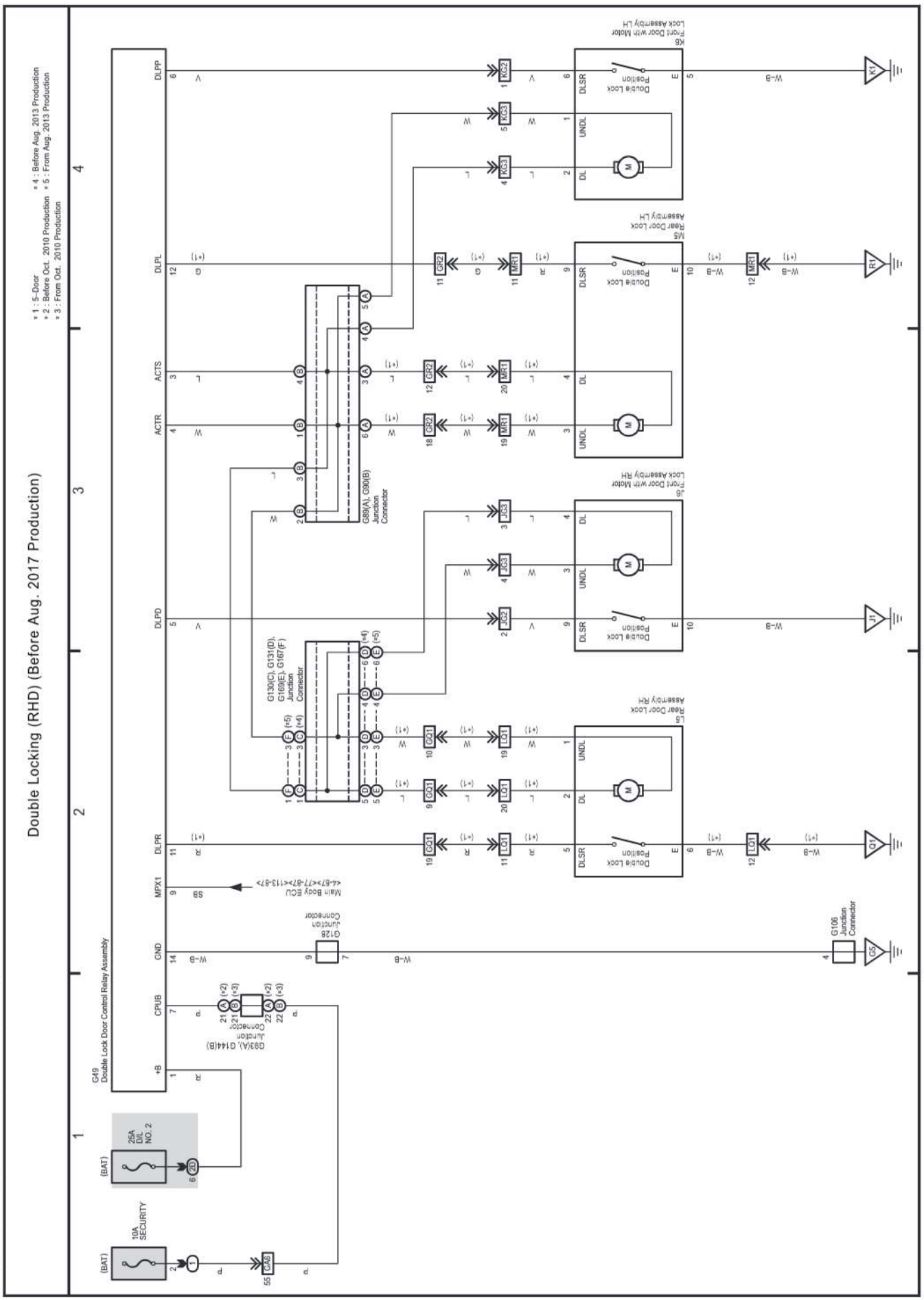

cardiagn.com

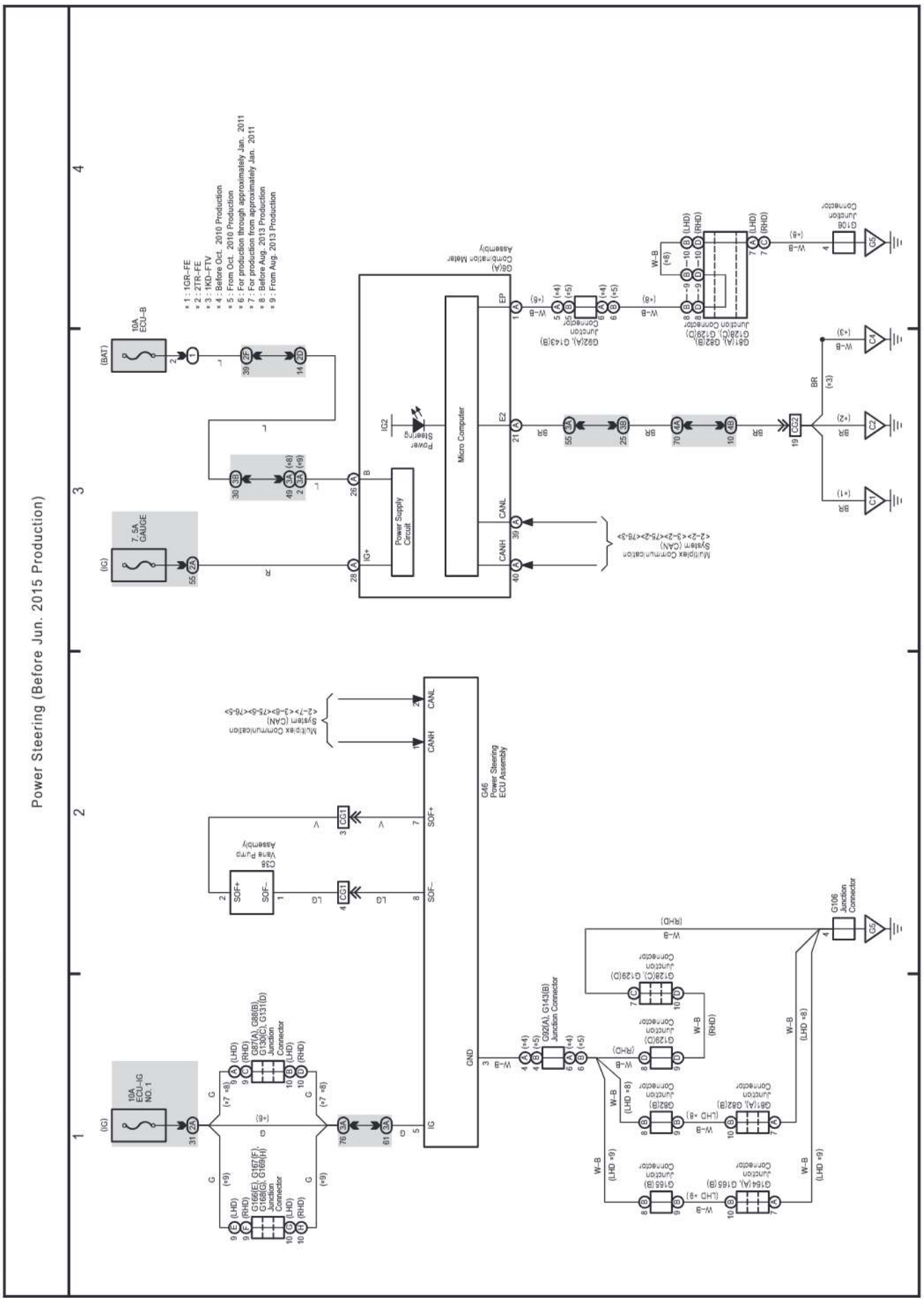

cardiagn.com

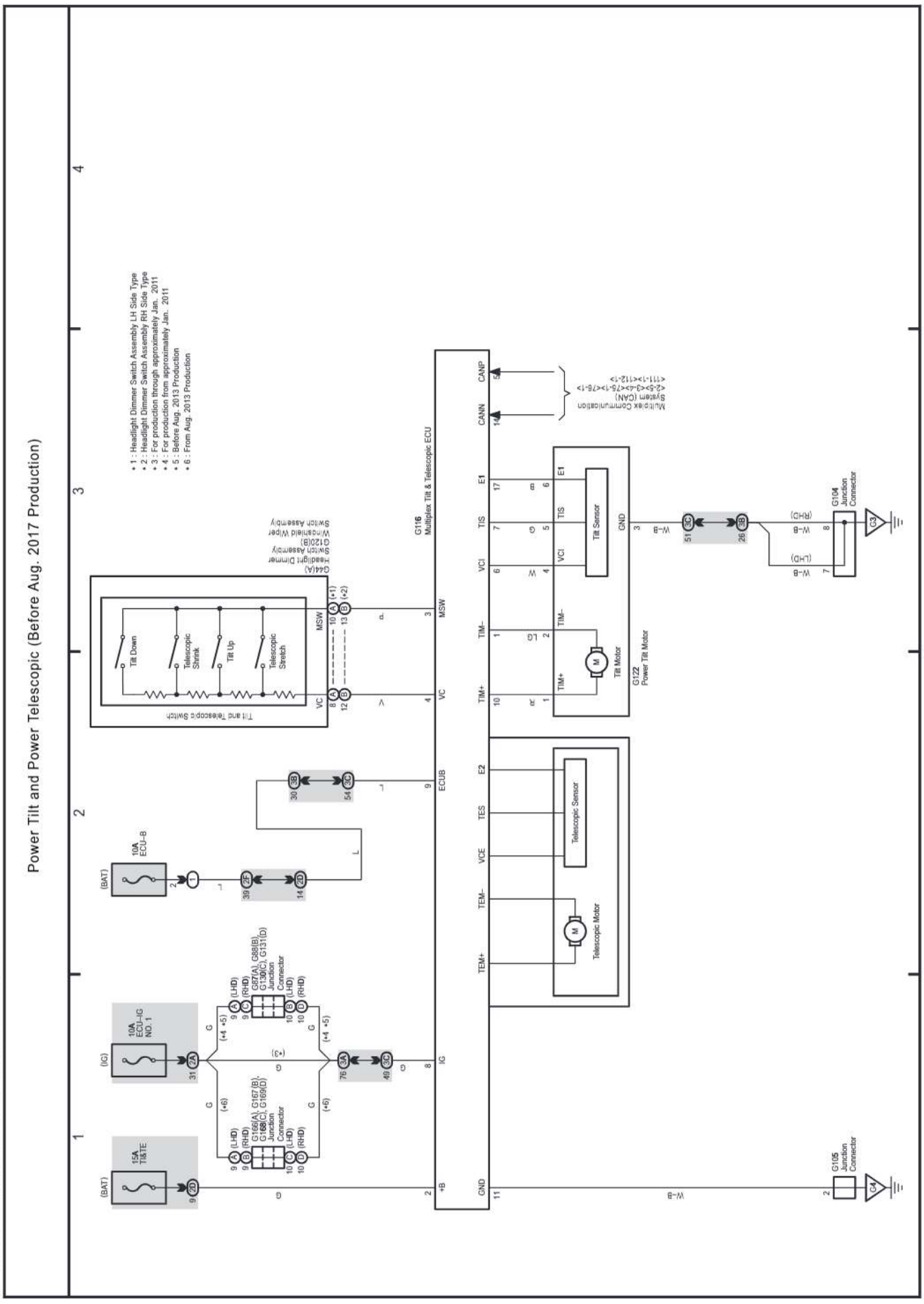

cardiagn.com

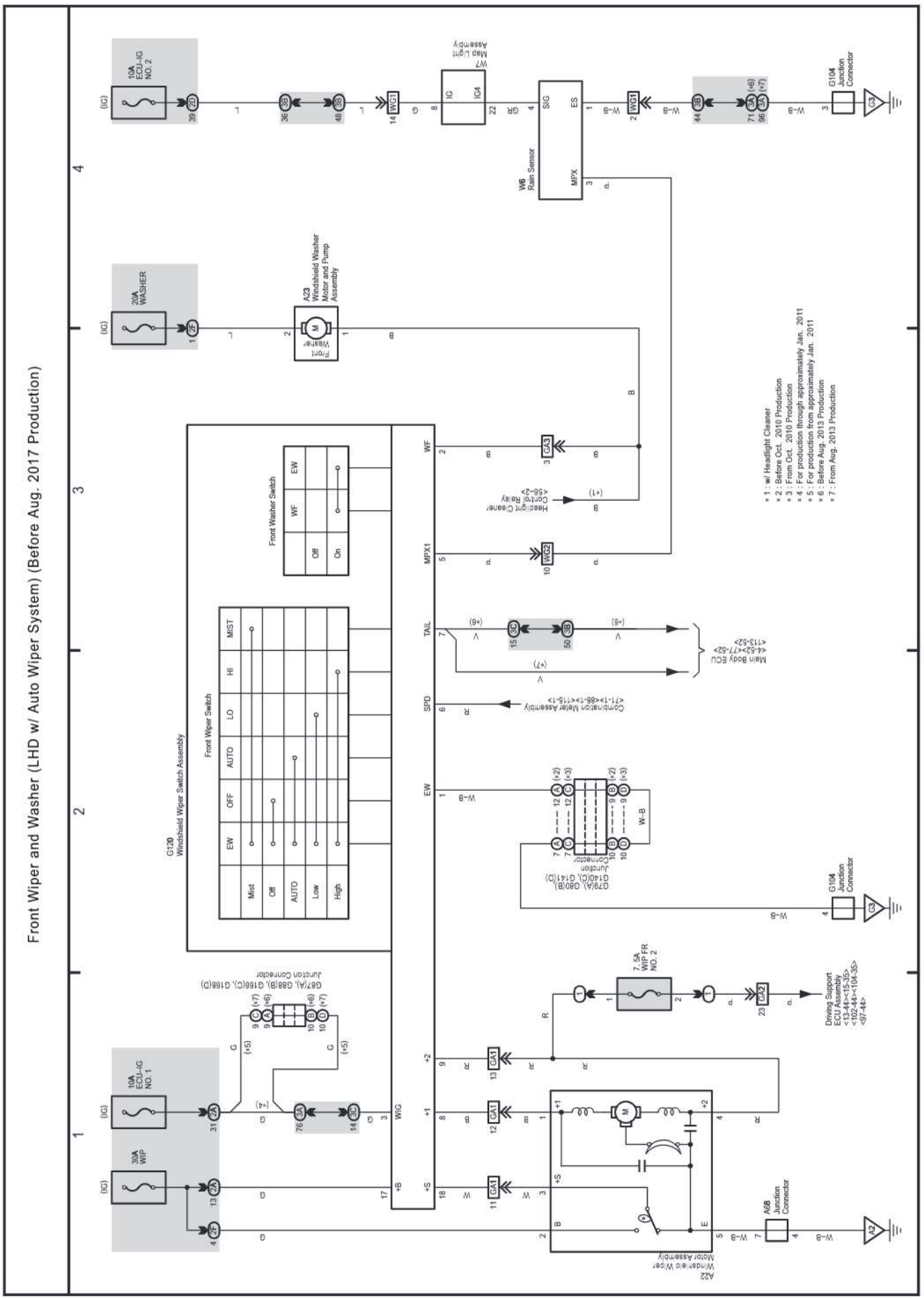

cardiagn.com

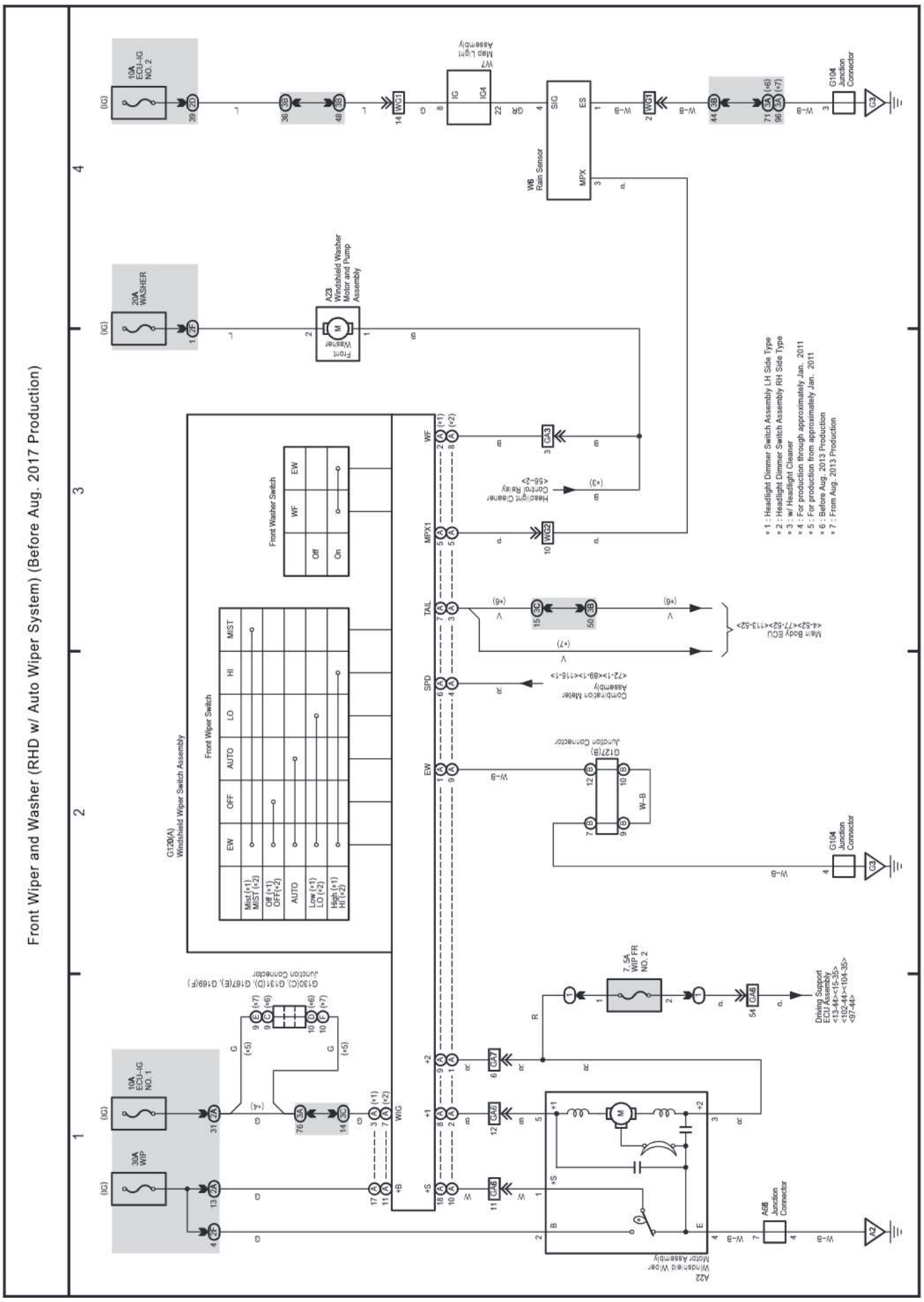

cardiagn.com

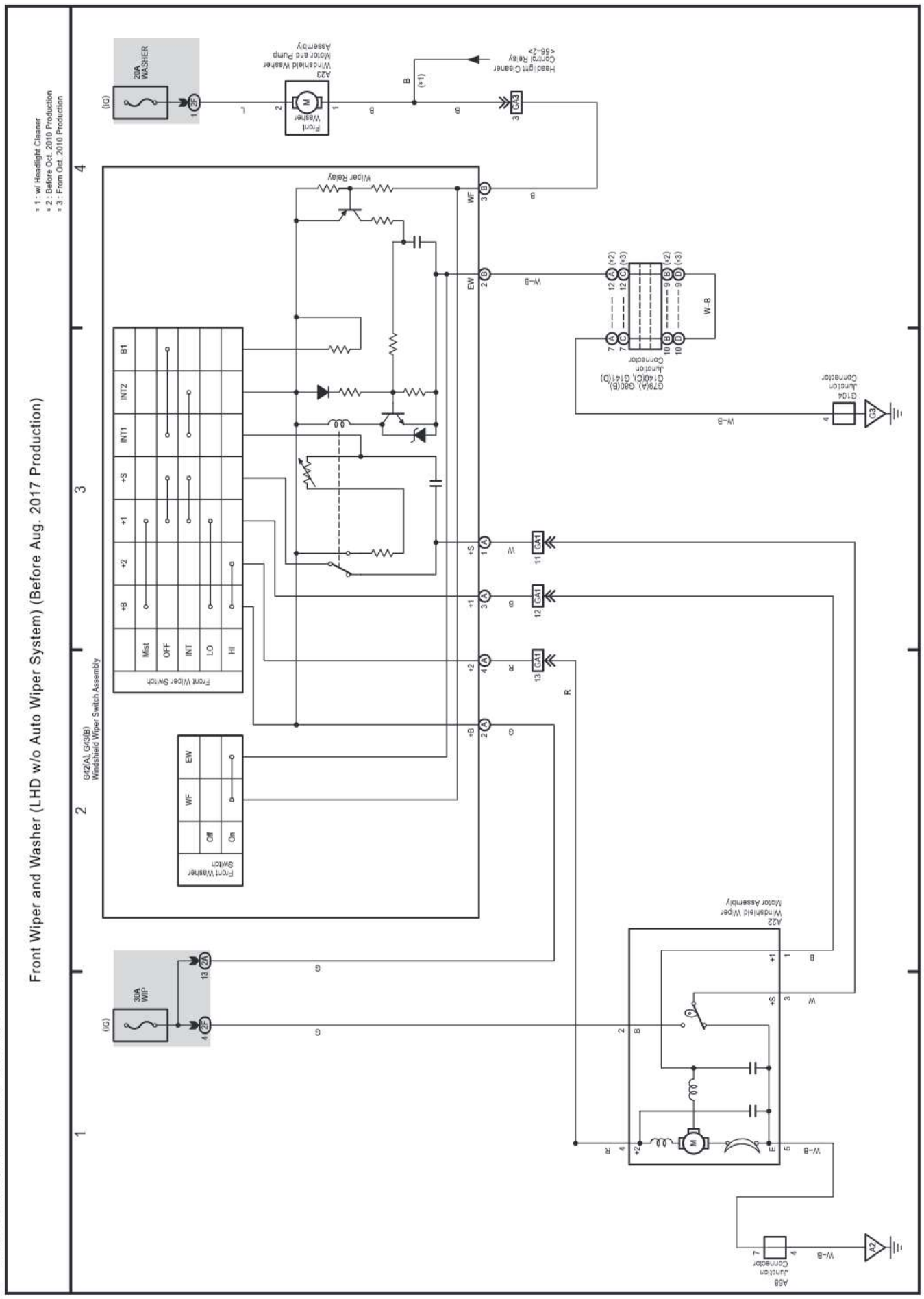

cardiagn.com

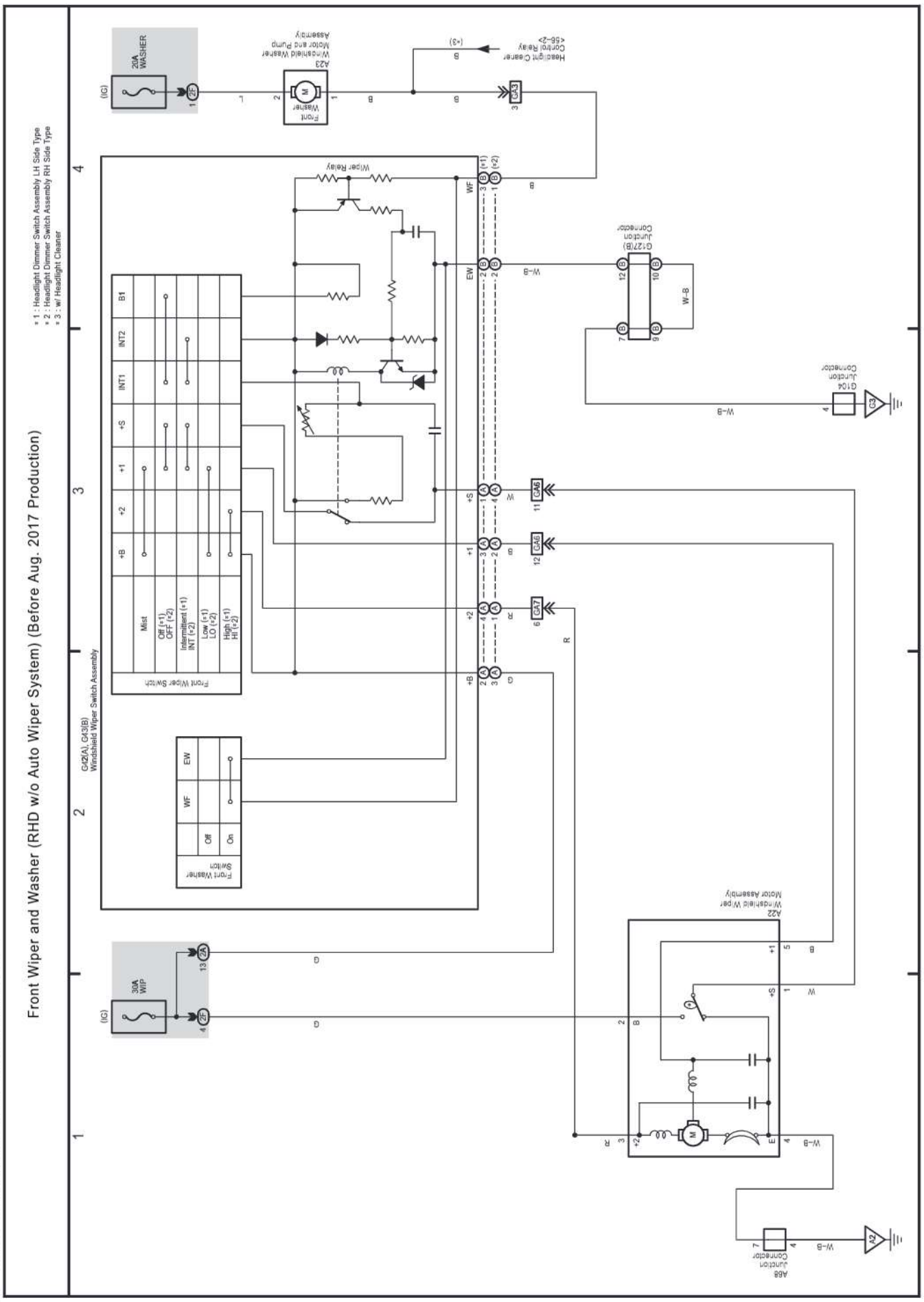

cardiagn.com

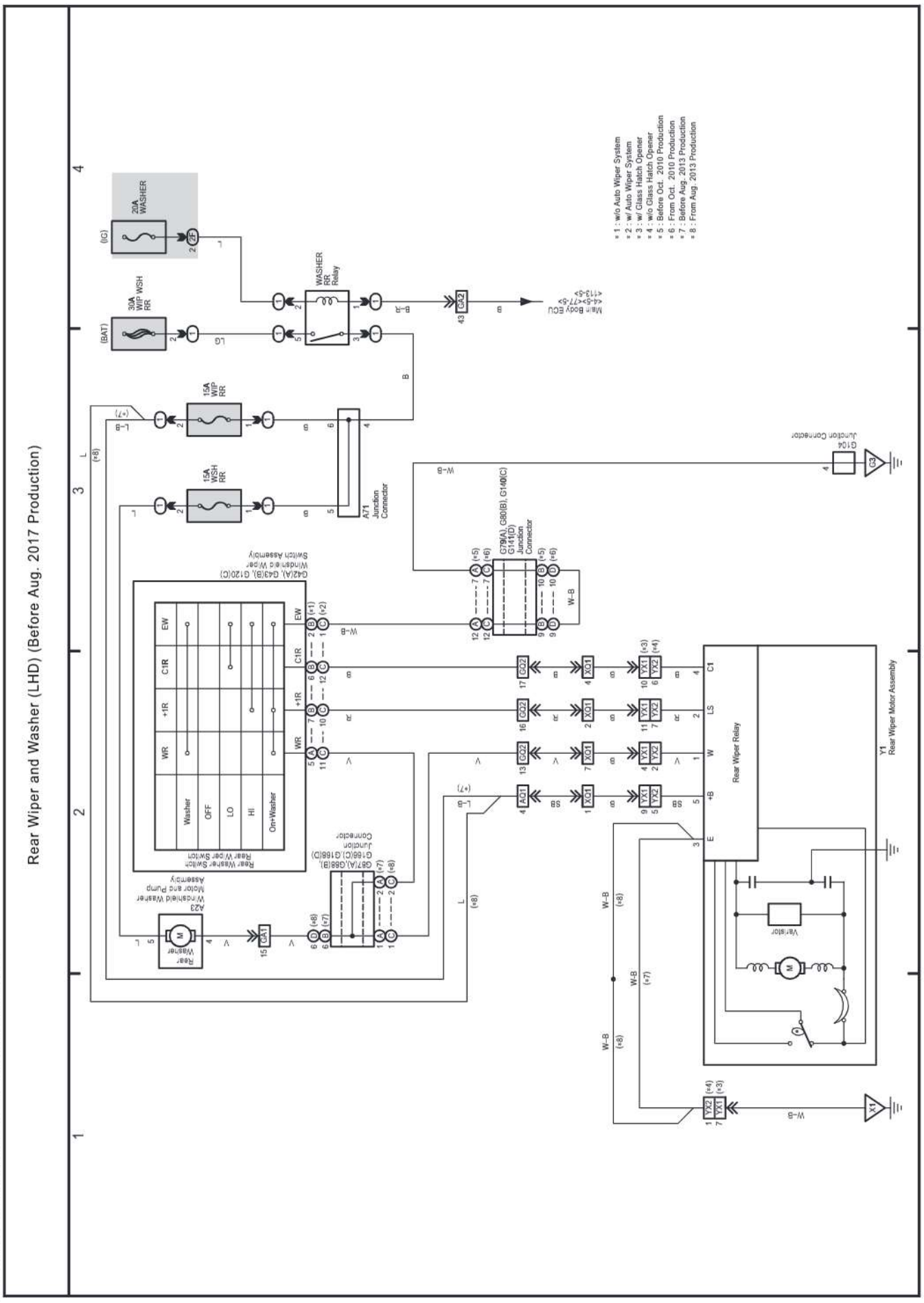

cardiagn.com

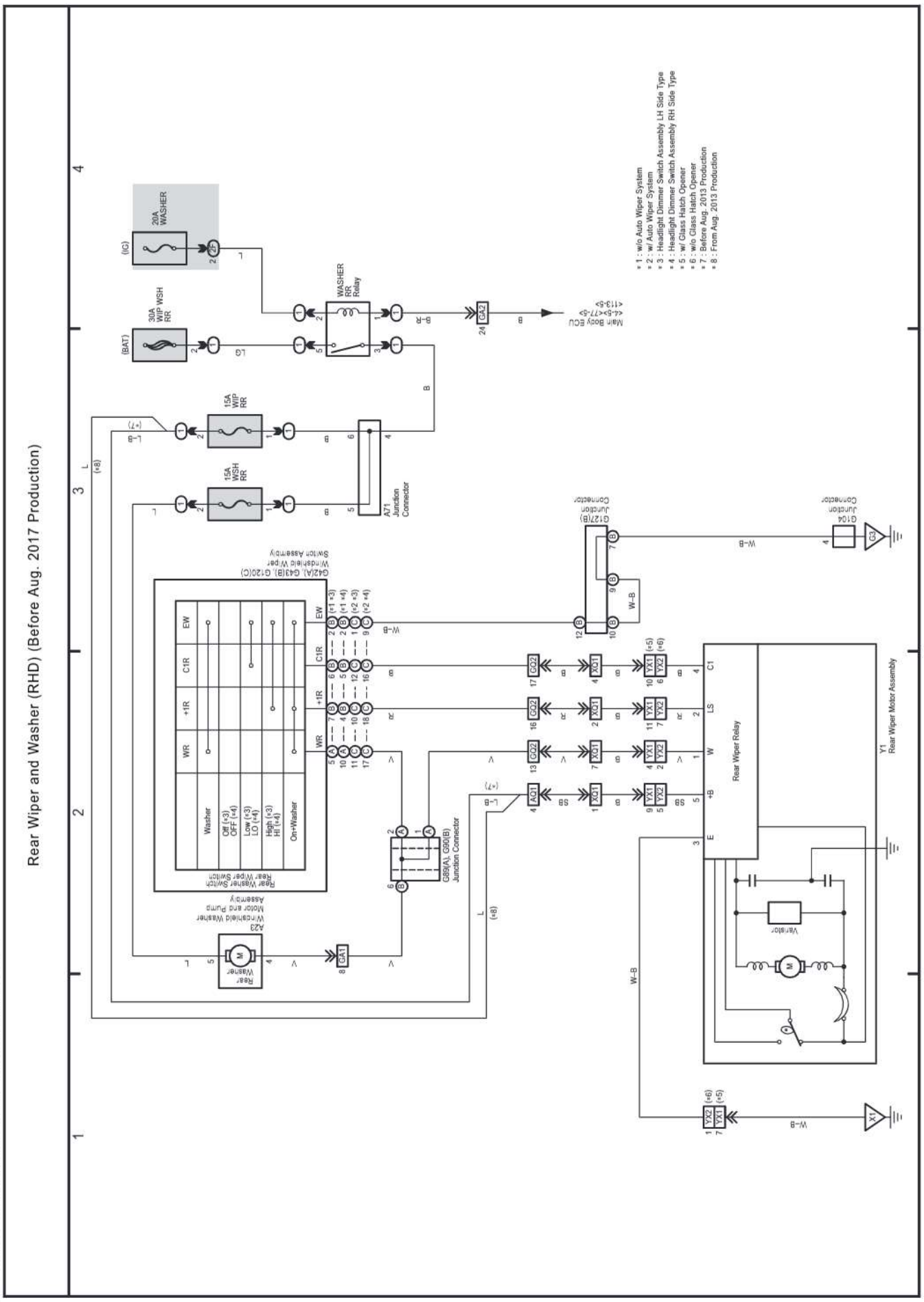

cardiagn.com

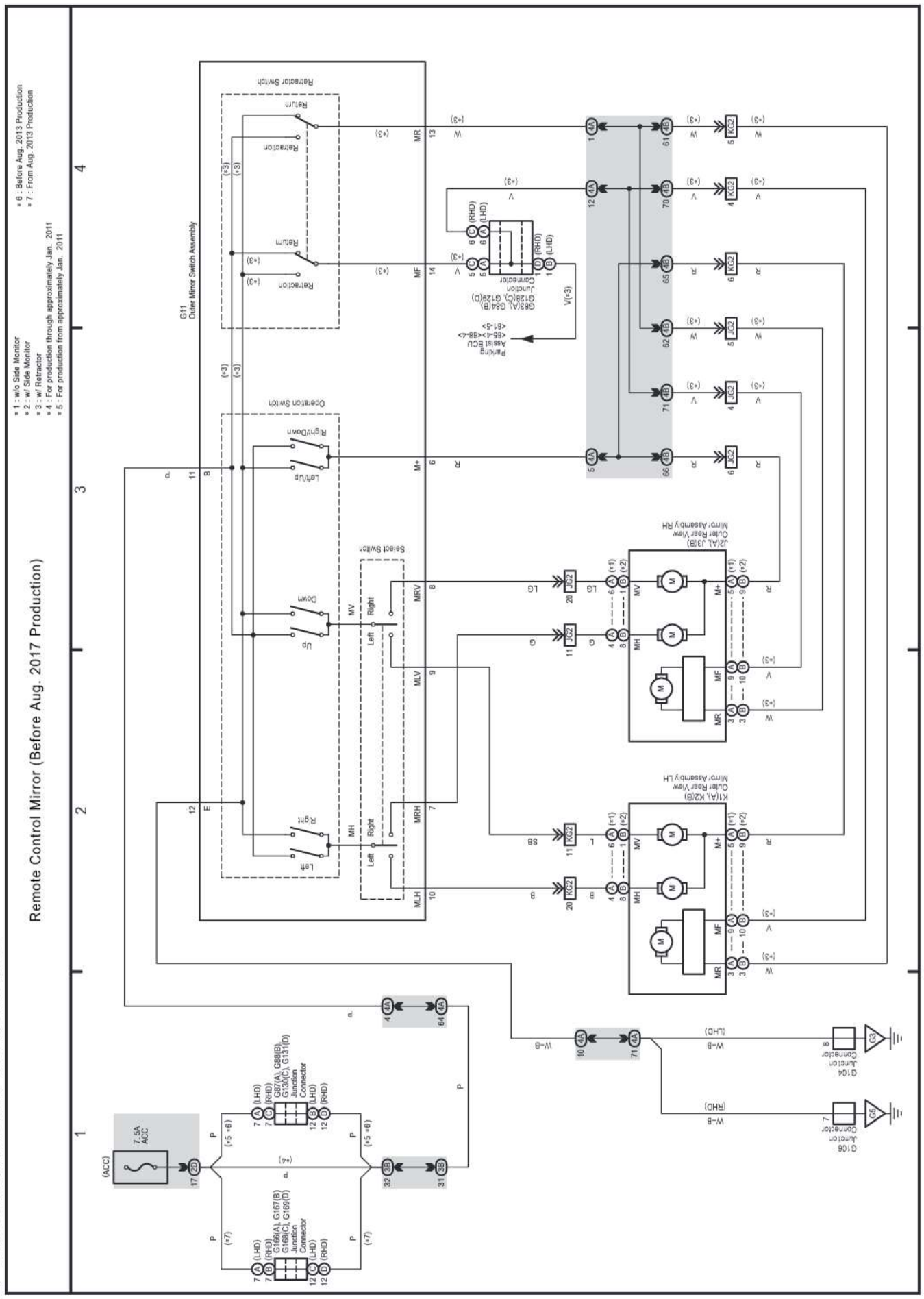

cardiagn.com

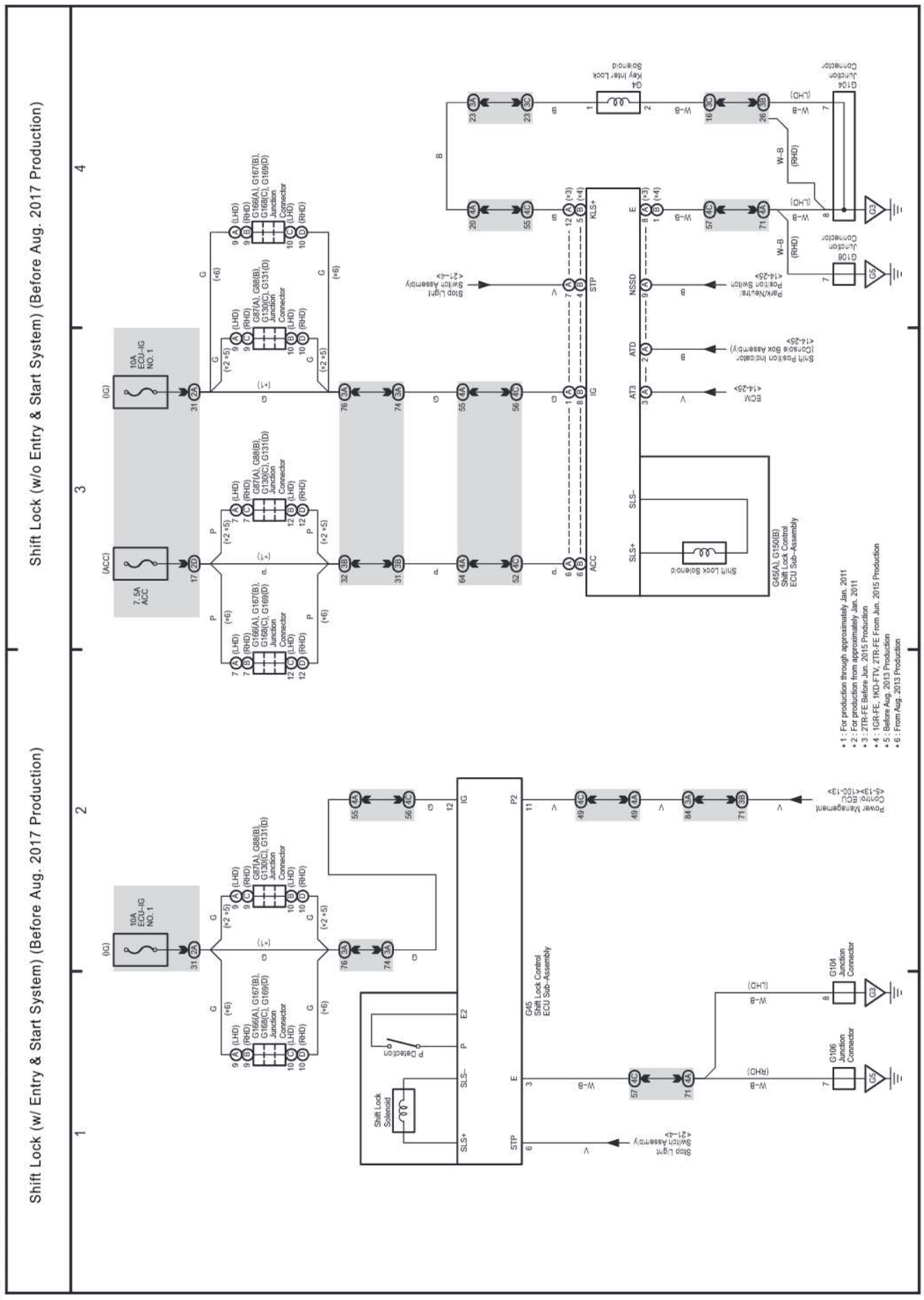

cardiagn.com

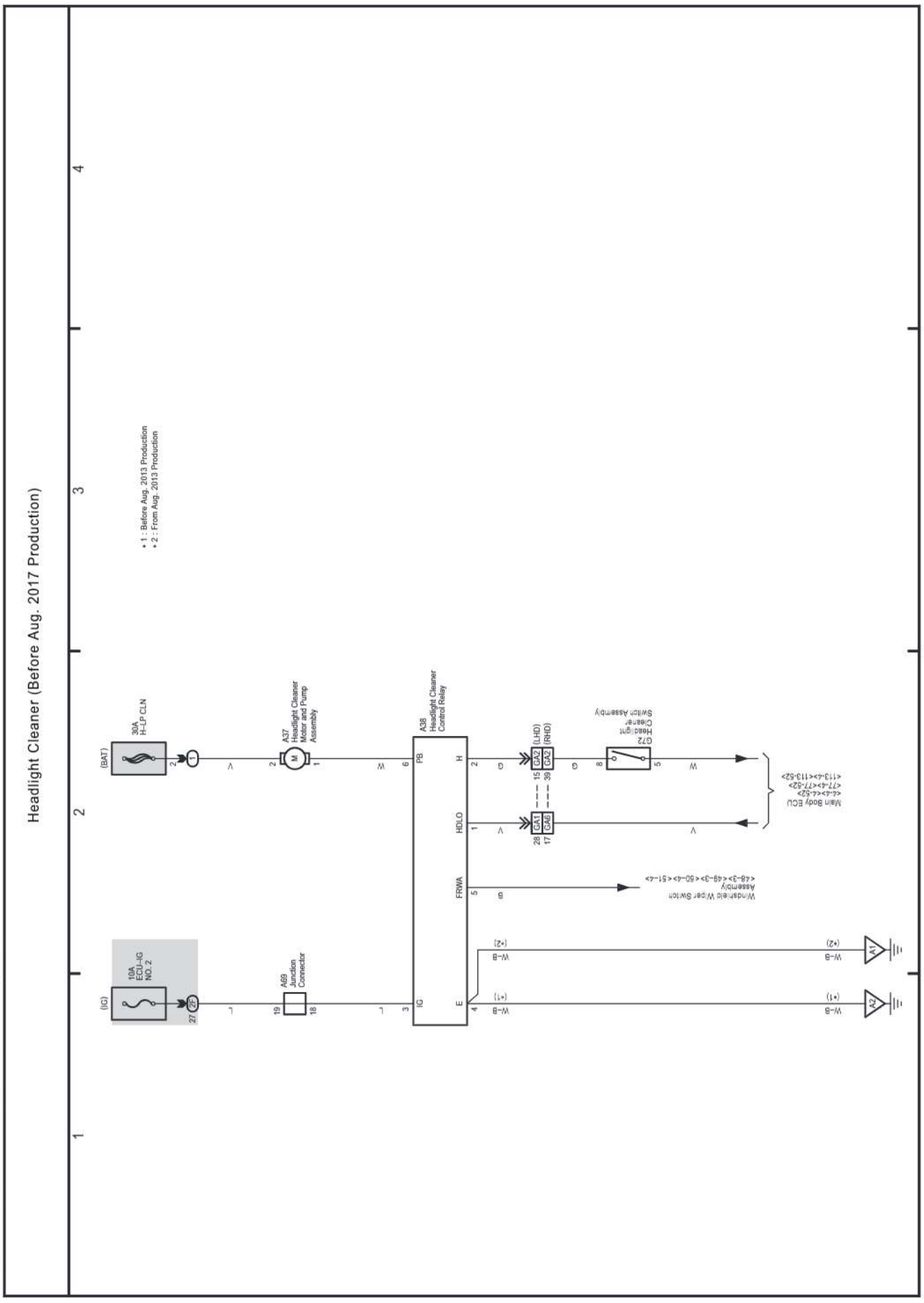

cardiagn.com

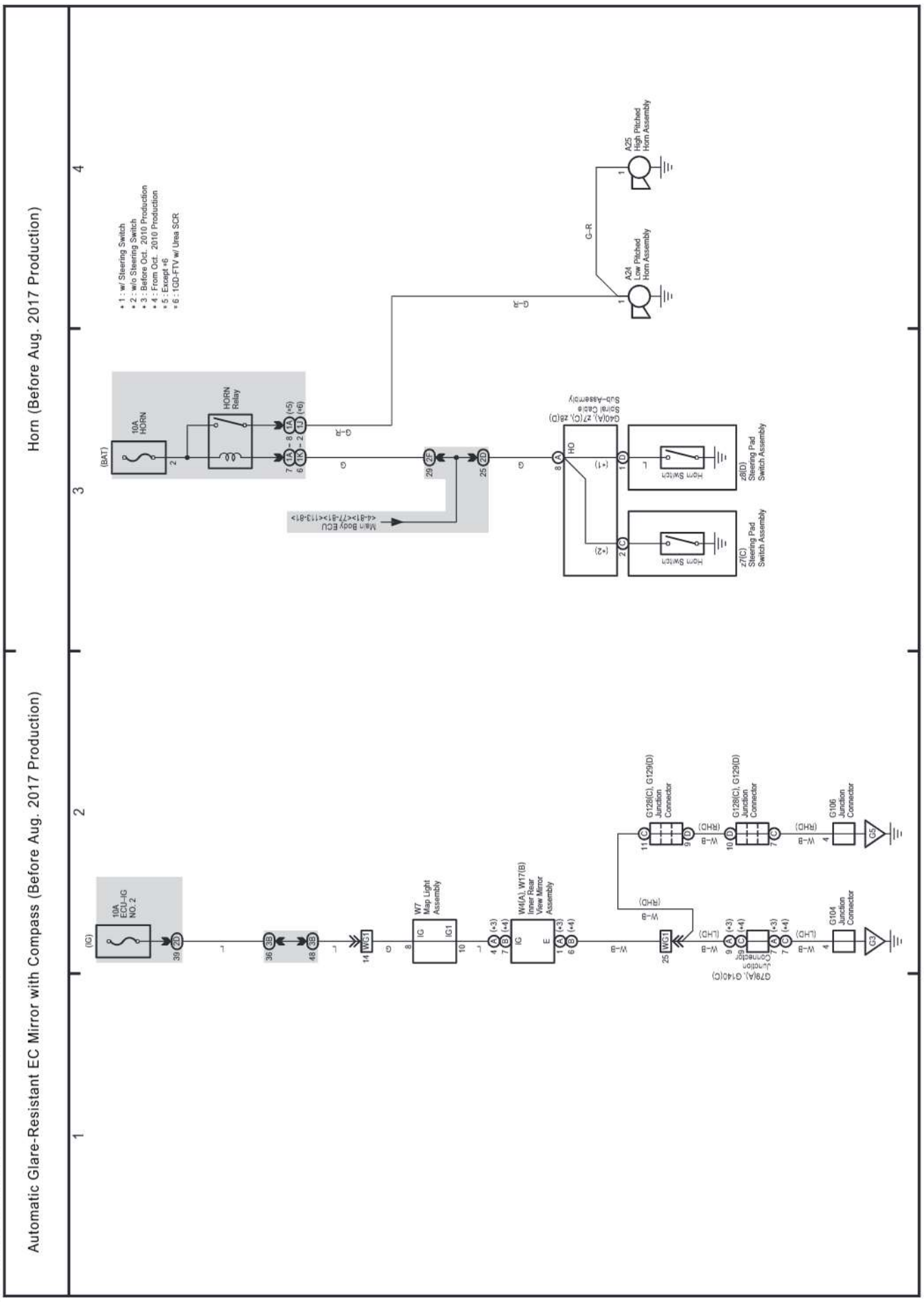

cardiagn.com

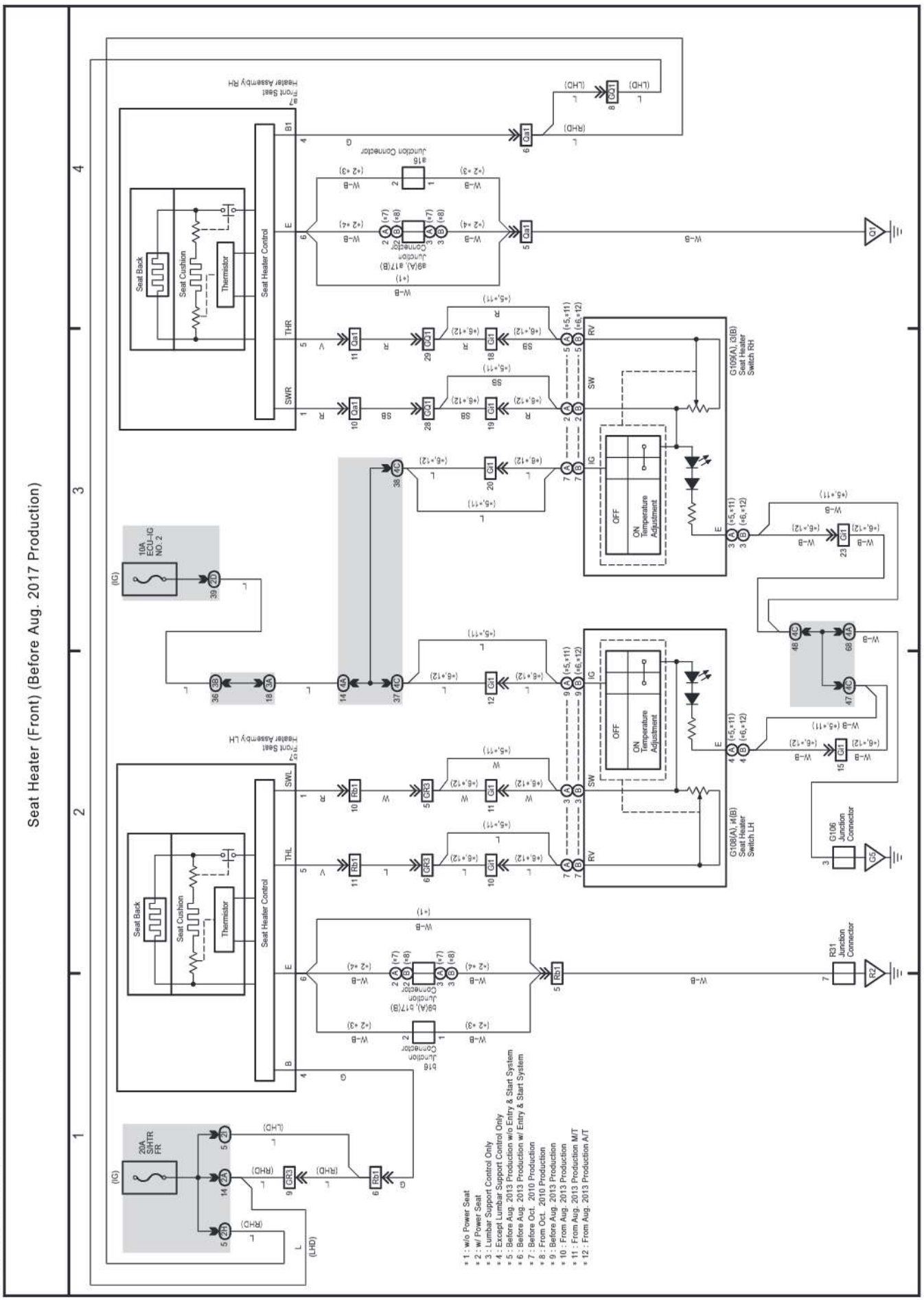

cardiagn.com

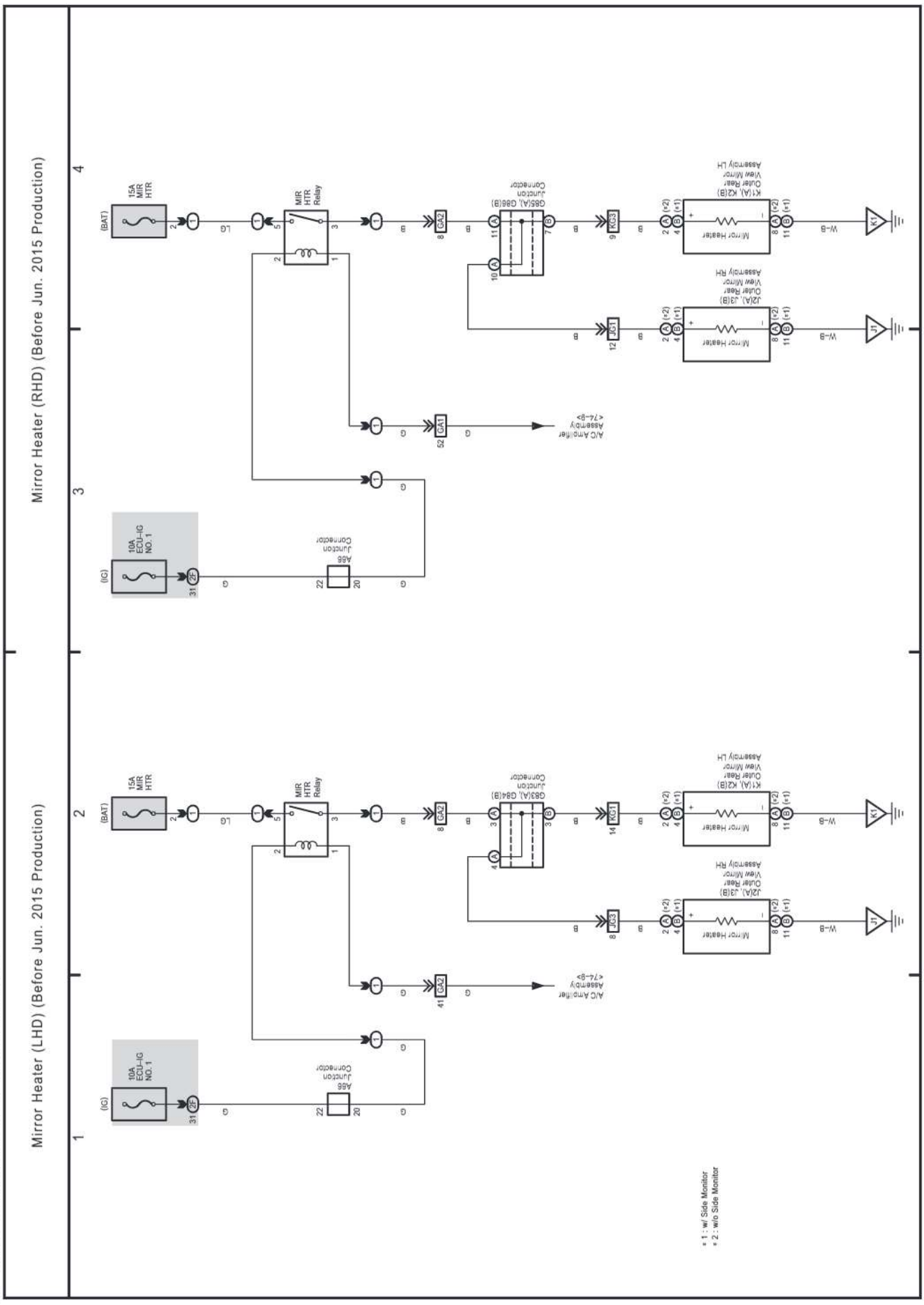

cardiagn.com

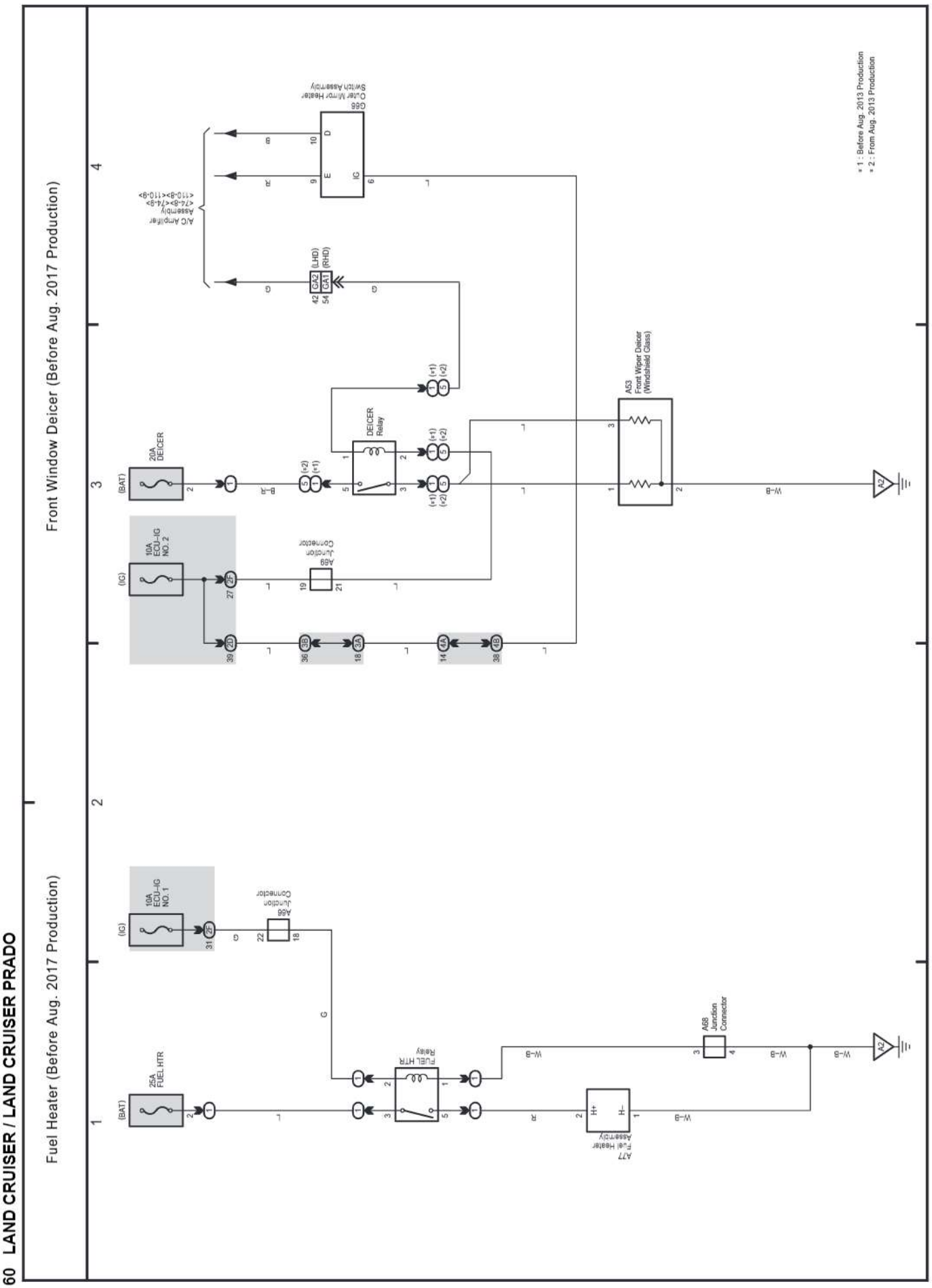

cardiagn.com

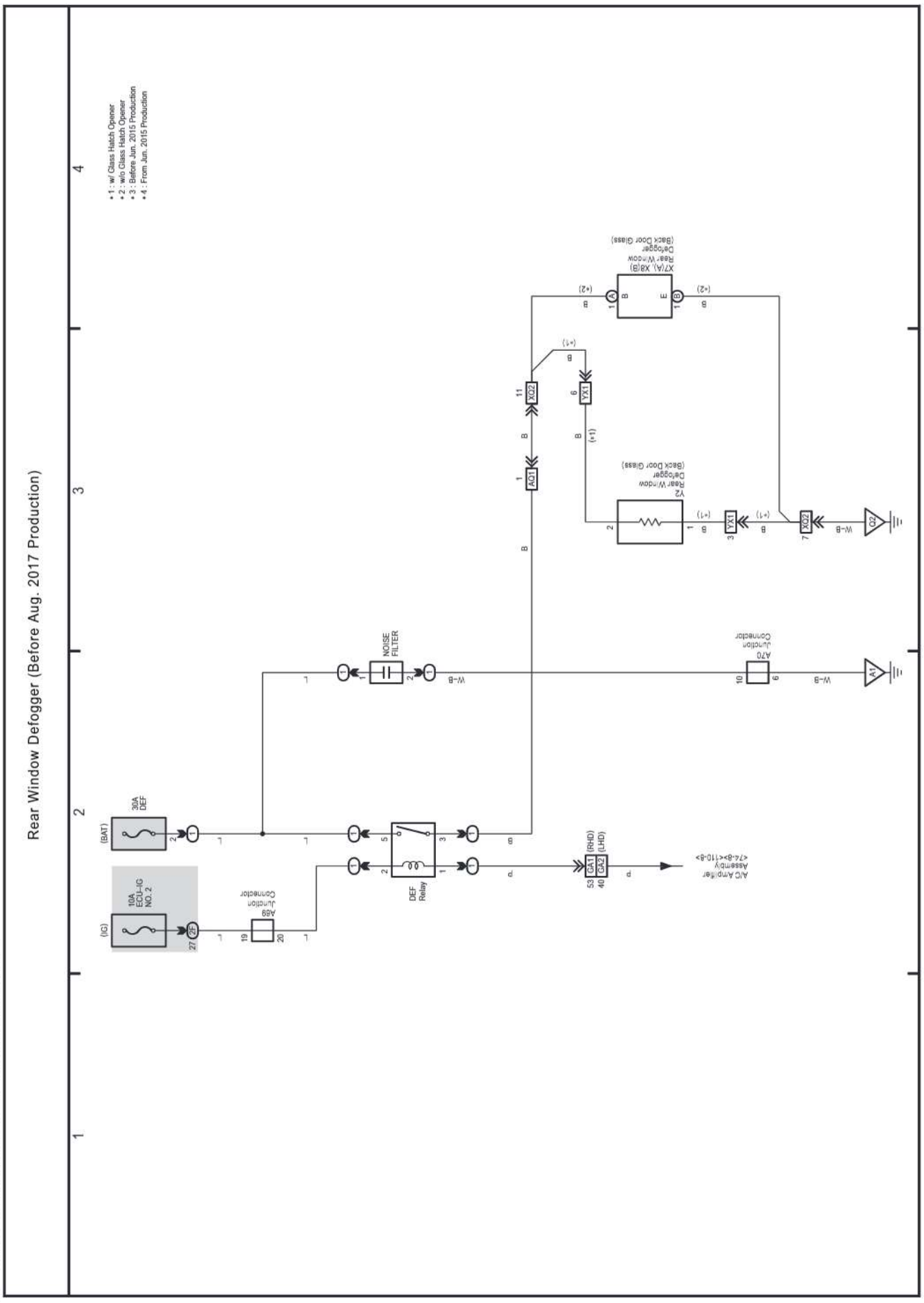

cardiagn.com

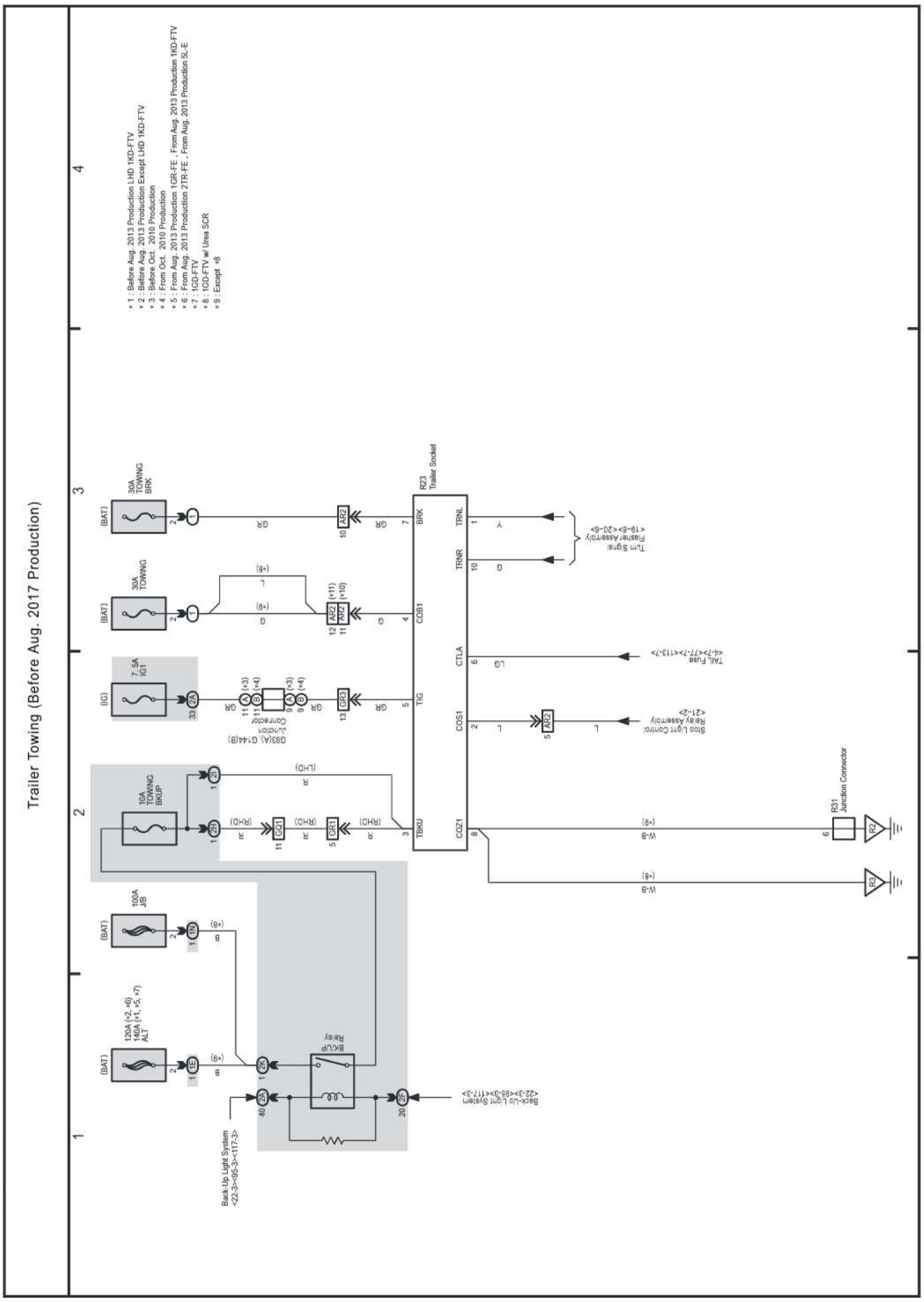

cardiagn.com

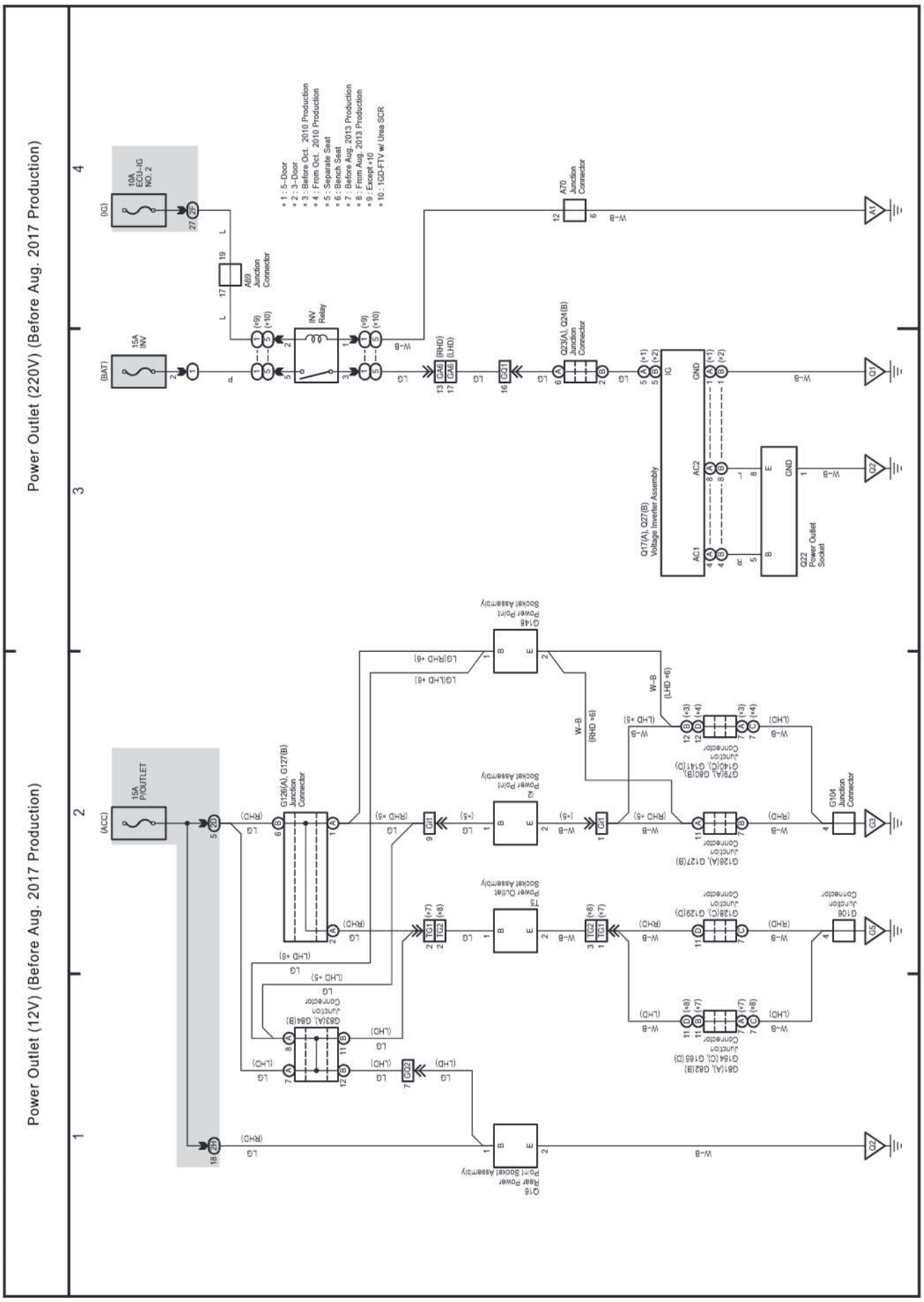

cardiagn.com

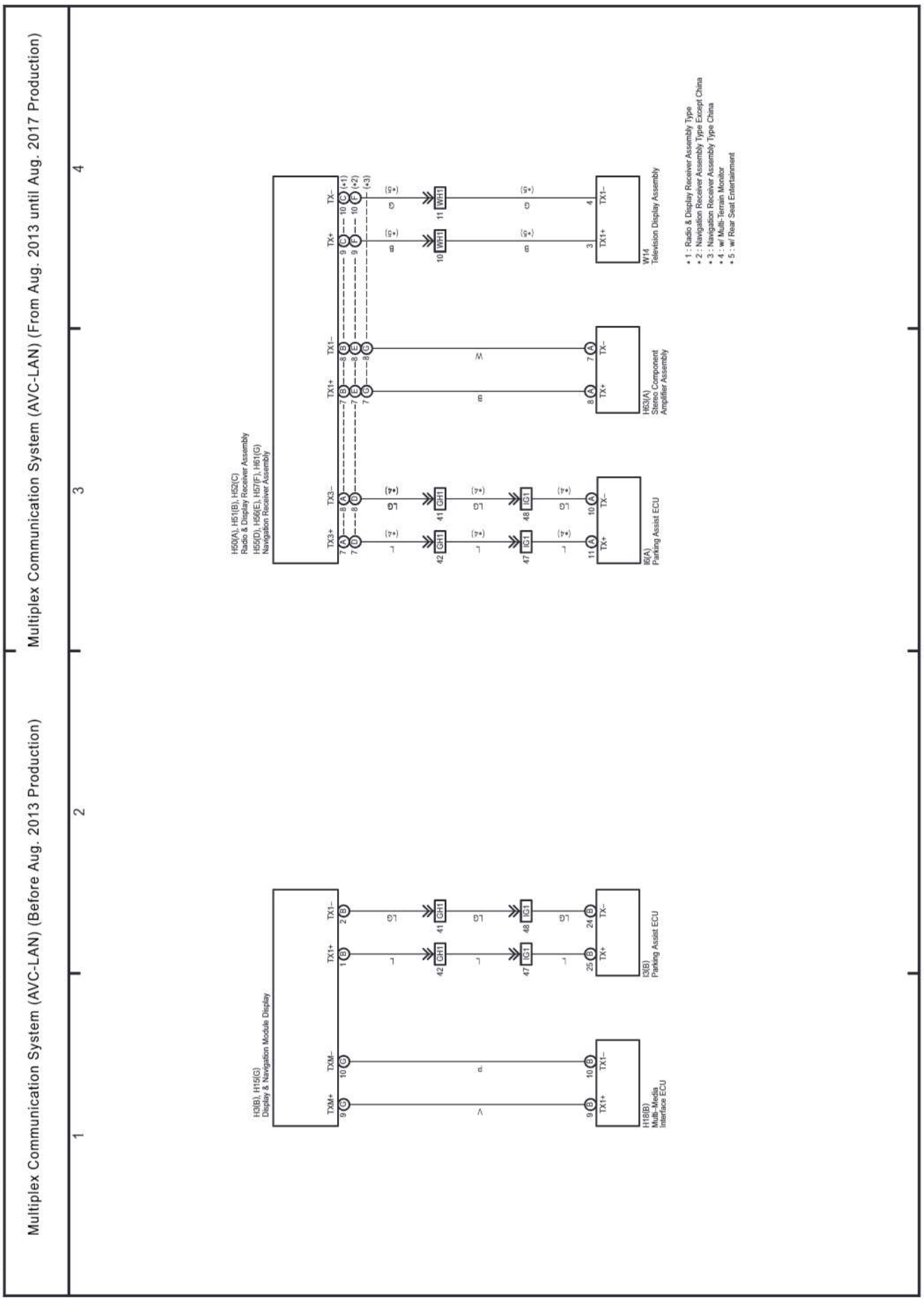

cardiagn.com

65 LAND CRUISER / LAND CRUISER PRADO

(Cont. next page)

Multi-Display (Before Aug. 2017 Production), Multi-Terrain Monitor (w/o Navigation System) (Before Aug. 2013 Production)
Parking Assist (Rear View Monitor and Wide-View Front & Side Monitor) (w/o Navigation System) (Before Aug. 2013 Production) and
Parking Assist (TOYOTA Parking Assist-Sensor) (8 Sensor Type w/o Navigation System w/ Multi-Display) (Before Aug. 2013 Production)

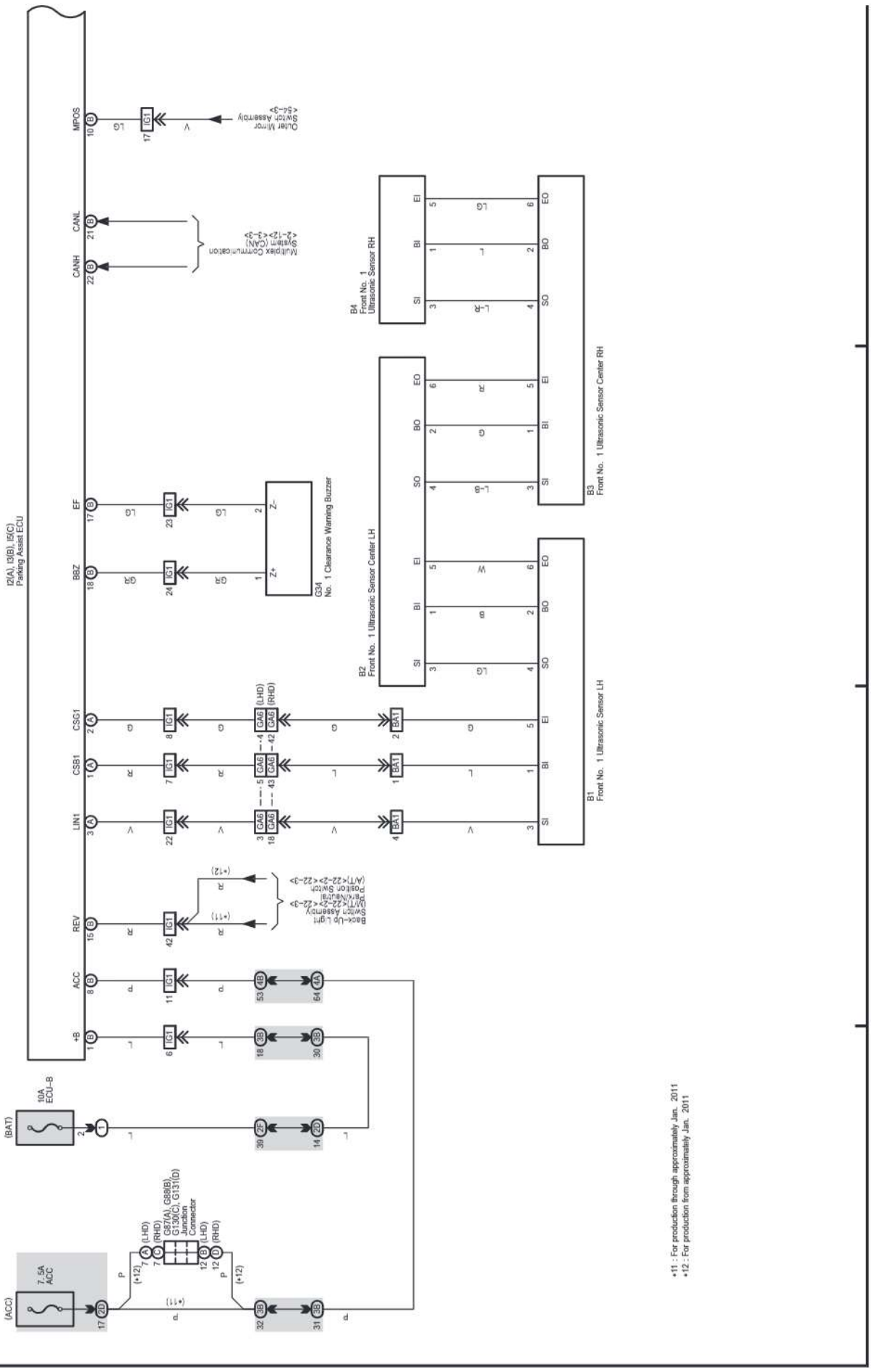

(Cont. next page)

Multi-Display (Before Aug. 2017 Production), Multi-Terrain Monitor (w/o Navigation System) (Before Aug. 2013 Production)
Parking Assist (Rear View Monitor and Wide-View Front & Side Monitor) (w/o Navigation System) (Before Aug. 2013 Production) and
Parking Assist (TOYOTA Parking Assist-Sensor) (8 Sensor Type w/o Navigation System w/ Multi-Display) (Before Aug. 2013 Production)

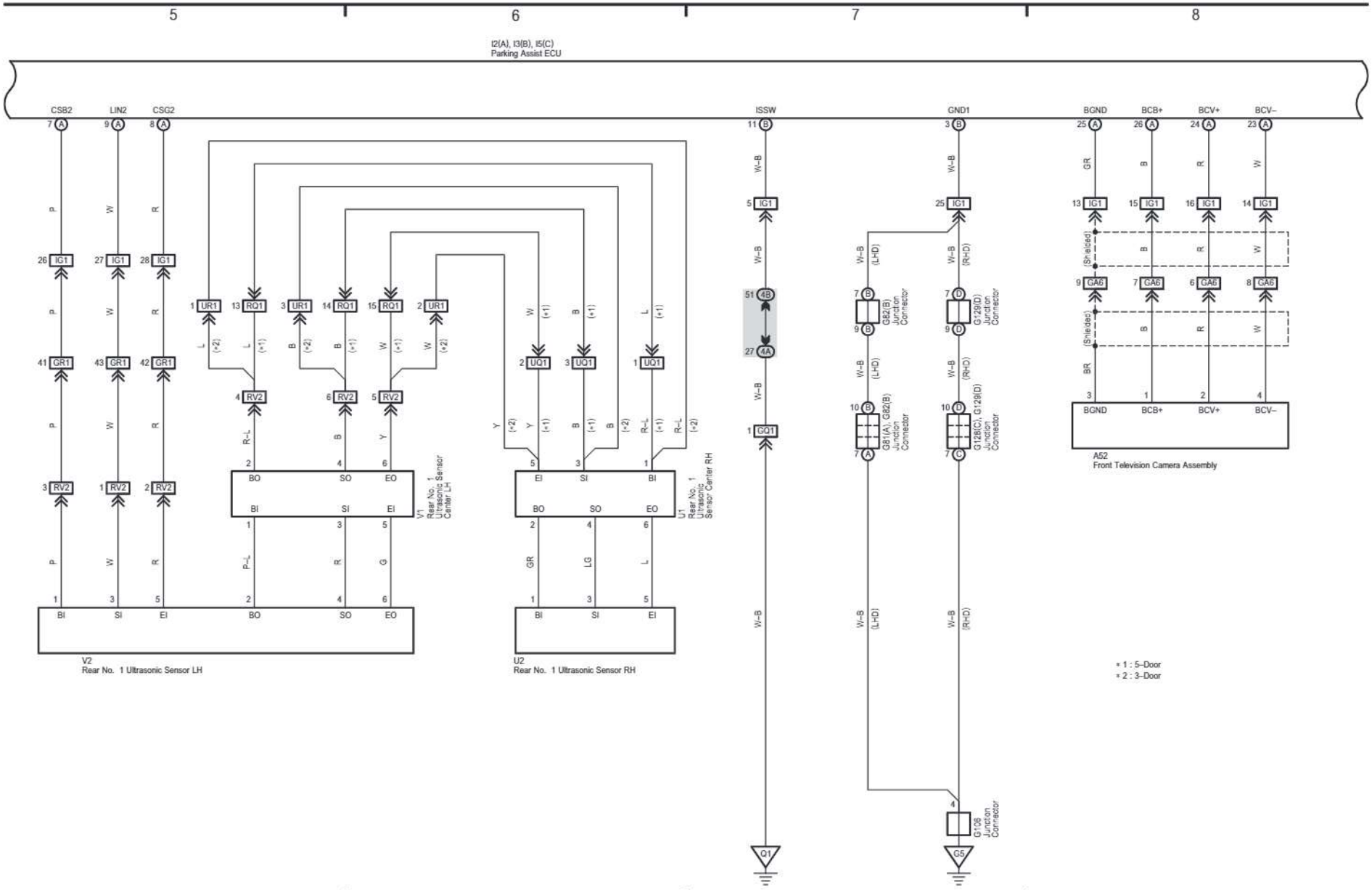

cardiagn.com

cardiagn.com

65 LAND CRUISER / LAND CRUISER PRADO (Cont'd)

(Cont. next page)

Multi-Display (Before Aug. 2017 Production), Multi-Terrain Monitor (w/o Navigation System) (Before Aug. 2013 Production)
Parking Assist (Rear View Monitor and Wide-View Front & Side Monitor) (w/o Navigation System) (Before Aug. 2013 Production) and
Parking Assist (TOYOTA Parking Assist-Sensor) (8 Sensor Type w/o Navigation System w/ Multi-Display) (Before Aug. 2013 Production)

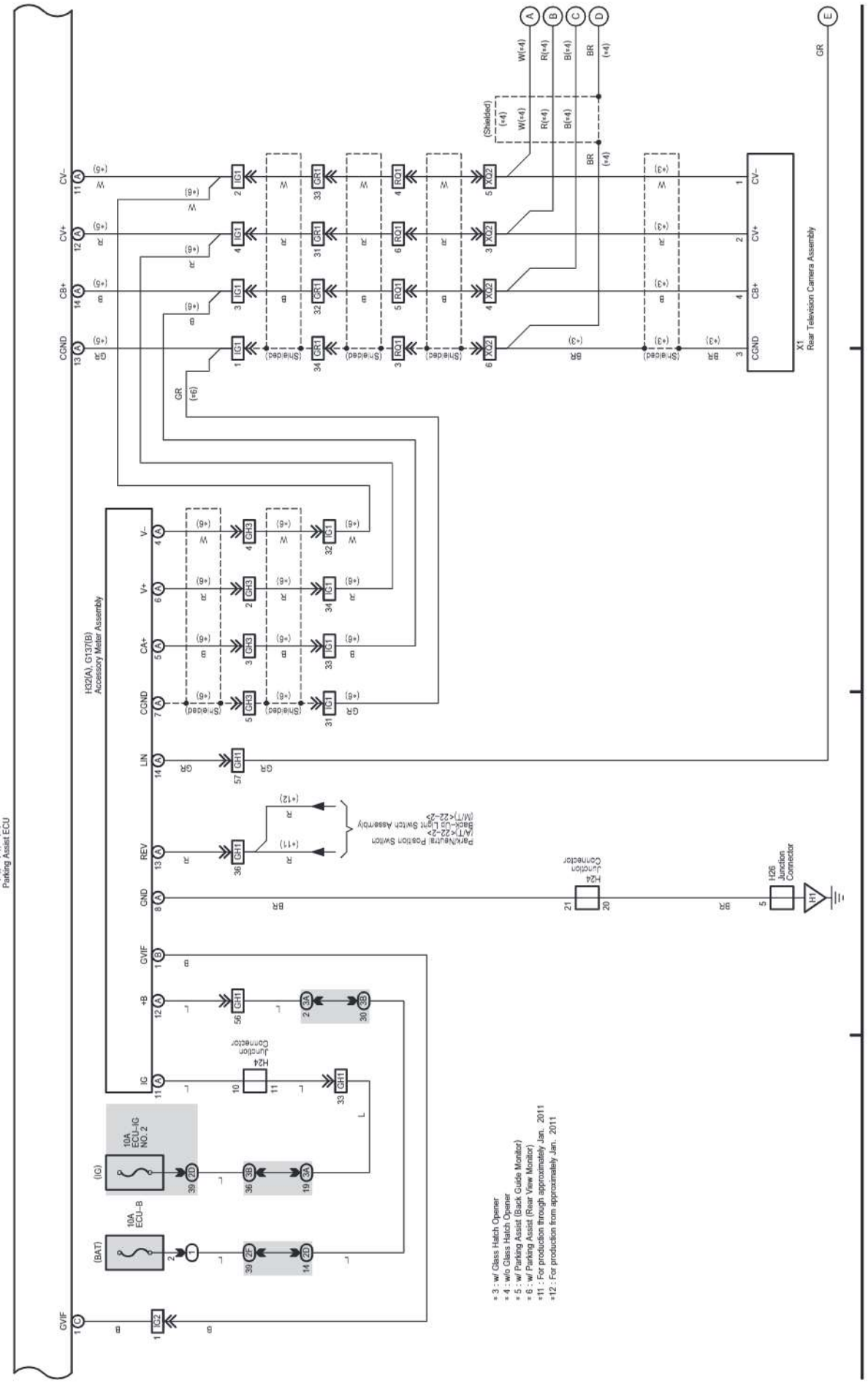

(Cont. next page)

Multi-Display (Before Aug. 2017 Production), Multi-Terrain Monitor (w/o Navigation System) (Before Aug. 2013 Production)
Parking Assist (Rear View Monitor and Wide-View Front & Side Monitor) (w/o Navigation System) (Before Aug. 2013 Production) and
Parking Assist (TOYOTA Parking Assist-Sensor) (8 Sensor Type w/o Navigation System w/ Multi-Display) (Before Aug. 2013 Production)

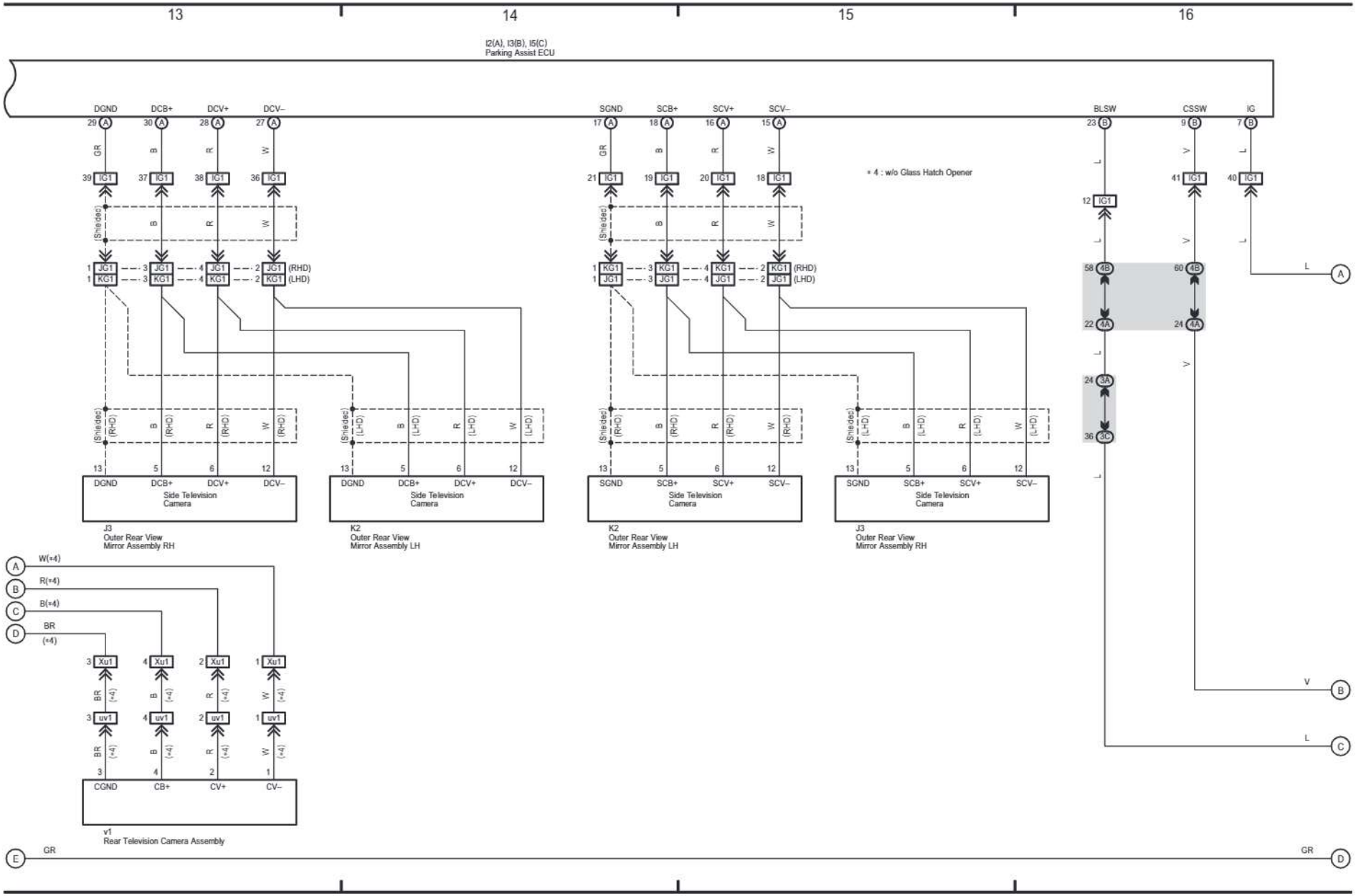

cardiagn.com

cardiagn.com

65 LAND CRUISER / LAND CRUISER PRADO (Cont'd)

Multi-Display (Before Aug. 2017 Production), Multi-Terrain Monitor (w/o Navigation System) (Before Aug. 2013 Production)
Parking Assist (Rear View Monitor and Wide-View Front & Side Monitor) (w/o Navigation System) (Before Aug. 2013 Production) and
Parking Assist (TOYOTA Parking Assist-Sensor) (8 Sensor Type w/o Navigation System w/ Multi-Display) (Before Aug. 2013 Production)

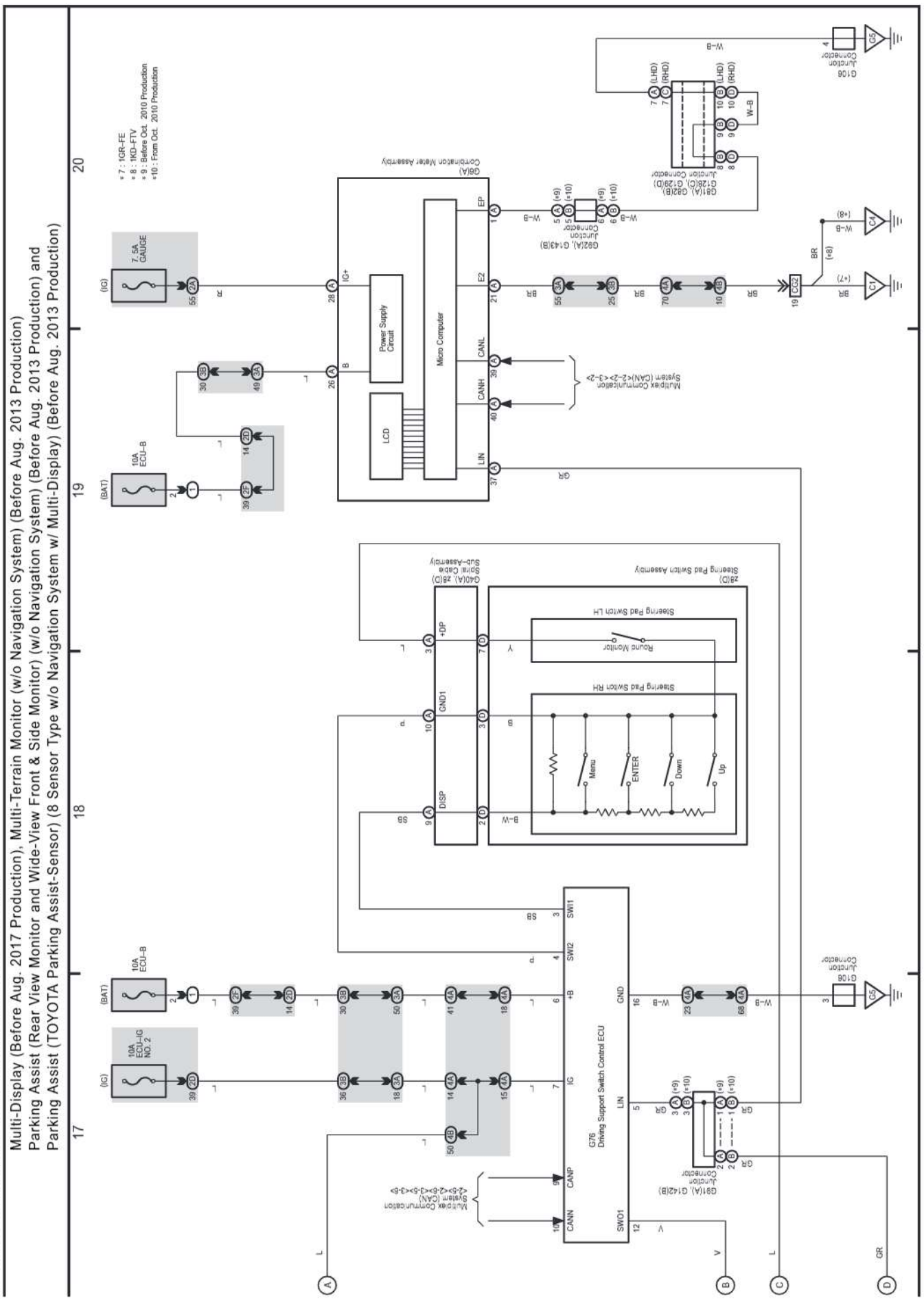

cardiagn.com

M OVERALL ELECTRICAL WIRING DIAGRAM

(Cont. next page)

Parking Assist (TOYOTA Parking Assist-Sensor) (8 Sensor Type w/o Navigation System w/o Multi-Display) (Before Aug. 2013 Production)

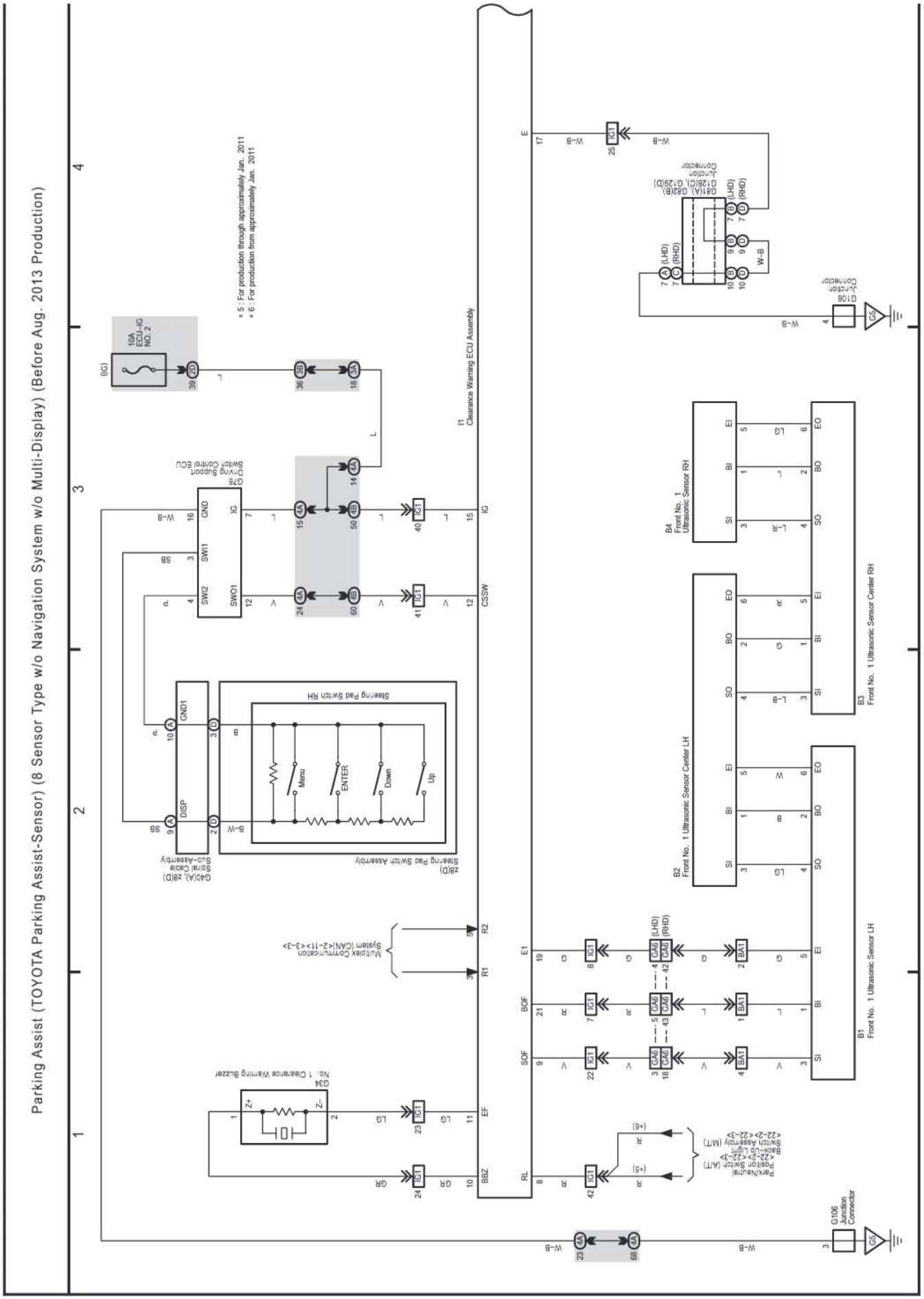

cardiagn.com

Parking Assist (TOYOTA Parking Assist-Sensor) (8 Sensor Type w/o Navigation System w/o Multi-Display) (Before Aug. 2013 Production)

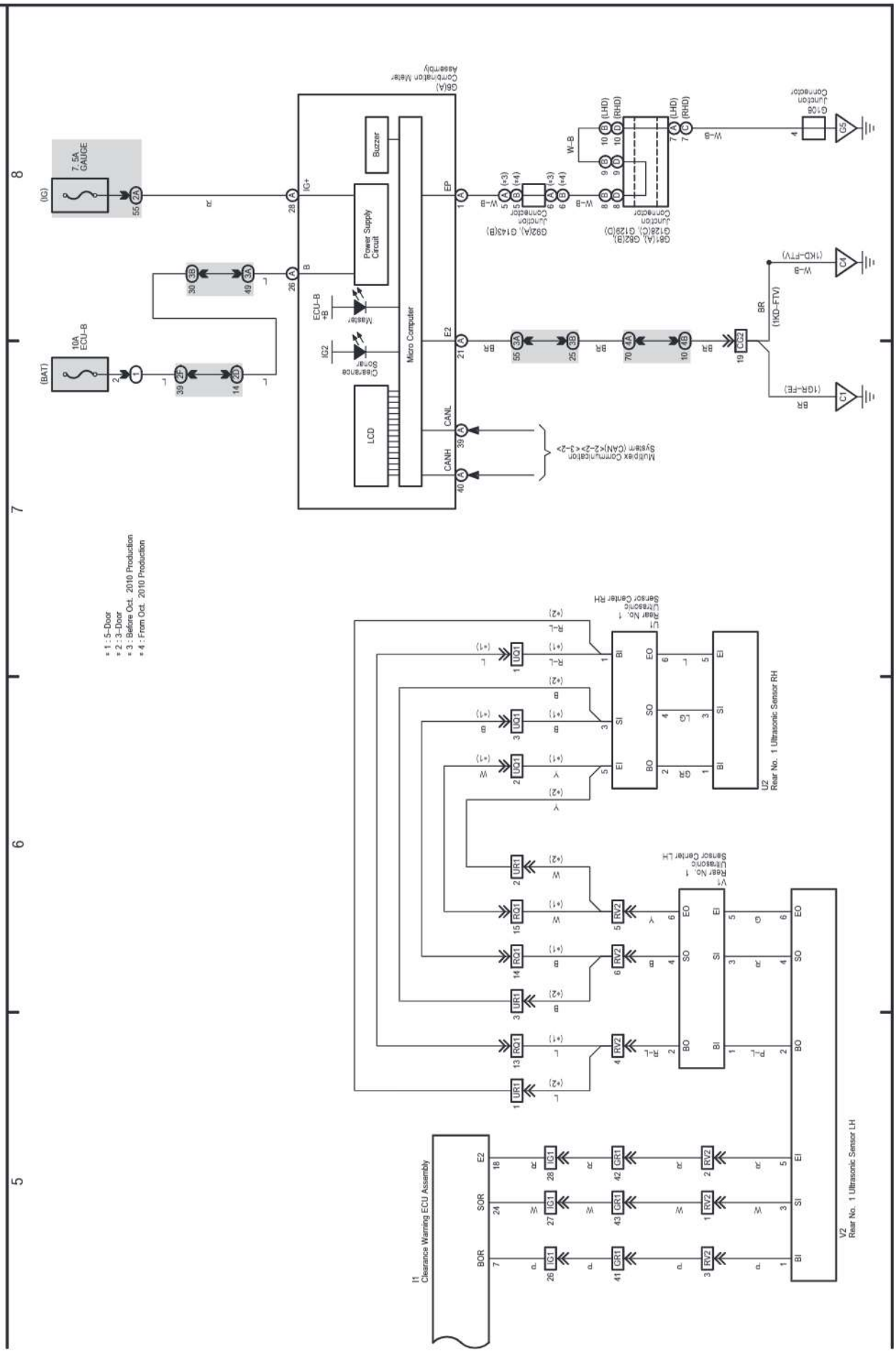

cardiagn.com

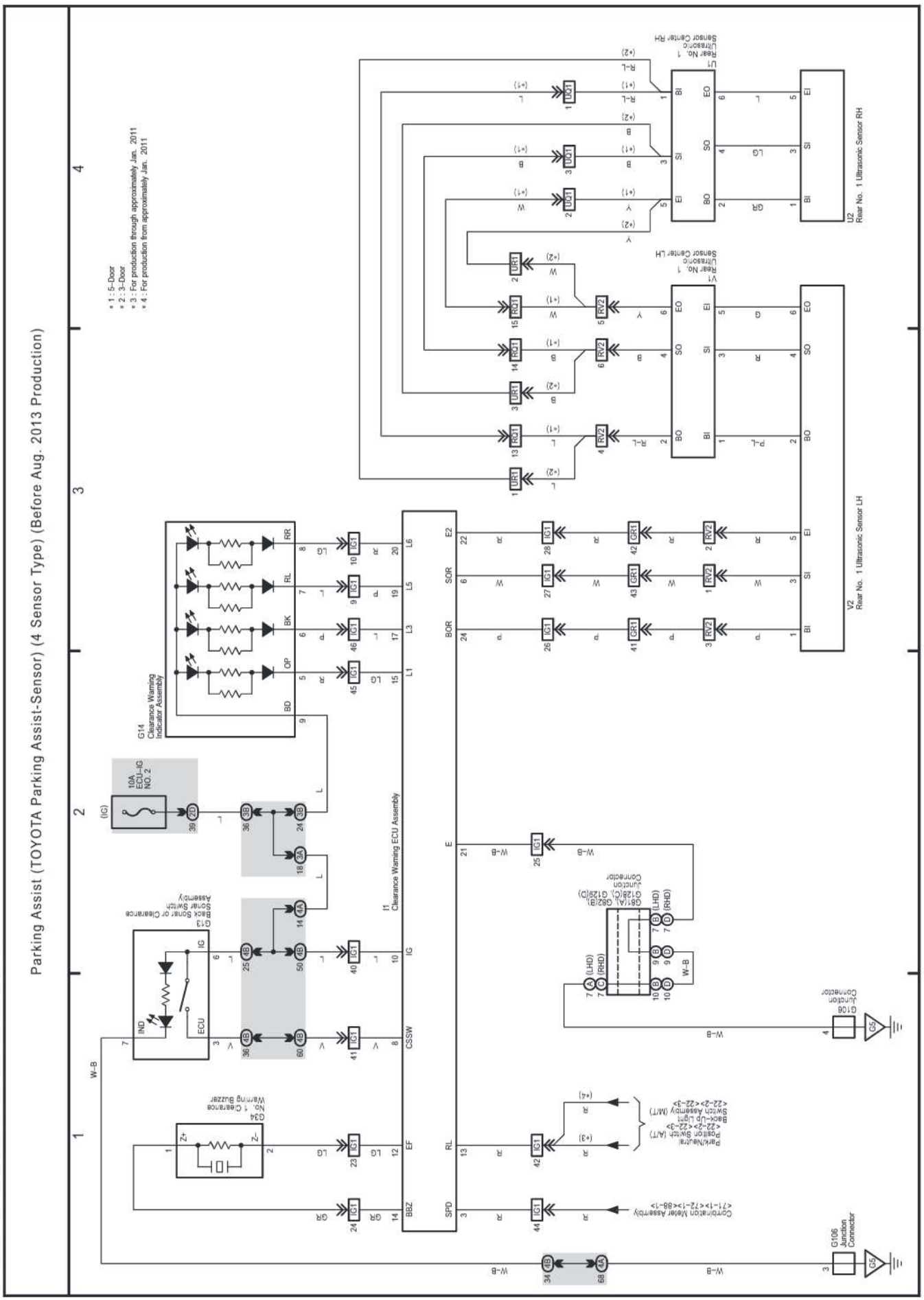

cardiagn.com

(Cont. next page)

Audio System (w/ Navigation System) (Before Aug. 2013 Production), Multi-Terrain Monitor (w/ Navigation System) (Before Aug. 2013 Production), Navigation System (Before Aug. 2013 Production), Parking Assist (Back Guide Monitor / Rear View Monitor and Wide-View Front & Side Monitor) (w/ Navigation System) (Before Aug. 2013 Production) and Parking Assist (TOYOTA Parking Assist-Sensor) (8 Sensor Type w/ Navigation System) (Before Aug. 2013 Production)

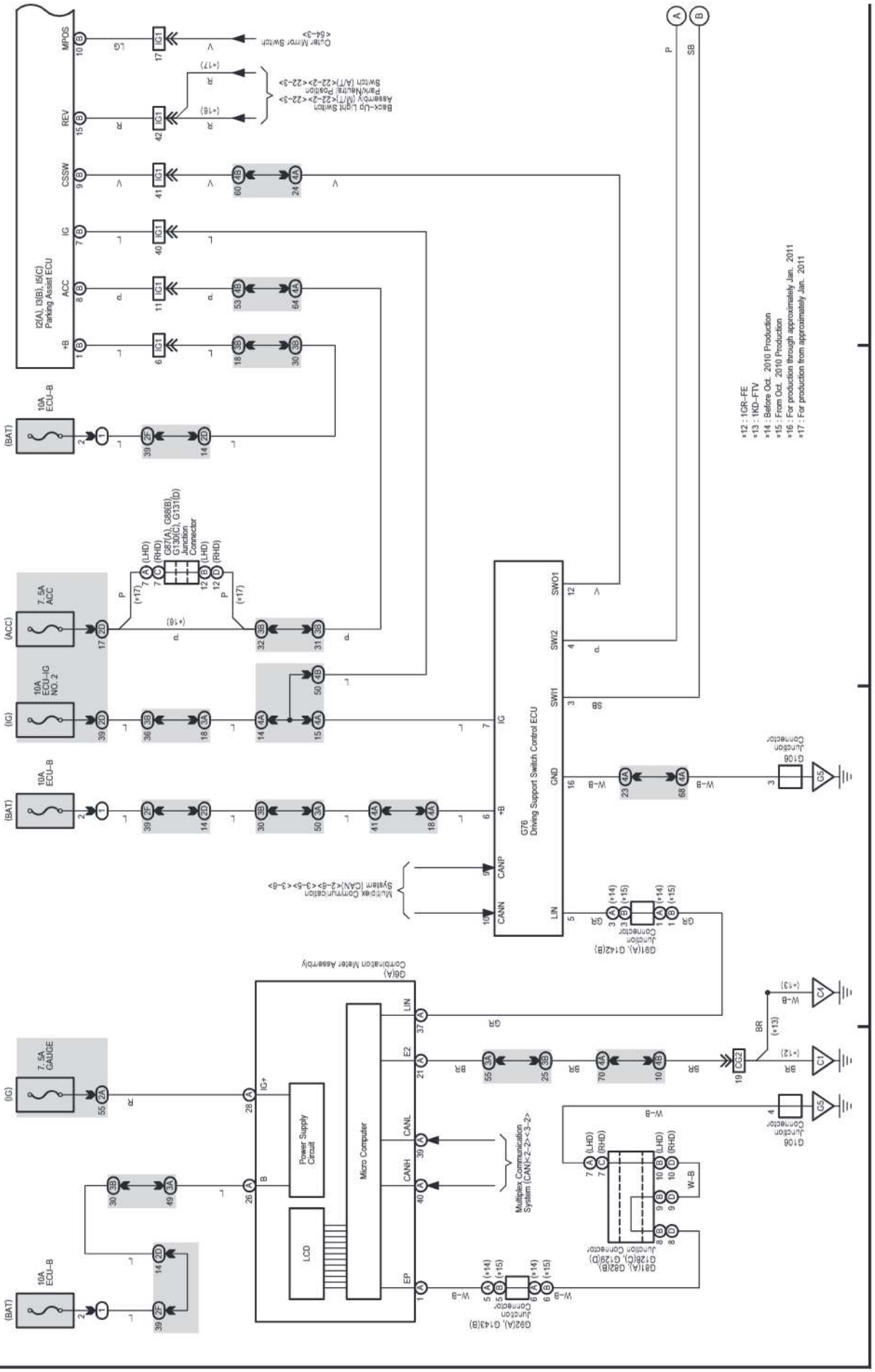

(Cont. next page)

Audio System (w/ Navigation System) (Before Aug. 2013 Production), Multi-Terrain Monitor (w/ Navigation System) (Before Aug. 2013 Production), Navigation System (Before Aug. 2013 Production), Parking Assist (Back Guide Monitor / Rear View Monitor and Wide-View Front & Side Monitor) (w/ Navigation System) (Before Aug. 2013 Production) and Parking Assist (TOYOTA Parking Assist-Sensor) (8 Sensor Type w/ Navigation System) (Before Aug. 2013 Production)

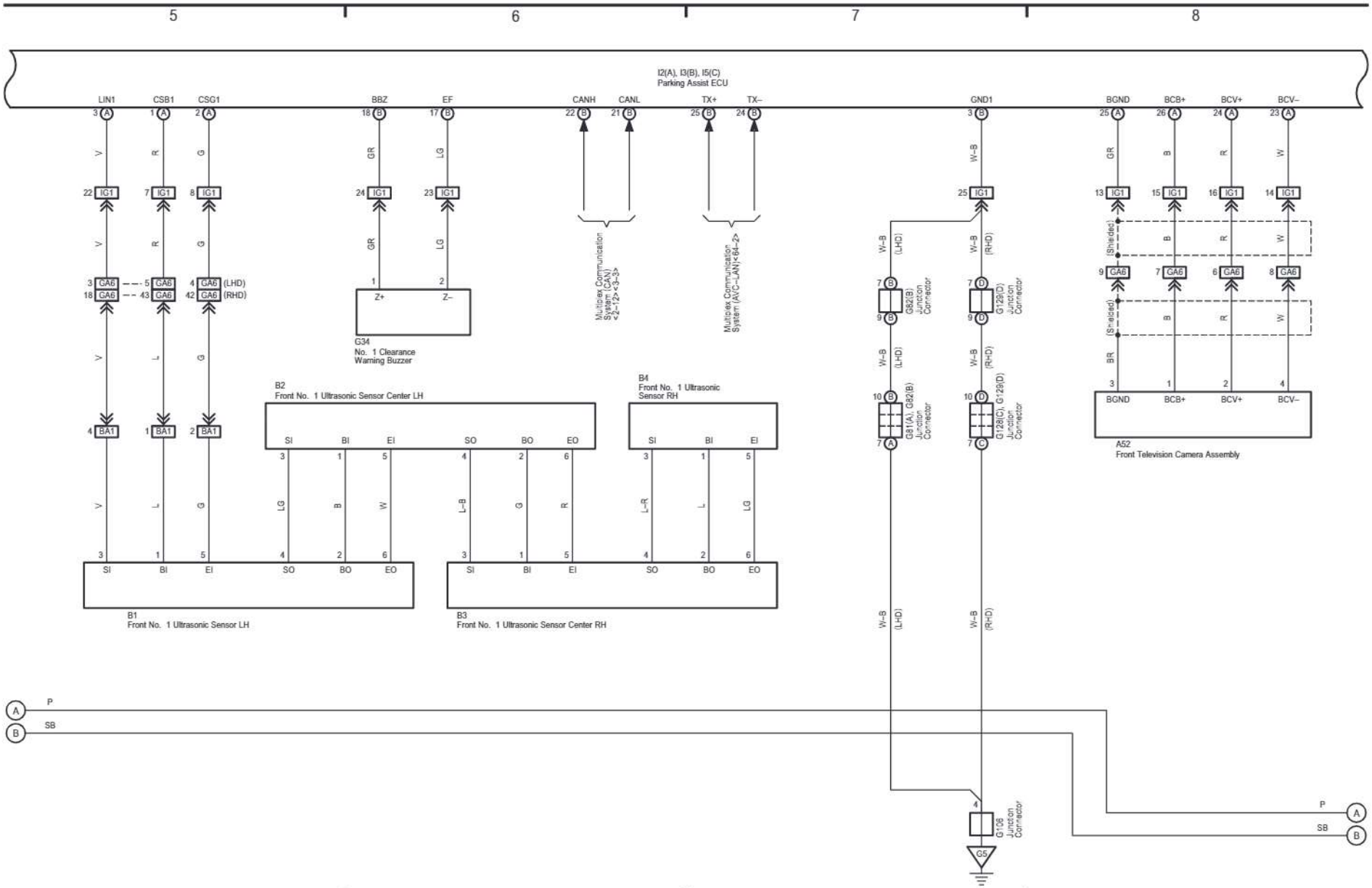

cardiagn.com

cardiagn.com

(Cont. next page)

Audio System (w/ Navigation System) (Before Aug. 2013 Production), Multi-Terrain Monitor (w/ Navigation System) (Before Aug. 2013 Production), Navigation System (Before Aug. 2013 Production), Parking Assist (Back Guide Monitor / Rear View Monitor and Wide-View Front & Side Monitor) (w/ Navigation System) (Before Aug. 2013 Production) and Parking Assist (TOYOTA Parking Assist-Sensor) (8 Sensor Type w/ Navigation System) (Before Aug. 2013 Production)

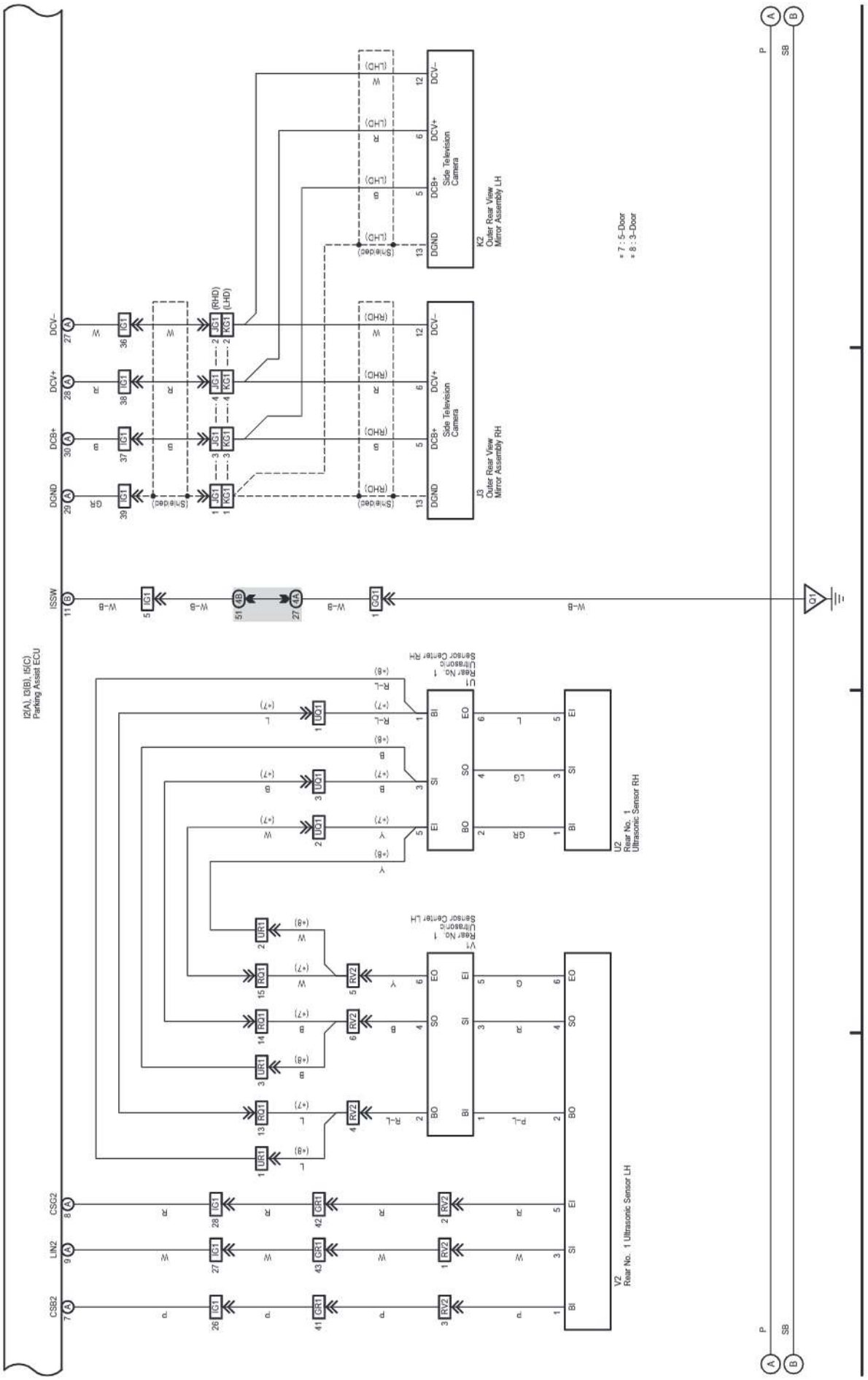

cardiagn.com

(Cont. next page)

Audio System (w/ Navigation System) (Before Aug. 2013 Production), Multi-Terrain Monitor (w/ Navigation System) (Before Aug. 2013 Production), Navigation System (Before Aug. 2013 Production), Parking Assist (Back Guide Monitor / Rear View Monitor and Wide-View Front & Side Monitor) (w/ Navigation System) (Before Aug. 2013 Production) and Parking Assist (TOYOTA Parking Assist-Sensor) (8 Sensor Type w/ Navigation System) (Before Aug. 2013 Production)

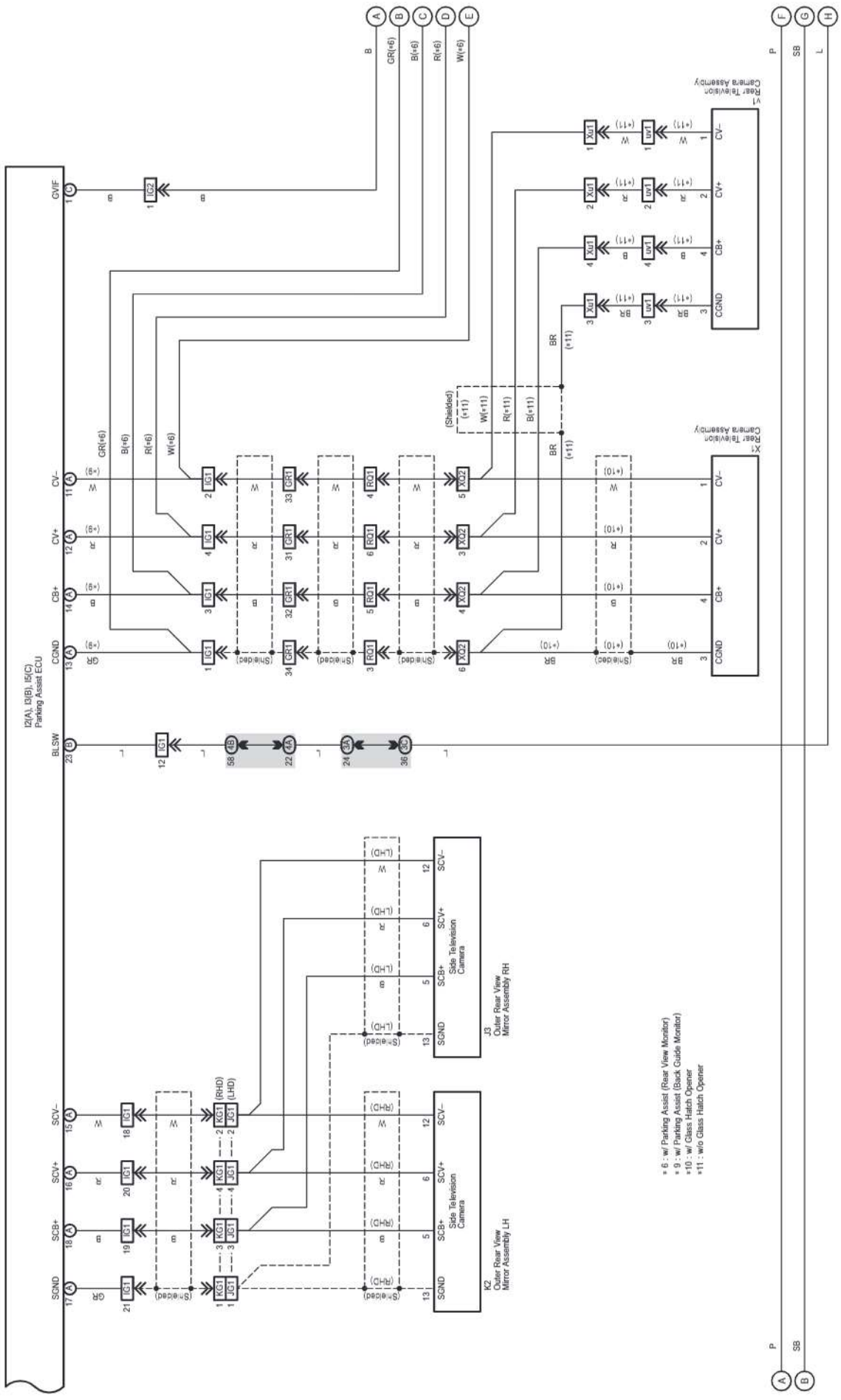

cardiagn.com

(Cont. next page)

Audio System (w/ Navigation System) (Before Aug. 2013 Production), Multi-Terrain Monitor (w/ Navigation System) (Before Aug. 2013 Production), Navigation System (Before Aug. 2013 Production), Parking Assist (Back Guide Monitor / Rear View Monitor and Wide-View Front & Side Monitor) (w/ Navigation System) (Before Aug. 2013 Production) and Parking Assist (TOYOTA Parking Assist-Sensor) (8 Sensor Type w/ Navigation System) (Before Aug. 2013 Production)

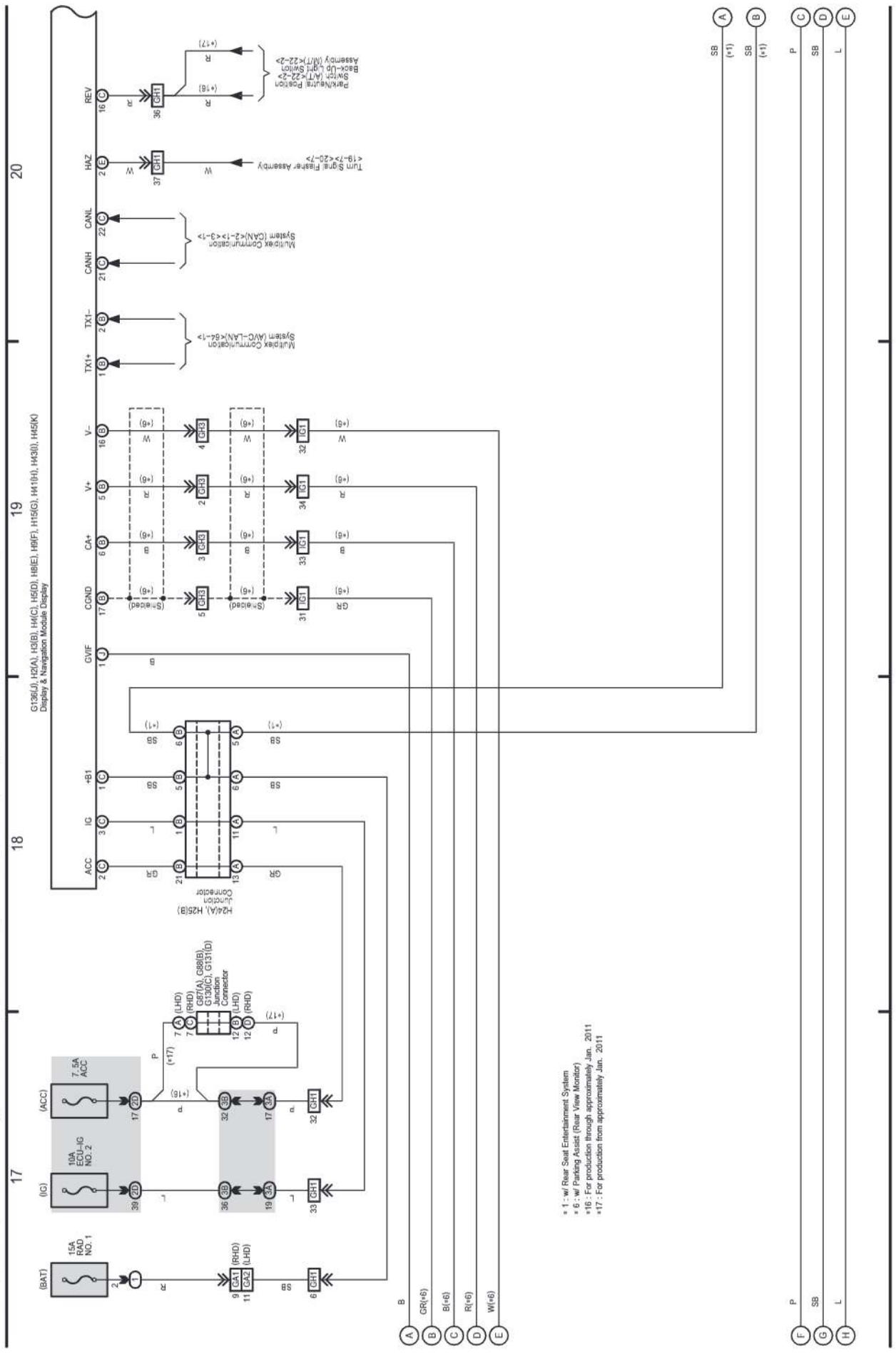

Audio System (w/ Navigation System) (Before Aug. 2013 Production), Multi-Terrain Monitor (w/ Navigation System) (Before Aug. 2013 Production), Navigation System (Before Aug. 2013 Production), Parking Assist (Back Guide Monitor / Rear View Monitor and Wide-View Front & Side Monitor) (w/ Navigation System) (Before Aug. 2013 Production) and Parking Assist (TOYOTA Parking Assist-Sensor) (8 Sensor Type w/ Navigation System) (Before Aug. 2013 Production)

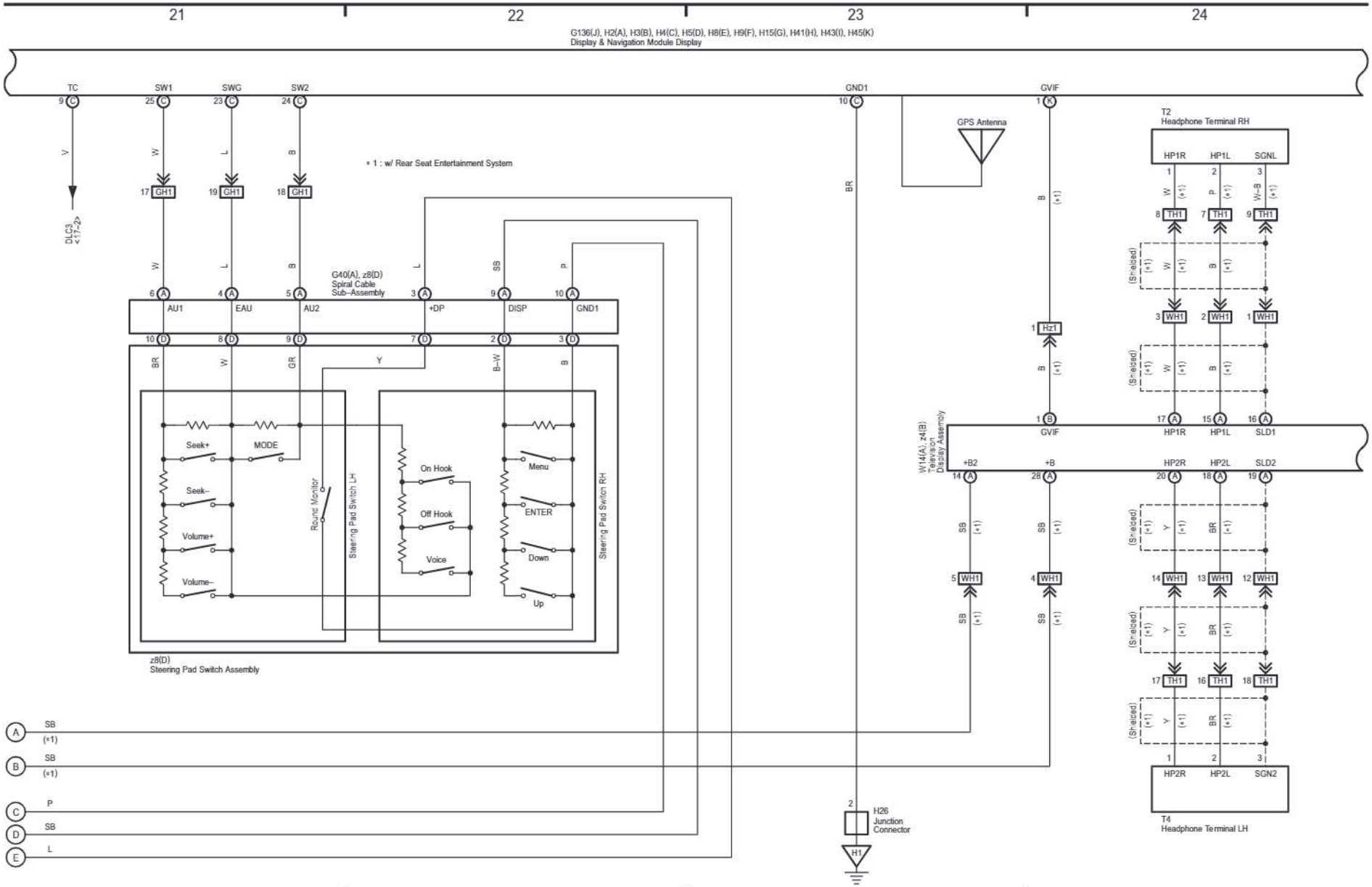

cardiagn.com

cardiagn.com

(Cont. next page)

Audio System (w/ Navigation System) (Before Aug. 2013 Production), Multi-Terrain Monitor (w/ Navigation System) (Before Aug. 2013 Production), Navigation System (Before Aug. 2013 Production), Parking Assist (Back Guide Monitor / Rear View Monitor and Wide-View Front & Side Monitor) (w/ Navigation System) (Before Aug. 2013 Production) and Parking Assist (TOYOTA Parking Assist-Sensor) (8 Sensor Type w/ Navigation System) (Before Aug. 2013 Production)

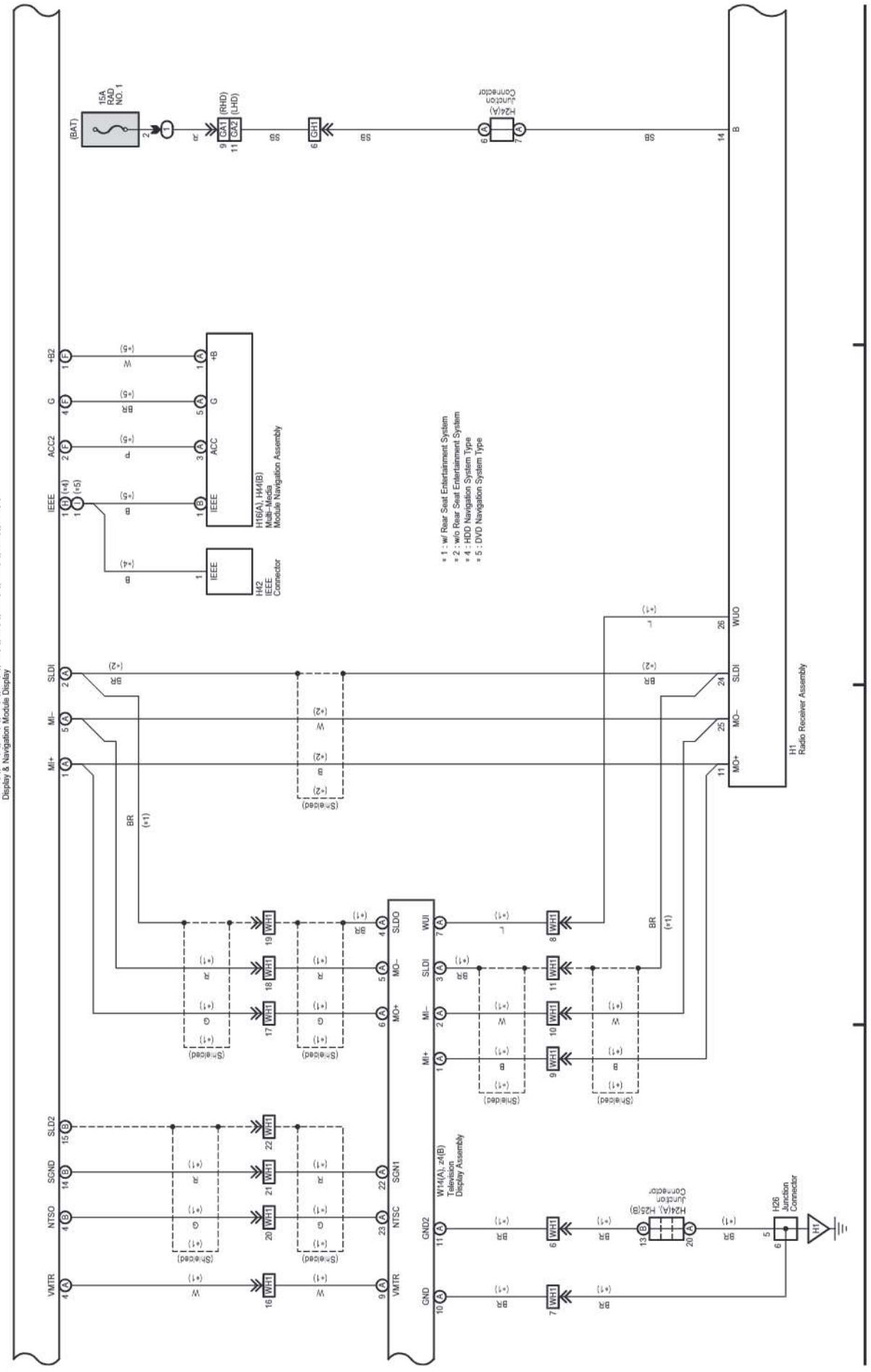

Audio System (w/ Navigation System) (Before Aug. 2013 Production), Multi-Terrain Monitor (w/ Navigation System) (Before Aug. 2013 Production), Navigation System (Before Aug. 2013 Production), Parking Assist (Back Guide Monitor / Rear View Monitor and Wide-View Front & Side Monitor) (w/ Navigation System) (Before Aug. 2013 Production) and Parking Assist (TOYOTA Parking Assist-Sensor) (8 Sensor Type w/ Navigation System) (Before Aug. 2013 Production)

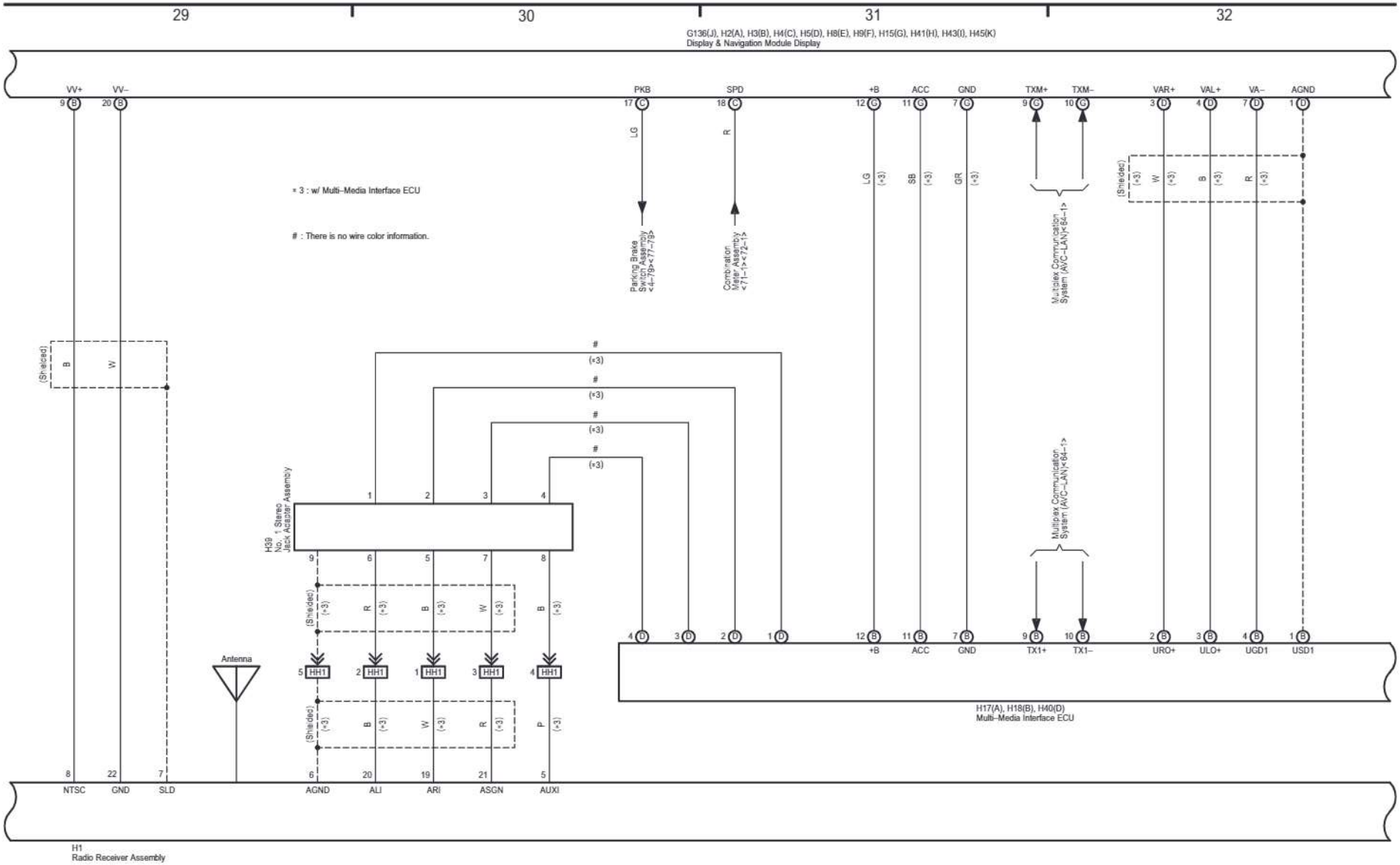

LAND CRUISER / LAND CRUISER PRADO (EM27T3E)

cardiagn.com

cardiagn.com

(Cont. next page)

Audio System (w/ Navigation System) (Before Aug. 2013 Production), Multi-Terrain Monitor (w/ Navigation System) (Before Aug. 2013 Production), Navigation System (Before Aug. 2013 Production), Parking Assist (Back Guide Monitor / Rear View Monitor and Wide-View Front & Side Monitor) (w/ Navigation System) (Before Aug. 2013 Production) and Parking Assist (TOYOTA Parking Assist-Sensor) (8 Sensor Type w/ Navigation System) (Before Aug. 2013 Production)

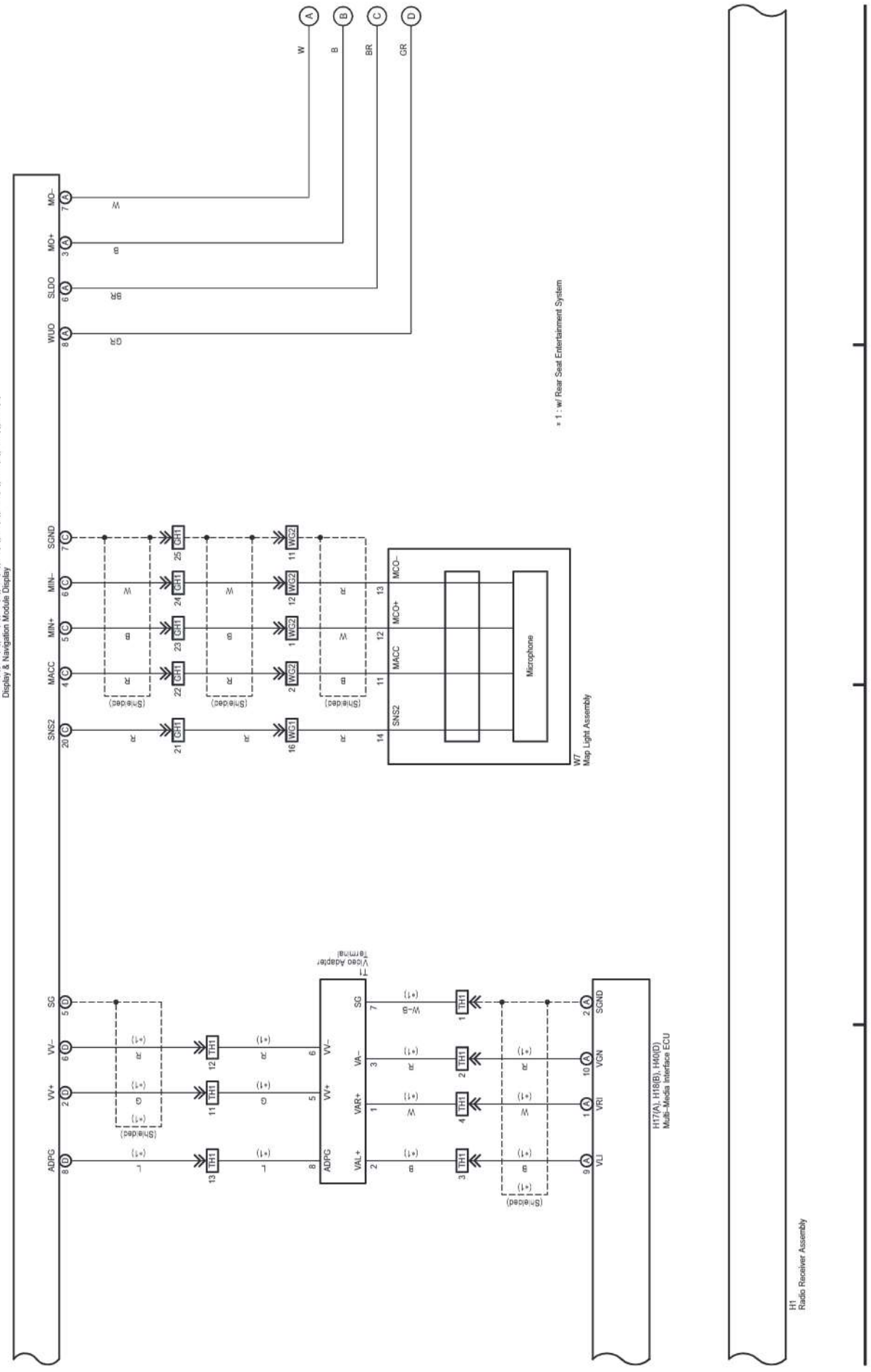

(Cont. next page)

Audio System (w/ Navigation System) (Before Aug. 2013 Production), Multi-Terrain Monitor (w/ Navigation System) (Before Aug. 2013 Production), Navigation System (Before Aug. 2013 Production), Parking Assist (Back Guide Monitor / Rear View Monitor and Wide-View Front & Side Monitor) (w/ Navigation System) (Before Aug. 2013 Production) and Parking Assist (TOYOTA Parking Assist-Sensor) (8 Sensor Type w/ Navigation System) (Before Aug. 2013 Production)

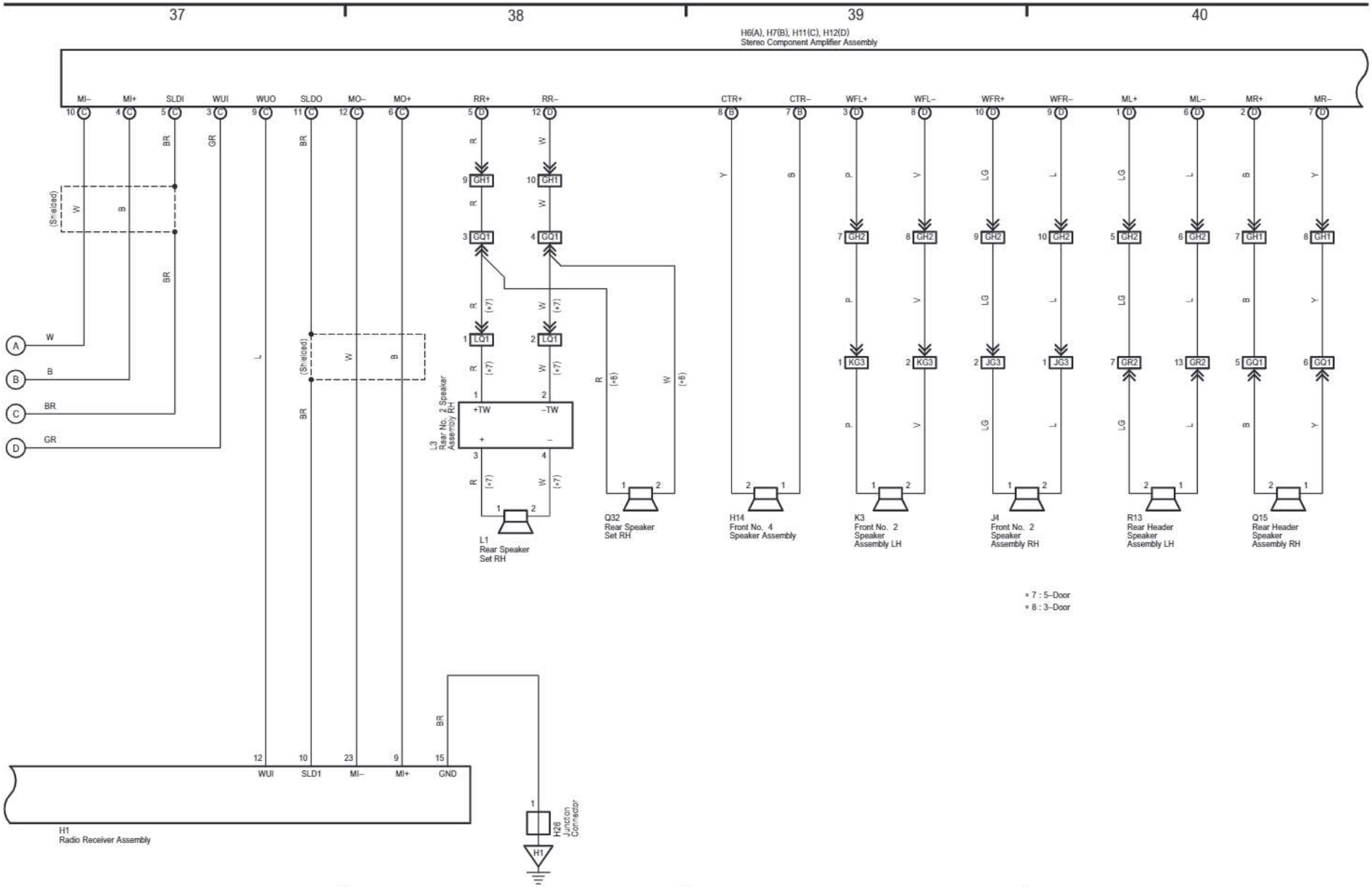

cardiagn.com

cardiagn.com

(Cont. next page)

Audio System (w/ Navigation System) (Before Aug. 2013 Production), Multi-Terrain Monitor (w/ Navigation System) (Before Aug. 2013 Production), Navigation System (Before Aug. 2013 Production), Parking Assist (Back Guide Monitor / Rear View Monitor and Wide-View Front & Side Monitor) (w/ Navigation System) (Before Aug. 2013 Production) and Parking Assist (TOYOTA Parking Assist-Sensor) (8 Sensor Type w/ Navigation System) (Before Aug. 2013 Production)

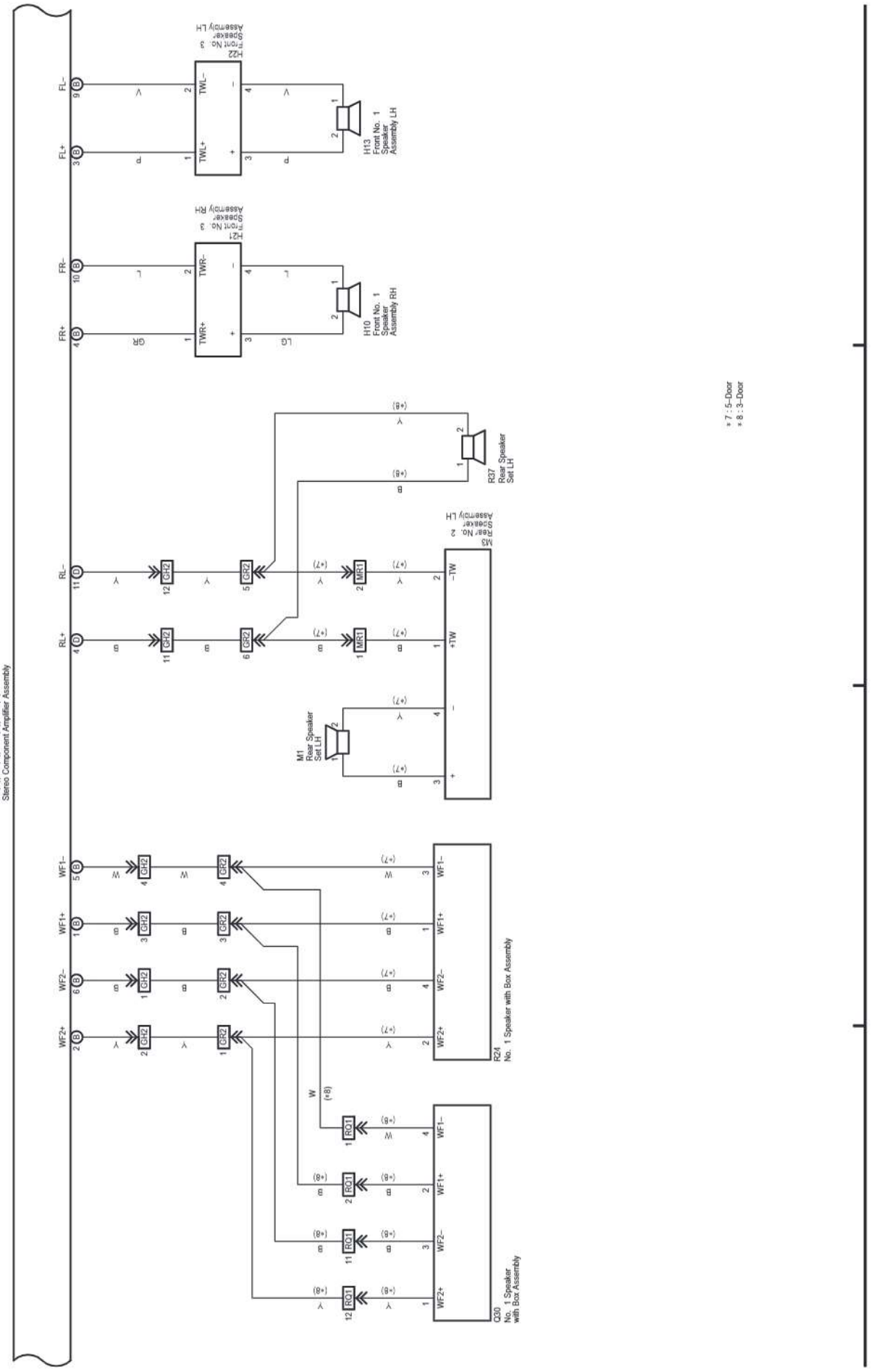

68 LAND CRUISER / LAND CRUISER PRADO (Cont'd)

Audio System (w/ Navigation System) (Before Aug. 2013 Production), Multi-Terrain Monitor (w/ Navigation System) (Before Aug. 2013 Production), Navigation System (Before Aug. 2013 Production), Parking Assist (Back Guide Monitor / Rear View Monitor and Wide-View Front & Side Monitor) (w/ Navigation System) (Before Aug. 2013 Production) and Parking Assist (TOYOTA Parking Assist-Sensor) (8 Sensor Type w/ Navigation System) (Before Aug. 2013 Production)

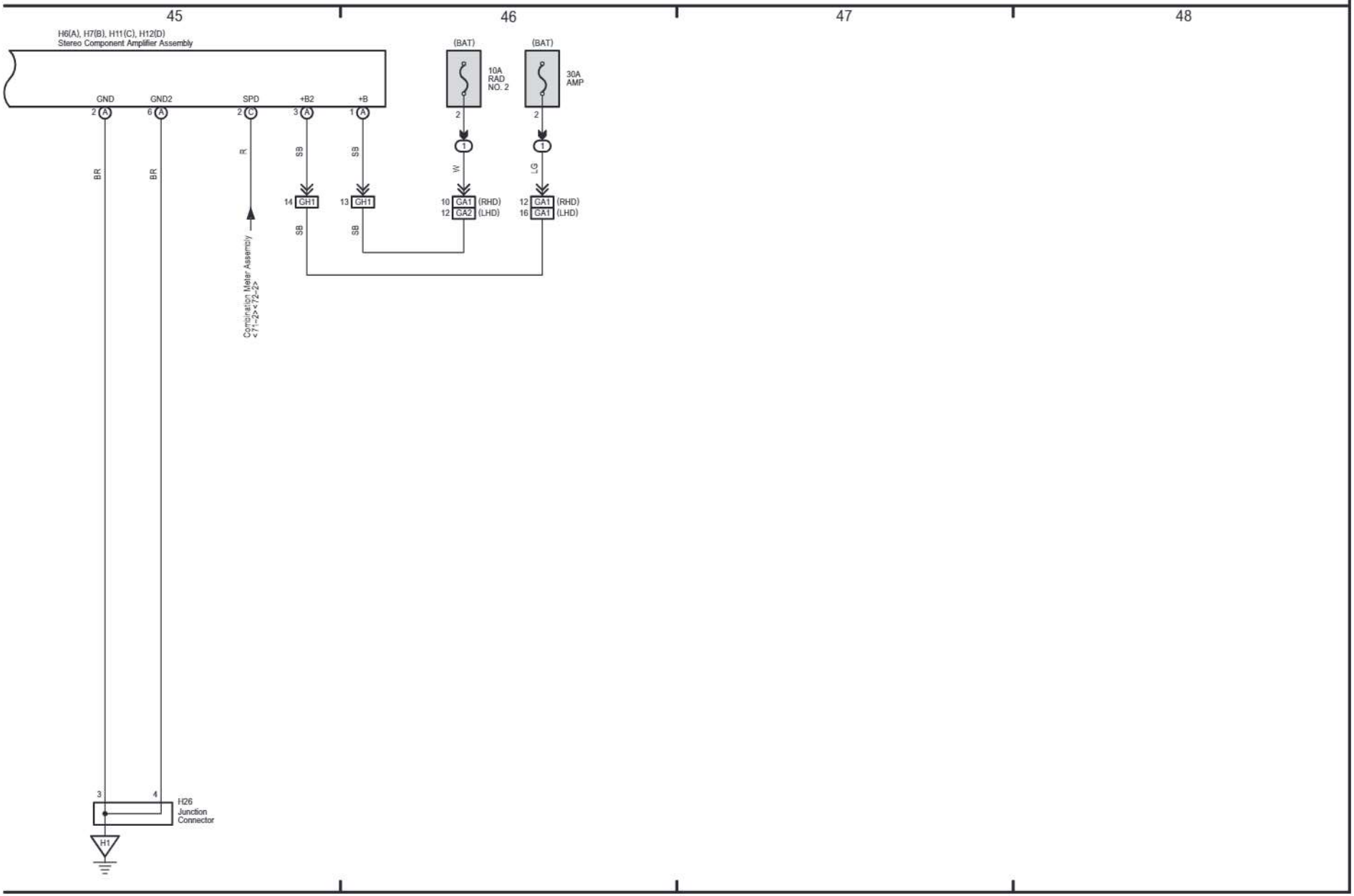

cardiagn.com

cardiagn.com

(Cont. next page)

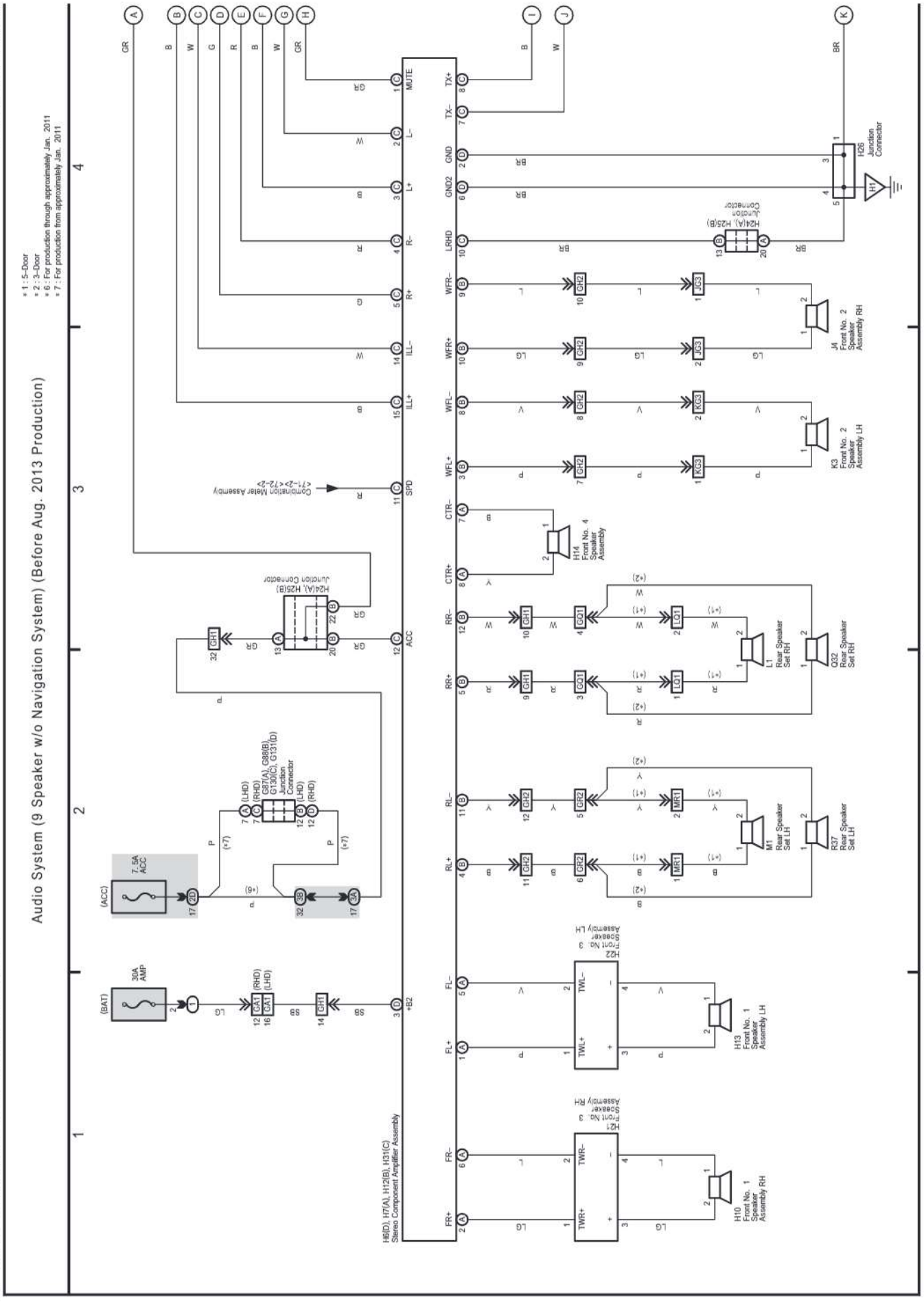

cardiagn.com

69 LAND CRUISER / LAND CRUISER PRADO (Cont'd)

(Cont. next page)

Audio System (9 Speaker w/o Navigation System) (Before Aug. 2013 Production)

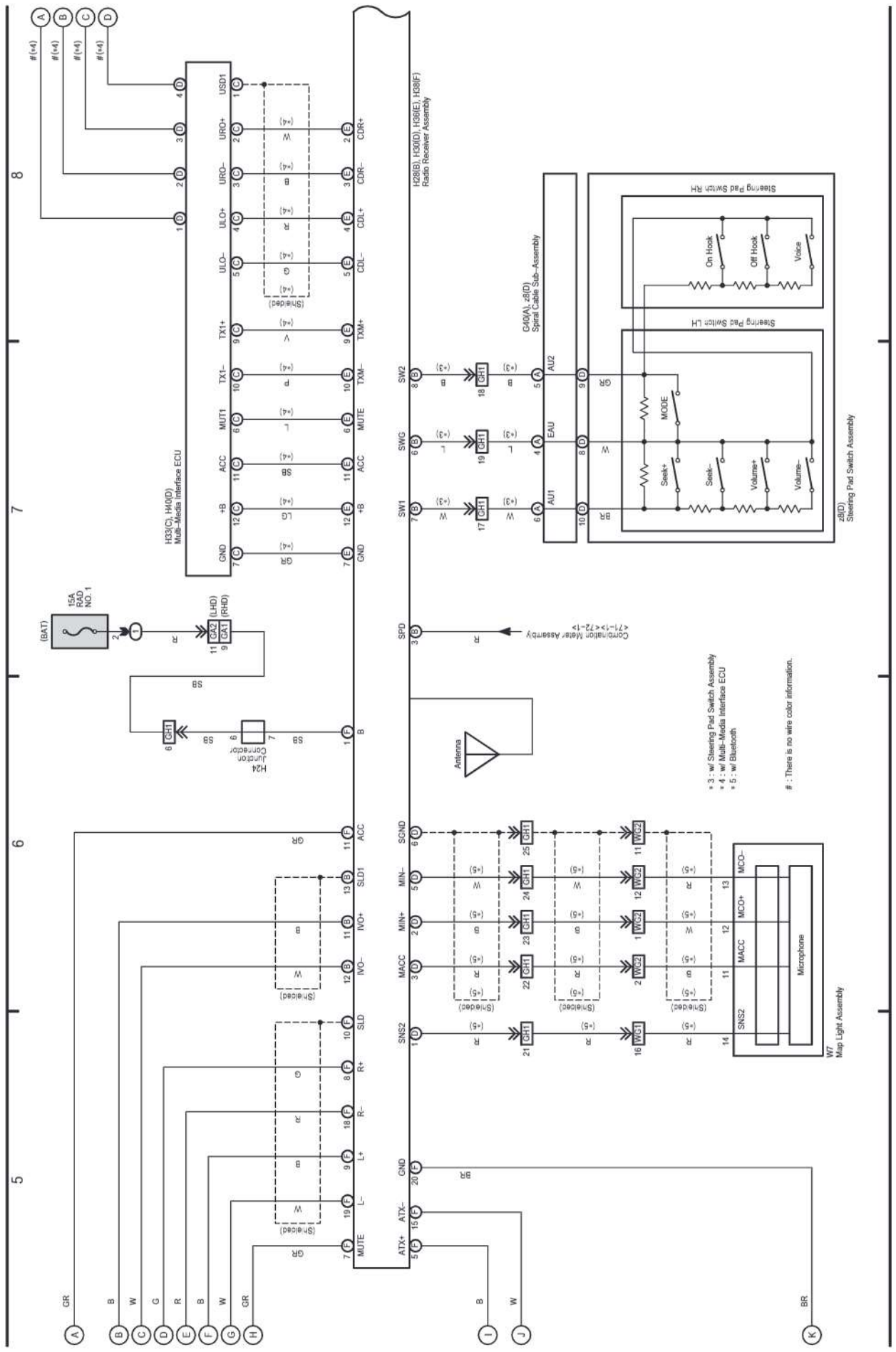

cardiagn.com

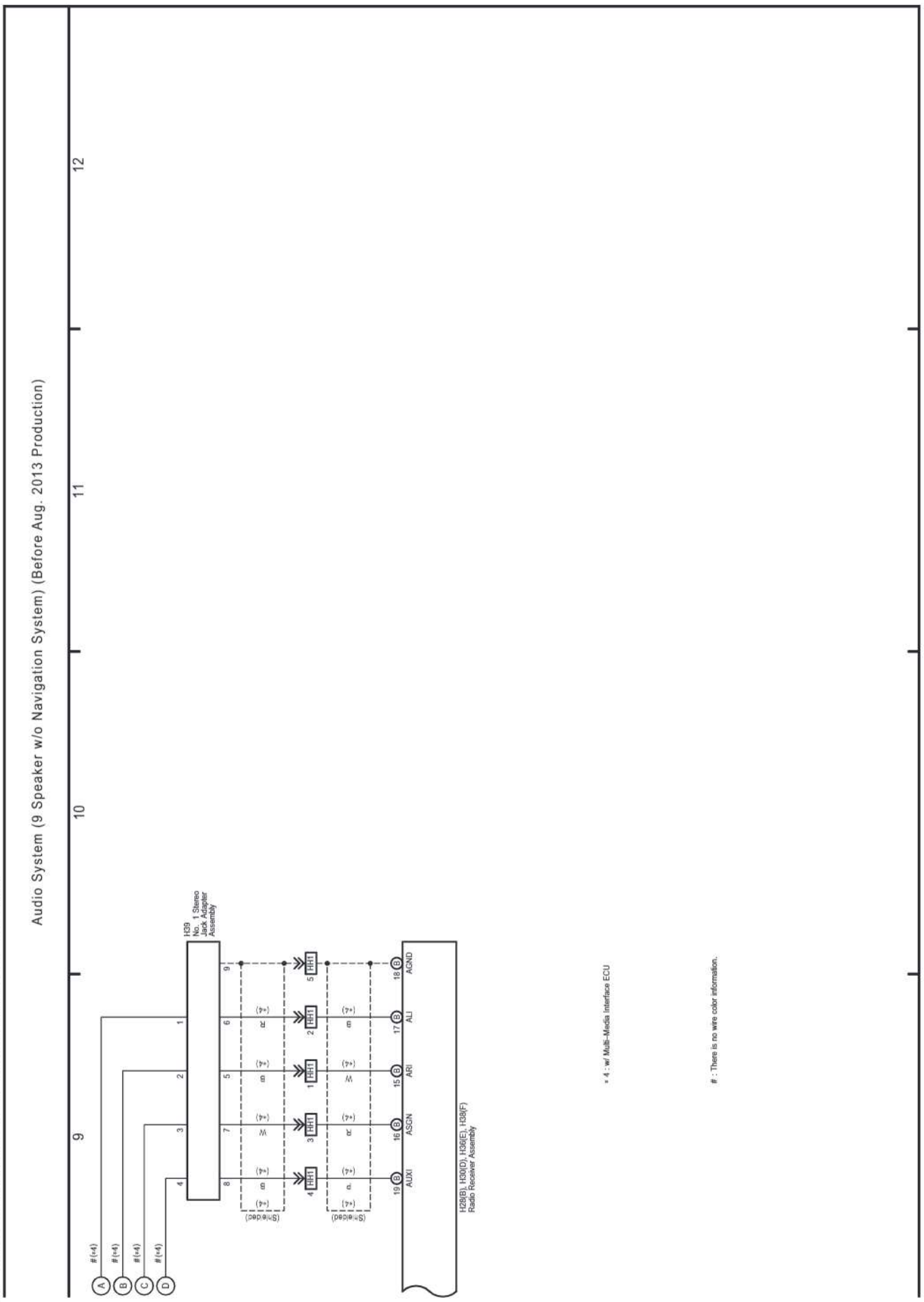

cardiagn.com

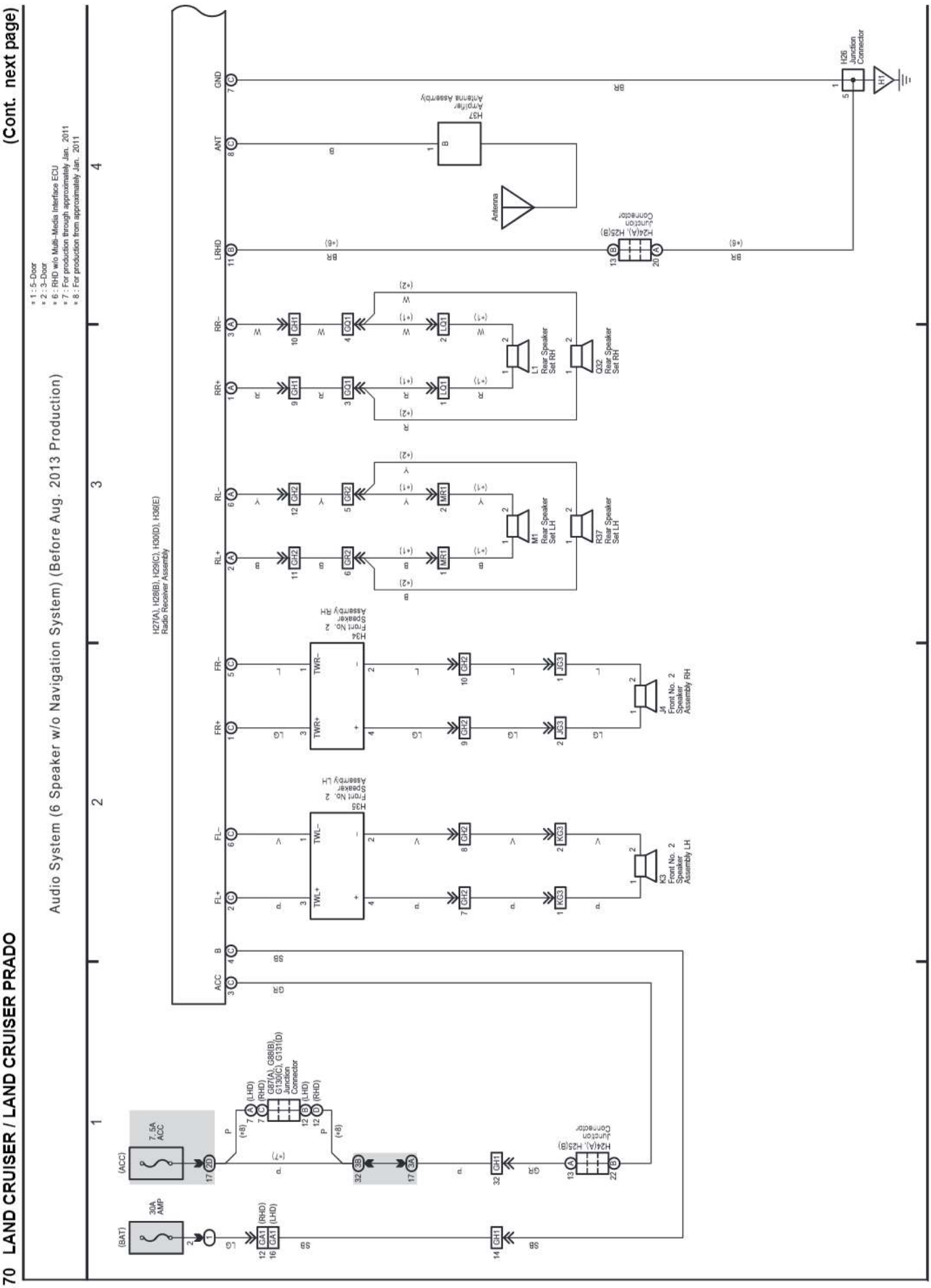

(Cont. next page)

Audio System (6 Speaker w/o Navigation System) (Before Aug. 2013 Production)

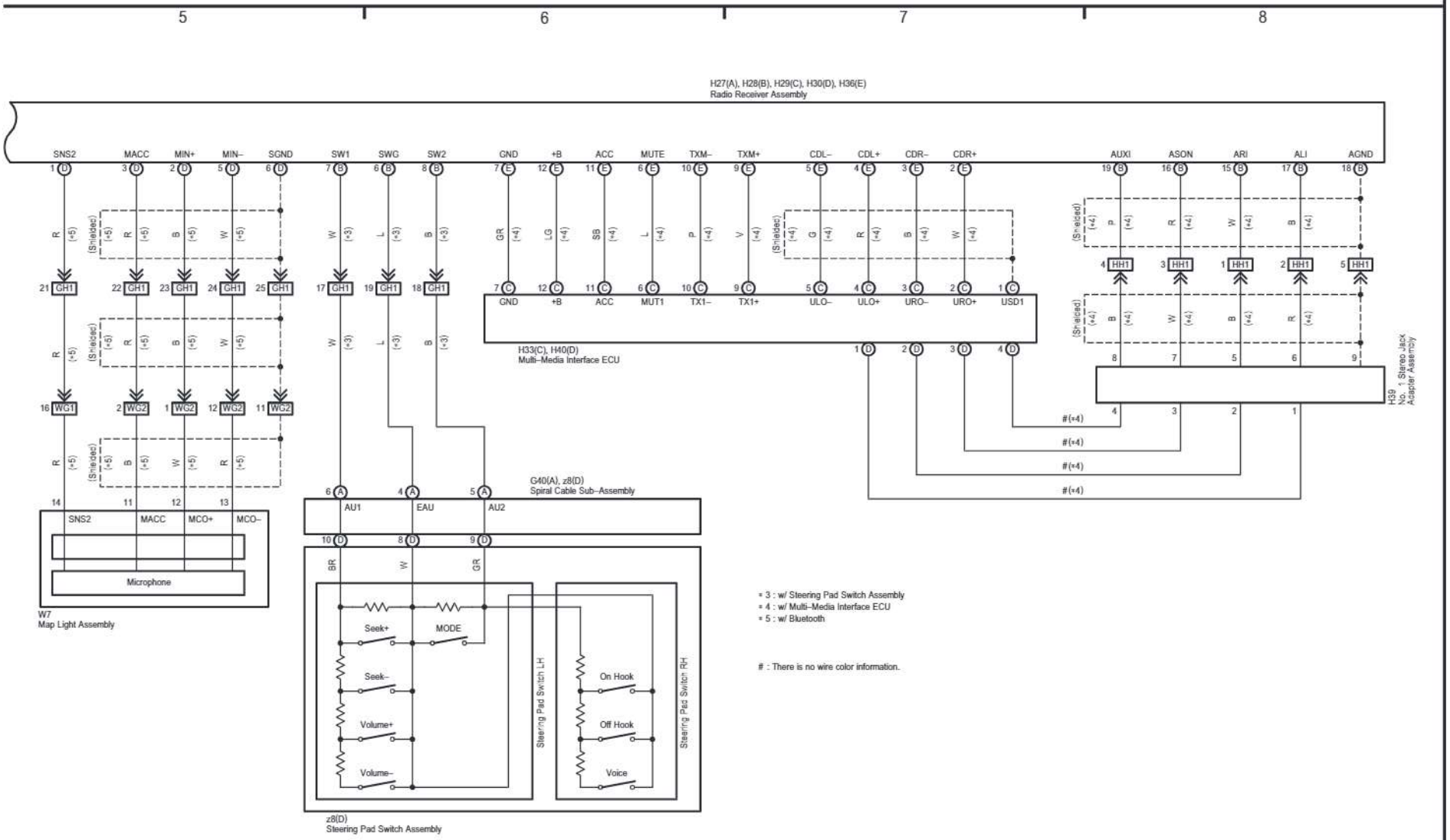

cardiagn.com

cardiagn.com

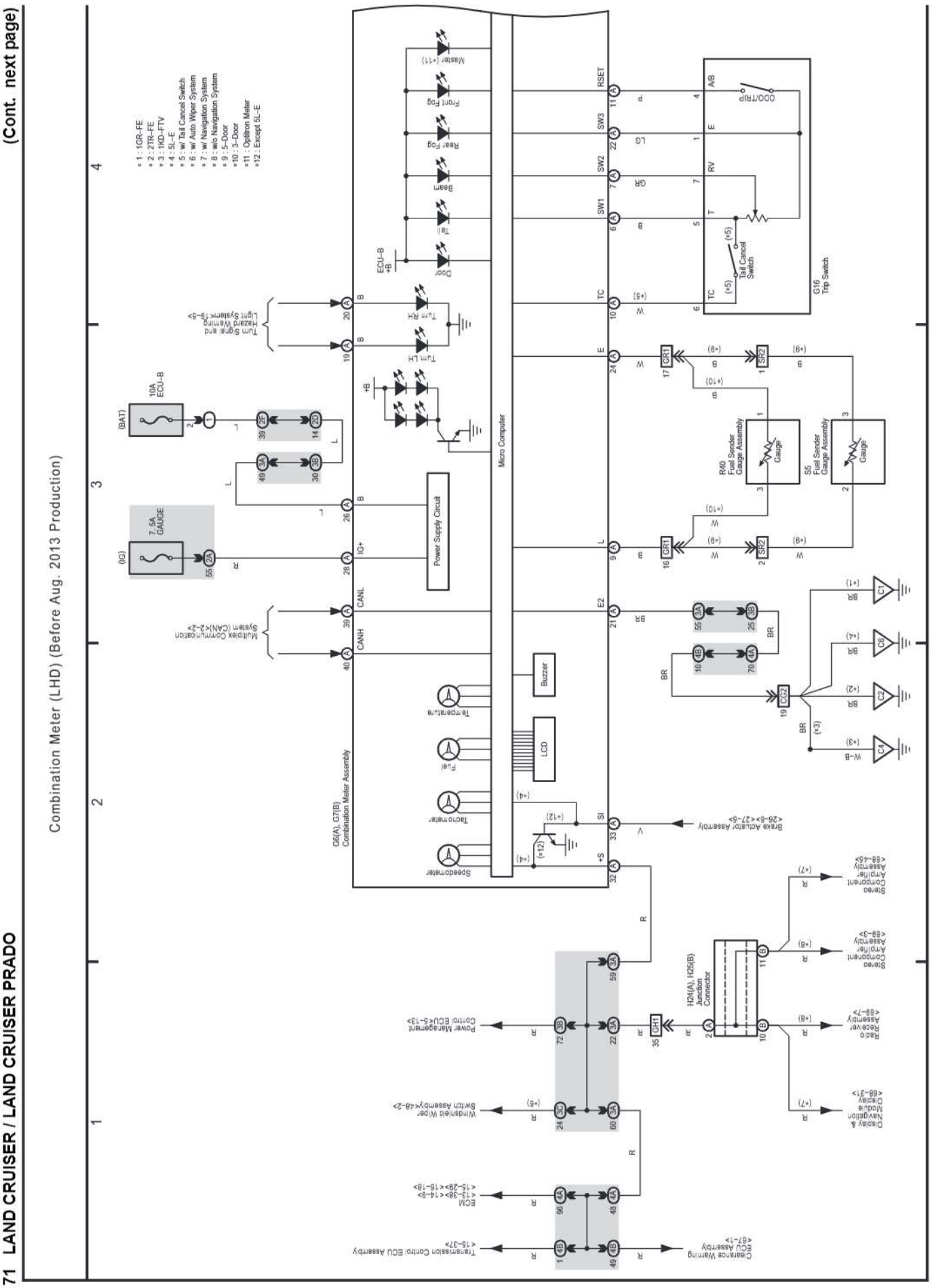

(Cont. next page)

Combination Meter (LHD) (Before Aug. 2013 Production)

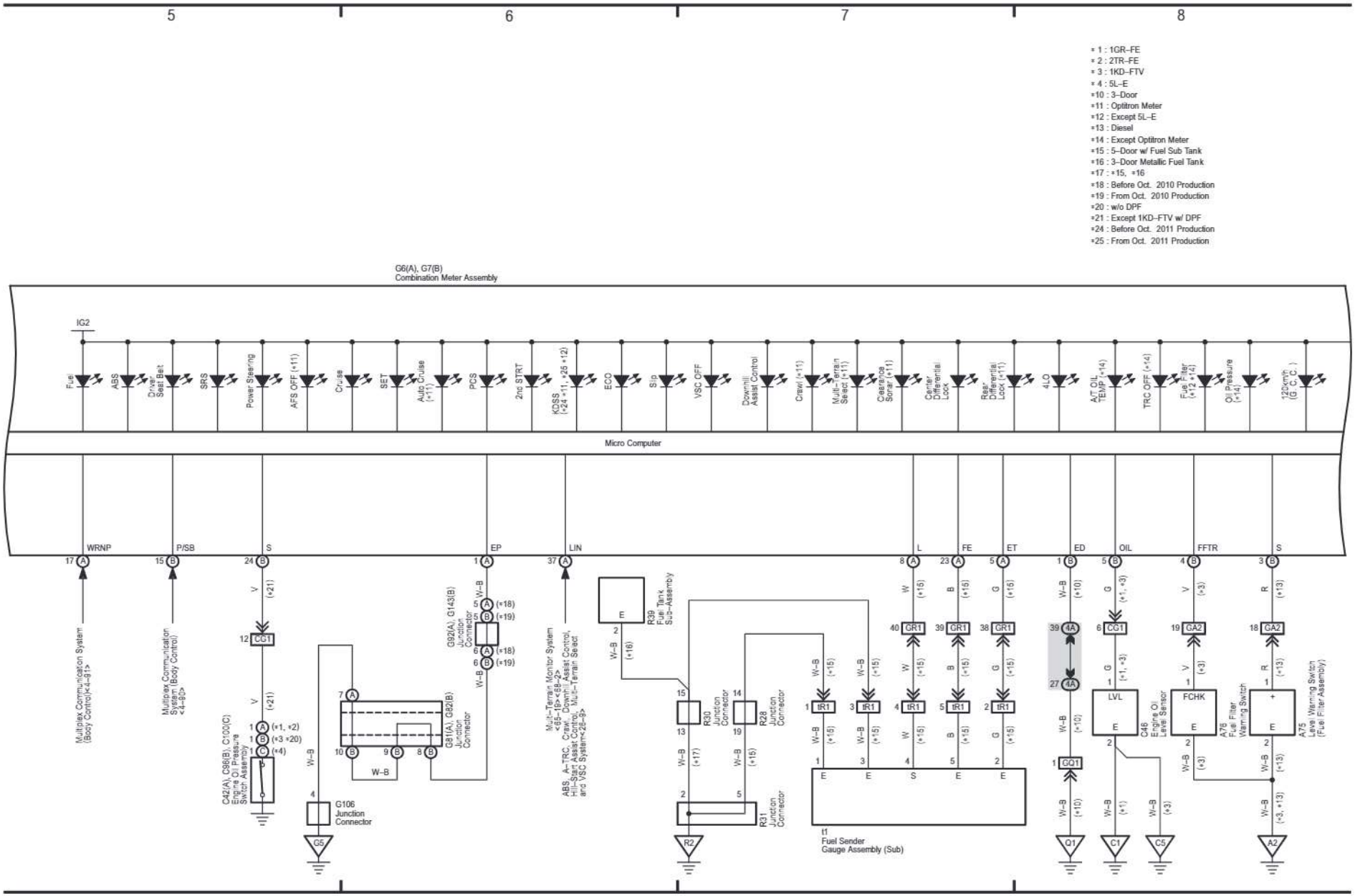

cardiagn.com

cardiagn.com

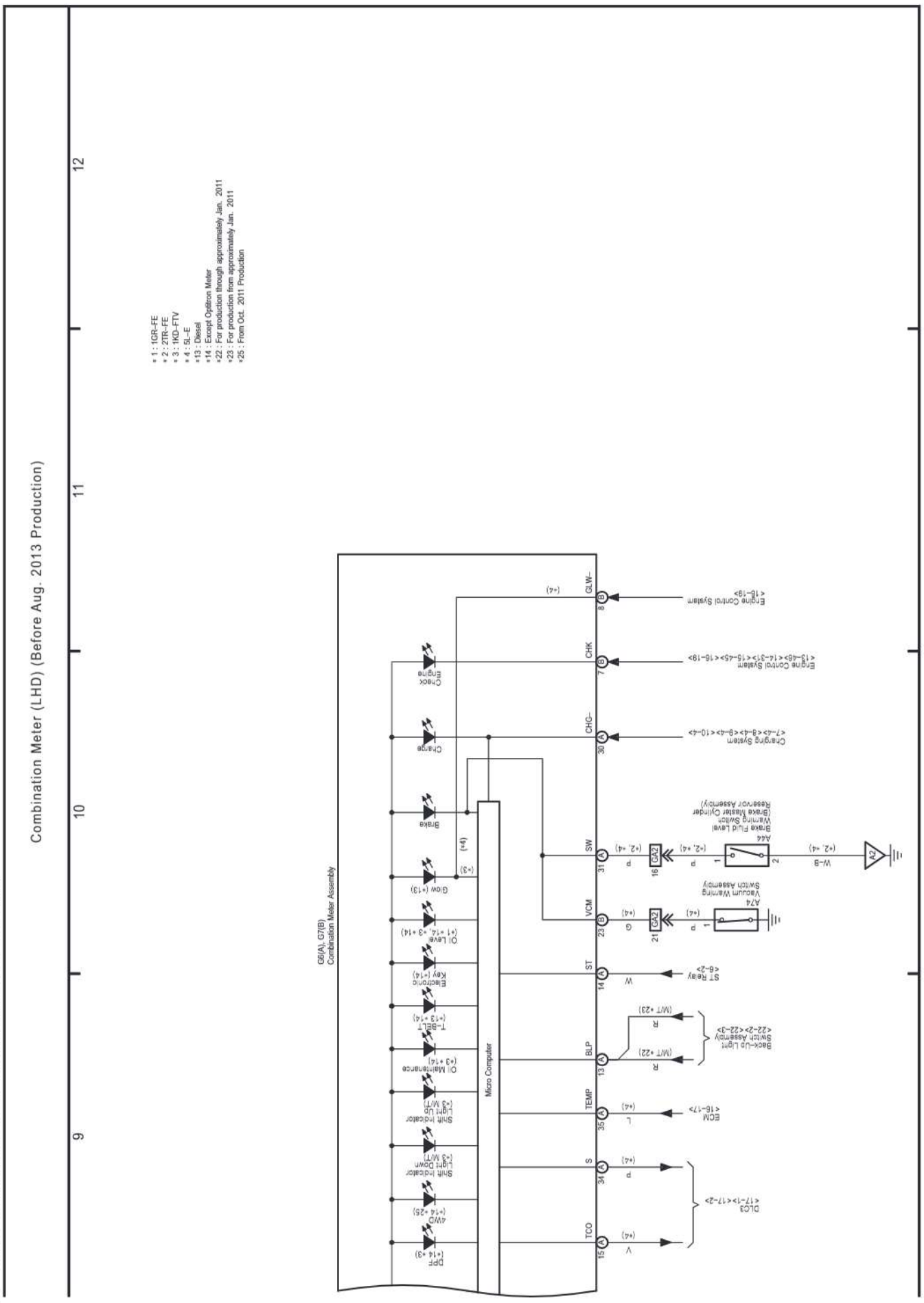

cardiagn.com

(Cont. next page)

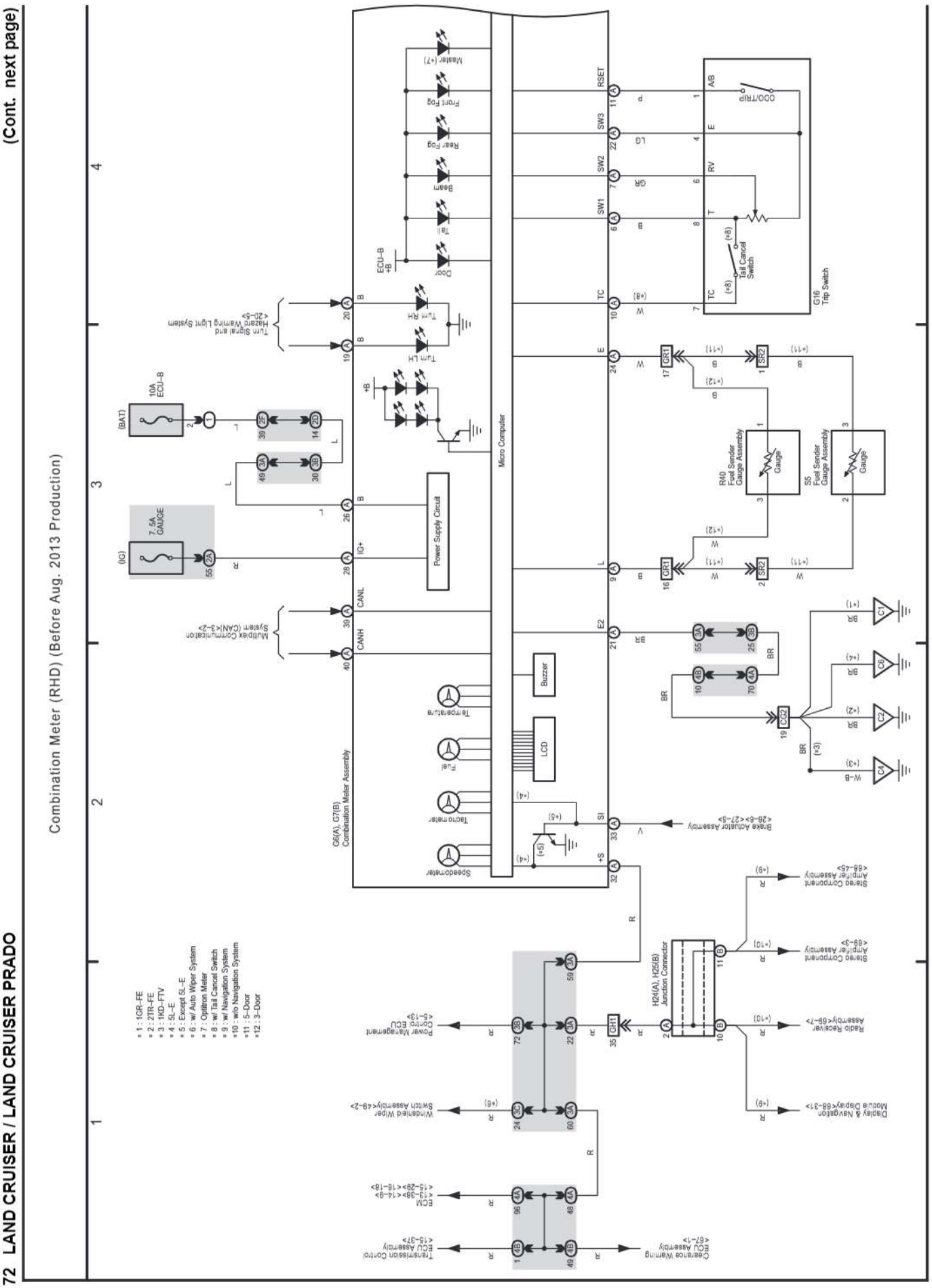

(Cont. next page)

Combination Meter (RHD) (Before Aug. 2013 Production)

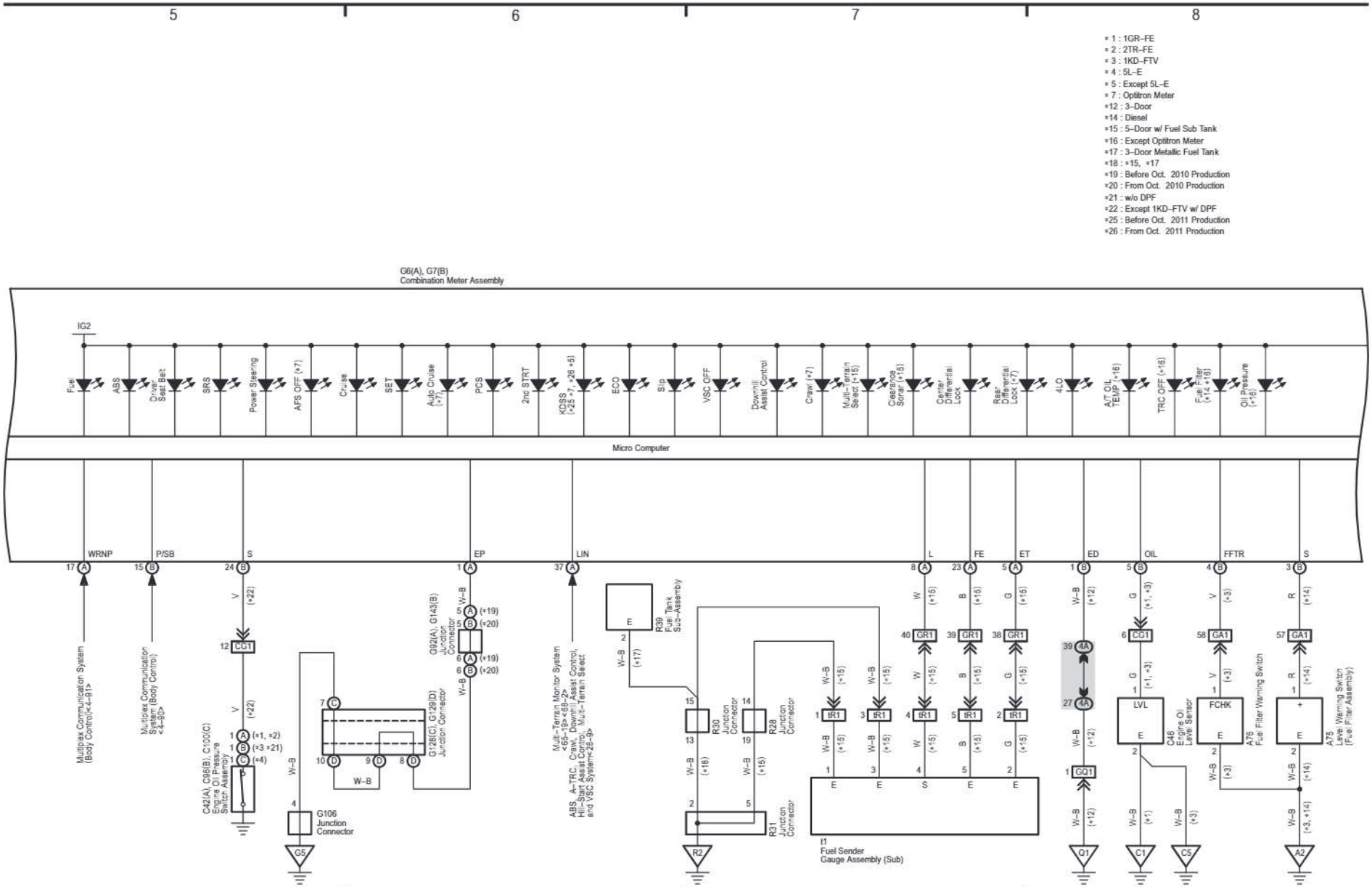

cardiagn.com

cardiagn.com

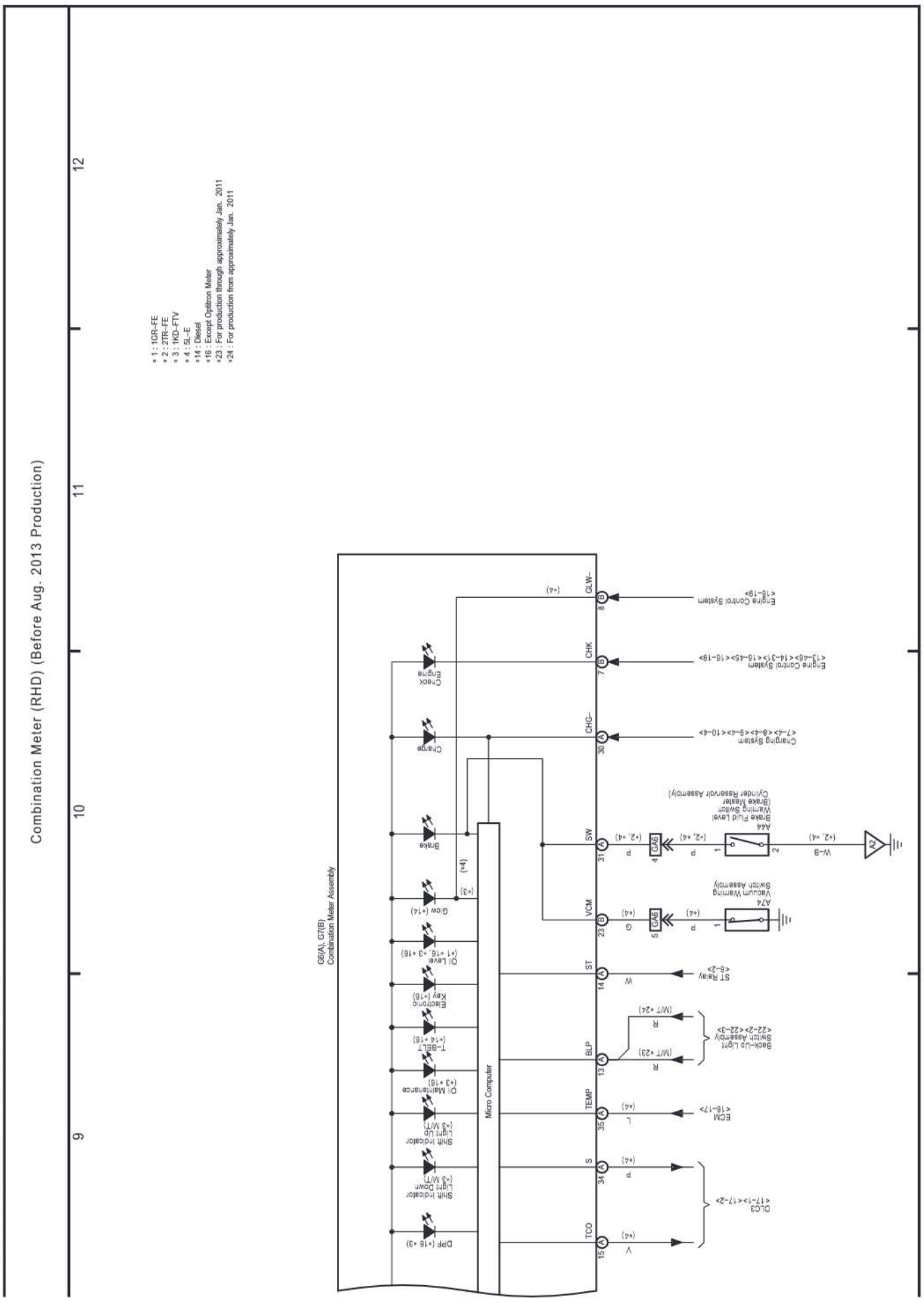

cardiagn.com

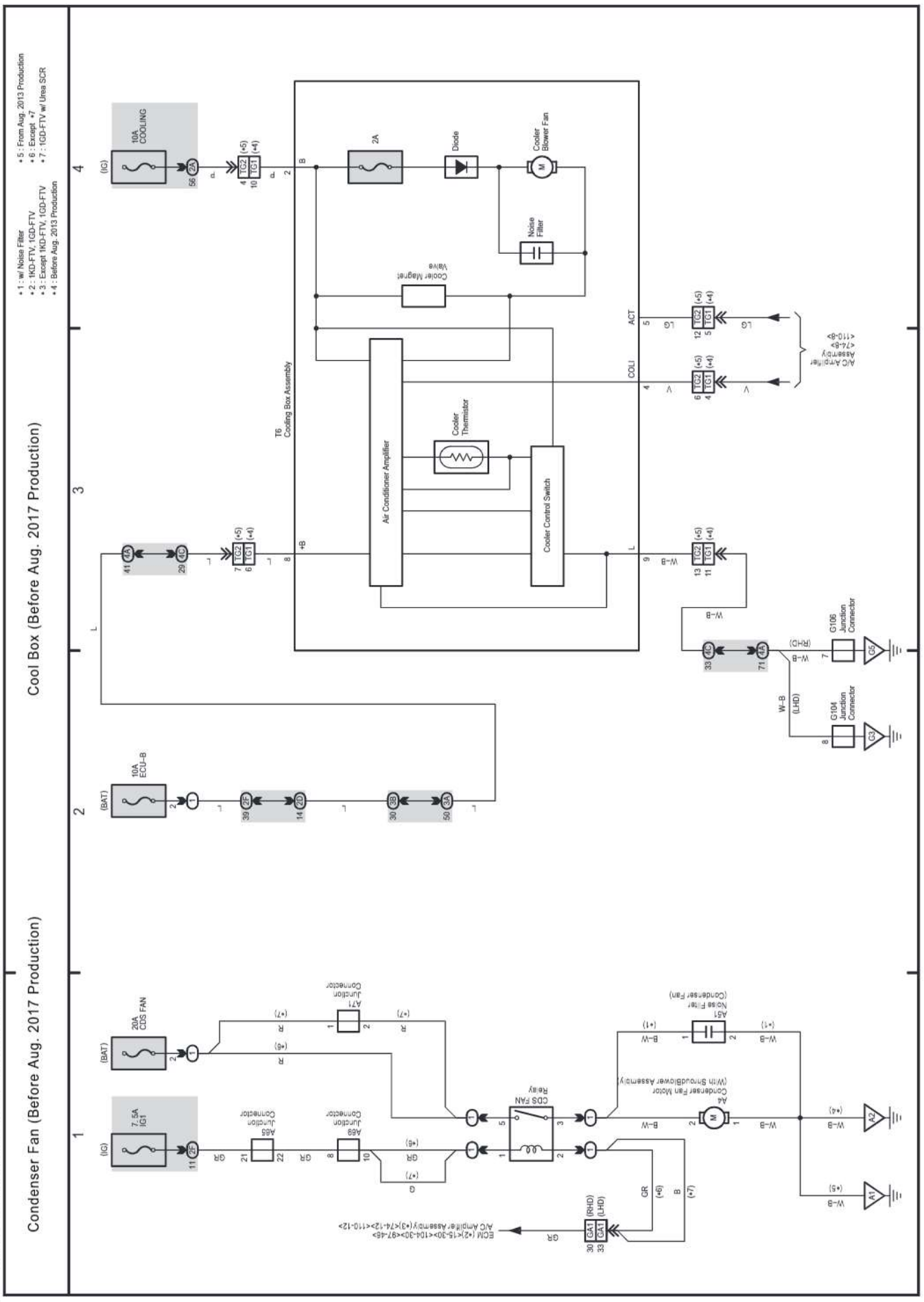

cardiagn.com

(Cont. next page)

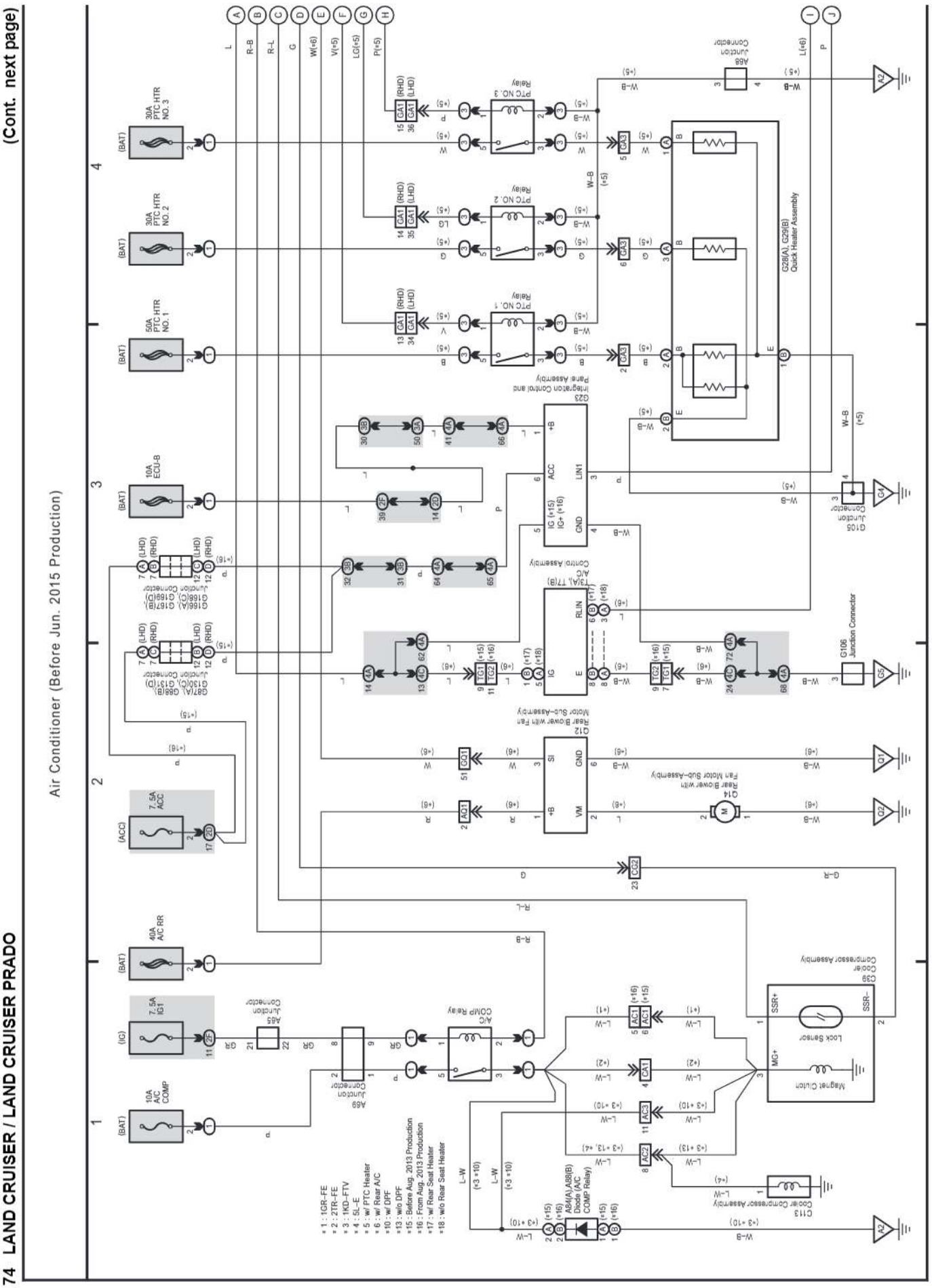

cardiagn.com

(Cont. next page)

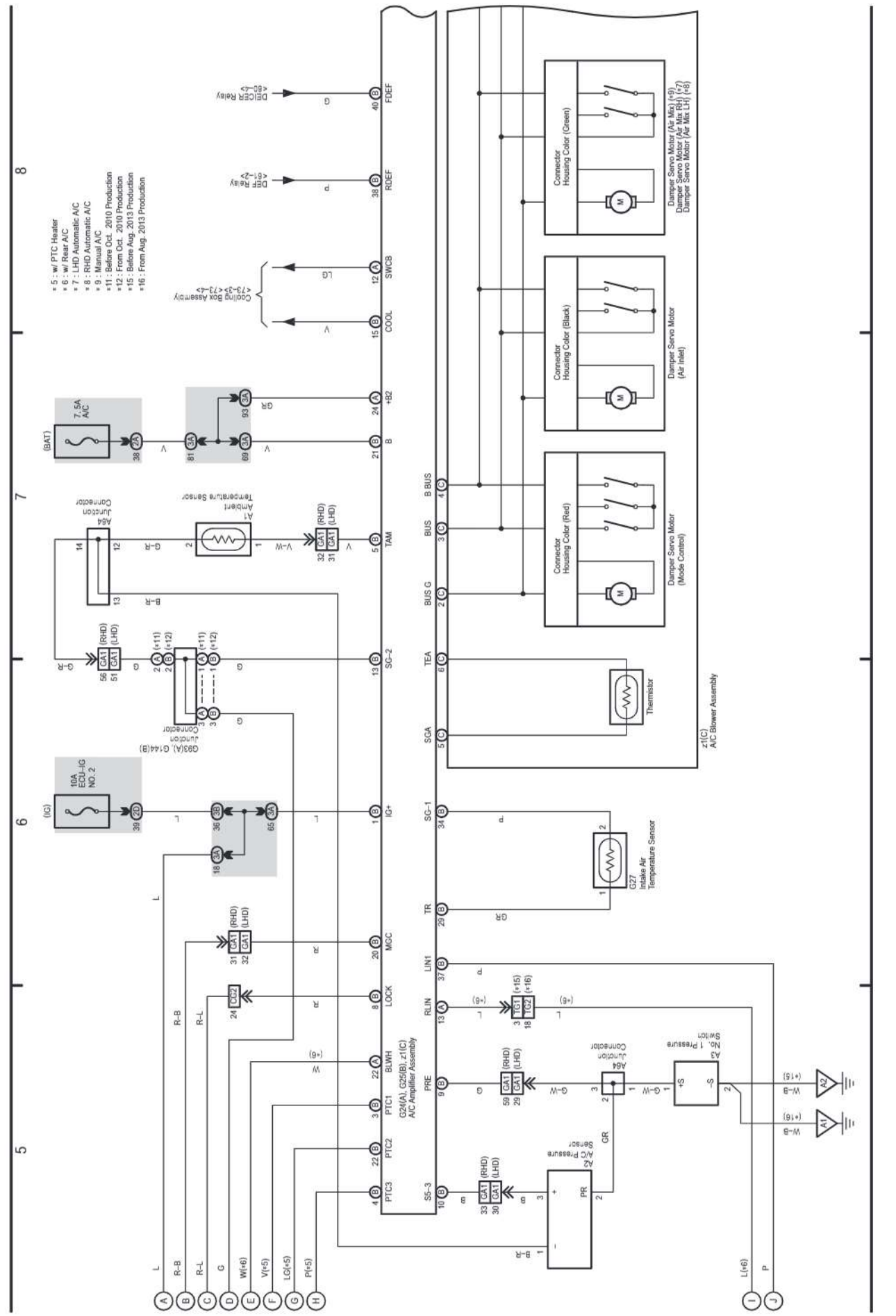

cardiagn.com

(Cont. next page)

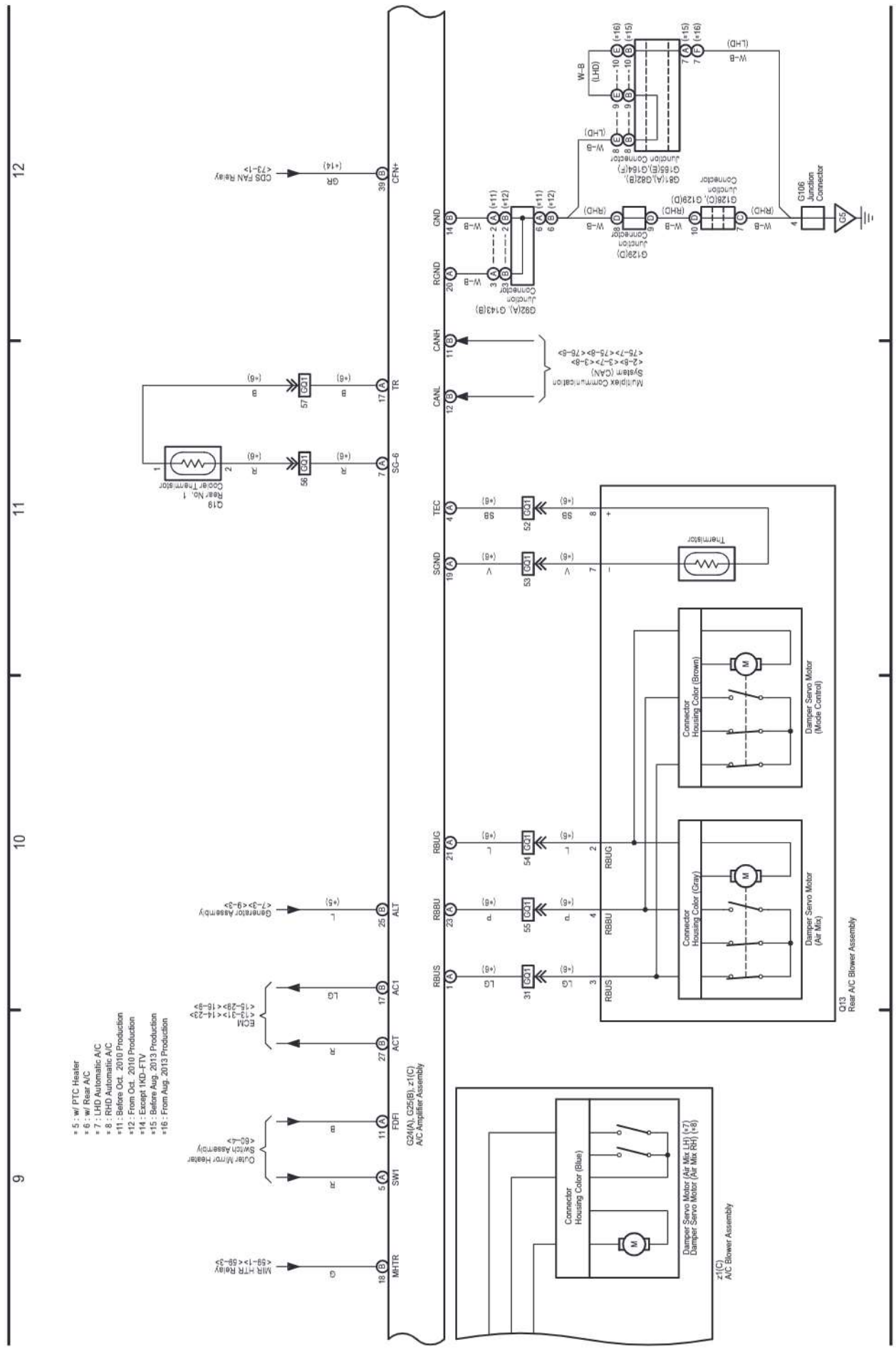

cardiagn.com

74 LAND CRUISER / LAND CRUISER PRADO (Cont'd)

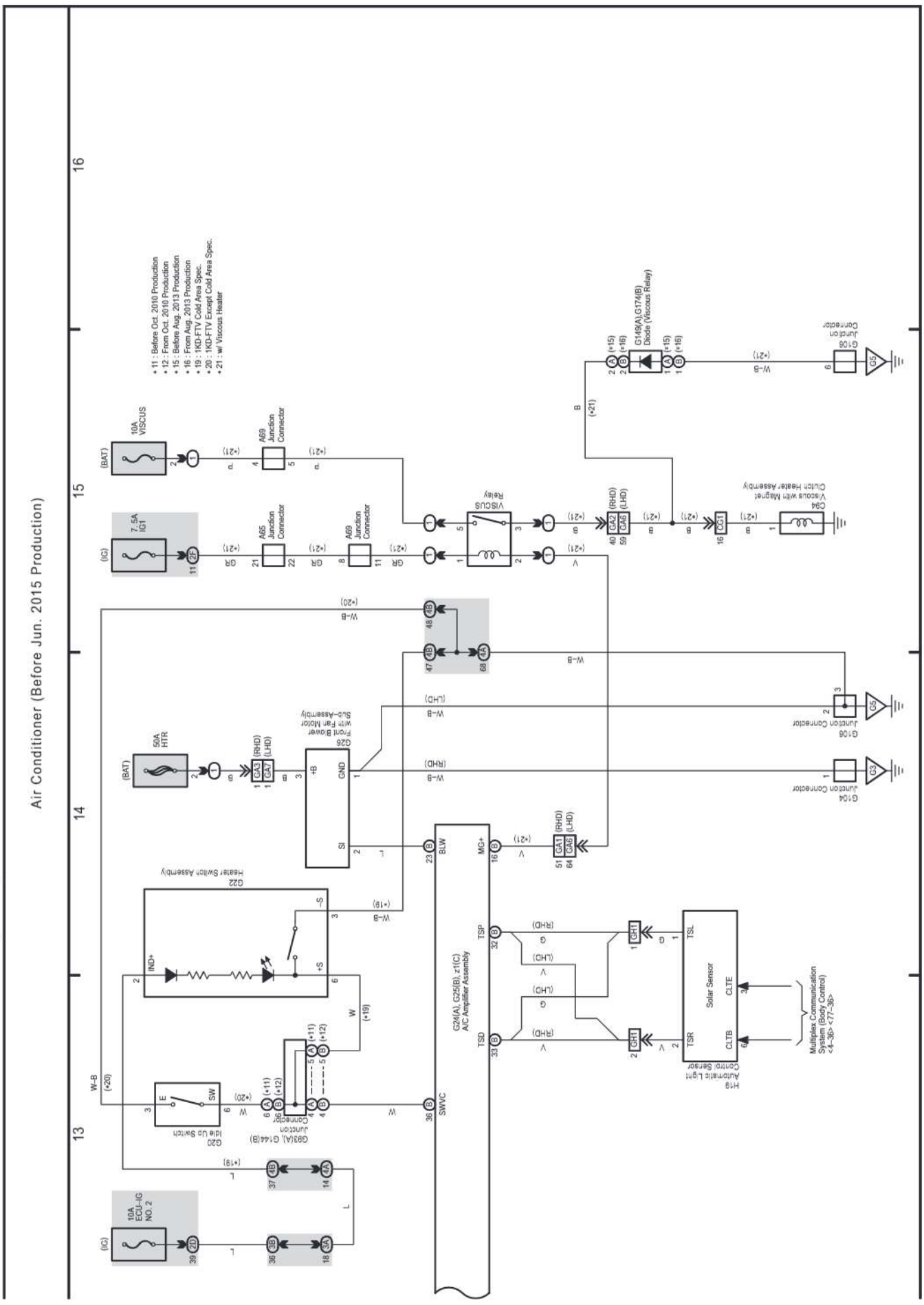

cardiagn.com

(Cont. next page)

Multiplex Communication System (CAN LHD) (From Aug. 2013 until Jun. 2015 Production)

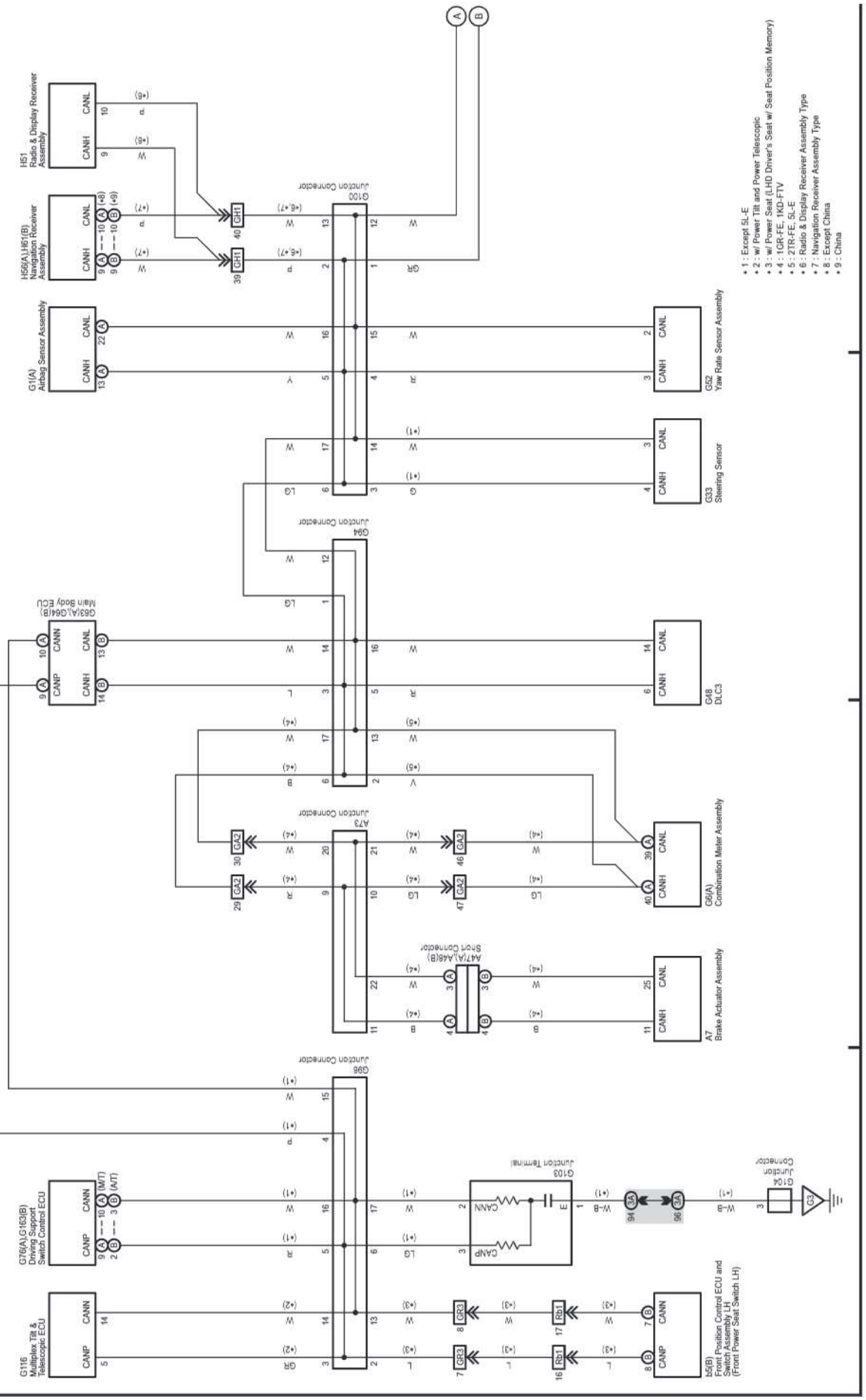

cardiagn.com

(Cont. next page)

Multiplex Communication System (CAN LHD) (From Aug. 2013 until Jun. 2015 Production)

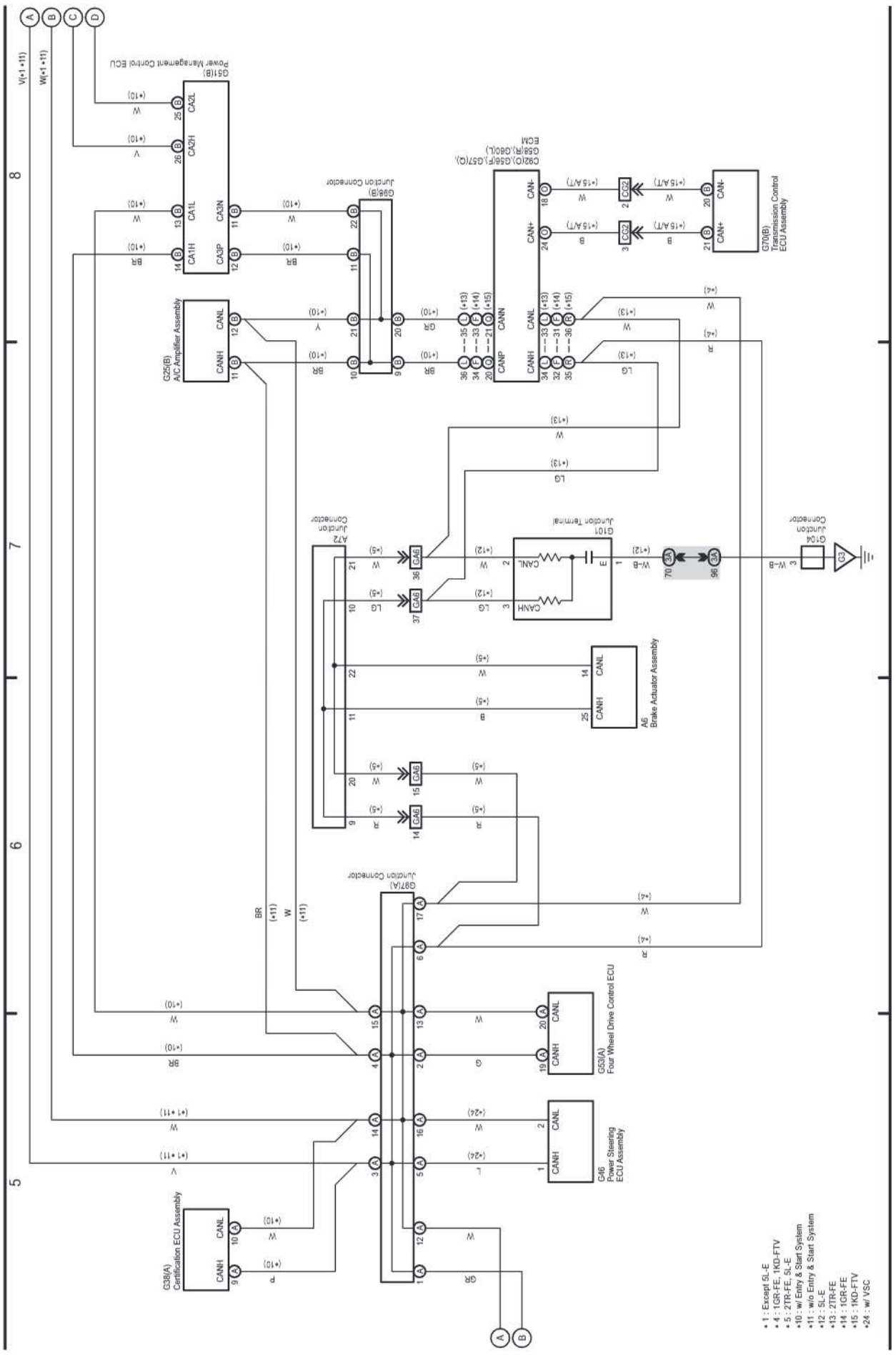

cardiagn.com

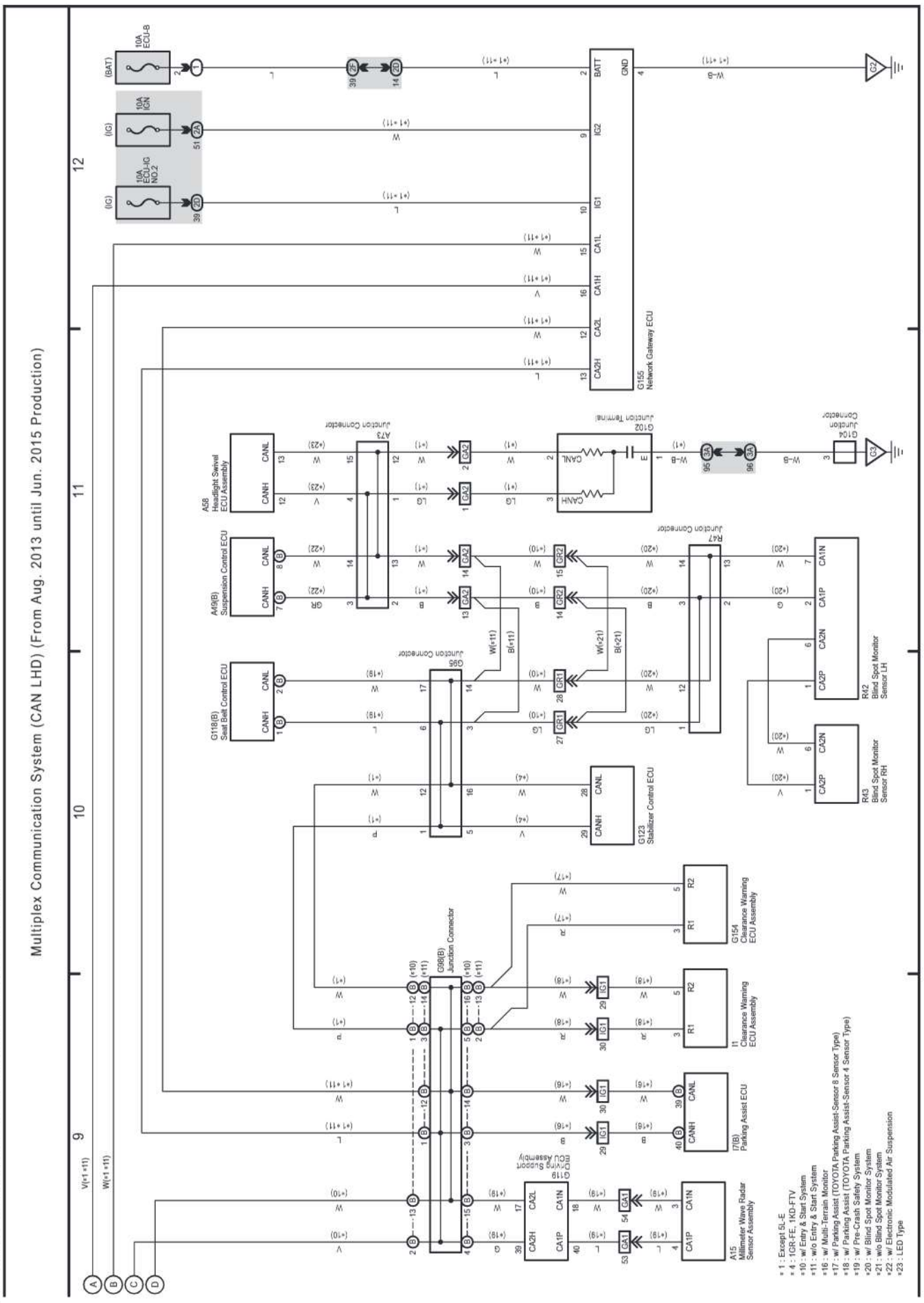

cardiagn.com

(Cont. next page)

Multiplex Communication System (CAN RHD) (From Aug. 2013 until Jun. 2015 Production)

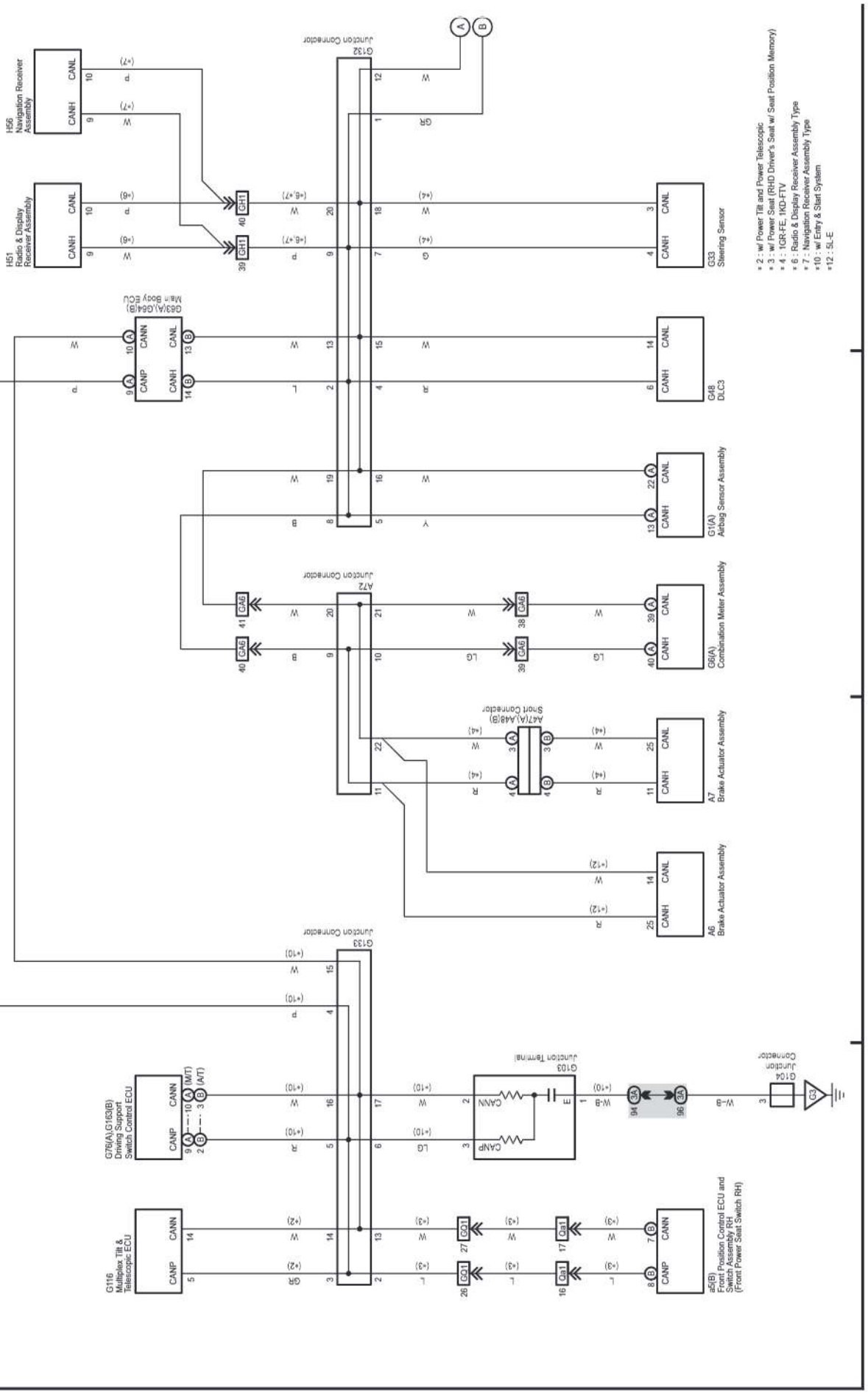

cardiagn.com

76 LAND CRUISER / LAND CRUISER PRADO (Cont'd)

(Cont. next page)

Multiplex Communication System (CAN RHD) (From Aug. 2013 until Jun. 2015 Production)

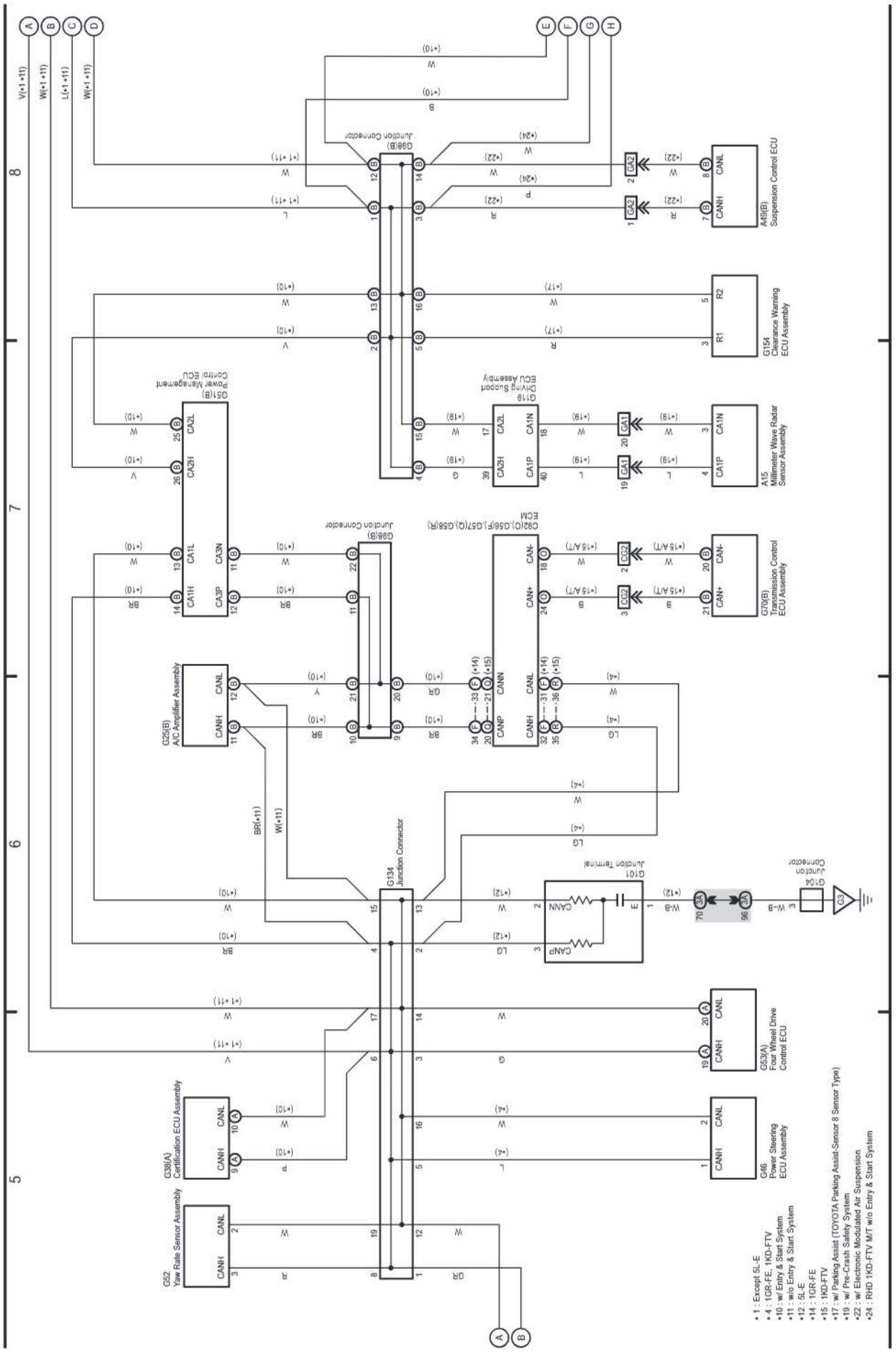

cardiagn.com

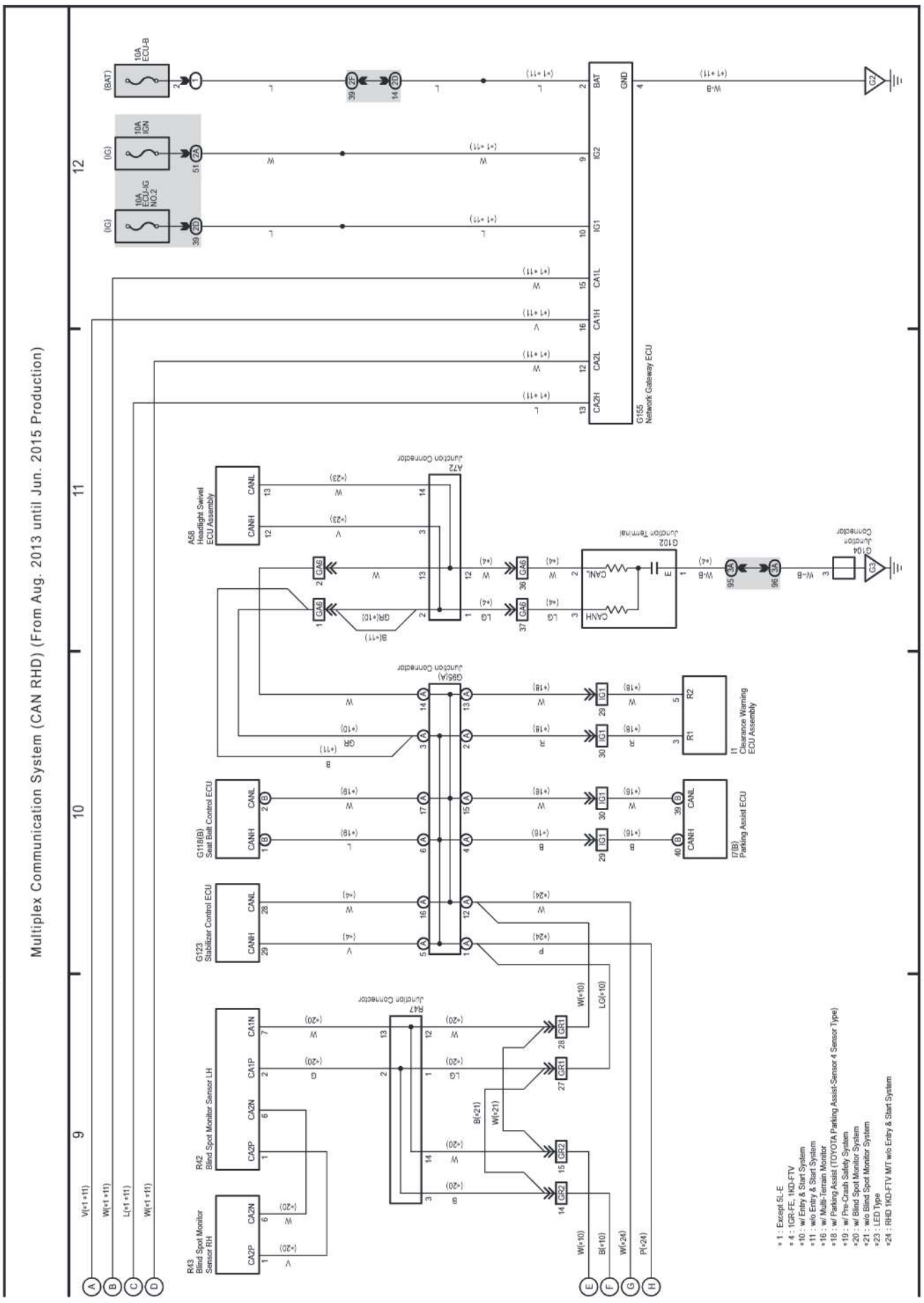

cardiagn.com

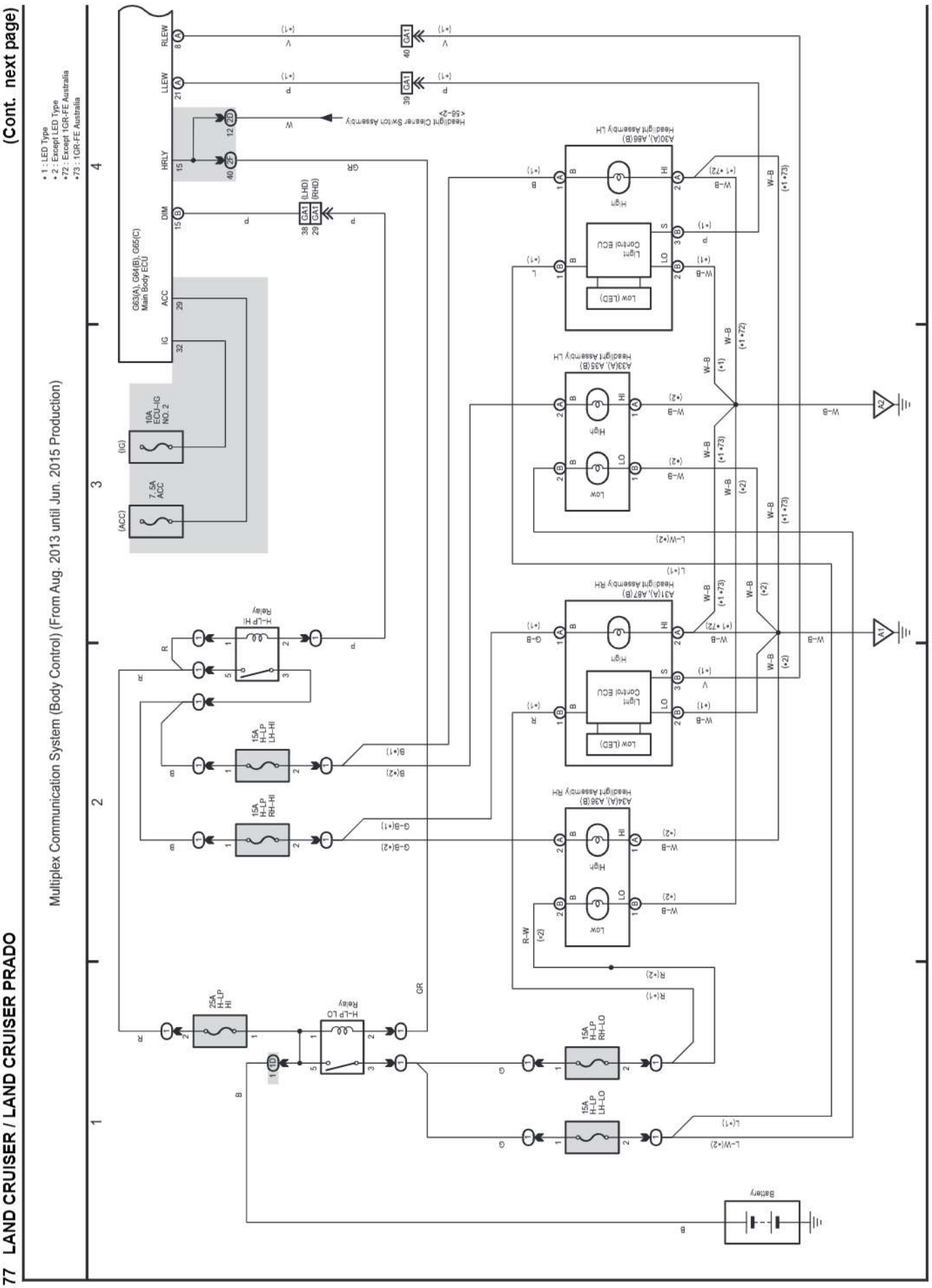

cardiagn.com

77 LAND CRUISER / LAND CRUISER PRADO (Cont'd)

(Cont. next page)

Multiplex Communication System (Body Control) (From Aug. 2013 until Jun. 2015 Production)

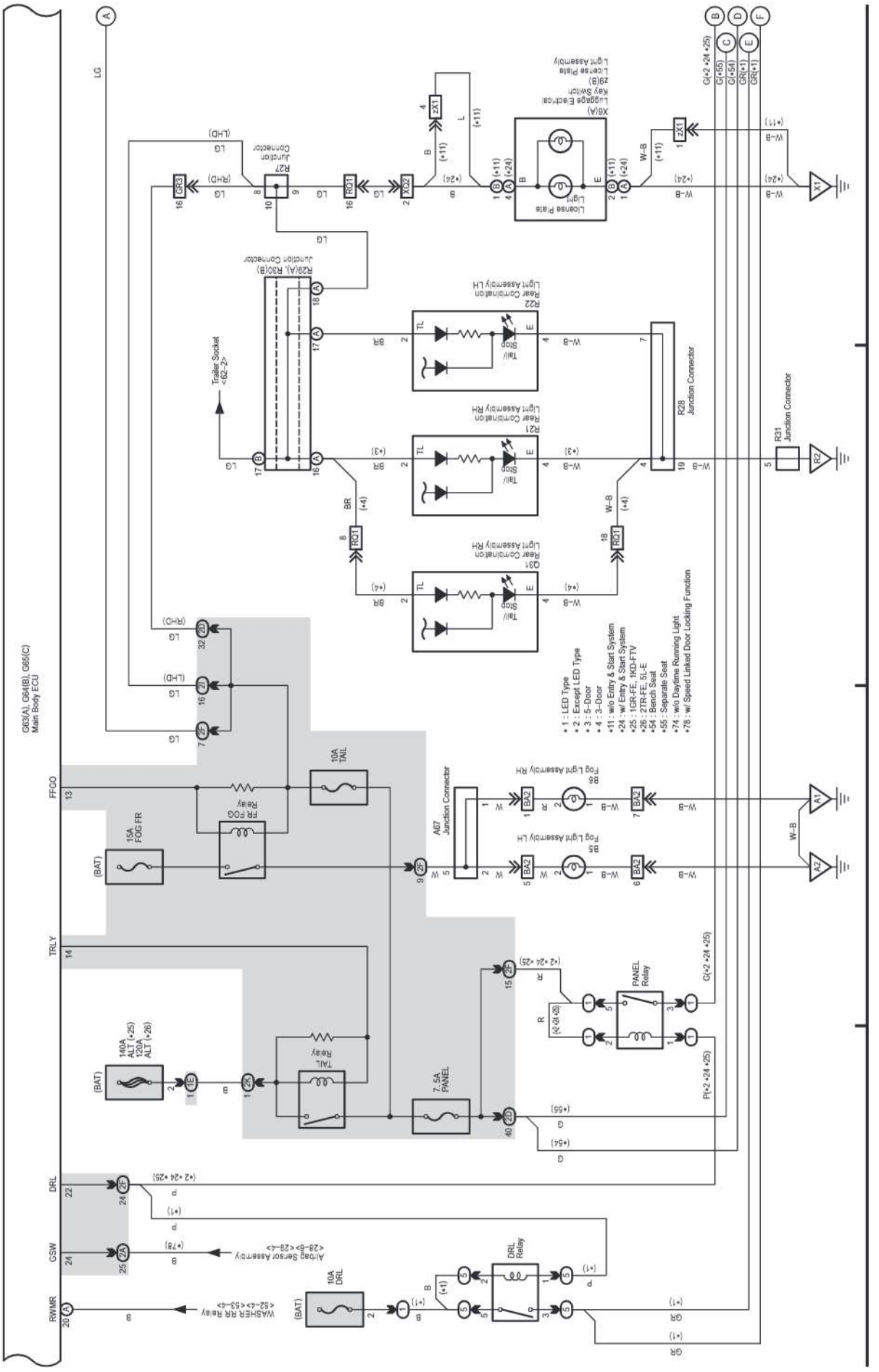

cardiagn.com

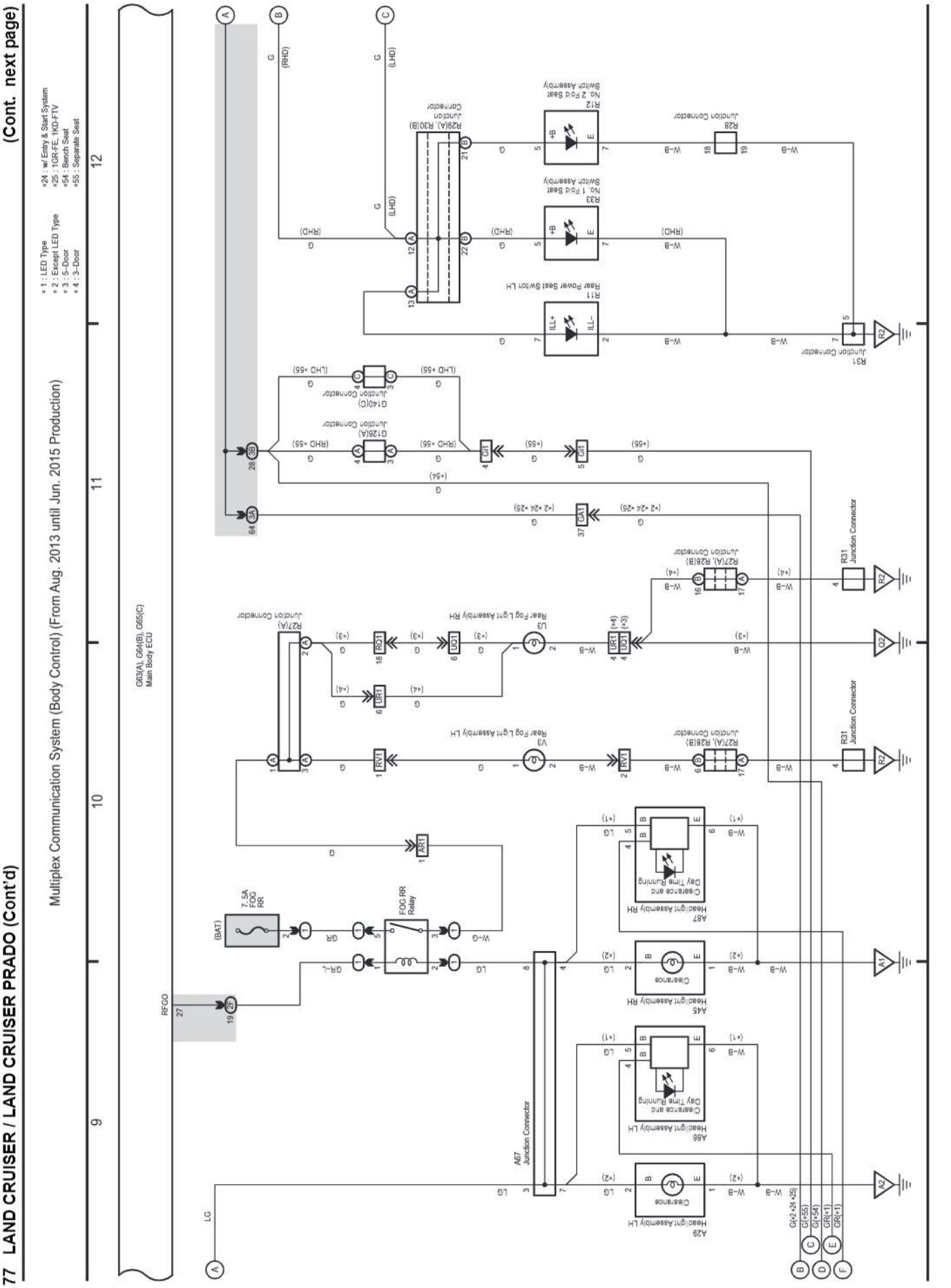

(Cont. next page)

Multiplex Communication System (Body Control) (From Aug. 2013 until Jun. 2015 Production)

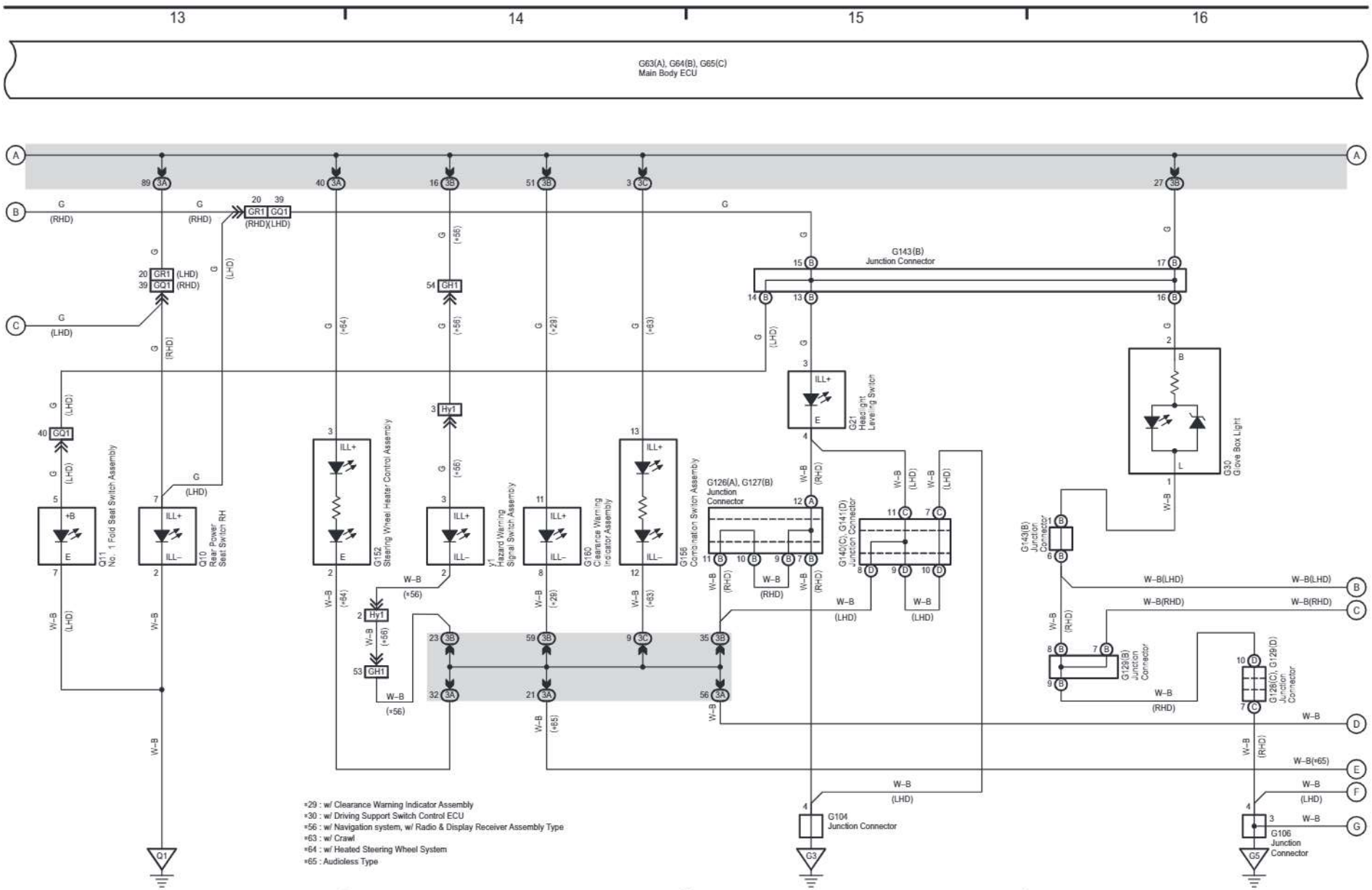

cardiagn.com

cardiagn.com

(Cont. next page)

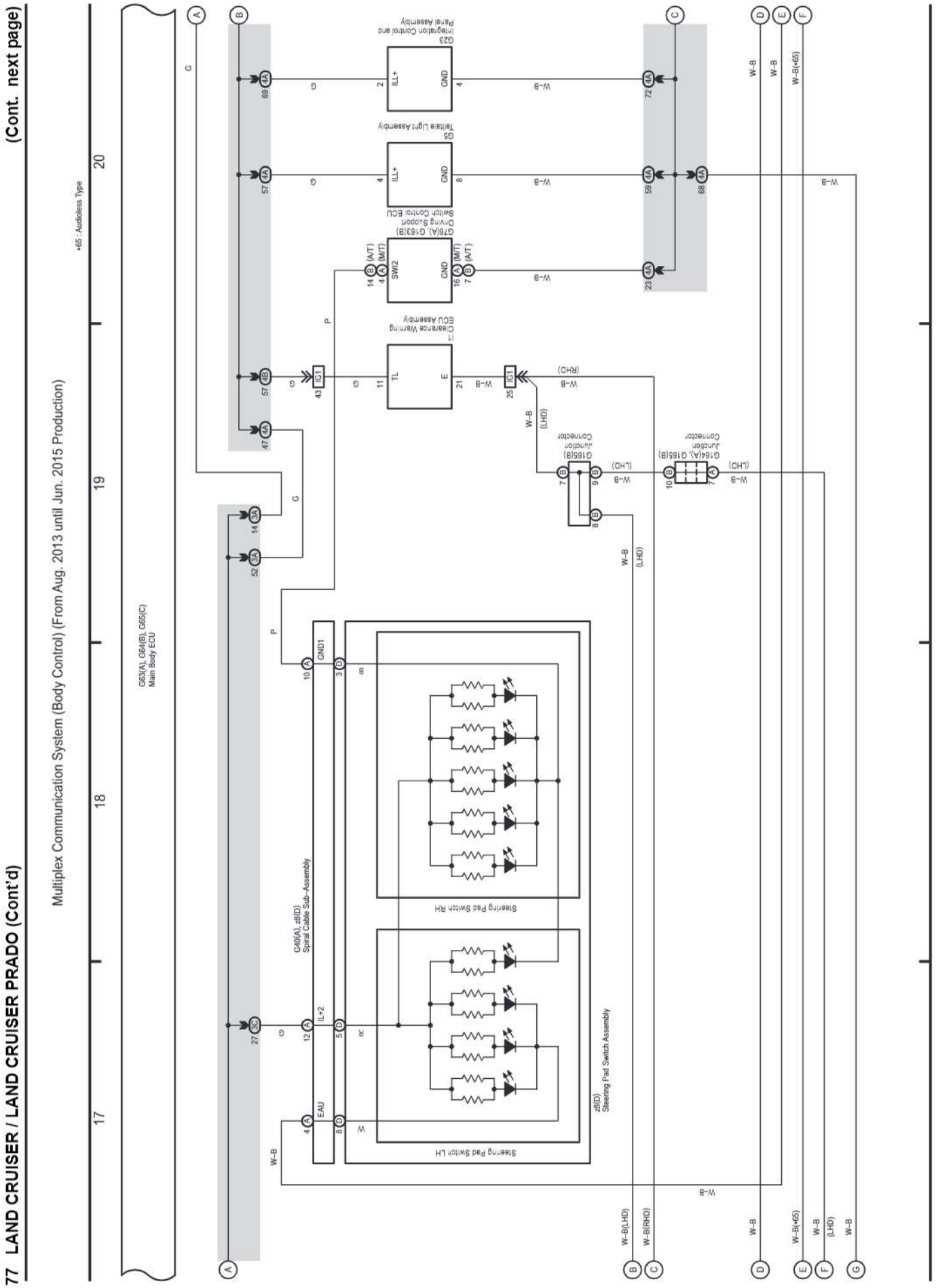

(Cont. next page)

Multiplex Communication System (Body Control) (From Aug. 2013 until Jun. 2015 Production)

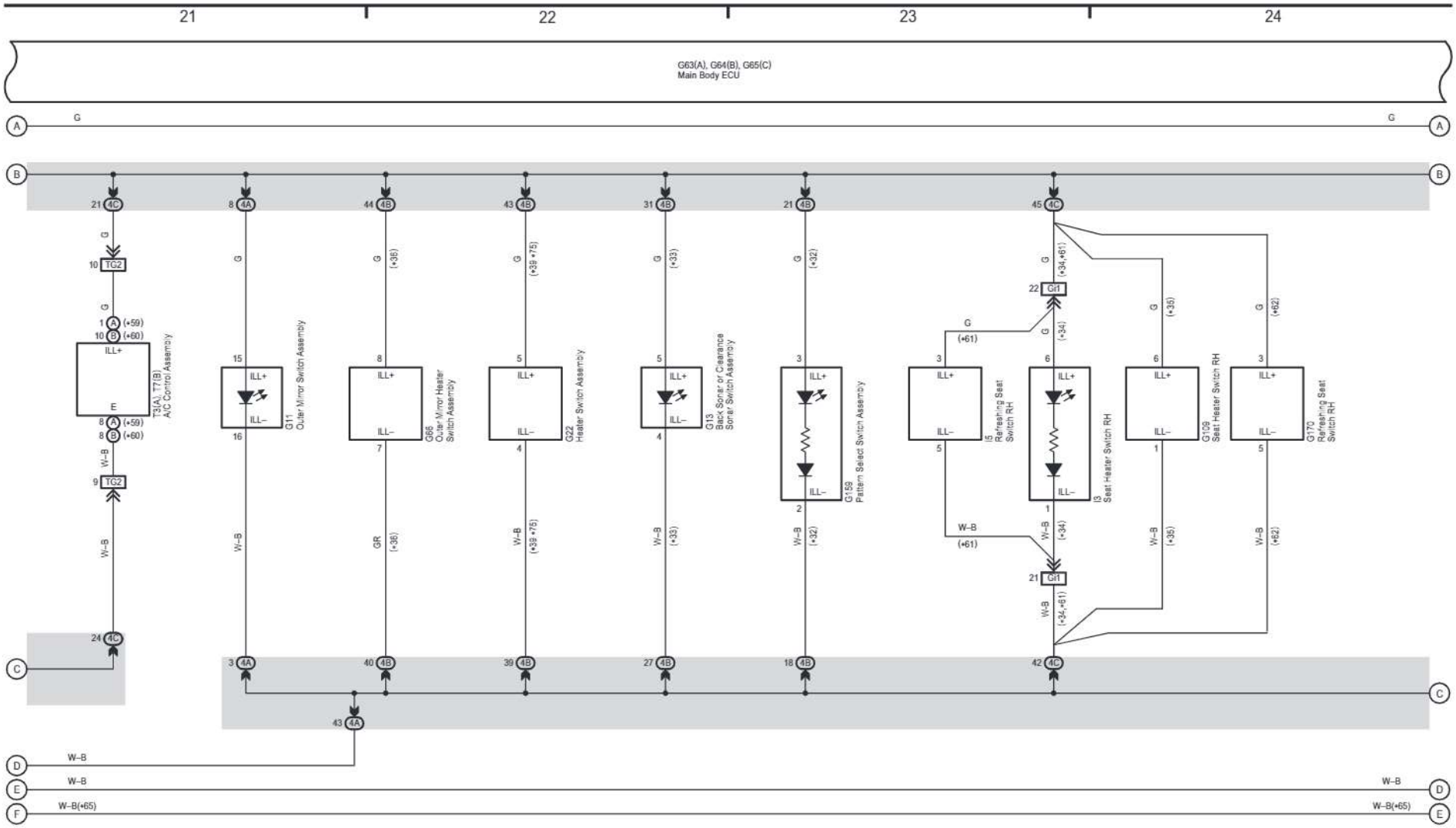

•32 : w/ Pattern Select Switch Assembly
•33 : w/ Back Sonar or Clearance Sonar Switch Assembly
•34 : A/T w/ Seat Heater (Front)
•35 : M/T w/ Seat Heater (Front)
•36 : w/ Front Window Deicer
•37 : w/ Rear Differential Lock
•39 : 1KD-FTV
•59 : w/o Seat Heater (Rear)
•60 : w/ Seat Heater (Rear)
•61 : A/T w/ Climate Control Seat
•62 : M/T w/ Climate Control Seat
•65 : Audioless Type
•75 : Cold Area Spec.

cardiagn.com

cardiagn.com

(Cont. next page)

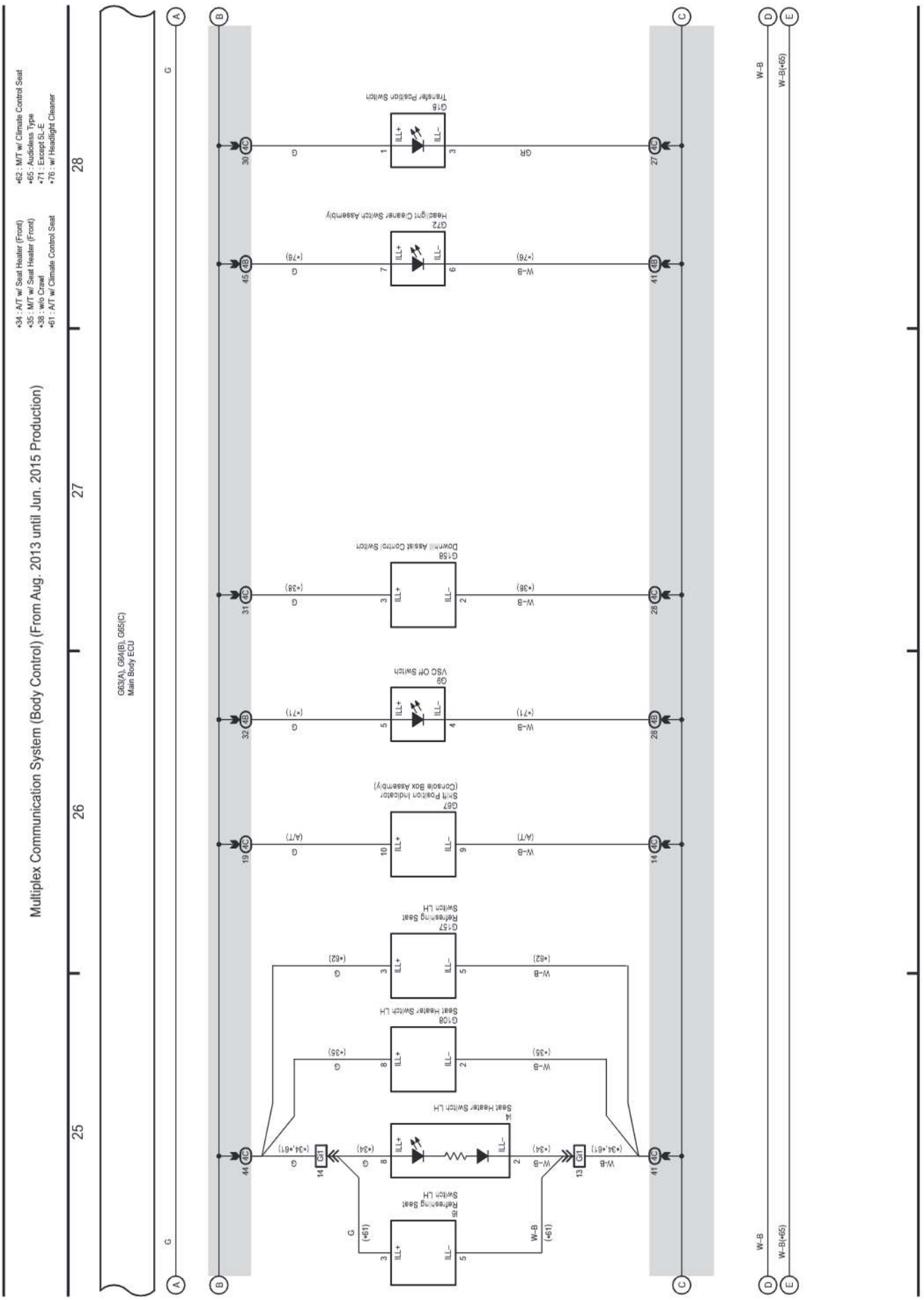

cardiagn.com

77 LAND CRUISER / LAND CRUISER PRADO (Cont'd)

(Cont. next page)

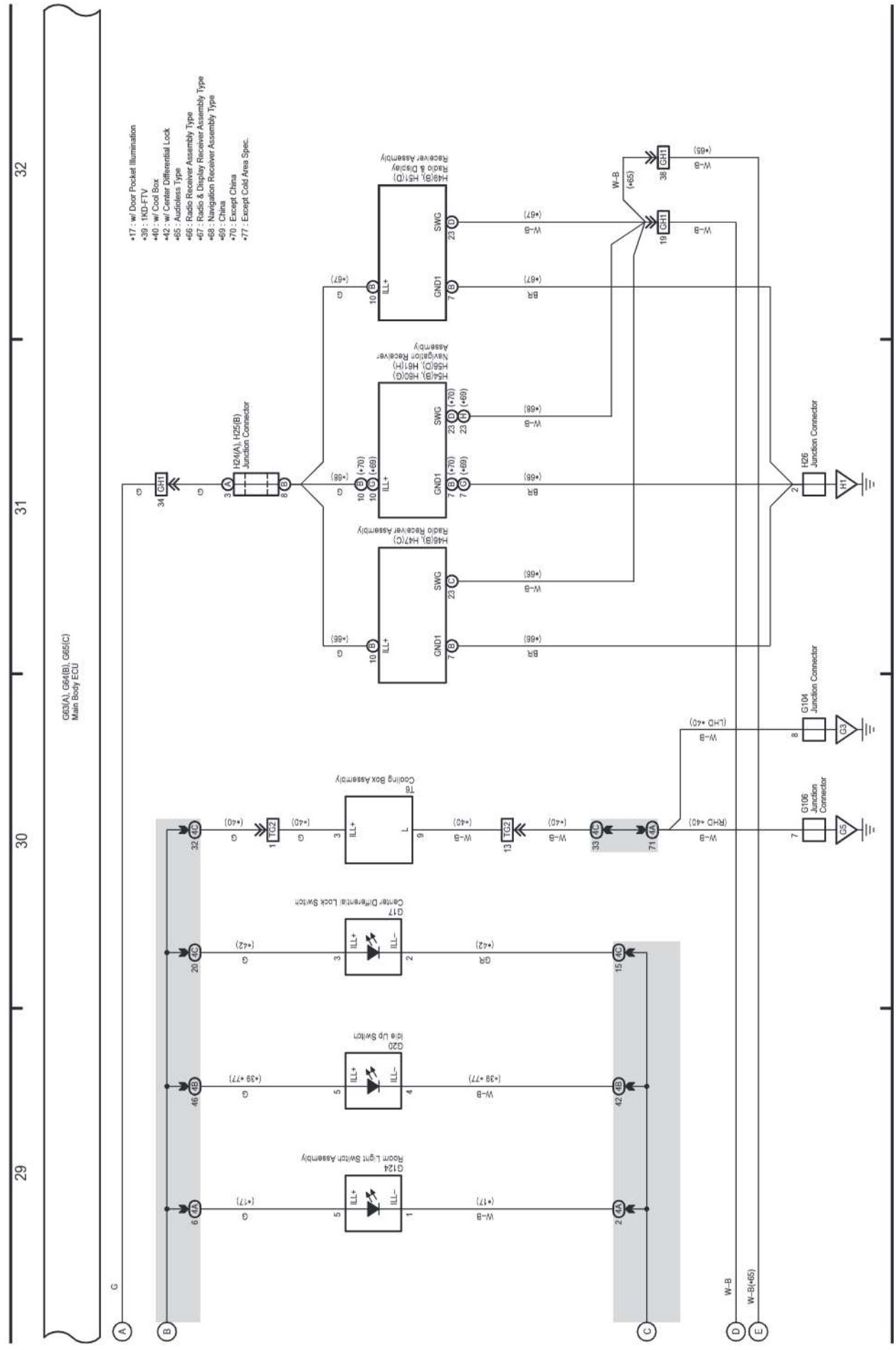

cardiagn.com

(Cont. next page)

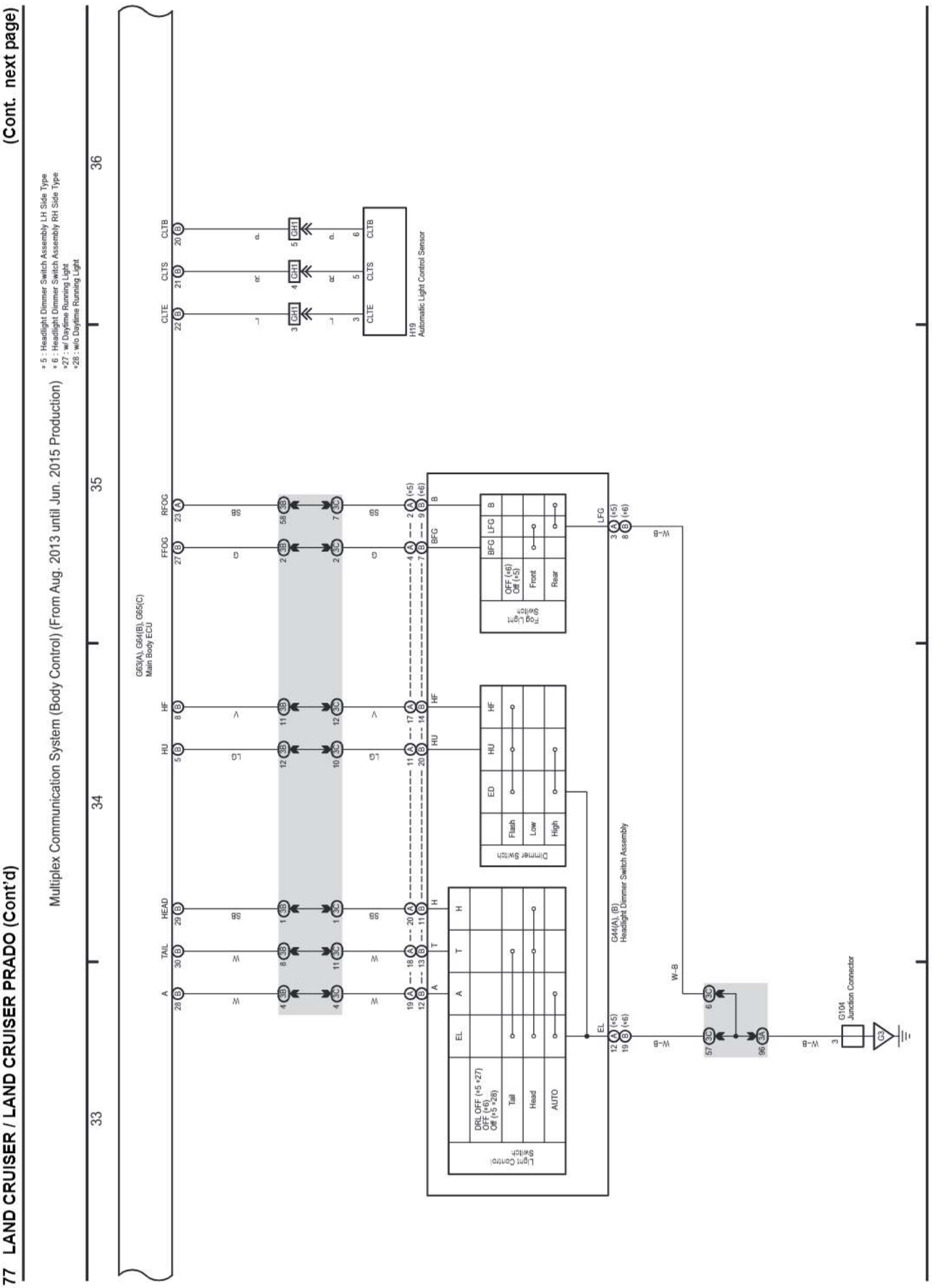

(Cont. next page)

Multiplex Communication System (Body Control) (From Aug. 2013 until Jun. 2015 Production)

*9 : w/ Automatic Glare-Resistant EC Mirror
*10 : w/ Theft Warning Siren Assembly
*11 : w/o Entry & Start System

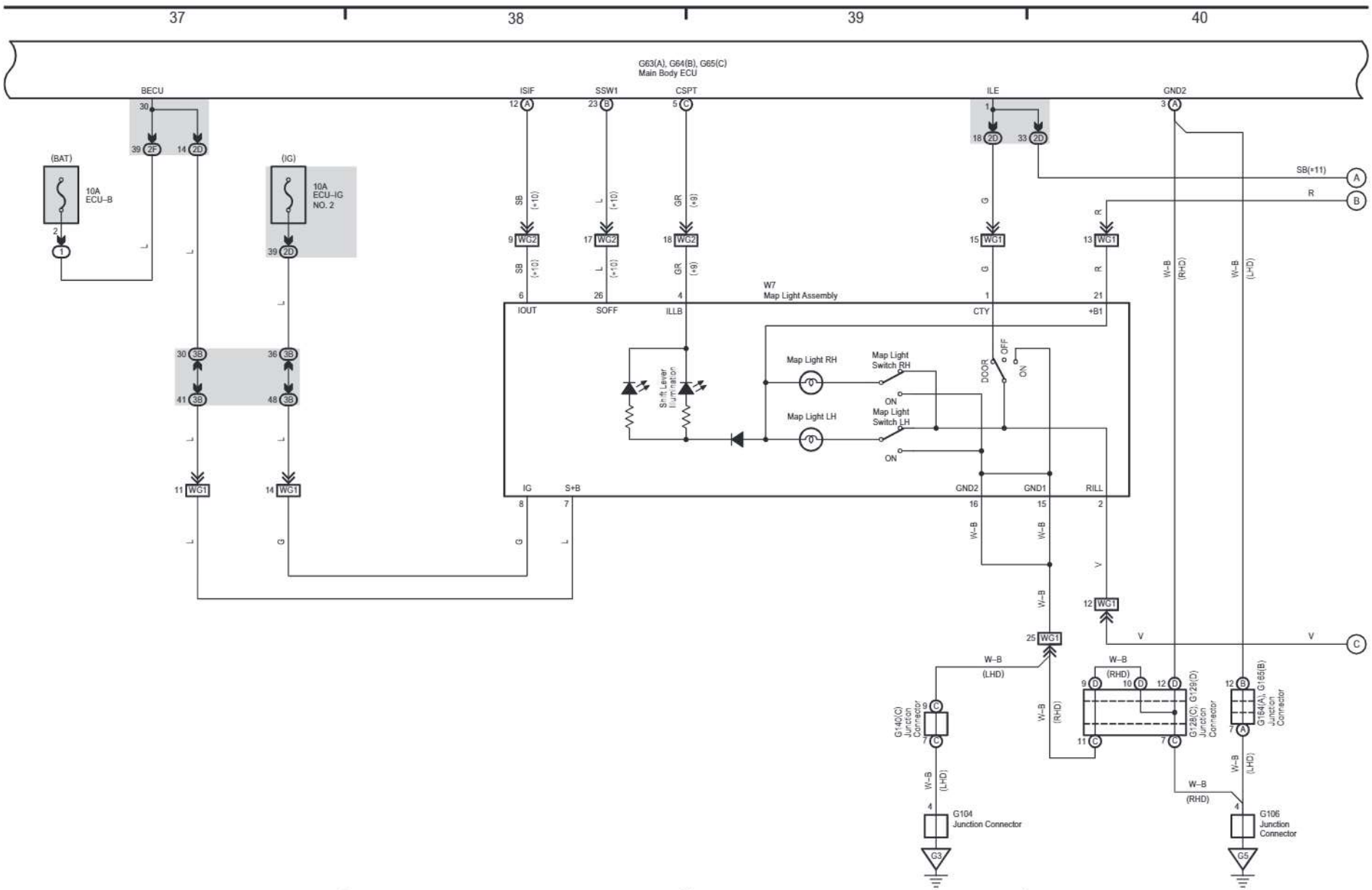

cardiagn.com

cardiagn.com

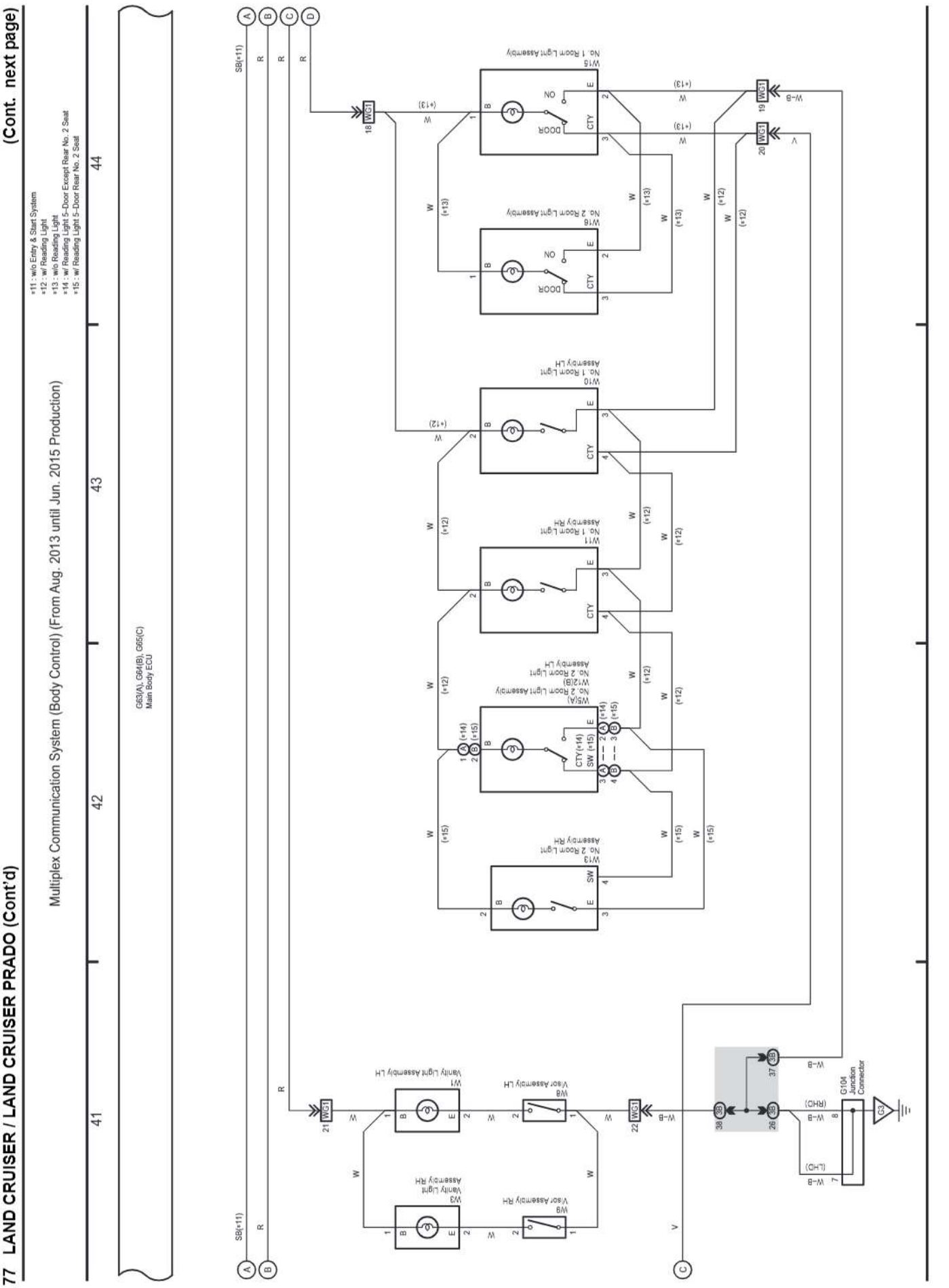

Multiplex Communication System (Body Control) (From Aug. 2013 until Jun. 2015 Production)

*11 : w/o Entry & Start System
*16 : w/ Foot Light
*17 : w/ Door Pocket Illumination

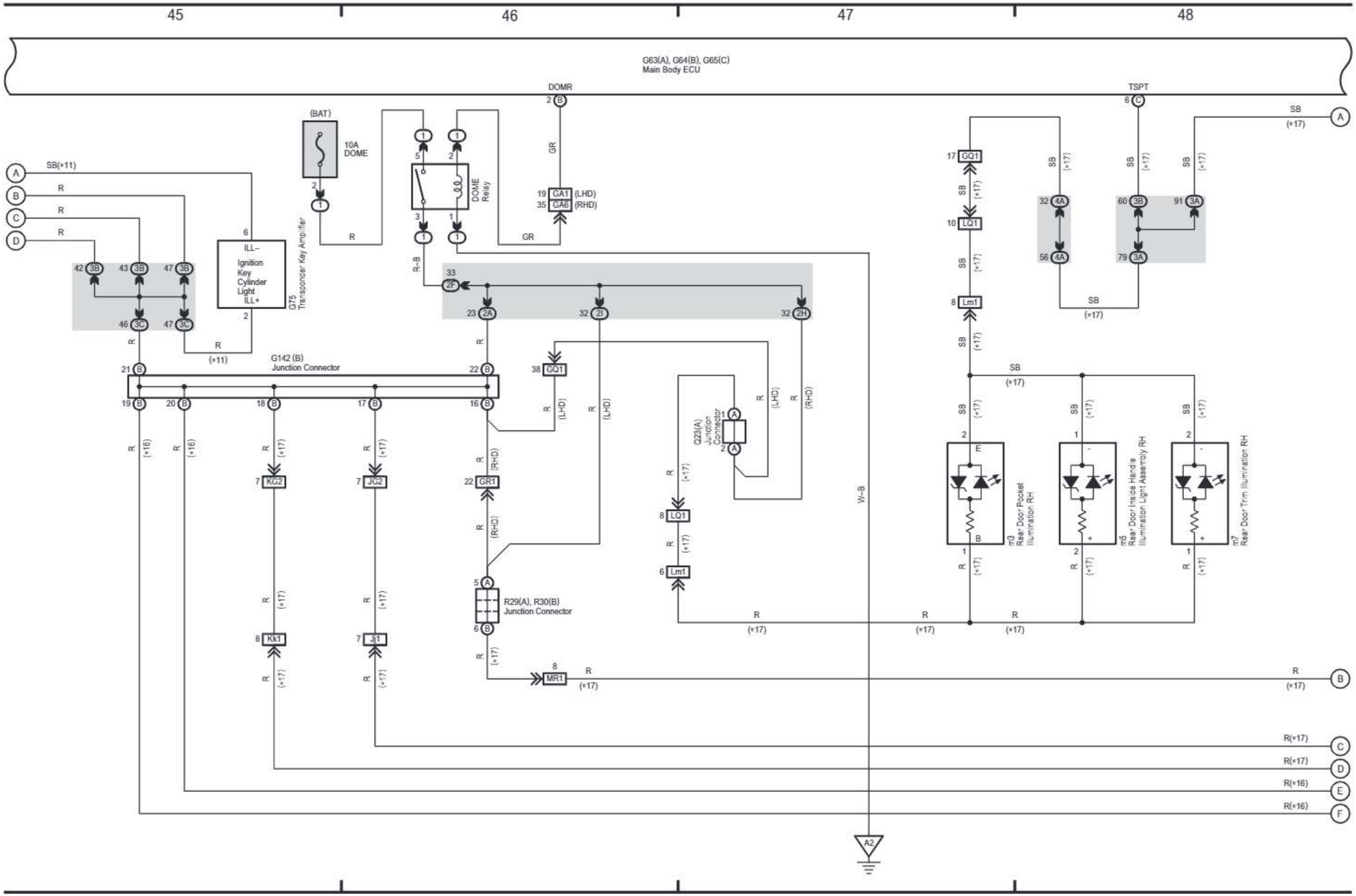

cardiagn.com

M

cardiagn.com

(Cont. next page)

Multiplex Communication System (Body Control) (From Aug. 2013 until Jun. 2015 Production)

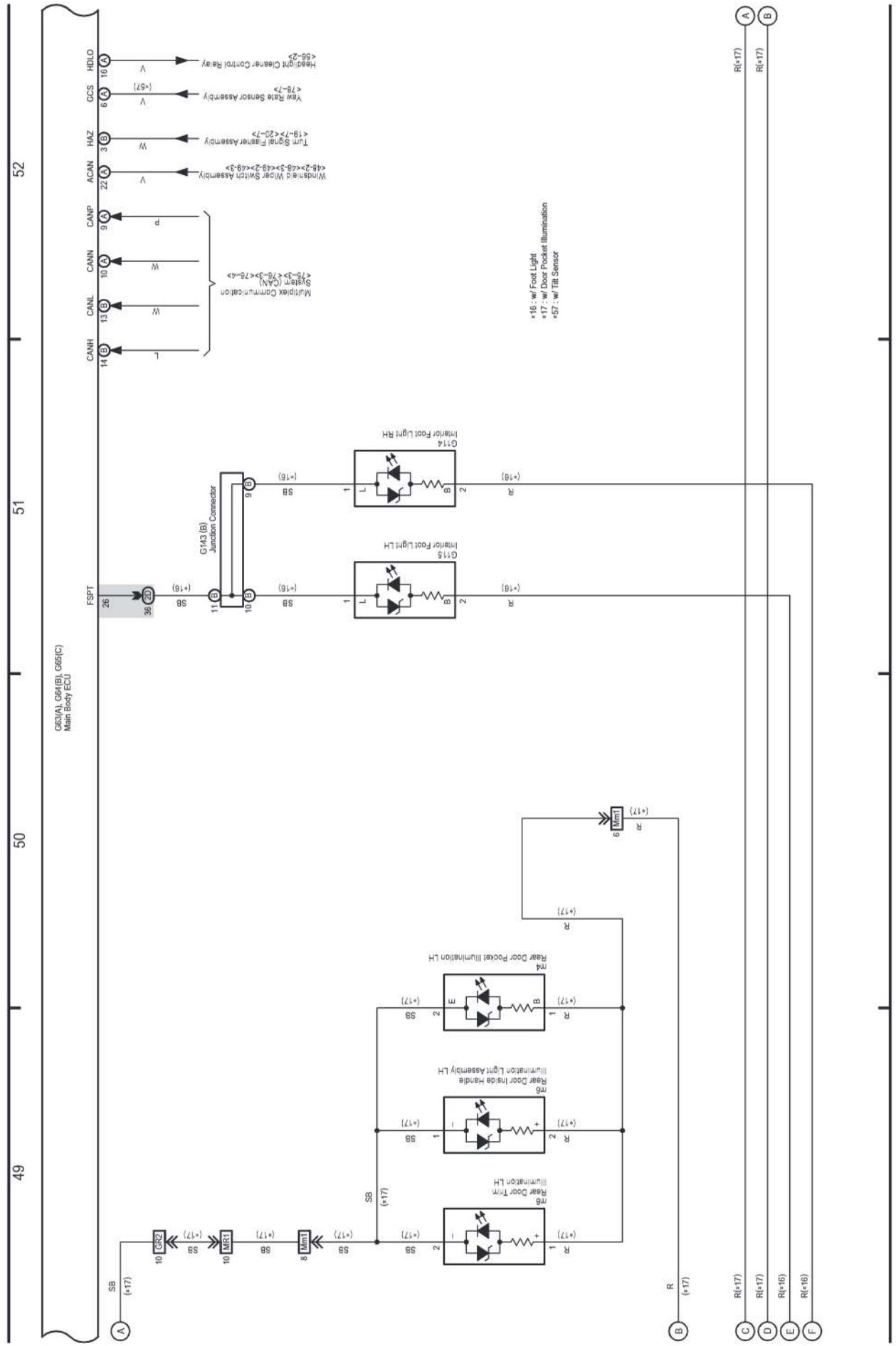

(Cont. next page)

Multiplex Communication System (Body Control) (From Aug. 2013 until Jun. 2015 Production)

*17 : w/ Door Pocket Illumination

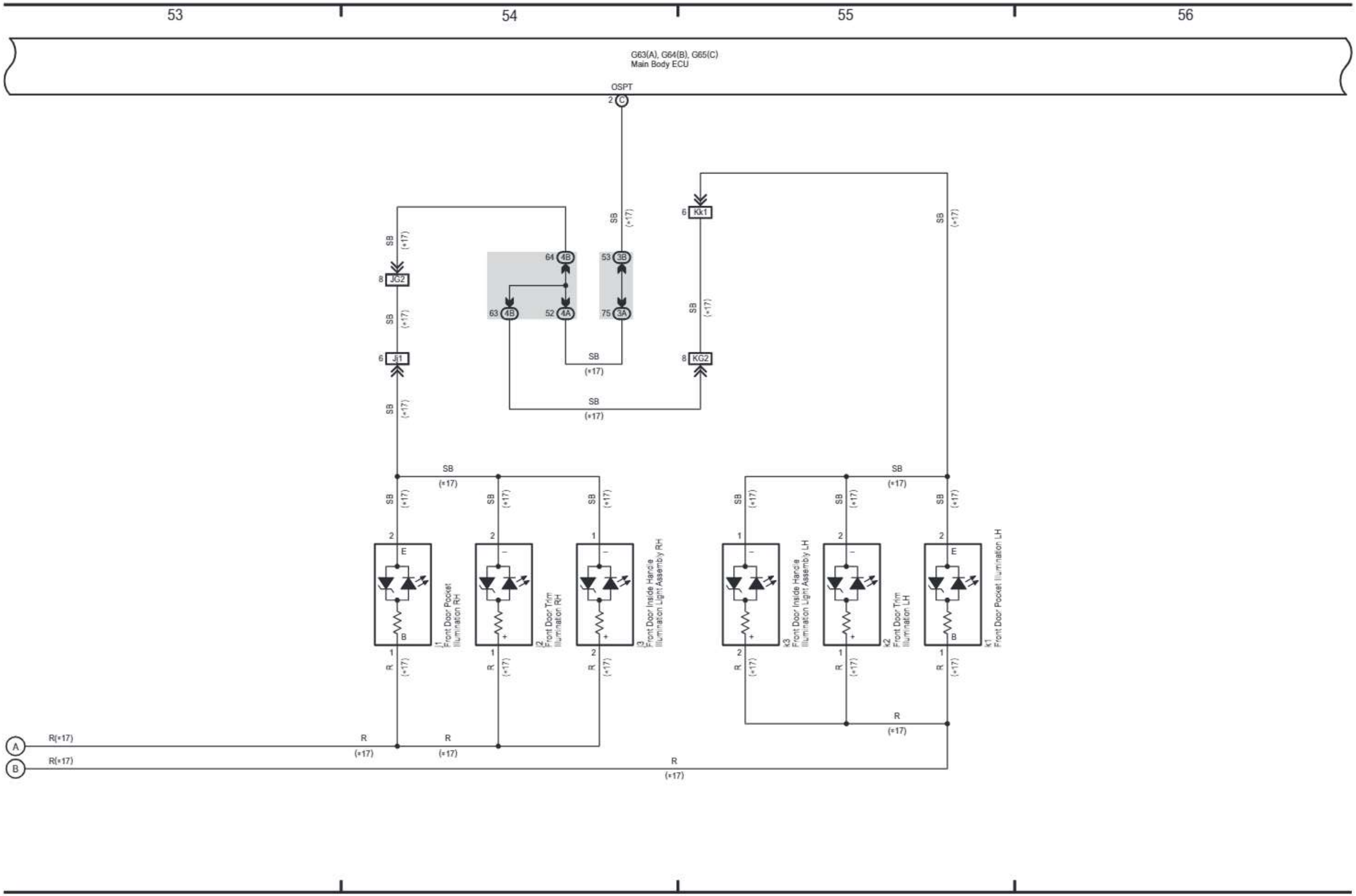

cardiagn.com

cardiagn.com

(Cont. next page)

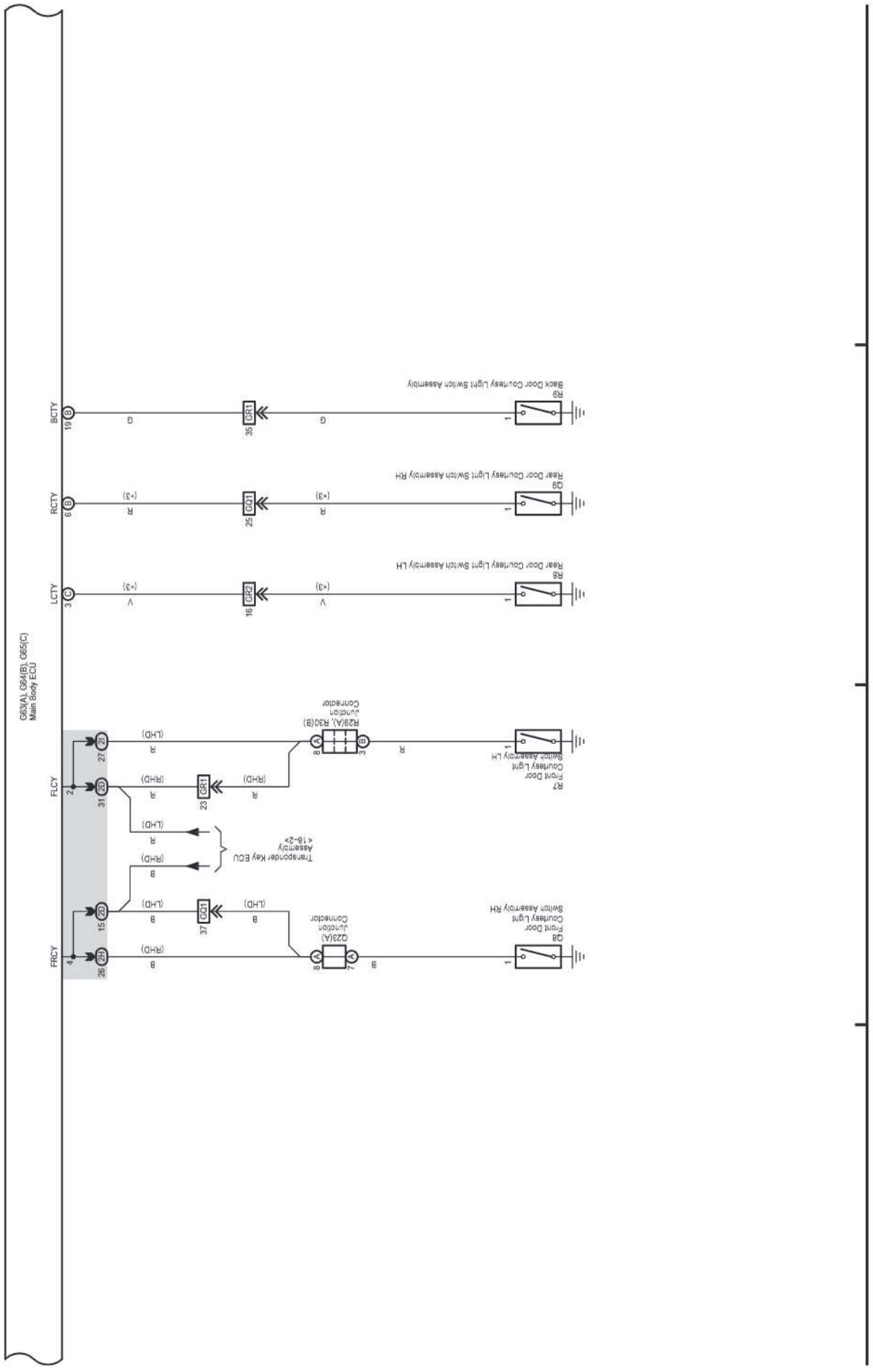

(Cont. next page)

Multiplex Communication System (Body Control) (From Aug. 2013 until Jun. 2015 Production)

*3 : 5-Door
*19 : w/ Double Locking
*20 : w/o Double Locking

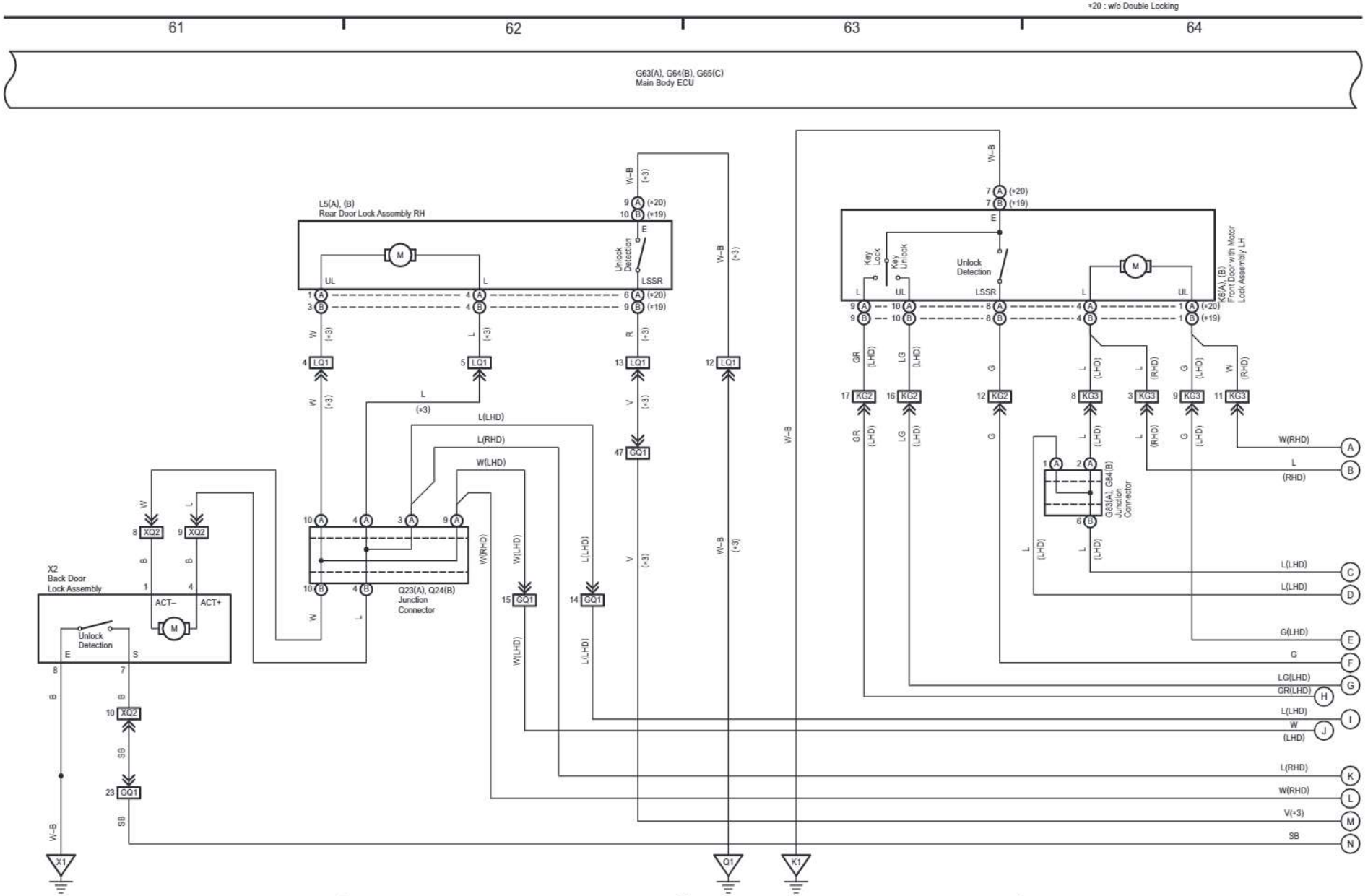

LAND CRUISER / LAND CRUISER PRADO (EM27T3E)

cardiagn.com

cardiagn.com

(Cont. next page)

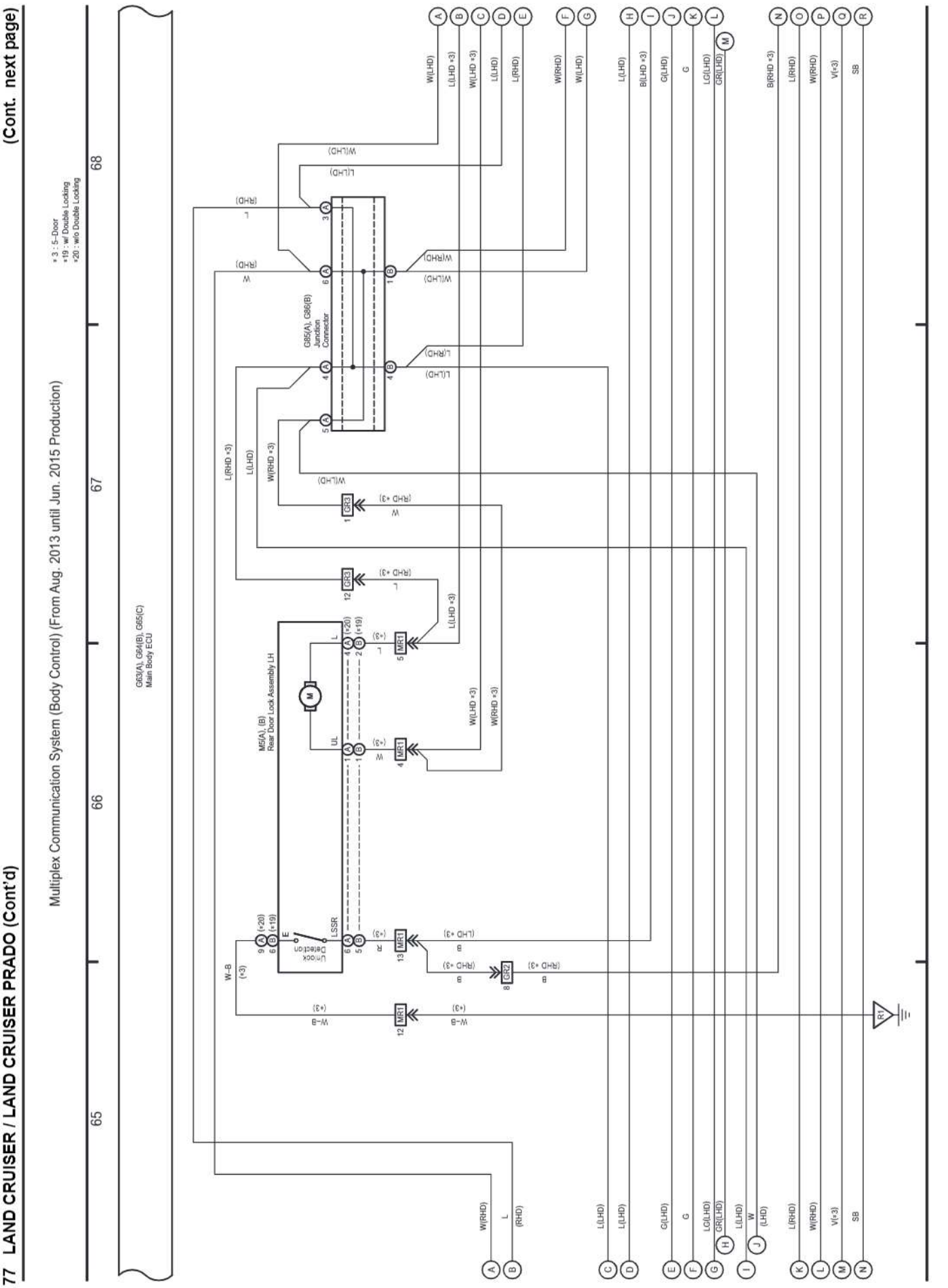

cardiagn.com

77 LAND CRUISER / LAND CRUISER PRADO (Cont'd)

(Cont. next page)

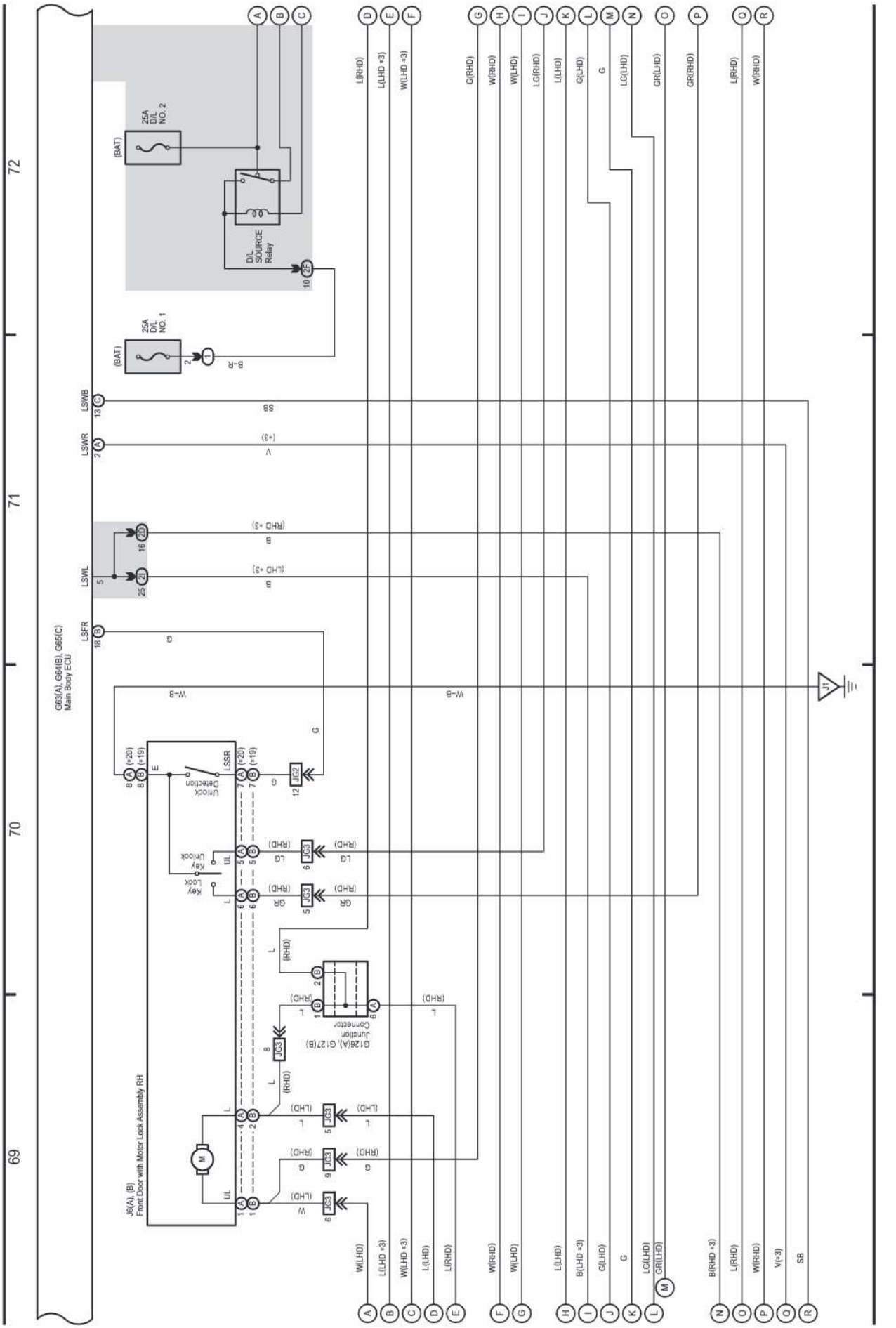

cardiagn.com

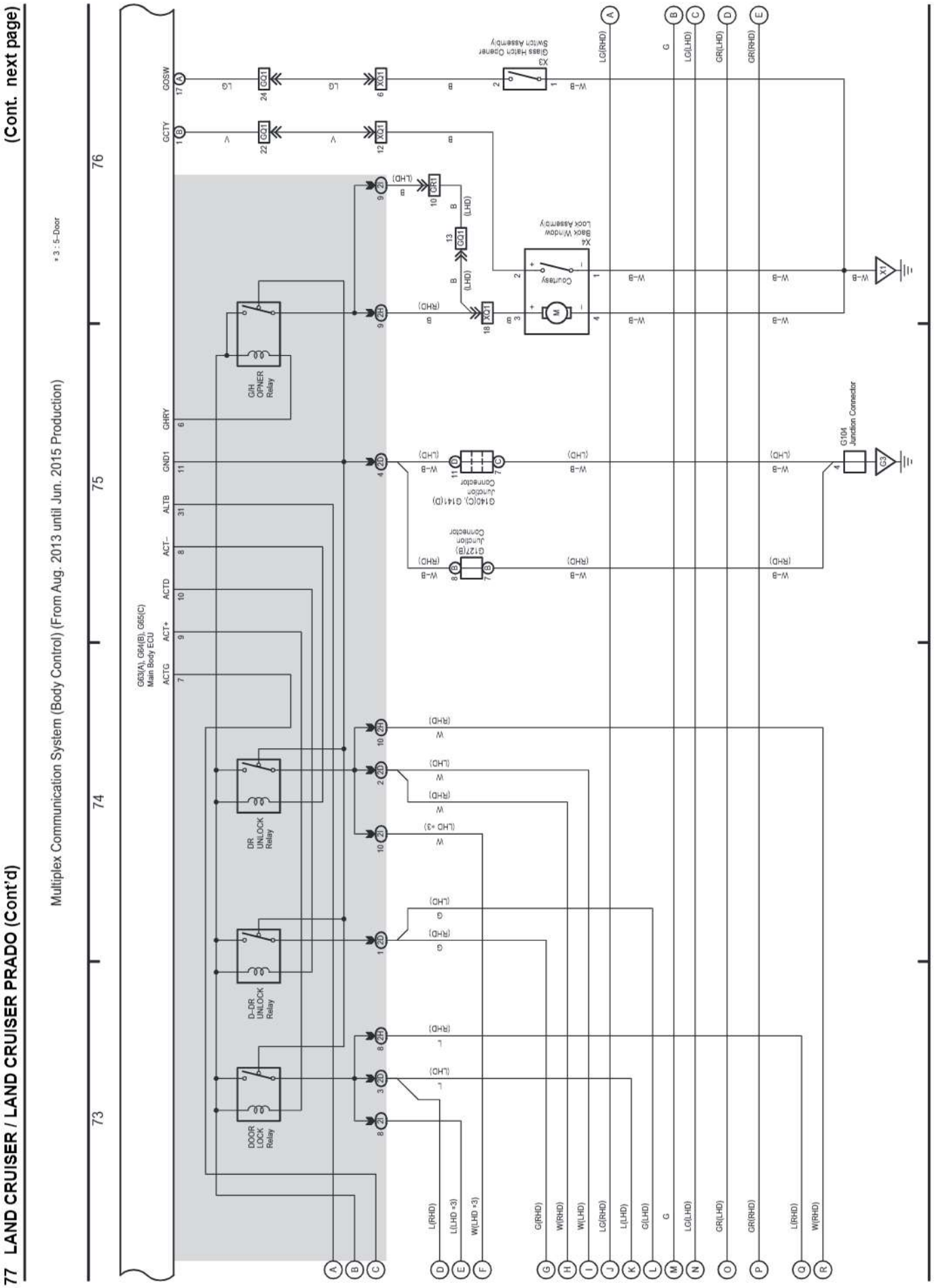

cardiagn.com

77 LAND CRUISER / LAND CRUISER PRADO (Cont'd)

(Cont. next page)

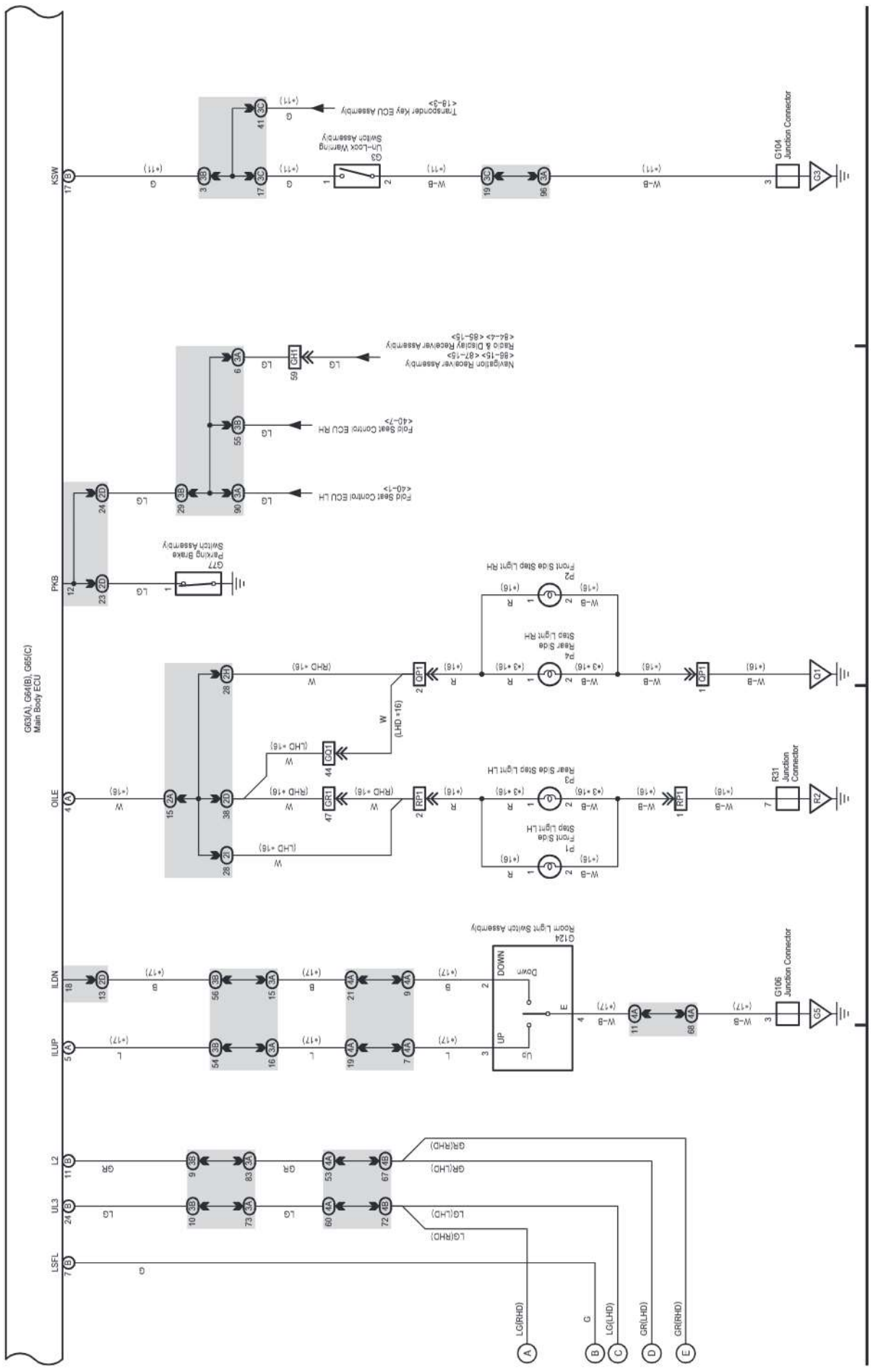

cardiagn.com

(Cont. next page)

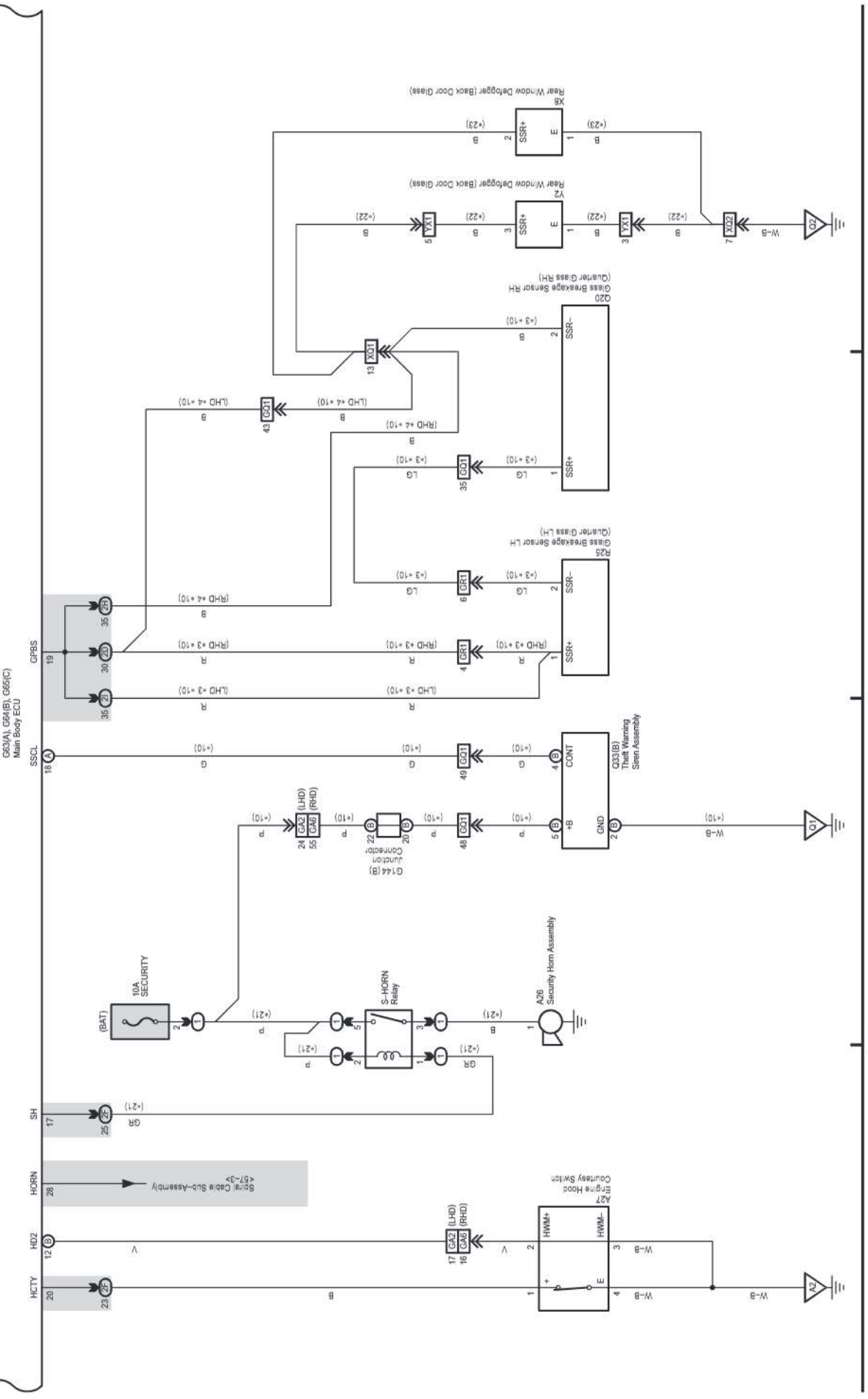

cardiagn.com

(Cont. next page)

Multiplex Communication System (Body Control) (From Aug. 2013 until Jun. 2015 Production)

*11 : w/o Entry & Start System
*24 : w/ Entry & Start System

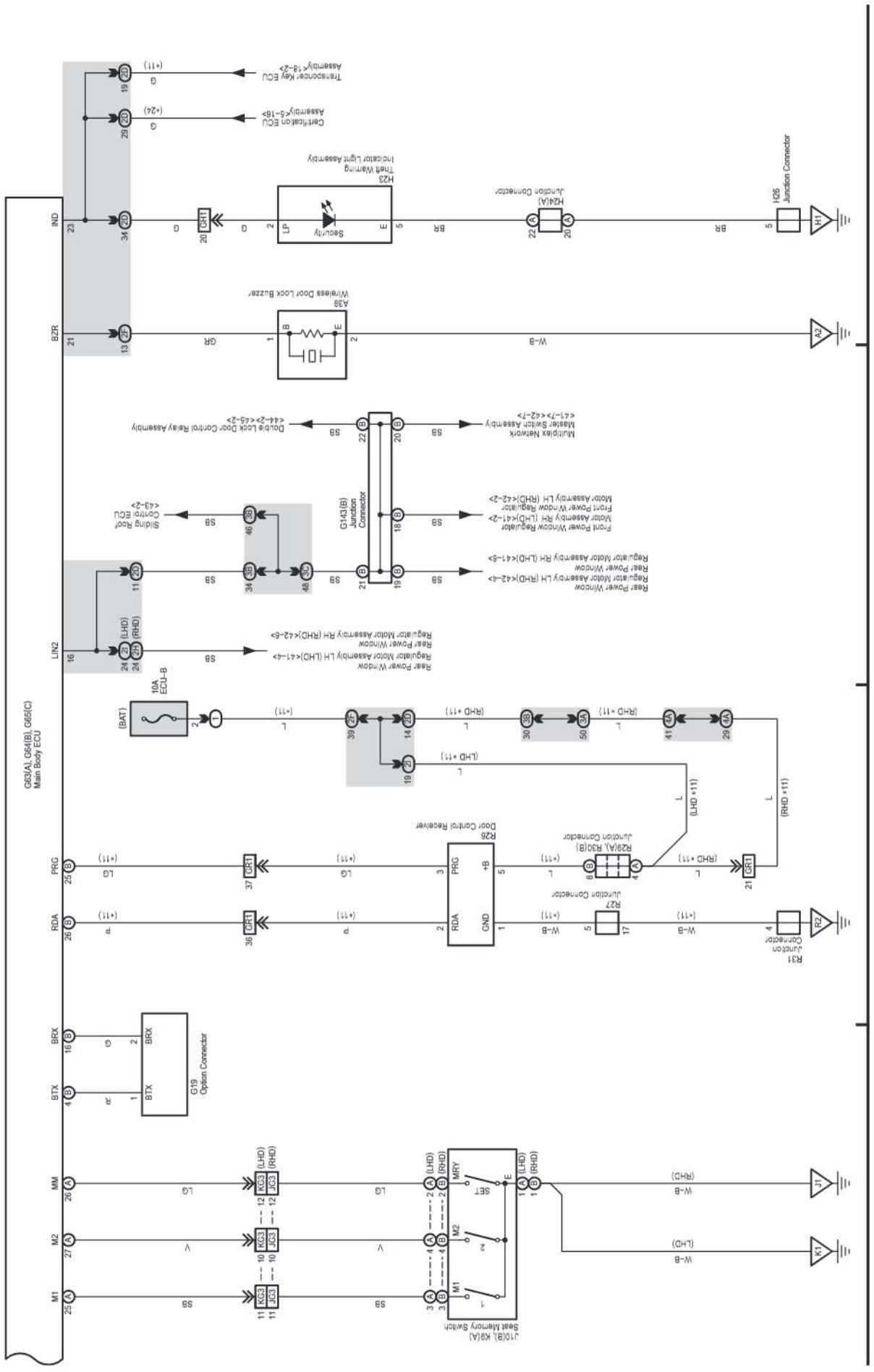

cardiagn.com

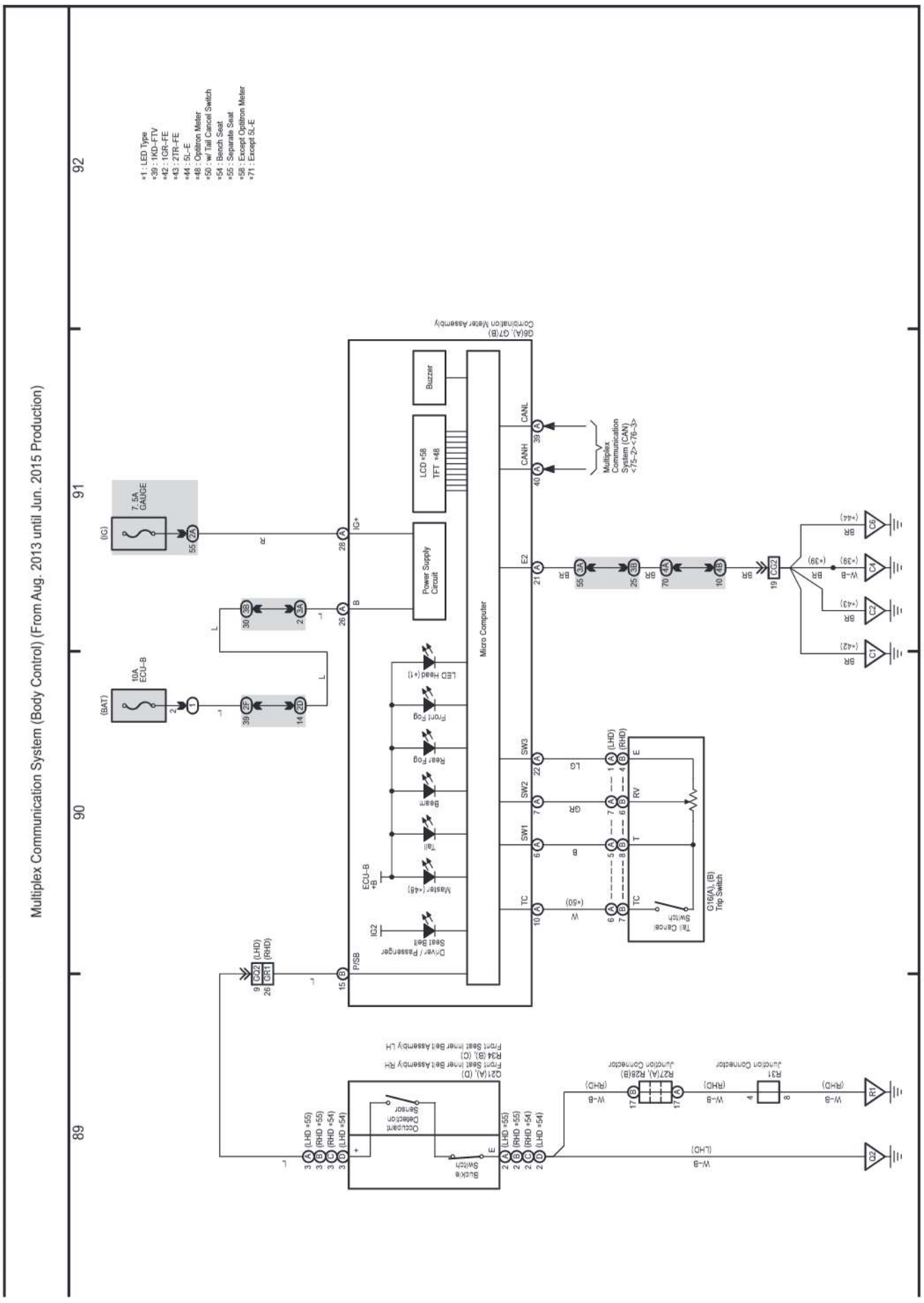

cardiagn.com

(Cont. next page)

ABS (1GR-FE, 1KD-FTV) (From Aug. 2013 until Jun. 2015 Production), A-TRC (From Aug. 2013 until Jun. 2015 Production), Crawl (From Aug. 2013 until Jun. 2015 Production), Downhill Assist Control (From Aug. 2013 until Jun. 2015 Production), Hill-Start Assist Control (From Aug. 2013 until Jun. 2015 Production), Multi-Terrain Select (From Aug. 2013 until Jun. 2015 Production) and VSC (1GR-FE, 1KD-FTV) (From Aug. 2013 until Jun. 2015 Production)

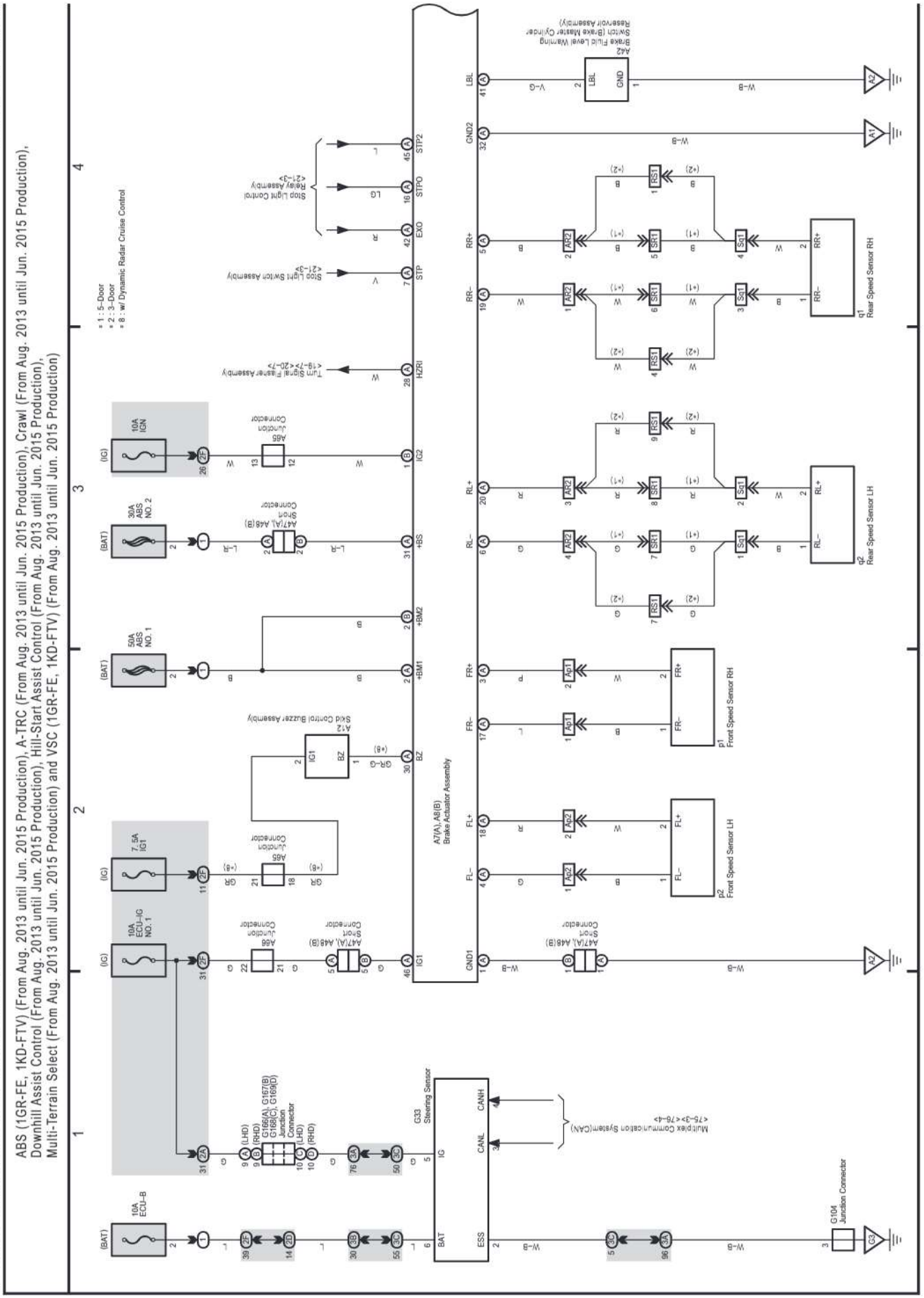

cardiagn.com

(Cont. next page)

ABS (1GR-FE, 1KD-FTV) (From Aug. 2013 until Jun. 2015 Production), A-TRC (From Aug. 2013 until Jun. 2015 Production), Crawl (From Aug. 2013 until Jun. 2015 Production), Downhill Assist Control (From Aug. 2013 until Jun. 2015 Production), Hill-Start Assist Control (From Aug. 2013 until Jun. 2015 Production), Multi-Terrain Select (From Aug. 2013 until Jun. 2015 Production) and VSC (1GR-FE, 1KD-FTV) (From Aug. 2013 until Jun. 2015 Production)

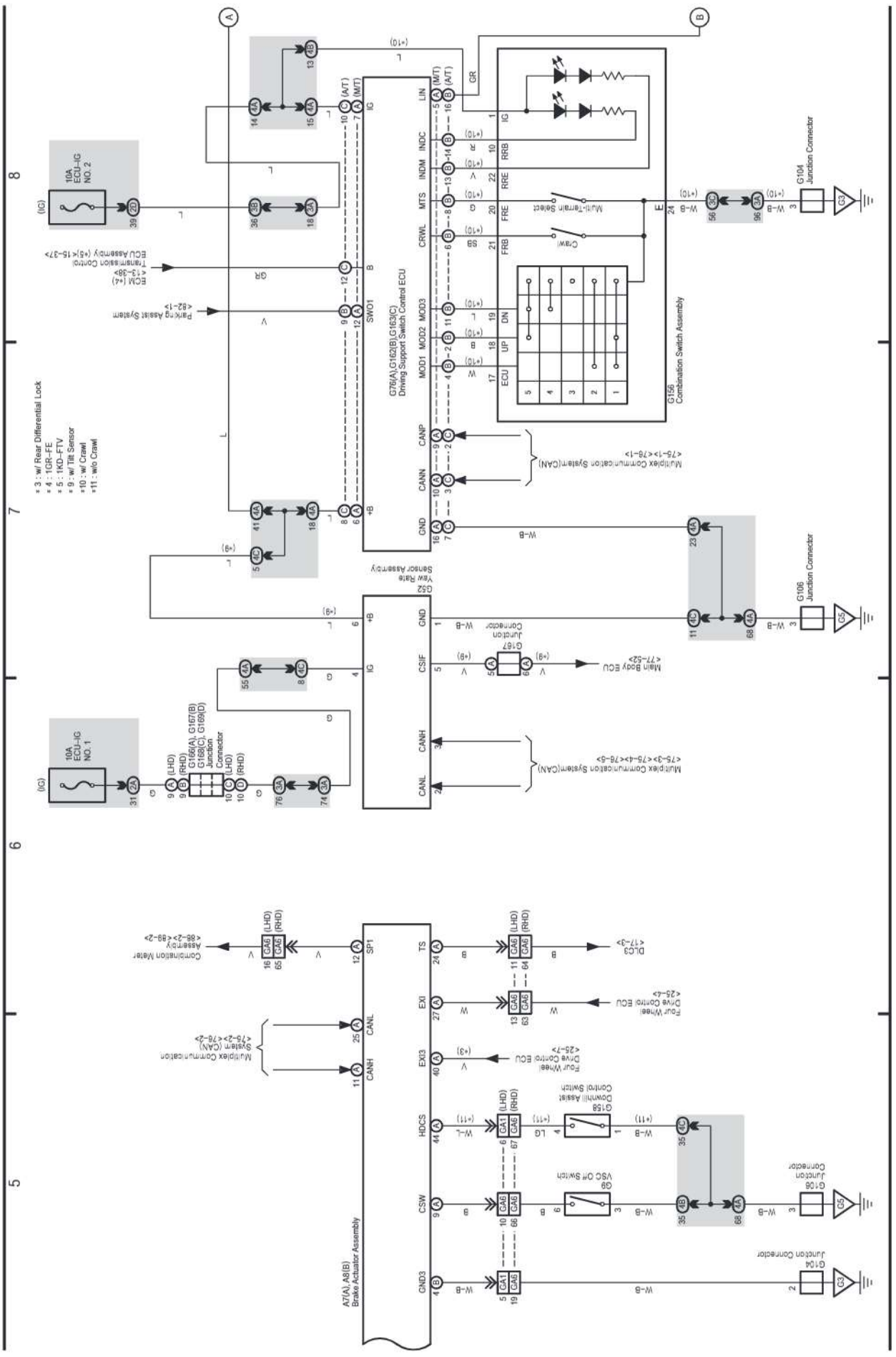

cardiagn.com

ABS (1GR-FE, 1KD-FTV) (From Aug. 2013 until Jun. 2015 Production), A-TRC (From Aug. 2013 until Jun. 2015 Production), Crawl (From Aug. 2013 until Jun. 2015 Production), Downhill Assist Control (From Aug. 2013 until Jun. 2015 Production), Hill-Start Assist Control (From Aug. 2013 until Jun. 2015 Production), Multi-Terrain Select (From Aug. 2013 until Jun. 2015 Production) and VSC (1GR-FE, 1KD-FTV) (From Aug. 2013 until Jun. 2015 Production)

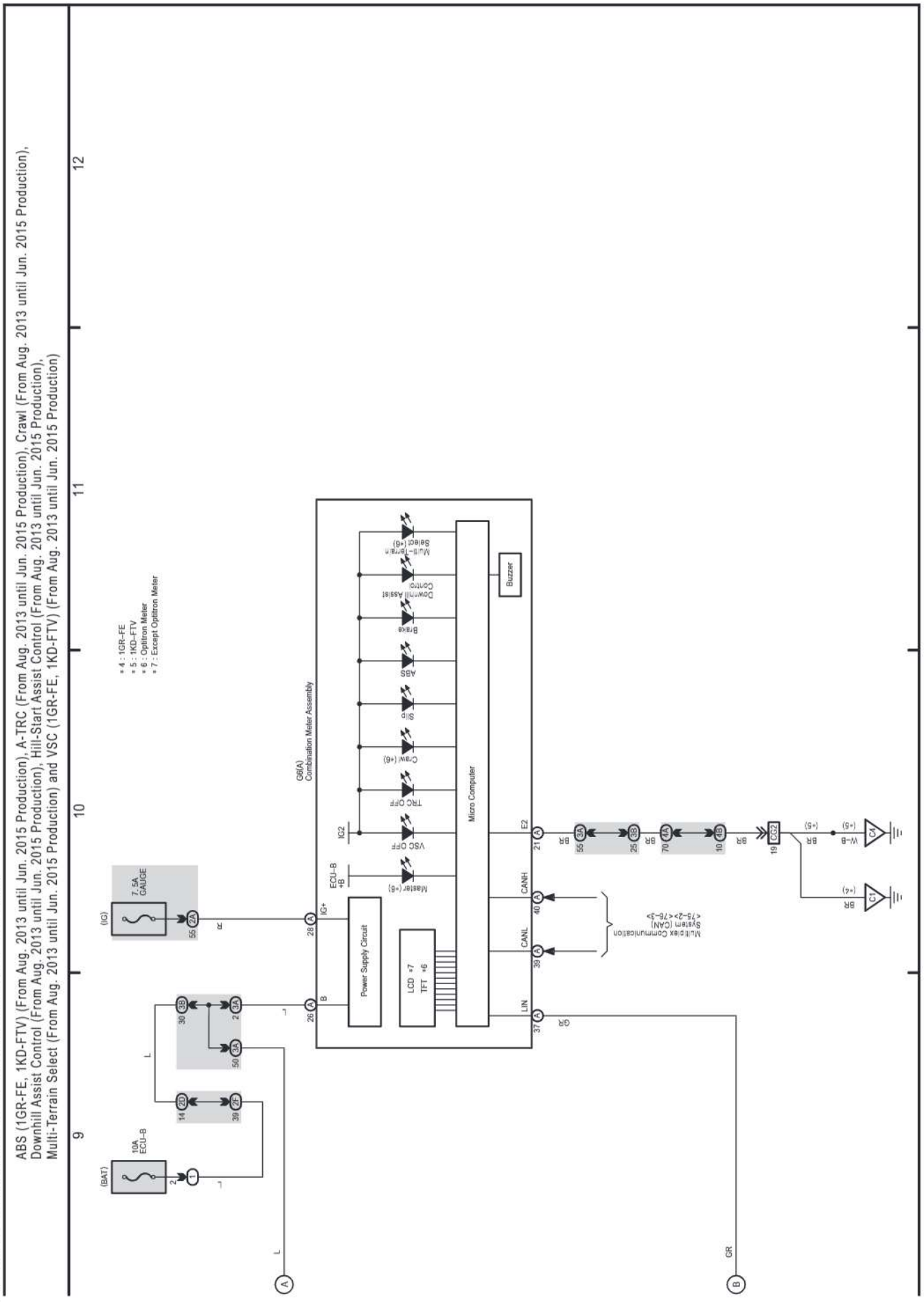

cardiagn.com

(Cont. next page)

Electronic Modulated Air Suspension (LHD) (From Aug. 2013 until Aug. 2017 Production)

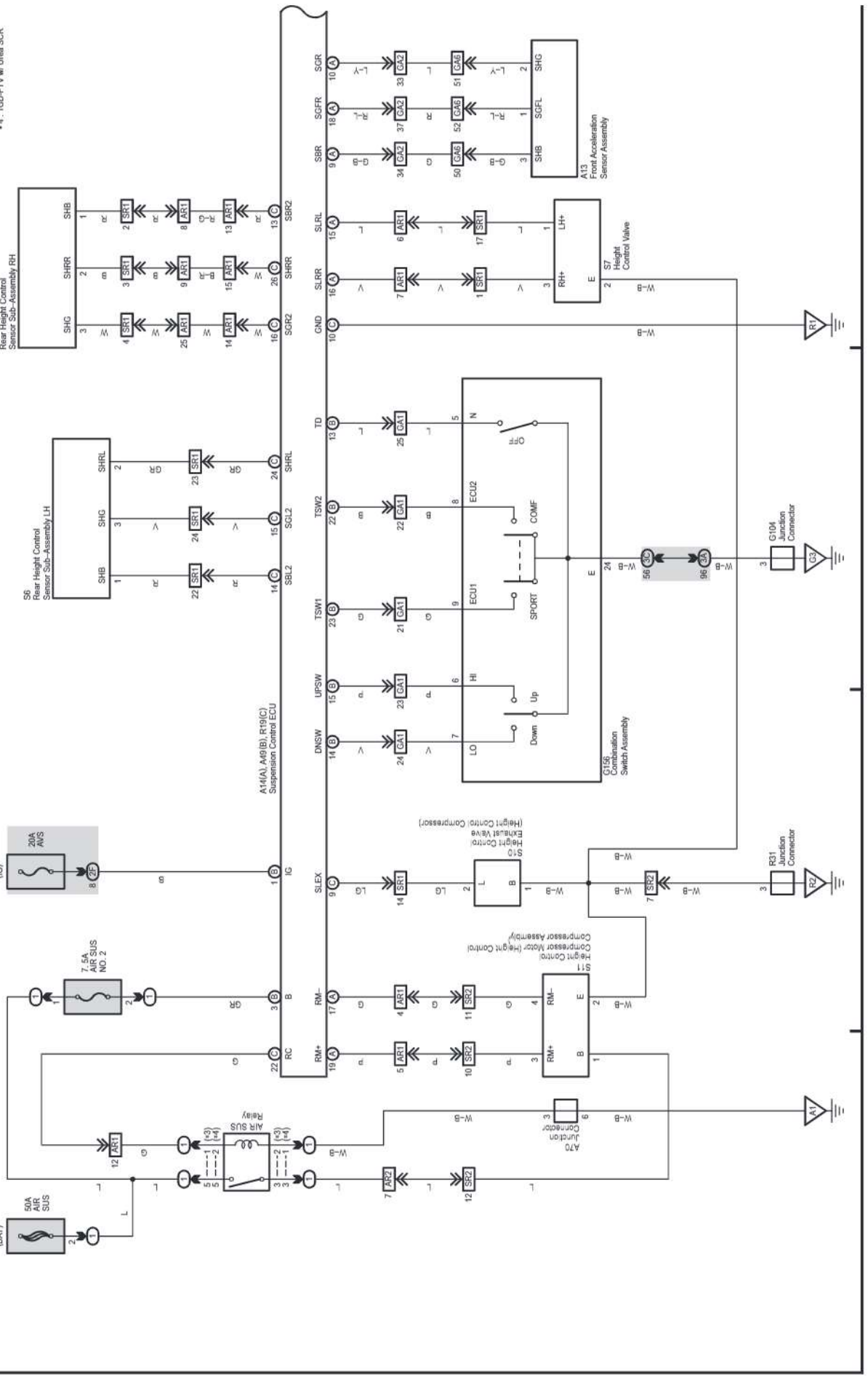

(Cont. next page)

Electronic Modulated Air Suspension (LHD) (From Aug. 2013 until Aug. 2017 Production)

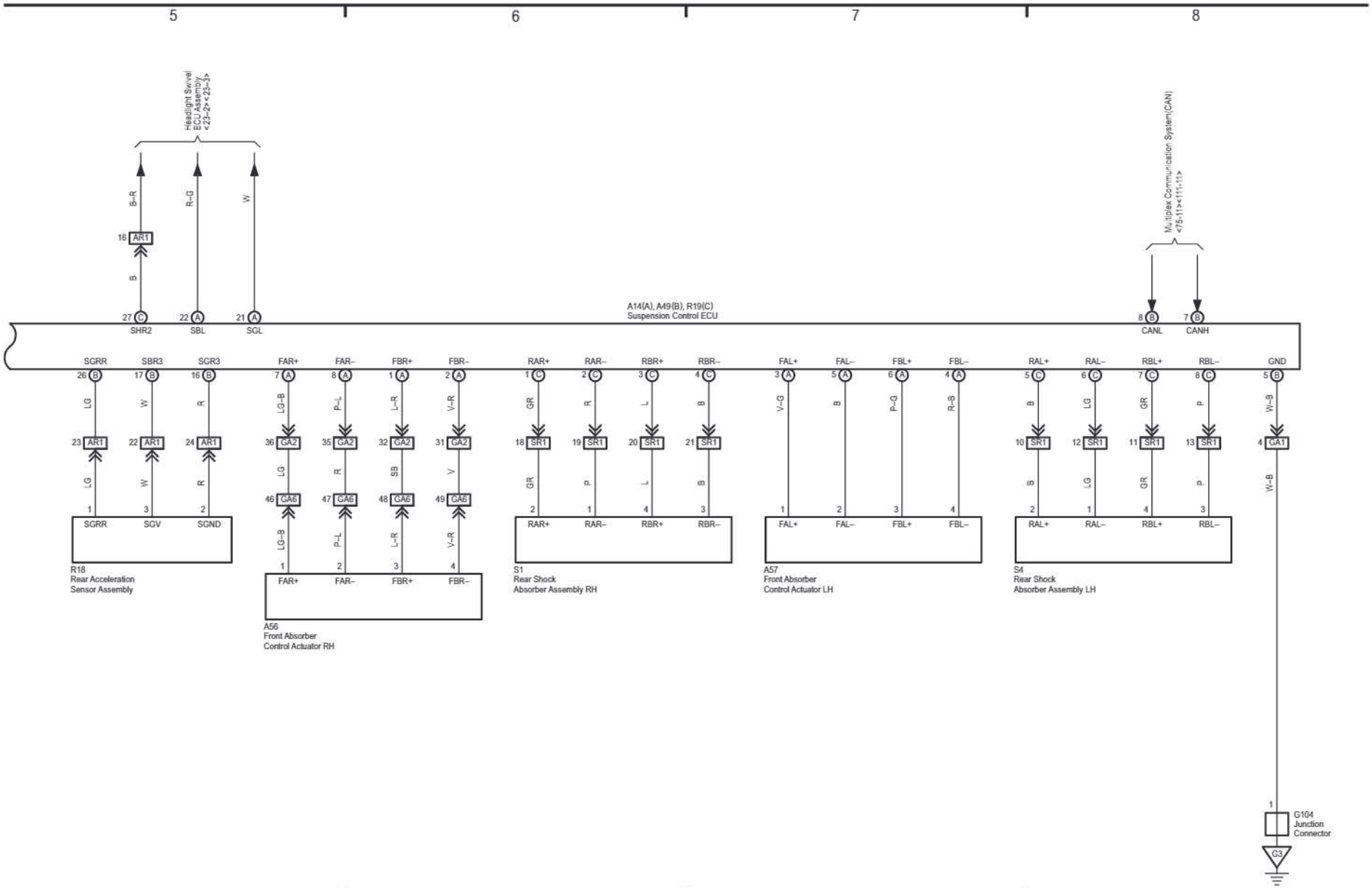

cardiagn.com

cardiagn.com

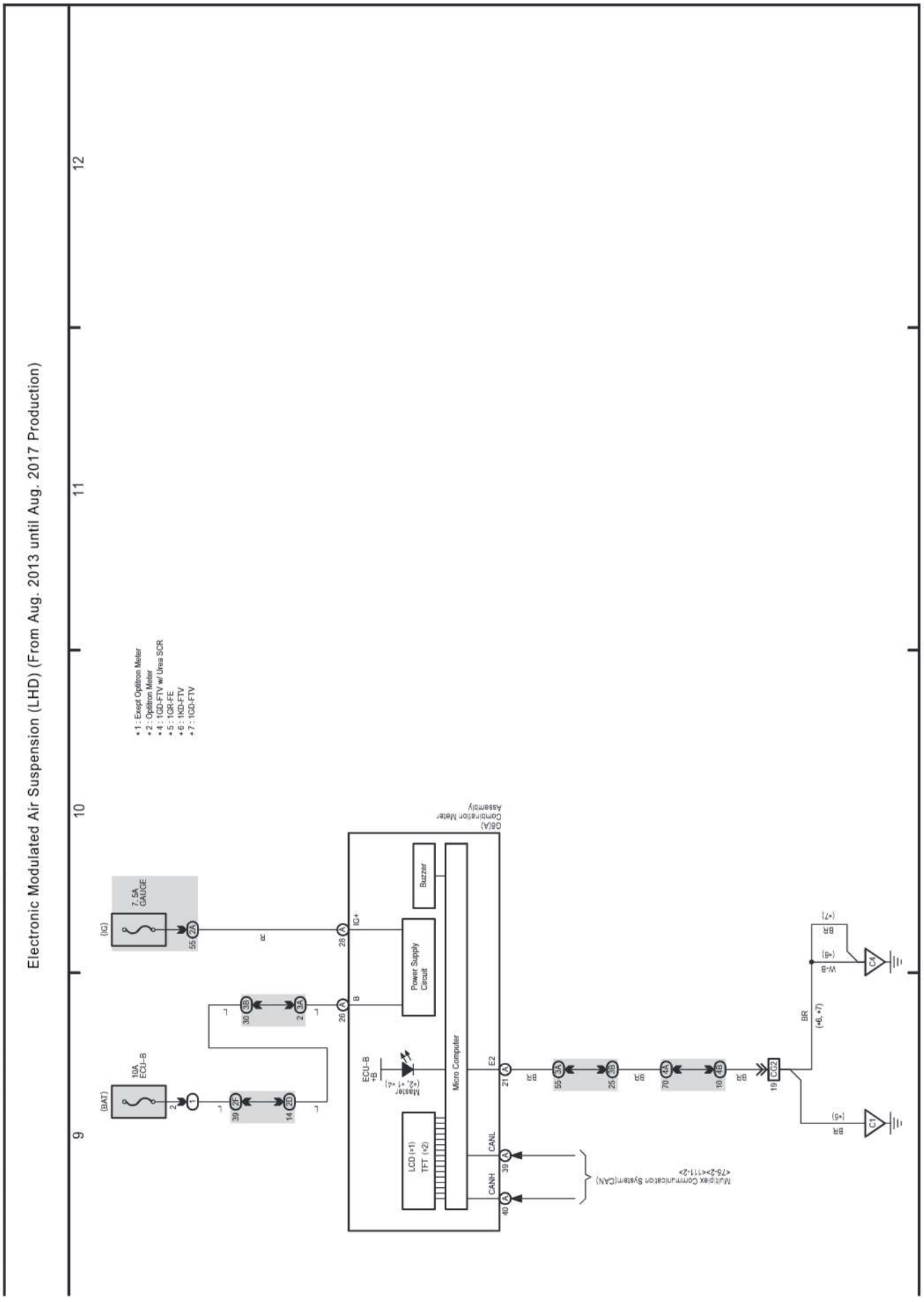

cardiagn.com

(Cont. next page)

Electronic Modulated Air Suspension (RHD) (From Aug. 2013 until Aug. 2017 Production)

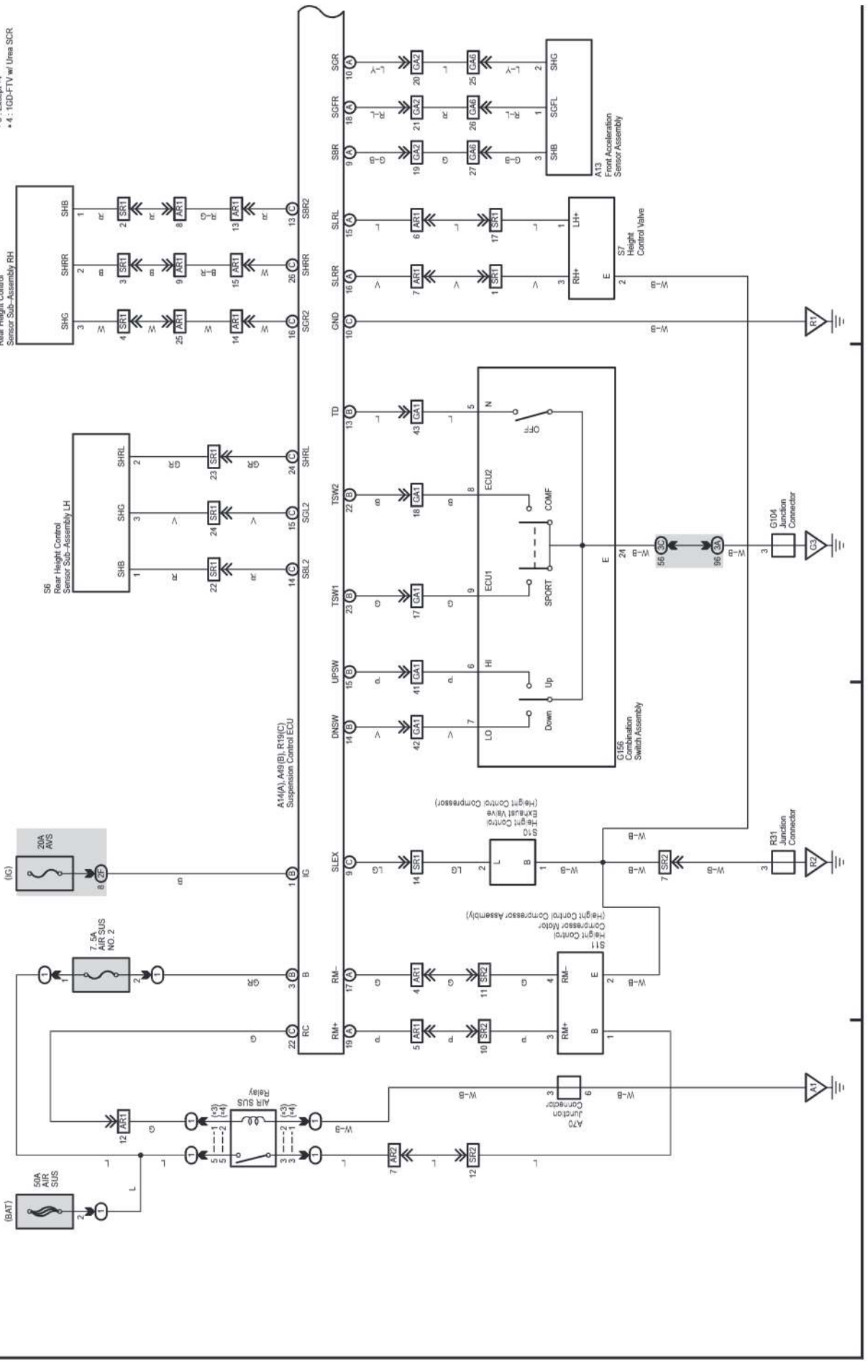

cardiagn.com

(Cont. next page)

Electronic Modulated Air Suspension (RHD) (From Aug. 2013 until Aug. 2017 Production)

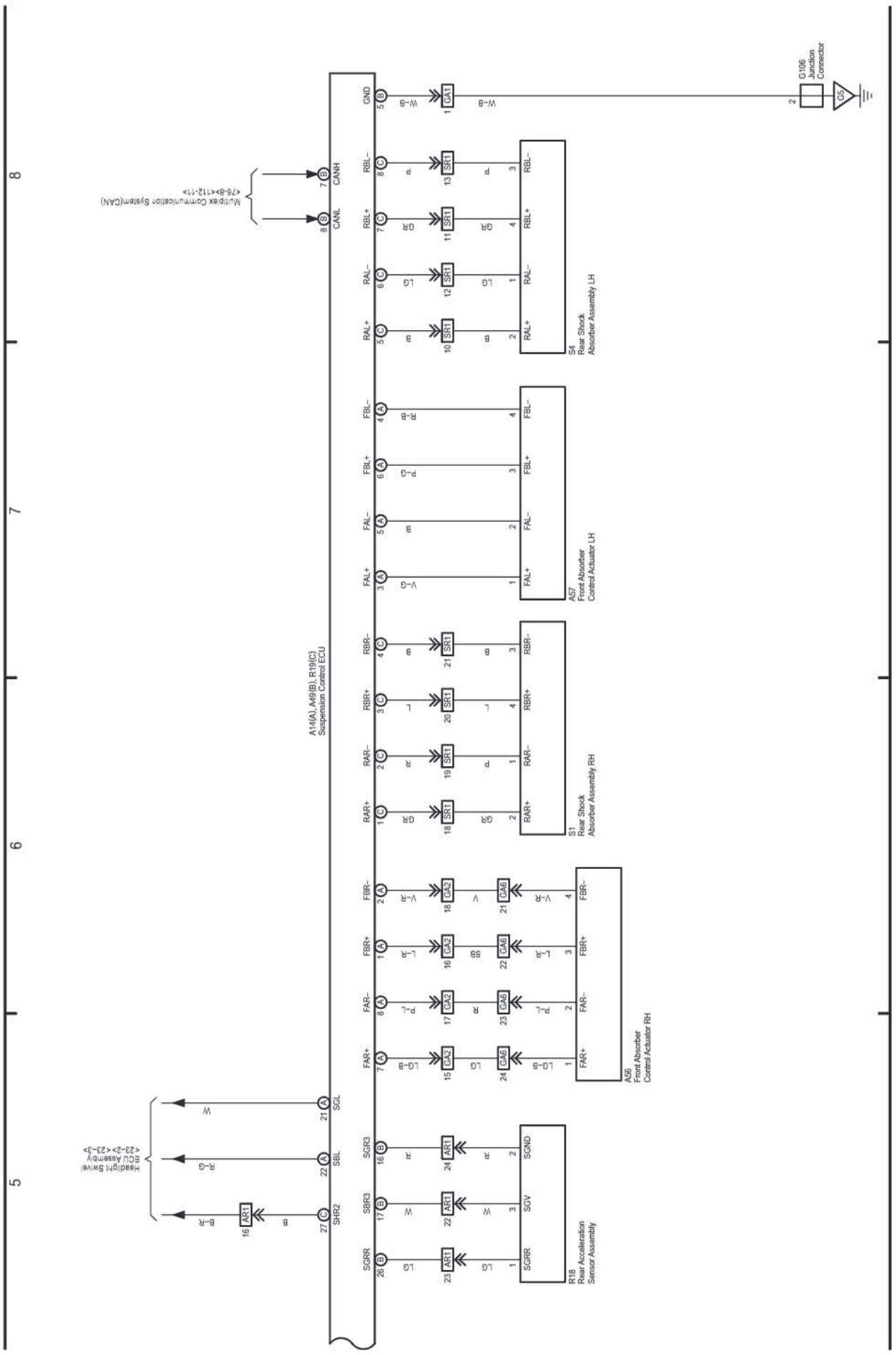

cardiagn.com

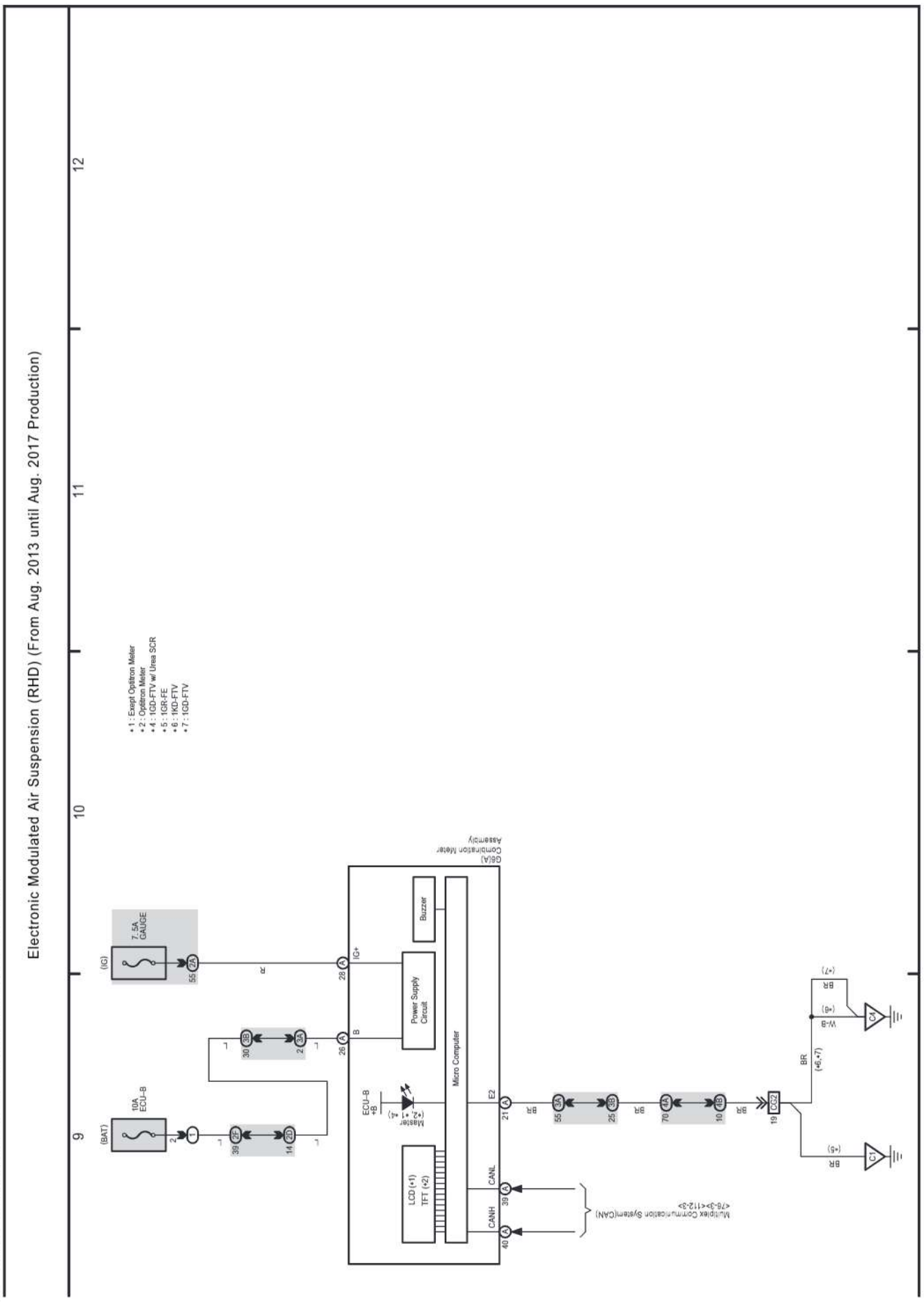

cardiagn.com

(Cont. next page)

Multi-Terrain Monitor (From Aug. 2013 until Aug. 2017 Production) and
Parking Assist (Back Guide Monitor) (Except China) (From Aug. 2013 until Aug. 2017 Production)

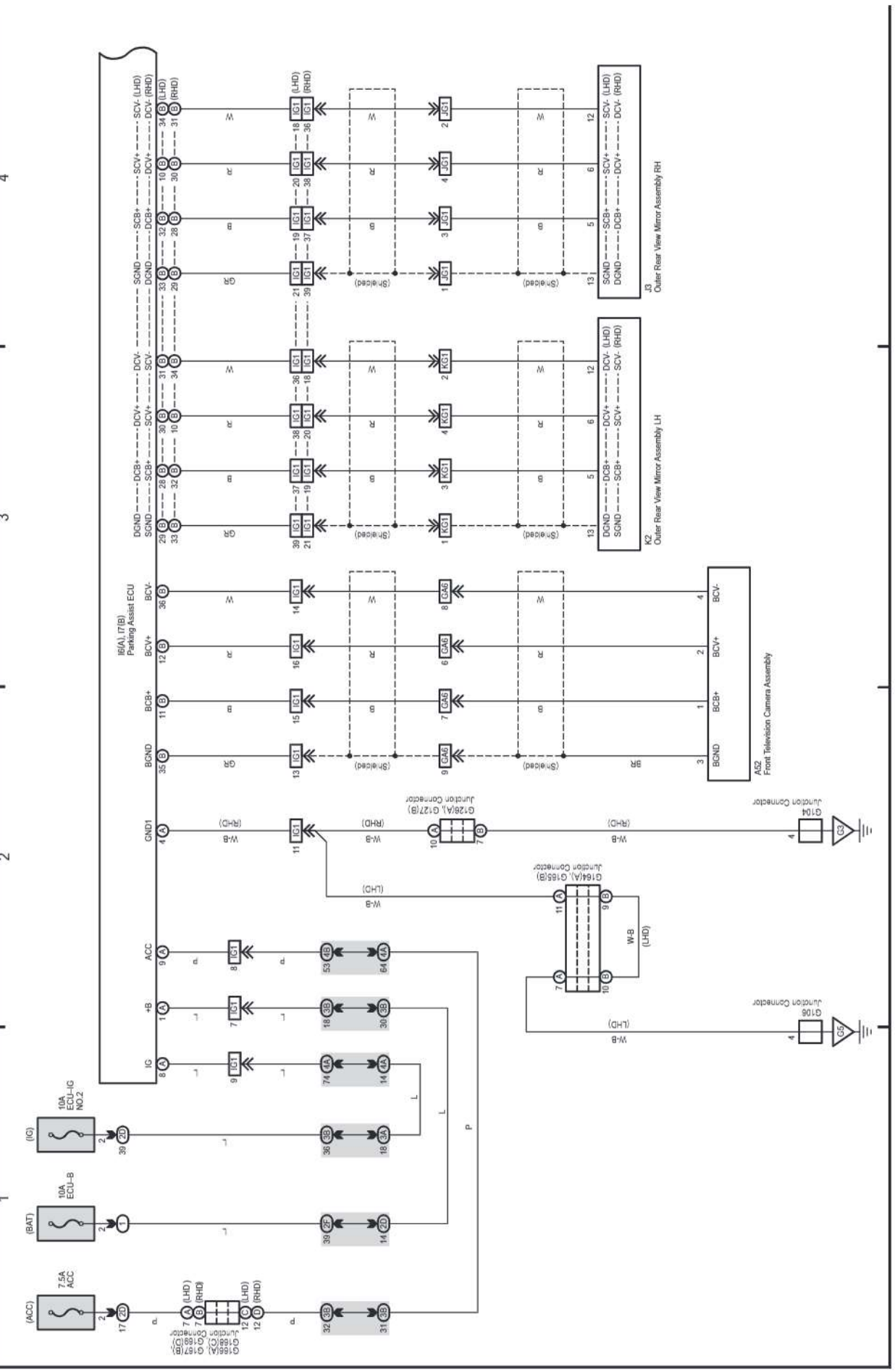

cardiagn.com

Multi-Terrain Monitor (From Aug. 2013 until Aug. 2017 Production) and
Parking Assist (Back Guide Monitor) (Except China) (From Aug. 2013 until Aug. 2017 Production)

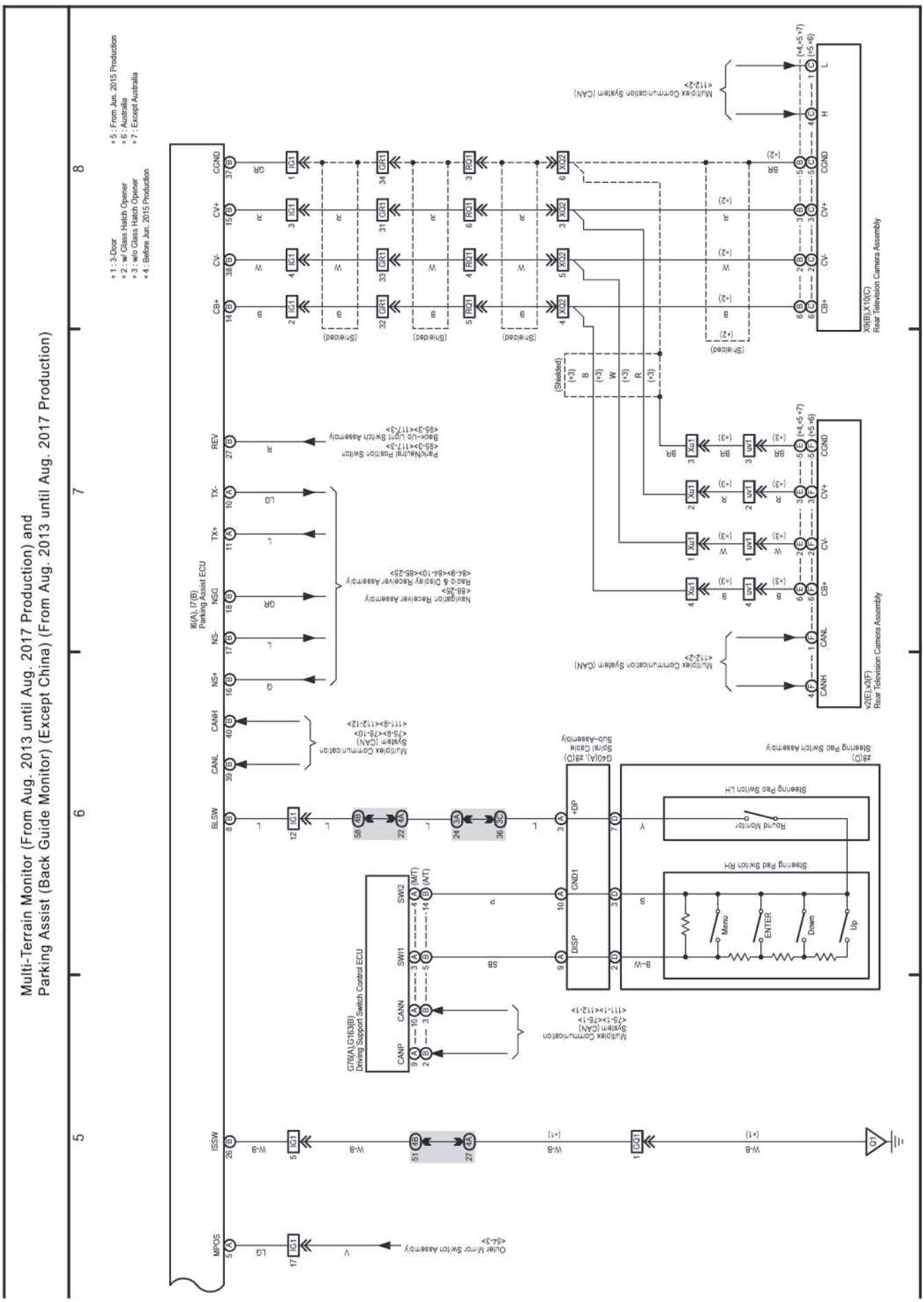

cardiagn.com

(Cont. next page)

Parking Assist (TOYOTA Parking Assist-Sensor) (From Aug. 2013 until Aug. 2017 Production)

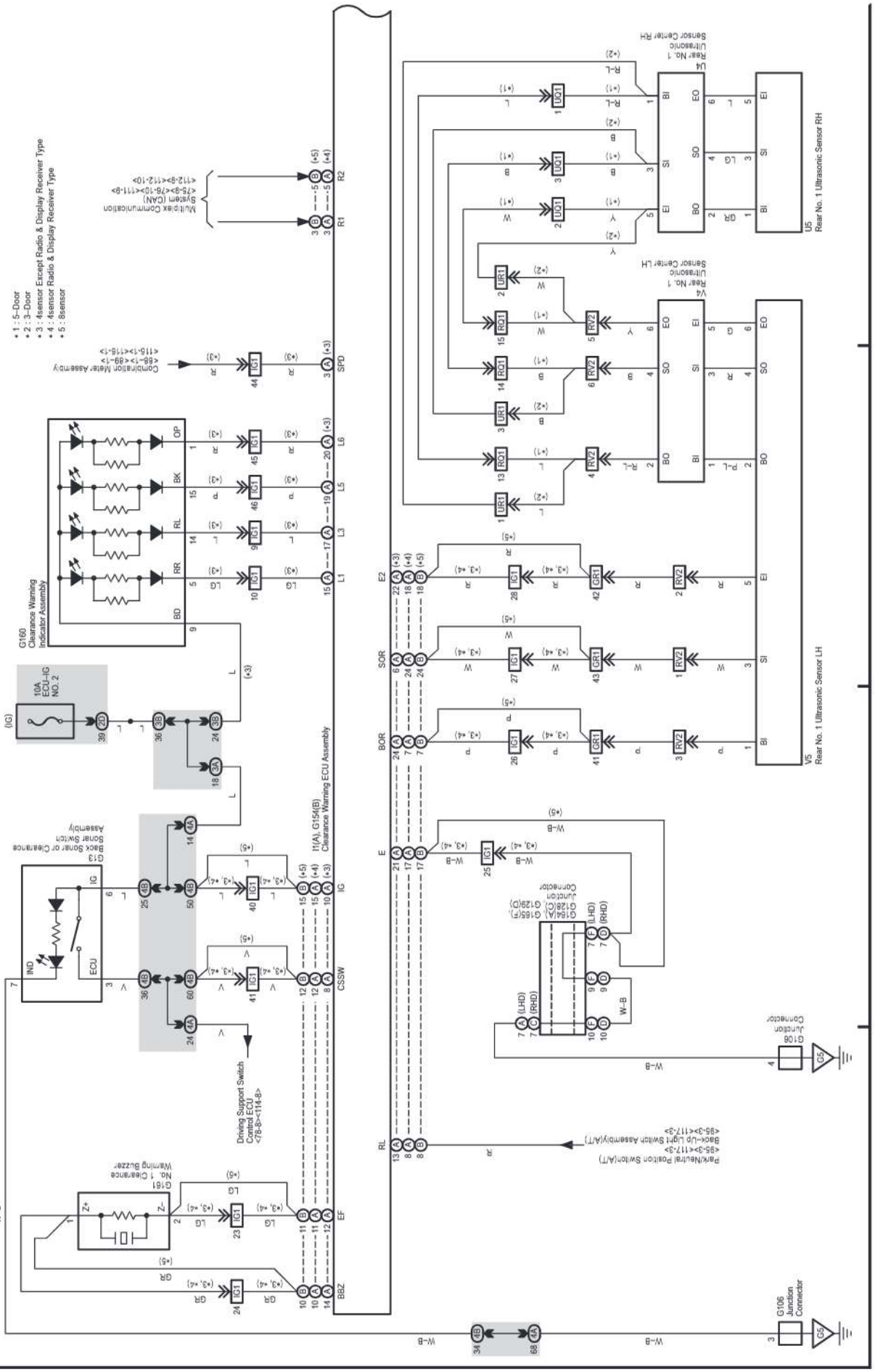

cardiagn.com

Parking Assist (TOYOTA Parking Assist-Sensor) (From Aug. 2013 until Aug. 2017 Production)

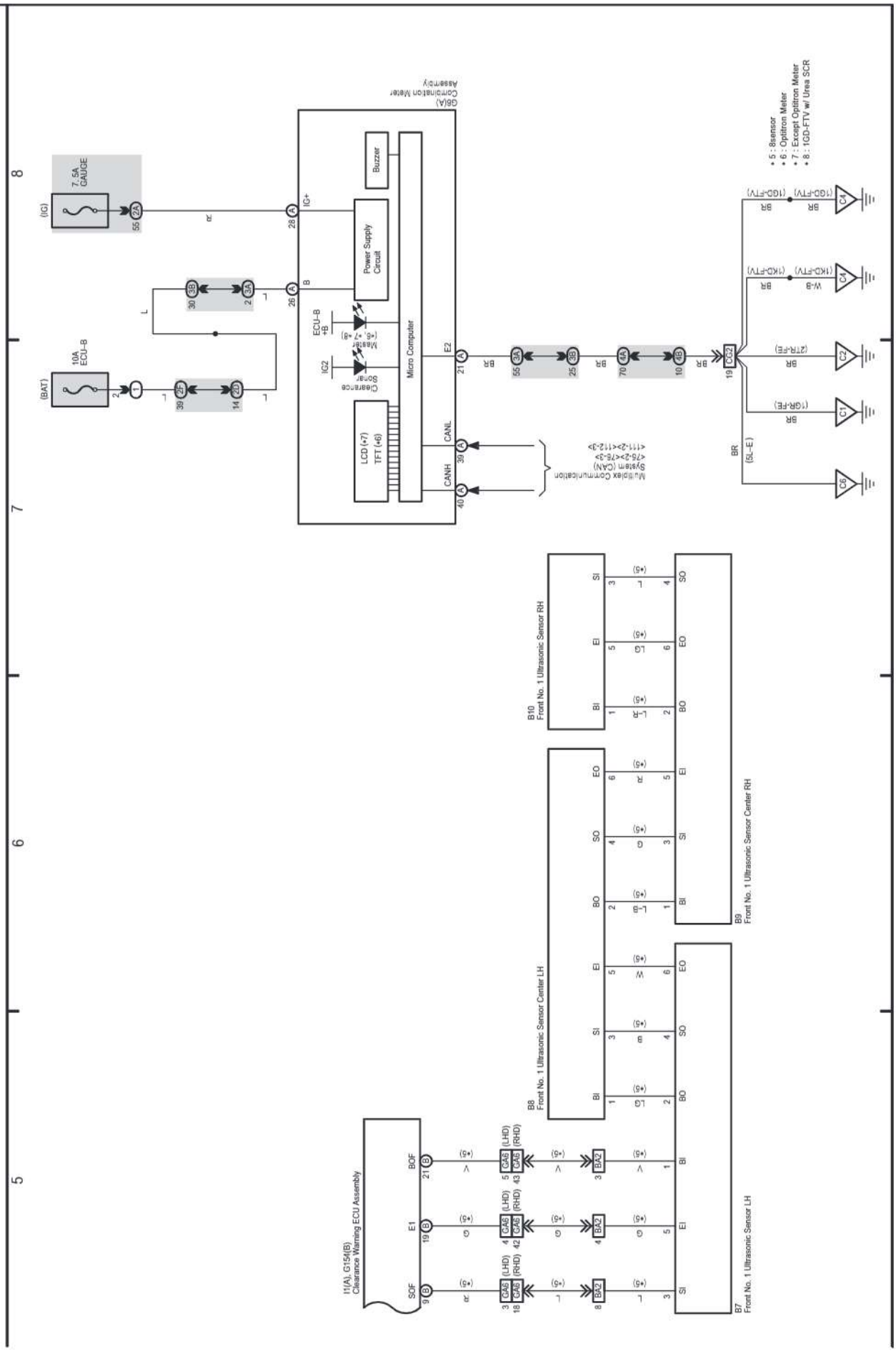

cardiagn.com

(Cont. next page)

Audio System (Radio Receiver Assembly Type, Audioless Type) (From Aug. 2013 until Aug. 2017 Production)

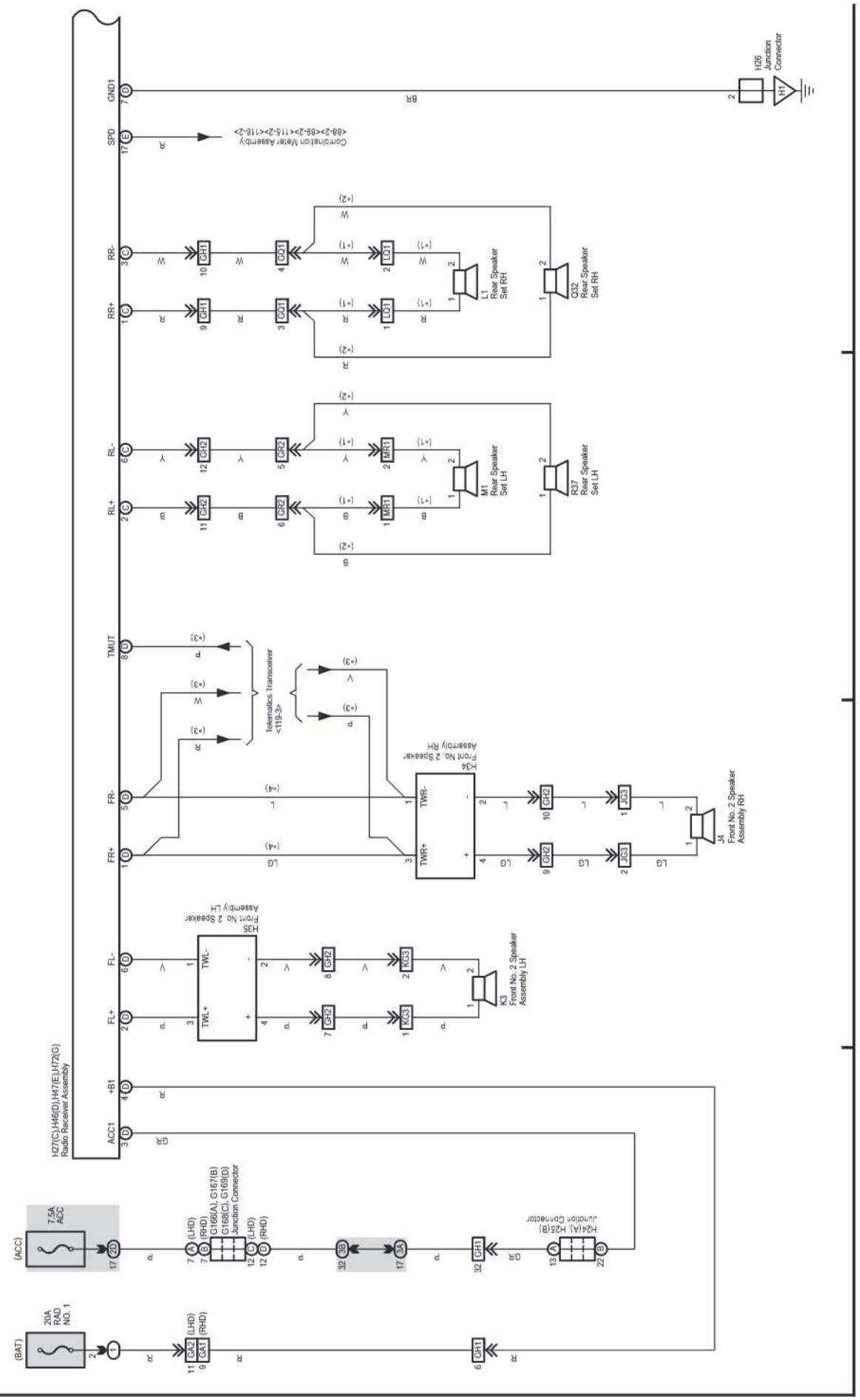

(Cont. next page)

Audio System (Radio Receiver Assembly Type, Audioless Type) (From Aug. 2013 until Aug. 2017 Production)

* 5 : w/ Steering Pad Switch Assmebly
* 6 : Radio Receiver Assembly Type
* 7 : Audioless Type

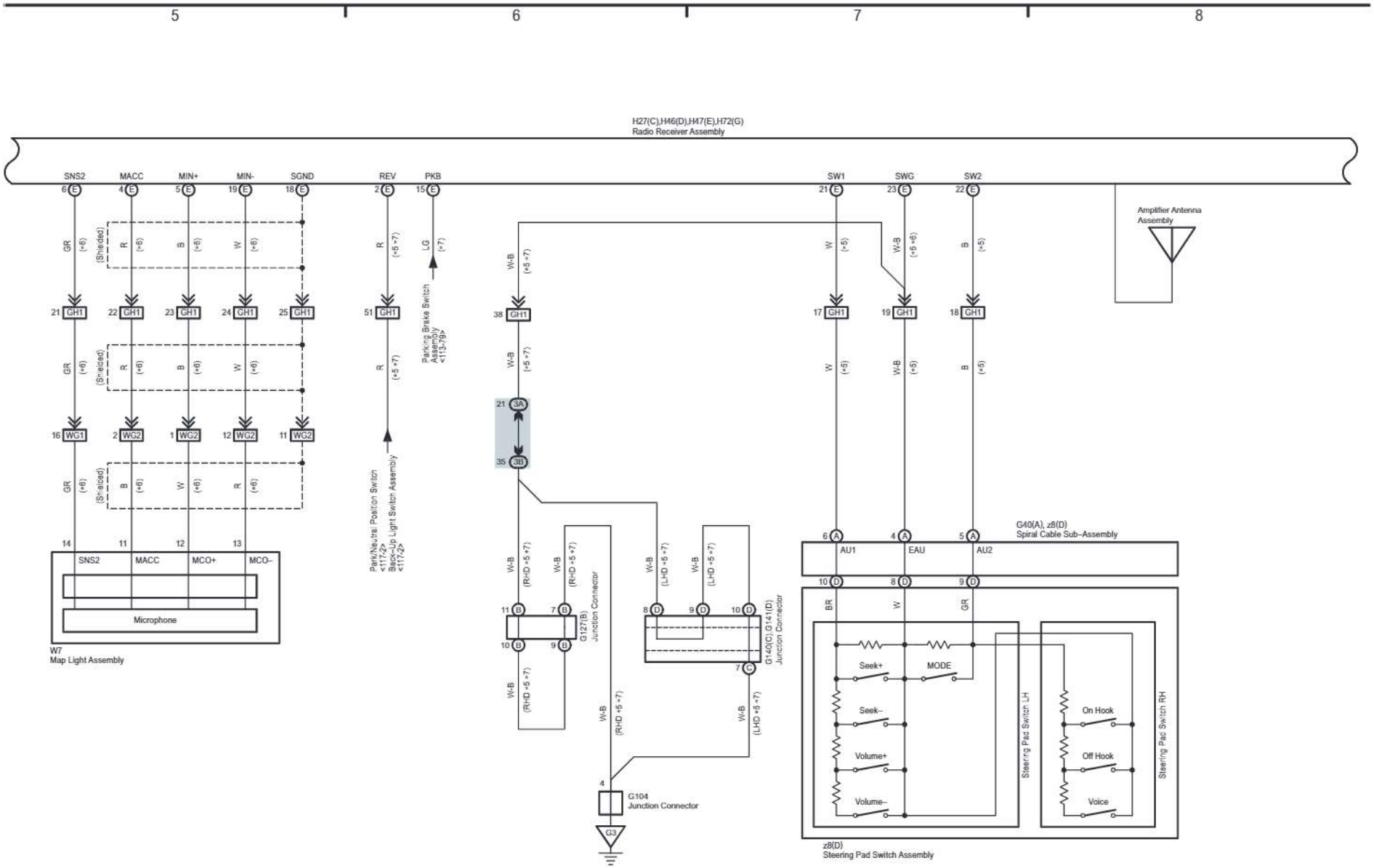

cardiagn.com

cardiagn.com

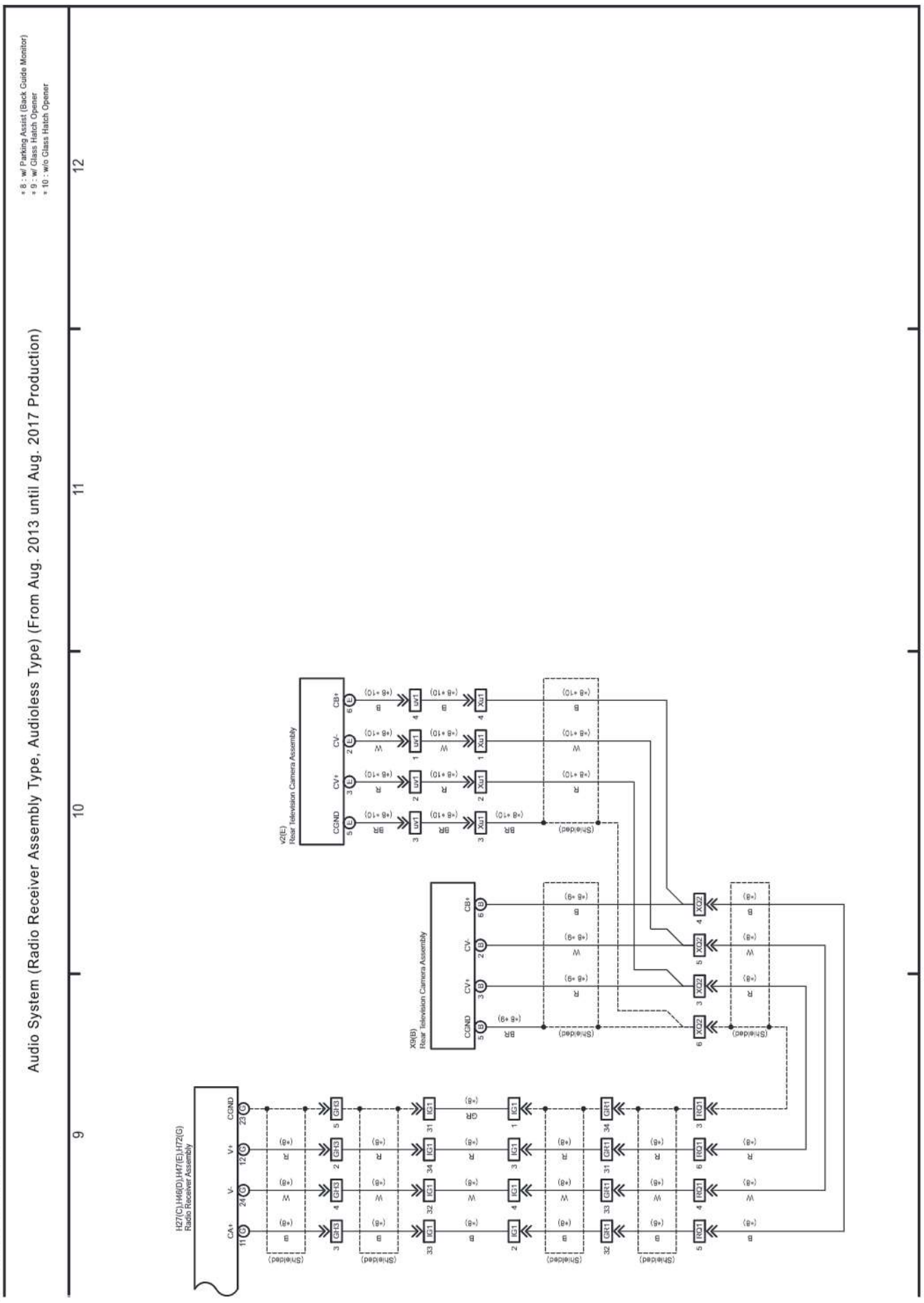

cardiagn.com

(Cont. next page)

Audio System (Radio & Display Receiver Assembly Type w/o Stereo Component Amplifier Assembly) (From Aug. 2013 until Aug. 2017 Production) and
Parking Assist (Rear View Monitor) (Radio & Display Receiver Assembly Type w/o Stereo Component Amplifier Assembly) (From Aug. 2013 until Aug. 2017 Production)

*1: 5-Door
*2: 3-Door

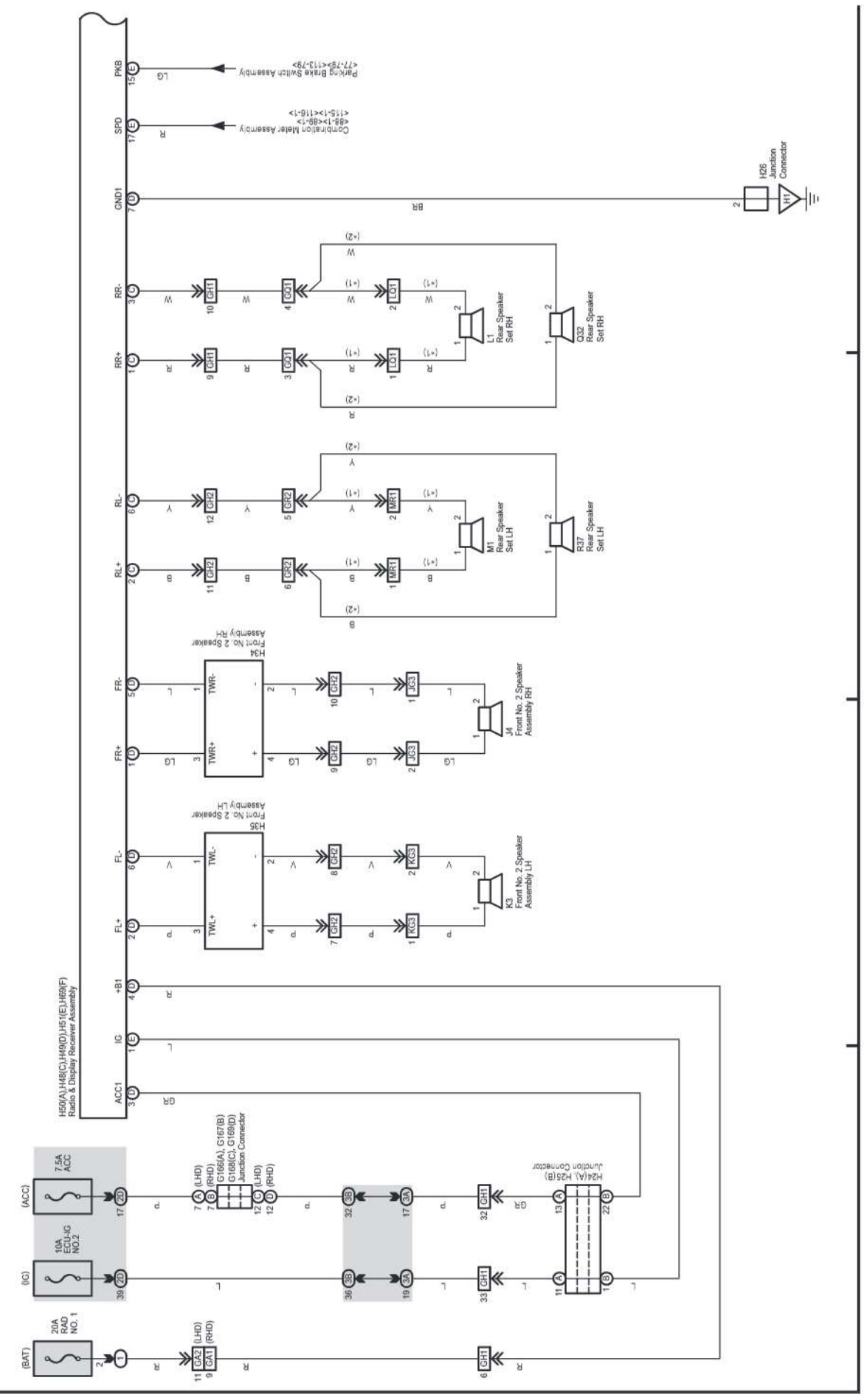

Audio System (Radio & Display Receiver Assembly Type w/o Stereo Component Amplifier Assembly) (From Aug. 2013 until Aug. 2017 Production) and
Parking Assist (Rear View Monitor) (Radio & Display Receiver Assembly Type w/o Stereo Component Amplifier Assembly) (From Aug. 2013 until Aug. 2017 Production)

: There is no wire color information.

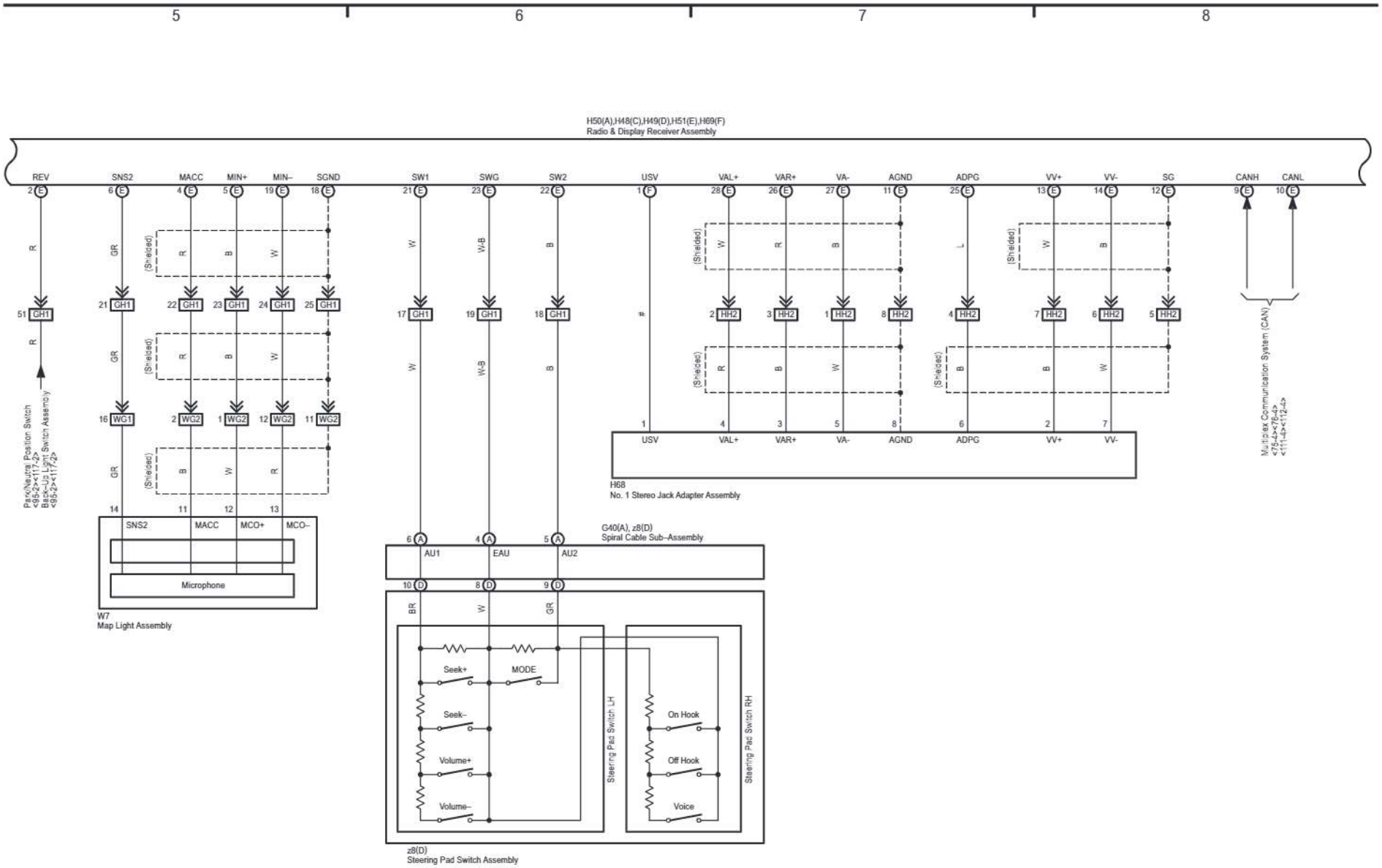

cardiagn.com

cardiagn.com

Audio System (Radio & Display Receiver Assembly Type w/o Stereo Component Amplifier Assembly) (From Aug. 2013 until Aug. 2017 Production) and
Parking Assist (Rear View Monitor) (Radio & Display Receiver Assembly Type w/o Stereo Component Amplifier Assembly) (From Aug. 2013 until Aug. 2017 Production)

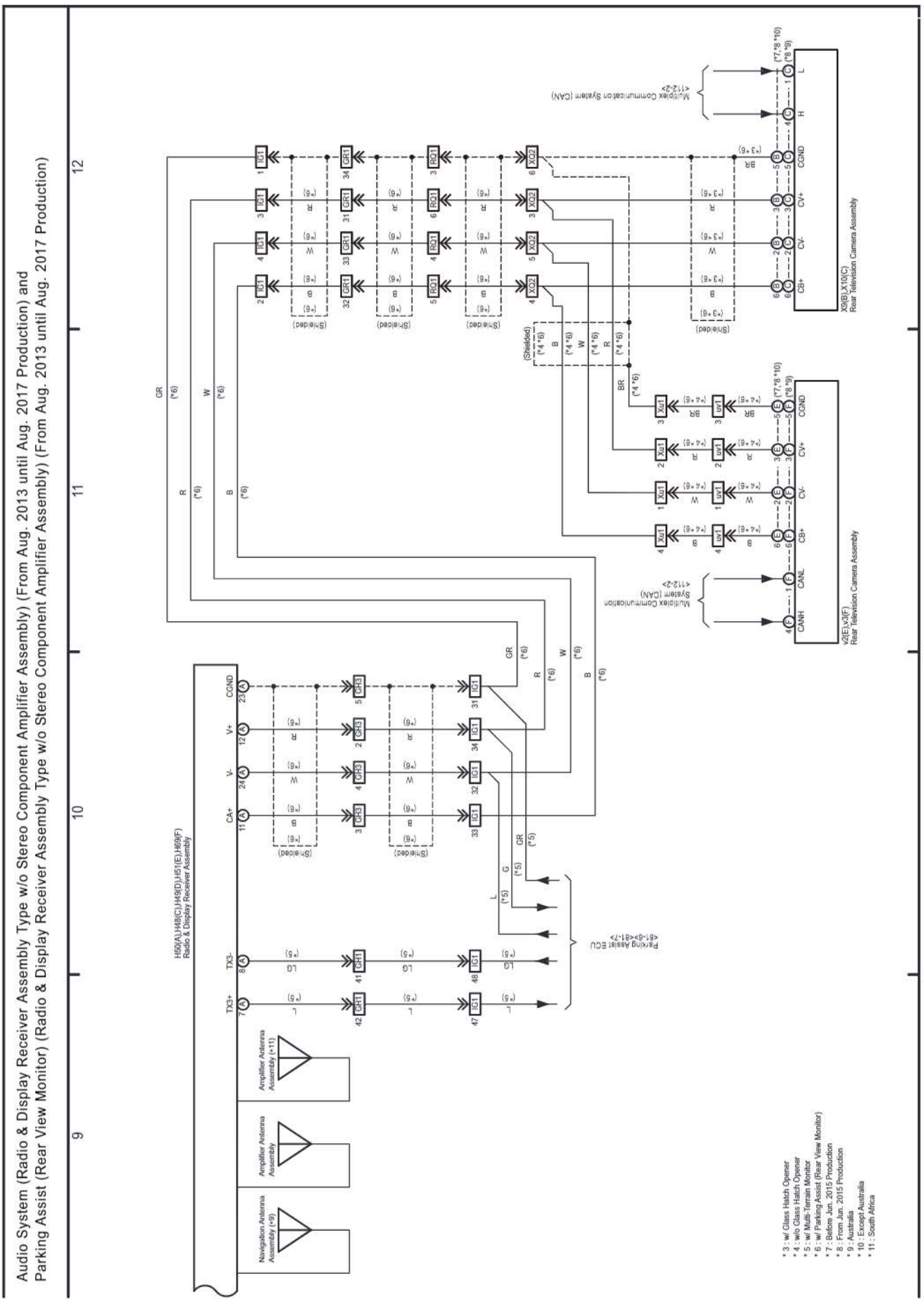

cardiagn.com

85 LAND CRUISER / LAND CRUISER PRADO

(Cont. next page)

Audio System (Radio & Display Receiver Assembly Type w/ Stereo Component Amplifier Assembly) (From Aug. 2013 until Aug. 2017 Production),
Navigation System (Radio & Display Receiver Assembly Type) (From Aug. 2013 until Aug. 2017 Production),
Parking Assist (Rear View Monitor) (Radio & Display Receiver Assembly Type w/ Stereo Component Amplifier Assembly) (From Aug. 2013 until Aug. 2017 Production)

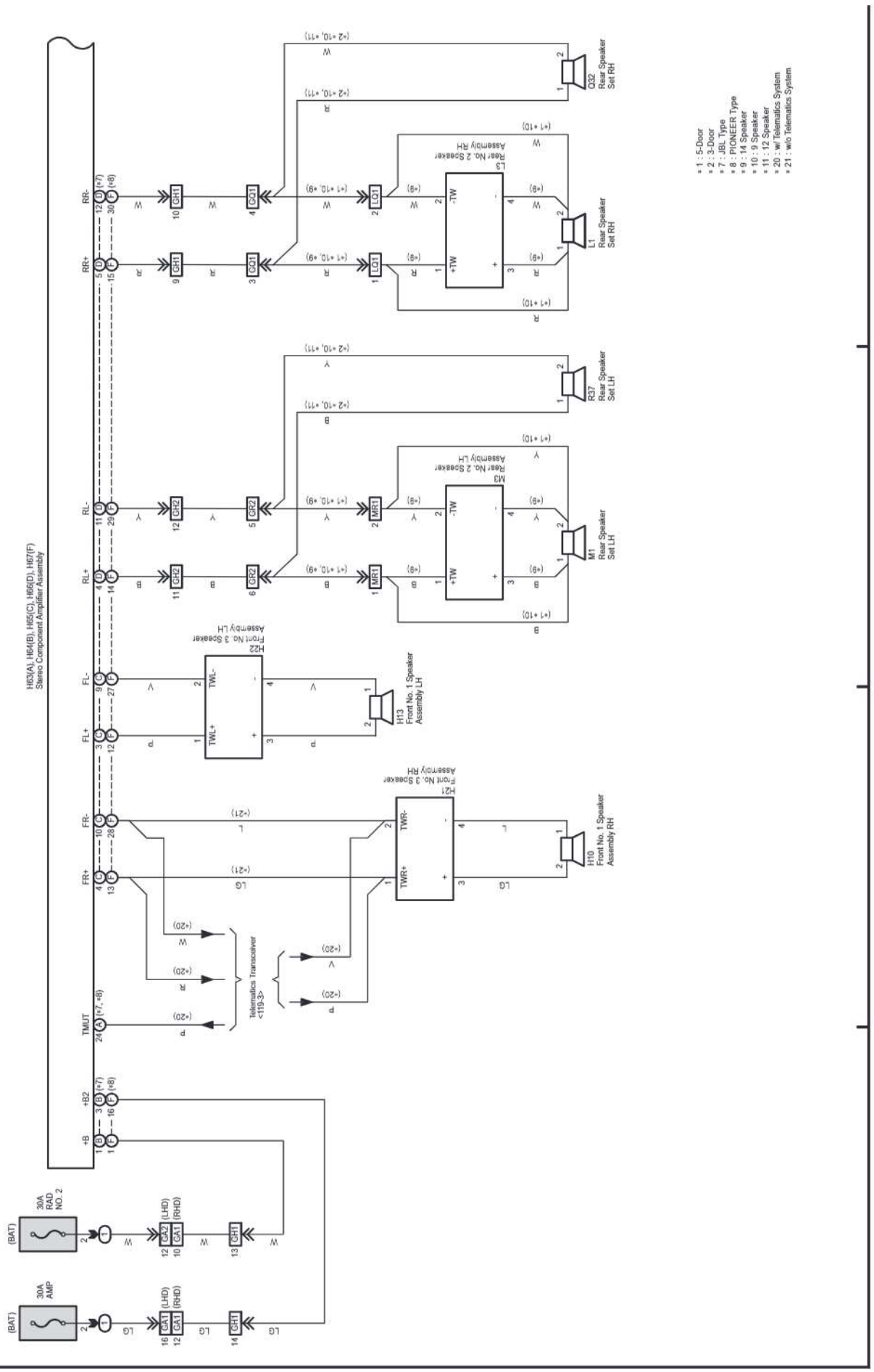

Audio System (Radio & Display Receiver Assembly Type w/ Stereo Component Amplifier Assembly) (From Aug. 2013 until Aug. 2017 Production),
Navigation System (Radio & Display Receiver Assembly Type) (From Aug. 2013 until Aug. 2017 Production),
Parking Assist (Rear View Monitor) (Radio & Display Receiver Assembly Type w/ Stereo Component Amplifier Assembly) (From Aug. 2013 until Aug. 2017 Production)

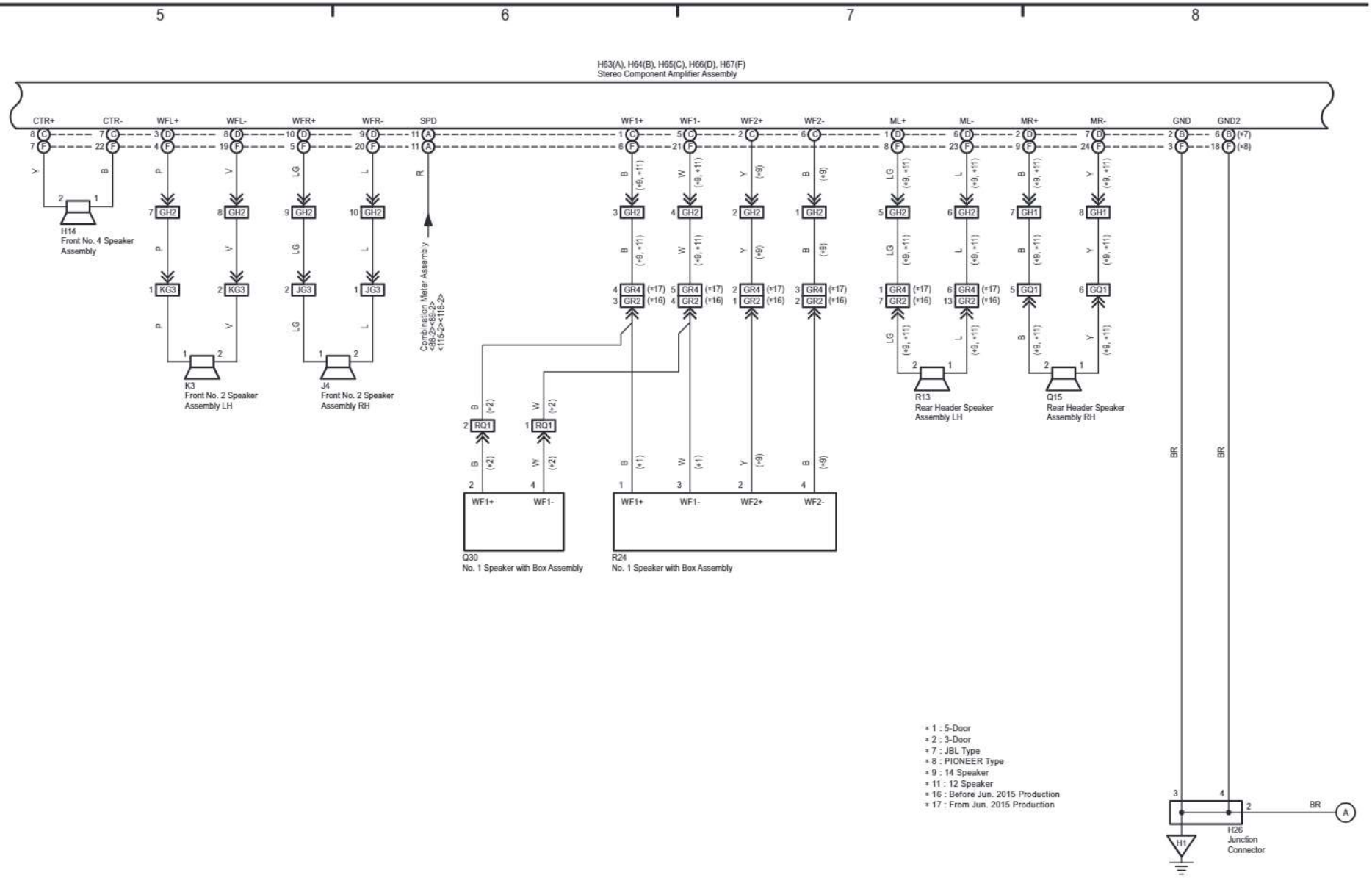

cardiagn.com

cardiagn.com

85 **LAND CRUISER / LAND CRUISER PRADO (Cont'd)** (Cont. next page)

Audio System (Radio & Display Receiver Assembly Type w/ Stereo Component Amplifier Assembly) (From Aug. 2013 until Aug. 2017 Production),
Navigation System (Radio & Display Receiver Assembly Type) (From Aug. 2013 until Aug. 2017 Production),
Parking Assist (Rear View Monitor) (Radio & Display Receiver Assembly Type w/ Stereo Component Amplifier Assembly) (From Aug. 2013 until Aug. 2017 Production)

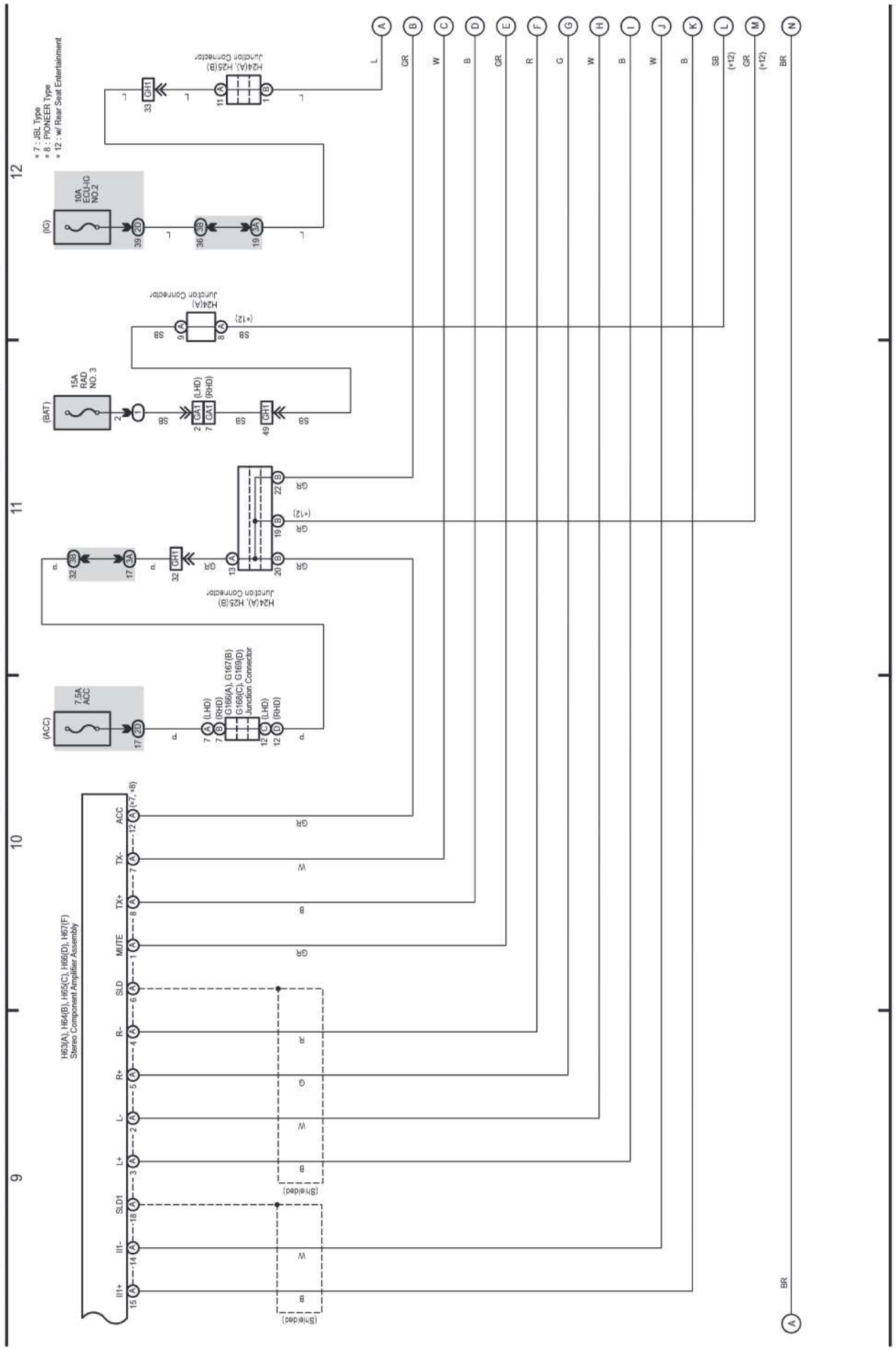

Audio System (Radio & Display Receiver Assembly Type w/ Stereo Component Amplifier Assembly) (From Aug. 2013 until Aug. 2017 Production),
Navigation System (Radio & Display Receiver Assembly Type) (From Aug. 2013 until Aug. 2017 Production),
Parking Assist (Rear View Monitor) (Radio & Display Receiver Assembly Type w/ Stereo Component Amplifier Assembly) (From Aug. 2013 until Aug. 2017 Production)

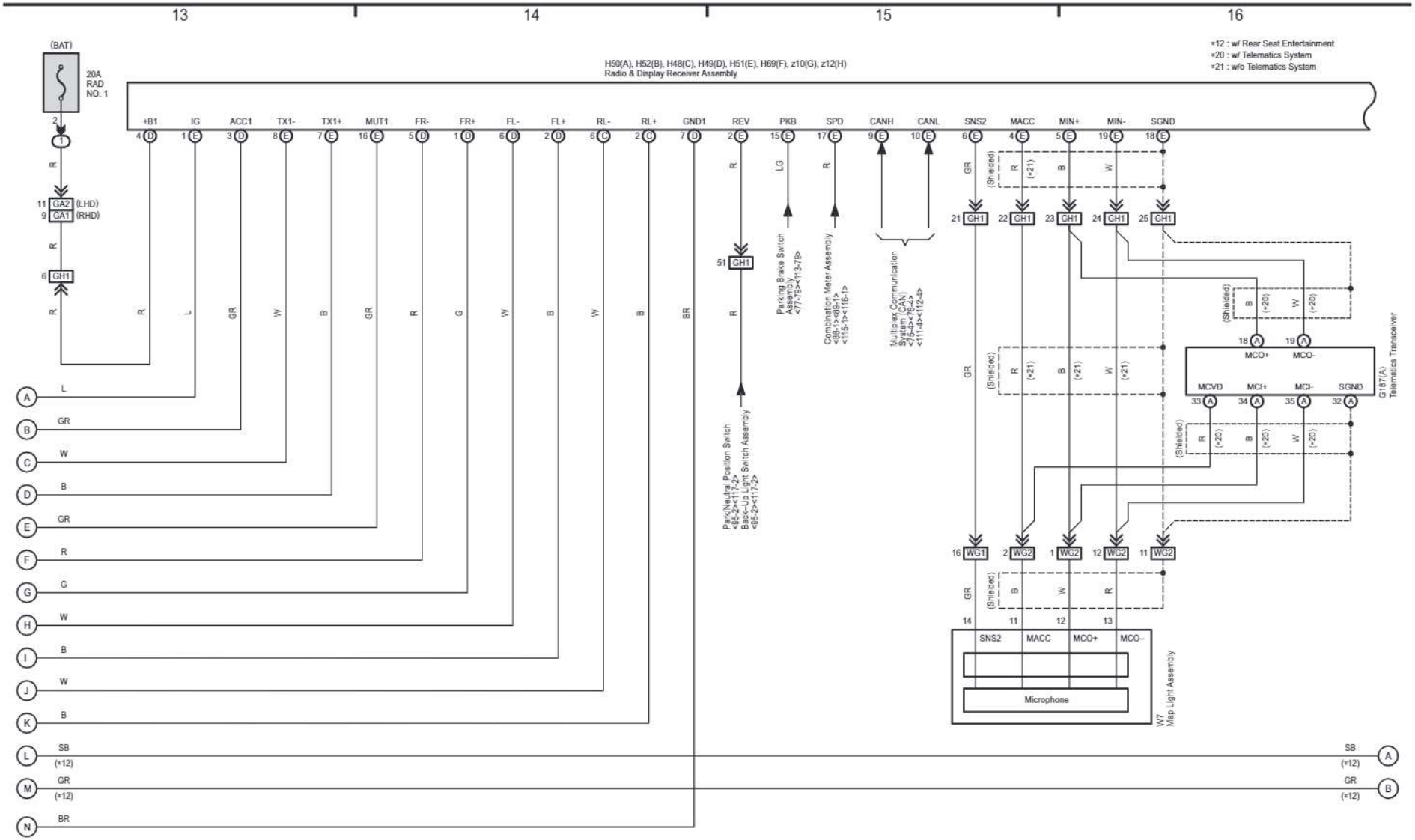

LAND CRUISER / LAND CRUISER PRADO (EM27T3E)

cardiagn.com

cardiagn.com

85 **LAND CRUISER / LAND CRUISER PRADO (Cont'd)** (Cont. next page)

Audio System (Radio & Display Receiver Assembly Type w/ Stereo Component Amplifier Assembly) (From Aug. 2013 until Aug. 2017 Production),
Navigation System (Radio & Display Receiver Assembly Type) (From Aug. 2013 until Aug. 2017 Production),
Parking Assist (Rear View Monitor) (Radio & Display Receiver Assembly Type w/ Stereo Component Amplifier Assembly) (From Aug. 2013 until Aug. 2017 Production)

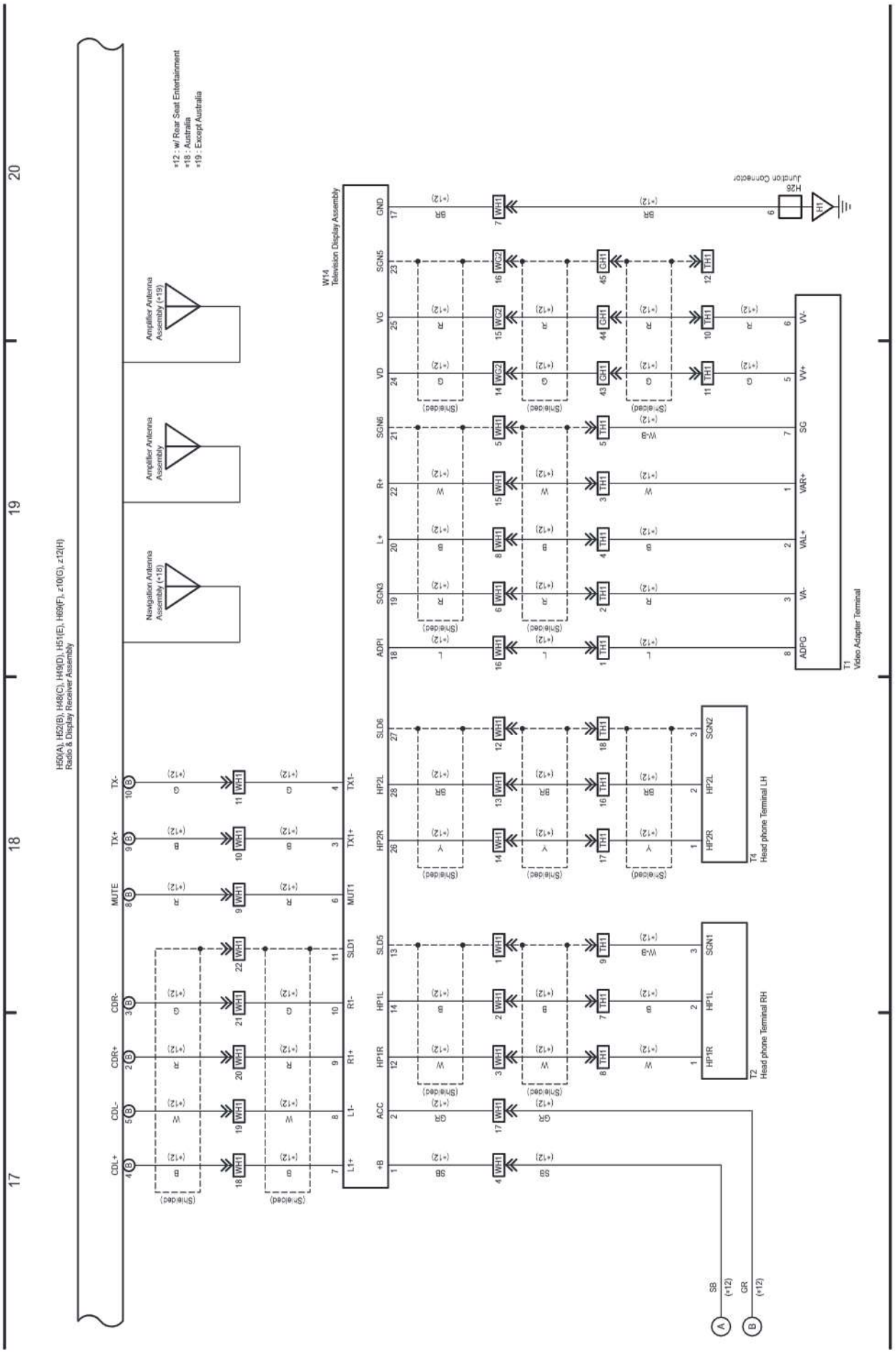

Audio System (Radio & Display Receiver Assembly Type w/ Stereo Component Amplifier Assembly) (From Aug. 2013 until Aug. 2017 Production),
Navigation System (Radio & Display Receiver Assembly Type) (From Aug. 2013 until Aug. 2017 Production),
Parking Assist (Rear View Monitor) (Radio & Display Receiver Assembly Type w/ Stereo Component Amplifier Assembly) (From Aug. 2013 until Aug. 2017 Production)

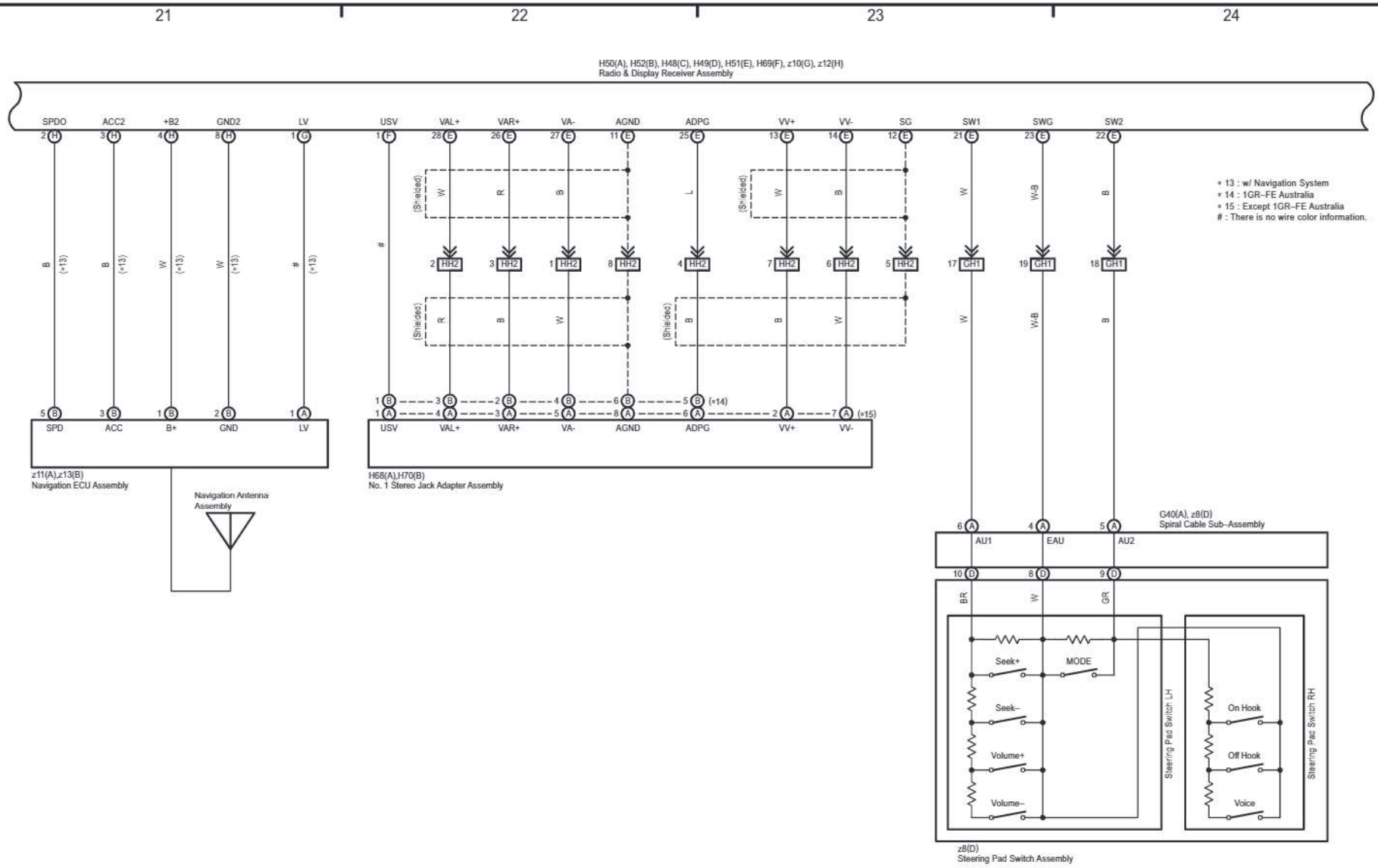

LAND CRUISER / LAND CRUISER PRADO (EM27T3E)

cardiagn.com

cardiagn.com

85 **LAND CRUISER / LAND CRUISER PRADO (Cont'd)**

Audio System (Radio & Display Receiver Assembly Type w/ Stereo Component Amplifier Assembly) (From Aug. 2013 until Aug. 2017 Production),
Navigation System (Radio & Display Receiver Assembly Type) (From Aug. 2013 until Aug. 2017 Production),
Parking Assist (Rear View Monitor) (Radio & Display Receiver Assembly Type w/ Stereo Component Amplifier Assembly) (From Aug. 2013 until Aug. 2017 Production)

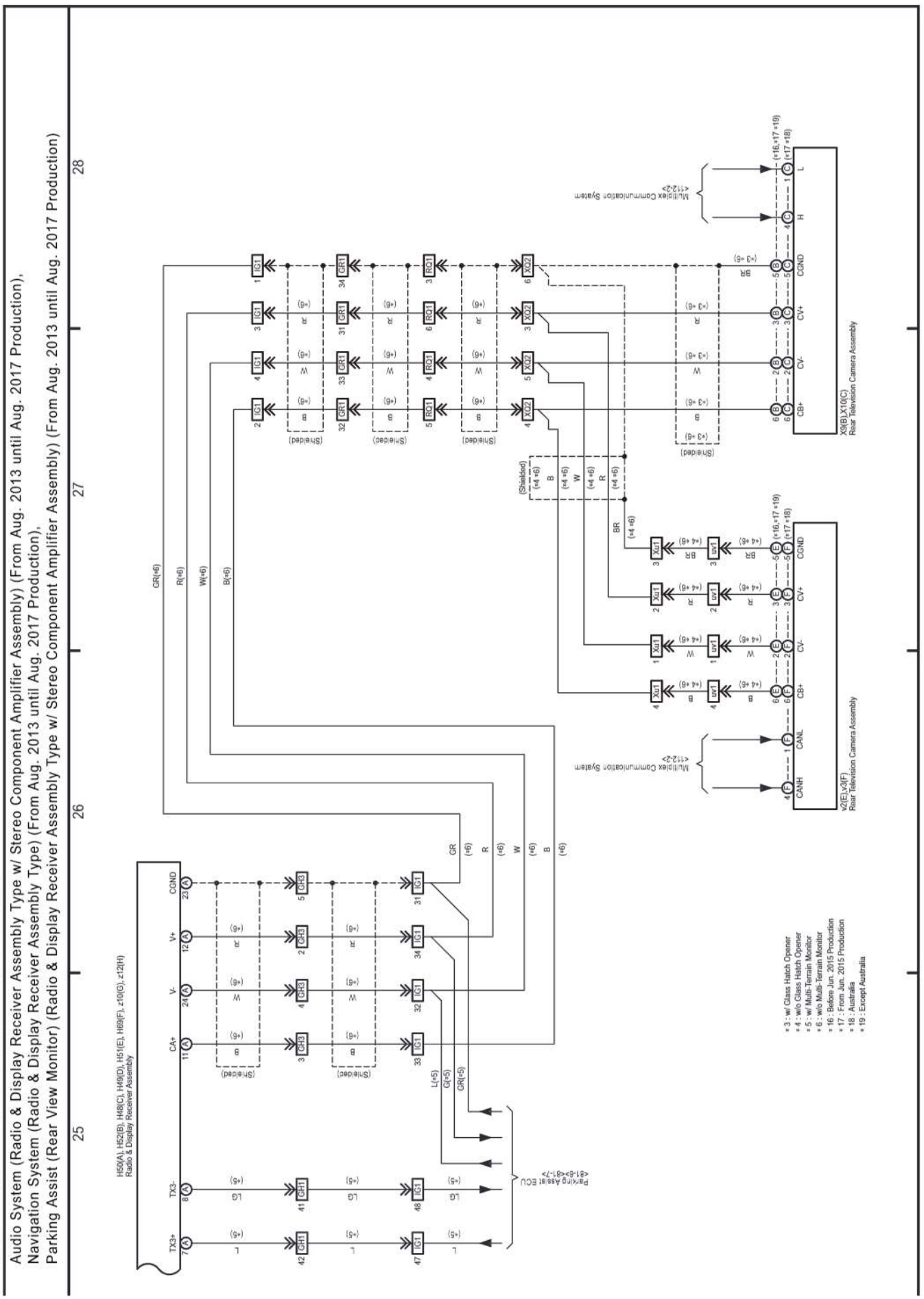

cardiagn.com

(Cont. next page)

Audio System (Navigation Receiver Assembly Type Except China) (From Aug. 2013 until Aug. 2017 Production),
Navigation System (Navigation Receiver Assembly Type Except China) (From Aug. 2013 until Aug. 2017 Production) and
Parking Assist (Rear View Monitor) (Navigation Receiver Assembly Type) (From Aug. 2013 until Aug. 2017 Production)

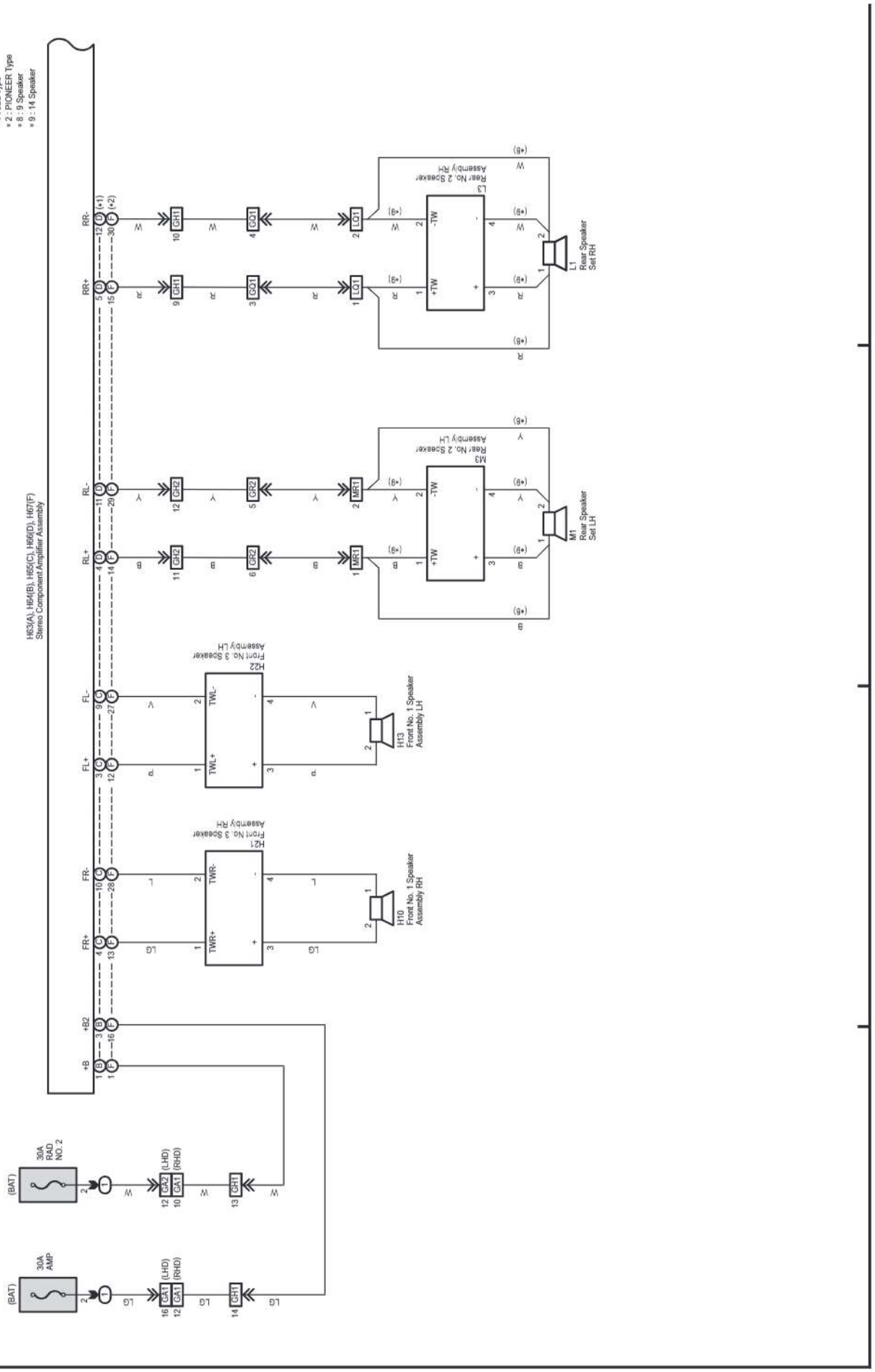

(Cont. next page)

Audio System (Navigation Receiver Assembly Type Except China) (From Aug. 2013 until Aug. 2017 Production),
Navigation System (Navigation Receiver Assembly Type Except China) (From Aug. 2013 until Aug. 2017 Production) and
Parking Assist (Rear View Monitor) (Navigation Receiver Assembly Type) (From Aug. 2013 until Aug. 2017 Production)

* 1 : JBL Type
* 2 : PIONEER Type
* 9 : 14 Speaker
* 10 : Before Jun. 2015 Production
* 11 : From Jun. 2015 Production

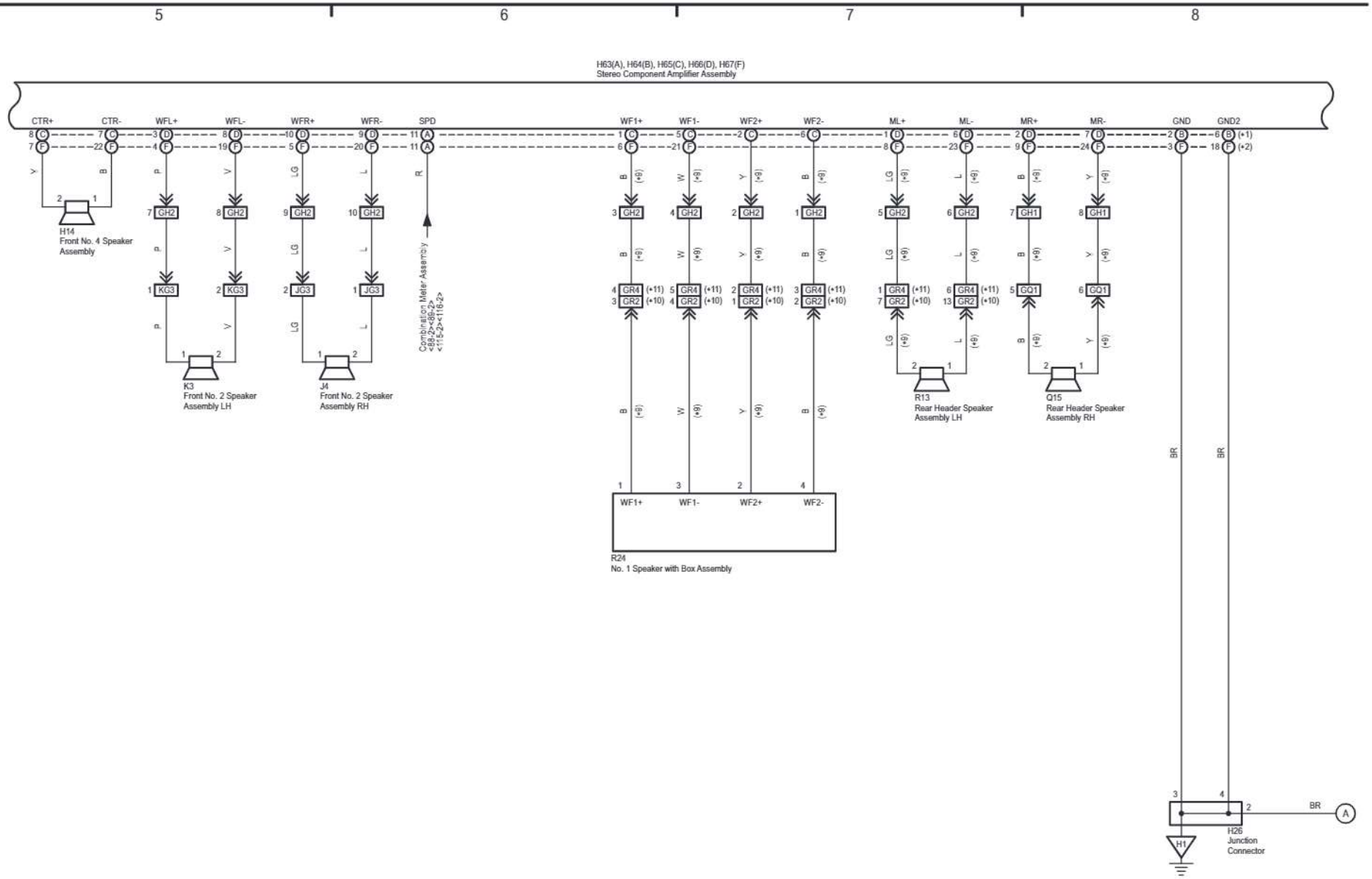

cardiagn.com

cardiagn.com

(Cont. next page)

Audio System (Navigation Receiver Assembly Type Except China) (From Aug. 2013 until Aug. 2017 Production),
Navigation System (Navigation Receiver Assembly Type Except China) (From Aug. 2013 until Aug. 2017 Production) and
Parking Assist (Rear View Monitor) (Navigation Receiver Assembly Type) (From Aug. 2013 until Aug. 2017 Production)

*7 : w/ Rear Seat Entertainment

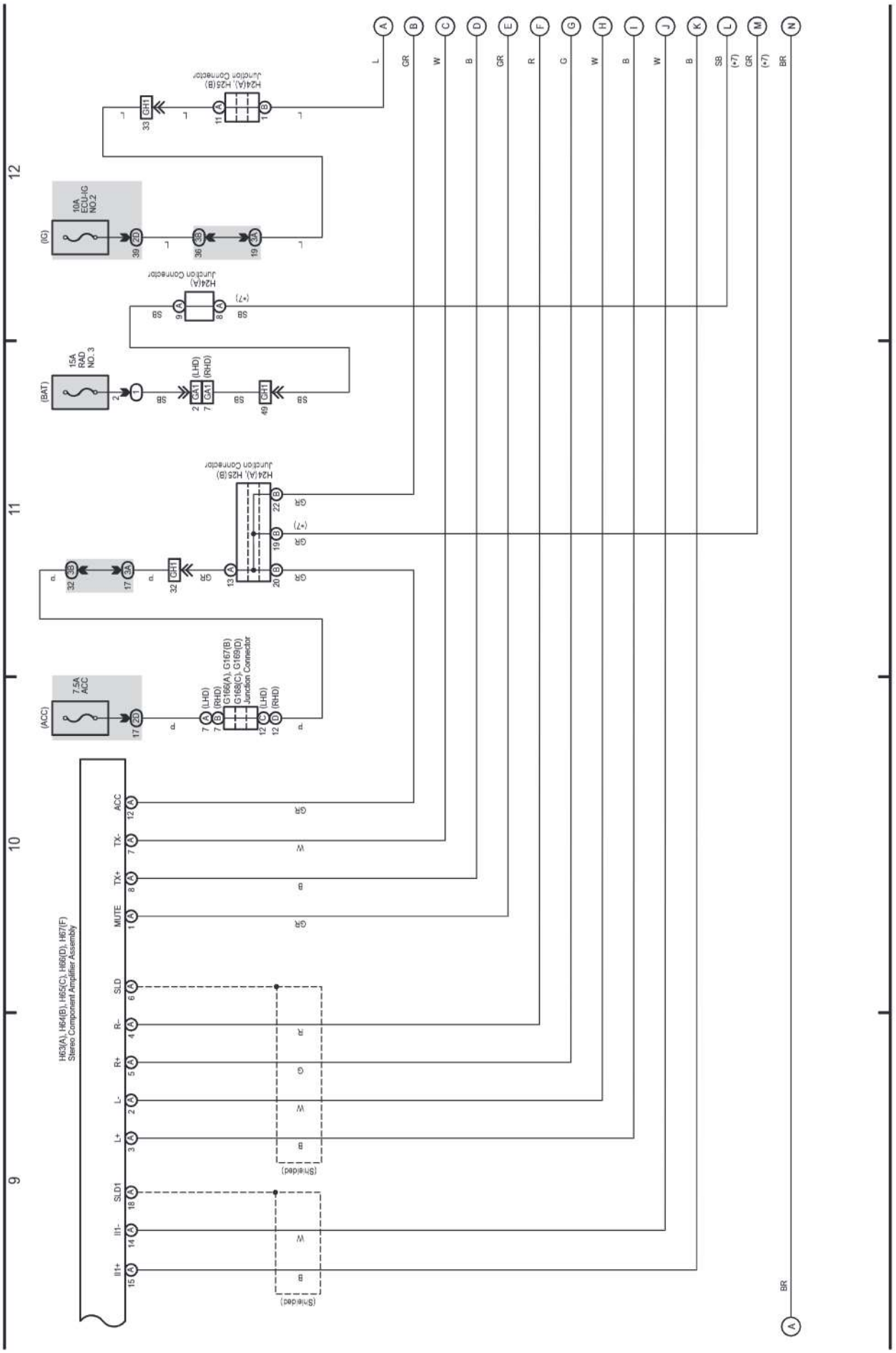

(Cont. next page)

Audio System (Navigation Receiver Assembly Type Except China) (From Aug. 2013 until Aug. 2017 Production),
Navigation System (Navigation Receiver Assembly Type Except China) (From Aug. 2013 until Aug. 2017 Production) and
Parking Assist (Rear View Monitor) (Navigation Receiver Assembly Type) (From Aug. 2013 until Aug. 2017 Production)

*7 : w/ Rear Seat Entertainment

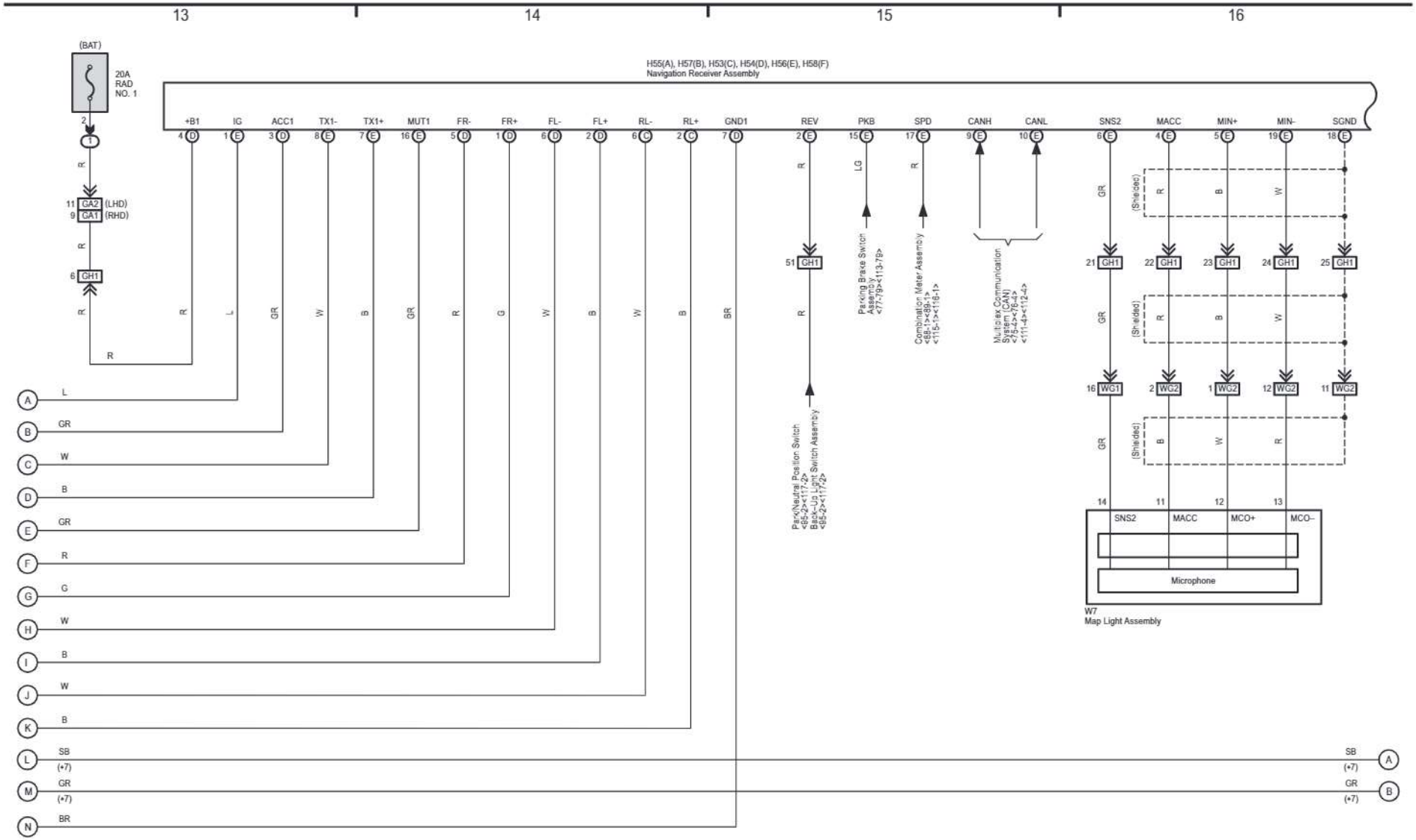

cardiagn.com

cardiagn.com

(Cont. next page)

Audio System (Navigation Receiver Assembly Type Except China) (From Aug. 2013 until Aug. 2017 Production),
Navigation System (Navigation Receiver Assembly Type Except China) (From Aug. 2013 until Aug. 2017 Production) and
Parking Assist (Rear View Monitor) (Navigation Receiver Assembly Type) (From Aug. 2013 until Aug. 2017 Production)

*7 : w/ Rear Seat Entertainment
*9 : 14 Speaker
*12 : Australia
*14 : South Africa

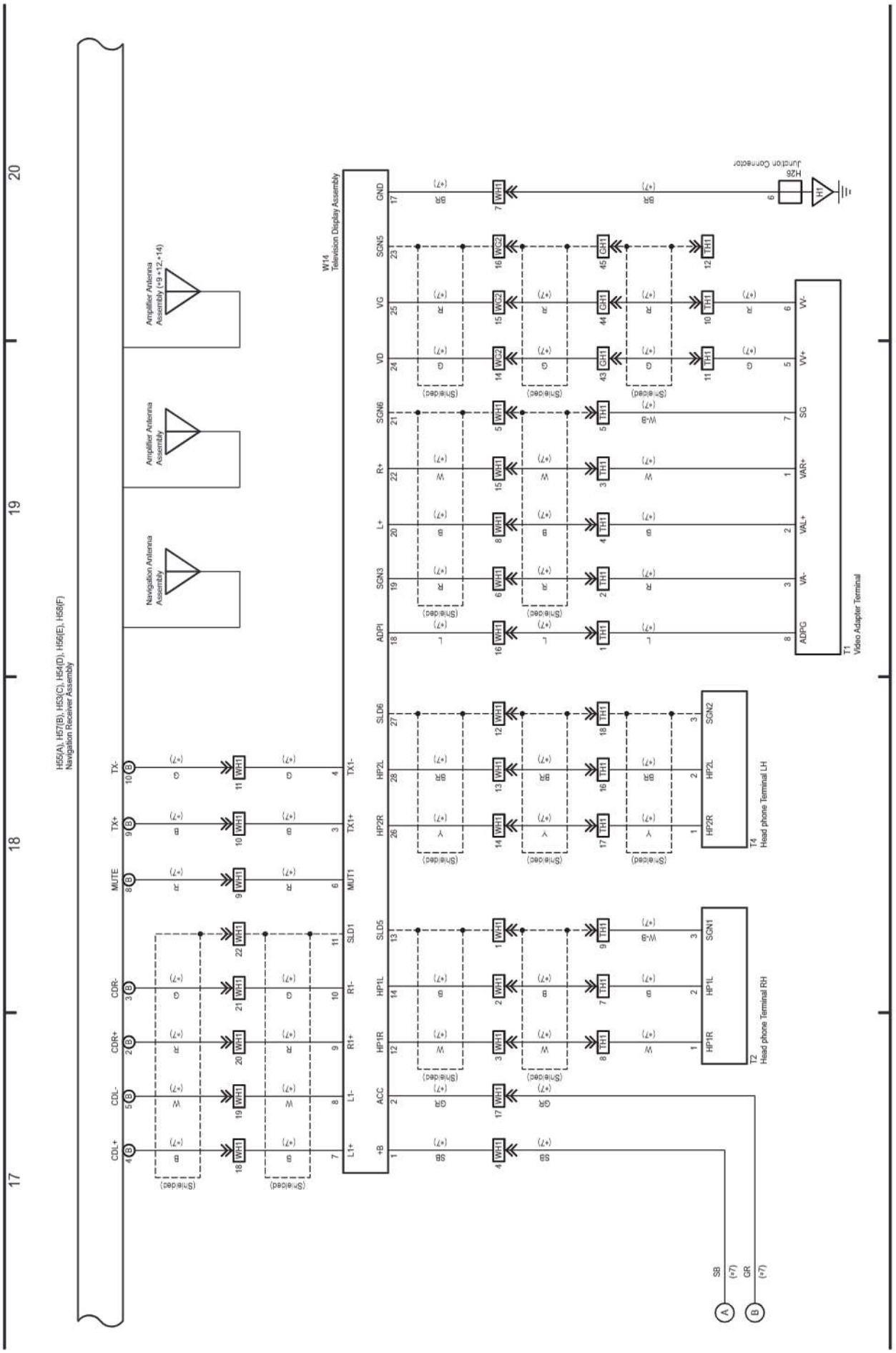

Audio System (Navigation Receiver Assembly Type Except China) (From Aug. 2013 until Aug. 2017 Production),
Navigation System (Navigation Receiver Assembly Type Except China) (From Aug. 2013 until Aug. 2017 Production) and
Parking Assist (Rear View Monitor) (Navigation Receiver Assembly Type) (From Aug. 2013 until Aug. 2017 Production)

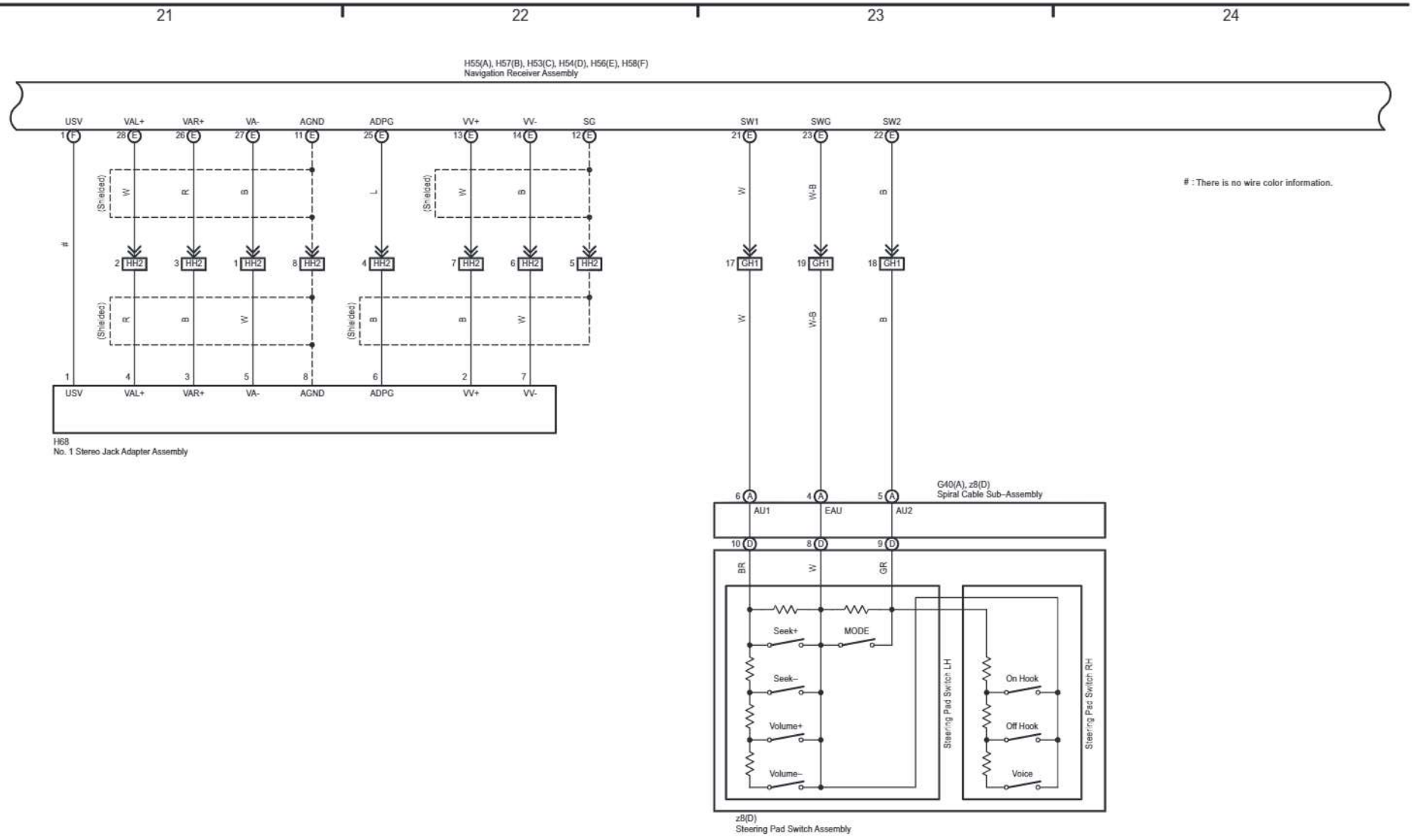

cardiagn.com

cardiagn.com

Audio System (Navigation Receiver Assembly Type Except China) (From Aug. 2013 until Aug. 2017 Production),
Navigation System (Navigation Receiver Assembly Type Except China) (From Aug. 2013 until Aug. 2017 Production) and
Parking Assist (Rear View Monitor) (Navigation Receiver Assembly Type) (From Aug. 2013 until Aug. 2017 Production)

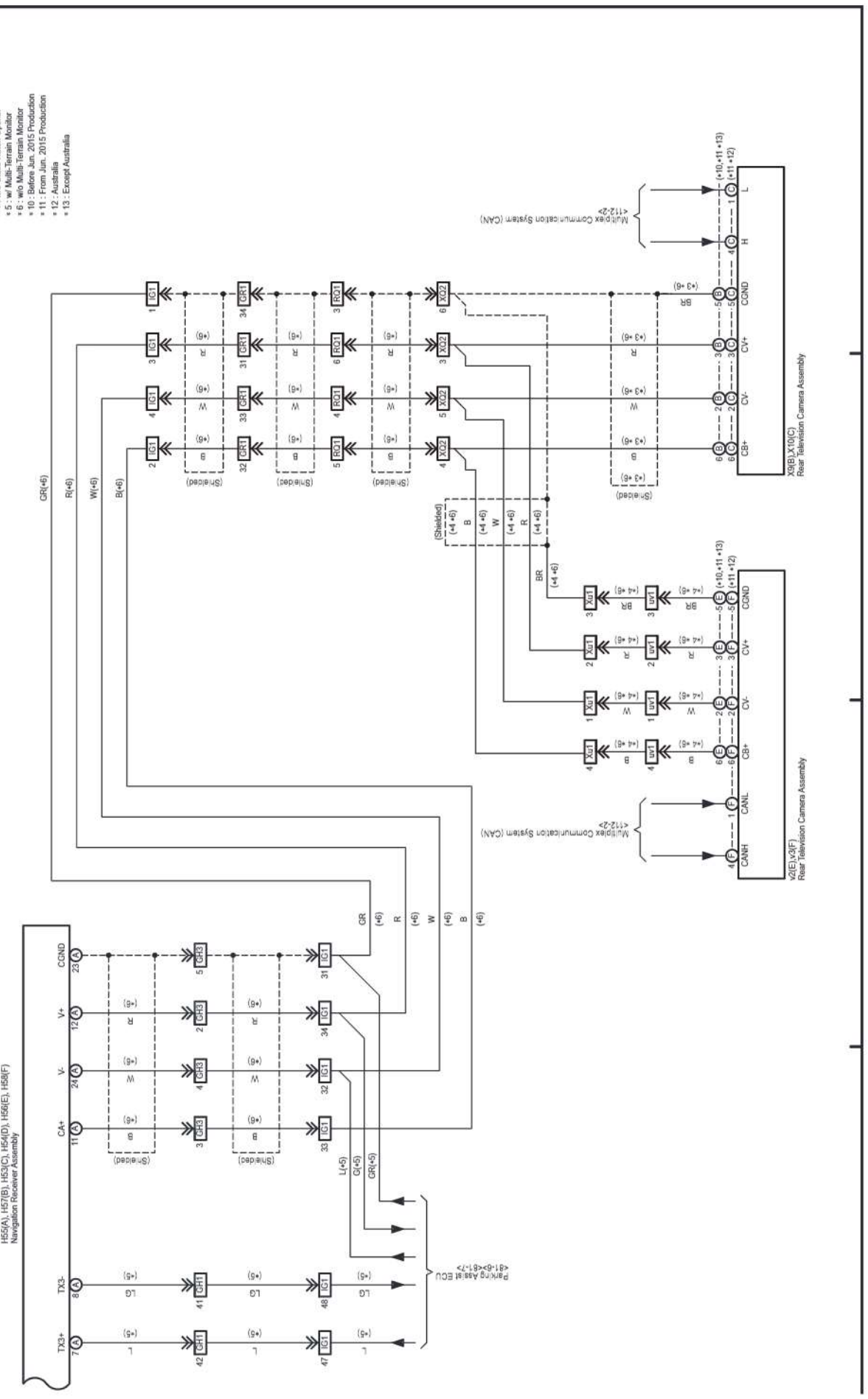

cardiagn.com

87 LAND CRUISER / LAND CRUISER PRADO

(Cont. next page)

Audio System (Navigation Receiver Assembly Type China) (From Aug. 2013 Production),
Navigation System (Navigation Receiver Assembly Type China) (From Aug. 2013 until Aug. 2017 Production) and
Parking Assist (Back Guide Monitor) (China) (From Aug. 2013 until Aug. 2017 Production)

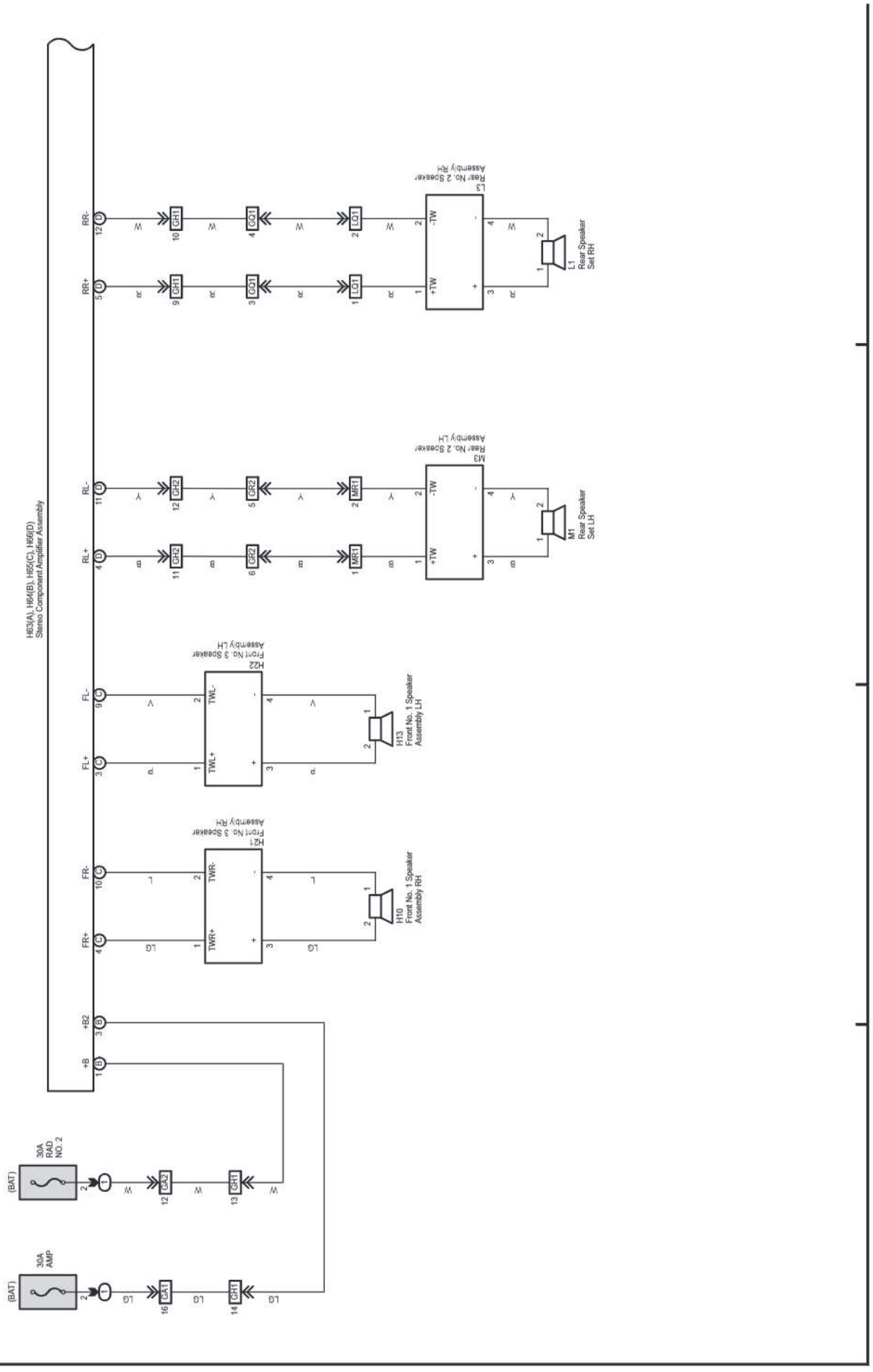

(Cont. next page)

Audio System (Navigation Receiver Assembly Type China) (From Aug. 2013 Production),
Navigation System (Navigation Receiver Assembly Type China) (From Aug. 2013 until Aug. 2017 Production) and
Parking Assist (Back Guide Monitor) (China) (From Aug. 2013 until Aug. 2017 Production)

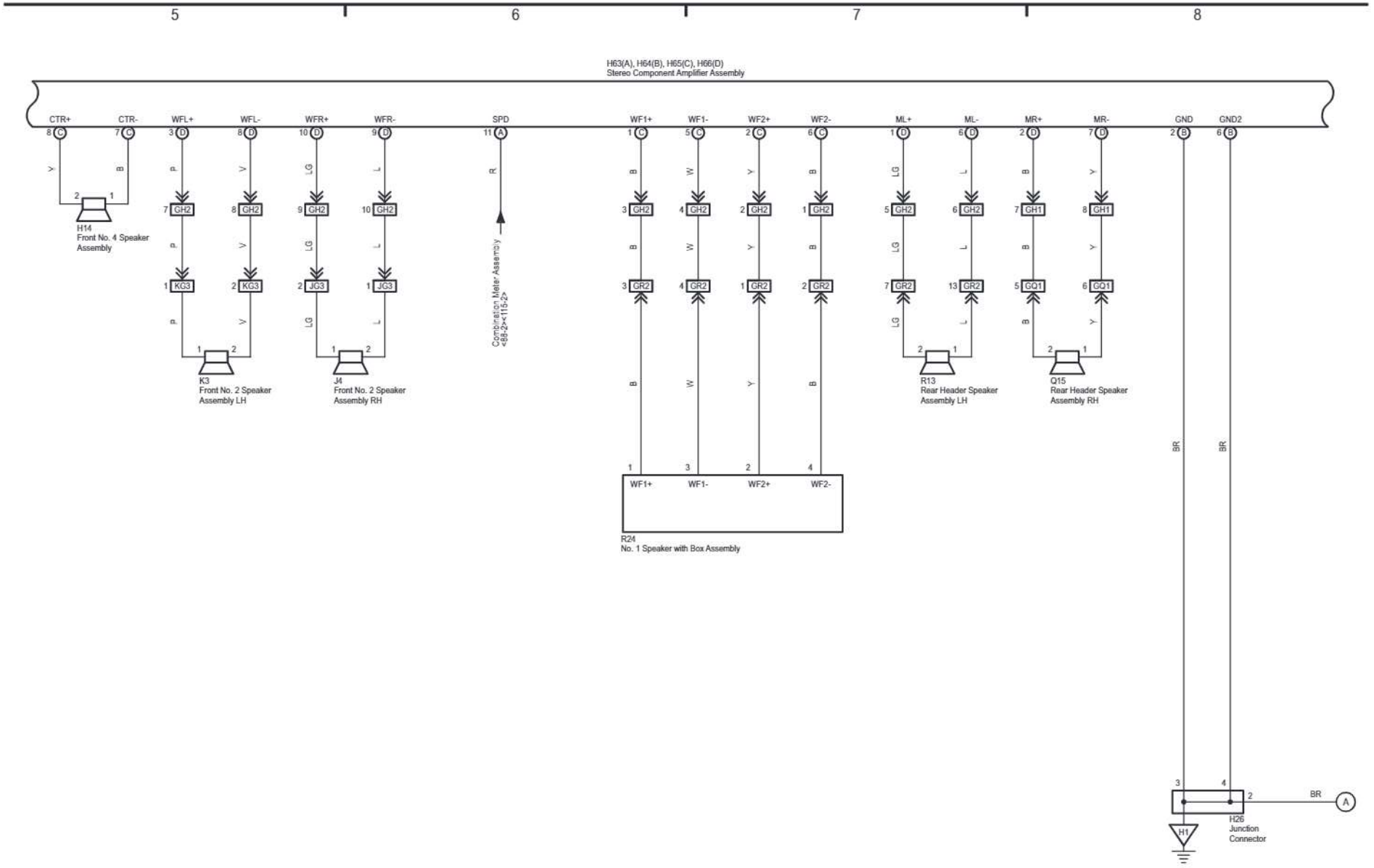

cardiagn.com

cardiagn.com

(Cont. next page)

Audio System (Navigation Receiver Assembly Type China) (From Aug. 2013 Production),
Navigation System (Navigation Receiver Assembly Type China) (From Aug. 2013 until Aug. 2017 Production) and
Parking Assist (Back Guide Monitor) (China) (From Aug. 2013 until Aug. 2017 Production)

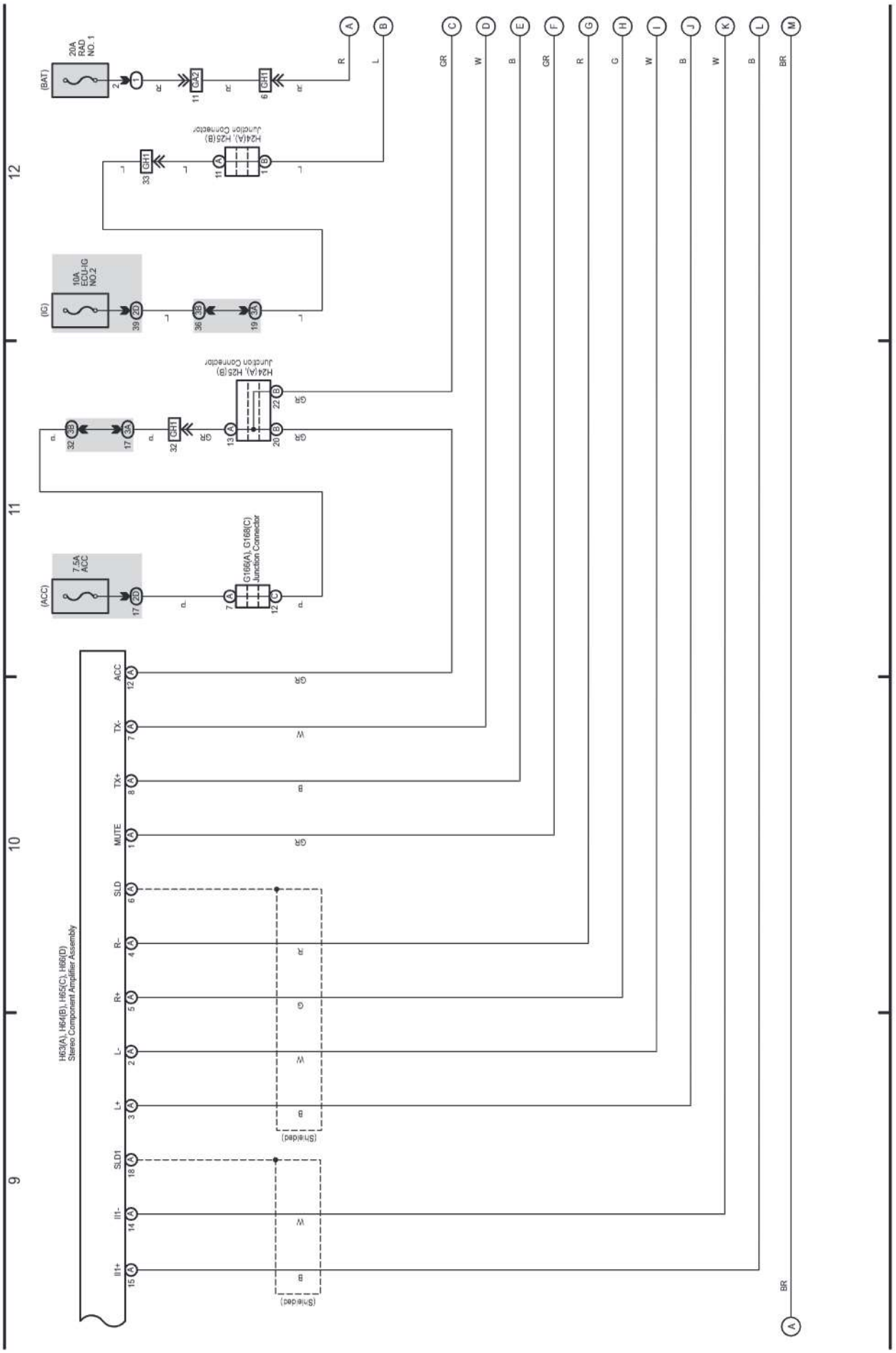

(Cont. next page)

Audio System (Navigation Receiver Assembly Type China) (From Aug. 2013 Production),
Navigation System (Navigation Receiver Assembly Type China) (From Aug. 2013 until Aug. 2017 Production) and
Parking Assist (Back Guide Monitor) (China) (From Aug. 2013 until Aug. 2017 Production)

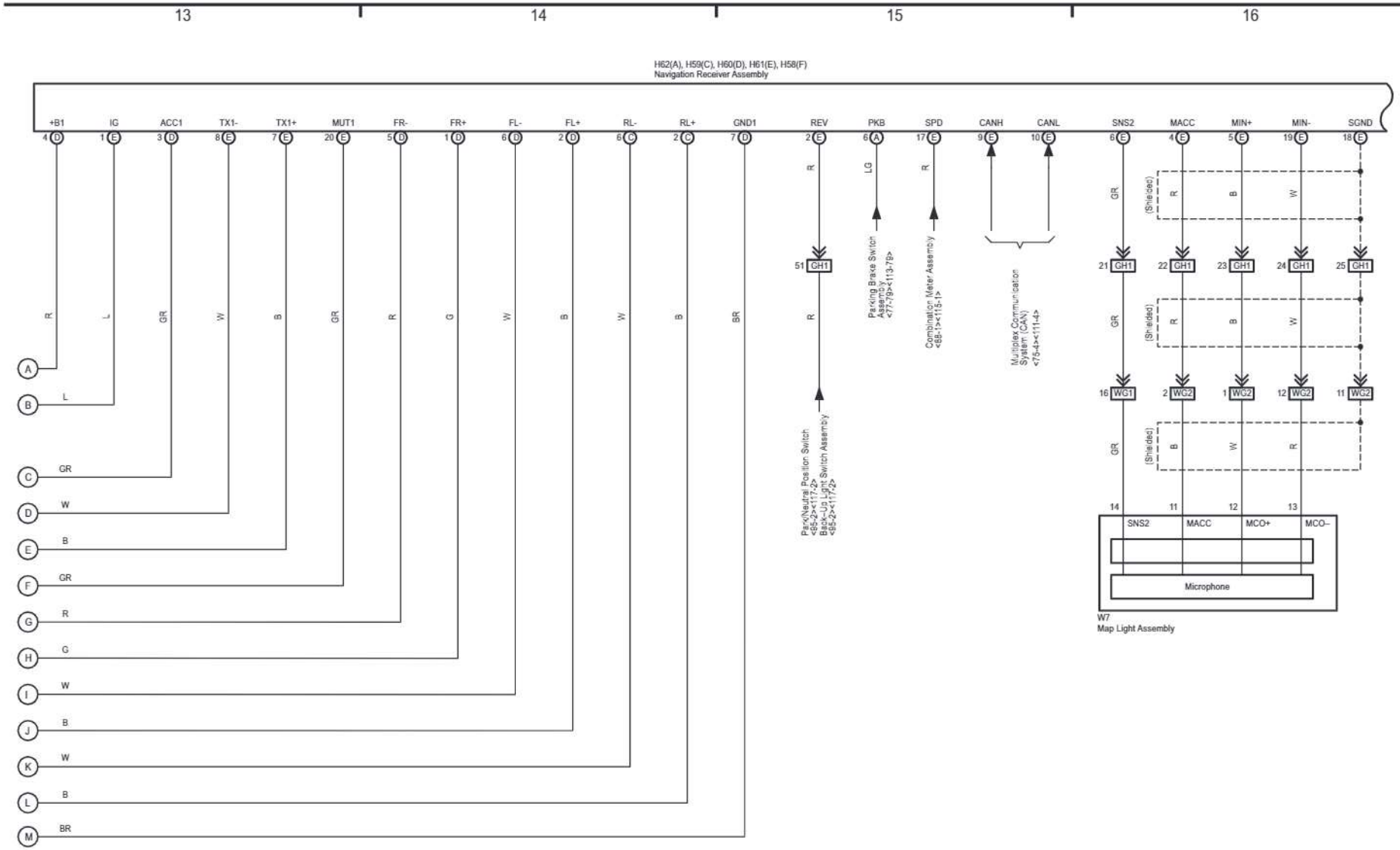

LAND CRUISER / LAND CRUISER PRADO (EM27T3E)

cardiagn.com

cardiagn.com

87 LAND CRUISER / LAND CRUISER PRADO (Cont'd)

(Cont. next page)

Audio System (Navigation Receiver Assembly Type China) (From Aug. 2013 Production),
Navigation System (Navigation Receiver Assembly Type China) (From Aug. 2013 until Aug. 2017 Production) and
Parking Assist (Back Guide Monitor) (China) (From Aug. 2013 until Aug. 2017 Production)

#: There is no wire color information.

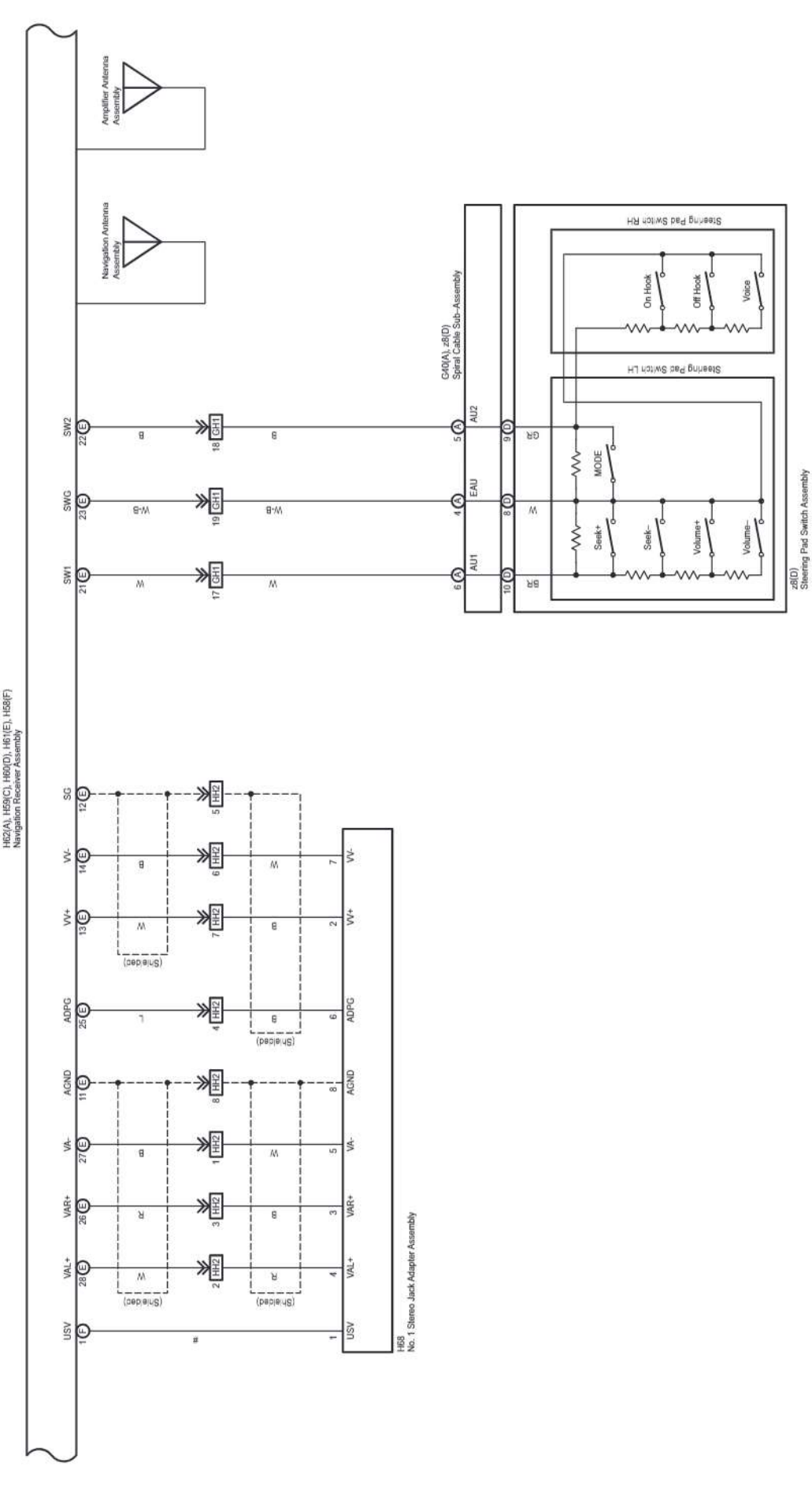

Audio System (Navigation Receiver Assembly Type China) (From Aug. 2013 Production),
Navigation System (Navigation Receiver Assembly Type China) (From Aug. 2013 until Aug. 2017 Production) and
Parking Assist (Back Guide Monitor) (China) (From Aug. 2013 until Aug. 2017 Production)

* 1 : w/ Glass Hatch Opener
* 2 : w/o Glass Hatch Opener

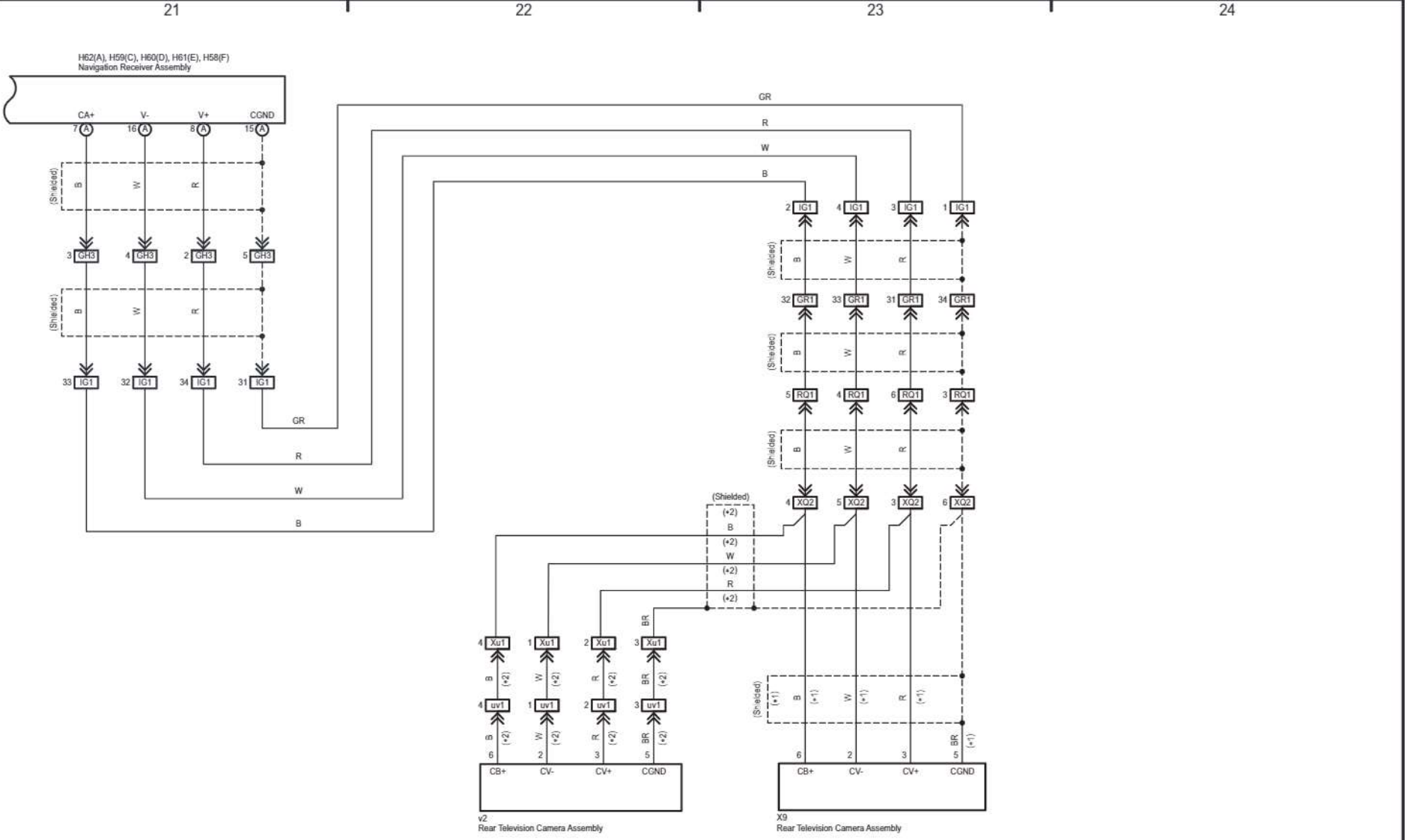

LAND CRUISER / LAND CRUISER PRADO (EM27T3E)

cardiagn.com

cardiagn.com

(Cont. next page)

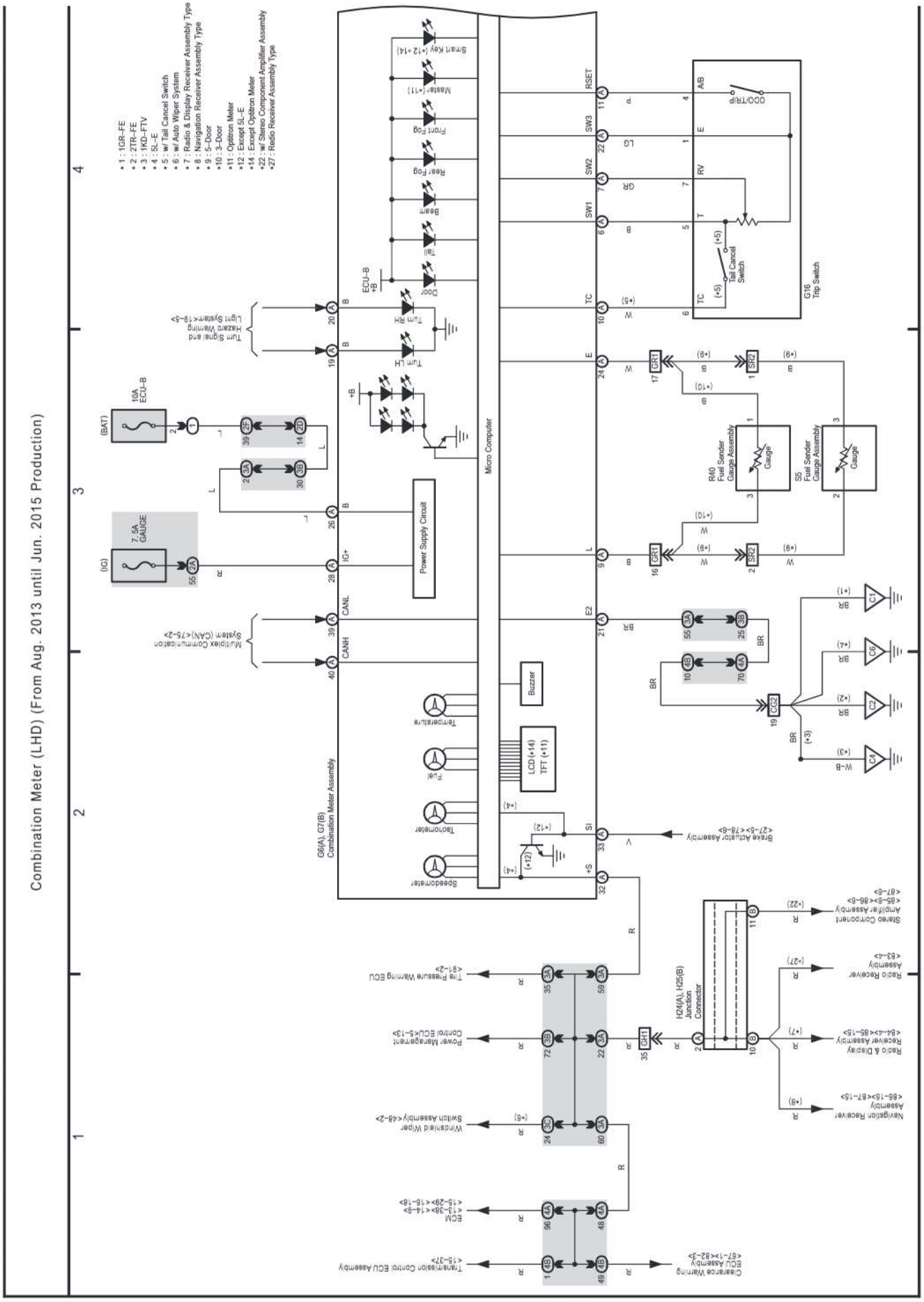

(Cont. next page)

Combination Meter (LHD) (From Aug. 2013 until Jun. 2015 Production)

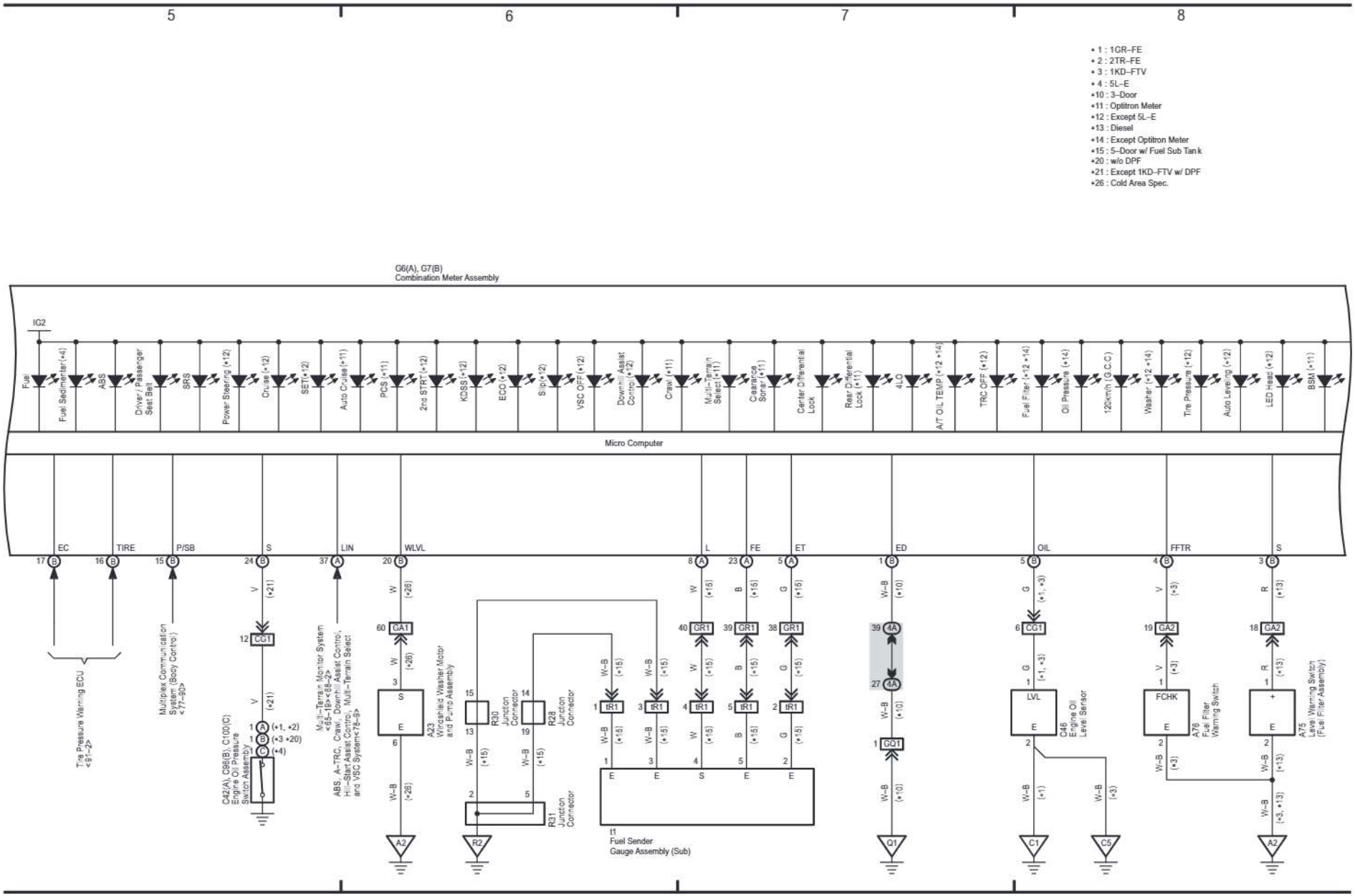

LAND CRUISER / LAND CRUISER PRADO (EM27T3E)

cardiagn.com

cardiagn.com

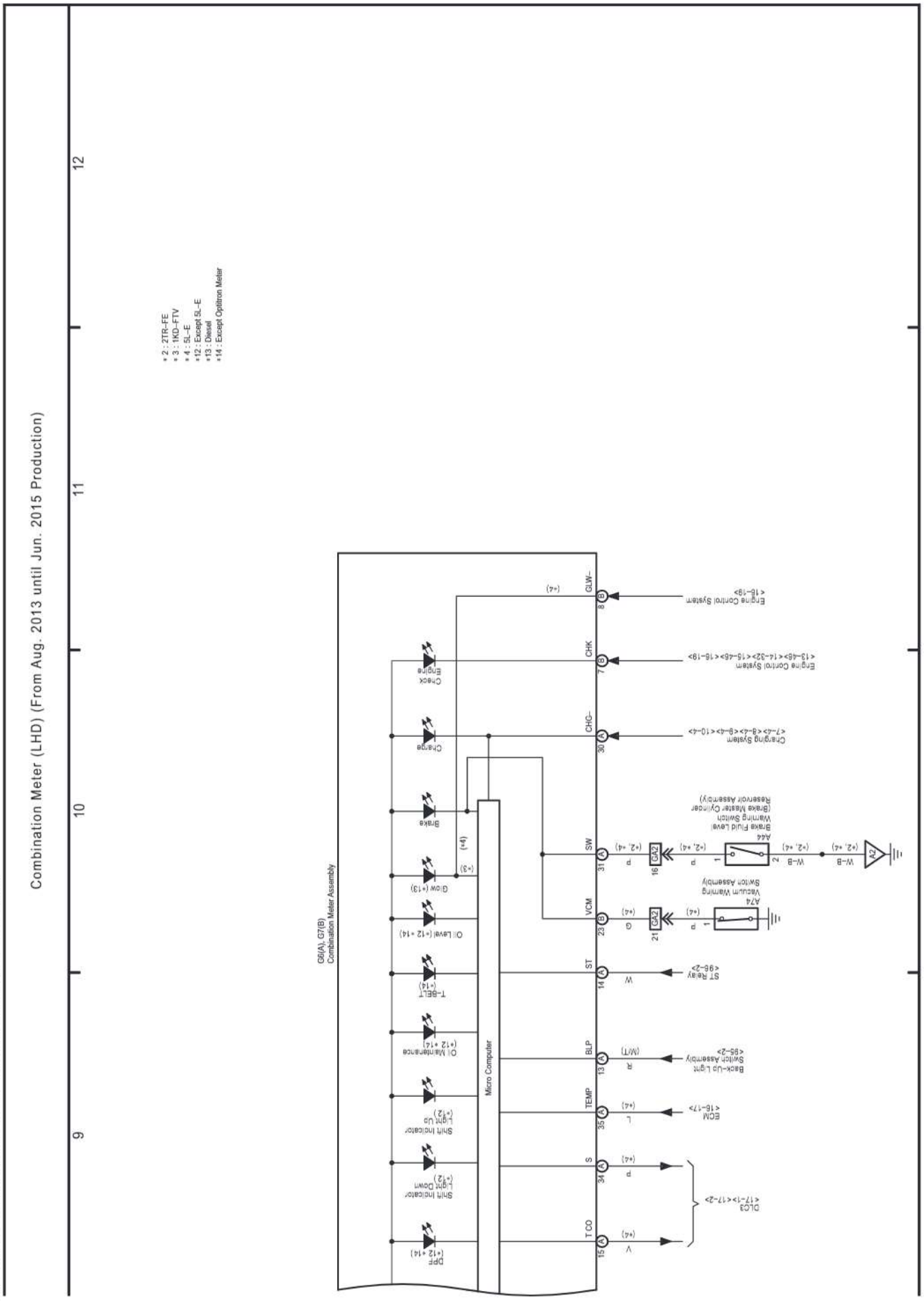

cardiagn.com

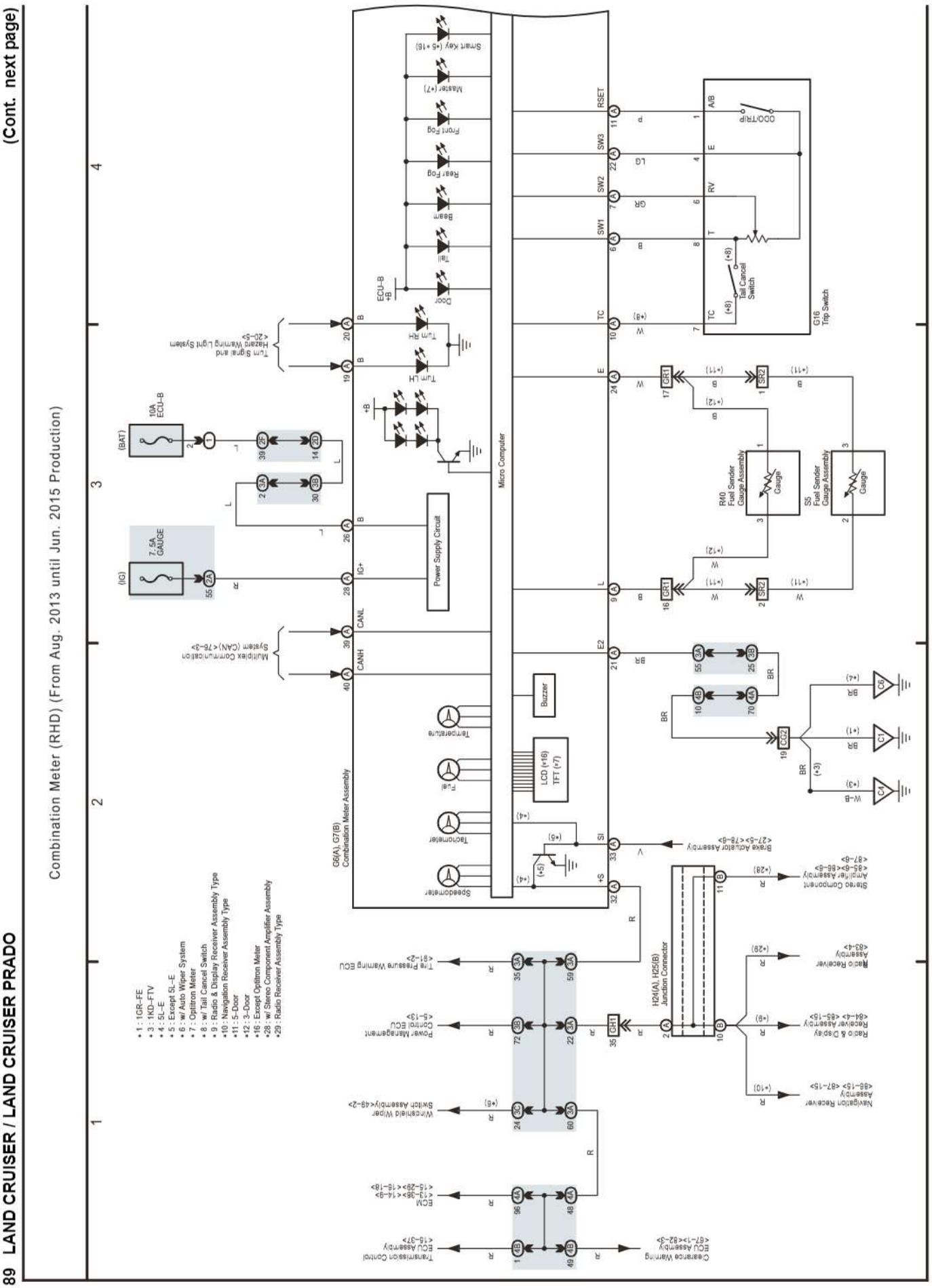

Combination Meter (RHD) (From Aug. 2013 until Jun. 2015 Production)

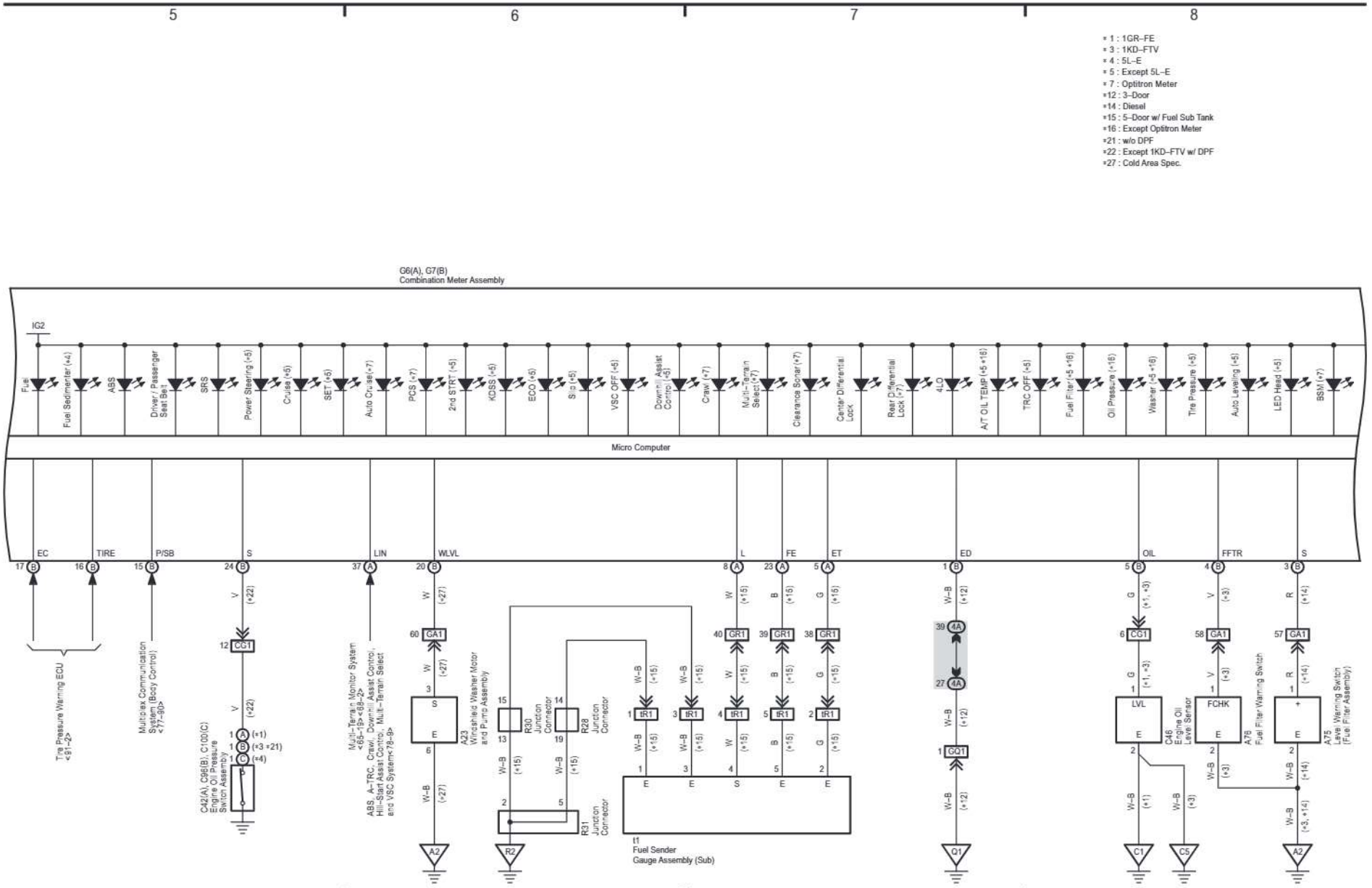

cardiagn.com

cardiagn.com

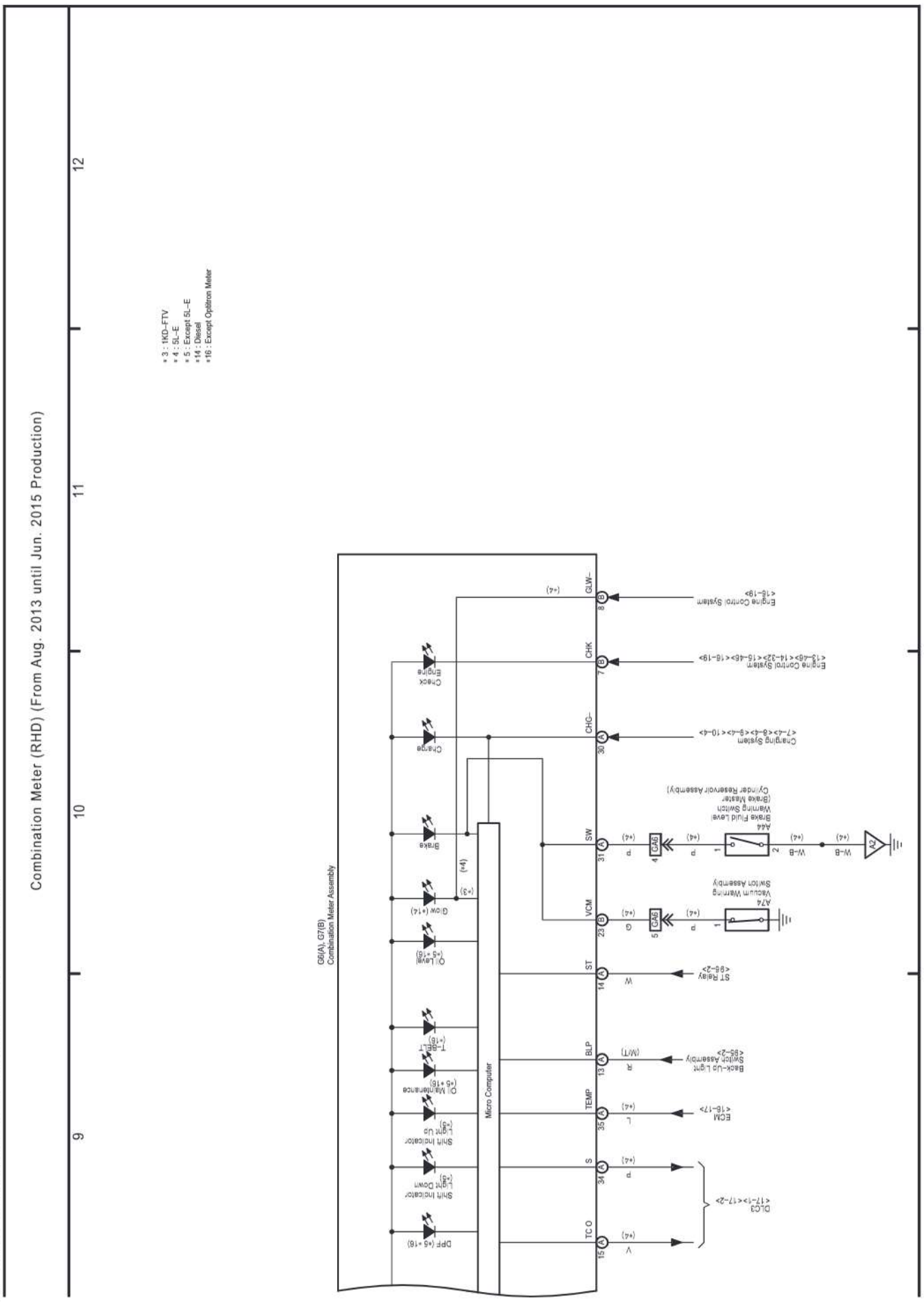

cardiagn.com

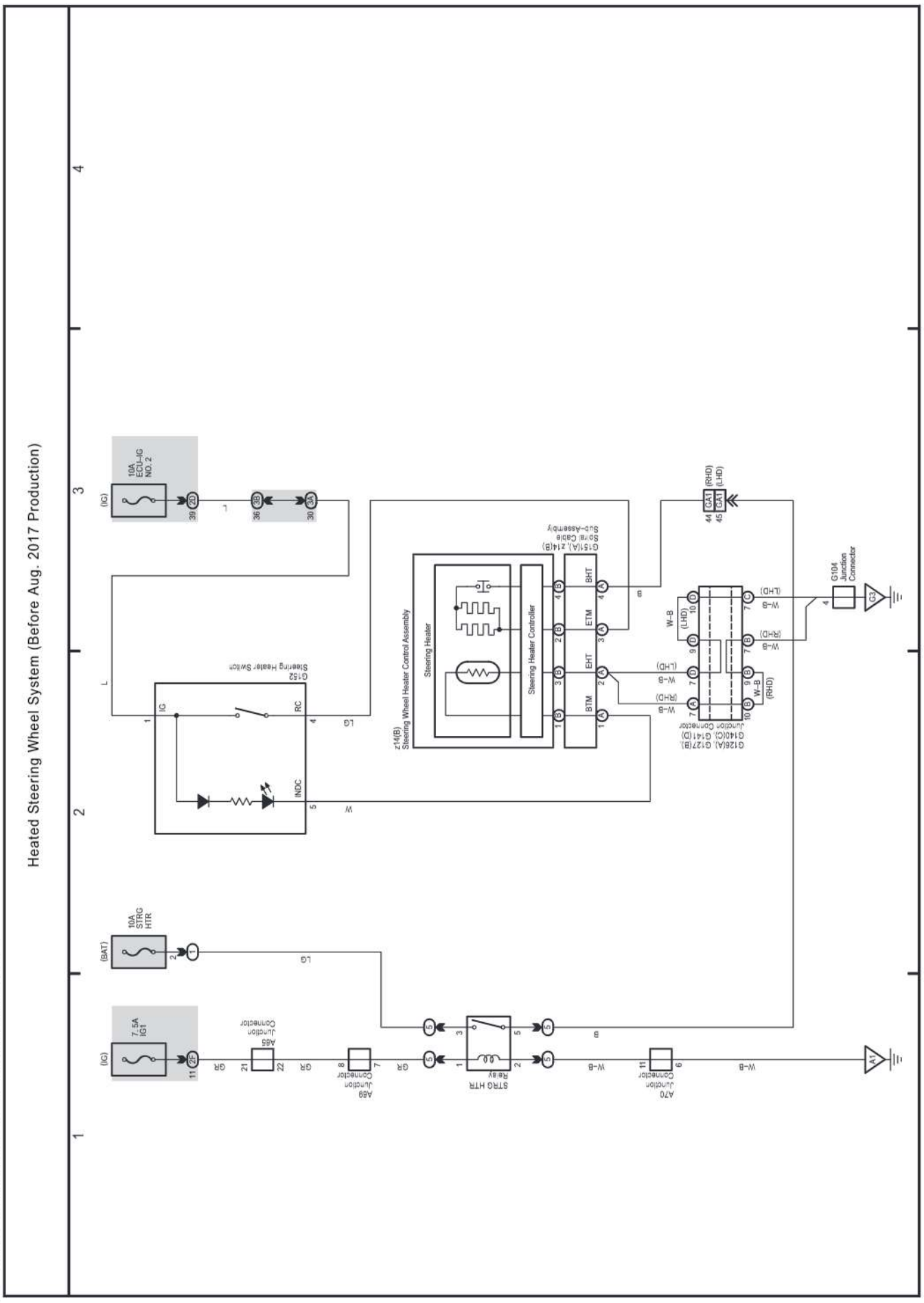

cardiagn.com

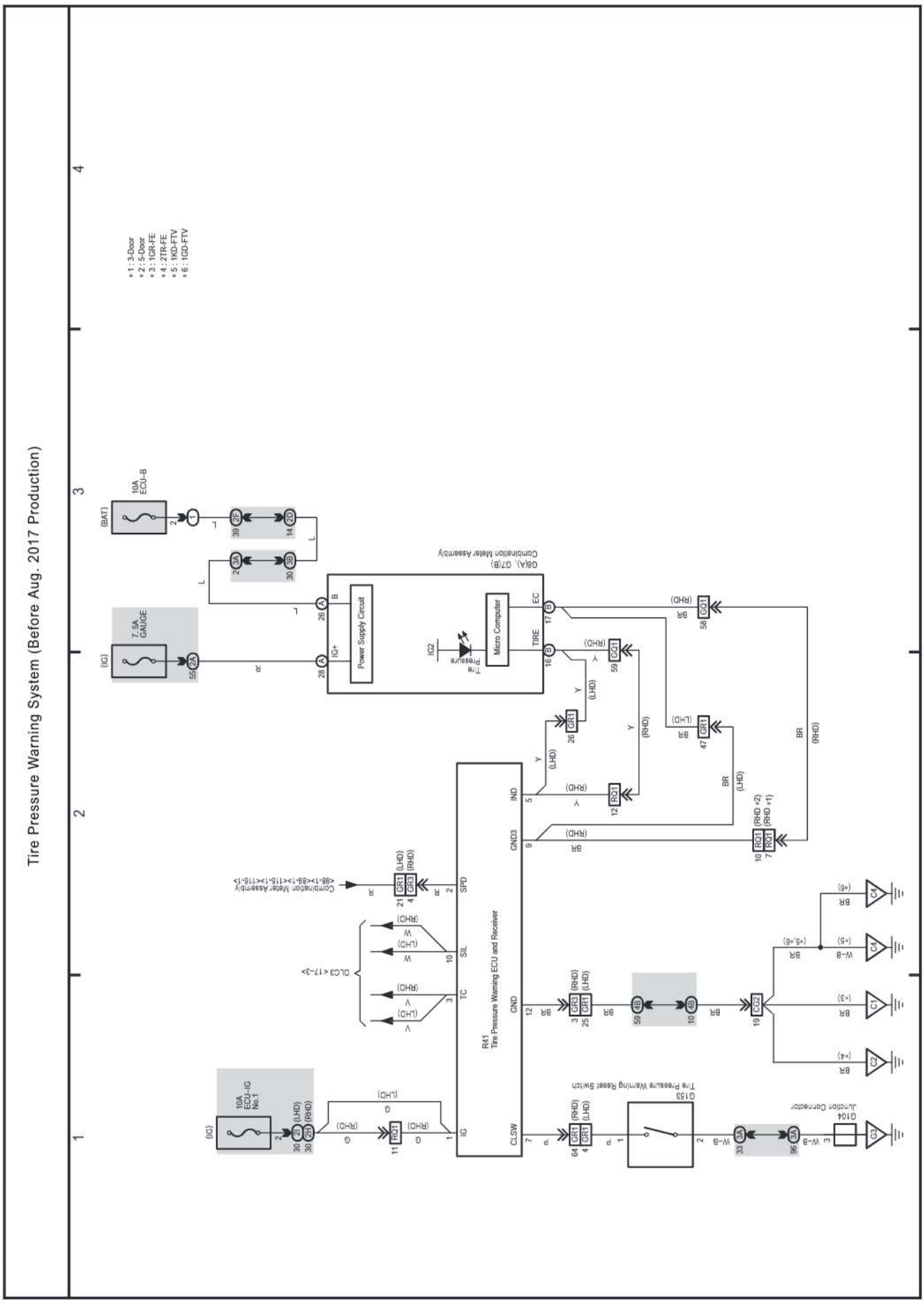

cardiagn.com

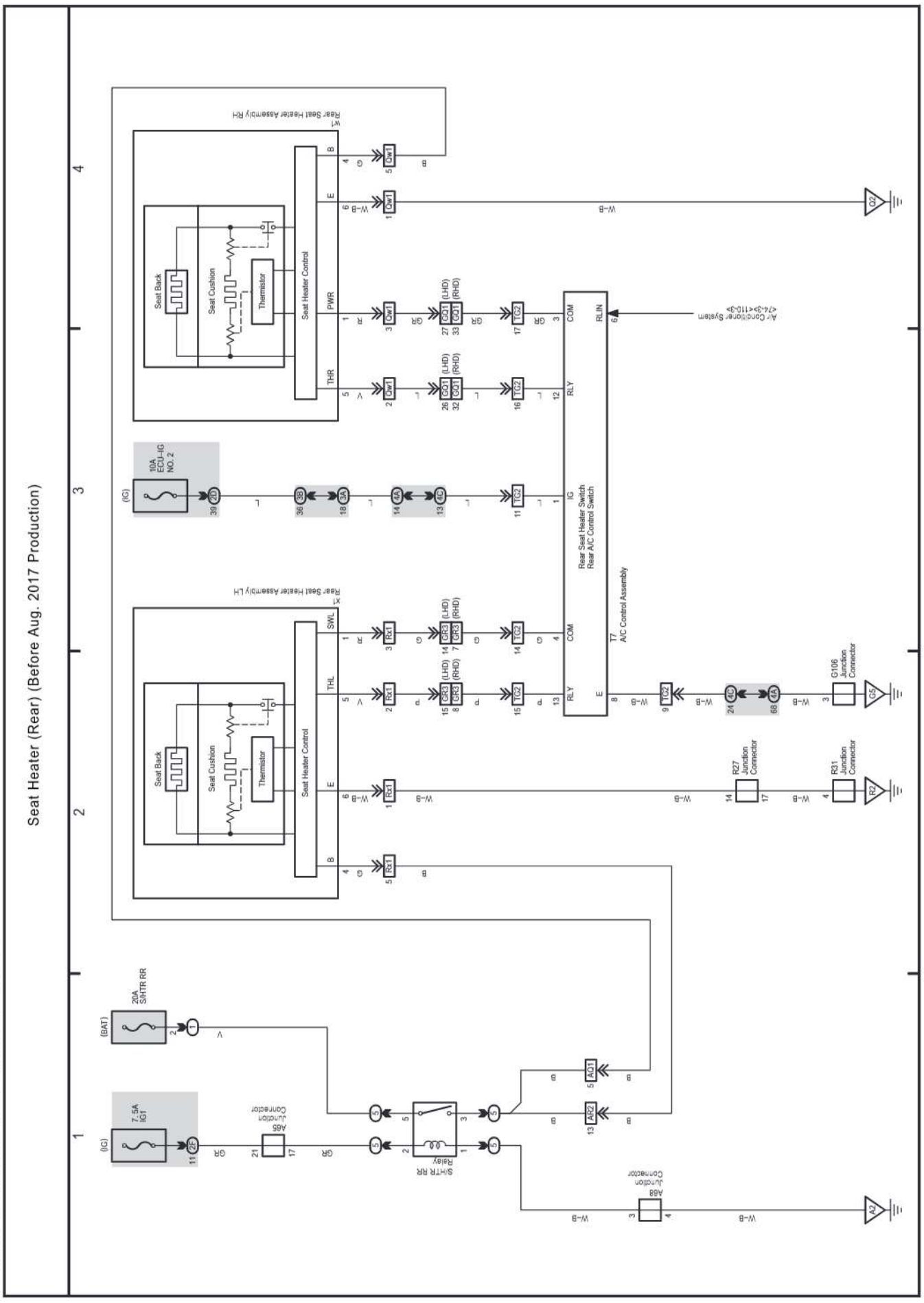

cardiagn.com

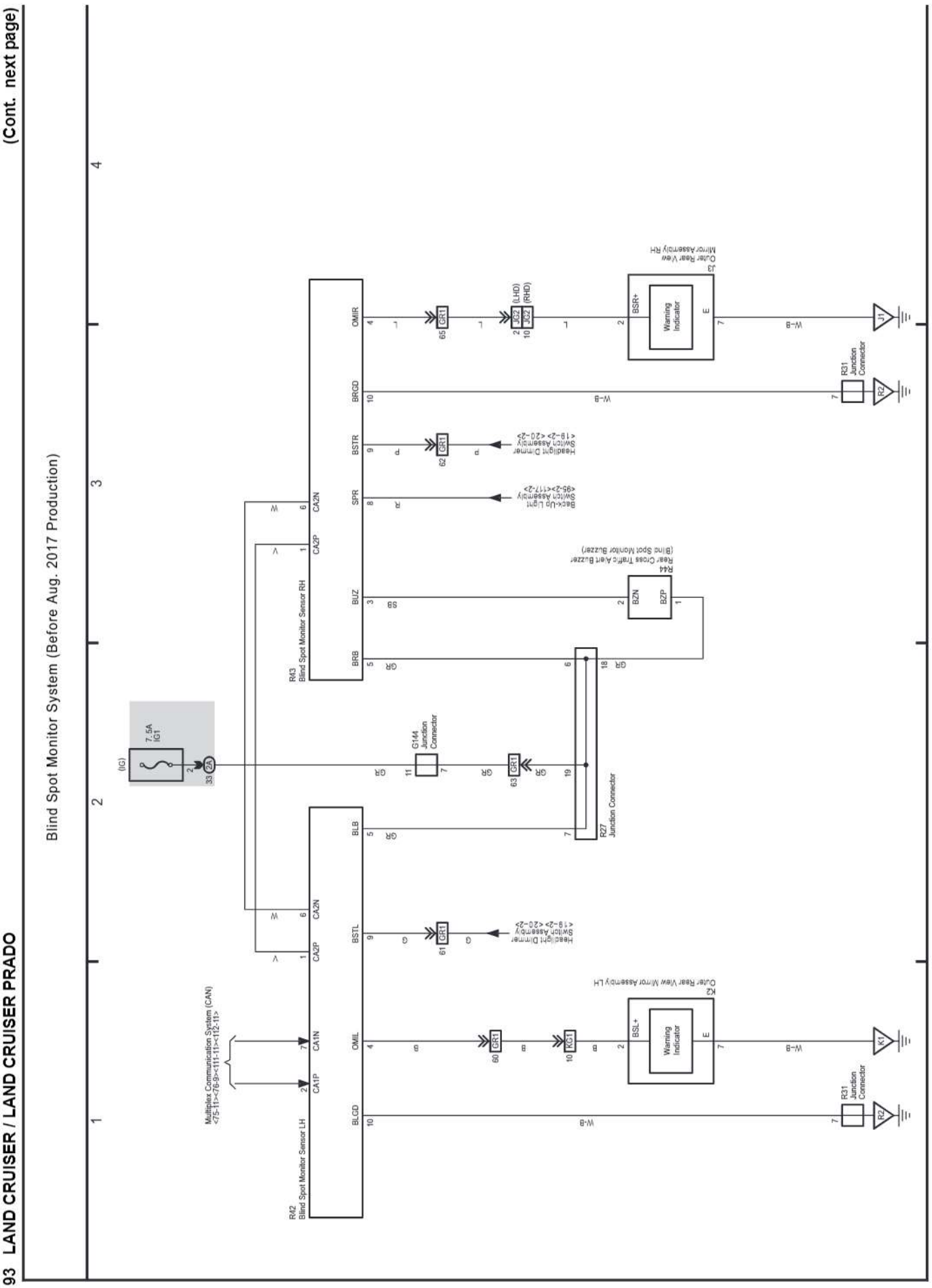

cardiagn.com

Blind Spot Monitor System (Before Aug. 2017 Production)

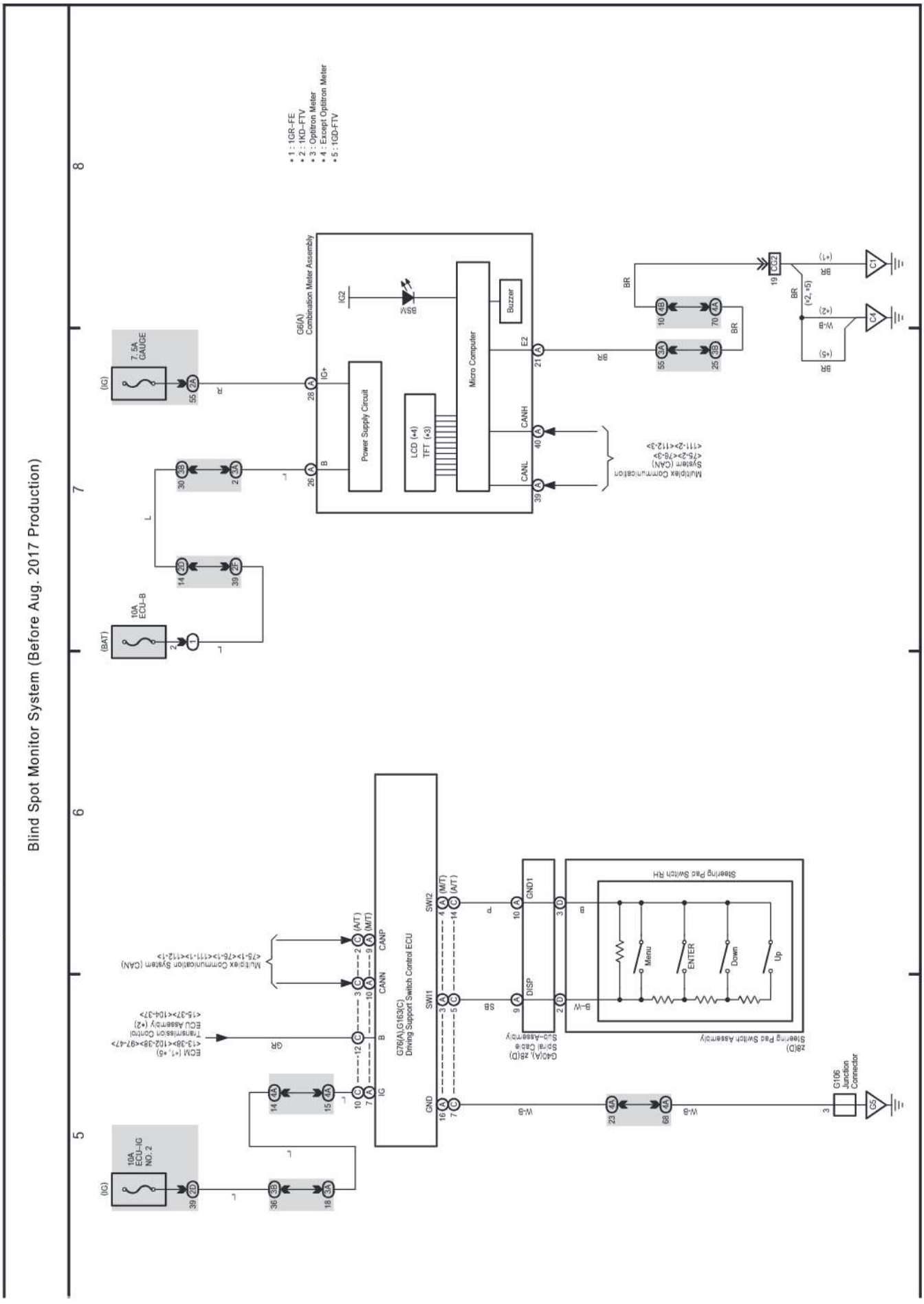

cardiagn.com

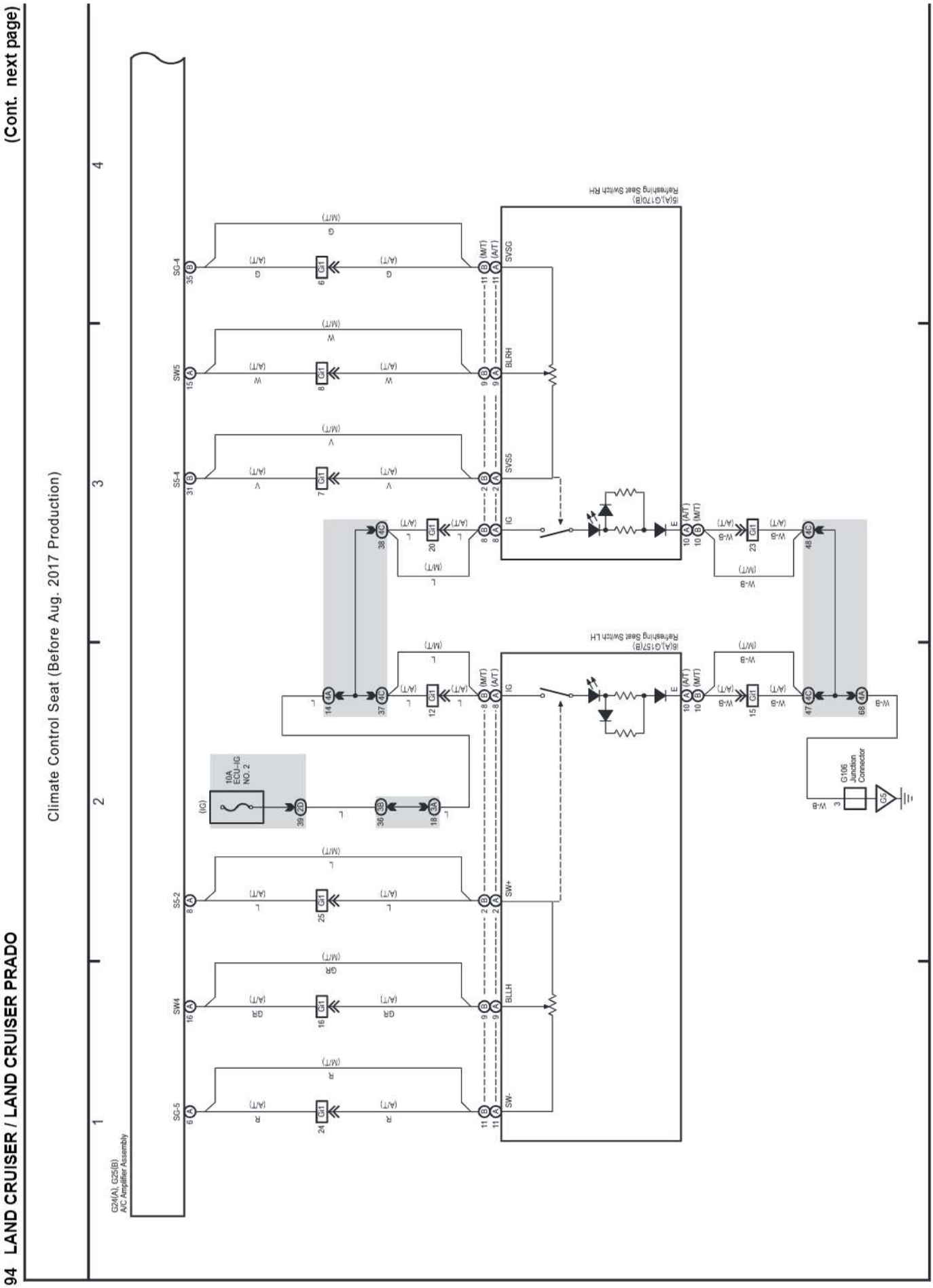

Climate Control Seat (Before Aug. 2017 Production)

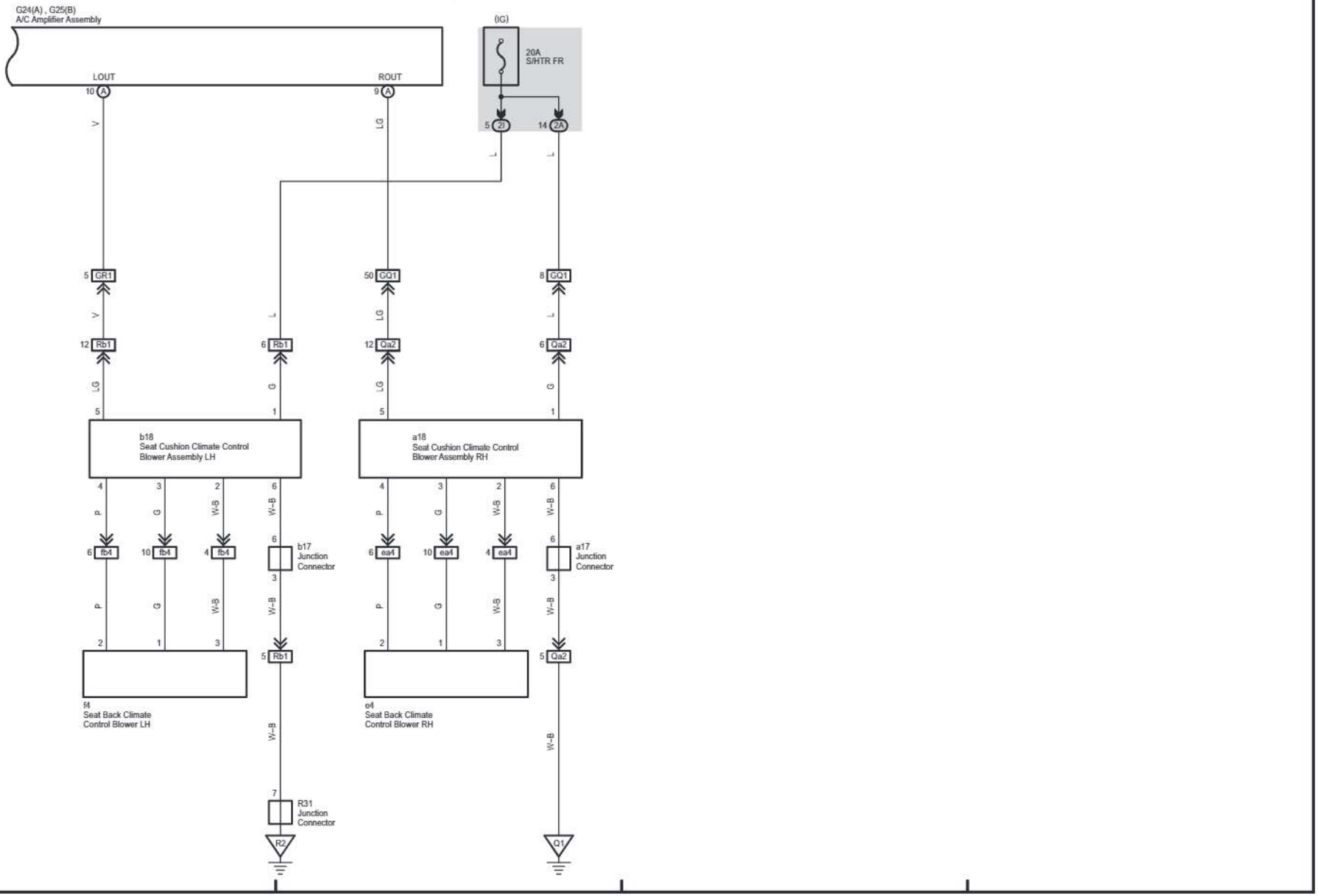

cardiagn.com

cardiagn.com

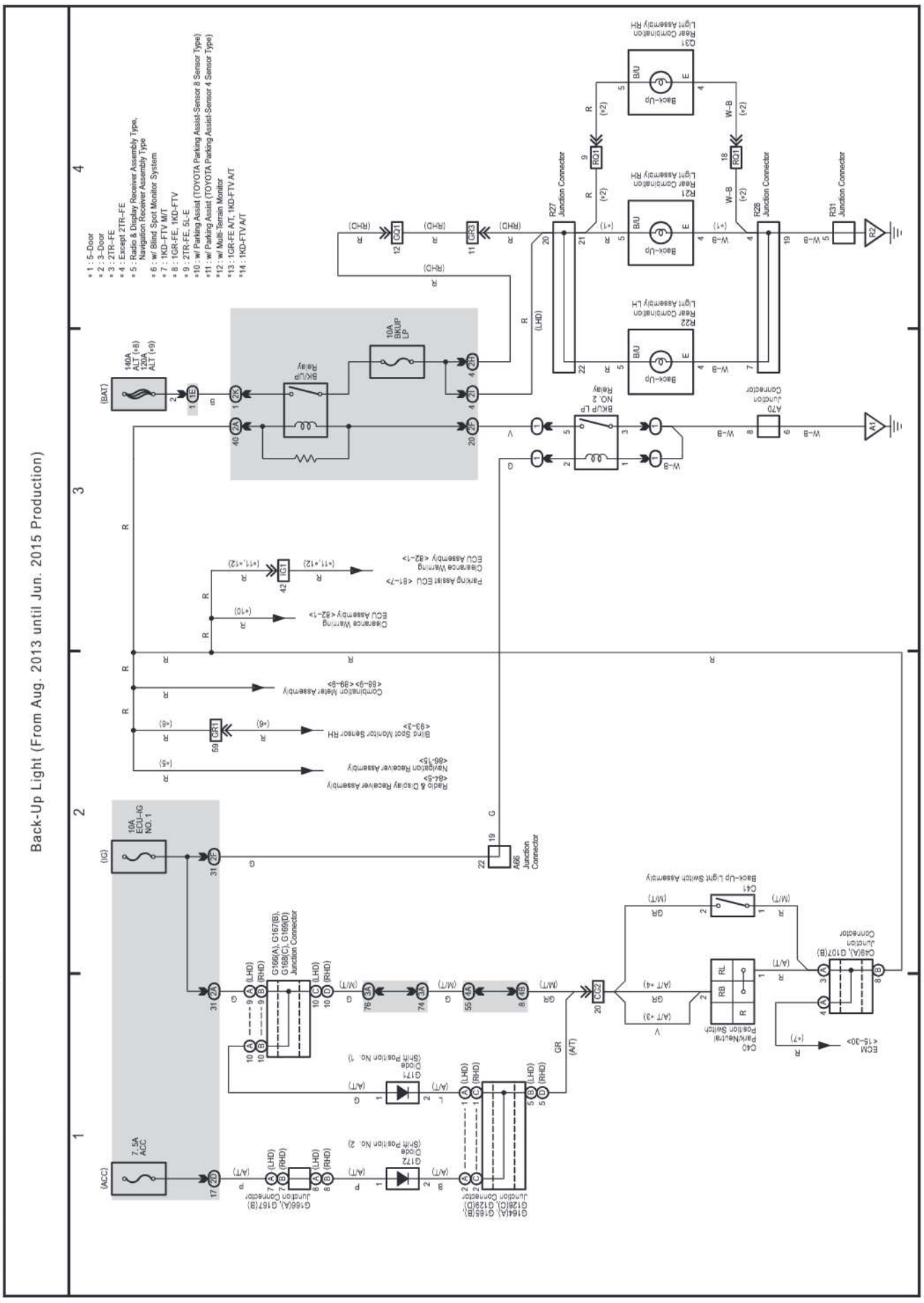

cardiagn.com

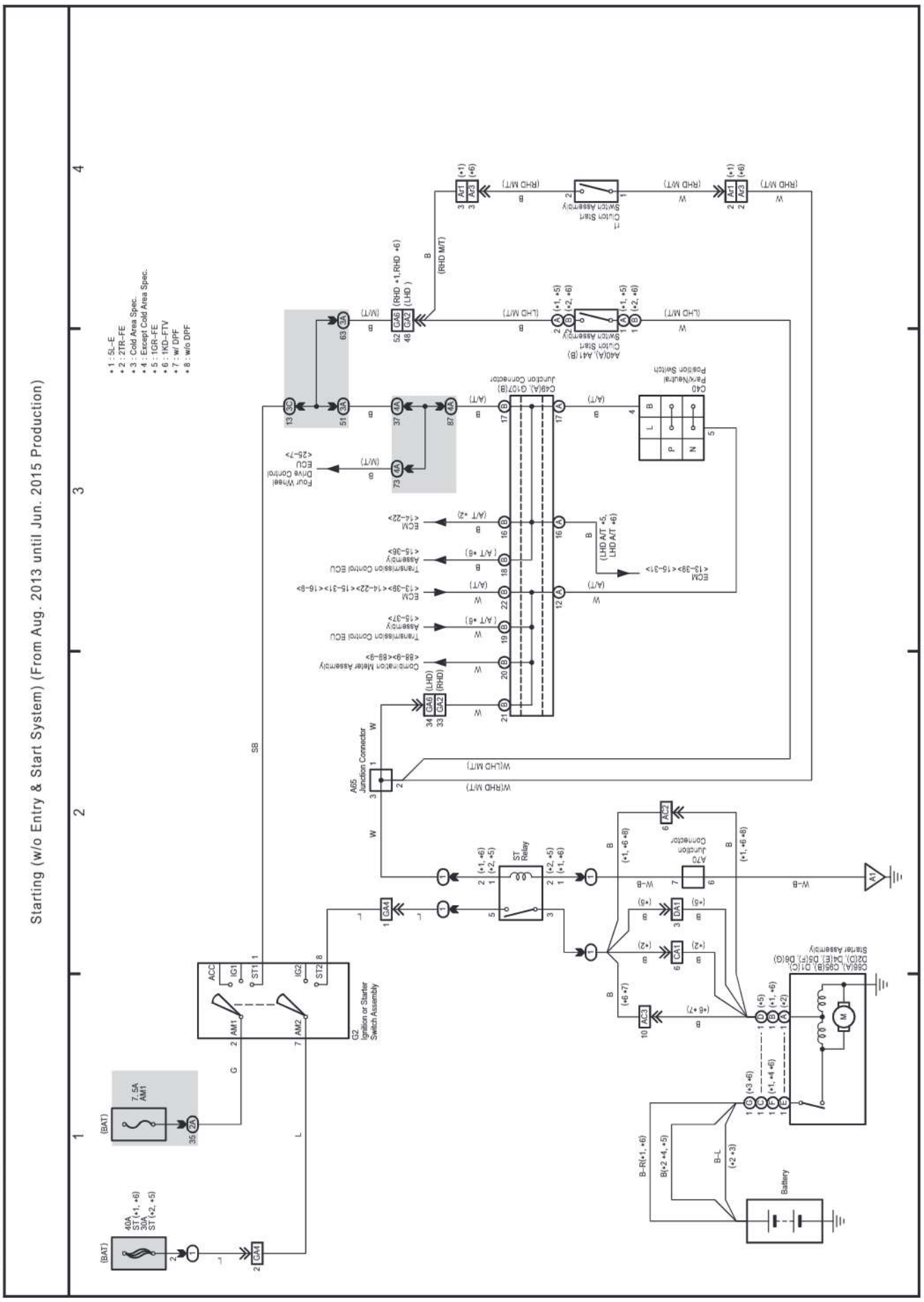

cardiagn.com

M OVERALL ELECTRICAL WIRING DIAGRAM

(Cont. next page)

Cruise Control (1GD-FTV) (Before Aug. 2017 Production), Dynamic Radar Cruise Control (1GD-FTV) (Before Aug. 2017 Production),
Engine Control (1GD-FTV) (Before Aug. 2017 Production), ECT and A/T Indicator (1GD-FTV) (Before Aug. 2017 Production)

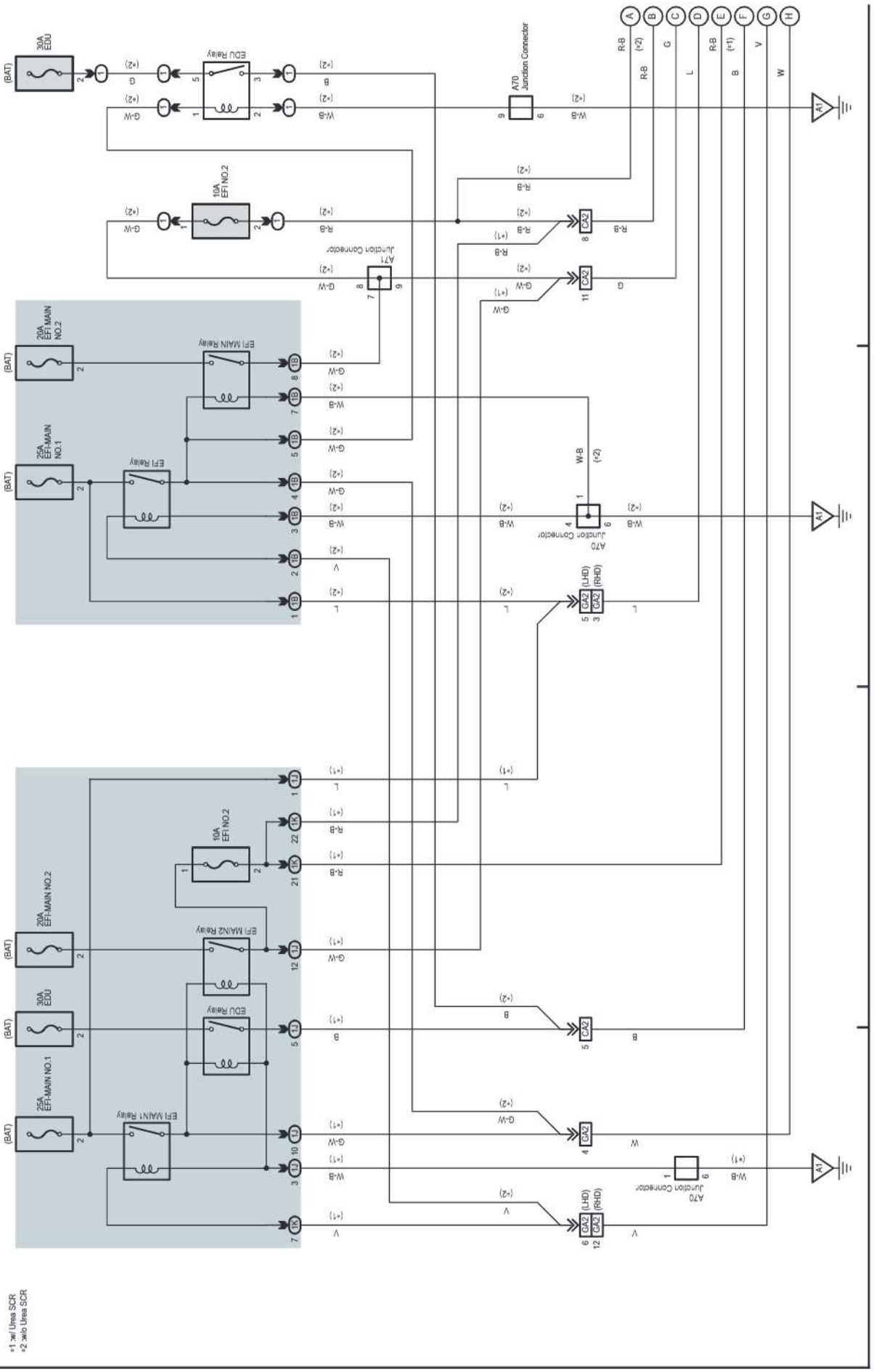

cardiagn.com

97 LAND CRUISER / LAND CRUISER PRADO (Cont'd)

(Cont. next page)

Cruise Control (1GD-FTV) (Before Aug. 2017 Production), Dynamic Radar Cruise Control (1GD-FTV) (Before Aug. 2017 Production),
Engine Control (1GD-FTV) (Before Aug. 2017 Production), ECT and A/T Indicator (1GD-FTV) (Before Aug. 2017 Production)

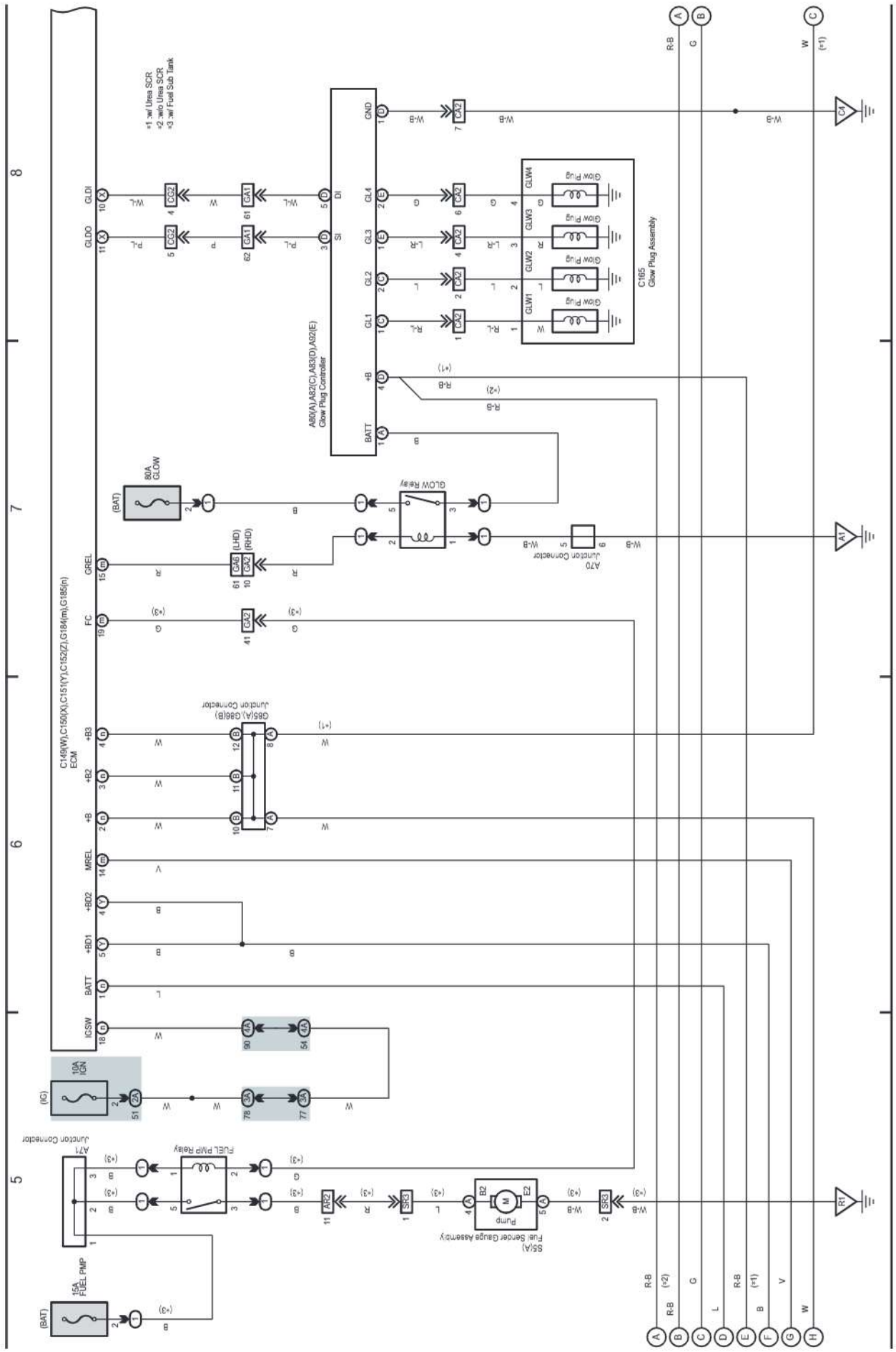

cardiagn.com

(Cont. next page)

Cruise Control (1GD-FTV) (Before Aug. 2017 Production), Dynamic Radar Cruise Control (1GD-FTV) (Before Aug. 2017 Production),
Engine Control (1GD-FTV) (Before Aug. 2017 Production), ECT and A/T Indicator (1GD-FTV) (Before Aug. 2017 Production)

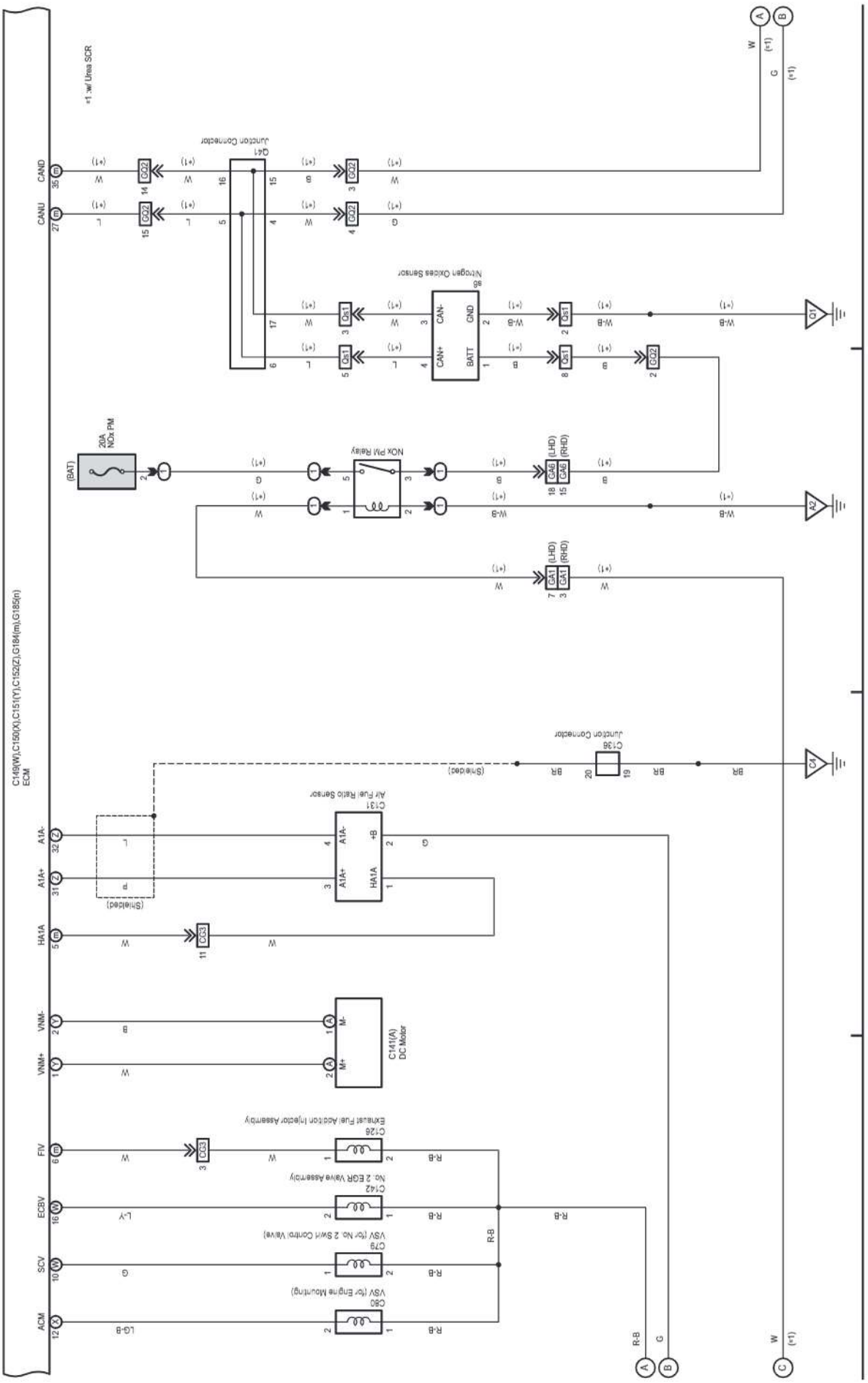

(Cont. next page)

Cruise Control (1GD-FTV) (Before Aug. 2017 Production), Dynamic Radar Cruise Control (1GD-FTV) (Before Aug. 2017 Production),
Engine Control (1GD-FTV) (Before Aug. 2017 Production), ECT and A/T Indicator (1GD-FTV) (Before Aug. 2017 Production)

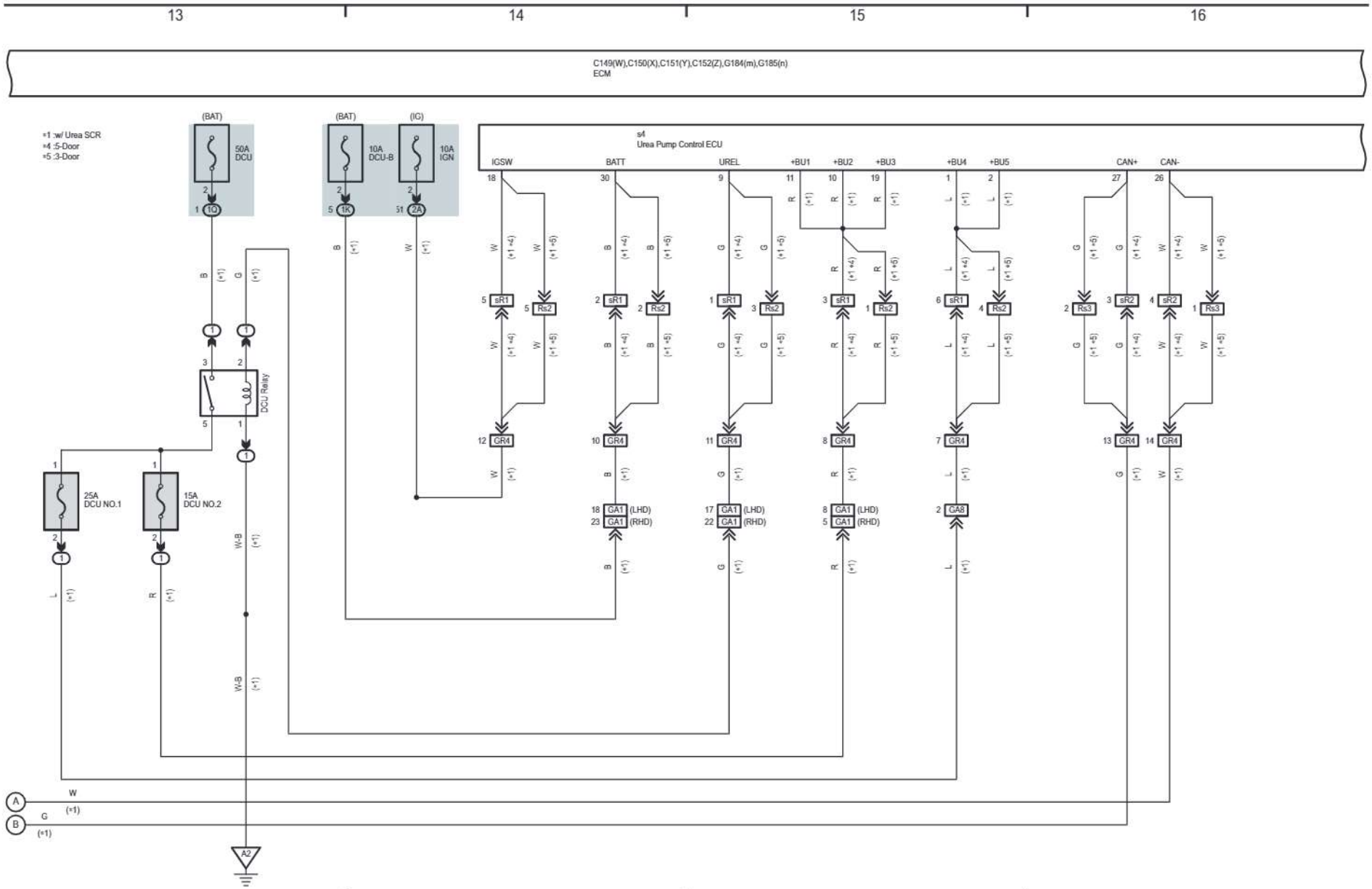

cardiagn.com

cardiagn.com

(Cont. next page)

Cruise Control (1GD-FTV) (Before Aug. 2017 Production), Dynamic Radar Cruise Control (1GD-FTV) (Before Aug. 2017 Production),
Engine Control (1GD-FTV) (Before Aug. 2017 Production), ECT and A/T Indicator (1GD-FTV) (Before Aug. 2017 Production)

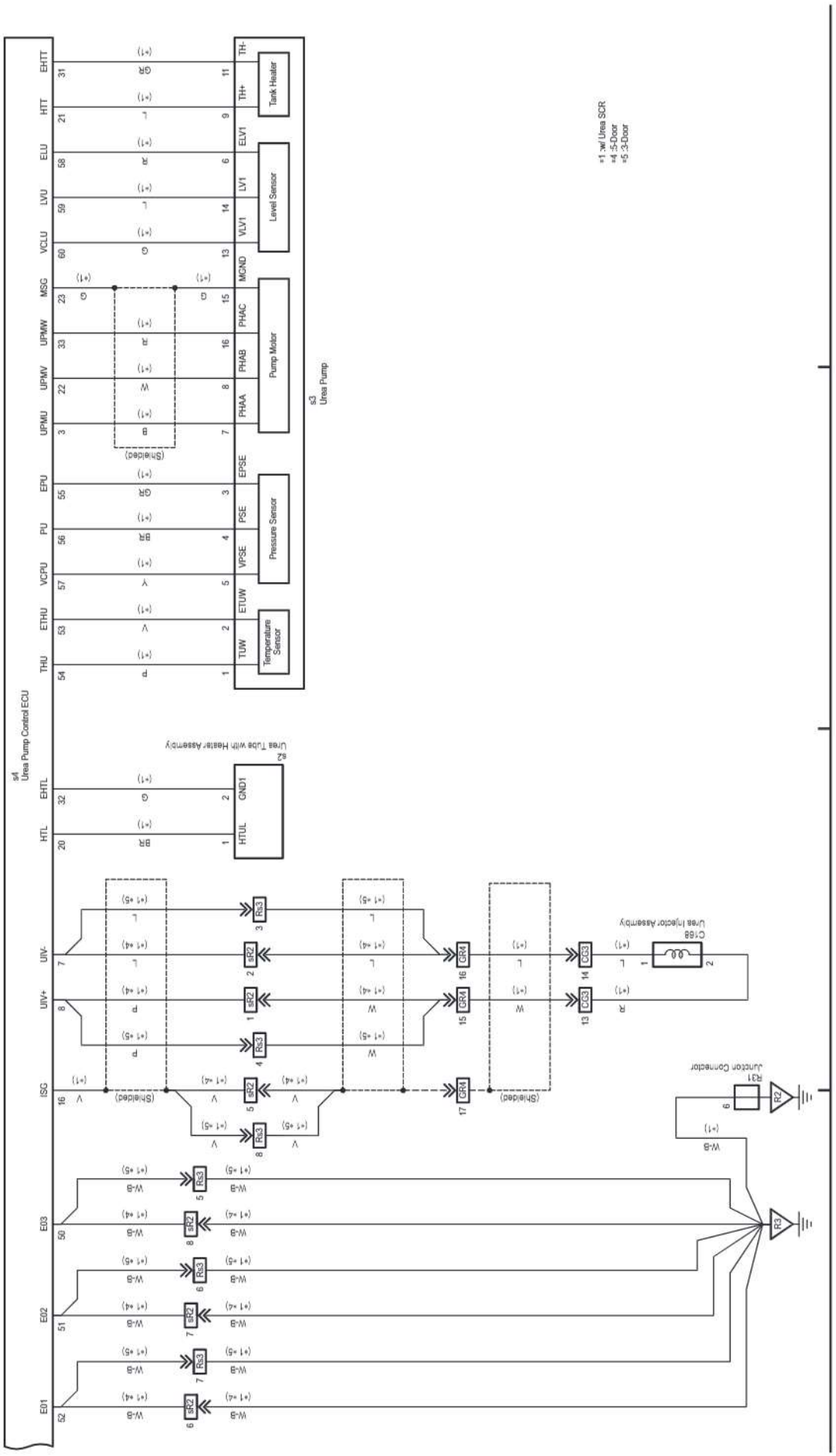

(Cont. next page)

Cruise Control (1GD-FTV) (Before Aug. 2017 Production), Dynamic Radar Cruise Control (1GD-FTV) (Before Aug. 2017 Production),
Engine Control (1GD-FTV) (Before Aug. 2017 Production), ECT and A/T Indicator (1GD-FTV) (Before Aug. 2017 Production)

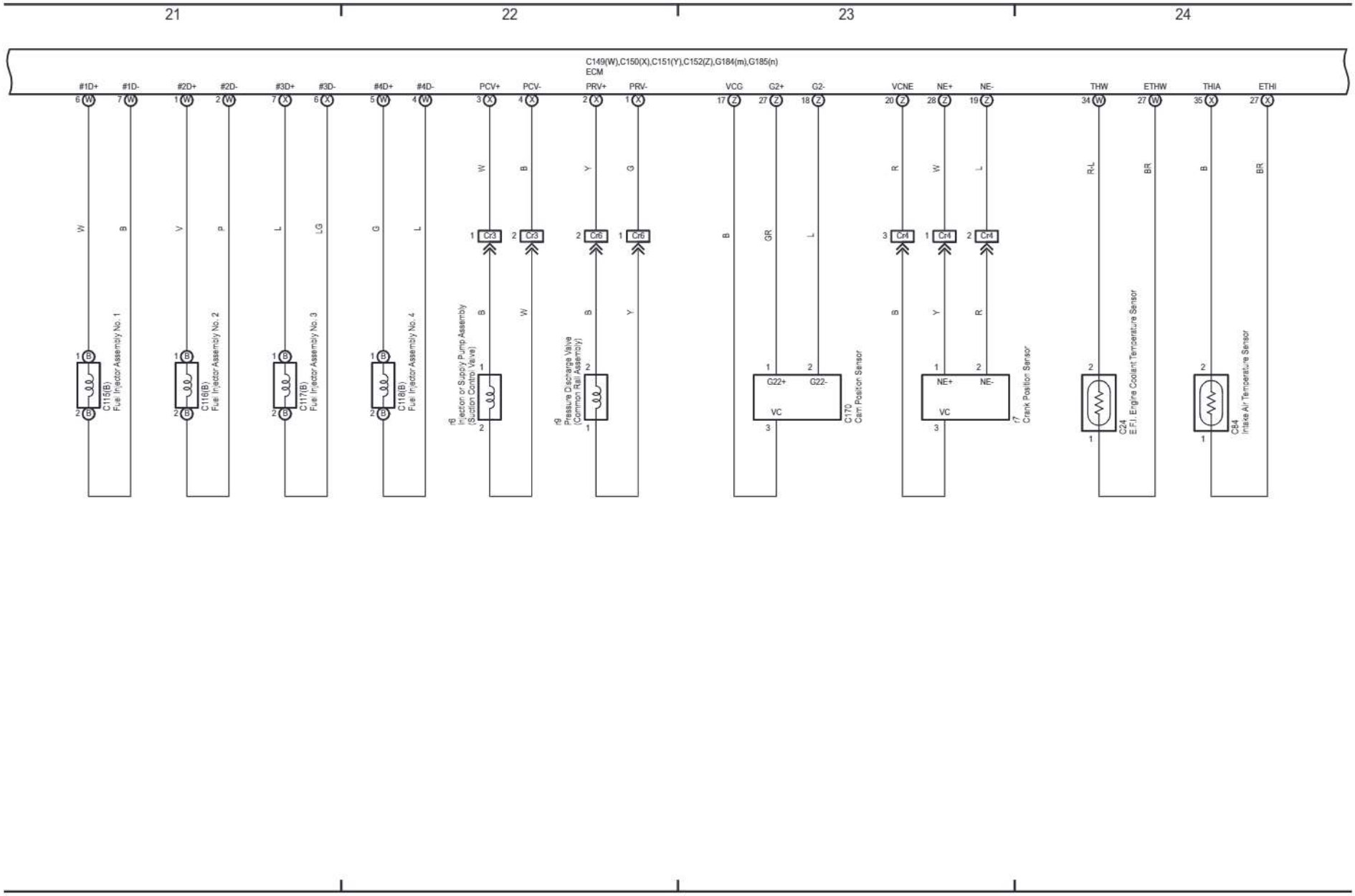

cardiagn.com

cardiagn.com

(Cont. next page)

Cruise Control (1GD-FTV) (Before Aug. 2017 Production), Dynamic Radar Cruise Control (1GD-FTV) (Before Aug. 2017 Production),
Engine Control (1GD-FTV) (Before Aug. 2017 Production), ECT and A/T Indicator (1GD-FTV) (Before Aug. 2017 Production)

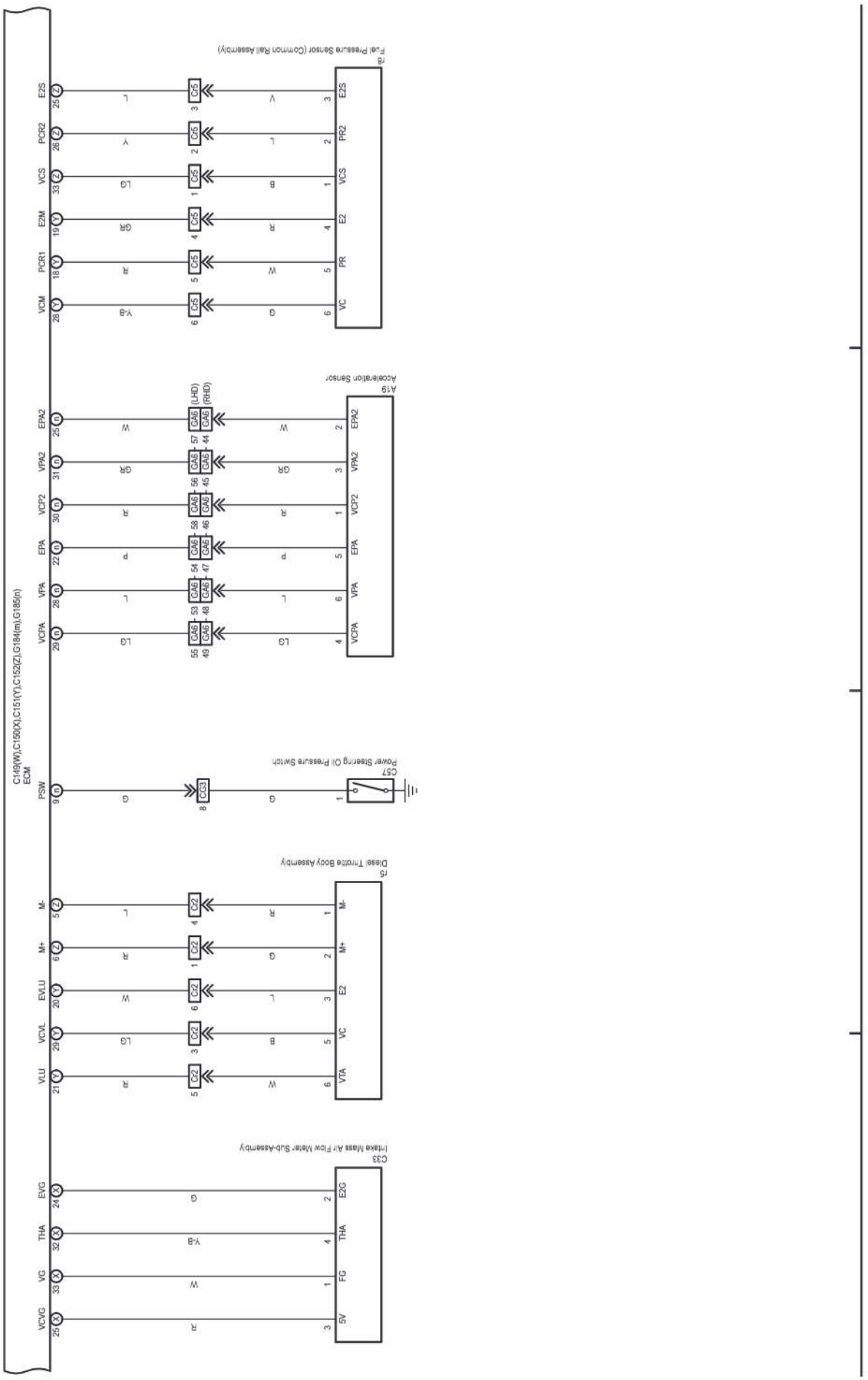

(Cont. next page)

Cruise Control (1GD-FTV) (Before Aug. 2017 Production), Dynamic Radar Cruise Control (1GD-FTV) (Before Aug. 2017 Production),
Engine Control (1GD-FTV) (Before Aug. 2017 Production), ECT and A/T Indicator (1GD-FTV) (Before Aug. 2017 Production)

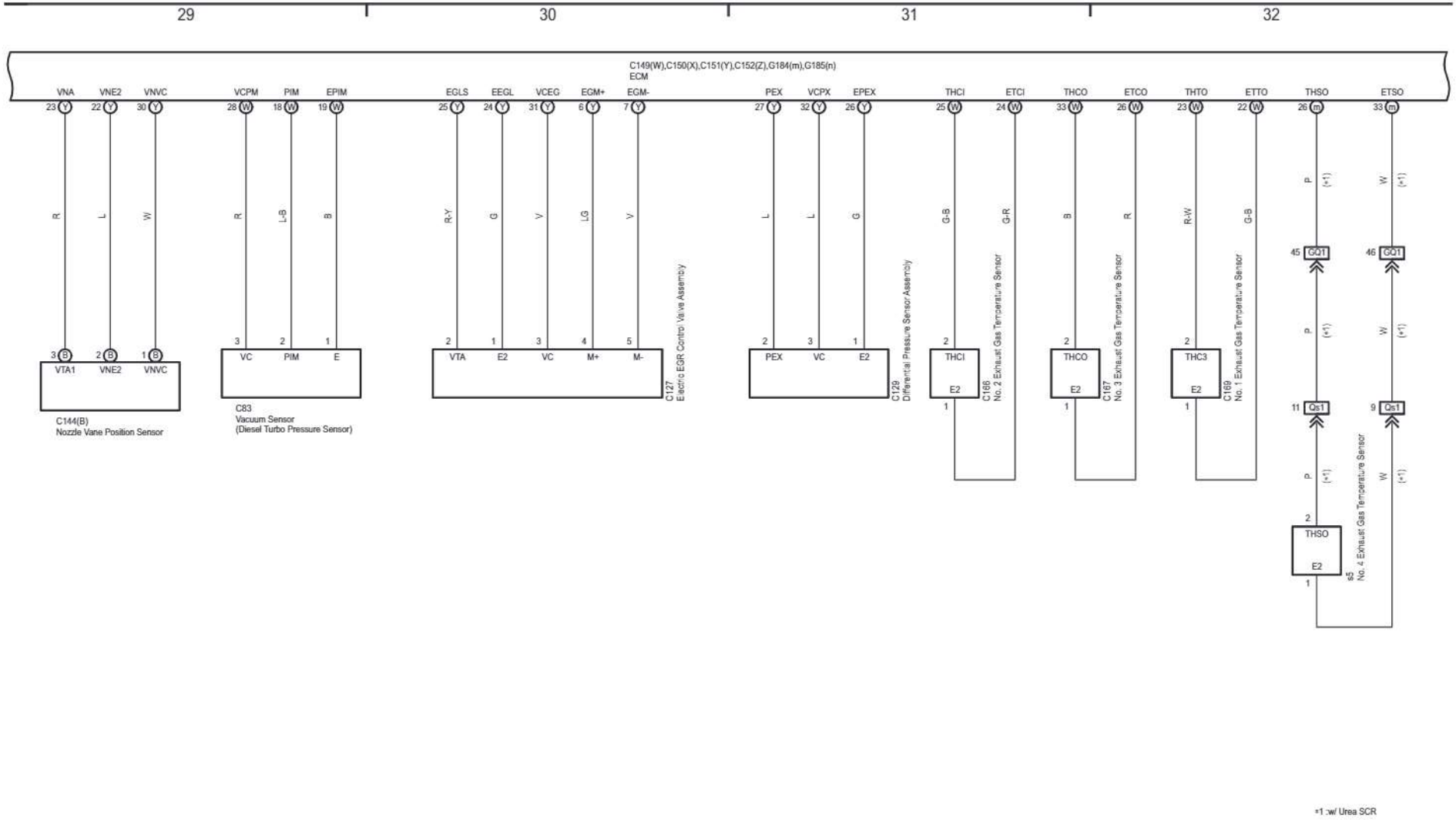

cardiagn.com

cardiagn.com

(Cont. next page)

Cruise Control (1GD-FTV) (Before Aug. 2017 Production), Dynamic Radar Cruise Control (1GD-FTV) (Before Aug. 2017 Production),
Engine Control (1GD-FTV) (Before Aug. 2017 Production), ECT and A/T Indicator (1GD-FTV) (Before Aug. 2017 Production)

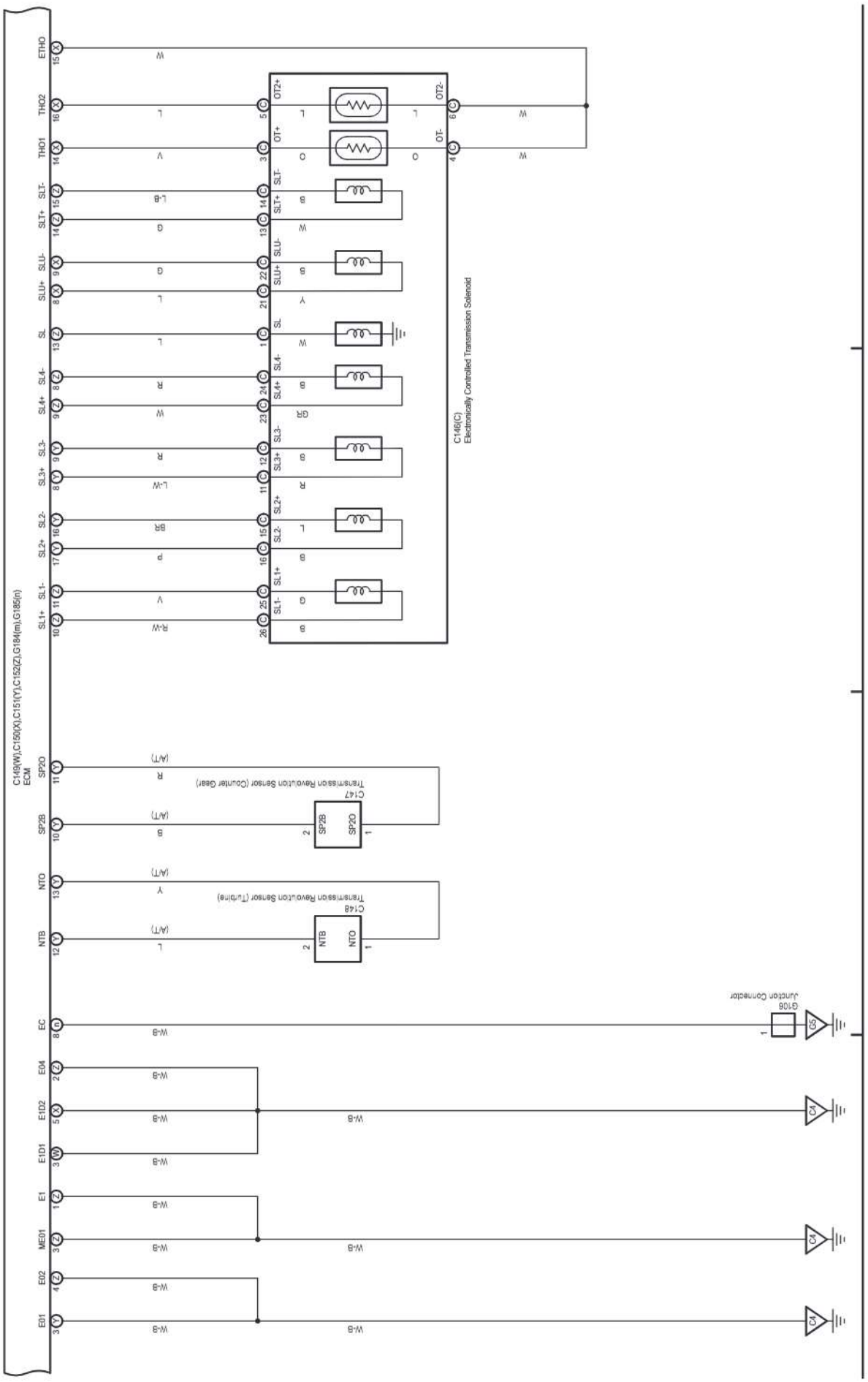

(Cont. next page)

Cruise Control (1GD-FTV) (Before Aug. 2017 Production), Dynamic Radar Cruise Control (1GD-FTV) (Before Aug. 2017 Production), Engine Control (1GD-FTV) (Before Aug. 2017 Production), ECT and A/T Indicator (1GD-FTV) (Before Aug. 2017 Production)

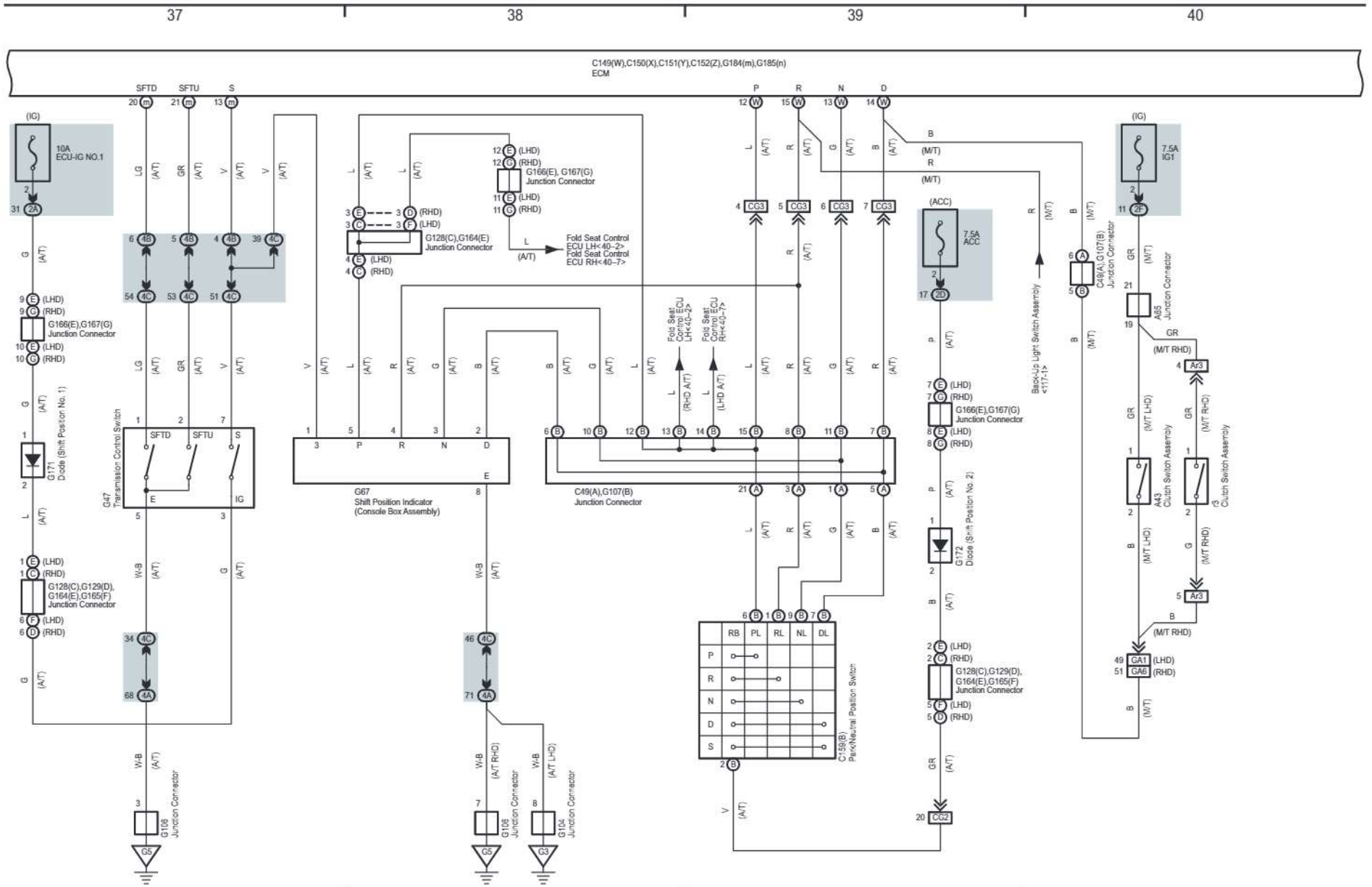

cardiagn.com

cardiagn.com

(Cont. next page)

Cruise Control (1GD-FTV) (Before Aug. 2017 Production), Dynamic Radar Cruise Control (1GD-FTV) (Before Aug. 2017 Production),
Engine Control (1GD-FTV) (Before Aug. 2017 Production), ECT and A/T Indicator (1GD-FTV) (Before Aug. 2017 Production)

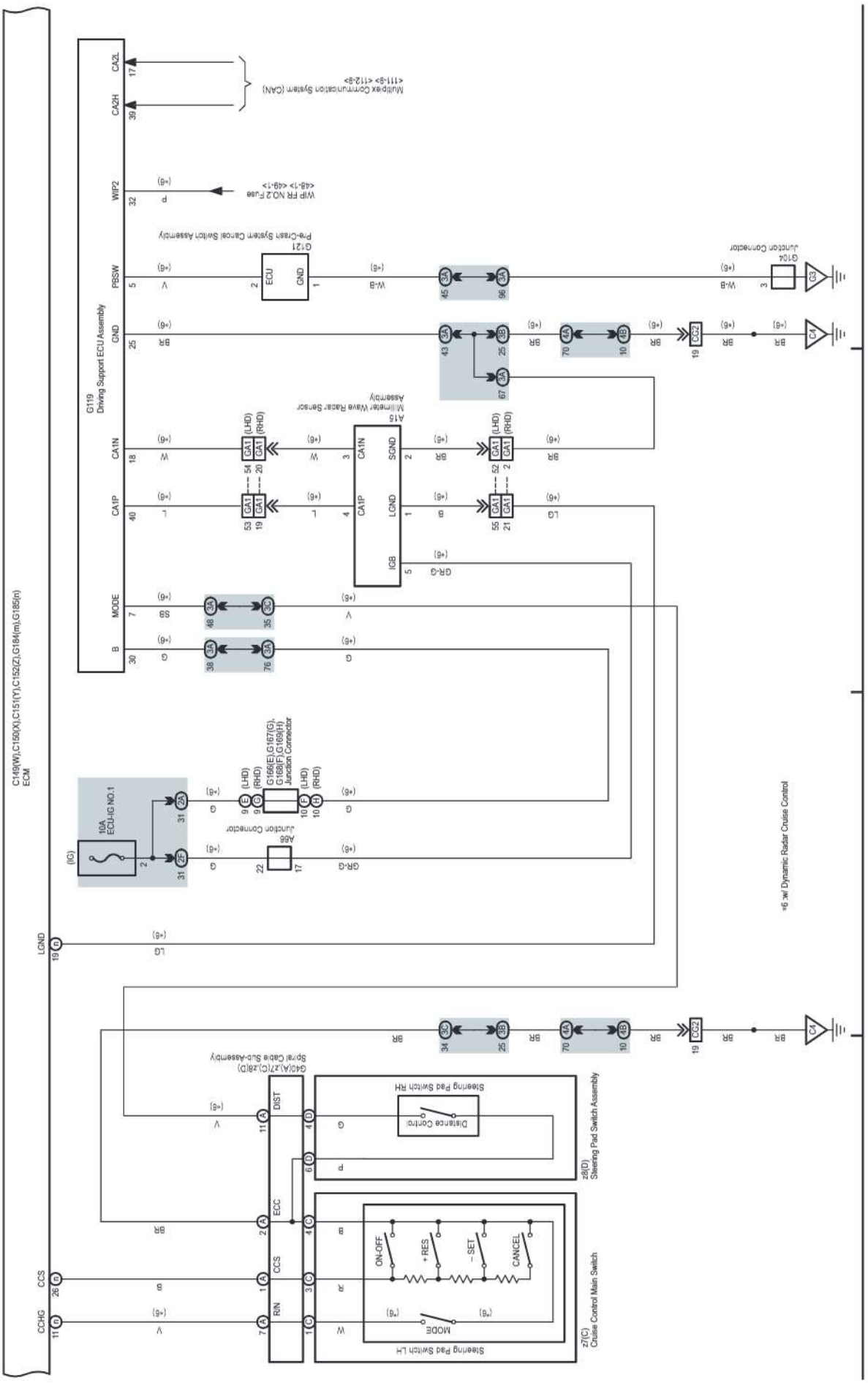

cardiagn.com

97 LAND CRUISER / LAND CRUISER PRADO (Cont'd)

(Cont. next page)

Cruise Control (1GD-FTV) (Before Aug. 2017 Production), Dynamic Radar Cruise Control (1GD-FTV) (Before Aug. 2017 Production),
Engine Control (1GD-FTV) (Before Aug. 2017 Production), ECT and A/T Indicator (1GD-FTV) (Before Aug. 2017 Production)

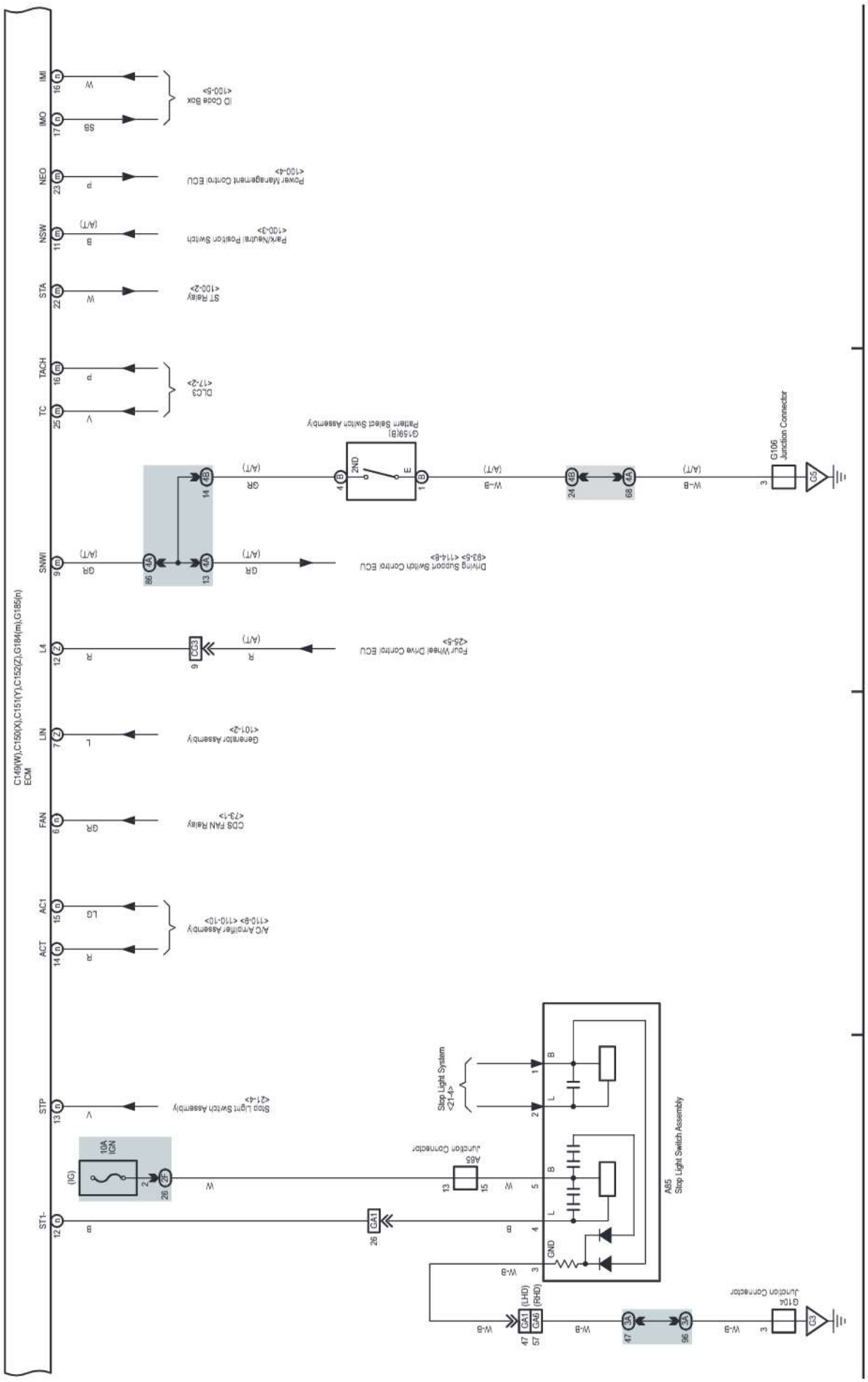

cardiagn.com

Cruise Control (1GD-FTV) (Before Aug. 2017 Production), Dynamic Radar Cruise Control (1GD-FTV) (Before Aug. 2017 Production),
Engine Control (1GD-FTV) (Before Aug. 2017 Production), ECT and A/T Indicator (1GD-FTV) (Before Aug. 2017 Production)

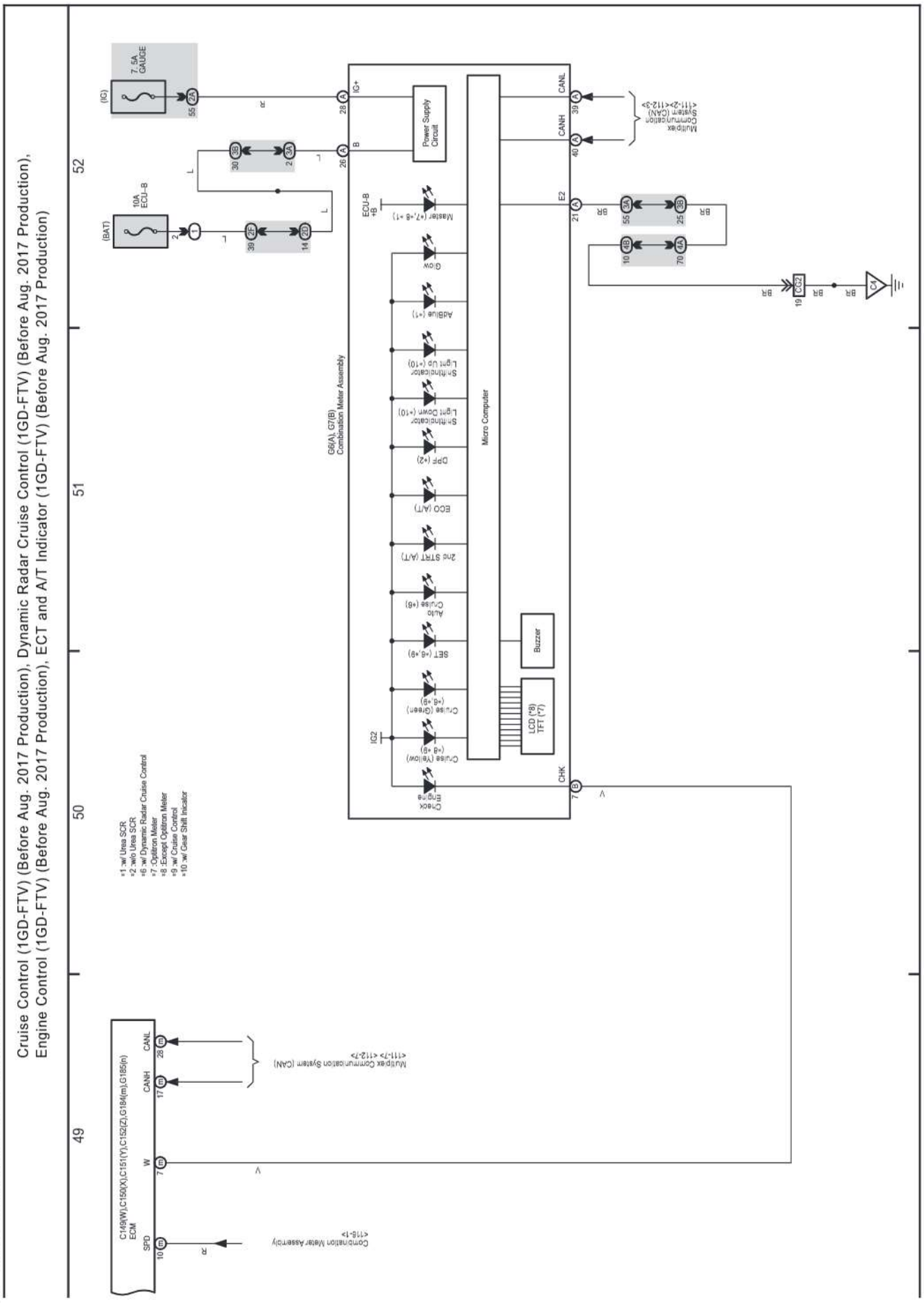

cardiagn.com

(Cont. next page)

Power Source (1GR-FE, 2TR-FE, 1KD-FTV, 5L-E, 1GD-FTV w/o Urea SCR) (From Jun. 2015 until Aug. 2017 Production)

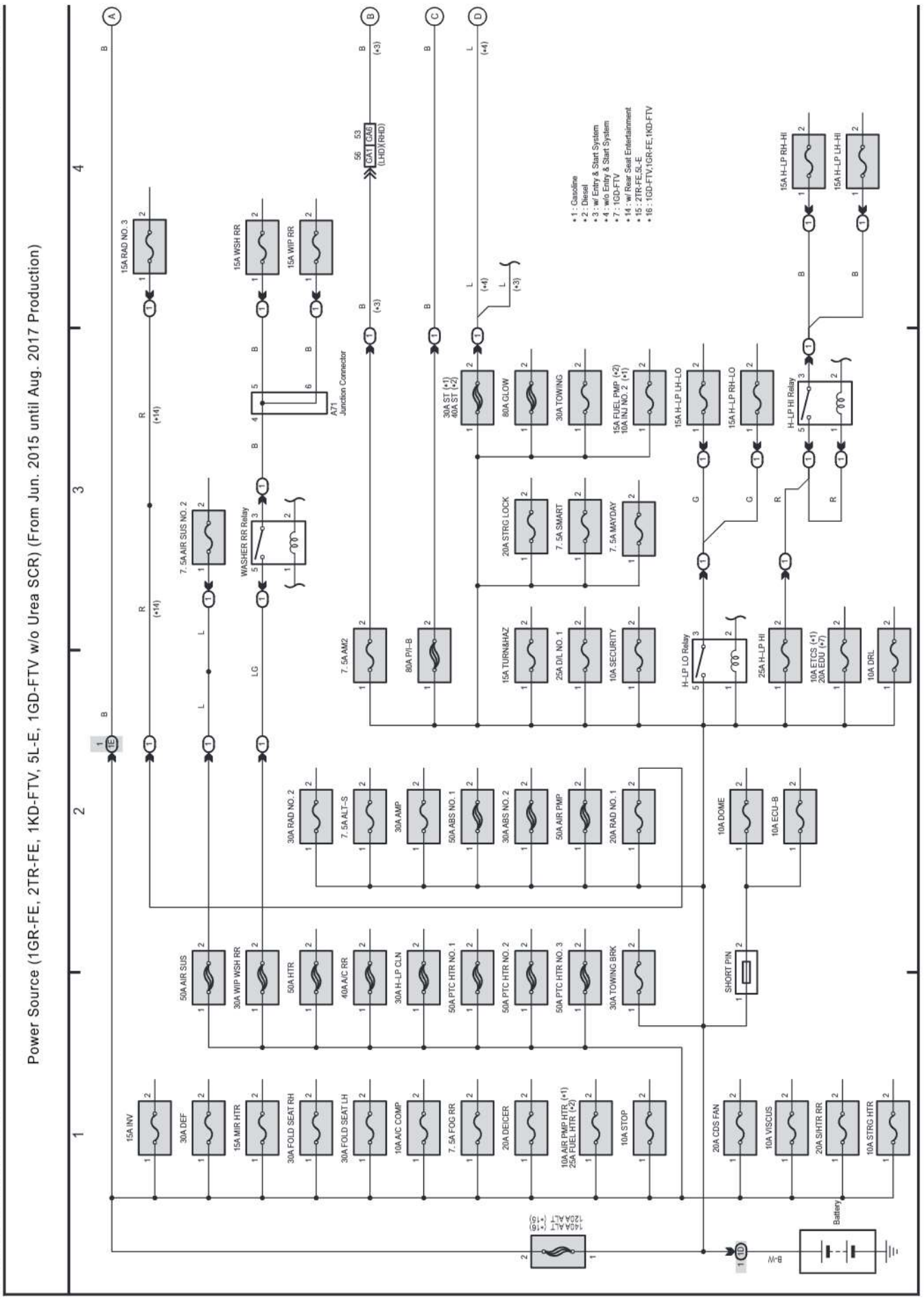

(Cont. next page)

Power Source (1GR-FE, 2TR-FE, 1KD-FTV, 5L-E, 1GD-FTV w/o Urea SCR) (From Jun. 2015 until Aug. 2017 Production)

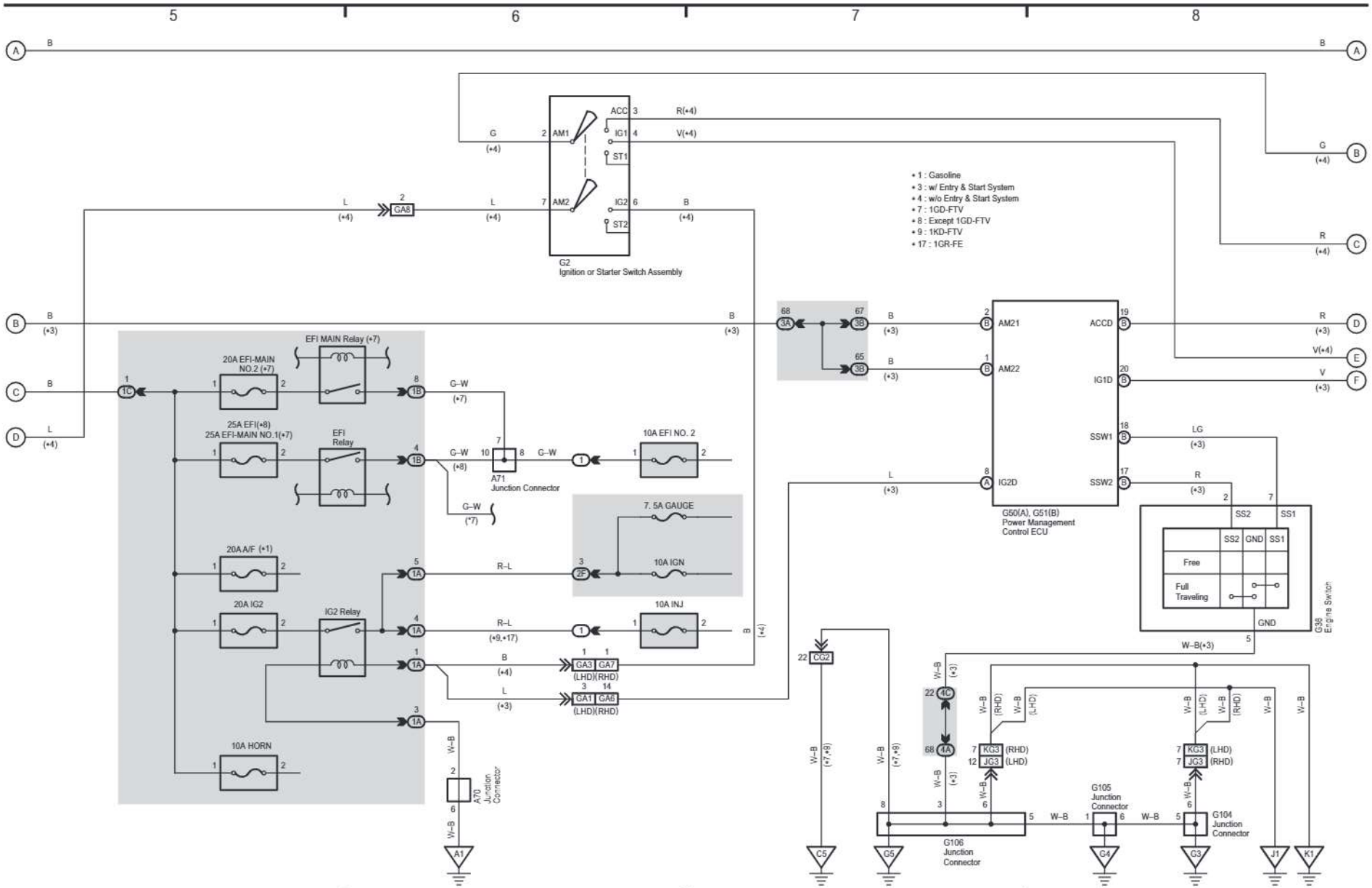

cardiagn.com

cardiagn.com

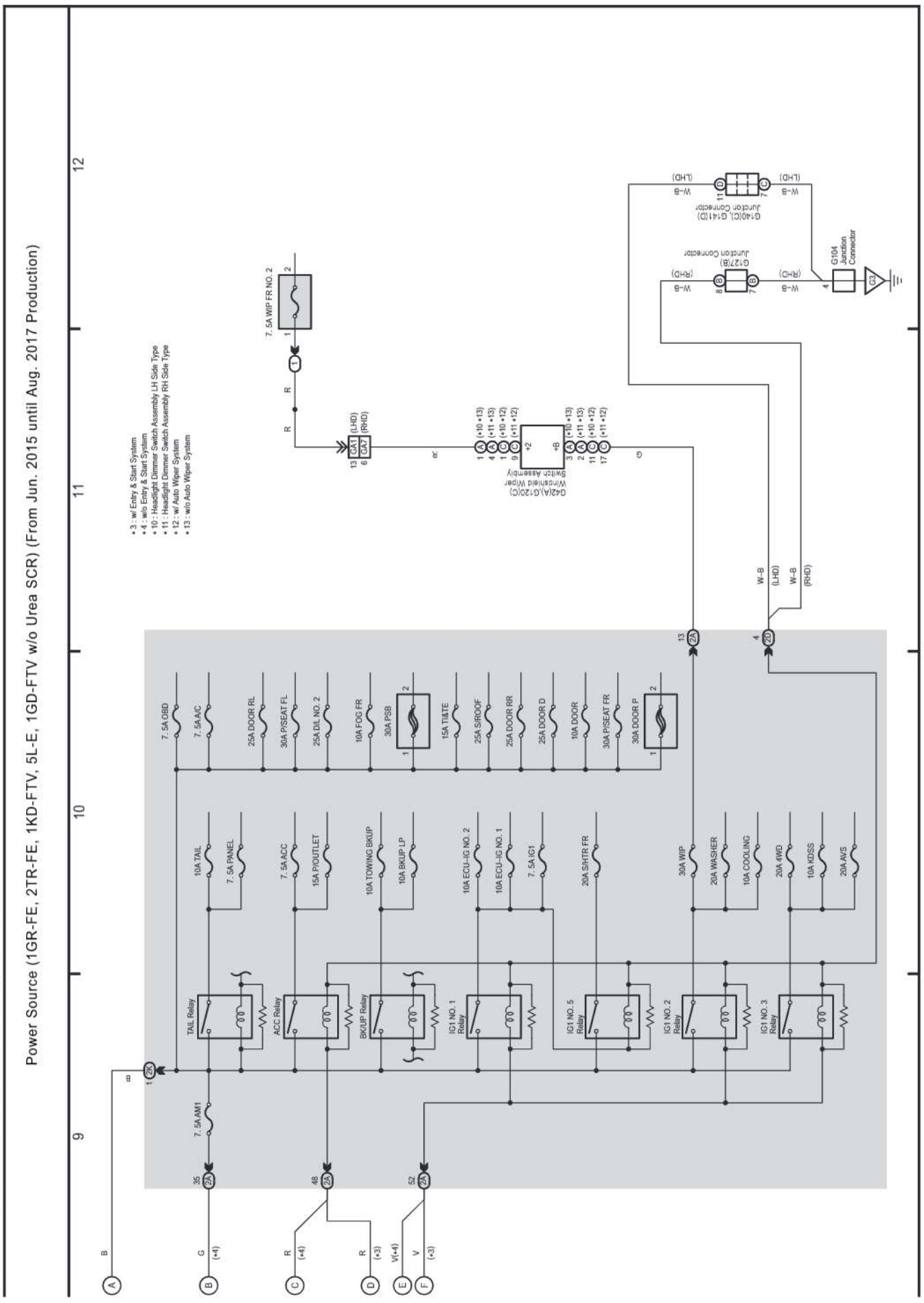

cardiagn.com

(Cont. next page)

Power Source (1GD-FTV w/ Urea SCR) (From Jun. 2015 until Aug. 2017 Production)

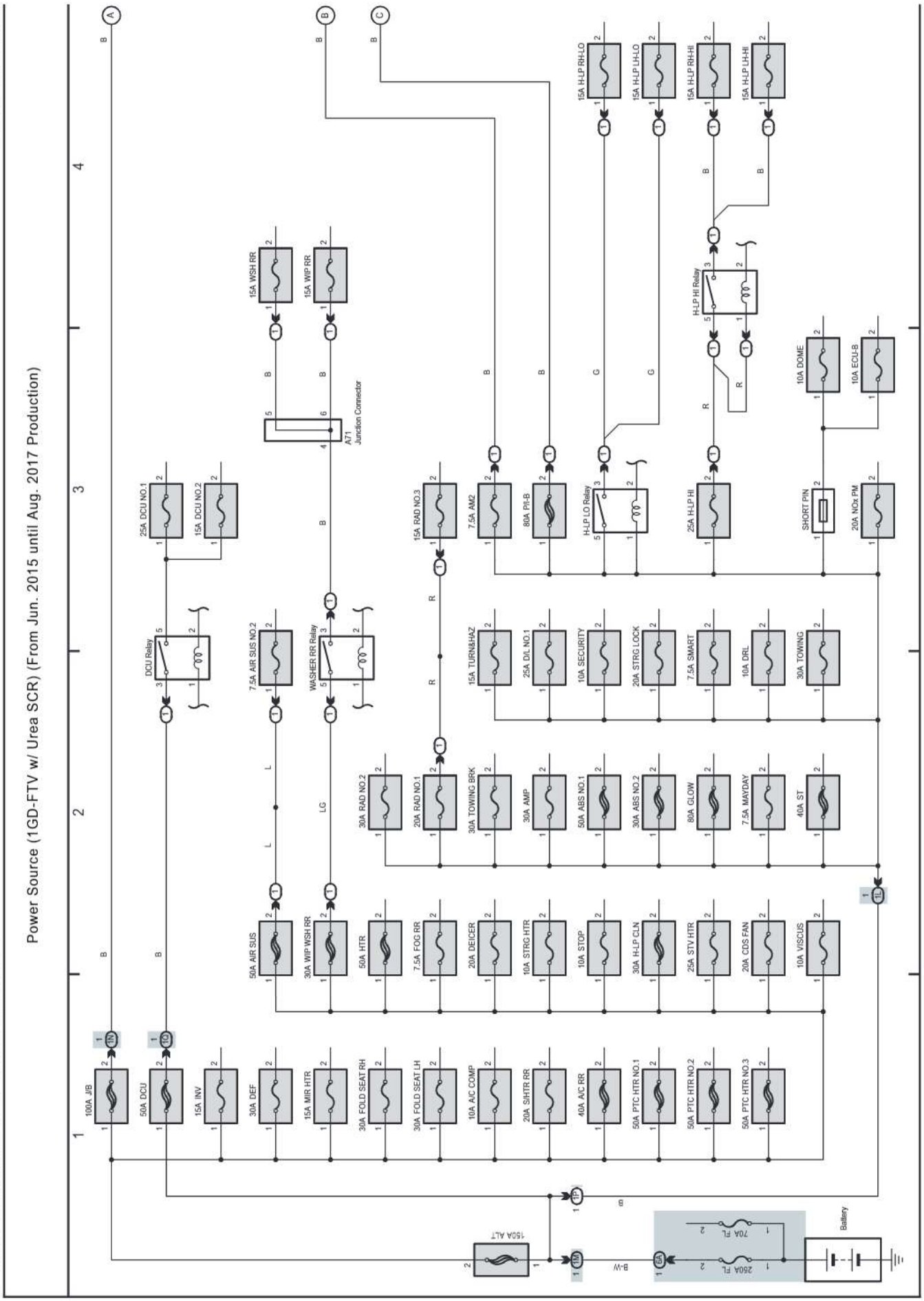

(Cont. next page)

Power Source (1GD-FTV w/ Urea SCR) (From Jun. 2015 until Aug. 2017 Production)

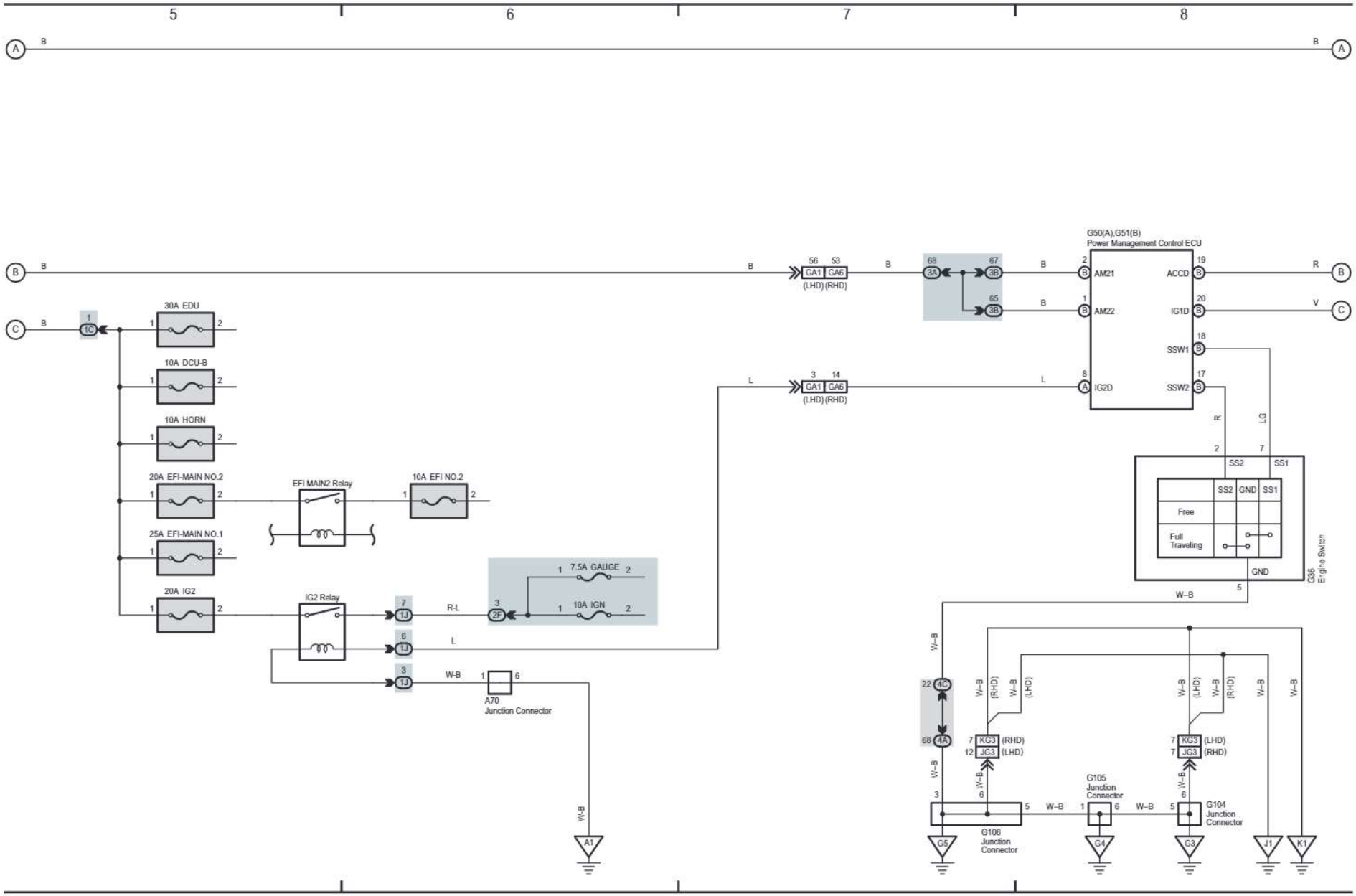

cardiagn.com

cardiagn.com

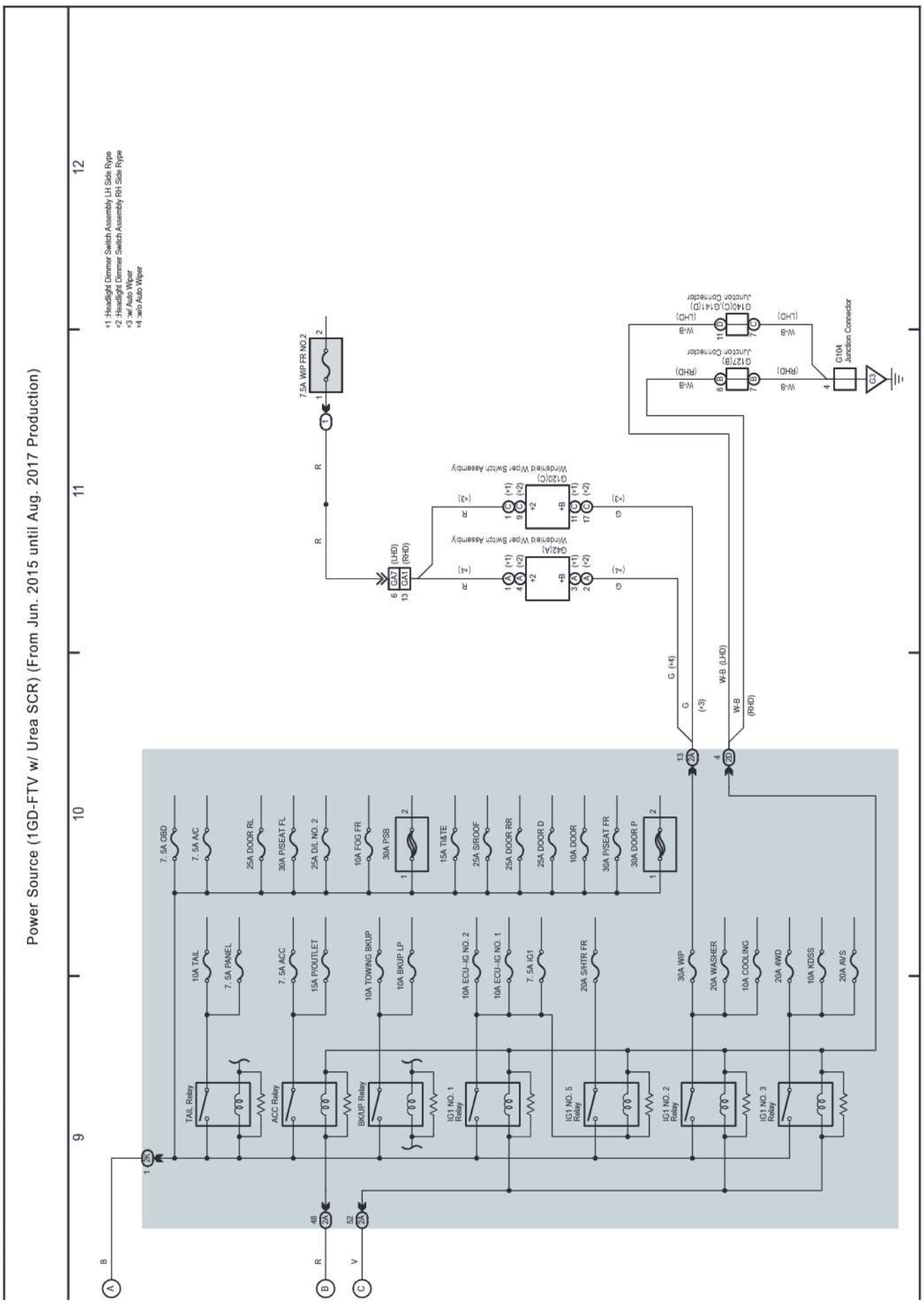

cardiagn.com

100 LAND CRUISER / LAND CRUISER PRADO

Starting (w/ Entry & Start System) (From Jun. 2015 until Aug. 2017 Production), Steering Lock (w/ Entry & Start System) (From Jun. 2015 until Aug. 2017 Production), Engine Immobiliser System (w/ Entry & Start System) (From Jun. 2015 until Aug. 2017 Production), Entry & Start System (From Jun. 2015 until Aug. 2017 Production), Wireless Door Lock Control (w/ Entry & Start System) (From Jun. 2015 until Aug. 2017 Production)

(Cont. next page)

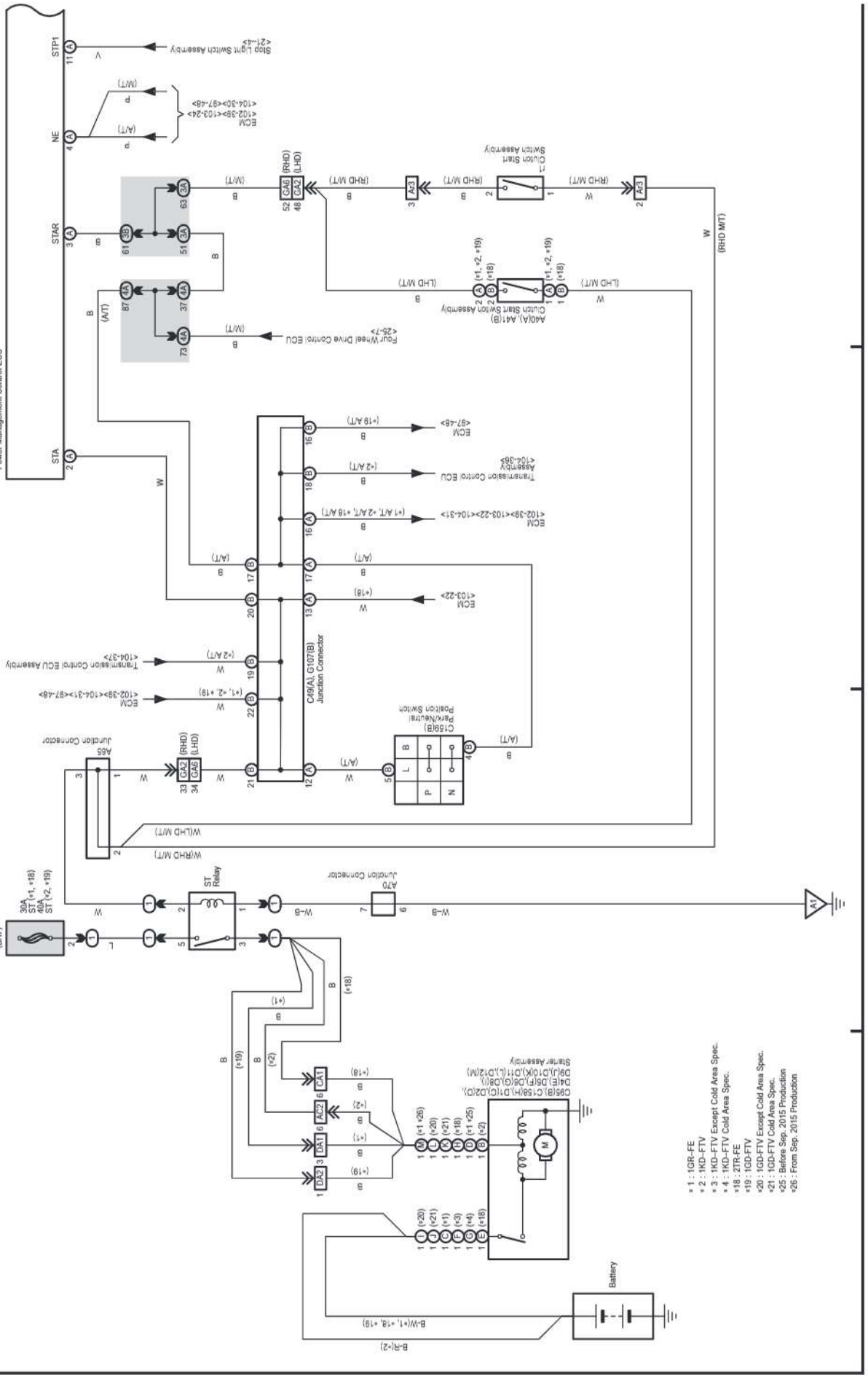

cardiagn.com

100 LAND CRUISER / LAND CRUISER PRADO (Cont'd)

(Cont. next page)

Starting (w/ Entry & Start System) (From Jun. 2015 until Aug. 2017 Production), Steering Lock (w/ Entry & Start System) (From Jun. 2015 until Aug. 2017 Production), Engine Immobiliser System (w/ Entry & Start System) (From Jun. 2015 until Aug. 2017 Production), Entry & Start System (From Jun. 2015 until Aug. 2017 Production), Wireless Door Lock Control (w/ Entry & Start System) (From Jun. 2015 until Aug. 2017 Production)

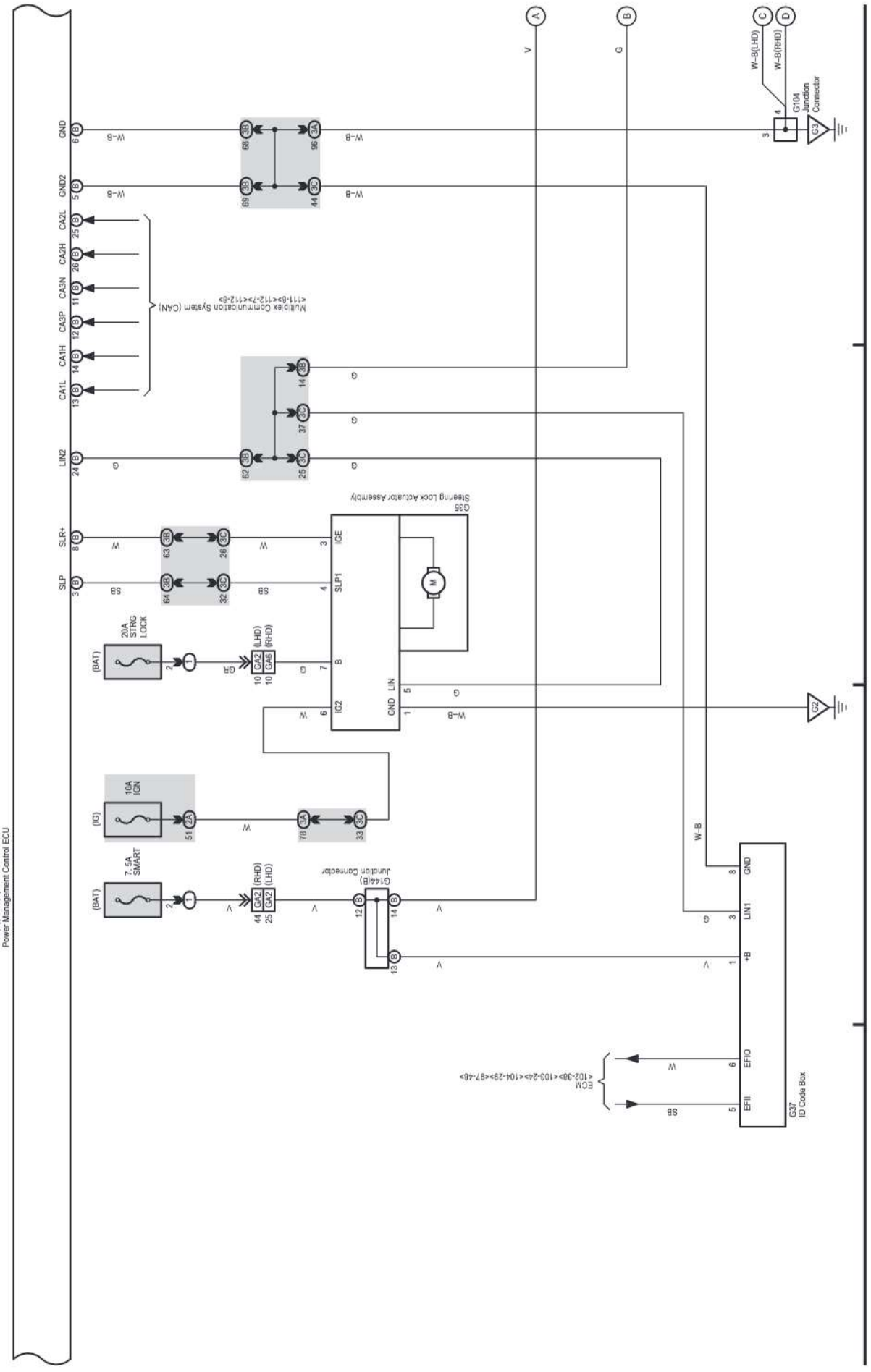

cardiagn.com

100 LAND CRUISER / LAND CRUISER PRADO (Cont'd)

(Cont. next page)

Starting (w/ Entry & Start System) (From Jun. 2015 until Aug. 2017 Production), Steering Lock (w/ Entry & Start System) (From Jun. 2015 until Aug. 2017 Production), Engine Immobiliser System (w/ Entry & Start System) (From Jun. 2015 until Aug. 2017 Production), Entry & Start System (From Jun. 2015 until Aug. 2017 Production), Wireless Door Lock Control (w/ Entry & Start System) (From Jun. 2015 until Aug. 2017 Production)

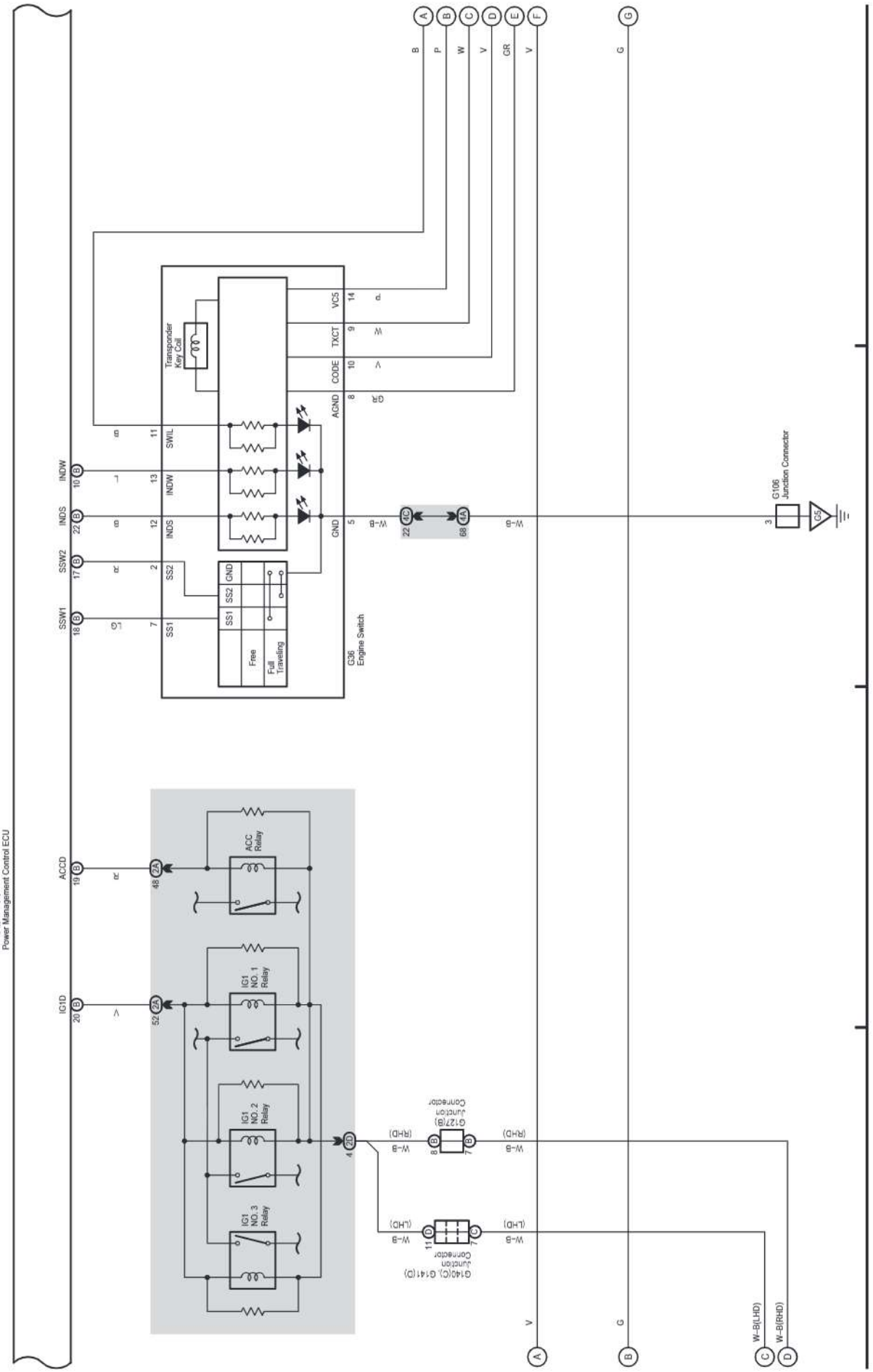

(Cont. next page)

Starting (w/ Entry & Start System) (From Jun. 2015 until Aug. 2017 Production), Steering Lock (w/ Entry & Start System) (From Jun. 2015 until Aug. 2017 Production), Engine Immobiliser System (w/ Entry & Start System) (From Jun. 2015 until Aug. 2017 Production), Entry & Start System (From Jun. 2015 until Aug. 2017 Production), Wireless Door Lock Control (w/ Entry & Start System) (From Jun. 2015 until Aug. 2017 Production)

*23 : 1GD-FTV w/ Urea SCR
*23 : Except *22

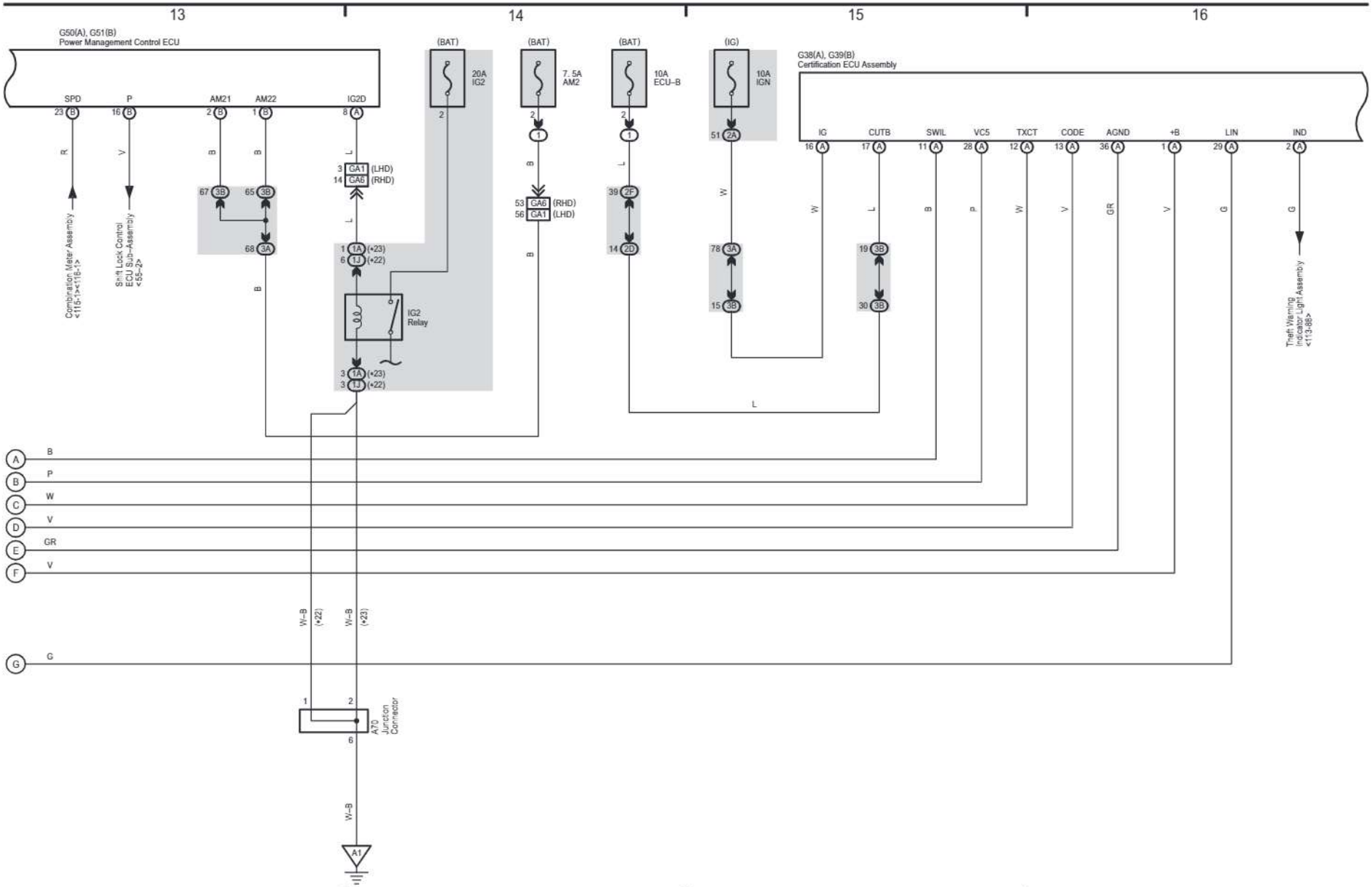

cardiagn.com

cardiagn.com

100 LAND CRUISER / LAND CRUISER PRADO (Cont'd)

(Cont. next page)

Starting (w/ Entry & Start System) (From Jun. 2015 until Aug. 2017 Production), Steering Lock (w/ Entry & Start System) (From Jun. 2015 until Aug. 2017 Production), Engine Immobiliser System (w/ Entry & Start System) (From Jun. 2015 until Aug. 2017 Production), Entry & Start System (From Jun. 2015 until Aug. 2017 Production), Wireless Door Lock Control (w/ Entry & Start System) (From Jun. 2015 until Aug. 2017 Production)

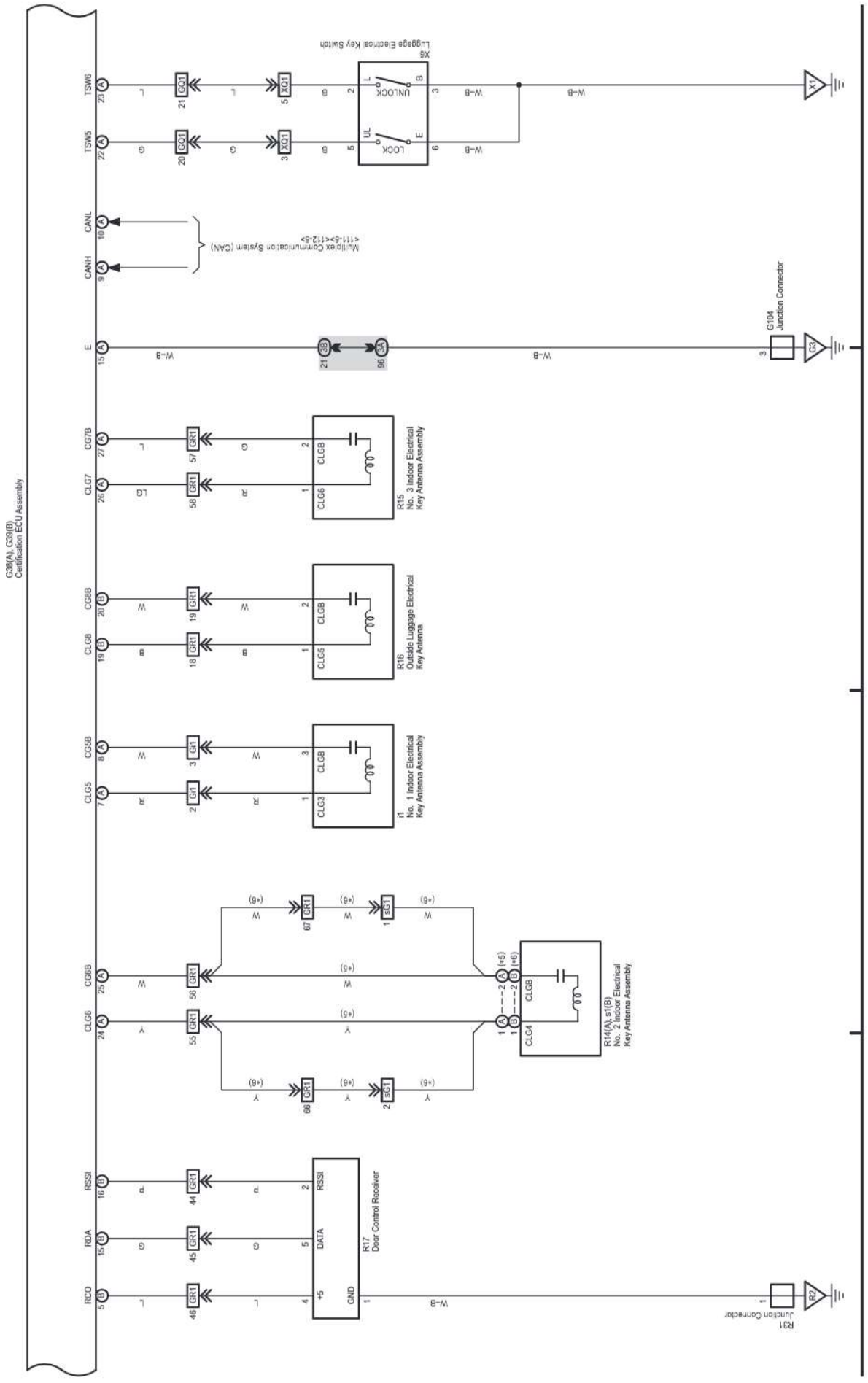

cardiagn.com

100 LAND CRUISER / LAND CRUISER PRADO (Cont'd)

Starting (w/ Entry & Start System) (From Jun. 2015 until Aug. 2017 Production), Steering Lock (w/ Entry & Start System) (From Jun. 2015 until Aug. 2017 Production), Engine Immobiliser System (w/ Entry & Start System) (From Jun. 2015 until Aug. 2017 Production), Entry & Start System (From Jun. 2015 until Aug. 2017 Production), Wireless Door Lock Control (w/ Entry & Start System) (From Jun. 2015 until Aug. 2017 Production)

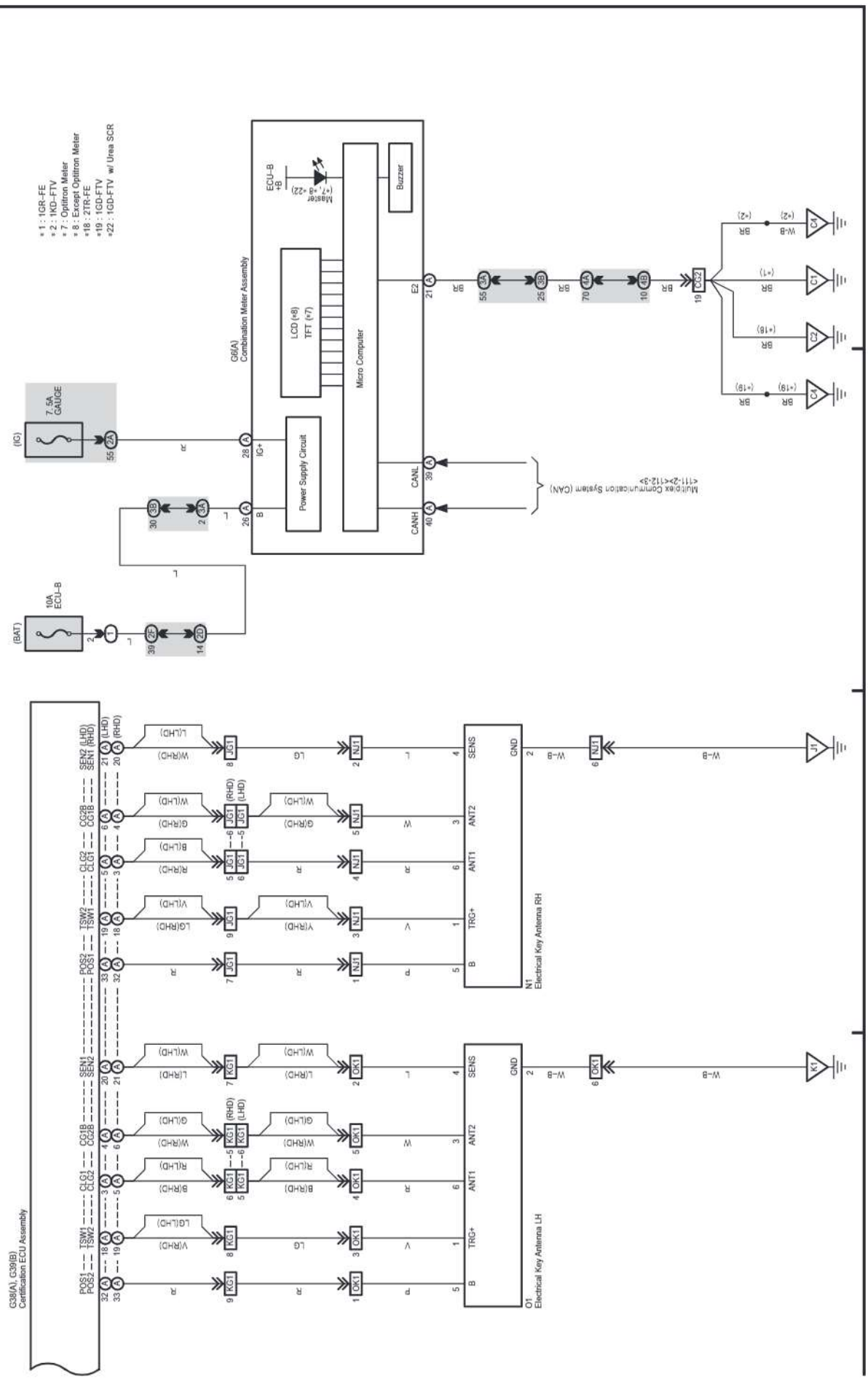

cardiagn.com

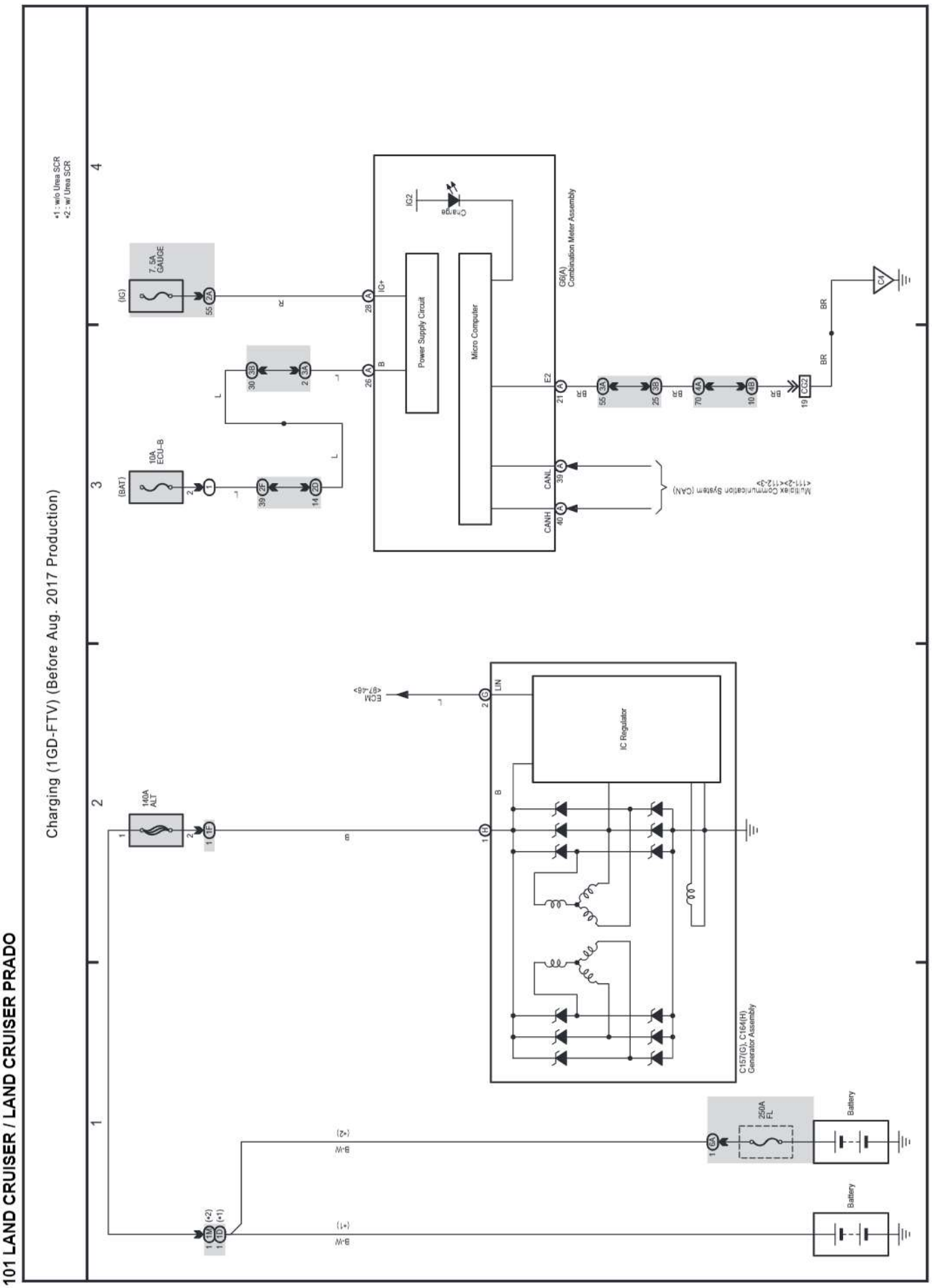

cardiagn.com

(Cont. next page)

102 LAND CRUISER / LAND CRUISER PRADO

Cruise Control (1GR-FE) (From Jun. 2015 until Aug. 2017 Production), Dynamic Radar Cruise Control (1GR-FE) (From Jun. 2015 until Aug. 2017 Production),
Engine Control (1GR-FE) (From Jun. 2015 until Aug. 2017 Production) and ECT and A/T Indicator (1GR-FE) (From Jun. 2015 until Aug. 2017 Production)

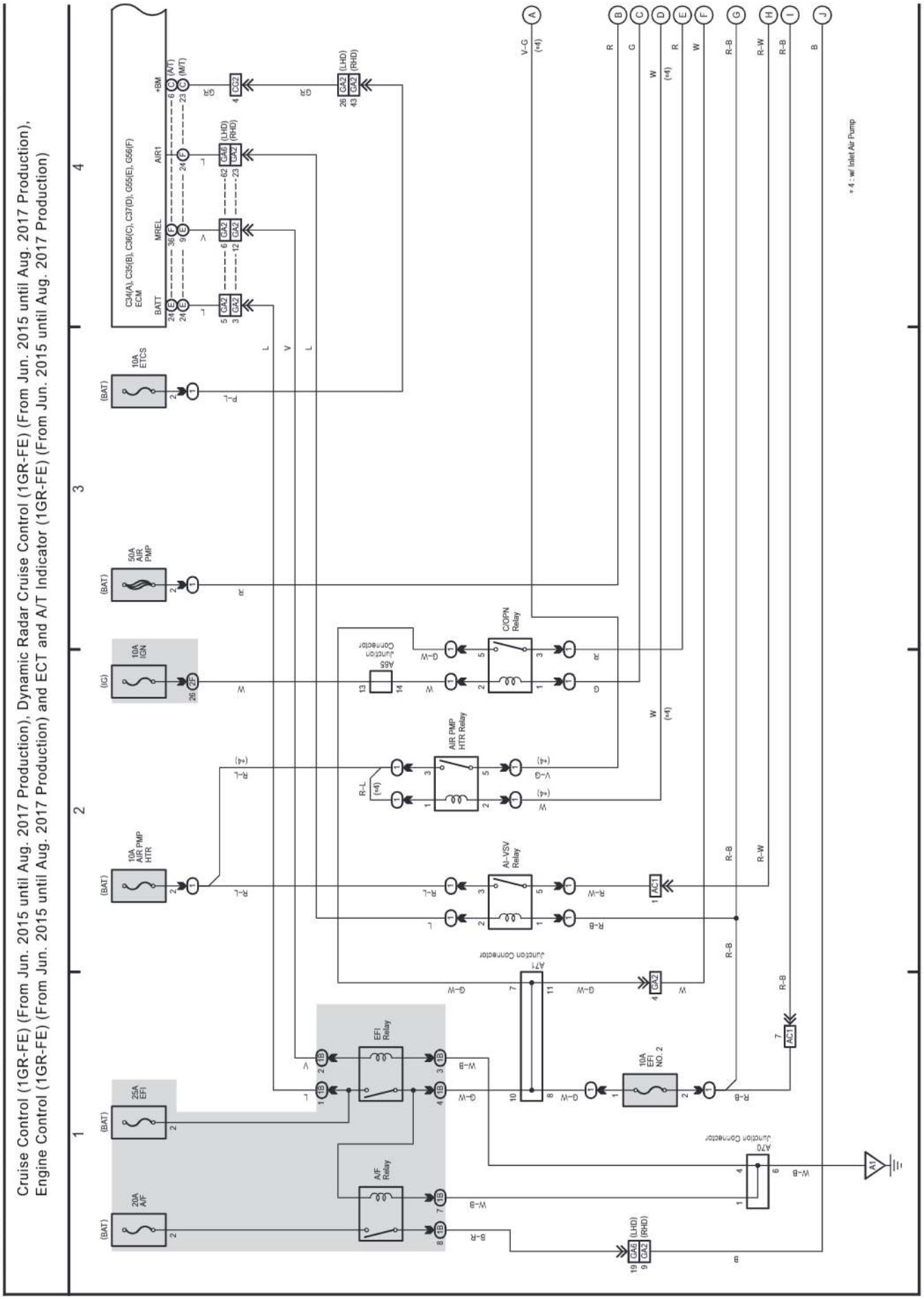

Cruise Control (1GR-FE) (From Jun. 2015 until Aug. 2017 Production), Dynamic Radar Cruise Control (1GR-FE) (From Jun. 2015 until Aug. 2017 Production), Engine Control (1GR-FE) (From Jun. 2015 until Aug. 2017 Production) and ECT and A/T Indicator (1GR-FE) (From Jun. 2015 until Aug. 2017 Production)

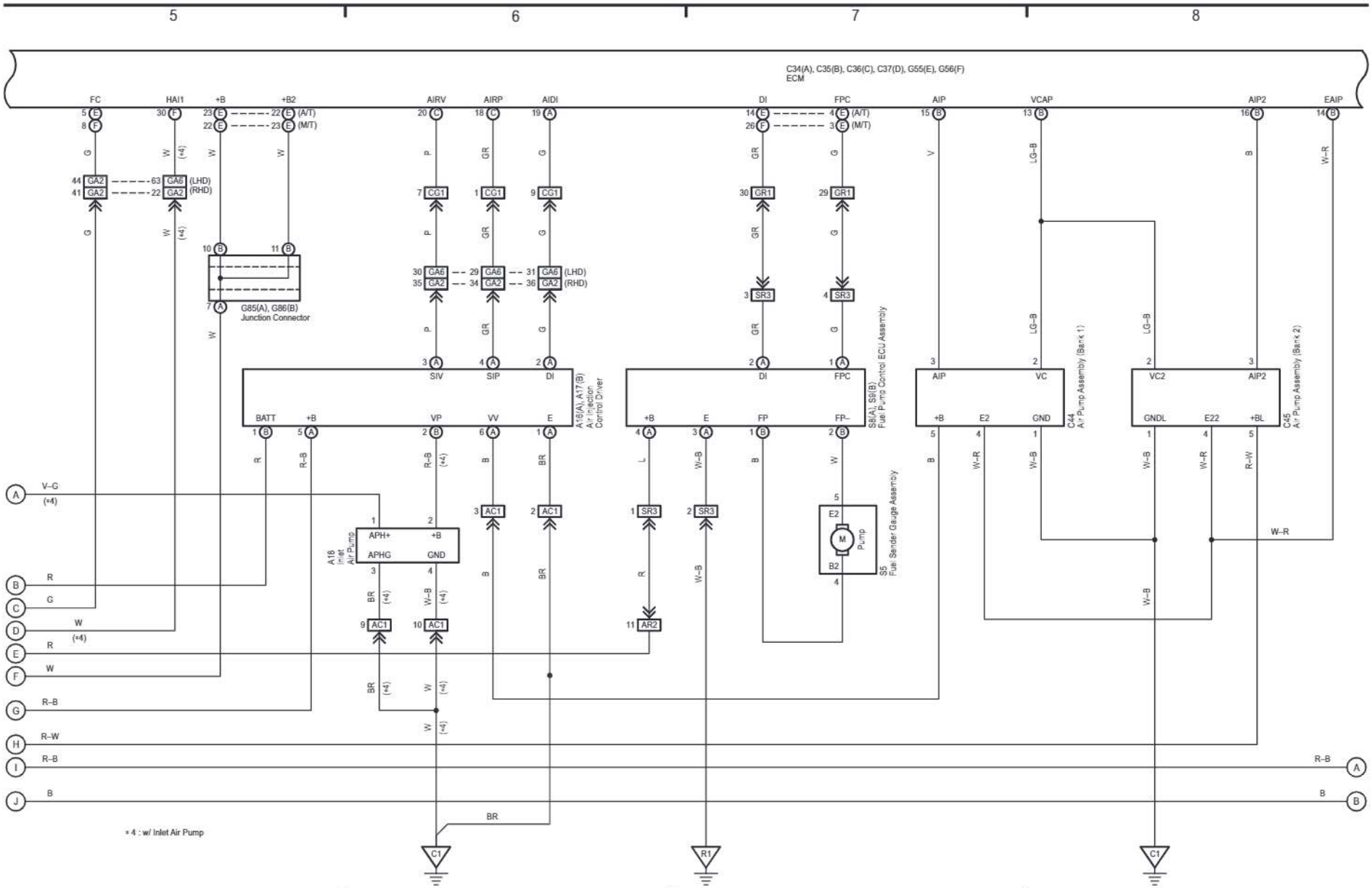

cardiagn.com

cardiagn.com

(Cont. next page)

Cruise Control (1GR-FE) (From Jun. 2015 until Aug. 2017 Production), Dynamic Radar Cruise Control (1GR-FE) (From Jun. 2015 until Aug. 2017 Production), Engine Control (1GR-FE) (From Jun. 2015 until Aug. 2017 Production) and ECT and A/T Indicator (1GR-FE) (From Jun. 2015 until Aug. 2017 Production)

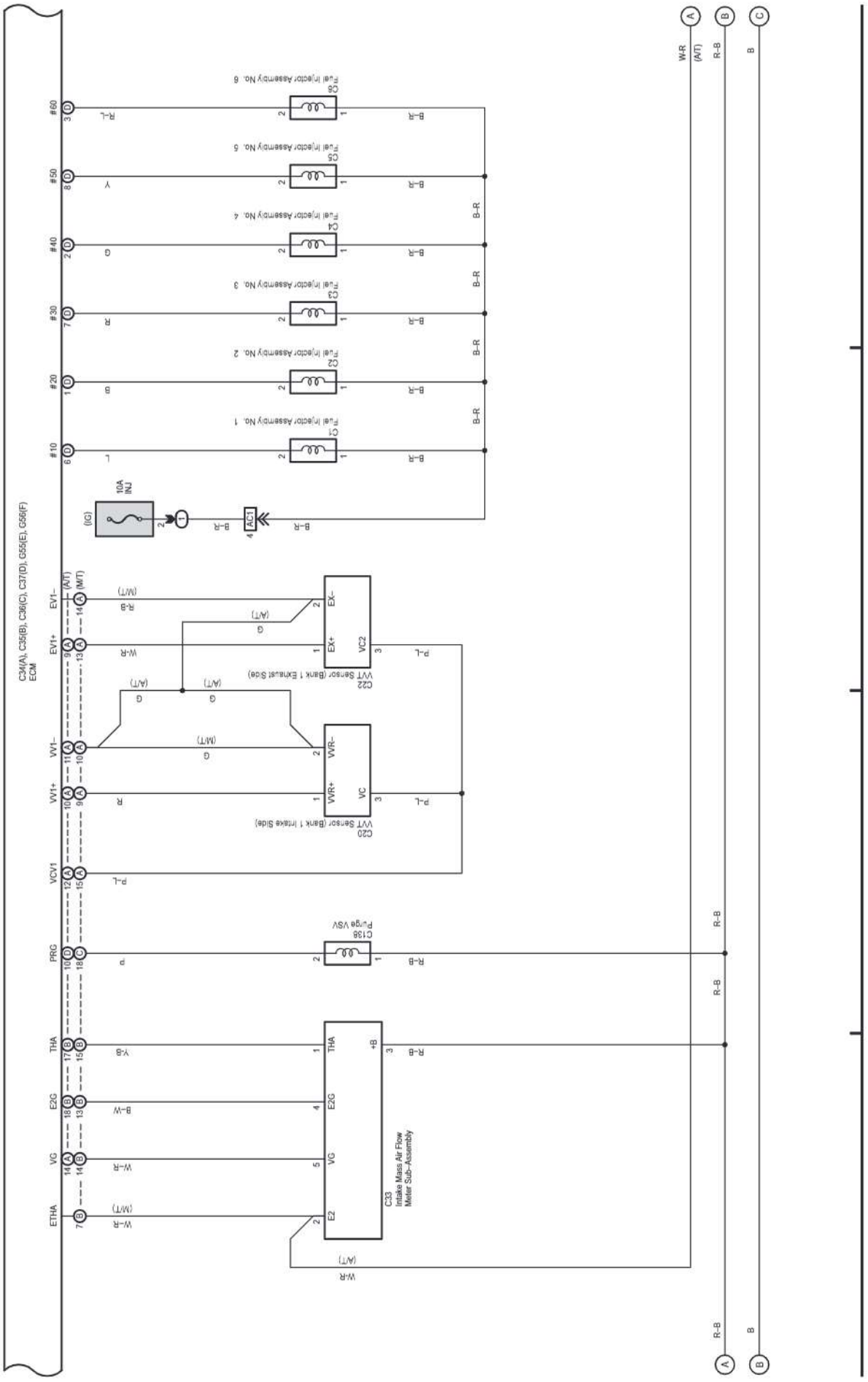

Cruise Control (1GR-FE) (From Jun. 2015 until Aug. 2017 Production), Dynamic Radar Cruise Control (1GR-FE) (From Jun. 2015 until Aug. 2017 Production), Engine Control (1GR-FE) (From Jun. 2015 until Aug. 2017 Production) and ECT and A/T Indicator (1GR-FE) (From Jun. 2015 until Aug. 2017 Production)

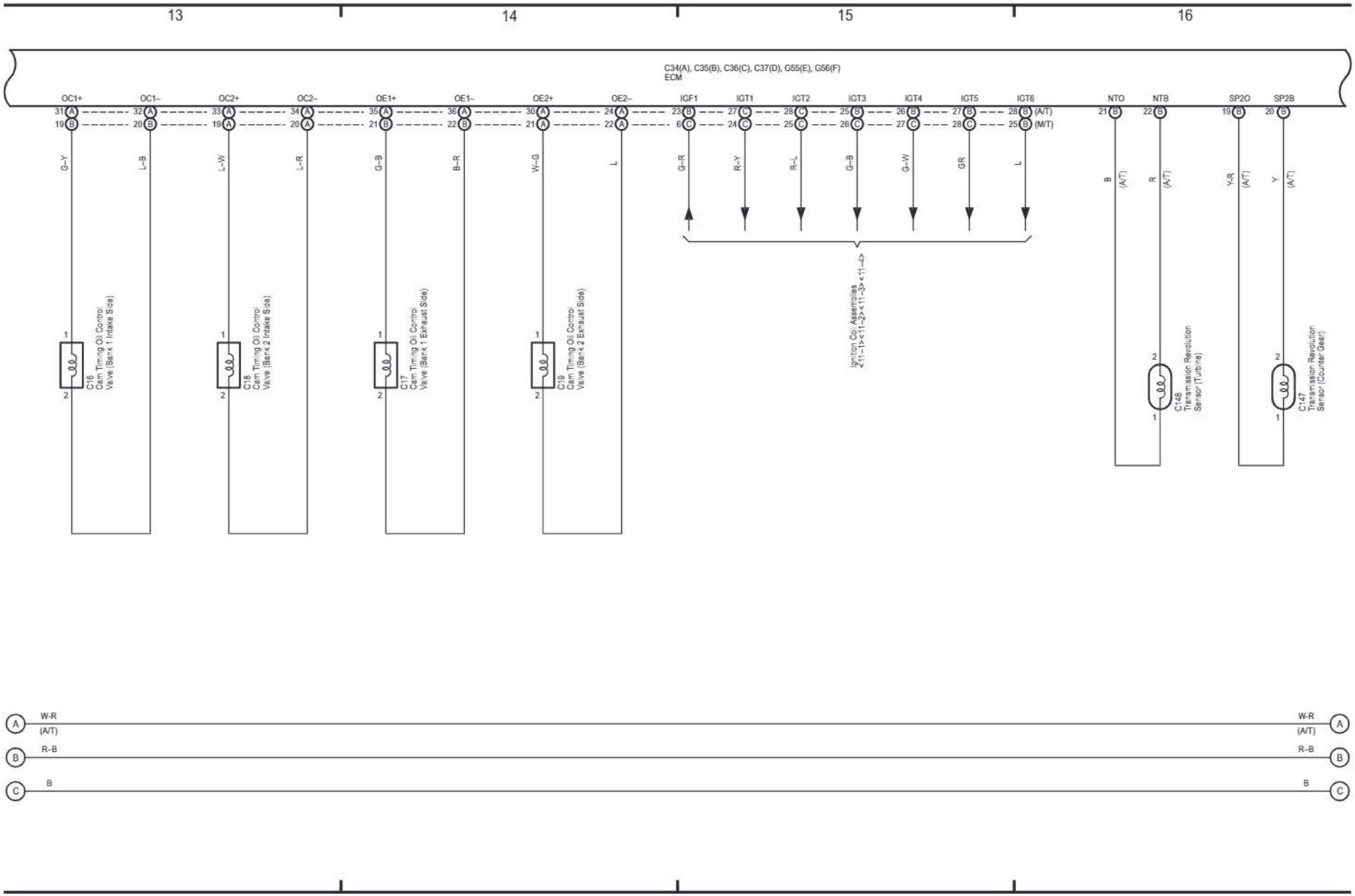

cardiagn.com

cardiagn.com

(Cont. next page)

102 LAND CRUISER / LAND CRUISER PRADO (Cont'd)

Cruise Control (1GR-FE) (From Jun. 2015 until Aug. 2017 Production), Dynamic Radar Cruise Control (1GR-FE) (From Jun. 2015 until Aug. 2017 Production), Engine Control (1GR-FE) (From Jun. 2015 until Aug. 2017 Production) and ECT and A/T Indicator (1GR-FE) (From Jun. 2015 until Aug. 2017 Production)

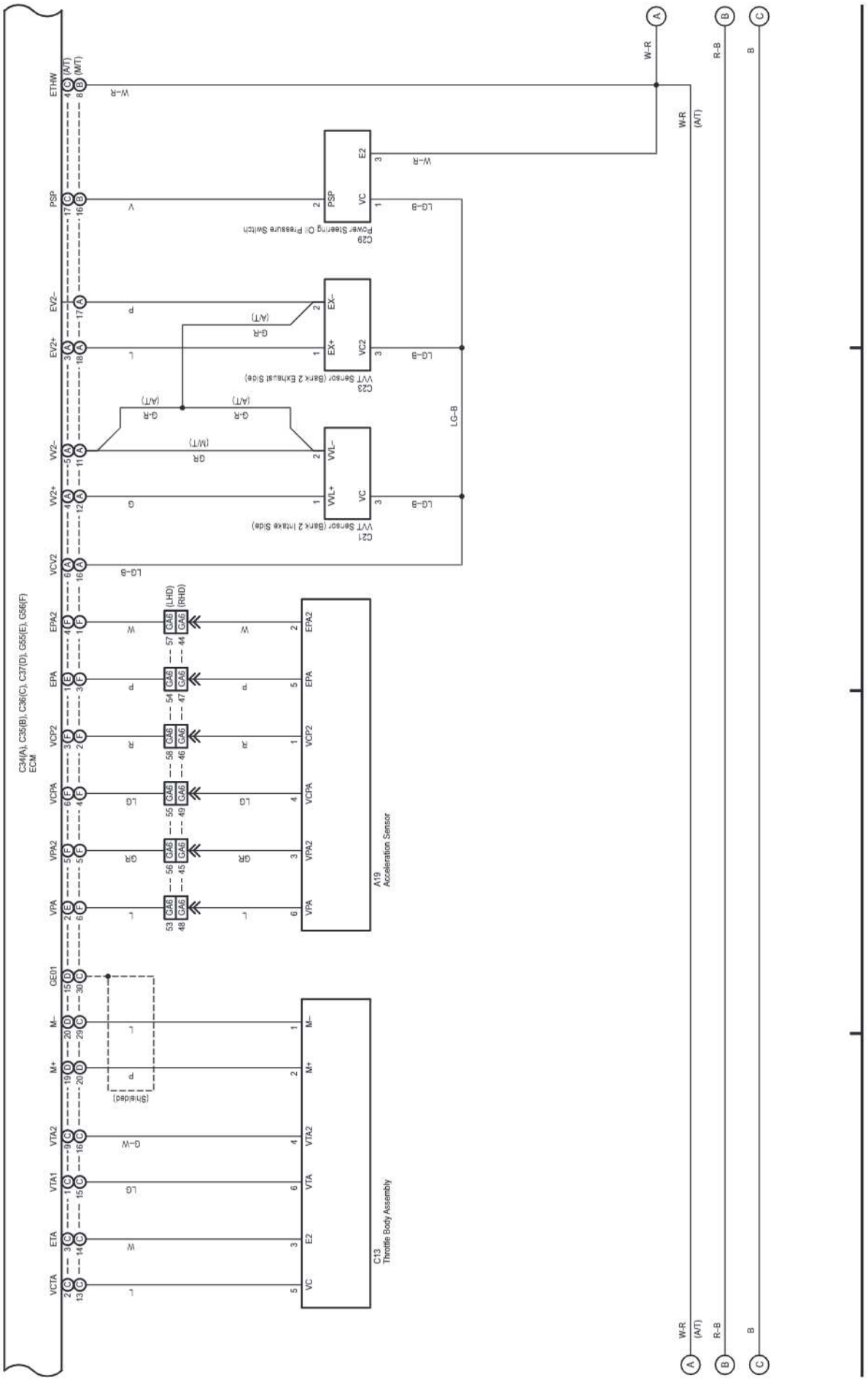

cardiagn.com

(Cont. next page)

Cruise Control (1GR-FE) (From Jun. 2015 until Aug. 2017 Production), Dynamic Radar Cruise Control (1GR-FE) (From Jun. 2015 until Aug. 2017 Production), Engine Control (1GR-FE) (From Jun. 2015 until Aug. 2017 Production) and ECT and A/T Indicator (1GR-FE) (From Jun. 2015 until Aug. 2017 Production)

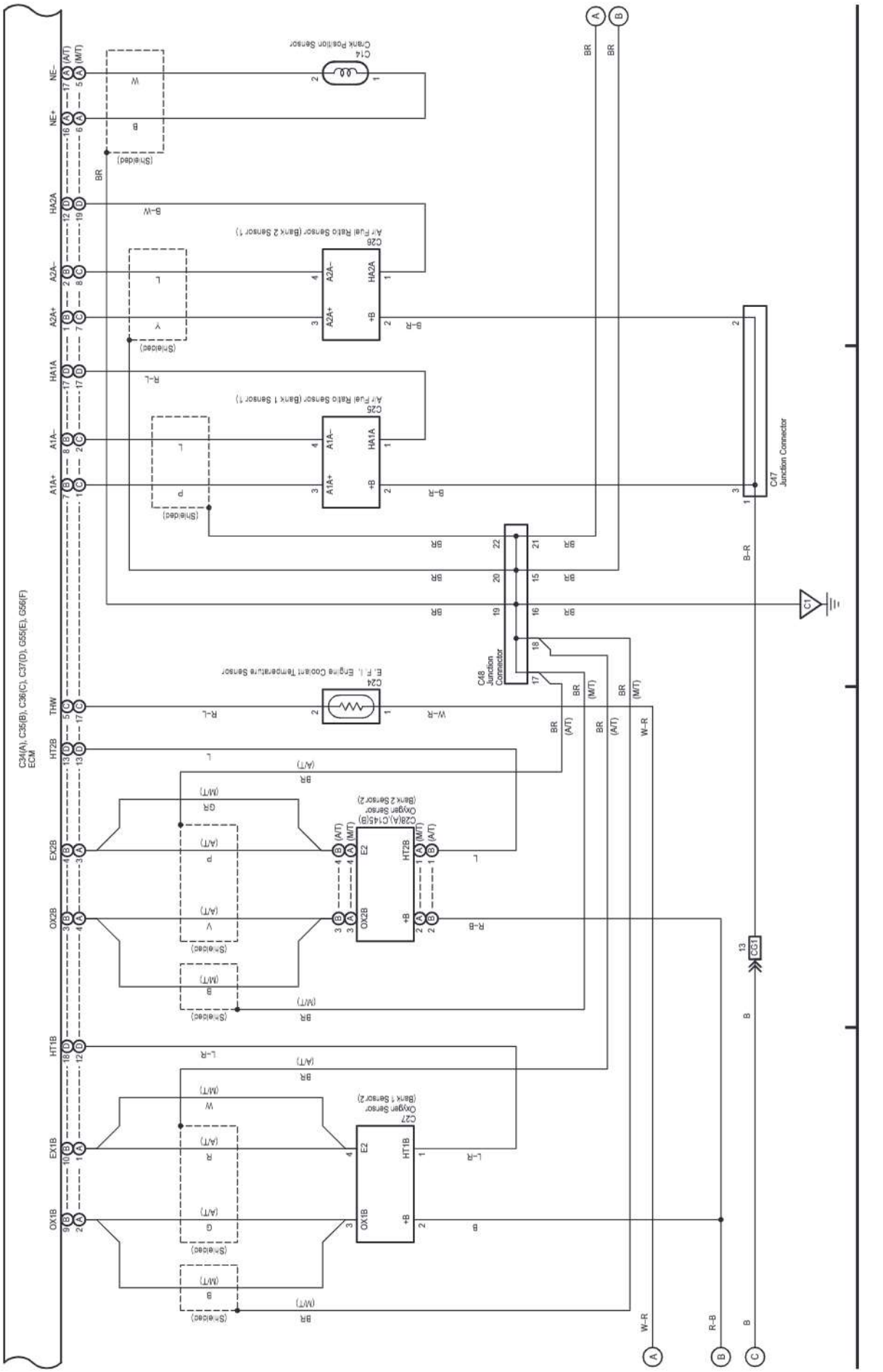

cardiagn.com

(Cont. next page)

102 LAND CRUISER / LAND CRUISER PRADO (Cont'd)

Cruise Control (1GR-FE) (From Jun. 2015 until Aug. 2017 Production), Dynamic Radar Cruise Control (1GR-FE) (From Jun. 2015 until Aug. 2017 Production), Engine Control (1GR-FE) (From Jun. 2015 until Aug. 2017 Production) and ECT and A/T Indicator (1GR-FE) (From Jun. 2015 until Aug. 2017 Production)

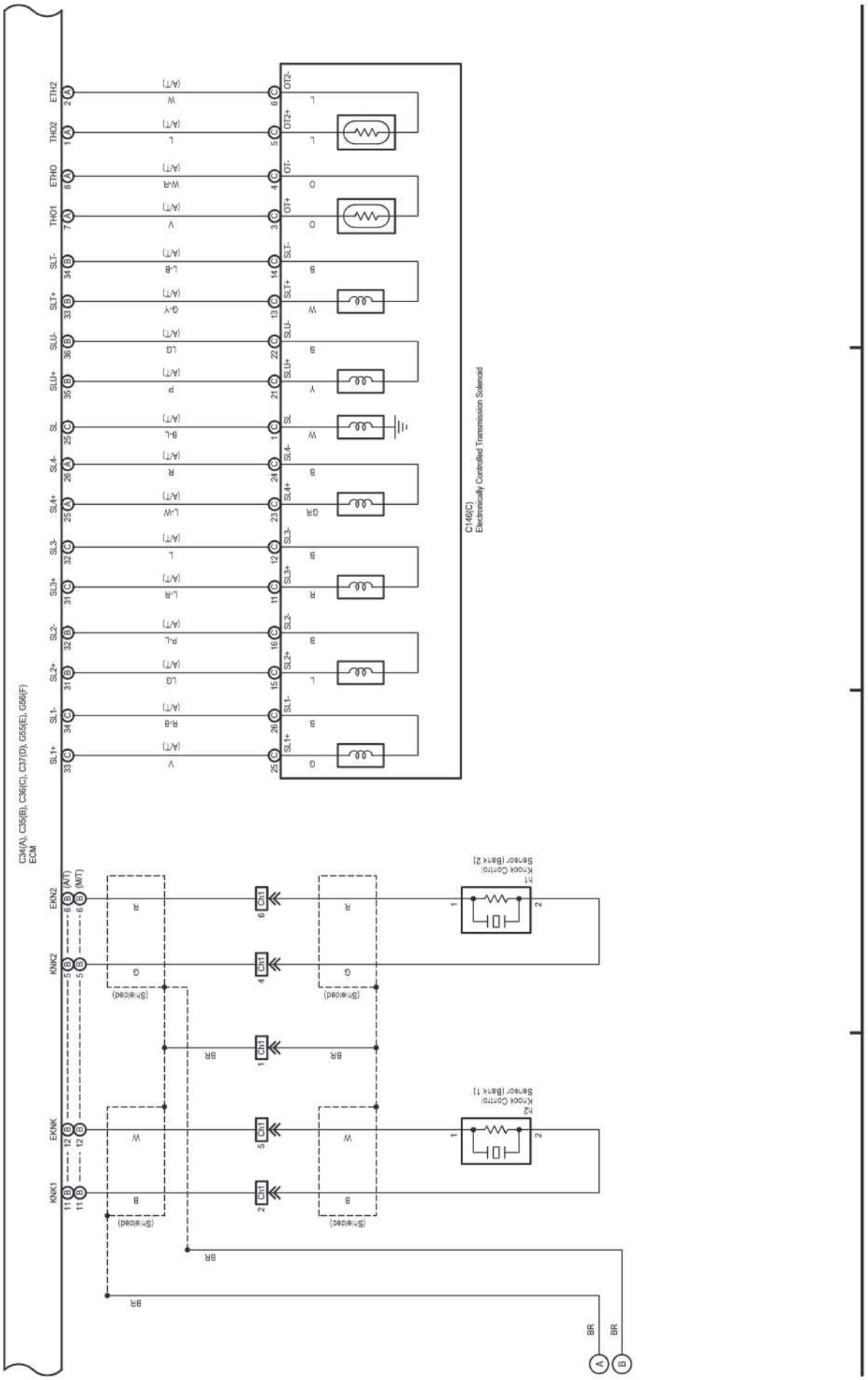

Cruise Control (1GR-FE) (From Jun. 2015 until Aug. 2017 Production), Dynamic Radar Cruise Control (1GR-FE) (From Jun. 2015 until Aug. 2017 Production), Engine Control (1GR-FE) (From Jun. 2015 until Aug. 2017 Production) and ECT and A/T Indicator (1GR-FE) (From Jun. 2015 until Aug. 2017 Production)

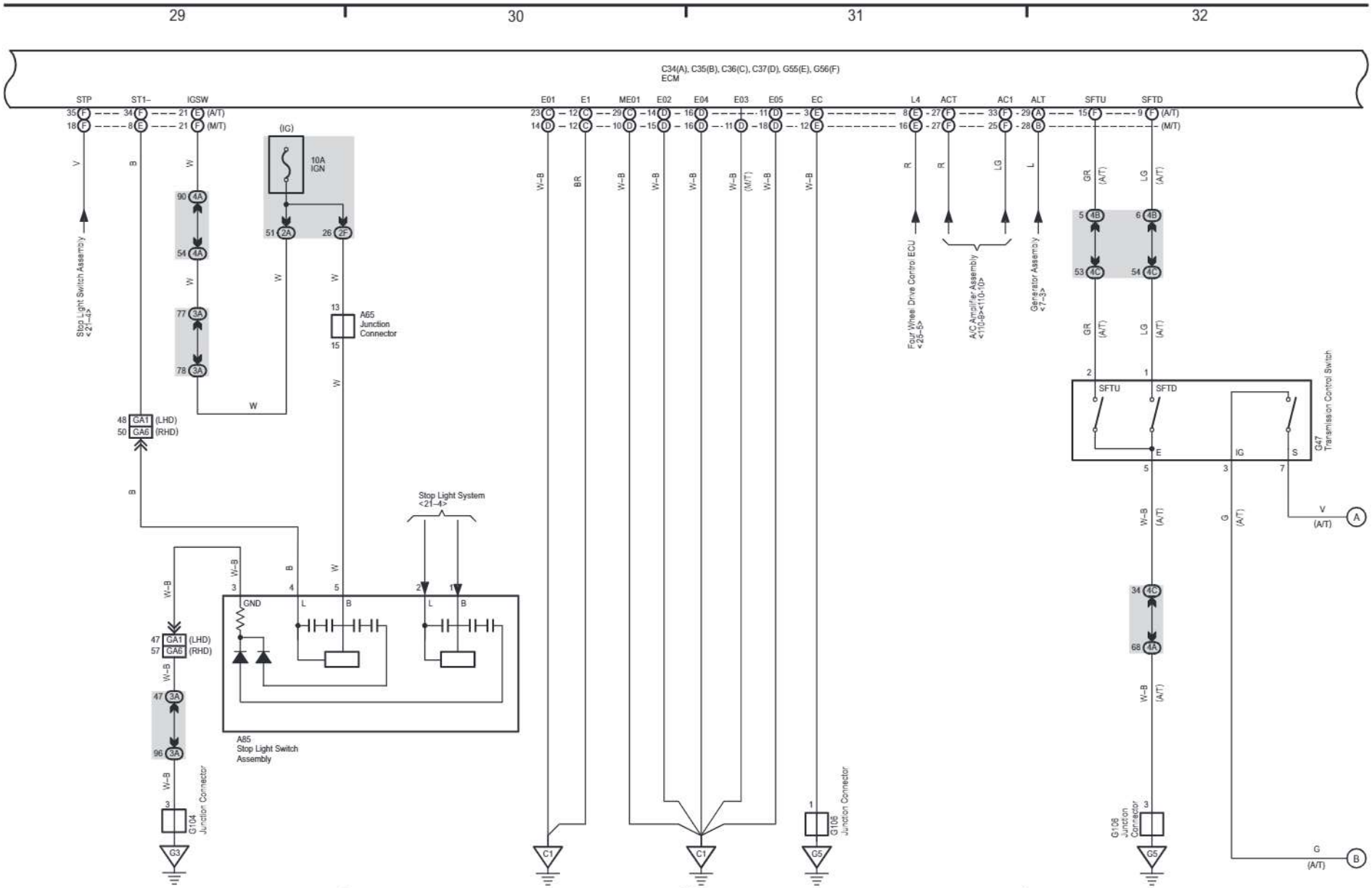

cardiagn.com

cardiagn.com

(Cont. next page)

102 LAND CRUISER / LAND CRUISER PRADO (Cont'd)

Cruise Control (1GR-FE) (From Jun. 2015 until Aug. 2017 Production), Dynamic Radar Cruise Control (1GR-FE) (From Jun. 2015 until Aug. 2017 Production), Engine Control (1GR-FE) (From Jun. 2015 until Aug. 2017 Production) and ECT and A/T Indicator (1GR-FE) (From Jun. 2015 until Aug. 2017 Production)

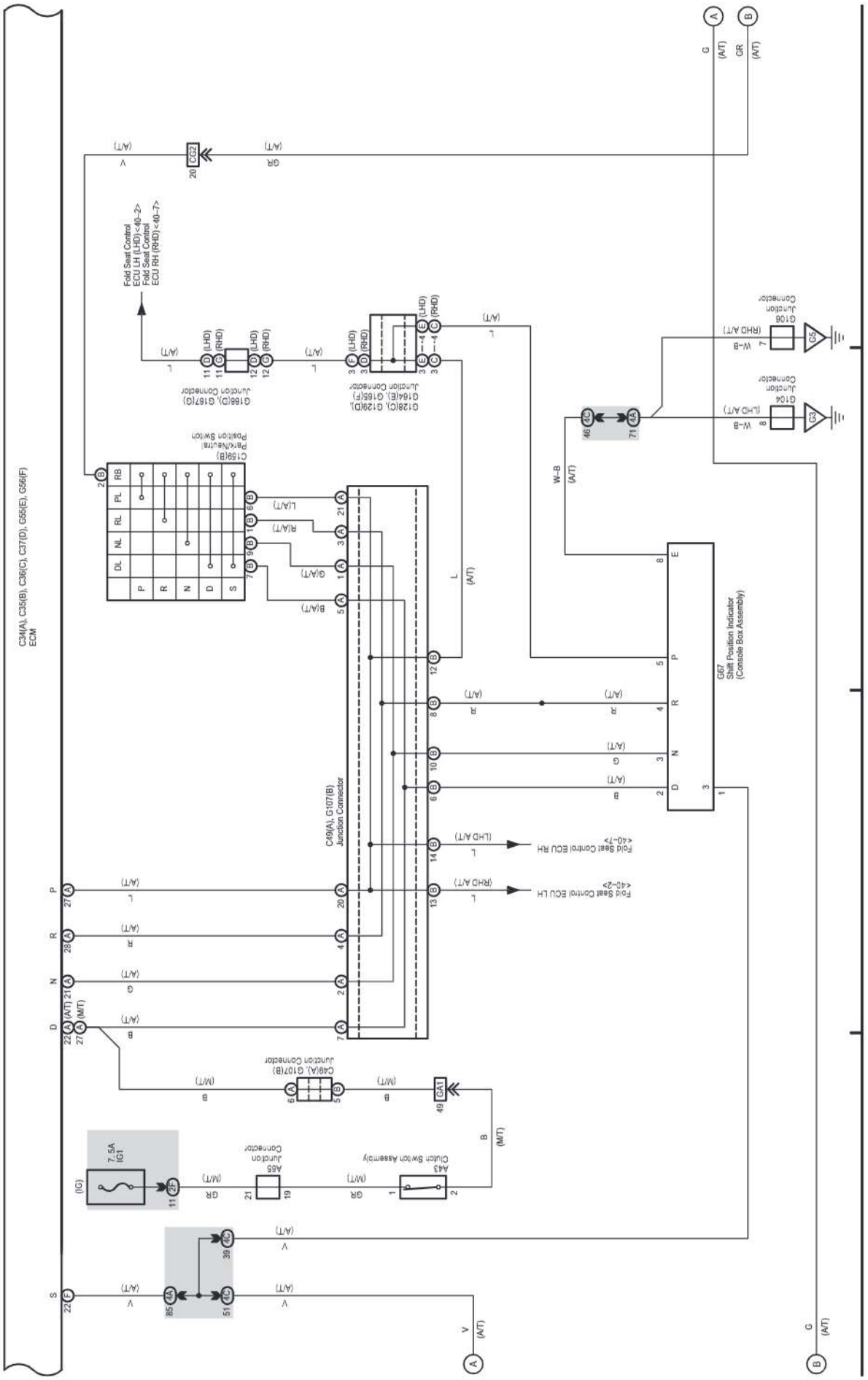

(Cont. next page)

Cruise Control (1GR-FE) (From Jun. 2015 until Aug. 2017 Production), Dynamic Radar Cruise Control (1GR-FE) (From Jun. 2015 until Aug. 2017 Production), Engine Control (1GR-FE) (From Jun. 2015 until Aug. 2017 Production) and ECT and A/T Indicator (1GR-FE) (From Jun. 2015 until Aug. 2017 Production)

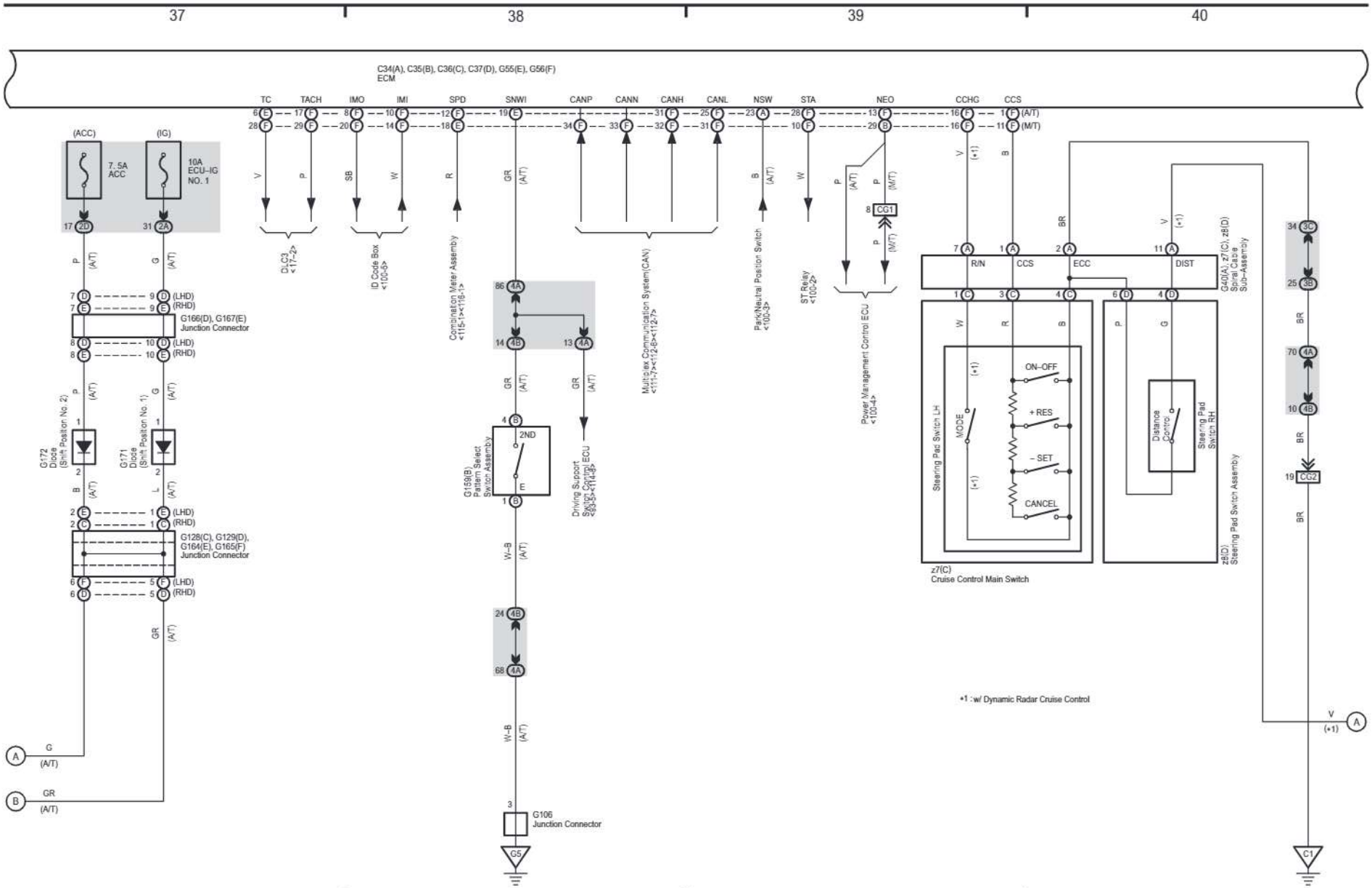

cardiagn.com

cardiagn.com

(Cont. next page)

Cruise Control (1GR-FE) (From Jun. 2015 until Aug. 2017 Production), Dynamic Radar Cruise Control (1GR-FE) (From Jun. 2015 until Aug. 2017 Production),
Engine Control (1GR-FE) (From Jun. 2015 until Aug. 2017 Production) and ECT and A/T Indicator (1GR-FE) (From Jun. 2015 until Aug. 2017 Production)

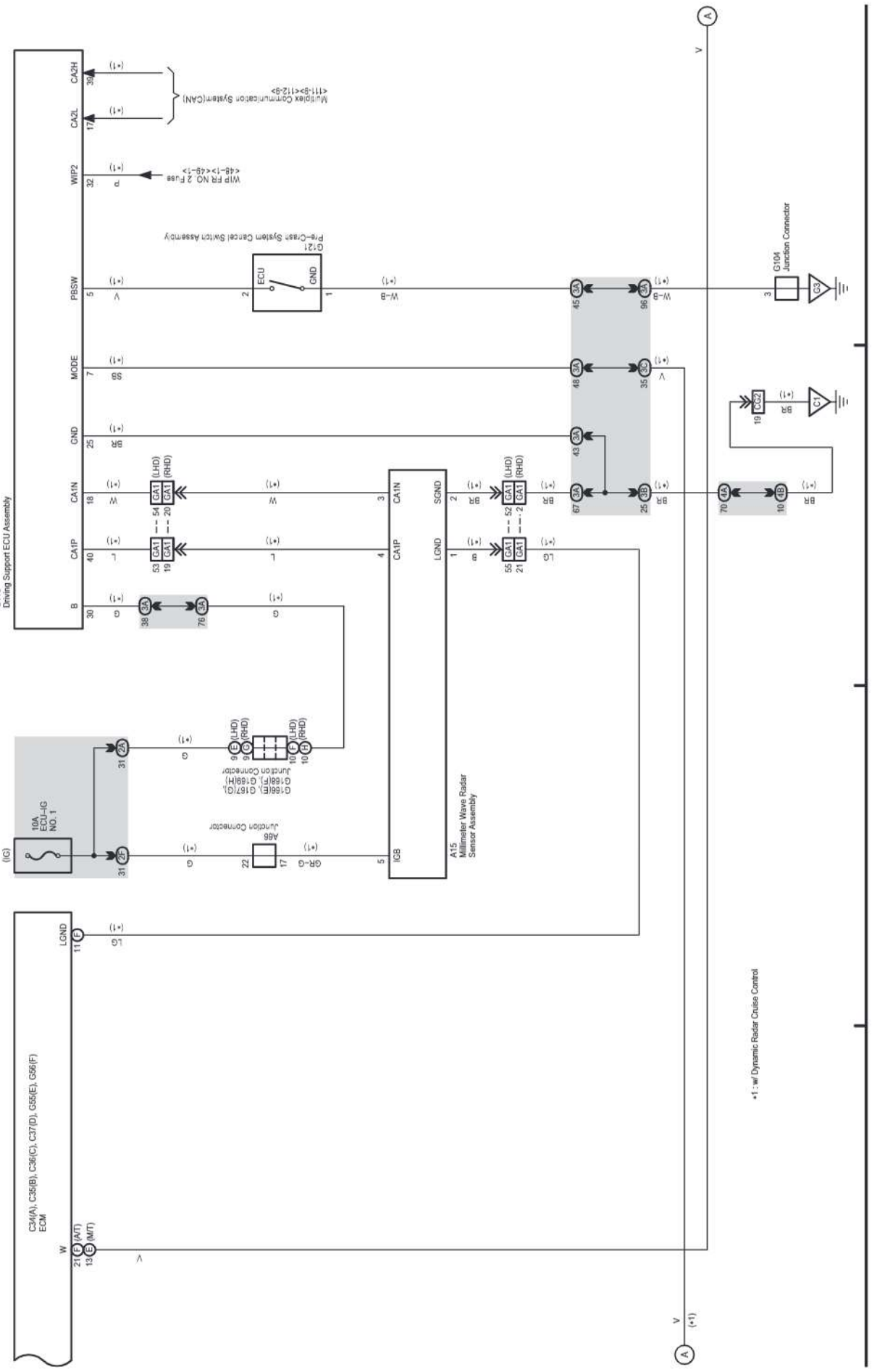

cardiagn.com

102 LAND CRUISER / LAND CRUISER PRADO (Cont'd)

Cruise Control (1GR-FE) (From Jun. 2015 until Aug. 2017 Production), Dynamic Radar Cruise Control (1GR-FE) (From Jun. 2015 until Aug. 2017 Production), Engine Control (1GR-FE) (From Jun. 2015 until Aug. 2017 Production) and ECT and A/T Indicator (1GR-FE) (From Jun. 2015 until Aug. 2017 Production)

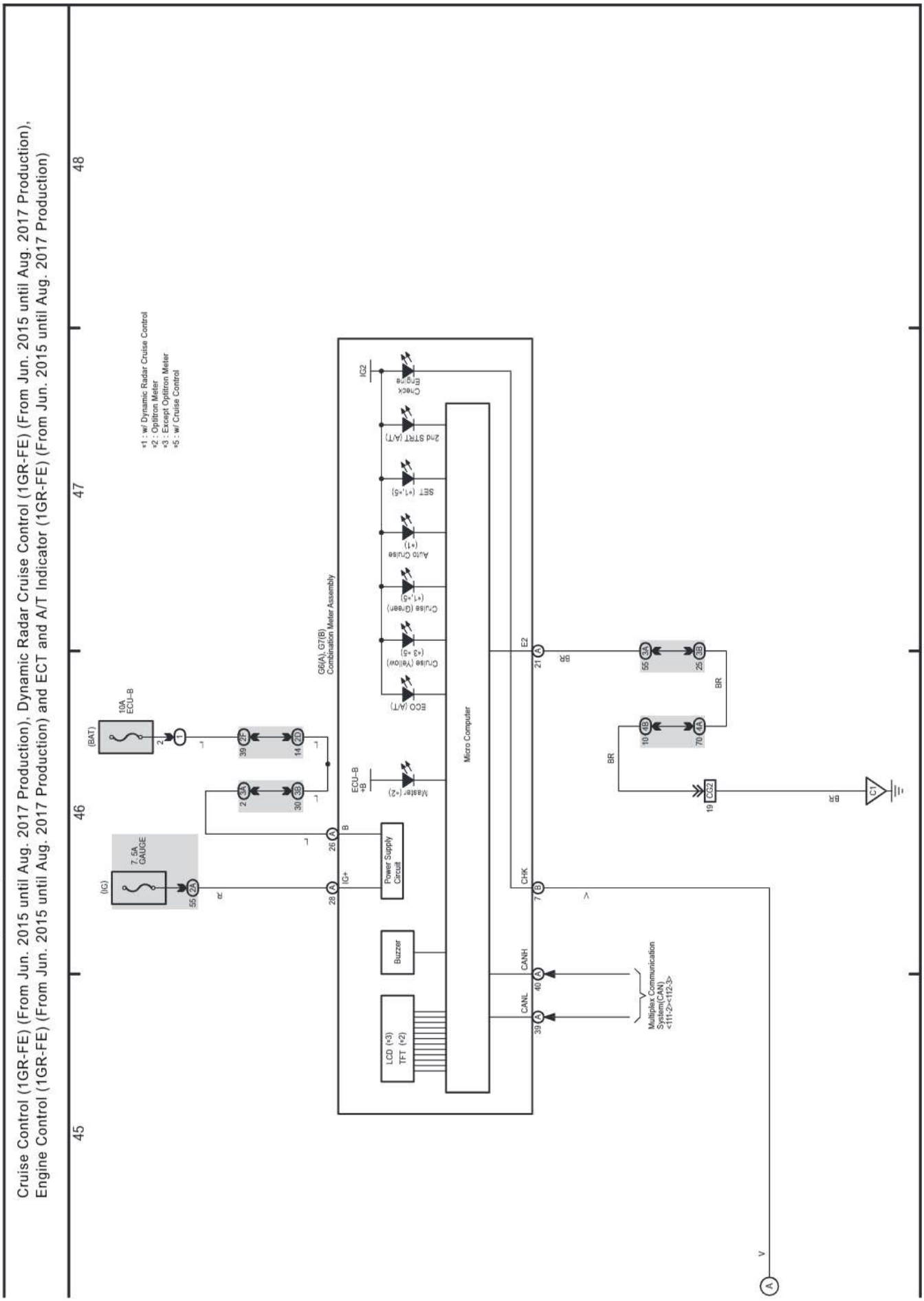

cardiagn.com

M OVERALL ELECTRICAL WIRING DIAGRAM

(Cont. next page)

Cruise Control (2TR-FE) (From Jun. 2015 until Aug. 2017 Production), Engine Control (2TR-FE) (From Jun. 2015 until Aug. 2017 Production) and ECT and A/T Indicator (2TR-FE) (From Jun. 2015 until Aug. 2017 Production)

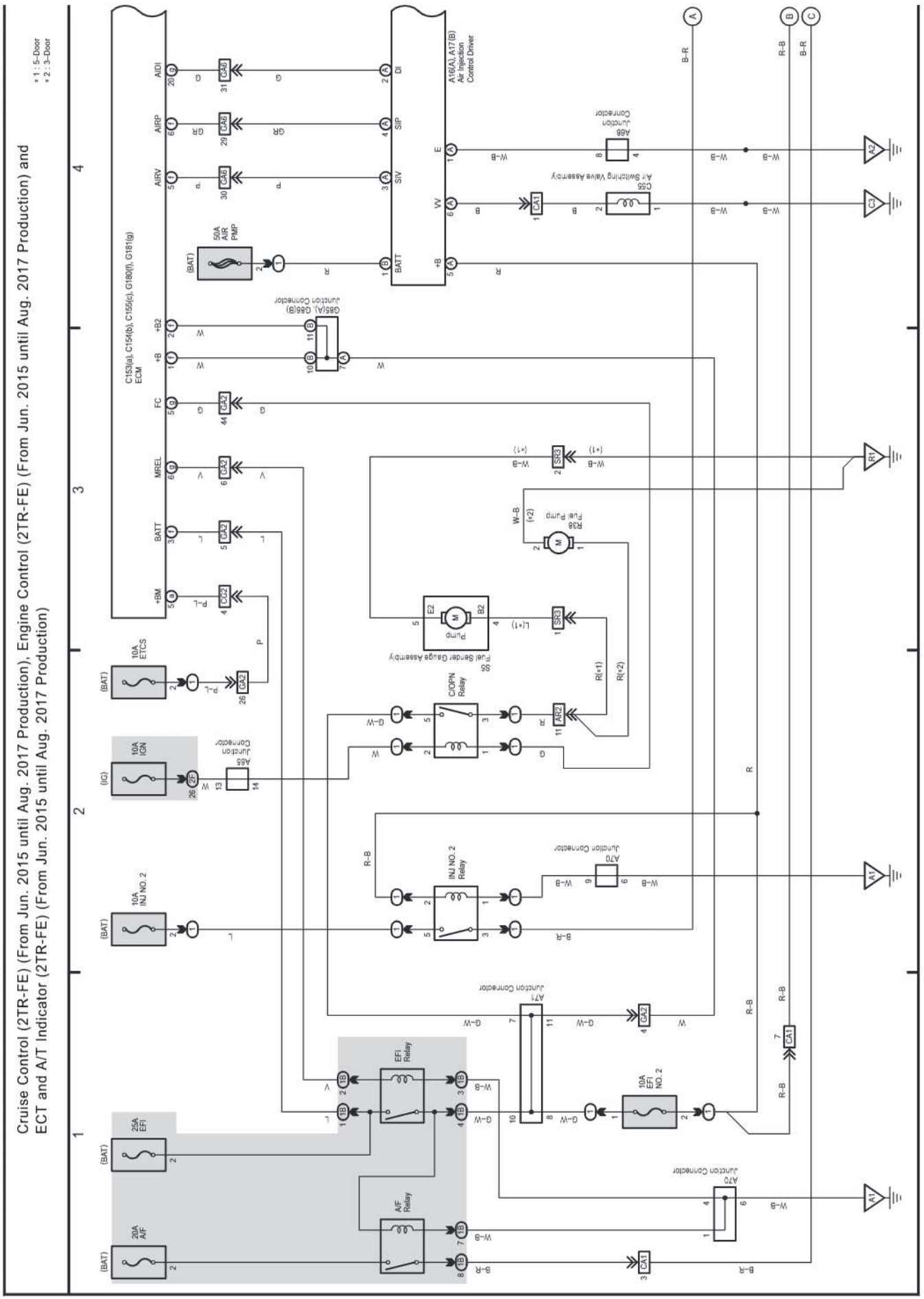

cardiagn.com

(Cont. next page)

Cruise Control (2TR-FE) (From Jun. 2015 until Aug. 2017 Production), Engine Control (2TR-FE) (From Jun. 2015 until Aug. 2017 Production) and ECT and A/T Indicator (2TR-FE) (From Jun. 2015 until Aug. 2017 Production)

*8 : w/ Inlet Air Pump

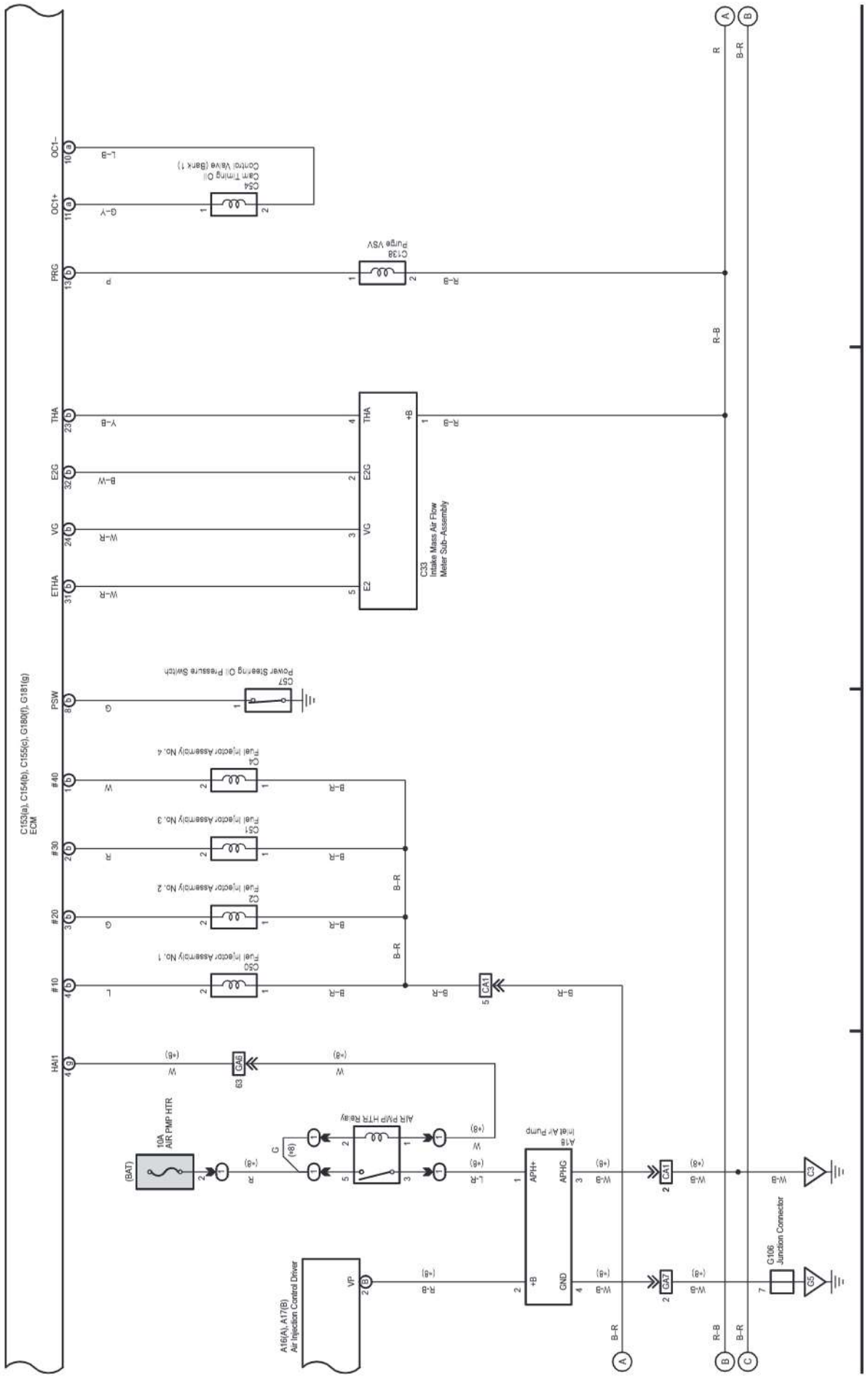

cardiagn.com

(Cont. next page)

Cruise Control (2TR-FE) (From Jun. 2015 until Aug. 2017 Production), Engine Control (2TR-FE) (From Jun. 2015 until Aug. 2017 Production) and ECT and A/T Indicator (2TR-FE) (From Jun. 2015 until Aug. 2017 Production)

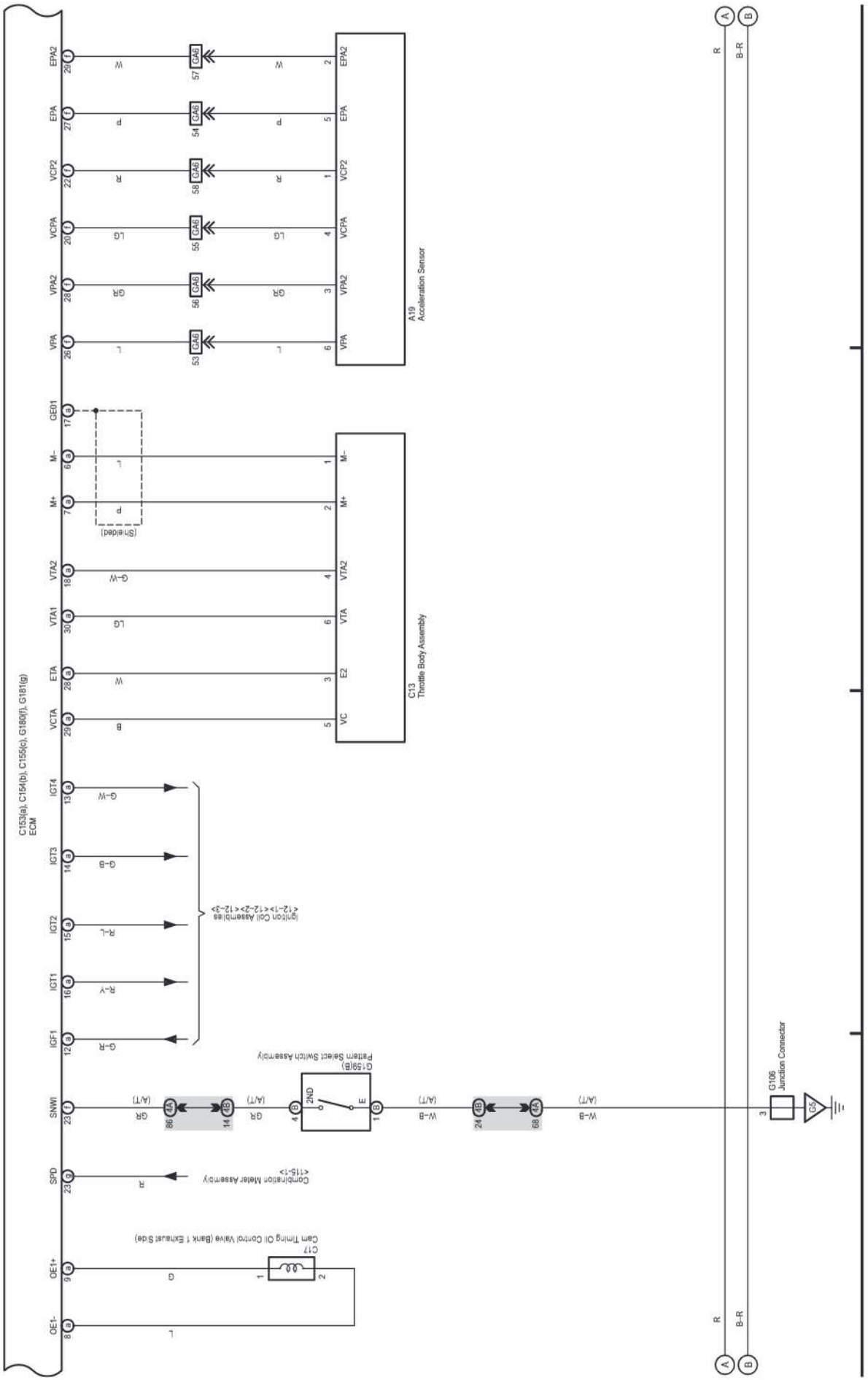

cardiagn.com

(Cont. next page)

Cruise Control (2TR-FE) (From Jun. 2015 until Aug. 2017 Production), Engine Control (2TR-FE) (From Jun. 2015 until Aug. 2017 Production) and ECT and A/T Indicator (2TR-FE) (From Jun. 2015 until Aug. 2017 Production)

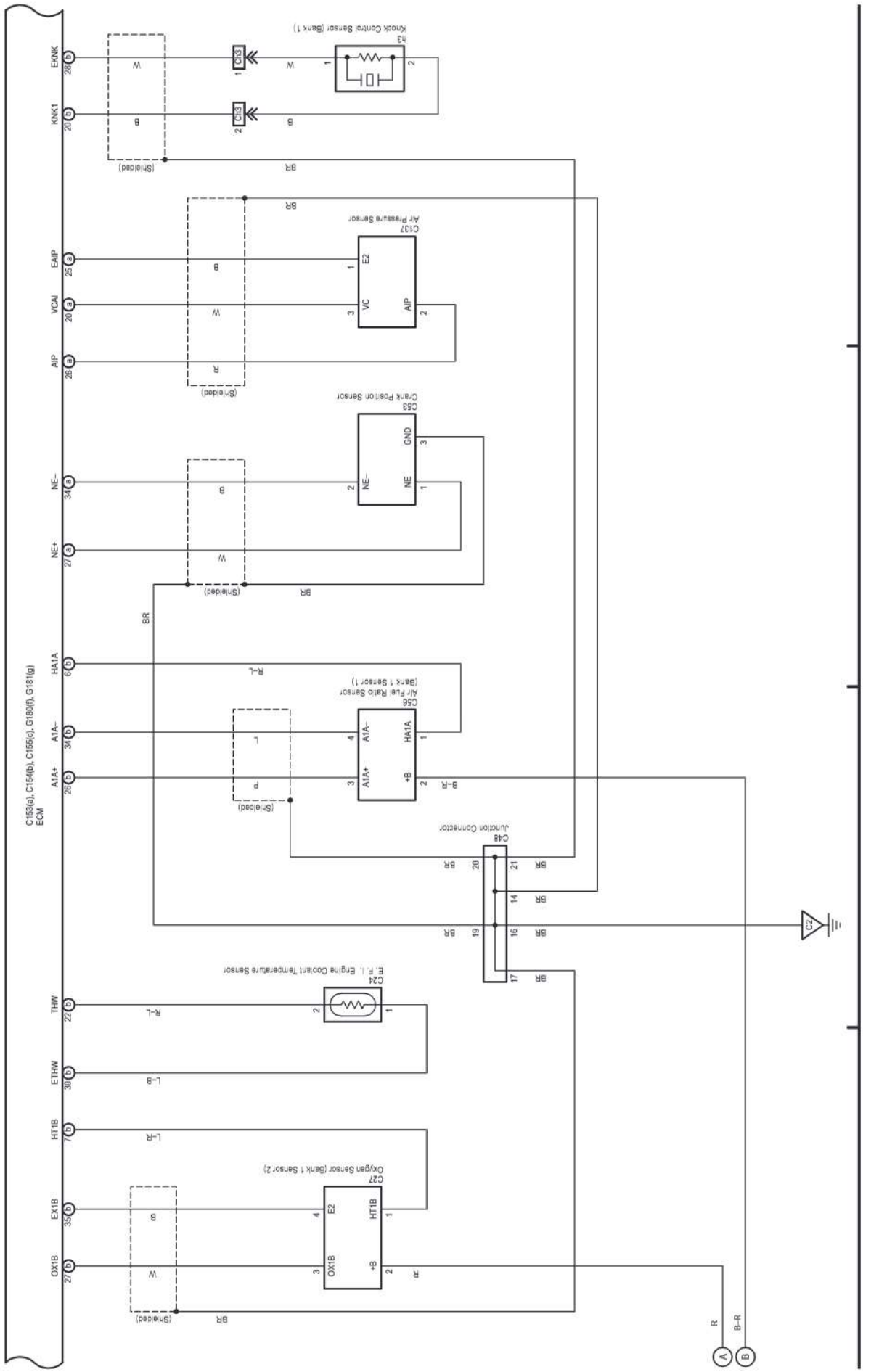

cardiagn.com

(Cont. next page)

Cruise Control (2TR-FE) (From Jun. 2015 until Aug. 2017 Production), Engine Control (2TR-FE) (From Jun. 2015 until Aug. 2017 Production) and ECT and A/T Indicator (2TR-FE) (From Jun. 2015 until Aug. 2017 Production)

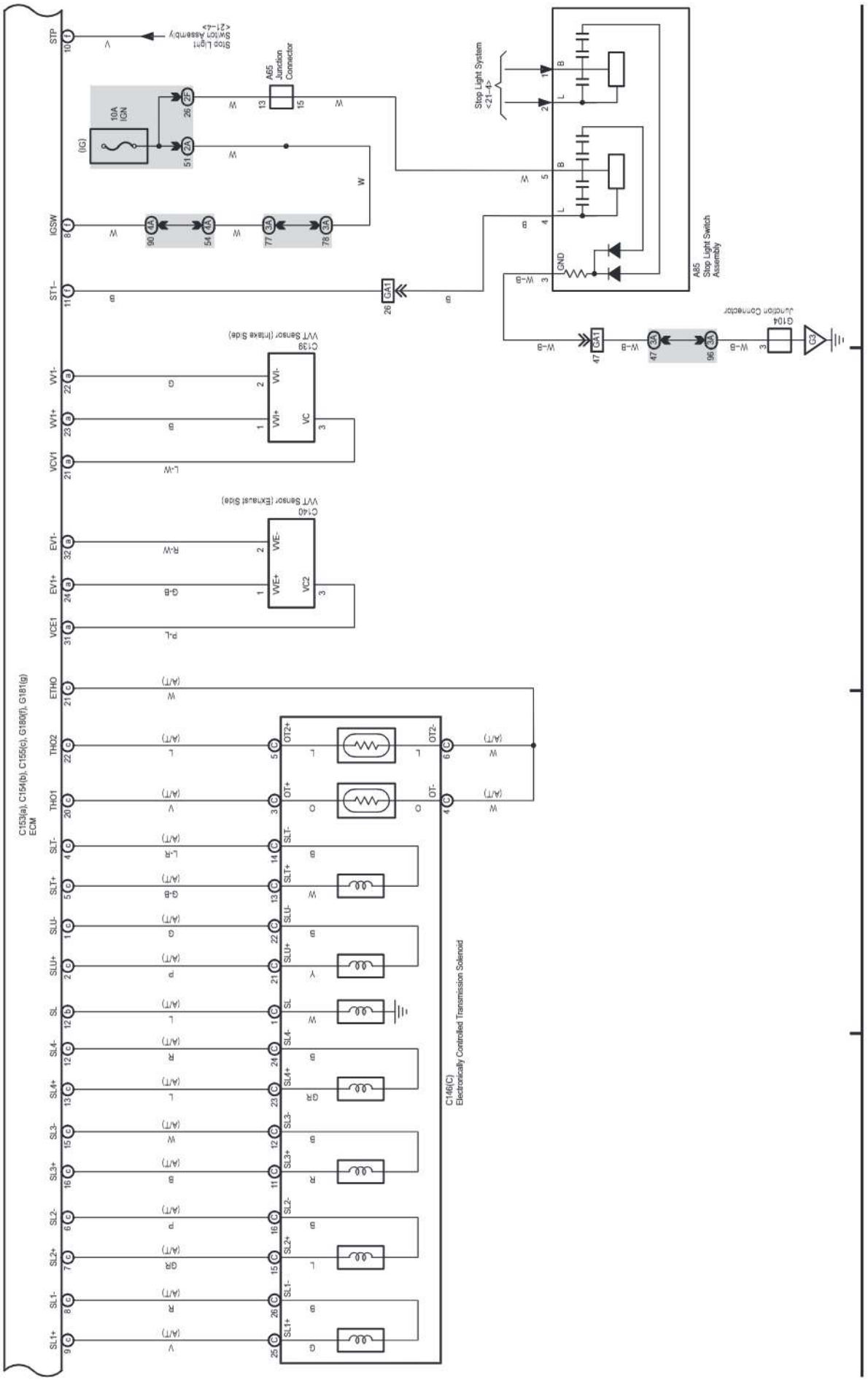

cardiagn.com

(Cont. next page)

Cruise Control (2TR-FE) (From Jun. 2015 until Aug. 2017 Production), Engine Control (2TR-FE) (From Jun. 2015 until Aug. 2017 Production) and ECT and A/T Indicator (2TR-FE) (From Jun. 2015 until Aug. 2017 Production)

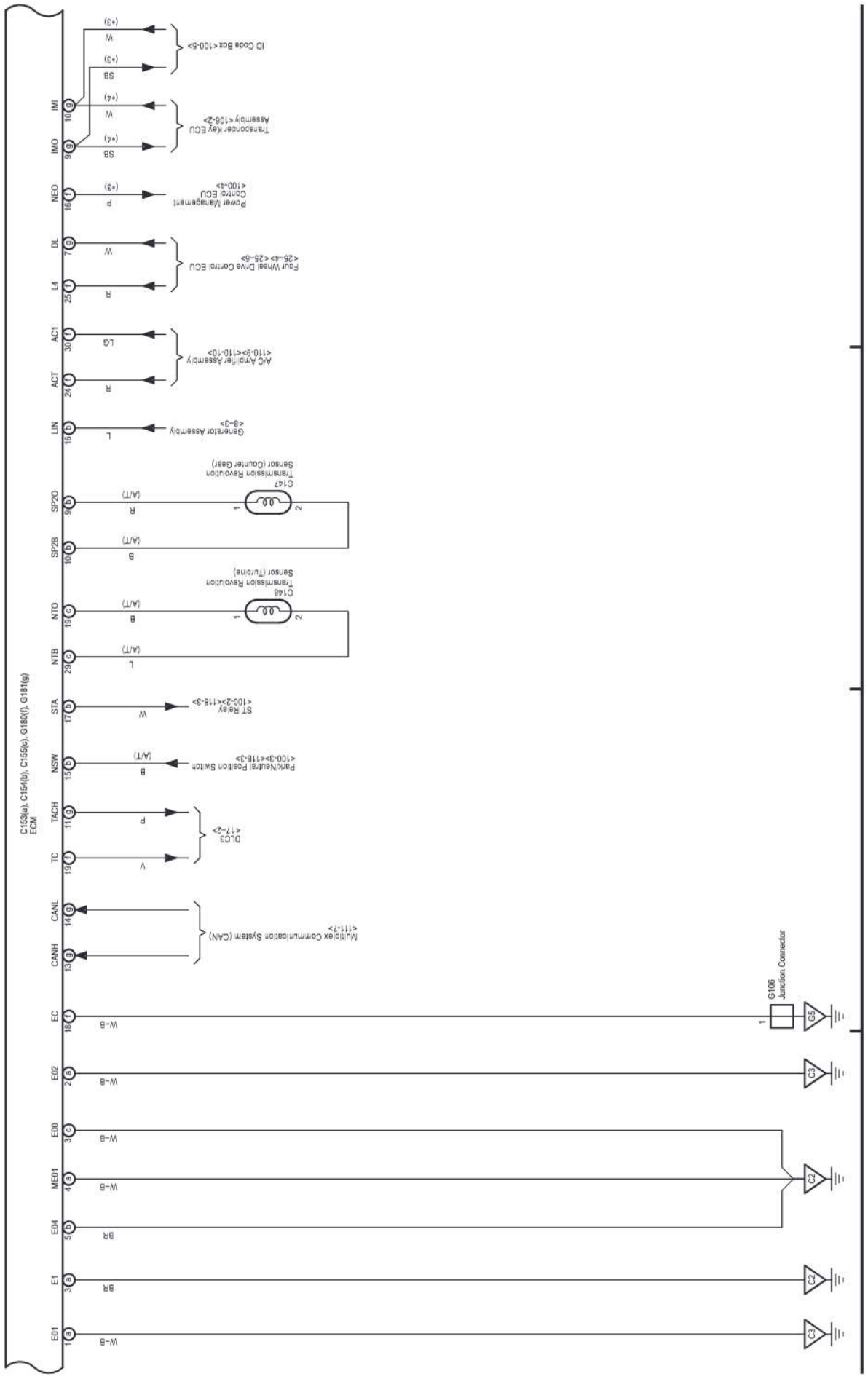

cardiagn.com

(Cont. next page)

Cruise Control (2TR-FE) (From Jun. 2015 until Aug. 2017 Production), Engine Control (2TR-FE) (From Jun. 2015 until Aug. 2017 Production) and ECT and A/T Indicator (2TR-FE) (From Jun. 2015 until Aug. 2017 Production)

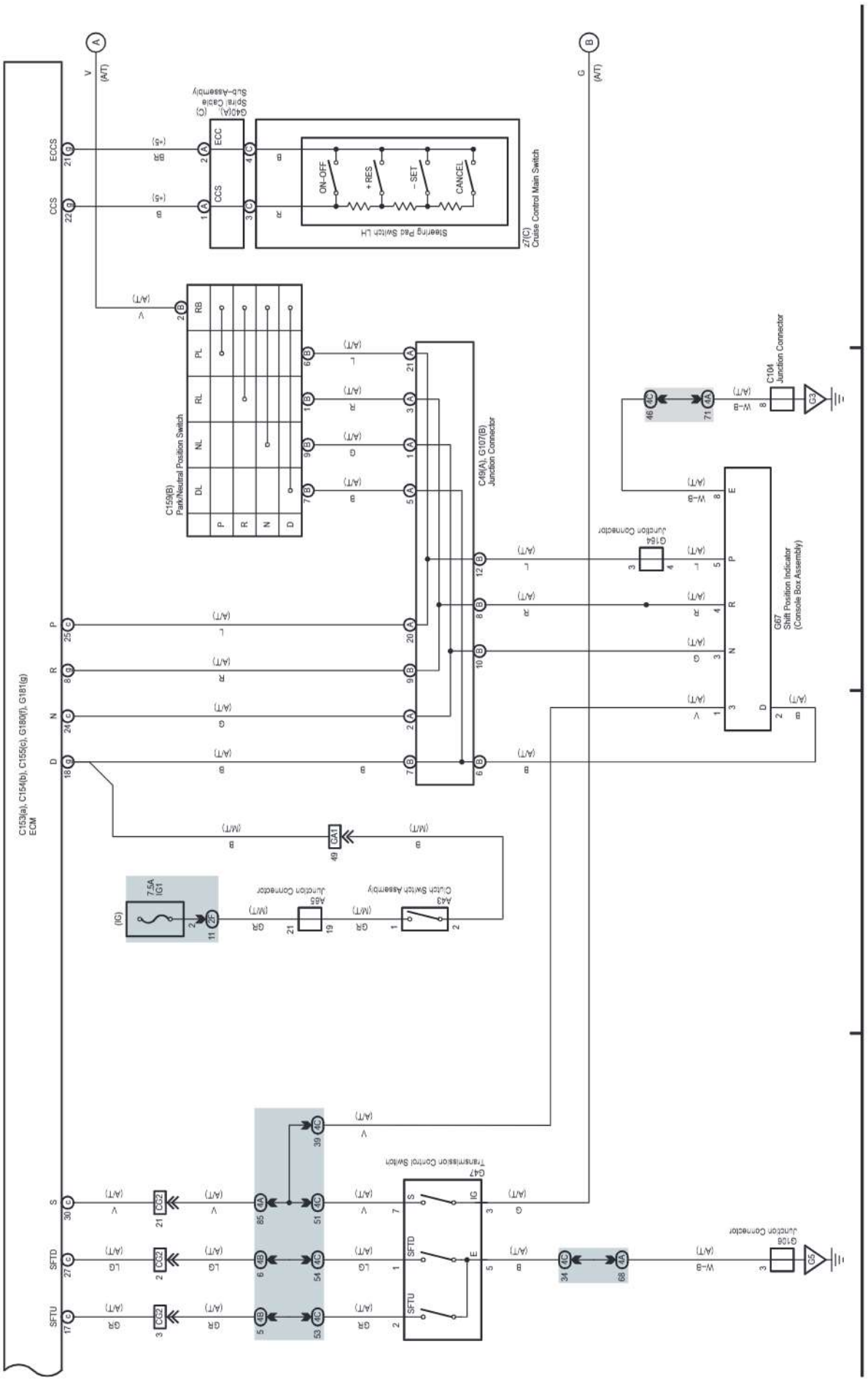

cardiagn.com

Cruise Control (2TR-FE) (From Jun. 2015 until Aug. 2017 Production), Engine Control (2TR-FE) (From Jun. 2015 until Aug. 2017 Production) and ECT and A/T Indicator (2TR-FE) (From Jun. 2015 until Aug. 2017 Production)

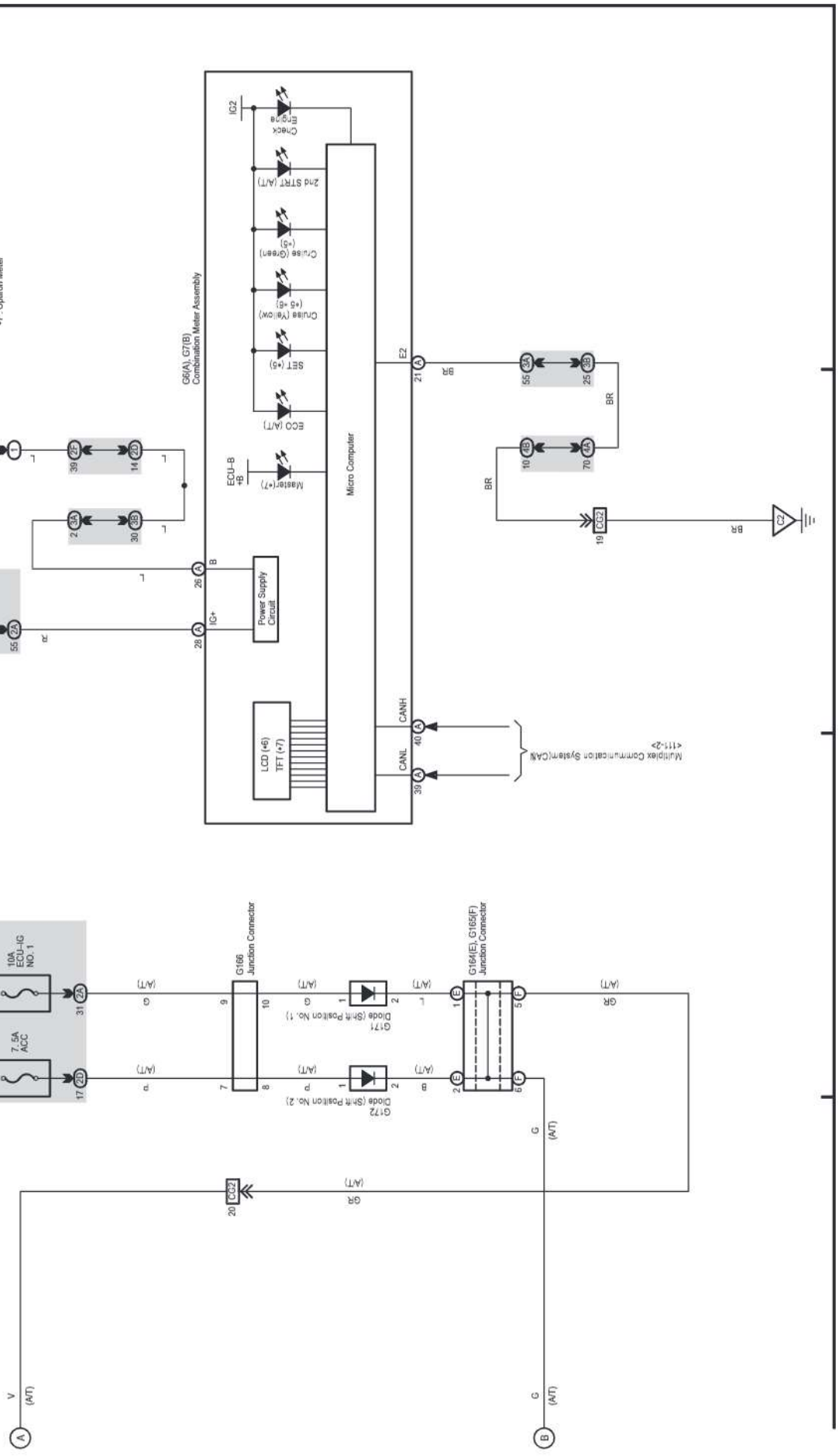

cardiagn.com

(Cont. next page)

104 LAND CRUISER / LAND CRUISER PRADO

Cruise Control (1KD-FTV) (From Jun. 2015 until Aug. 2017 Production), Dynamic Radar Cruise Control (1KD-FTV) (From Jun. 2015 until Aug. 2017 Production), Engine Control (1KD-FTV) (From Jun. 2015 until Aug. 2017 Production) and ECT and A/T Indicator (1KD-FTV) (From Jun. 2015 until Aug. 2017 Production)

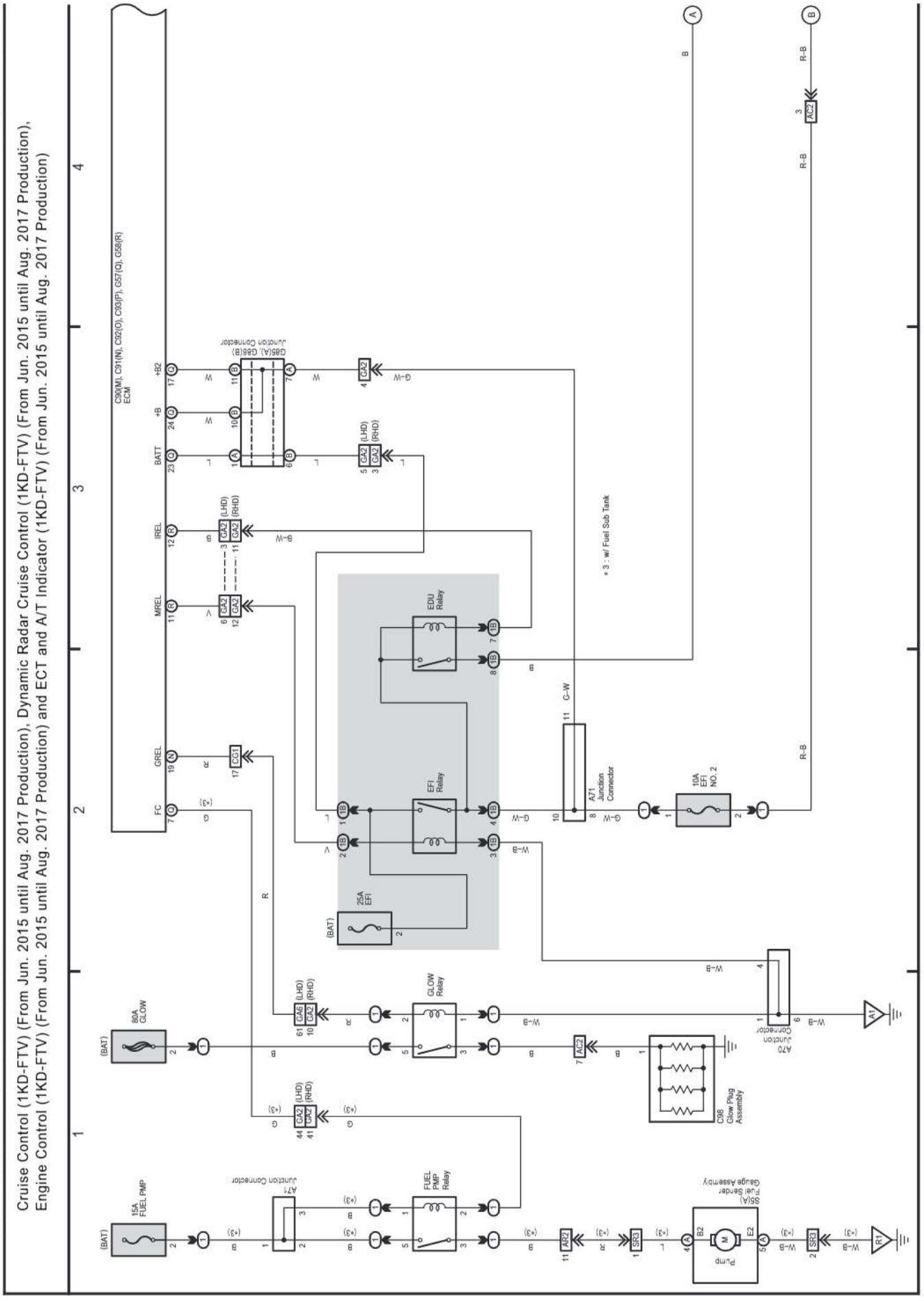

(Cont. next page)

Cruise Control (1KD-FTV) (From Jun. 2015 until Aug. 2017 Production), Dynamic Radar Cruise Control (1KD-FTV) (From Jun. 2015 until Aug. 2017 Production), Engine Control (1KD-FTV) (From Jun. 2015 until Aug. 2017 Production) and ECT and A/T Indicator (1KD-FTV) (From Jun. 2015 until Aug. 2017 Production)

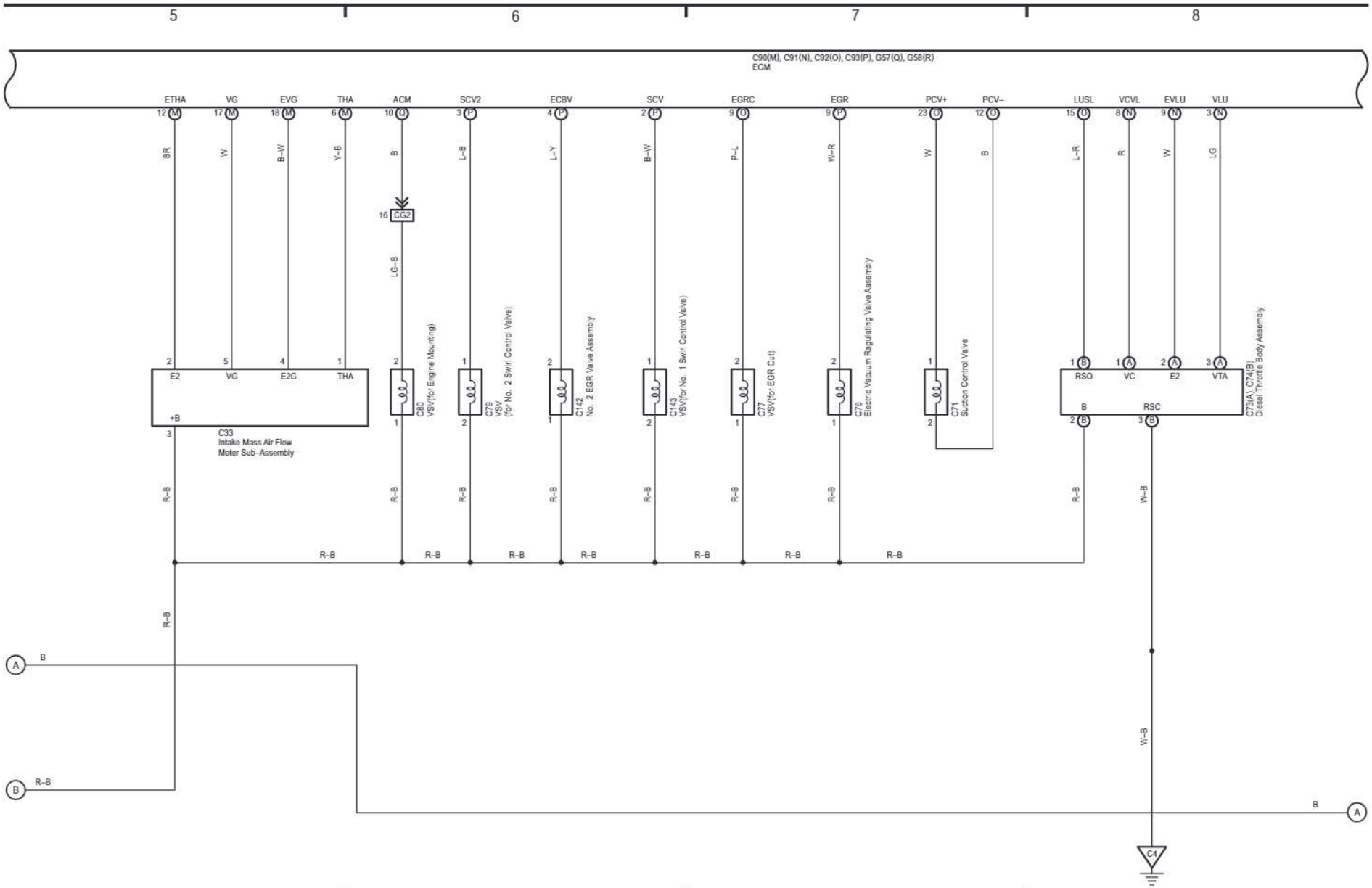

cardiagn.com

cardiagn.com

(Cont. next page)

104 LAND CRUISER / LAND CRUISER PRADO (Cont'd)

Cruise Control (1KD-FTV) (From Jun. 2015 until Aug. 2017 Production), Dynamic Radar Cruise Control (1KD-FTV) (From Jun. 2015 until Aug. 2017 Production), Engine Control (1KD-FTV) (From Jun. 2015 until Aug. 2017 Production) and ECT and A/T Indicator (1KD-FTV) (From Jun. 2015 until Aug. 2017 Production)

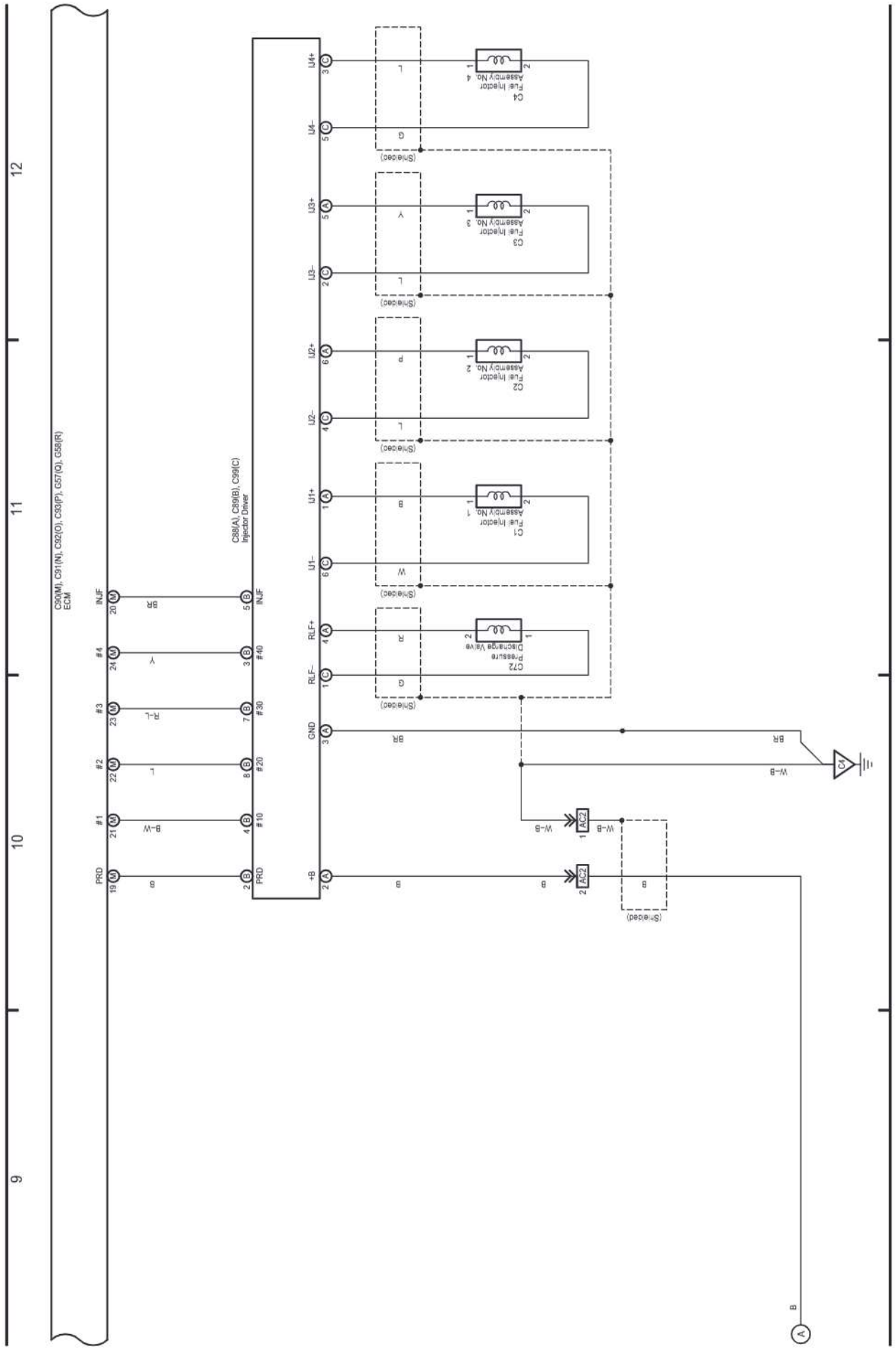

(Cont. next page)

Cruise Control (1KD-FTV) (From Jun. 2015 until Aug. 2017 Production), Dynamic Radar Cruise Control (1KD-FTV) (From Jun. 2015 until Aug. 2017 Production), Engine Control (1KD-FTV) (From Jun. 2015 until Aug. 2017 Production) and ECT and A/T Indicator (1KD-FTV) (From Jun. 2015 until Aug. 2017 Production)

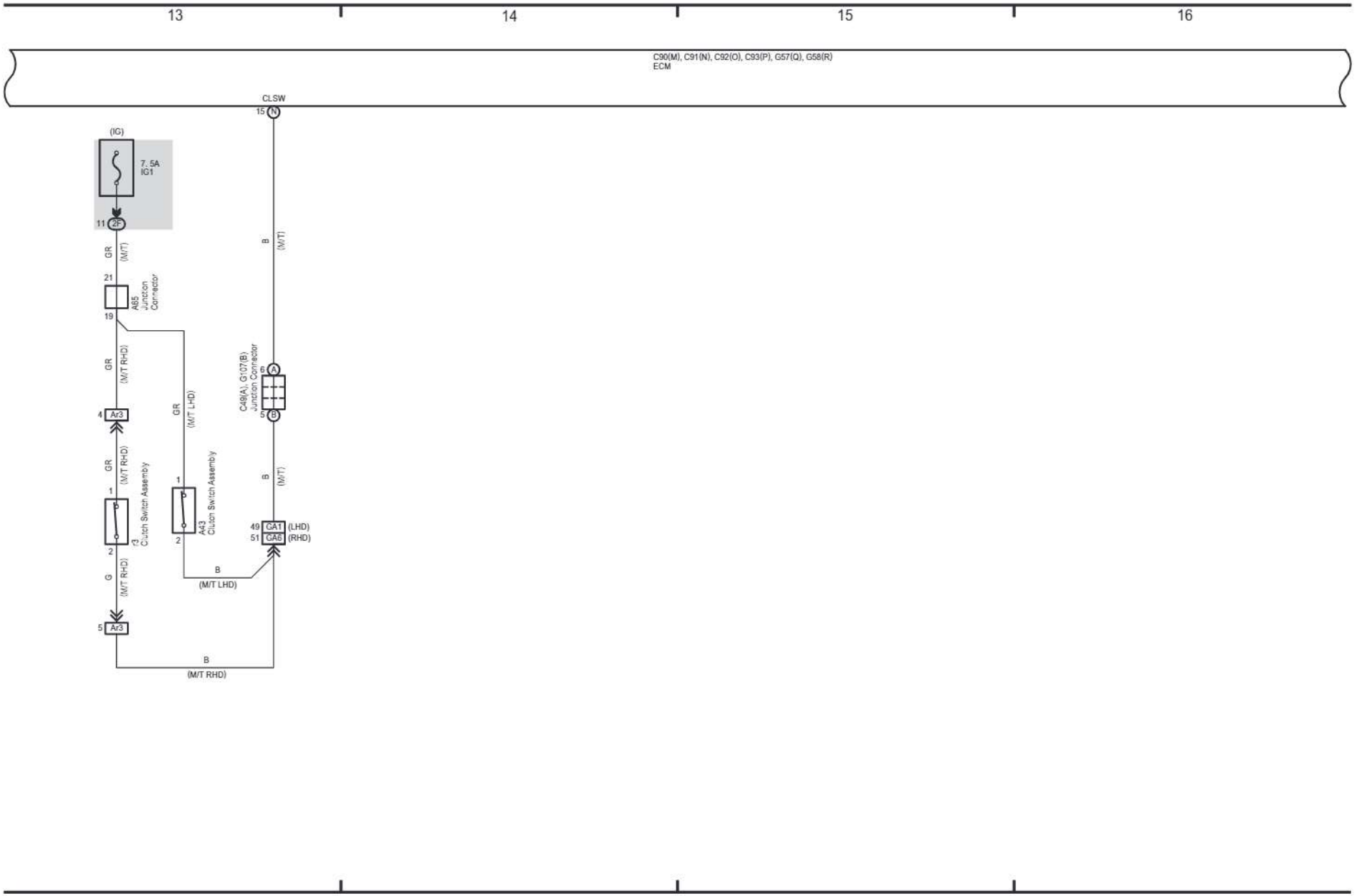

cardiagn.com

cardiagn.com

(Cont. next page)

104 LAND CRUISER / LAND CRUISER PRADO (Cont'd)

Cruise Control (1KD-FTV) (From Jun. 2015 until Aug. 2017 Production), Dynamic Radar Cruise Control (1KD-FTV) (From Jun. 2015 until Aug. 2017 Production), Engine Control (1KD-FTV) (From Jun. 2015 until Aug. 2017 Production) and ECT and A/T Indicator (1KD-FTV) (From Jun. 2015 until Aug. 2017 Production)

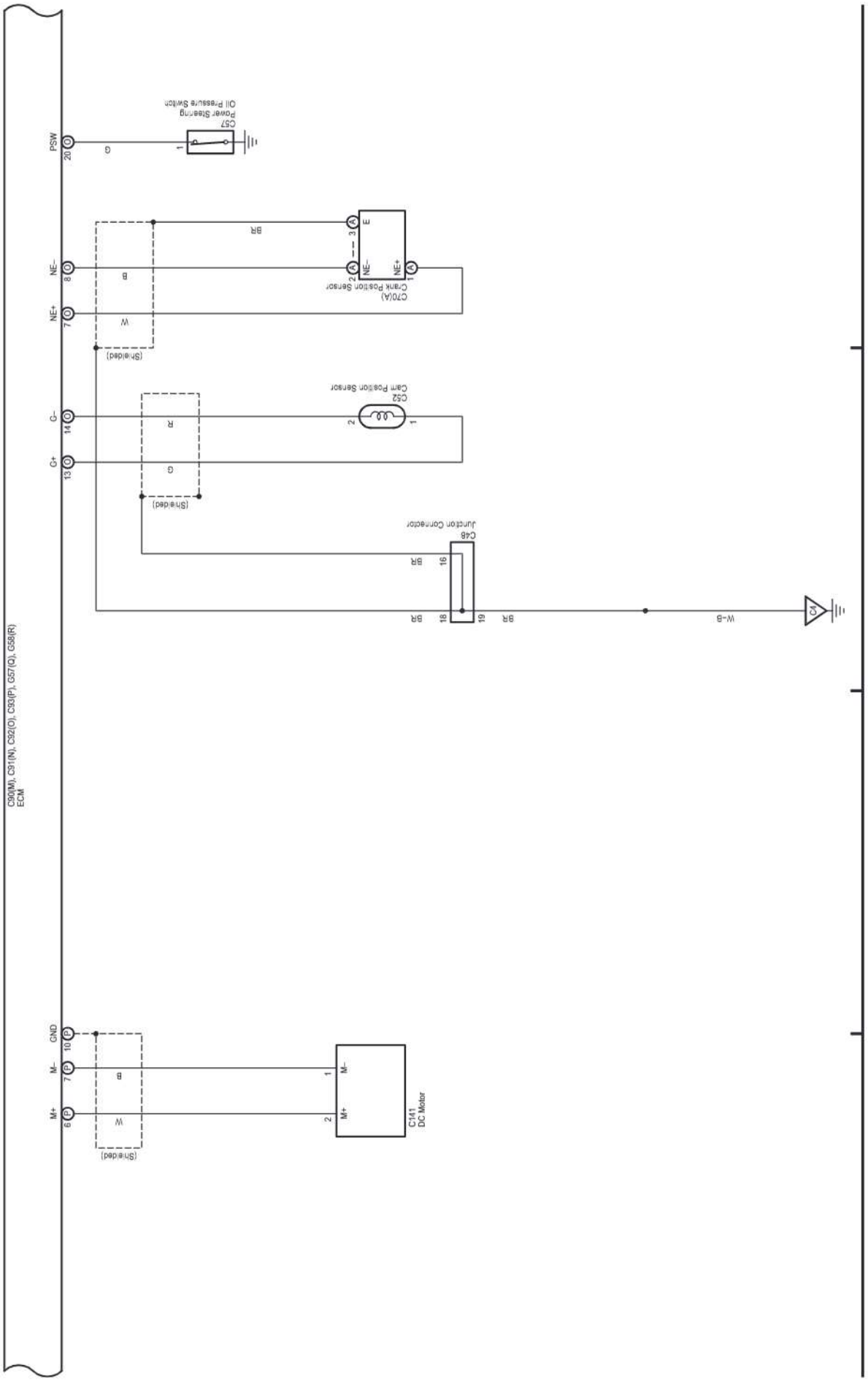

(Cont. next page)

Cruise Control (1KD-FTV) (From Jun. 2015 until Aug. 2017 Production), Dynamic Radar Cruise Control (1KD-FTV) (From Jun. 2015 until Aug. 2017 Production), Engine Control (1KD-FTV) (From Jun. 2015 until Aug. 2017 Production) and ECT and A/T Indicator (1KD-FTV) (From Jun. 2015 until Aug. 2017 Production)

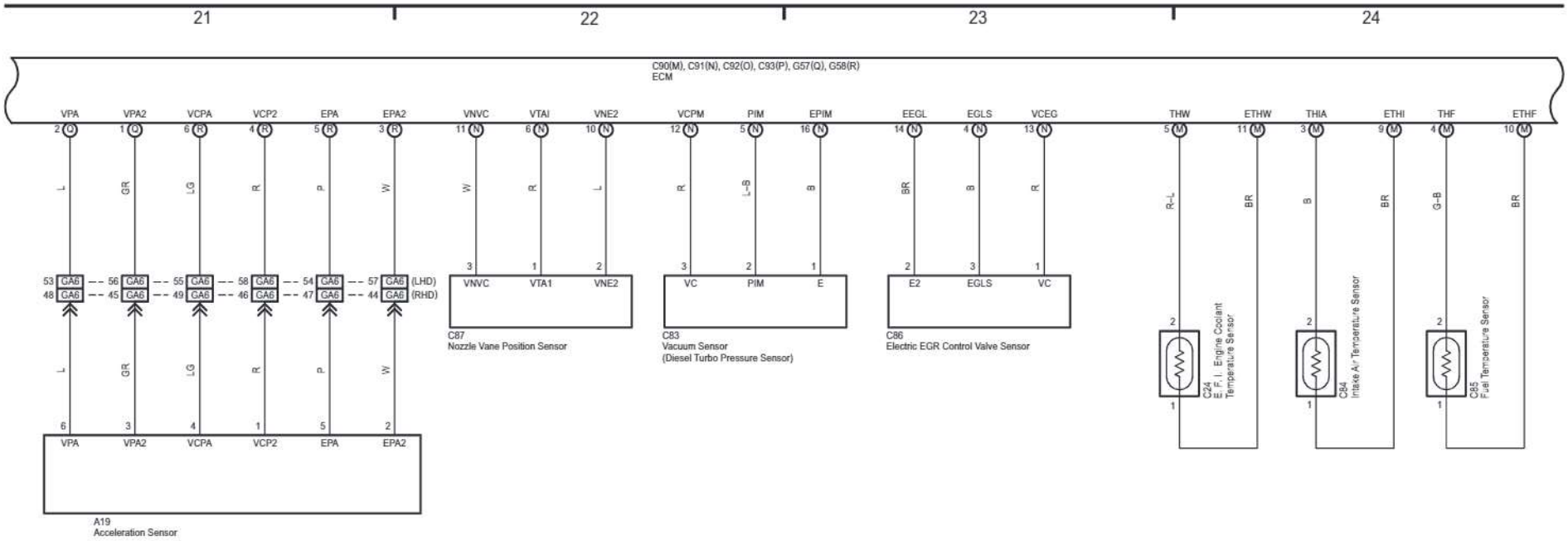

cardiagn.com

cardiagn.com

(Cont. next page)

104 LAND CRUISER / LAND CRUISER PRADO (Cont'd)

Cruise Control (1KD-FTV) (From Jun. 2015 until Aug. 2017 Production), Dynamic Radar Cruise Control (1KD-FTV) (From Jun. 2015 until Aug. 2017 Production), Engine Control (1KD-FTV) (From Jun. 2015 until Aug. 2017 Production) and ECT and A/T Indicator (1KD-FTV) (From Jun. 2015 until Aug. 2017 Production)

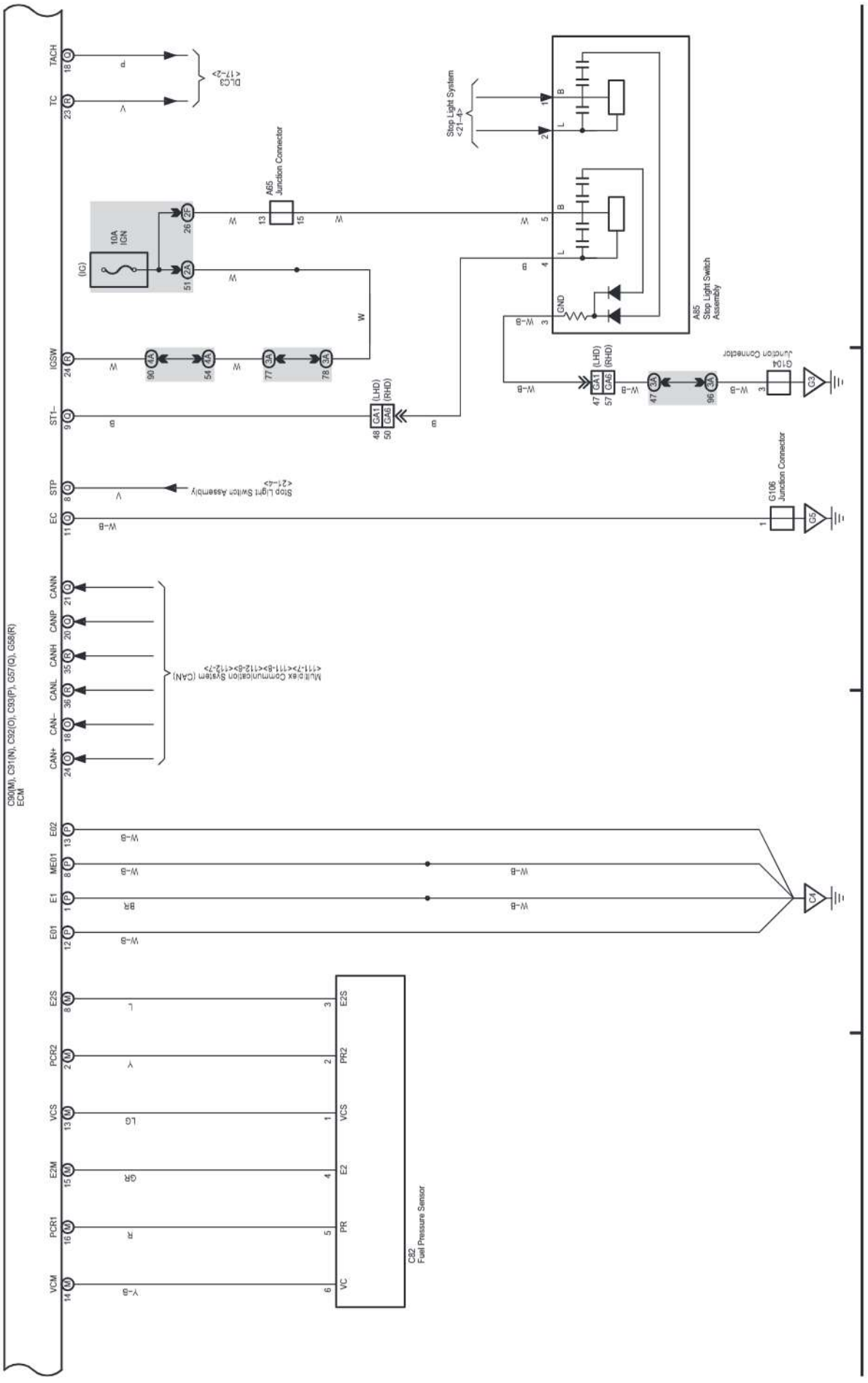

cardiagn.com

(Cont. next page)

Cruise Control (1KD-FTV) (From Jun. 2015 until Aug. 2017 Production), Dynamic Radar Cruise Control (1KD-FTV) (From Jun. 2015 until Aug. 2017 Production), Engine Control (1KD-FTV) (From Jun. 2015 until Aug. 2017 Production) and ECT and A/T Indicator (1KD-FTV) (From Jun. 2015 until Aug. 2017 Production)

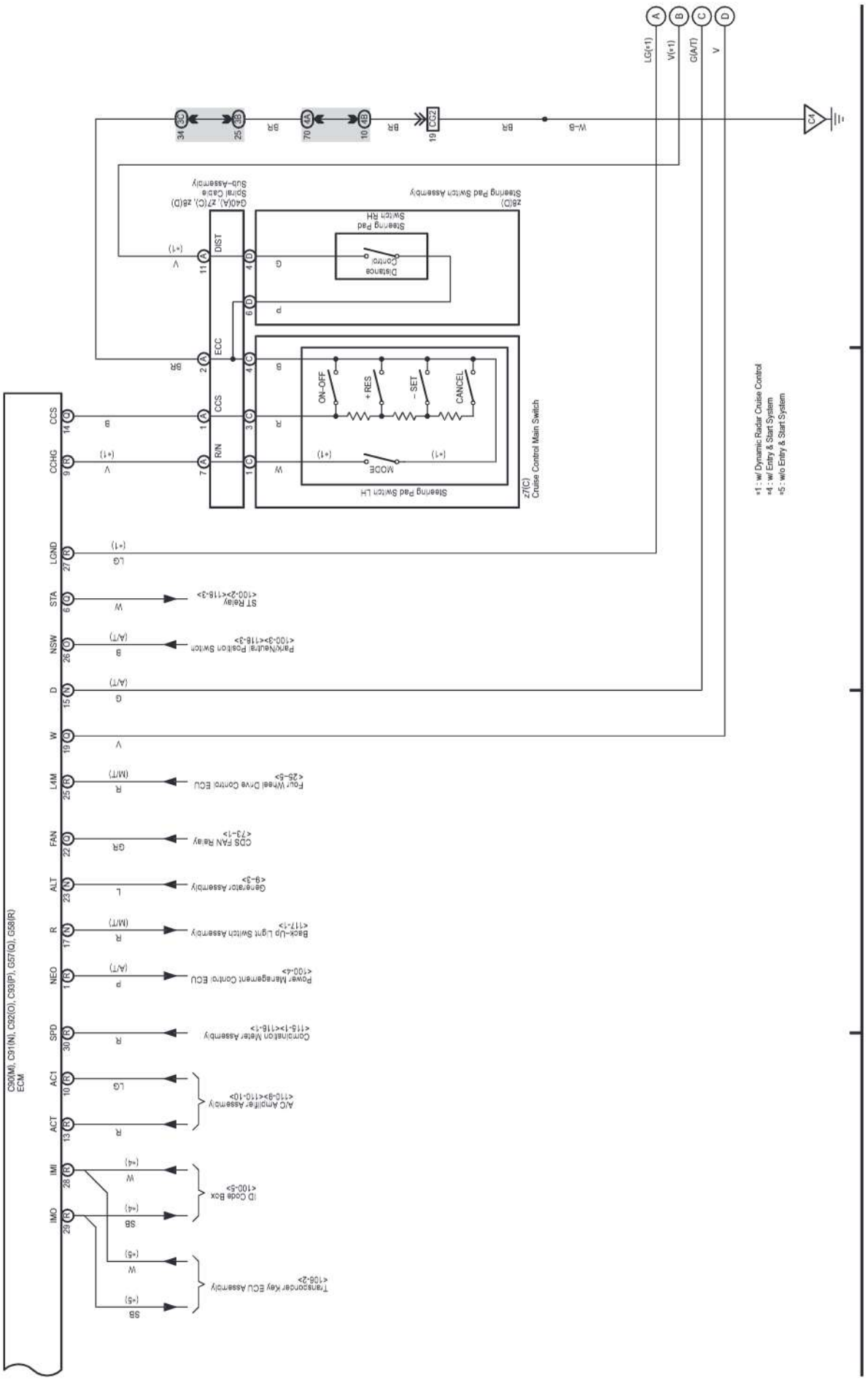

cardiagn.com

(Cont. next page)

104 LAND CRUISER / LAND CRUISER PRADO (Cont'd)

Cruise Control (1KD-FTV) (From Jun. 2015 until Aug. 2017 Production), Dynamic Radar Cruise Control (1KD-FTV) (From Jun. 2015 until Aug. 2017 Production), Engine Control (1KD-FTV) (From Jun. 2015 until Aug. 2017 Production) and ECT and A/T Indicator (1KD-FTV) (From Jun. 2015 until Aug. 2017 Production)

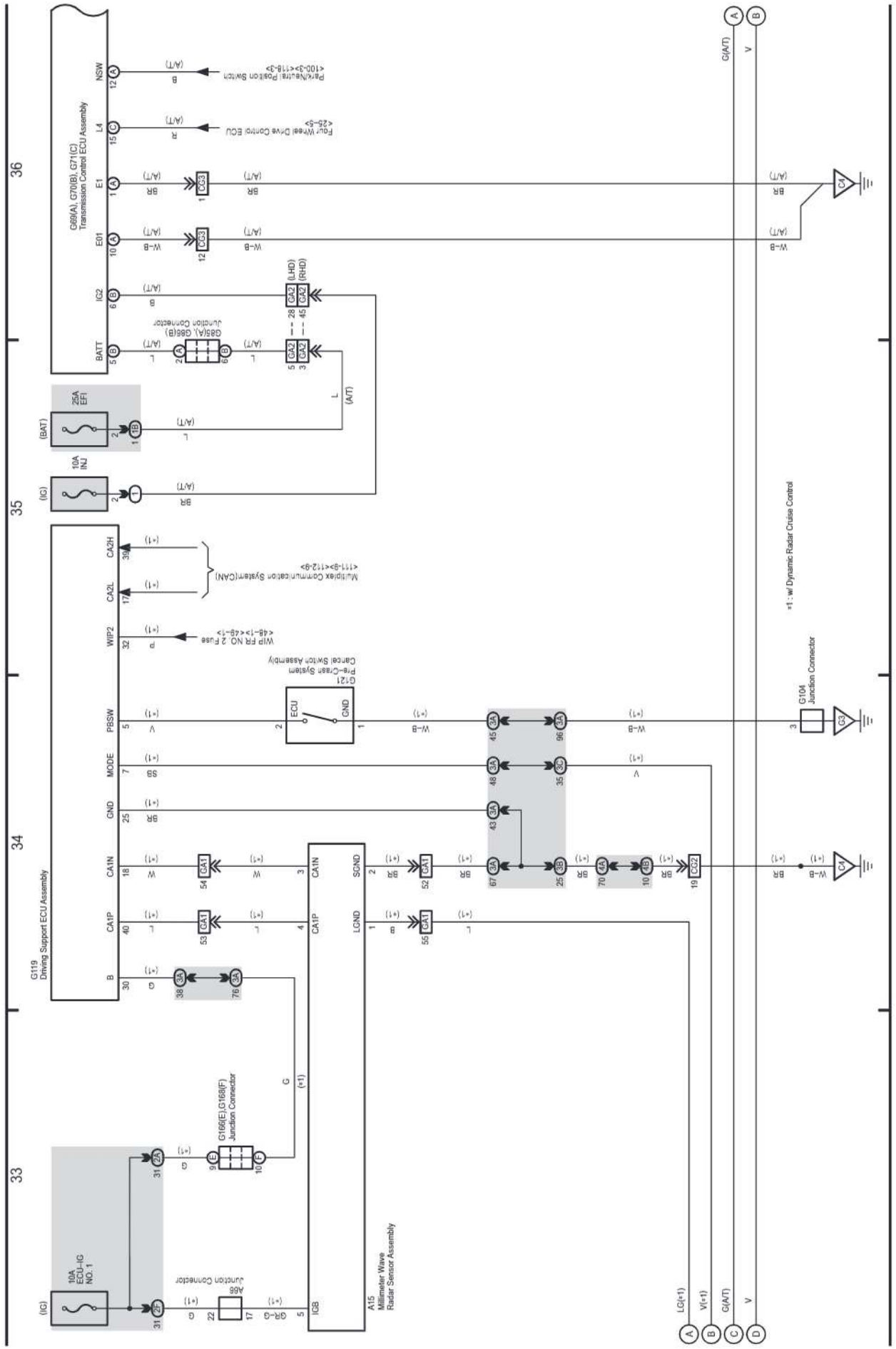

(Cont. next page)

Cruise Control (1KD-FTV) (From Jun. 2015 until Aug. 2017 Production), Dynamic Radar Cruise Control (1KD-FTV) (From Jun. 2015 until Aug. 2017 Production), Engine Control (1KD-FTV) (From Jun. 2015 until Aug. 2017 Production) and ECT and A/T Indicator (1KD-FTV) (From Jun. 2015 until Aug. 2017 Production)

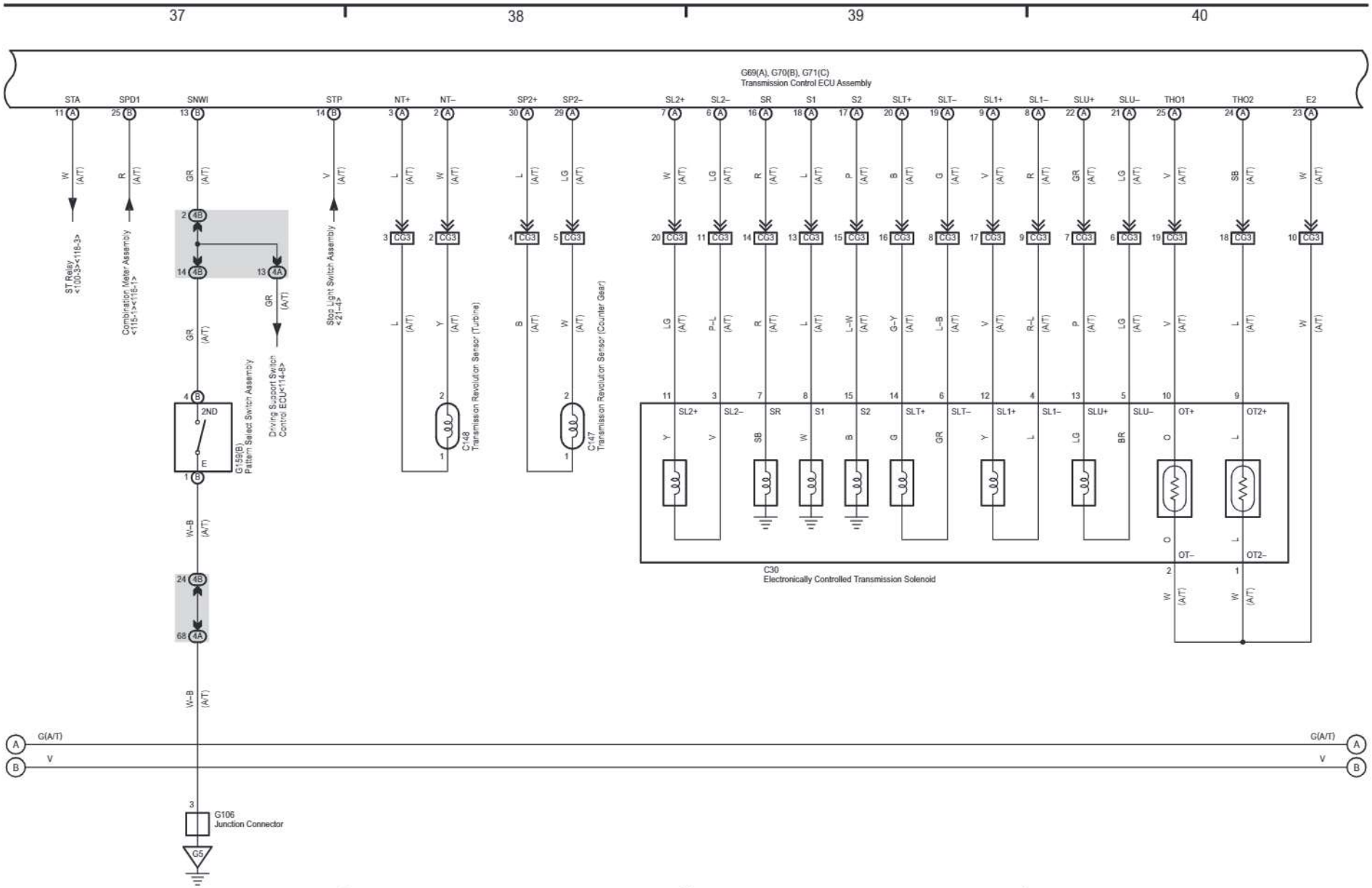

cardiagn.com

cardiagn.com

(Cont. next page)

Cruise Control (1KD-FTV) (From Jun. 2015 until Aug. 2017 Production), Dynamic Radar Cruise Control (1KD-FTV) (From Jun. 2015 until Aug. 2017 Production), Engine Control (1KD-FTV) (From Jun. 2015 until Aug. 2017 Production) and ECT and A/T Indicator (1KD-FTV) (From Jun. 2015 until Aug. 2017 Production)

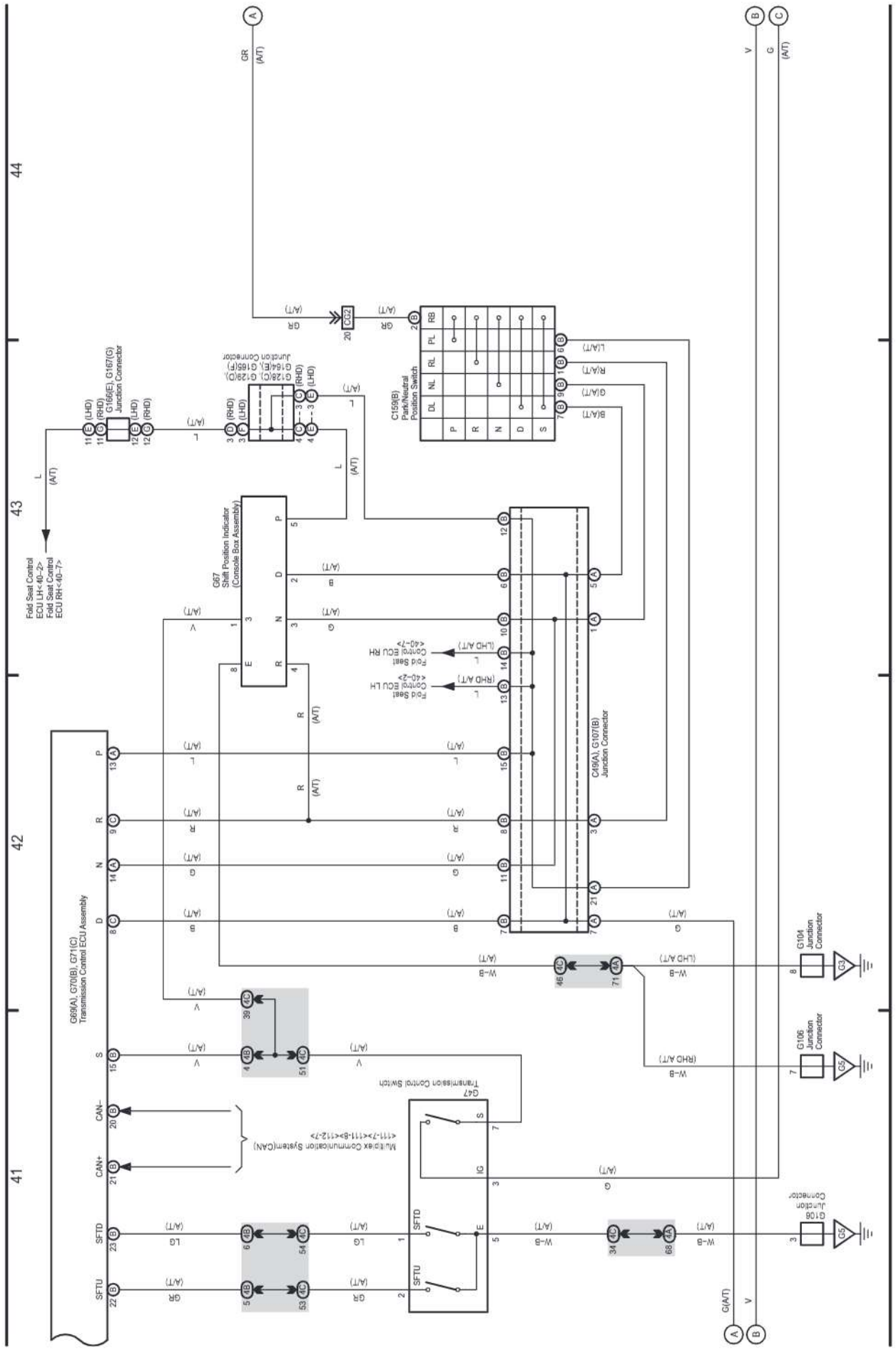

cardiagn.com

104 LAND CRUISER / LAND CRUISER PRADO (Cont'd)

Cruise Control (1KD-FTV) (From Jun. 2015 until Aug. 2017 Production), Dynamic Radar Cruise Control (1KD-FTV) (From Jun. 2015 until Aug. 2017 Production), Engine Control (1KD-FTV) (From Jun. 2015 until Aug. 2017 Production) and ECT and A/T Indicator (1KD-FTV) (From Jun. 2015 until Aug. 2017 Production)

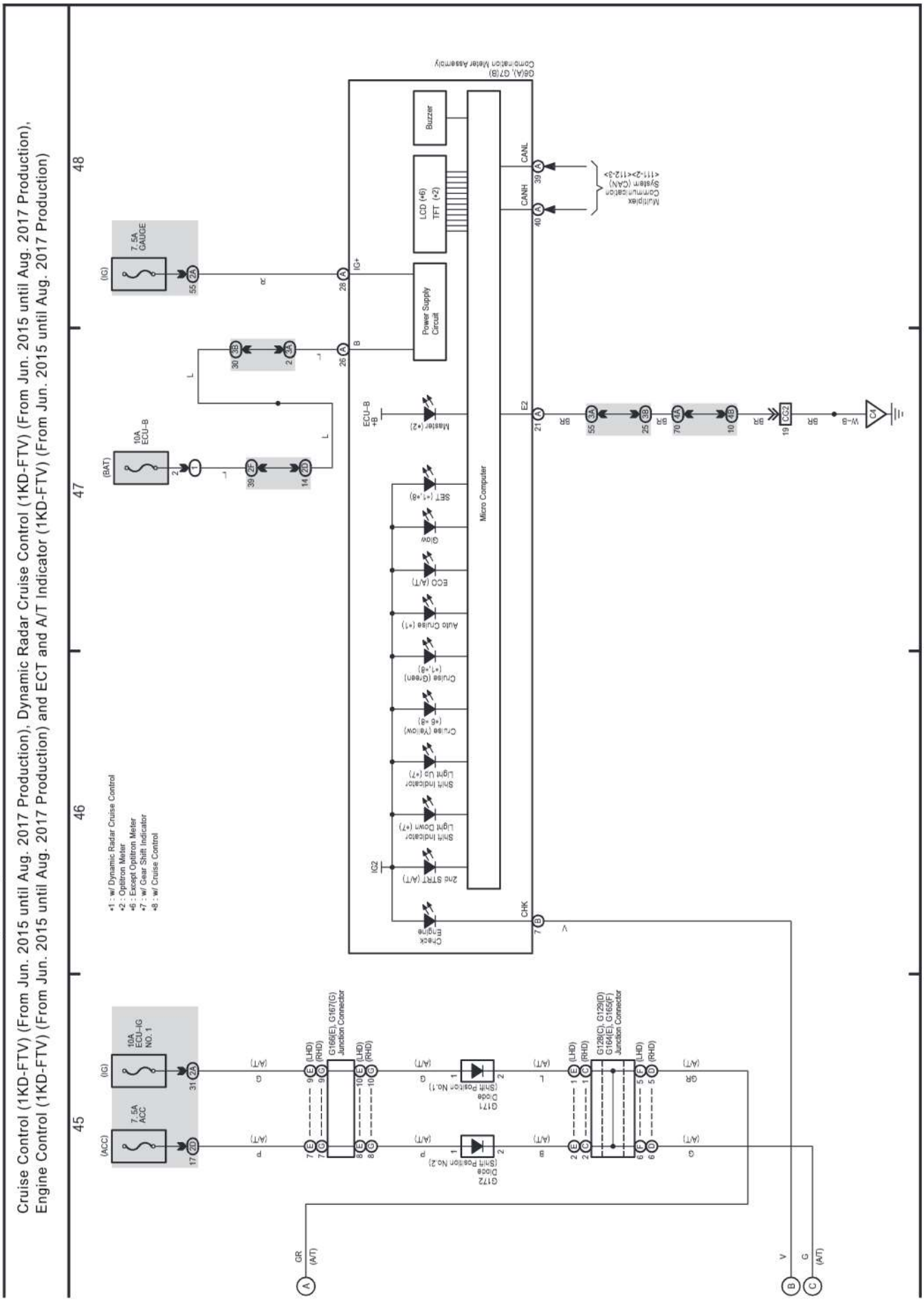

cardiagn.com

M OVERALL ELECTRICAL WIRING DIAGRAM

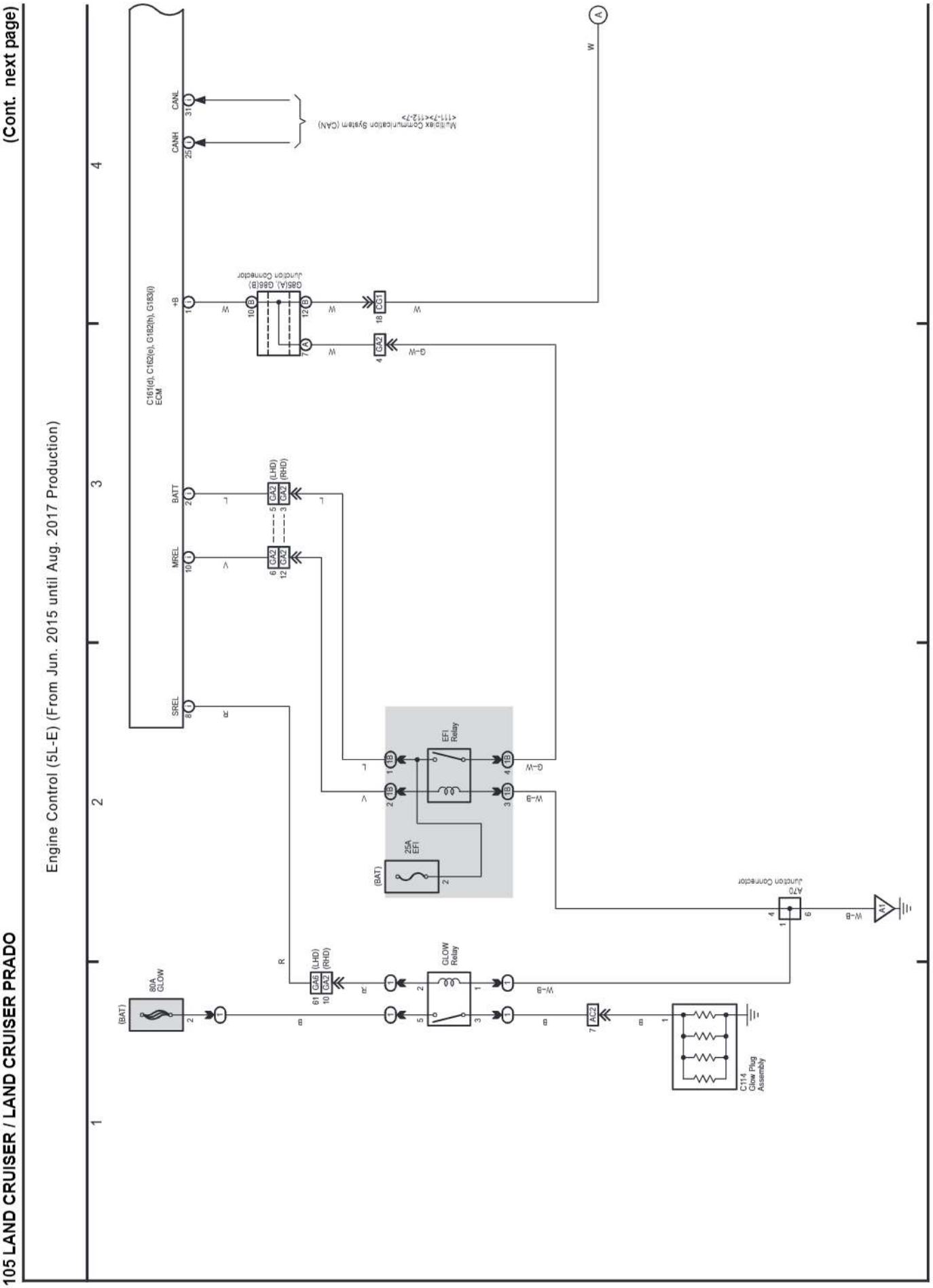

cardiagn.com

105 LAND CRUISER / LAND CRUISER PRADO (Cont'd)

(Cont. next page)

Engine Control (5L-E) (From Jun. 2015 until Aug. 2017 Production)

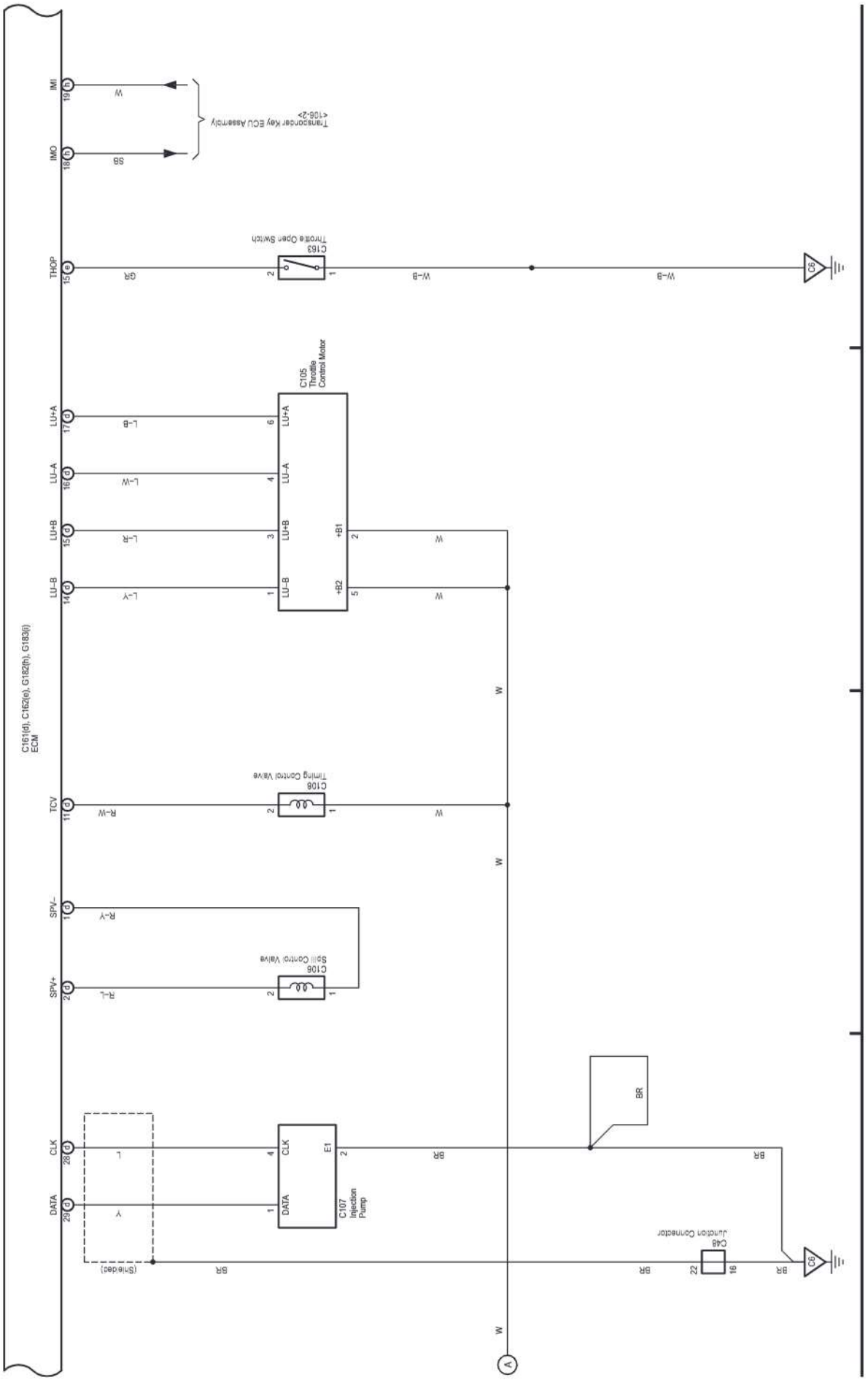

cardiagn.com

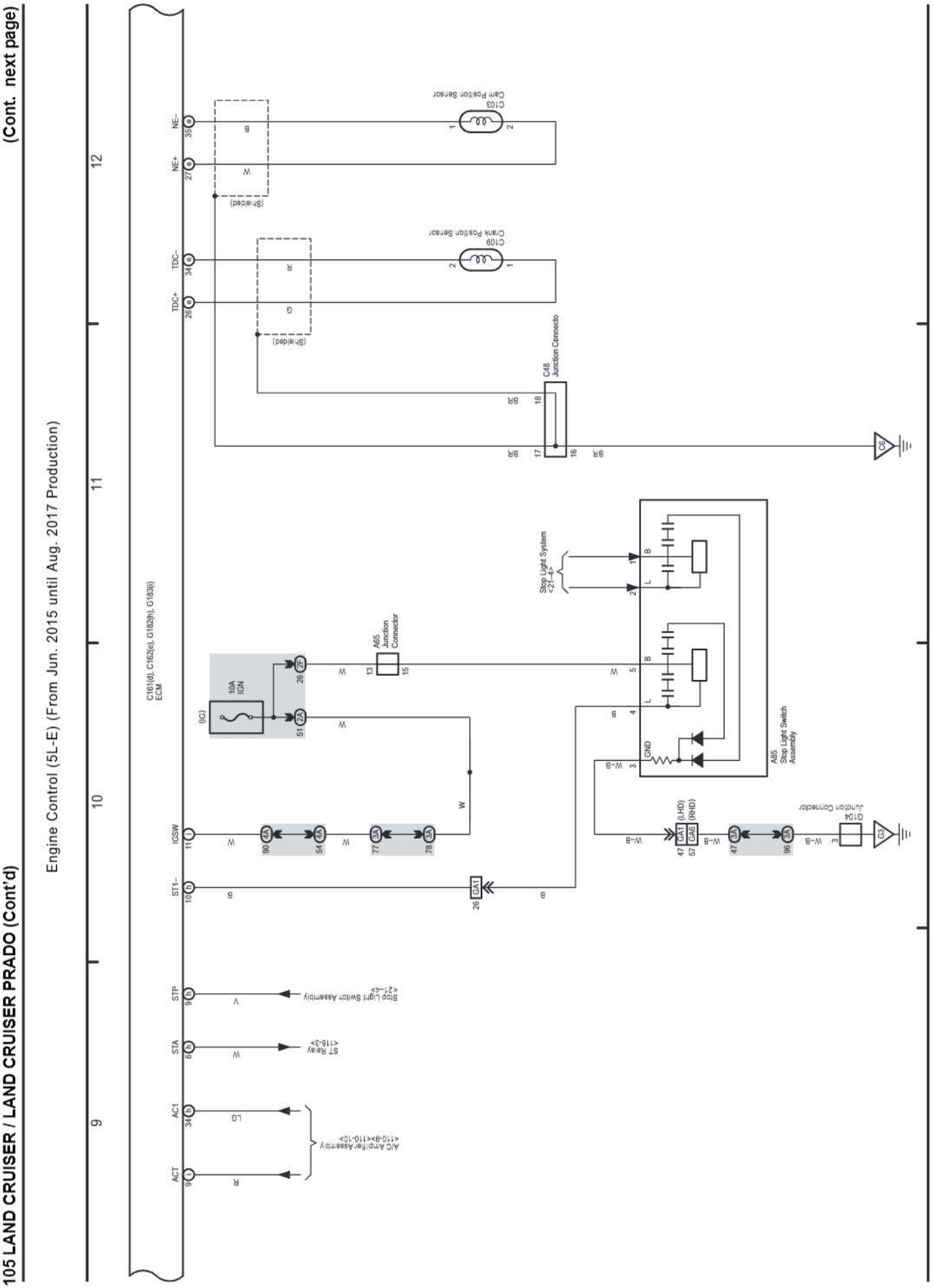

(Cont. next page)

Engine Control (5L-E) (From Jun. 2015 until Aug. 2017 Production)

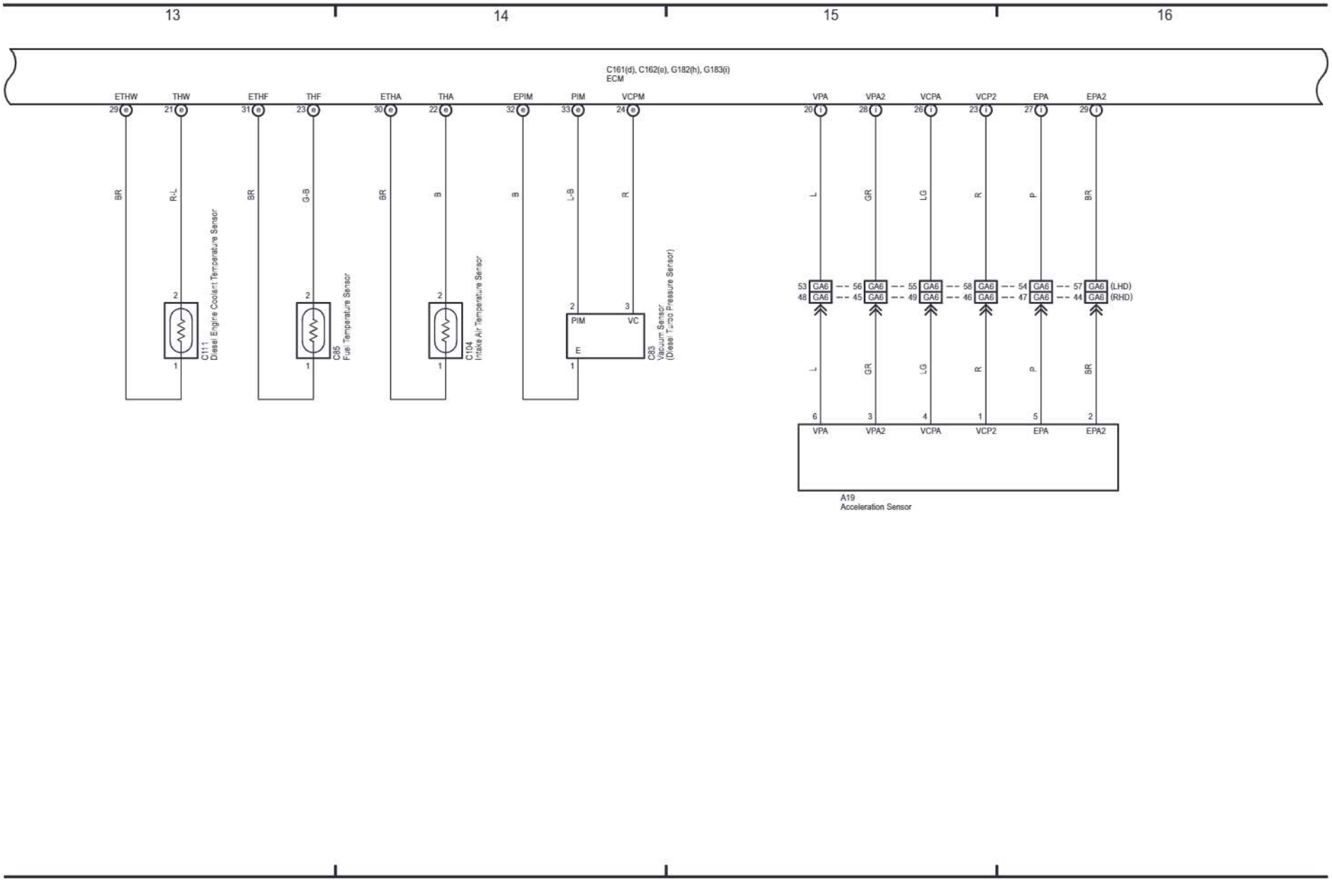

cardiagn.com

cardiagn.com

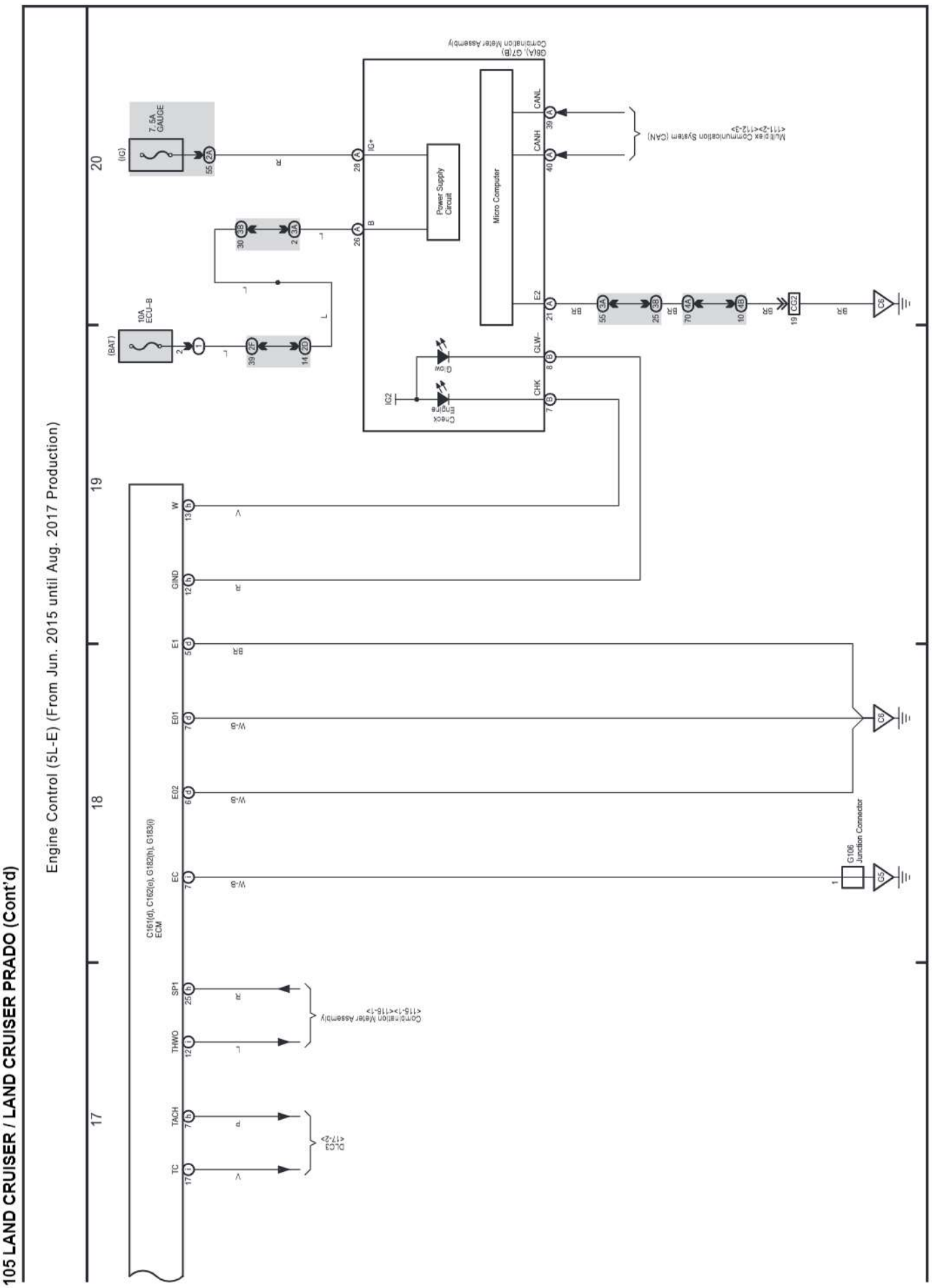

cardiagn.com

106 LAND CRUISER / LAND CRUISER PRADO

Engine Immobiliser System (w/o Entry & Start System) (From Jun. 2015 until Aug. 2017 Production)

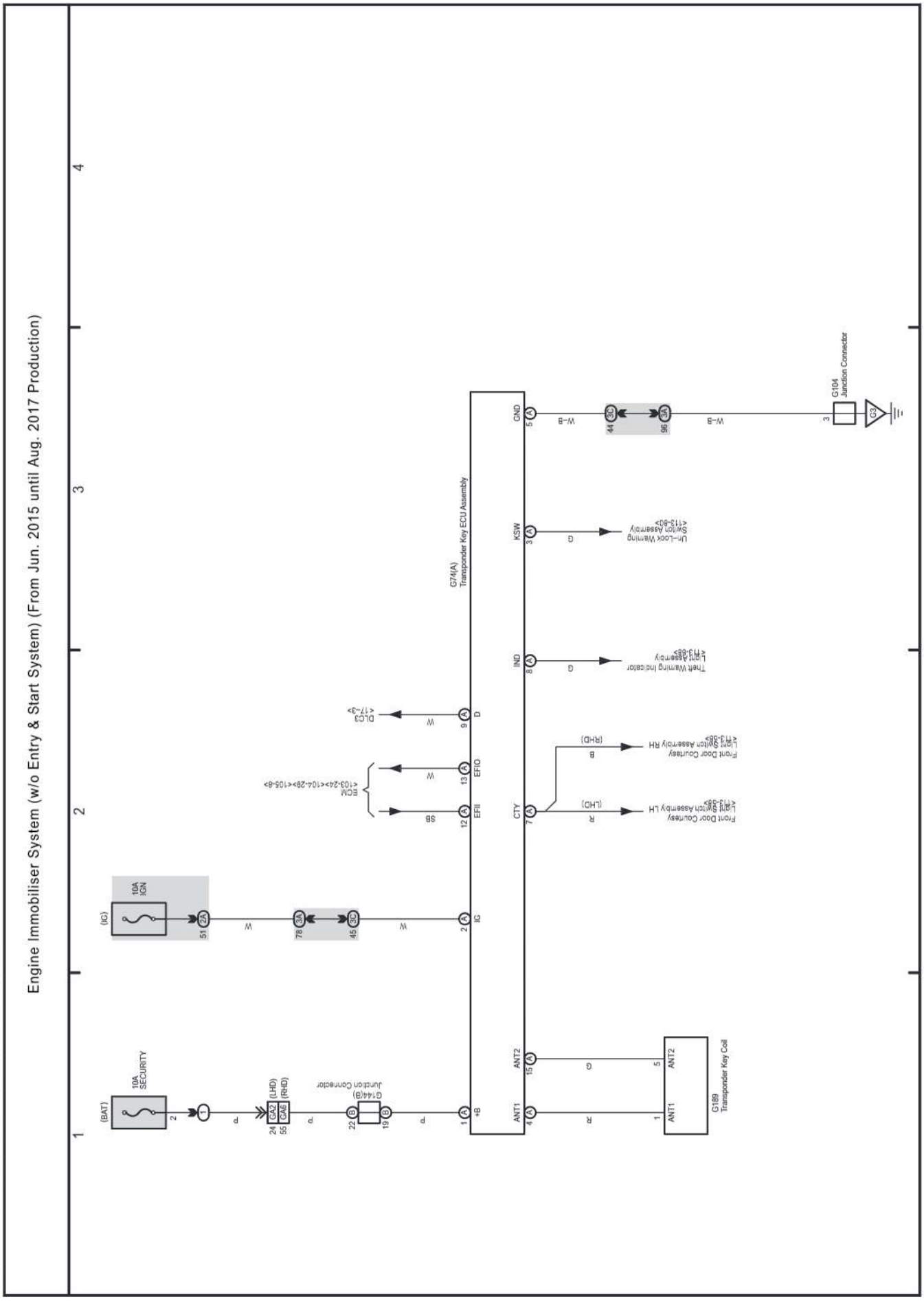

cardiagn.com

107 LAND CRUISER / LAND CRUISER PRADO

ABS (2TR-FE, 5L-E) (From Jun. 2015 until Aug. 2017 Production), TRC (2TR-FE) (From Jun. 2015 until Aug. 2017 Production) and VSC (2TR-FE) (From Jun. 2015 until Aug. 2017 Production)

(Cont. next page)

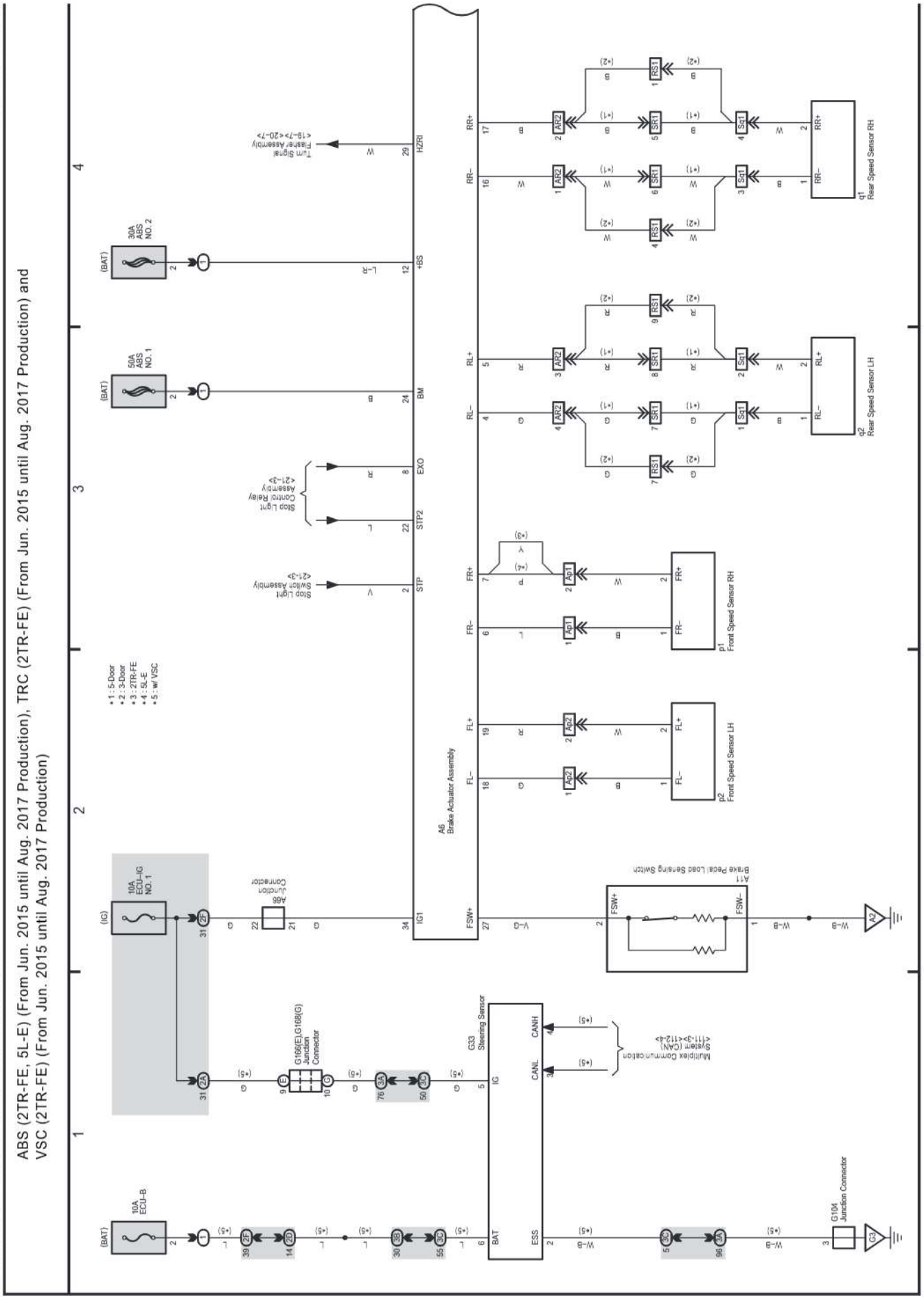

ABS (2TR-FE, 5L-E) (From Jun. 2015 until Aug. 2017 Production), TRC (2TR-FE) (From Jun. 2015 until Aug. 2017 Production) and VSC (2TR-FE) (From Jun. 2015 until Aug. 2017 Production)

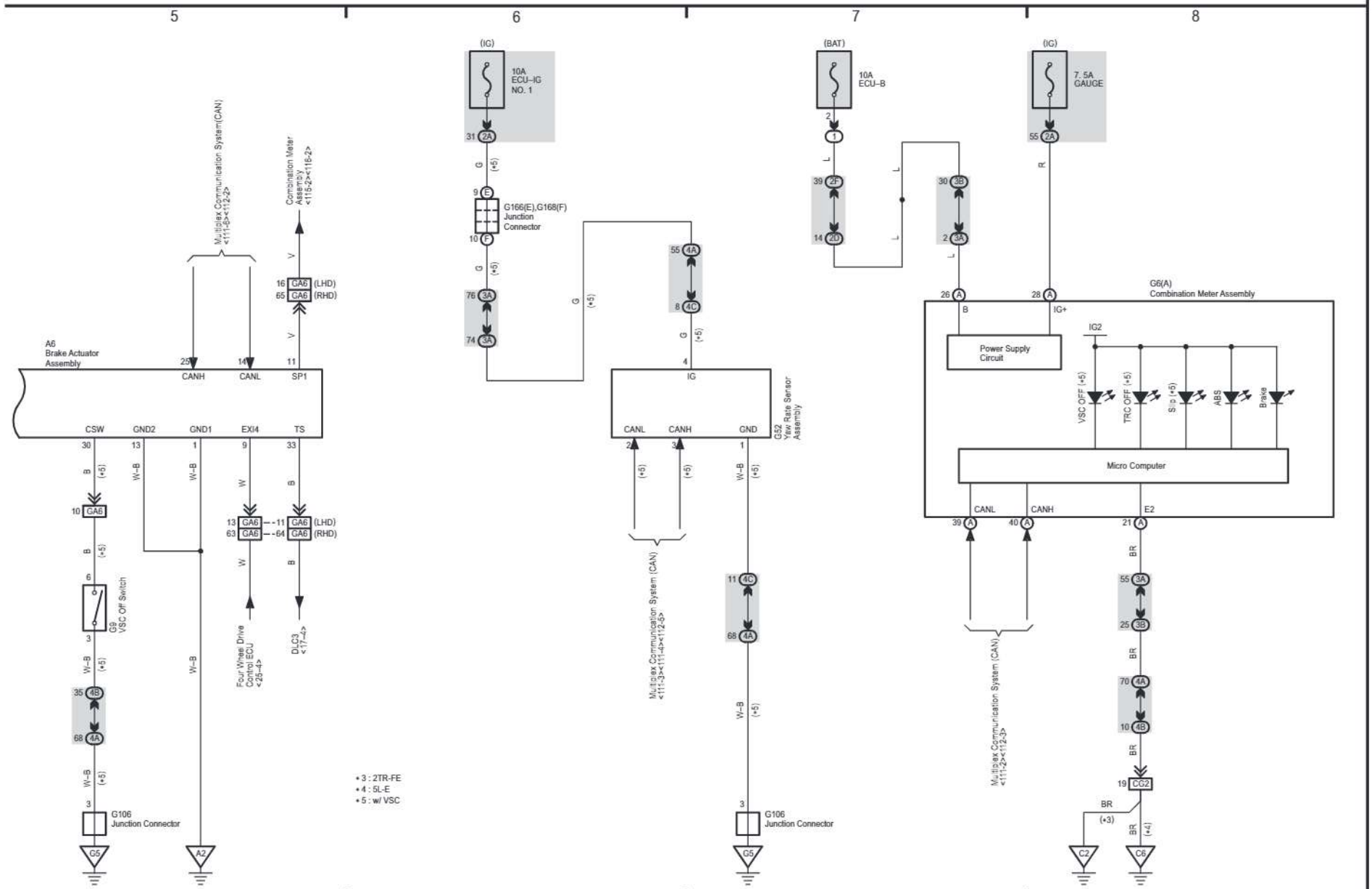

cardiagn.com

cardiagn.com

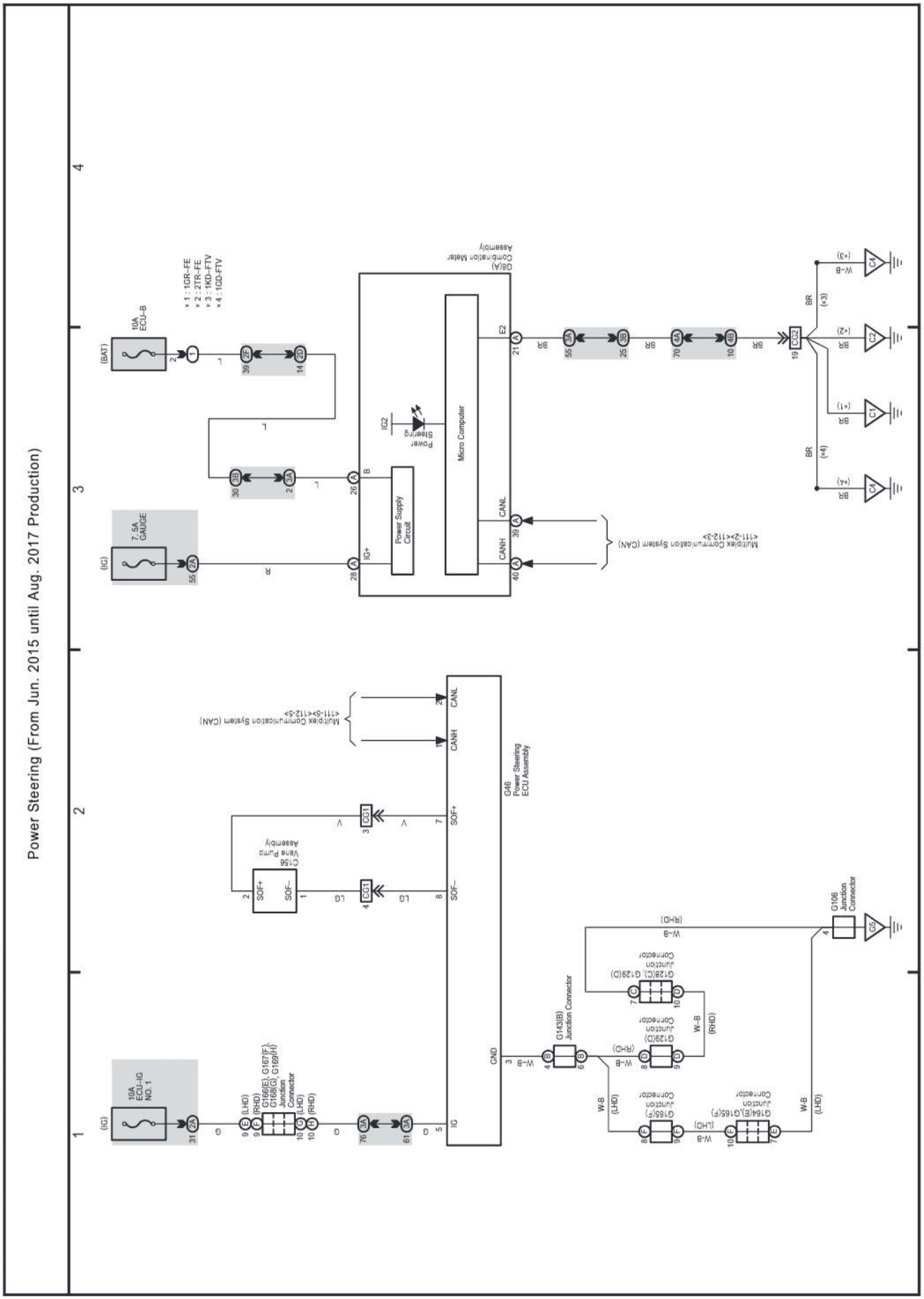

cardiagn.com

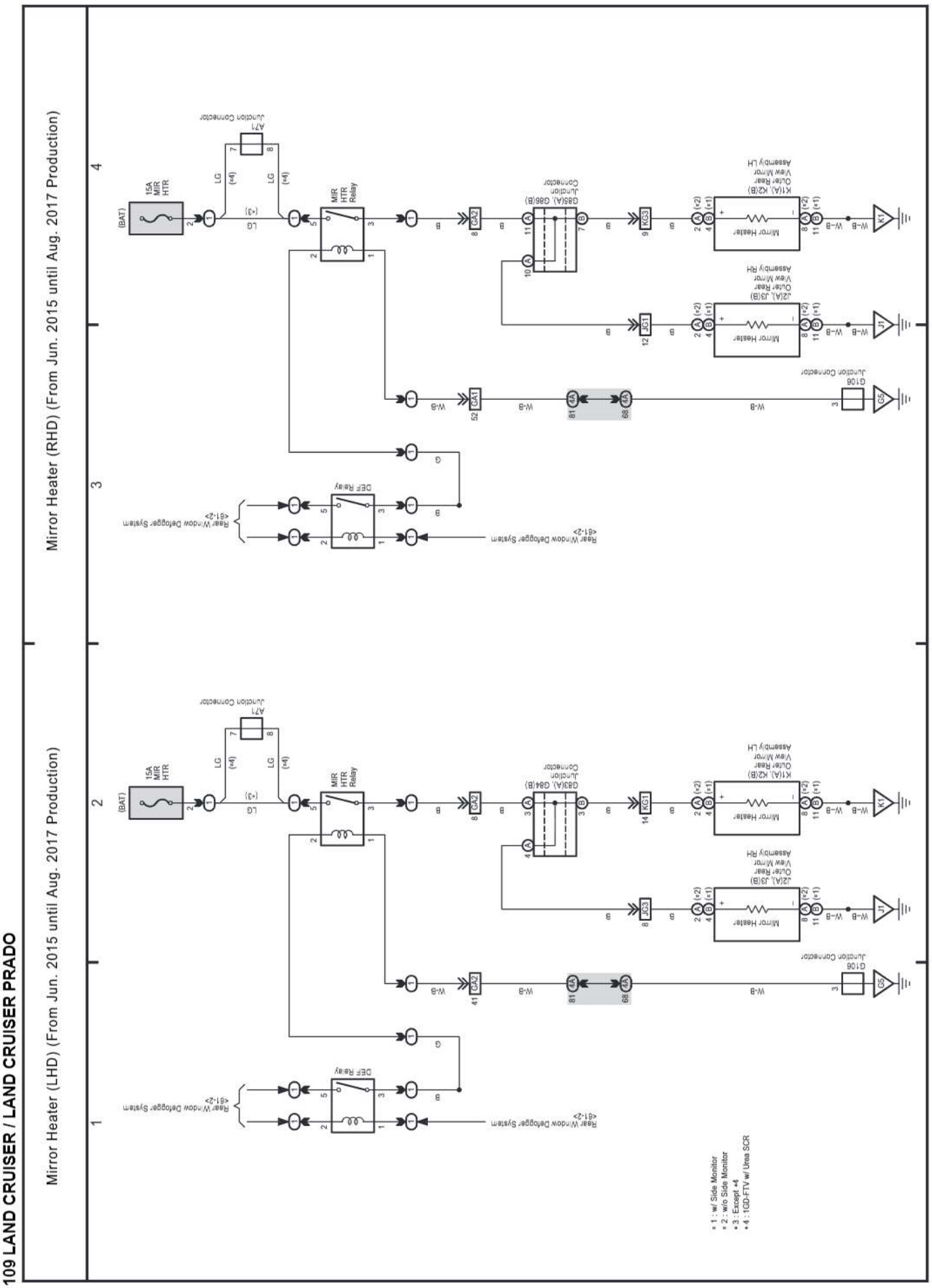

cardiagn.com

(Cont. next page)

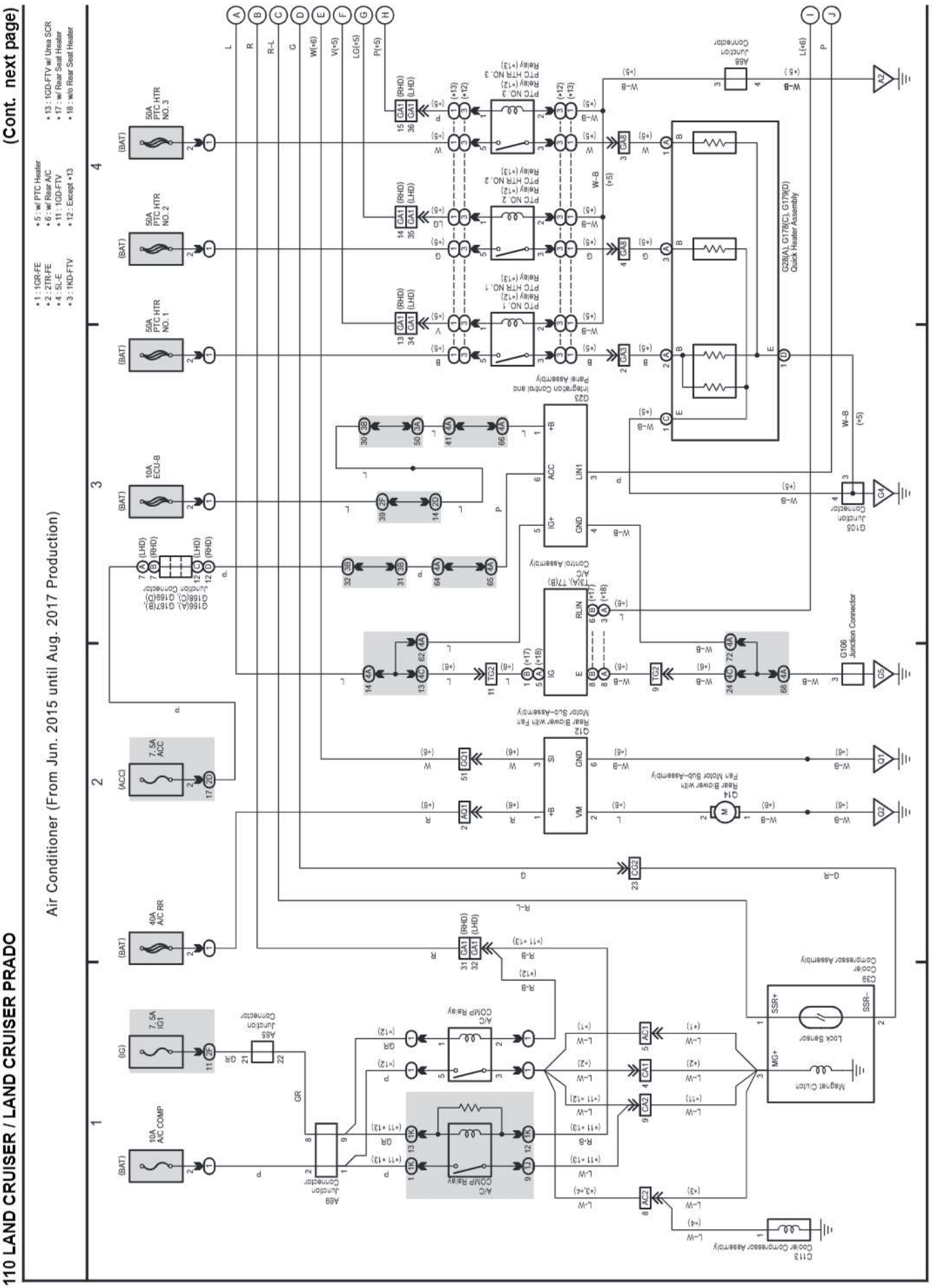

cardiagn.com

(Cont. next page)

Air Conditioner (From Jun. 2015 until Aug. 2017 Production)

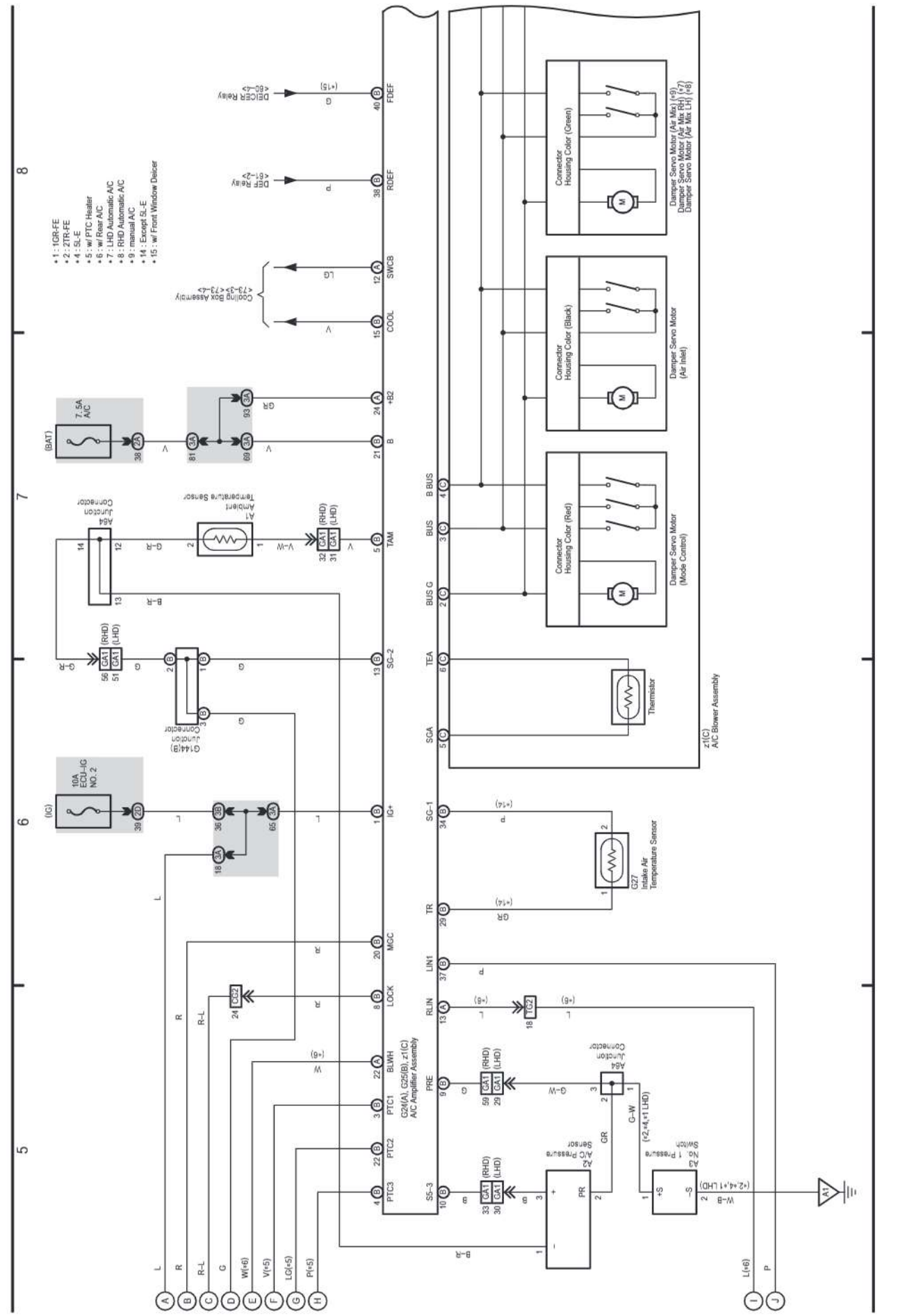

cardiagn.com

(Cont. next page)

Air Conditioner (From Jun. 2015 until Aug. 2017 Production)

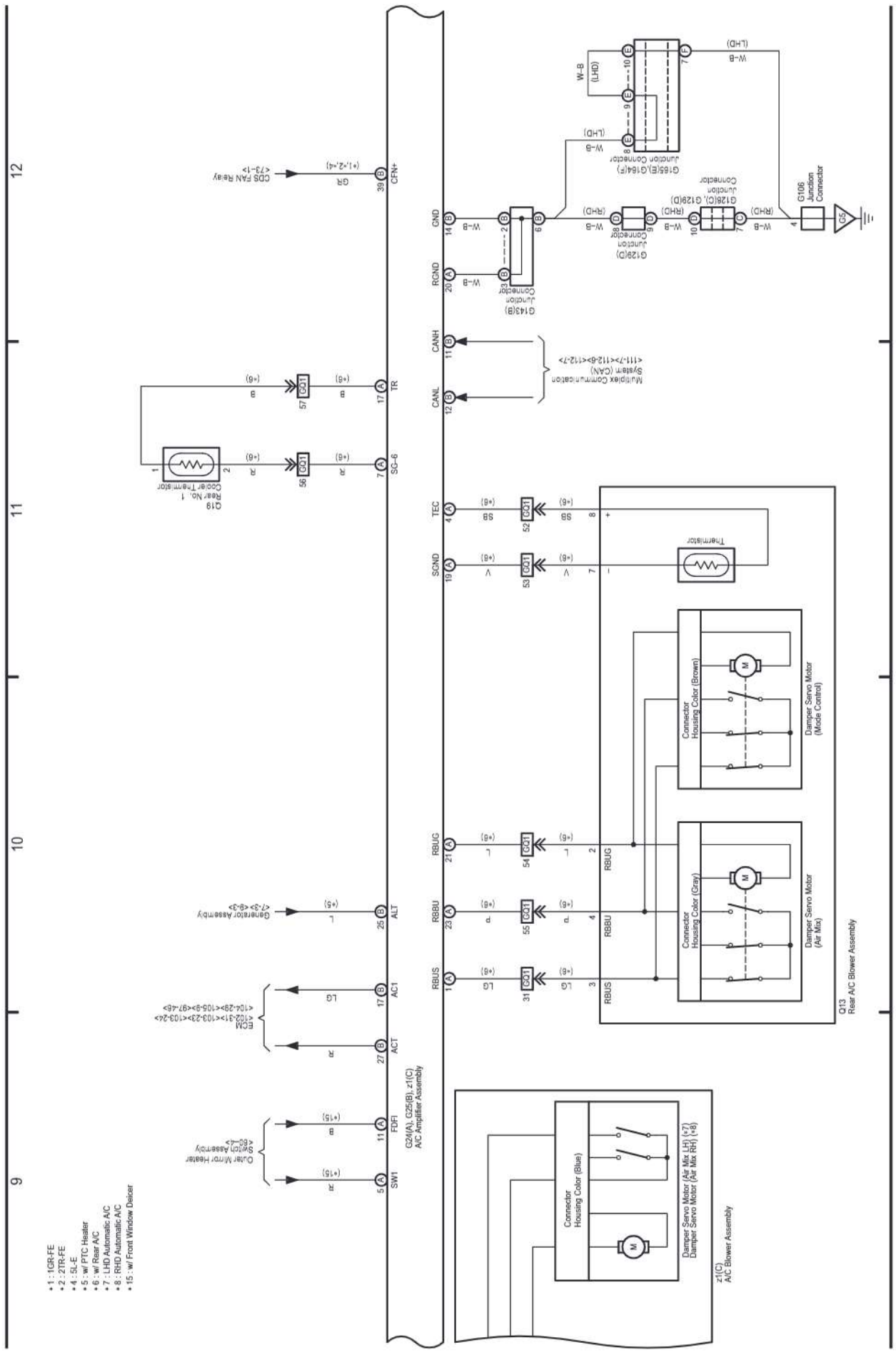

cardiagn.com

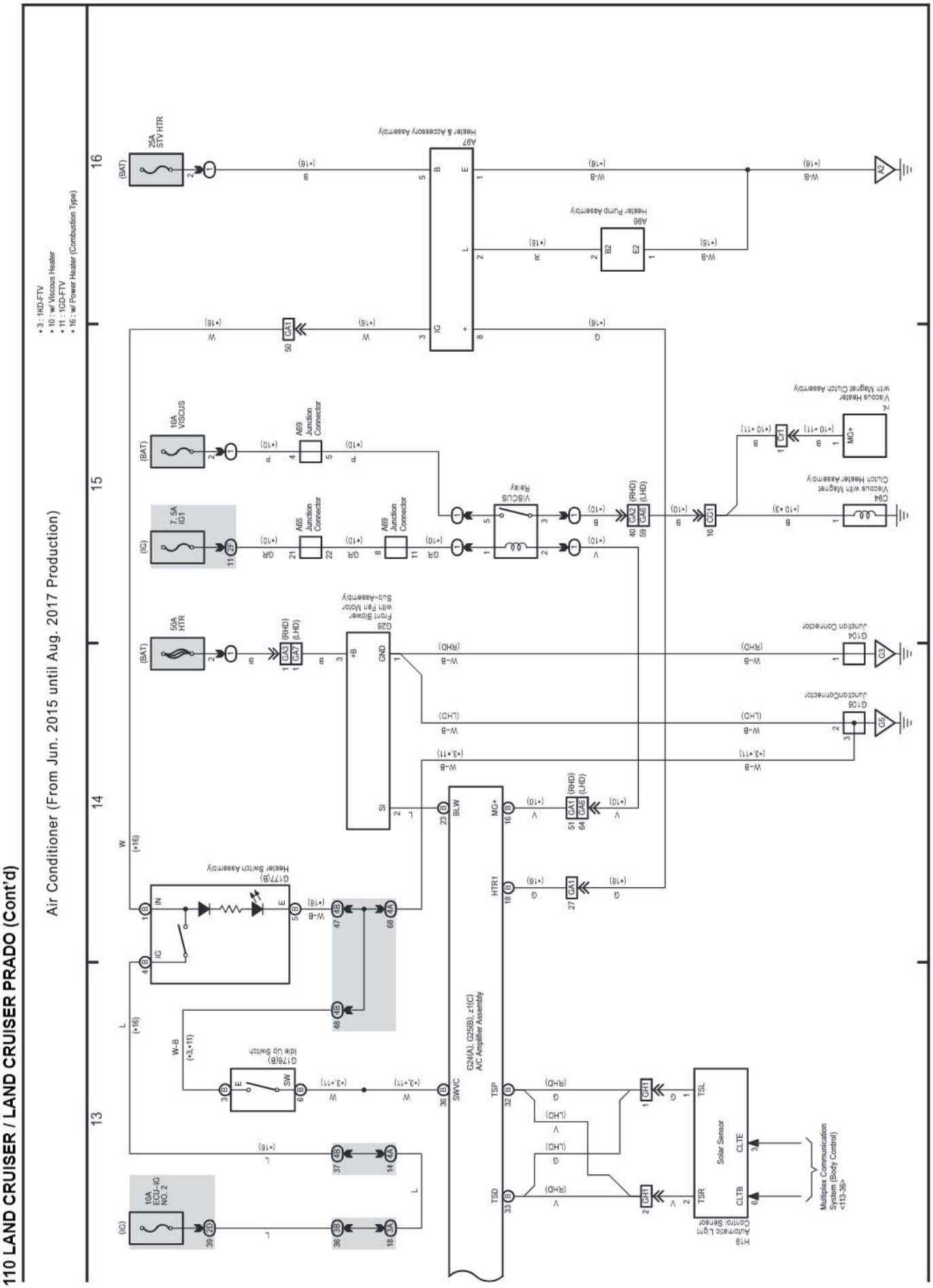

cardiagn.com

(Cont. next page)

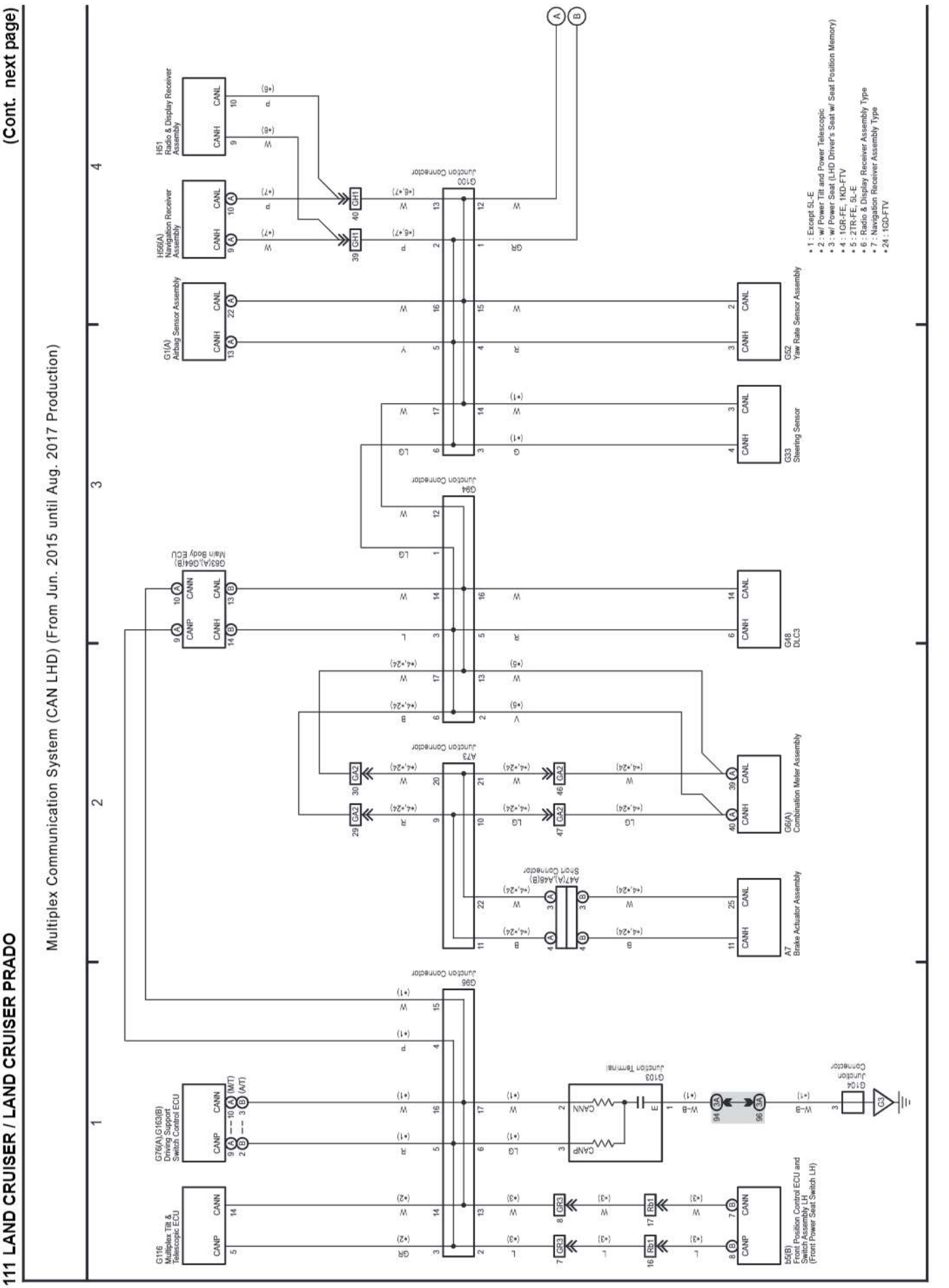

cardiagn.com

(Cont. next page)

Multiplex Communication System (CAN LHD) (From Jun. 2015 until Aug. 2017 Production)

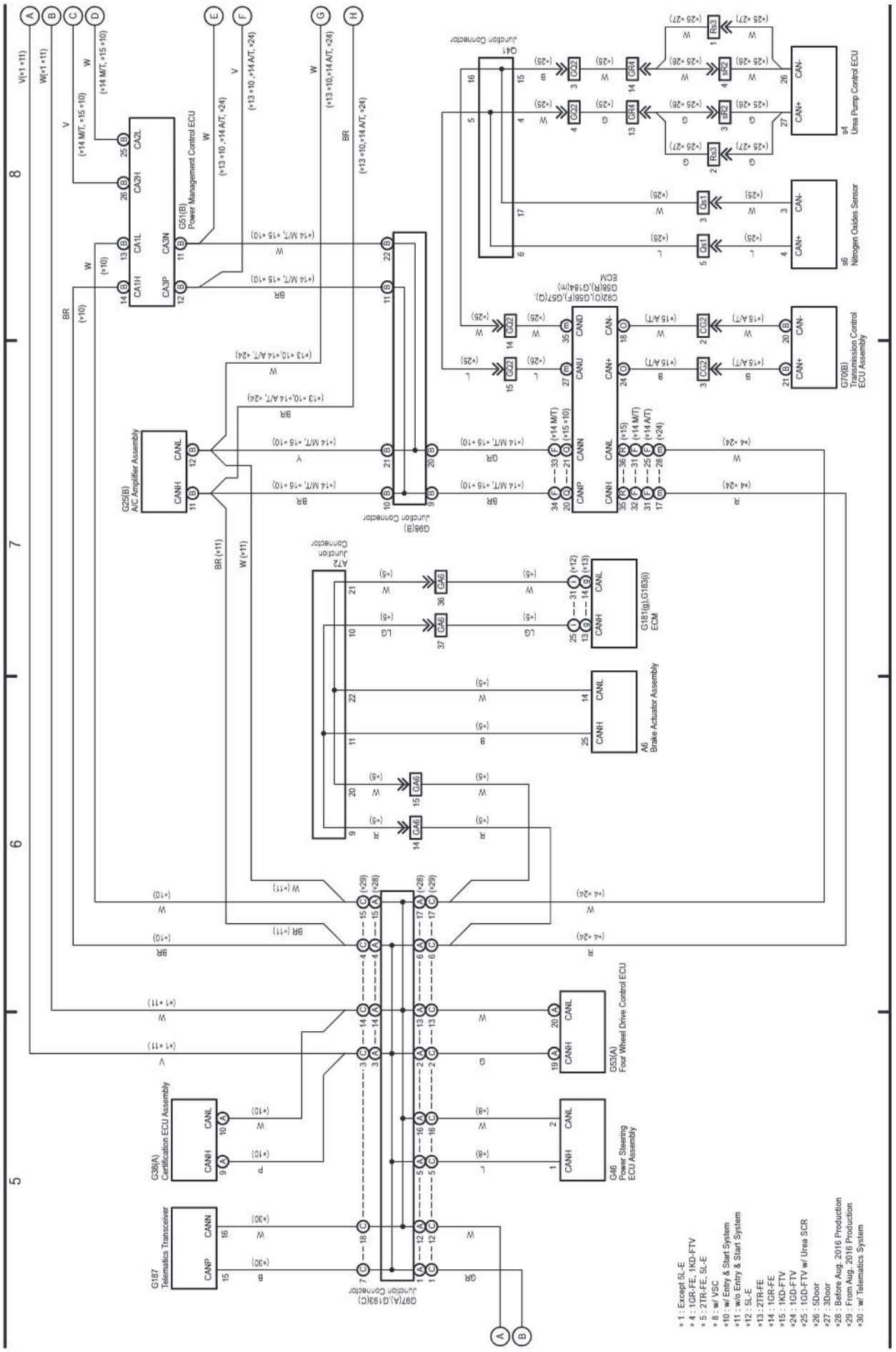

cardiagn.com

111 LAND CRUISER / LAND CRUISER PRADO (Cont'd)

(Cont. next page)

Multiplex Communication System (CAN LHD) (From Jun. 2015 until Aug. 2017 Production)

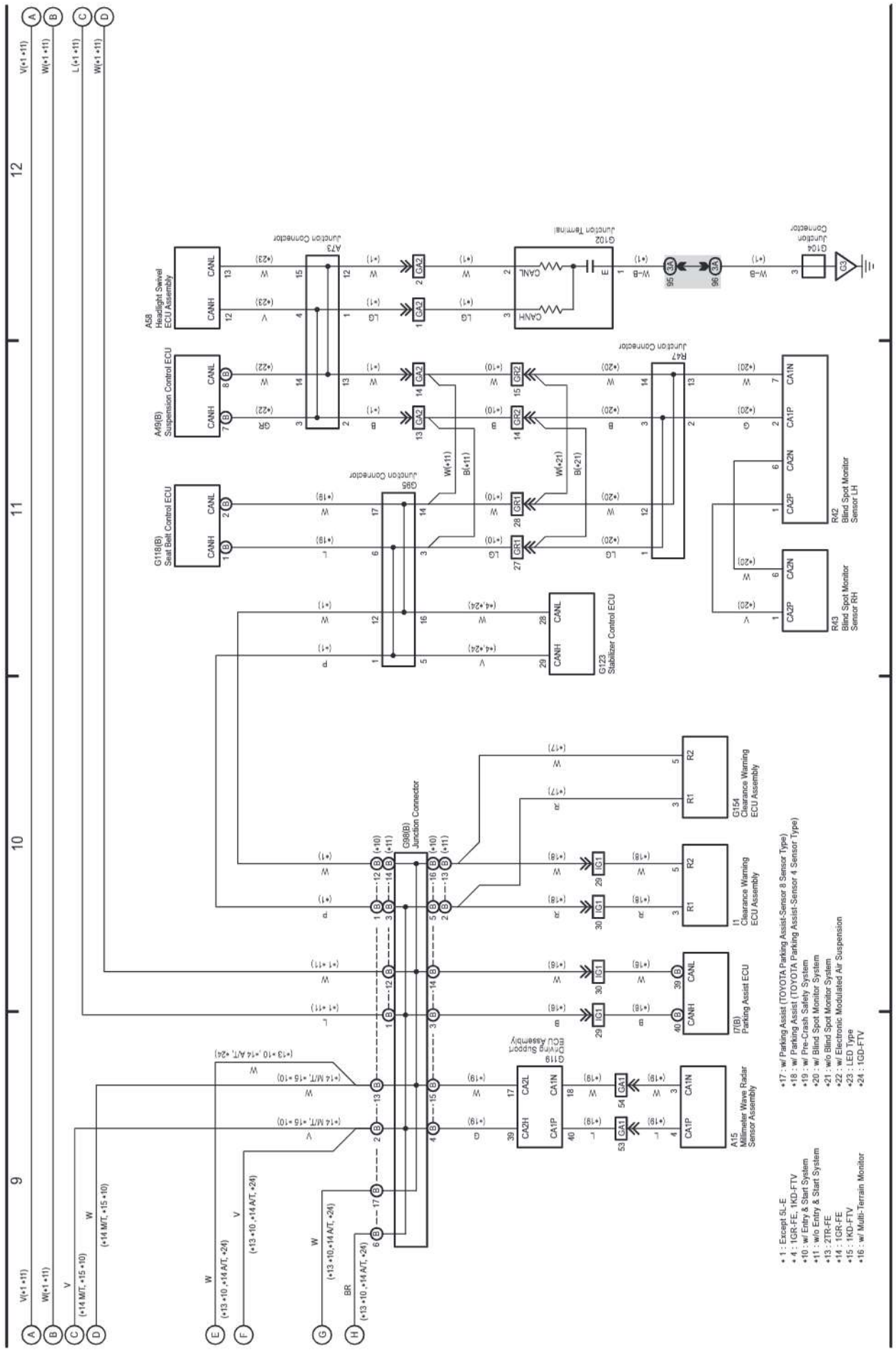

cardiagn.com

111 LAND CRUISER / LAND CRUISER PRADO (Cont'd)

Multiplex Communication System (CAN LHD) (From Jun. 2015 until Aug. 2017 Production)

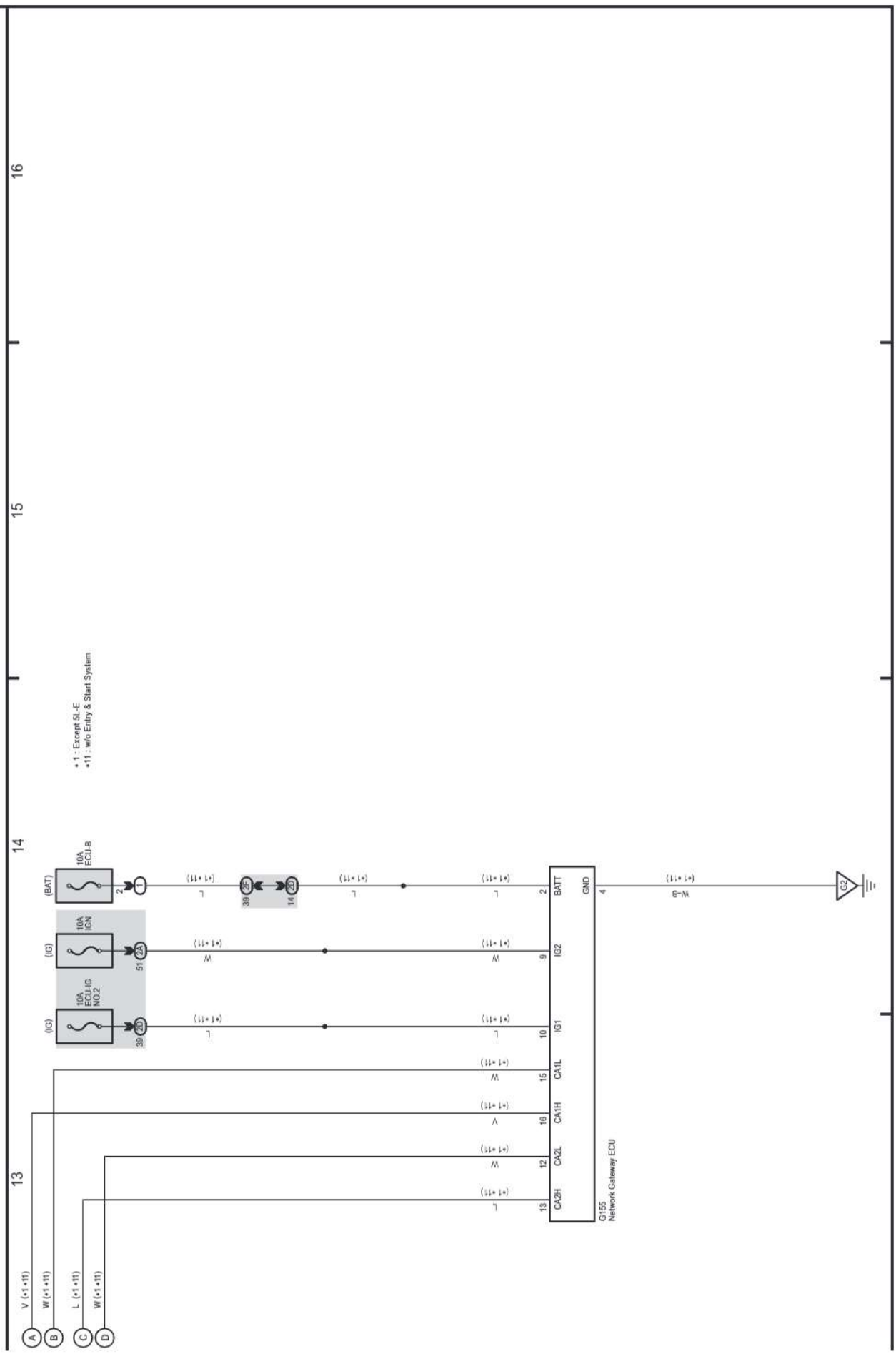

cardiagn.com

(Cont. next page)

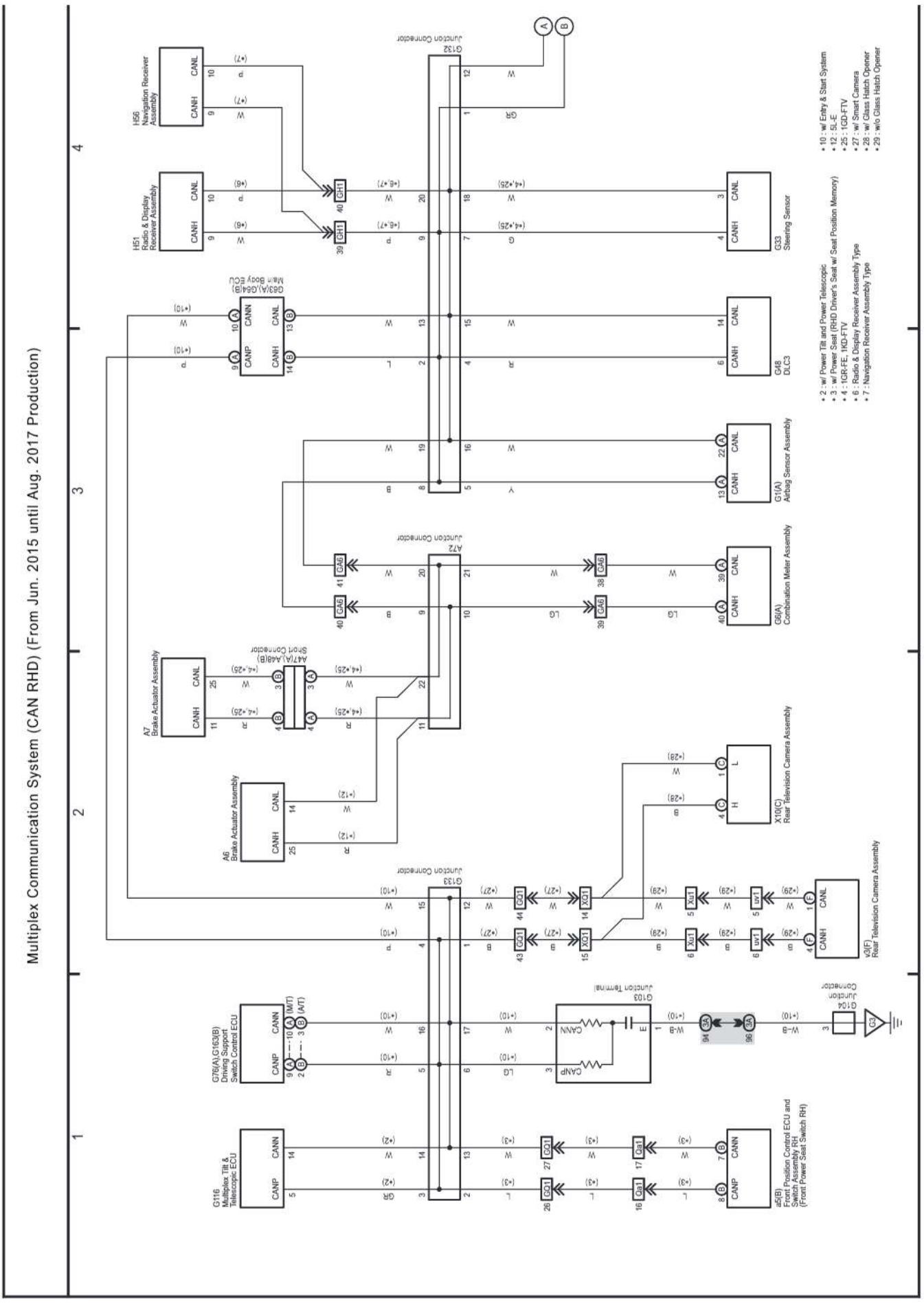

(Cont. next page)

Multiplex Communication System (CAN RHD) (From Jun. 2015 until Aug. 2017 Production)

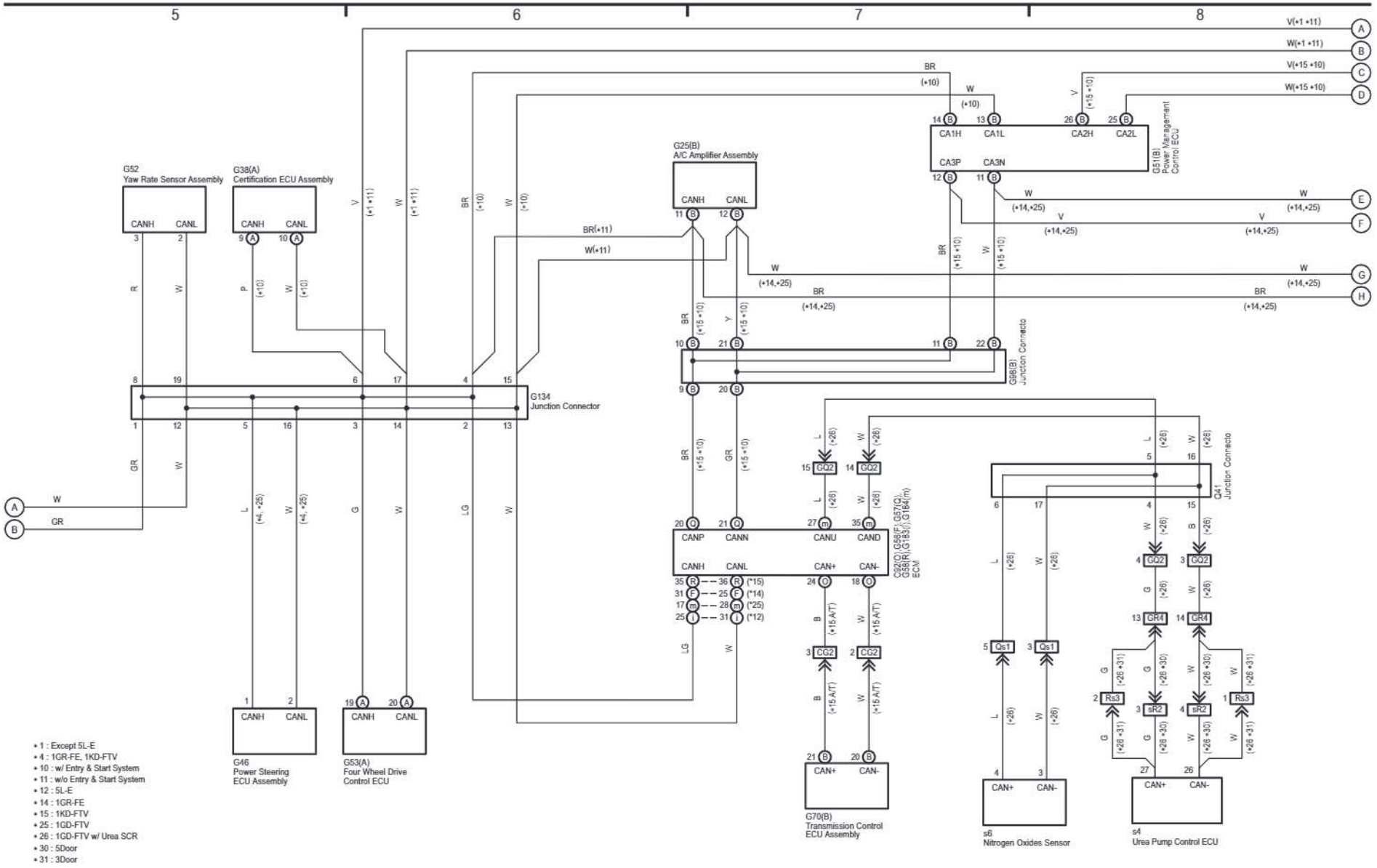

cardiagn.com

cardiagn.com

(Cont. next page)

Multiplex Communication System (CAN RHD) (From Jun. 2015 until Aug. 2017 Production)

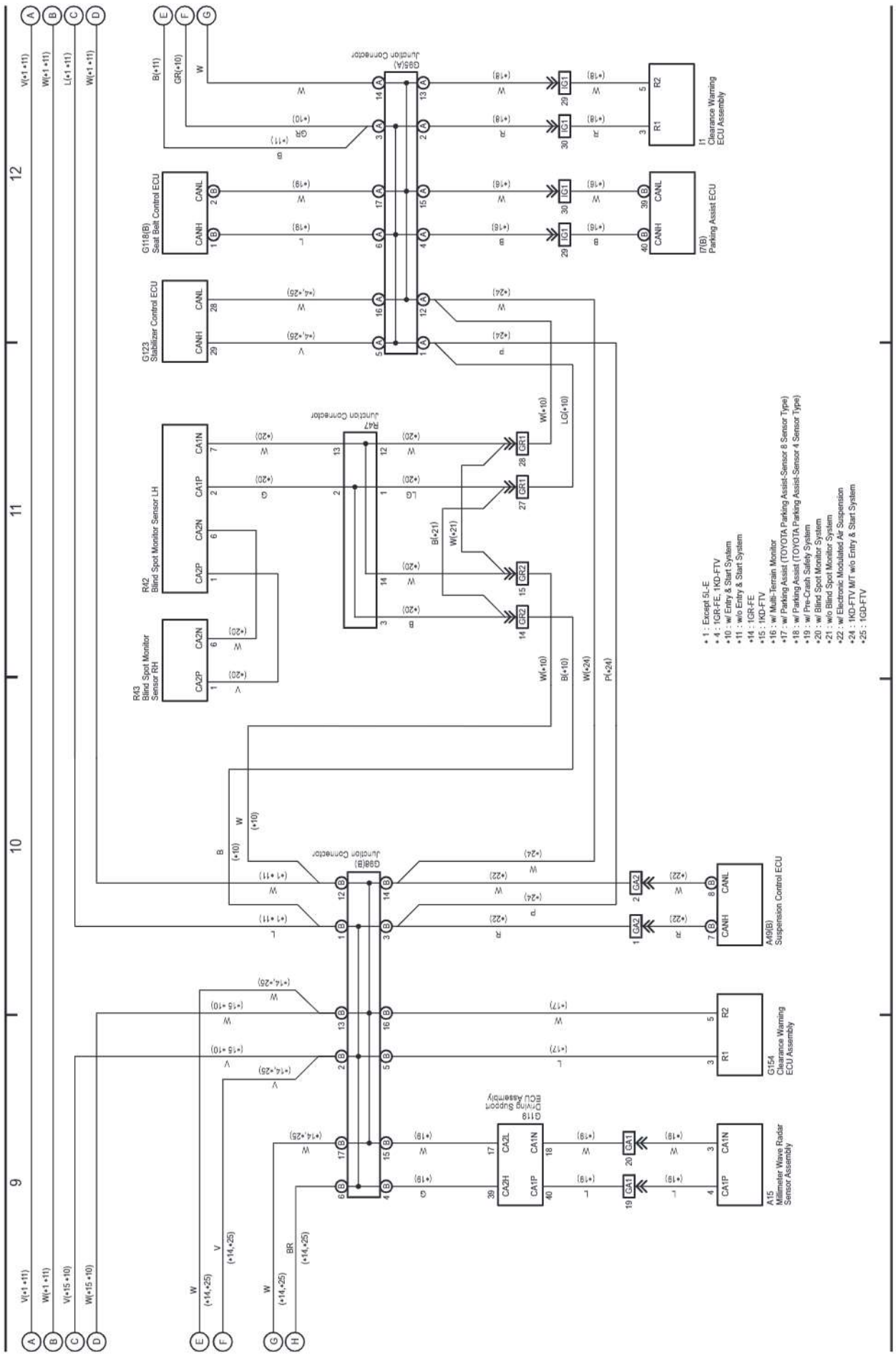

cardiagn.com

112 LAND CRUISER / LAND CRUISER PRADO (Cont'd)

Multiplex Communication System (CAN RHD) (From Jun. 2015 until Aug. 2017 Production)

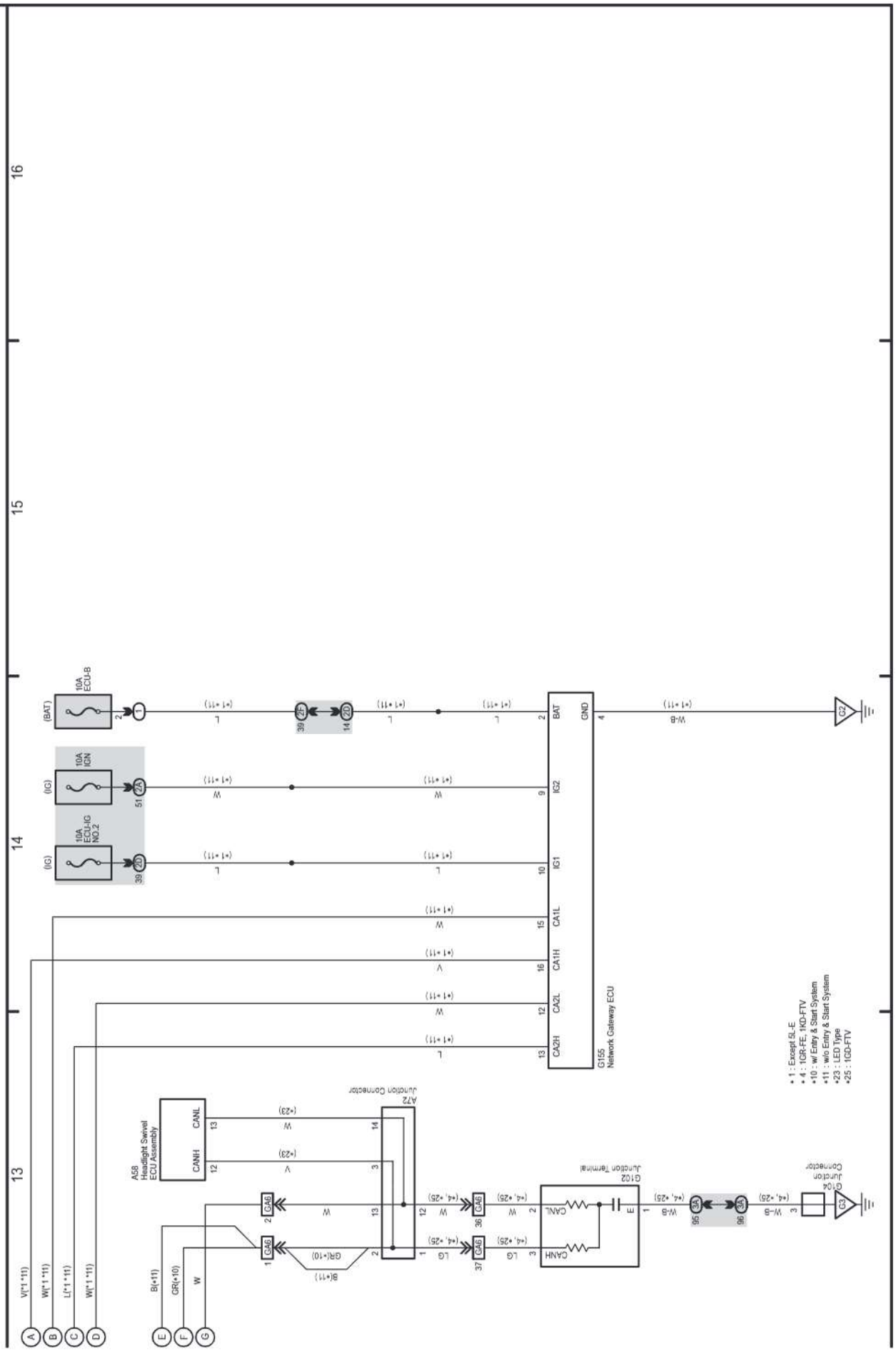

cardiagn.com

M OVERALL ELECTRICAL WIRING DIAGRAM

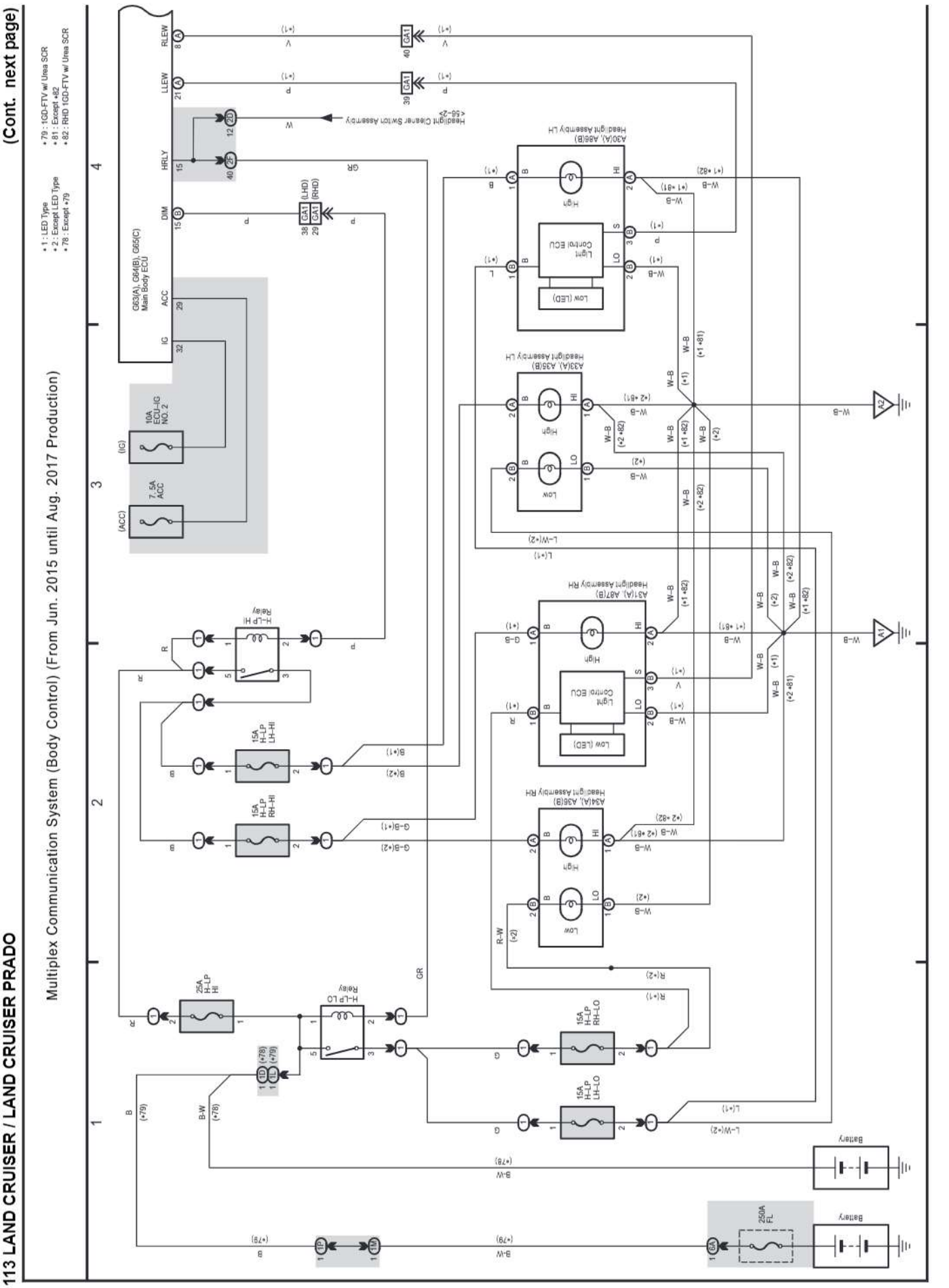

cardiagn.com

(Cont. next page)

Multiplex Communication System (Body Control) (From Jun. 2015 until Aug. 2017 Production)

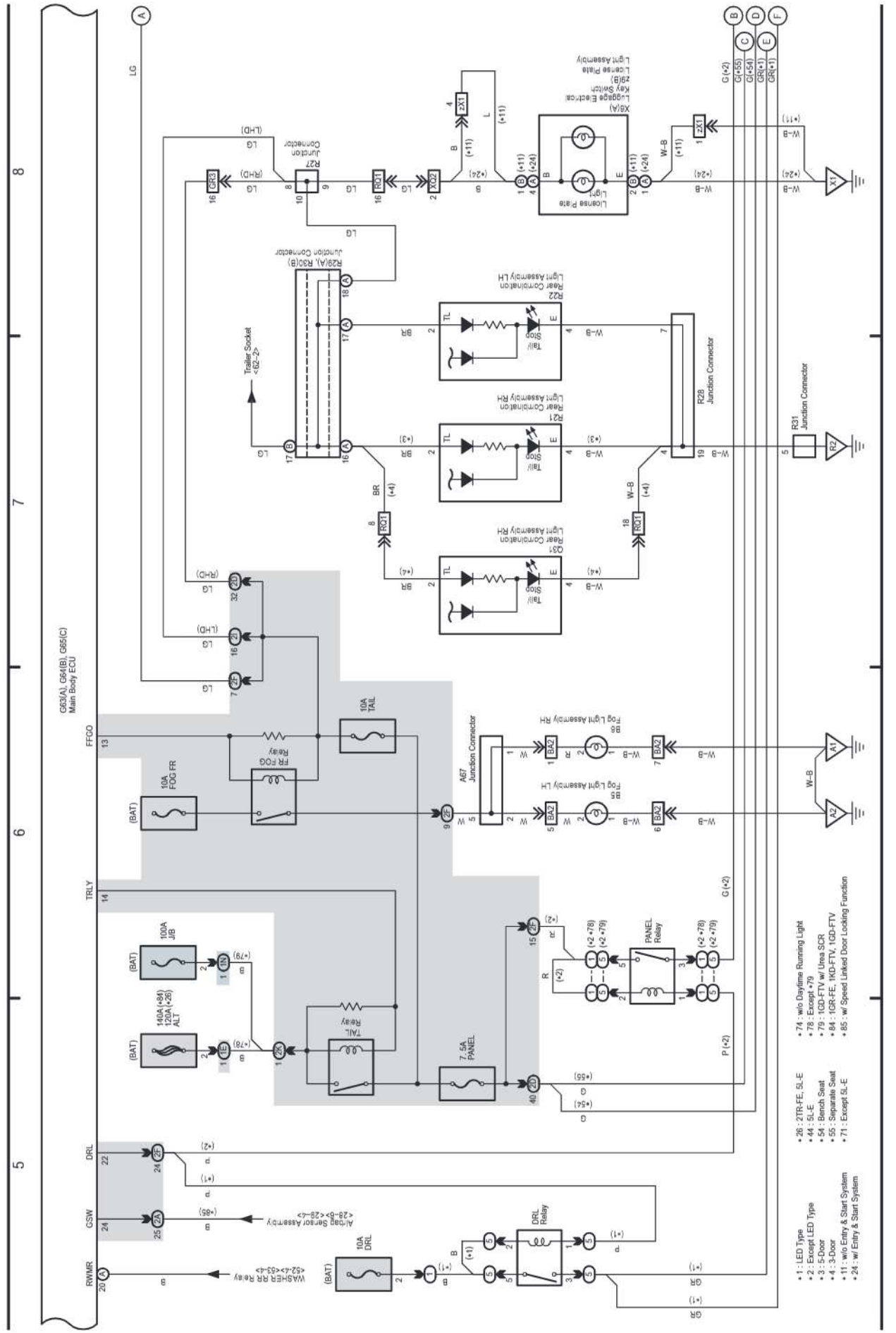

cardiagn.com

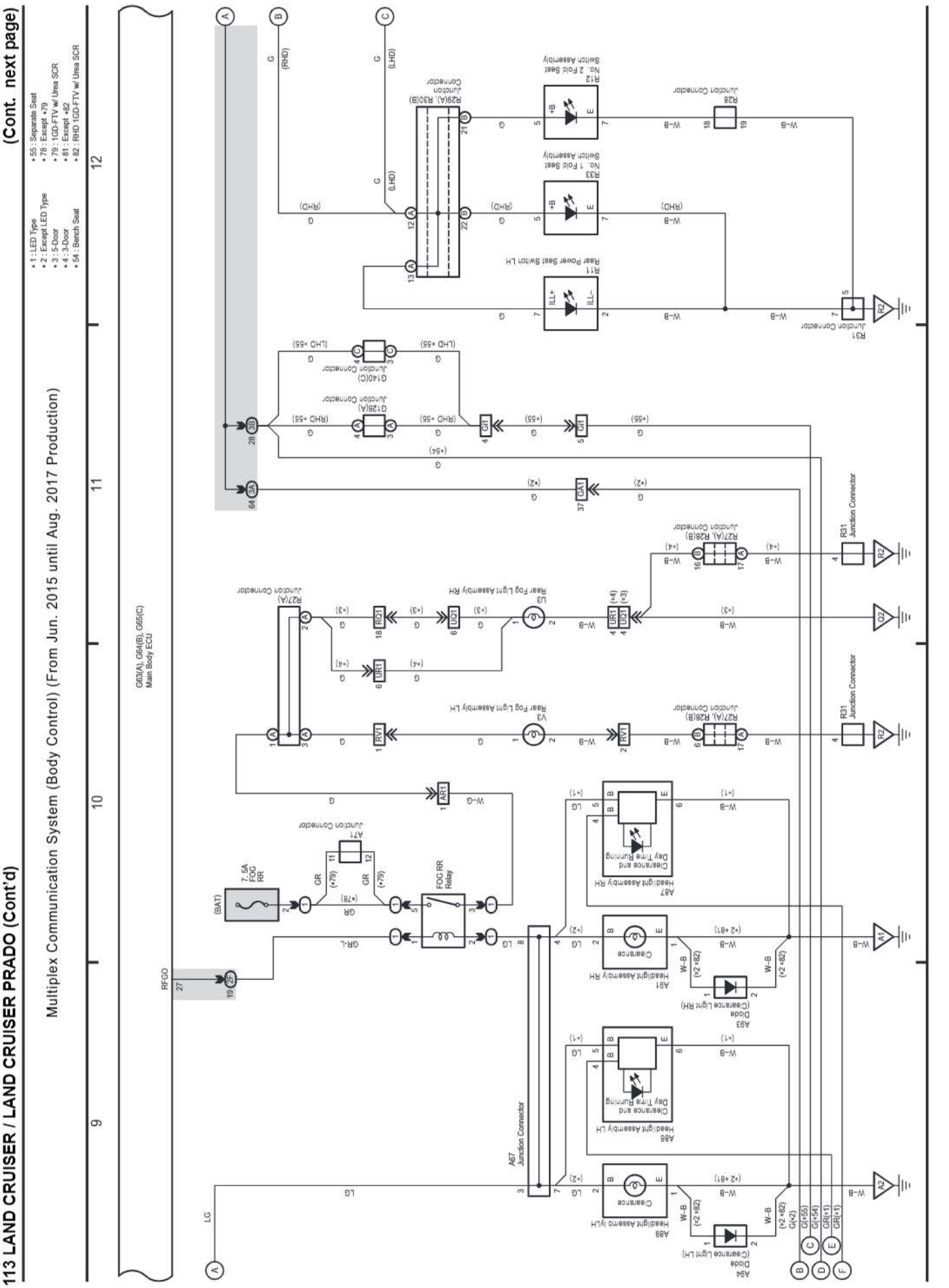

(Cont. next page)

Multiplex Communication System (Body Control) (From Jun. 2015 until Aug. 2017 Production)

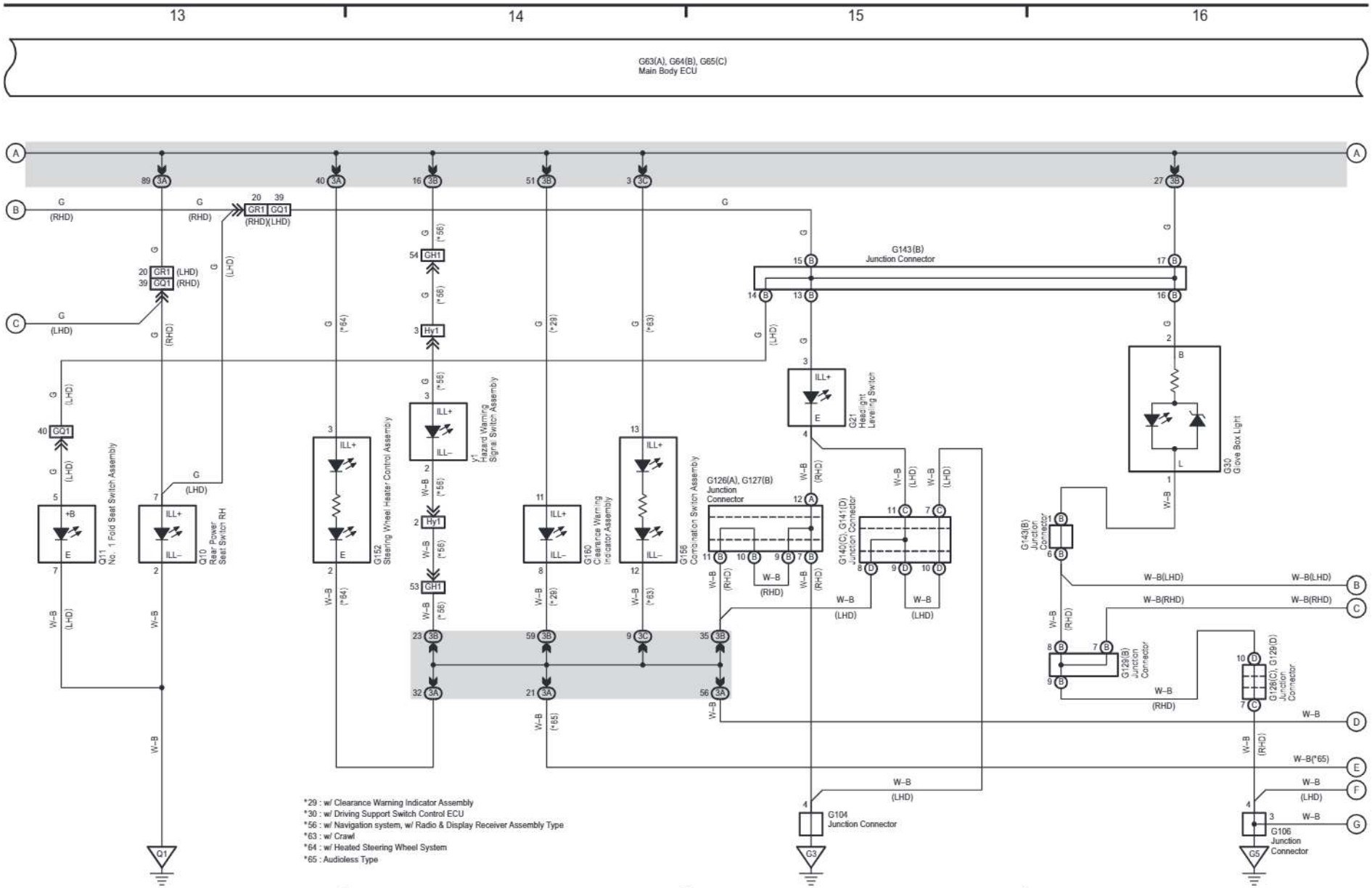

LAND CRUISER / LAND CRUISER PRADO (EM27T3E)

cardiagn.com

cardiagn.com

(Cont. next page)

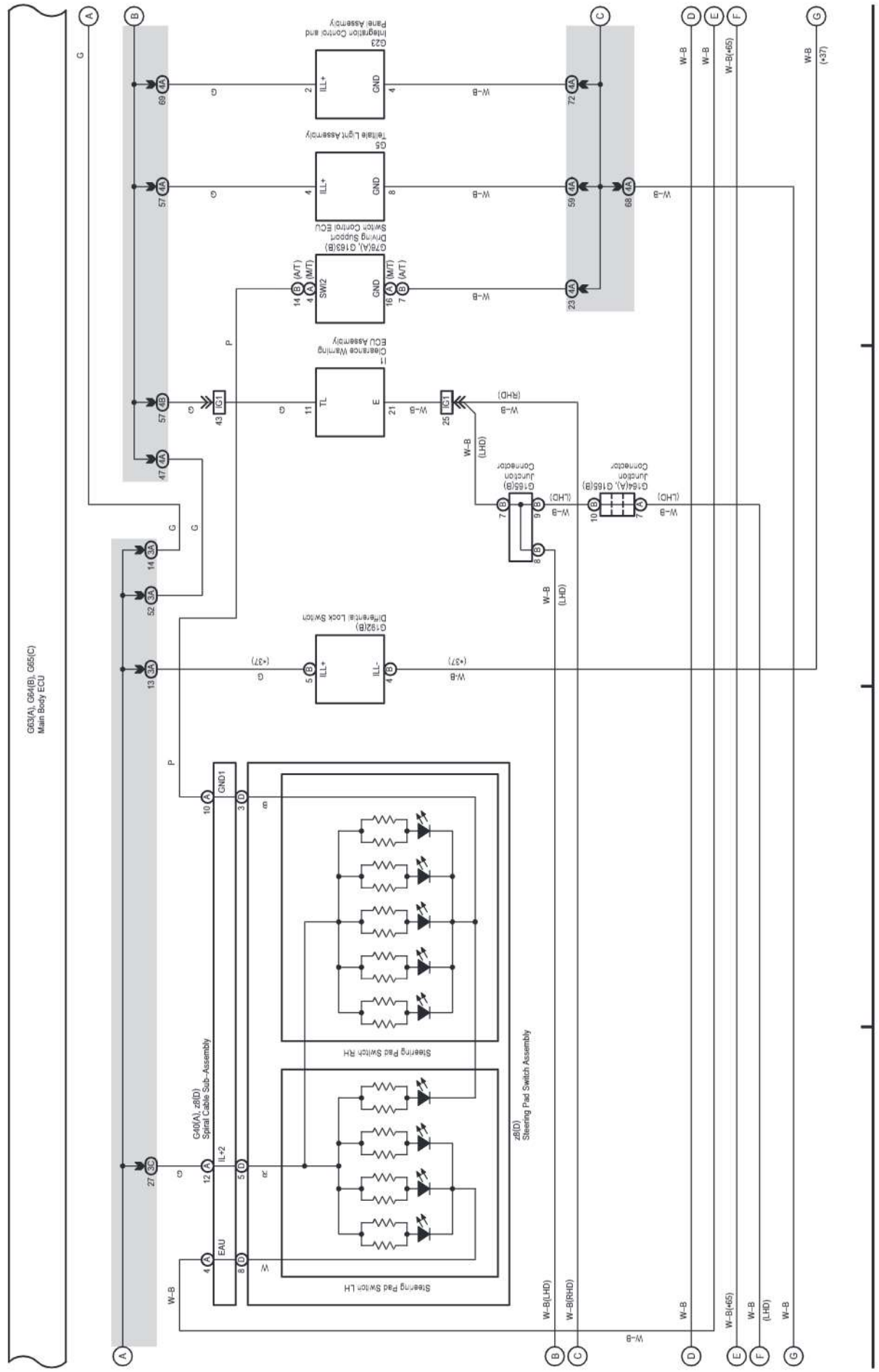

(Cont. next page)

Multiplex Communication System (Body Control) (From Jun. 2015 until Aug. 2017 Production)

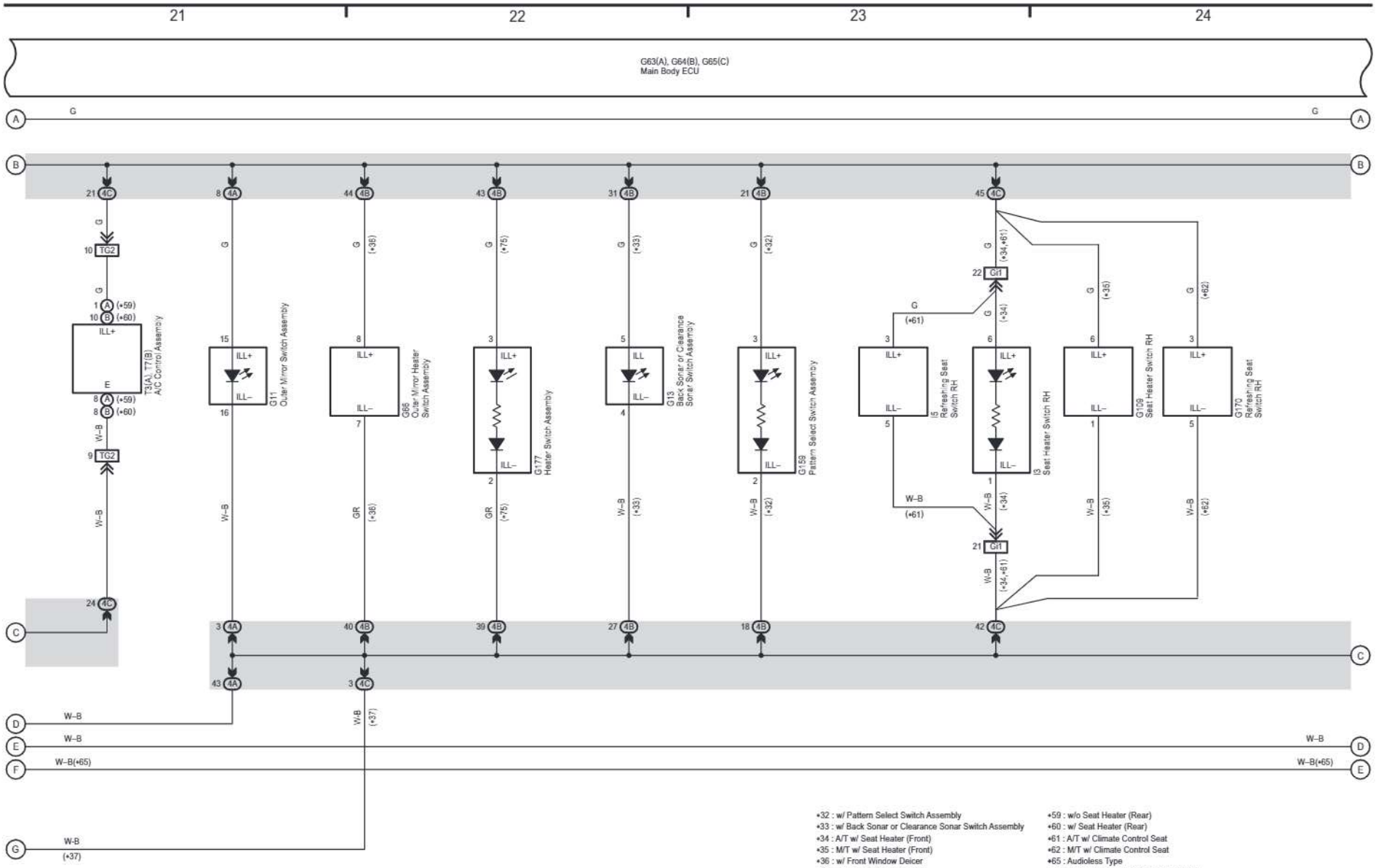

cardiagn.com

cardiagn.com

(Cont. next page)

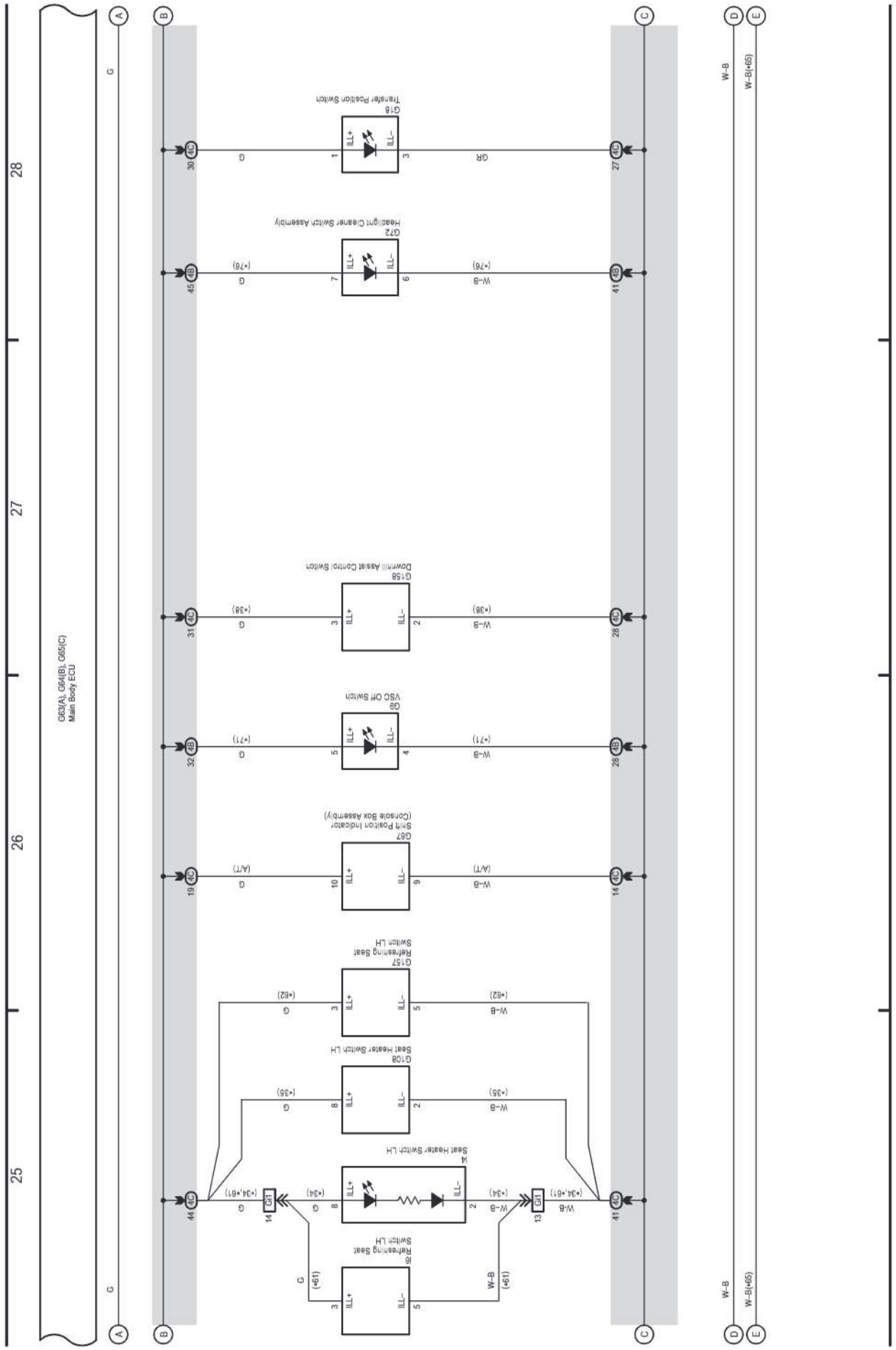

cardiagn.com

(Cont. next page)

Multiplex Communication System (Body Control) (From Jun. 2015 until Aug. 2017 Production)

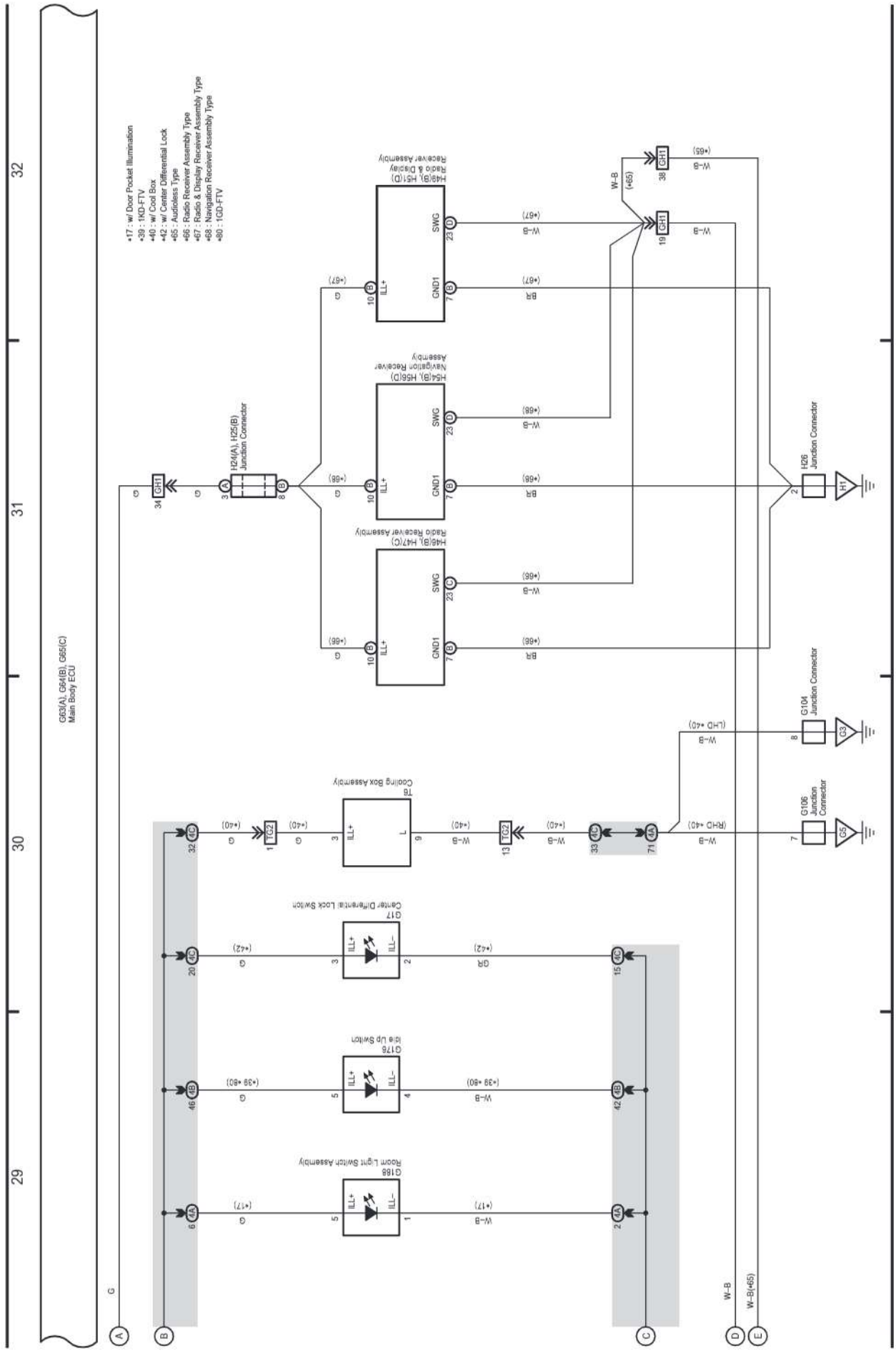

cardiagn.com

(Cont. next page)

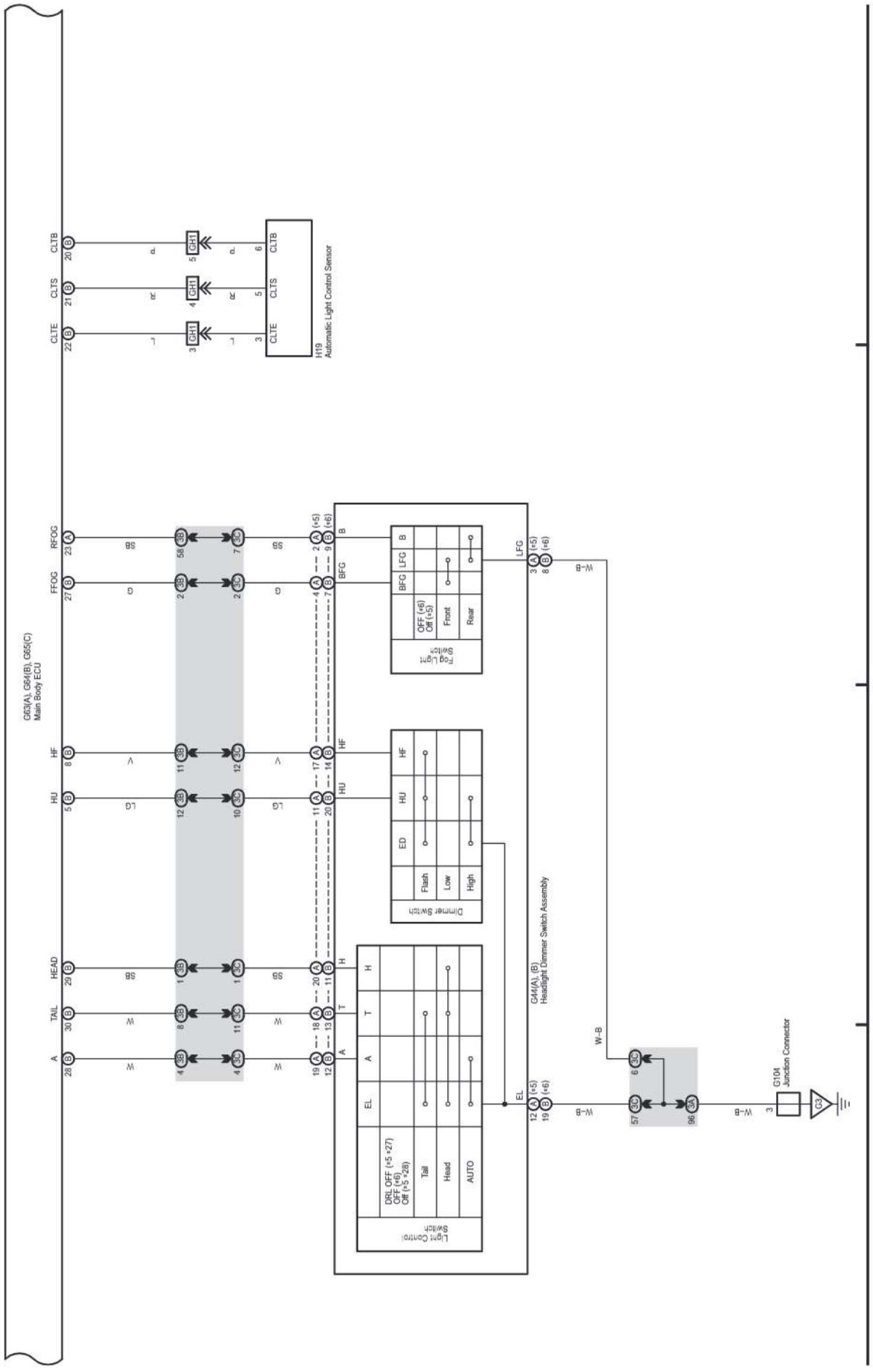

(Cont. next page)

Multiplex Communication System (Body Control) (From Jun. 2015 until Aug. 2017 Production)

*9 : w/ Automatic Glare-Resistant EC Mirror
*10 : w/ Theft Warning Siren Assembly
*11 : w/o Entry & Start System

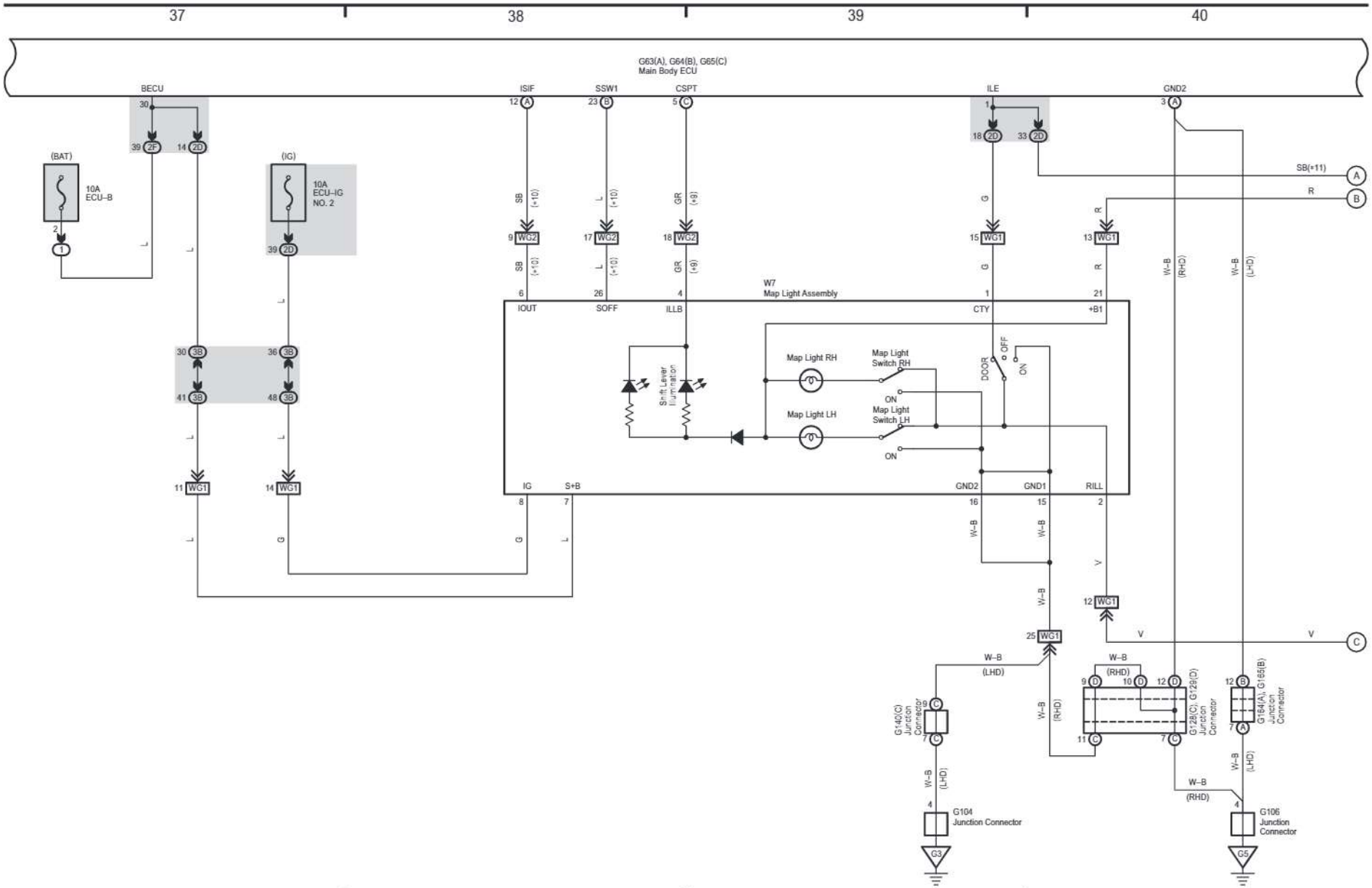

cardiagn.com

cardiagn.com

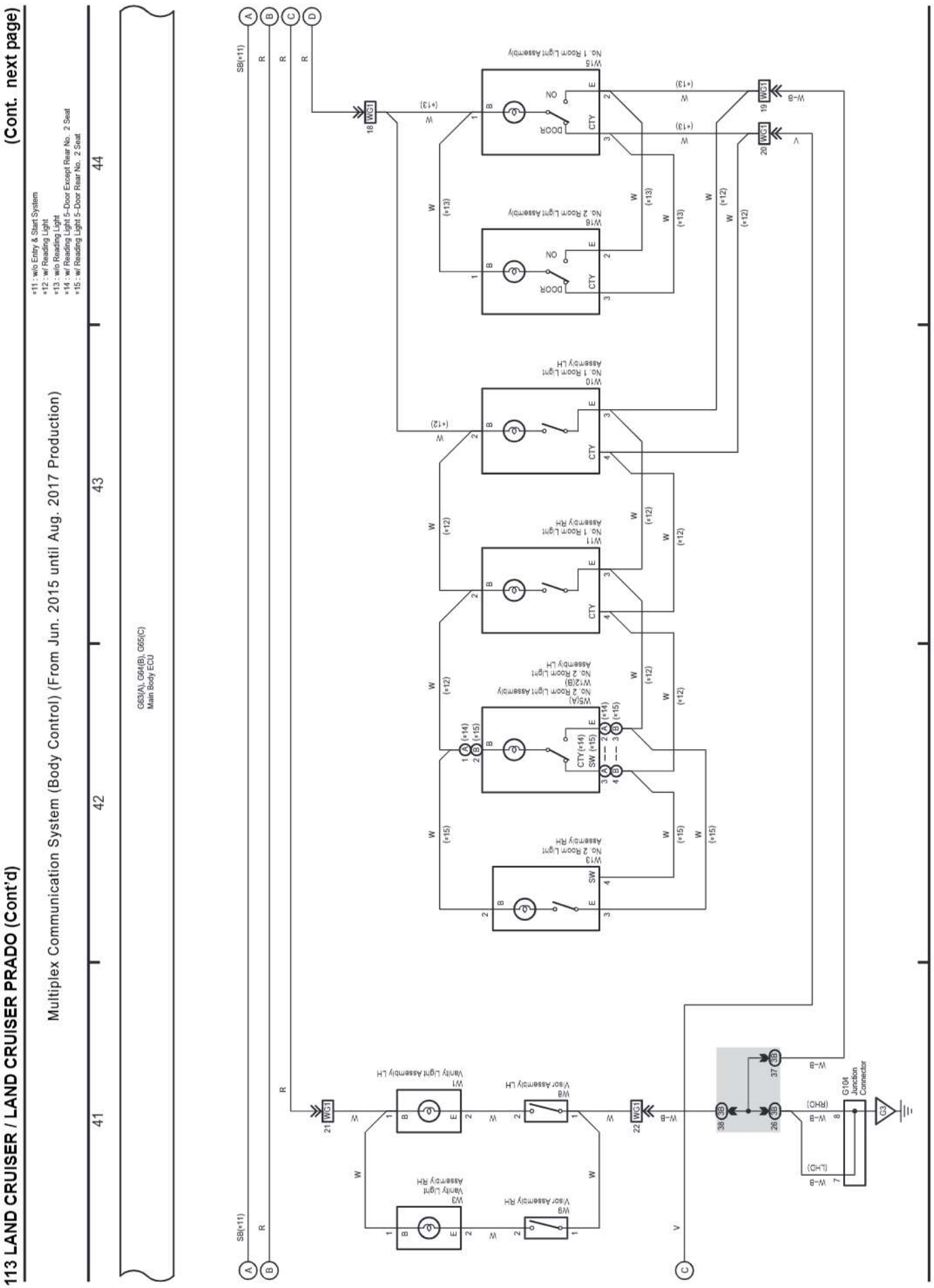

cardiagn.com

(Cont. next page)

Multiplex Communication System (Body Control) (From Jun. 2015 until Aug. 2017 Production)

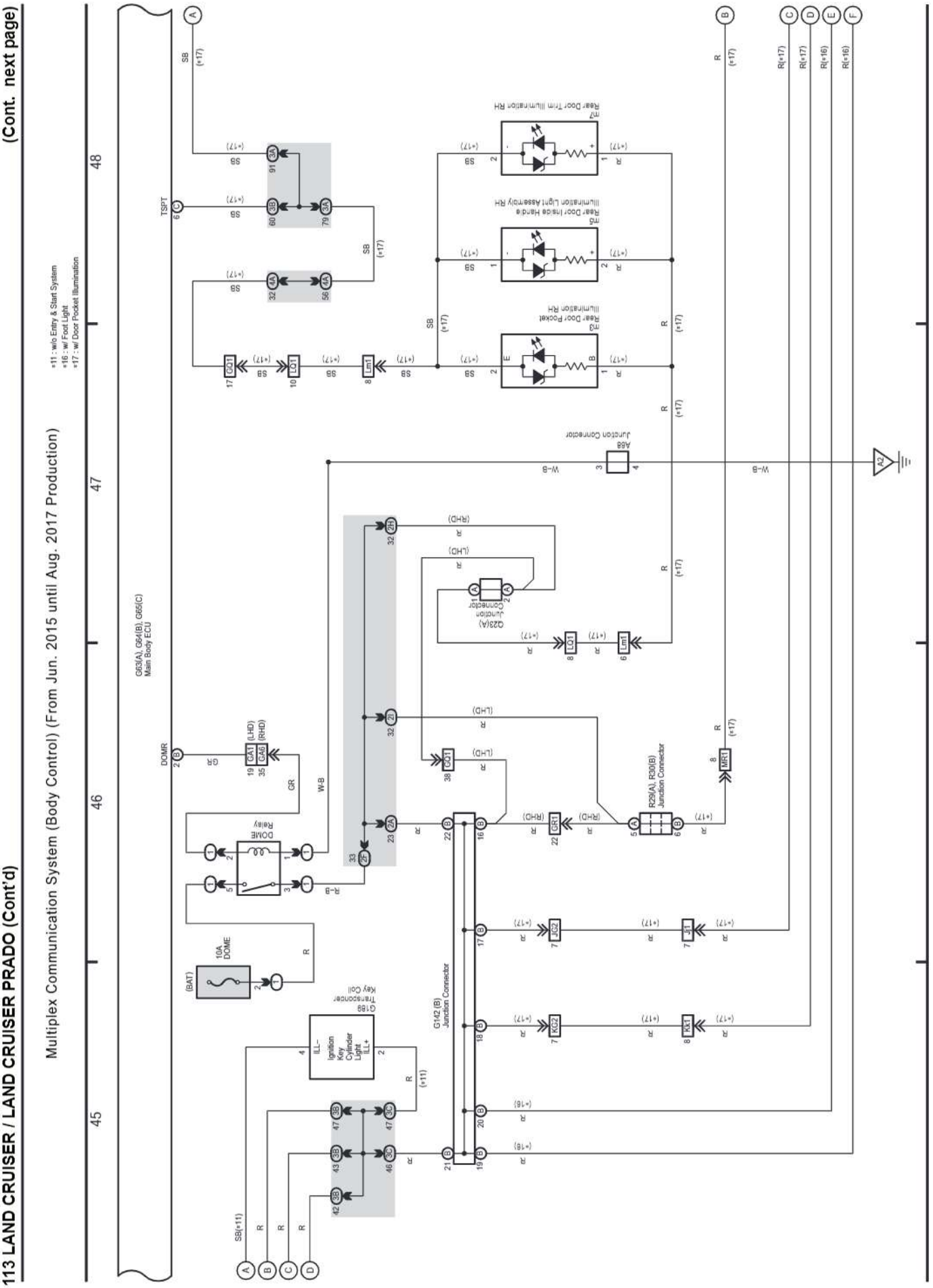

cardiagn.com

(Cont. next page)

Multiplex Communication System (Body Control) (From Jun. 2015 until Aug. 2017 Production)

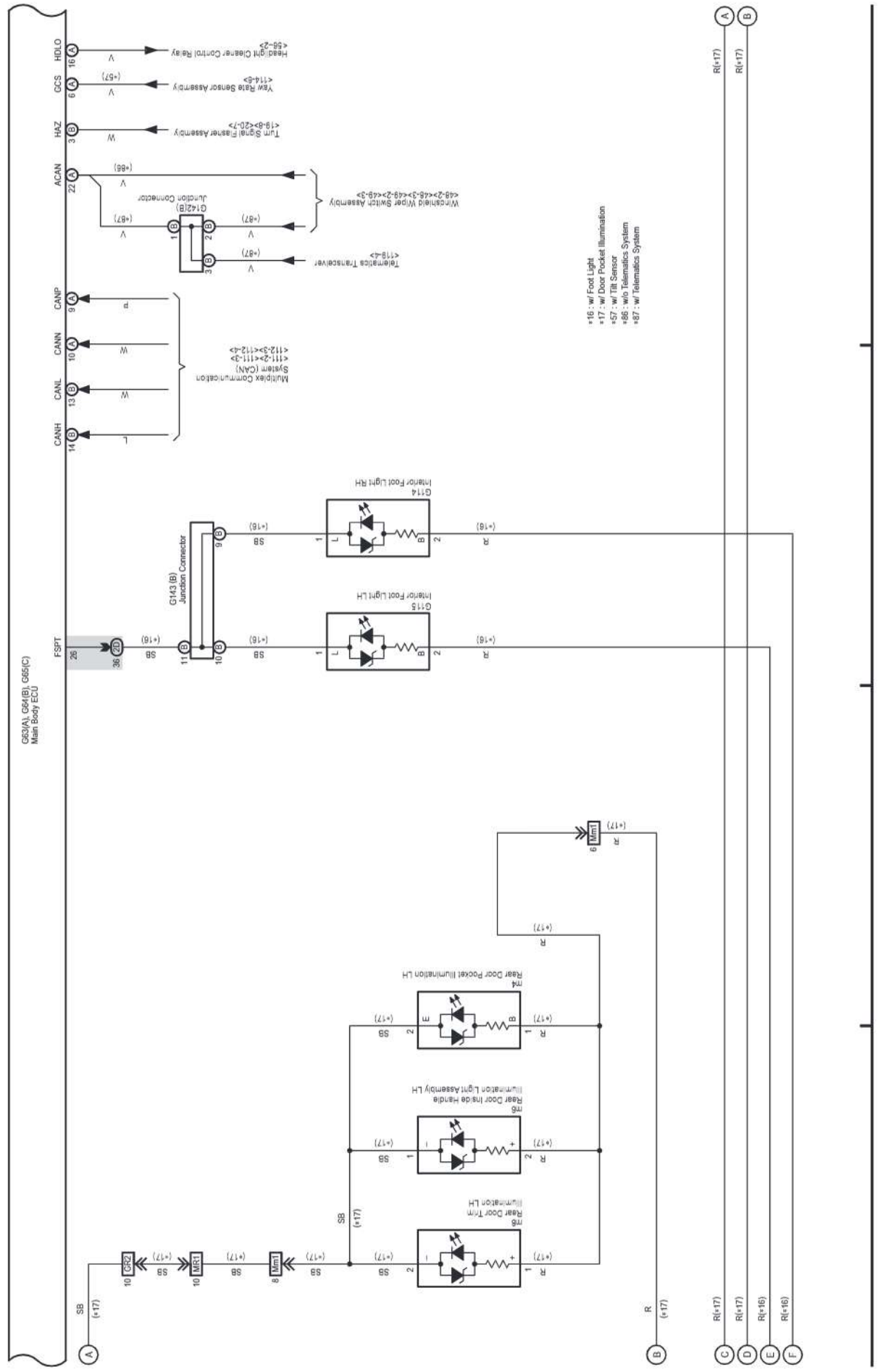

(Cont. next page)

Multiplex Communication System (Body Control) (From Jun. 2015 until Aug. 2017 Production)

*17 : w/ Door Pocket Illumination

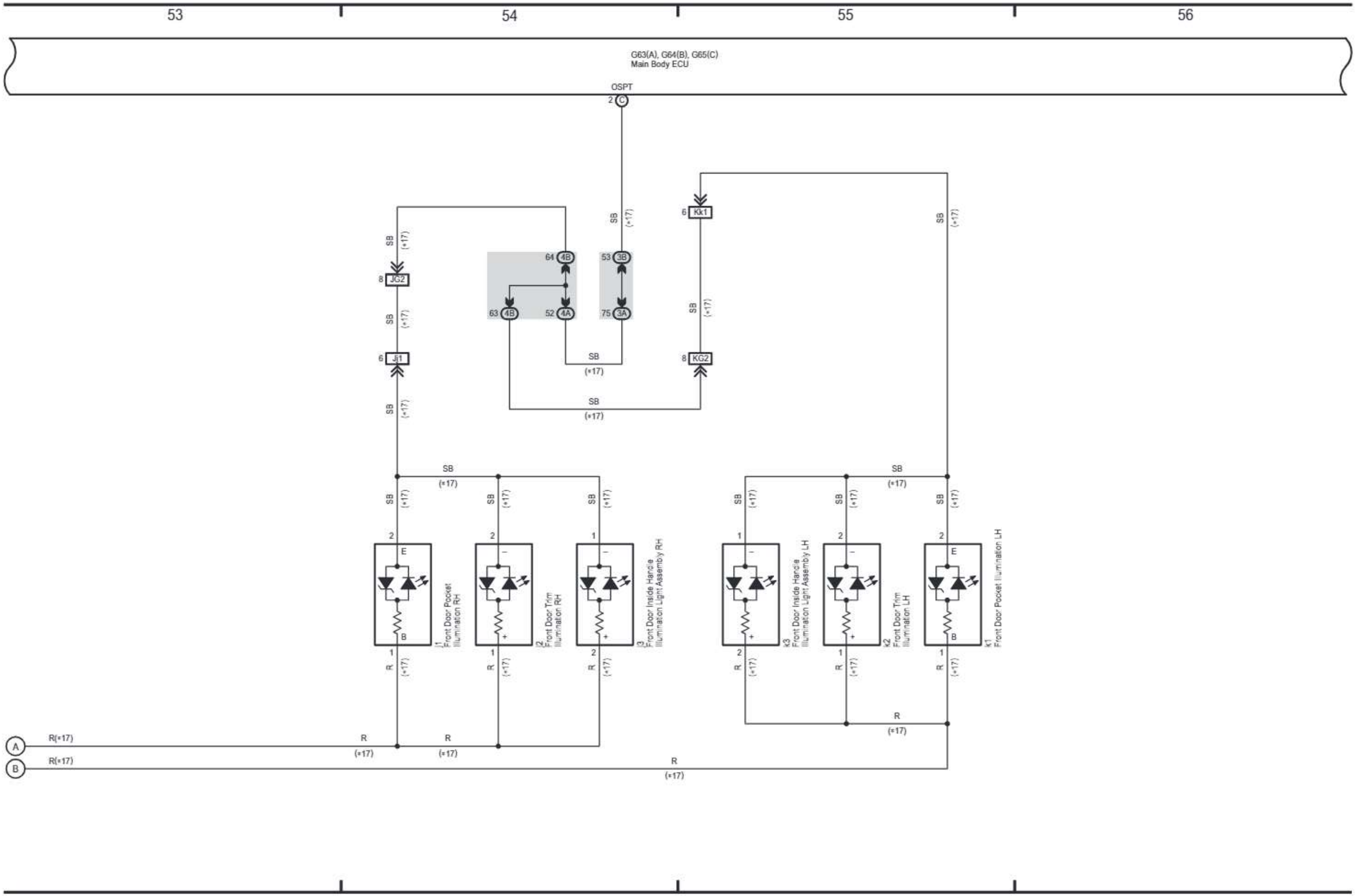

cardiagn.com

cardiagn.com

(Cont. next page)

Multiplex Communication System (Body Control) (From Jun. 2015 until Aug. 2017 Production)

*: 3 : 5-Door

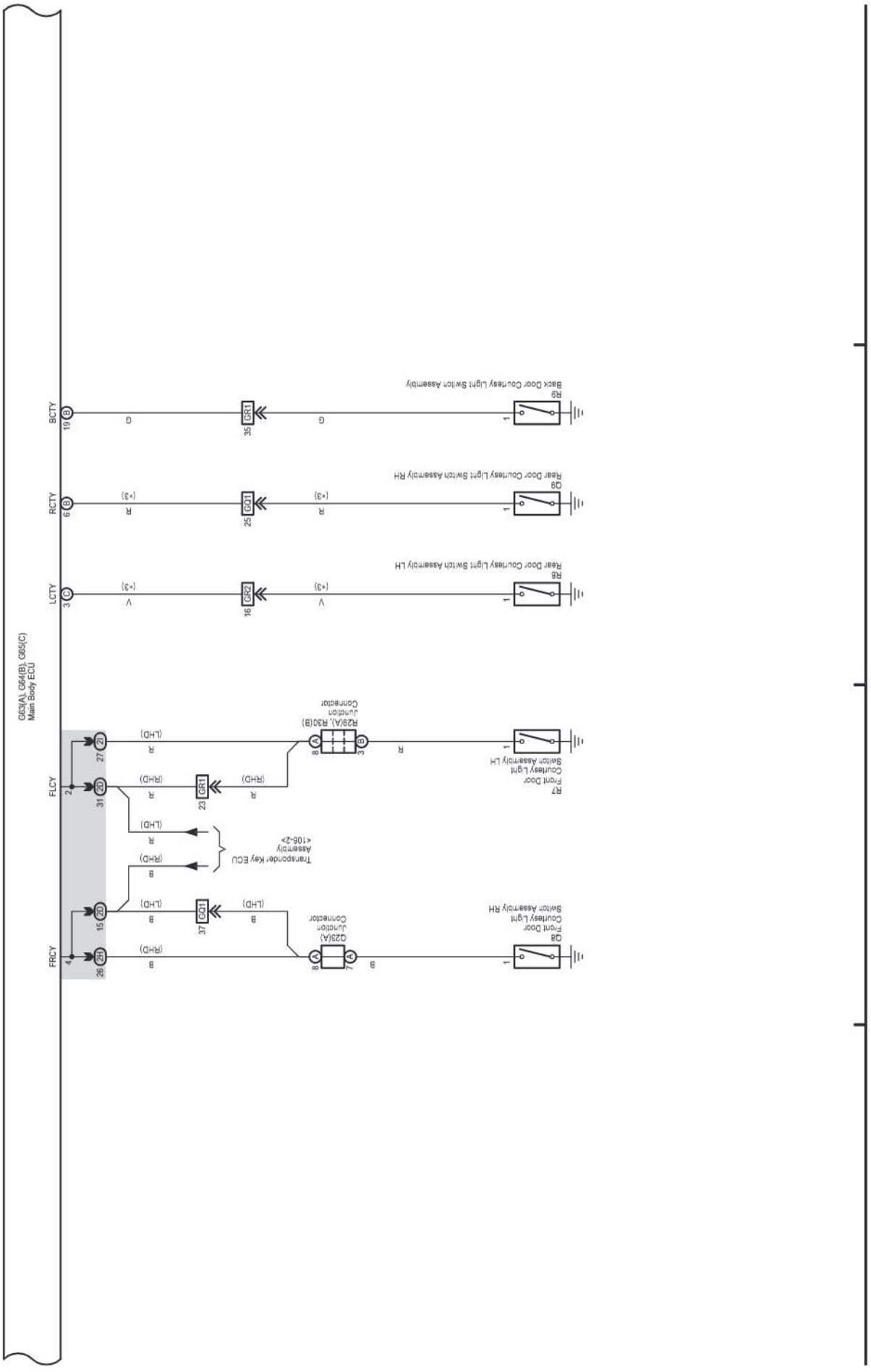

(Cont. next page)

Multiplex Communication System (Body Control) (From Jun. 2015 until Aug. 2017 Production)

*3 : 5-Door
*19 : w/ Double Locking
*20 : w/o Double Locking

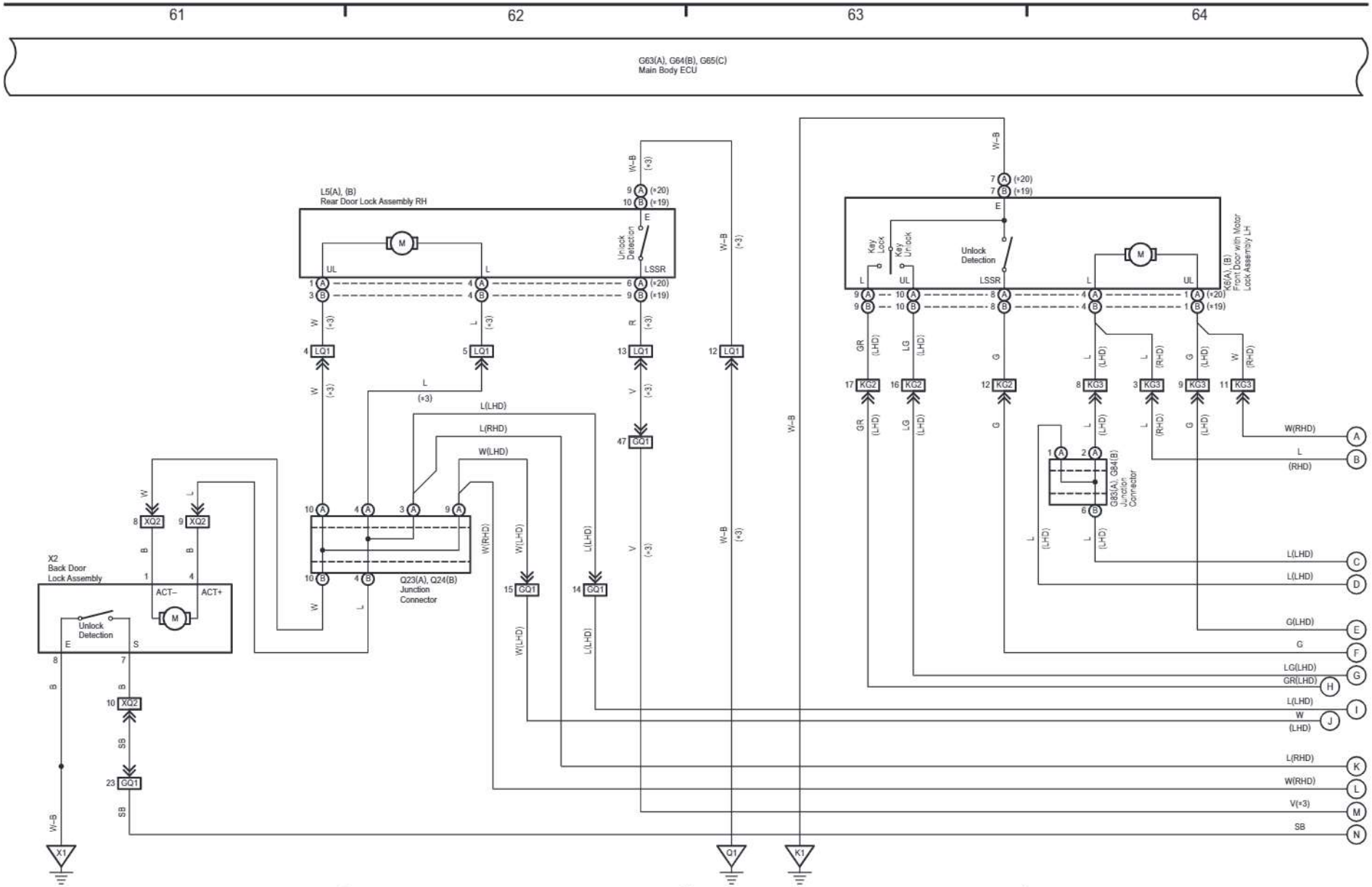

cardiagn.com

cardiagn.com

(Cont. next page)

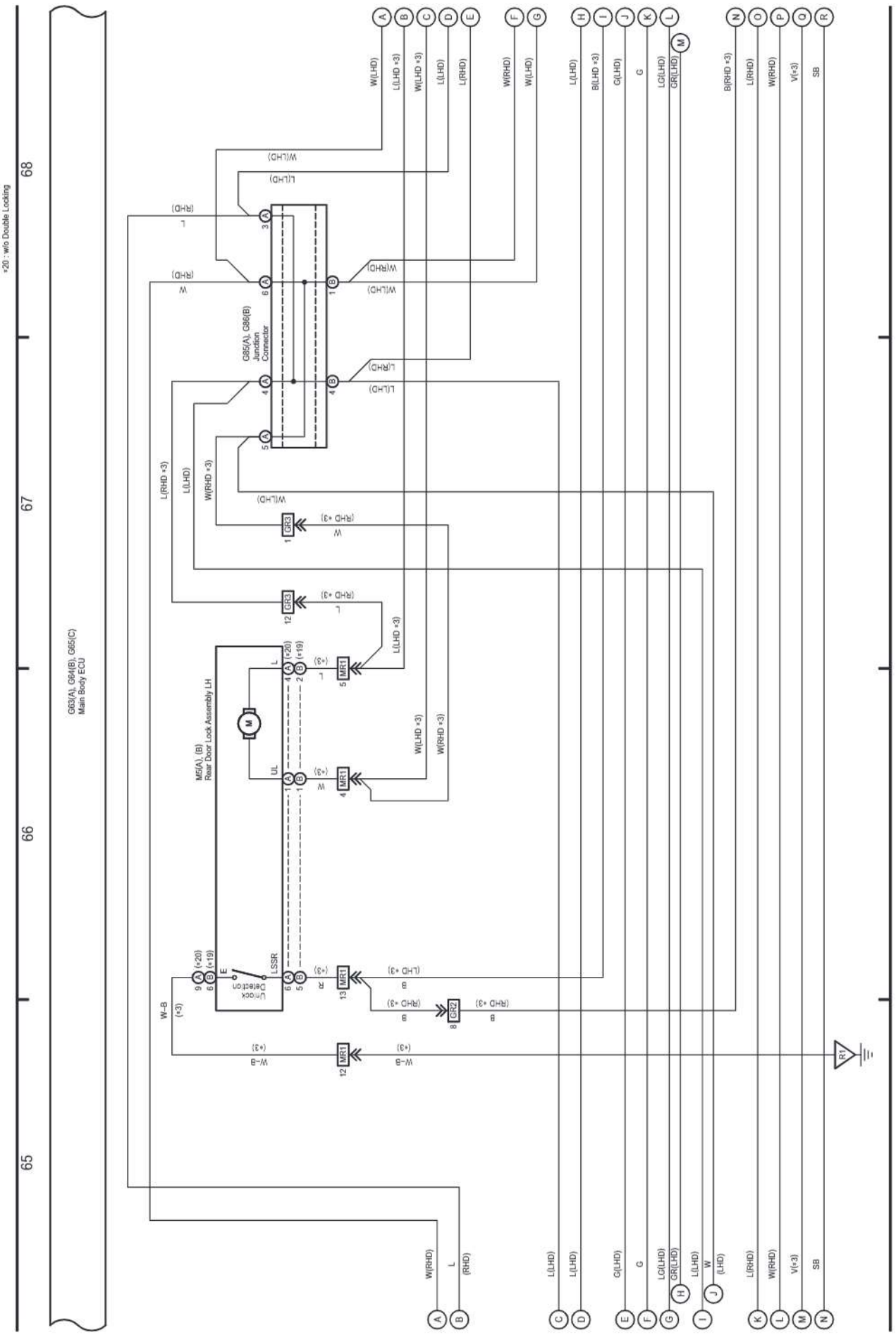

cardiagn.com

(Cont. next page)

Multiplex Communication System (Body Control) (From Jun. 2015 until Aug. 2017 Production)

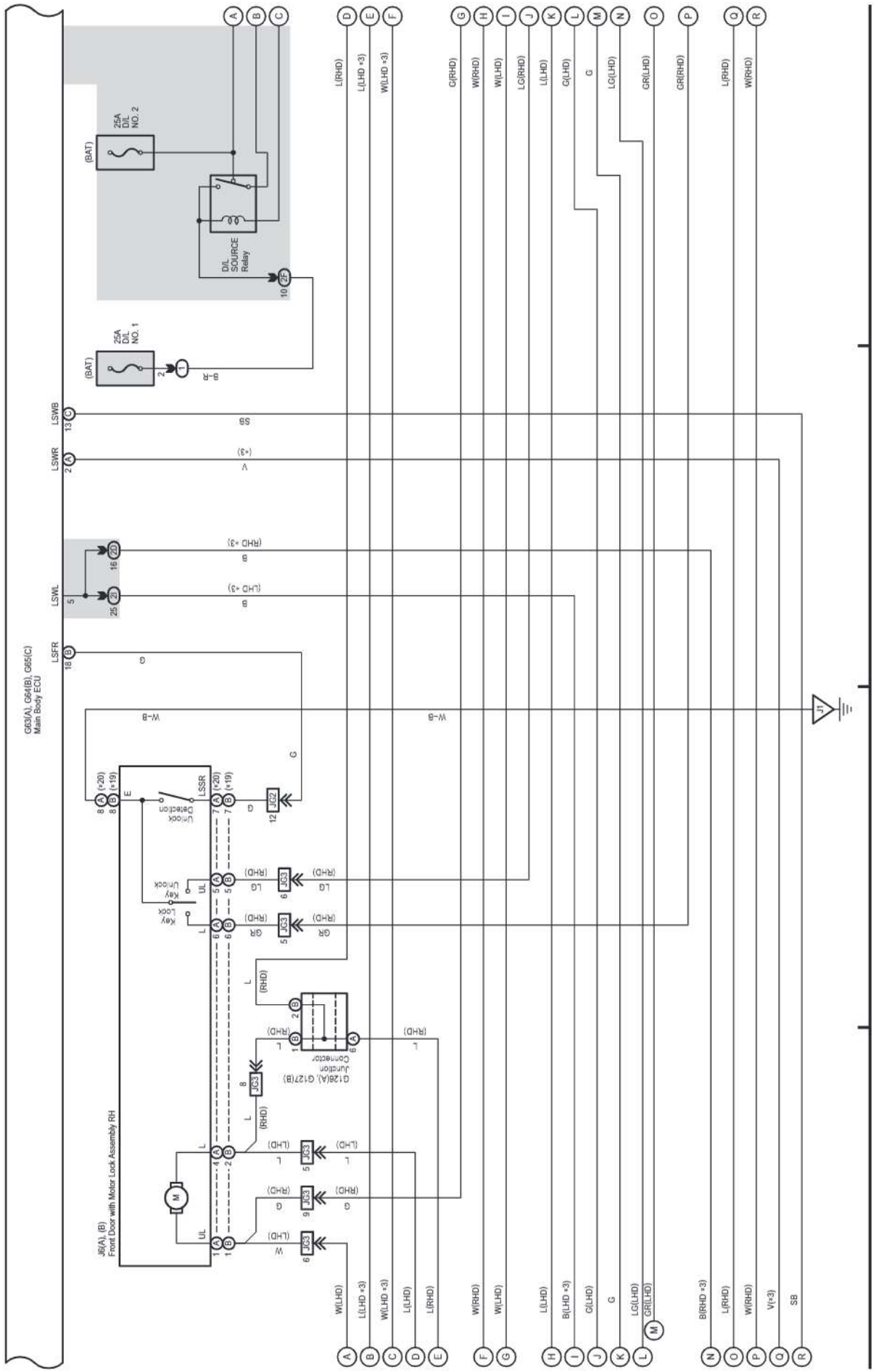

cardiagn.com

(Cont. next page)

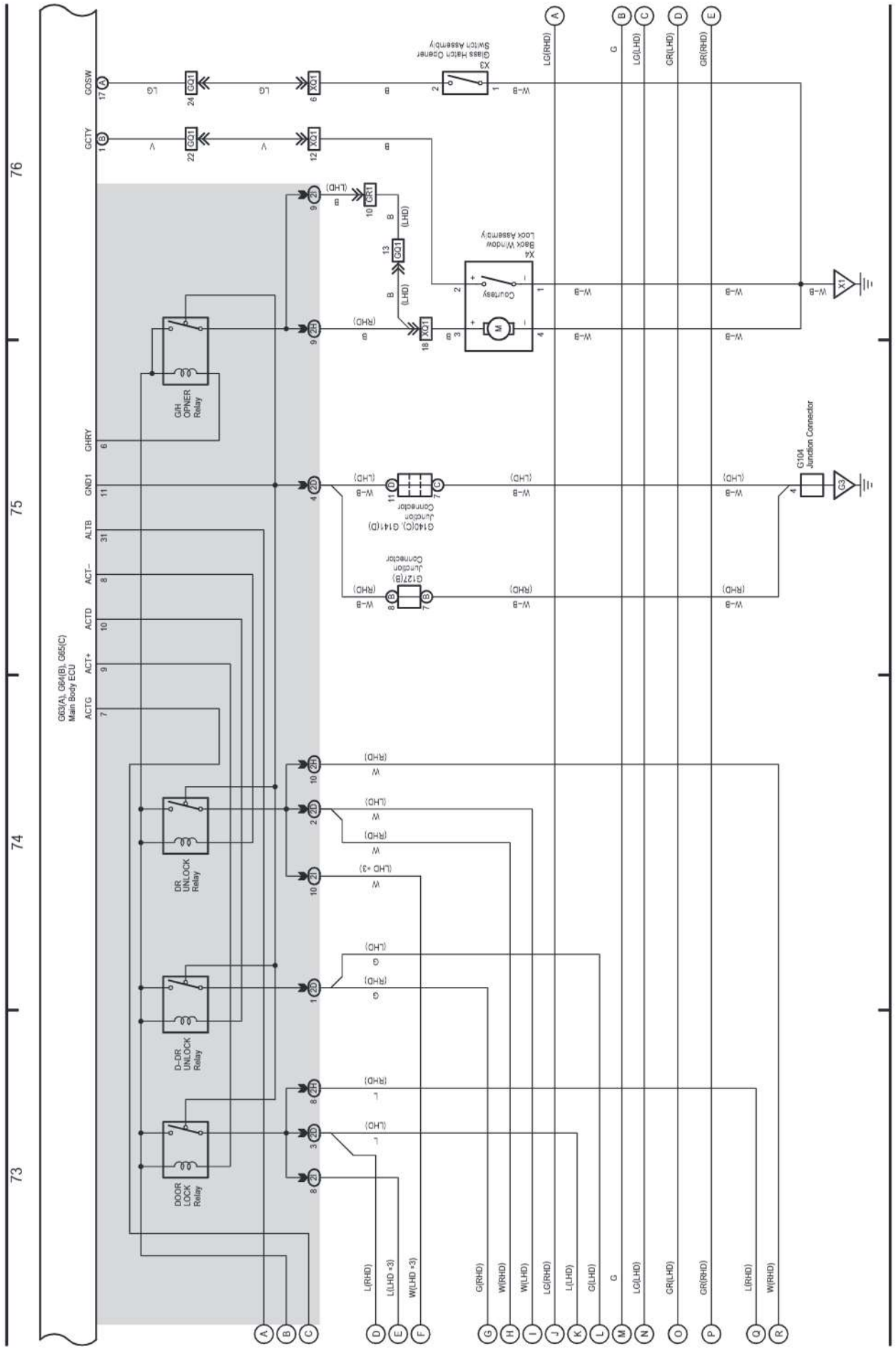

cardiagn.com

(Cont. next page)

Multiplex Communication System (Body Control) (From Jun. 2015 until Aug. 2017 Production)

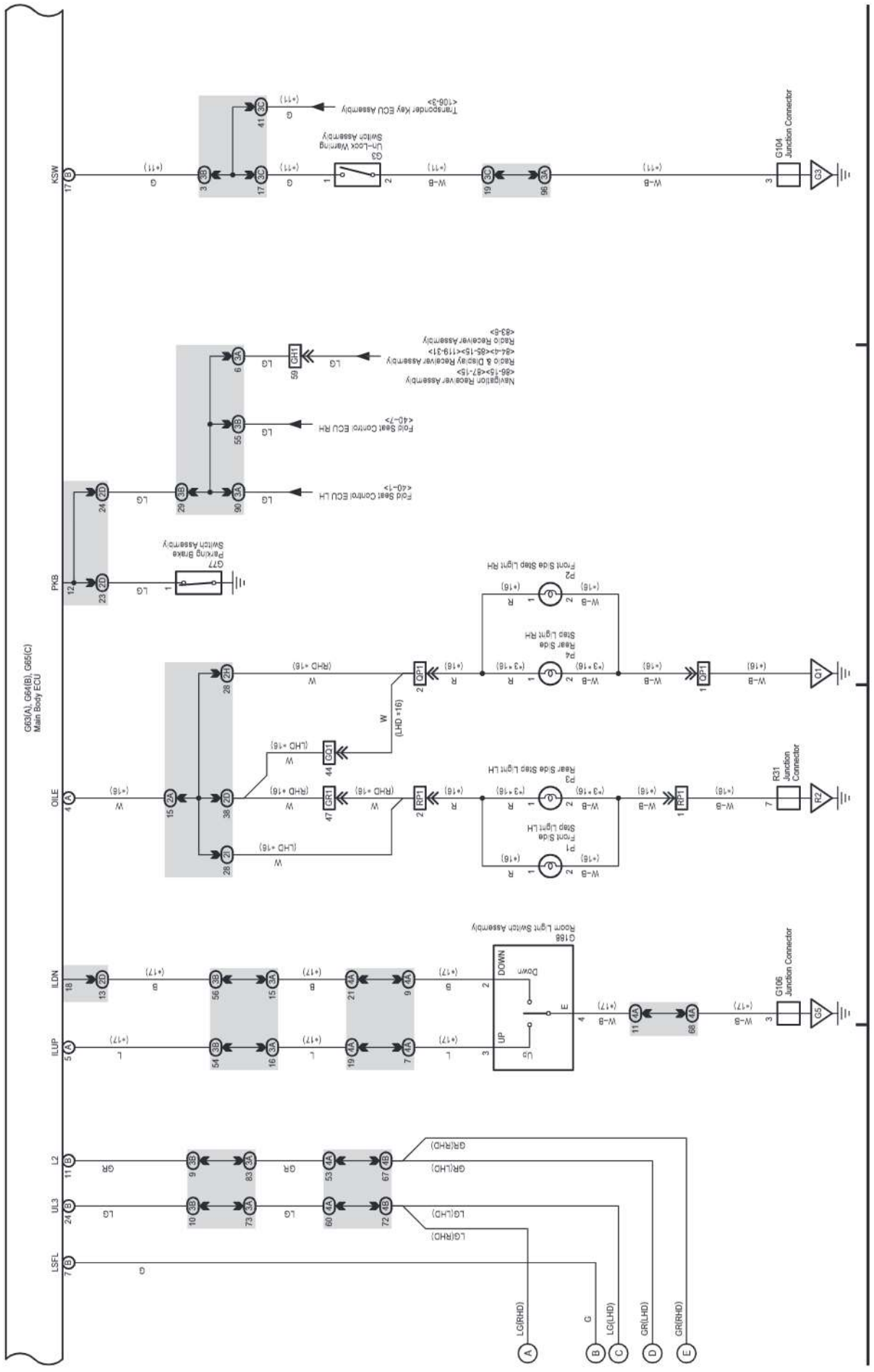

cardiagn.com

(Cont. next page)

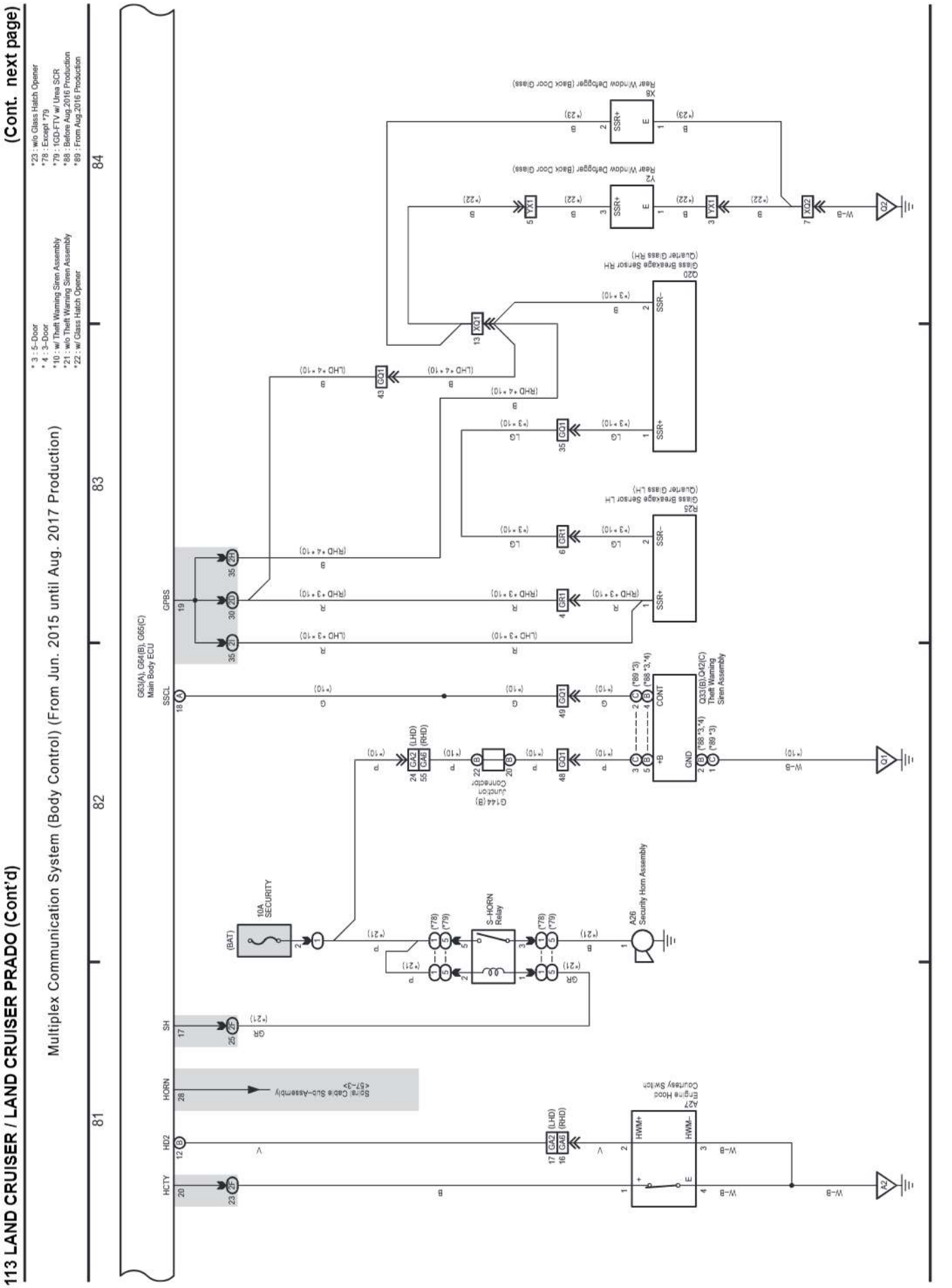

cardiagn.com

(Cont. next page)

Multiplex Communication System (Body Control) (From Jun. 2015 until Aug. 2017 Production)

*11 : w/o Entry & Start System
*24 : w/ Entry & Start System

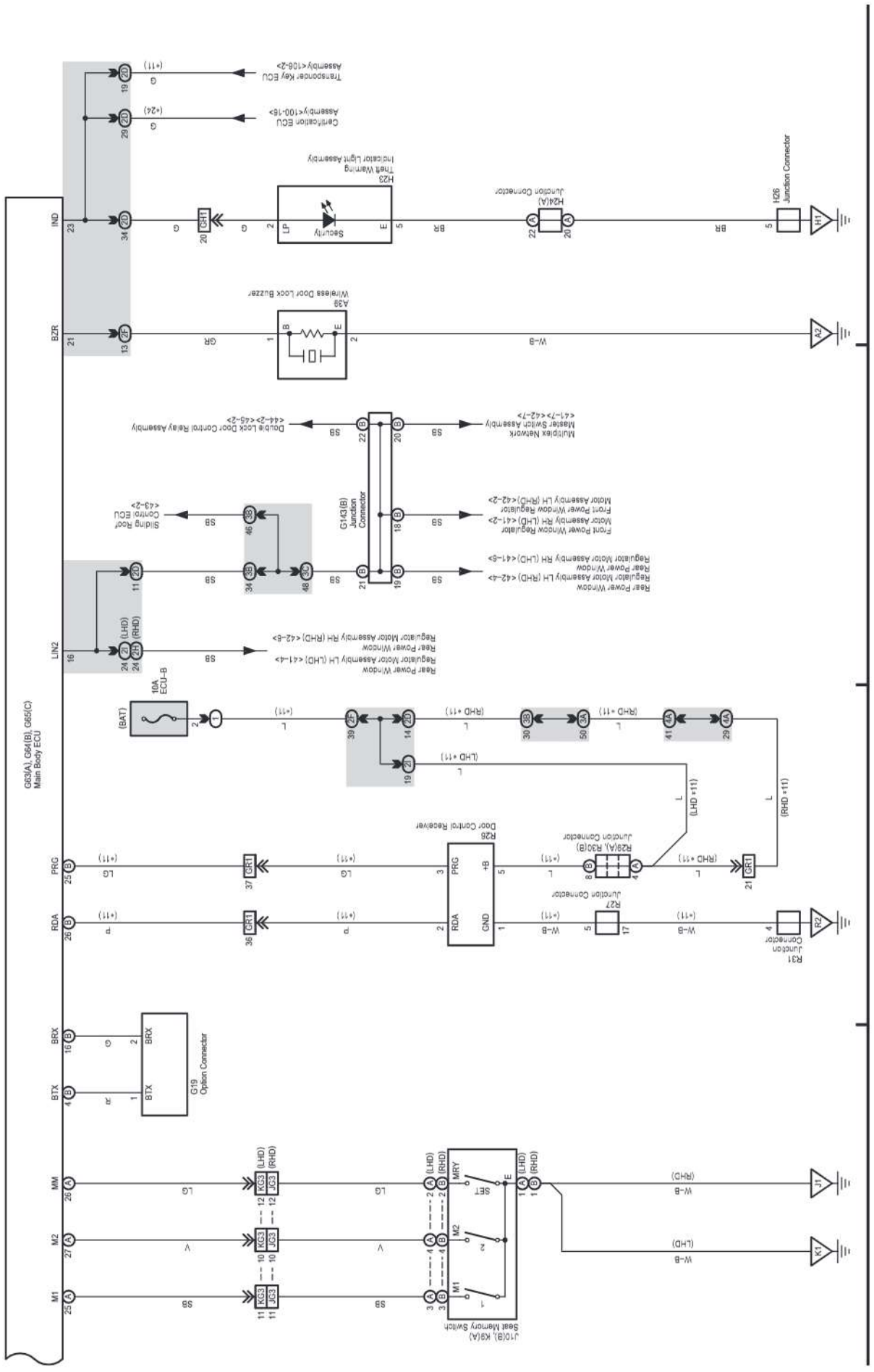

cardiagn.com

Multiplex Communication System (Body Control) (From Jun. 2015 until Aug. 2017 Production)

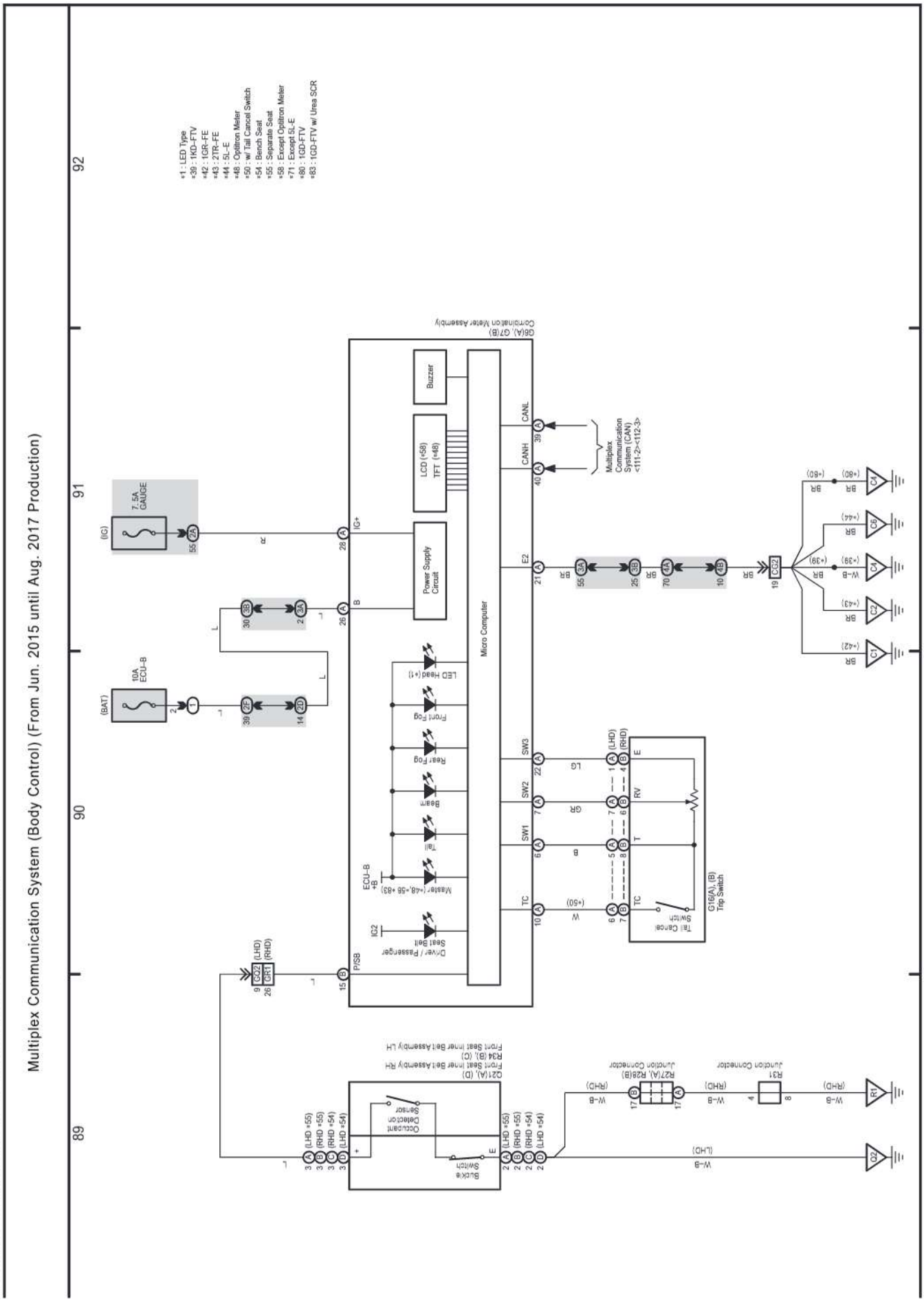

cardiagn.com

114 LAND CRUISER / LAND CRUISER PRADO

ABS (1GR-FE, 1KD-FTV, 1GD-FTV) (From Jun. 2015 until Aug. 2017 Production), A-TRC (From Jun. 2015 until Aug. 2017 Production), Crawl (From Jun. 2015 until Aug. 2017 Production), Downhill Assist Control (From Jun. 2015 until Aug. 2017 Production), Hill-Start Assist Control (From Jun. 2015 until Aug. 2017 Production), Multi-Terrain Select (From Jun. 2015 until Aug. 2017 Production) and VSC (1GR-FE, 1KD-FTV, 1GD-FTV) (From Jun. 2015 until Aug. 2017 Production)

(Cont. next page)

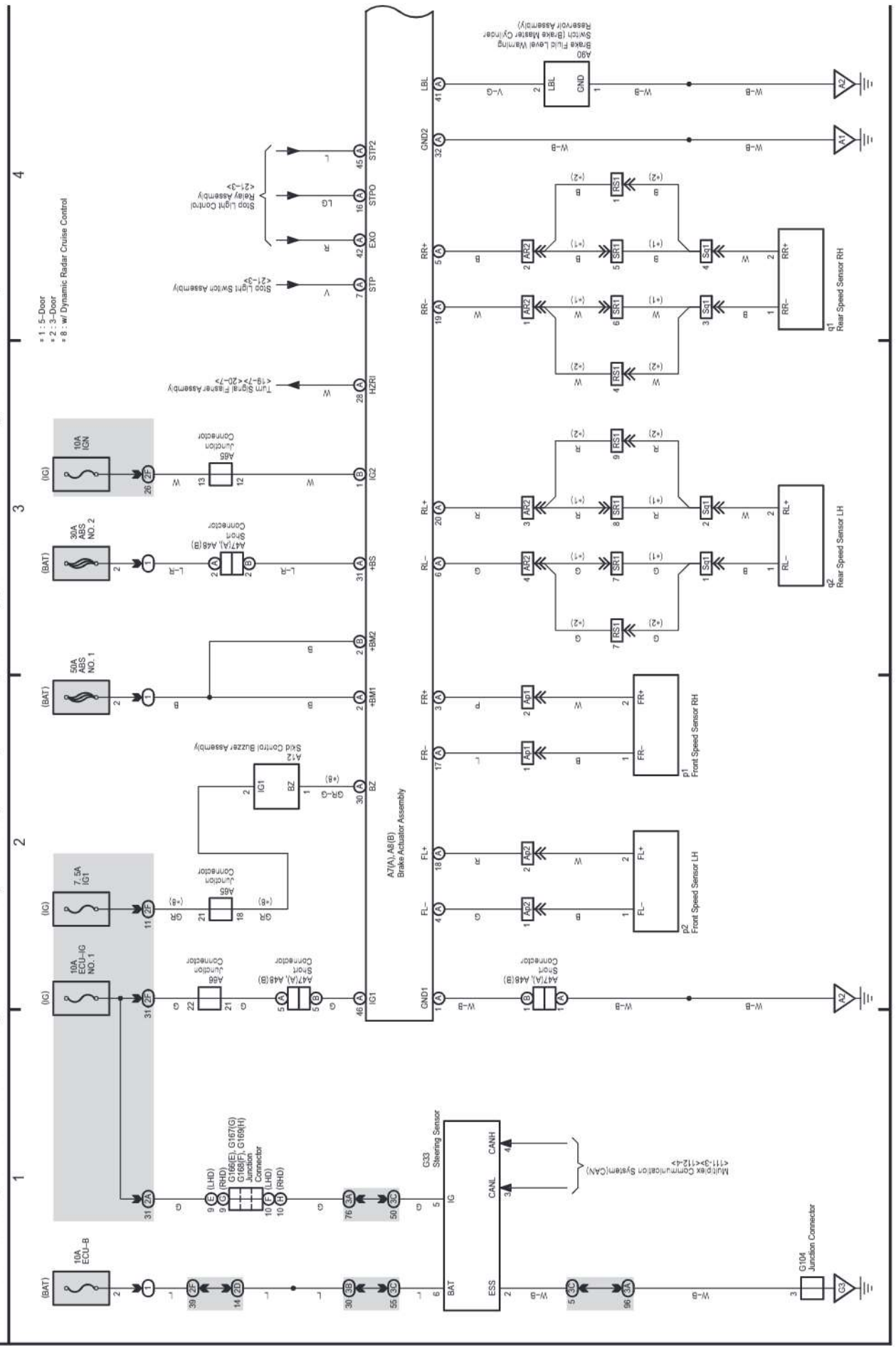

(Cont. next page)

ABS (1GR-FE, 1KD-FTV, 1GD-FTV) (From Jun. 2015 until Aug. 2017 Production), A-TRC (From Jun. 2015 until Aug. 2017 Production), Crawl (From Jun. 2015 until Aug. 2017 Production), Downhill Assist Control (From Jun. 2015 until Aug. 2017 Production), Hill-Start Assist Control (From Jun. 2015 until Aug. 2017 Production), Multi-Terrain Select (From Jun. 2015 until Aug. 2017 Production) and VSC (1GR-FE, 1KD-FTV, 1GD-FTV) (From Jun. 2015 until Aug. 2017 Production)

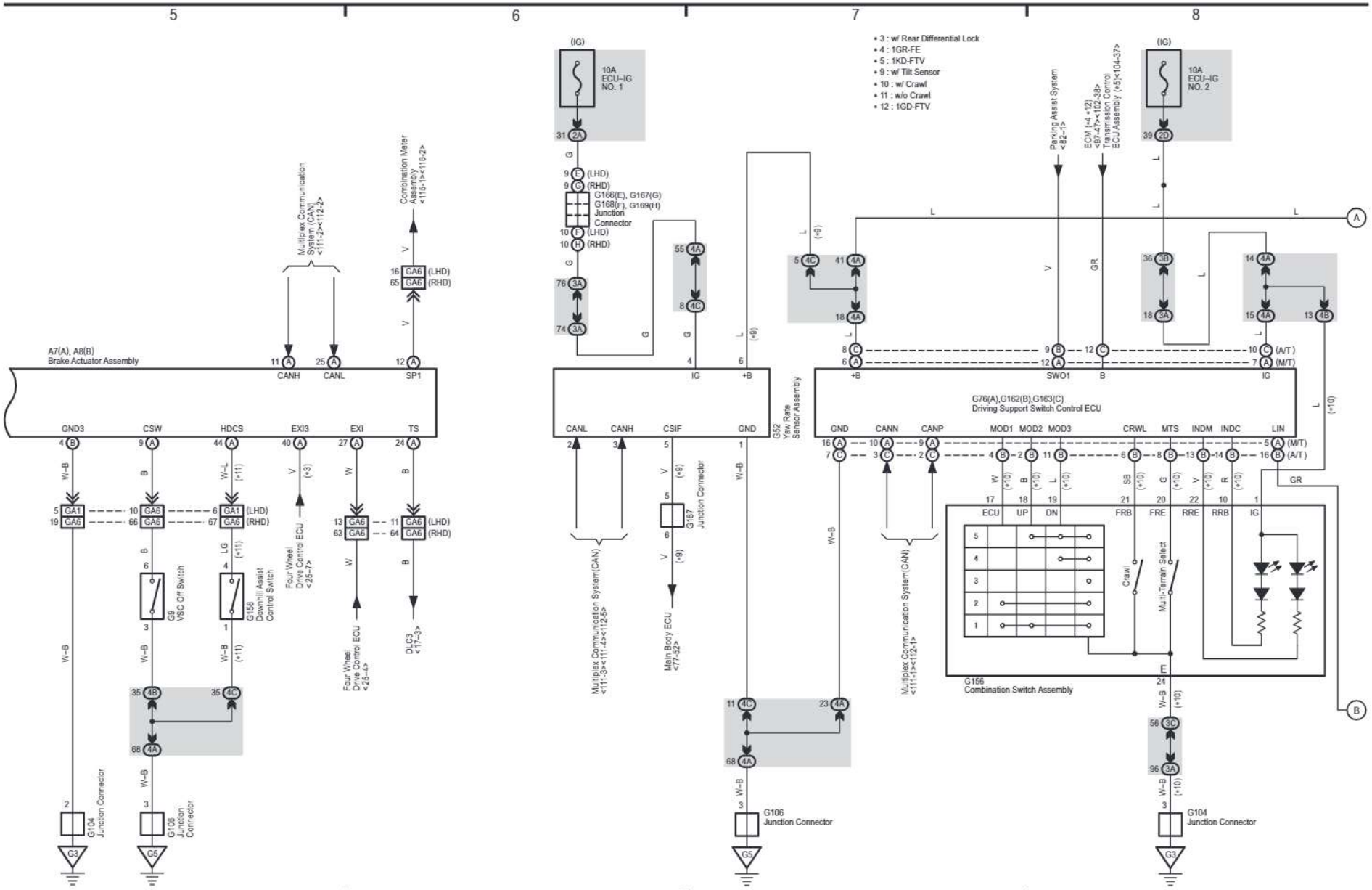

cardiagn.com

cardiagn.com

114 LAND CRUISER / LAND CRUISER PRADO (Cont'd)

ABS (1GR-FE, 1KD-FTV, 1GD-FTV) (From Jun. 2015 until Aug. 2017 Production), A-TRC (From Jun. 2015 until Aug. 2017 Production), Crawl (From Jun. 2015 until Aug. 2017 Production), Downhill Assist Control (From Jun. 2015 until Aug. 2017 Production), Hill-Start Assist Control (From Jun. 2015 until Aug. 2017 Production), Multi-Terrain Select (From Jun. 2015 until Aug. 2017 Production) and VSC (1GR-FE, 1KD-FTV, 1GD-FTV) (From Jun. 2015 until Aug. 2017 Production)

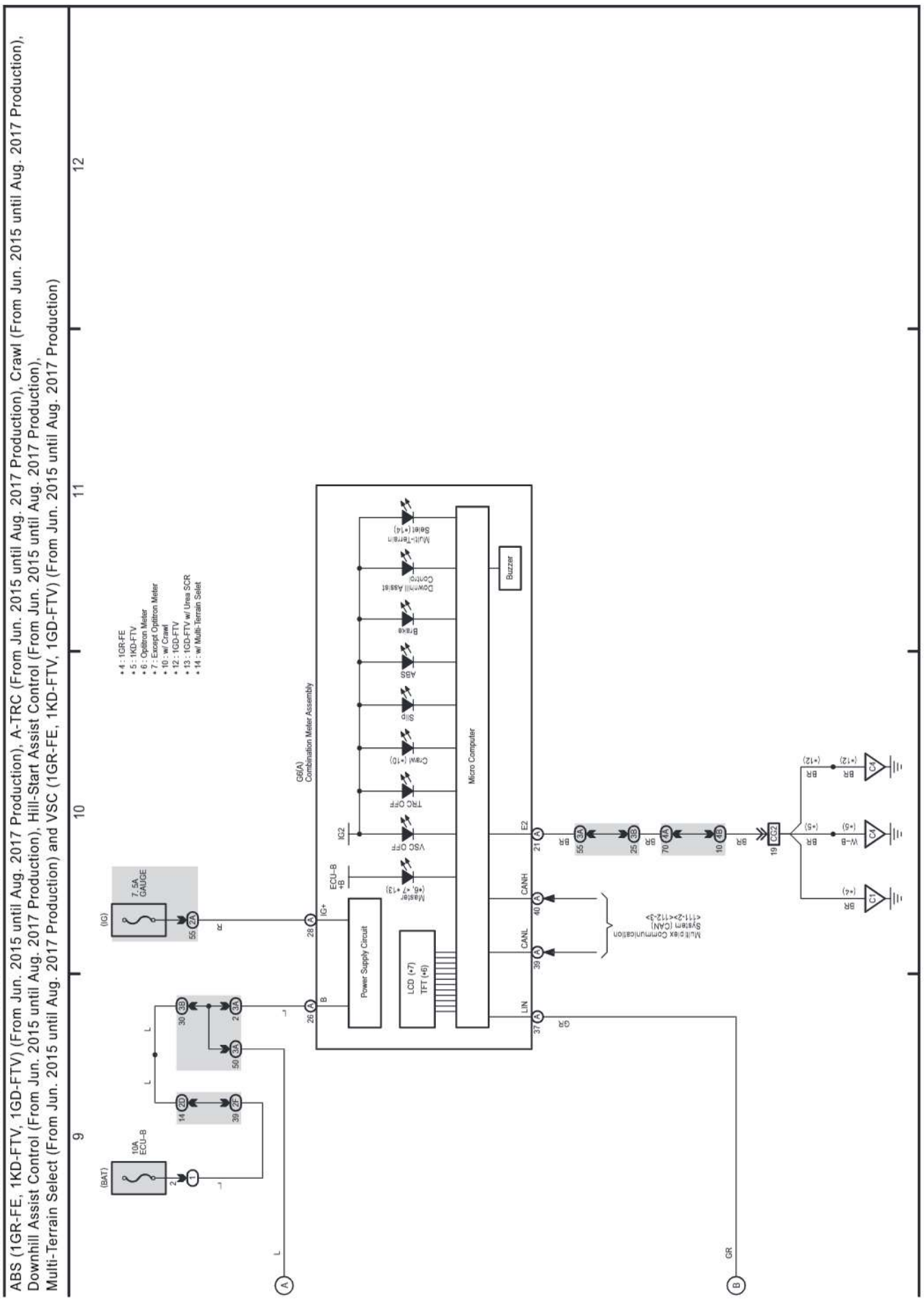

cardiagn.com

(Cont. next page)

Combination Meter (LHD) (From Jun. 2015 until Aug. 2017 Production)

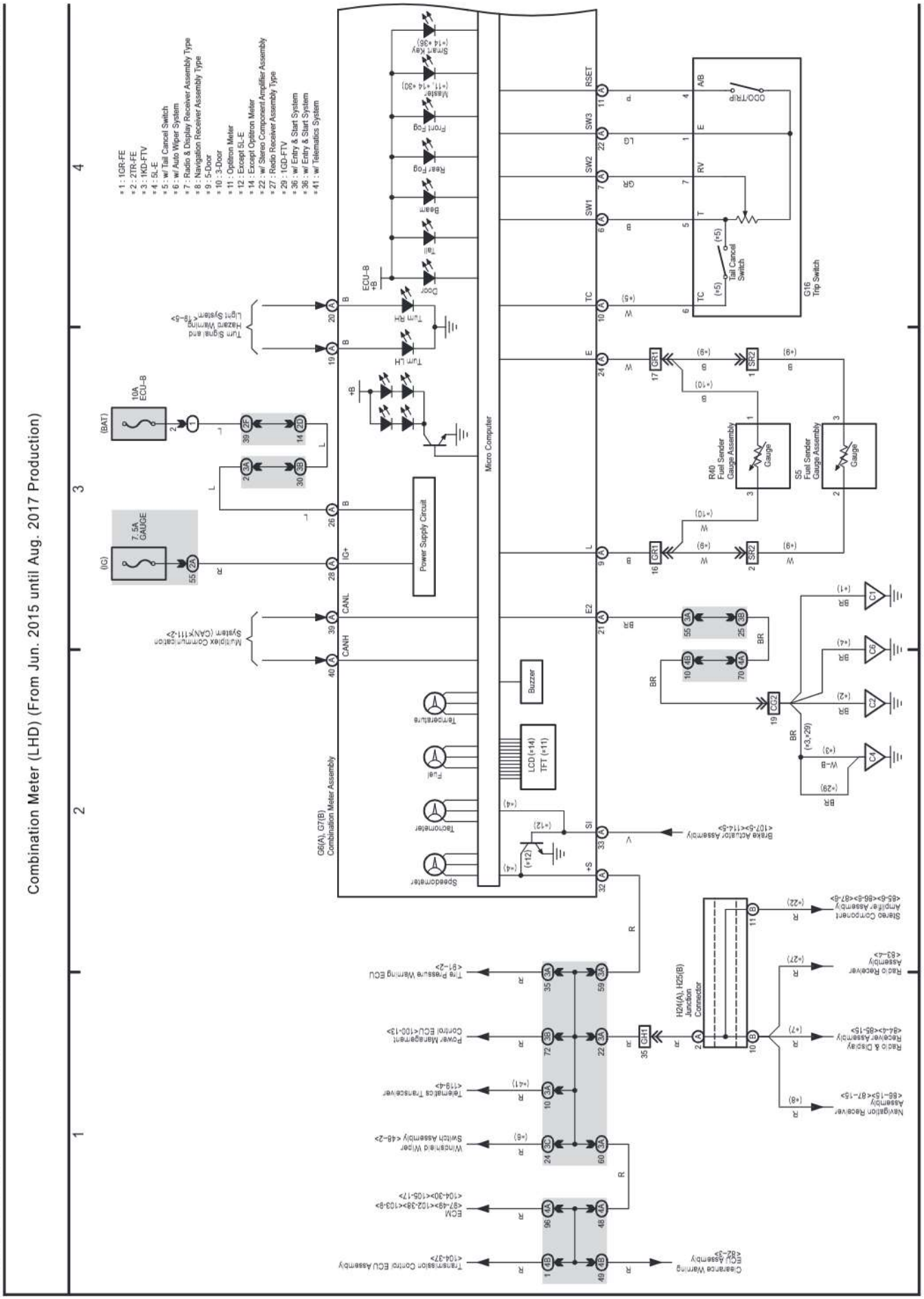

cardiagn.com

(Cont. next page)

Combination Meter (LHD) (From Jun. 2015 until Aug. 2017 Production)

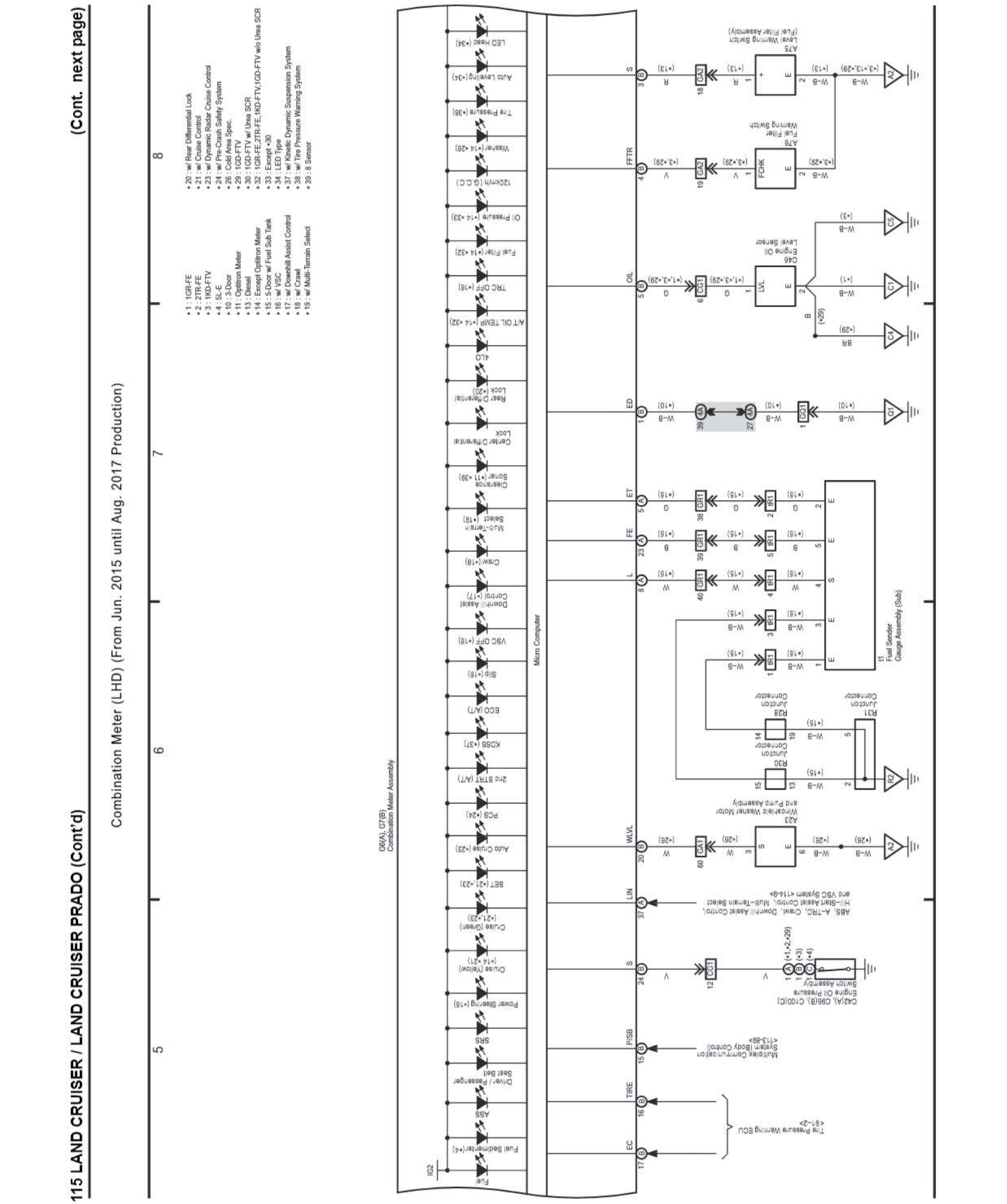

cardiagn.com

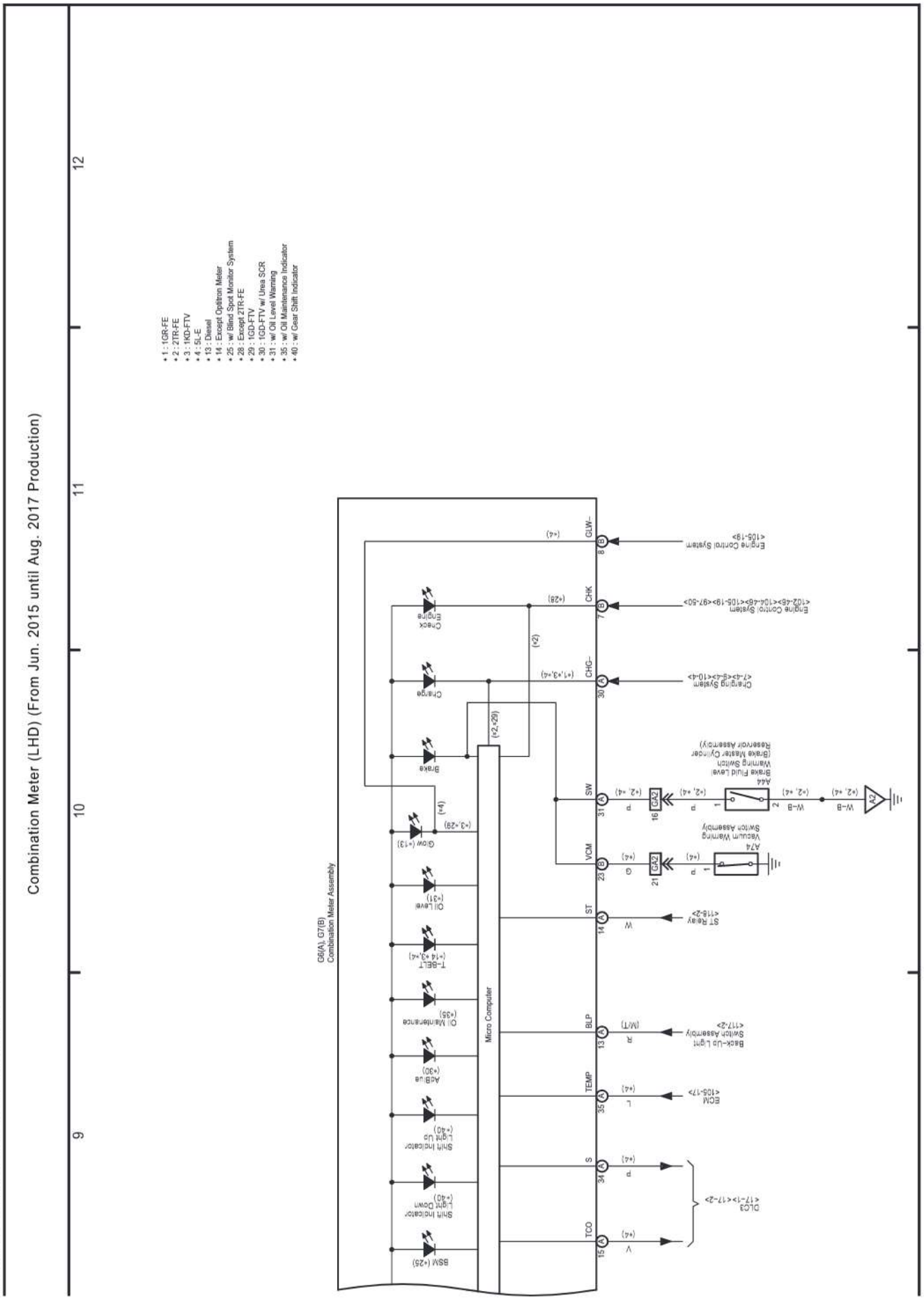

cardiagn.com

(Cont. next page)

Combination Meter (RHD) (From Jun. 2015 until Aug. 2017 Production)

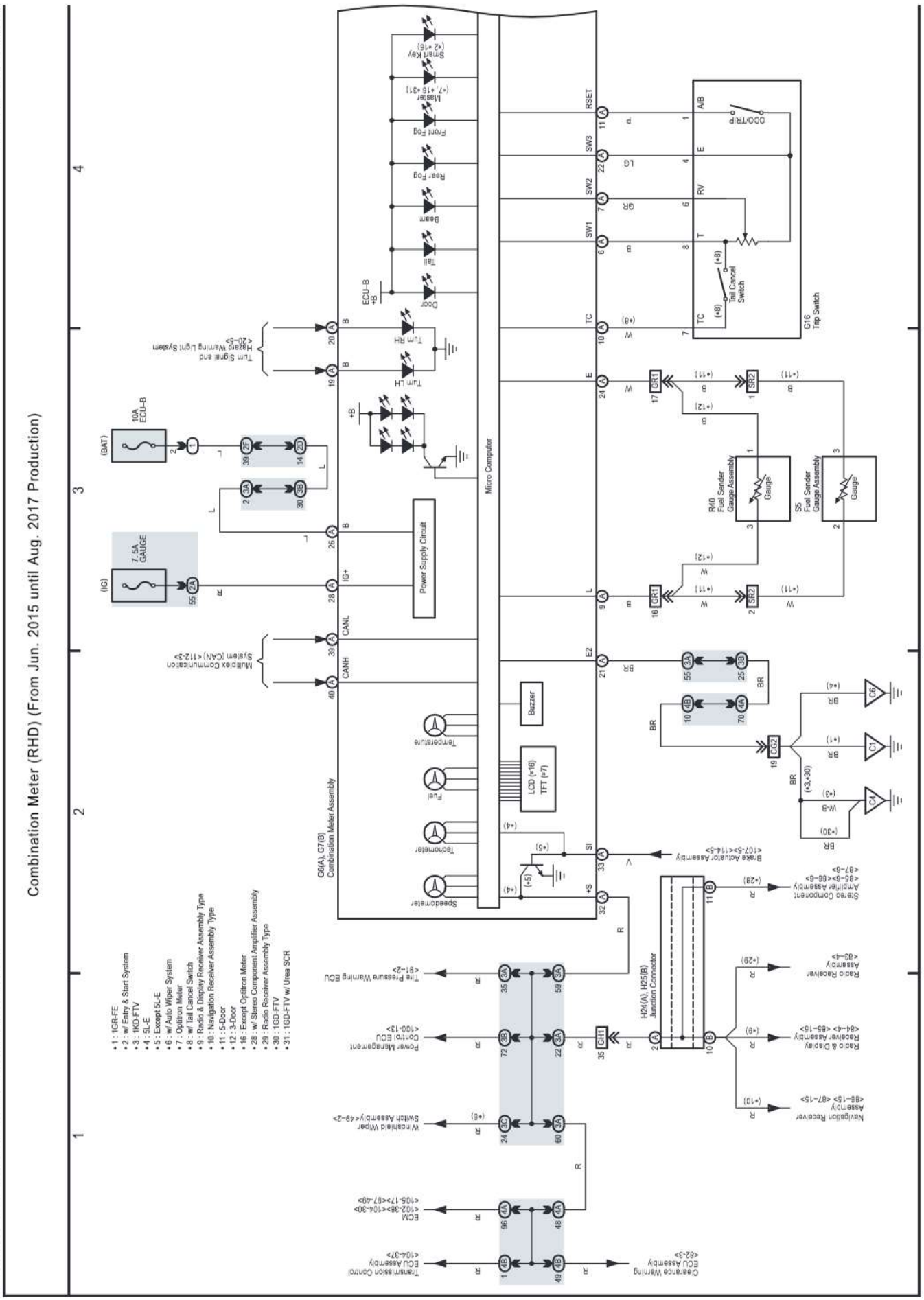

(Cont. next page)

Combination Meter (RHD) (From Jun. 2015 until Aug. 2017 Production)

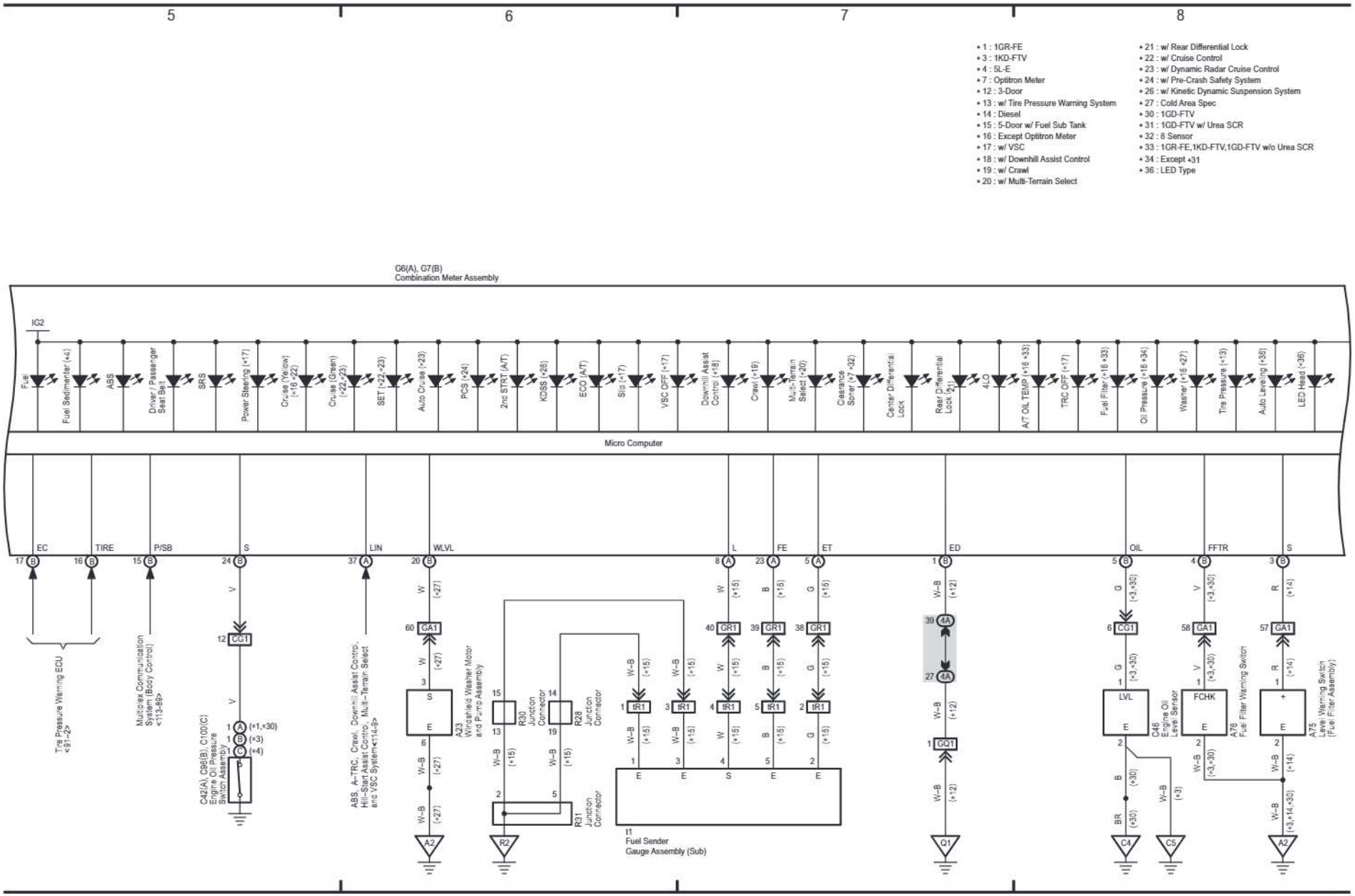

cardiagn.com

cardiagn.com

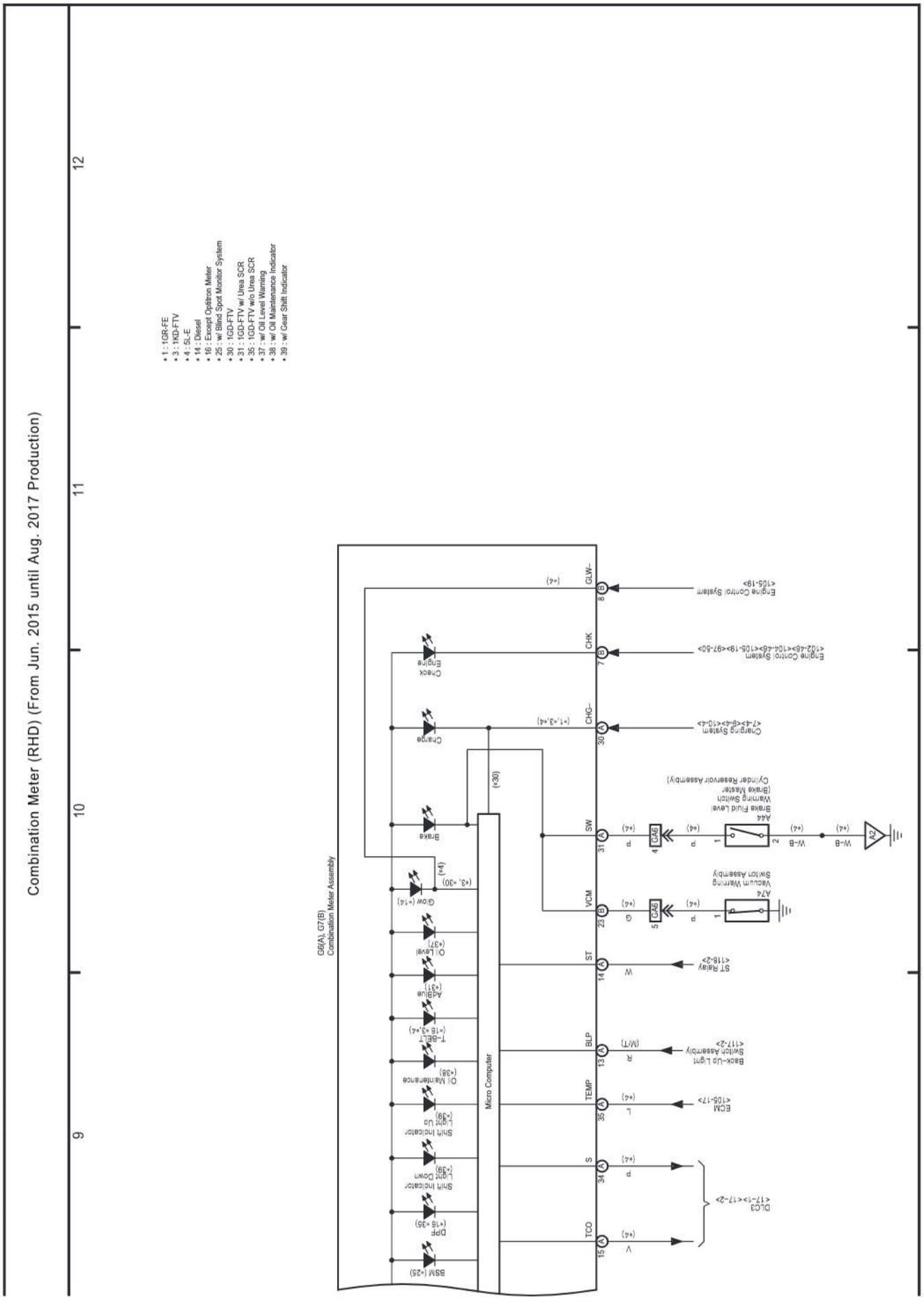

cardiagn.com

M OVERALL ELECTRICAL WIRING DIAGRAM

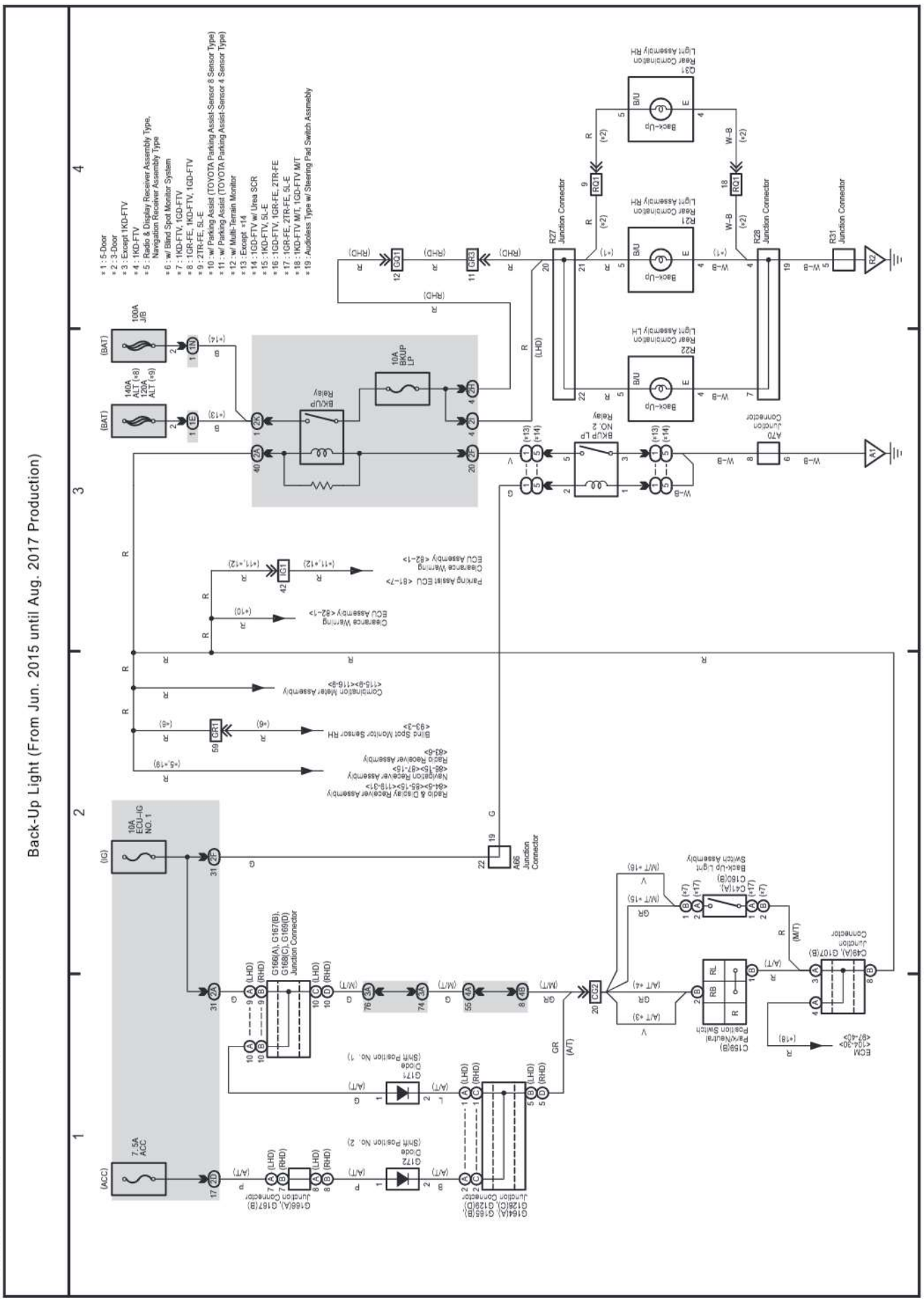

cardiagn.com

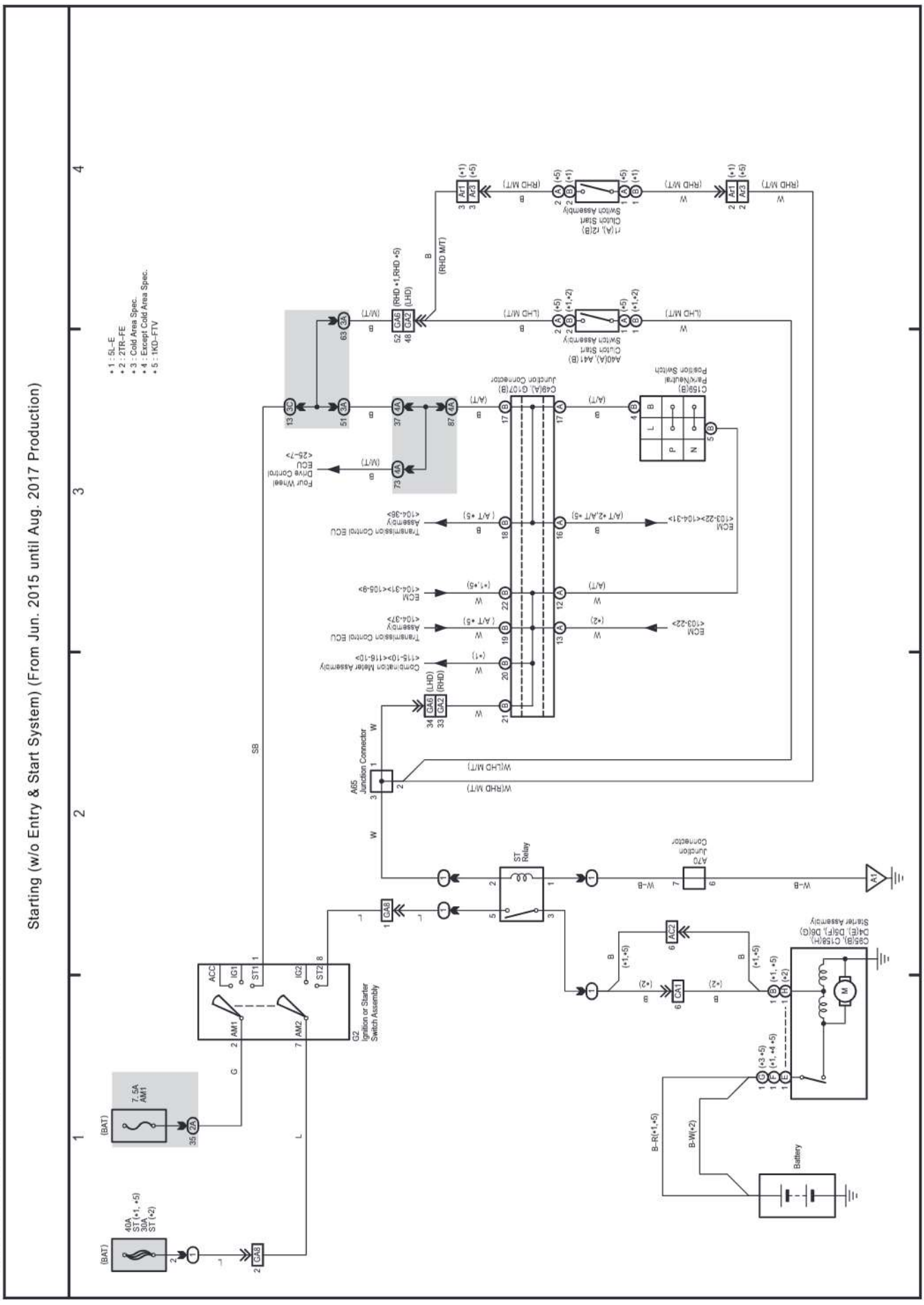

cardiagn.com

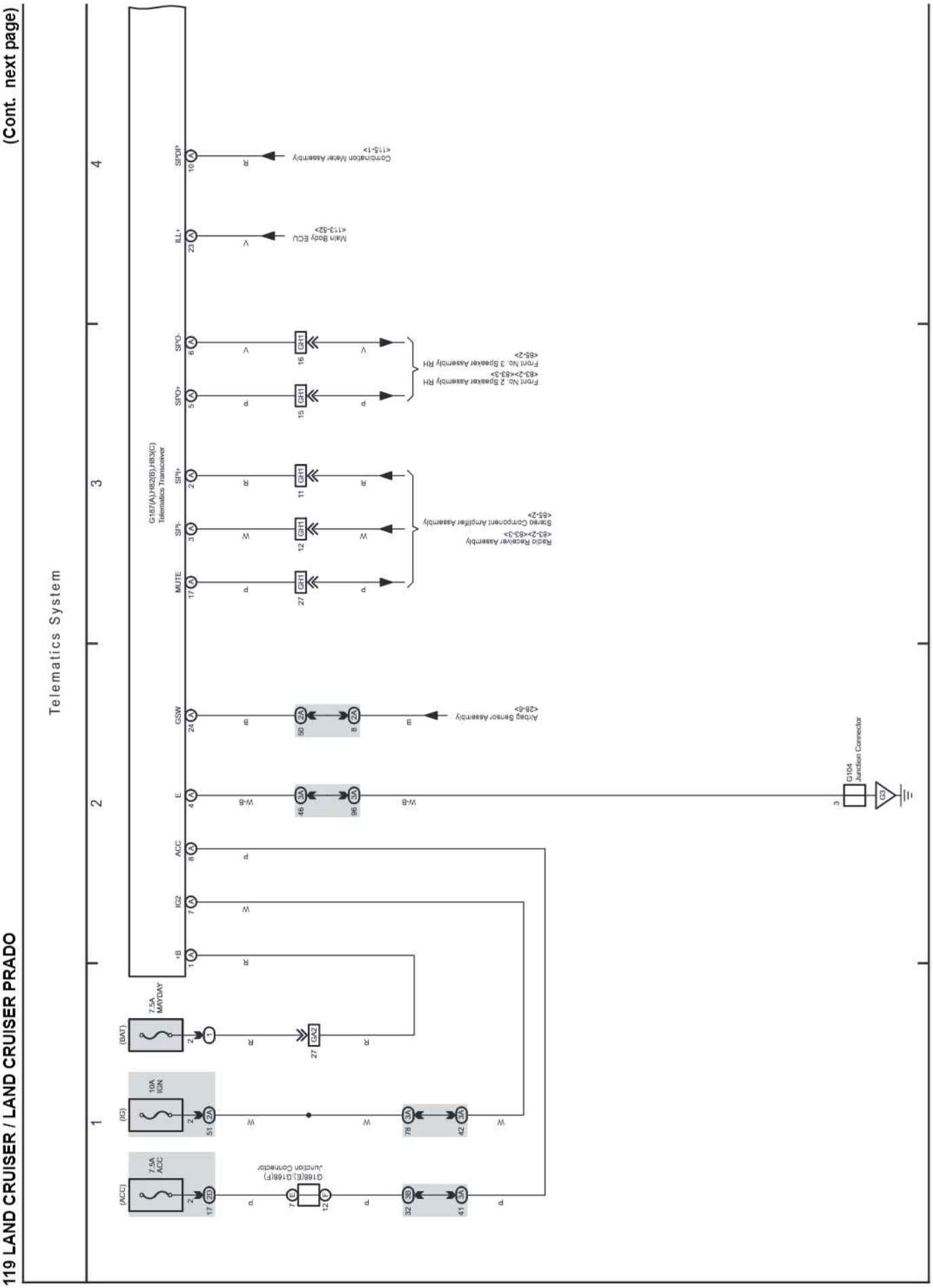

cardiagn.com

(Cont. next page)

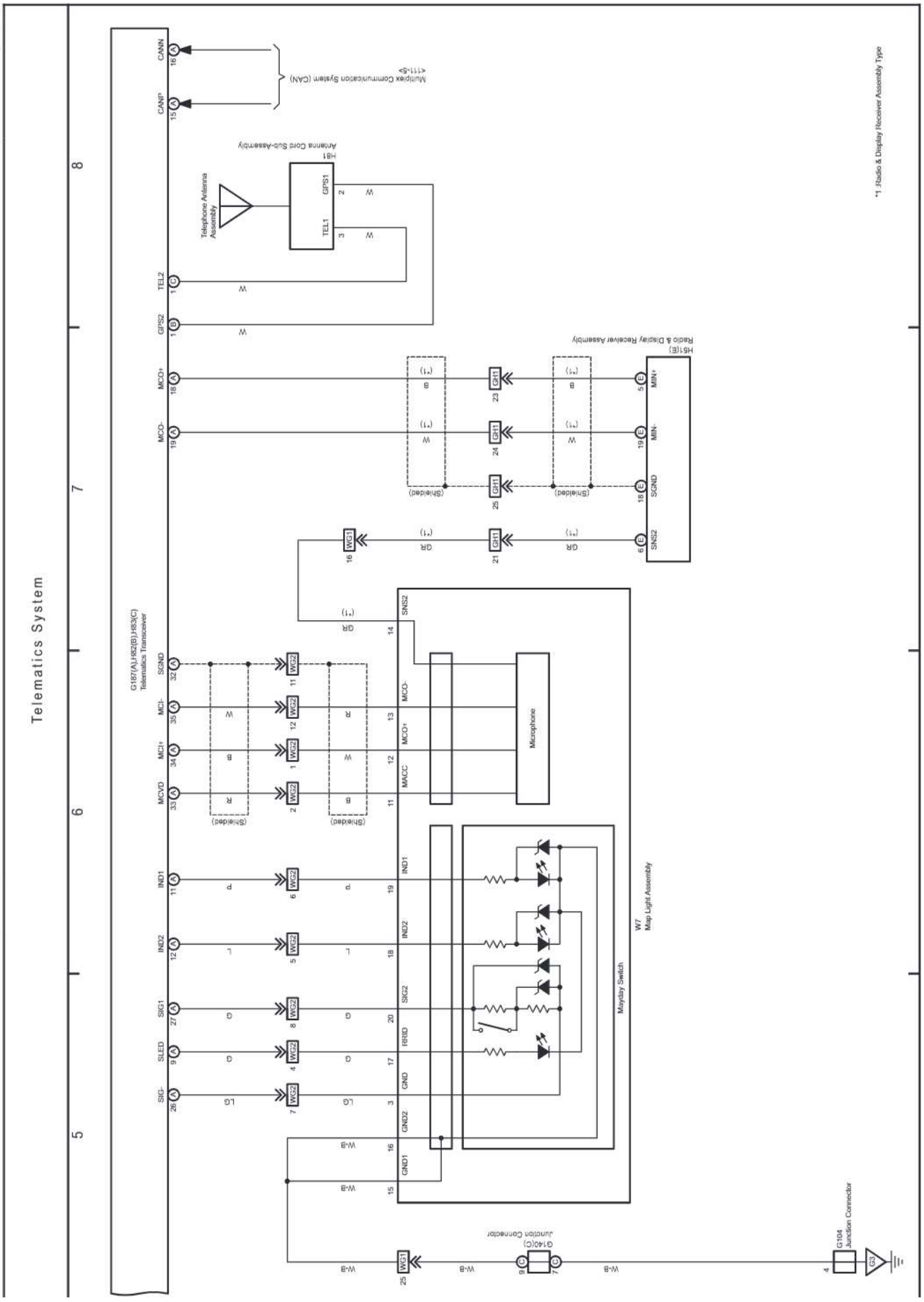

cardiagn.com

(Cont. next page)

Audio System (Radio & Display Receiver Assembly Type w/ Stereo Component Amplifier Assembly w/ Telematics System),
Navigation System (Radio & Display Receiver Assembly Type w/ Telematics System),
Parking Assist (Rear View Monitor) (Radio & Display Receiver Assembly Type w/ Stereo Component Amplifier Assembly w/ Telematics System),
Telematics System (Radio & Display Receiver Assembly Type w/ Stereo Component Amplifier Assembly)

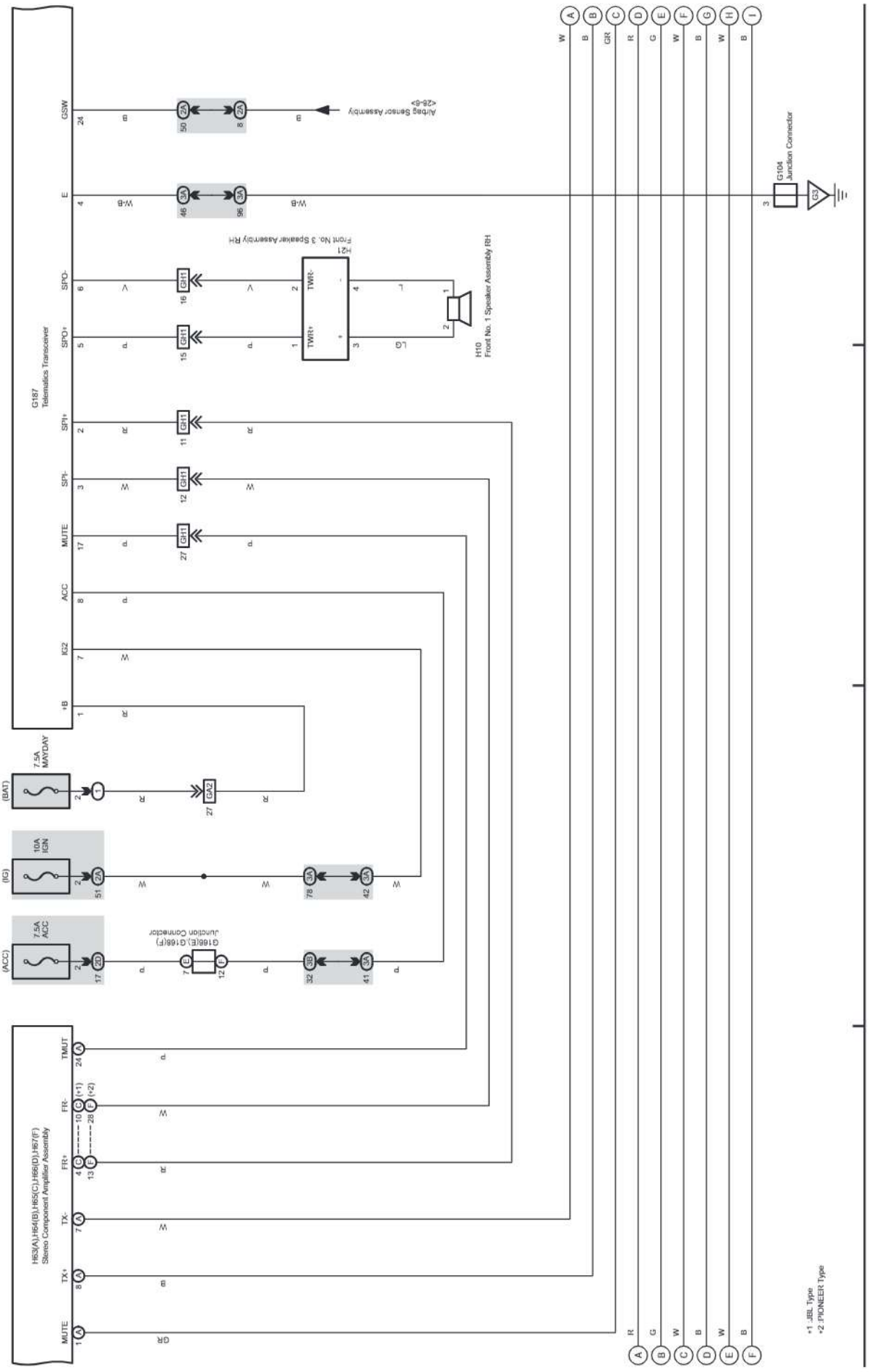

cardiagn.com

119 LAND CRUISER / LAND CRUISER PRADO (Cont'd)

(Cont. next page)

Audio System (Radio & Display Receiver Assembly Type w/ Stereo Component Amplifier Assembly w/ Telematics System),
Navigation System (Radio & Display Receiver Assembly Type w/ Telematics System),
Parking Assist (Rear View Monitor) (Radio & Display Receiver Assembly Type w/ Stereo Component Amplifier Assembly w/ Telematics System),
Telematics System (Radio & Display Receiver Assembly Type w/ Stereo Component Amplifier Assembly)

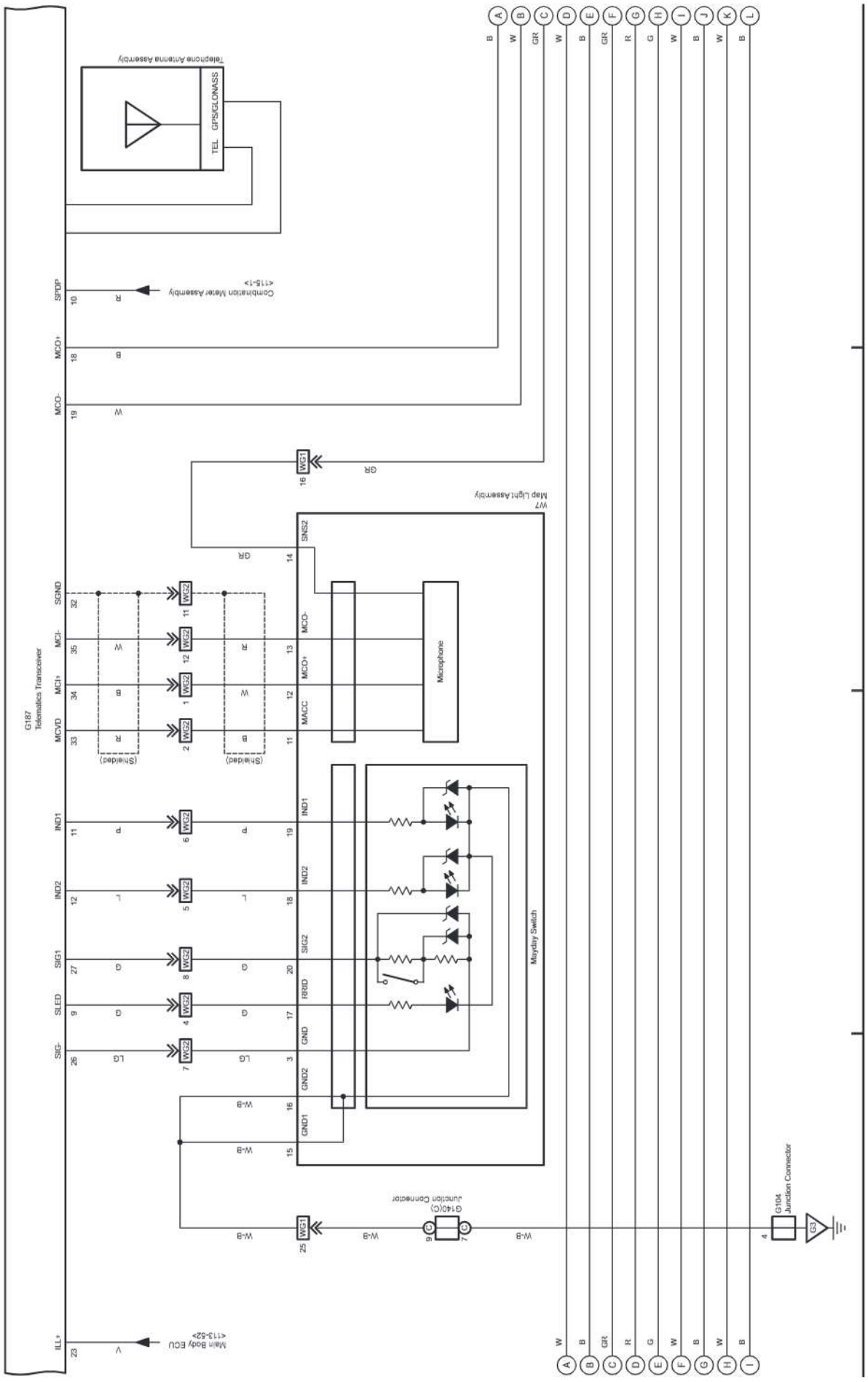

cardiagn.com

(Cont. next page)

119 LAND CRUISER / LAND CRUISER PRADO (Cont'd)

Audio System (Radio & Display Receiver Assembly Type w/ Stereo Component Amplifier Assembly w/ Telematics System),
Navigation System (Radio & Display Receiver Assembly Type w/ Telematics System),
Parking Assist (Rear View Monitor) (Radio & Display Receiver Assembly Type w/ Stereo Component Amplifier Assembly w/ Telematics System),
Telematics System (Radio & Display Receiver Assembly Type w/ Stereo Component Amplifier Assembly)

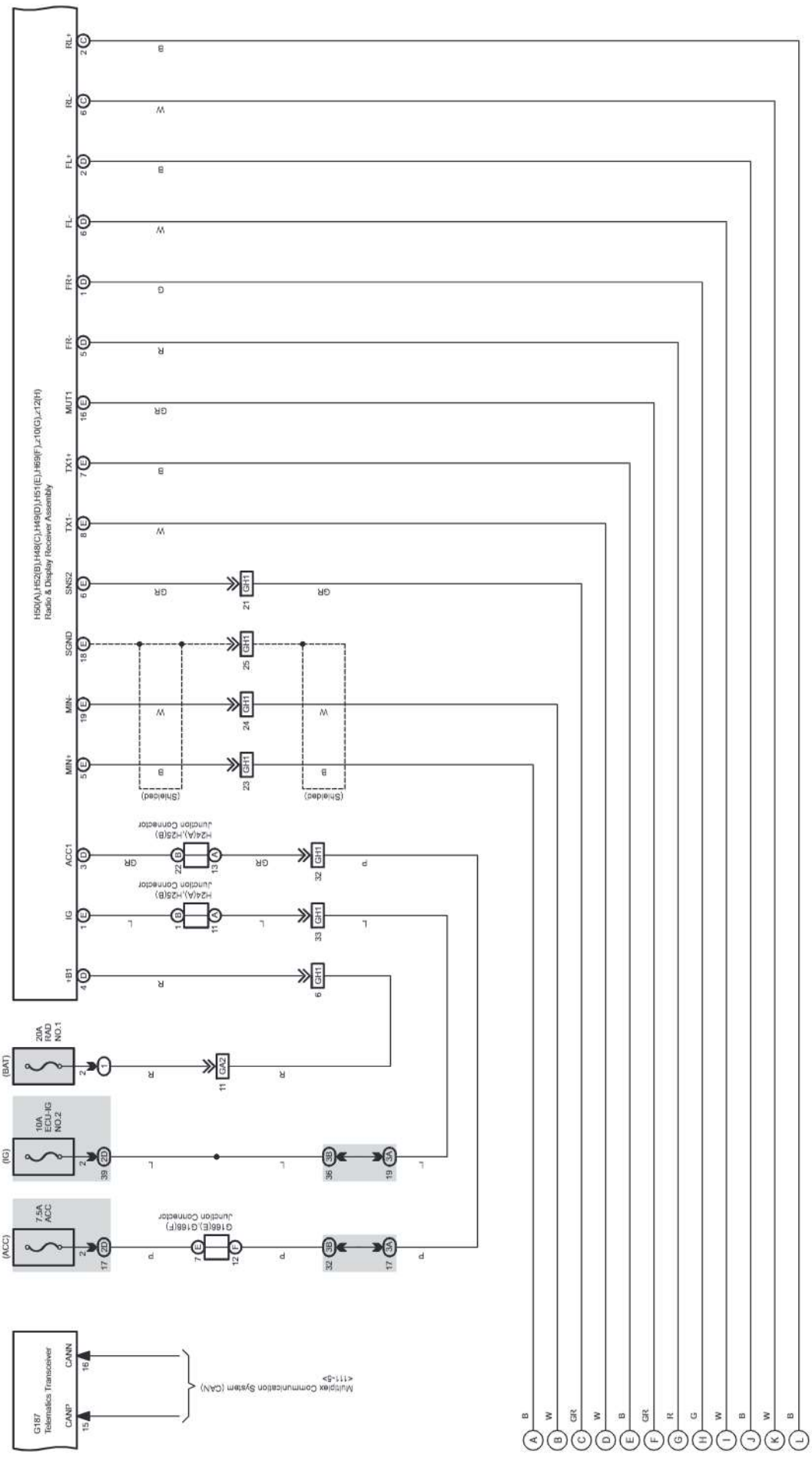

(Cont. next page)

Audio System (Radio & Display Receiver Assembly Type w/ Stereo Component Amplifier Assembly w/ Telematics System),
Navigation System (Radio & Display Receiver Assembly Type w/ Telematics System),
Parking Assist (Rear View Monitor) (Radio & Display Receiver Assembly Type w/ Stereo Component Amplifier Assembly w/ Telematics System),
Telematics System (Radio & Display Receiver Assembly Type w/ Stereo Component Amplifier Assembly)

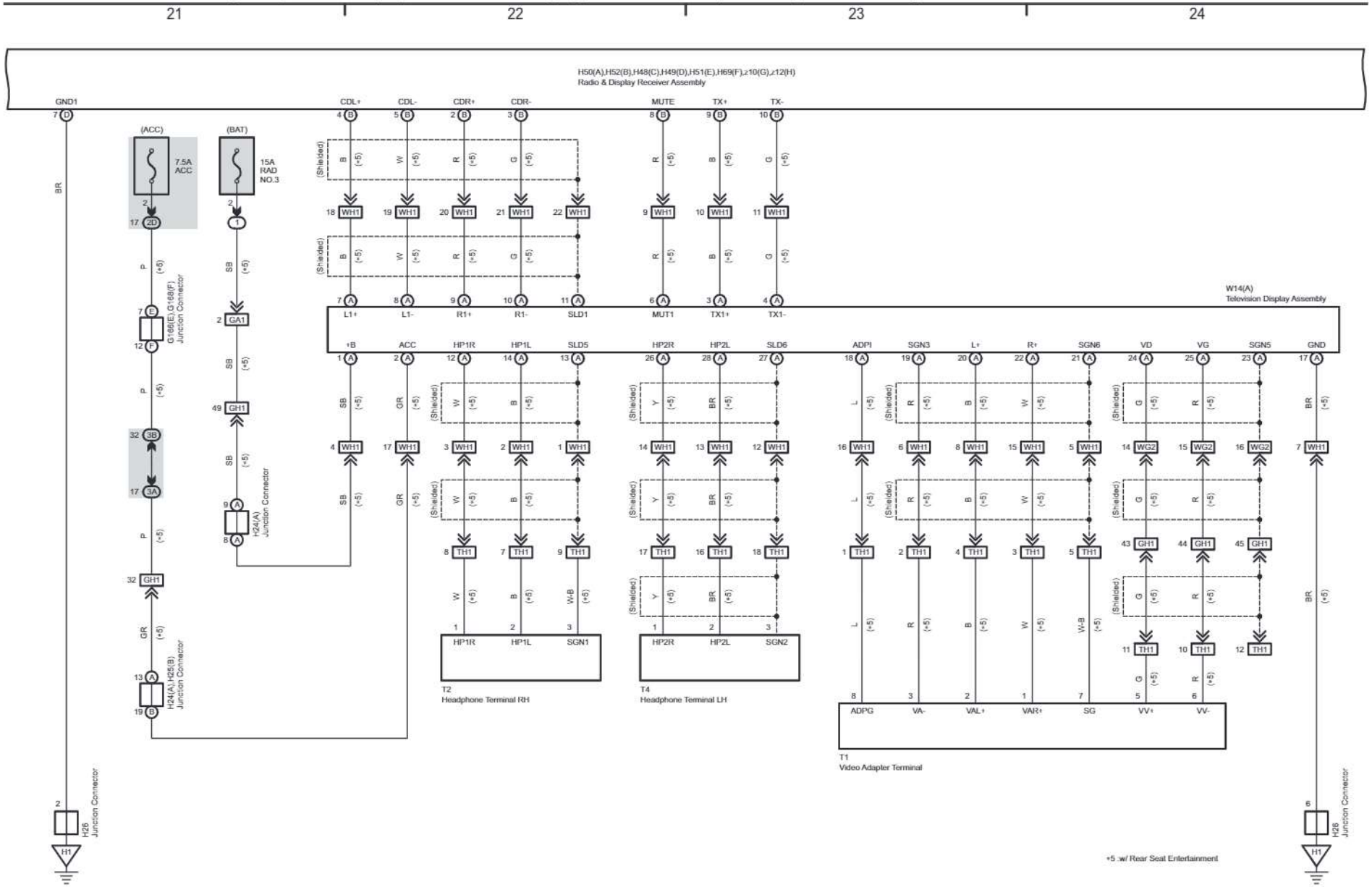

cardiagn.com

cardiagn.com

(Cont. next page)

119 LAND CRUISER / LAND CRUISER PRADO (Cont'd)

Audio System (Radio & Display Receiver Assembly Type w/ Stereo Component Amplifier Assembly w/ Telematics System),
Navigation System (Radio & Display Receiver Assembly Type w/ Telematics System),
Parking Assist (Rear View Monitor) (Radio & Display Receiver Assembly Type w/ Stereo Component Amplifier Assembly w/ Telematics System),
Telematics System (Radio & Display Receiver Assembly Type w/ Stereo Component Amplifier Assembly)

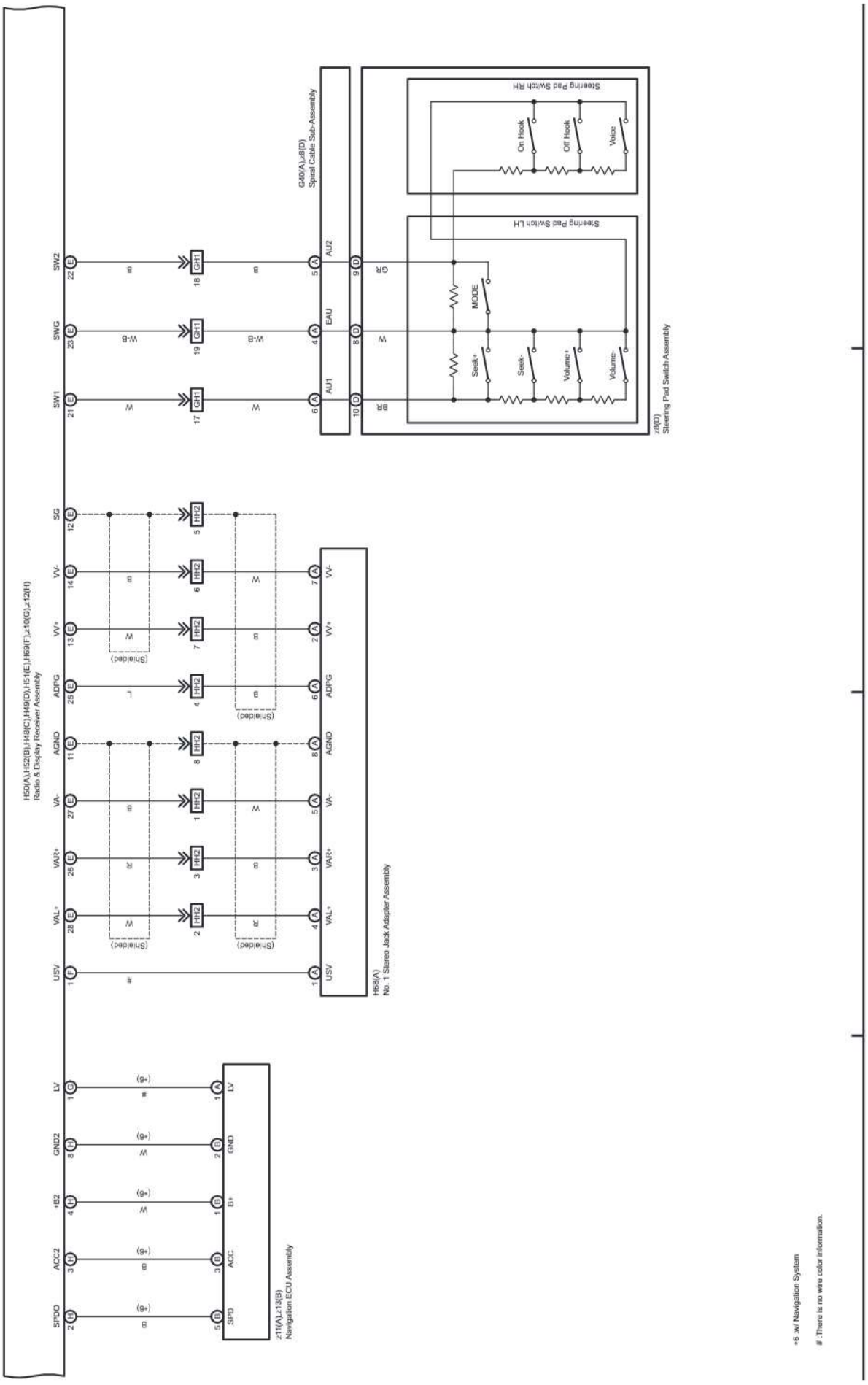

*6 w/ Navigation System

If : There is no wire color information.

cardiagn.com

119 LAND CRUISER / LAND CRUISER PRADO (Cont'd)

Audio System (Radio & Display Receiver Assembly Type w/ Stereo Component Amplifier Assembly w/ Telematics System),
Navigation System (Radio & Display Receiver Assembly Type w/ Telematics System),
Parking Assist (Rear View Monitor) (Radio & Display Receiver Assembly Type w/ Stereo Component Amplifier Assembly w/ Telematics System),
Telematics System (Radio & Display Receiver Assembly Type w/ Stereo Component Amplifier Assembly)

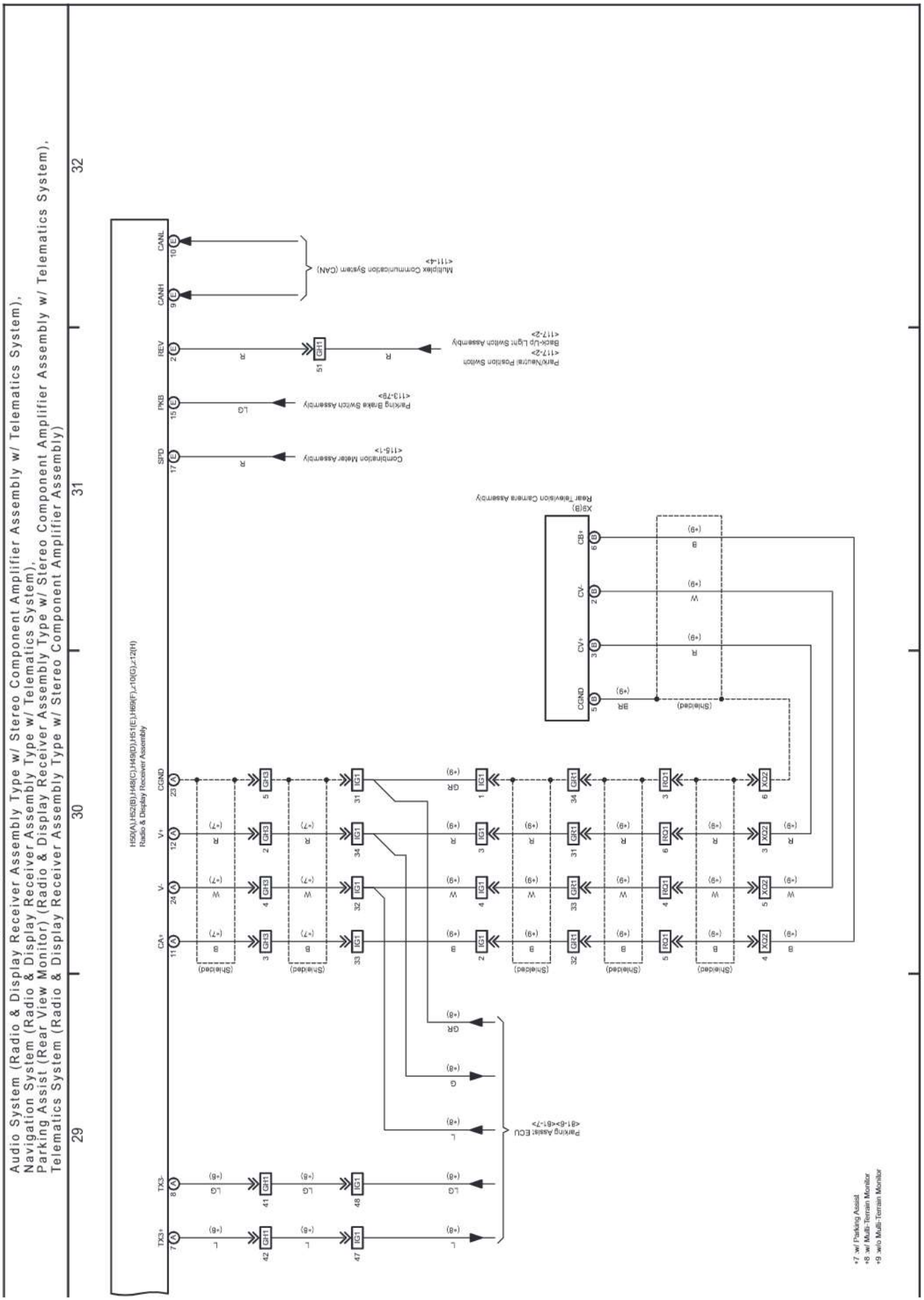

cardiagn.com

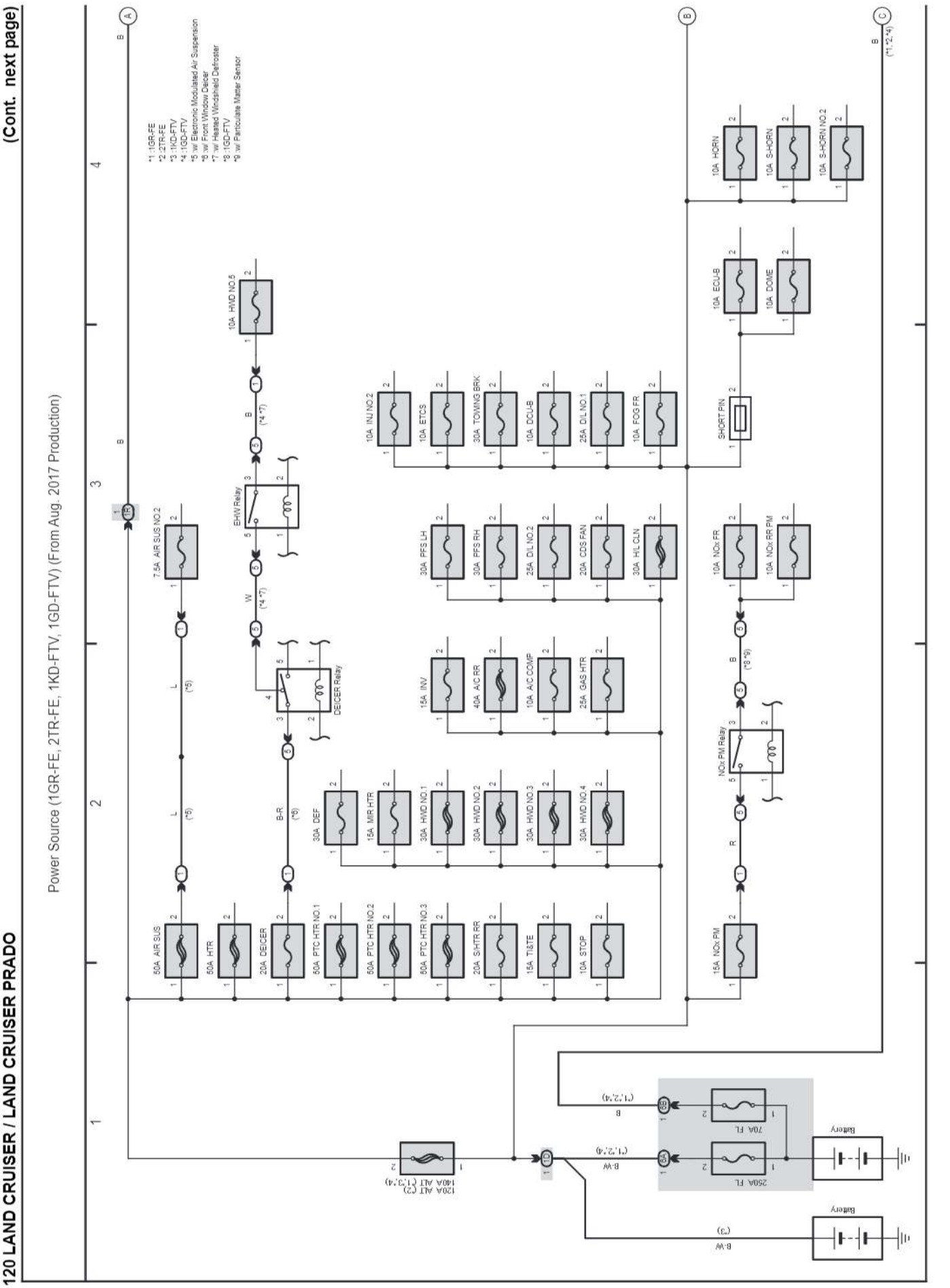

(Cont. next page)

Power Source (1GR-FE, 2TR-FE, 1KD-FTV, 1GD-FTV) (From Aug. 2017 Production)

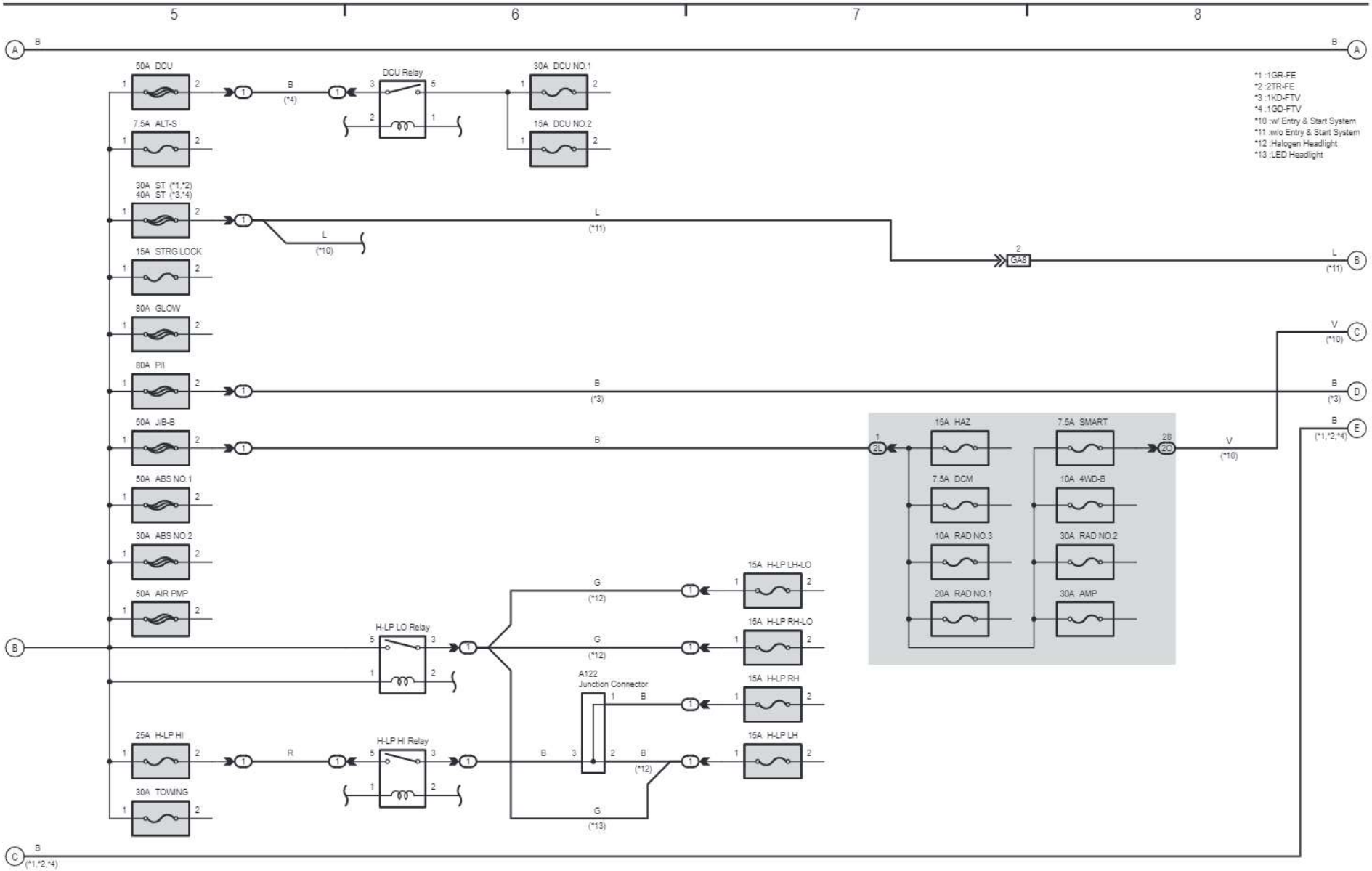

cardiagn.com

cardiagn.com

(Cont. next page)

Power Source (1GR-FE, 2TR-FE, 1KD-FTV, 1GD-FTV) (From Aug. 2017 Production)

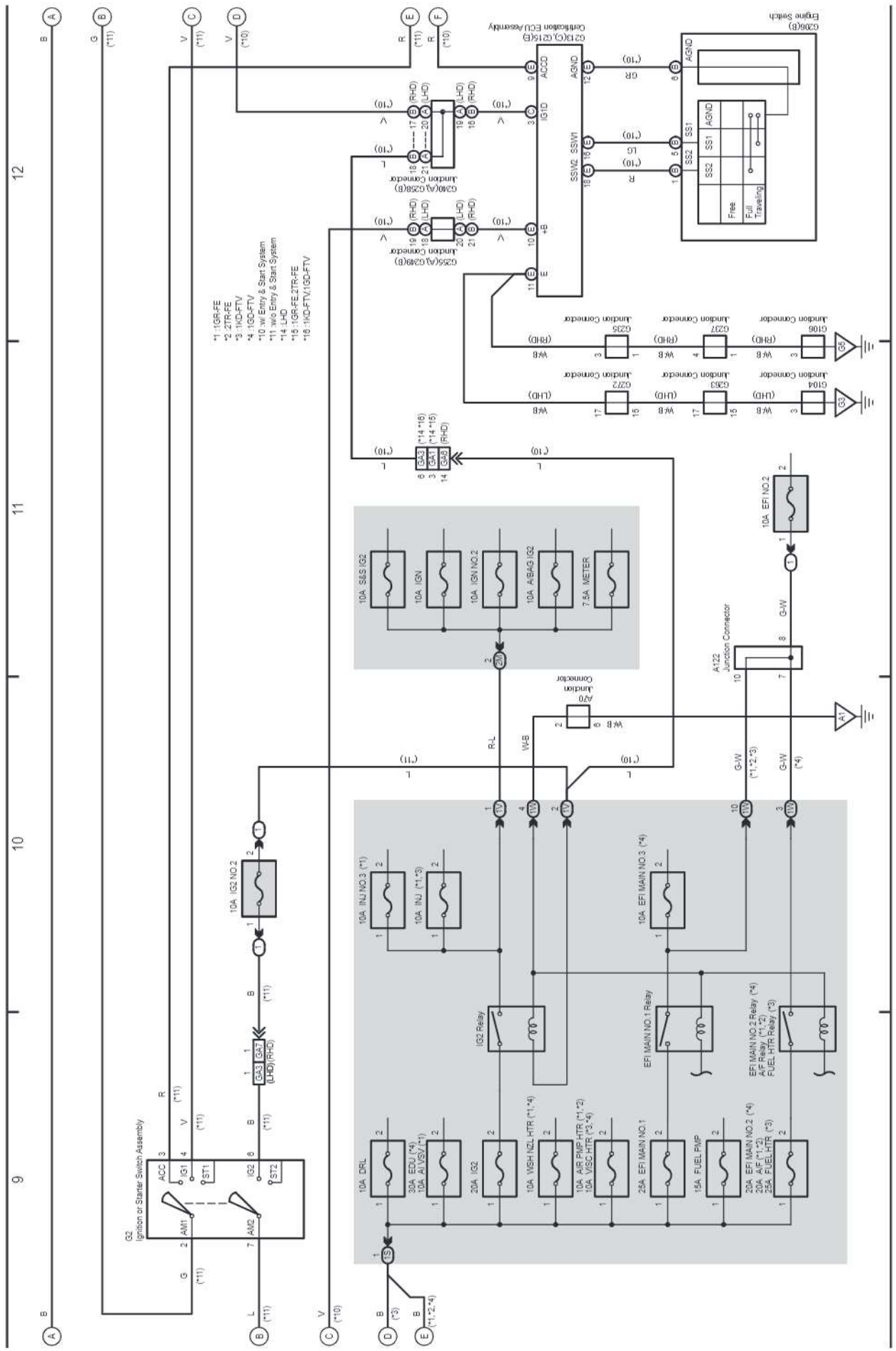

cardiagn.com

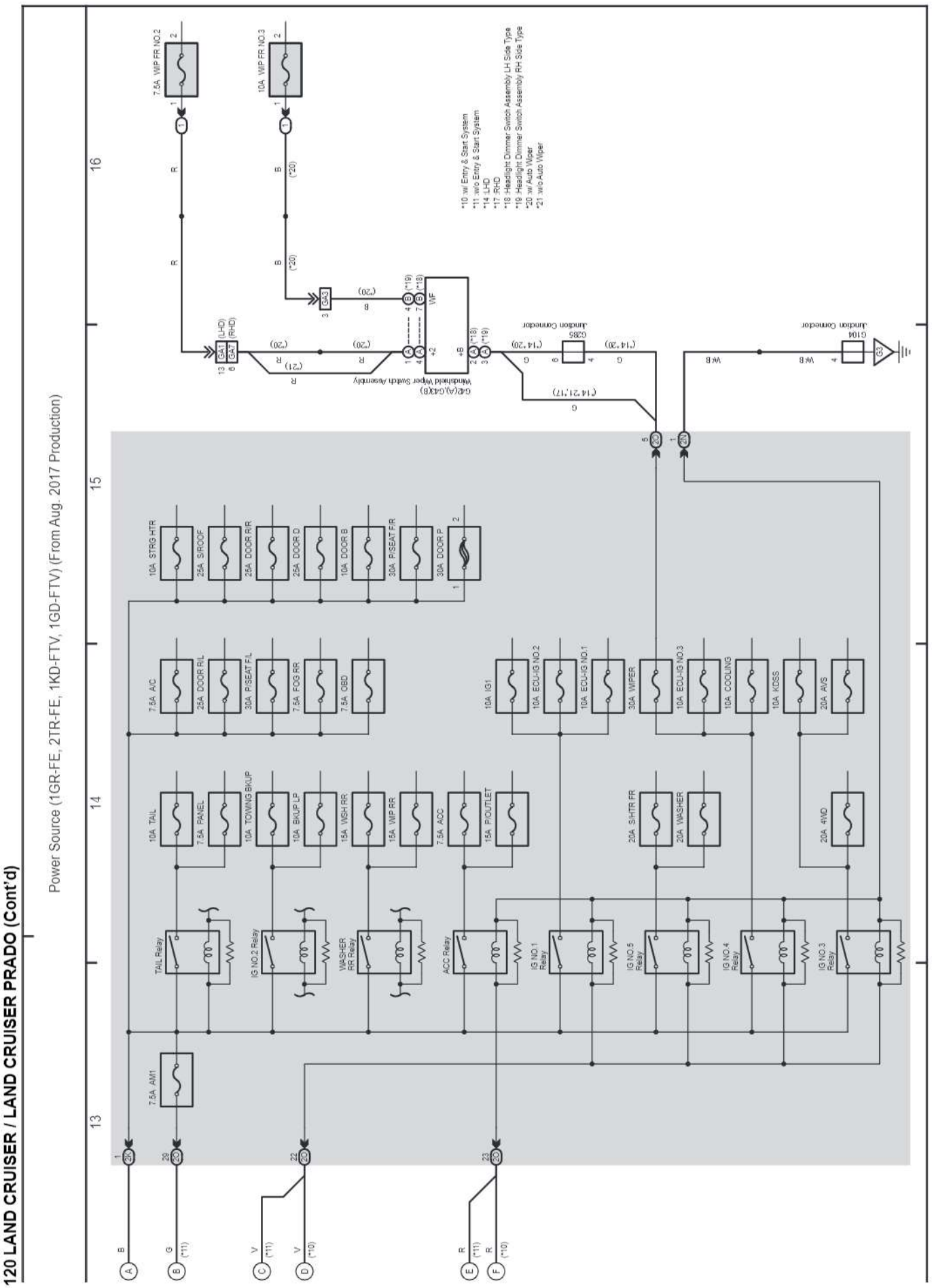

cardiagn.com

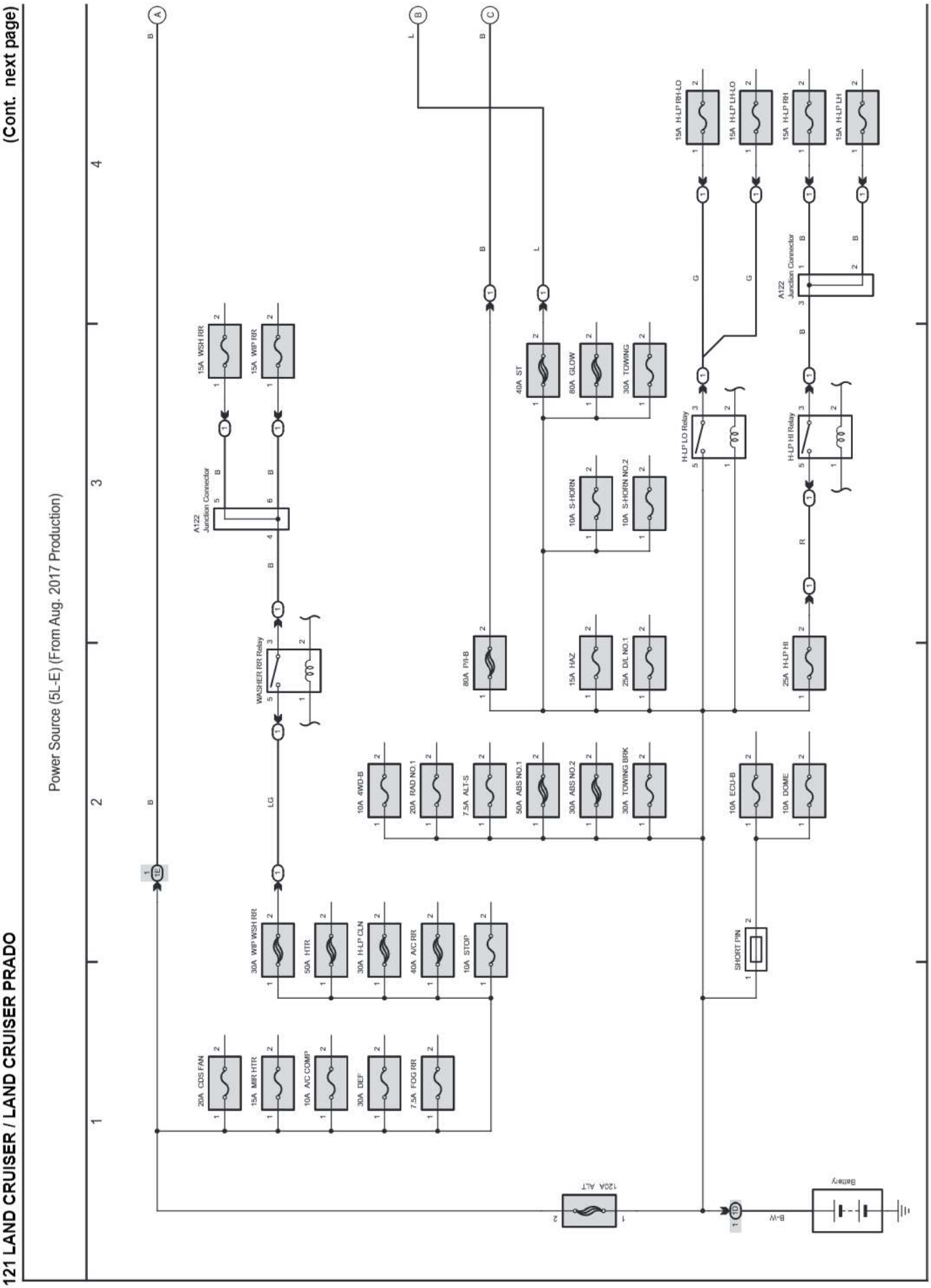

cardiagn.com

(Cont. next page)

Power Source (5L-E) (From Aug. 2017 Production)

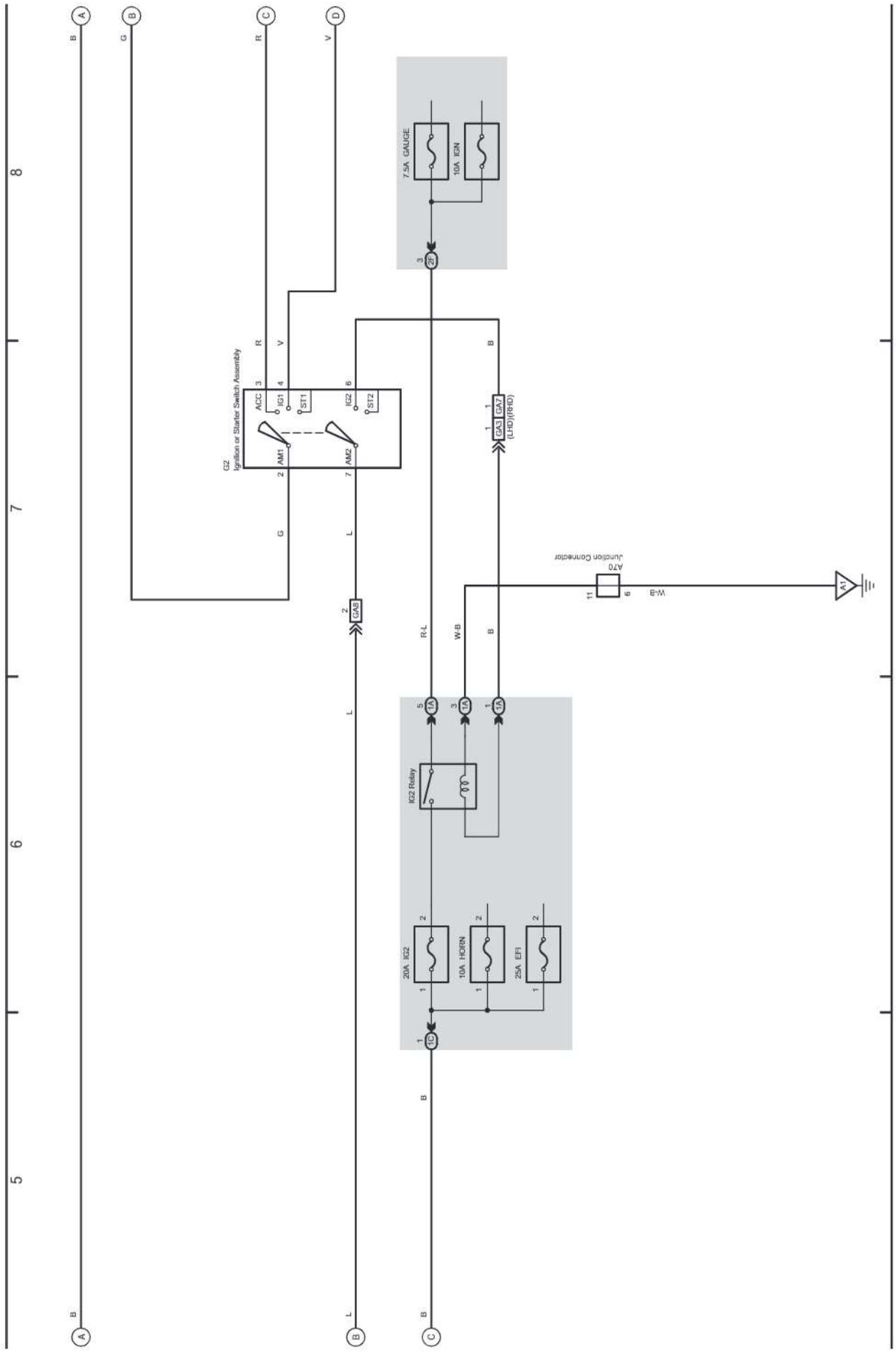

cardiagn.com

M OVERALL ELECTRICAL WIRING DIAGRAM

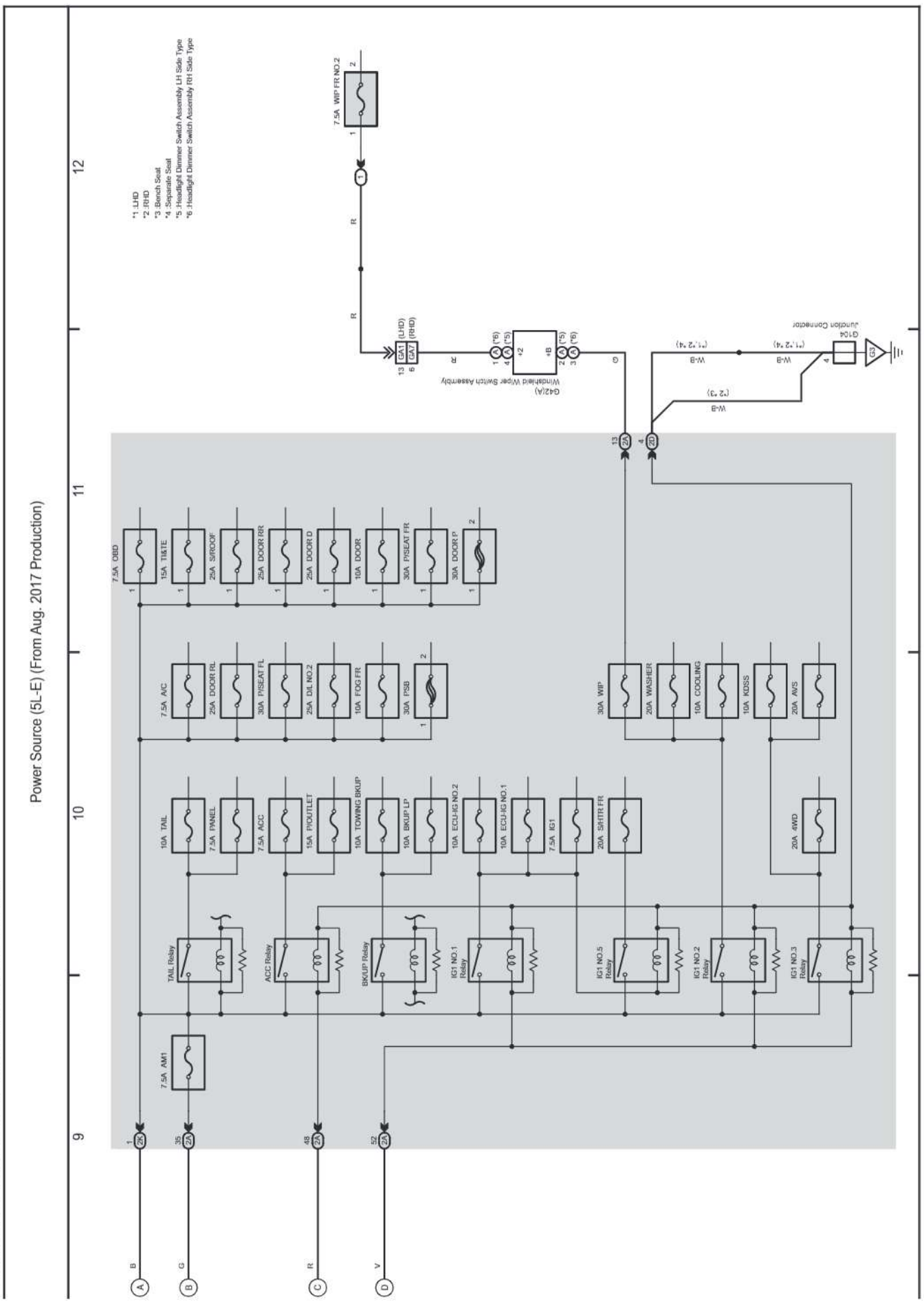

cardiagn.com

M OVERALL ELECTRICAL WIRING DIAGRAM

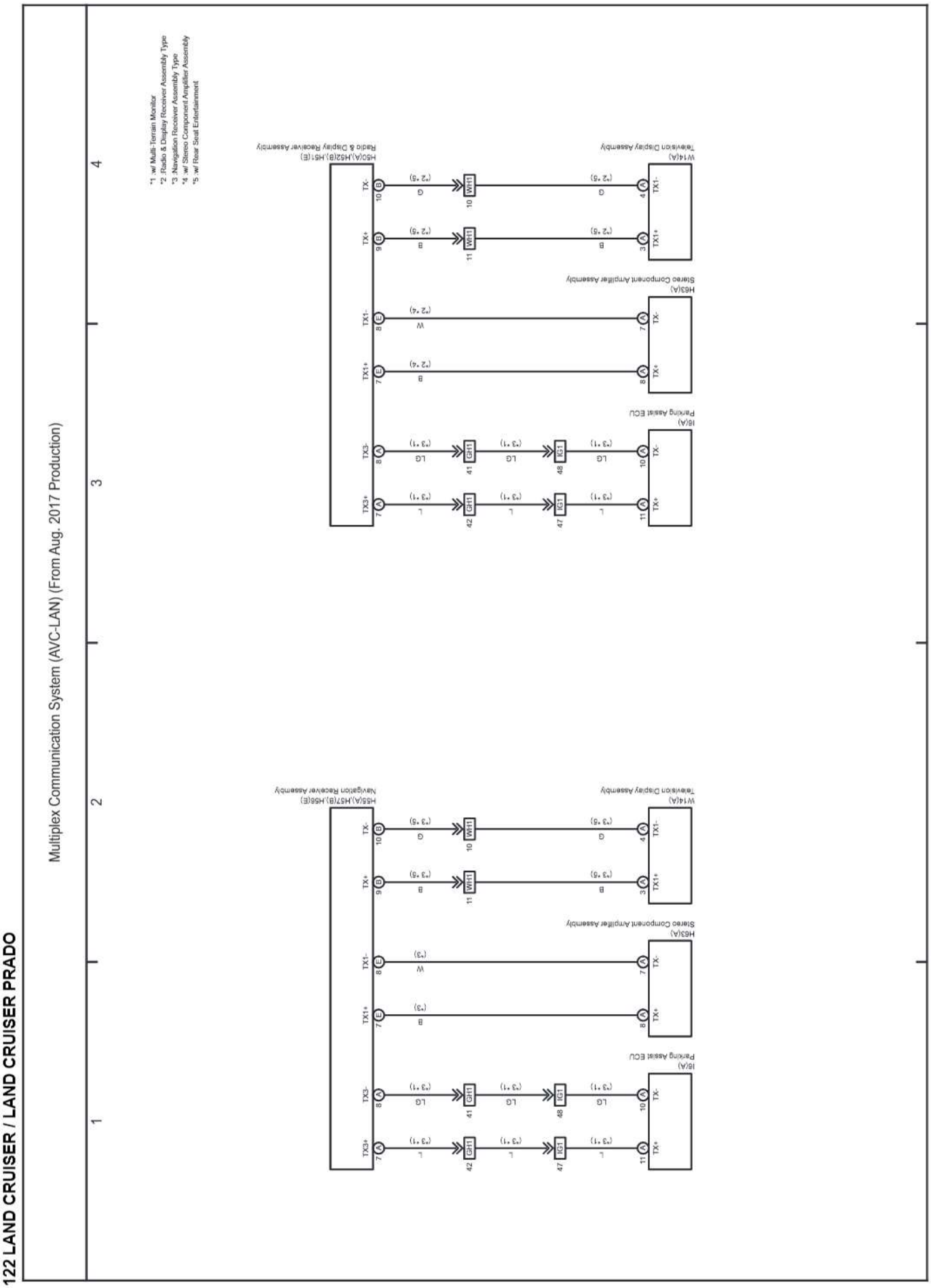

cardiagn.com

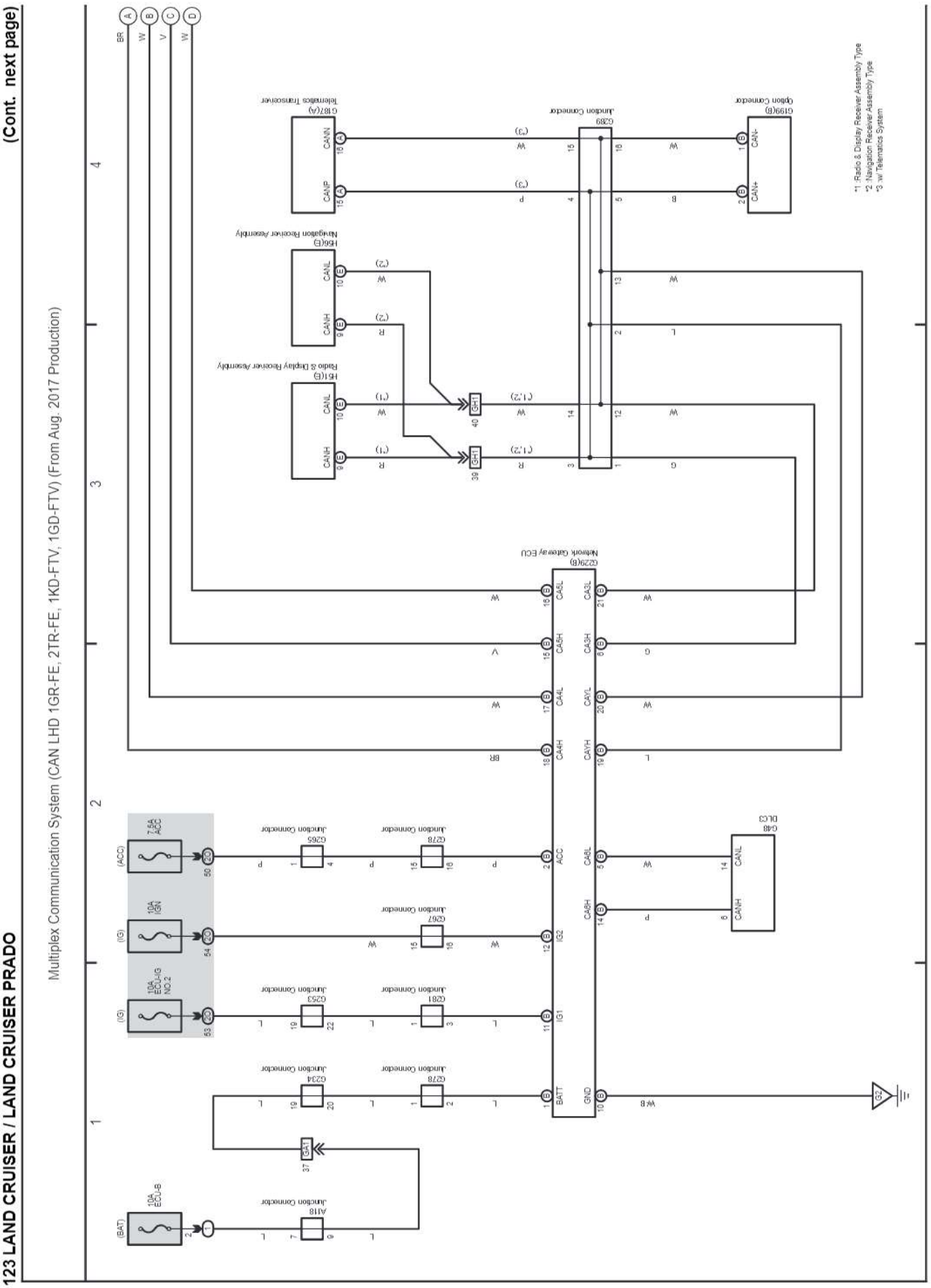

cardiagn.com

(Cont. next page)

Multiplex Communication System (CAN LHD 1GR-FE, 2TR-FE, 1KD-FTV, 1GD-FTV) (From Aug. 2017 Production)

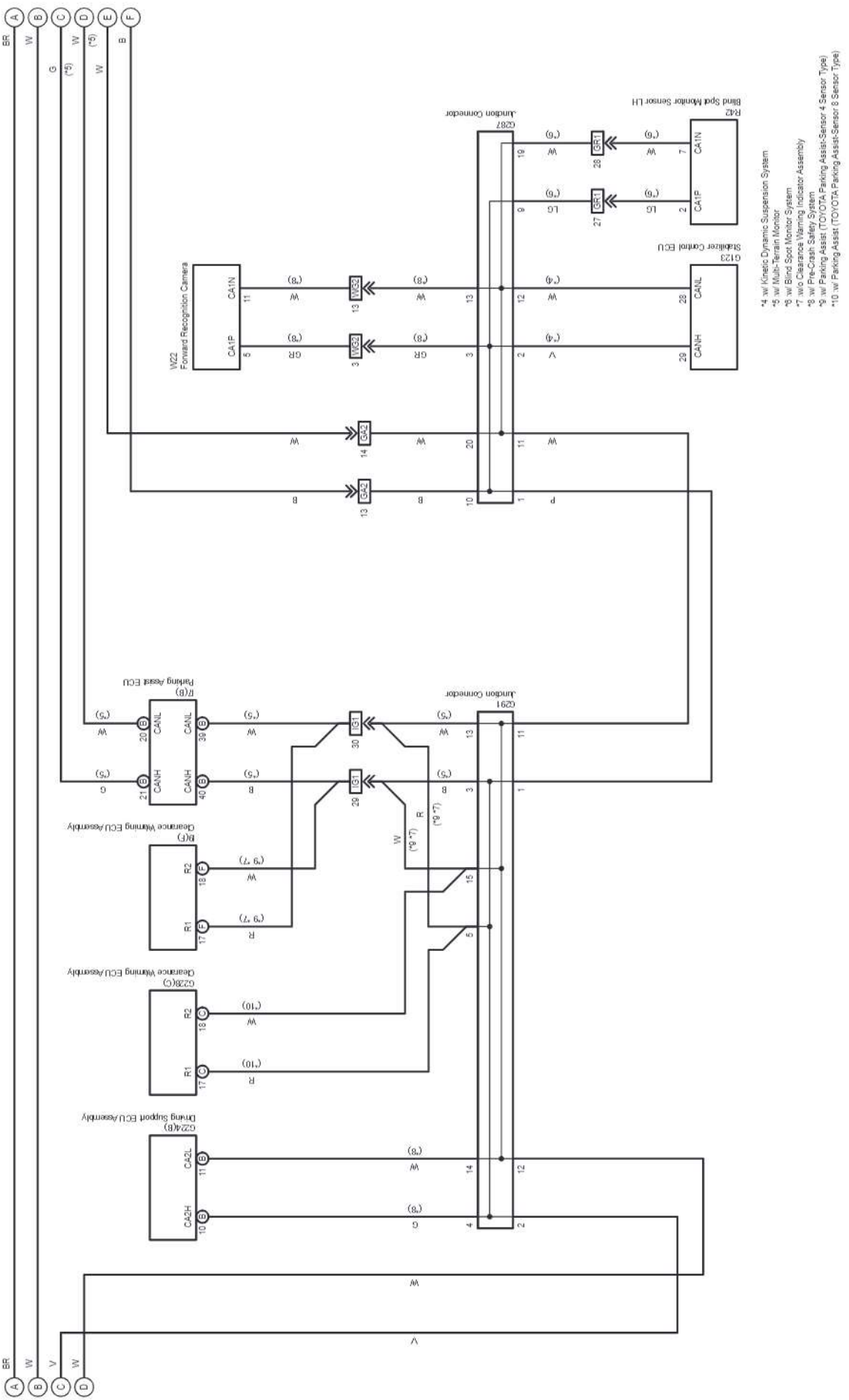

cardiagn.com

(Cont. next page)

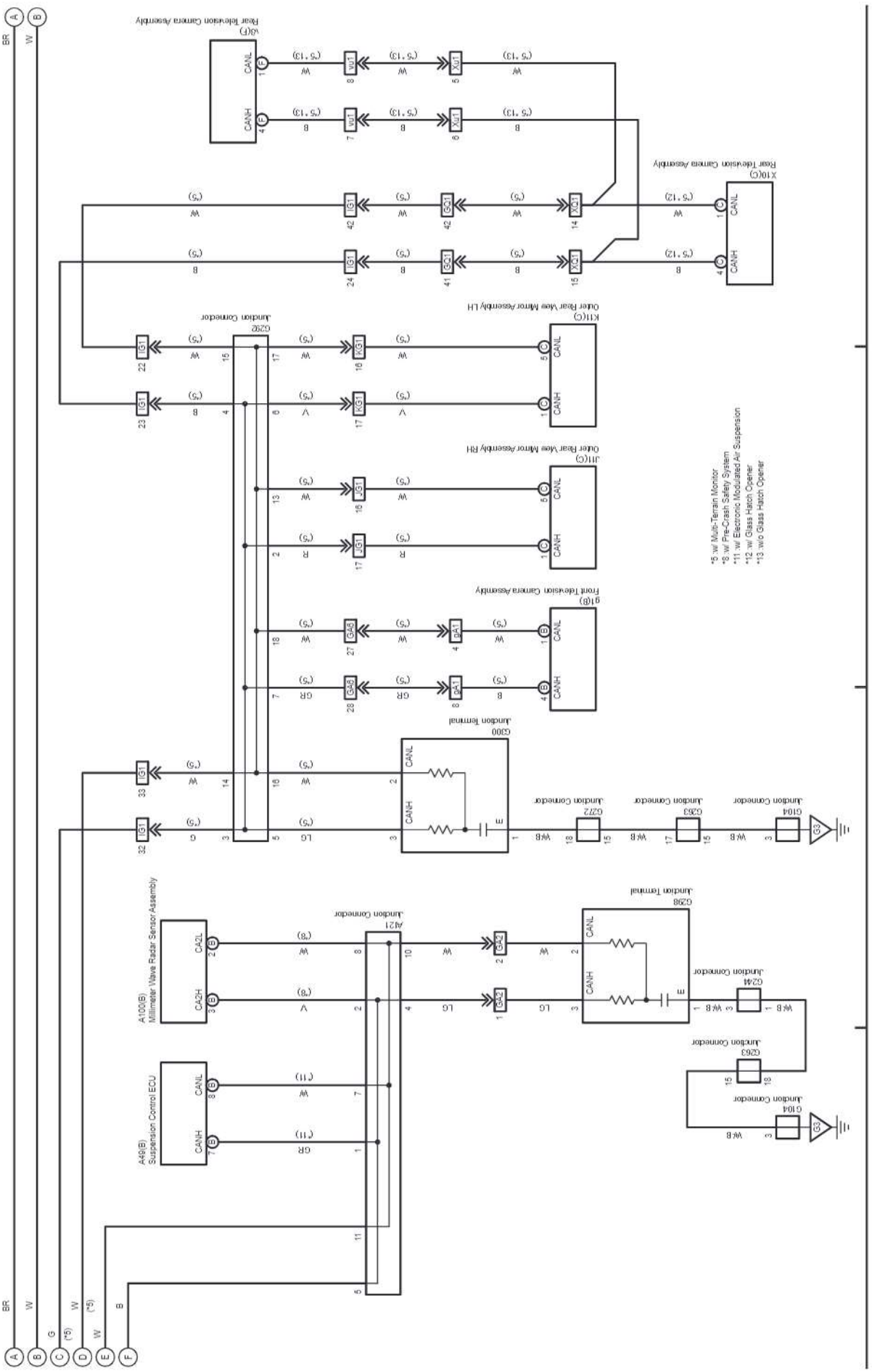

cardiagn.com

(Cont. next page)

Multiplex Communication System (CAN LHD 1GR-FE, 2TR-FE, 1KD-FTV, 1GD-FTV) (From Aug. 2017 Production)

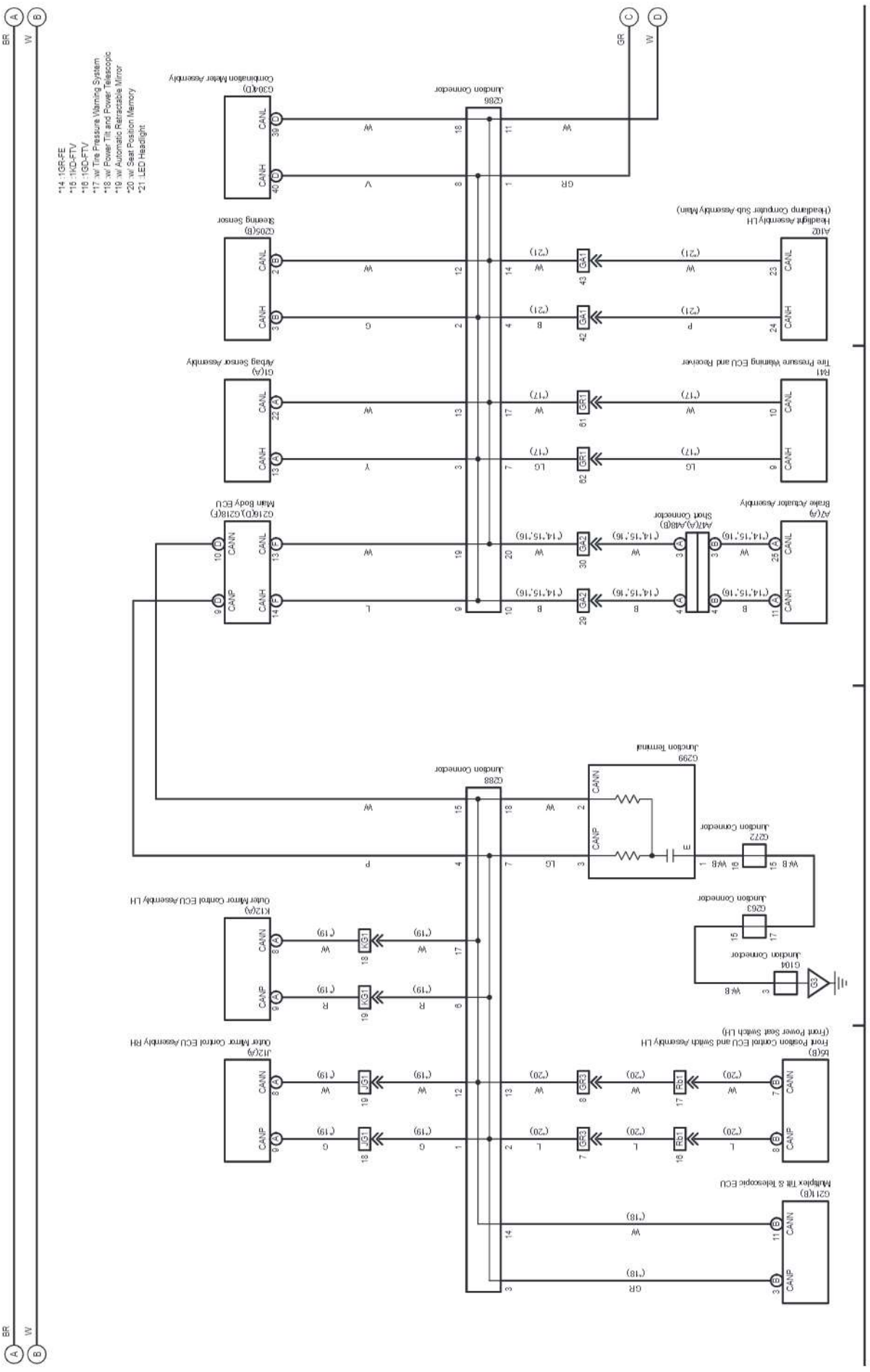

cardiagn.com

M OVERALL ELECTRICAL WIRING DIAGRAM

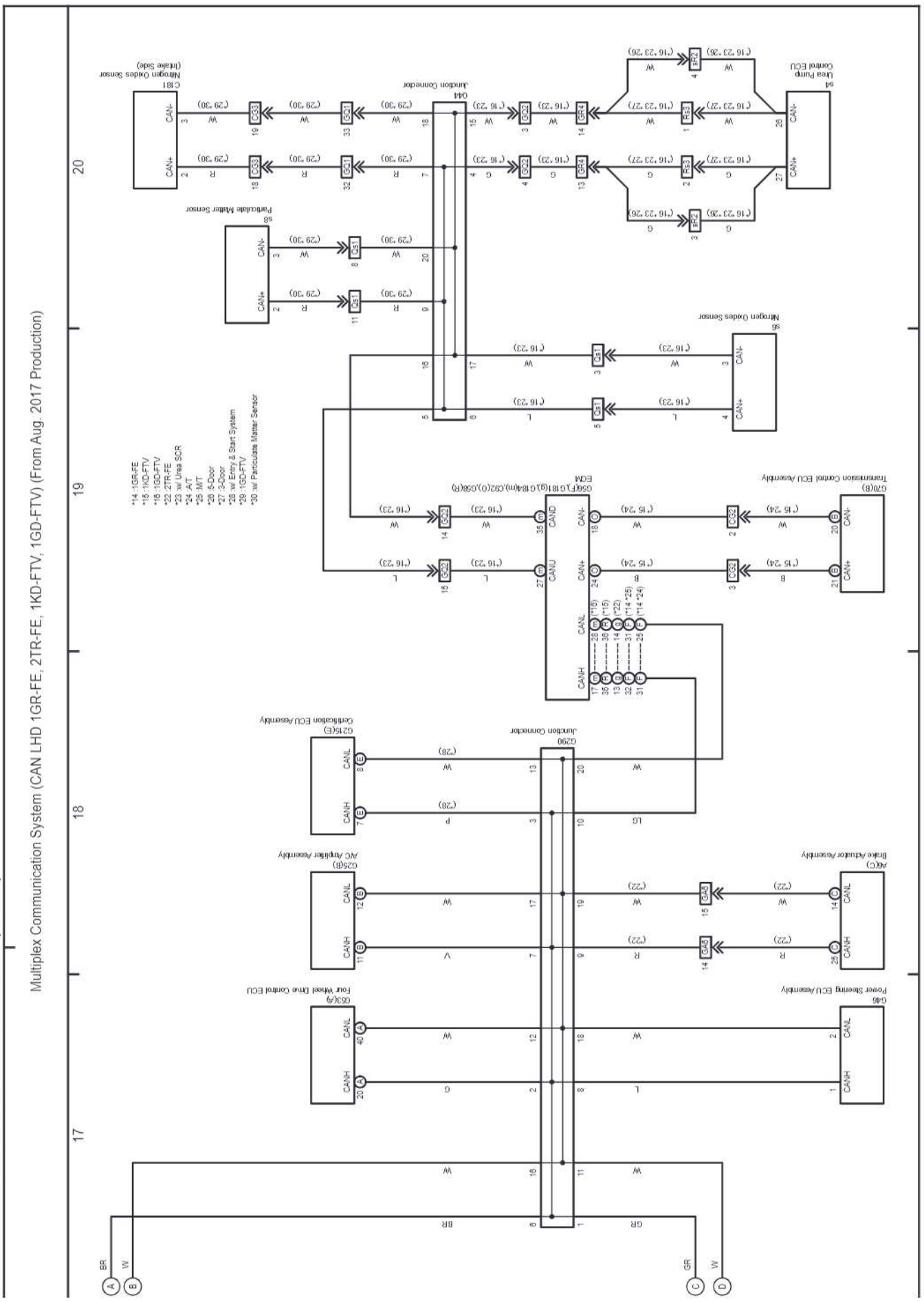

cardiagn.com

(Cont. next page)

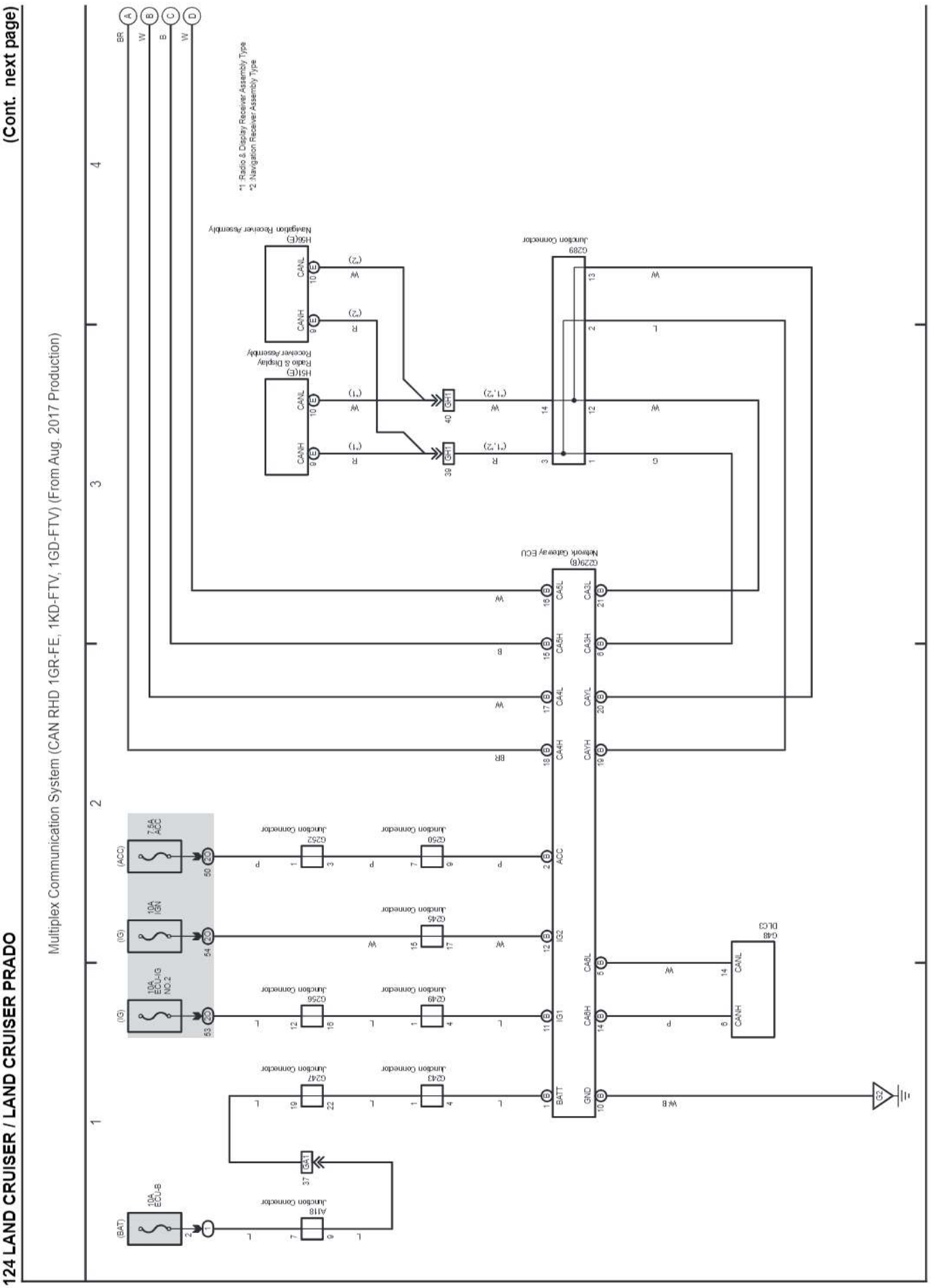

cardiagn.com

(Cont. next page)

Multiplex Communication System (CAN RHD 1GR-FE, 1KD-FTV, 1GD-FTV) (From Aug. 2017 Production)

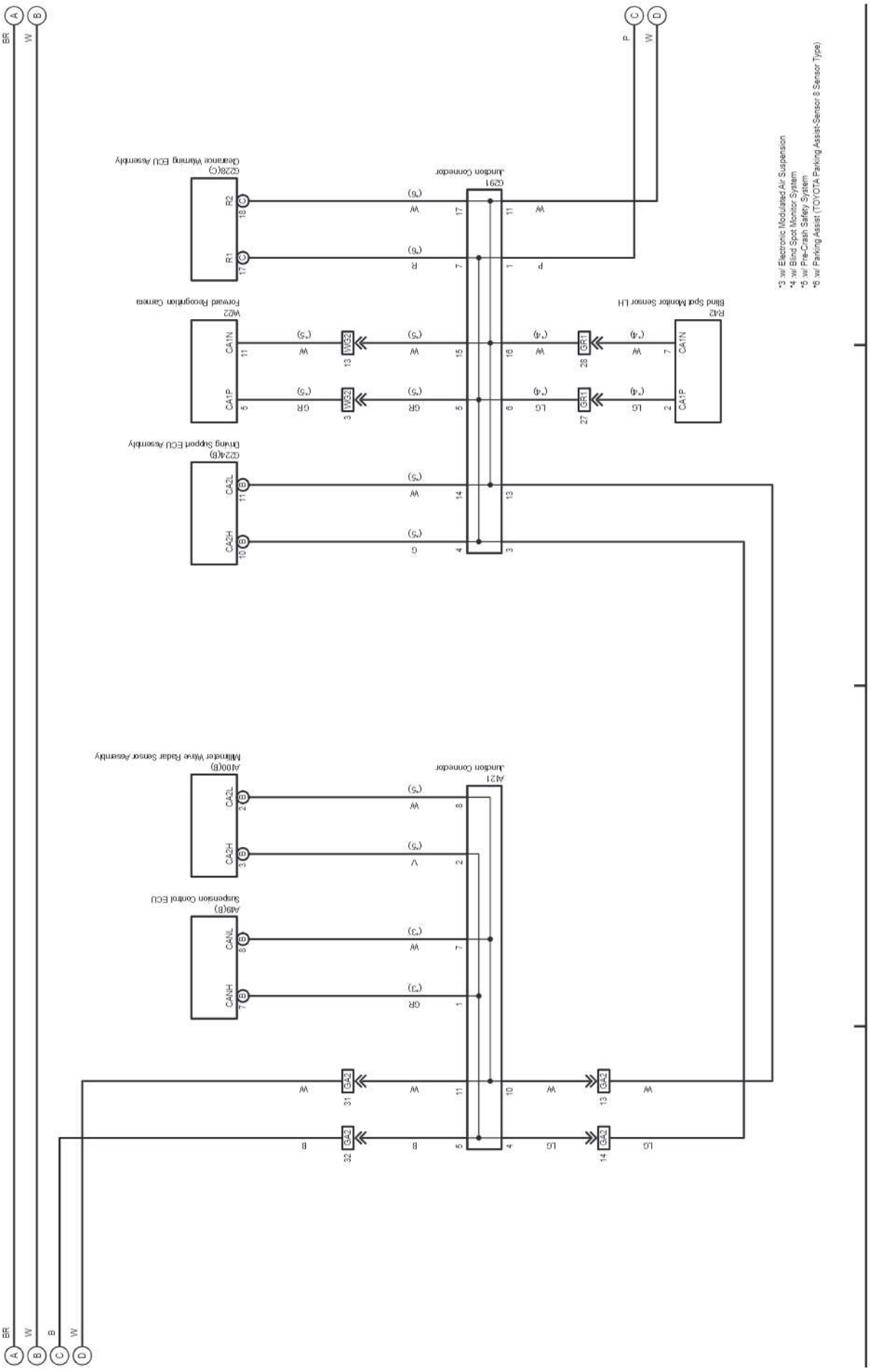

cardiagn.com

M OVERALL ELECTRICAL WIRING DIAGRAM

(Cont. next page)

Multiplex Communication System (CAN RHD 1GR-FE, 1KD-FTV, 1GD-FTV) (From Aug. 2017 Production)

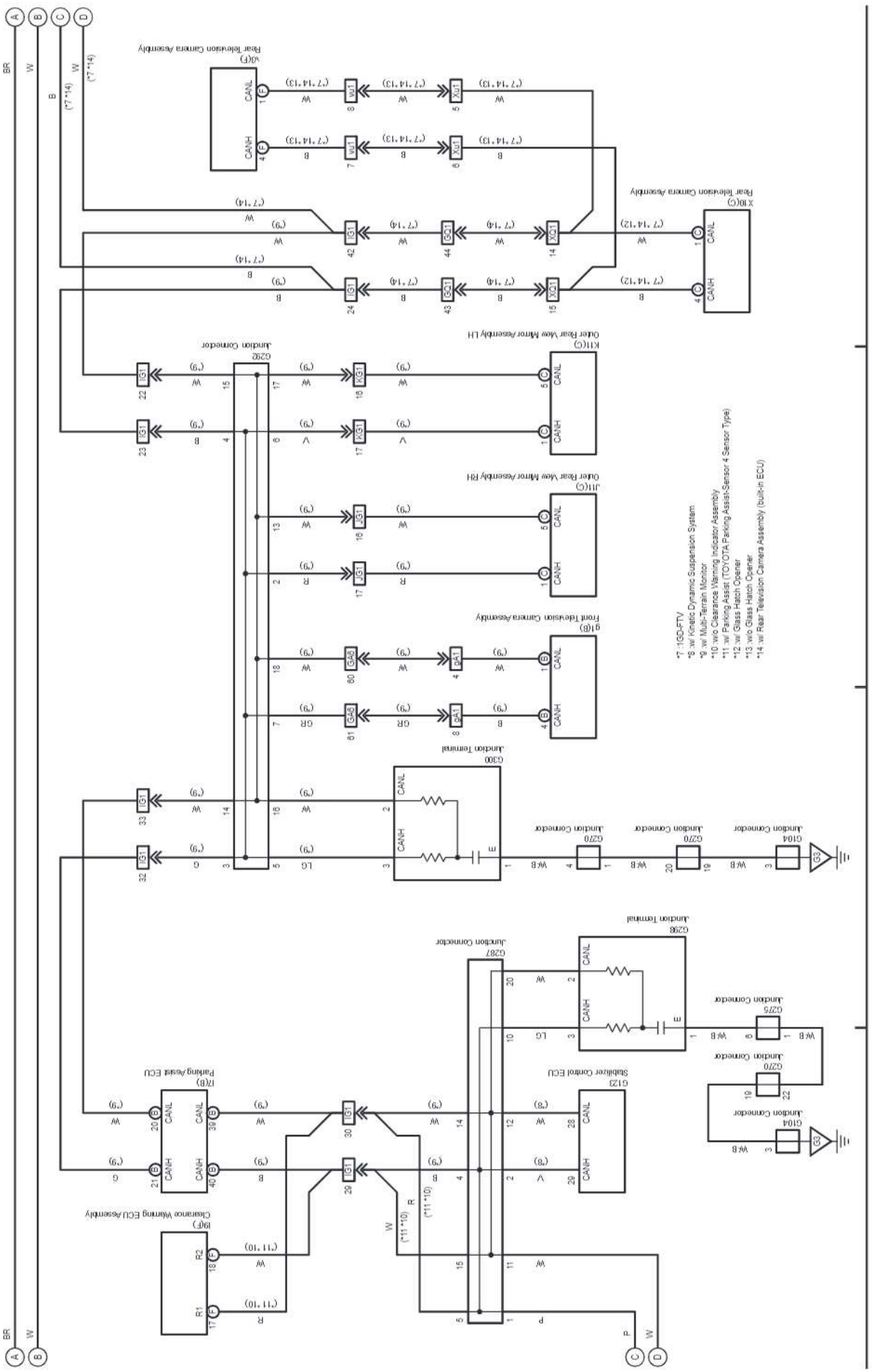

cardiagn.com

(Cont. next page)

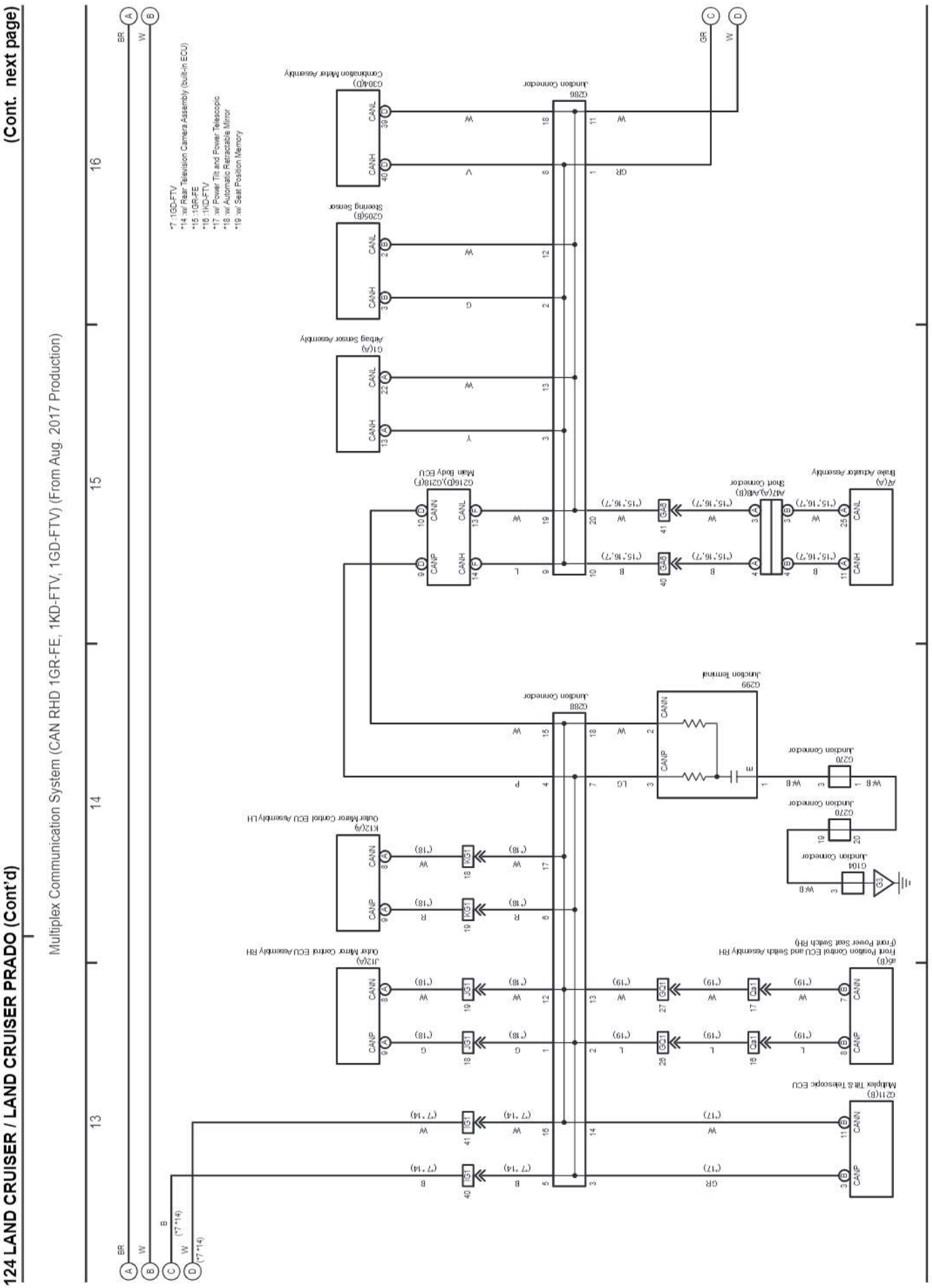

cardiagn.com

(Cont. next page)

Multiplex Communication System (CAN RHD 1GR-FE, 1KD-FTV, 1GD-FTV) (From Aug. 2017 Production)

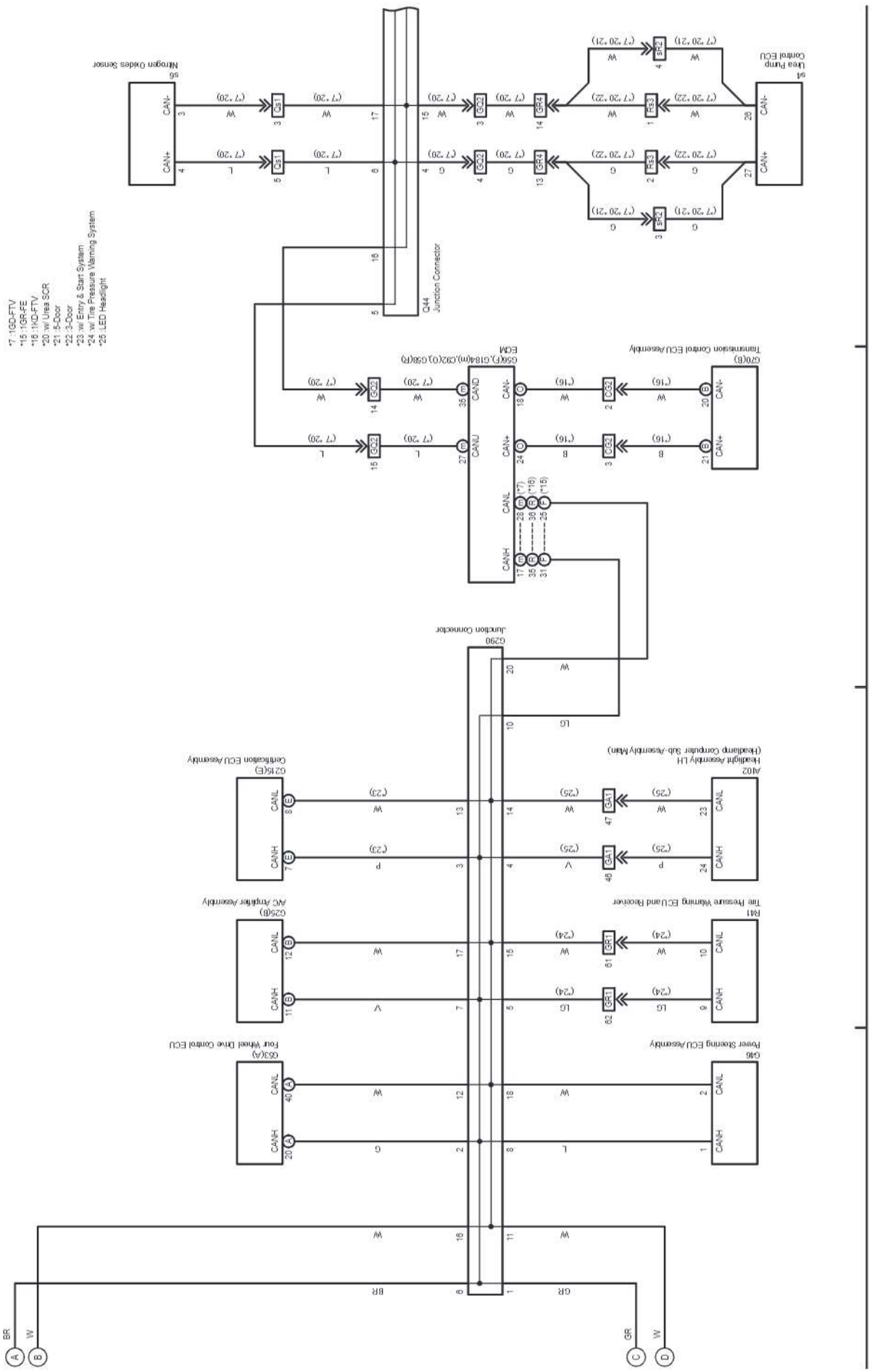

Multiplex Communication System (CAN RHD 1GR-FE, 1KD-FTV, 1GD-FTV) (From Aug. 2017 Production)

21 22 23 24

*26 :1GD-FTV
*27 :w/ Particulate Matter Sensor

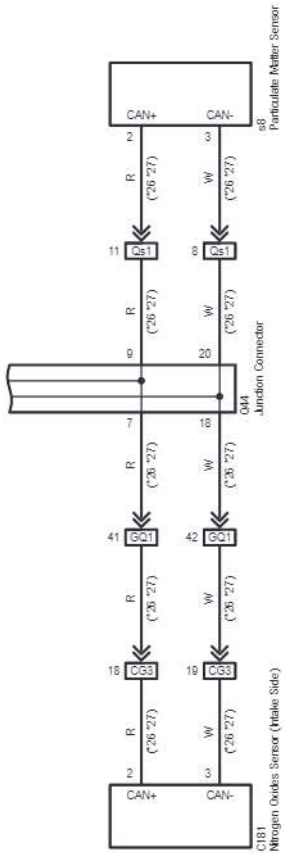

cardiagn.com

cardiagn.com

M OVERALL ELECTRICAL WIRING DIAGRAM

(Cont. next page)

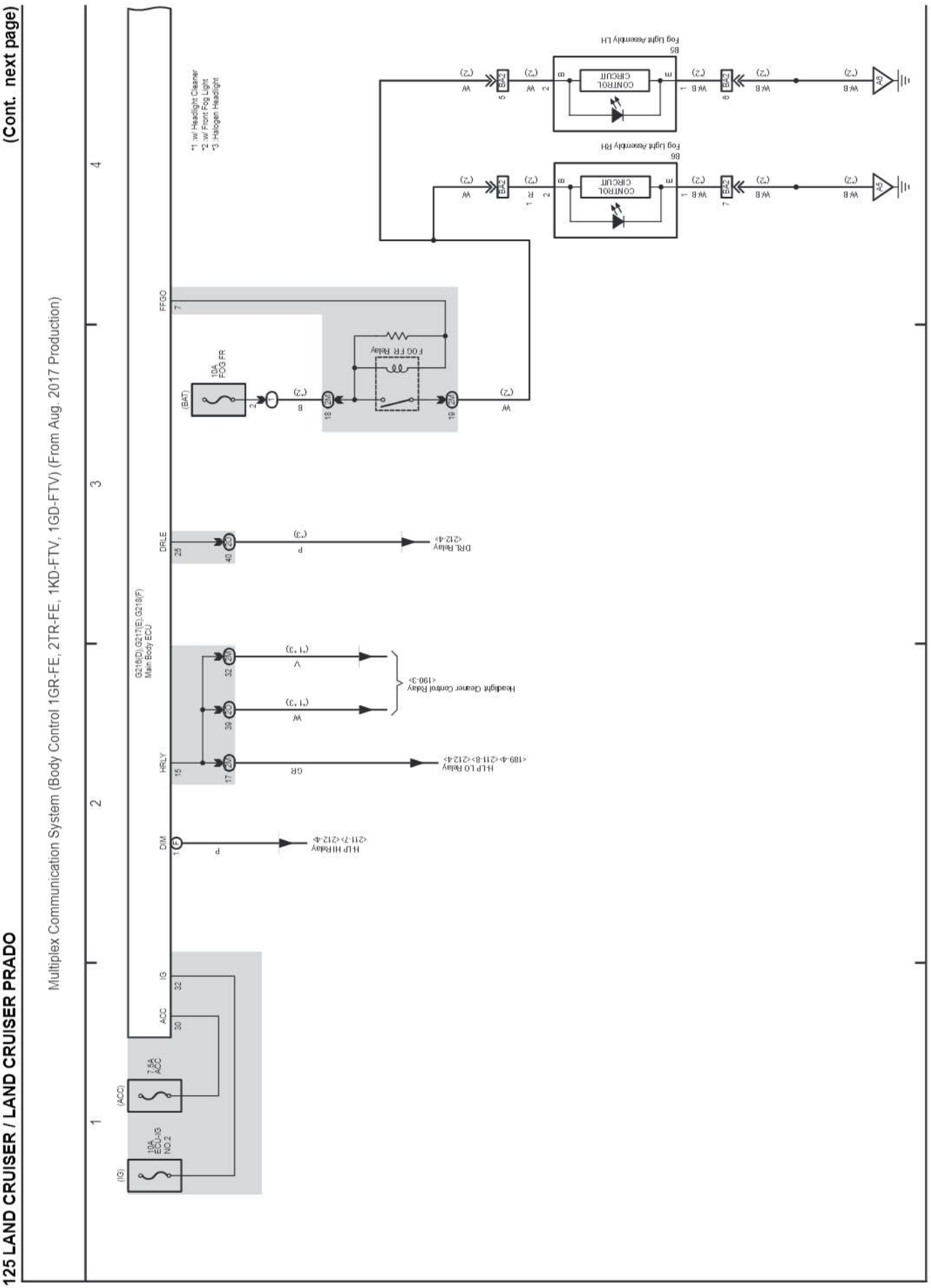

cardiagn.com

(Cont. next page)

Multiplex Communication System (Body Control 1GR-FE, 2TR-FE, 1KD-FTV, 1GD-FTV) (From Aug. 2017 Production)

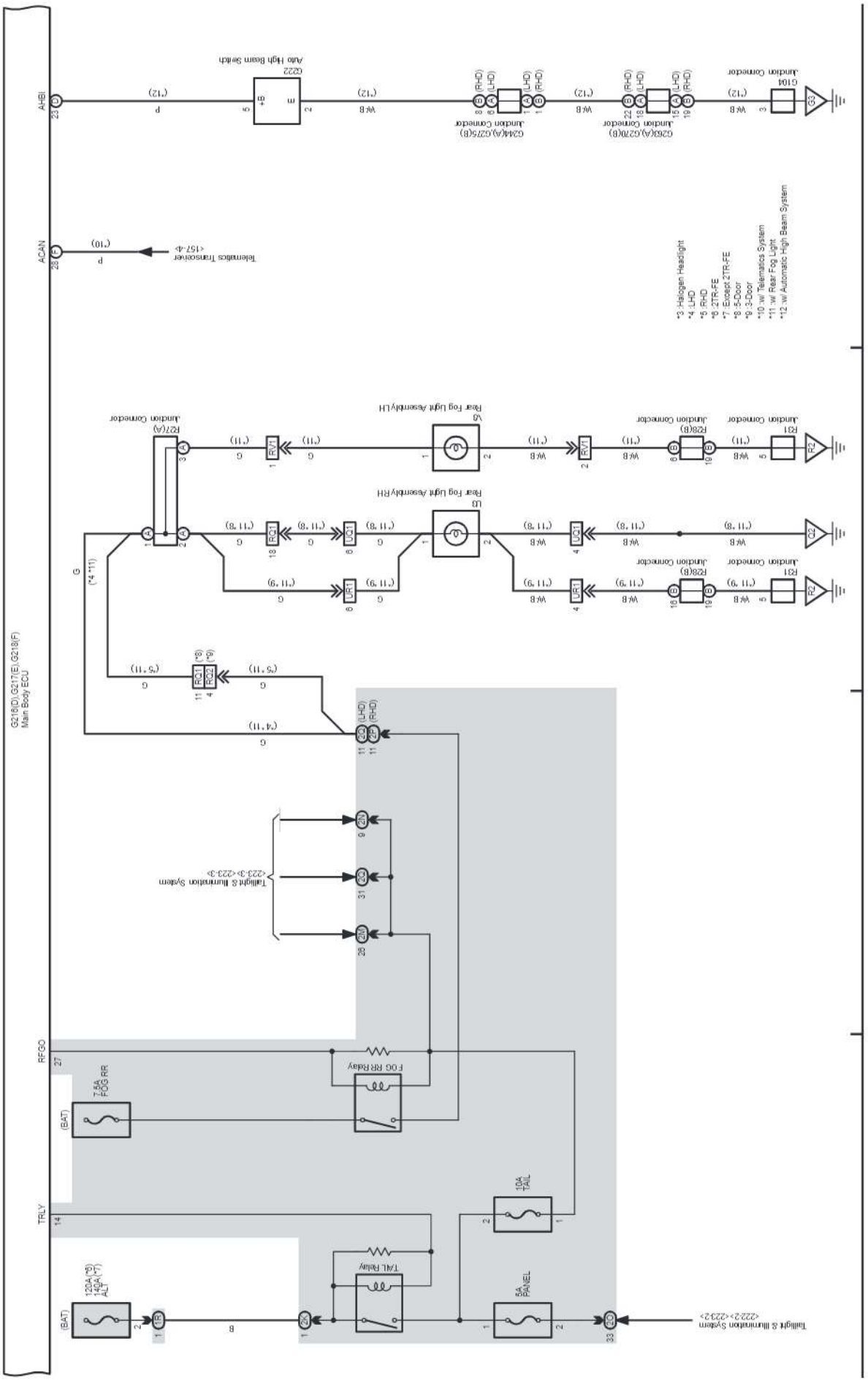

cardiagn.com

(Cont. next page)

Multiplex Communication System (Body Control 1GR-FE, 2TR-FE, 1KD-FTV, 1GD-FTV) (From Aug. 2017 Production)

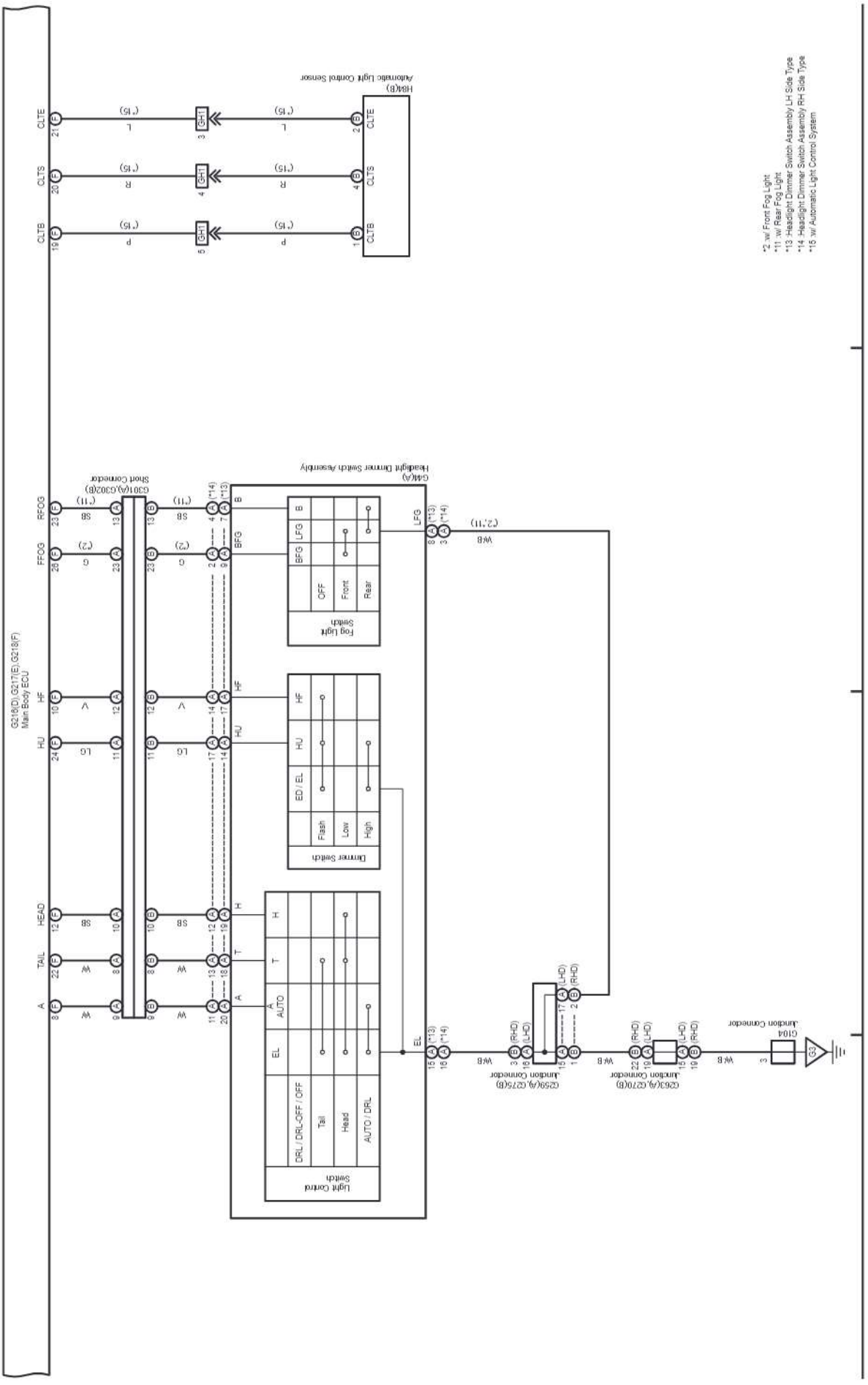

cardiagn.com

(Cont. next page)

125 LAND CRUISER / LAND CRUISER PRADO (Cont'd)

Multiplex Communication System (Body Control 1GR-FE, 2TR-FE, 1KD-FTV, 1GD-FTV) (From Aug. 2017 Production)

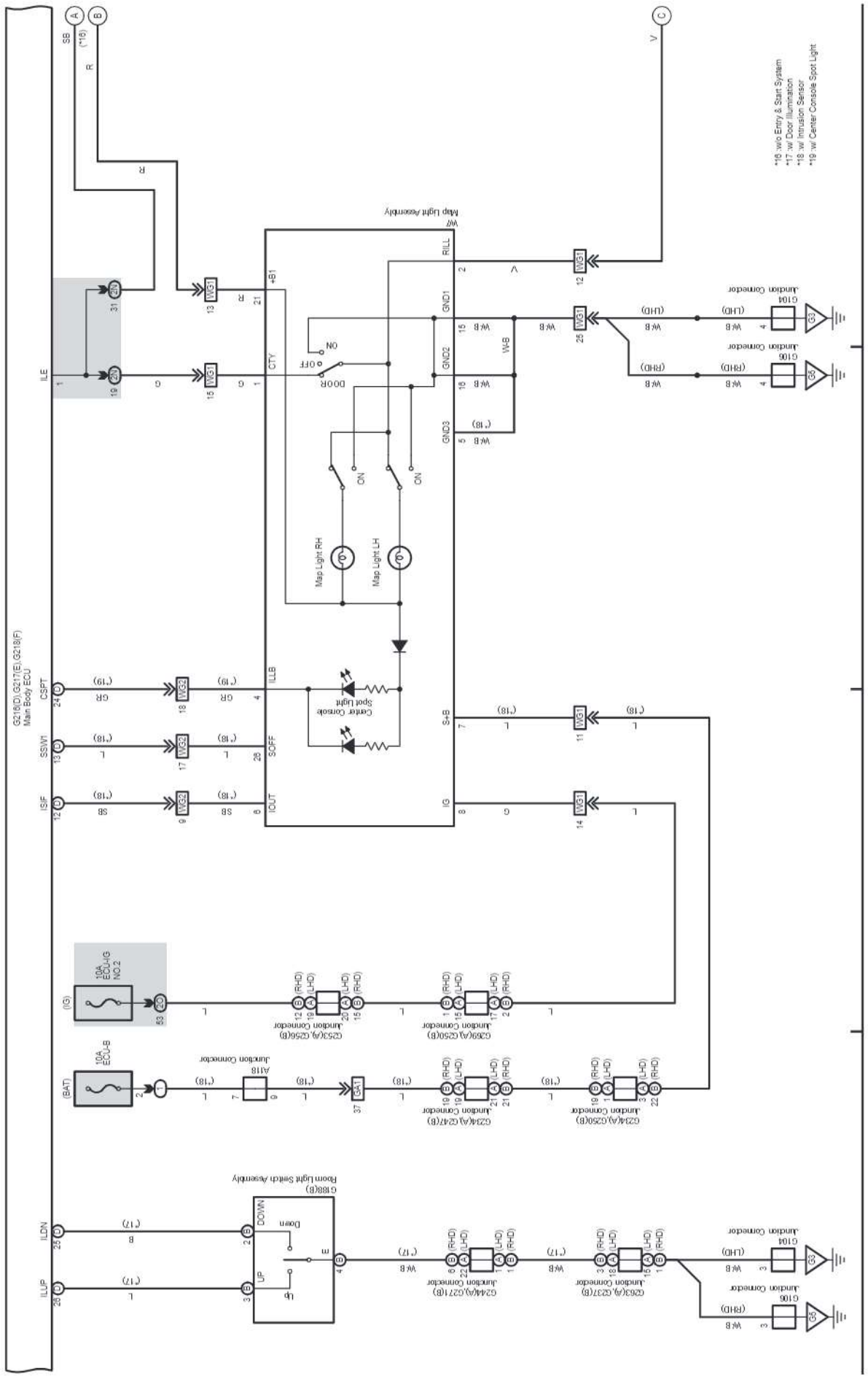

cardiagn.com

(Cont. next page)

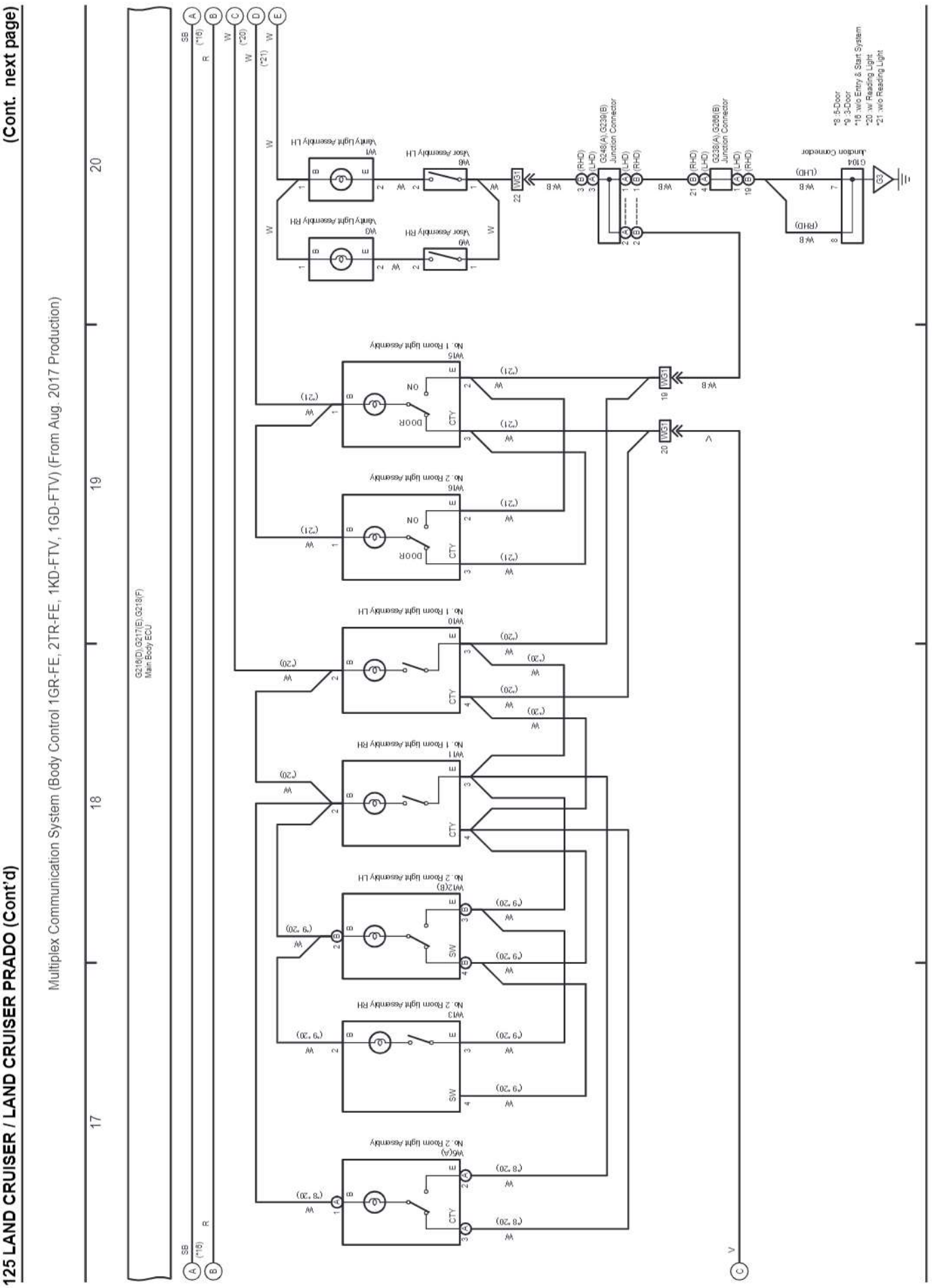

cardiagn.com

(Cont. next page)

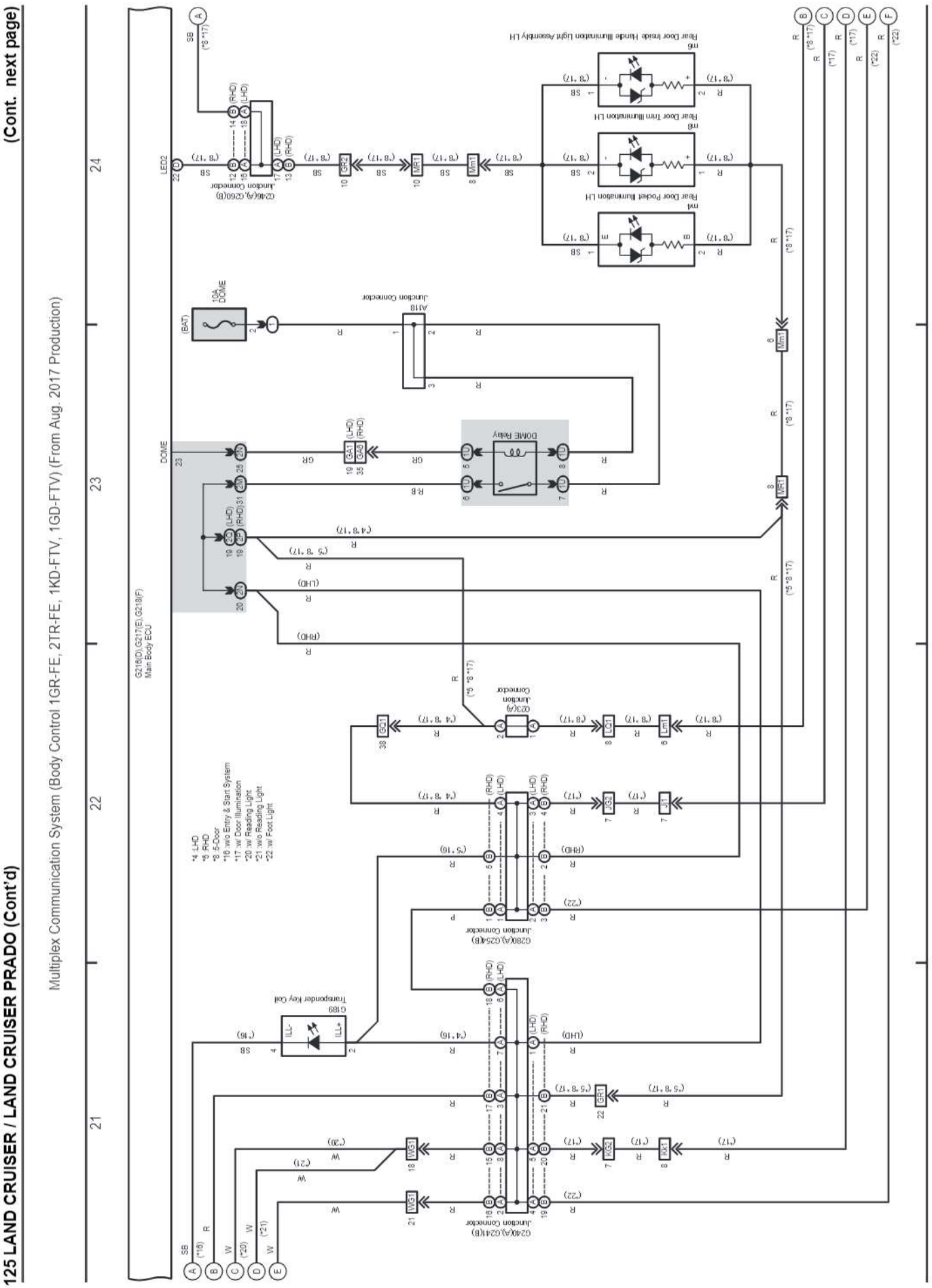

cardiagn.com

(Cont. next page)

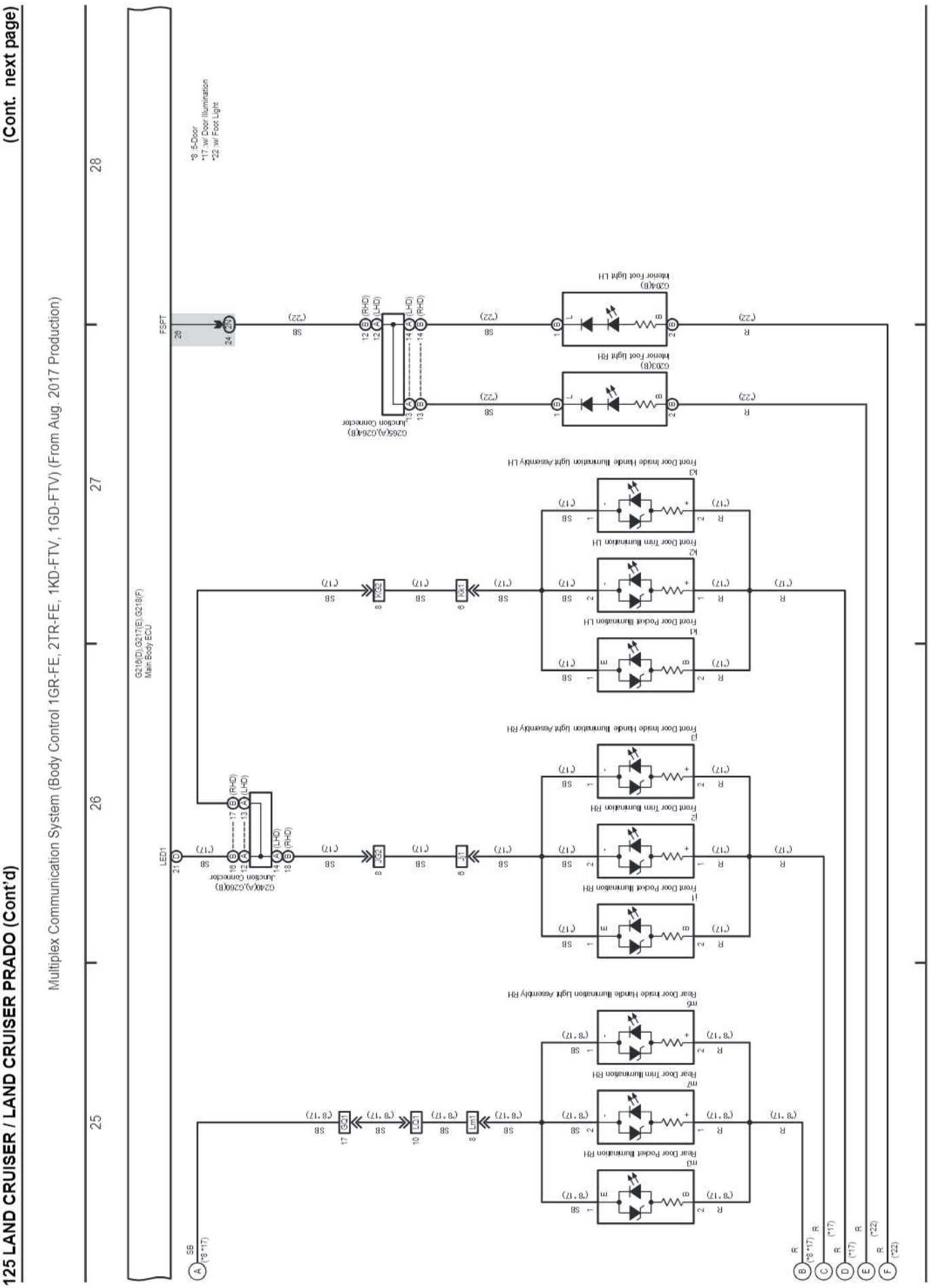

cardiagn.com

(Cont. next page)

Multiplex Communication System (Body Control 1GR-FE, 2TR-FE, 1KD-FTV, 1GD-FTV) (From Aug. 2017 Production)

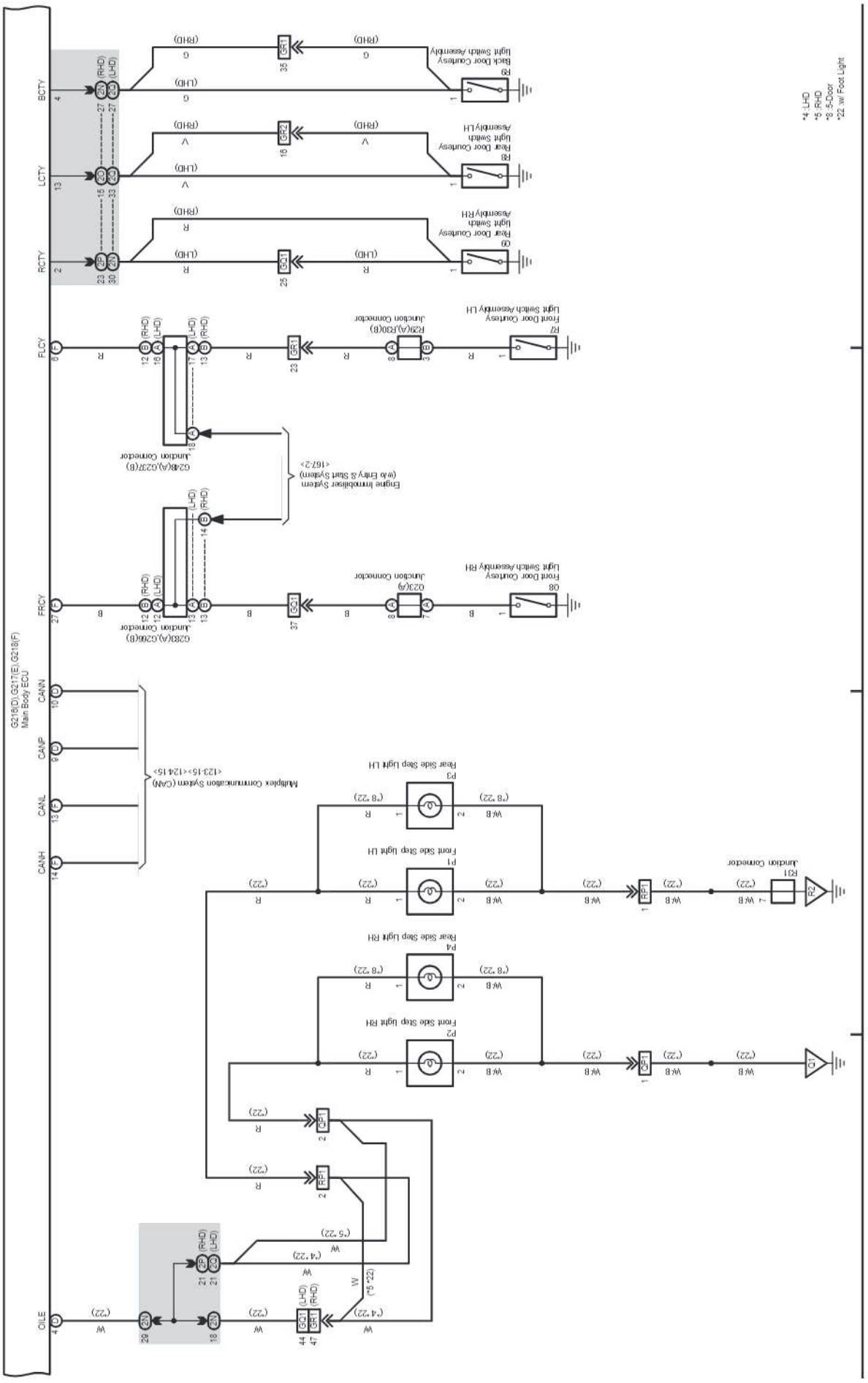

cardiagn.com

(Cont. next page)

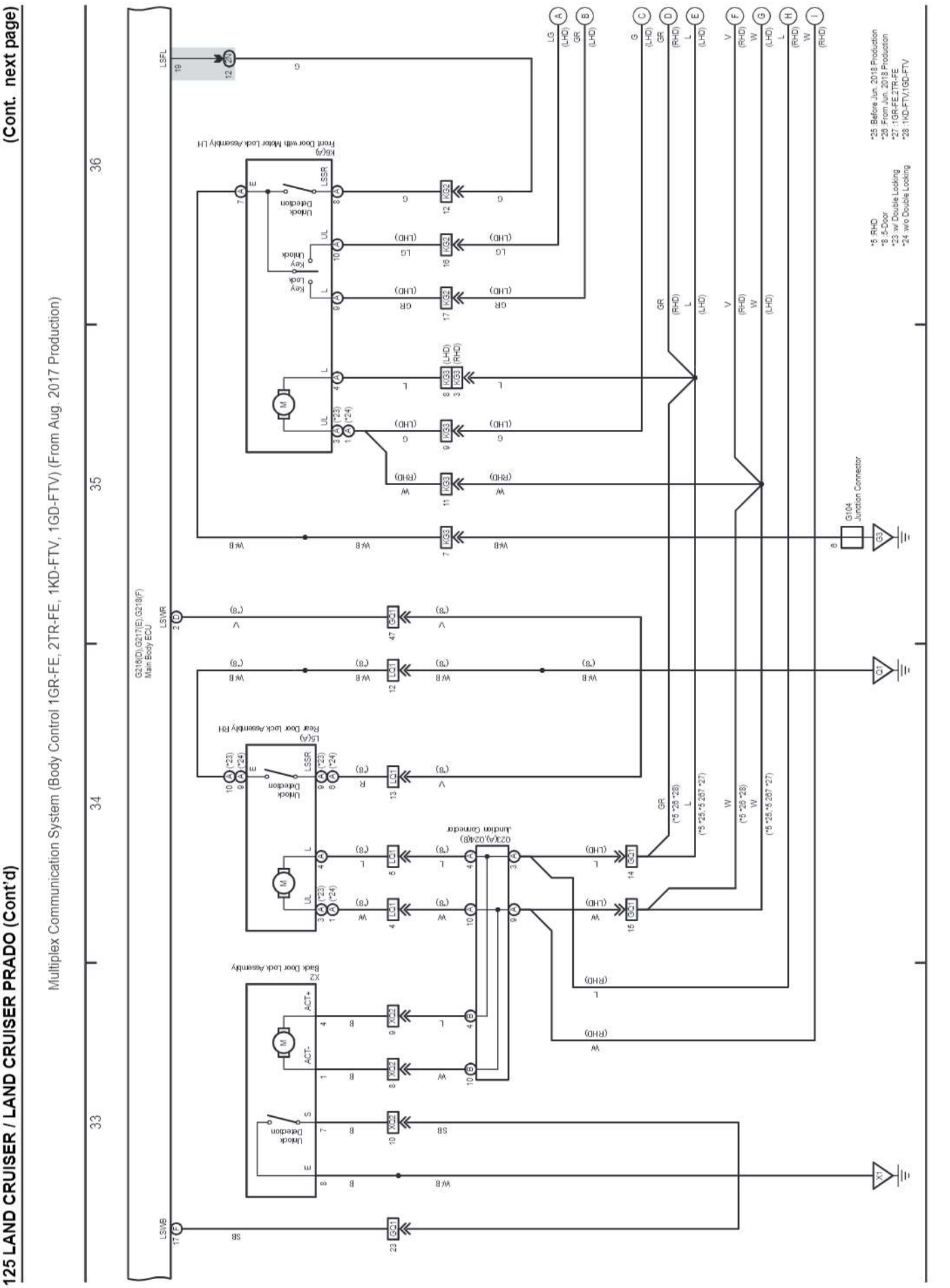

cardiagn.com

(Cont. next page)

Multiplex Communication System (Body Control 1GR-FE, 2TR-FE, 1KD-FTV, 1GD-FTV) (From Aug. 2017 Production)

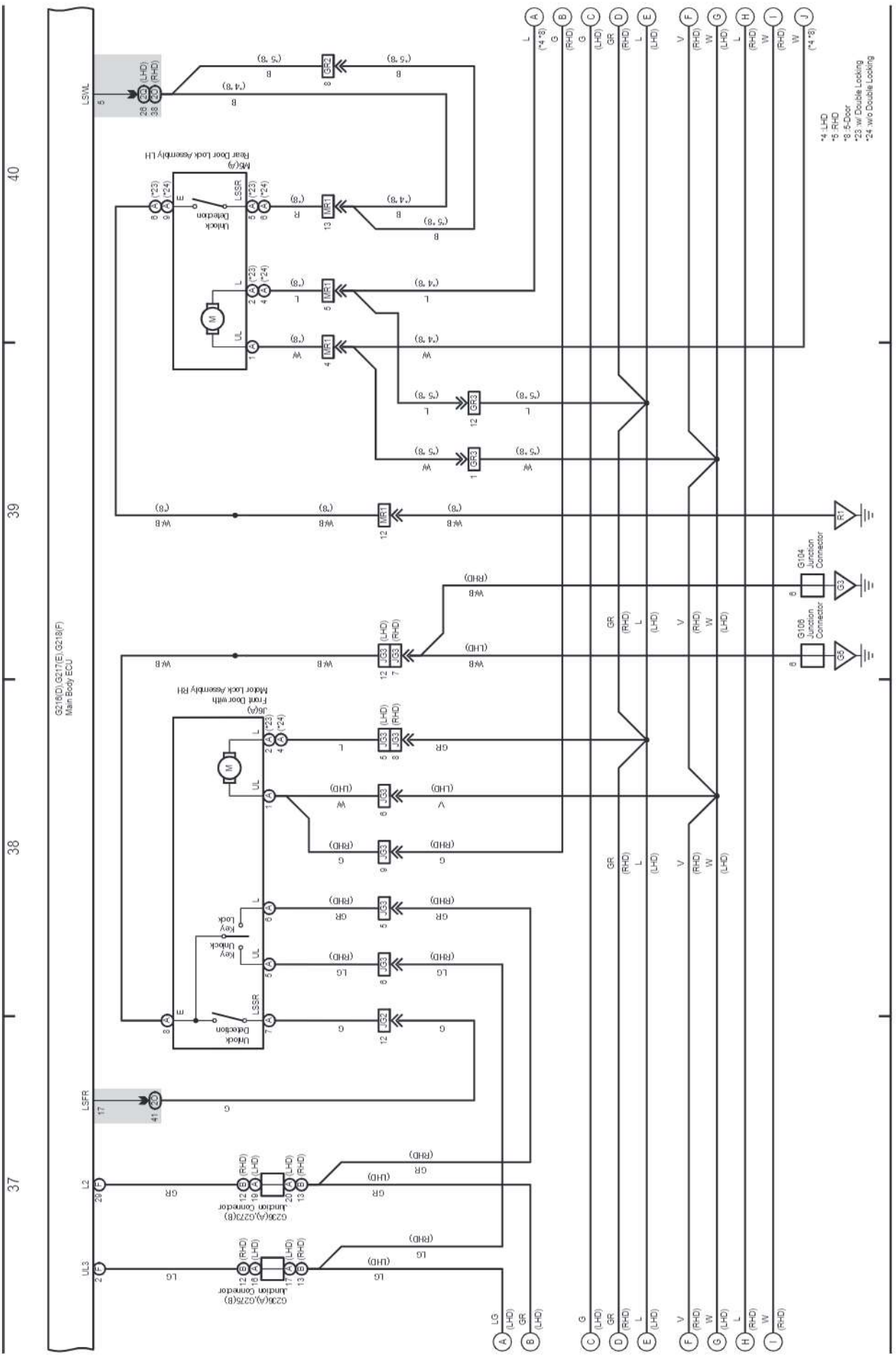

cardiagn.com

M OVERALL ELECTRICAL WIRING DIAGRAM

(Cont. next page)

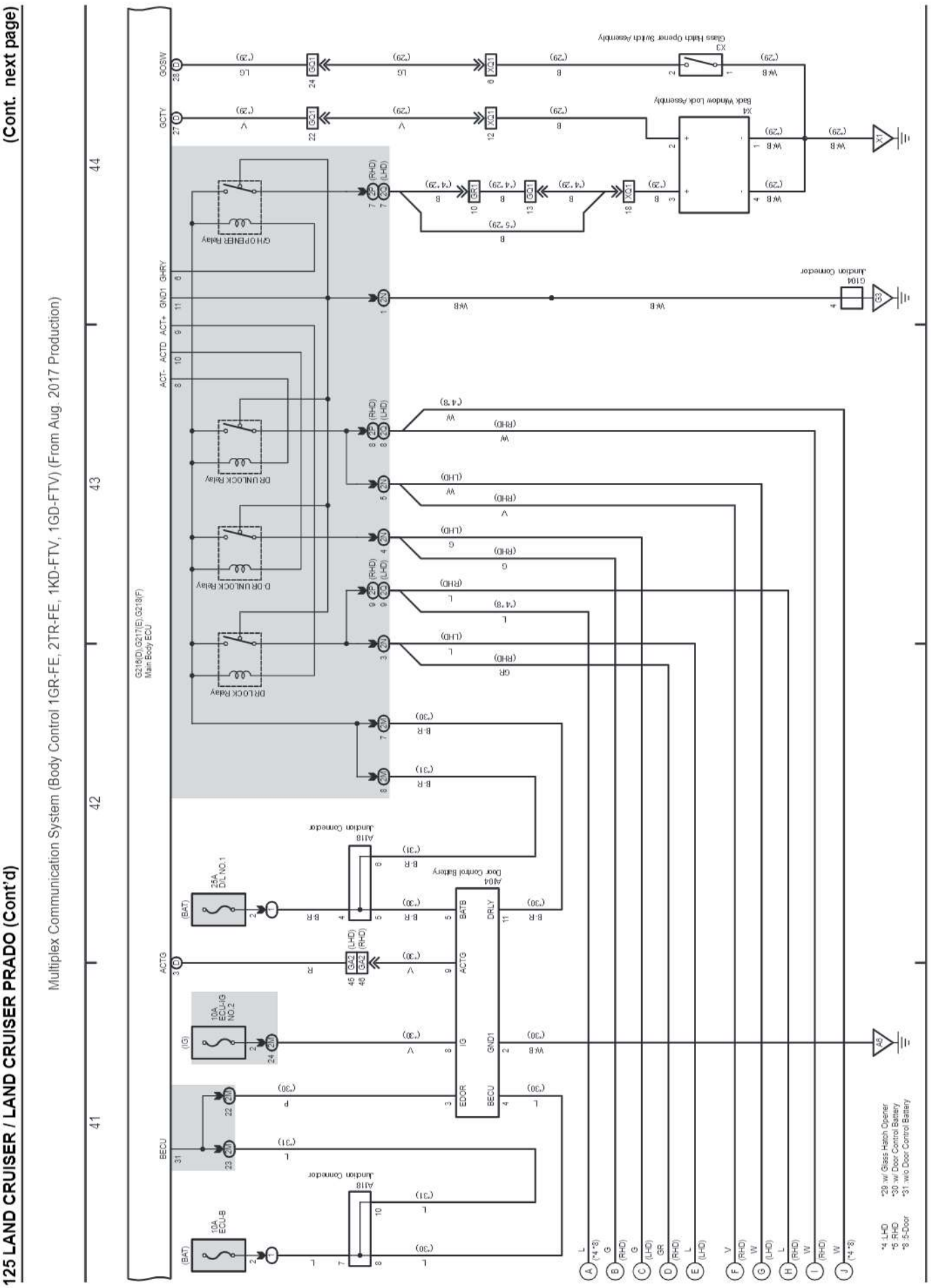

cardiagn.com

(Cont. next page)

Multiplex Communication System (Body Control 1GR-FE, 2TR-FE, 1KD-FTV, 1GD-FTV) (From Aug. 2017 Production)

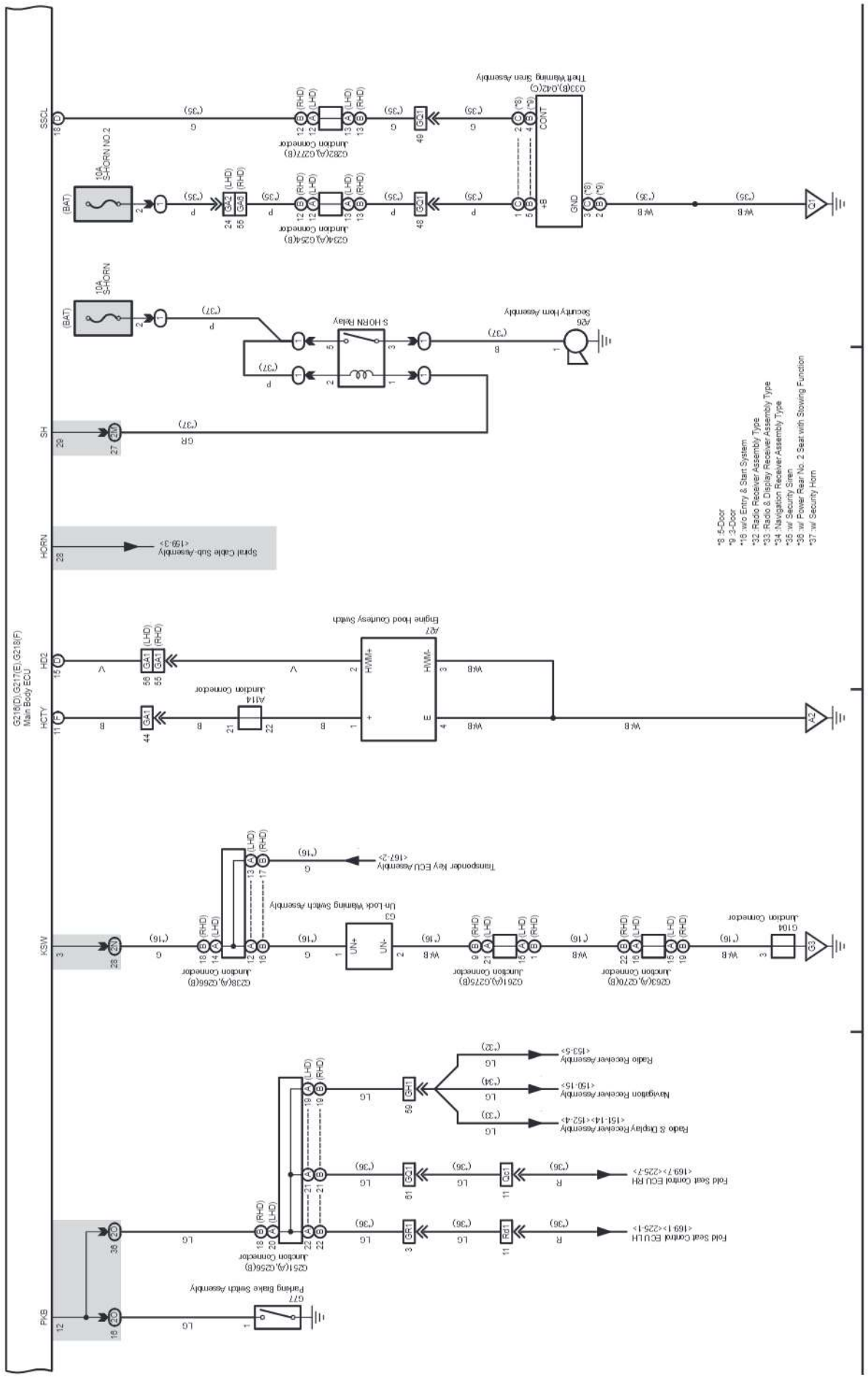

cardiagn.com

(Cont. next page)

Multiplex Communication System (Body Control 1GR-FE, 2TR-FE, 1KD-FTV, 1GD-FTV) (From Aug. 2017 Production)

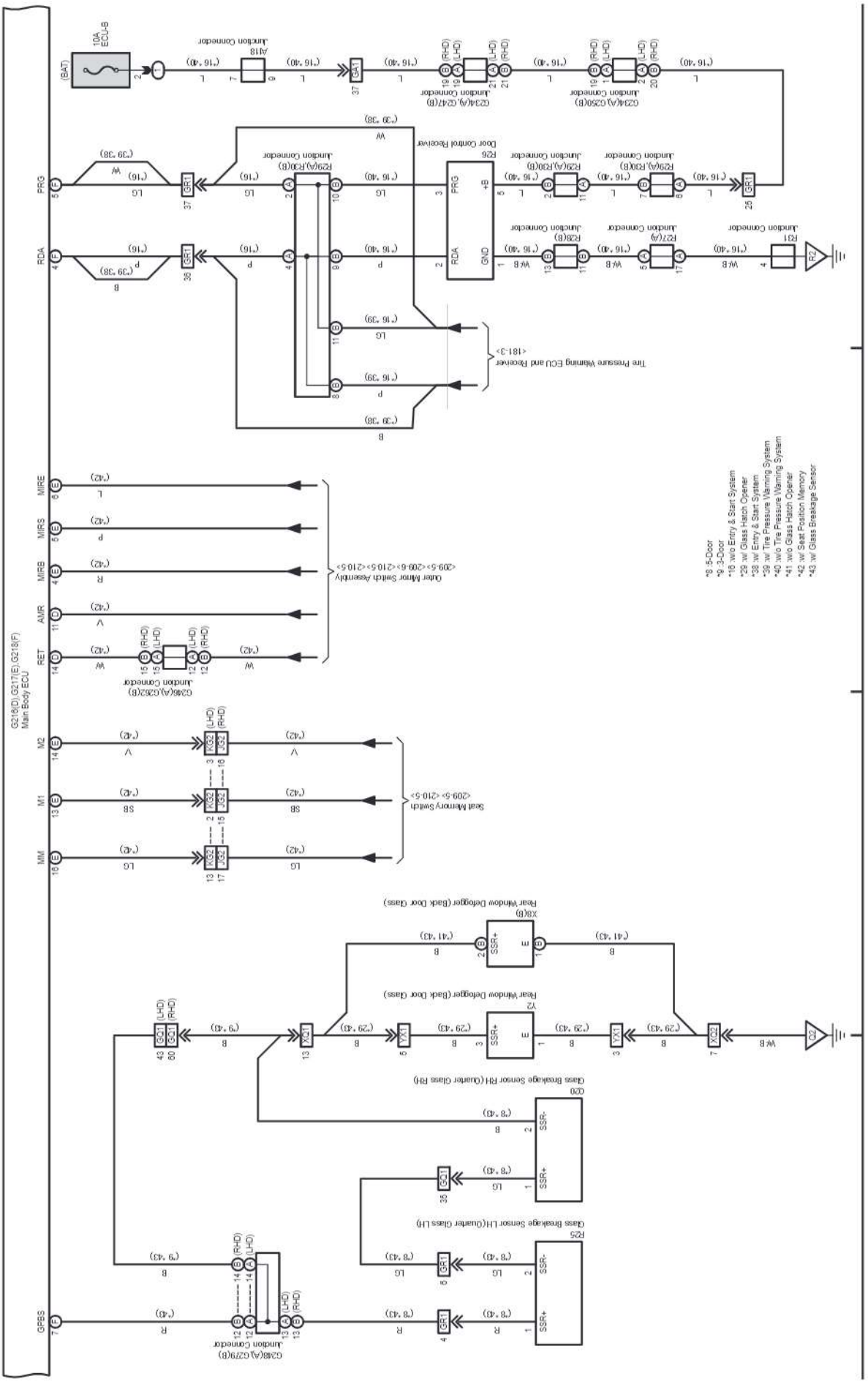

cardiagn.com

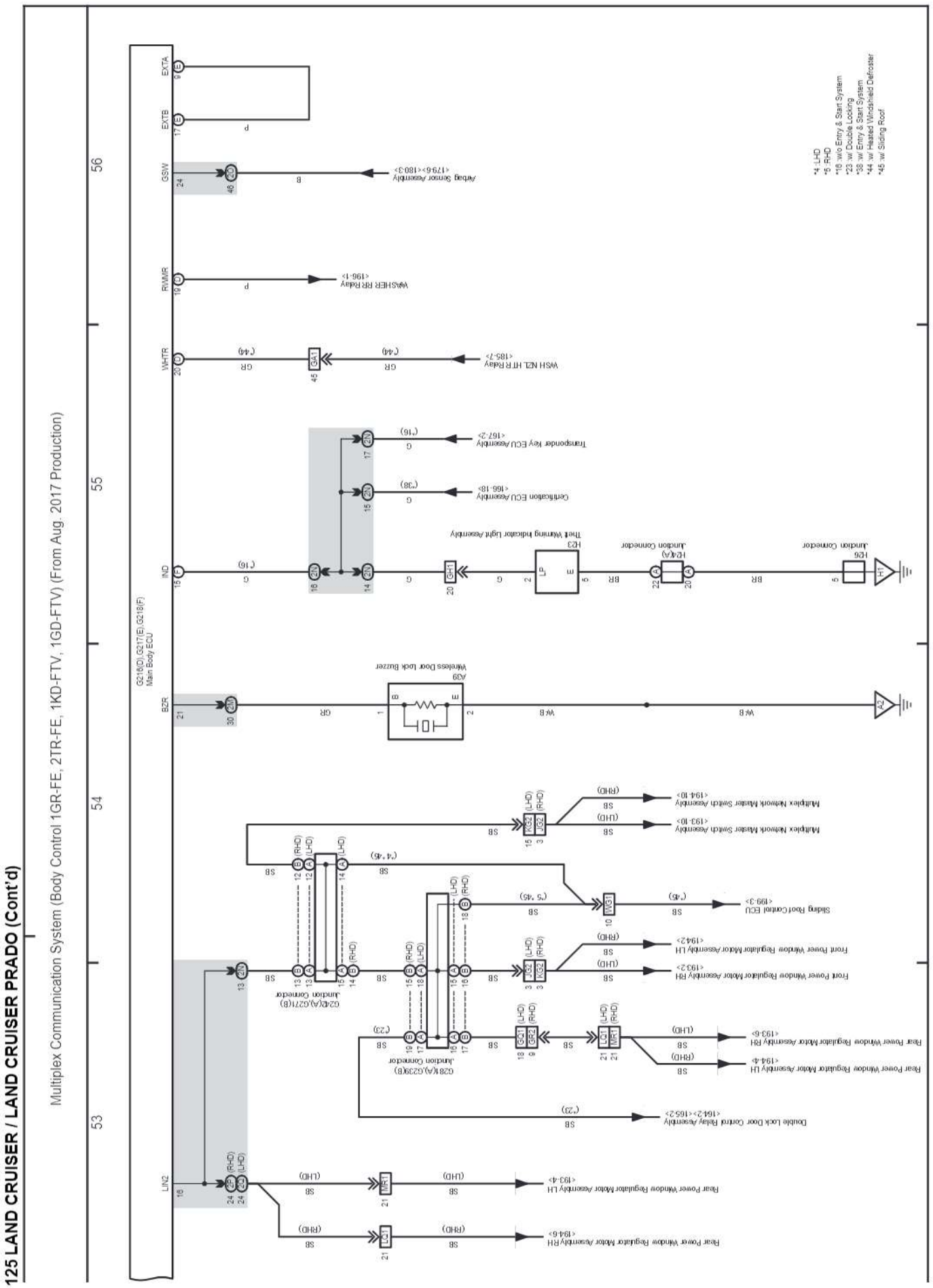

cardiagn.com

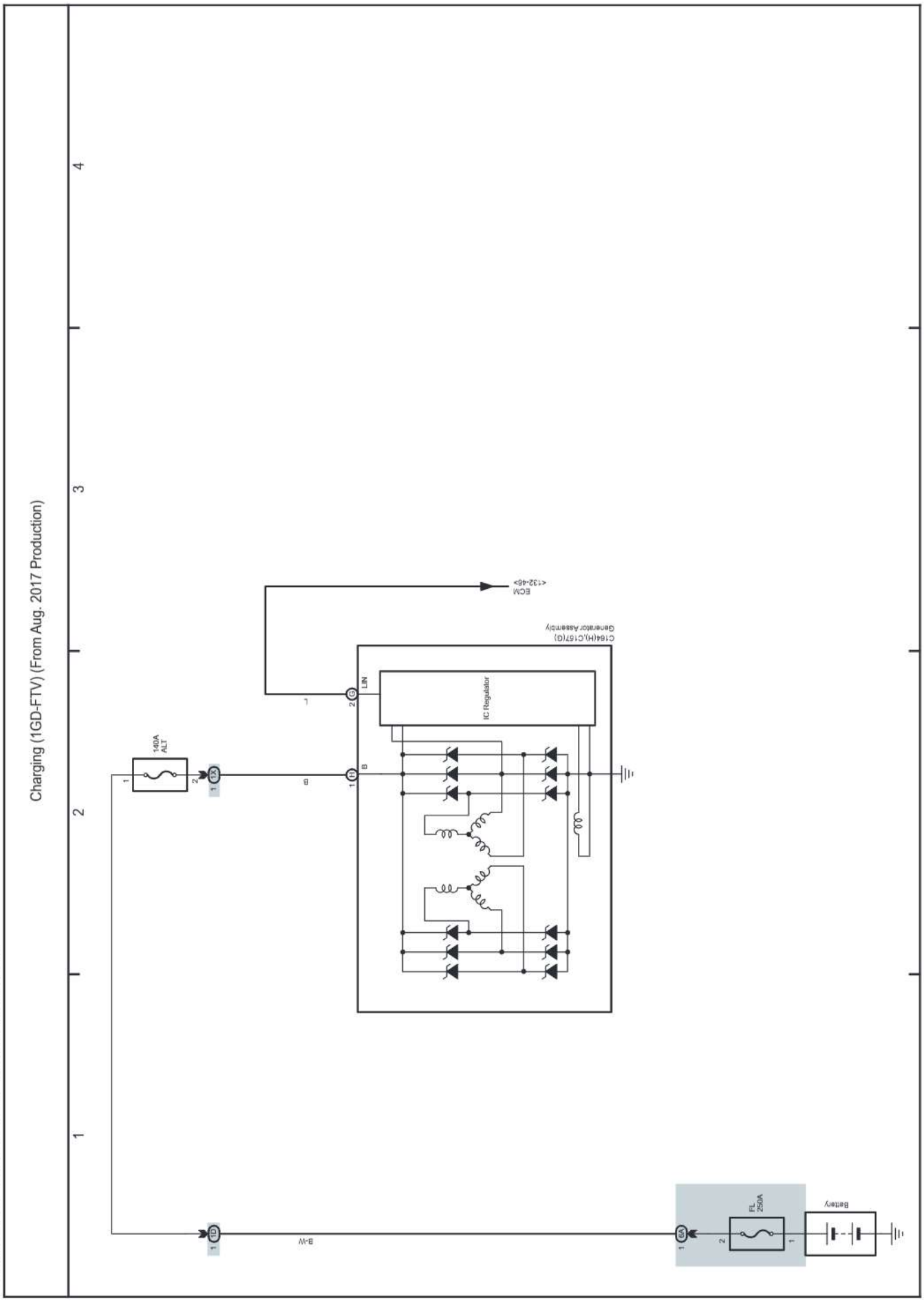

cardiagn.com

M OVERALL ELECTRICAL WIRING DIAGRAM

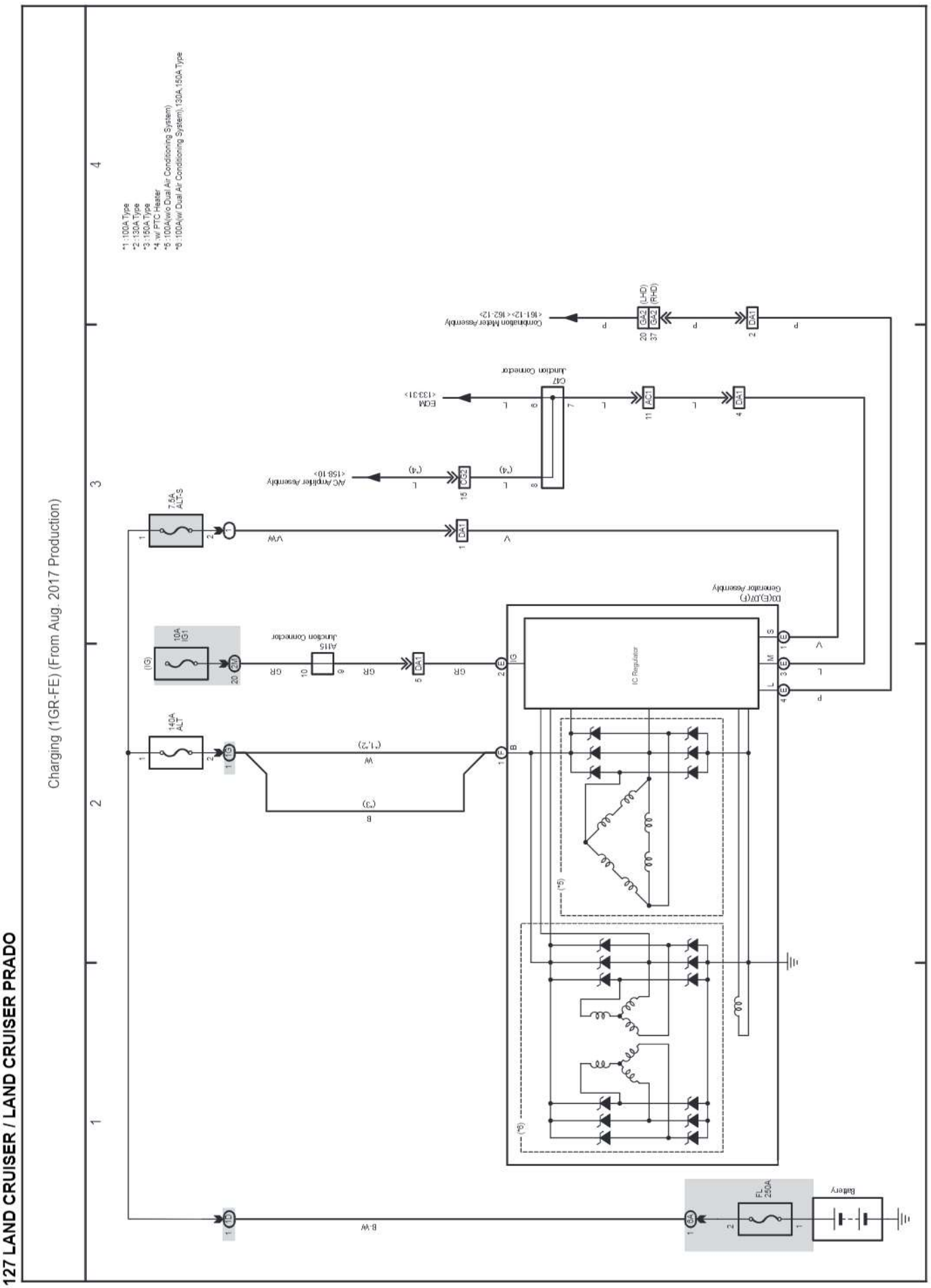

cardiagn.com

M OVERALL ELECTRICAL WIRING DIAGRAM

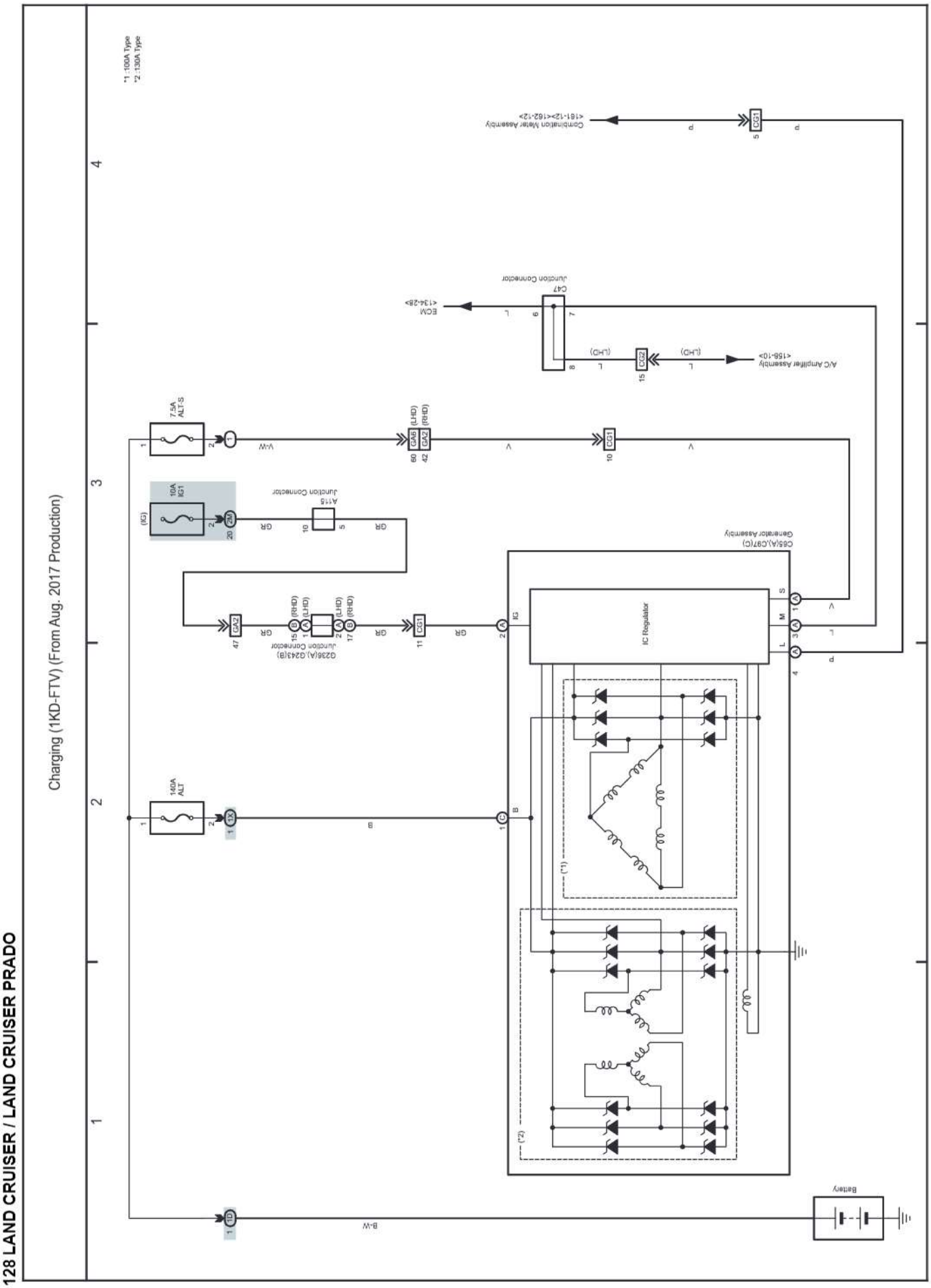

cardiagn.com

M OVERALL ELECTRICAL WIRING DIAGRAM

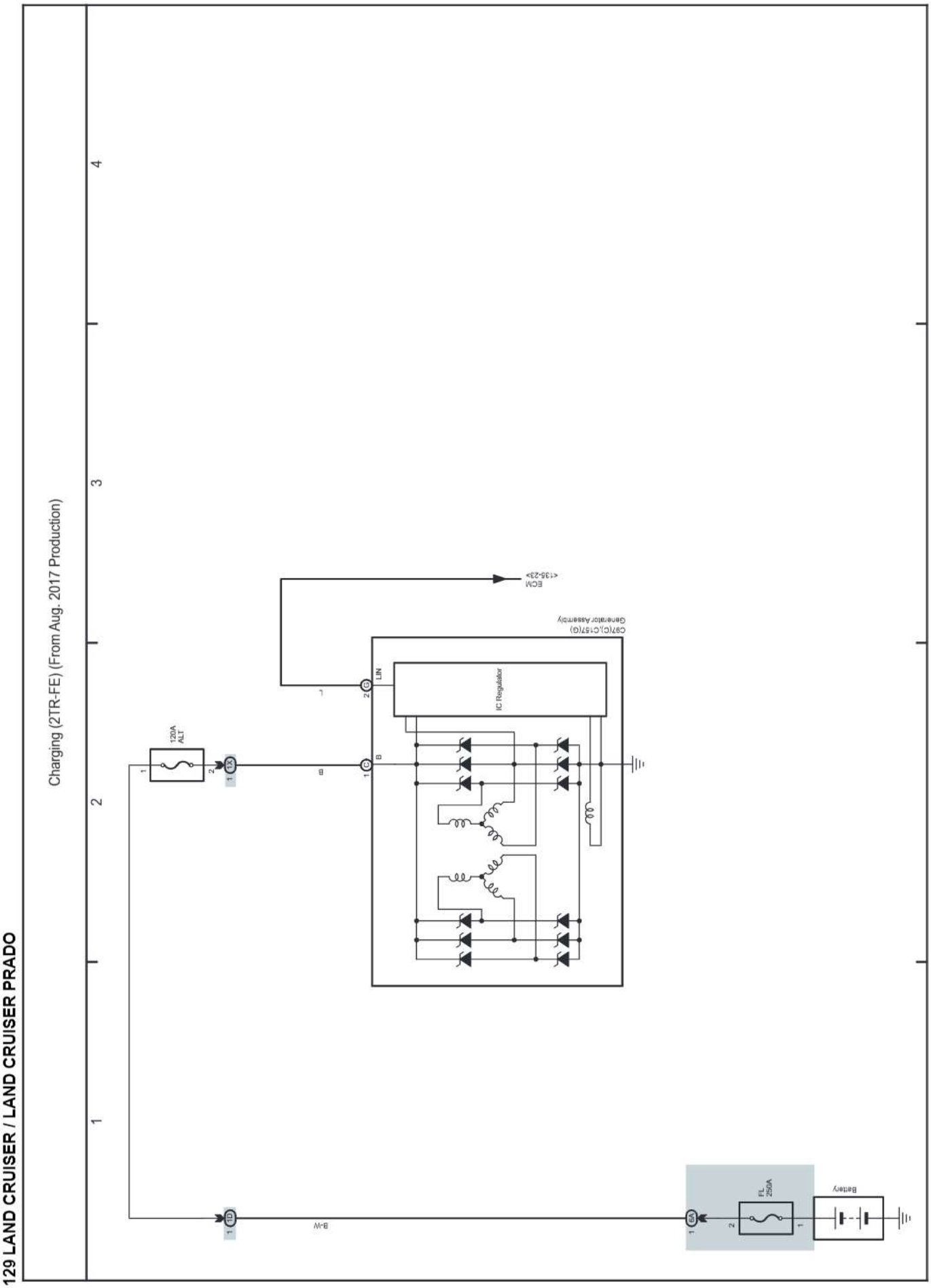

cardiagn.com

M OVERALL ELECTRICAL WIRING DIAGRAM

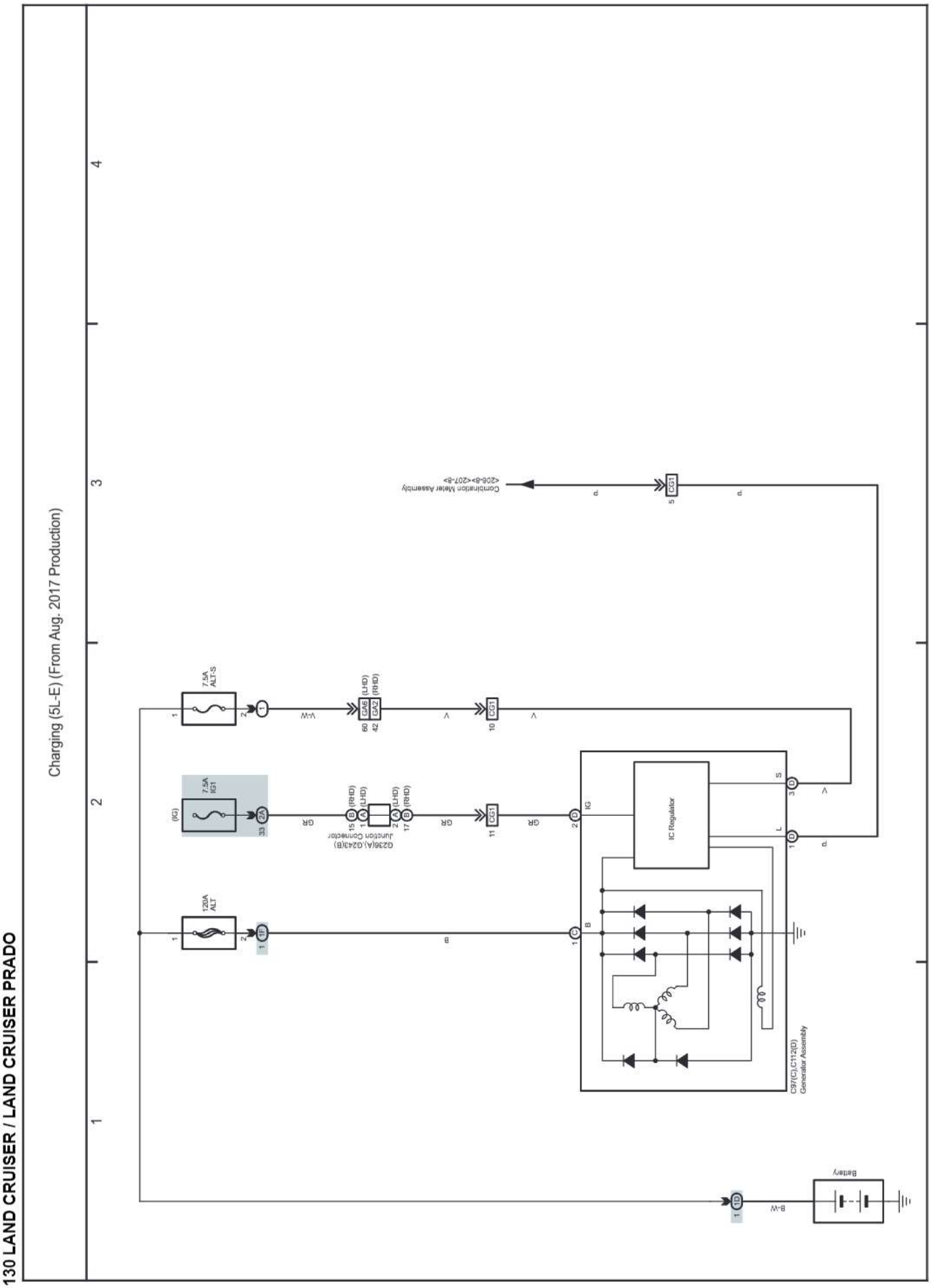

cardiagn.com

M OVERALL ELECTRICAL WIRING DIAGRAM

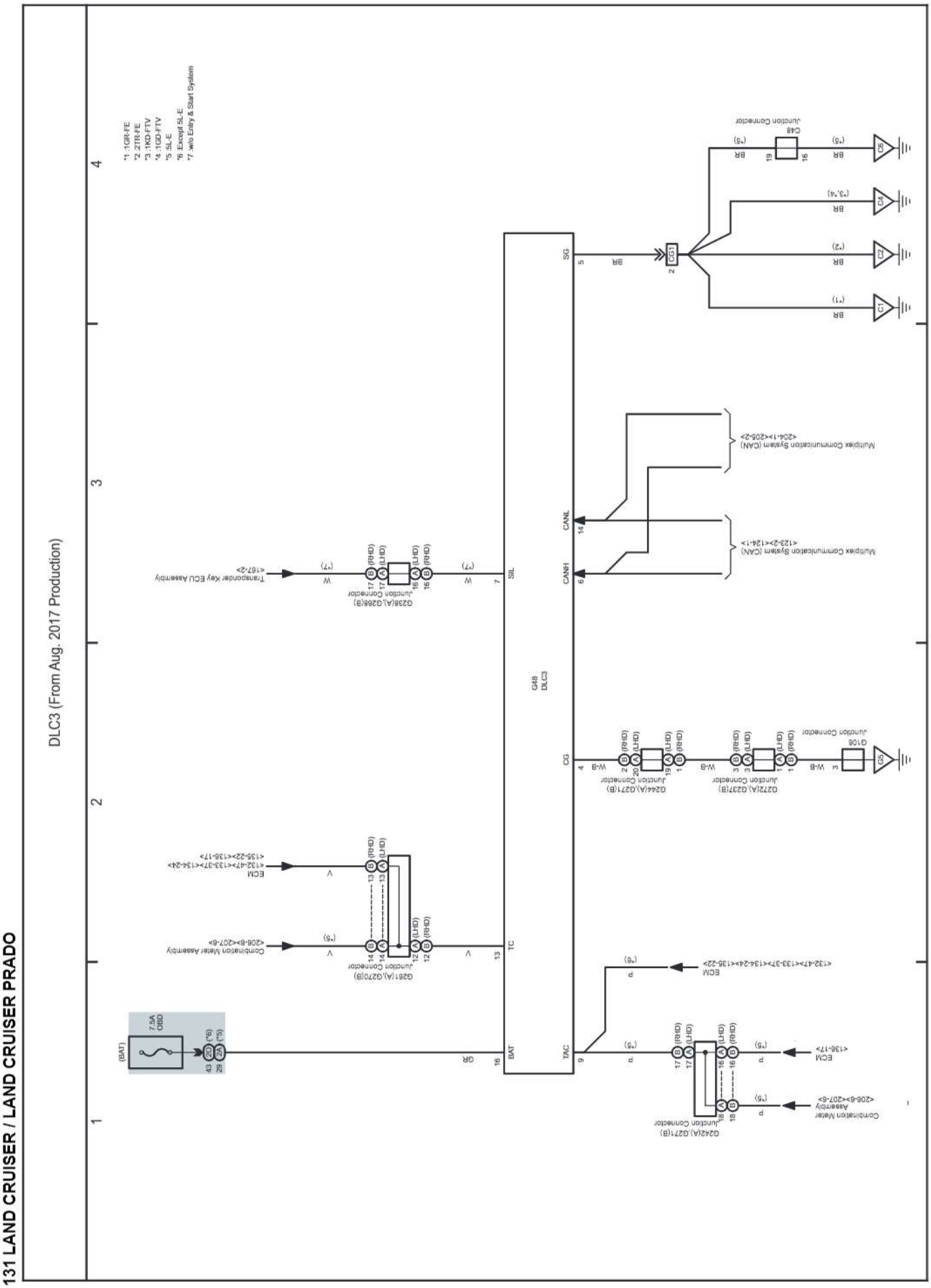

cardiagn.com

(Cont. next page)

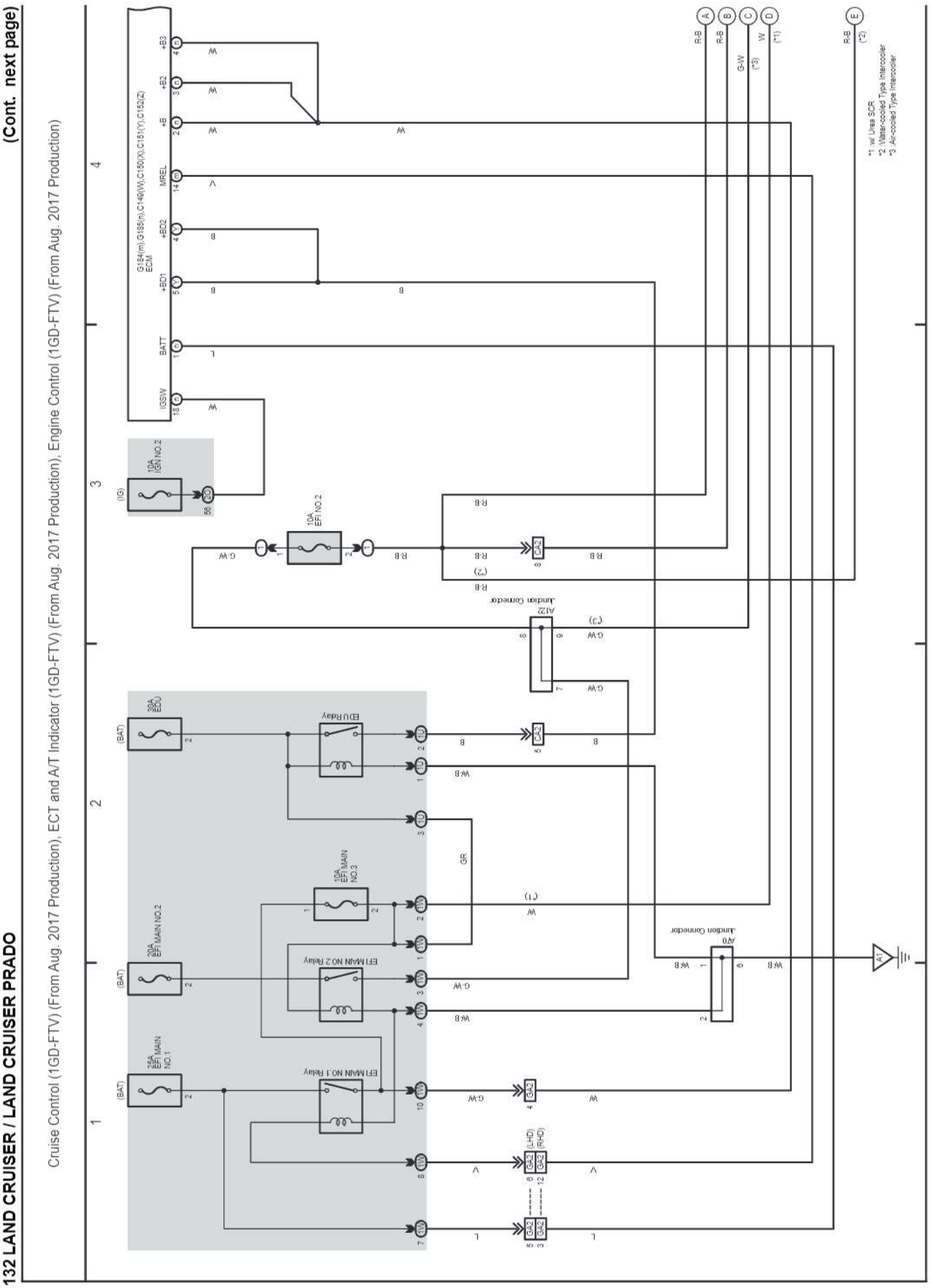

cardiagn.com

(Cont. next page)

132 LAND CRUISER / LAND CRUISER PRADO (Cont'd)

Cruise Control (1GD-FTV) (From Aug. 2017 Production), ECT and A/T Indicator (1GD-FTV) (From Aug. 2017 Production), Engine Control (1GD-FTV) (From Aug. 2017 Production)

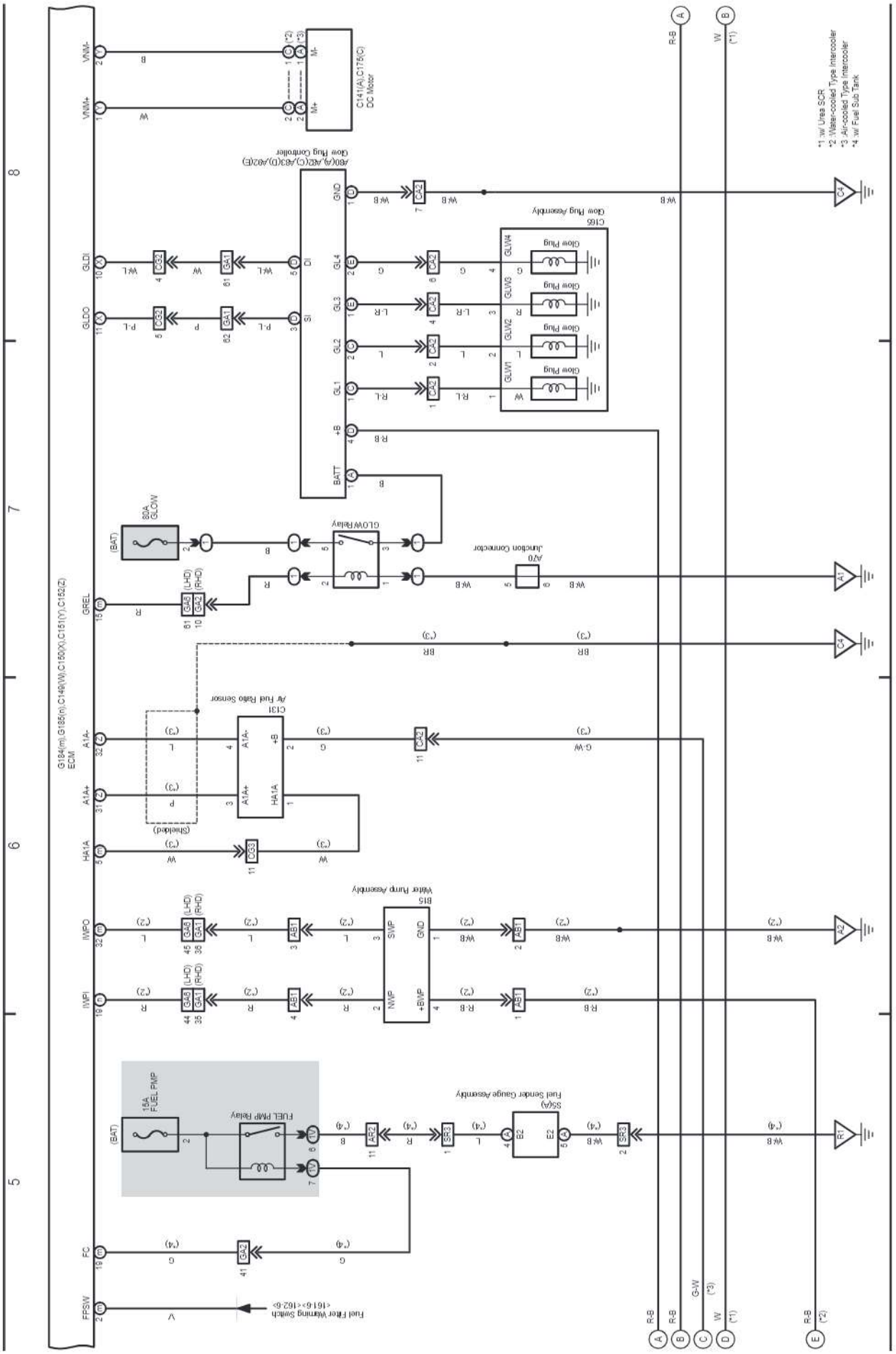

cardiagn.com

(Cont. next page)

Cruise Control (1GD-FTV) (From Aug. 2017 Production), ECT and A/T Indicator (1GD-FTV) (From Aug. 2017 Production), Engine Control (1GD-FTV) (From Aug. 2017 Production)

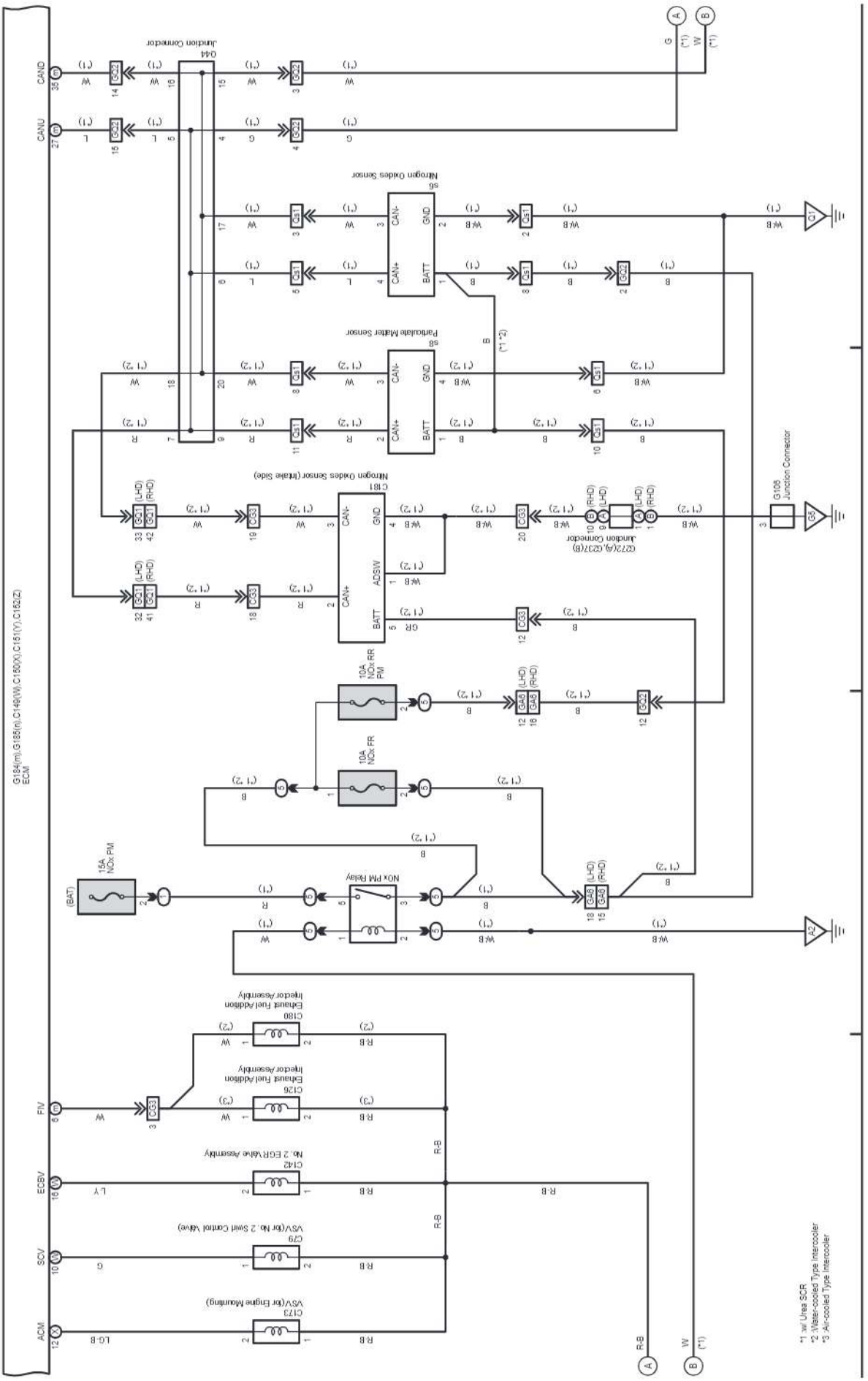

cardiagn.com

(Cont. next page)

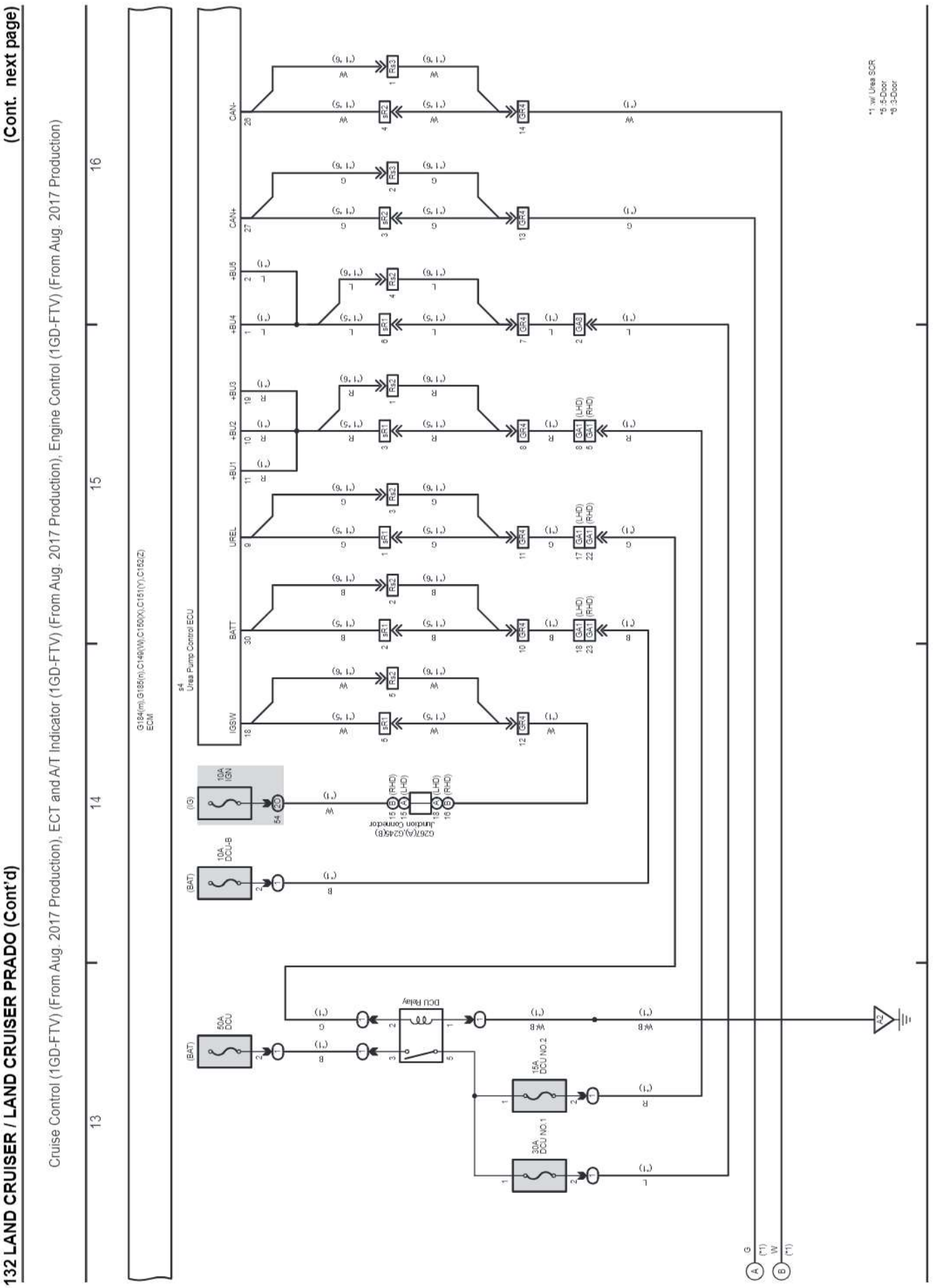

cardiagn.com

(Cont. next page)

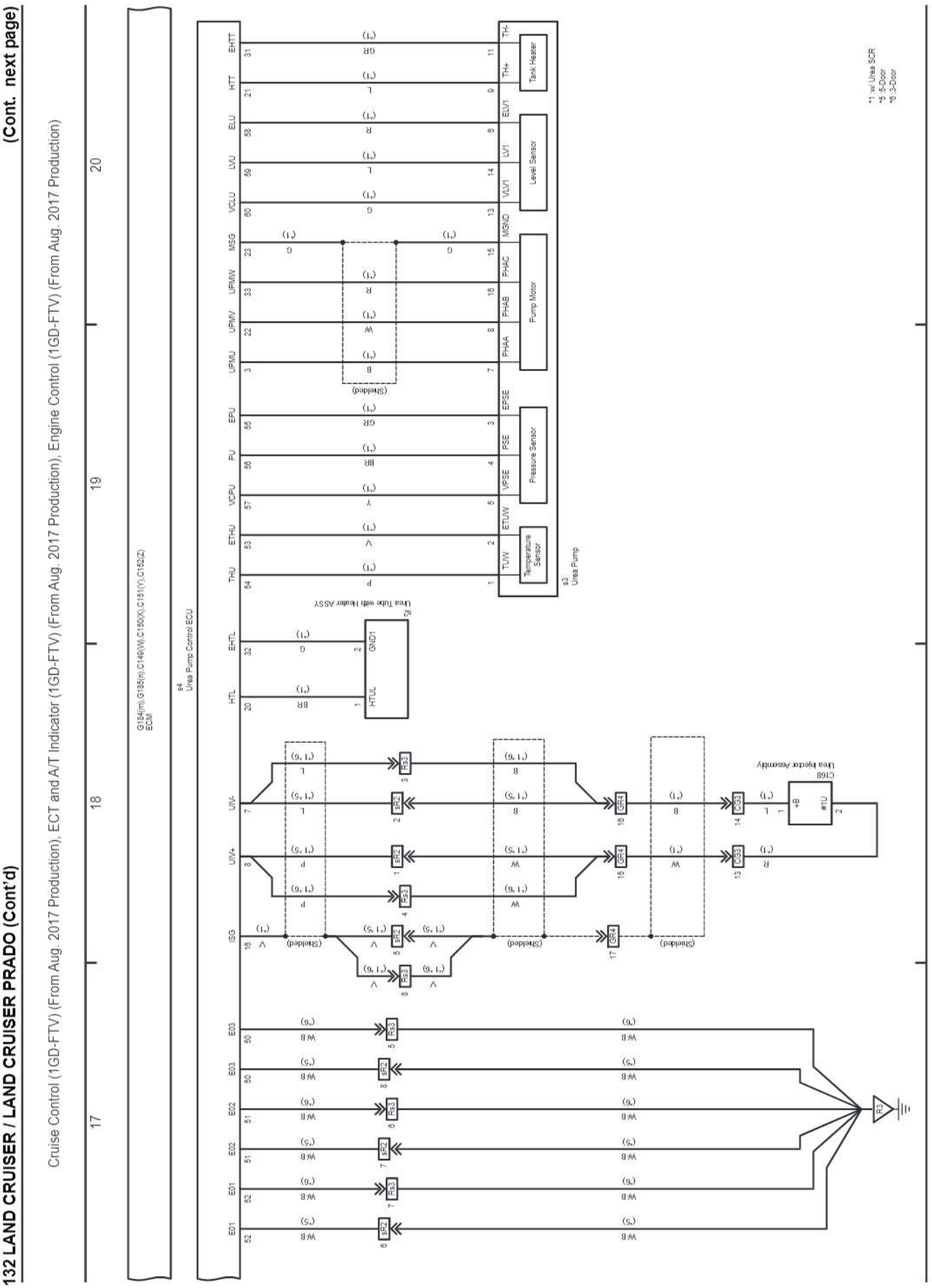

(Cont. next page)

Cruise Control (1GD-FTV) (From Aug. 2017 Production), ECT and A/T Indicator (1GD-FTV) (From Aug. 2017 Production), Engine Control (1GD-FTV) (From Aug. 2017 Production)

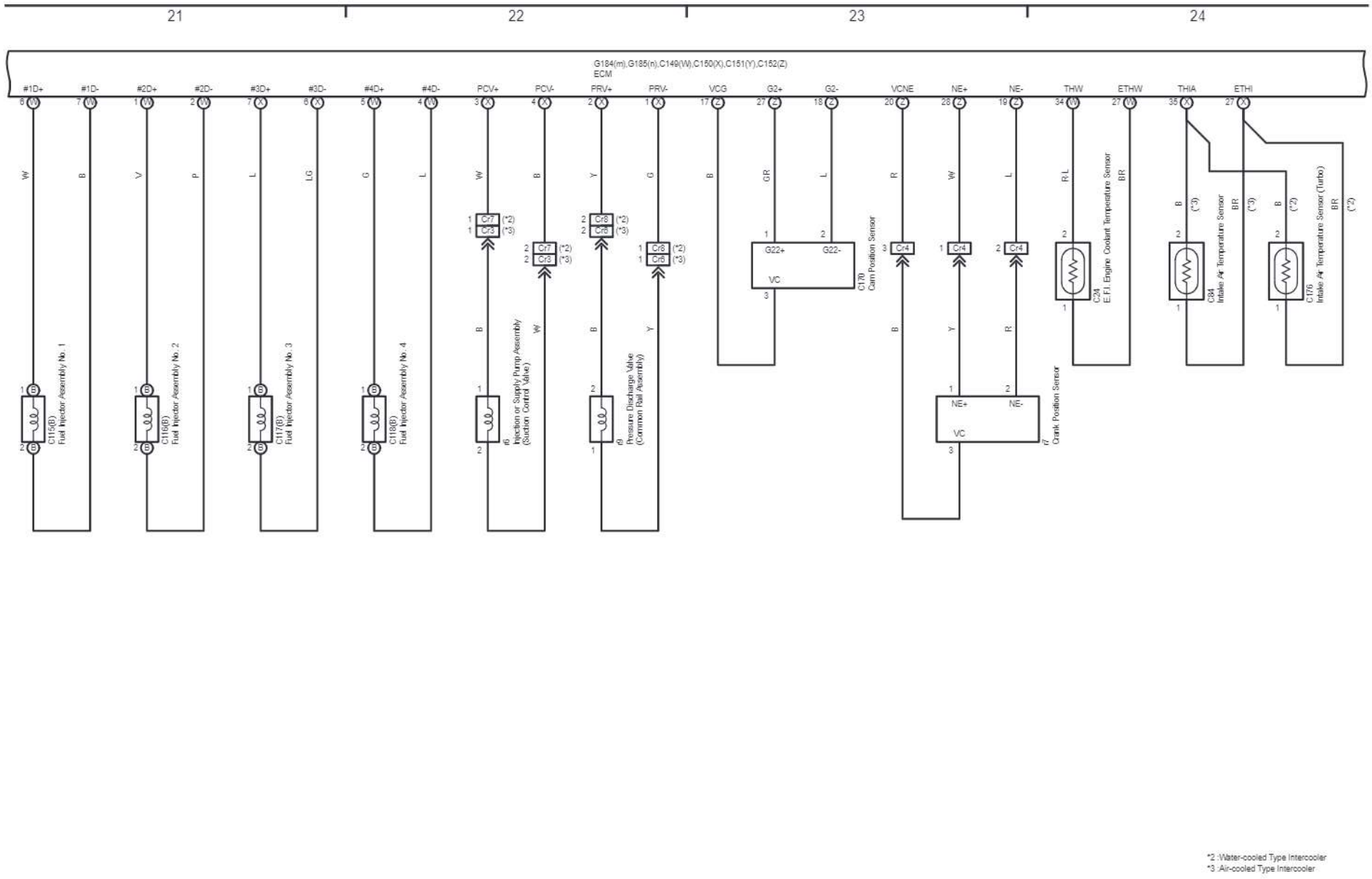

cardiagn.com

cardiagn.com

(Cont. next page)

Cruise Control (1GD-FTV) (From Aug. 2017 Production), ECT and A/T Indicator (1GD-FTV) (From Aug. 2017 Production), Engine Control (1GD-FTV) (From Aug. 2017 Production)

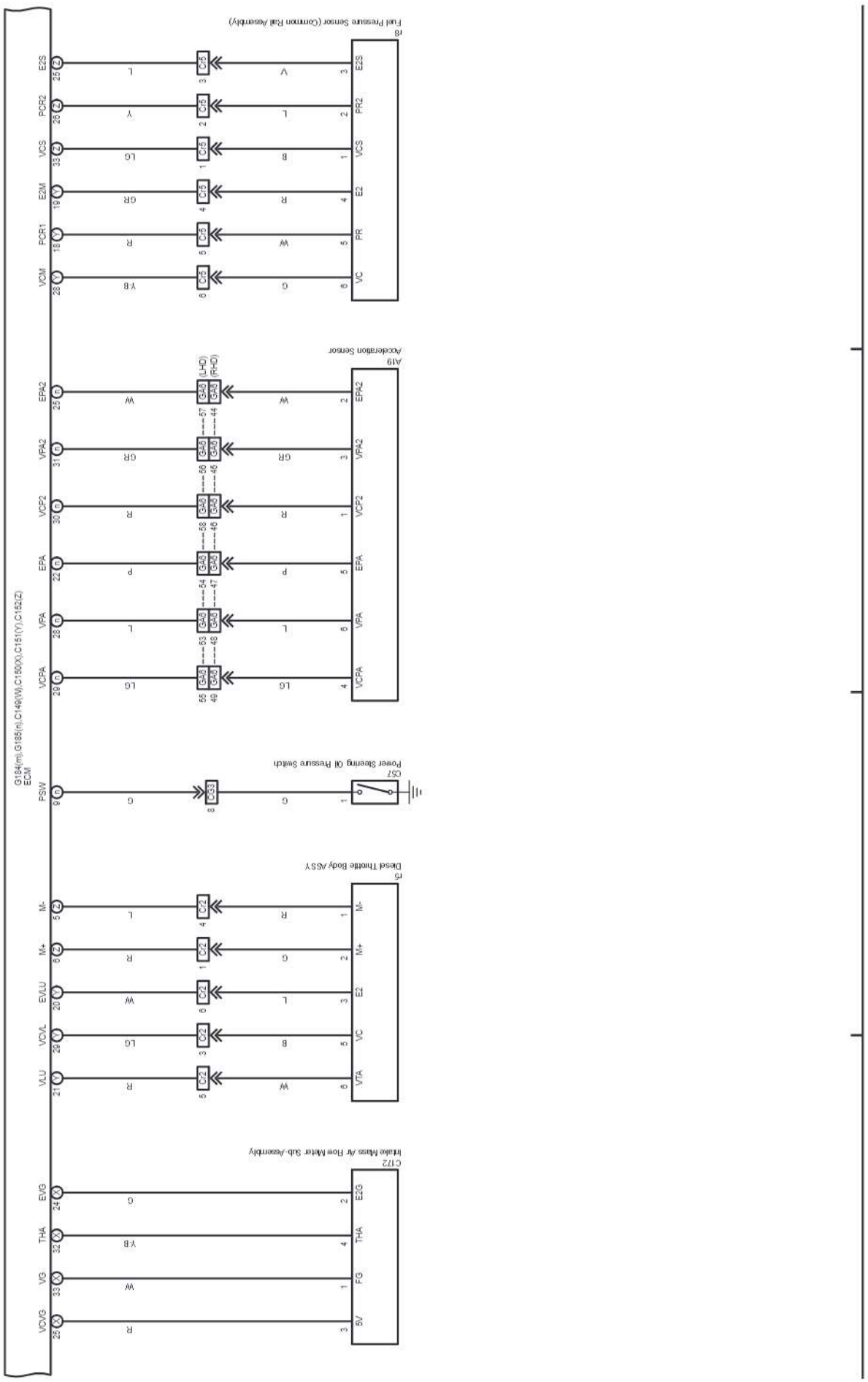

cardiagn.com

(Cont. next page)

Cruise Control (1GD-FTV) (From Aug. 2017 Production), ECT and A/T Indicator (1GD-FTV) (From Aug. 2017 Production), Engine Control (1GD-FTV) (From Aug. 2017 Production)

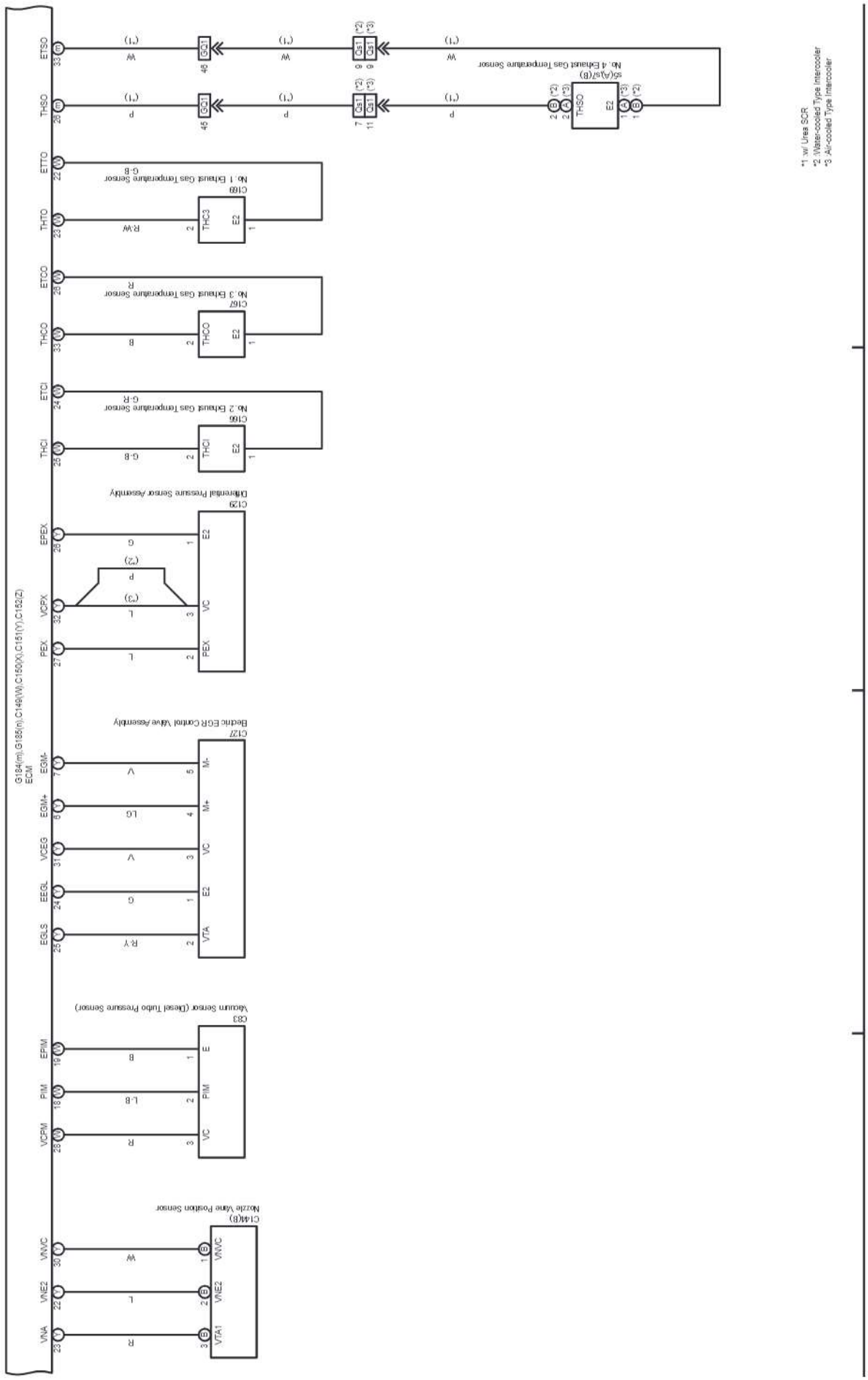

cardiagn.com

(Cont. next page)

Cruise Control (1GD-FTV) (From Aug. 2017 Production), ECT and A/T Indicator (1GD-FTV) (From Aug. 2017 Production), Engine Control (1GD-FTV) (From Aug. 2017 Production)

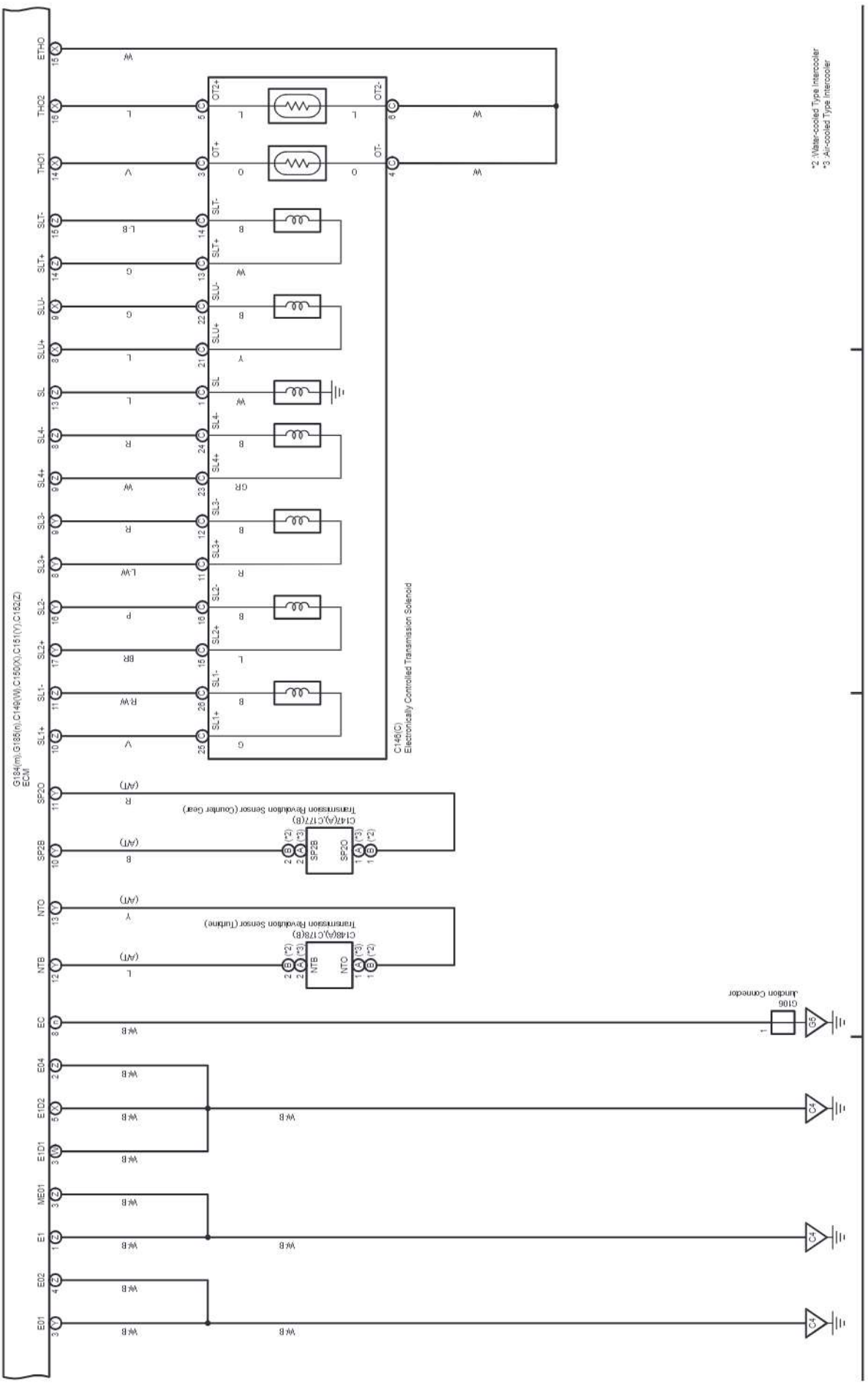

cardiagn.com

(Cont. next page)

Cruise Control (1GD-FTV) (From Aug. 2017 Production), ECT and A/T Indicator (1GD-FTV) (From Aug. 2017 Production), Engine Control (1GD-FTV) (From Aug. 2017 Production)

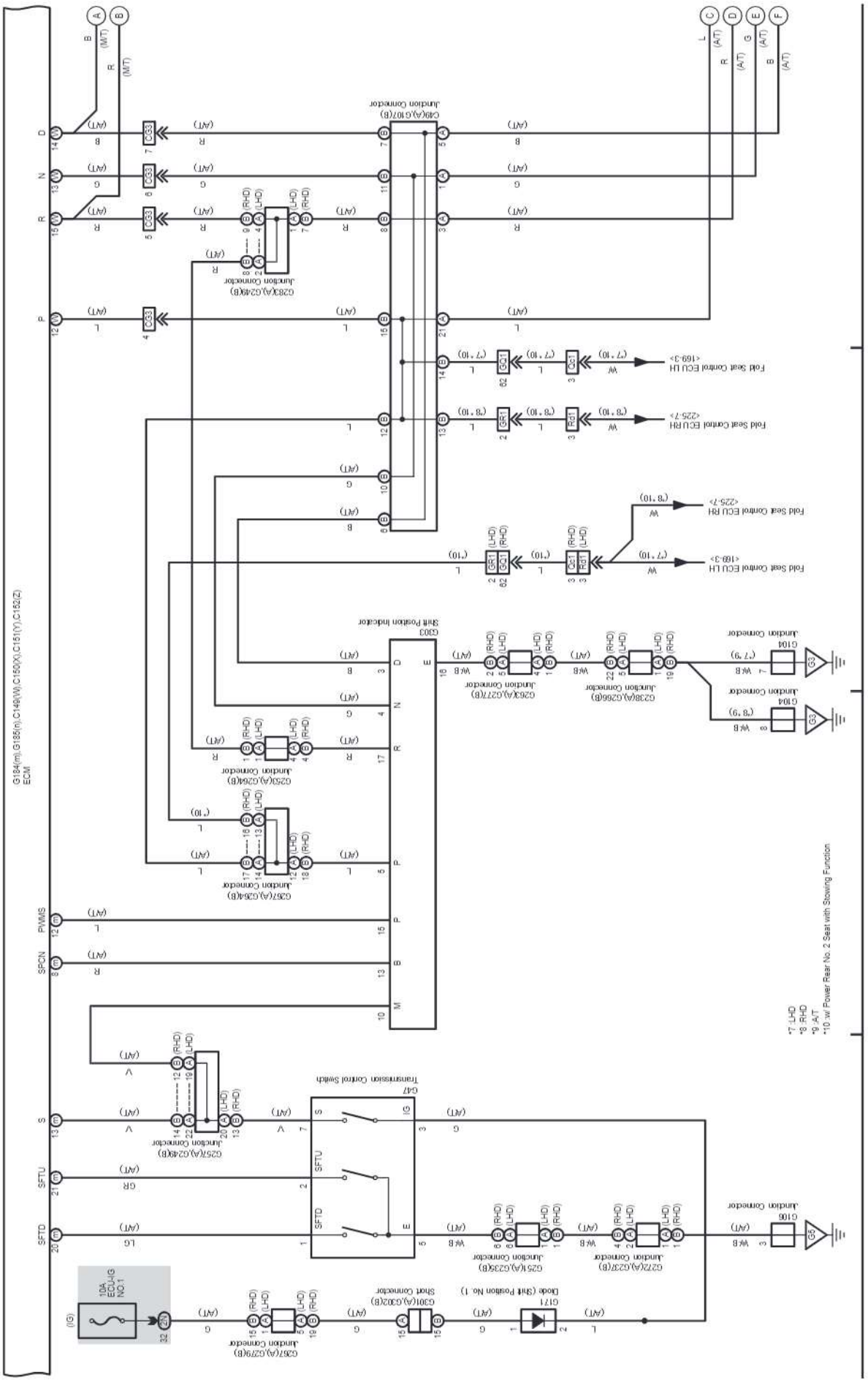

cardiagn.com

(Cont. next page)

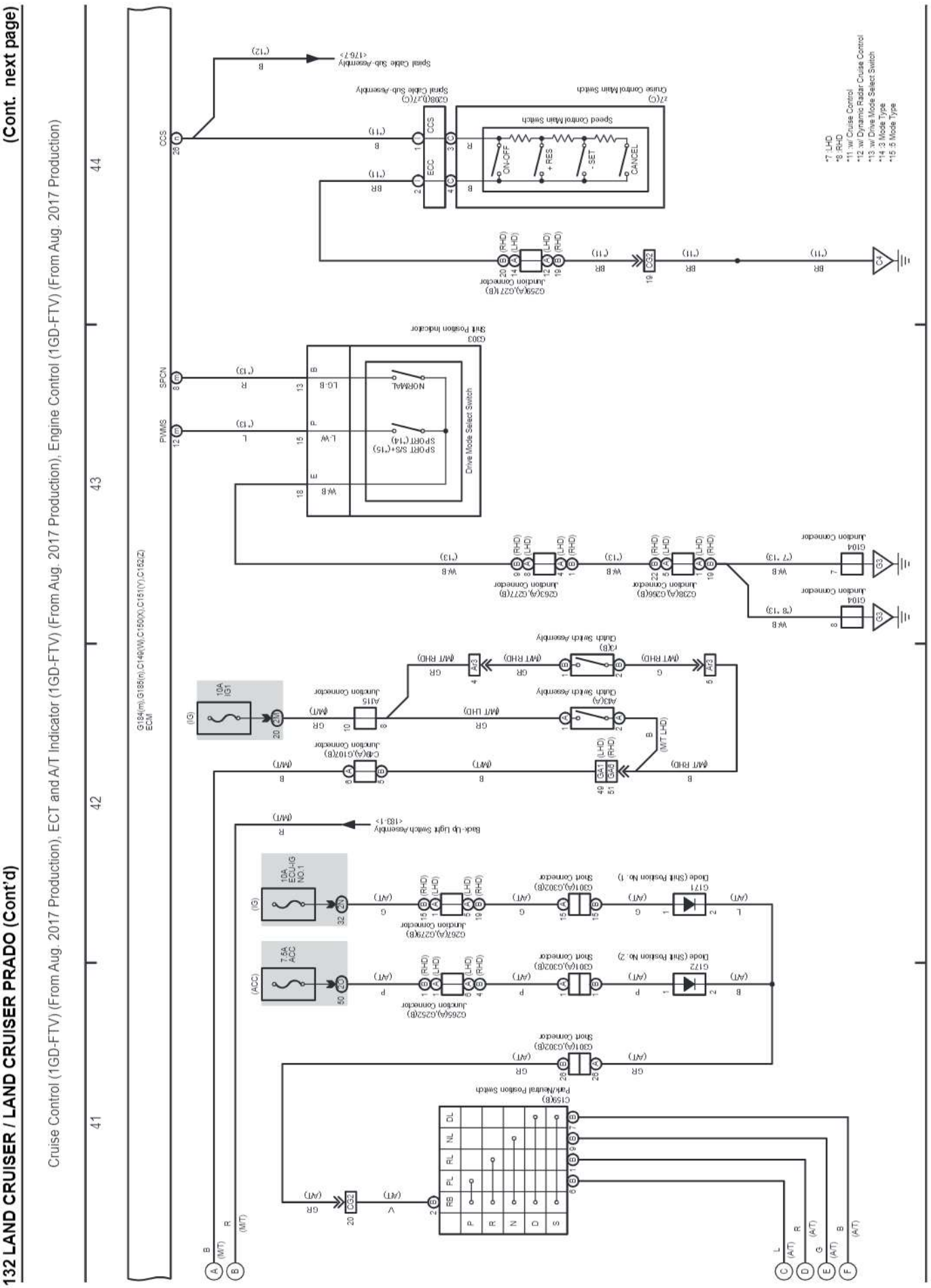

cardiagn.com

(Cont. next page)

132 LAND CRUISER / LAND CRUISER PRADO (Cont'd)

Cruise Control (1GD-FTV) (From Aug. 2017 Production), ECT and A/T Indicator (1GD-FTV) (From Aug. 2017 Production), Engine Control (1GD-FTV) (From Aug. 2017 Production)

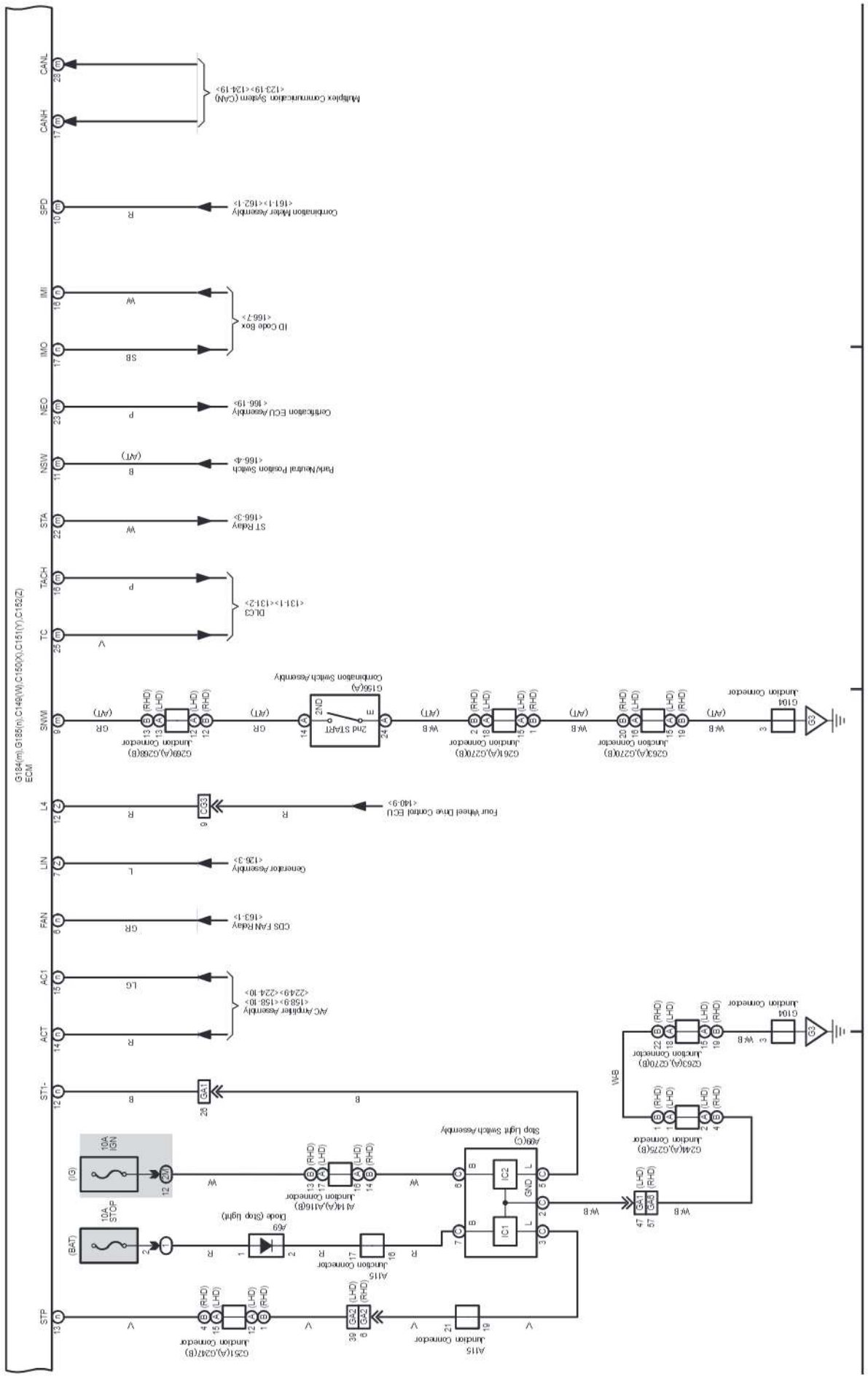

cardiagn.com

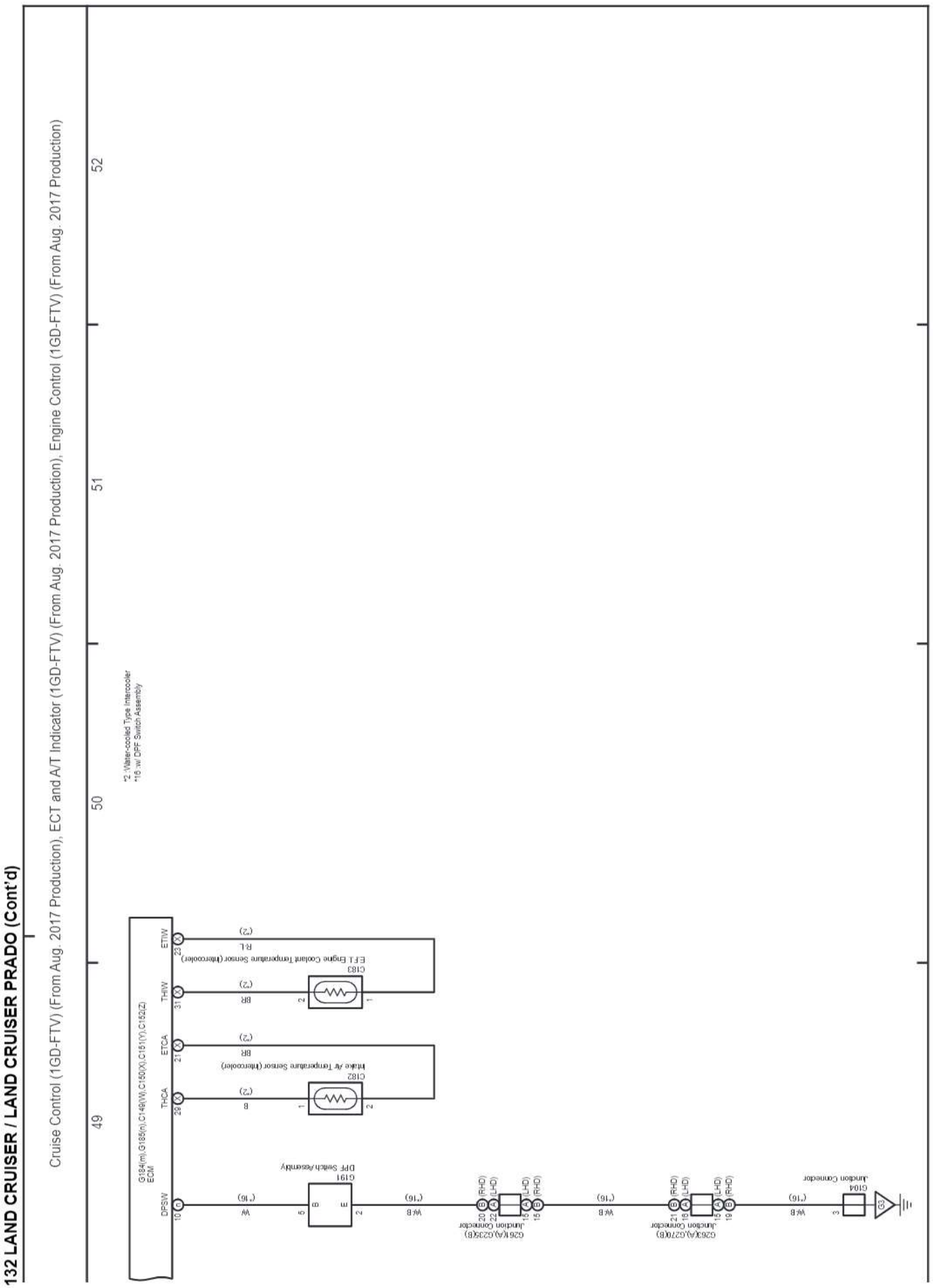

cardiagn.com

(Cont. next page)

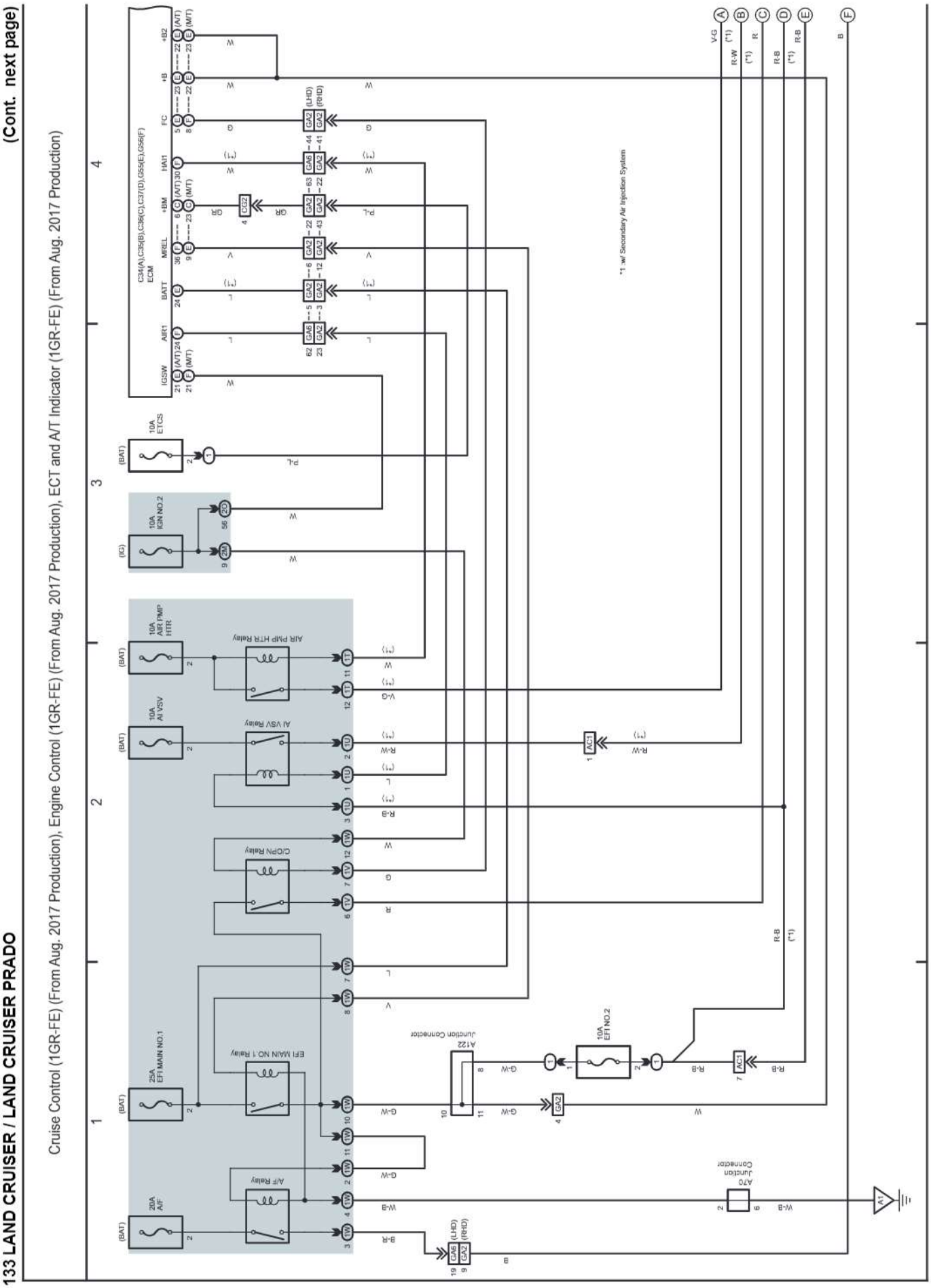

(Cont. next page)

Cruise Control (1GR-FE) (From Aug. 2017 Production), Engine Control (1GR-FE) (From Aug. 2017 Production), ECT and A/T Indicator (1GR-FE) (From Aug. 2017 Production)

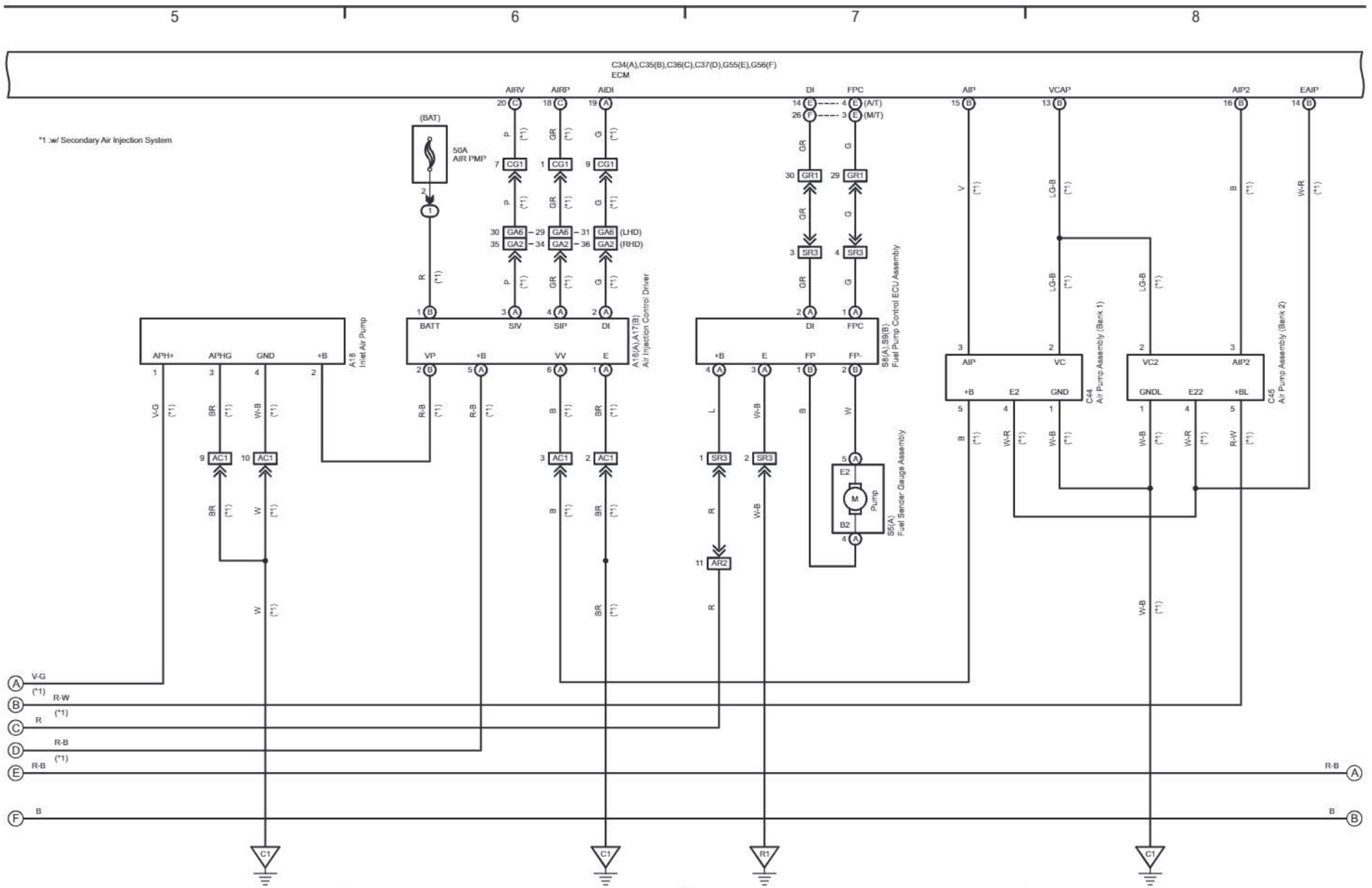

LAND CRUISER / LAND CRUISER PRADO (EM27T3E)

cardiagn.com

cardiagn.com

(Cont. next page)

Cruise Control (1GR-FE) (From Aug. 2017 Production), Engine Control (1GR-FE) (From Aug. 2017 Production), ECT and A/T Indicator (1GR-FE) (From Aug. 2017 Production)

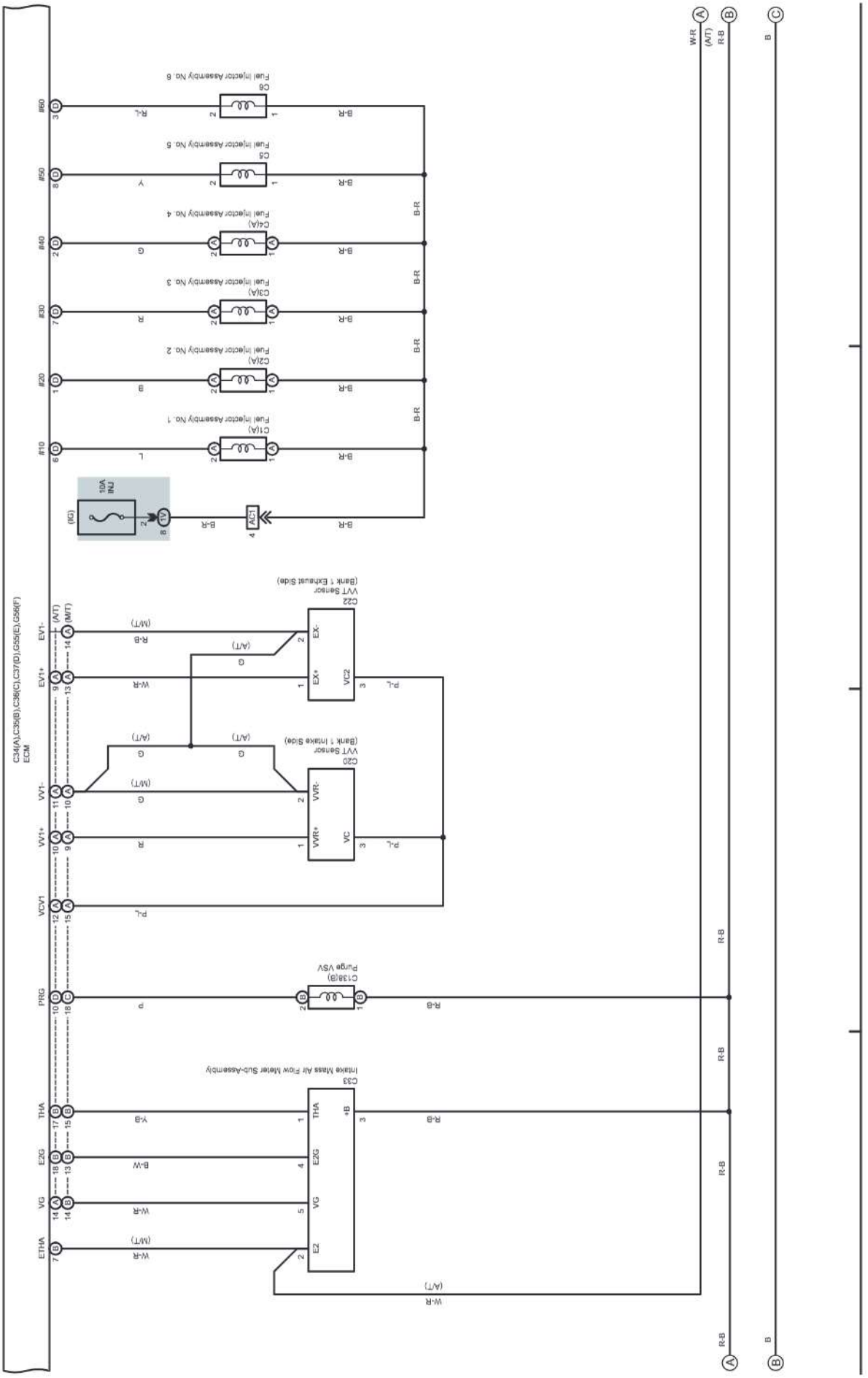

(Cont. next page)

Cruise Control (1GR-FE) (From Aug. 2017 Production), Engine Control (1GR-FE) (From Aug. 2017 Production), ECT and A/T Indicator (1GR-FE) (From Aug. 2017 Production)

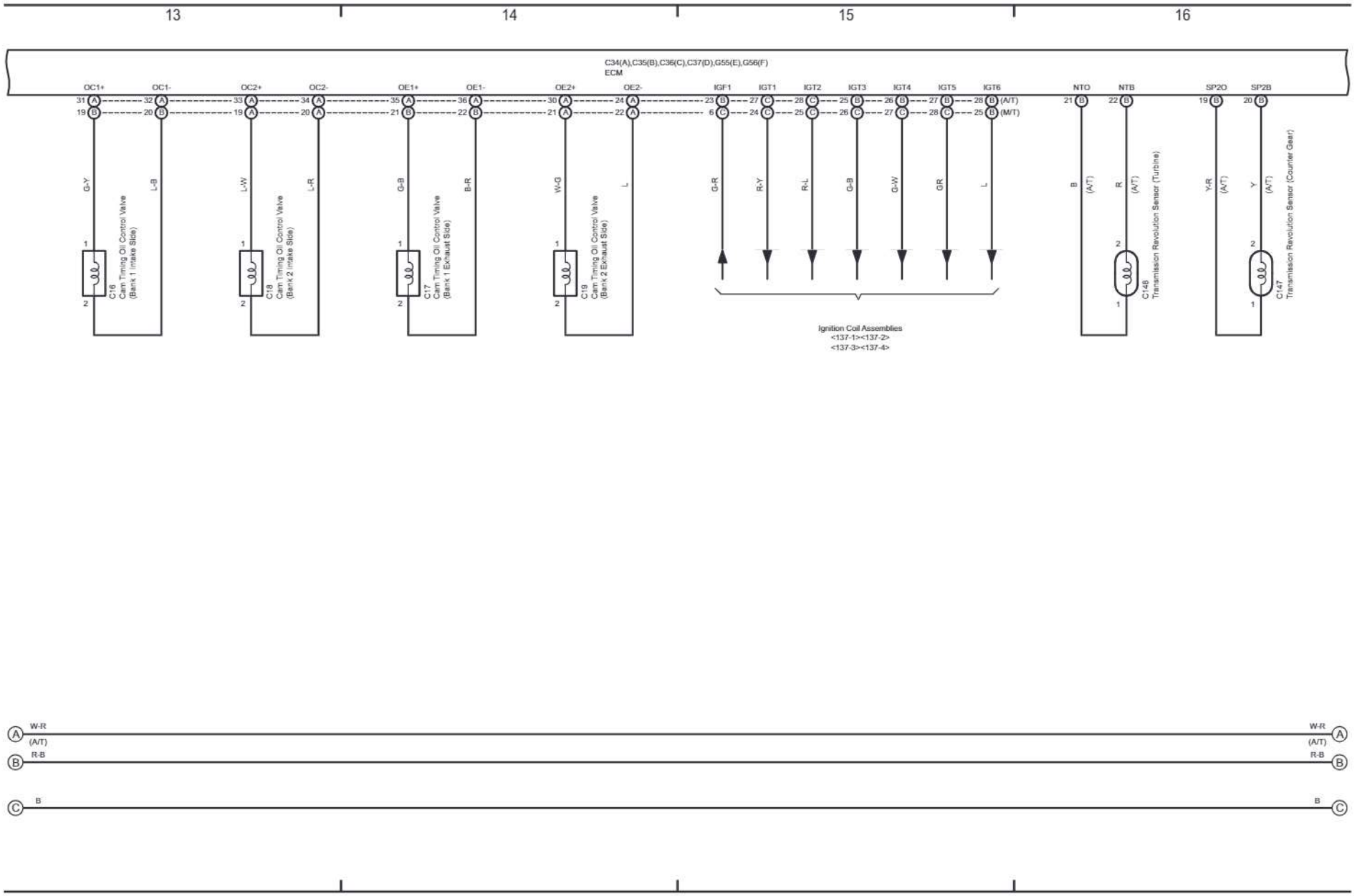

cardiagn.com

cardiagn.com

(Cont. next page)

Cruise Control (1GR-FE) (From Aug. 2017 Production), Engine Control (1GR-FE) (From Aug. 2017 Production), ECT and A/T Indicator (1GR-FE) (From Aug. 2017 Production)

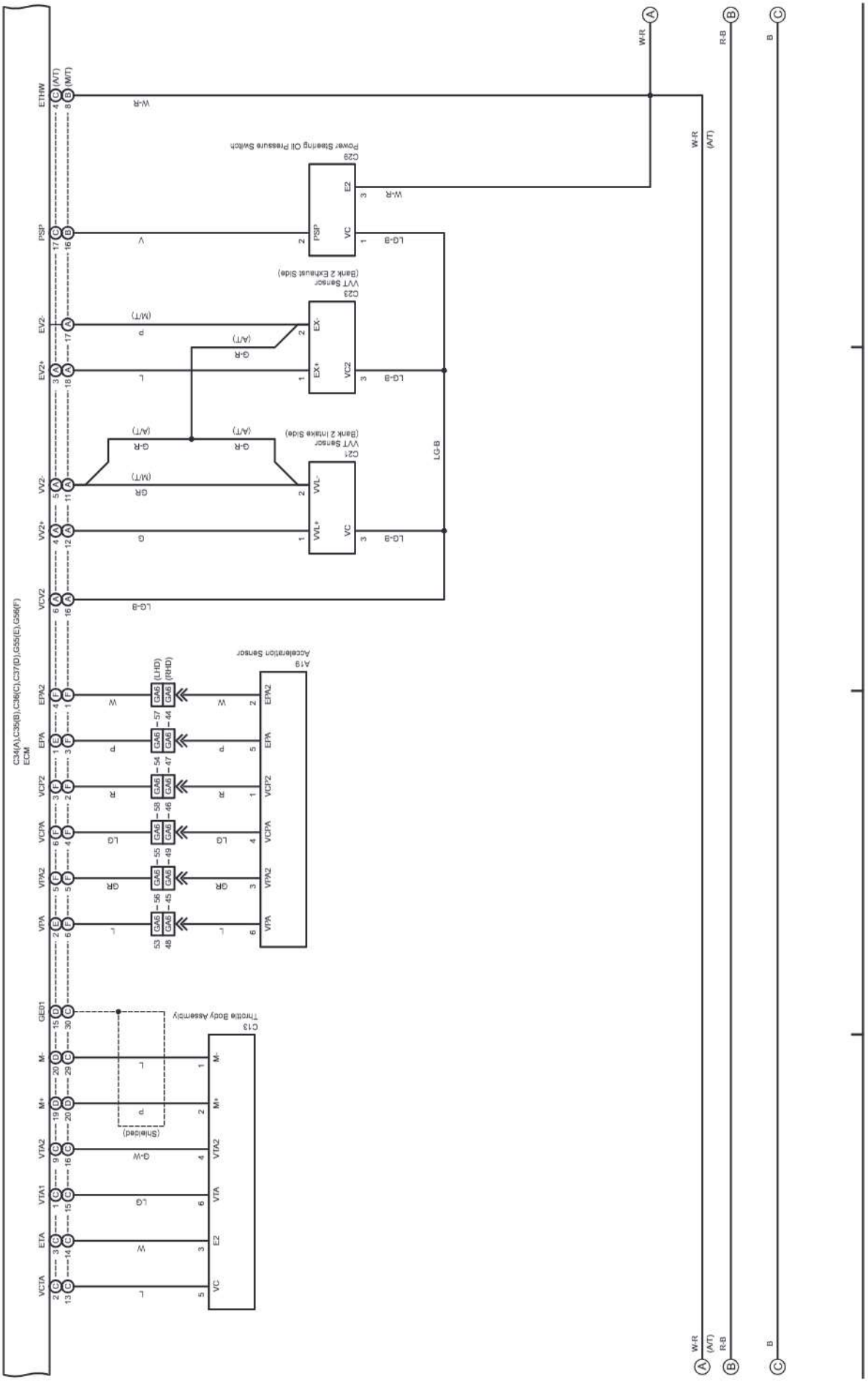

cardiagn.com

(Cont. next page)

133 LAND CRUISER / LAND CRUISER PRADO (Cont'd)

Cruise Control (1GR-FE) (From Aug. 2017 Production), Engine Control (1GR-FE) (From Aug. 2017 Production), ECT and A/T Indicator (1GR-FE) (From Aug. 2017 Production)

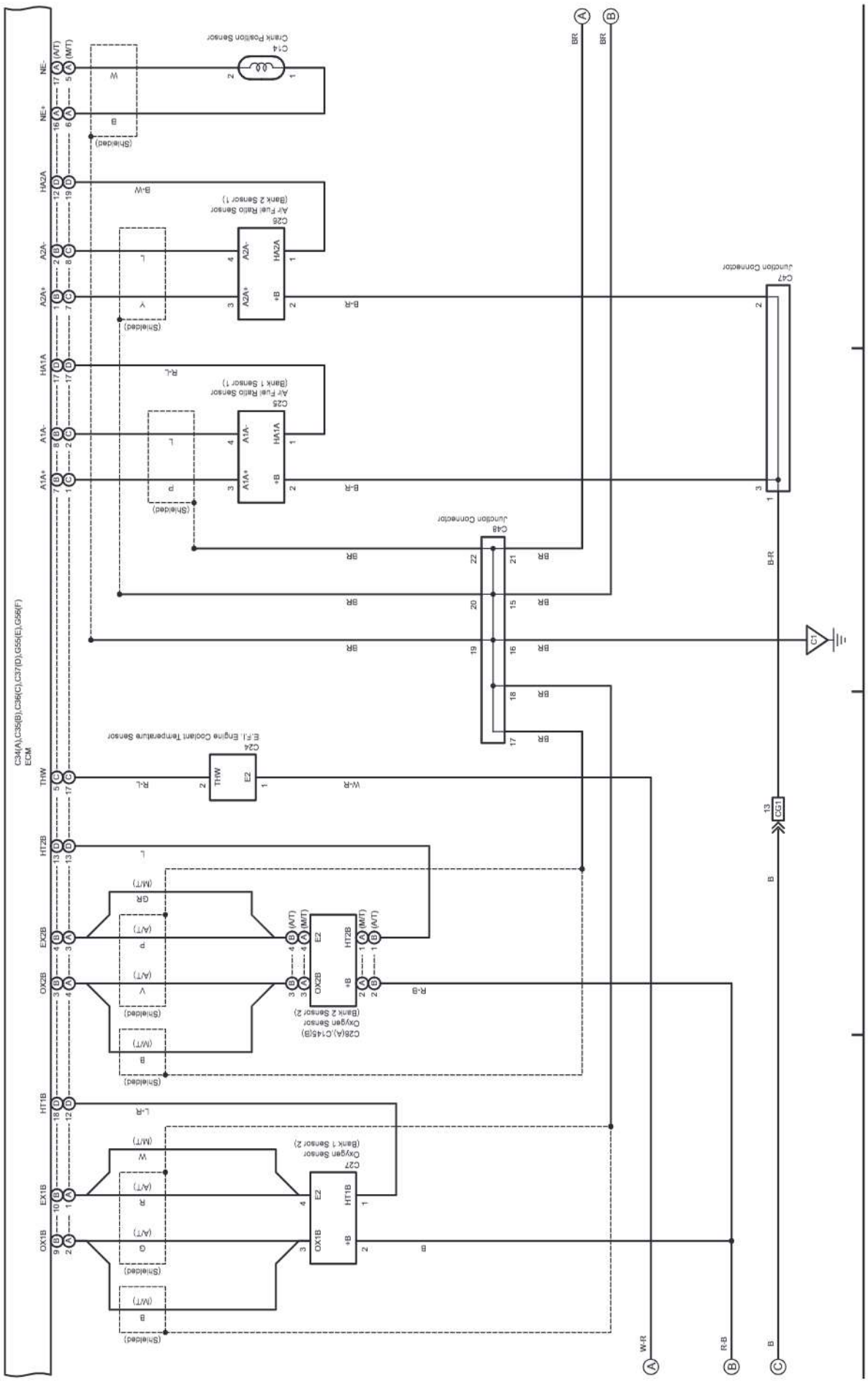

cardiagn.com

(Cont. next page)

133 LAND CRUISER / LAND CRUISER PRADO (Cont'd)

Cruise Control (1GR-FE) (From Aug. 2017 Production), Engine Control (1GR-FE) (From Aug. 2017 Production), ECT and A/T Indicator (1GR-FE) (From Aug. 2017 Production)

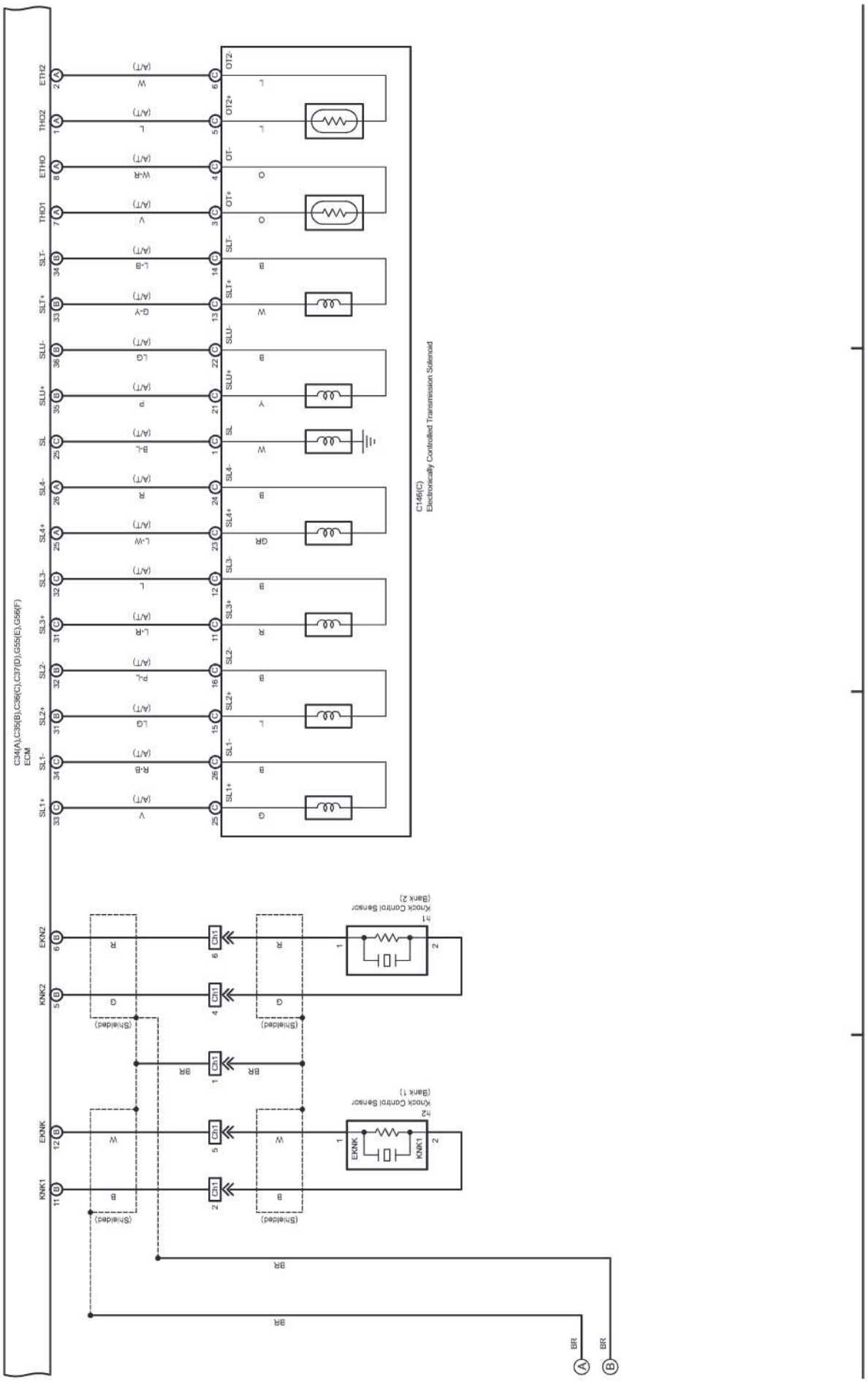

cardiagn.com

(Cont. next page)

133 LAND CRUISER / LAND CRUISER PRADO (Cont'd)

Cruise Control (1GR-FE) (From Aug. 2017 Production), Engine Control (1GR-FE) (From Aug. 2017 Production), ECT and A/T Indicator (1GR-FE) (From Aug. 2017 Production)

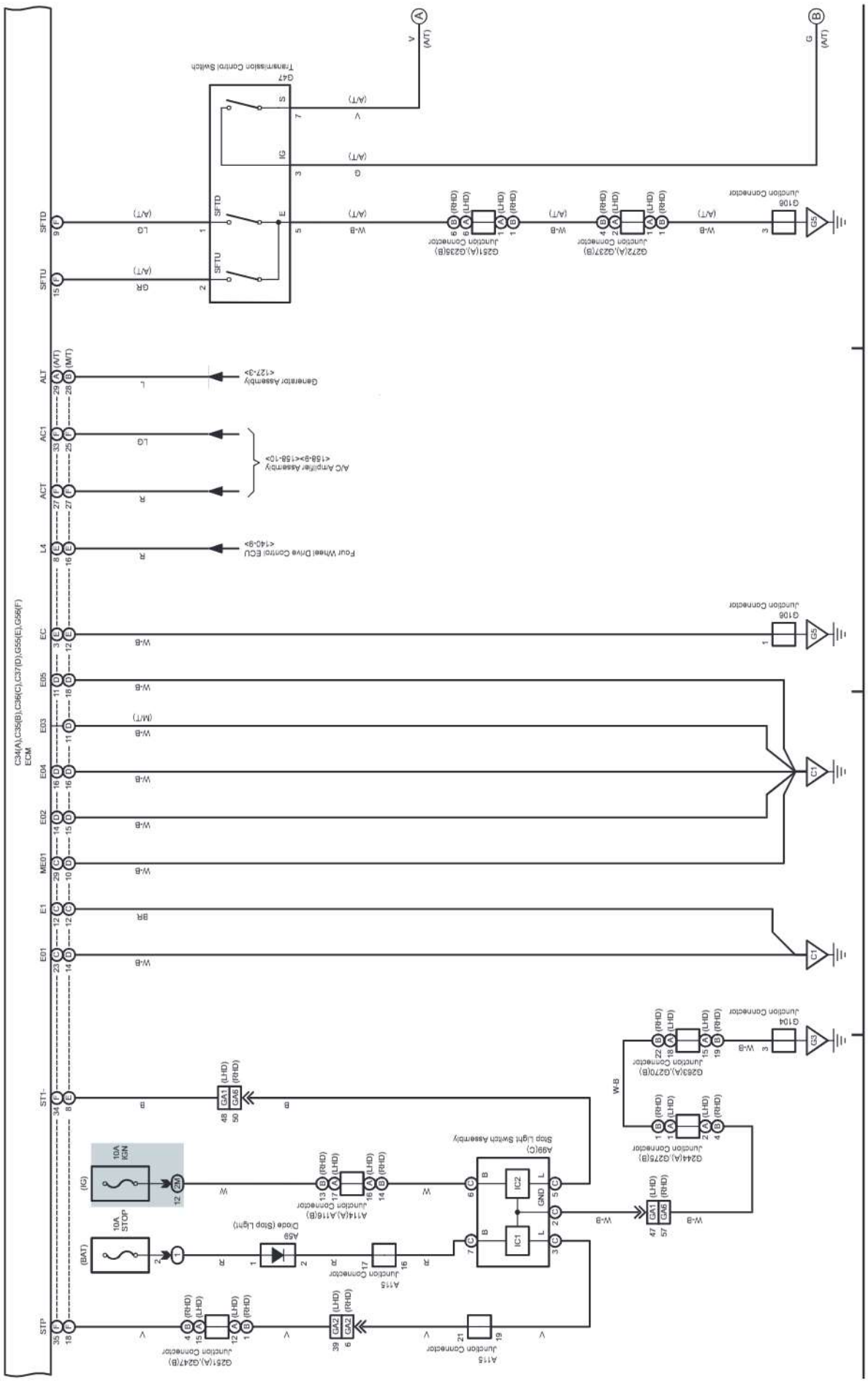

cardiagn.com

(Cont. next page)

Cruise Control (1GR-FE) (From Aug. 2017 Production), Engine Control (1GR-FE) (From Aug. 2017 Production), ECT and A/T Indicator (1GR-FE) (From Aug. 2017 Production)

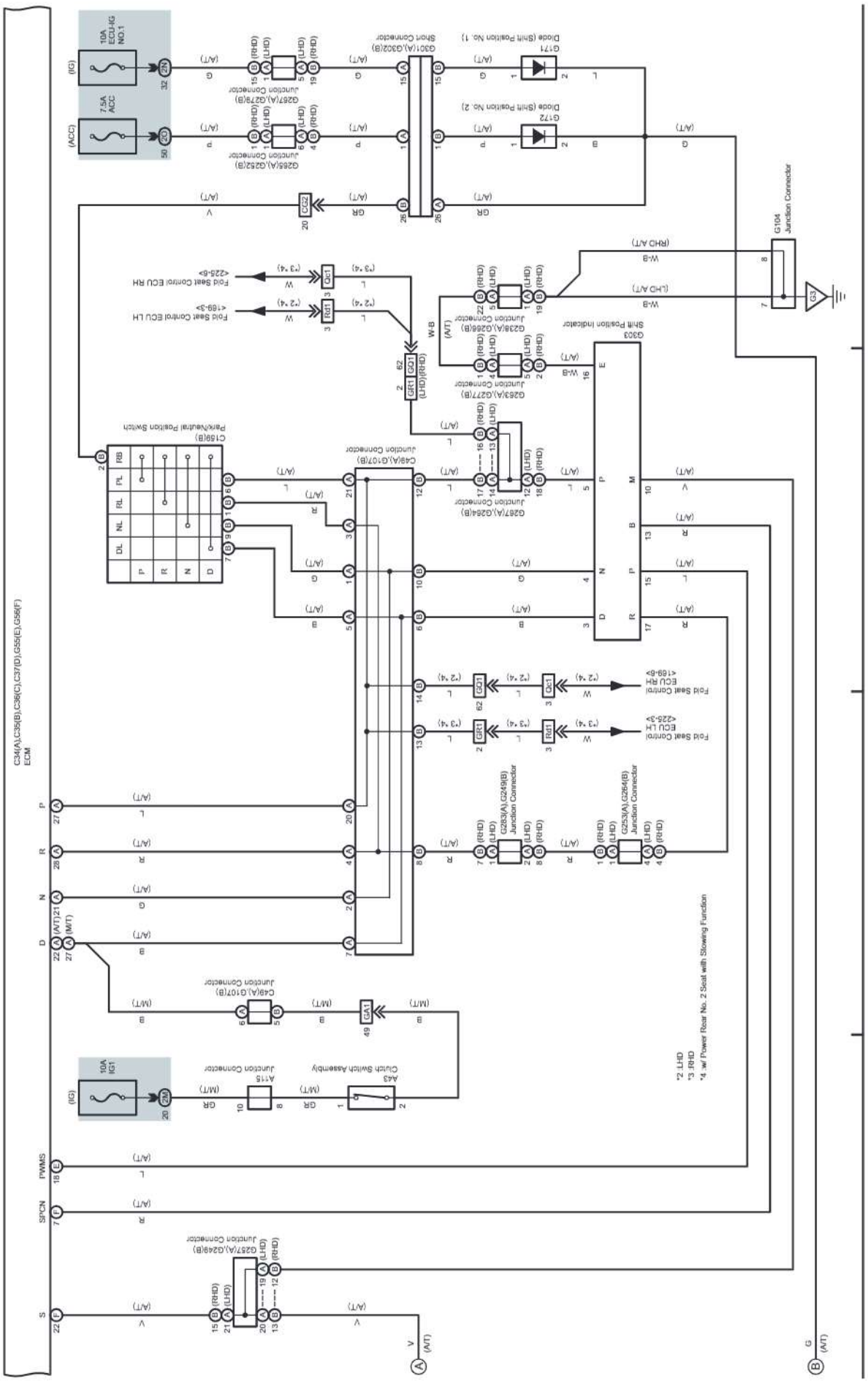

cardiagn.com

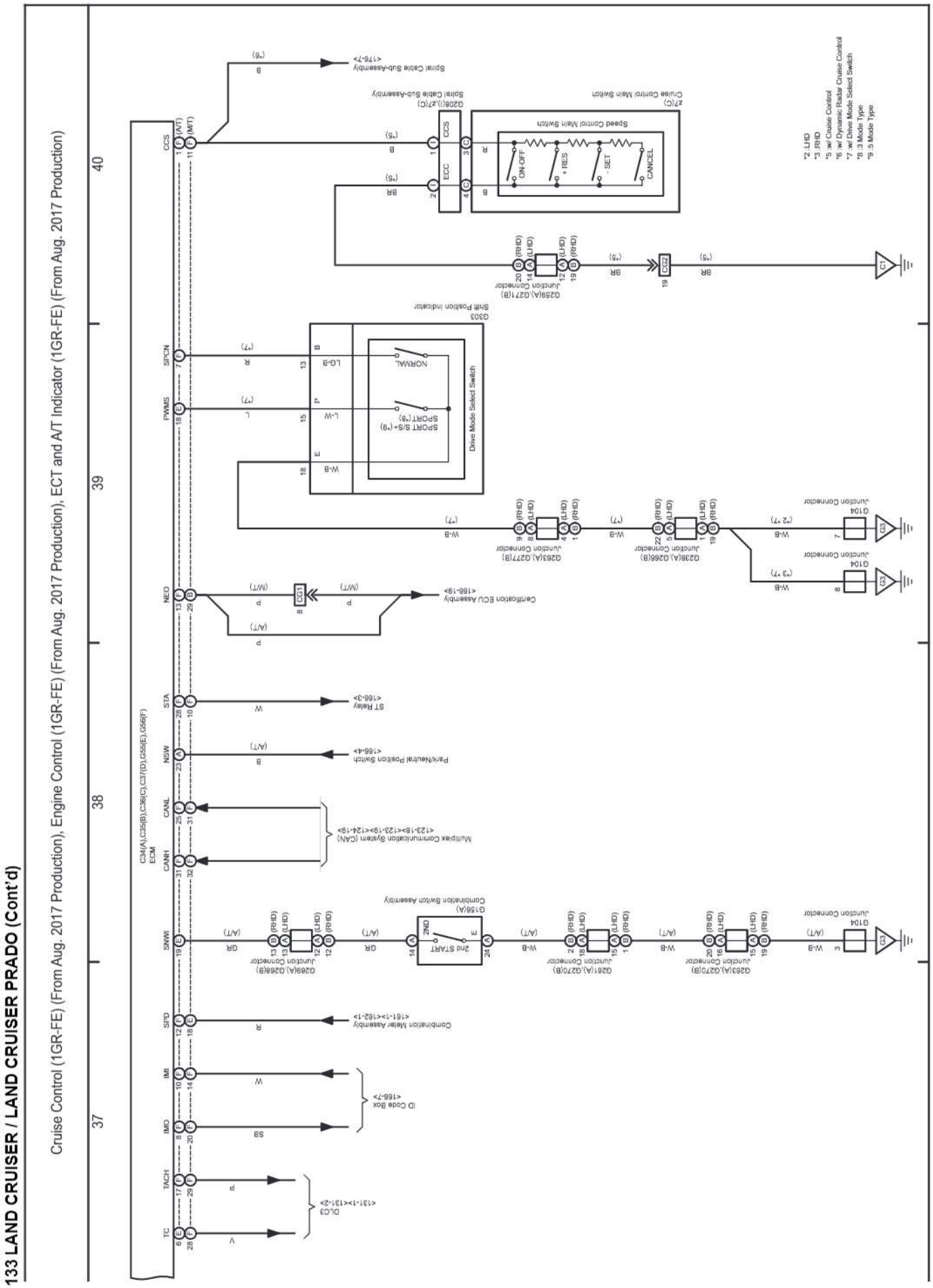

cardiagn.com

(Cont. next page)

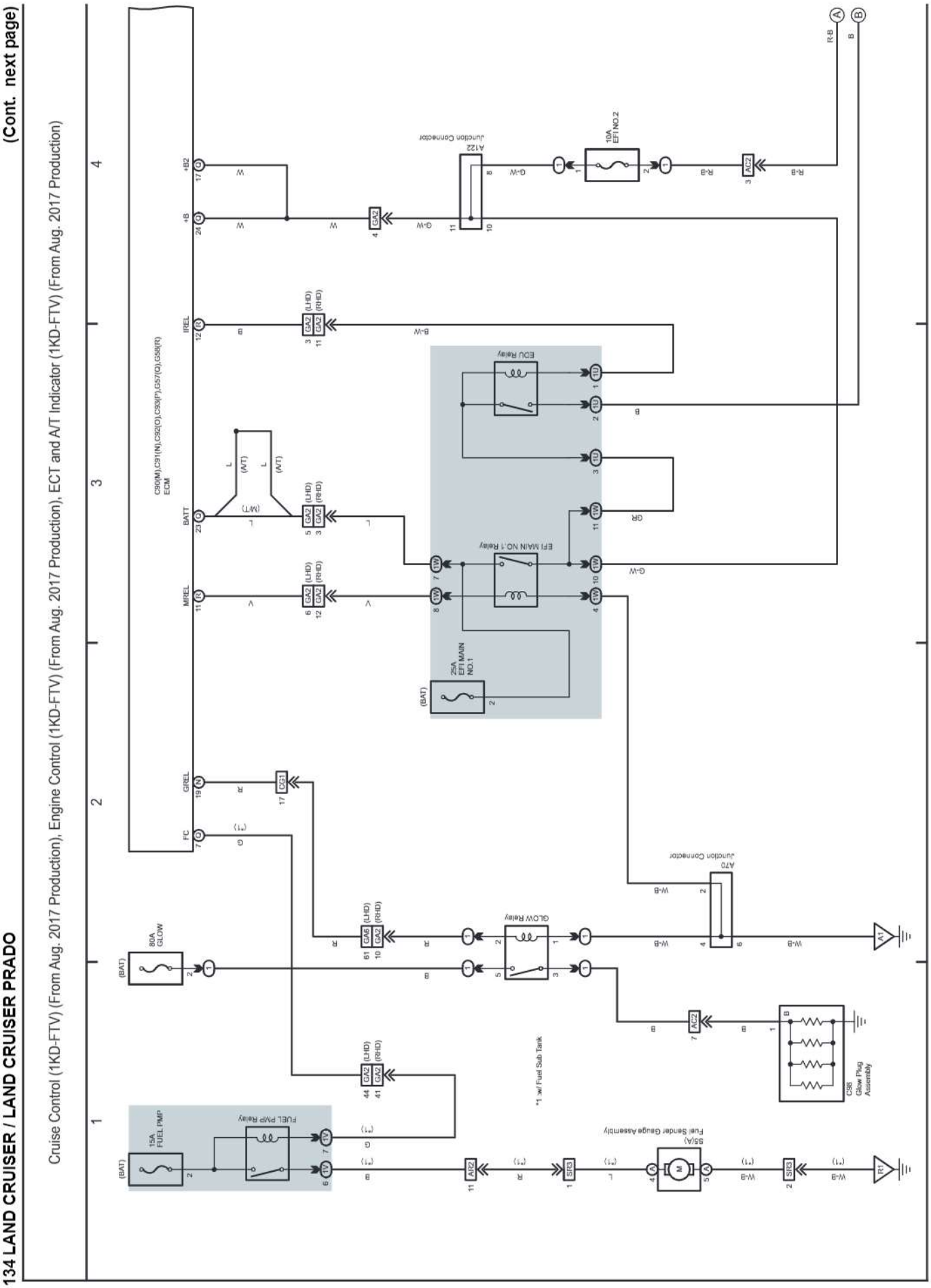

cardiagn.com

(Cont. next page)

Cruise Control (1KD-FTV) (From Aug. 2017 Production), Engine Control (1KD-FTV) (From Aug. 2017 Production), ECT and A/T Indicator (1KD-FTV) (From Aug. 2017 Production)

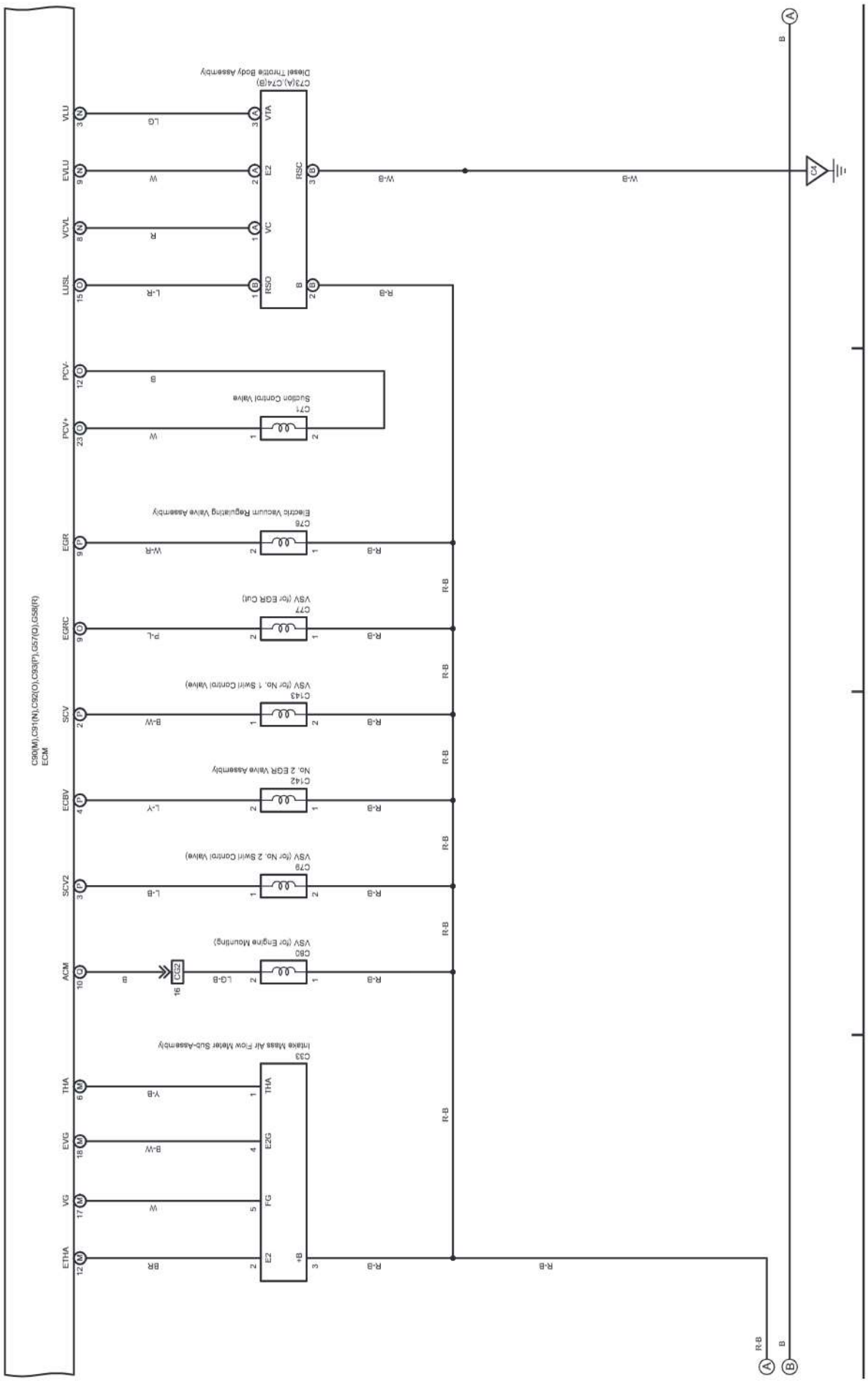

cardiagn.com

(Cont. next page)

Cruise Control (1KD-FTV) (From Aug. 2017 Production), Engine Control (1KD-FTV) (From Aug. 2017 Production), ECT and A/T Indicator (1KD-FTV) (From Aug. 2017 Production)

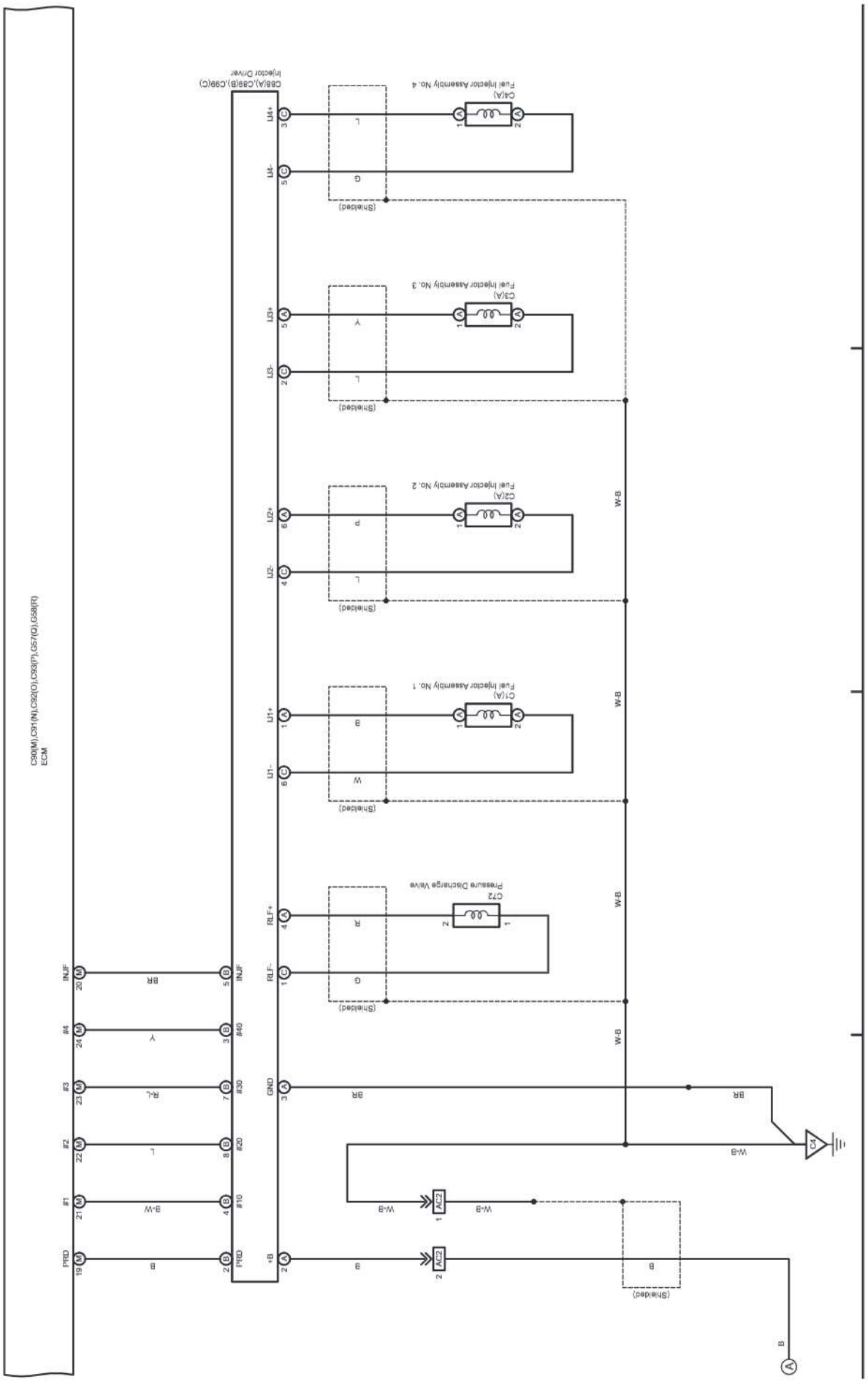

cardiagn.com

(Cont. next page)

Cruise Control (1KD-FTV) (From Aug. 2017 Production), Engine Control (1KD-FTV) (From Aug. 2017 Production), ECT and A/T Indicator (1KD-FTV) (From Aug. 2017 Production)

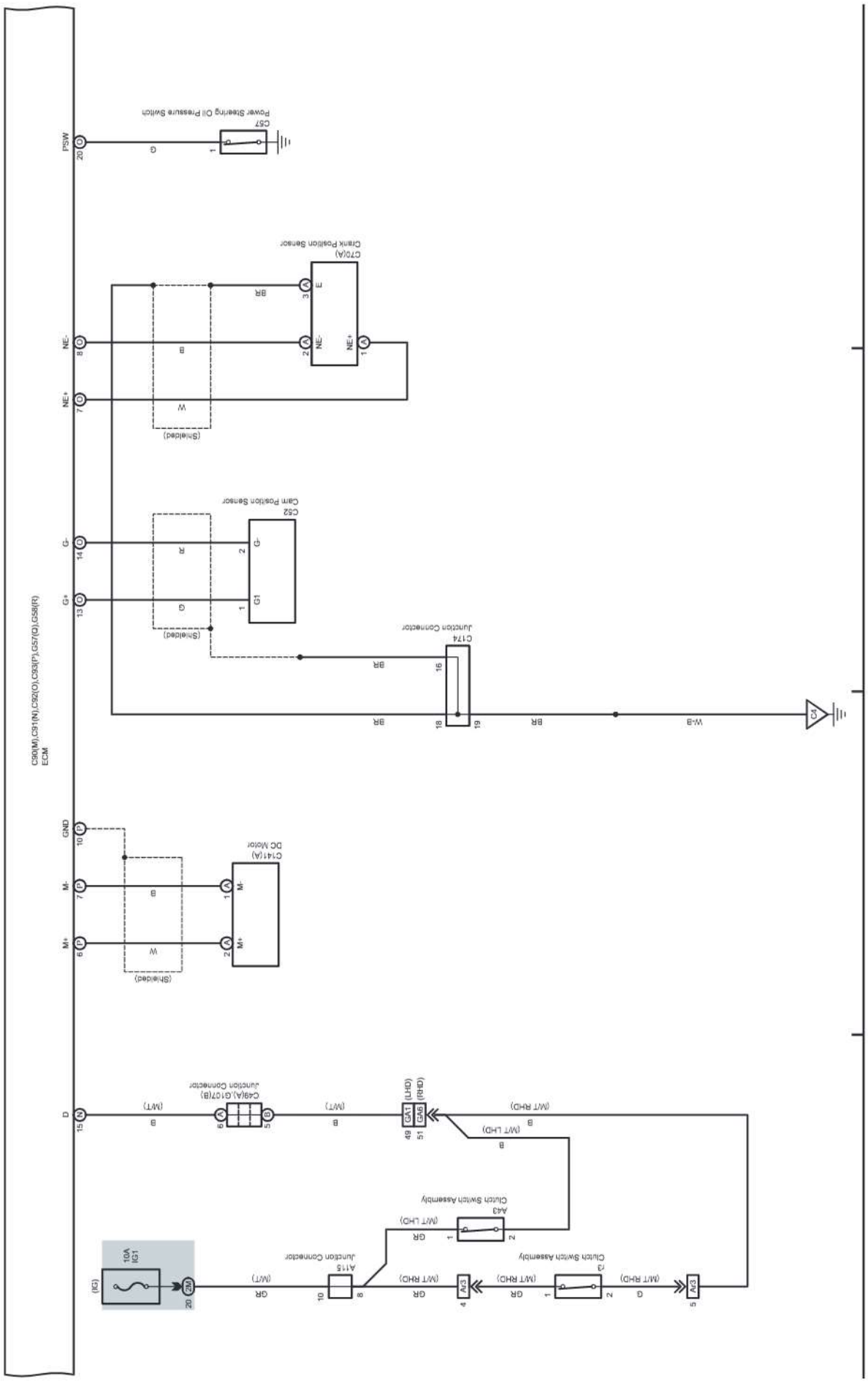

cardiagn.com

(Cont. next page)

Cruise Control (1KD-FTV) (From Aug. 2017 Production), Engine Control (1KD-FTV) (From Aug. 2017 Production), ECT and A/T Indicator (1KD-FTV) (From Aug. 2017 Production)

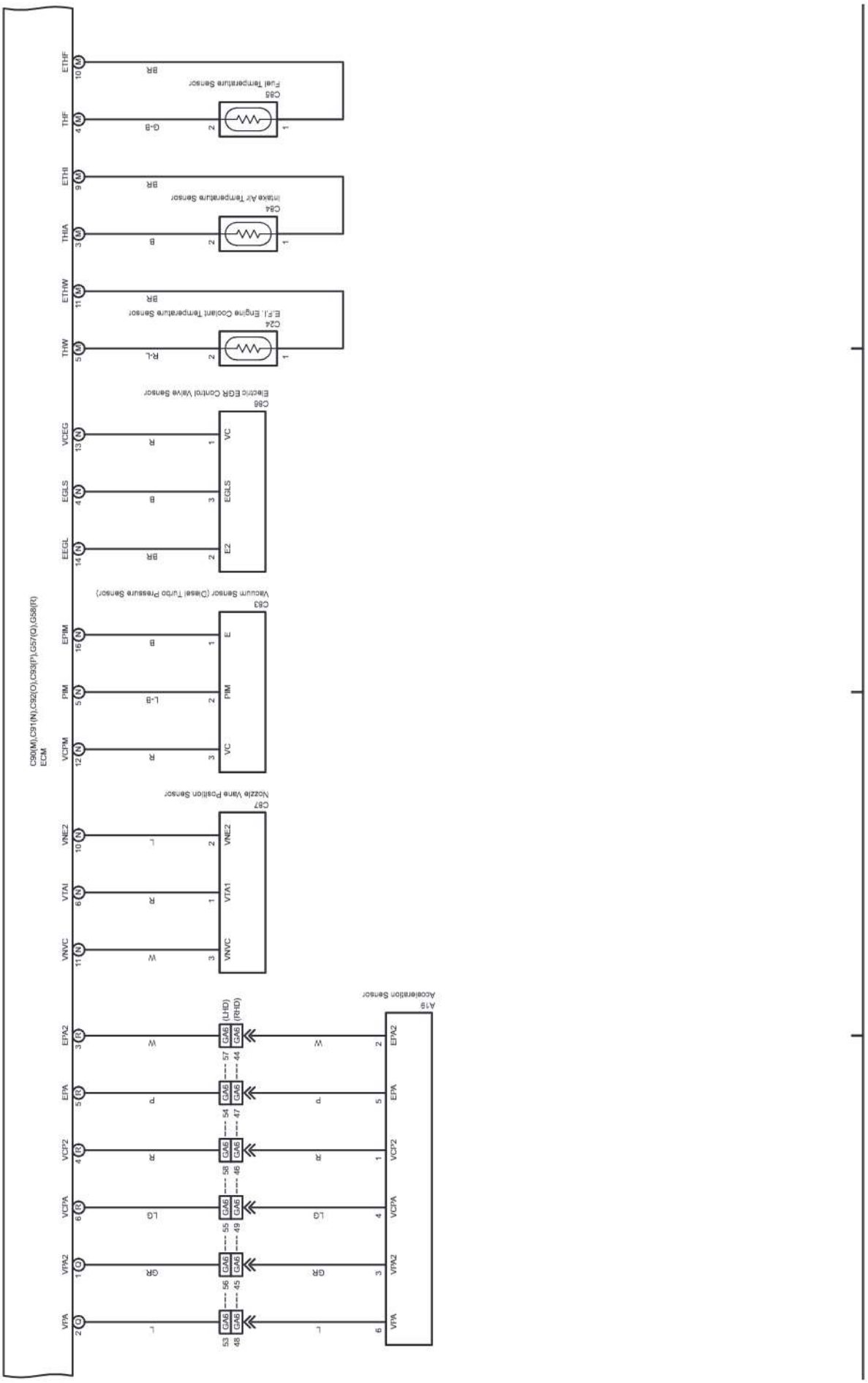

(Cont. next page)

Cruise Control (1KD-FTV) (From Aug. 2017 Production), Engine Control (1KD-FTV) (From Aug. 2017 Production), ECT and A/T Indicator (1KD-FTV) (From Aug. 2017 Production)

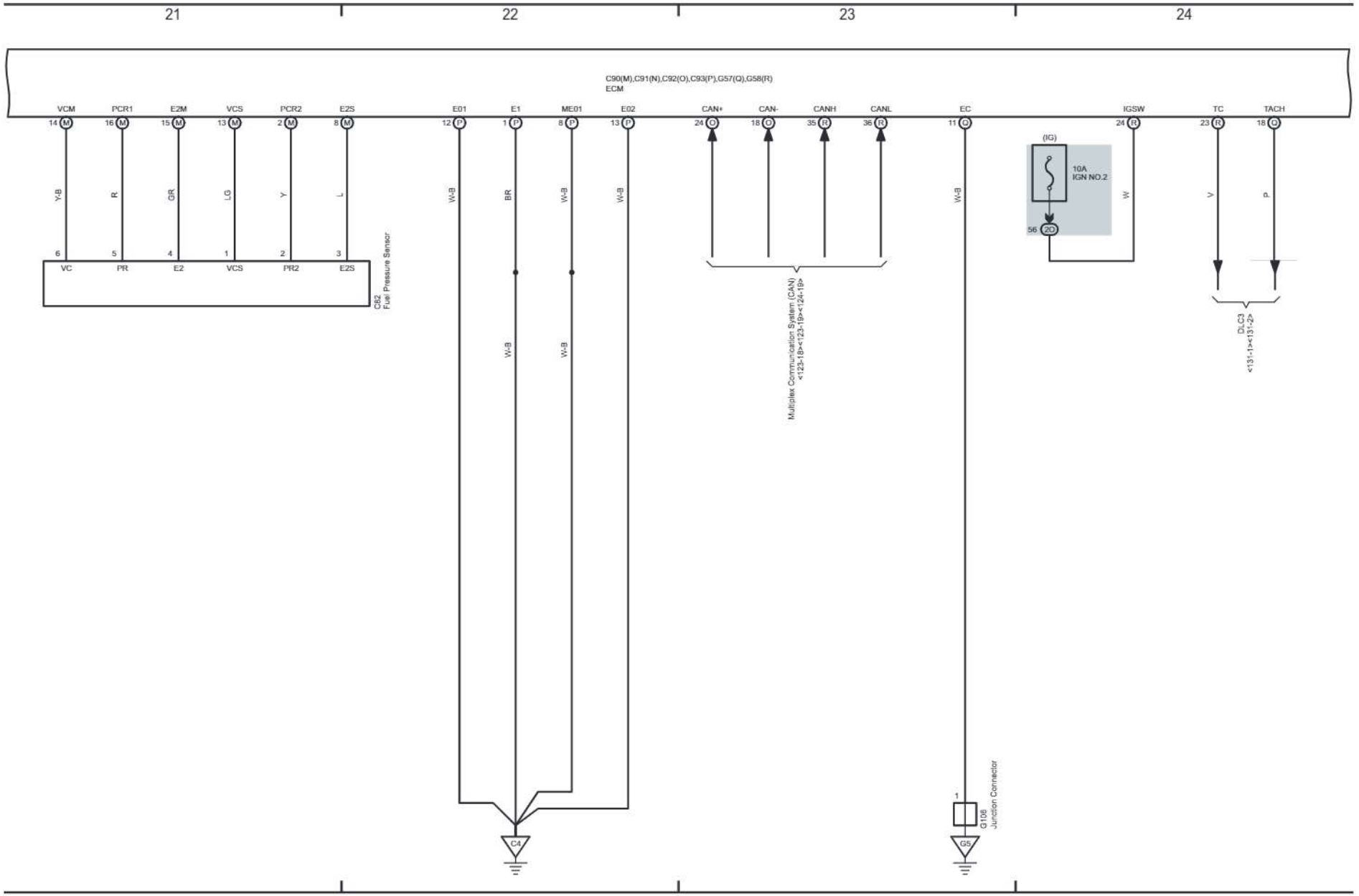

cardiagn.com

cardiagn.com

(Cont. next page)

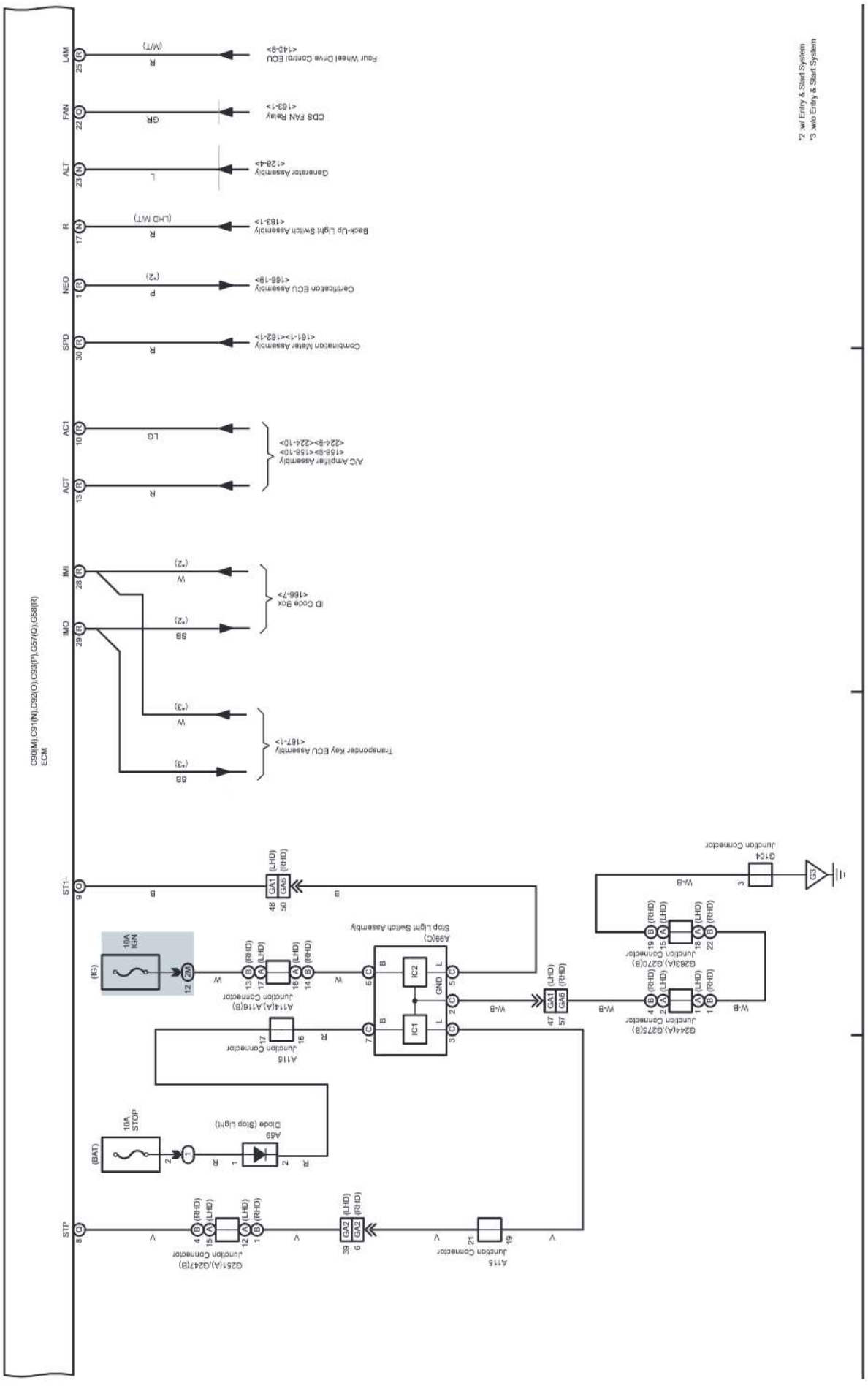

(Cont. next page)

Cruise Control (1KD-FTV) (From Aug. 2017 Production), Engine Control (1KD-FTV) (From Aug. 2017 Production), ECT and A/T Indicator (1KD-FTV) (From Aug. 2017 Production)

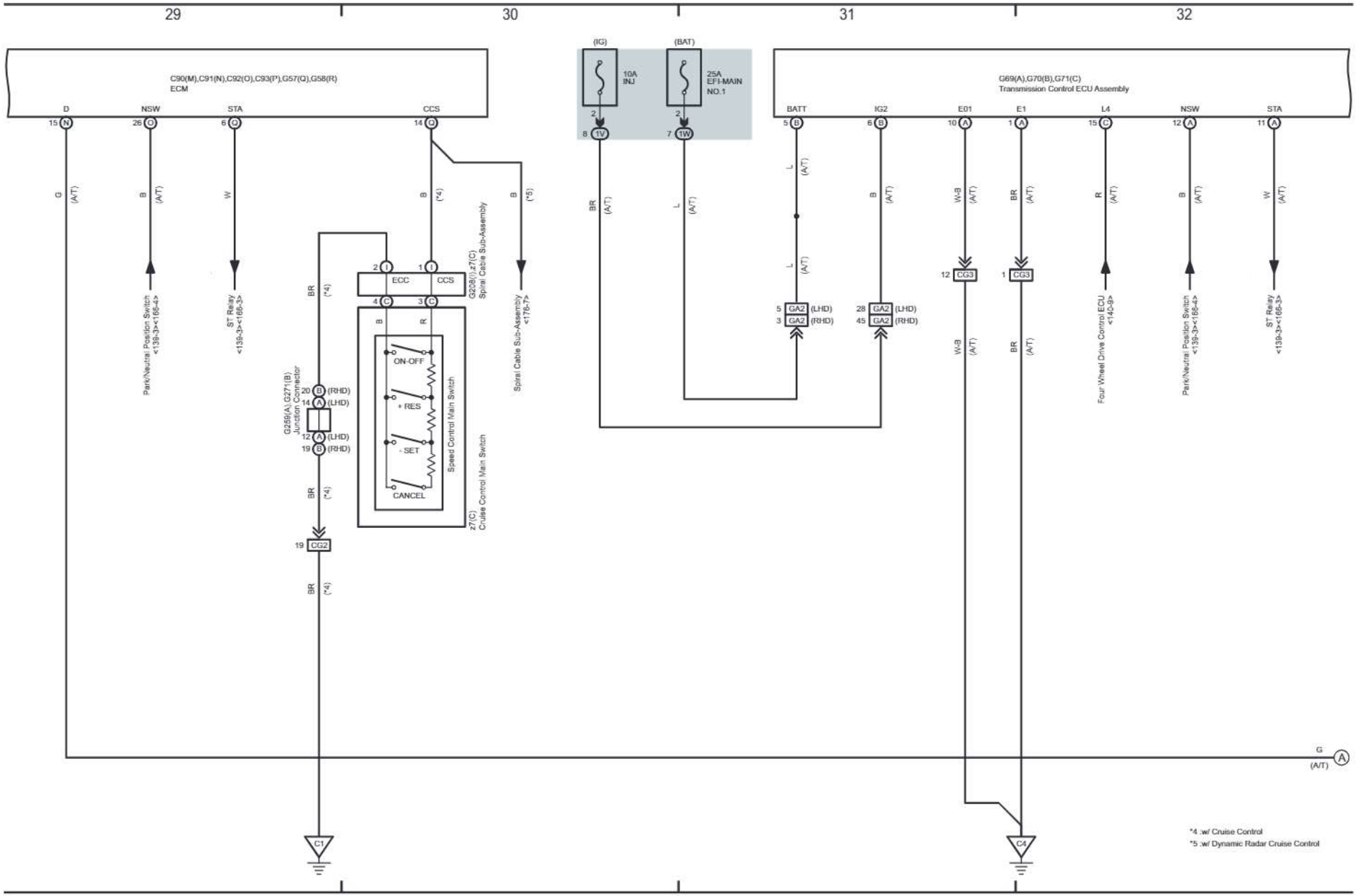

cardiagn.com

cardiagn.com

(Cont. next page)

Cruise Control (1KD-FTV) (From Aug. 2017 Production), Engine Control (1KD-FTV) (From Aug. 2017 Production), ECT and A/T Indicator (1KD-FTV) (From Aug. 2017 Production)

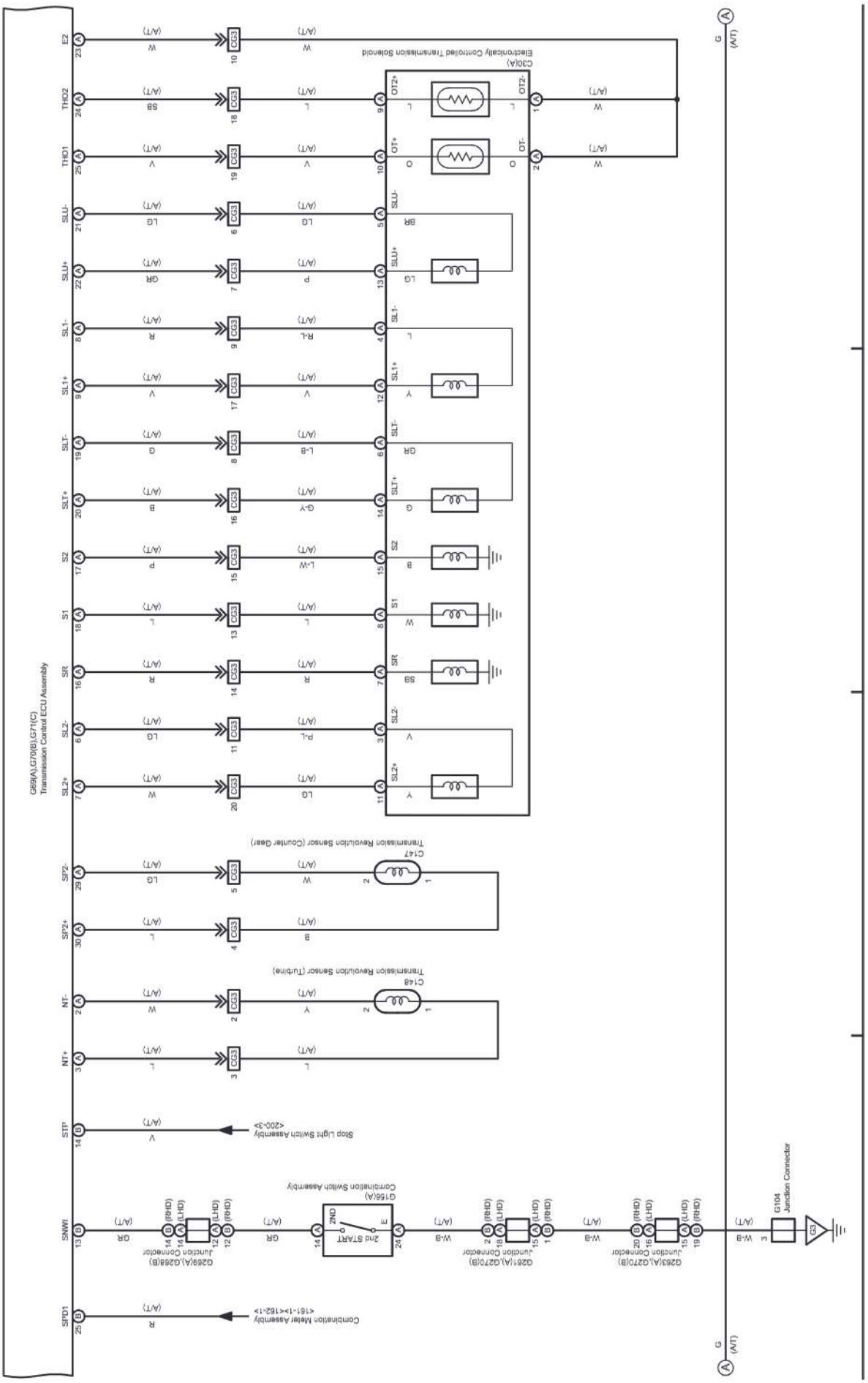

cardiagn.com

(Cont. next page)

Cruise Control (1KD-FTV) (From Aug. 2017 Production), Engine Control (1KD-FTV) (From Aug. 2017 Production), ECT and A/T Indicator (1KD-FTV) (From Aug. 2017 Production)

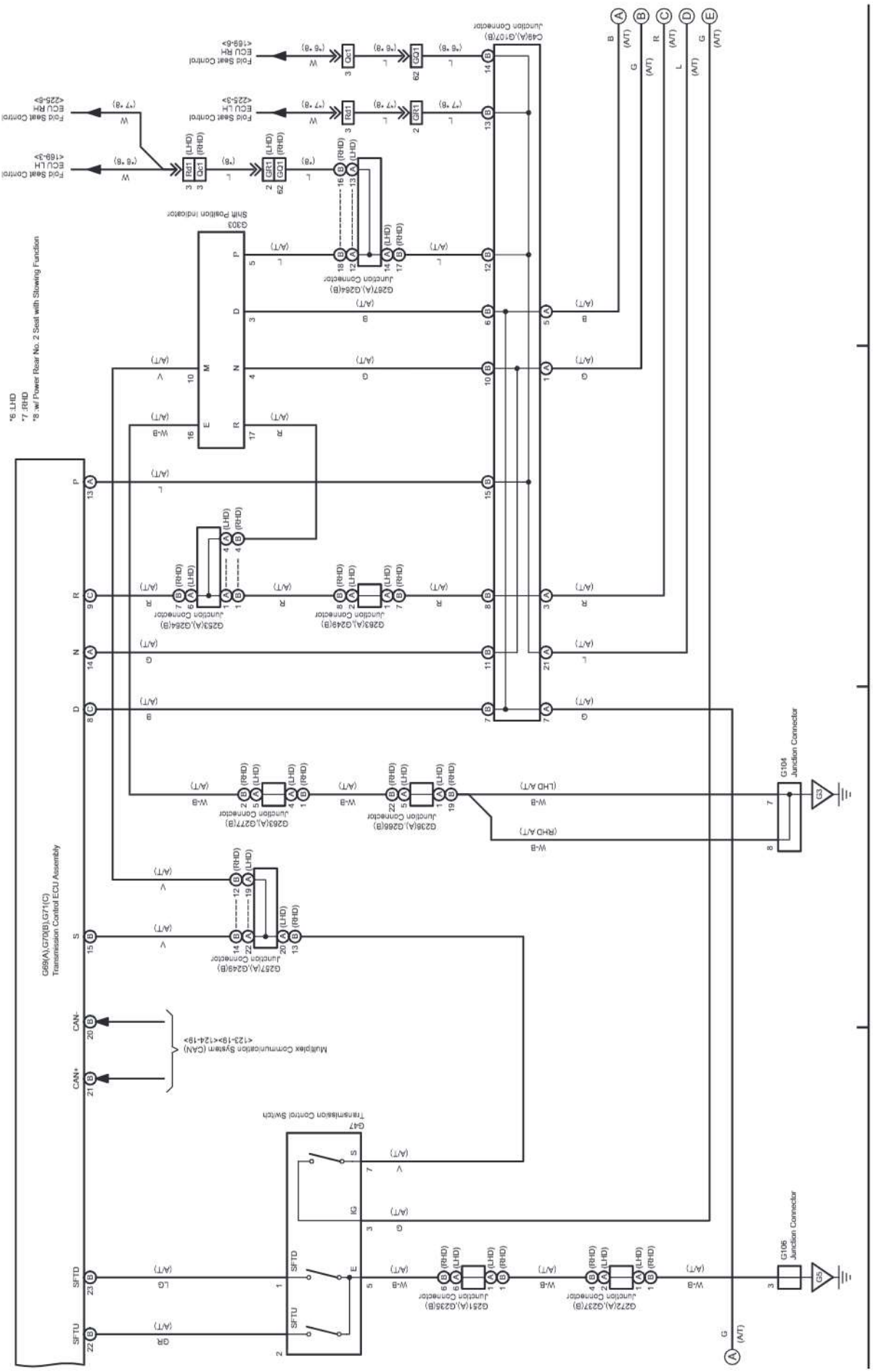

cardiagn.com

Cruise Control (1KD-FTV) (From Aug. 2017 Production), Engine Control (1KD-FTV) (From Aug. 2017 Production), ECT and A/T Indicator (1KD-FTV) (From Aug. 2017 Production)

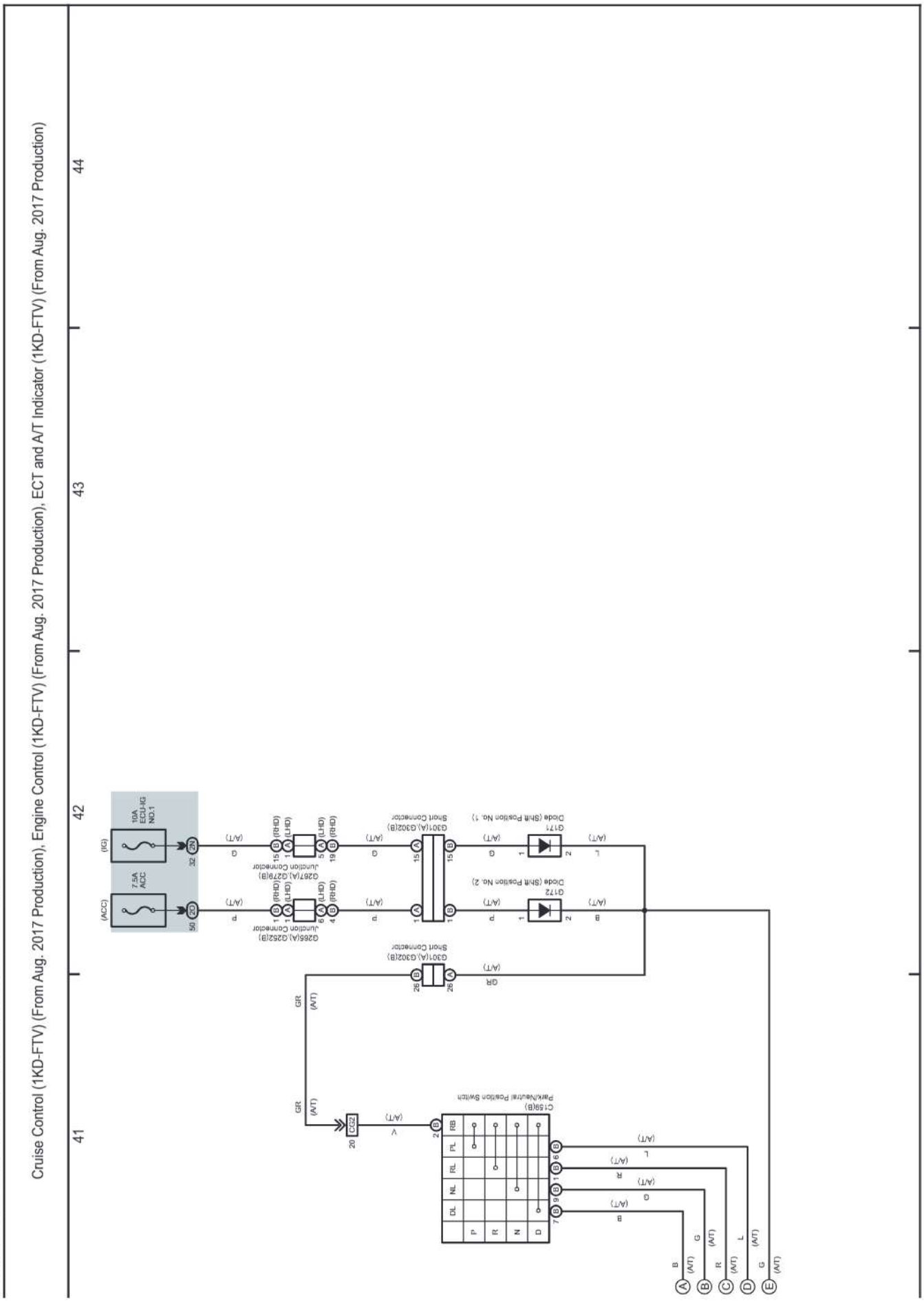

cardiagn.com

(Cont. next page)

Cruise Control (2TR-FE) (From Aug. 2017 Production), ECT and A/T Indicator (2TR-FE) (From Aug. 2017 Production), Engine Control (2TR-FE) (From Aug. 2017 Production)

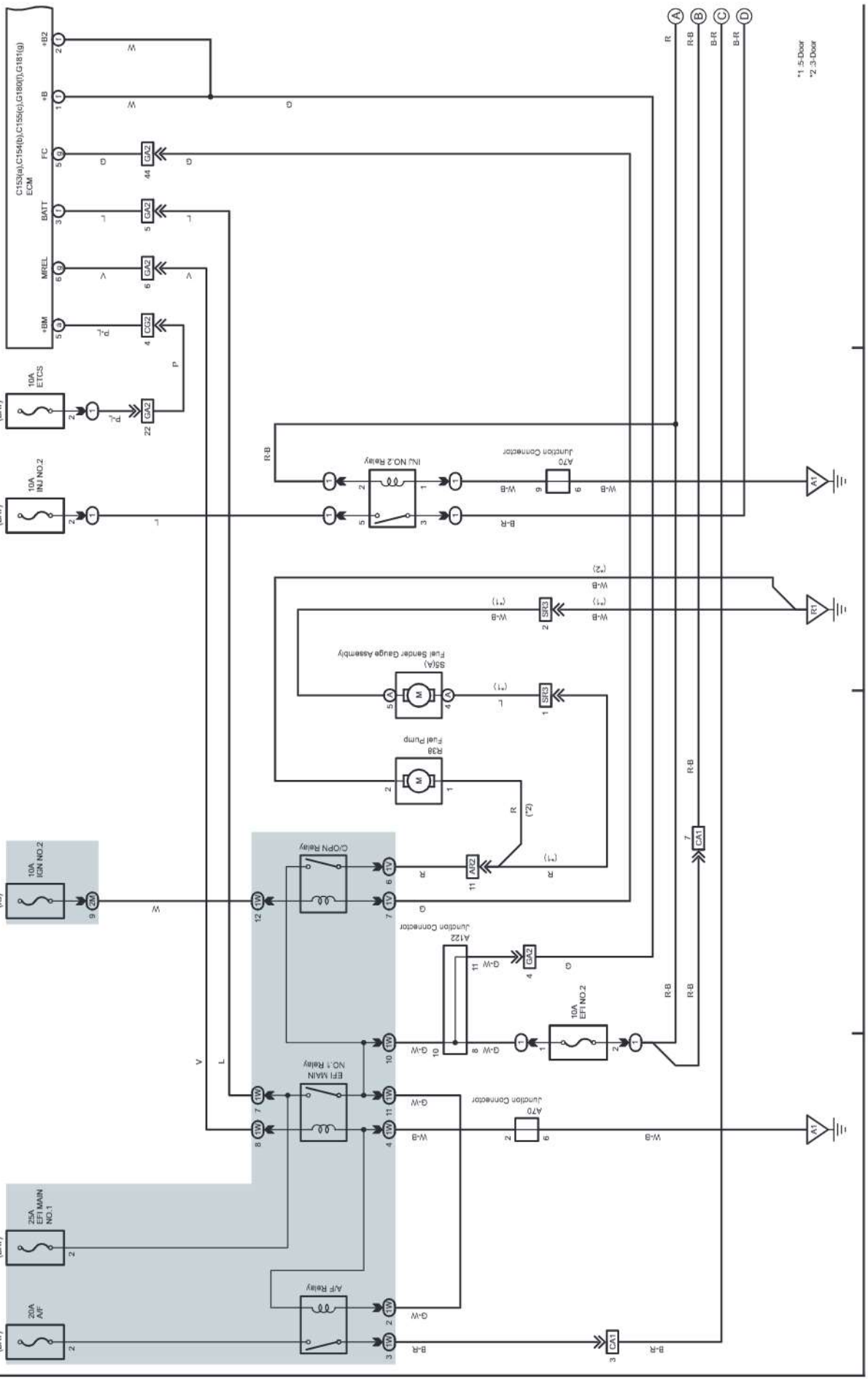

cardiagn.com

(Cont. next page)

135 LAND CRUISER / LAND CRUISER PRADO (Cont'd)

Cruise Control (2TR-FE) (From Aug. 2017 Production), ECT and A/T Indicator (2TR-FE) (From Aug. 2017 Production), Engine Control (2TR-FE) (From Aug. 2017 Production)

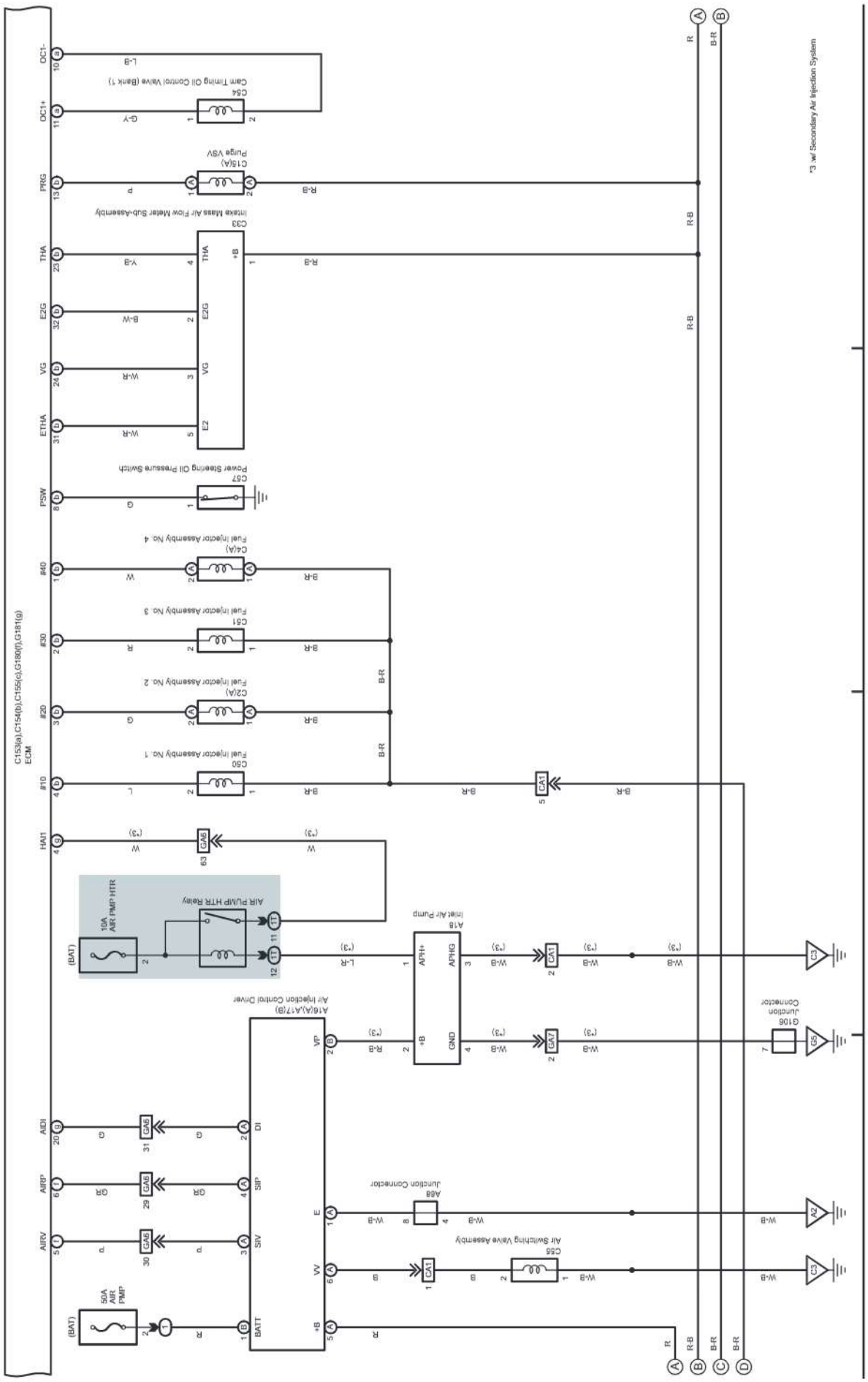

cardiagn.com

(Cont. next page)

Cruise Control (2TR-FE) (From Aug. 2017 Production), ECT and A/T Indicator (2TR-FE) (From Aug. 2017 Production), Engine Control (2TR-FE) (From Aug. 2017 Production)

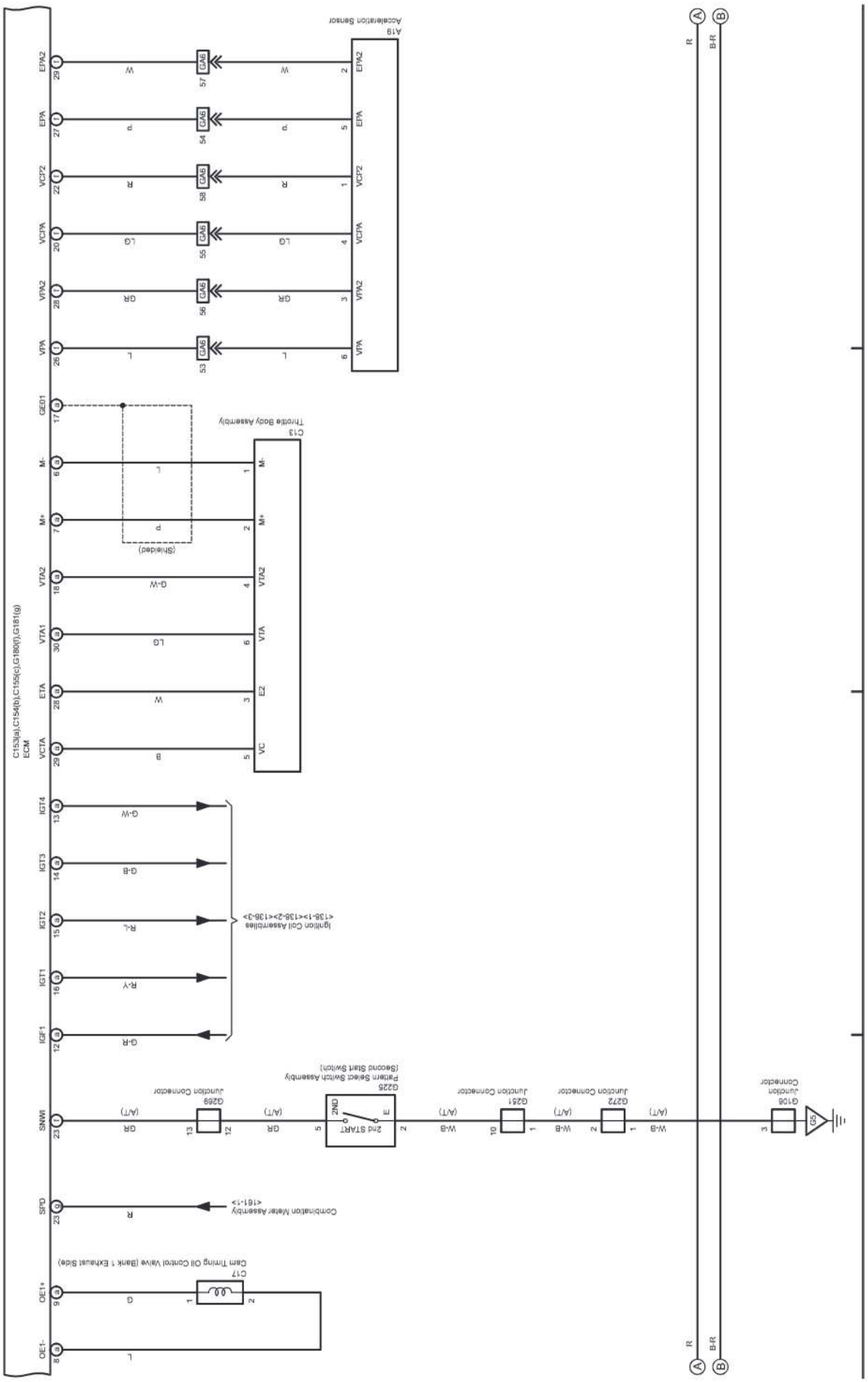

(Cont. next page)

Cruise Control (2TR-FE) (From Aug. 2017 Production), ECT and A/T Indicator (2TR-FE) (From Aug. 2017 Production), Engine Control (2TR-FE) (From Aug. 2017 Production)

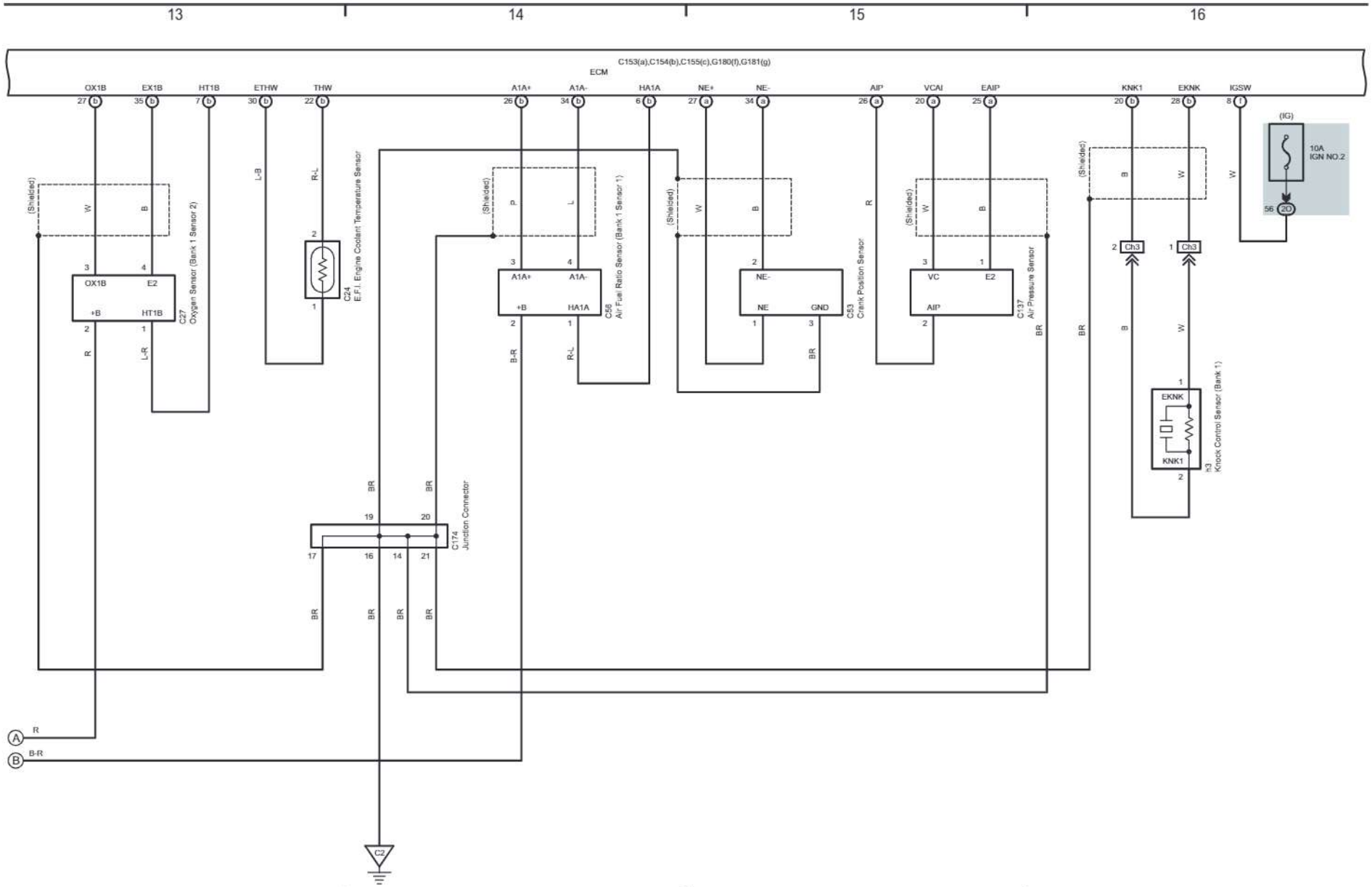

cardiagn.com

cardiagn.com

(Cont. next page)

Cruise Control (2TR-FE) (From Aug. 2017 Production), ECT and A/T Indicator (2TR-FE) (From Aug. 2017 Production), Engine Control (2TR-FE) (From Aug. 2017 Production)

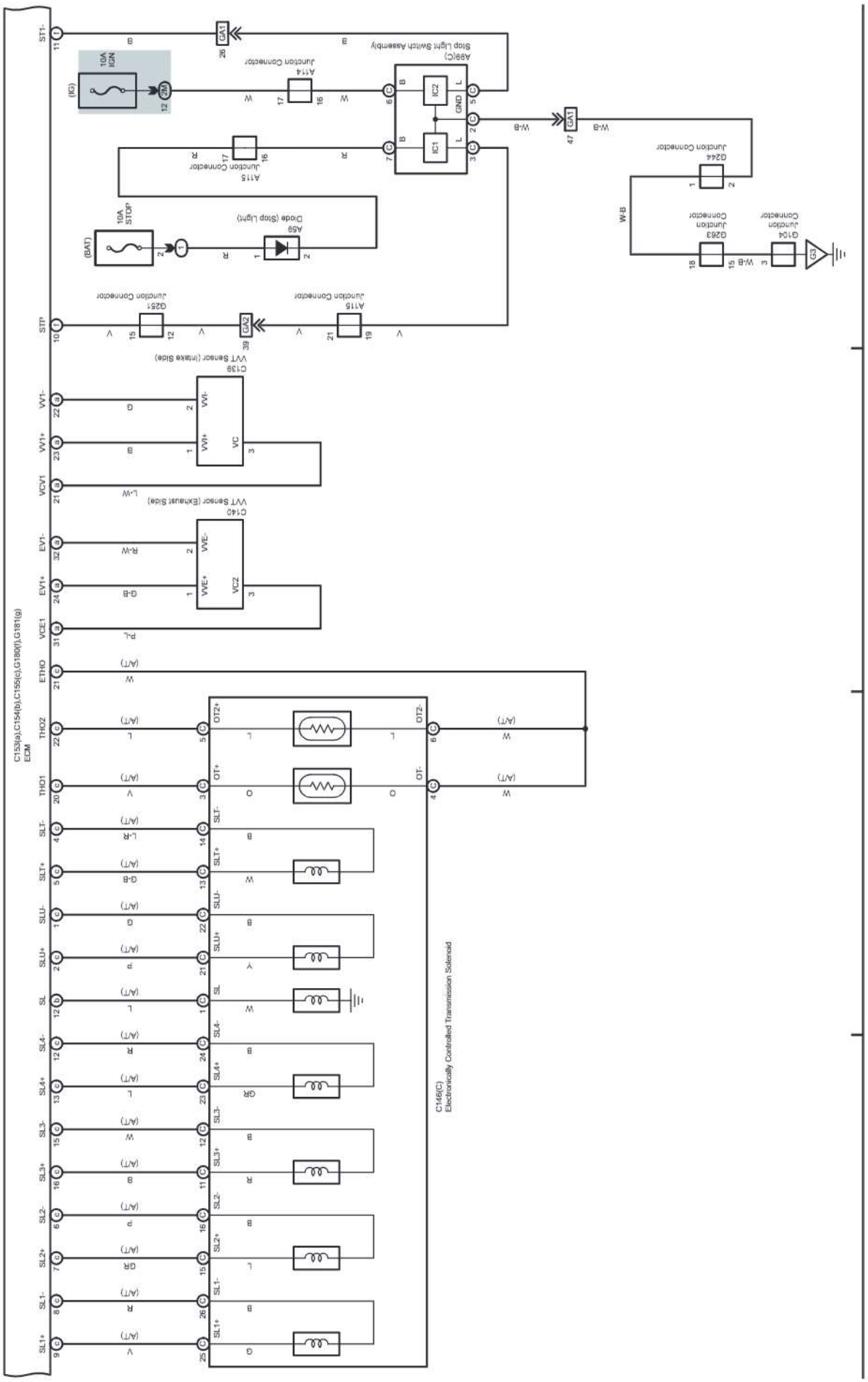

(Cont. next page)

Cruise Control (2TR-FE) (From Aug. 2017 Production), ECT and A/T Indicator (2TR-FE) (From Aug. 2017 Production), Engine Control (2TR-FE) (From Aug. 2017 Production)

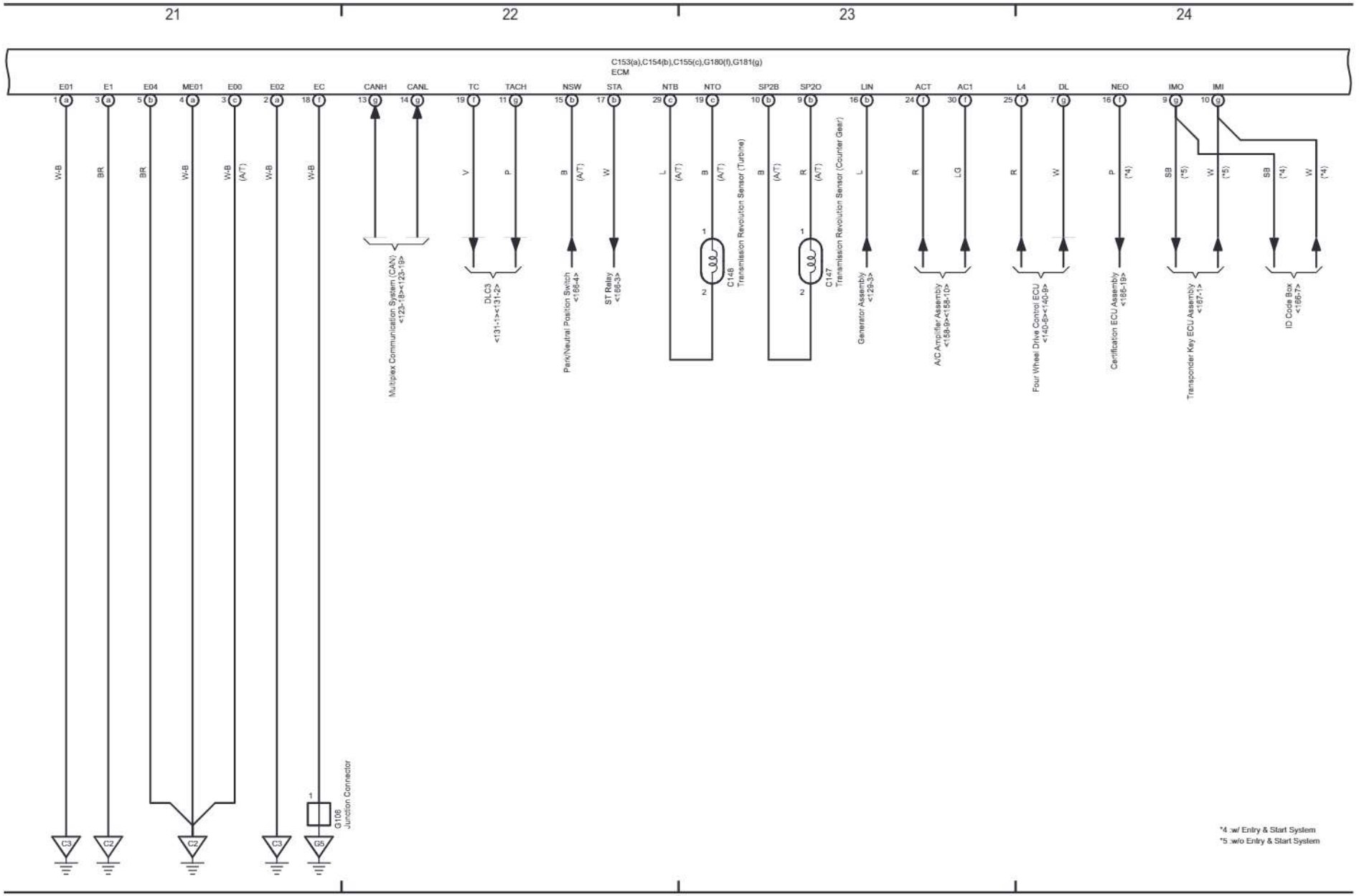

cardiagn.com

cardiagn.com

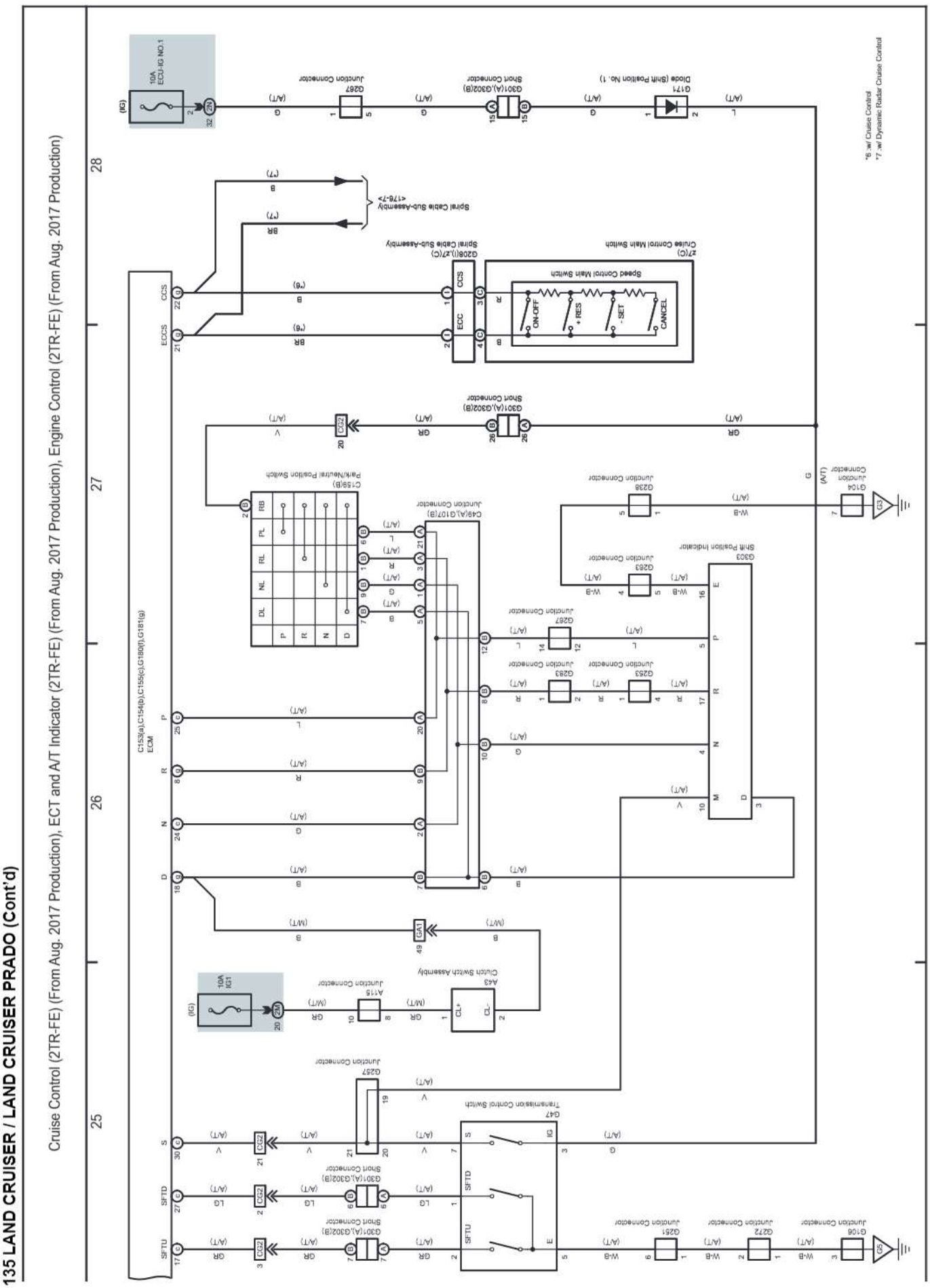

cardiagn.com

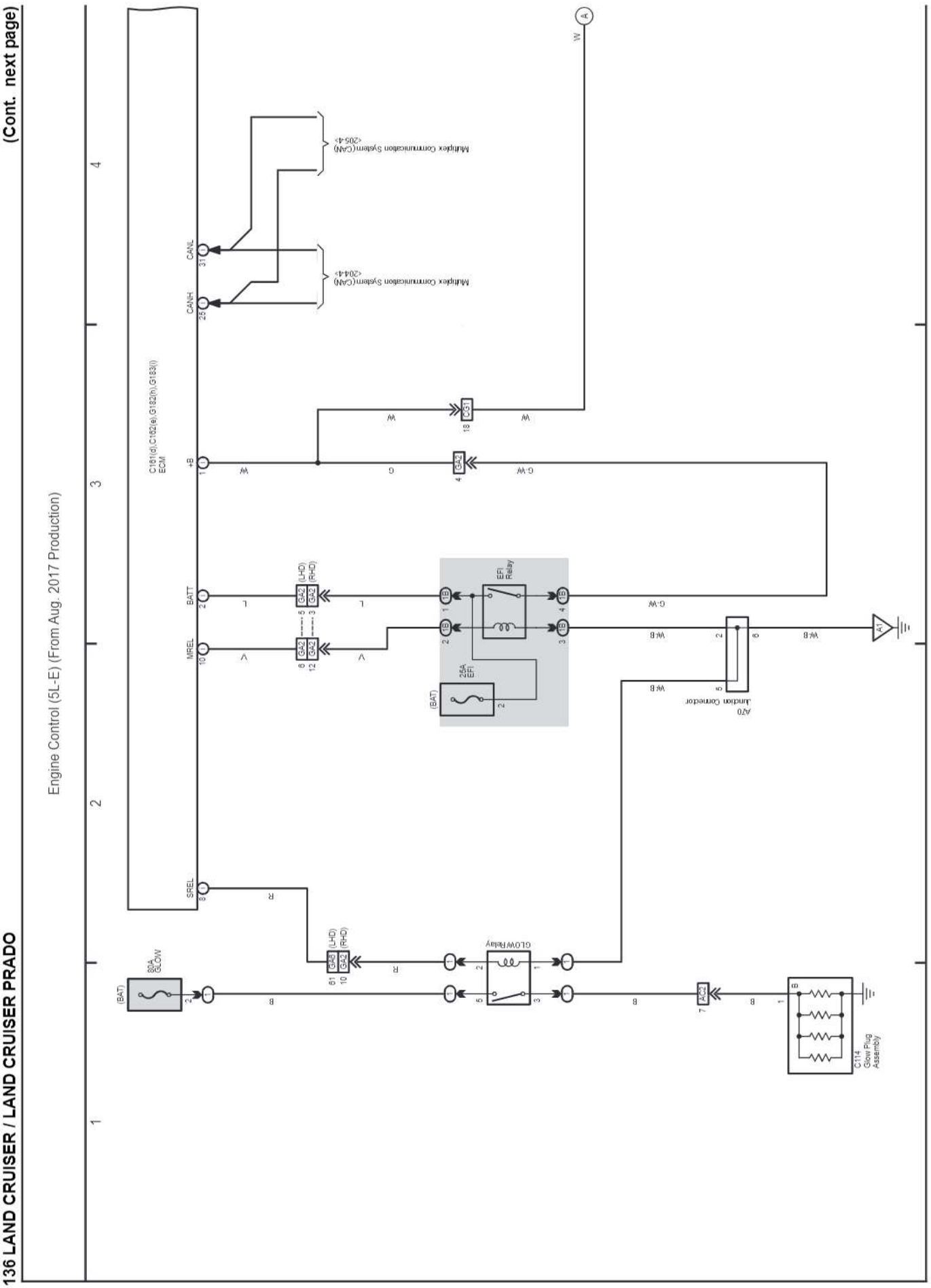

cardiagn.com

(Cont. next page)

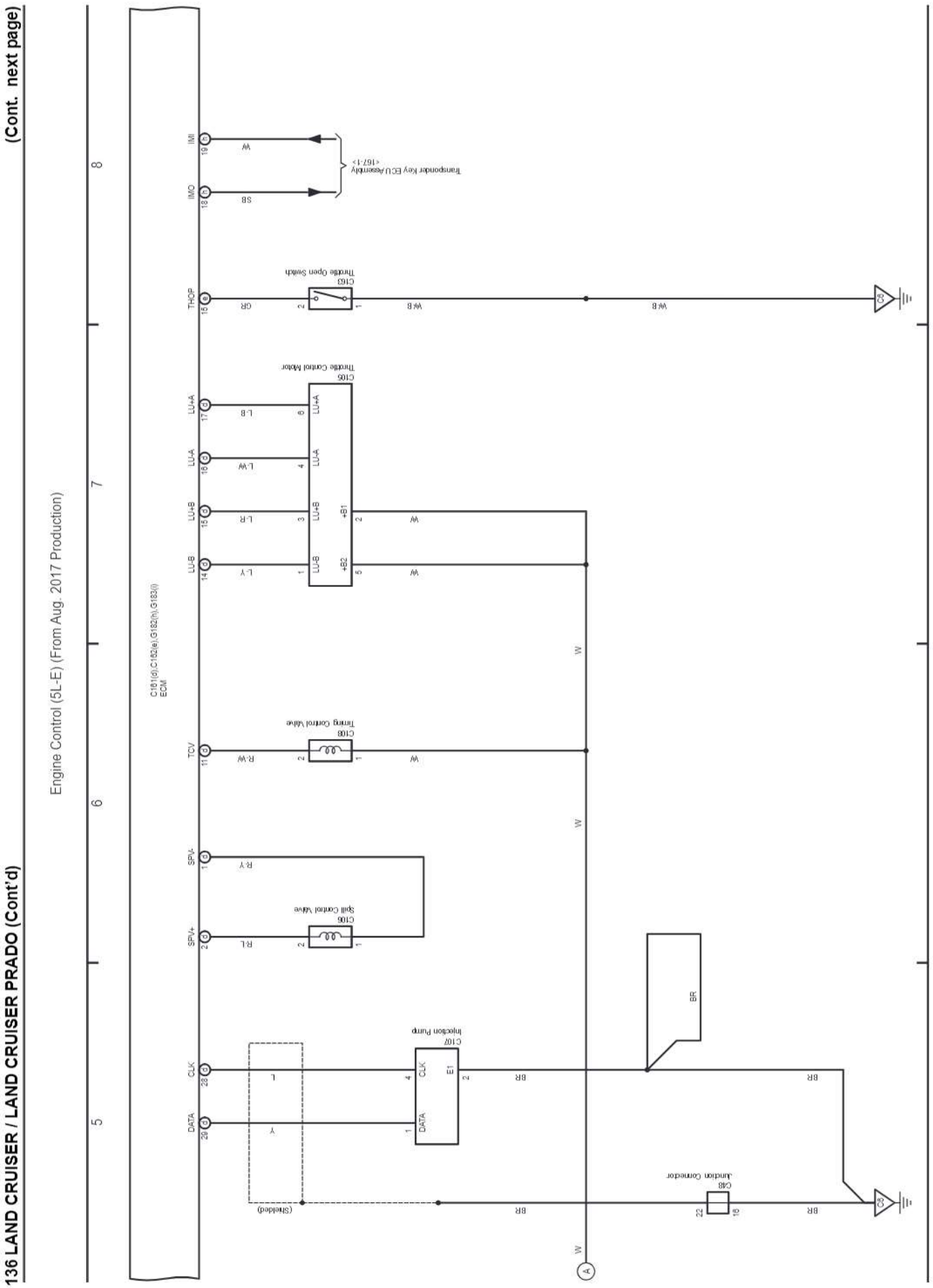

cardiagn.com

(Cont. next page)

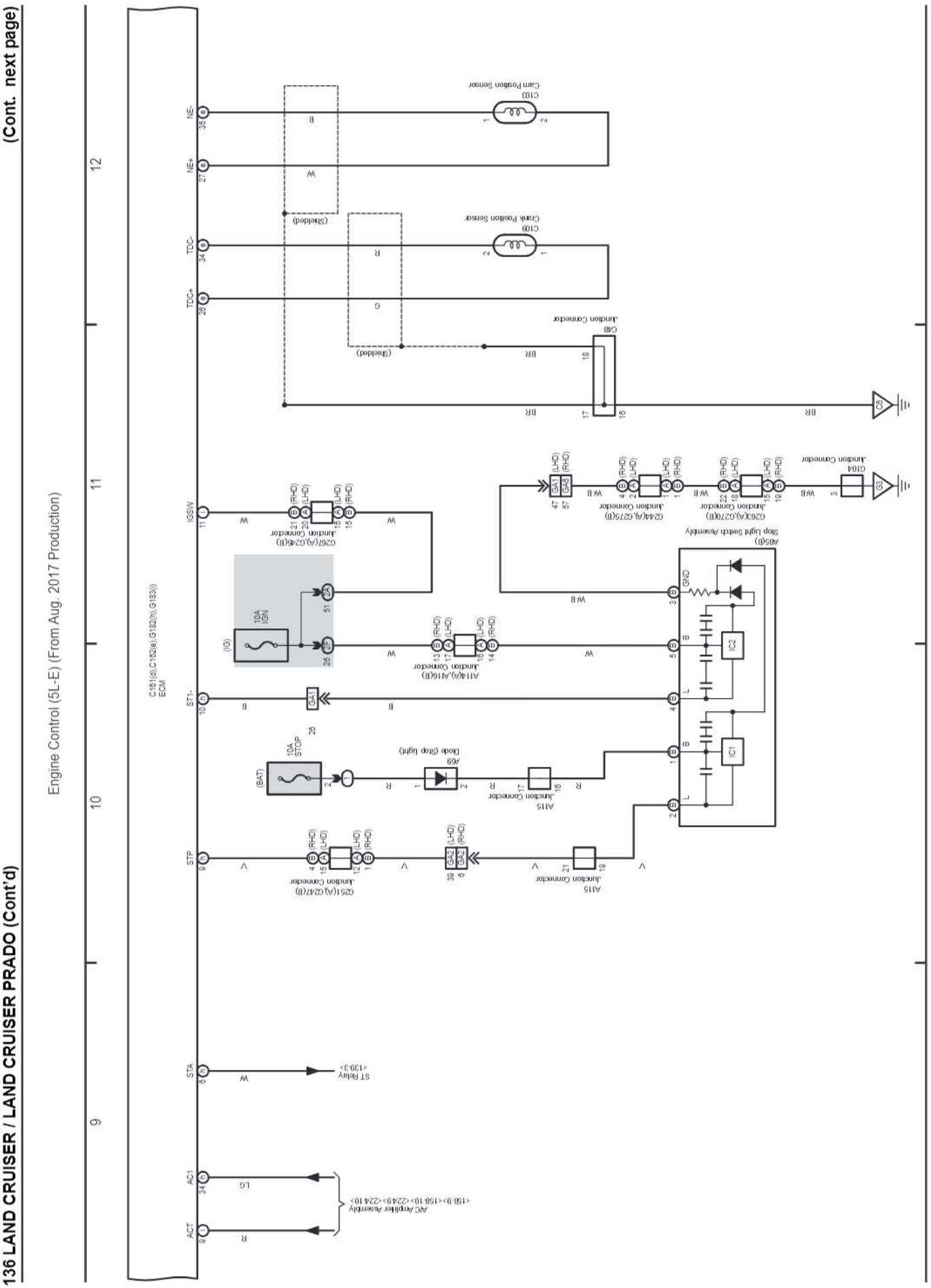

136 LAND CRUISER / LAND CRUISER PRADO (Cont'd)

(Cont. next page)

Engine Control (5L-E) (From Aug. 2017 Production)

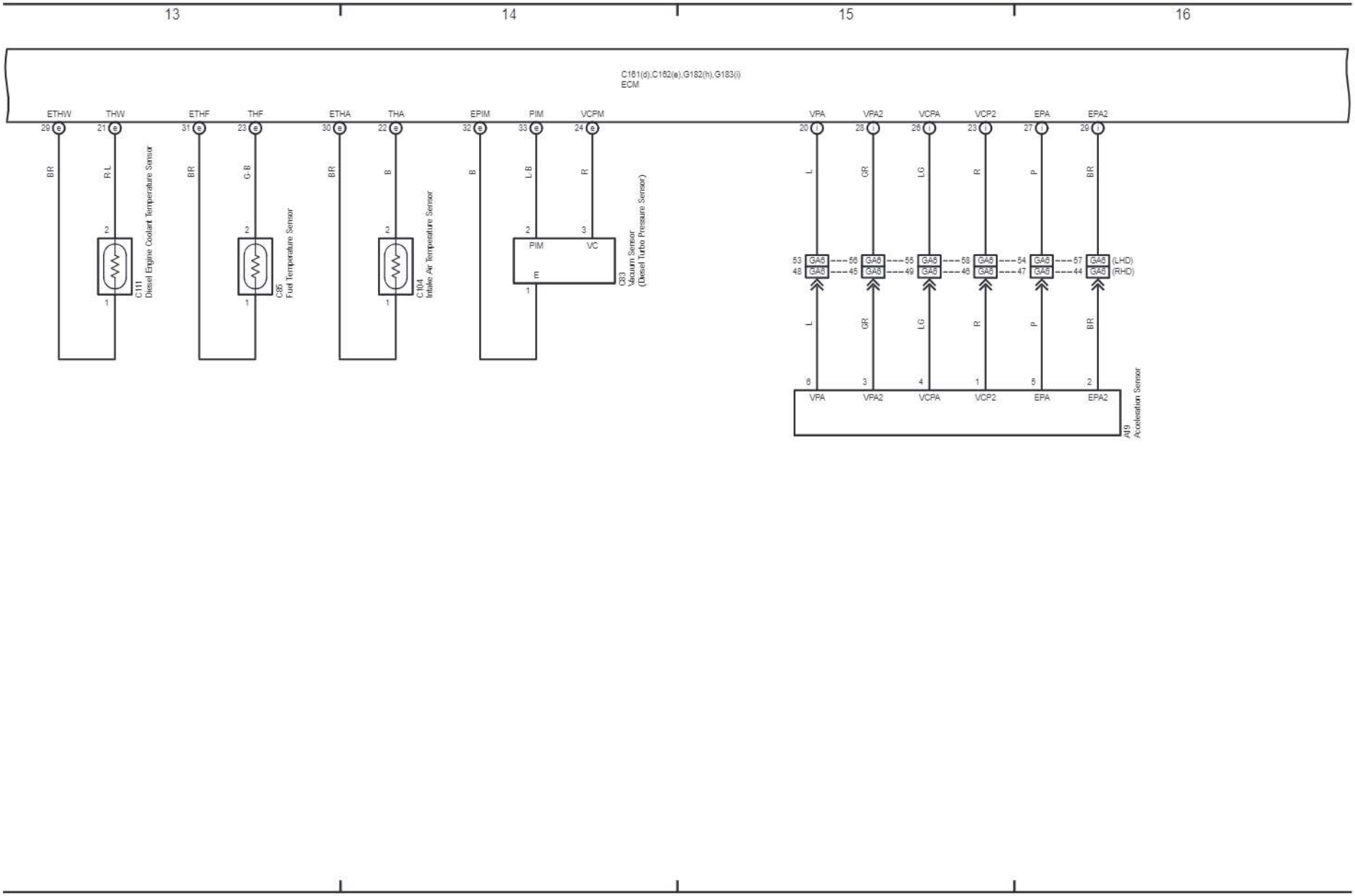

cardiagn.com

cardiagn.com

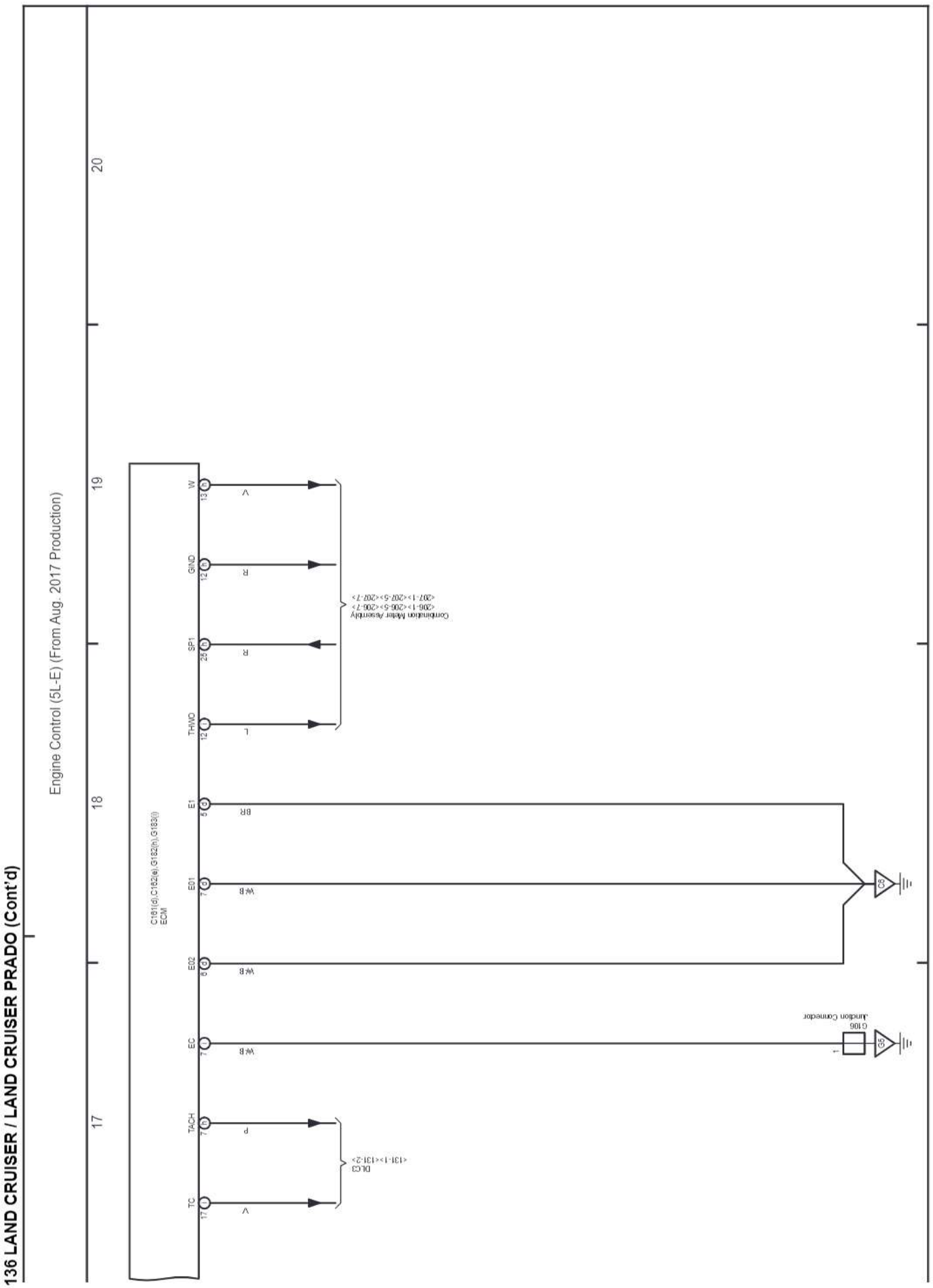

cardiagn.com

137 LAND CRUISER / LAND CRUISER PRADO

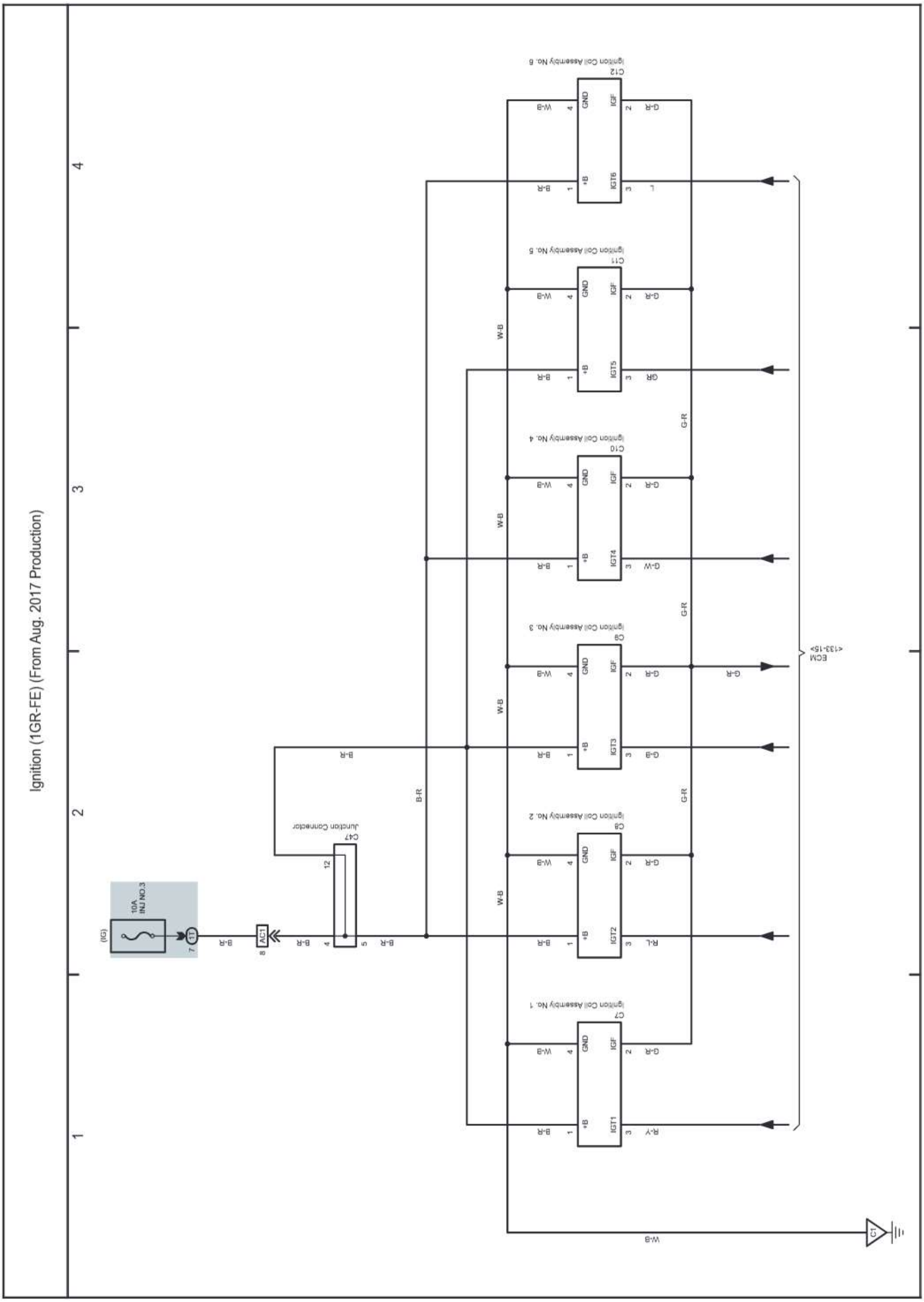

cardiagn.com

M OVERALL ELECTRICAL WIRING DIAGRAM

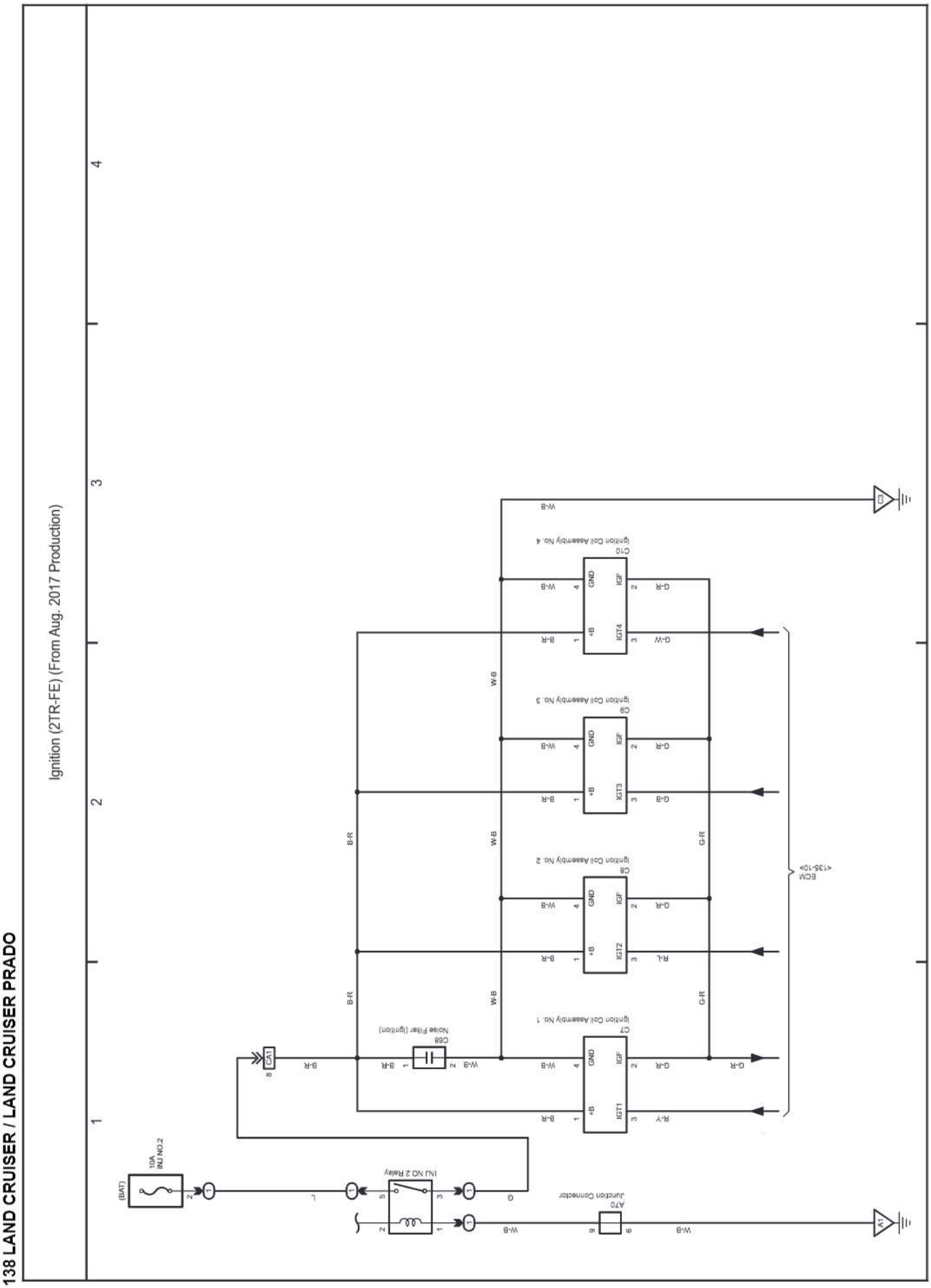

cardiagn.com

M OVERALL ELECTRICAL WIRING DIAGRAM

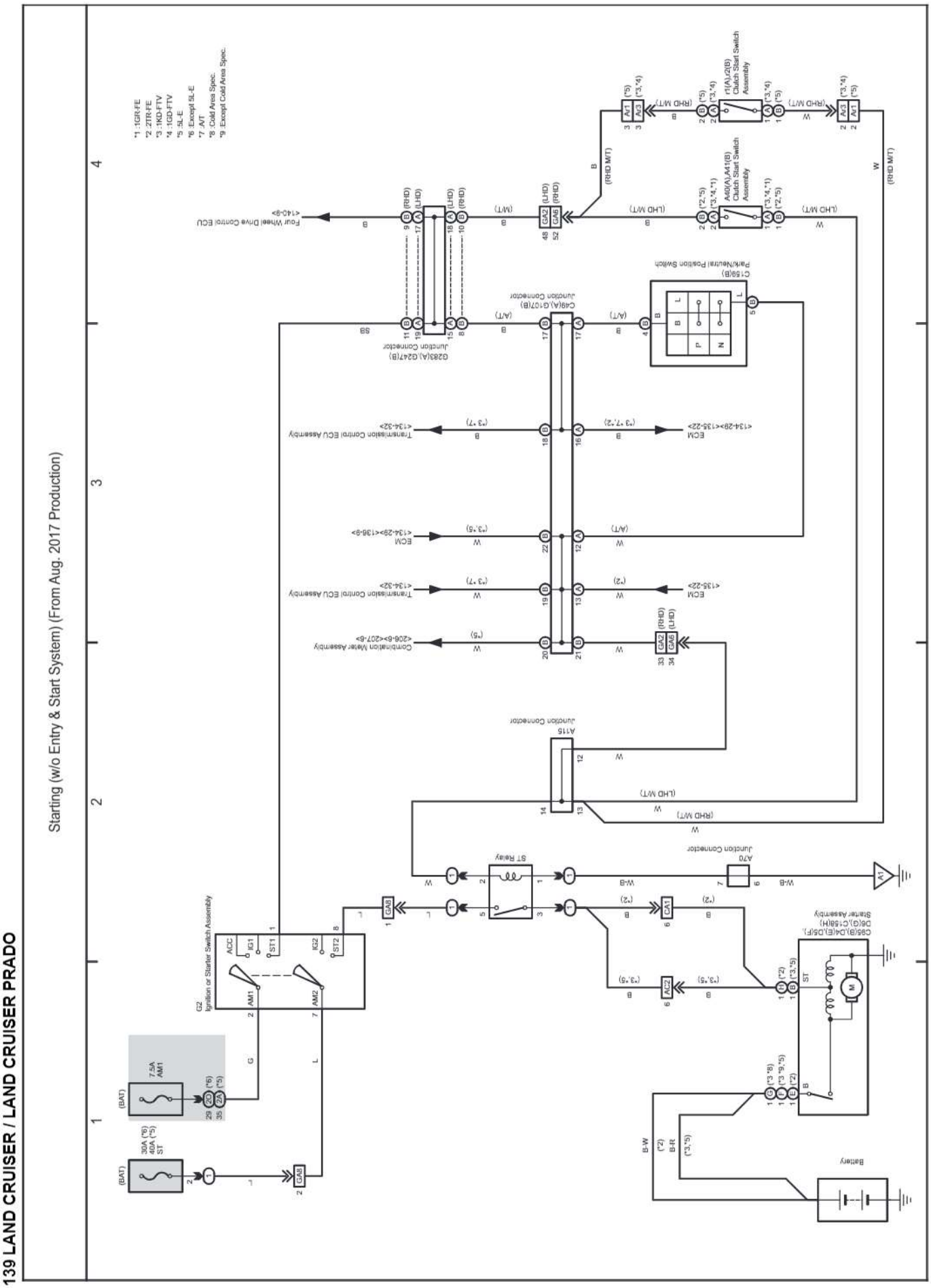

139 LAND CRUISER / LAND CRUISER PRADO

cardiagn.com

M OVERALL ELECTRICAL WIRING DIAGRAM

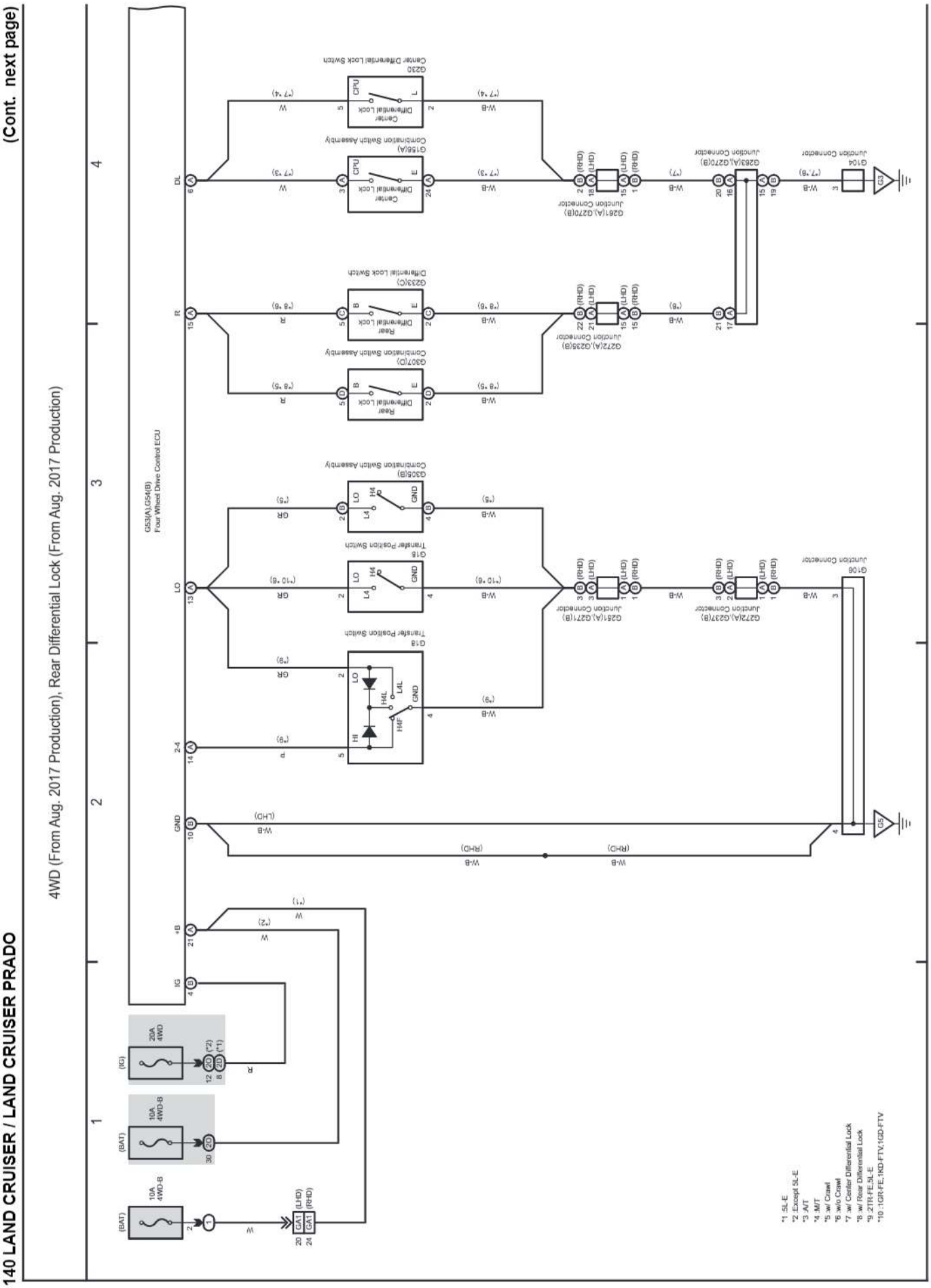

cardiagn.com

(Cont. next page)

4WD (From Aug. 2017 Production), Rear Differential Lock (From Aug. 2017 Production)

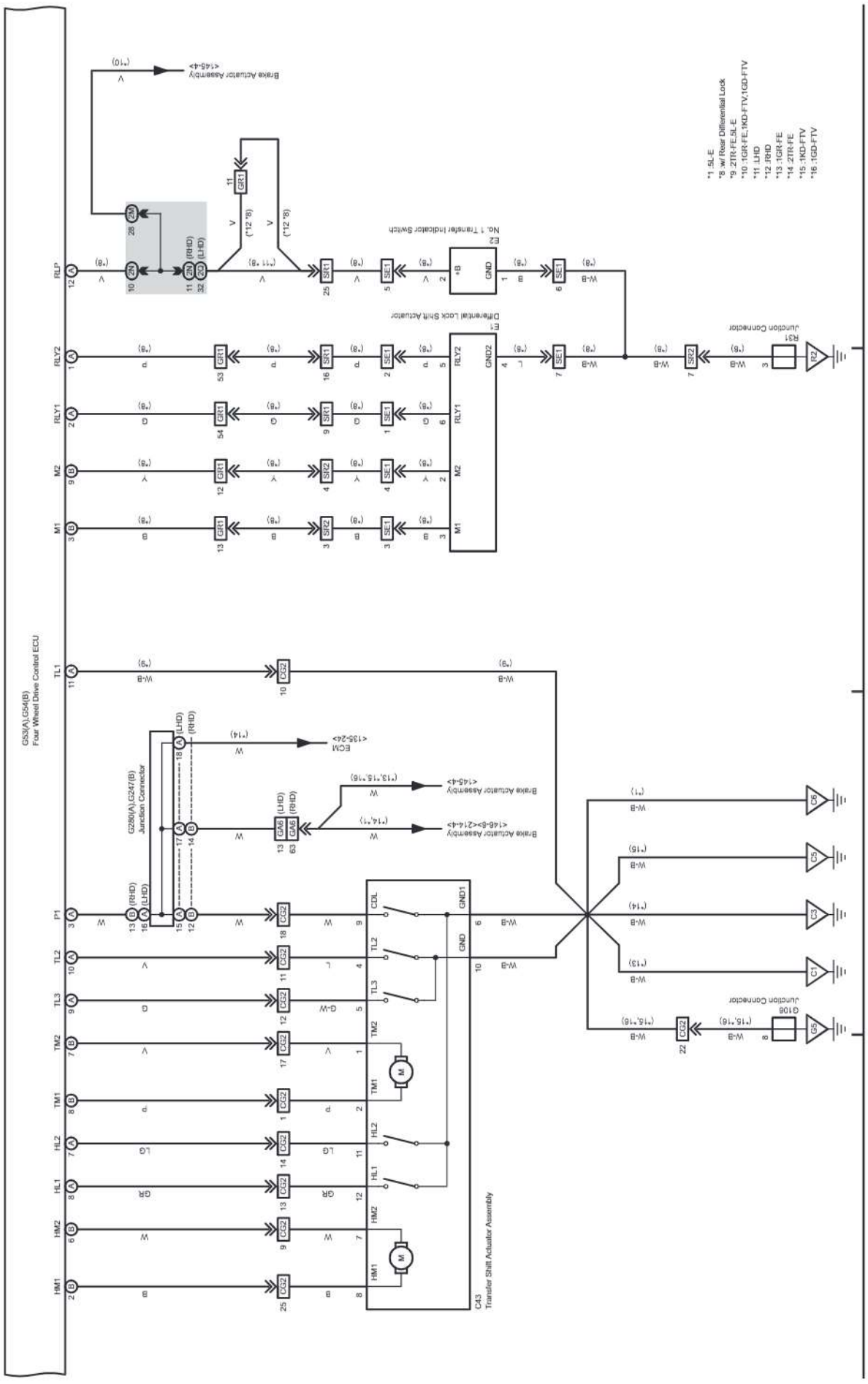

cardiagn.com

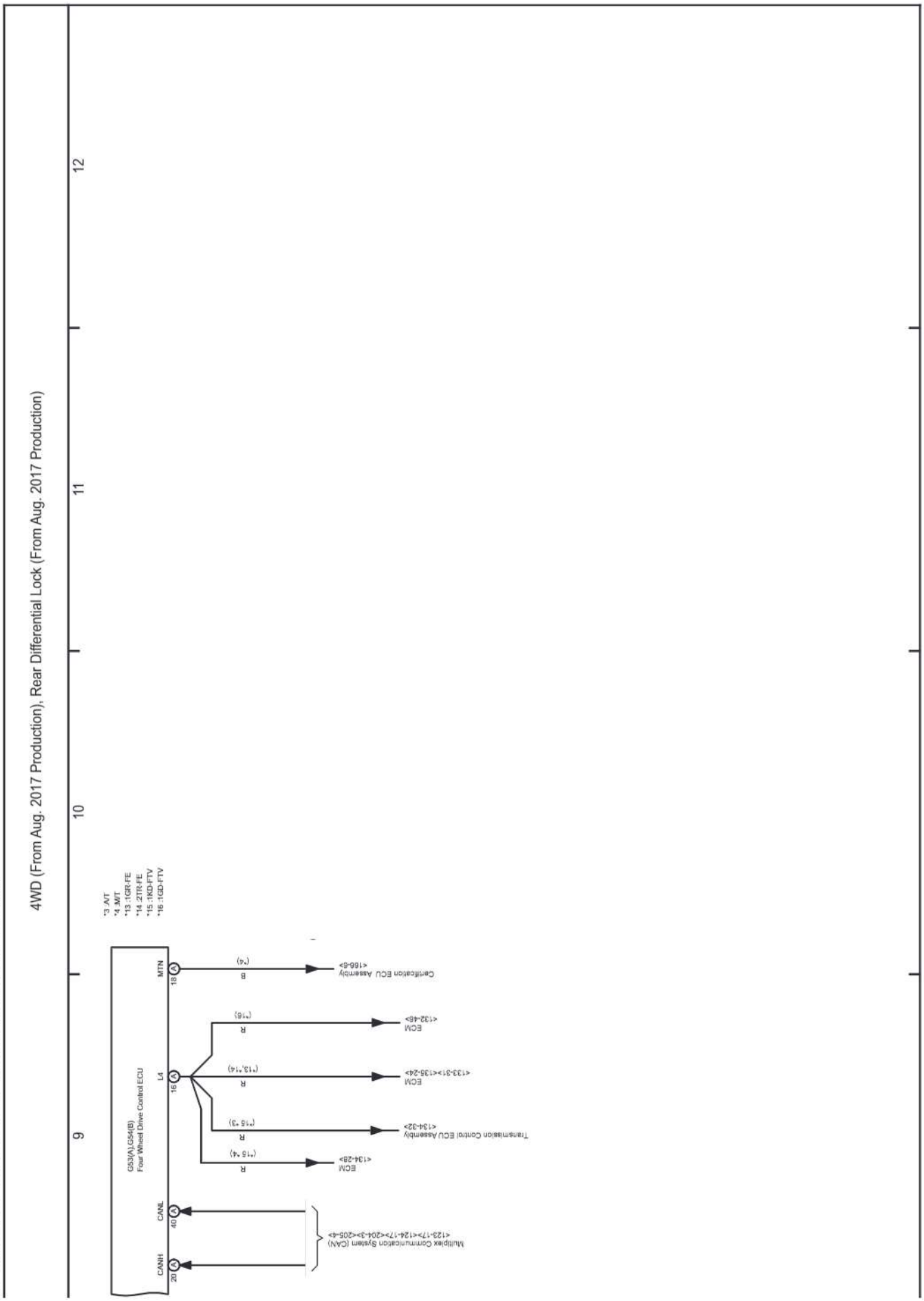

cardiagn.com

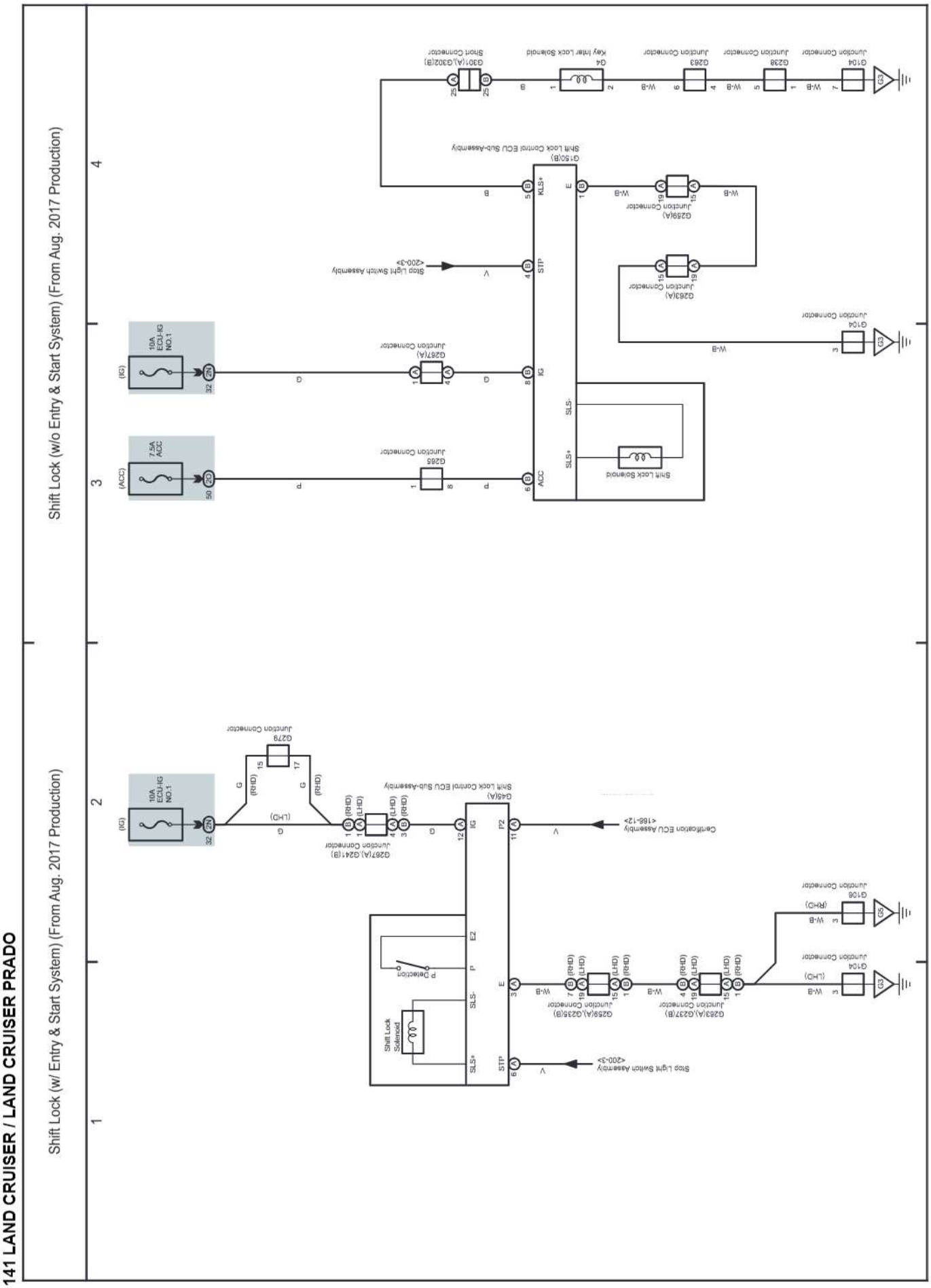

cardiagn.com

M OVERALL ELECTRICAL WIRING DIAGRAM

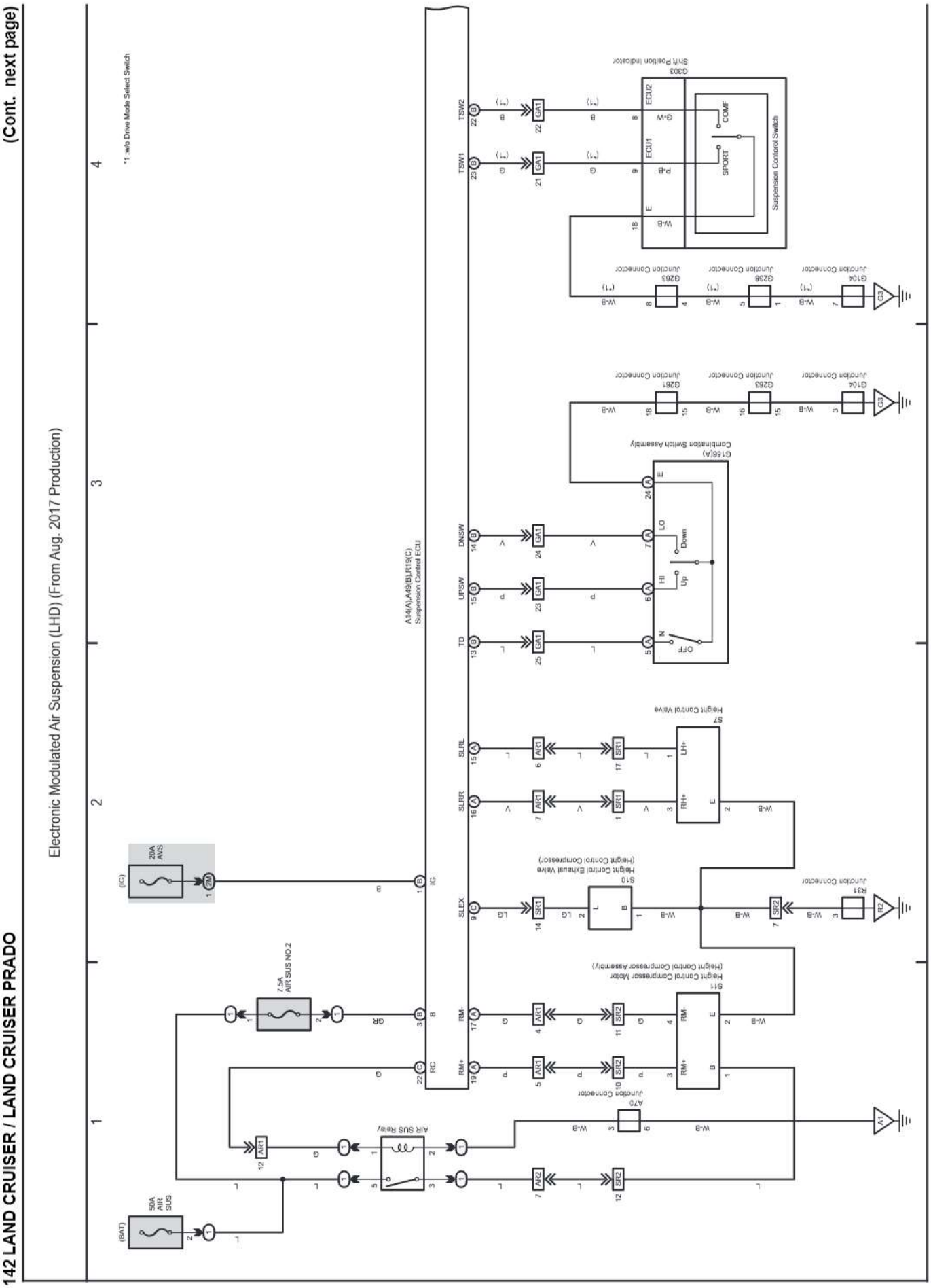

cardiagn.com

142 LAND CRUISER / LAND CRUISER PRADO (Cont'd)

Electronic Modulated Air Suspension (LHD) (From Aug. 2017 Production)

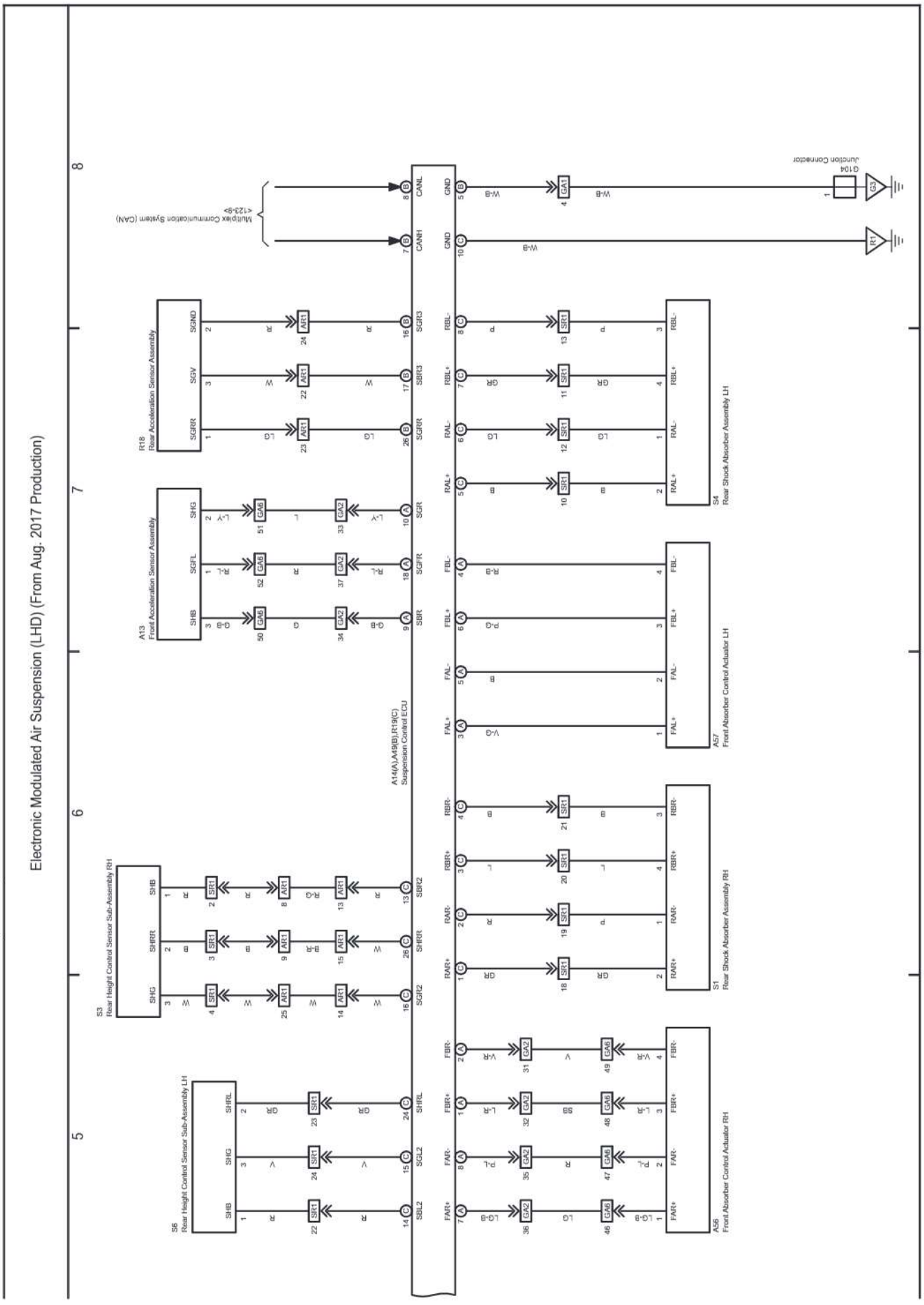

cardiagn.com

(Cont. next page)

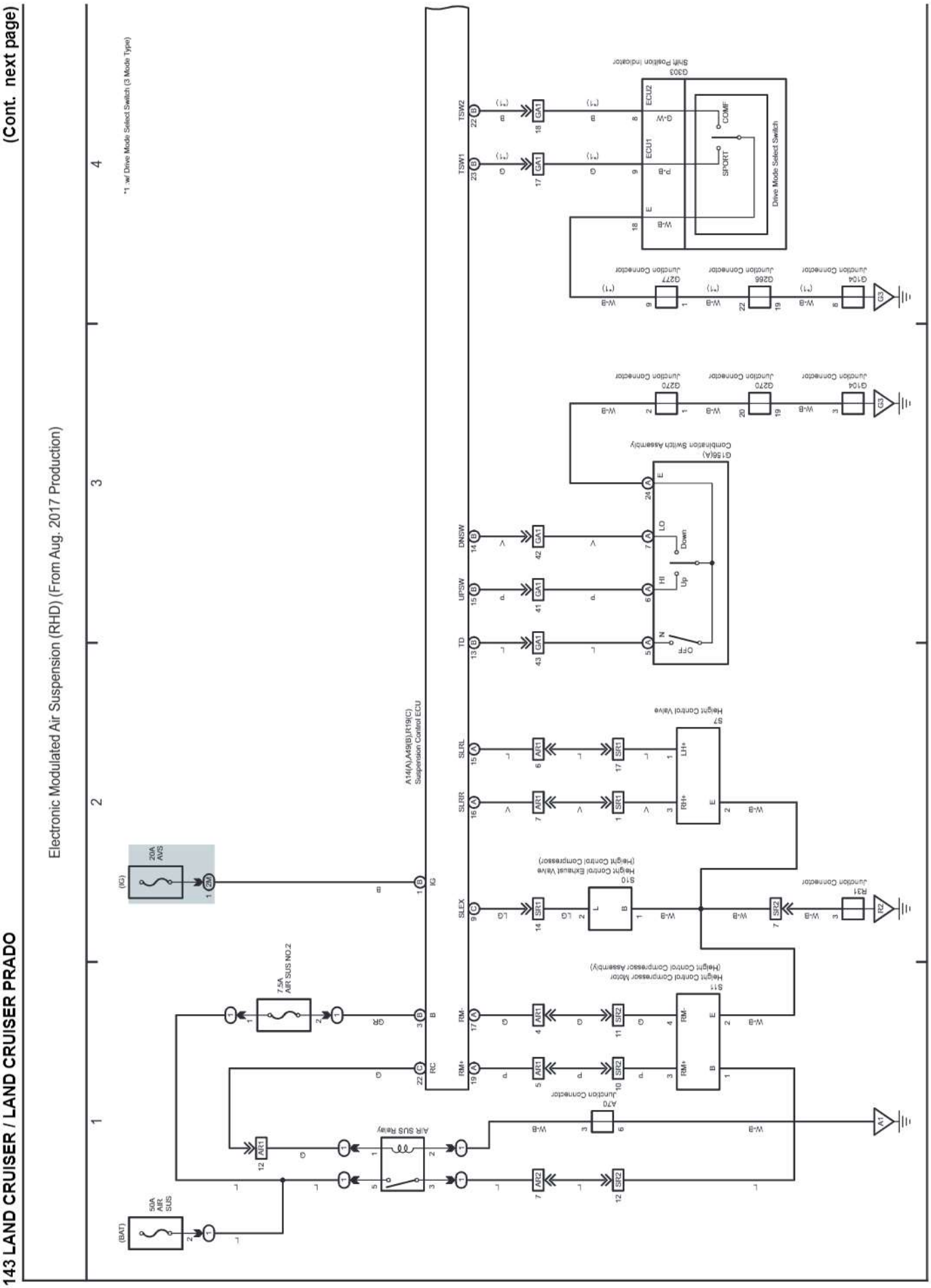

Electronic Modulated Air Suspension (RHD) (From Aug. 2017 Production)

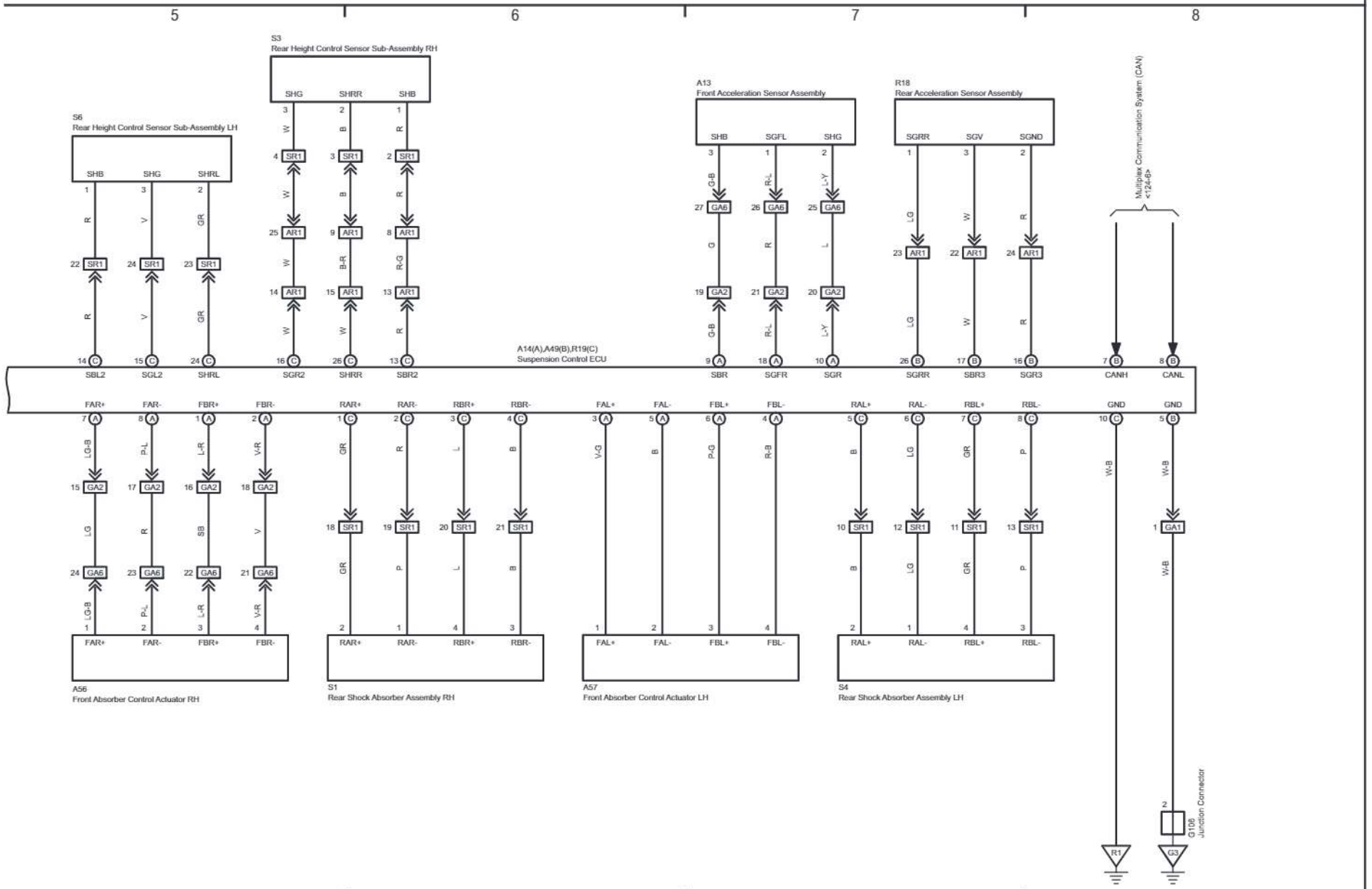

cardiagn.com

cardiagn.com

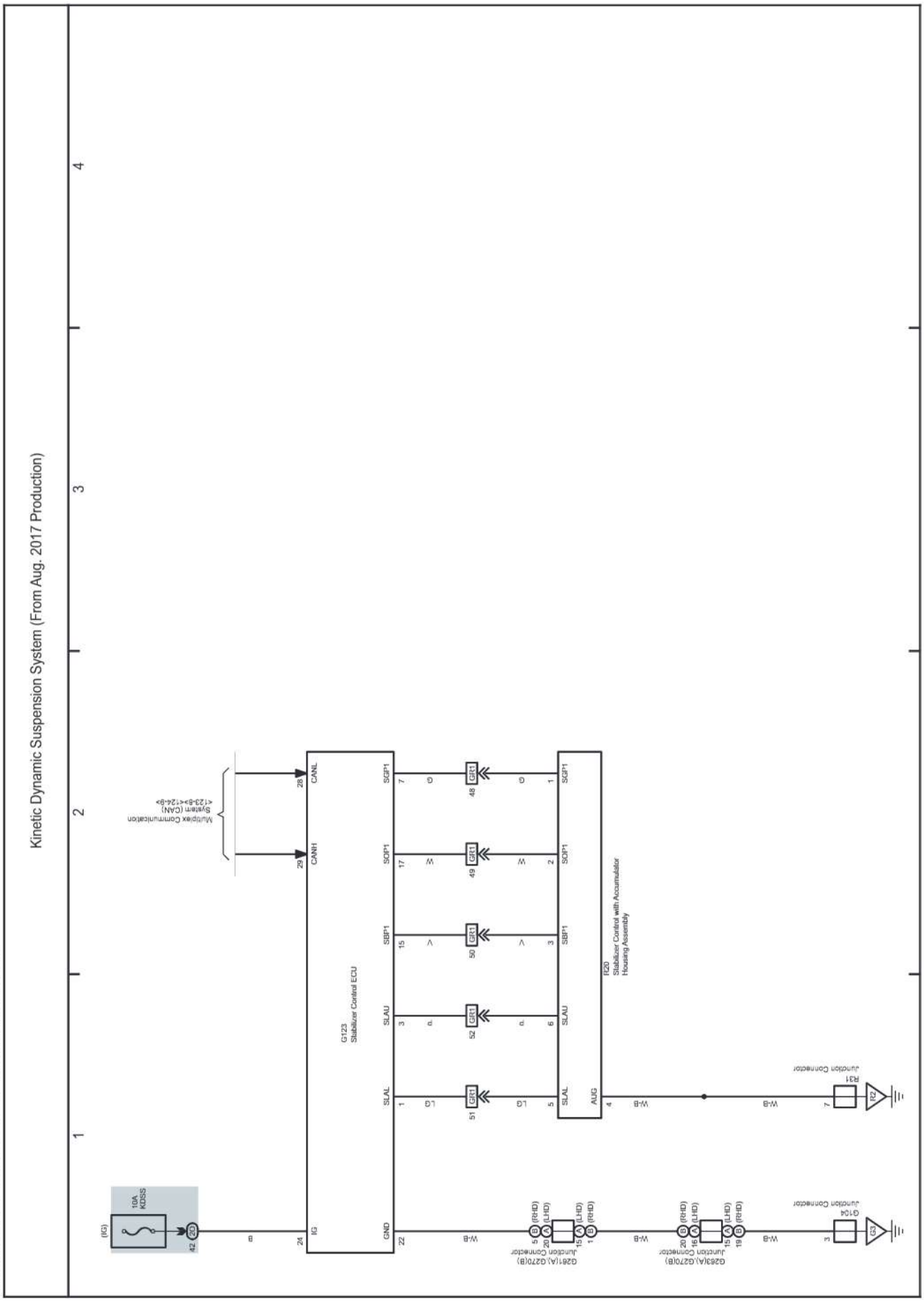

cardiagn.com

(Cont. next page)

145 LAND CRUISER / LAND CRUISER PRADO

ABS (1GR-FE, 1KD-FTV, 1GD-FTV) (From Aug. 2017 Production), A-TRC (From Aug. 2017 Production), Crawl (From Aug. 2017 Production), Downhill Assist Control (From Aug. 2017 Production), Hill-Start Assist Control (From Aug. 2017 Production), Multi-Terrain Select (From Aug. 2017 Production), VSC (1GR-FE, 1KD-FTV, 1GD-FTV) (From Aug. 2017 Production)

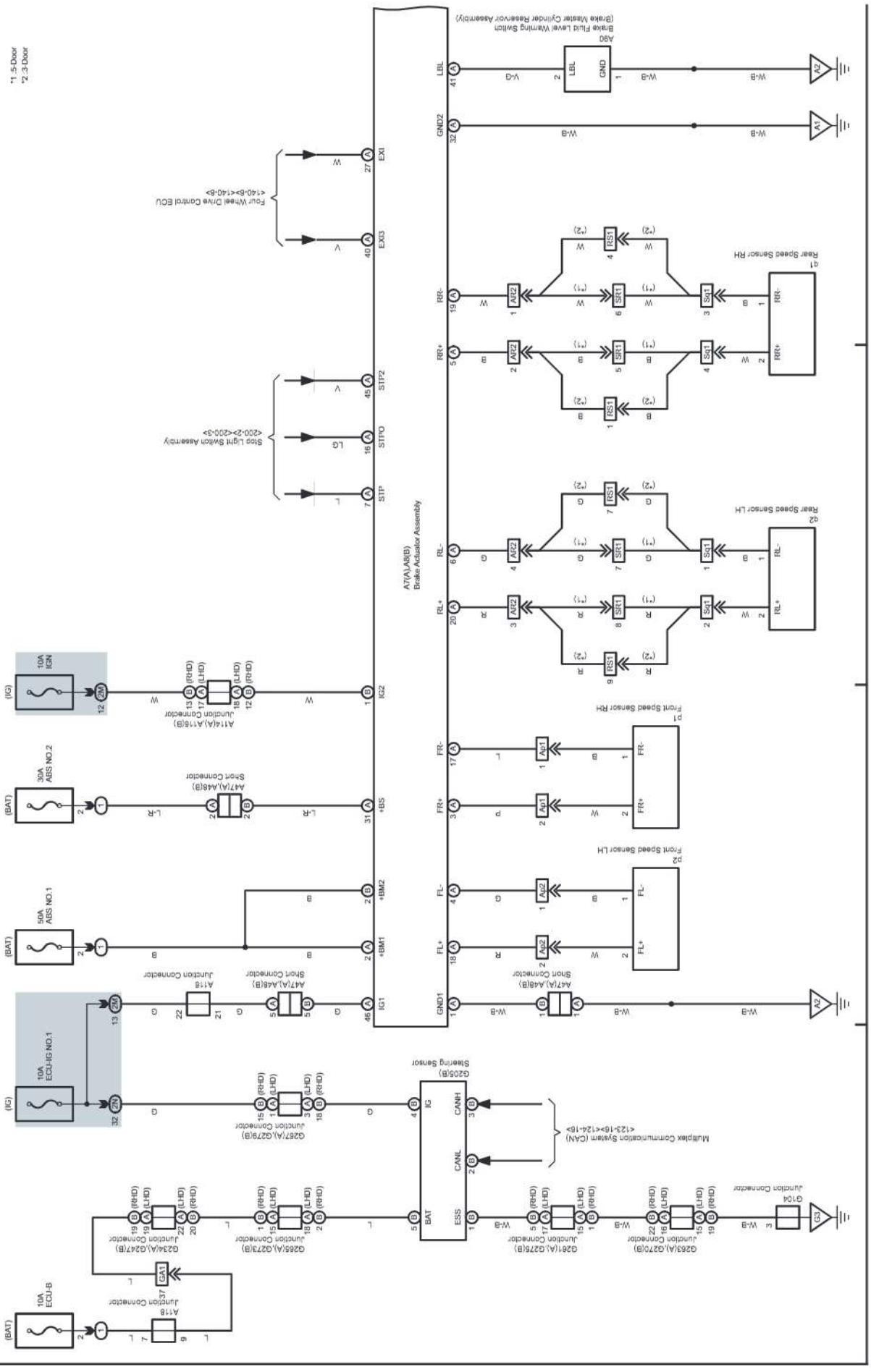

cardiagn.com

145 LAND CRUISER / LAND CRUISER PRADO (Cont'd)

ABS (1GR-FE, 1KD-FTV, 1GD-FTV) (From Aug. 2017 Production), A-TRC (From Aug. 2017 Production), Crawl (From Aug. 2017 Production), Downhill Assist Control (From Aug. 2017 Production), Hill-Start Assist Control (From Aug. 2017 Production), Multi-Terrain Select (From Aug. 2017 Production), VSC (1GR-FE, 1KD-FTV, 1GD-FTV) (From Aug. 2017 Production)

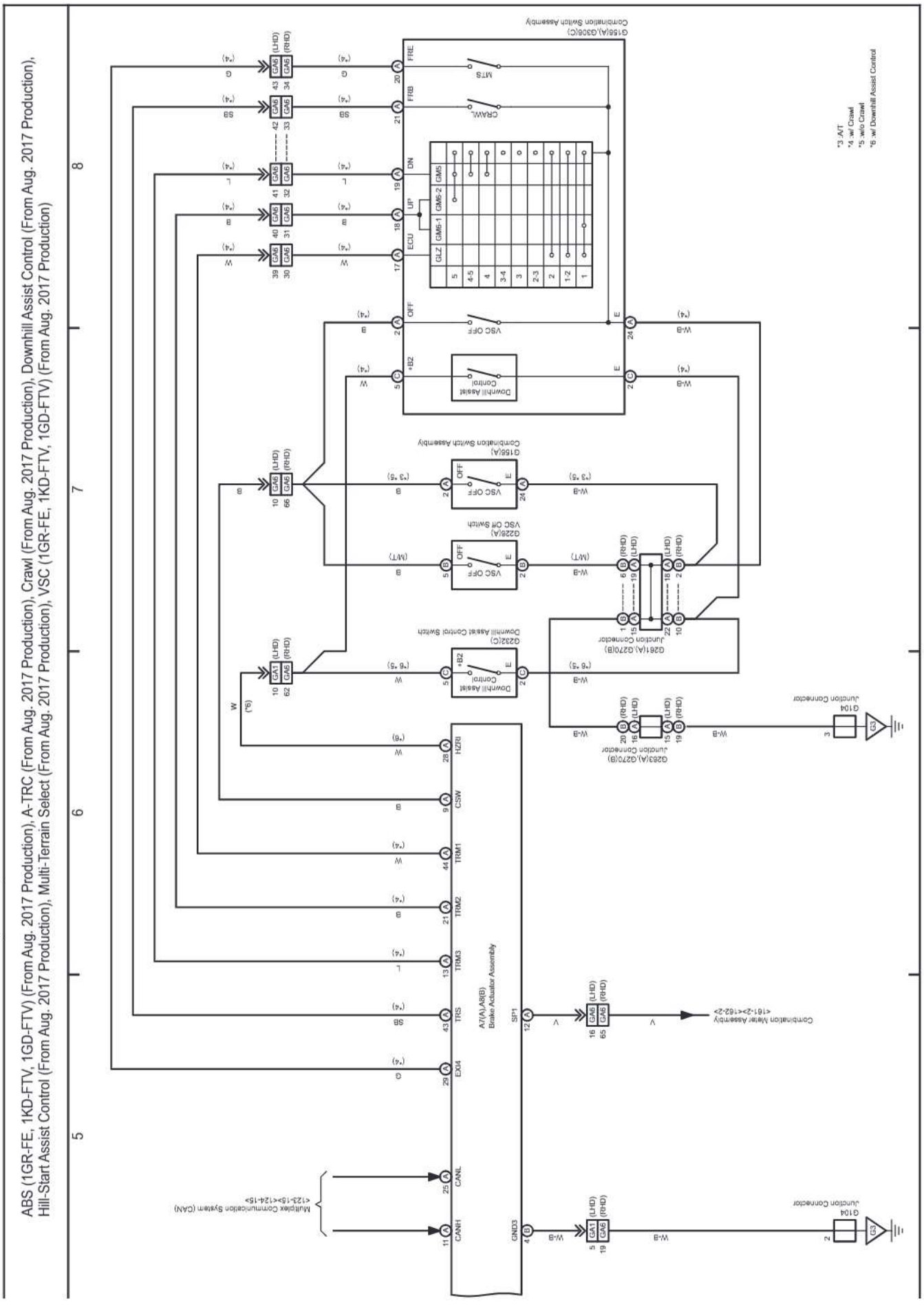

cardiagn.com

(Cont. next page)

ABS (2TR-FE) (From Aug. 2017 Production), TRC (2TR-FE) (From Aug. 2017 Production), VSC (2TR-FE) (From Aug. 2017 Production)

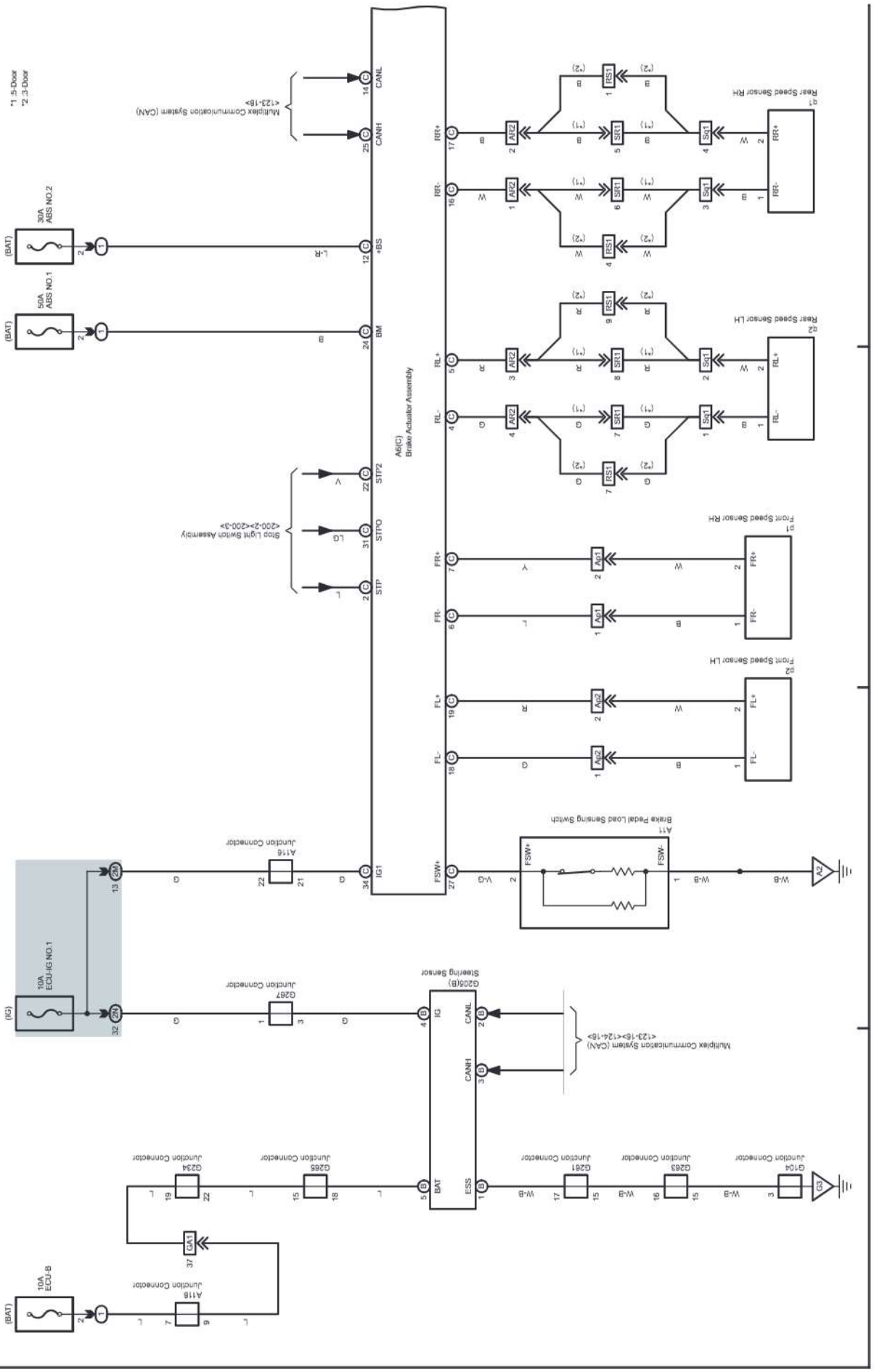

cardiagn.com

146 LAND CRUISER / LAND CRUISER PRADO (Cont'd)

ABS (2TR-FE) (From Aug. 2017 Production), TRC (2TR-FE) (From Aug. 2017 Production), VSC (2TR-FE) (From Aug. 2017 Production)

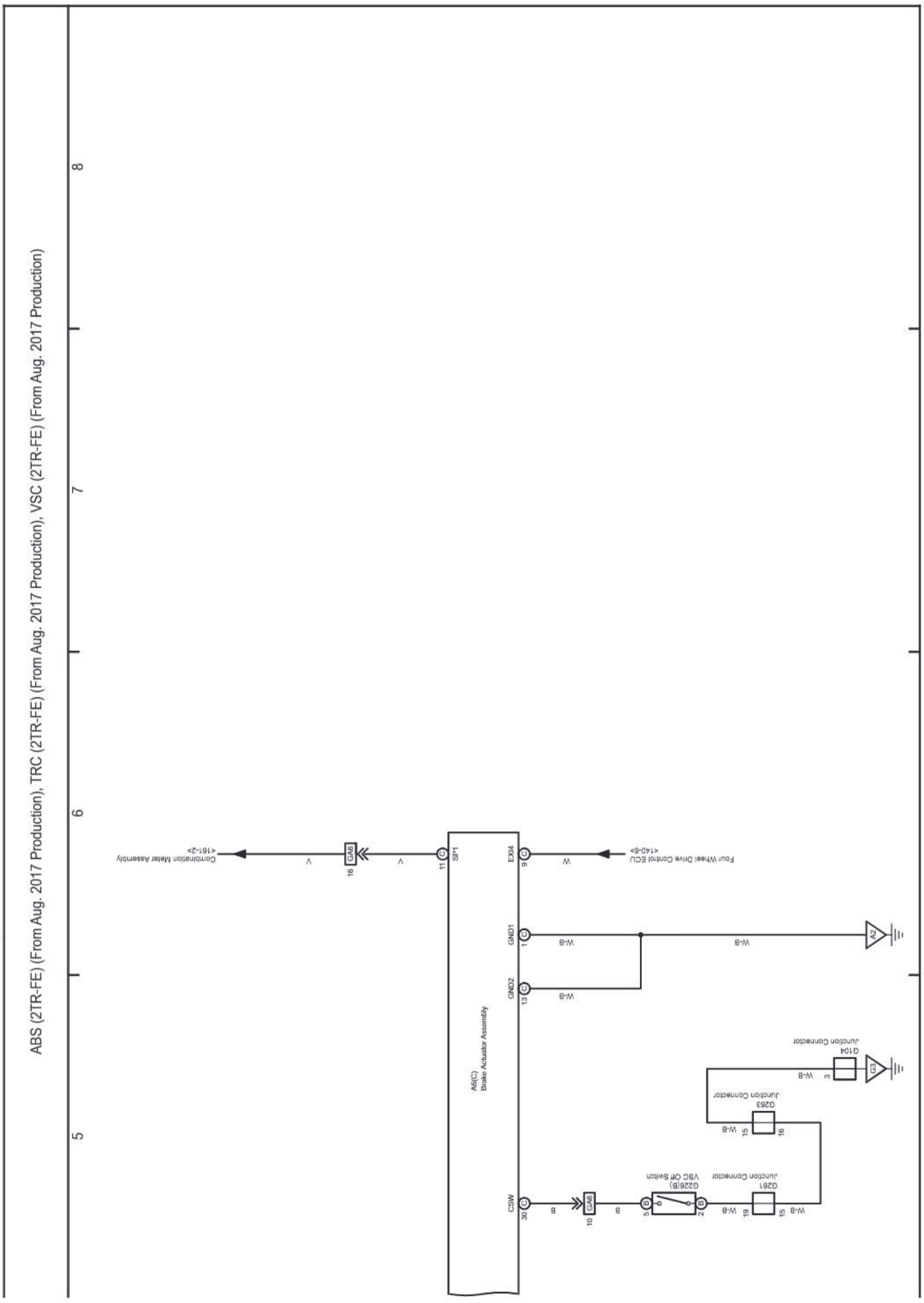

cardiagn.com

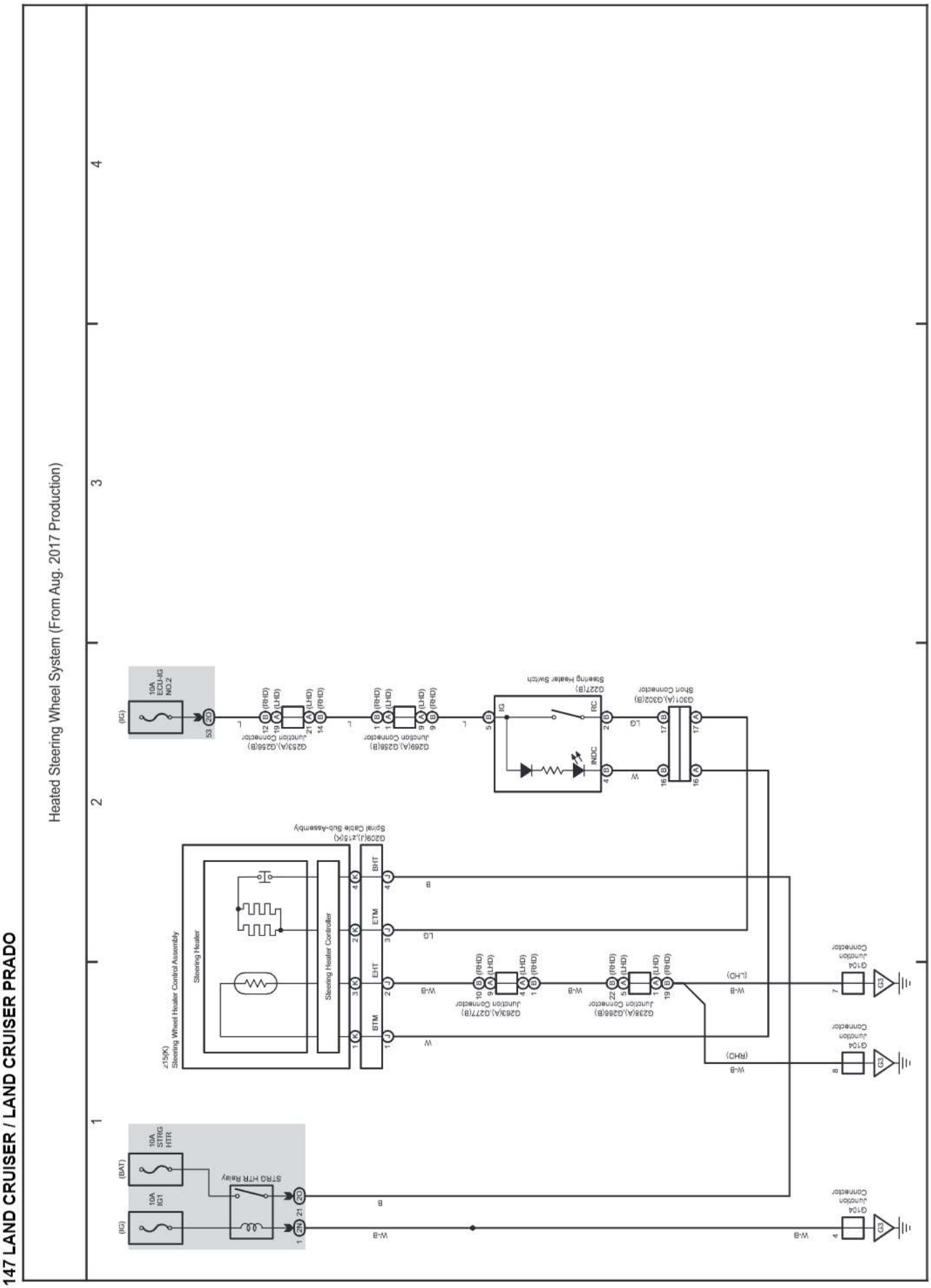

cardiagn.com

M OVERALL ELECTRICAL WIRING DIAGRAM

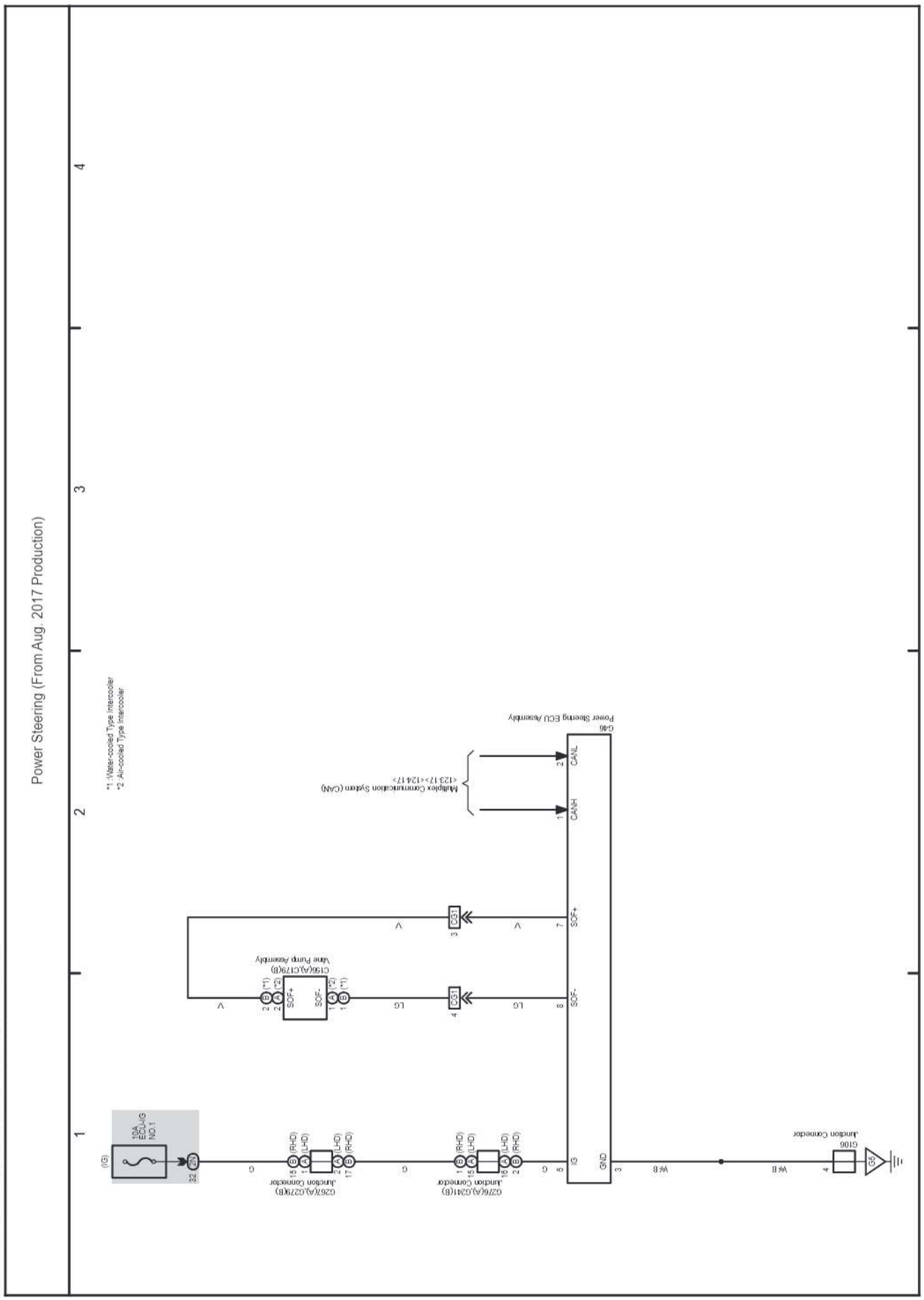

cardiagn.com

M OVERALL ELECTRICAL WIRING DIAGRAM

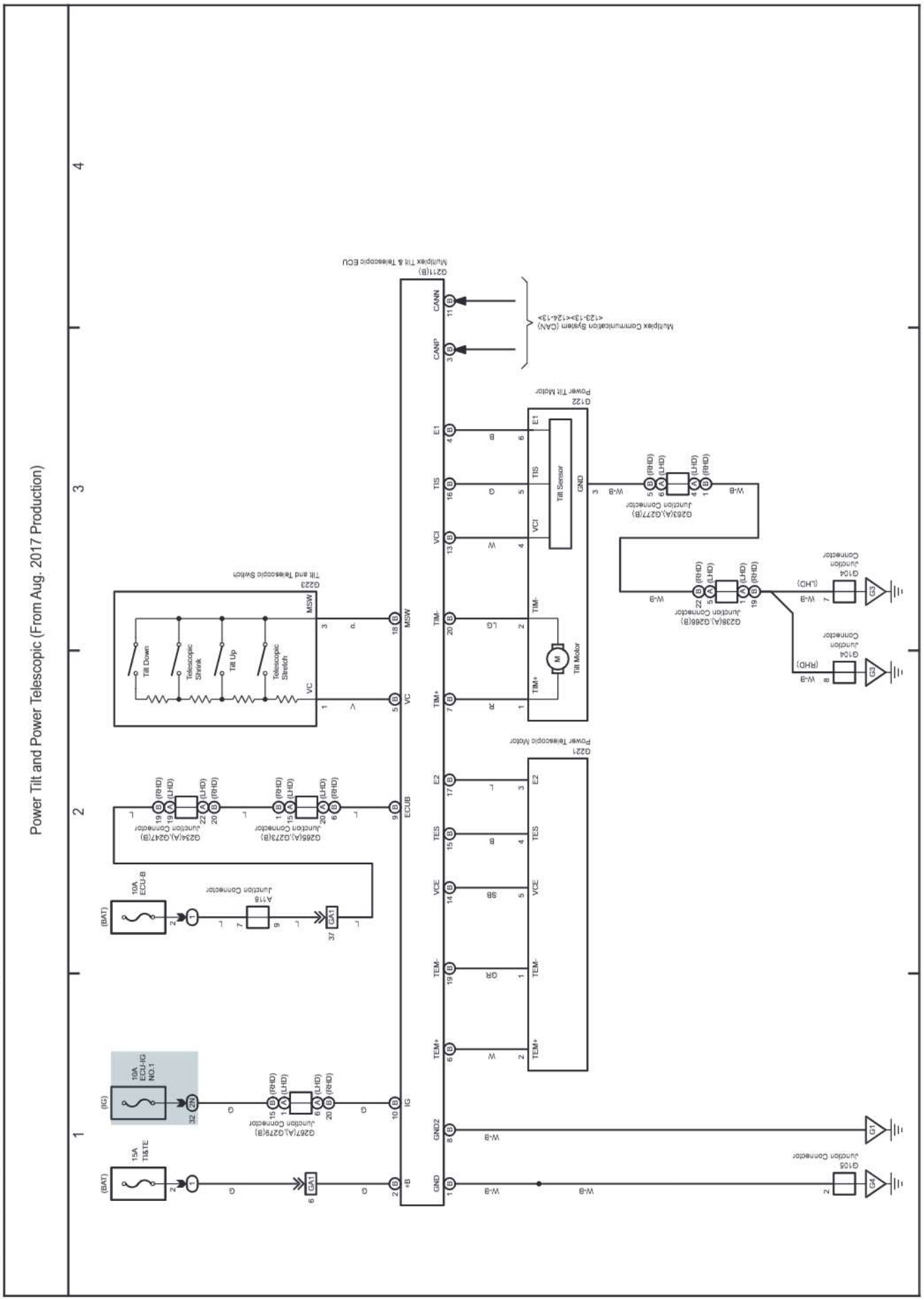

149 LAND CRUISER / LAND CRUISER PRADO

cardiagn.com

(Cont. next page)

150 LAND CRUISER / LAND CRUISER PRADO

Audio System (Navigation Receiver Assembly Type) (From Aug. 2017 Production), Navigation System (Navigation Receiver Assembly Type) (From Aug. 2017 Production), Parking Assist (Rear View Monitor) (Navigation Receiver Assembly Type) (From Aug. 2017 Production), Parking Assist (Back Guide Monitor) (From Aug. 2017 Production)

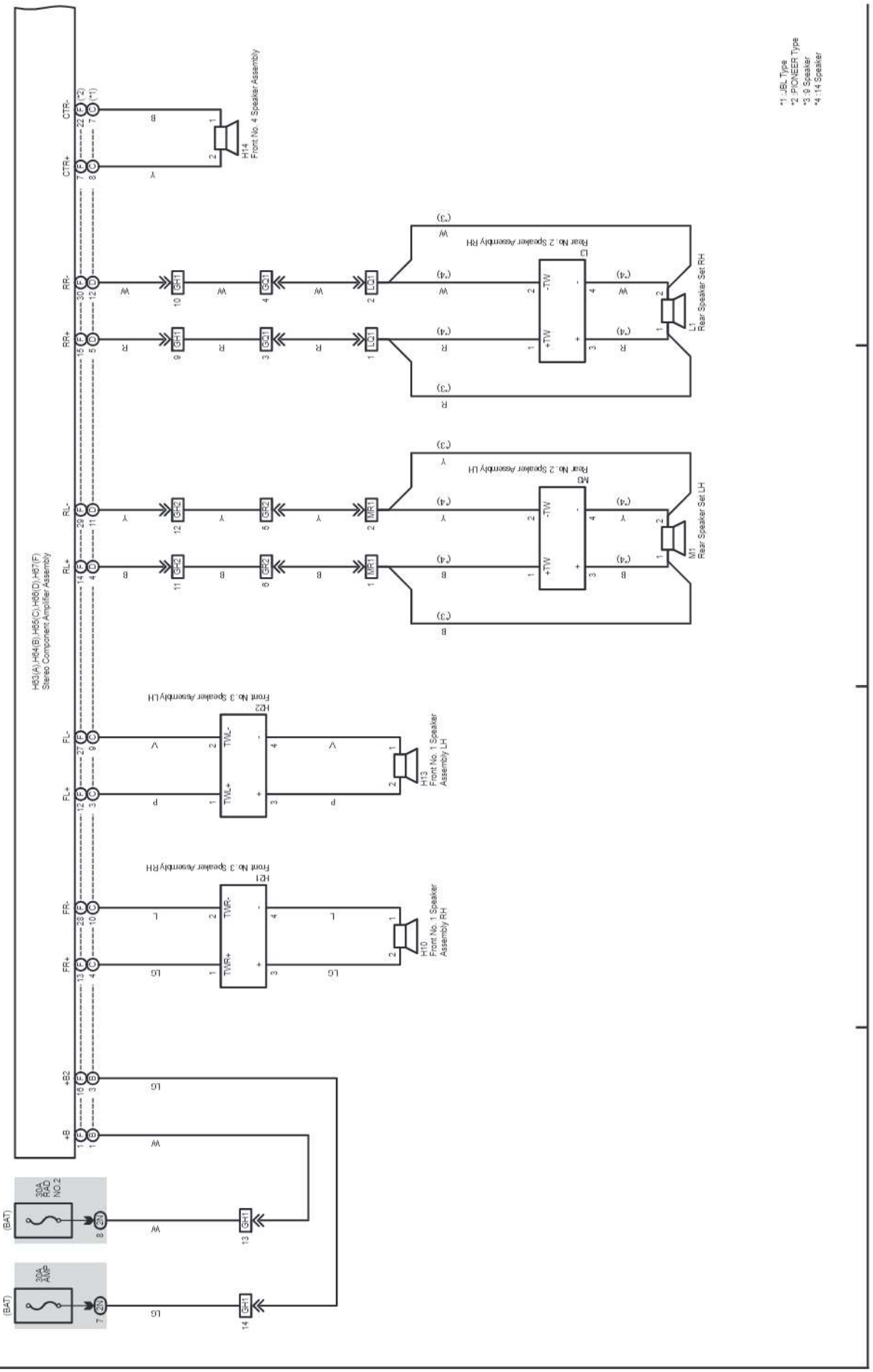

cardiagn.com

(Cont. next page)

150 LAND CRUISER / LAND CRUISER PRADO (Cont'd)

Audio System (Navigation Receiver Assembly Type) (From Aug. 2017 Production), Navigation System (Navigation Receiver Assembly Type) (From Aug. 2017 Production), Parking Assist (Rear View Monitor) (Navigation Receiver Assembly Type) (From Aug. 2017 Production), Parking Assist (Back Guide Monitor) (From Aug. 2017 Production)

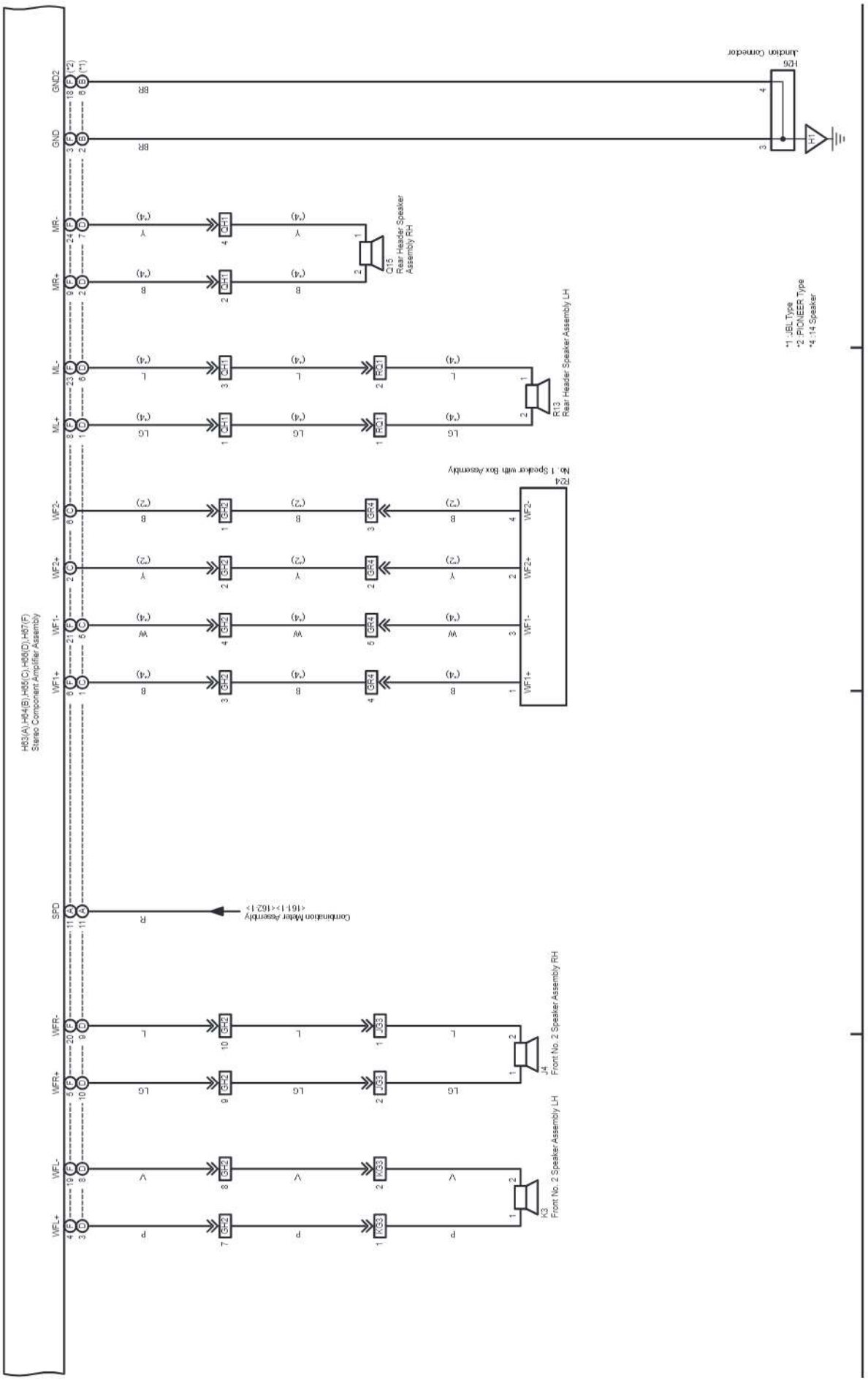

cardiagn.com

(Cont. next page)

Audio System (Navigation Receiver Assembly Type) (From Aug. 2017 Production), Navigation System (Navigation Receiver Assembly Type) (From Aug. 2017 Production), Parking Assist (Rear View Monitor) (Navigation Receiver Assembly Type) (From Aug. 2017 Production), Parking Assist (Back Guide Monitor) (From Aug. 2017 Production)

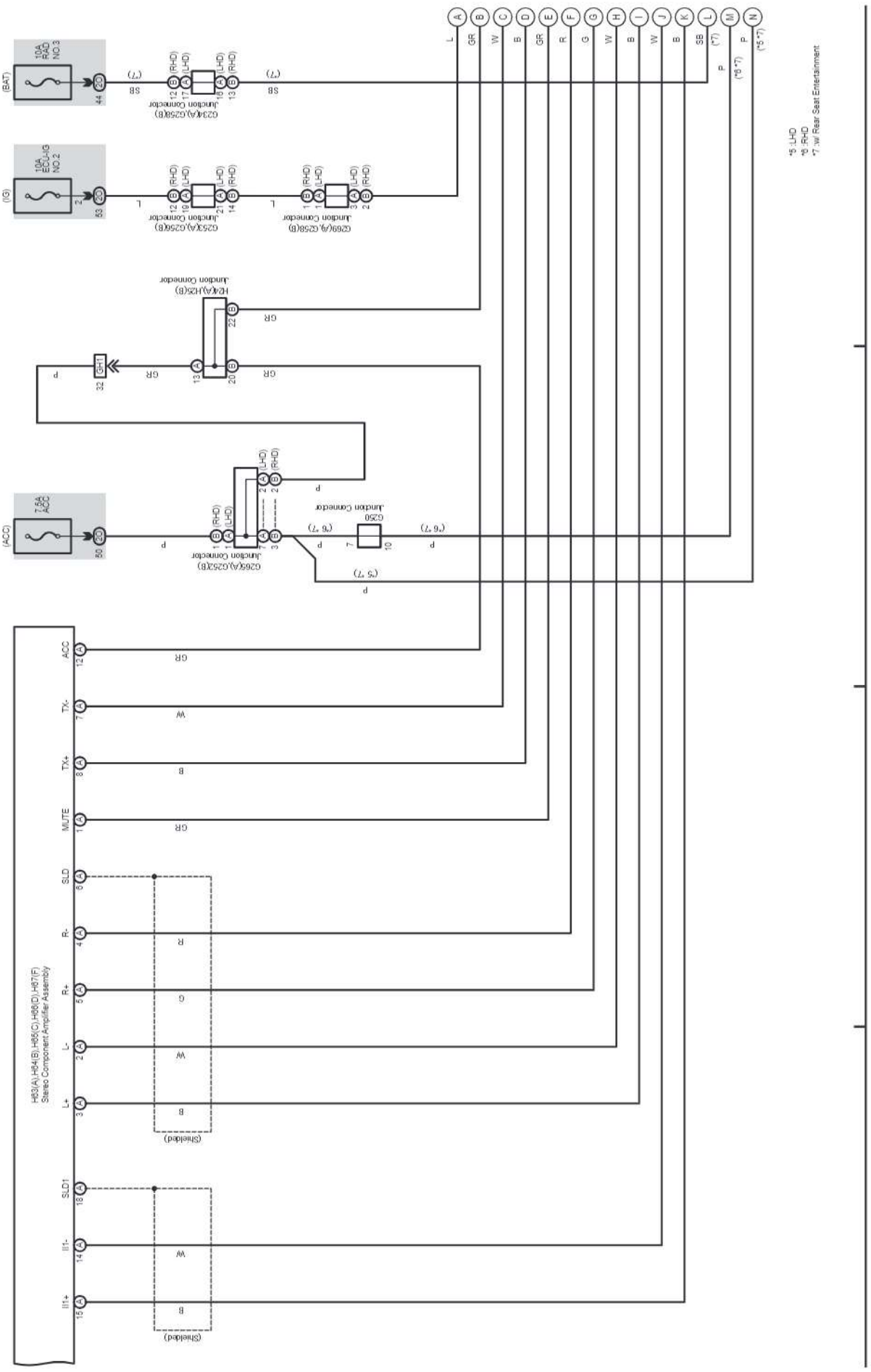

(Cont. next page)

Audio System (Navigation Receiver Assembly Type) (From Aug. 2017 Production), Navigation System (Navigation Receiver Assembly Type) (From Aug. 2017 Production), Parking Assist (Rear View Monitor) (Navigation Receiver Assembly Type) (From Aug. 2017 Production), Parking Assist (Back Guide Monitor) (From Aug. 2017 Production)

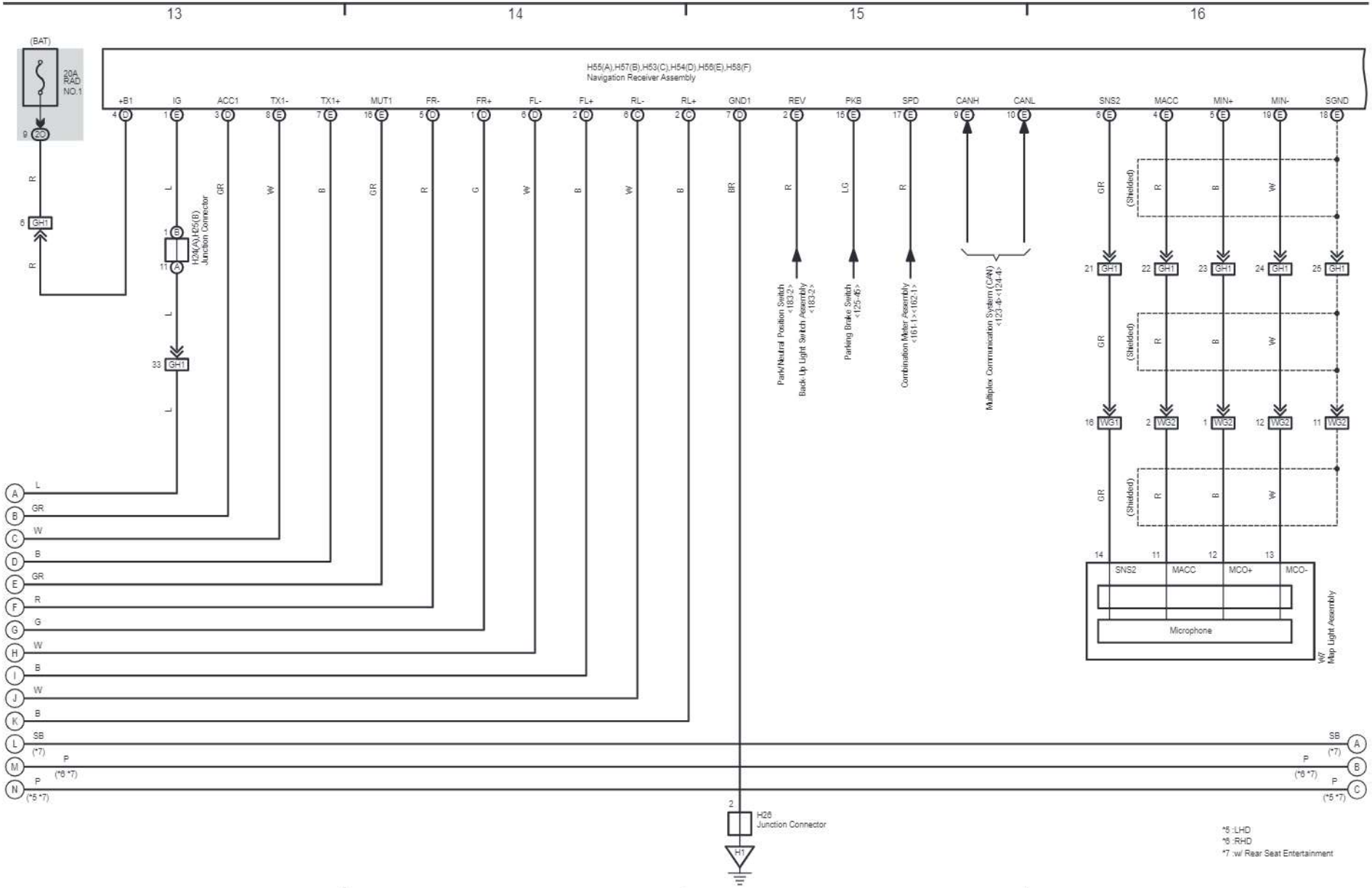

cardiagn.com

cardiagn.com

(Cont. next page)

Audio System (Navigation Receiver Assembly Type) (From Aug. 2017 Production), Navigation System (Navigation Receiver Assembly Type) (From Aug. 2017 Production), Parking Assist (Rear View Monitor) (Navigation Receiver Assembly Type) (From Aug. 2017 Production), Parking Assist (Back Guide Monitor) (From Aug. 2017 Production)

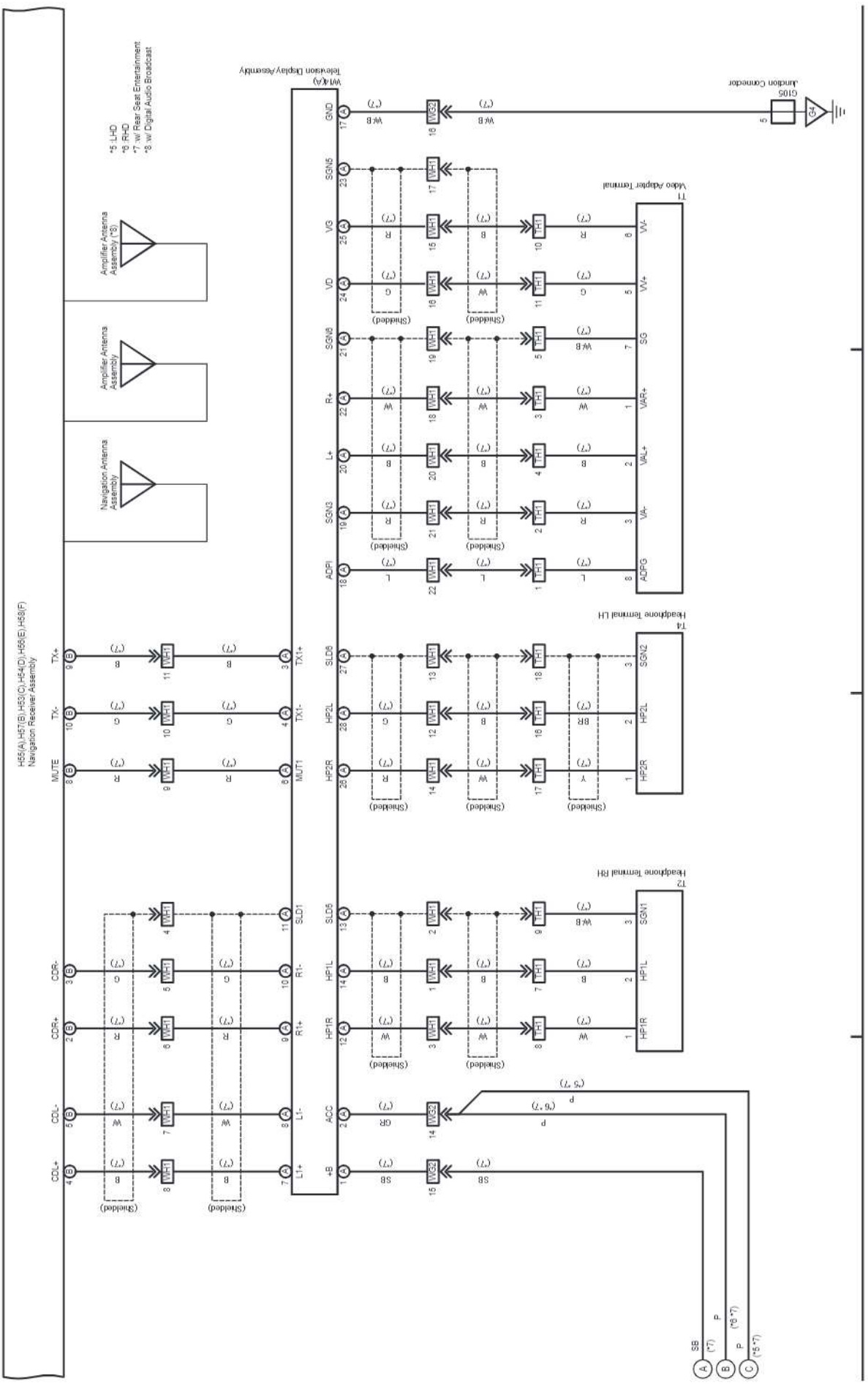

cardiagn.com

150 LAND CRUISER / LAND CRUISER PRADO (Cont'd)

(Cont. next page)

Audio System (Navigation Receiver Assembly Type) (From Aug. 2017 Production), Navigation System (Navigation Receiver Assembly Type) (From Aug. 2017 Production), Parking Assist (Rear View Monitor) (Navigation Receiver Assembly Type) (From Aug. 2017 Production), Parking Assist (Back Guide Monitor) (From Aug. 2017 Production)

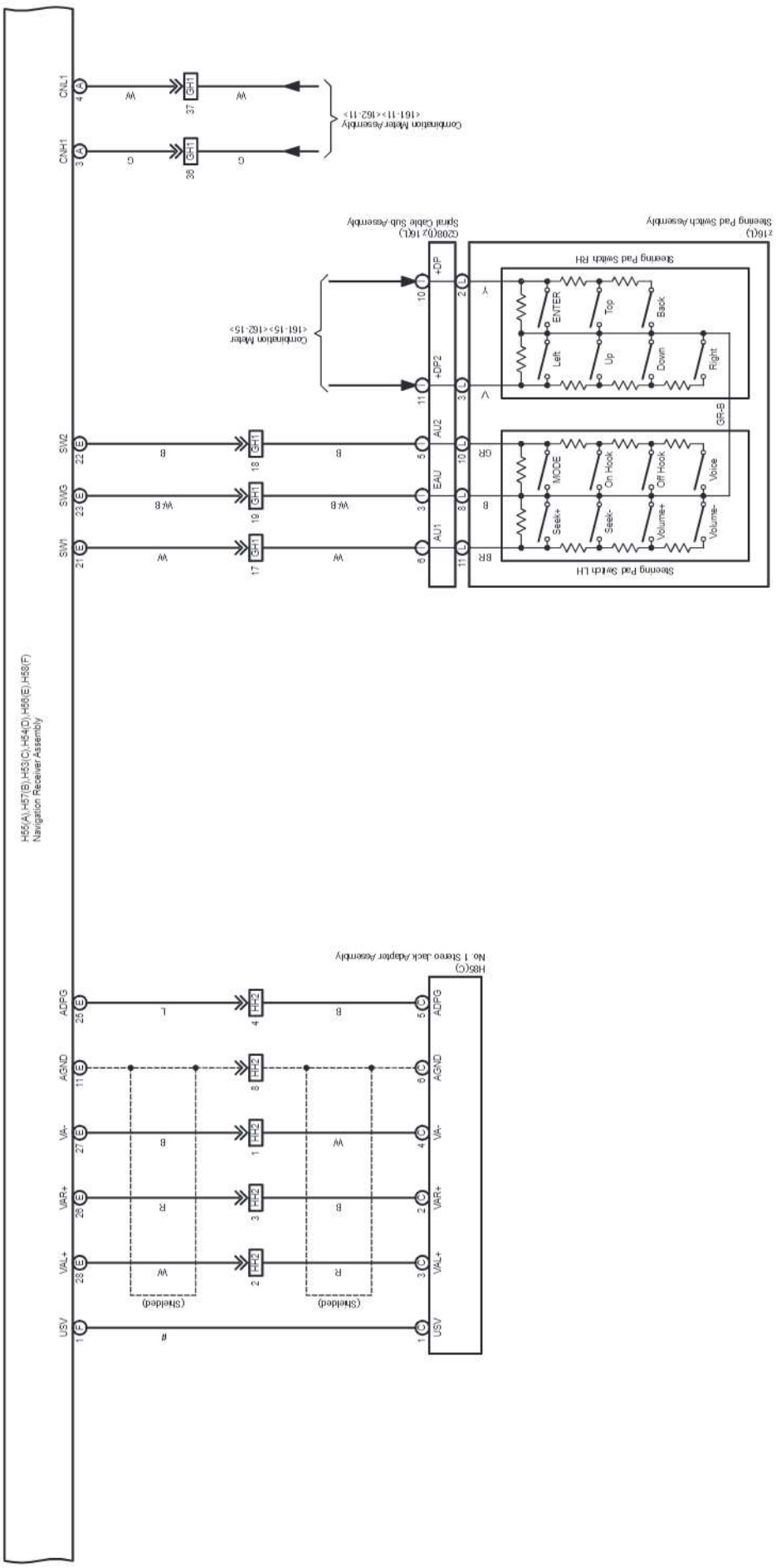

cardiagn.com

M OVERALL ELECTRICAL WIRING DIAGRAM

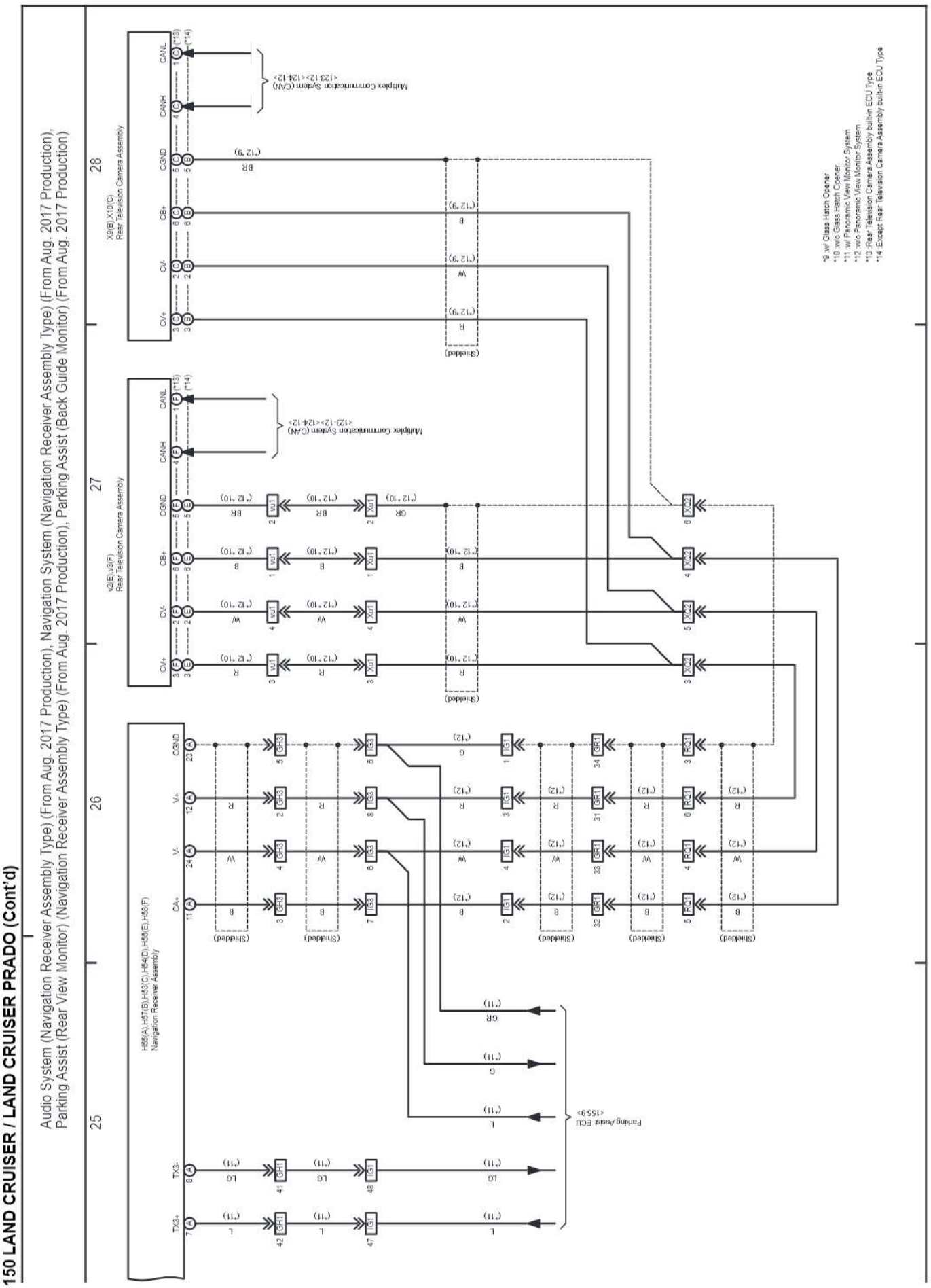

cardiagn.com

(Cont. next page)

Audio System (Radio & Display Receiver Assembly Type w/ Stereo Component Amplifier Assembly) (From Aug. 2017 Production),
Navigation System (Radio & Display Receiver Assembly Type) (From Aug. 2017 Production),
Parking Assist (Rear View Monitor) (Radio & Display Receiver Assembly Type w/ Stereo Component Amplifier Assembly) (From Aug. 2017 Production)

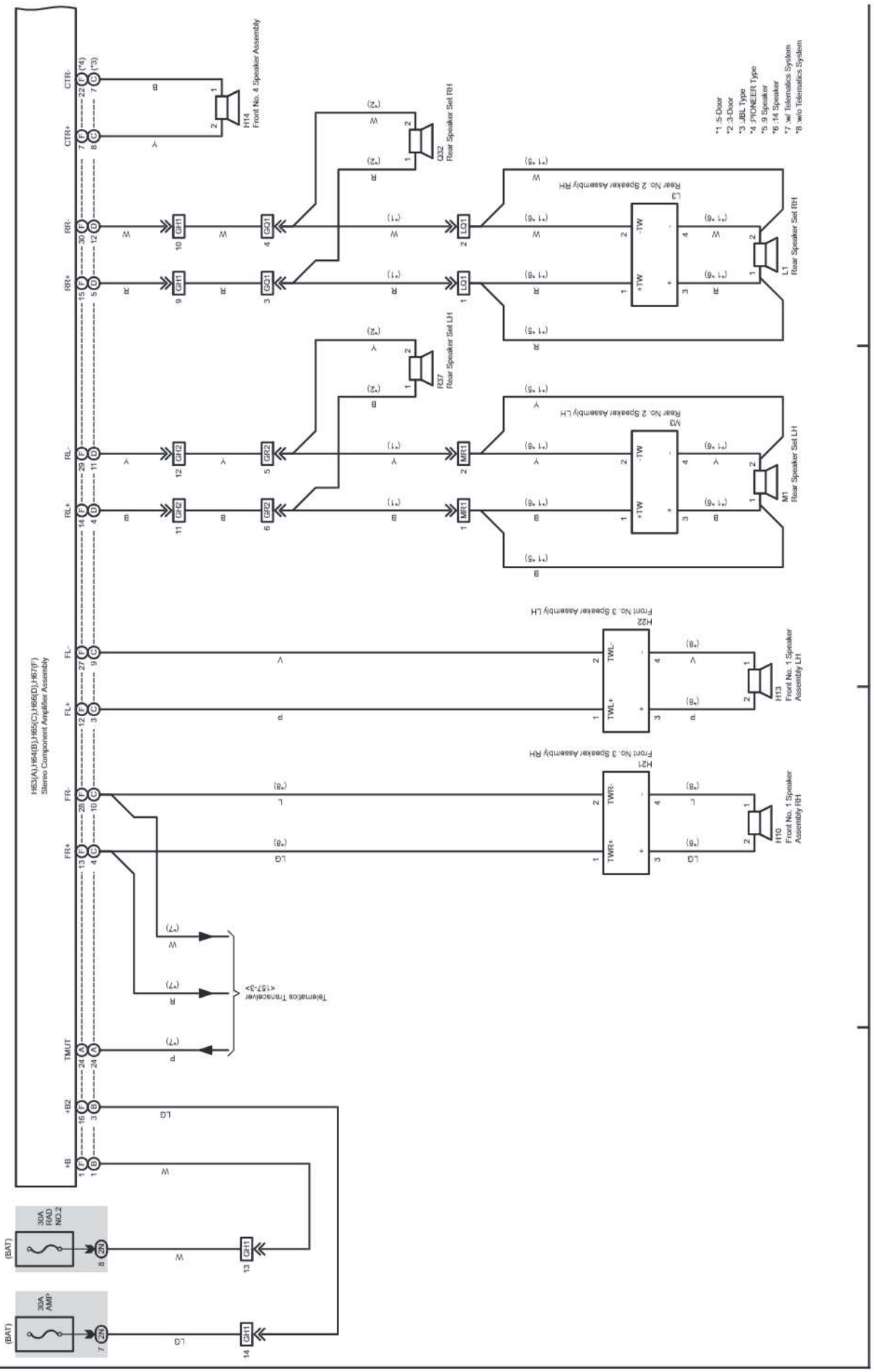

(Cont. next page)

Audio System (Radio & Display Receiver Assembly Type w/ Stereo Component Amplifier Assembly) (From Aug. 2017 Production),
Navigation System (Radio & Display Receiver Assembly Type) (From Aug. 2017 Production),
Parking Assist (Rear View Monitor) (Radio & Display Receiver Assembly Type w/ Stereo Component Amplifier Assembly) (From Aug. 2017 Production)

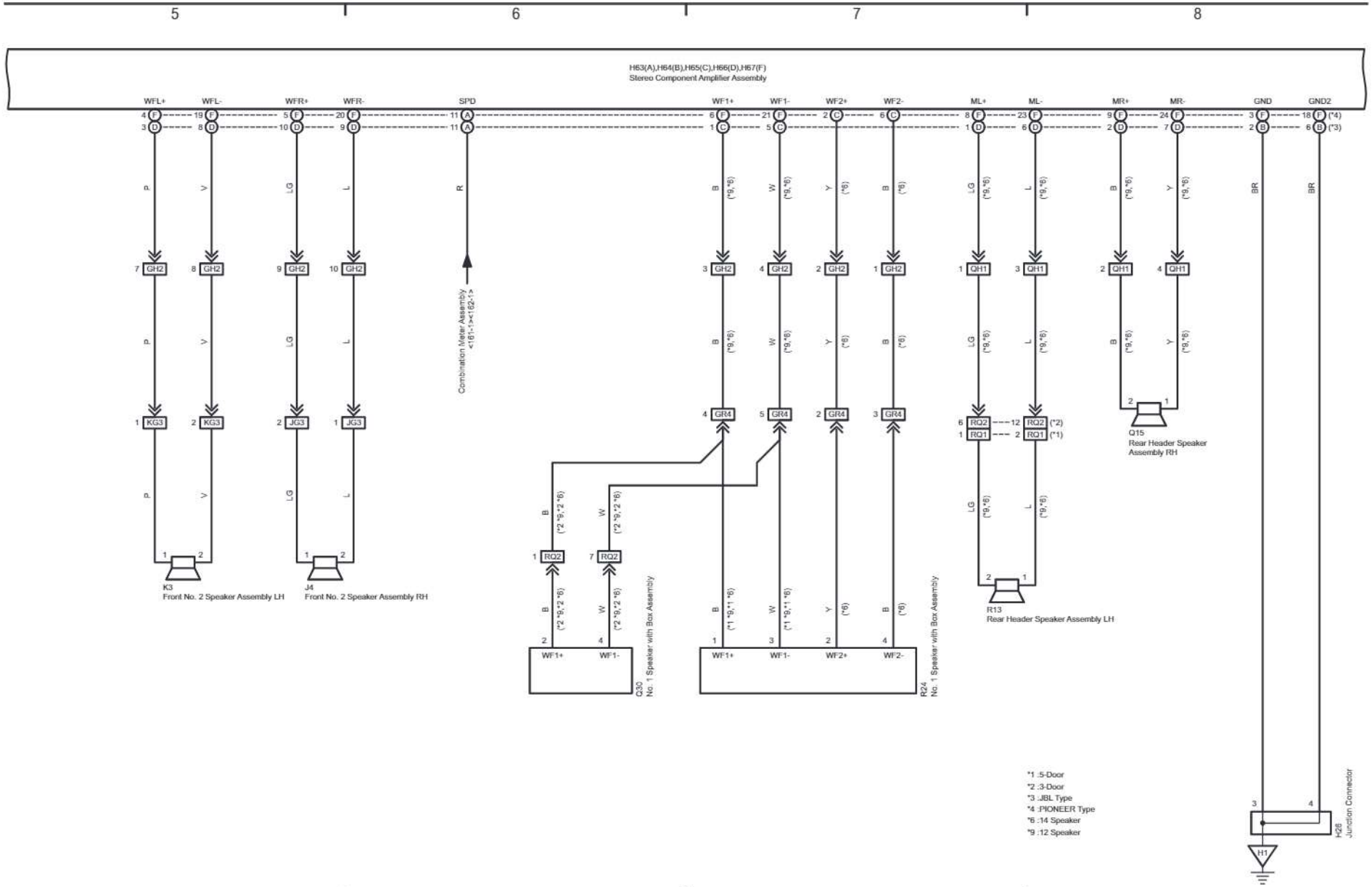

LAND CRUISER / LAND CRUISER PRADO (EM27T3E)

cardiagn.com

cardiagn.com

(Cont. next page)

151 LAND CRUISER / LAND CRUISER PRADO (Cont'd)

Audio System (Radio & Display Receiver Assembly Type w/ Stereo Component Amplifier Assembly) (From Aug. 2017 Production),
Navigation System (Radio & Display Receiver Assembly Type) (From Aug. 2017 Production),
Parking Assist (Rear View Monitor) (Radio & Display Receiver Assembly Type w/ Stereo Component Amplifier Assembly) (From Aug. 2017 Production)

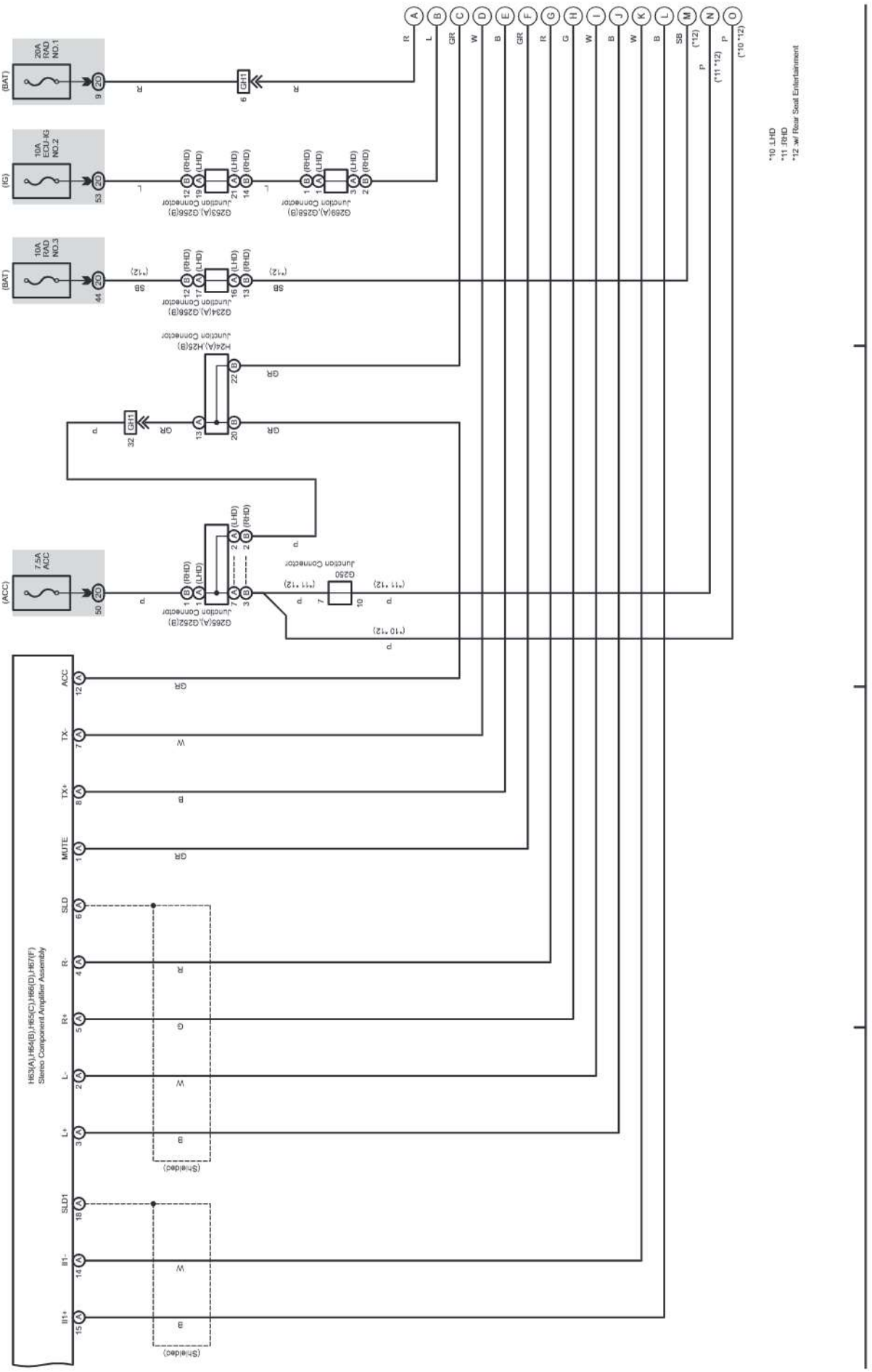

cardiagn.com

(Cont. next page)

151 LAND CRUISER / LAND CRUISER PRADO (Cont'd)

Audio System (Radio & Display Receiver Assembly Type w/ Stereo Component Amplifier Assembly) (From Aug. 2017 Production),
Navigation System (Radio & Display Receiver Assembly Type) (From Aug. 2017 Production),
Parking Assist (Rear View Monitor) (Radio & Display Receiver Assembly Type w/ Stereo Component Amplifier Assembly) (From Aug. 2017 Production)

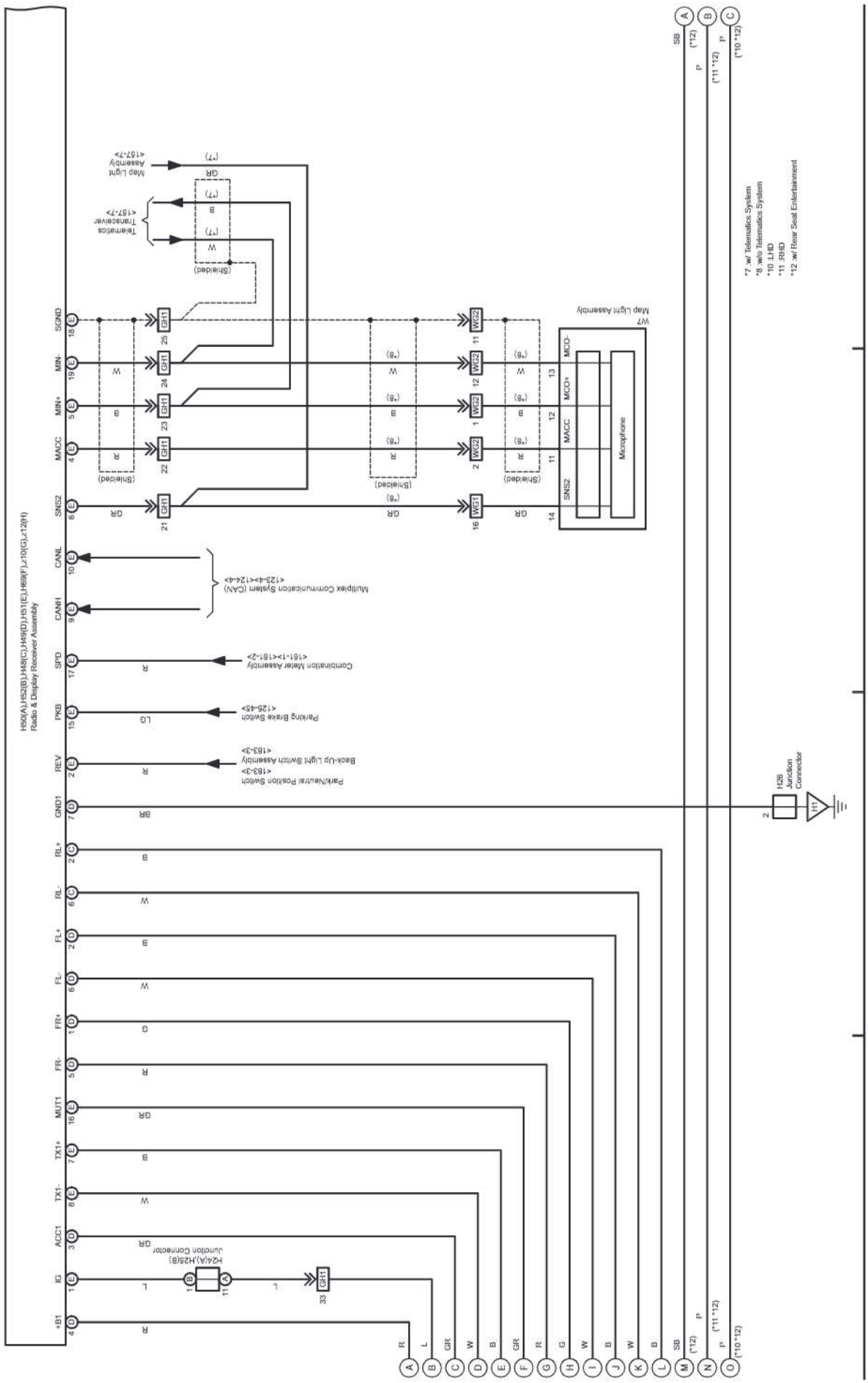

cardiagn.com

(Cont. next page)

151 LAND CRUISER / LAND CRUISER PRADO (Cont'd)

Audio System (Radio & Display Receiver Assembly Type w/ Stereo Component Amplifier Assembly) (From Aug. 2017 Production),
Navigation System (Radio & Display Receiver Assembly Type) (From Aug. 2017 Production),
Parking Assist (Rear View Monitor) (Radio & Display Receiver Assembly Type w/ Stereo Component Amplifier Assembly) (From Aug. 2017 Production)

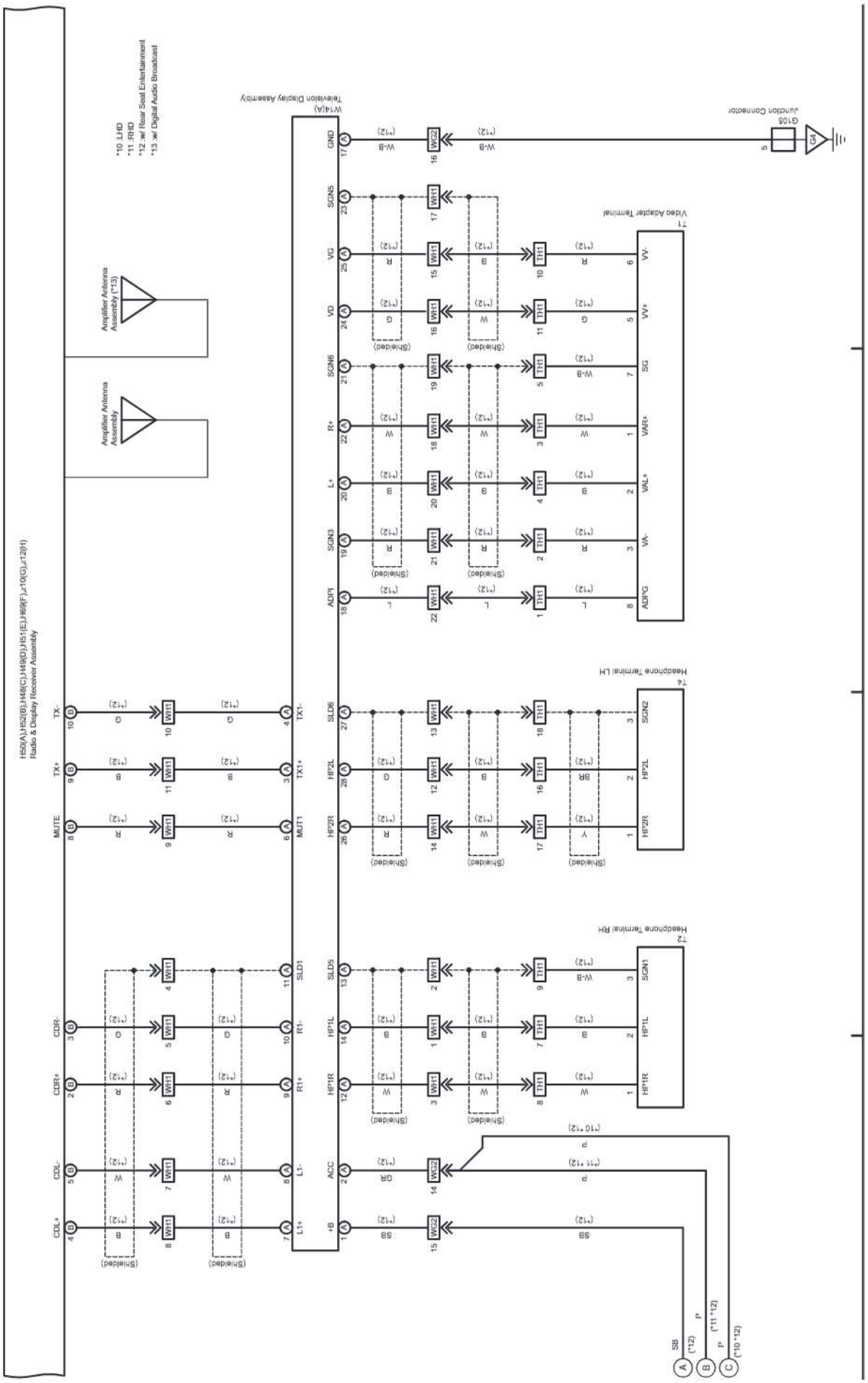

(Cont. next page)

Audio System (Radio & Display Receiver Assembly Type w/ Stereo Component Amplifier Assembly) (From Aug. 2017 Production),
Navigation System (Radio & Display Receiver Assembly Type) (From Aug. 2017 Production),
Parking Assist (Rear View Monitor) (Radio & Display Receiver Assembly Type w/ Stereo Component Amplifier Assembly) (From Aug. 2017 Production)

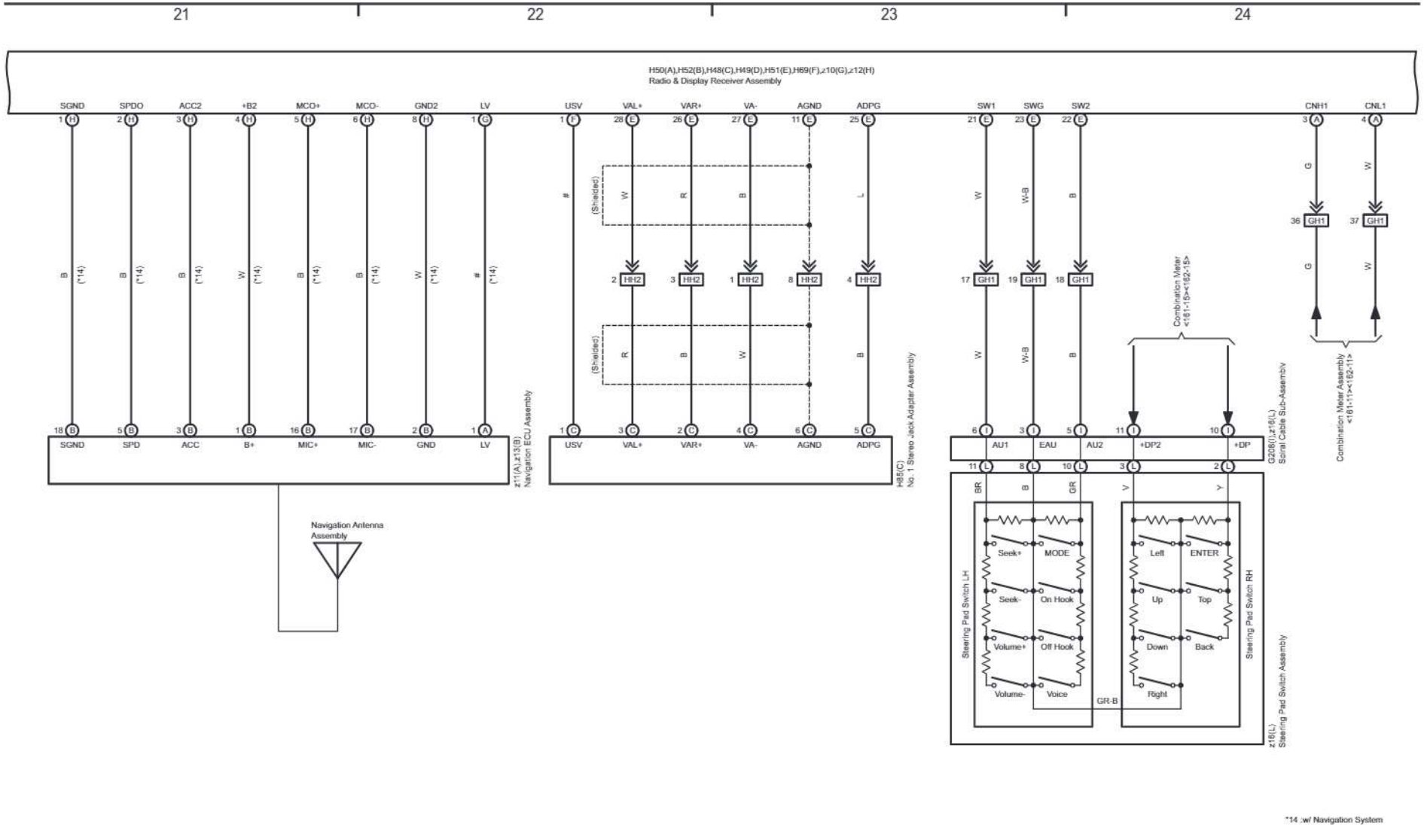

LAND CRUISER / LAND CRUISER PRADO (EM27T3E)

cardiagn.com

cardiagn.com

151 LAND CRUISER / LAND CRUISER PRADO (Cont'd)

Audio System (Radio & Display Receiver Assembly Type w/ Stereo Component Amplifier Assembly) (From Aug. 2017 Production),
Navigation System (Radio & Display Receiver Assembly Type) (From Aug. 2017 Production),
Parking Assist (Rear View Monitor) (Radio & Display Receiver Assembly Type w/ Stereo Component Amplifier Assembly) (From Aug. 2017 Production)

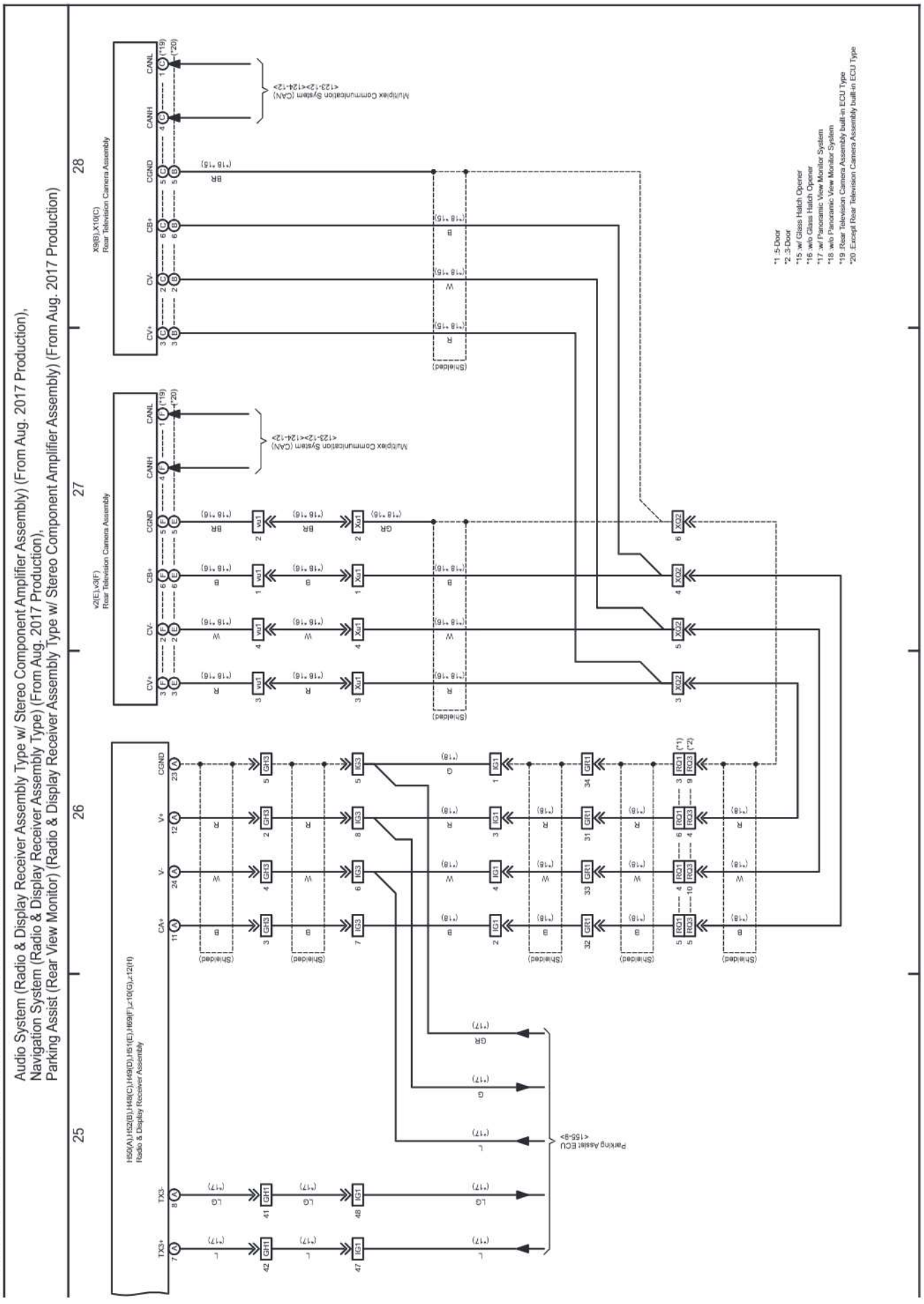

cardiagn.com

M OVERALL ELECTRICAL WIRING DIAGRAM

(Cont. next page)

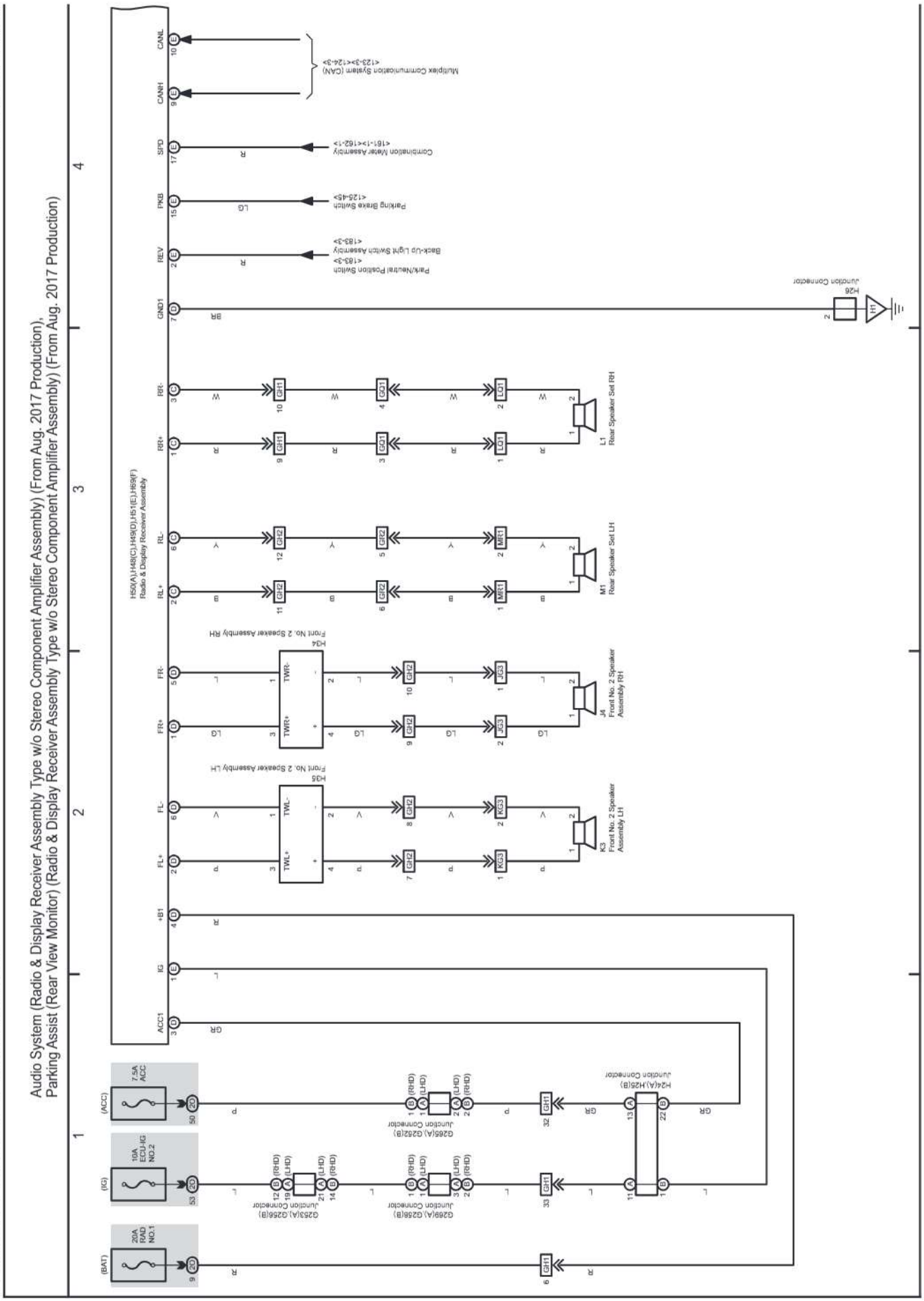

cardiagn.com

(Cont. next page)

Audio System (Radio & Display Receiver Assembly Type w/o Stereo Component Amplifier Assembly) (From Aug. 2017 Production),
Parking Assist (Rear View Monitor) (Radio & Display Receiver Assembly Type w/o Stereo Component Amplifier Assembly) (From Aug. 2017 Production)

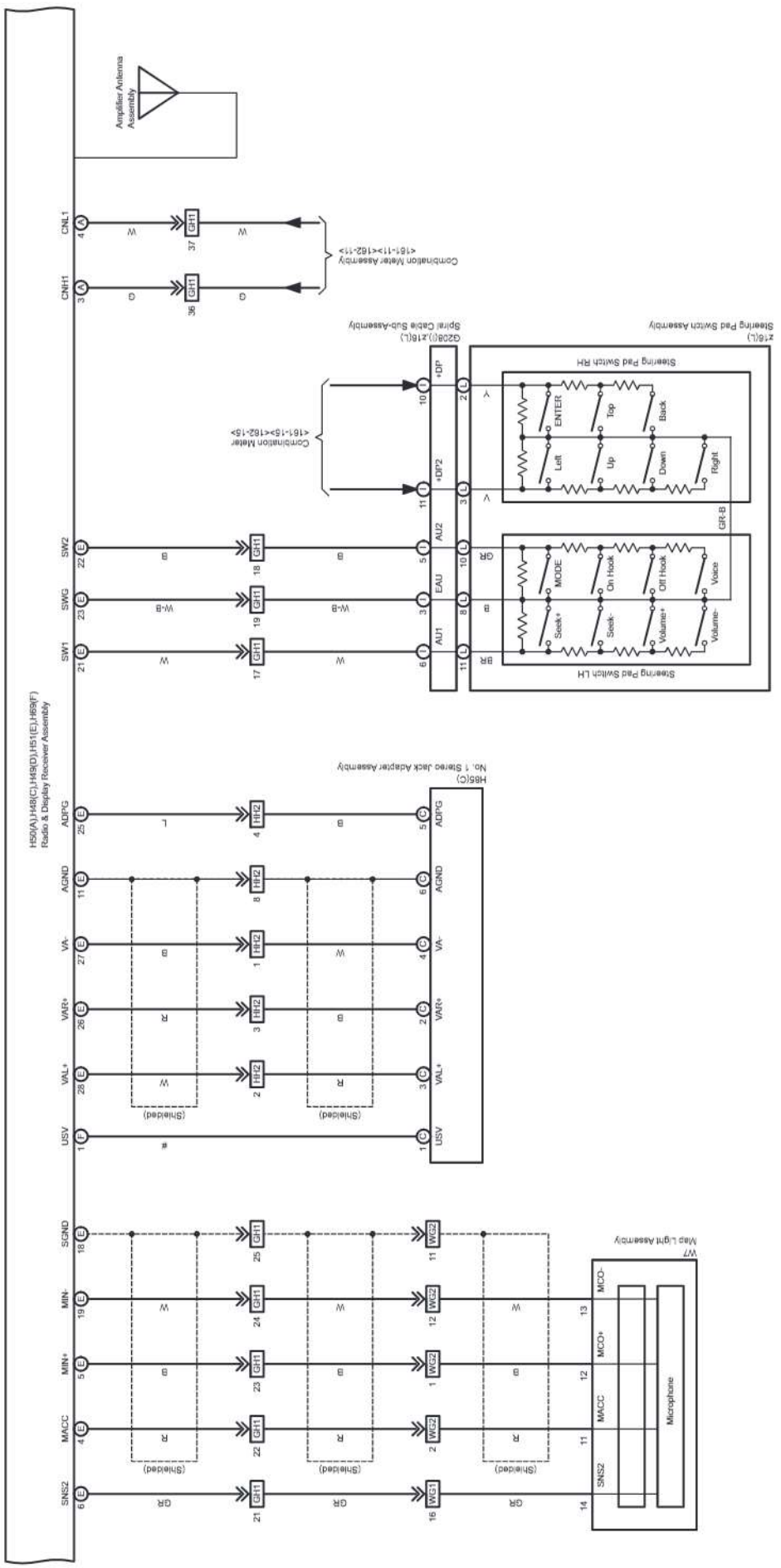

cardiagn.com

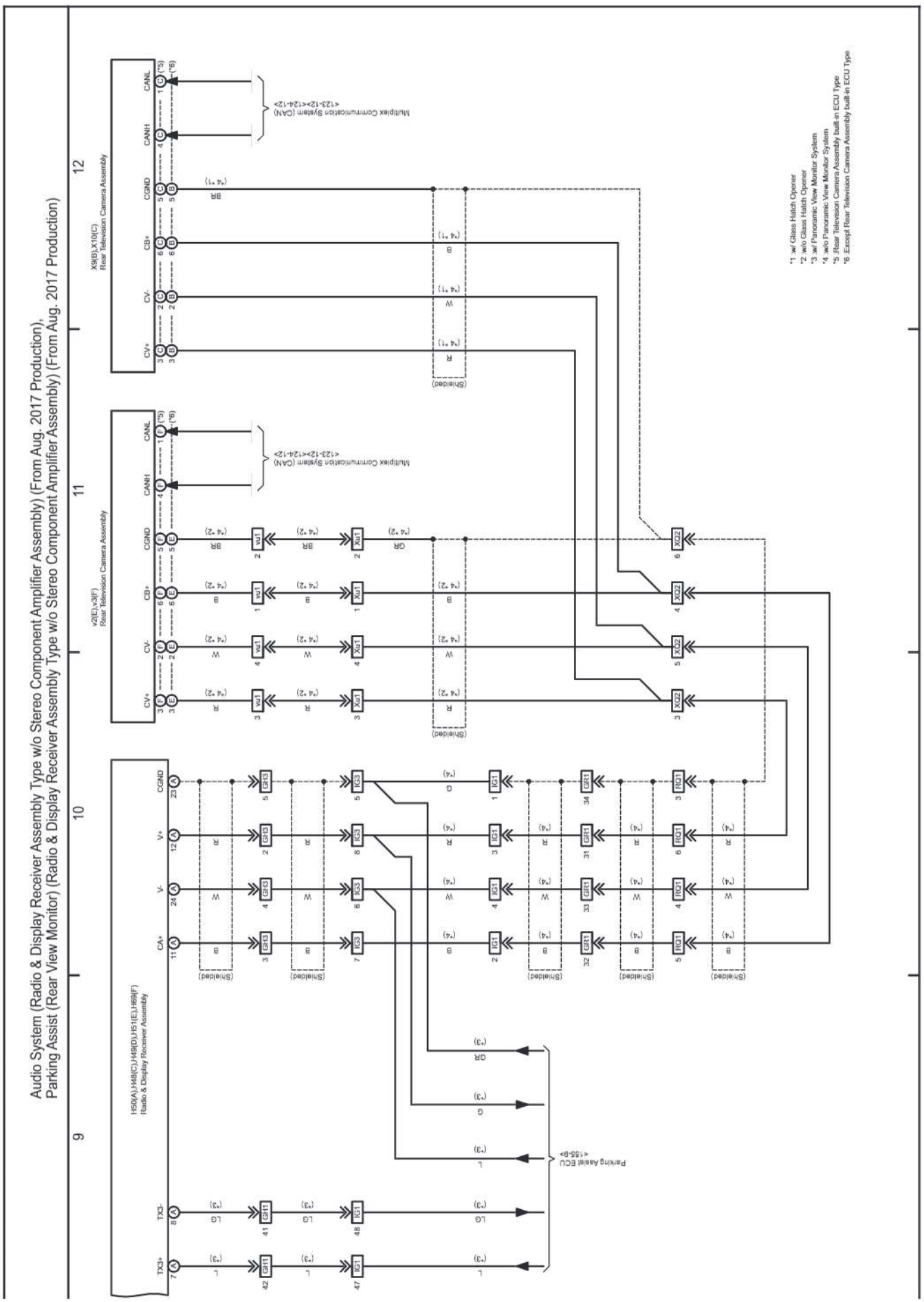

cardiagn.com

(Cont. next page)

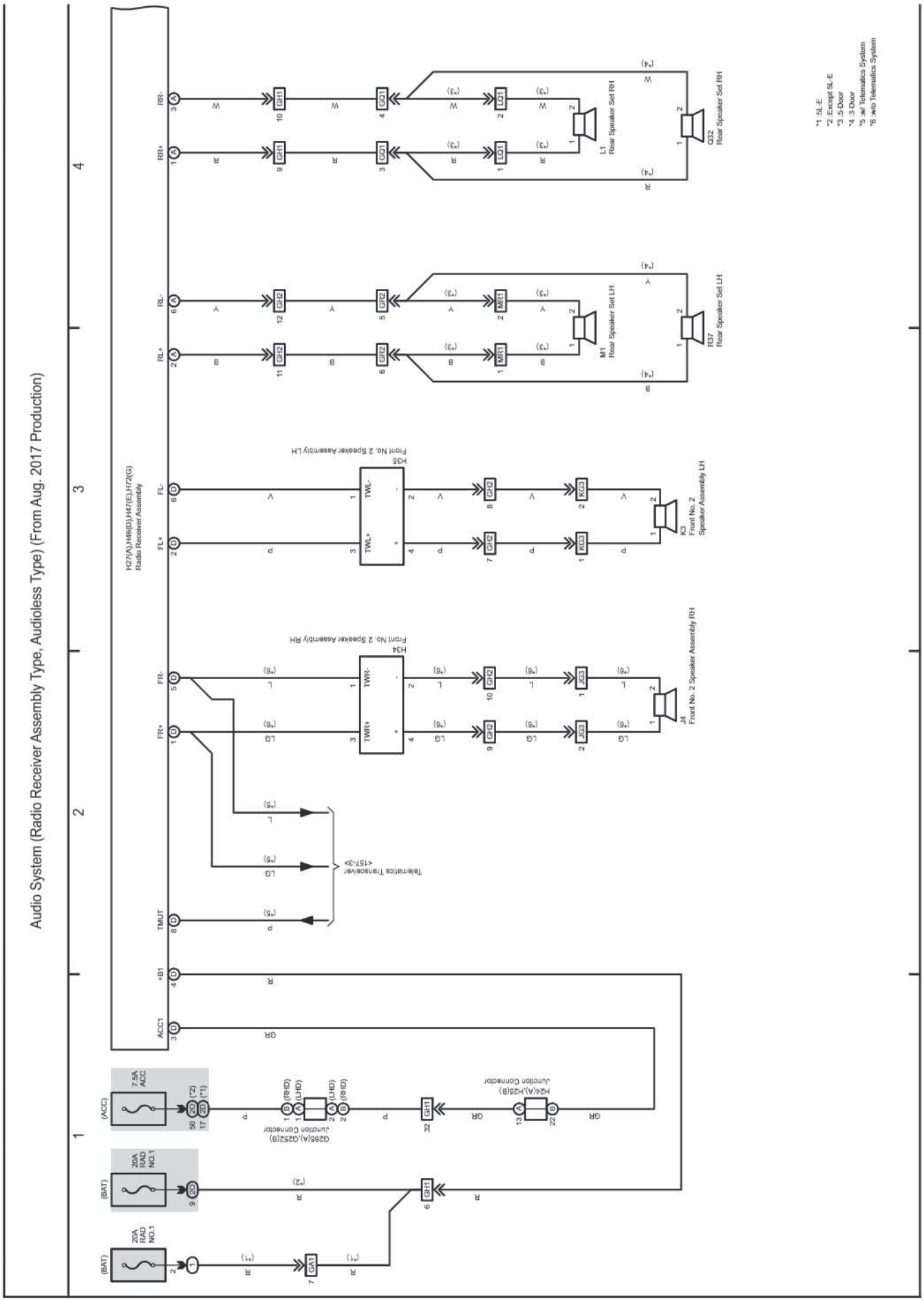

cardiagn.com

(Cont. next page)

Audio System (Radio Receiver Assembly Type, Audioless Type) (From Aug. 2017 Production)

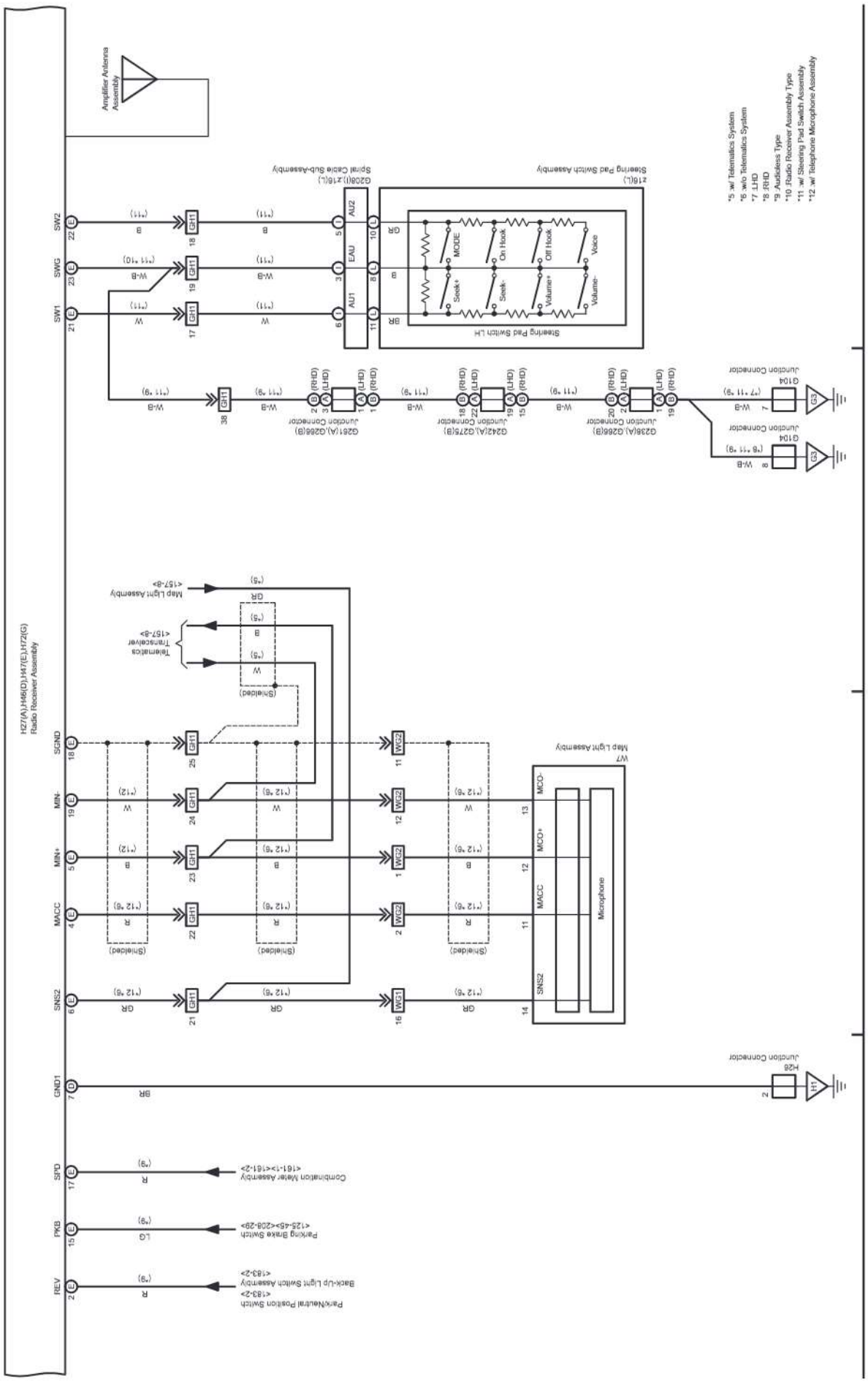

cardiagn.com

153 LAND CRUISER / LAND CRUISER PRADO (Cont'd)

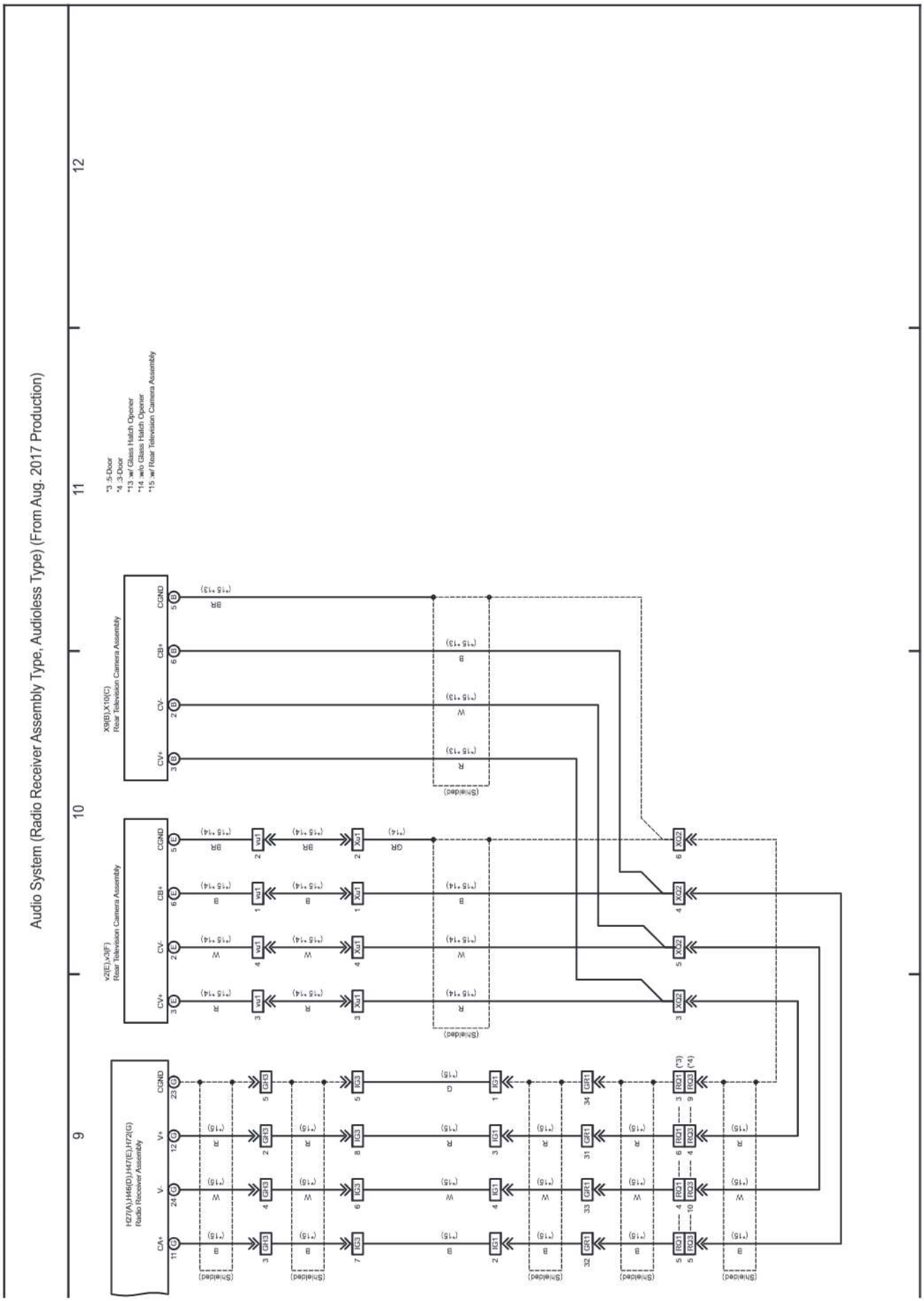

cardiagn.com

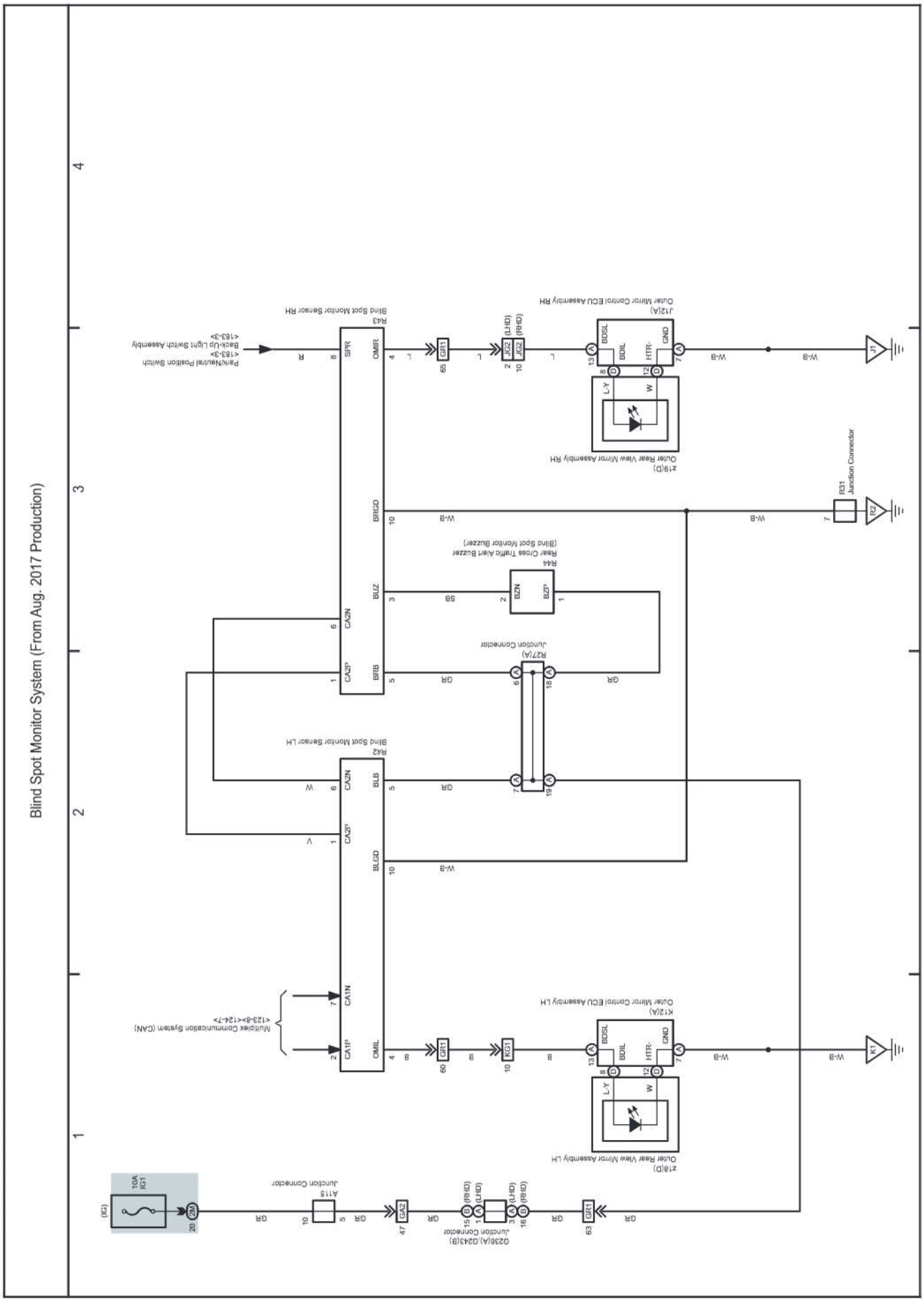

cardiagn.com

(Cont. next page)

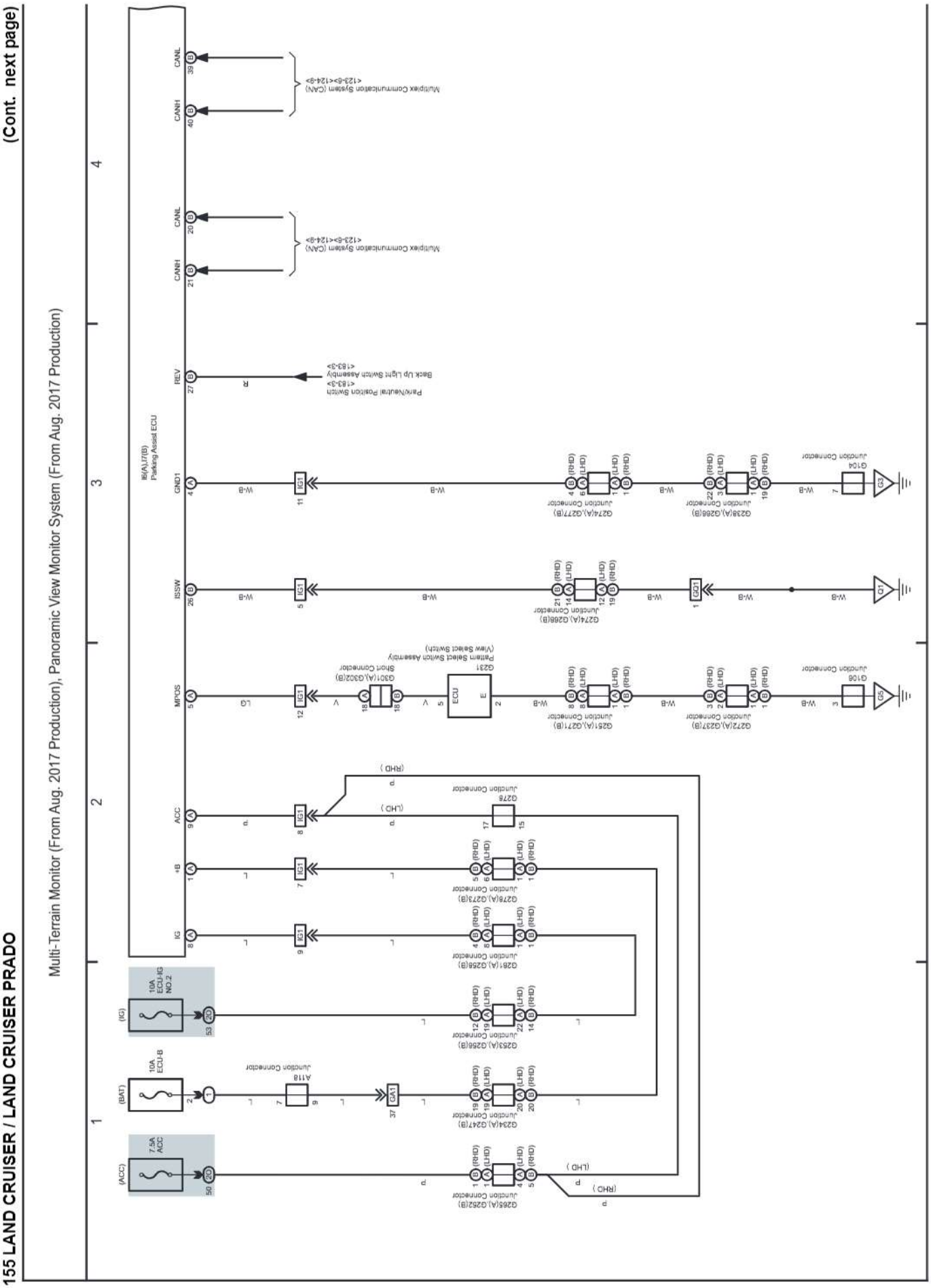

(Cont. next page)

Multi-Terrain Monitor (From Aug. 2017 Production), Panoramic View Monitor System (From Aug. 2017 Production)

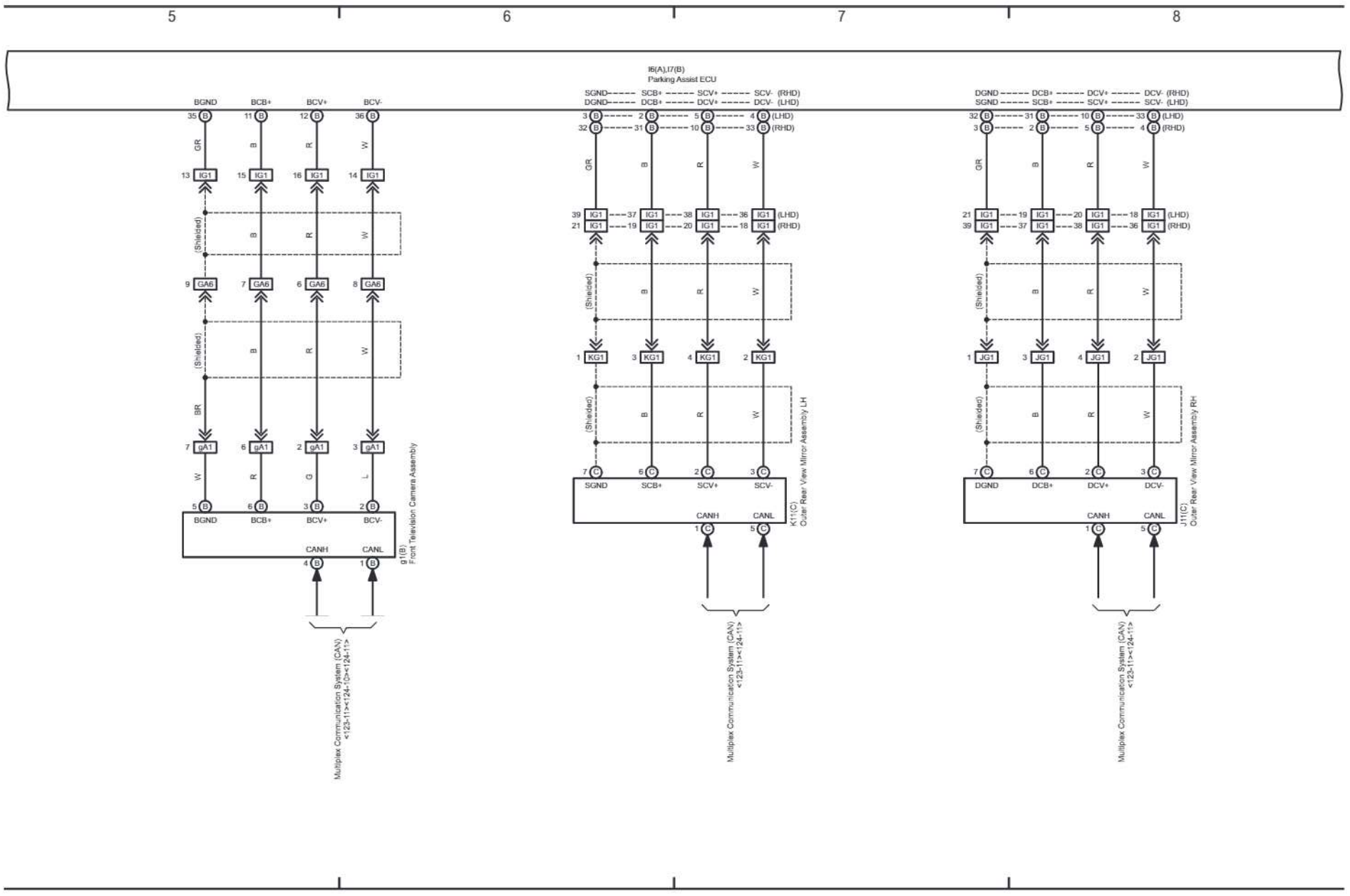

cardiagn.com

cardiagn.com

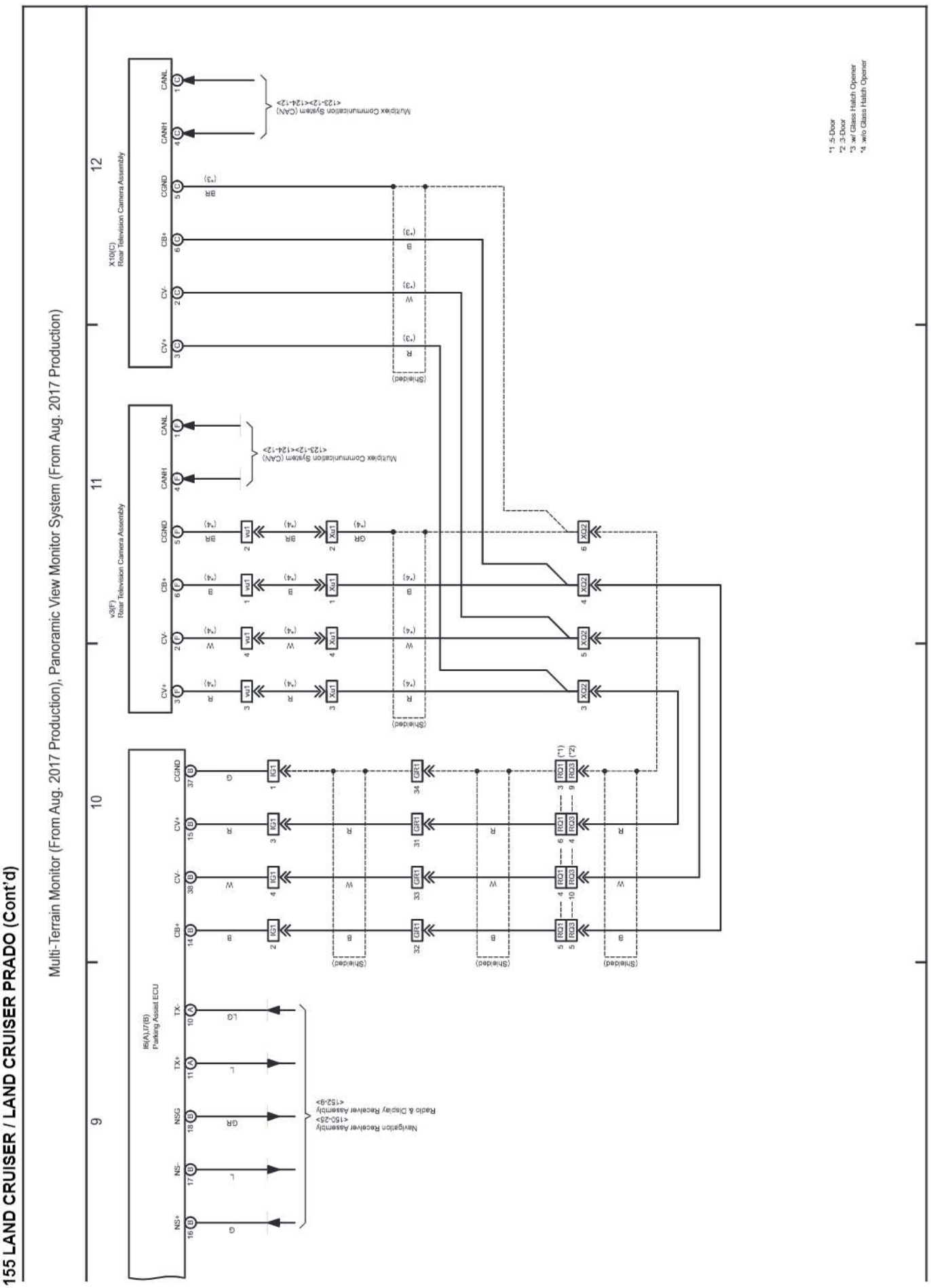

cardiagn.com

(Cont. next page)

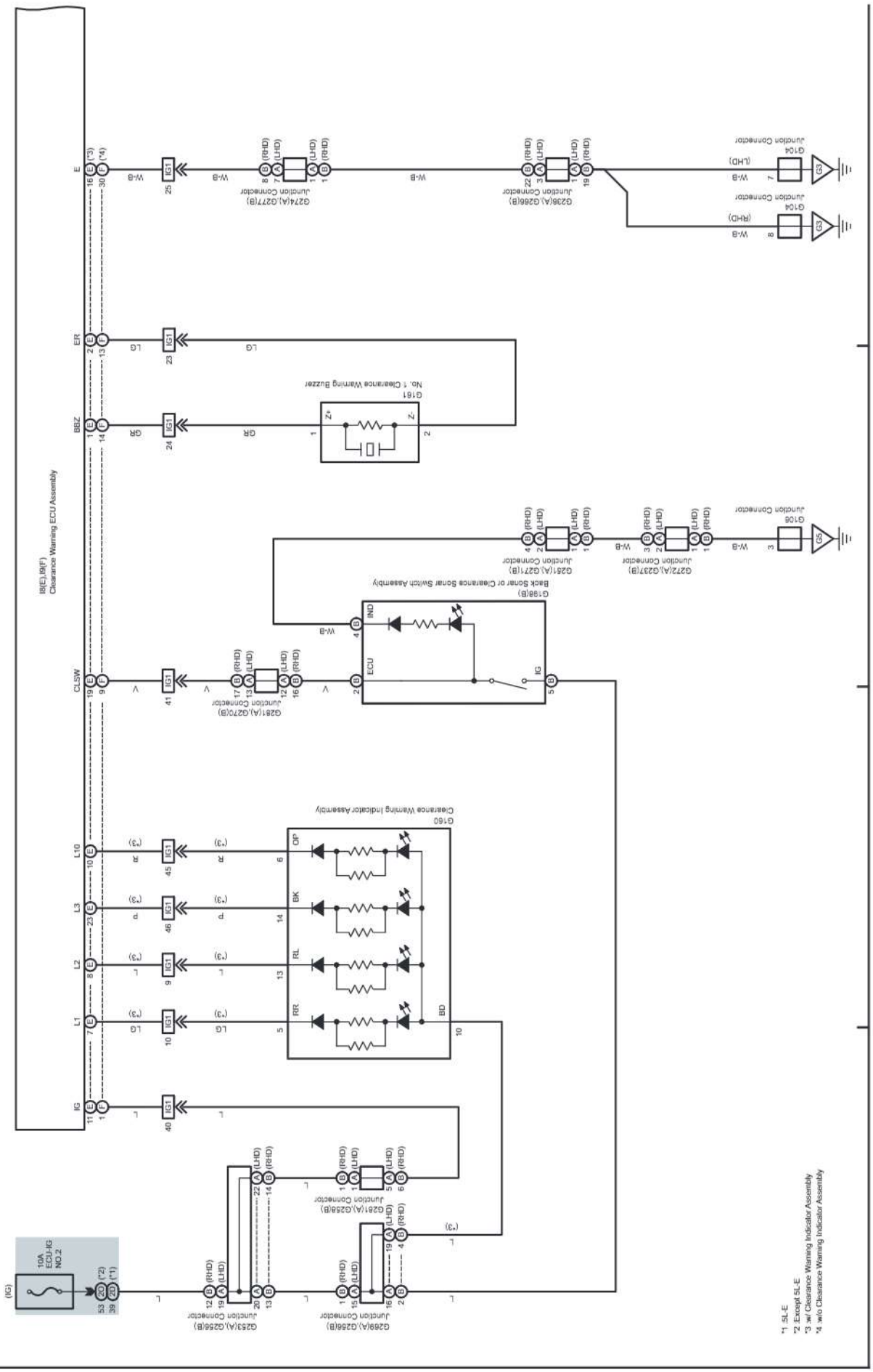

cardiagn.com

Parking Assist (TOYOTA Parking Assist-Sensor) (4 Sensor Type) (From Aug. 2017 Production)

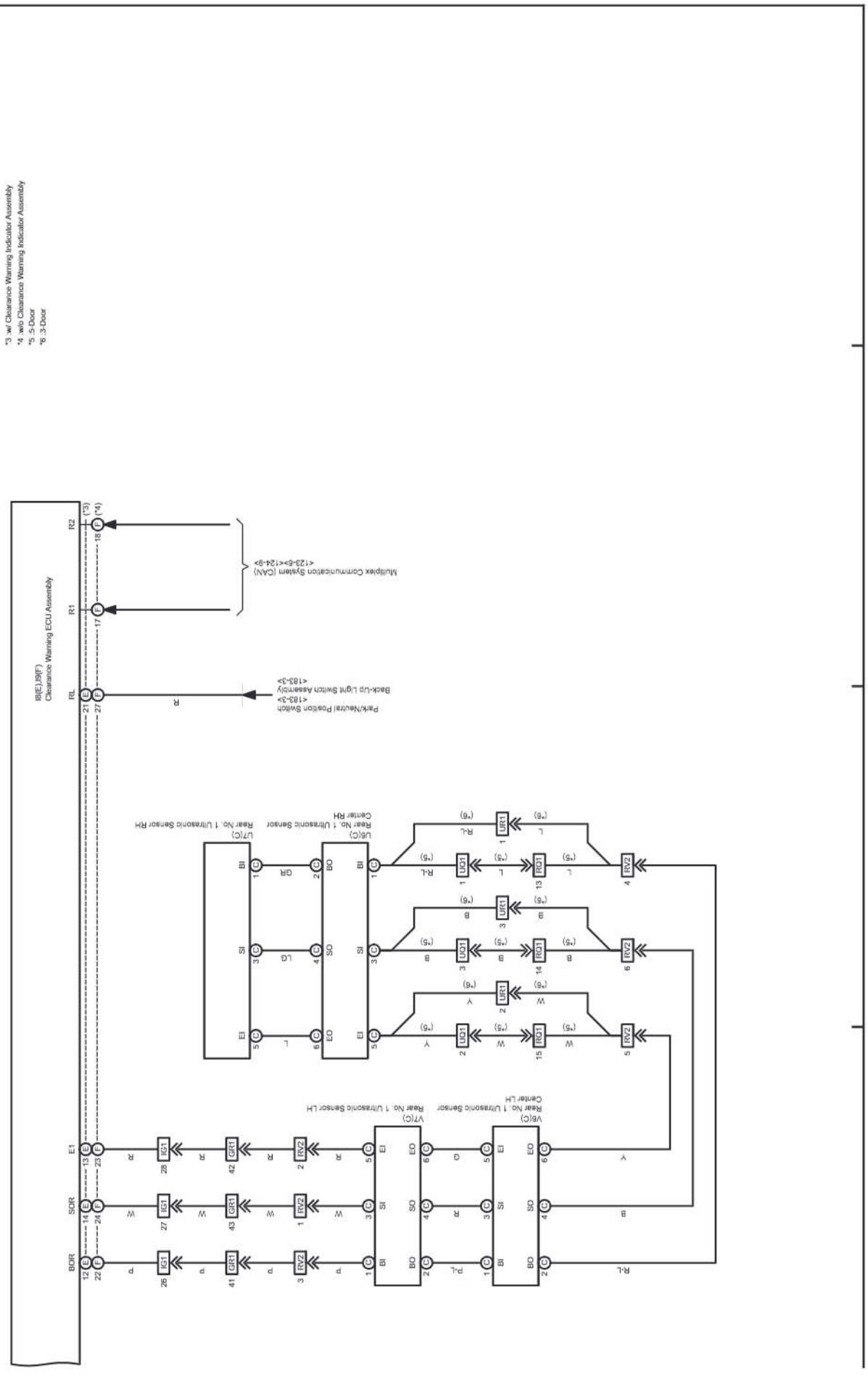

cardiagn.com

M OVERALL ELECTRICAL WIRING DIAGRAM

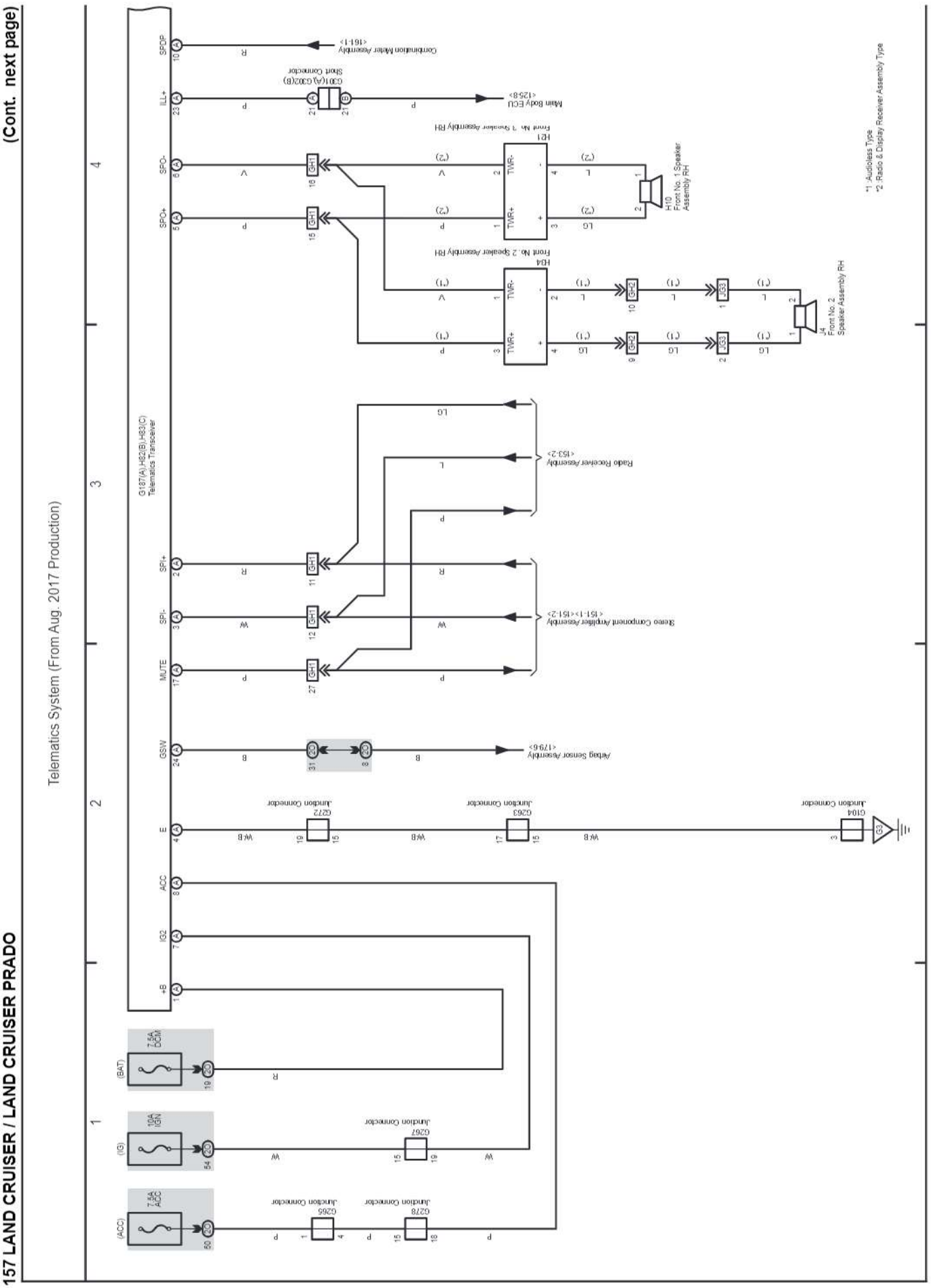

cardiagn.com

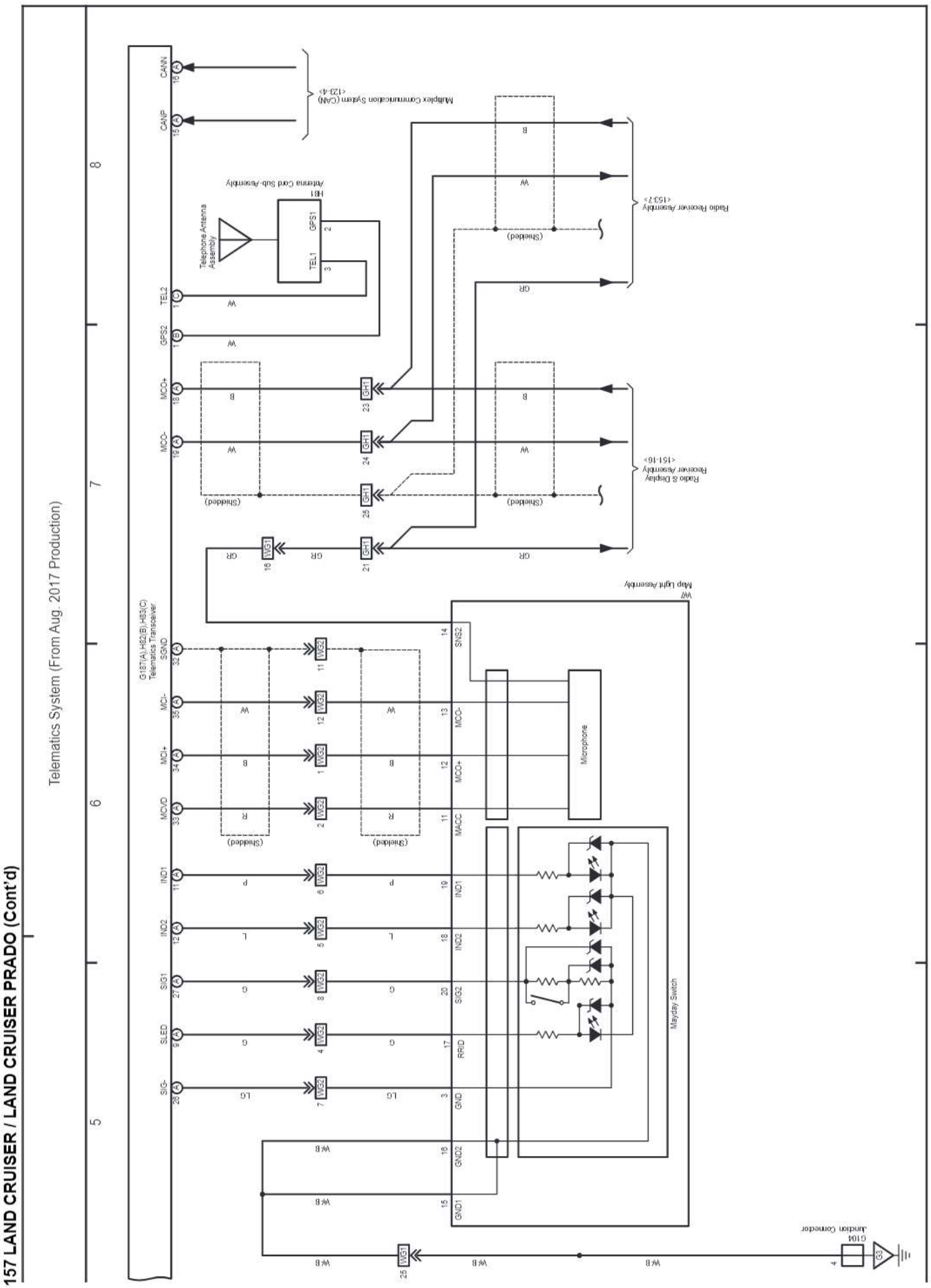

cardiagn.com

M OVERALL ELECTRICAL WIRING DIAGRAM

(Cont. next page)

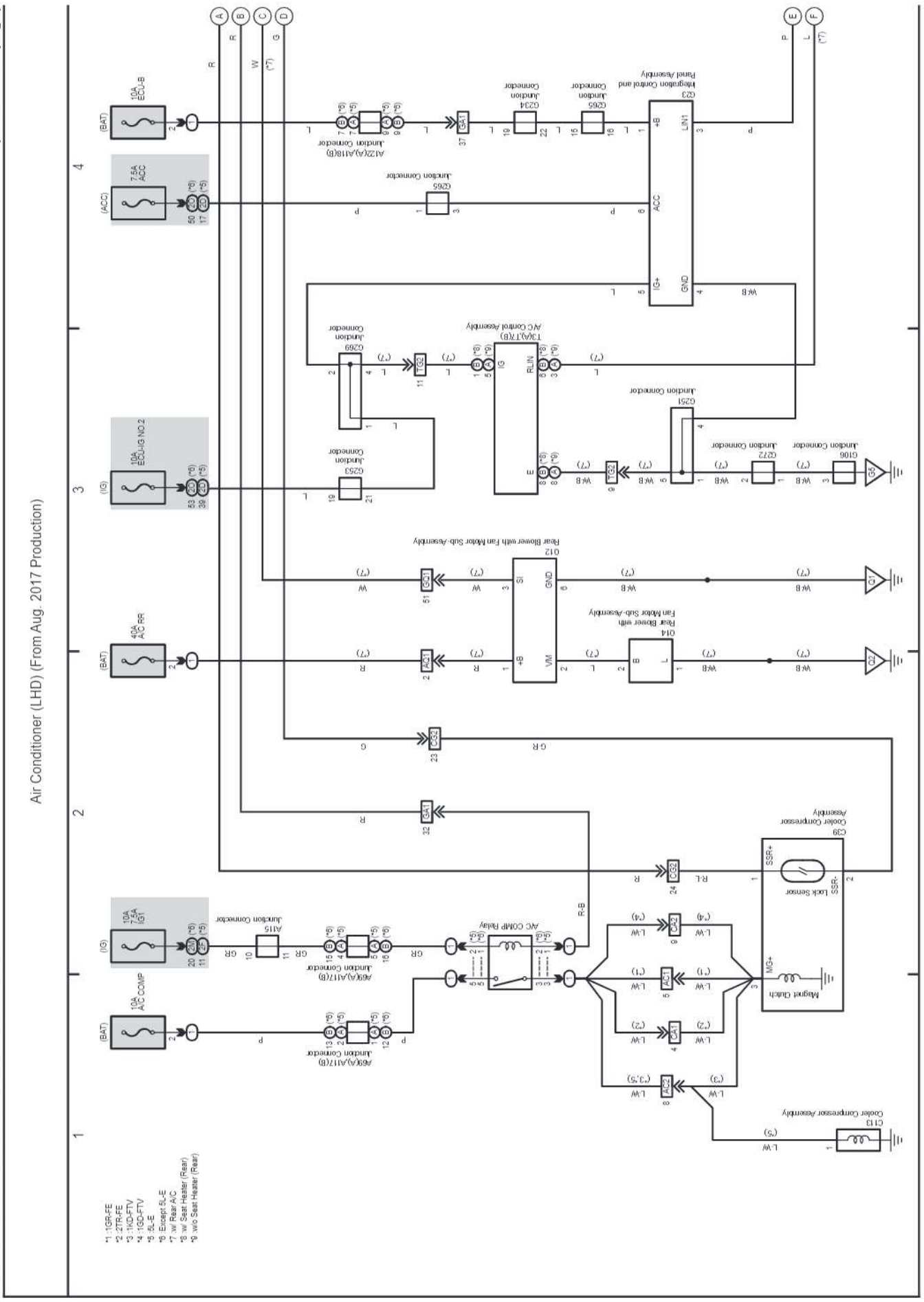

cardiagn.com

158 LAND CRUISER / LAND CRUISER PRADO (Cont'd)

(Cont. next page)

Air Conditioner (LHD) (From Aug. 2017 Production)

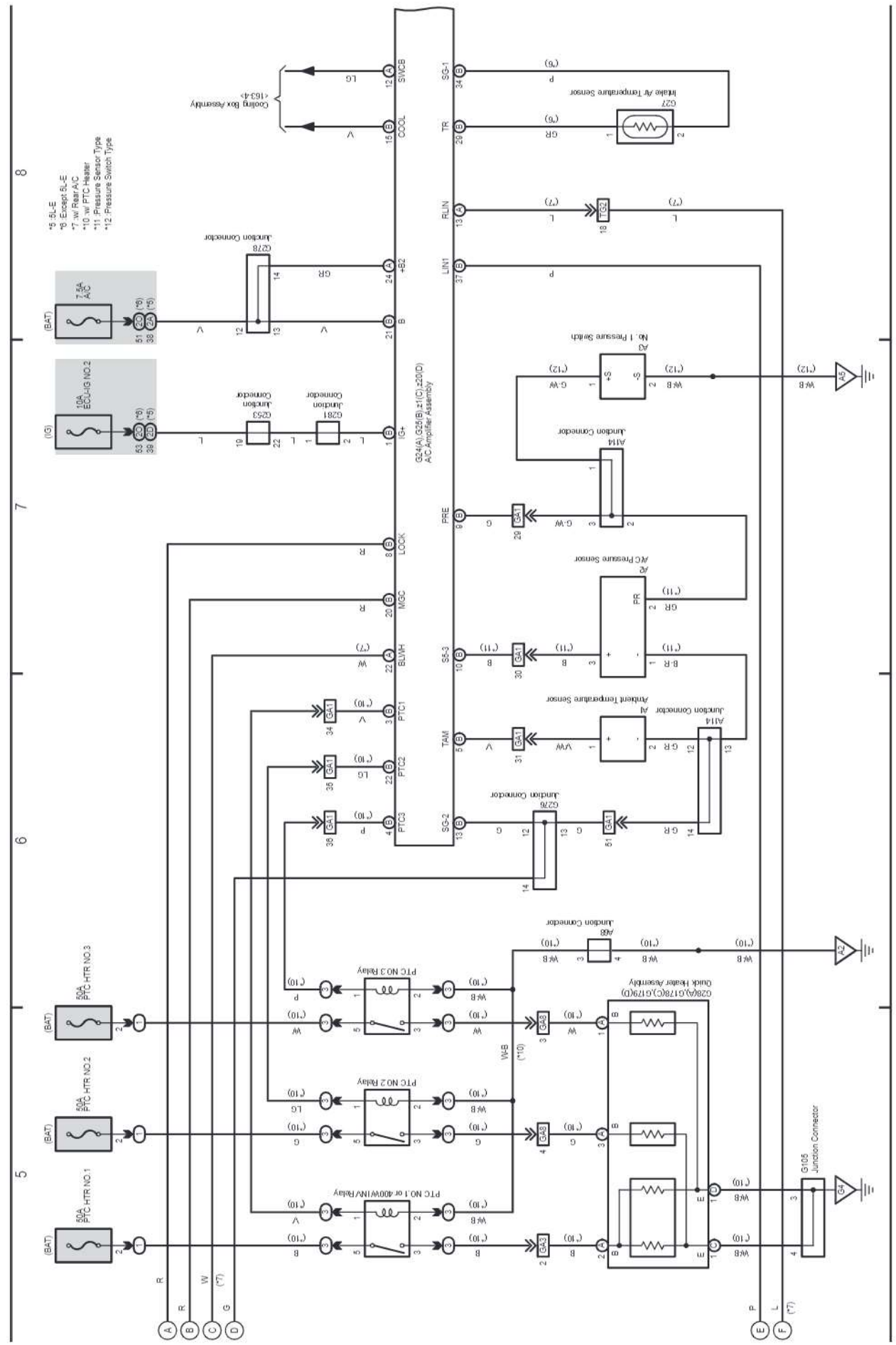

cardiagn.com

(Cont. next page)

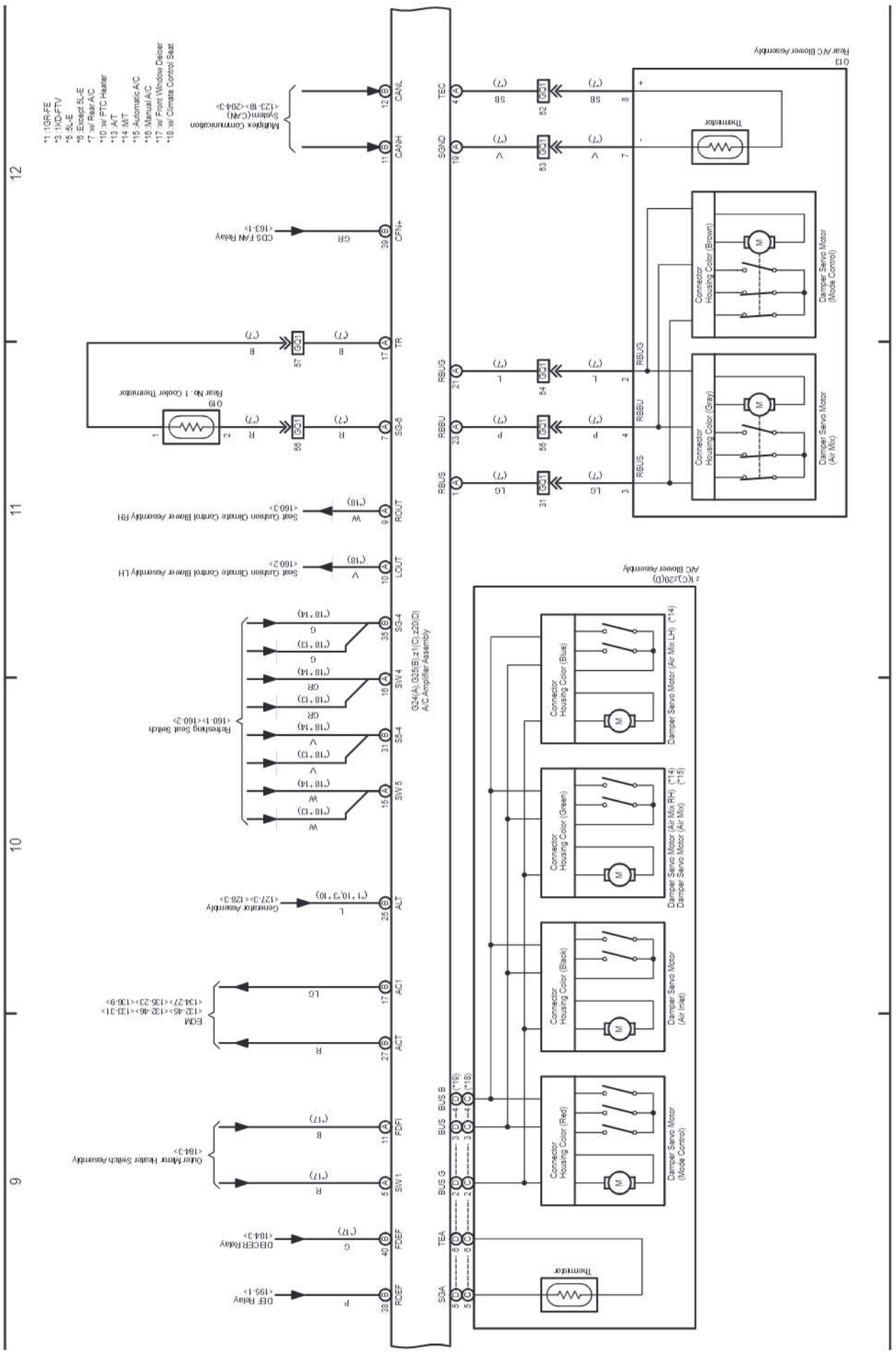

cardiagn.com

158 LAND CRUISER / LAND CRUISER PRADO (Cont'd)

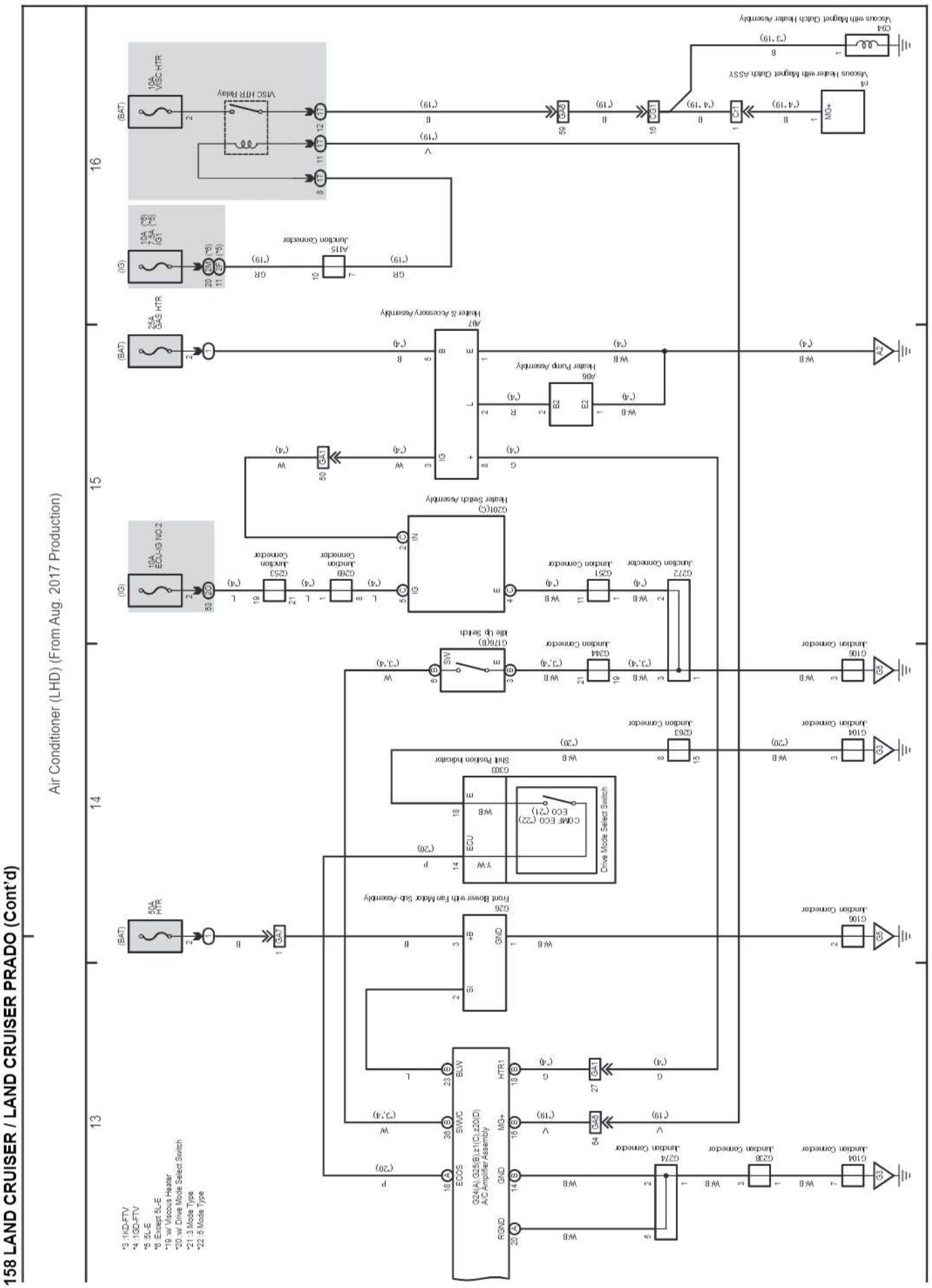

cardiagn.com

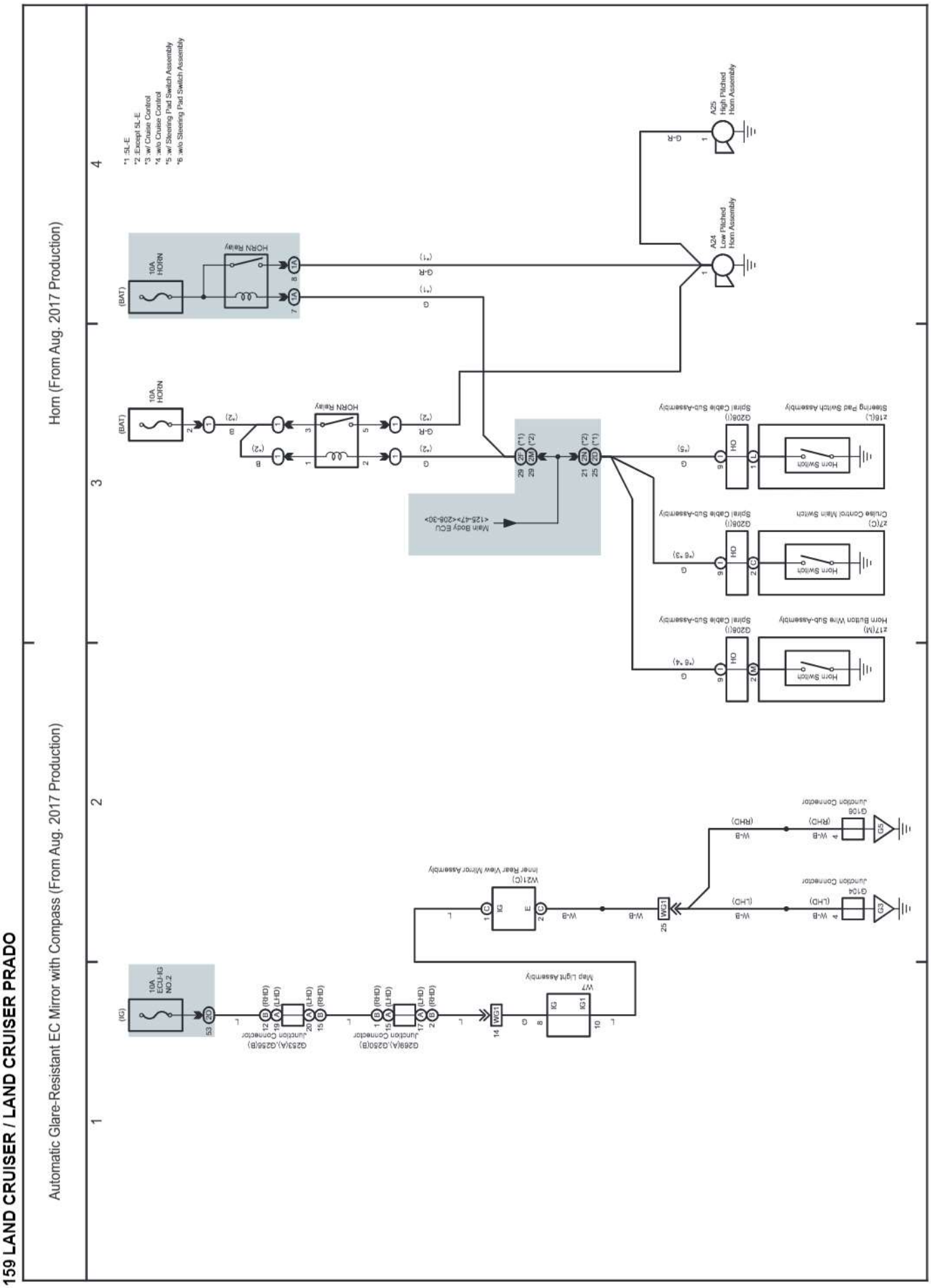

cardiagn.com

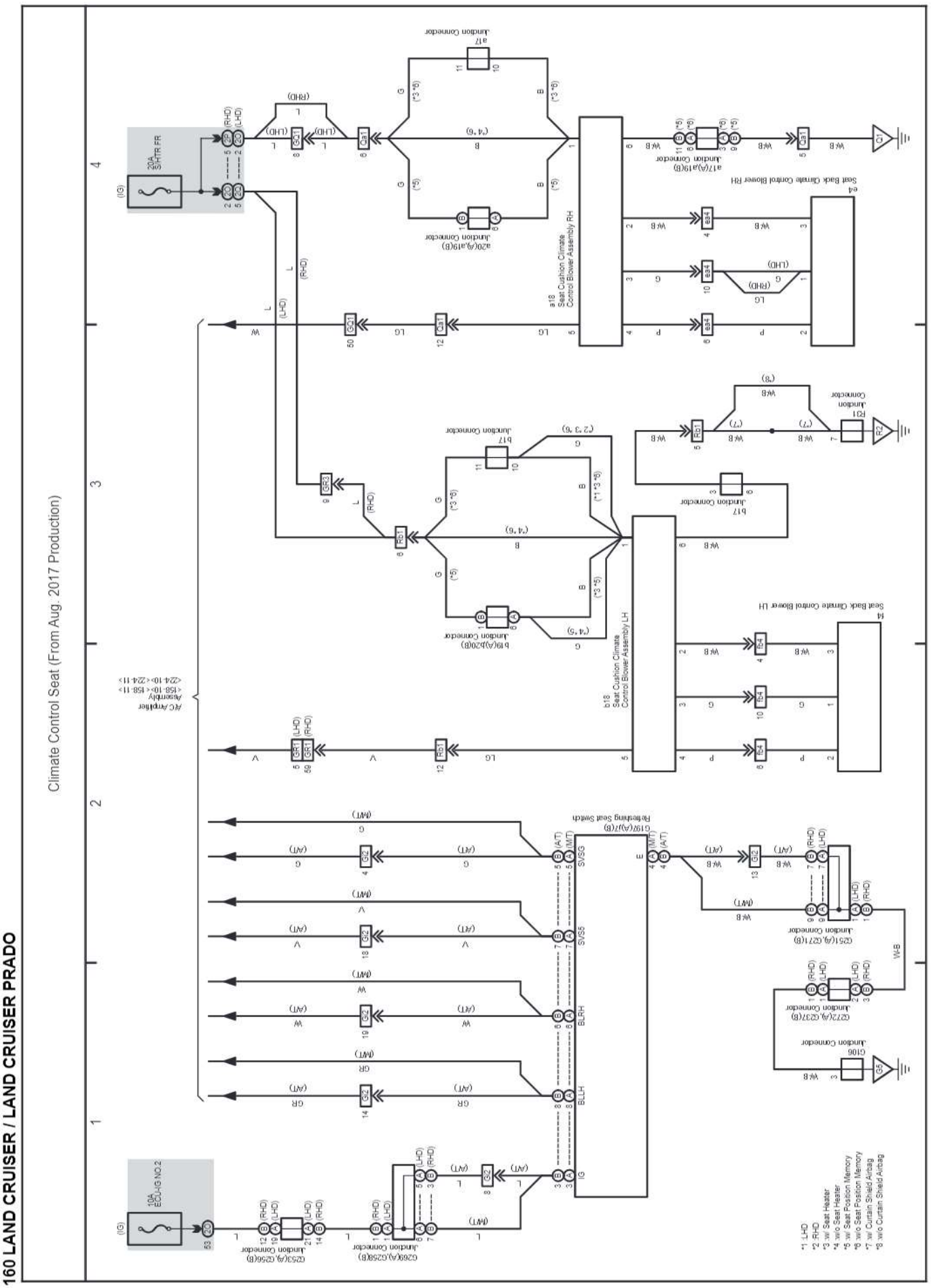

cardiagn.com

M OVERALL ELECTRICAL WIRING DIAGRAM

(Cont. next page)

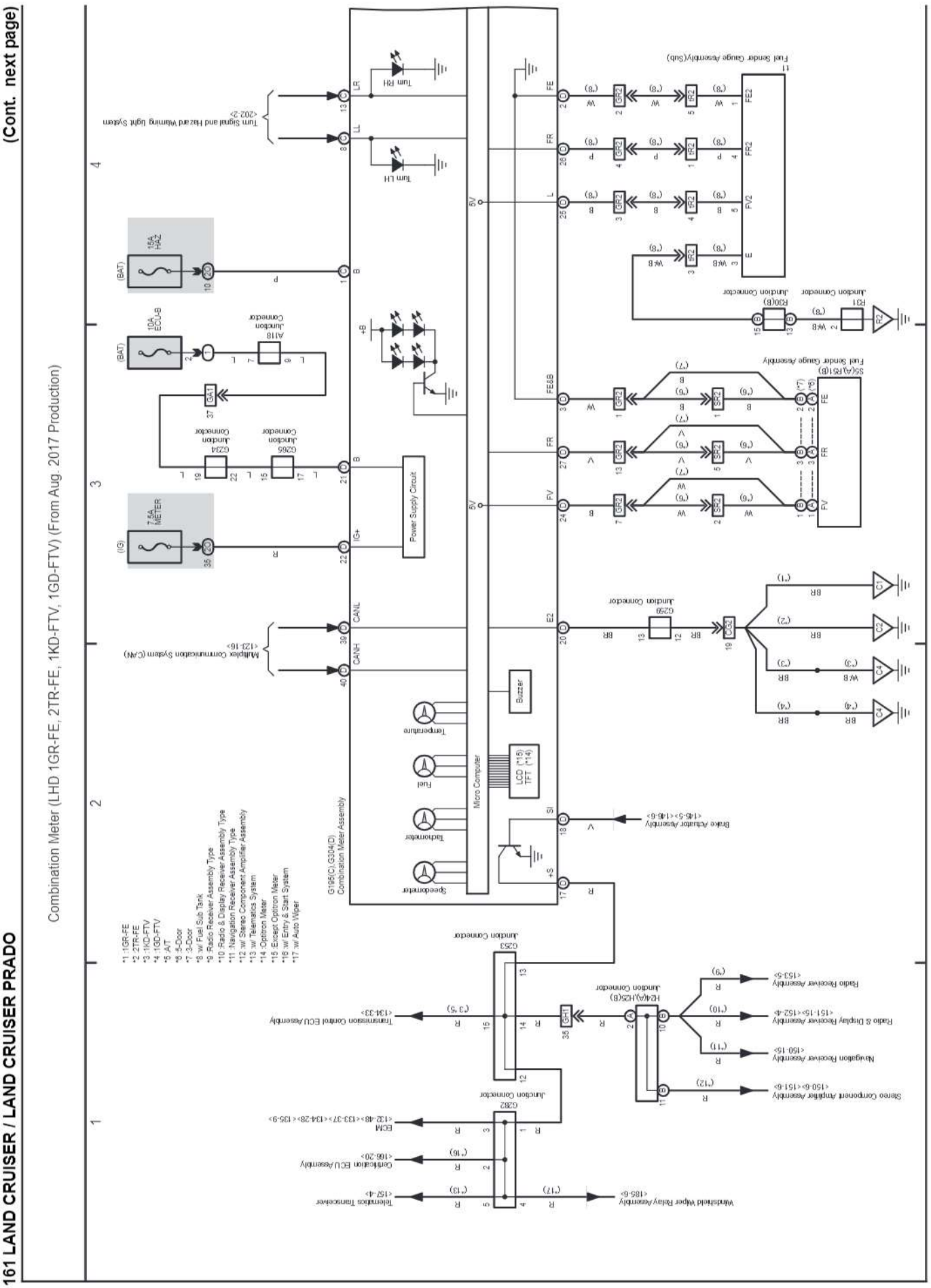

cardiagn.com

(Cont. next page)

Combination Meter (LHD 1GR-FE, 2TR-FE, 1KD-FTV, 1GD-FTV) (From Aug. 2017 Production)

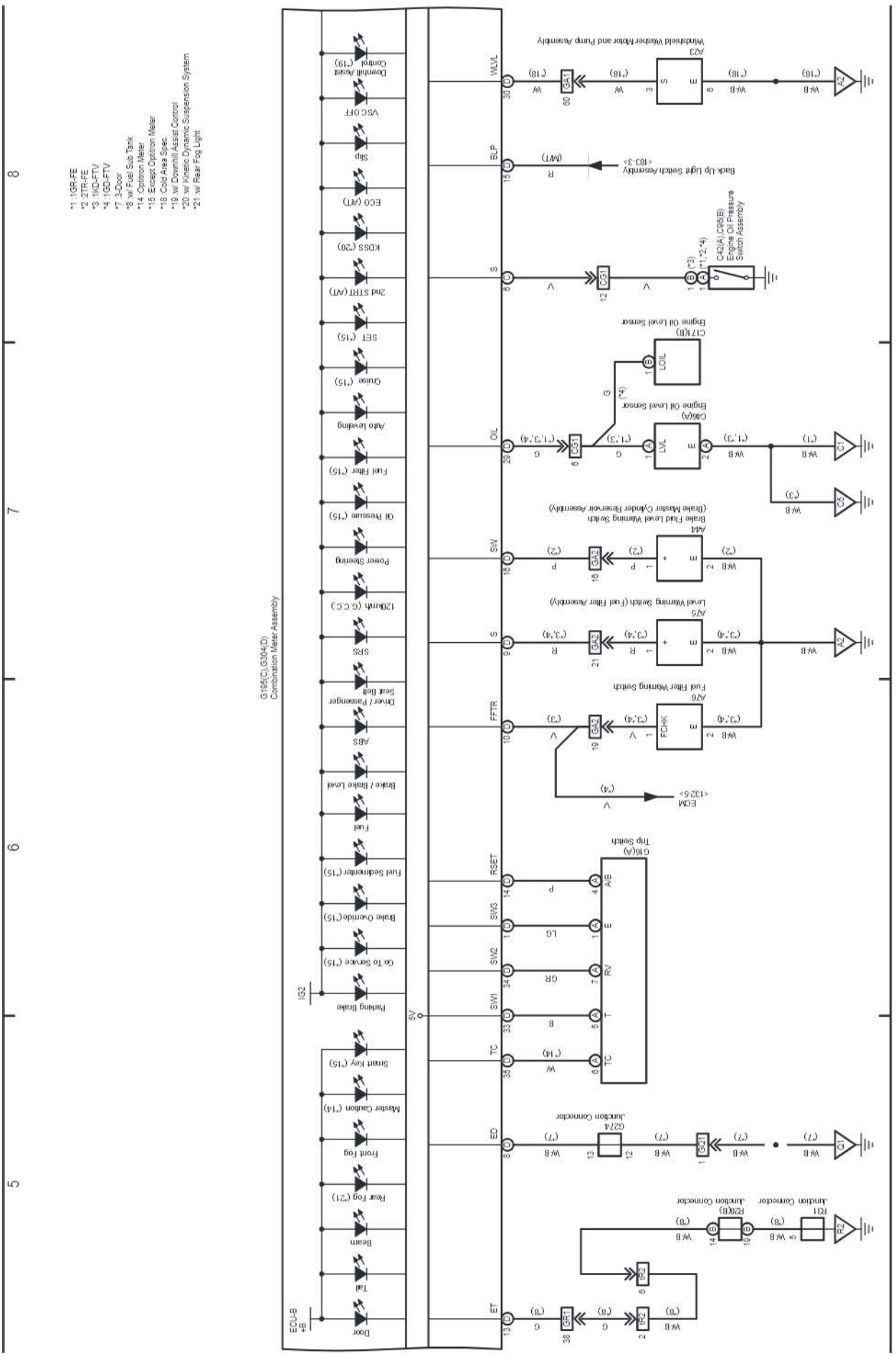

cardiagn.com

M OVERALL ELECTRICAL WIRING DIAGRAM

(Cont. next page)

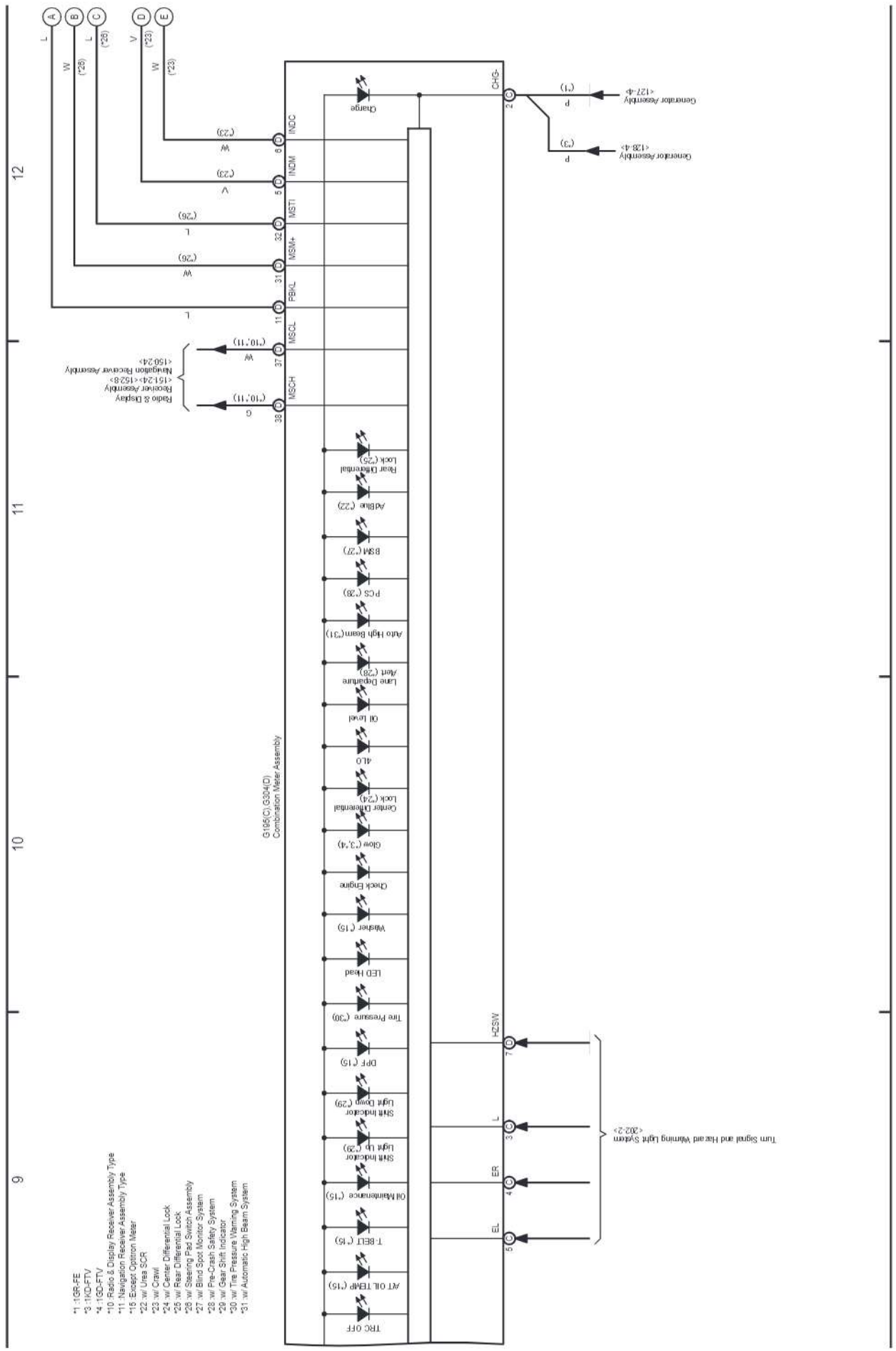

cardiagn.com

161 LAND CRUISER / LAND CRUISER PRADO (Cont'd)

Combination Meter (LHD 1GR-FE, 2TR-FE, 1KD-FTV, 1GD-FTV) (From Aug. 2017 Production)

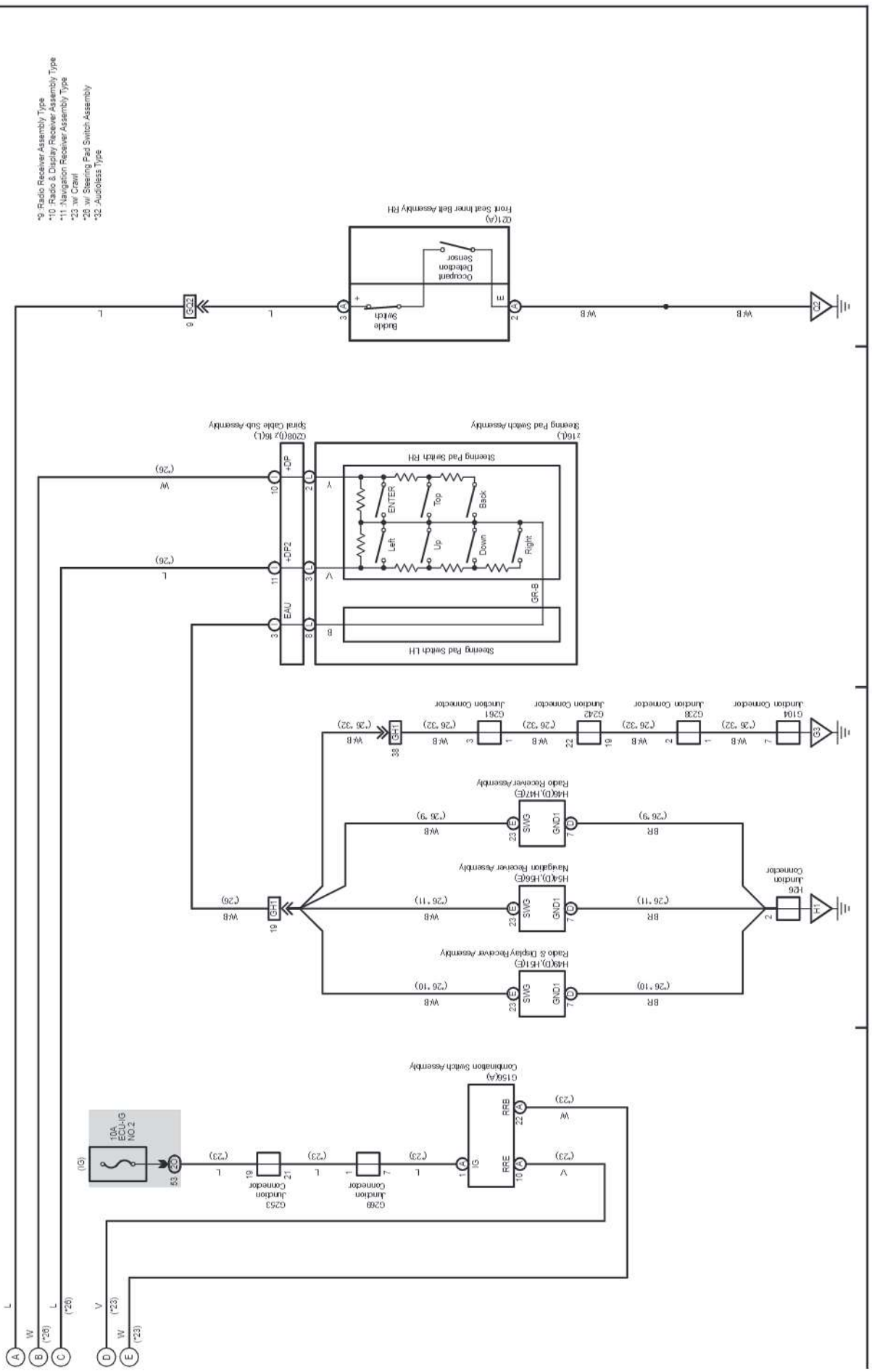

cardiagn.com

(Cont. next page)

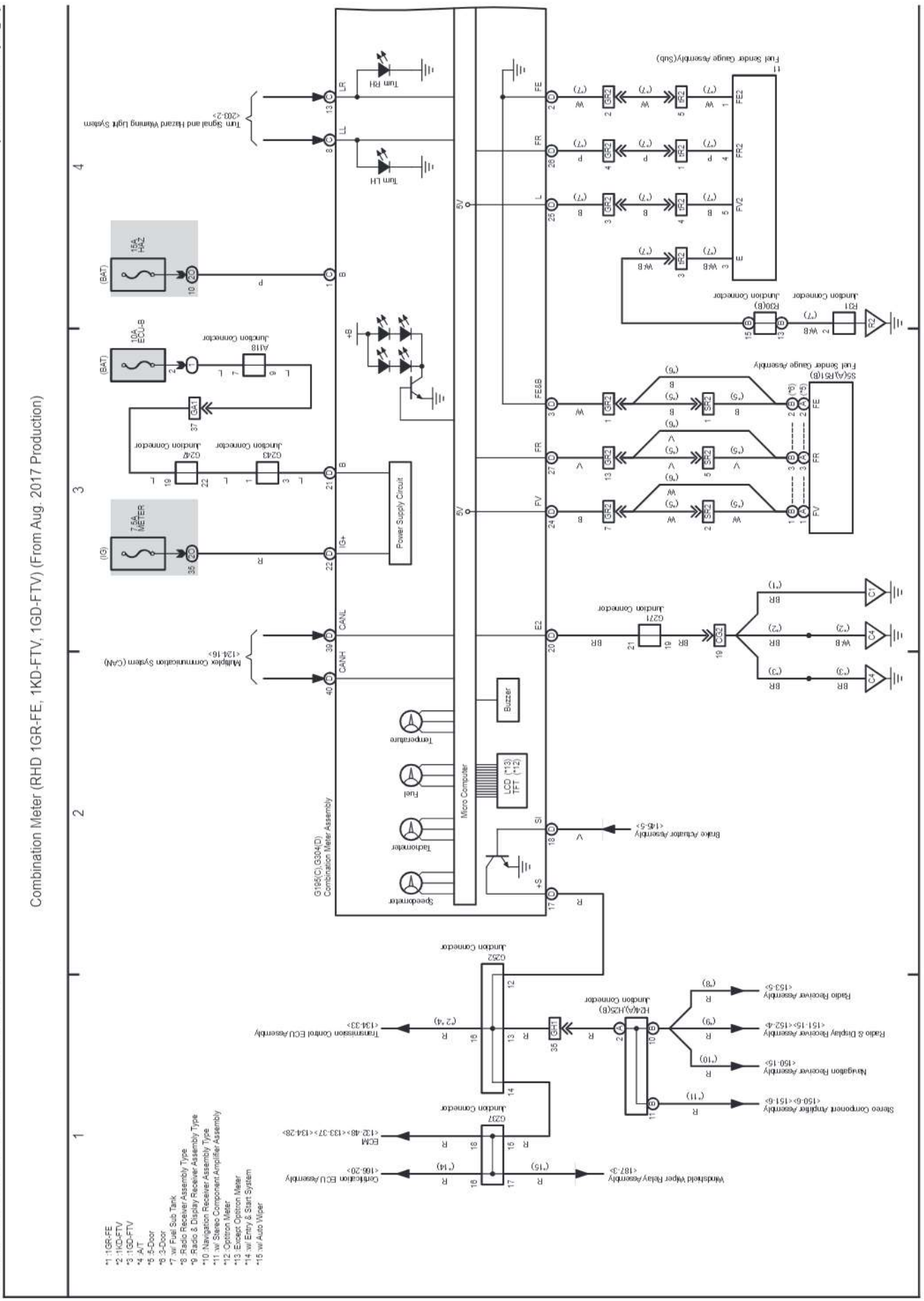

(Cont. next page)

Combination Meter (RHD 1GR-FE, 1KD-FTV, 1GD-FTV) (From Aug. 2017 Production)

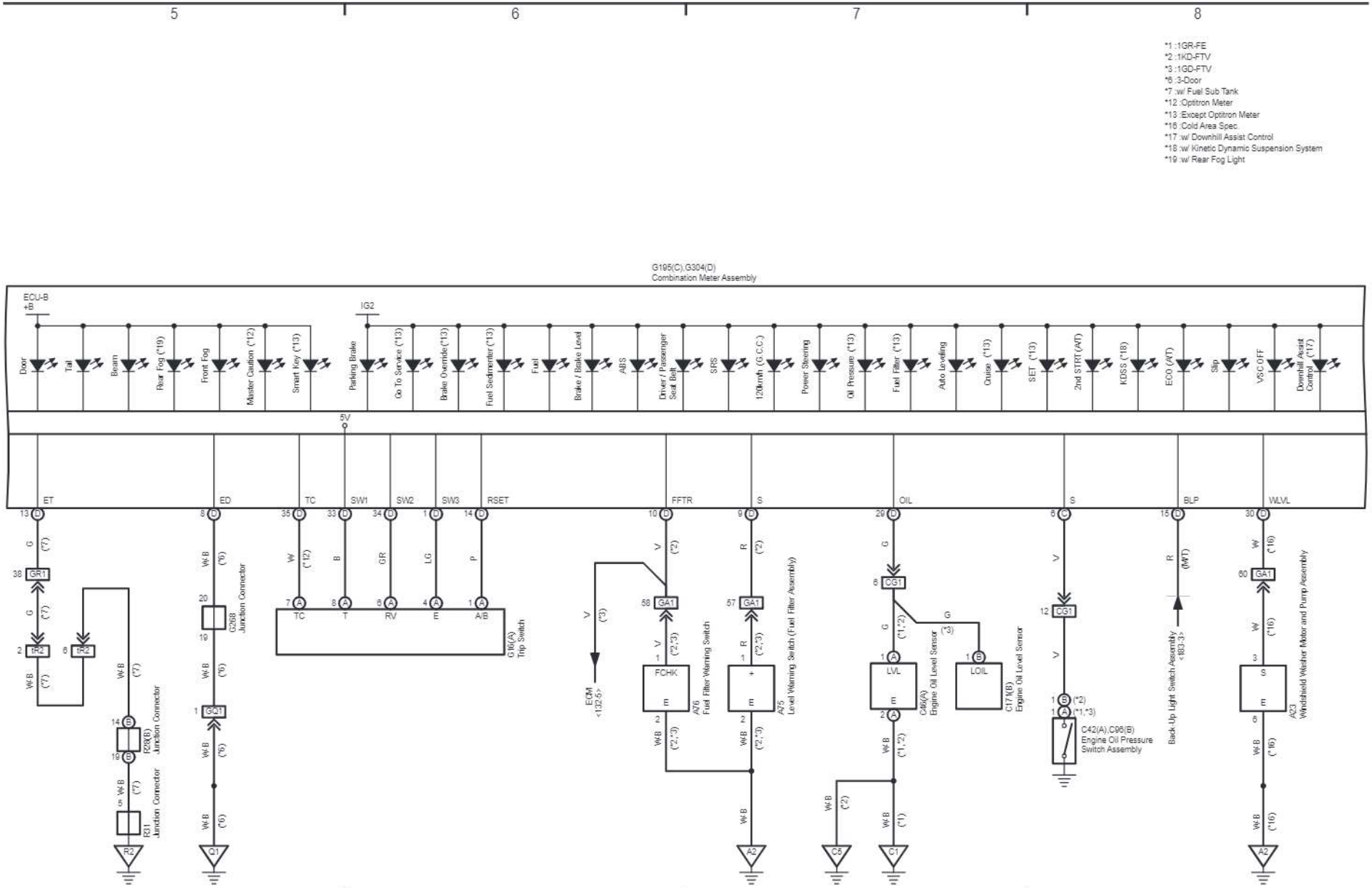

cardiagn.com

cardiagn.com

M OVERALL ELECTRICAL WIRING DIAGRAM

(Cont. next page)

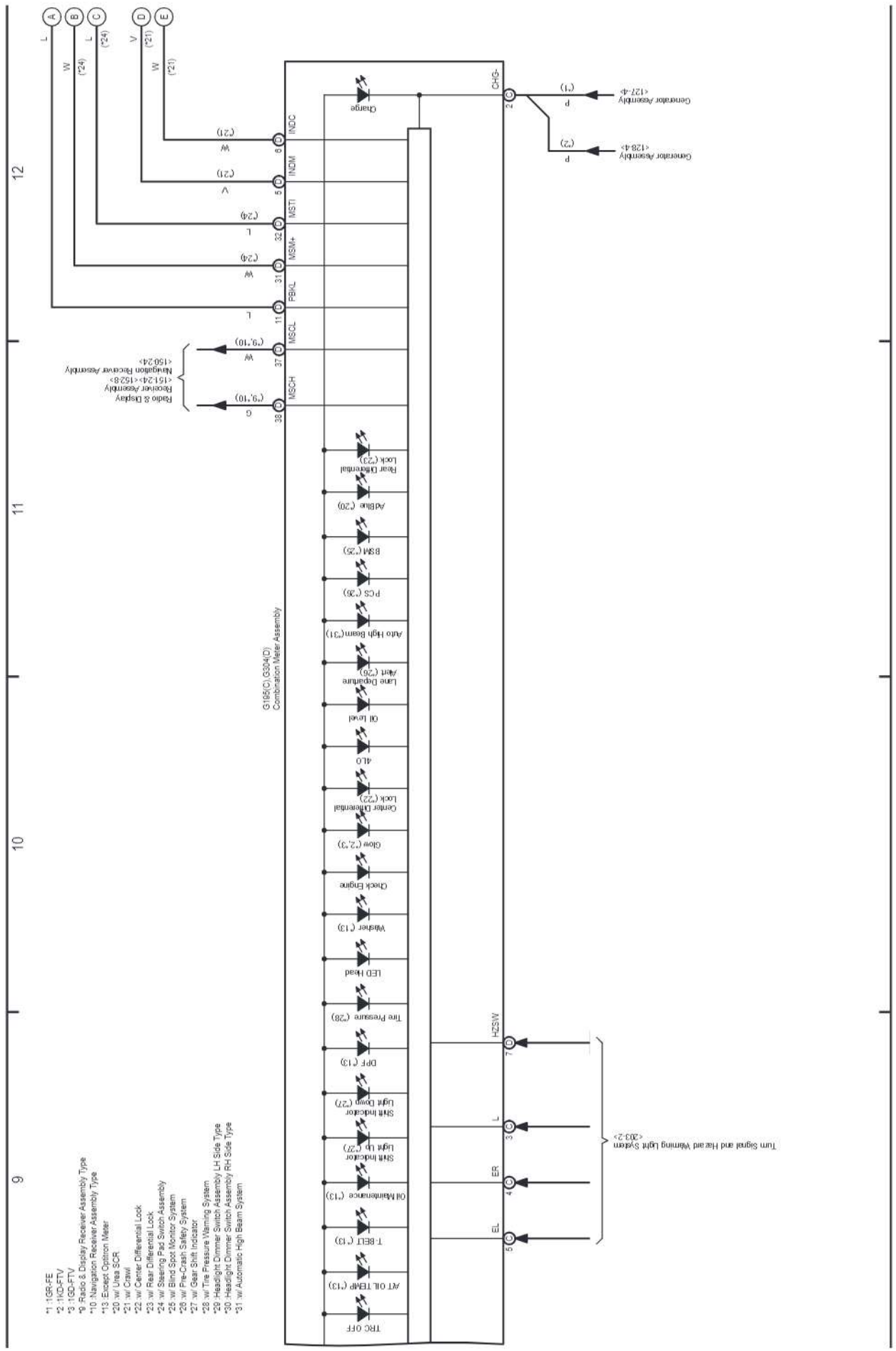

cardiagn.com

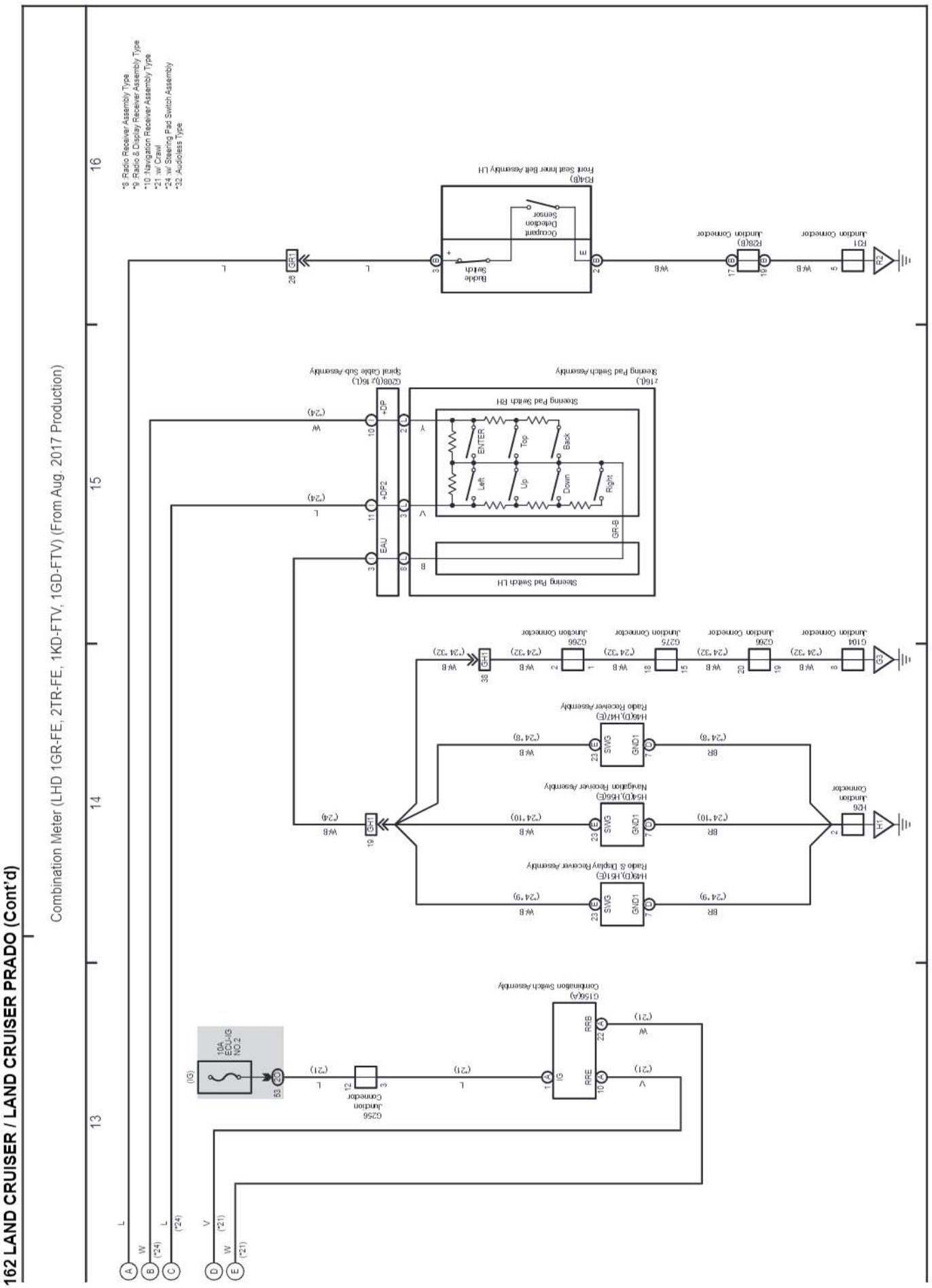

cardiagn.com

M OVERALL ELECTRICAL WIRING DIAGRAM

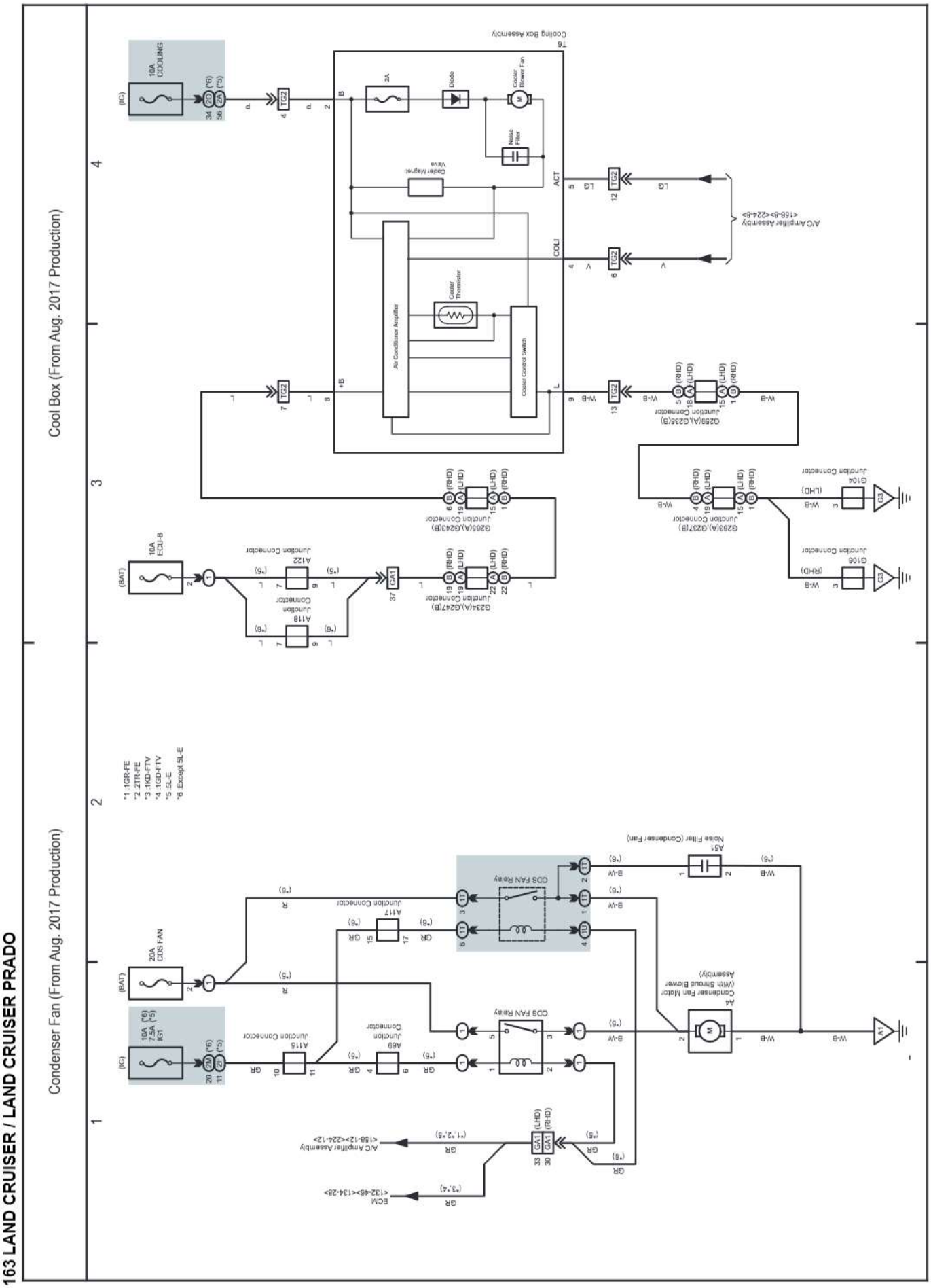

cardiagn.com

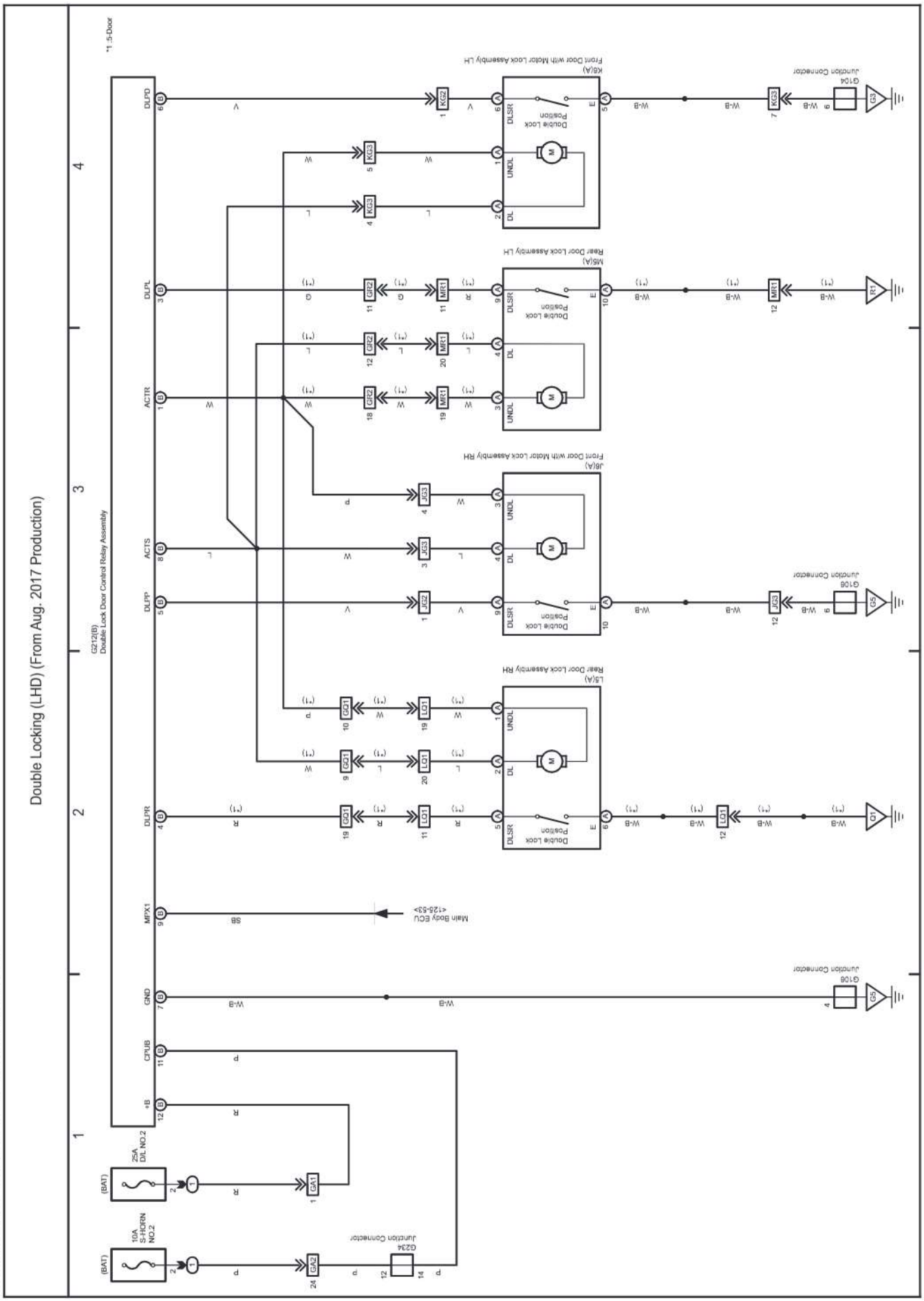

cardiagn.com

M OVERALL ELECTRICAL WIRING DIAGRAM

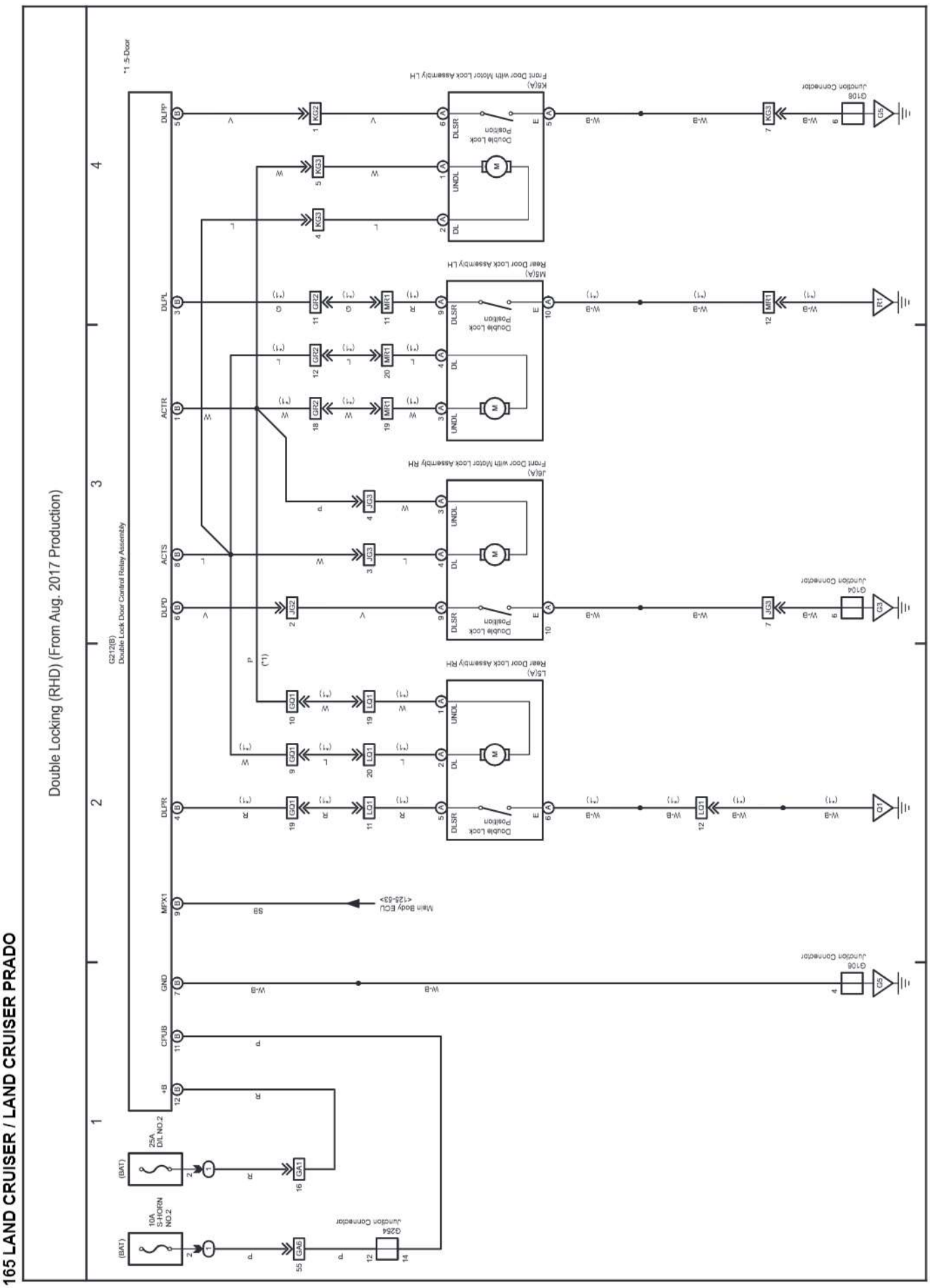

165 LAND CRUISER / LAND CRUISER PRADO

cardiagn.com

M OVERALL ELECTRICAL WIRING DIAGRAM

(Cont. next page)

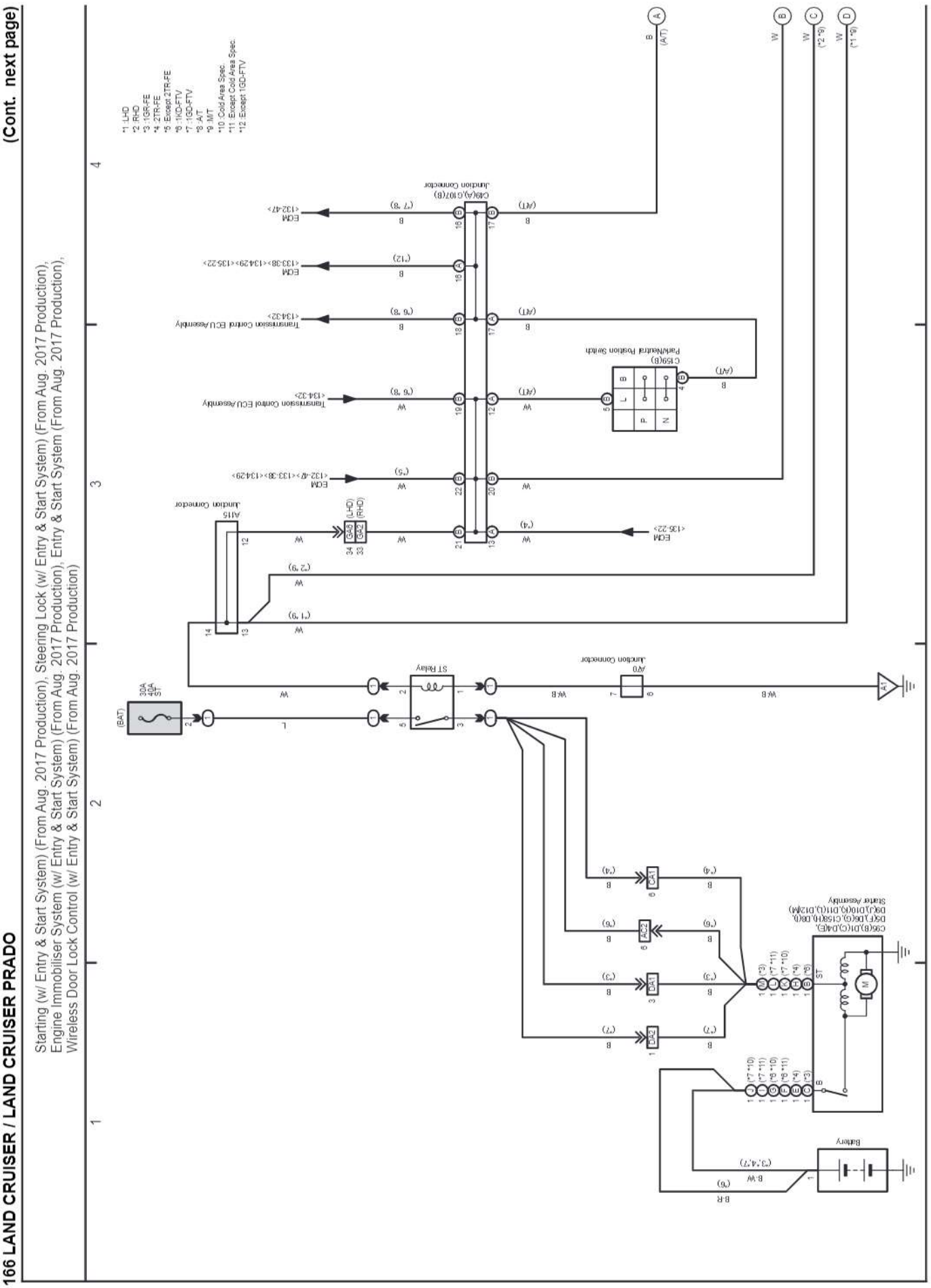

cardiagn.com

(Cont. next page)

Starting (w/ Entry & Start System) (From Aug. 2017 Production), Steering Lock (w/ Entry & Start System) (From Aug. 2017 Production), Engine Immobiliser System (w/ Entry & Start System) (From Aug. 2017 Production), Entry & Start System (From Aug. 2017 Production), Wireless Door Lock Control (w/ Entry & Start System) (From Aug. 2017 Production)

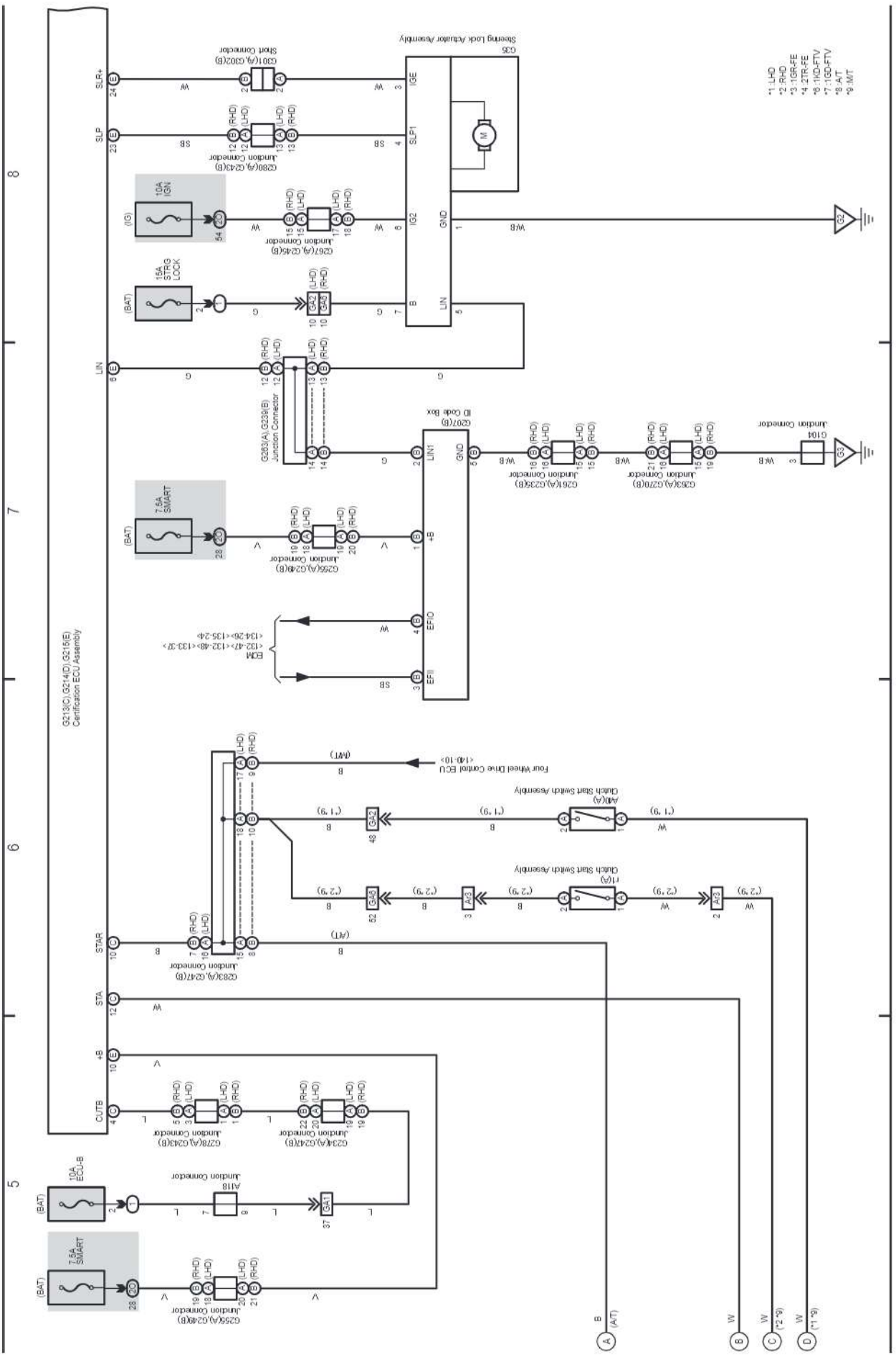

cardiagn.com

(Cont. next page)

Starting (w/ Entry & Start System) (From Aug. 2017 Production), Steering Lock (w/ Entry & Start System) (From Aug. 2017 Production), Engine Immobiliser System (w/ Entry & Start System) (From Aug. 2017 Production), Entry & Start System (From Aug. 2017 Production), Wireless Door Lock Control (w/ Entry & Start System) (From Aug. 2017 Production)

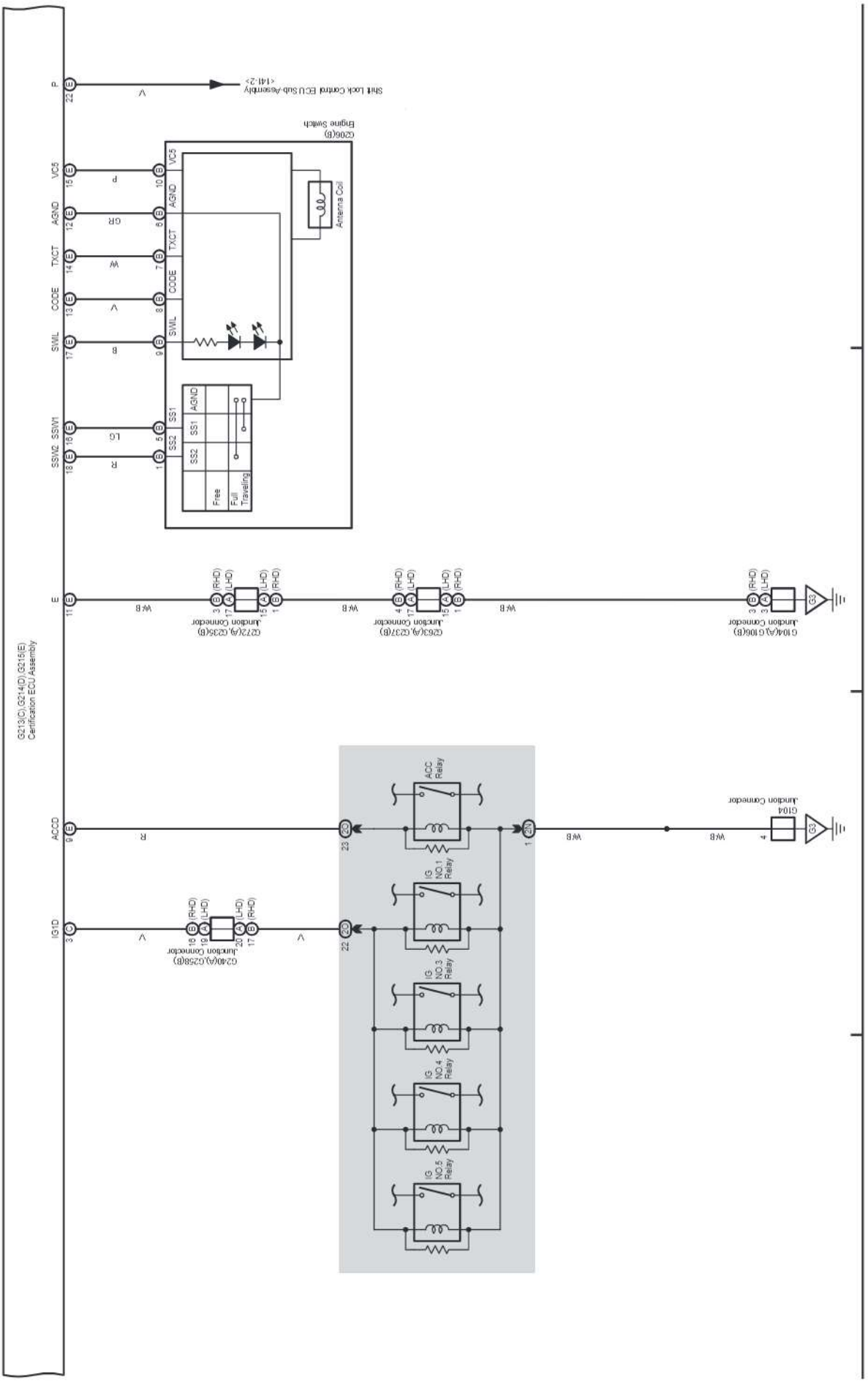

cardiagn.com

(Cont. next page)

Starting (w/ Entry & Start System) (From Aug. 2017 Production), Steering Lock (w/ Entry & Start System) (From Aug. 2017 Production),
Engine Immobiliser System (w/ Entry & Start System) (From Aug. 2017 Production), Entry & Start System (From Aug. 2017 Production),
Wireless Door Lock Control (w/ Entry & Start System) (From Aug. 2017 Production)

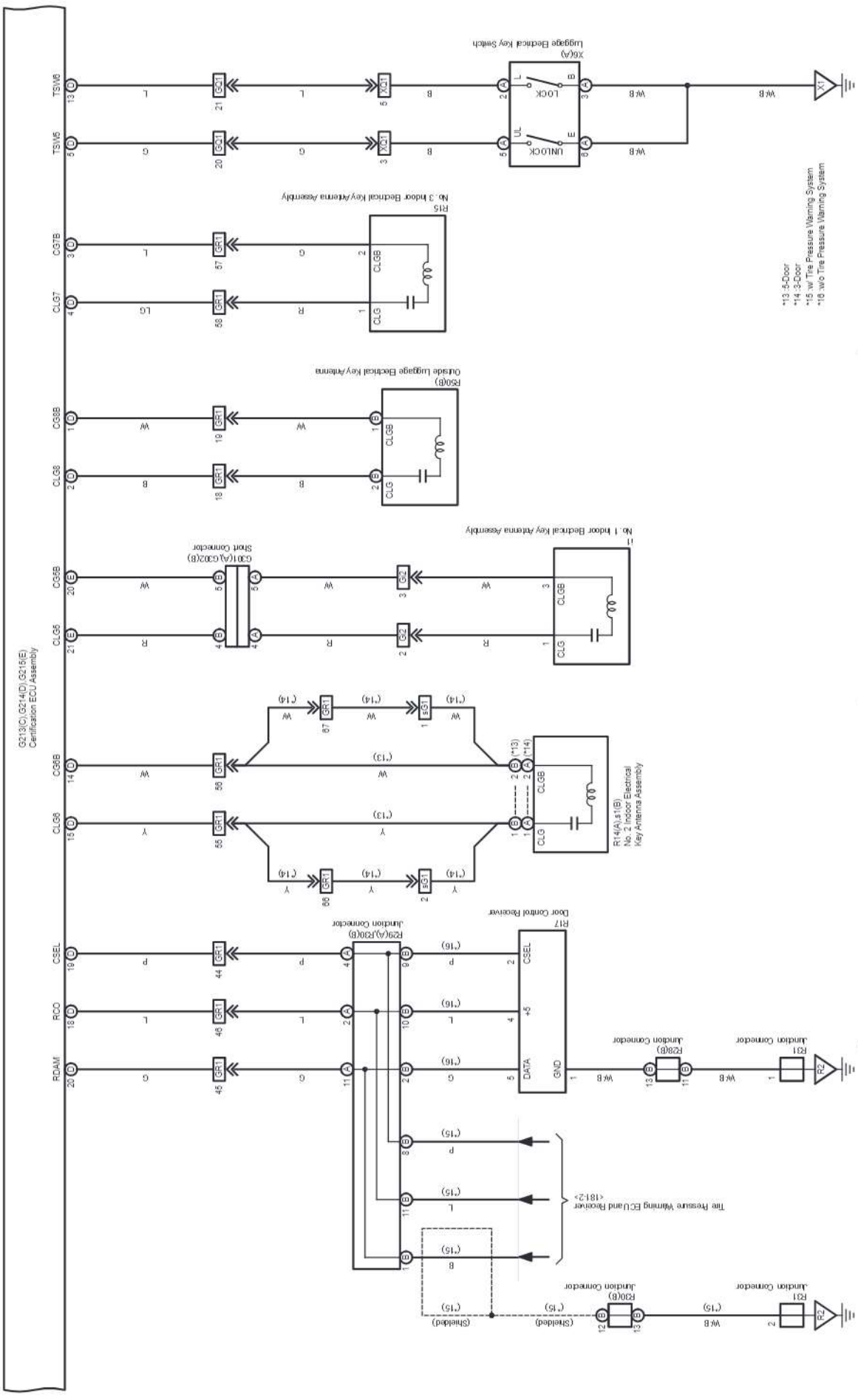

cardiagn.com

166 LAND CRUISER / LAND CRUISER PRADO (Cont'd)

Starting (w/ Entry & Start System) (From Aug. 2017 Production), Steering Lock (w/ Entry & Start System) (From Aug. 2017 Production), Engine Immobiliser System (w/ Entry & Start System) (From Aug. 2017 Production), Entry & Start System (From Aug. 2017 Production), Wireless Door Lock Control (w/ Entry & Start System) (From Aug. 2017 Production)

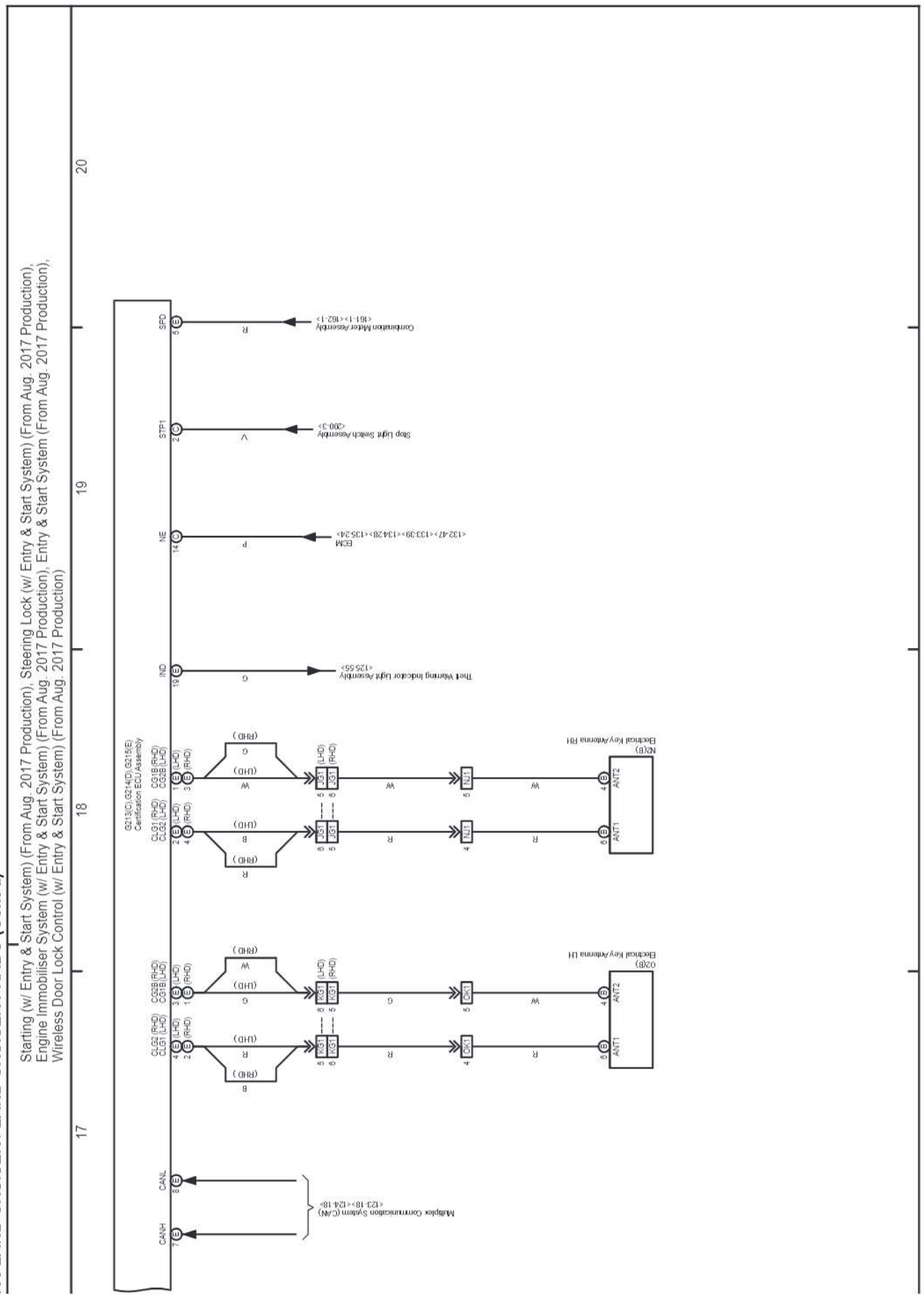

cardiagn.com

M OVERALL ELECTRICAL WIRING DIAGRAM

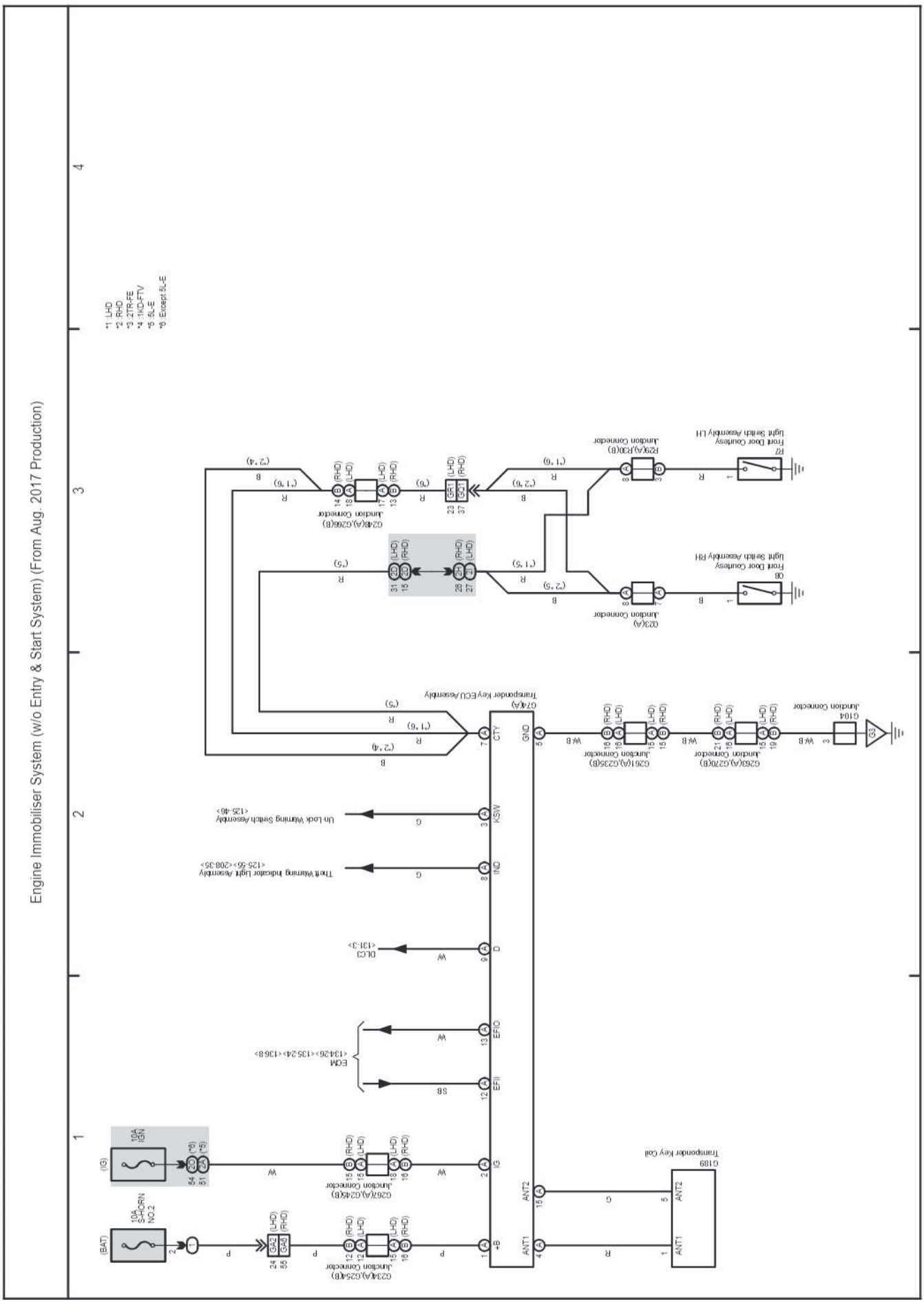

cardiagn.com

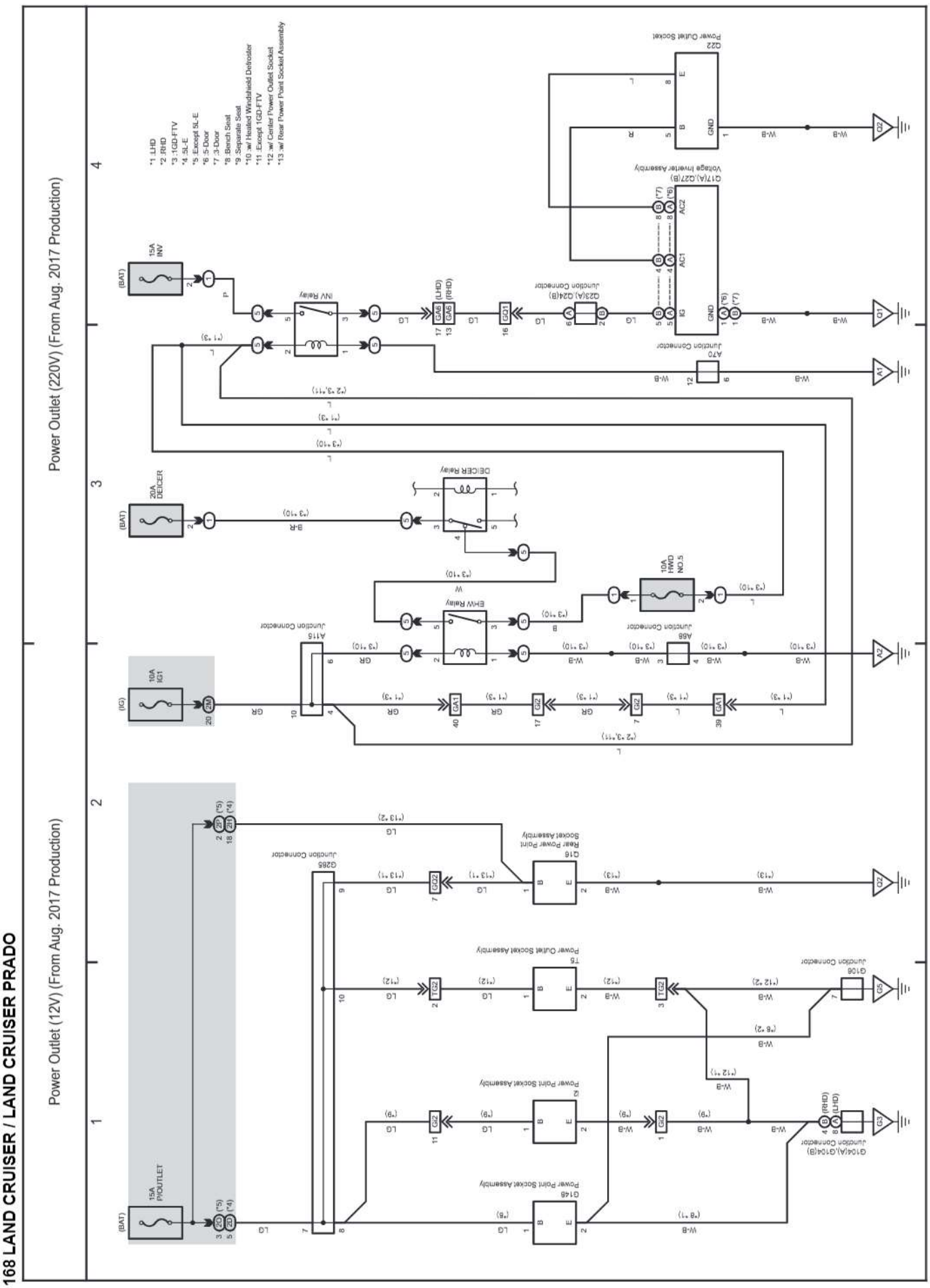

cardiagn.com

(Cont. next page)

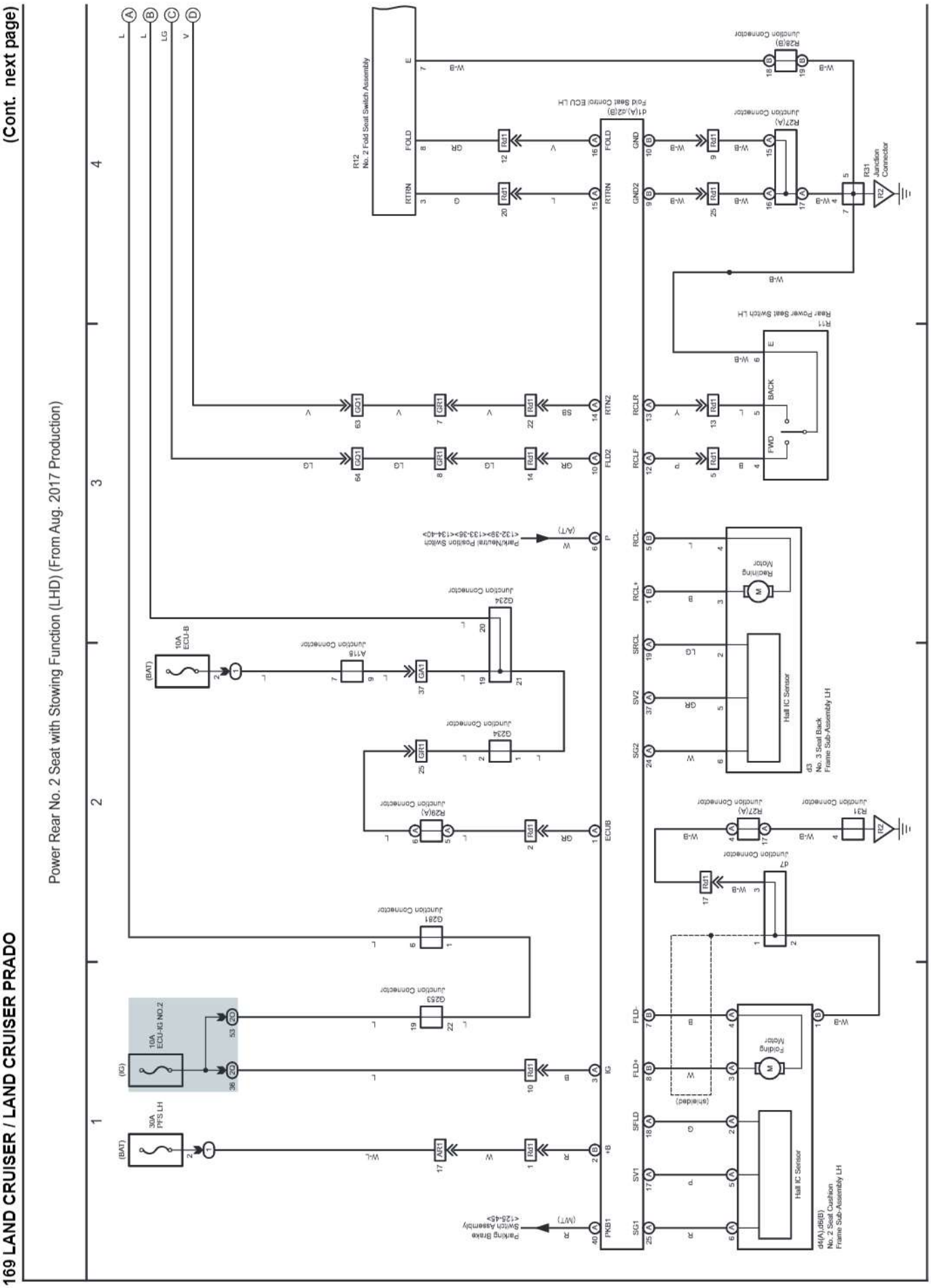

cardiagn.com

169 LAND CRUISER / LAND CRUISER PRADO (Cont'd)

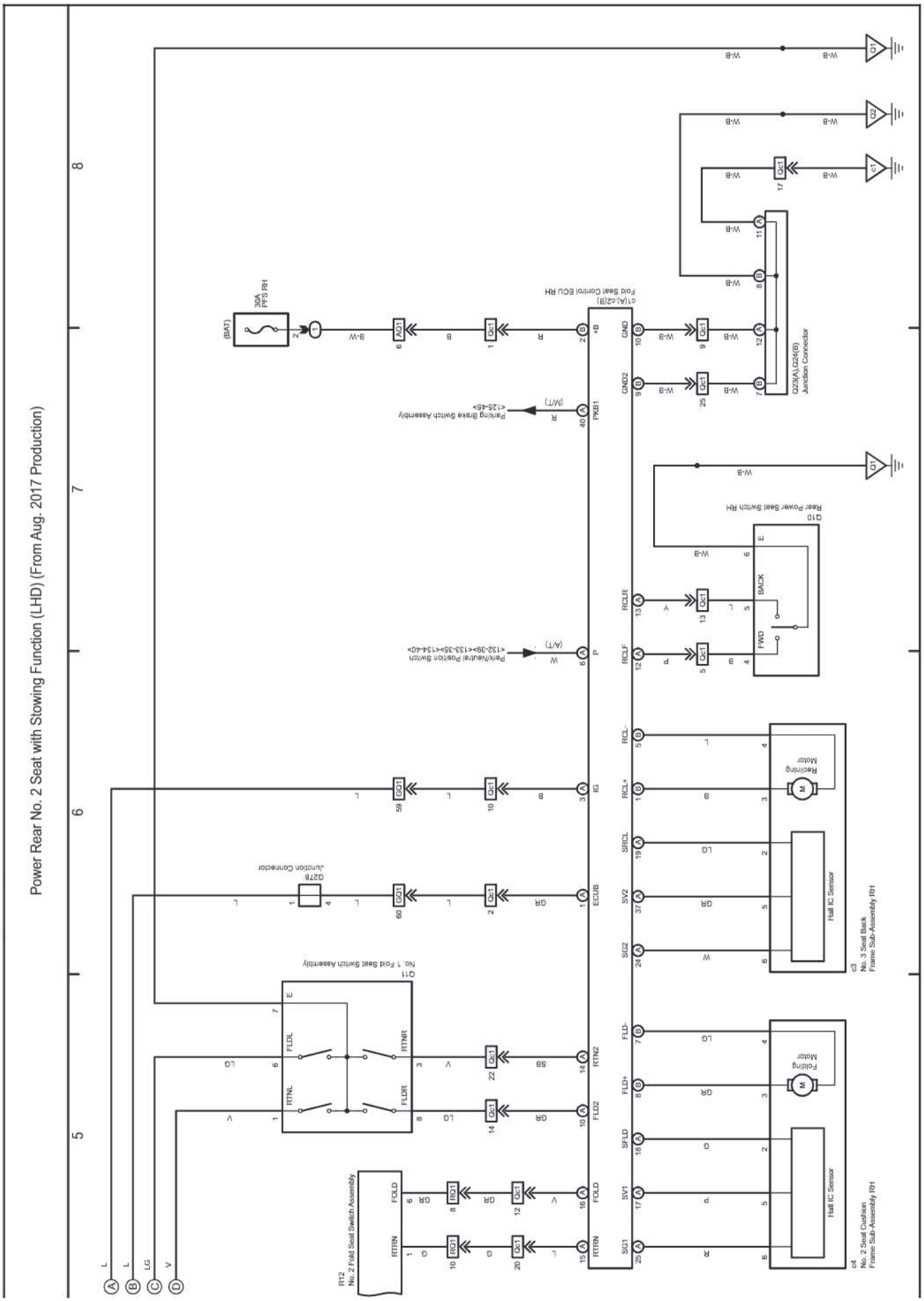

cardiagn.com

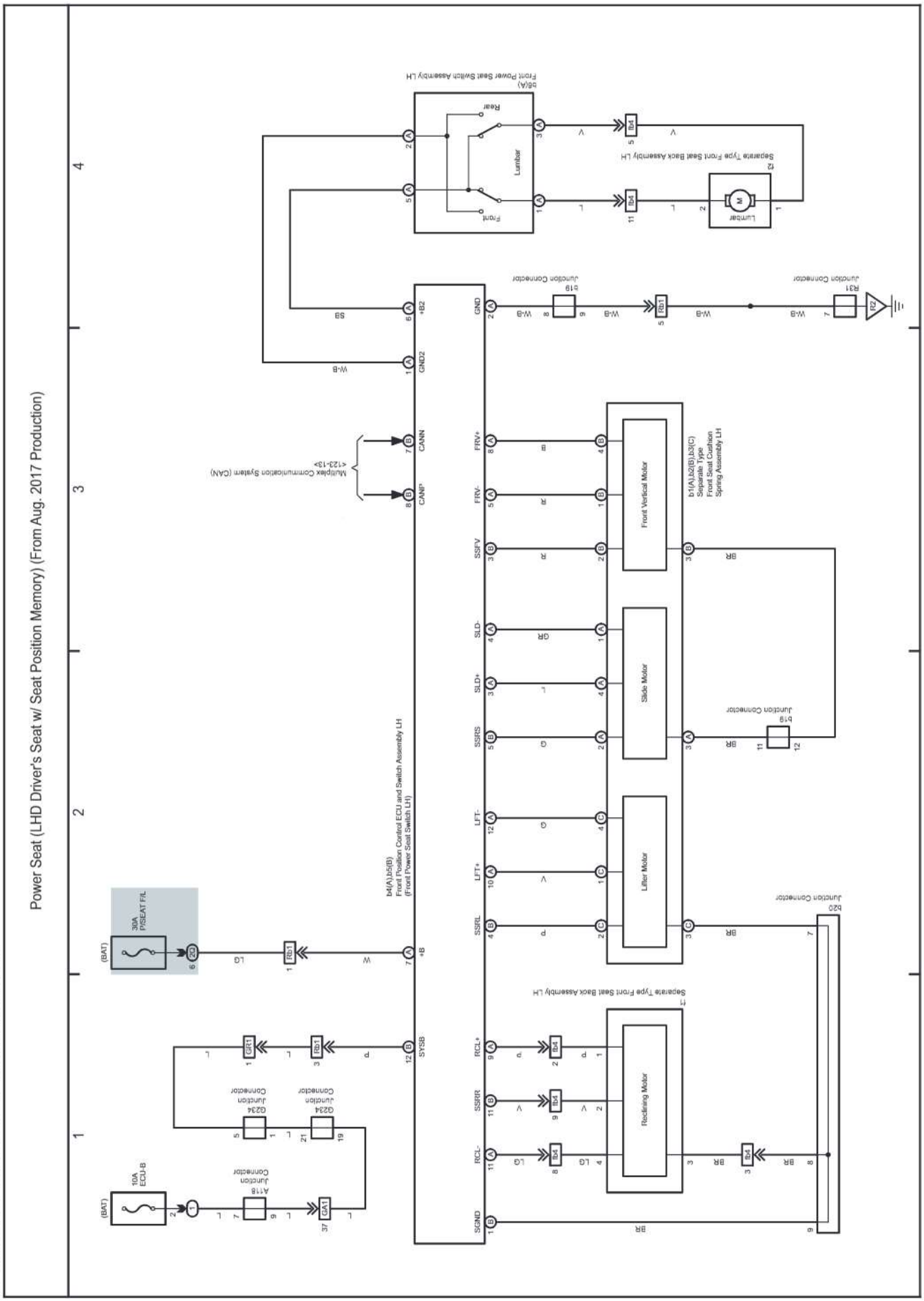

cardiagn.com

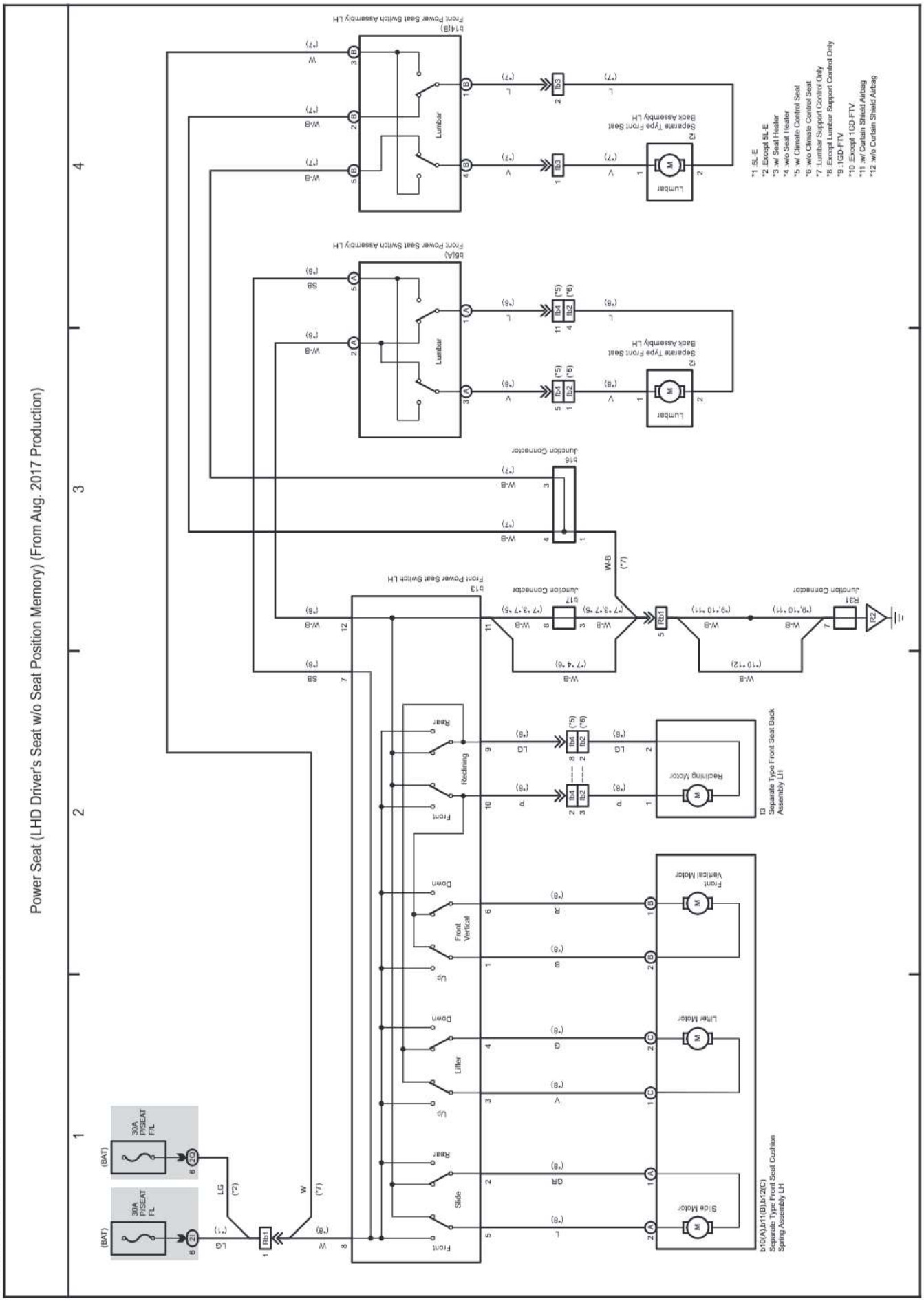

cardiagn.com

M OVERALL ELECTRICAL WIRING DIAGRAM

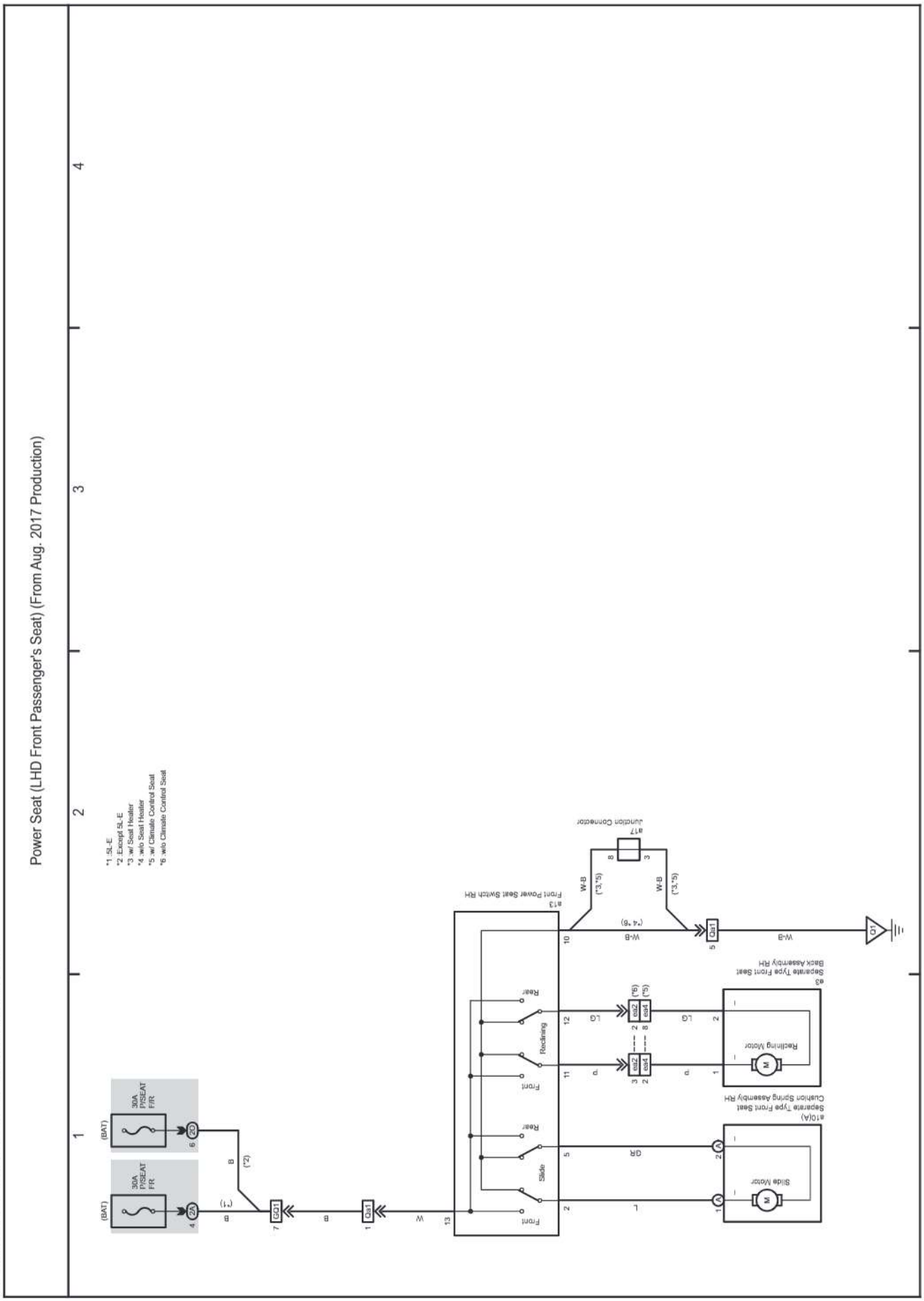

172 LAND CRUISER / LAND CRUISER PRADO

cardiagn.com

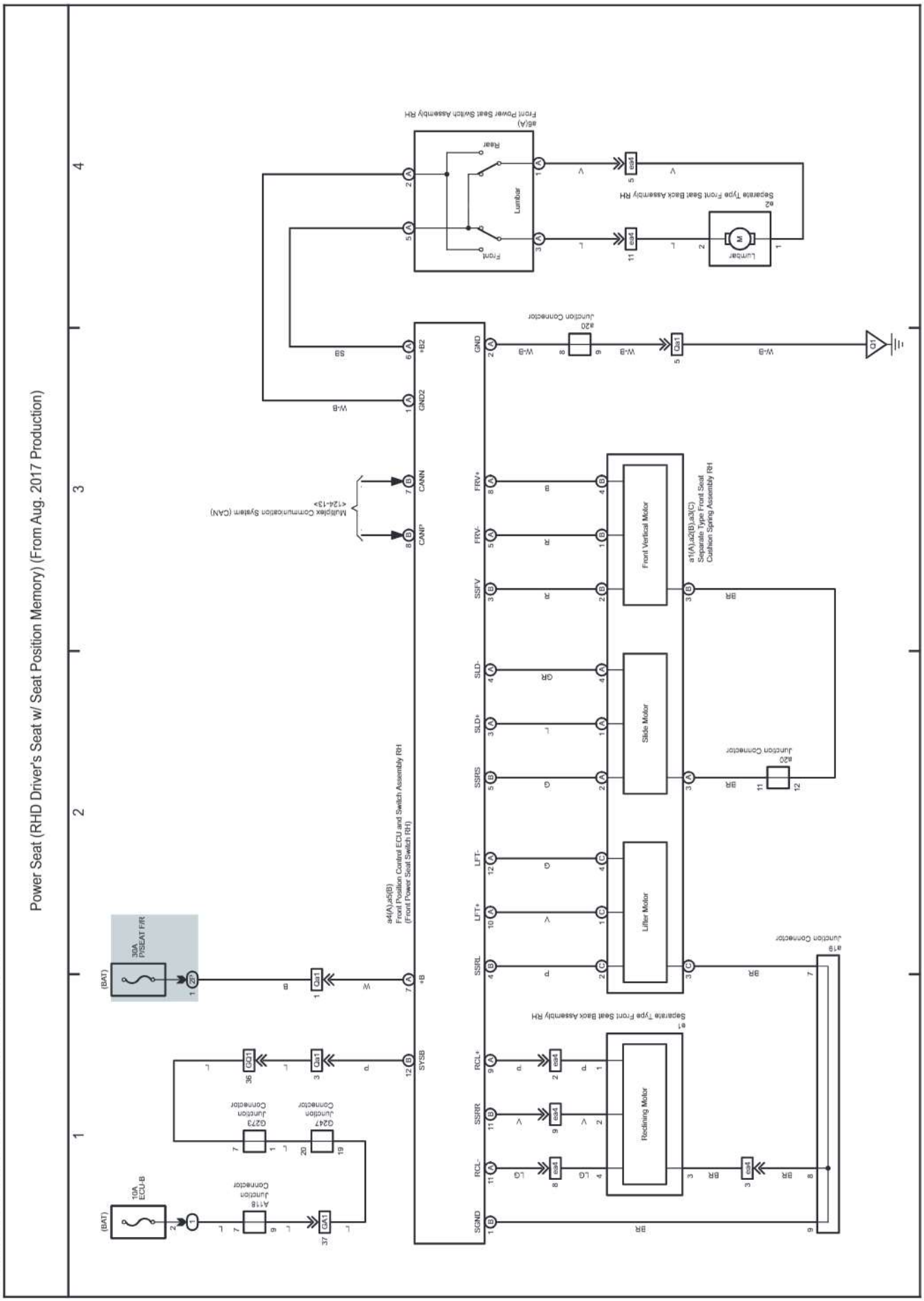

cardiagn.com

M OVERALL ELECTRICAL WIRING DIAGRAM

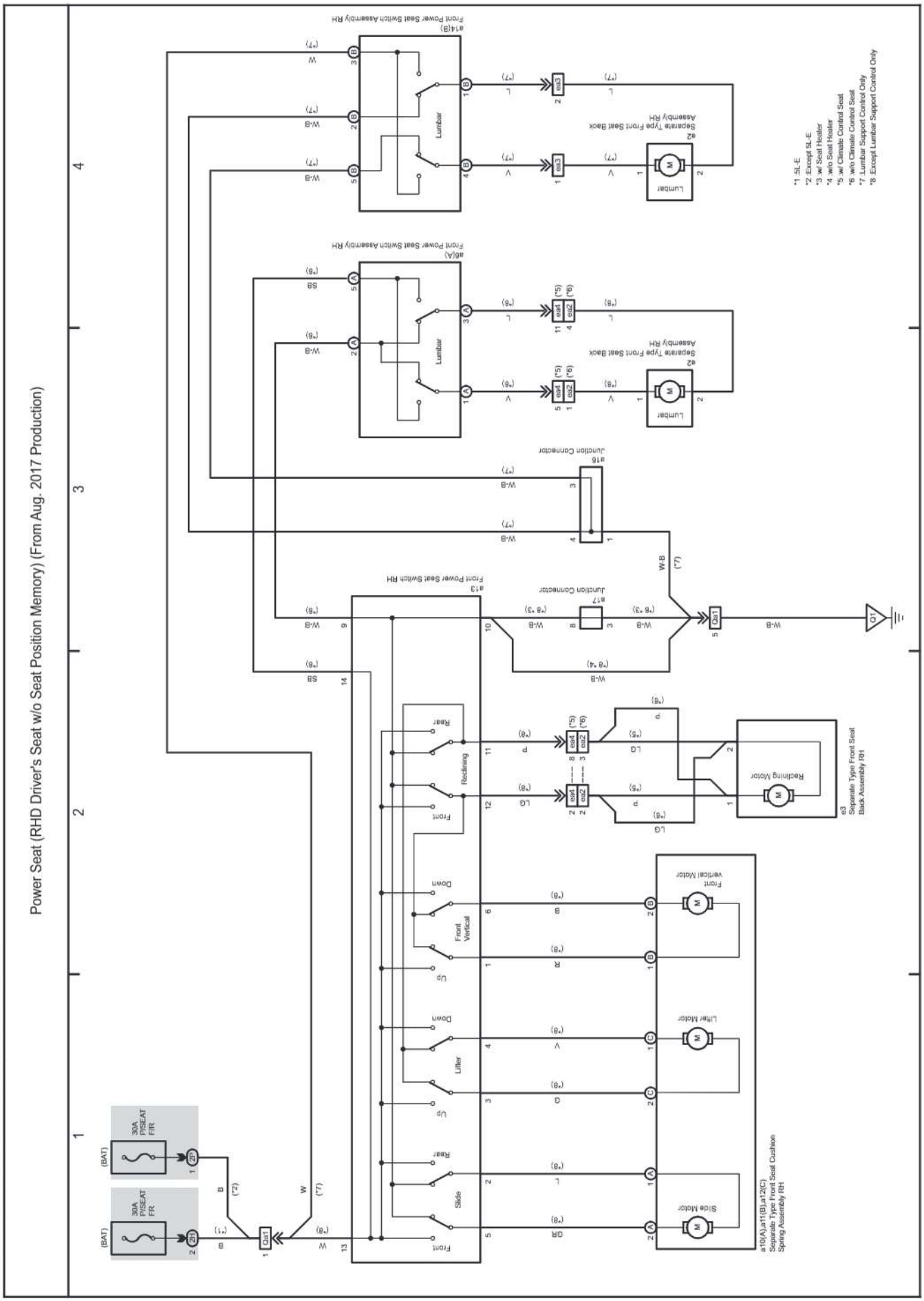

cardiagn.com

M OVERALL ELECTRICAL WIRING DIAGRAM

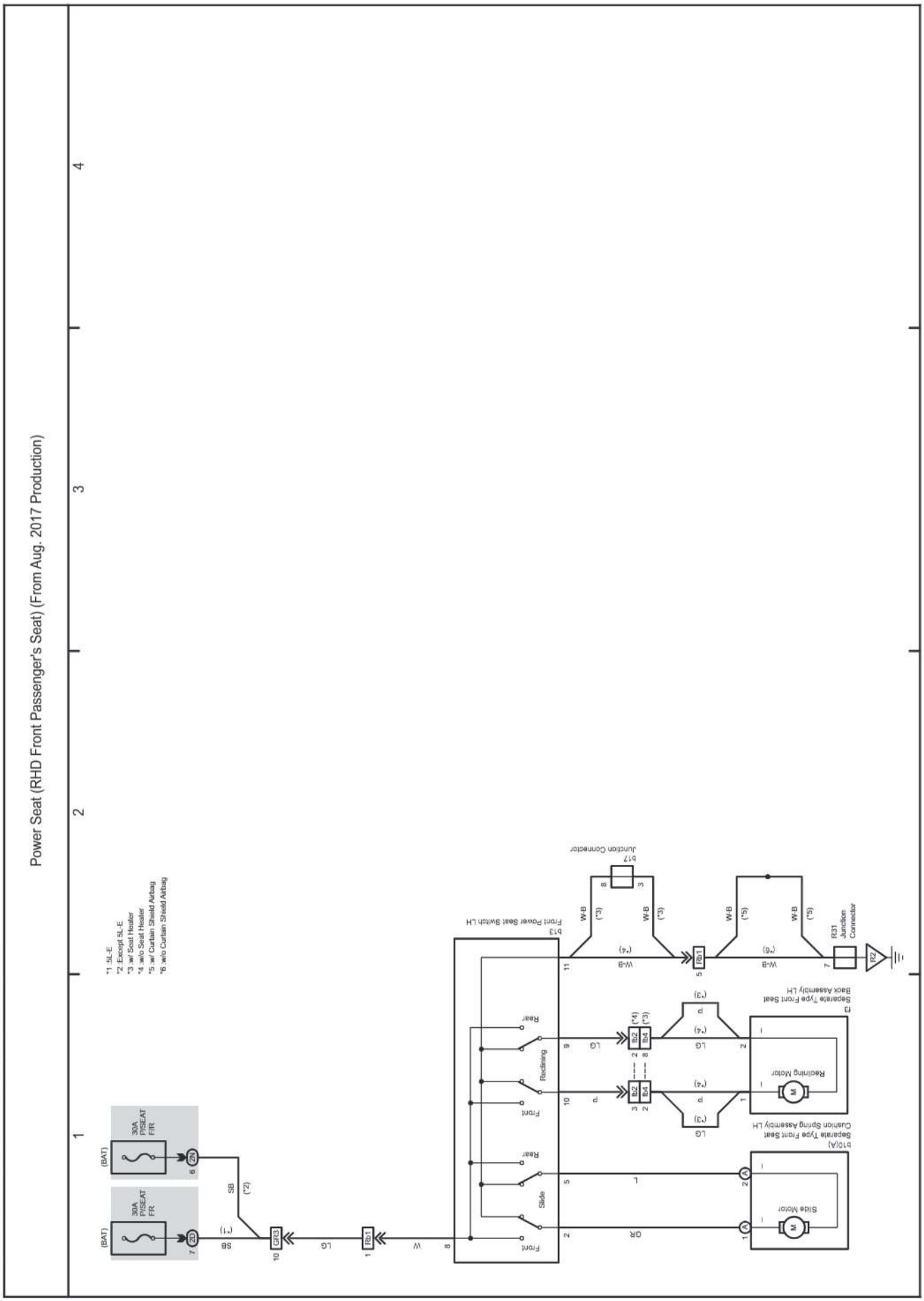

cardiagn.com

(Cont. next page)

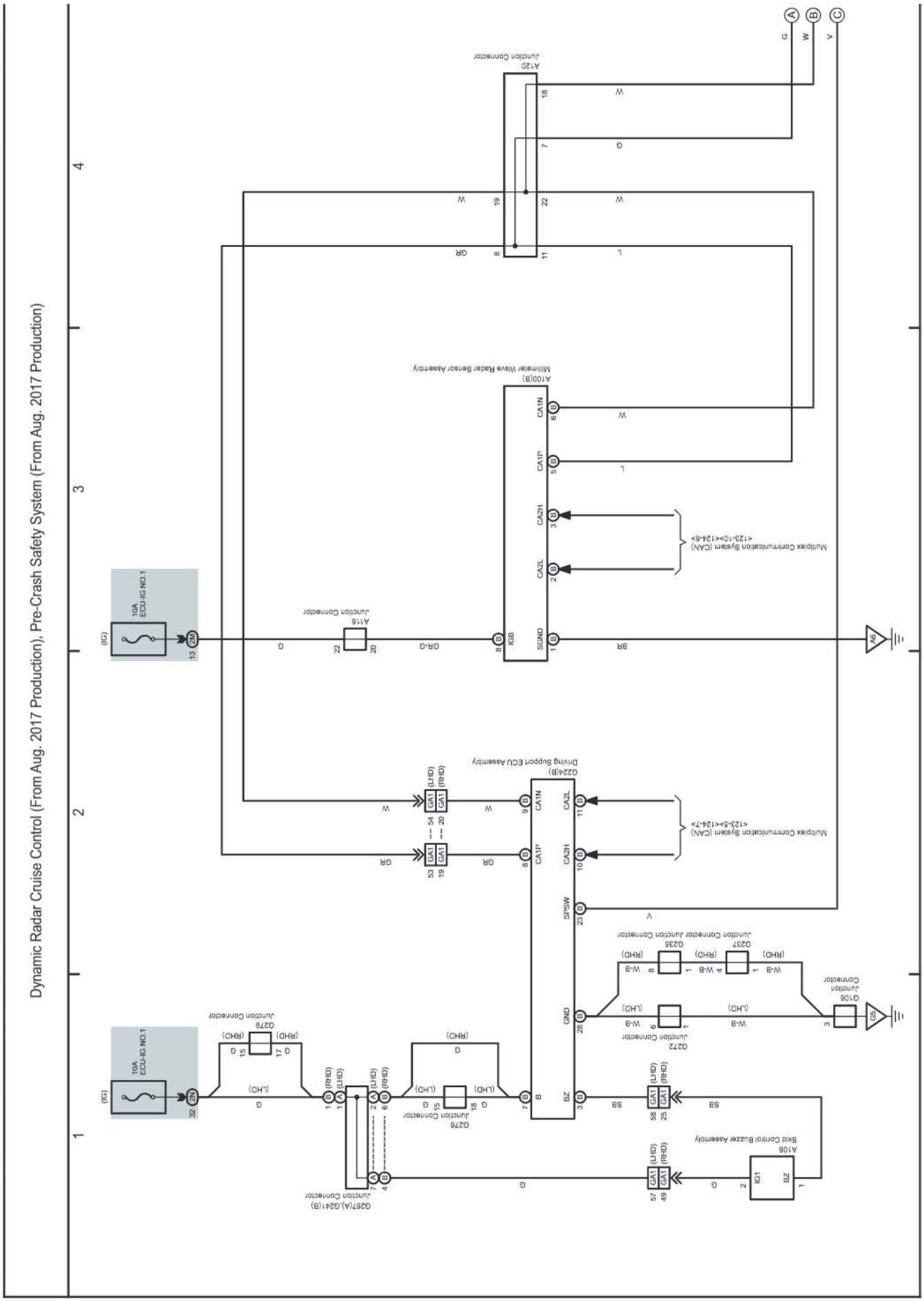

cardiagn.com

176 LAND CRUISER / LAND CRUISER PRADO (Cont'd)

Dynamic Radar Cruise Control (From Aug. 2017 Production), Pre-Crash Safety System (From Aug. 2017 Production)

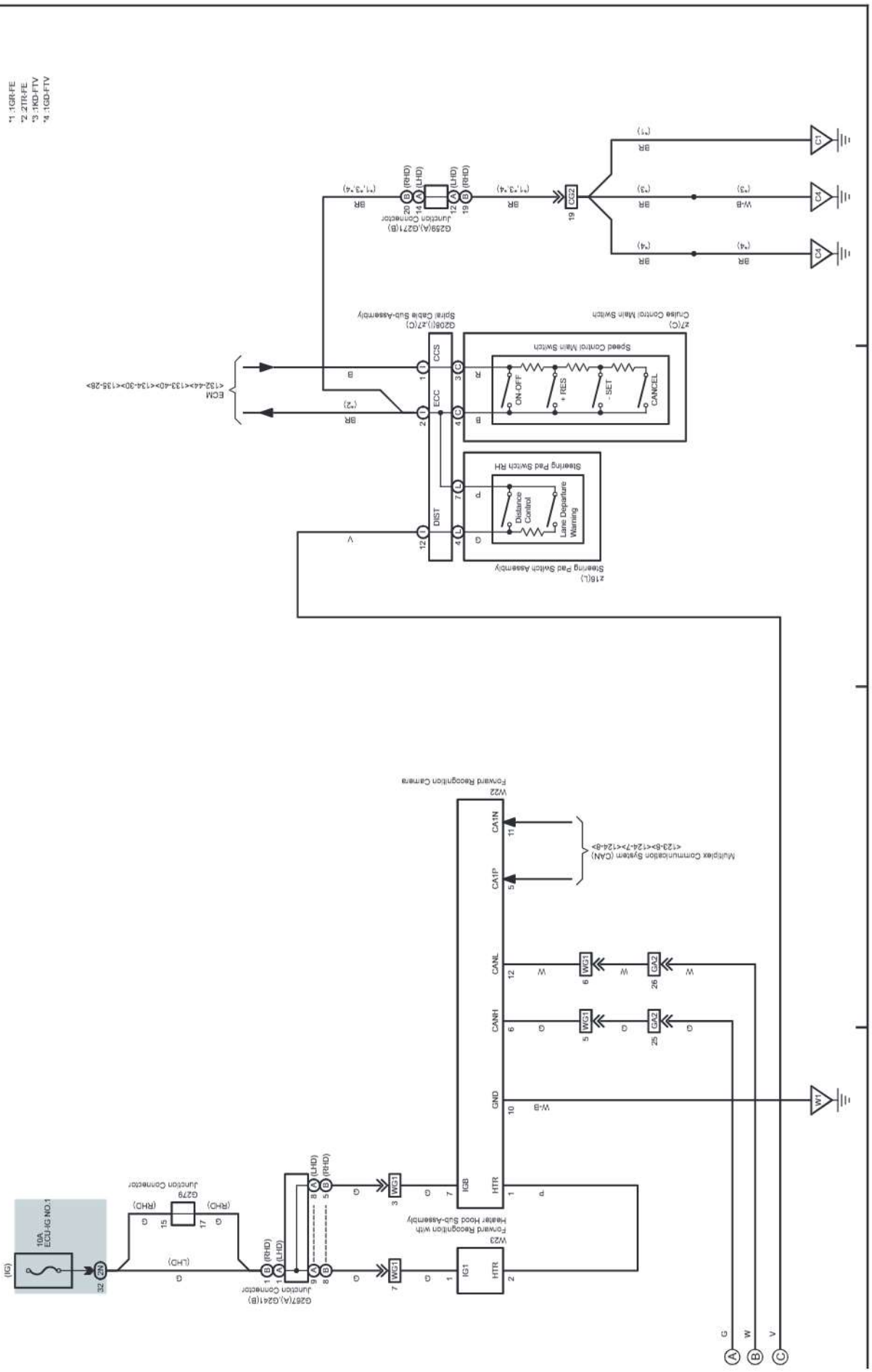

cardiagn.com

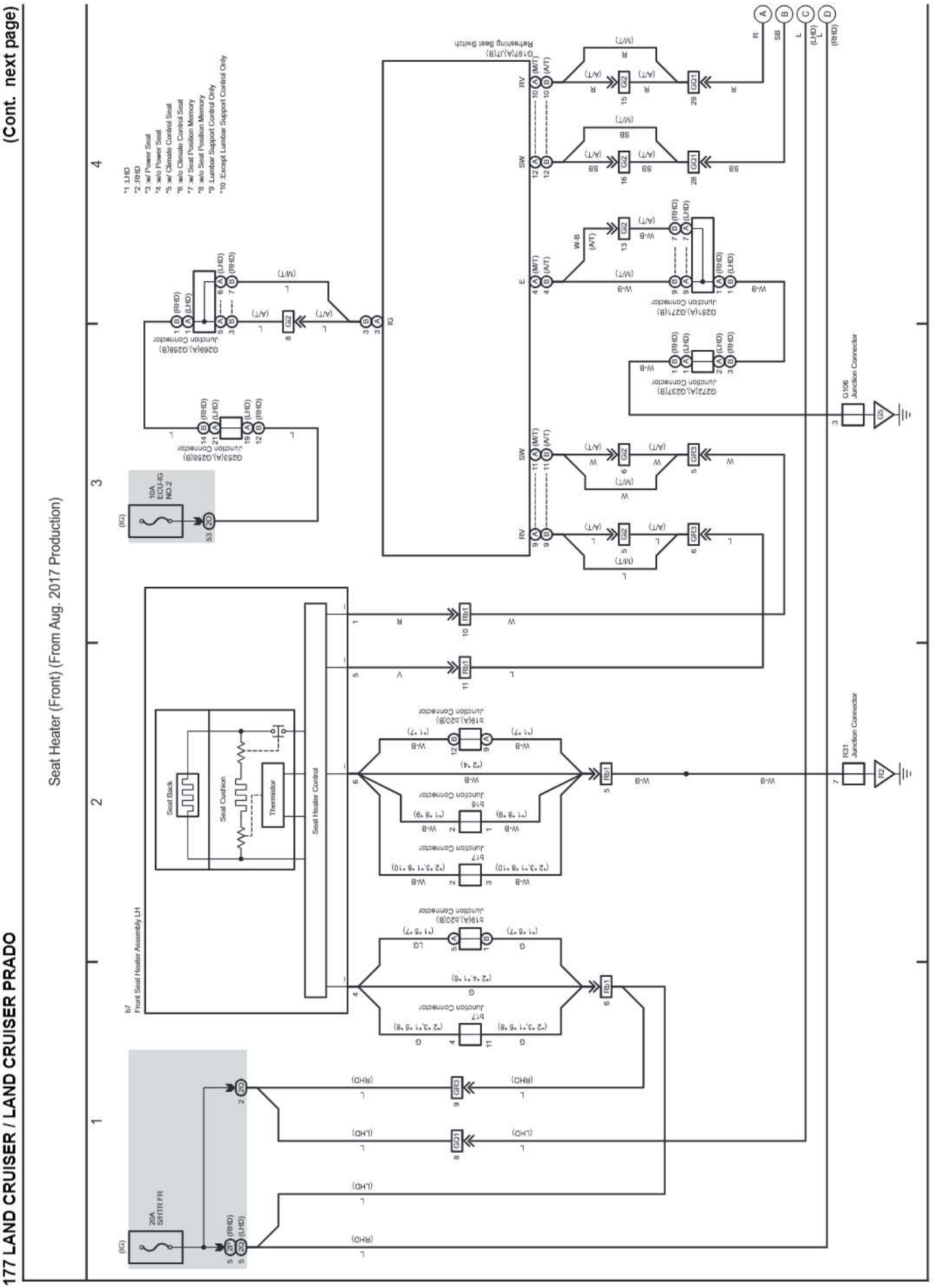

Seat Heater (Front) (From Aug. 2017 Production)

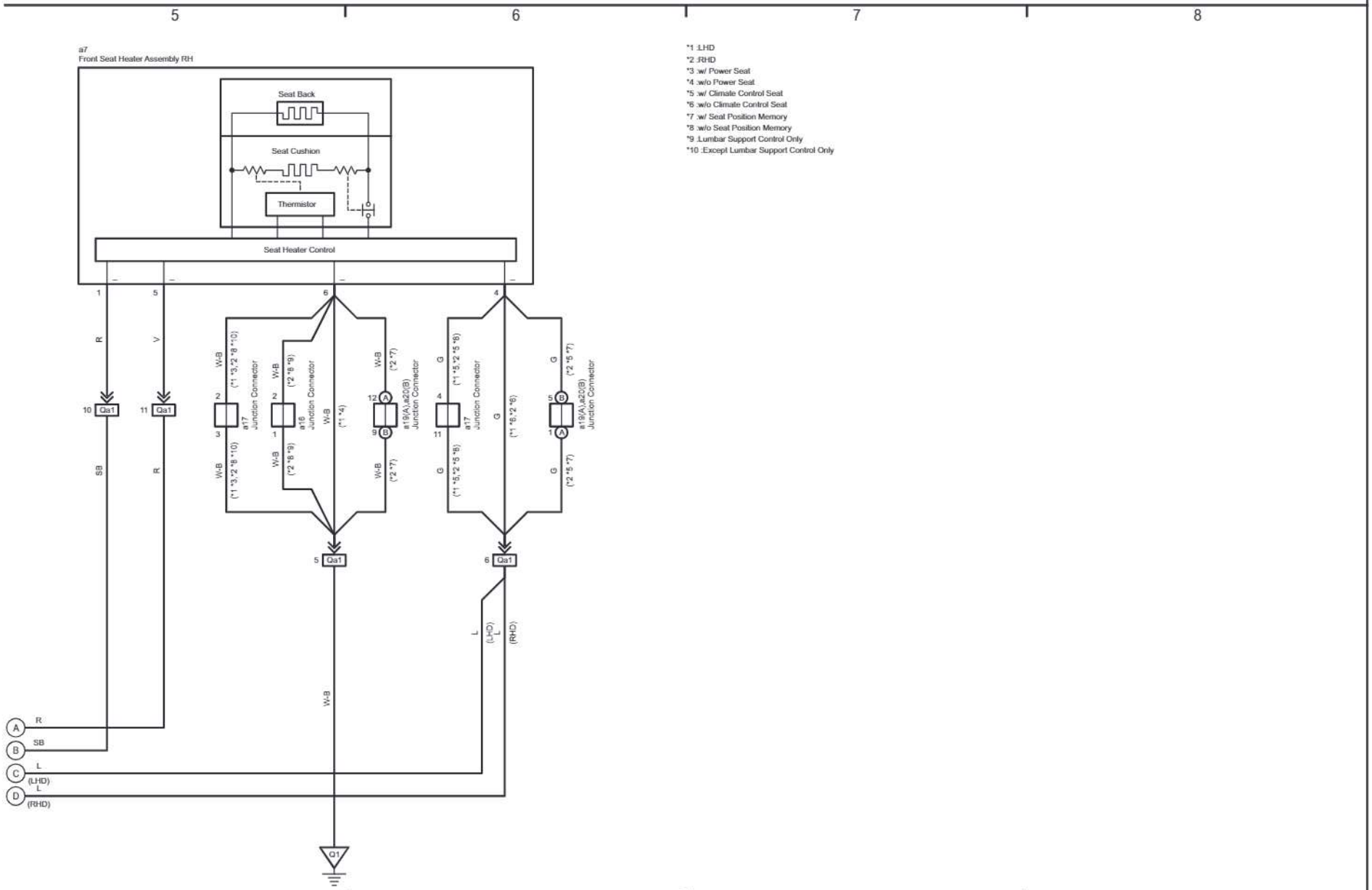

cardiagn.com

cardiagn.com

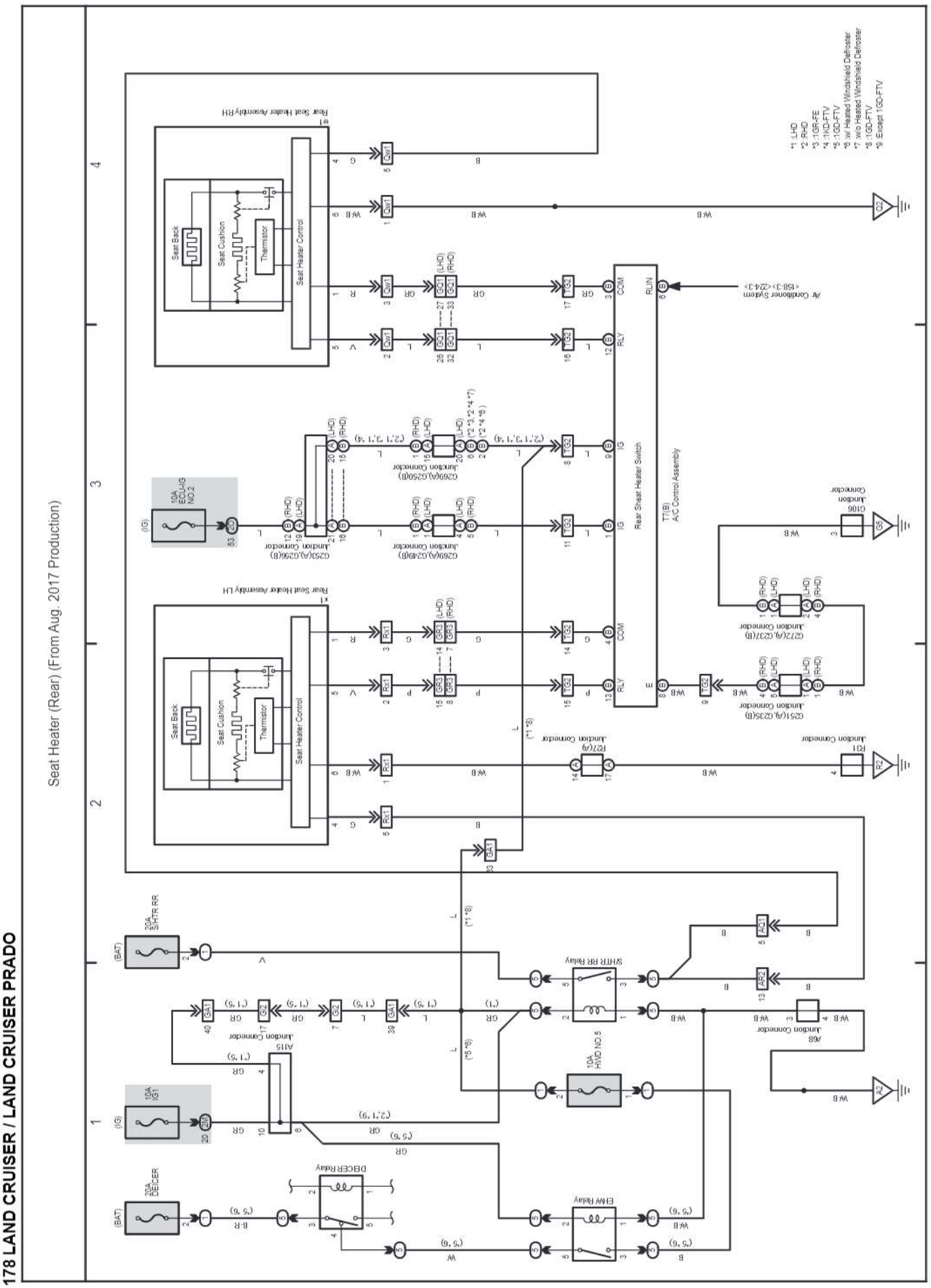

cardiagn.com

M OVERALL ELECTRICAL WIRING DIAGRAM

(Cont. next page)

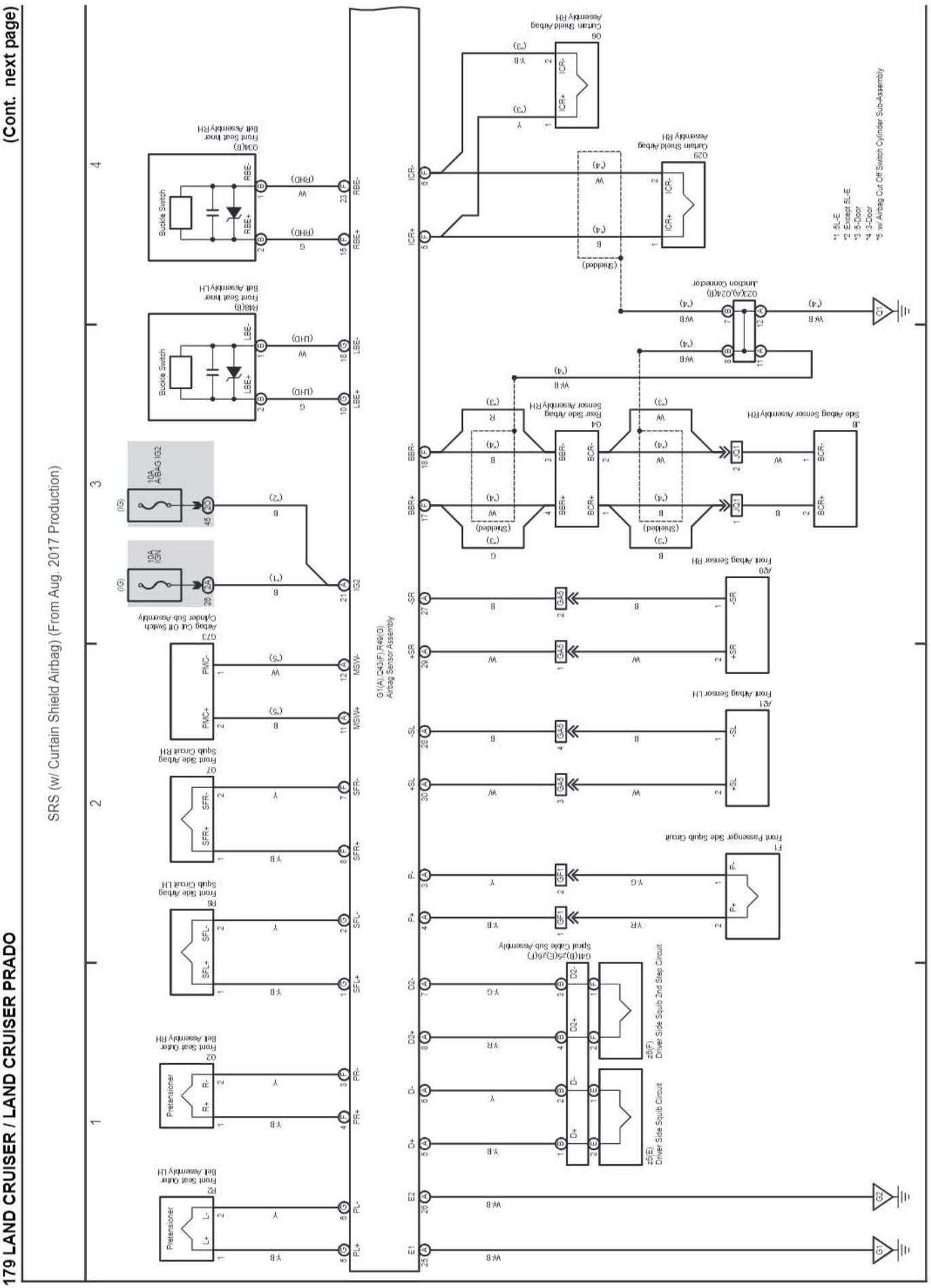

cardiagn.com

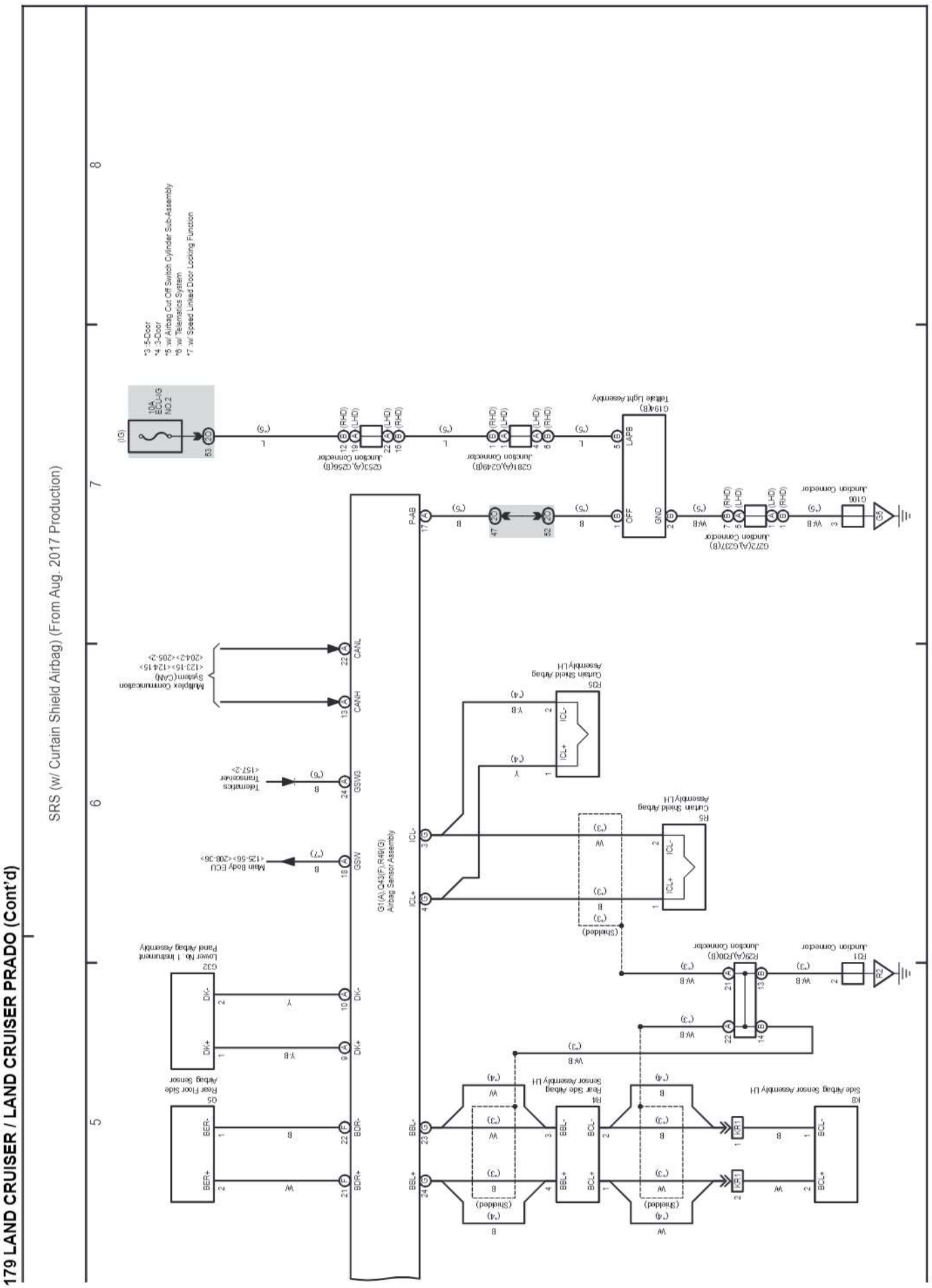

cardiagn.com

M OVERALL ELECTRICAL WIRING DIAGRAM

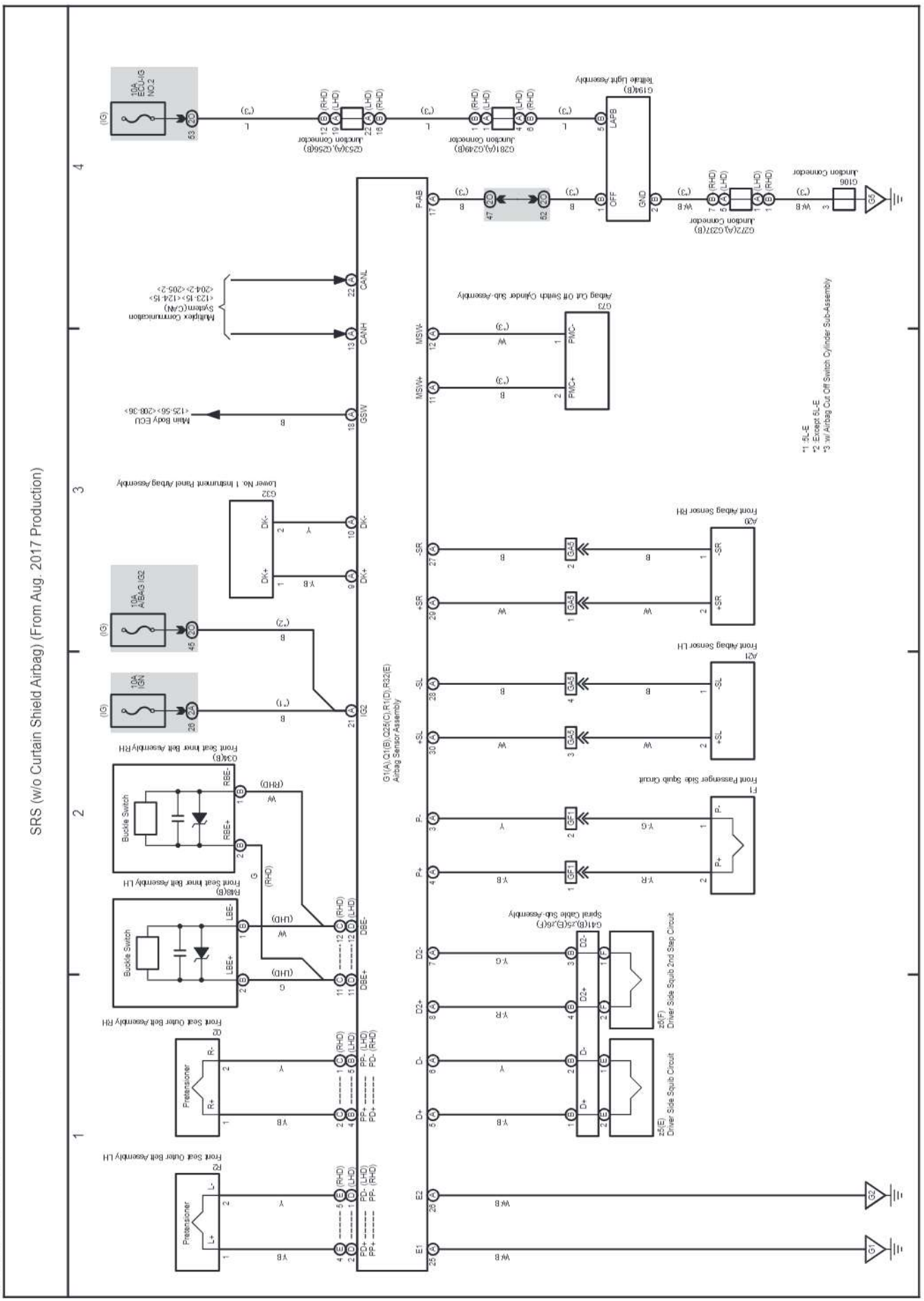

cardiagn.com

M OVERALL ELECTRICAL WIRING DIAGRAM

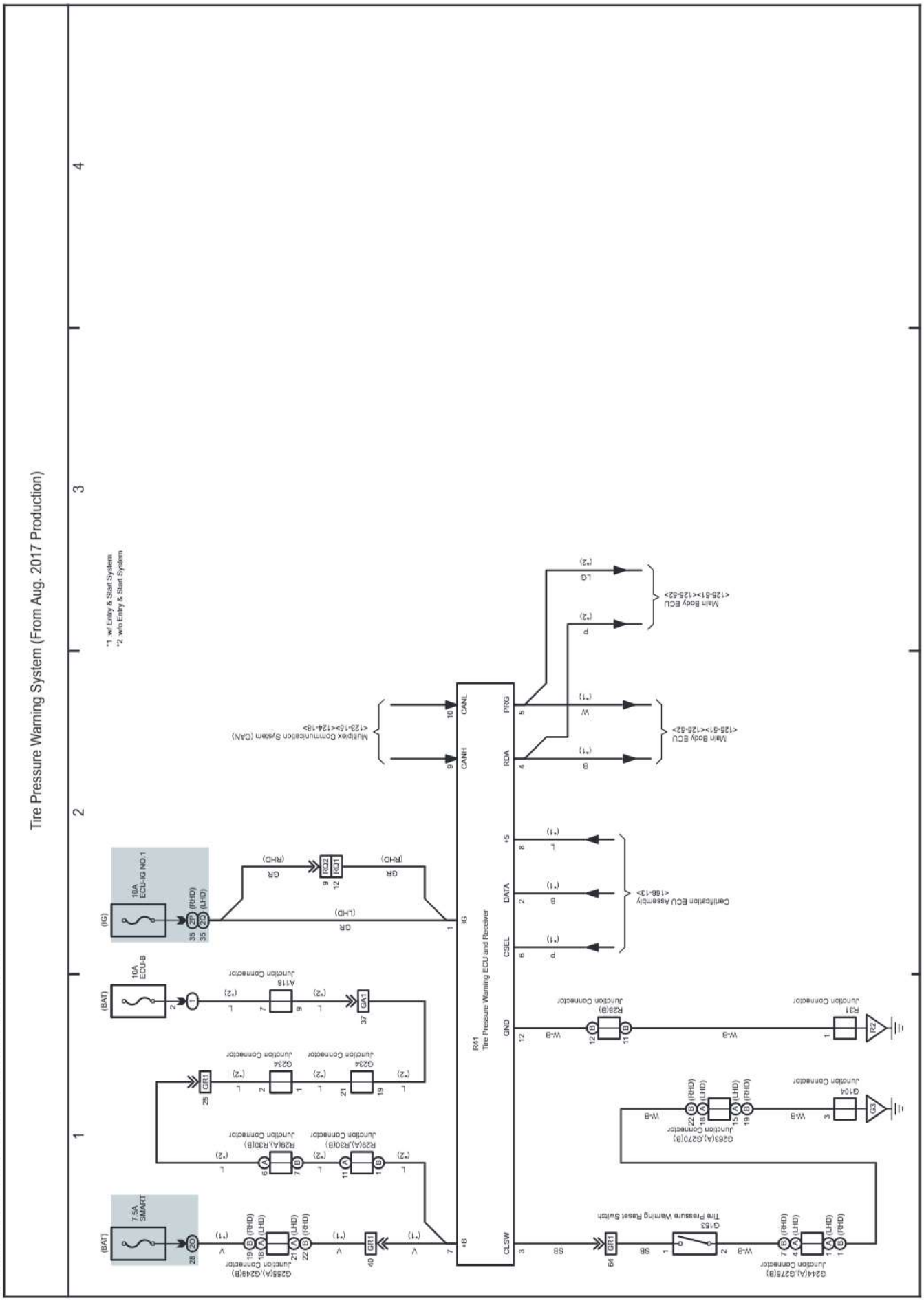

cardiagn.com

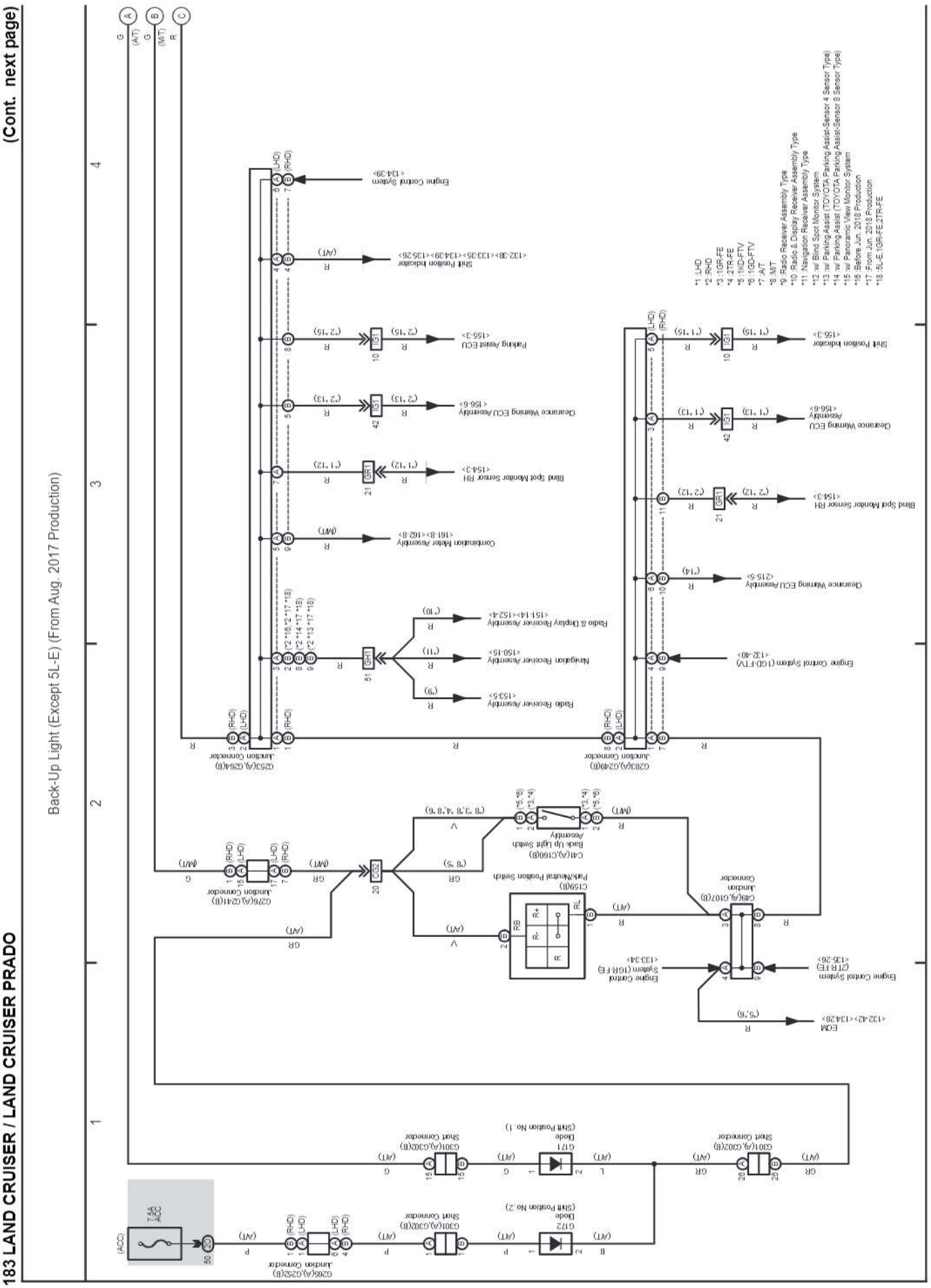

cardiagn.com

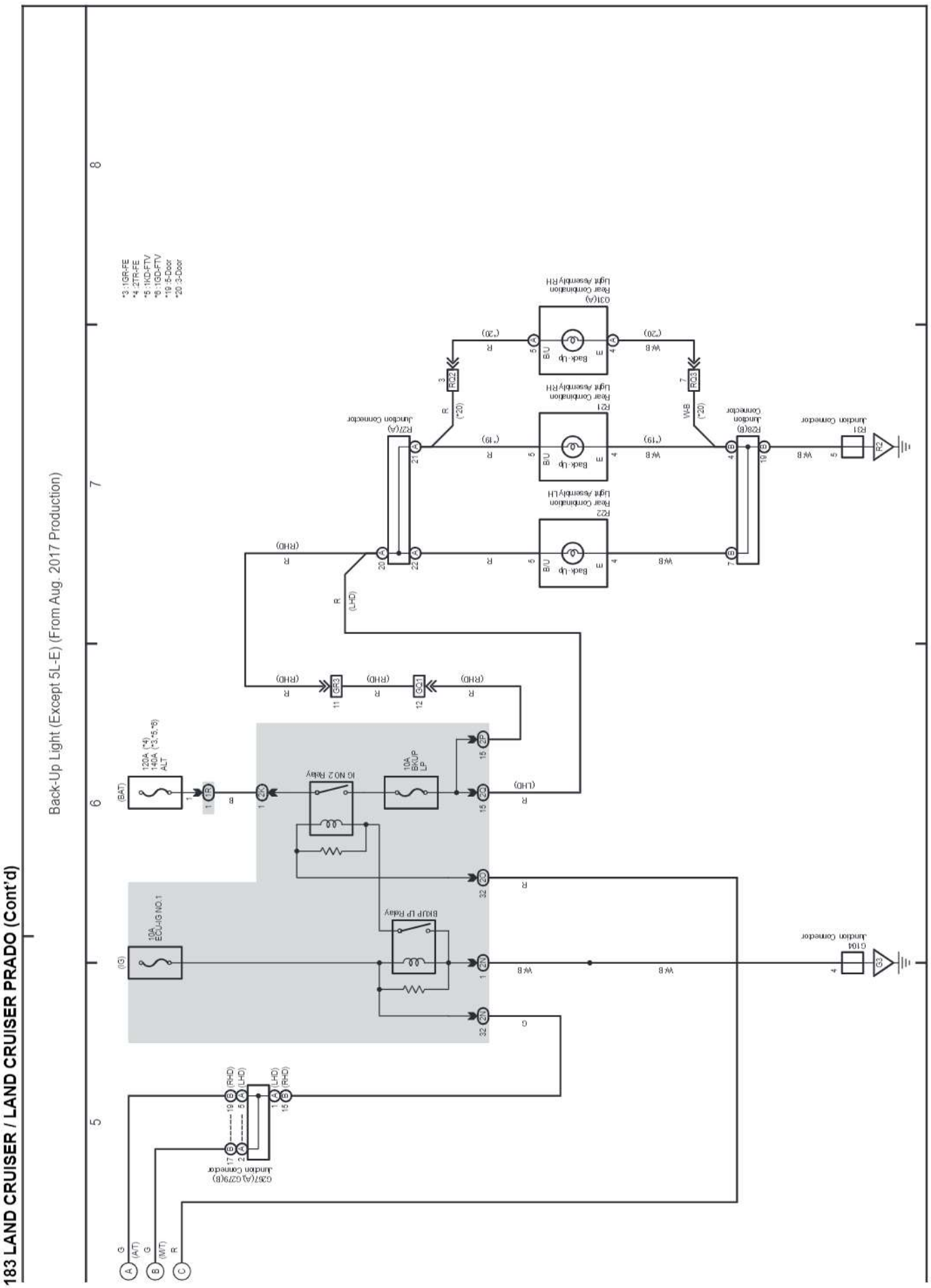

cardiagn.com

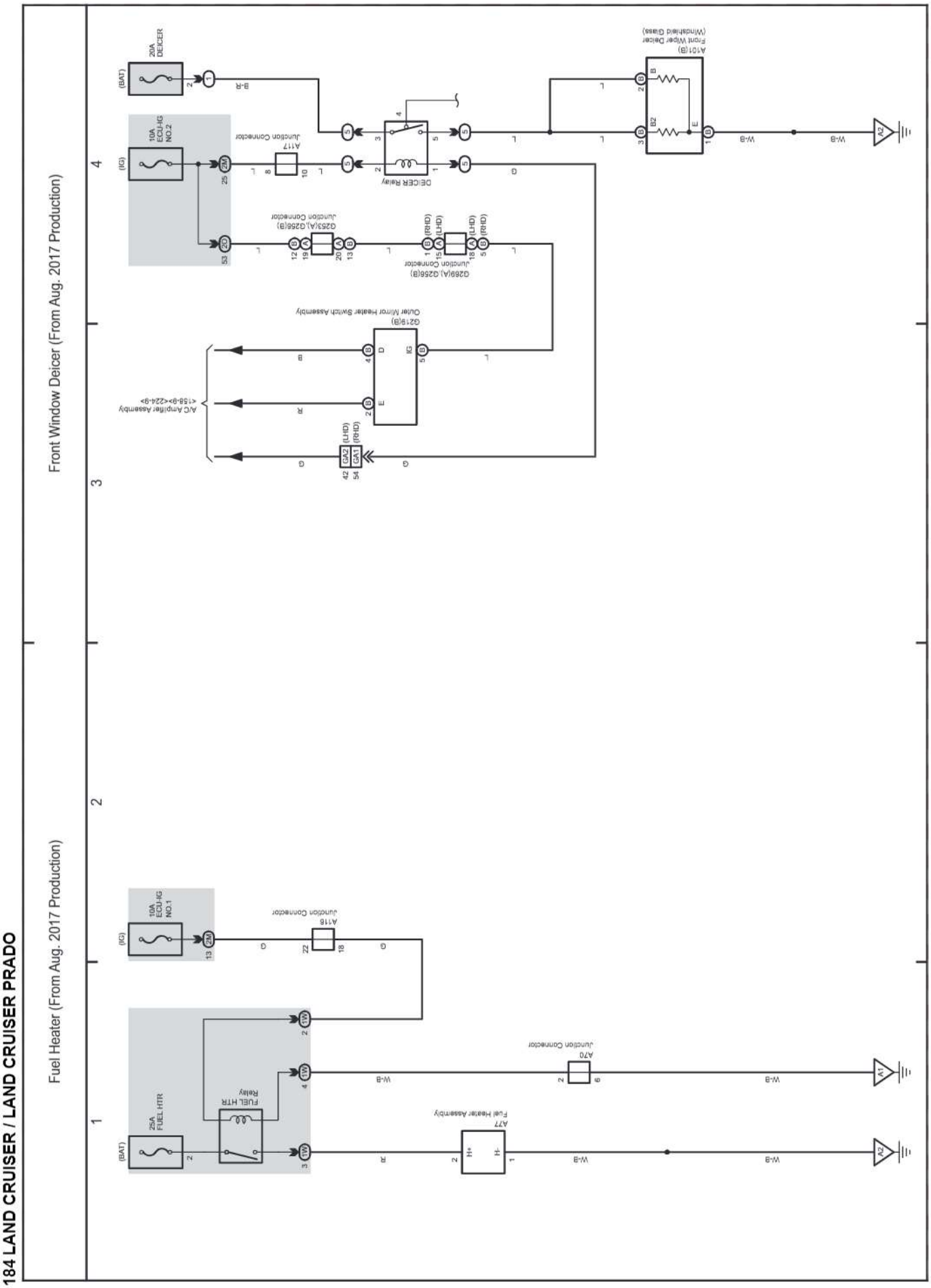

cardiagn.com

M OVERALL ELECTRICAL WIRING DIAGRAM

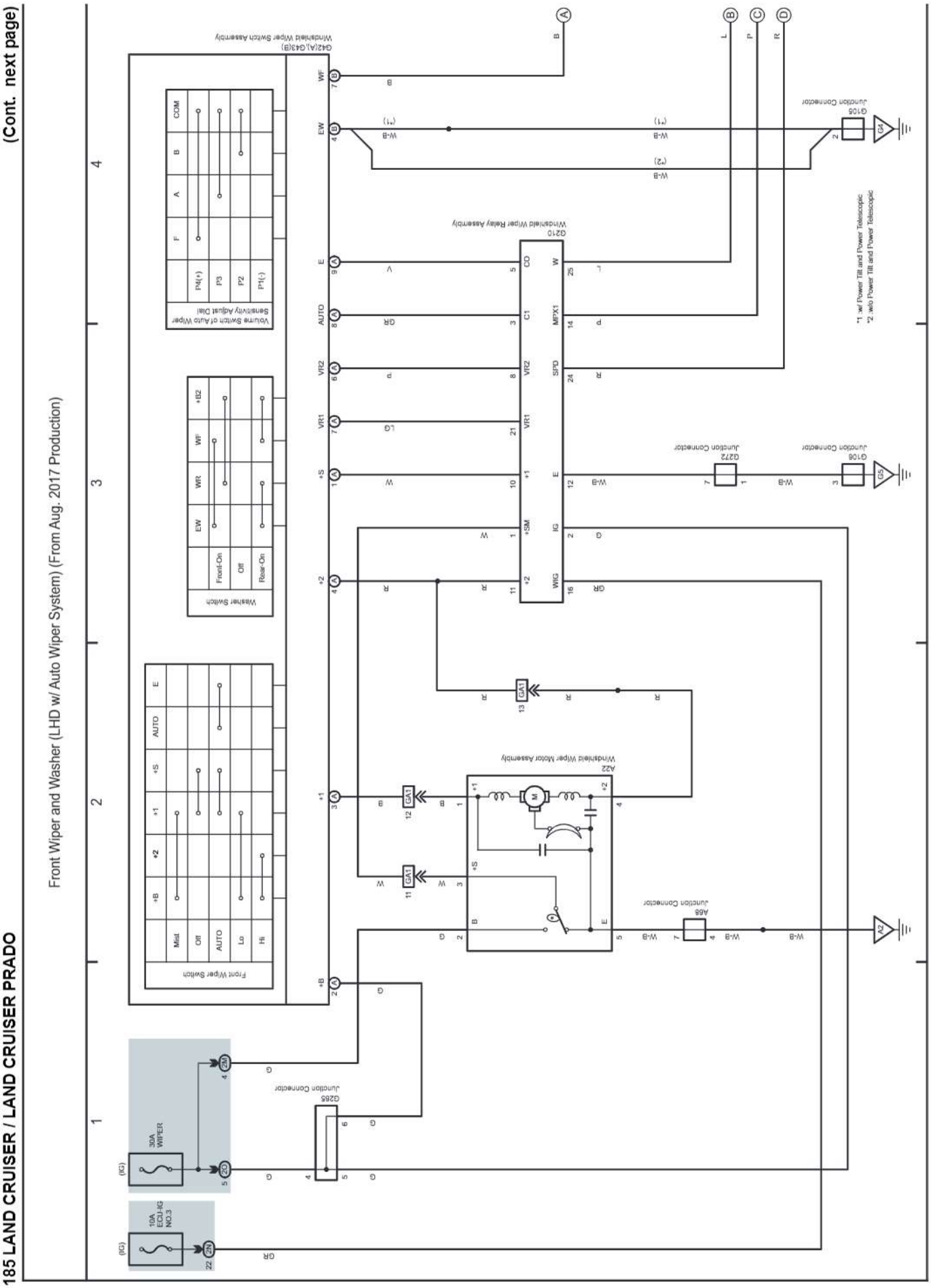

cardiagn.com

185 LAND CRUISER / LAND CRUISER PRADO (Cont'd)

Front Wiper and Washer (LHD w/ Auto Wiper System) (From Aug. 2017 Production)

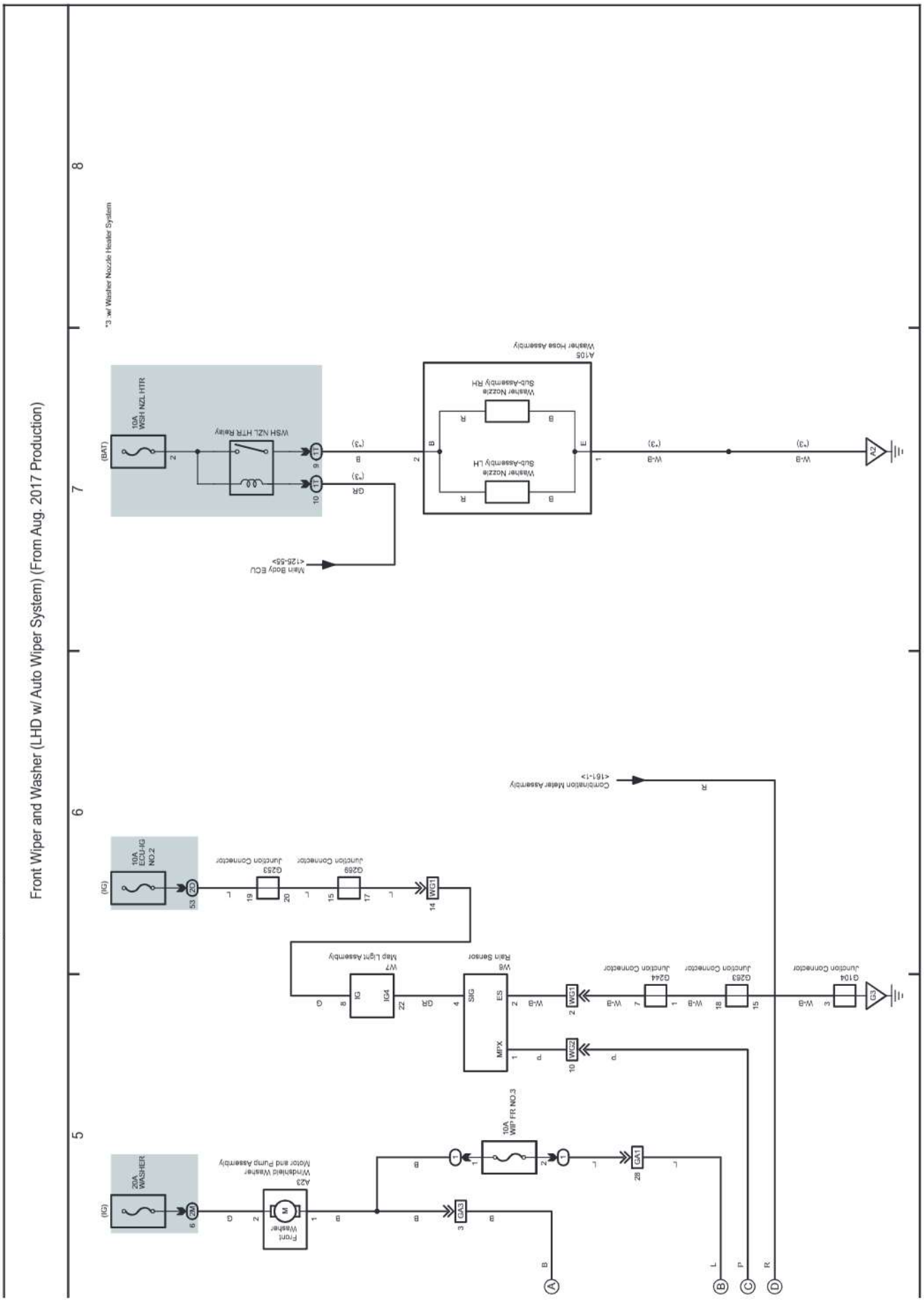

cardiagn.com

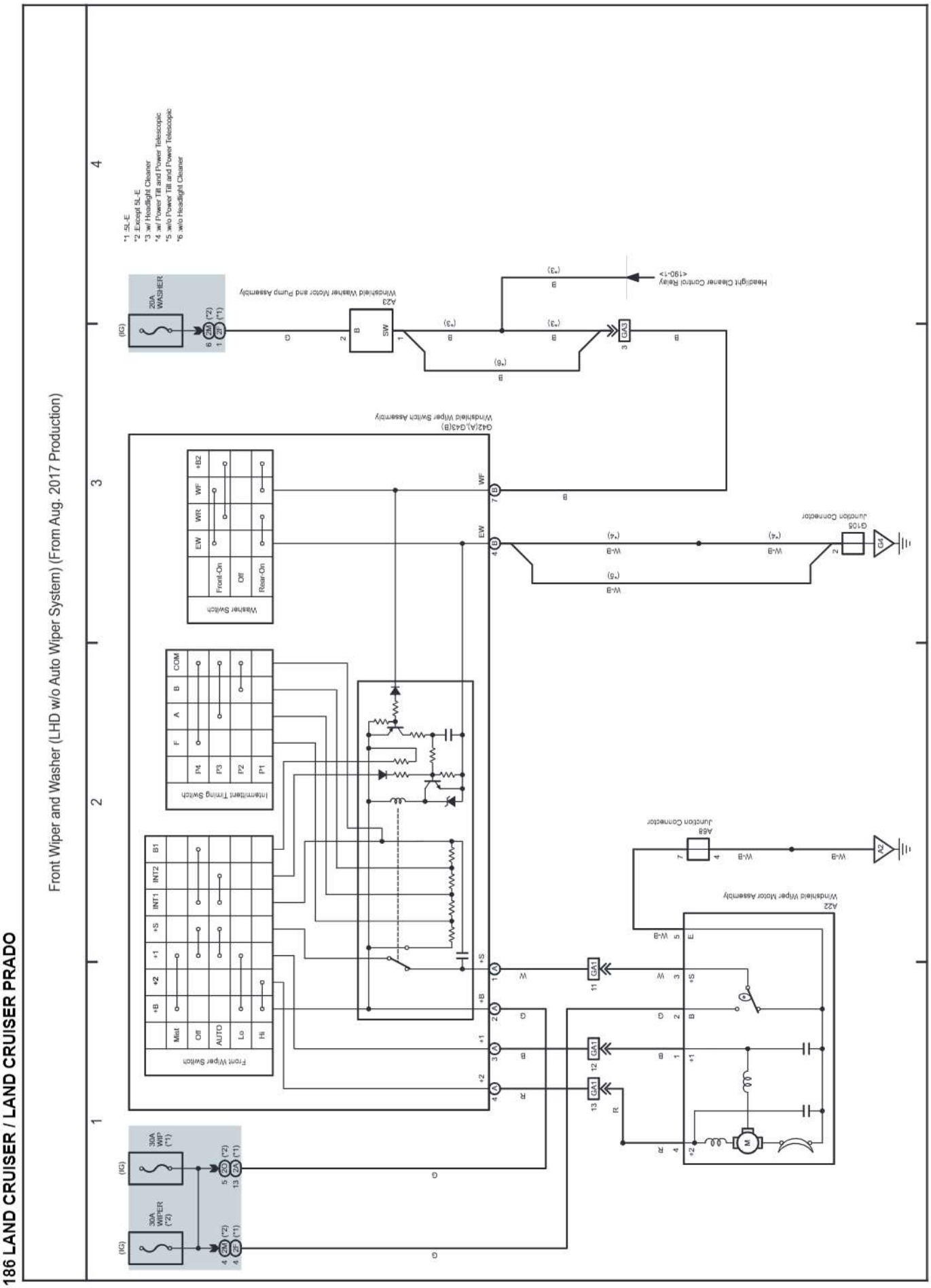

cardiagn.com

M OVERALL ELECTRICAL WIRING DIAGRAM

(Cont. next page)

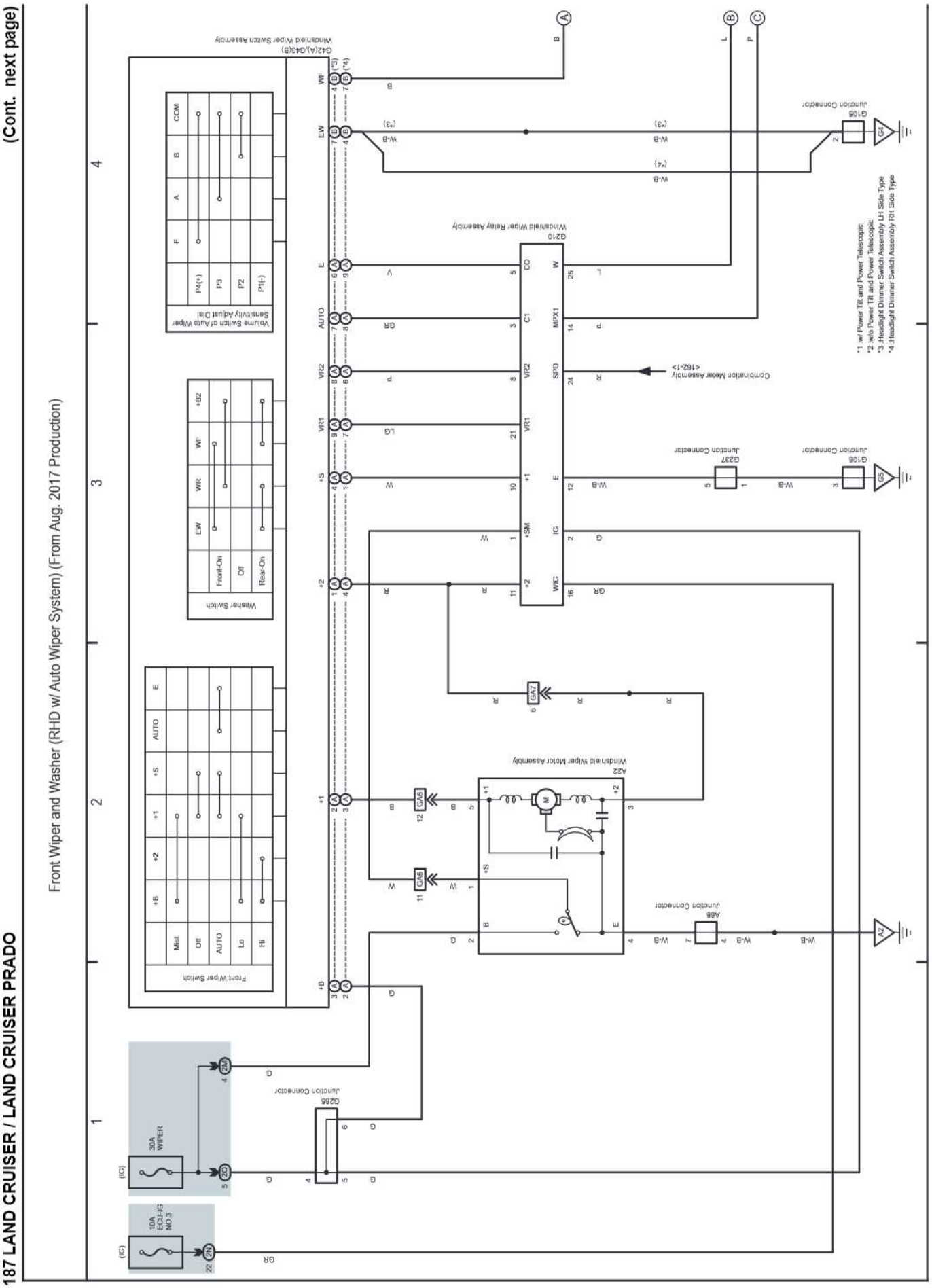

cardiagn.com

187 LAND CRUISER / LAND CRUISER PRADO (Cont'd)

Front Wiper and Washer (RHD w/ Auto Wiper System) (From Aug. 2017 Production)

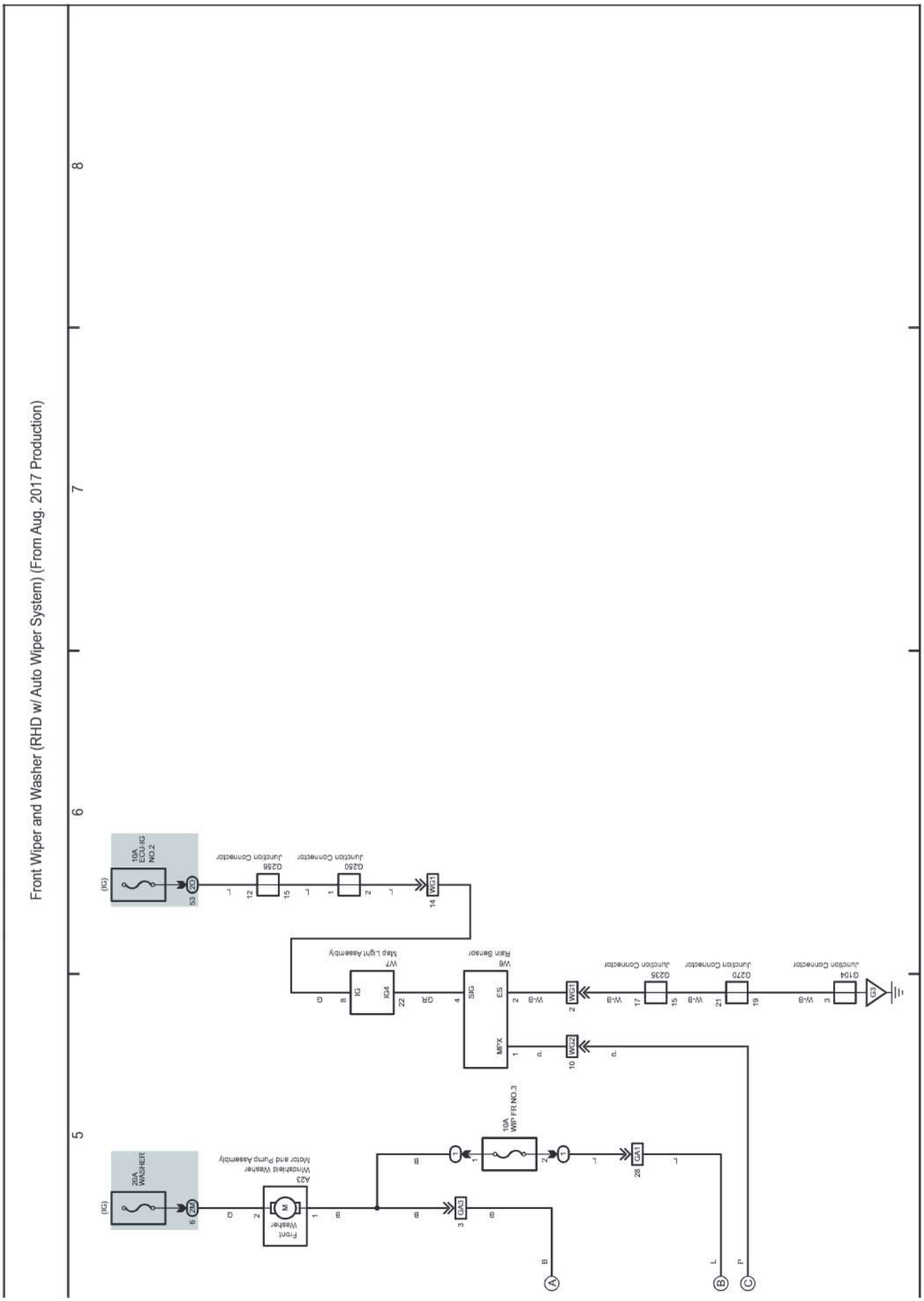

cardiagn.com

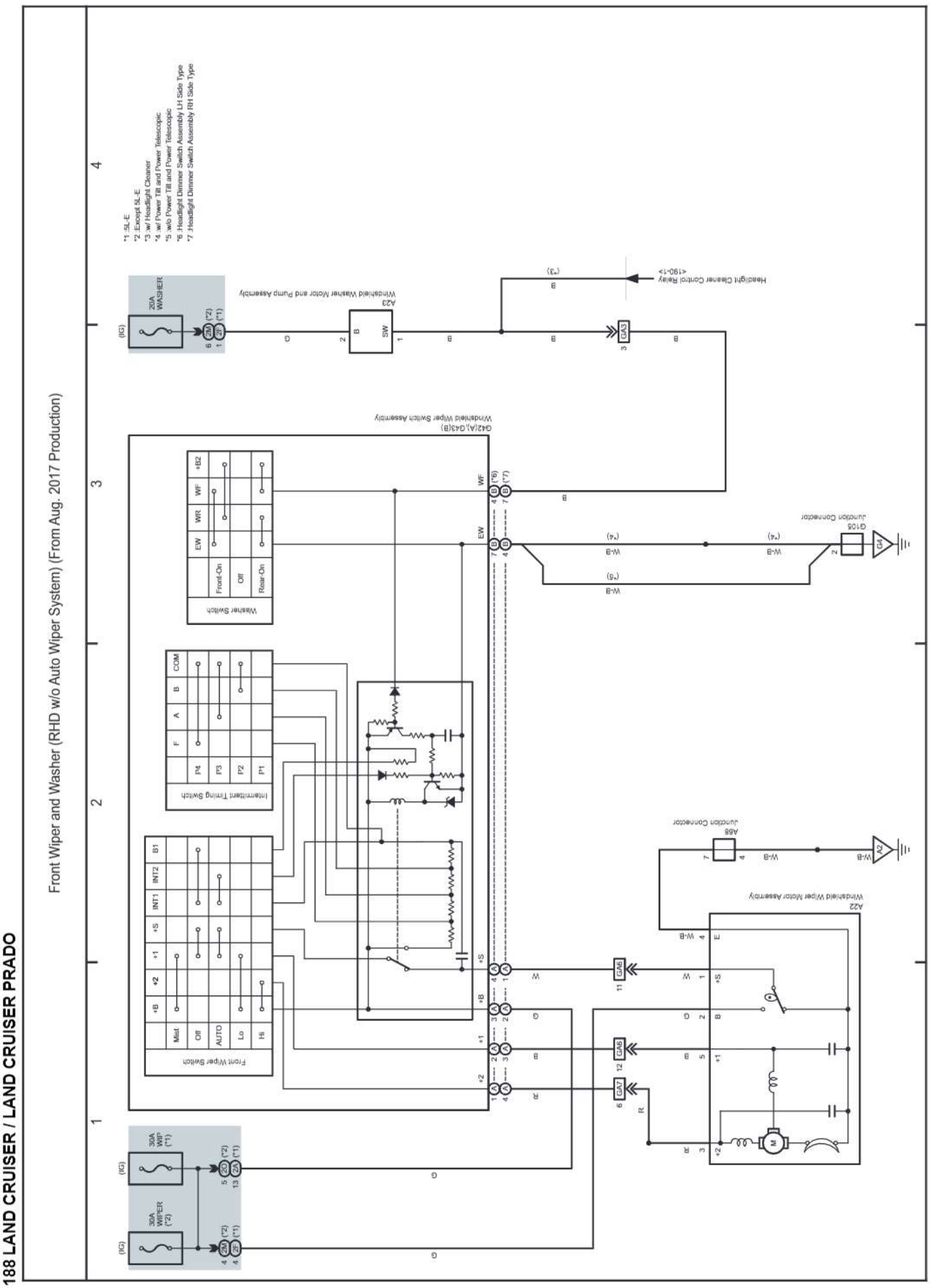

cardiagn.com

M OVERALL ELECTRICAL WIRING DIAGRAM

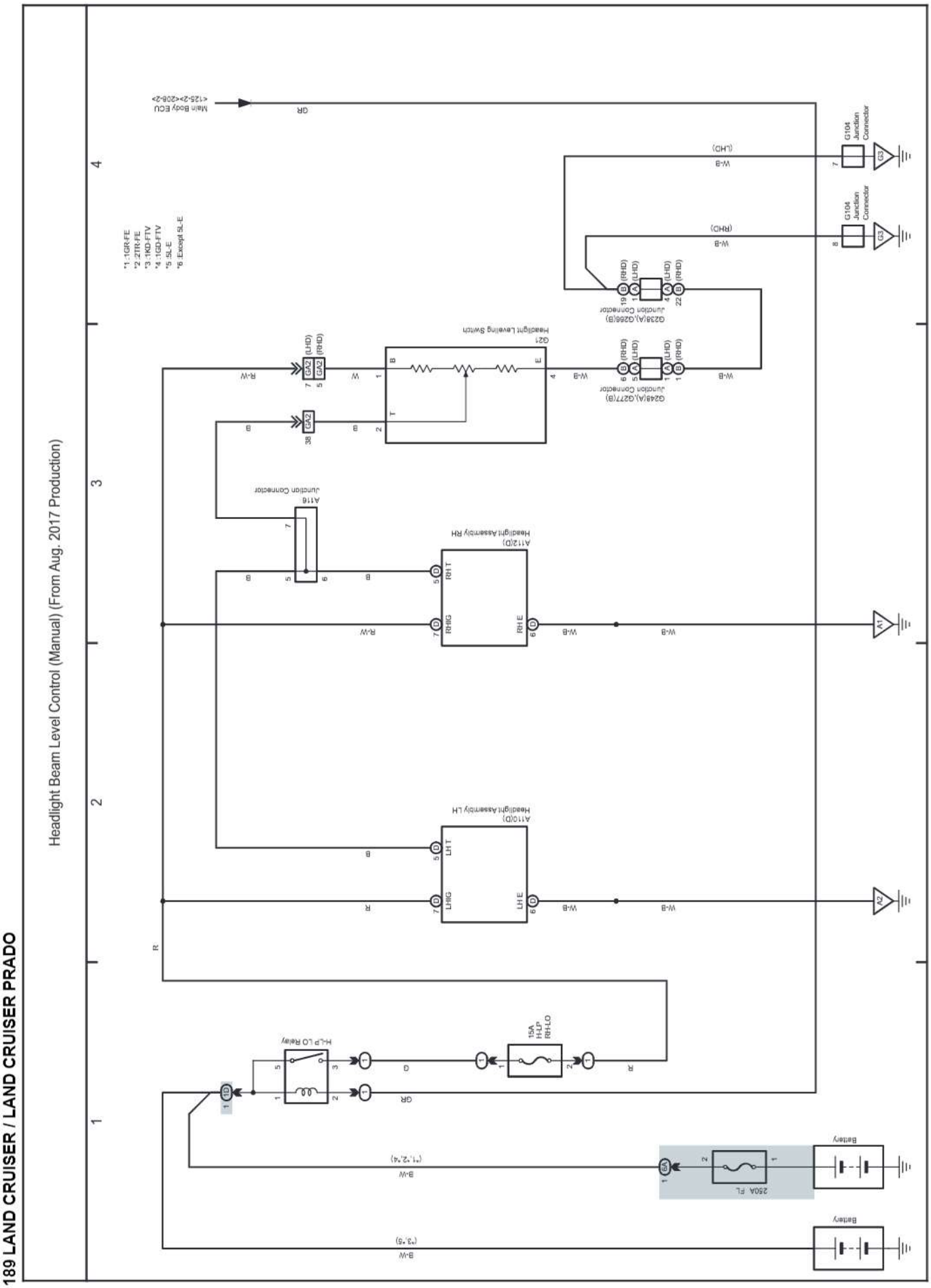

cardiagn.com

M OVERALL ELECTRICAL WIRING DIAGRAM

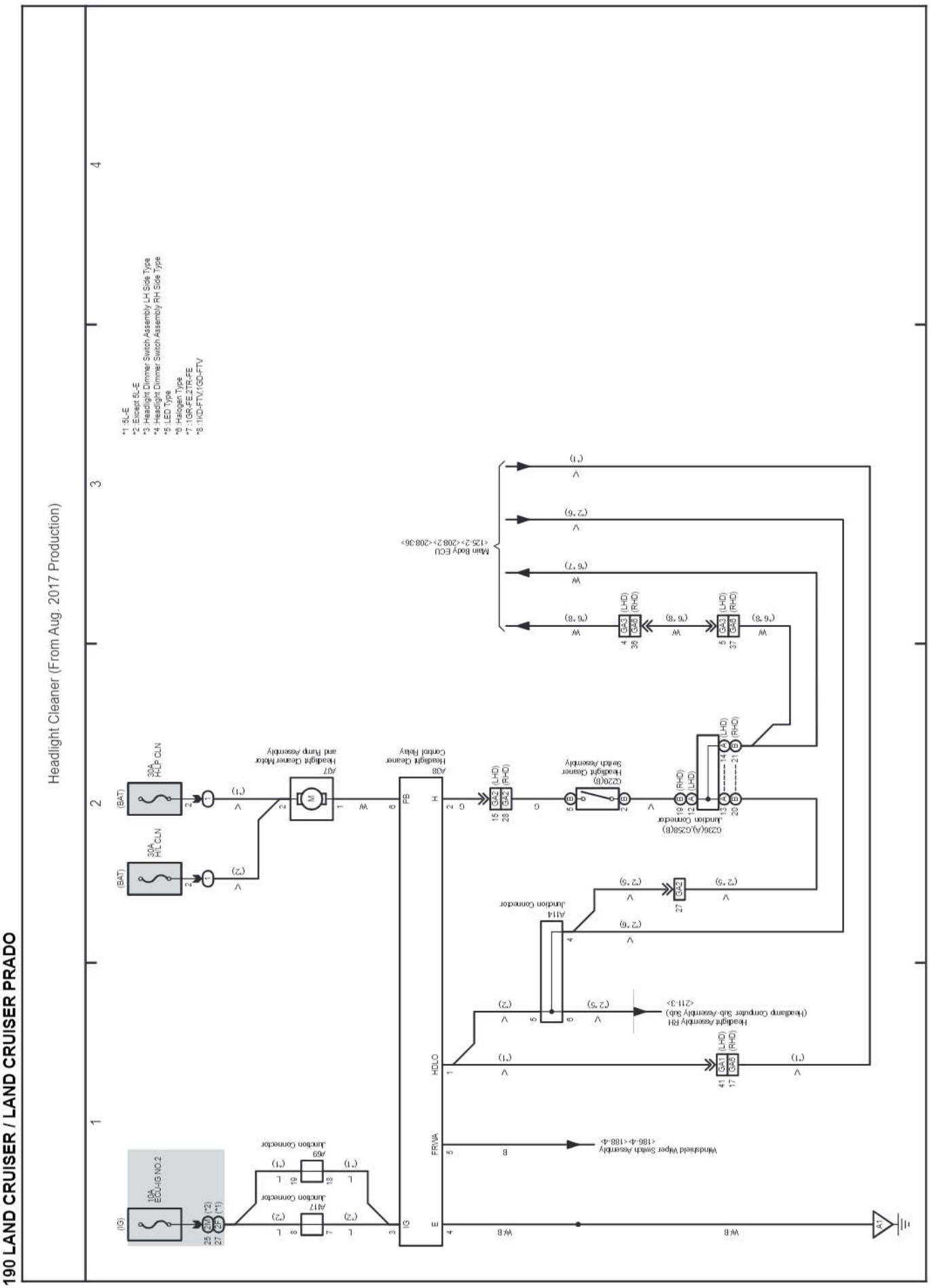

cardiagn.com

M OVERALL ELECTRICAL WIRING DIAGRAM

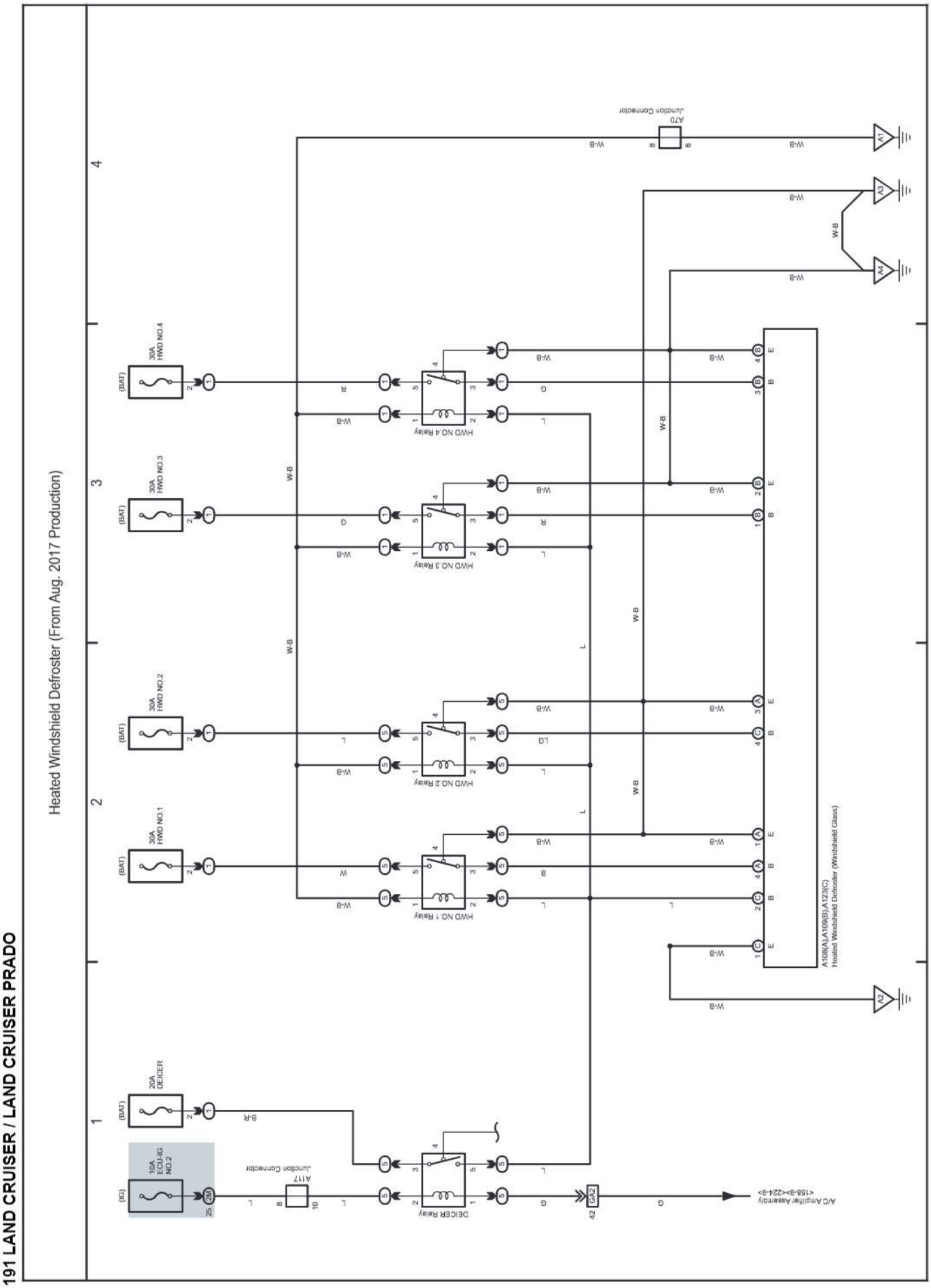

cardiagn.com

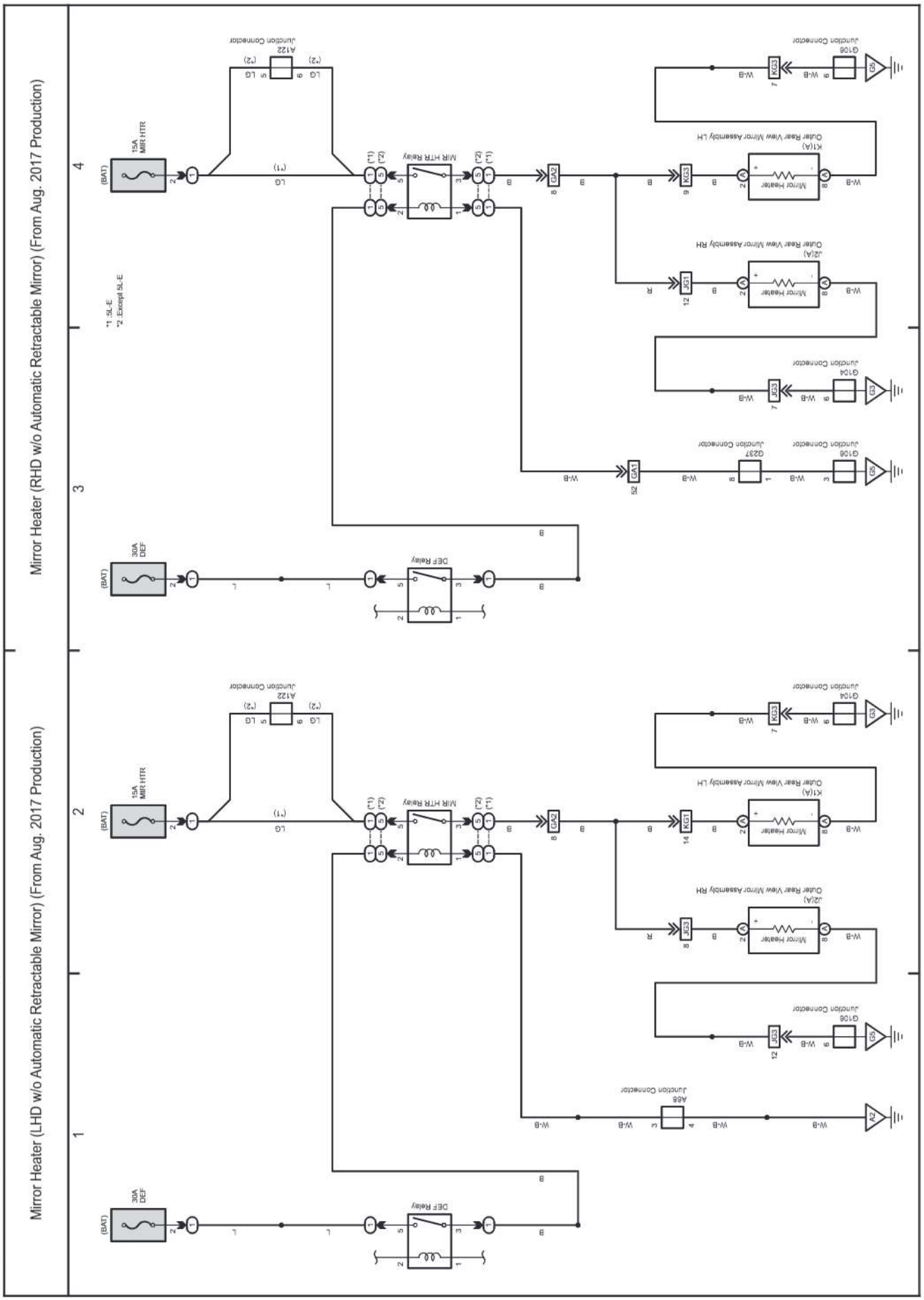

cardiagn.com

(Cont. next page)

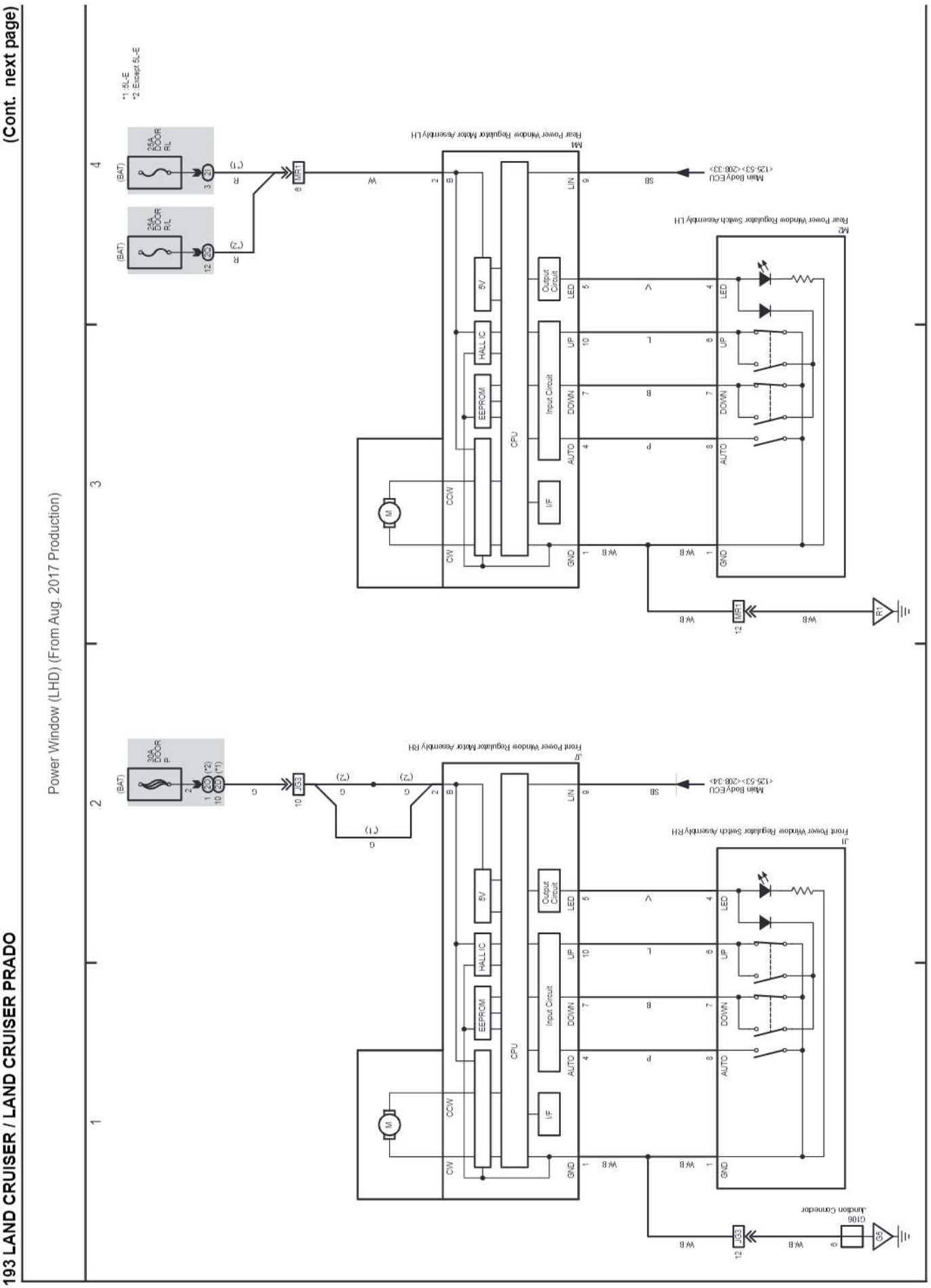

cardiagn.com

(Cont. next page)

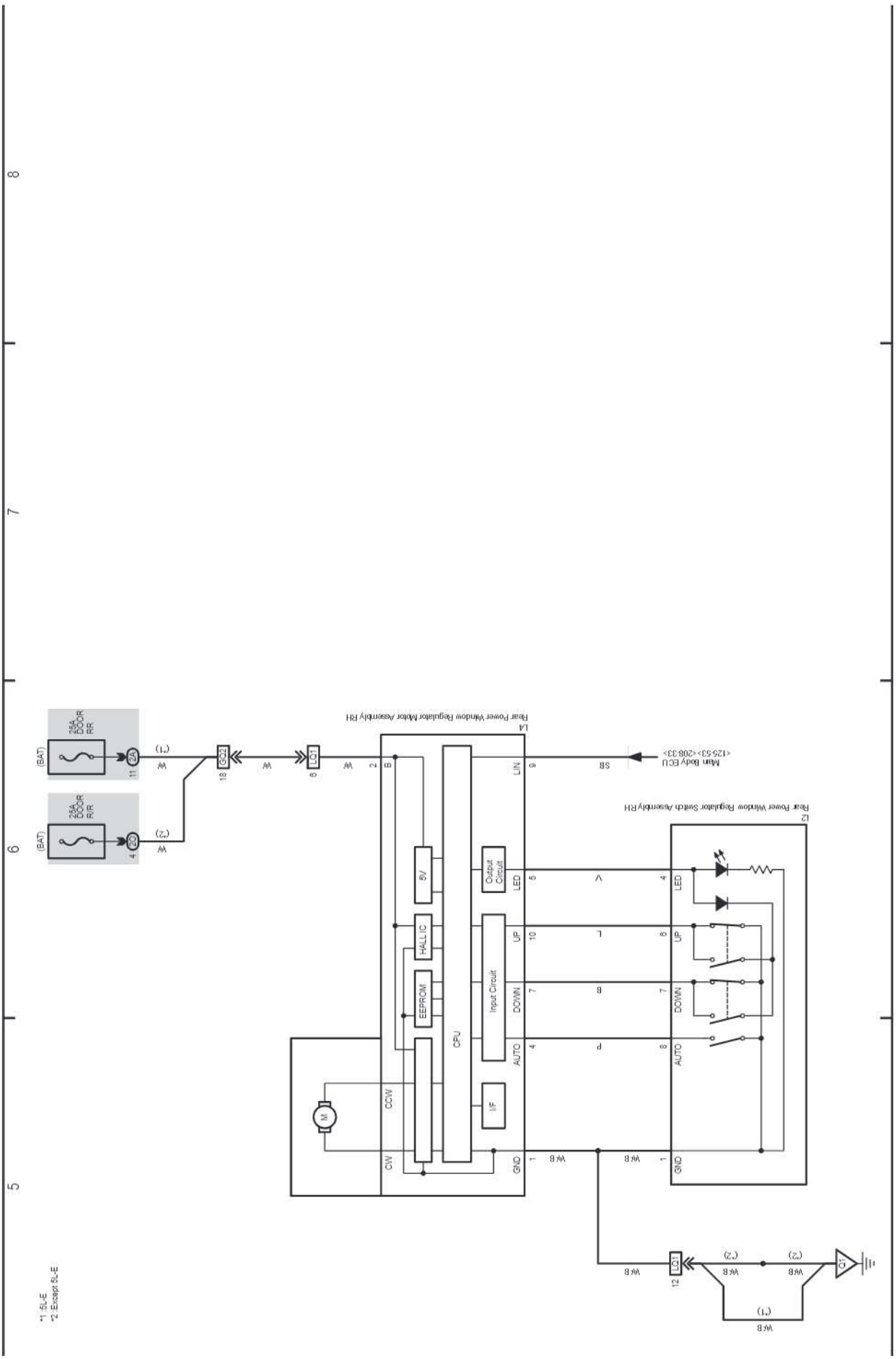

cardiagn.com

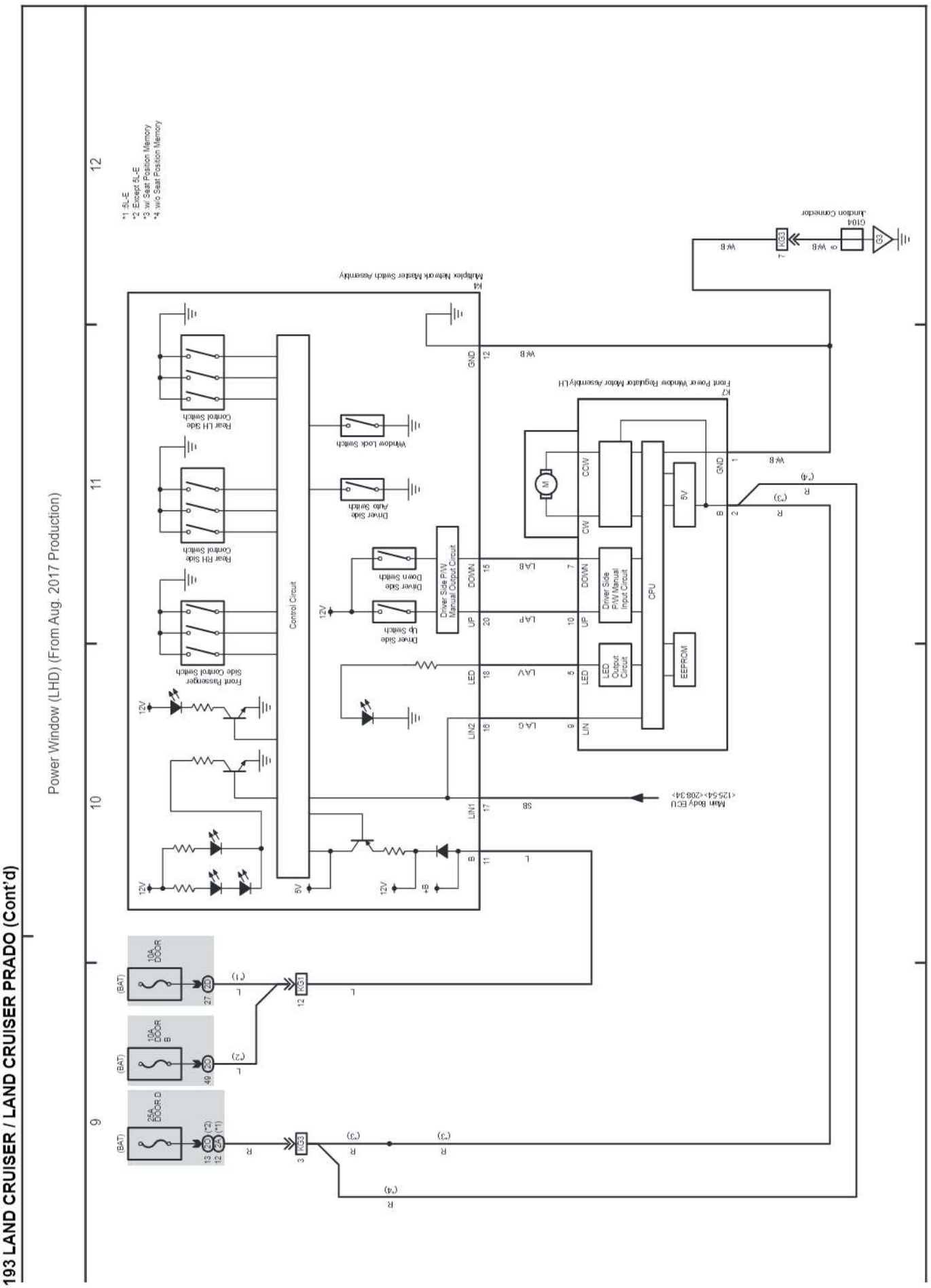

cardiagn.com

(Cont. next page)

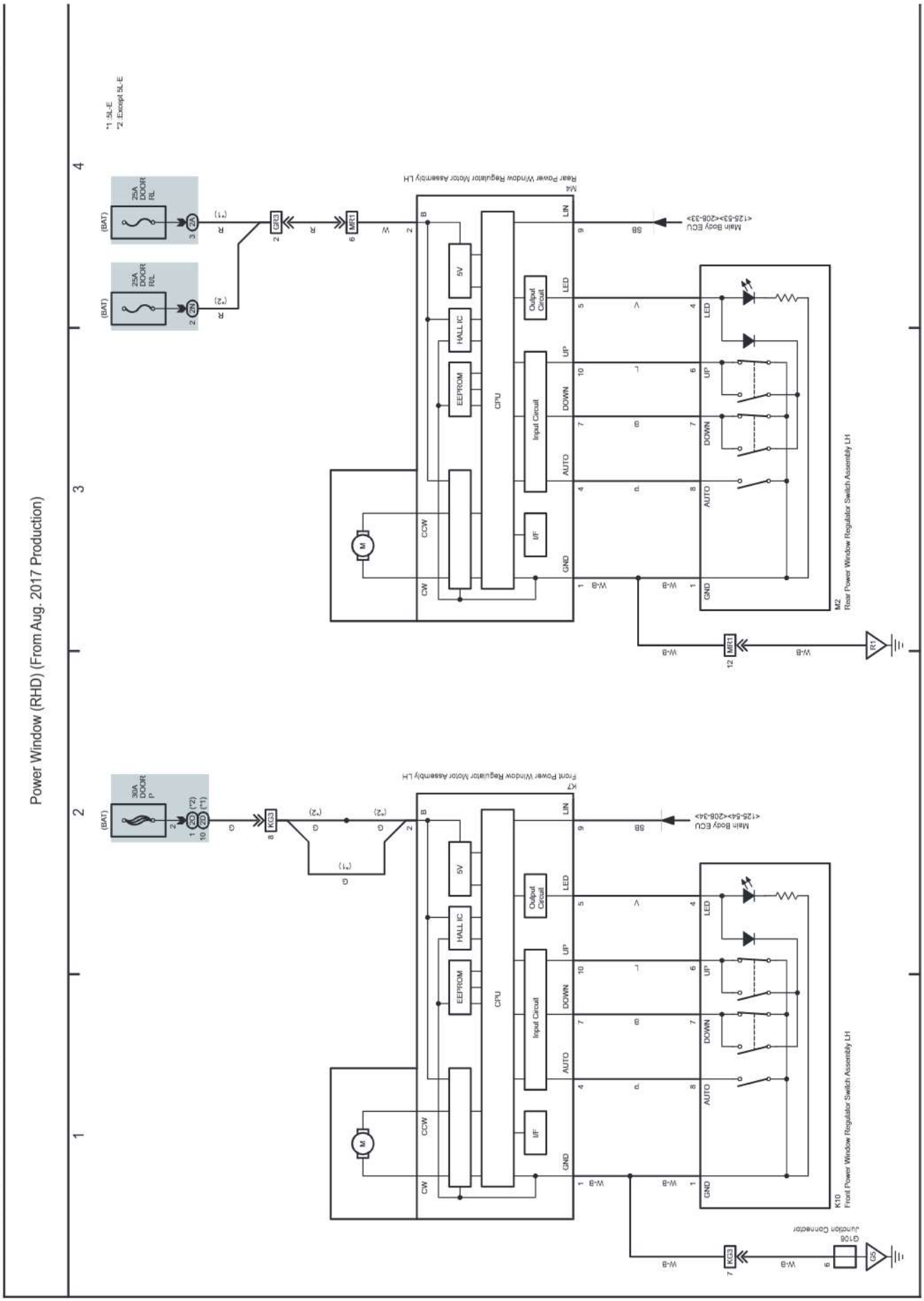

(Cont. next page)

Power Window (RHD) (From Aug. 2017 Production)

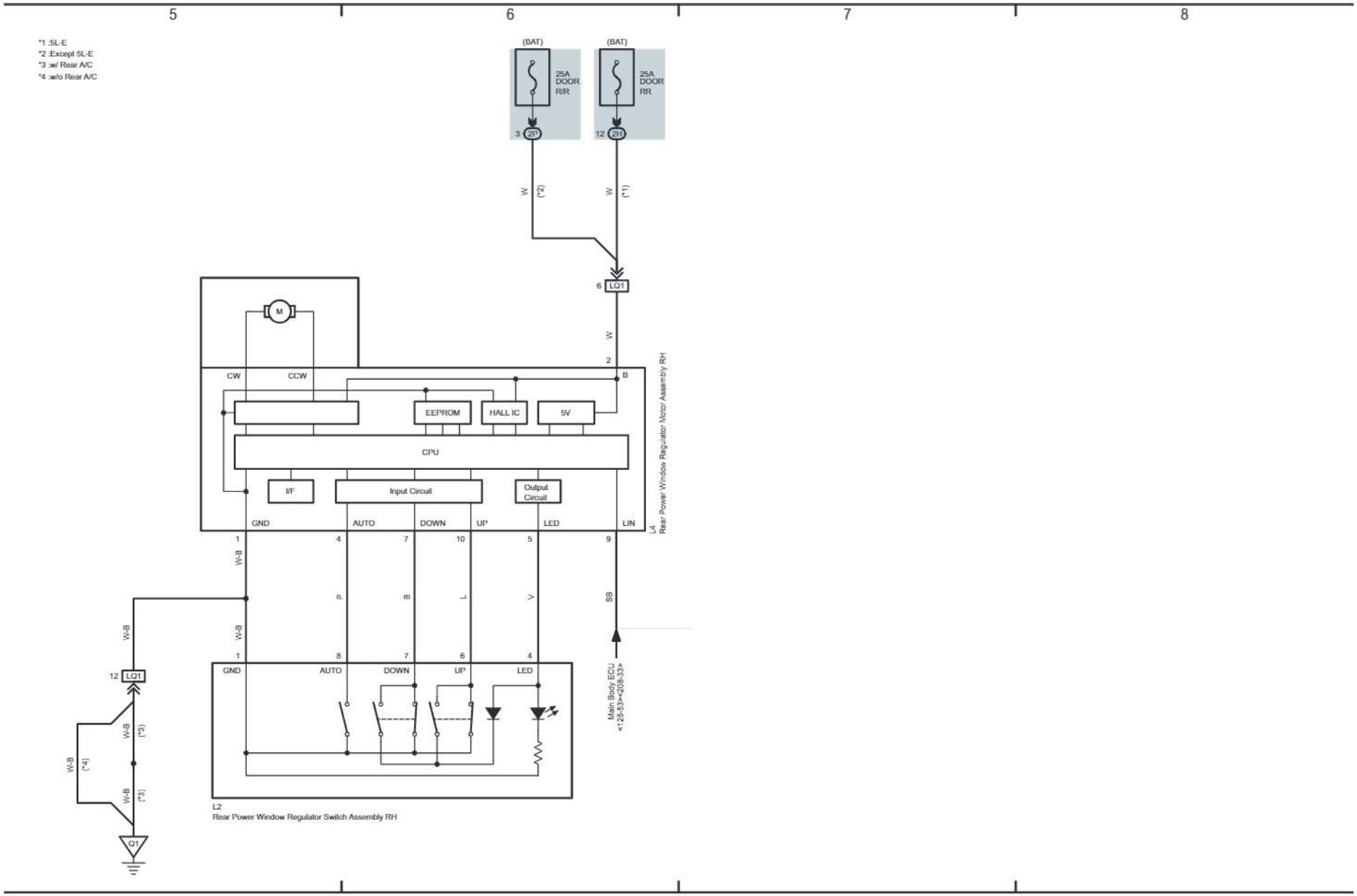

cardiagn.com

cardiagn.com

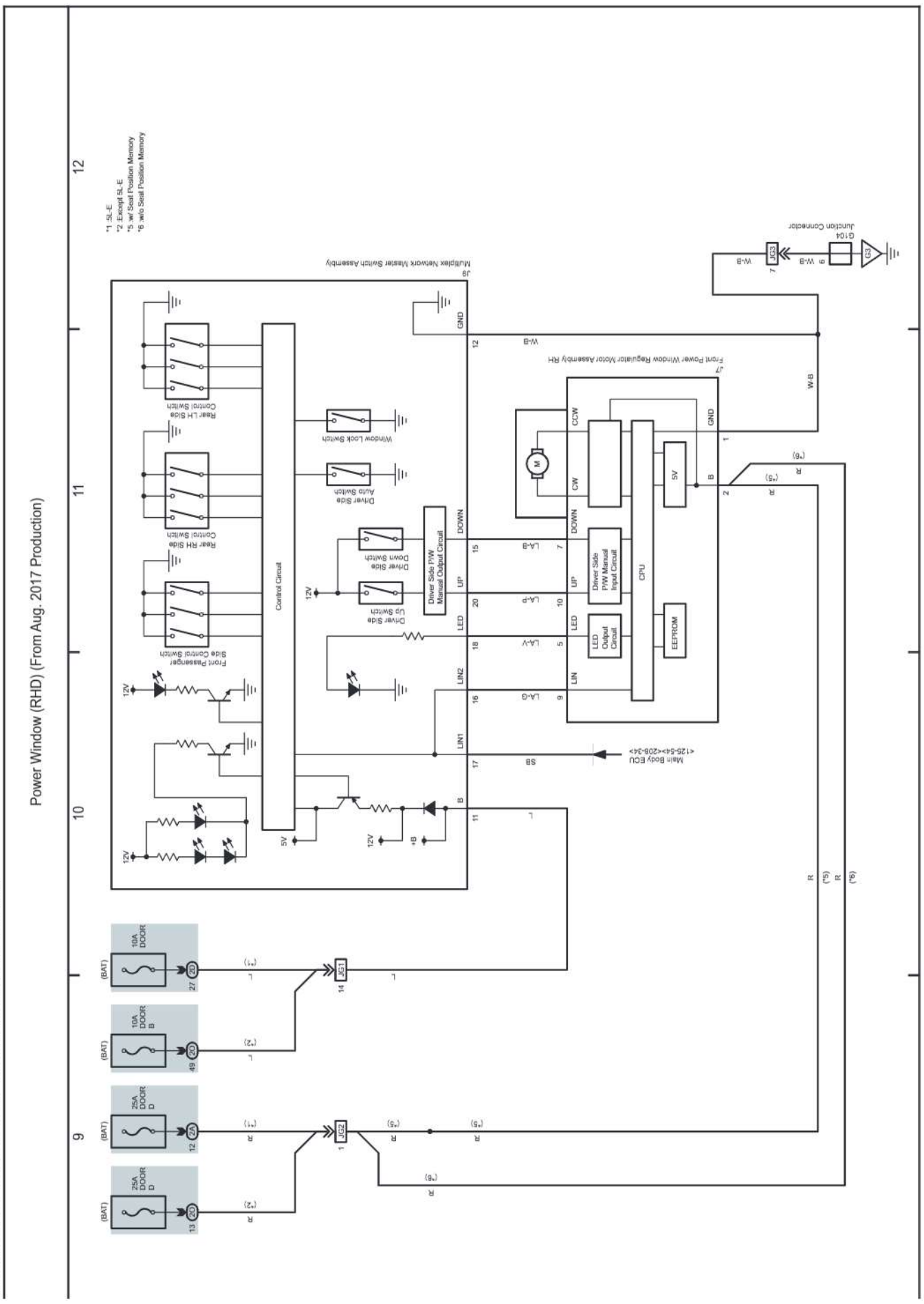

cardiagn.com

M OVERALL ELECTRICAL WIRING DIAGRAM

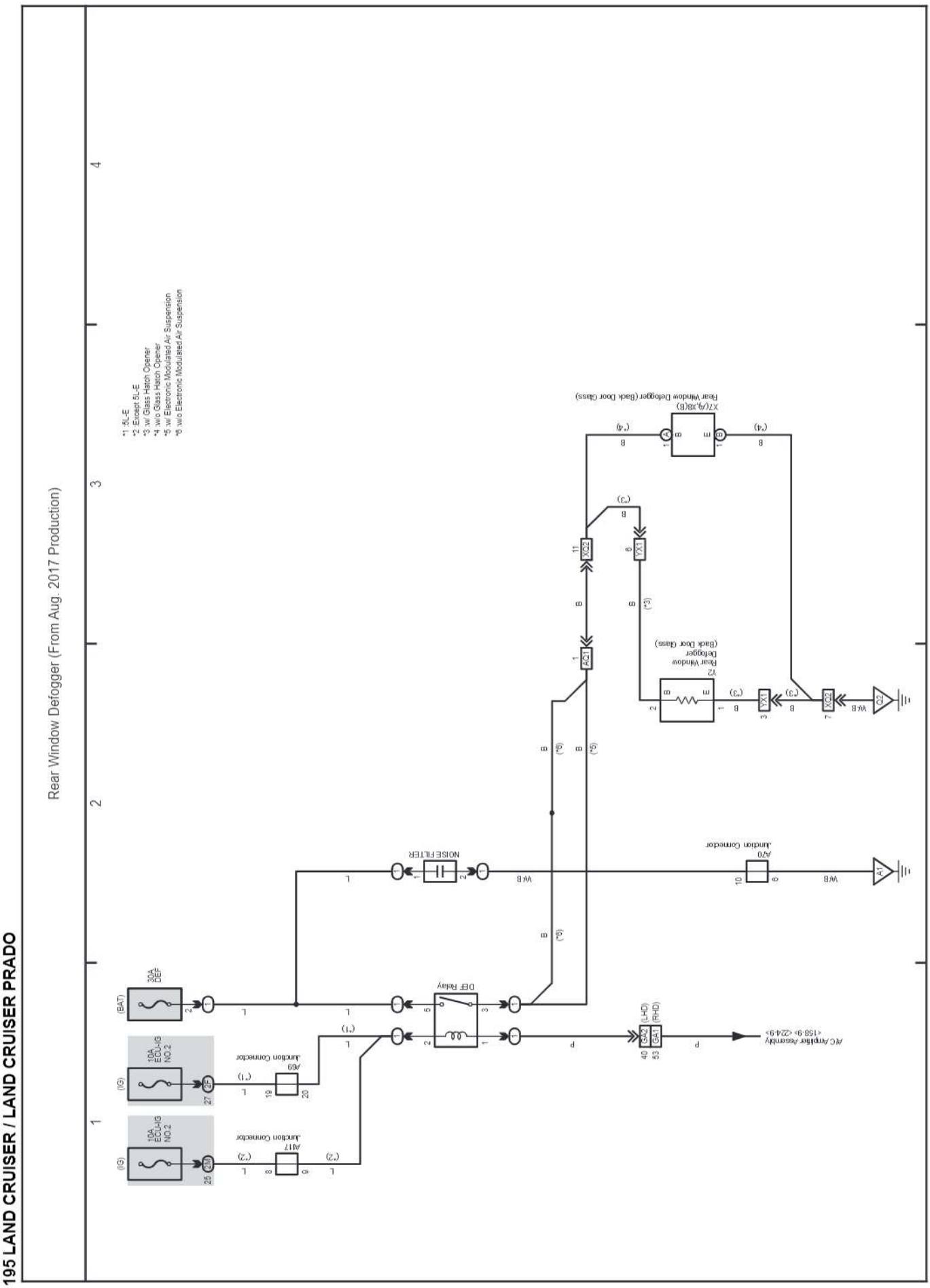

cardiagn.com

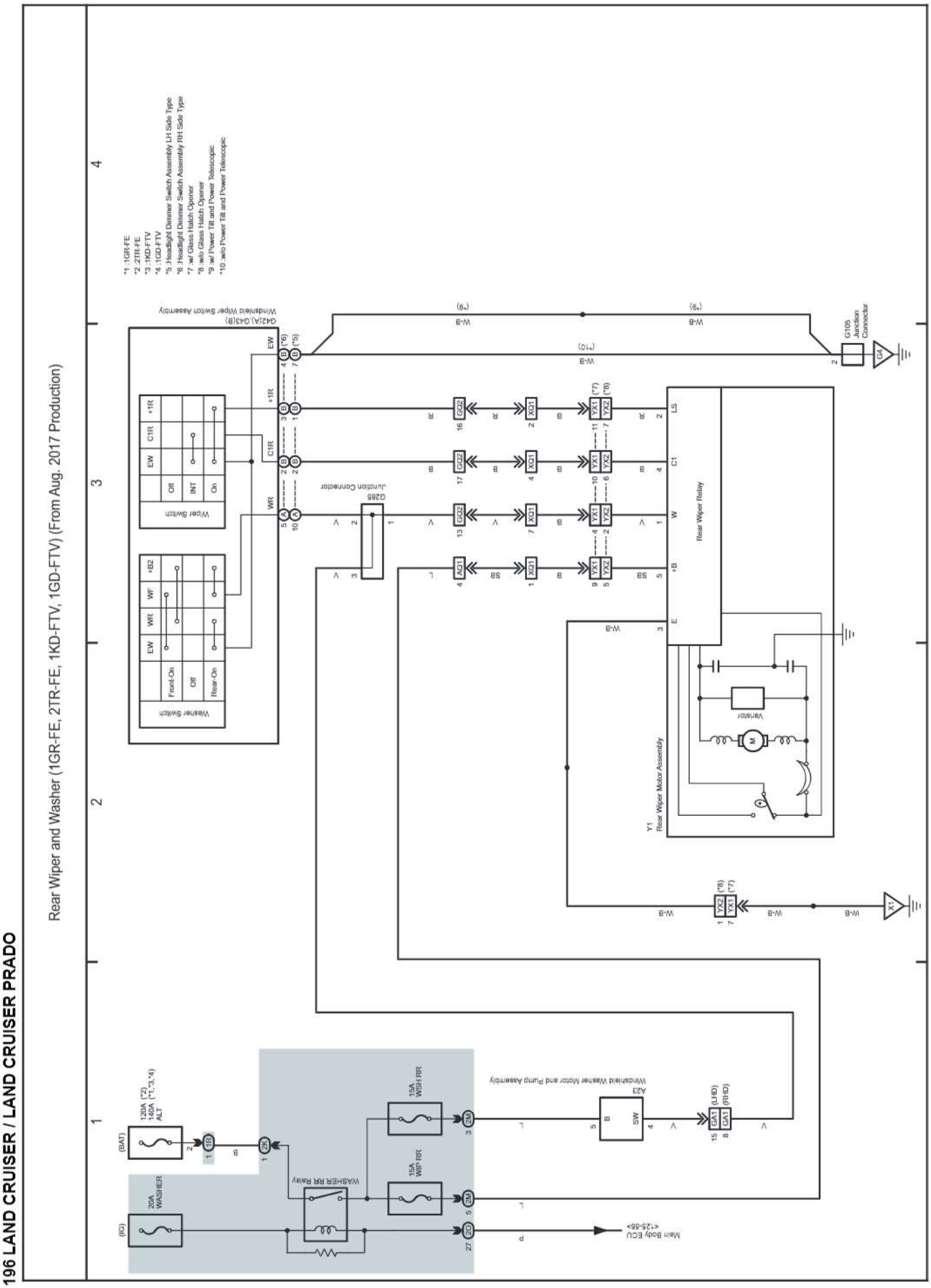

cardiagn.com

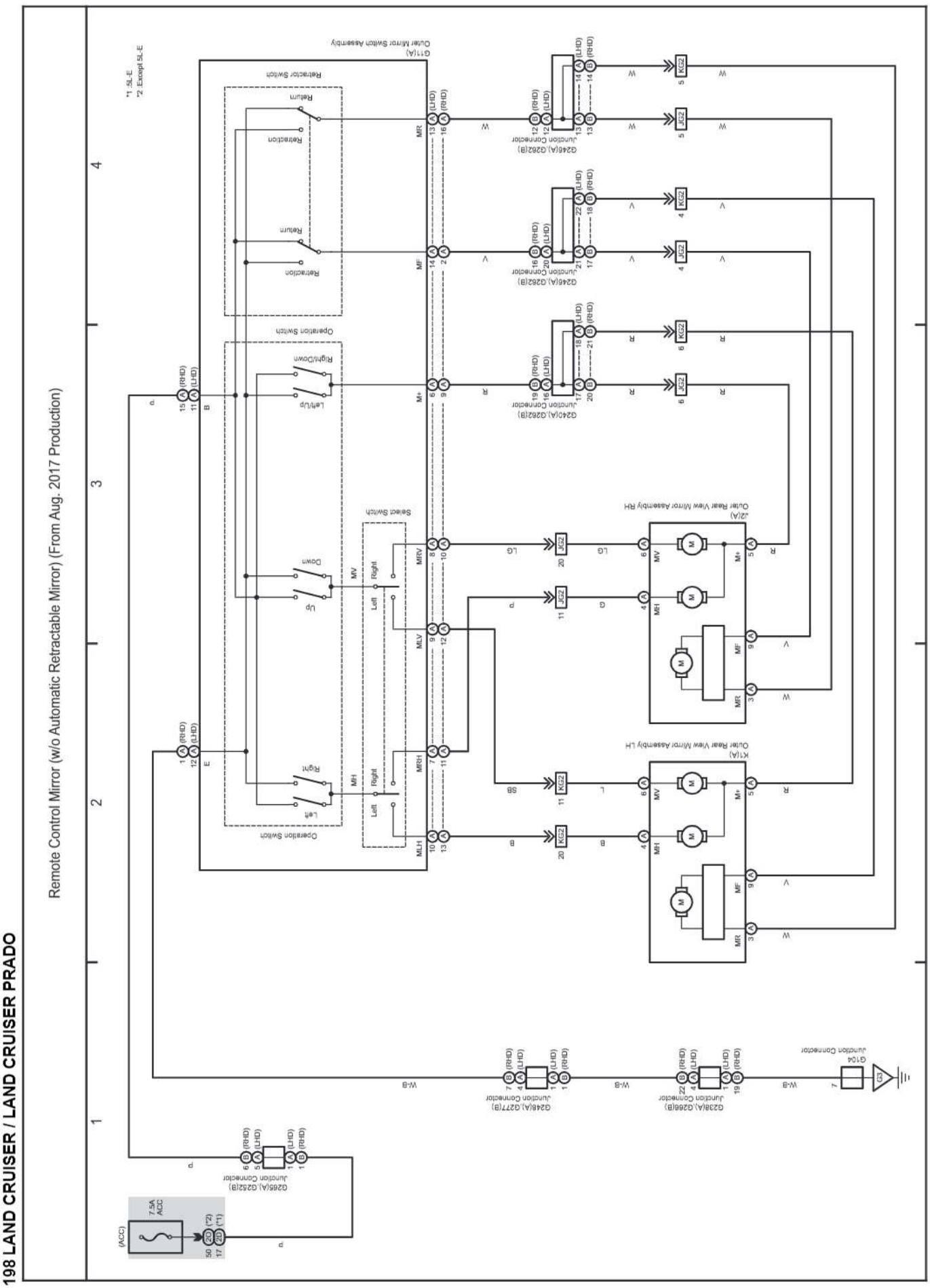

cardiagn.com

M OVERALL ELECTRICAL WIRING DIAGRAM

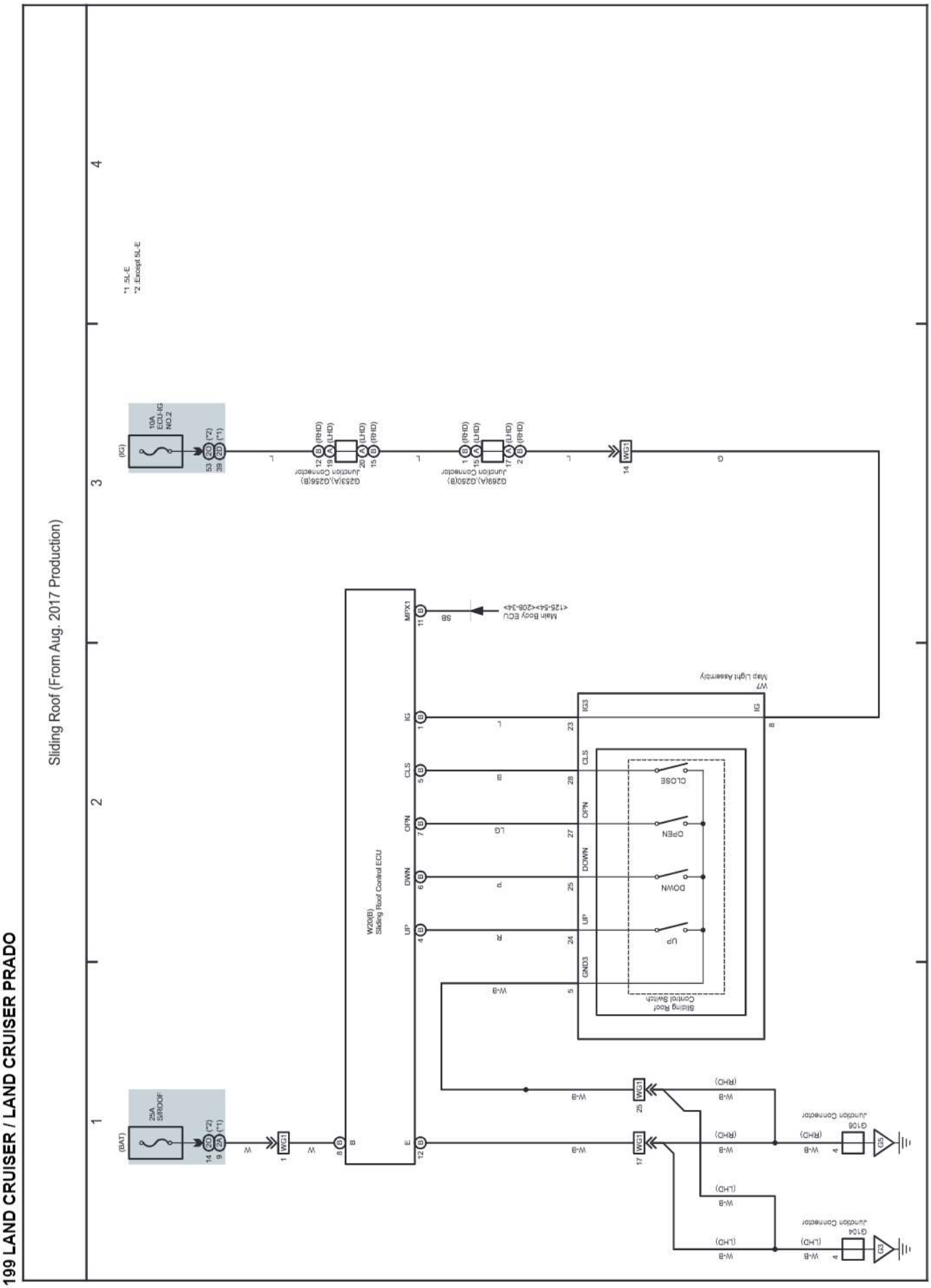

cardiagn.com

M OVERALL ELECTRICAL WIRING DIAGRAM

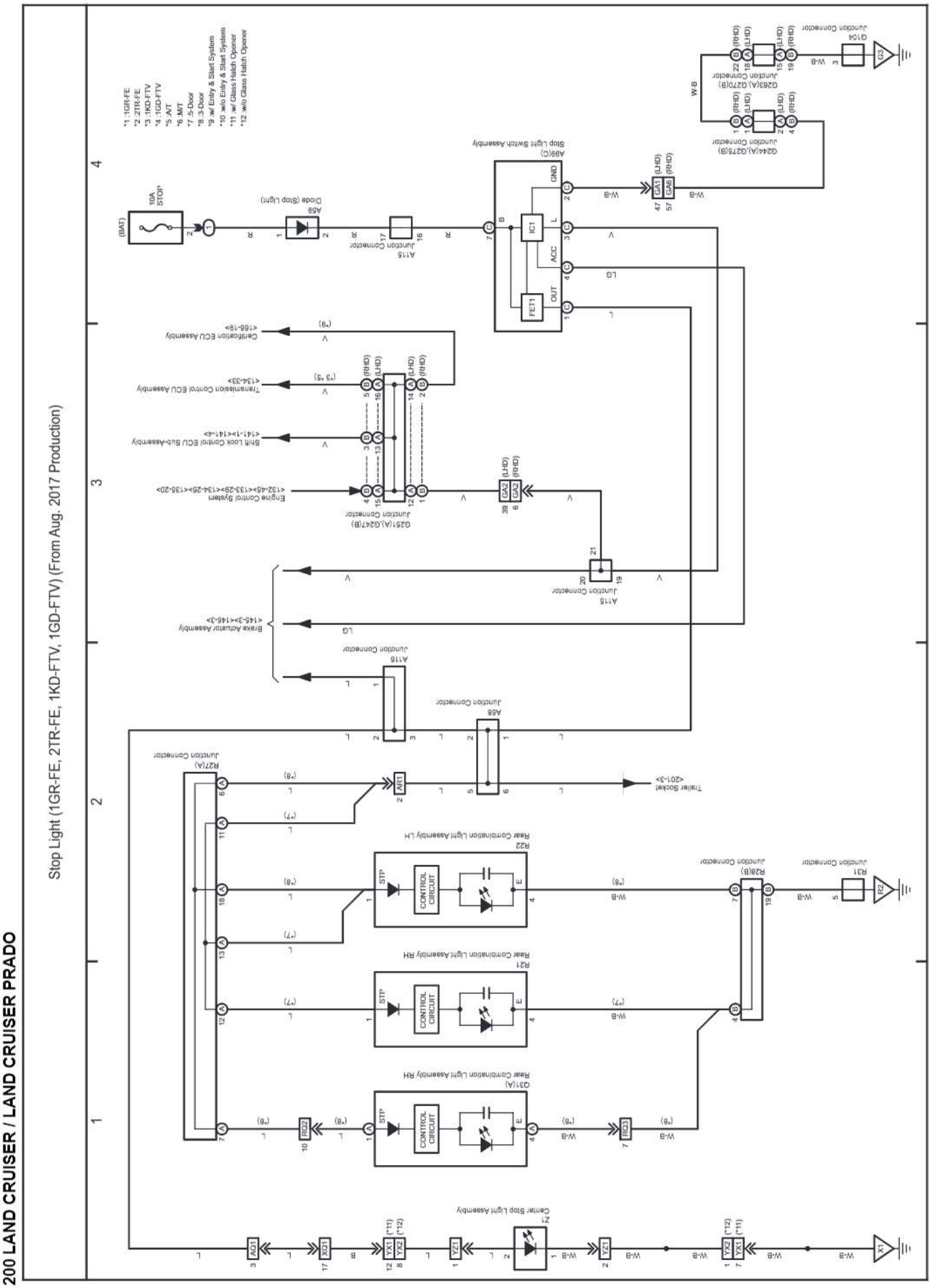

cardiagn.com

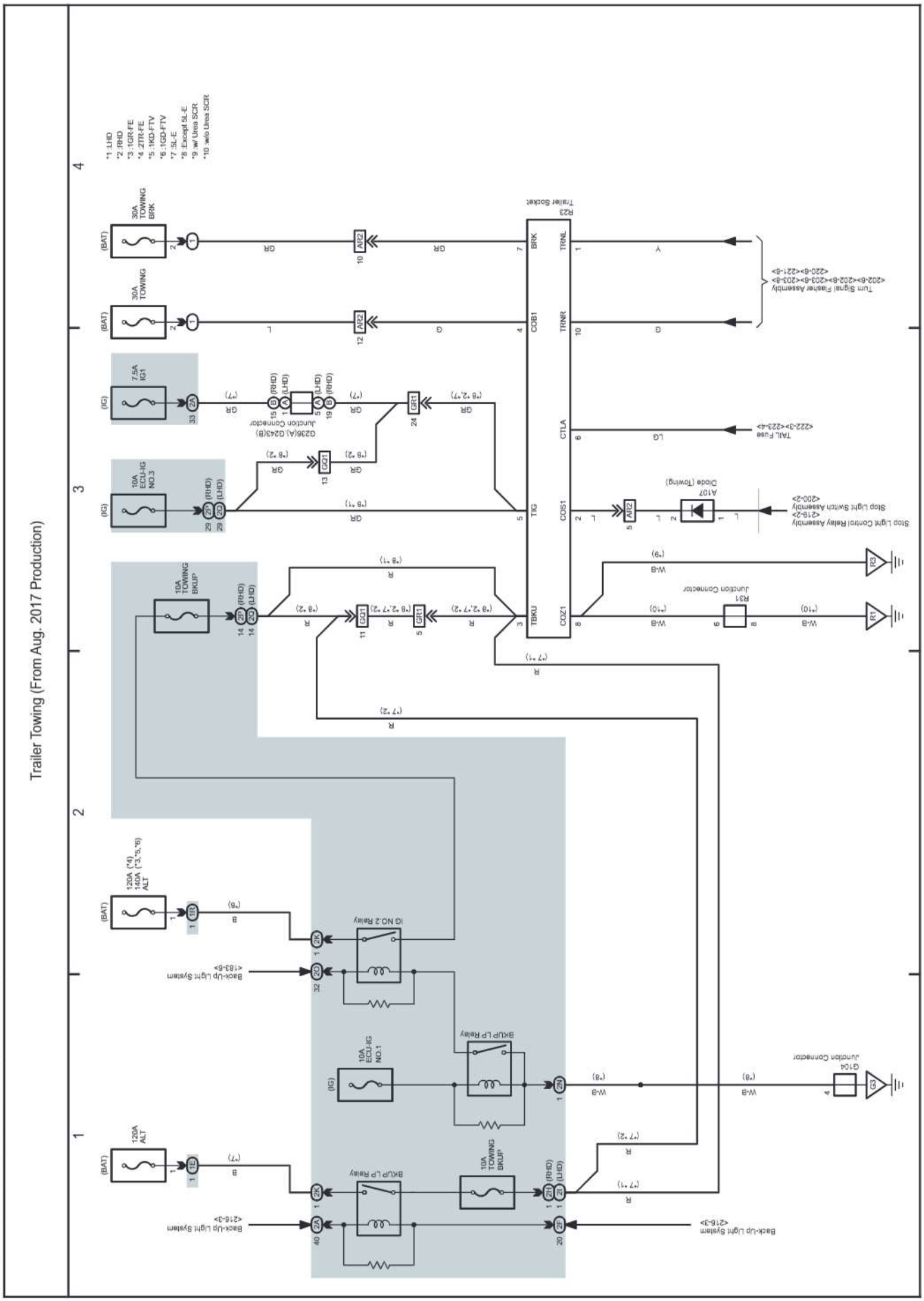

cardiagn.com

M OVERALL ELECTRICAL WIRING DIAGRAM

(Cont. next page)

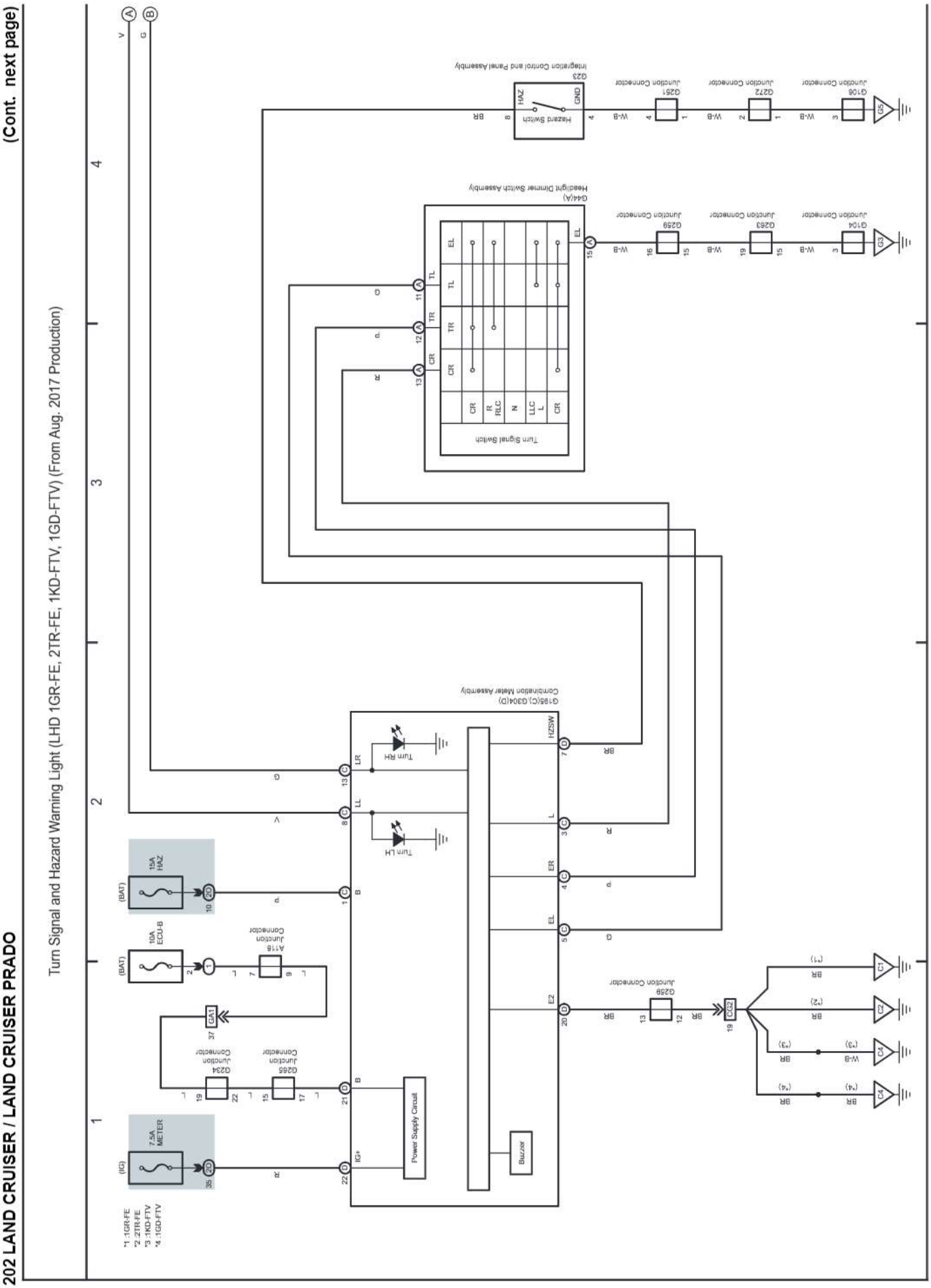

cardiagn.com

Turn Signal and Hazard Warning Light (LHD 1GR-FE, 2TR-FE, 1KD-FTV, 1GD-FTV) (From Aug. 2017 Production)

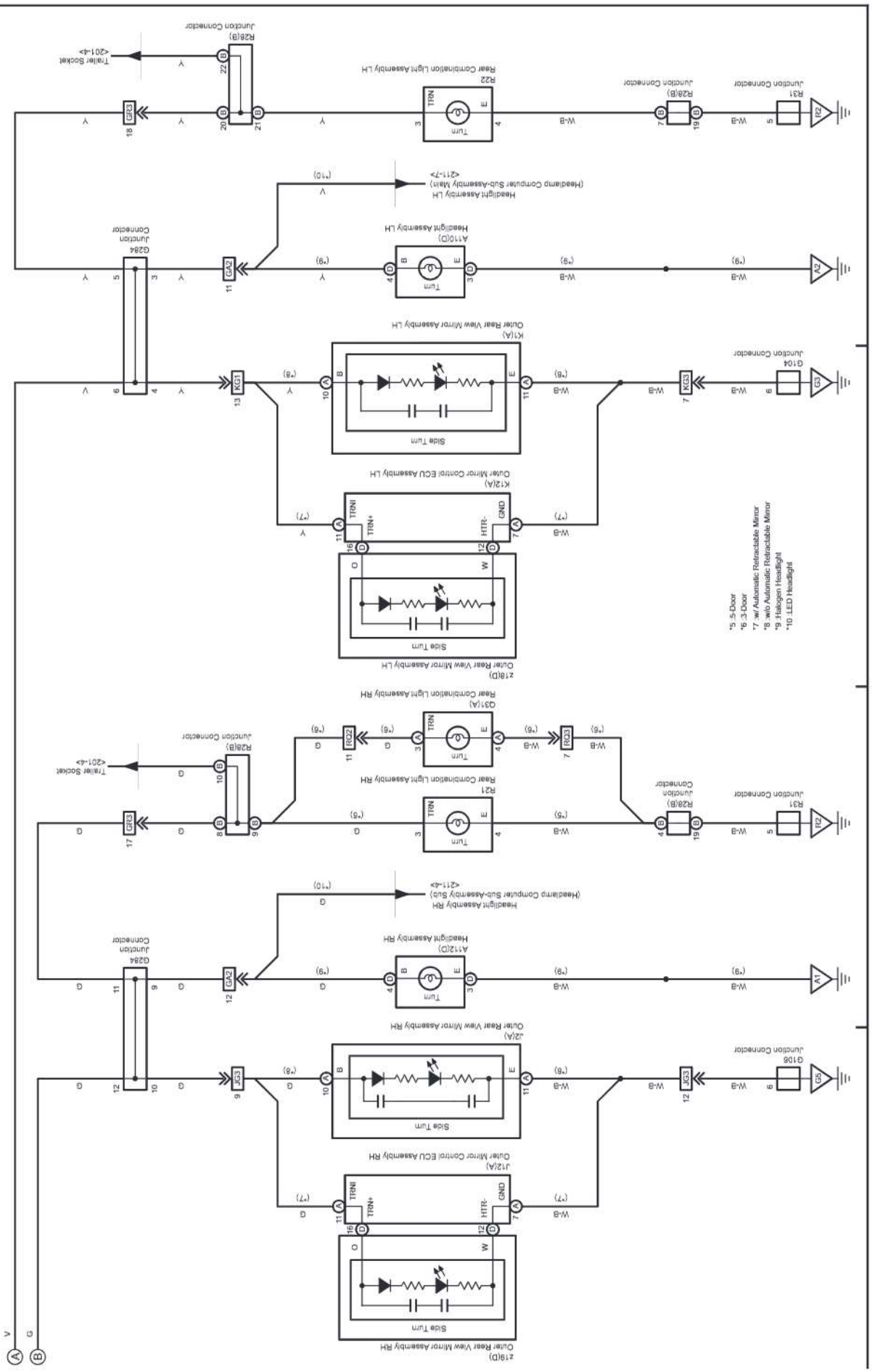

cardiagn.com

M OVERALL ELECTRICAL WIRING DIAGRAM

(Cont. next page)

203 LAND CRUISER / LAND CRUISER PRADO

Turn Signal and Hazard Warning Light (RHD 1GR-FE, 1KD-FTV, 1GD-FTV) (From Aug. 2017 Production)

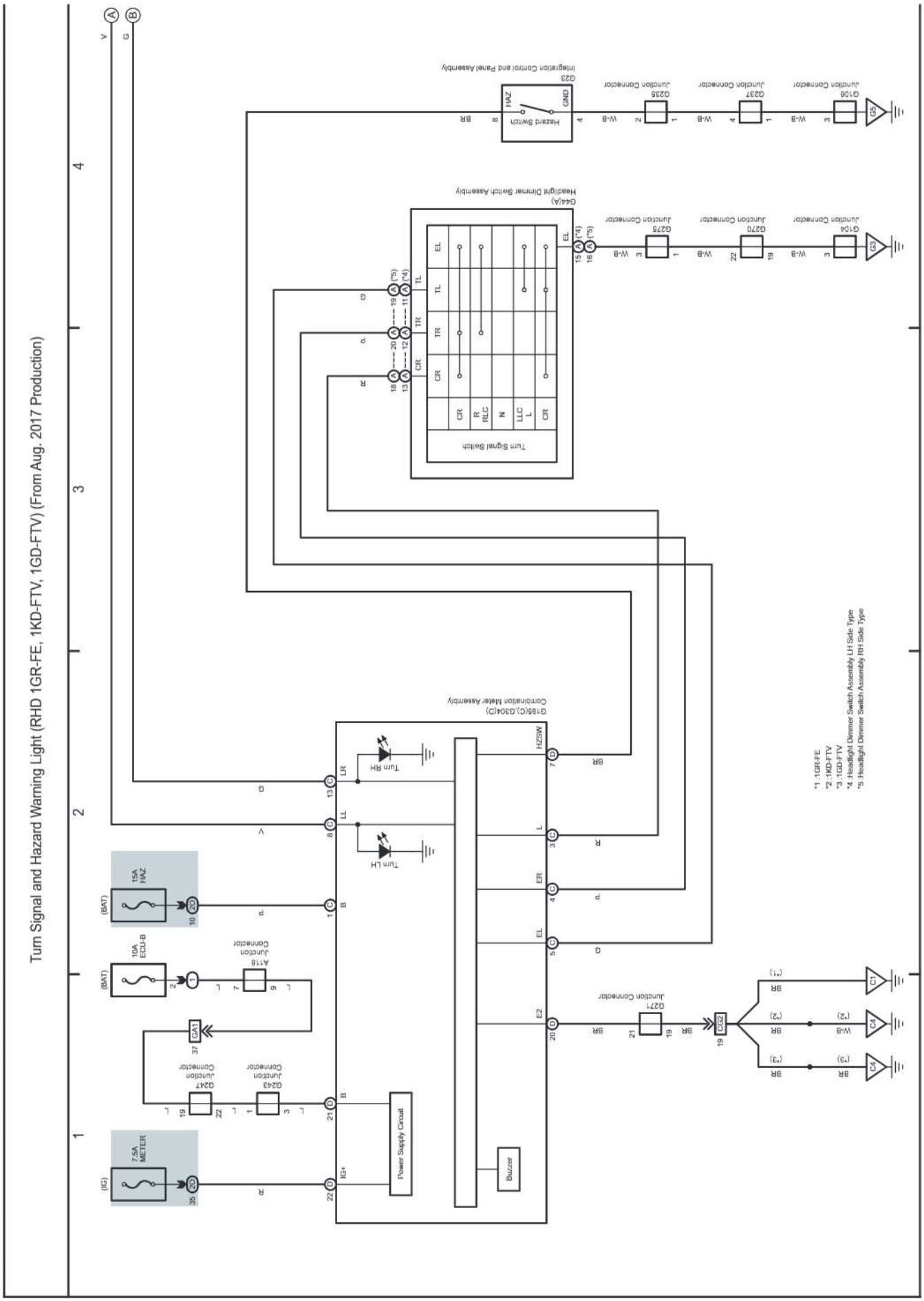

cardiagn.com

Turn Signal and Hazard Warning Light (RHD 1GR-FE, 1KD-FTV, 1GD-FTV) (From Aug. 2017 Production)

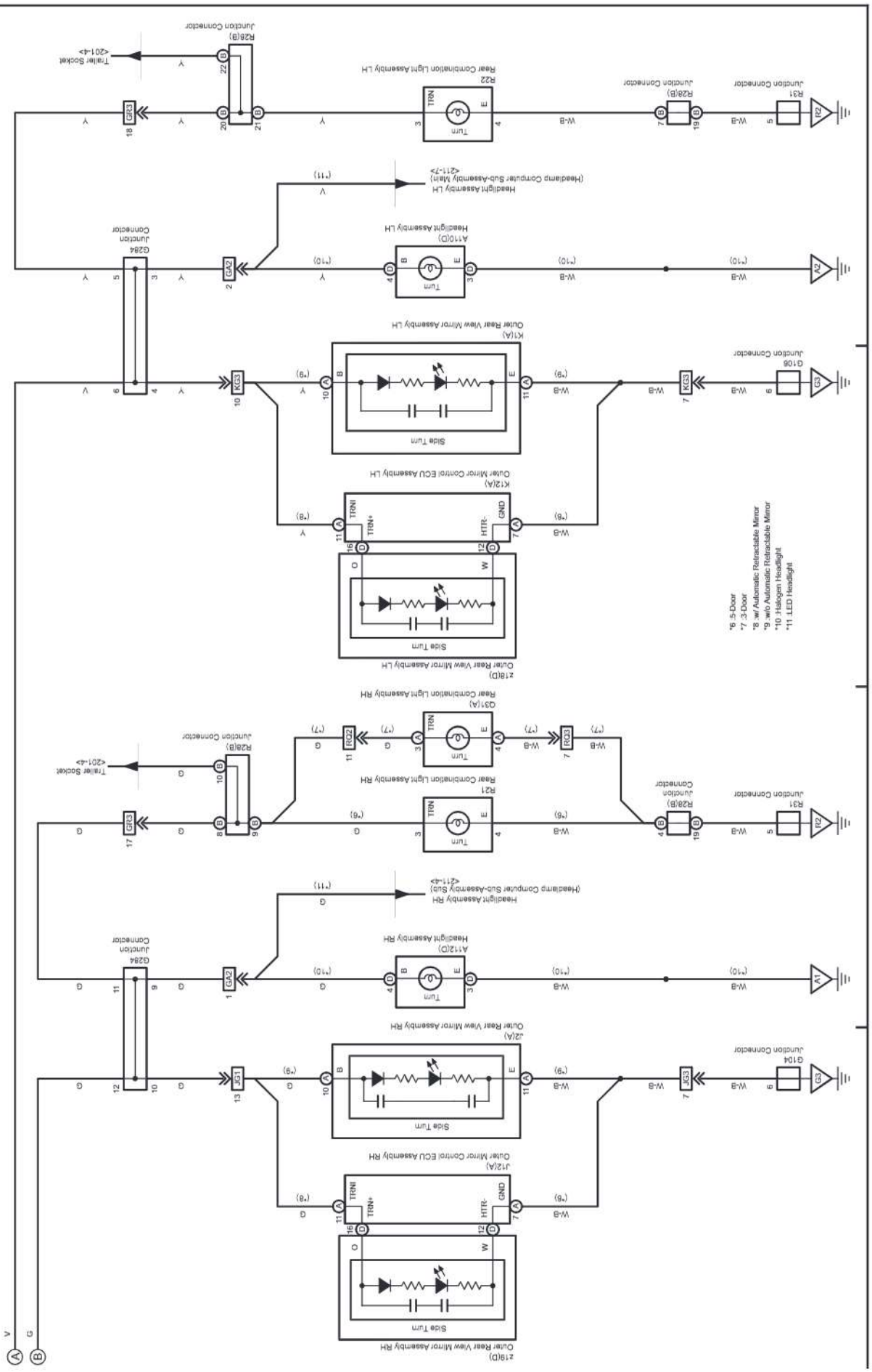

cardiagn.com

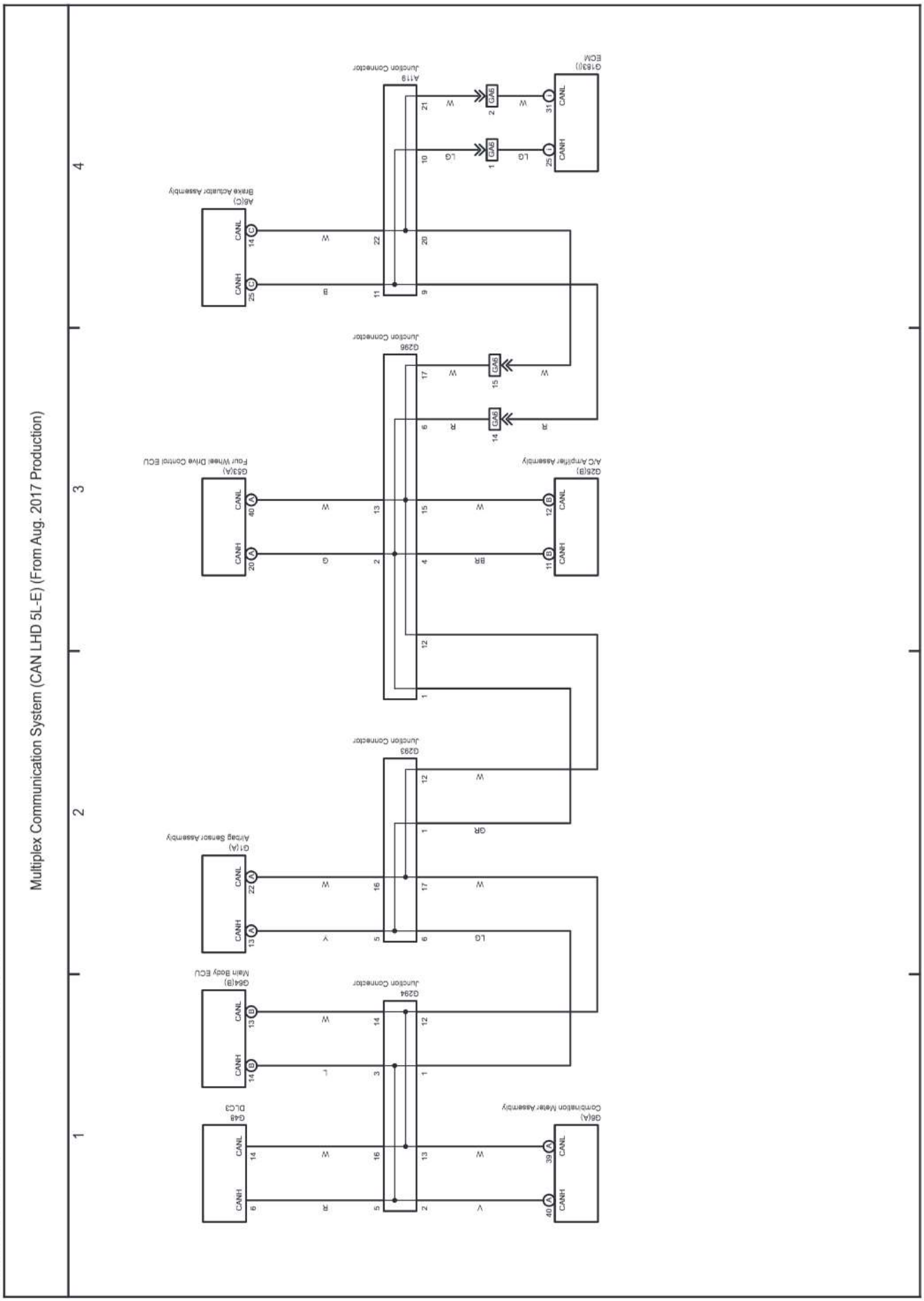

cardiagn.com

M OVERALL ELECTRICAL WIRING DIAGRAM

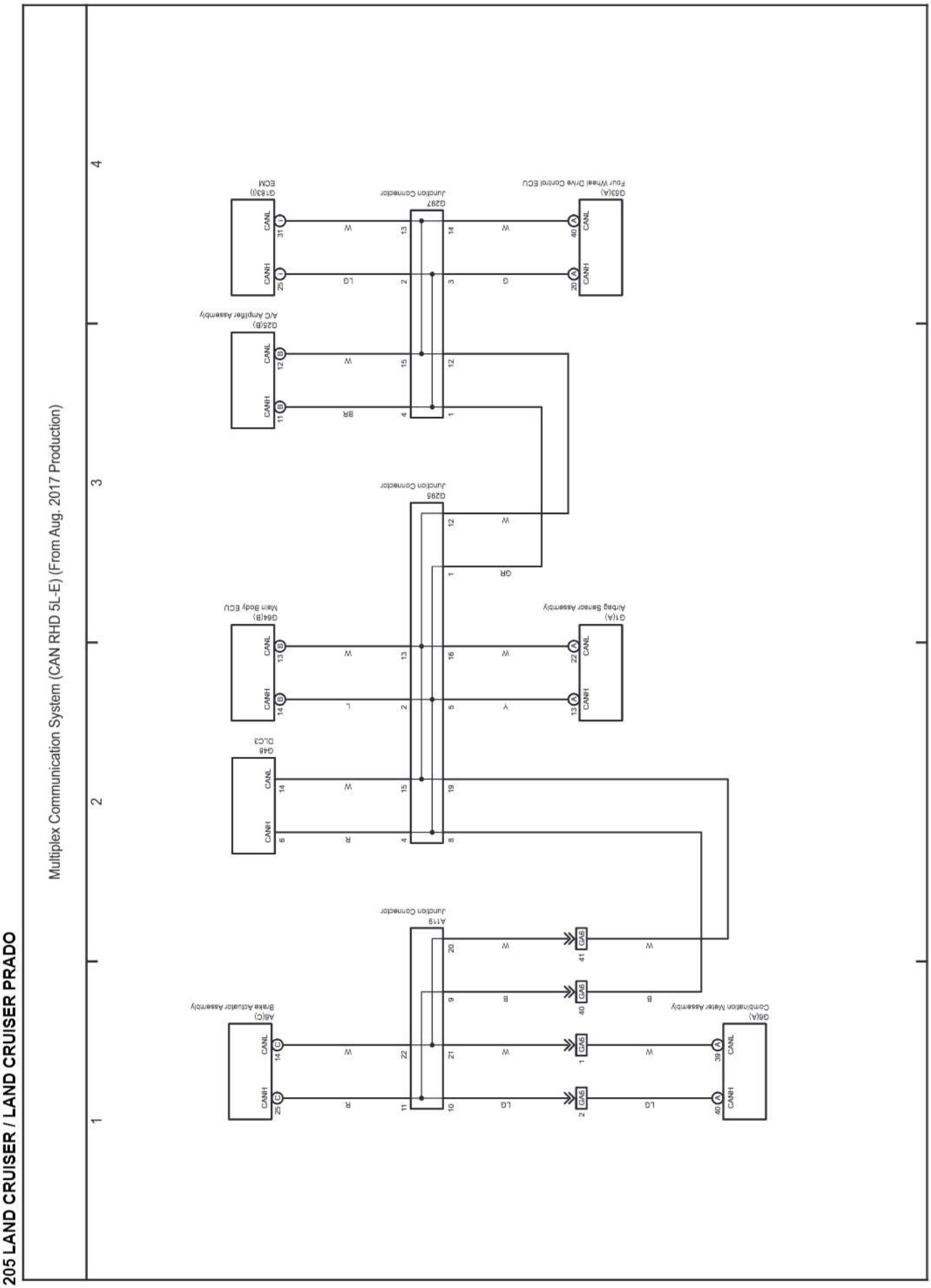

cardiagn.com

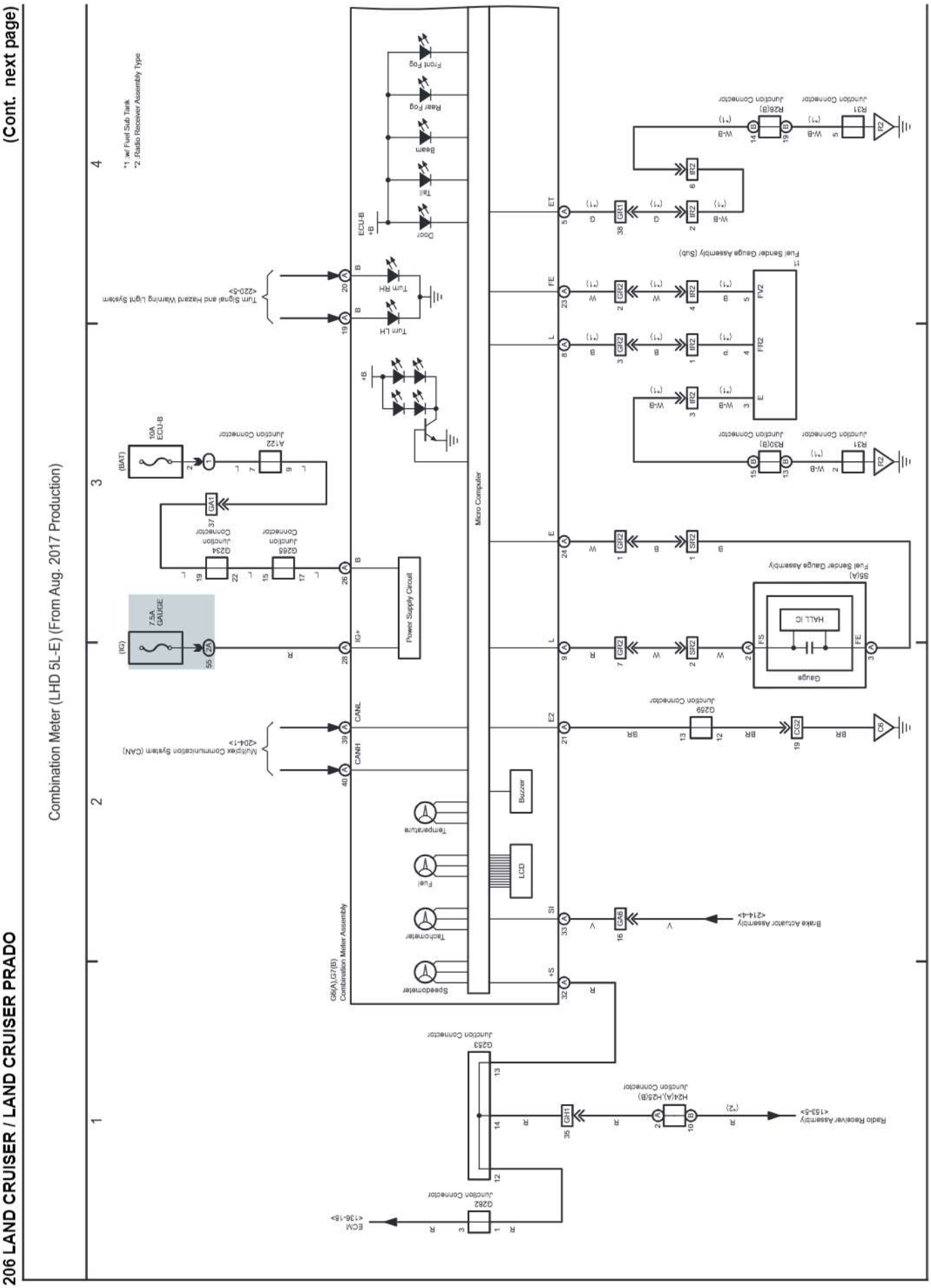

cardiagn.com

206 LAND CRUISER / LAND CRUISER PRADO (Cont'd)

Combination Meter (LHD 5L-E) (From Aug. 2017 Production)

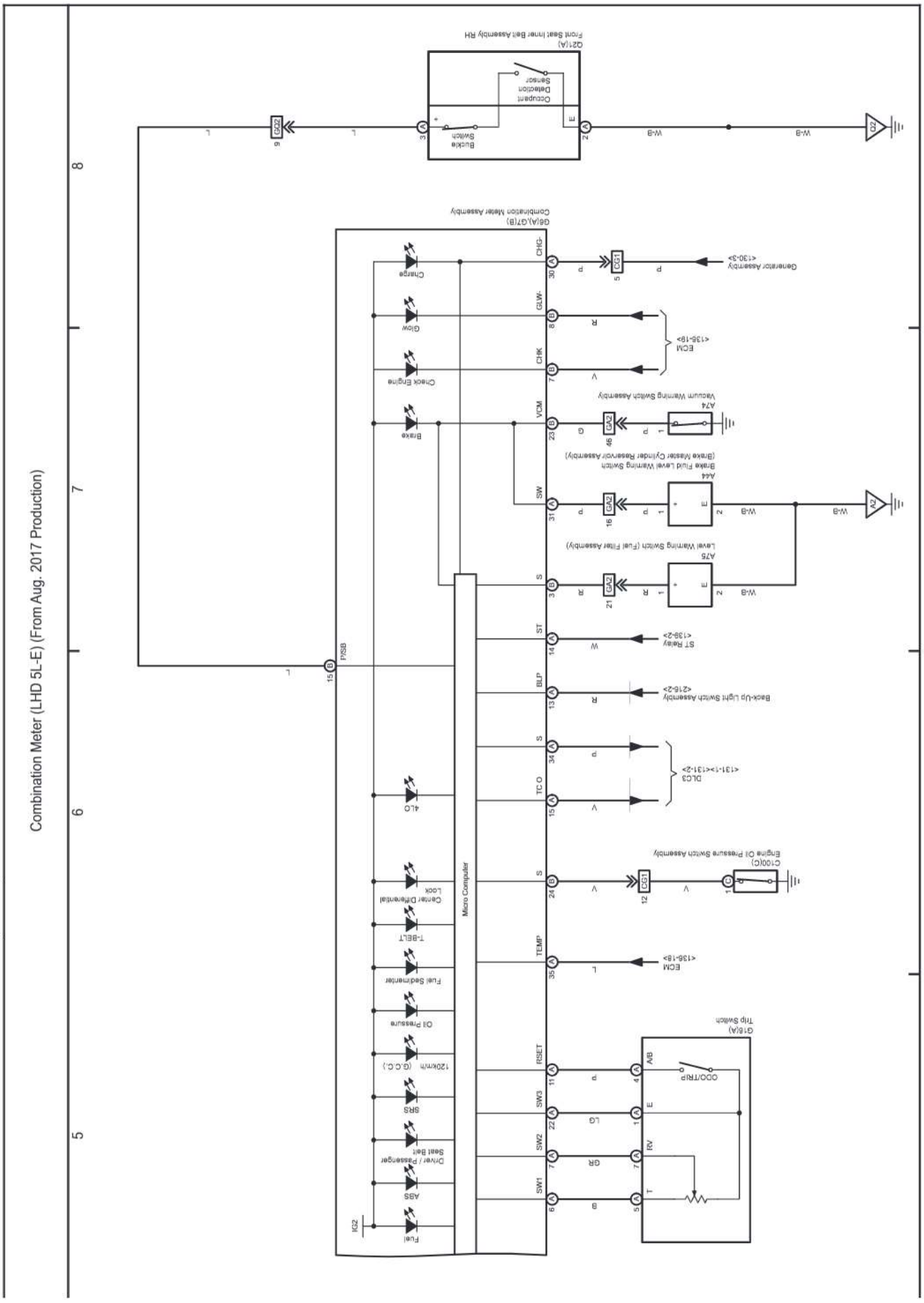

cardiagn.com

M OVERALL ELECTRICAL WIRING DIAGRAM

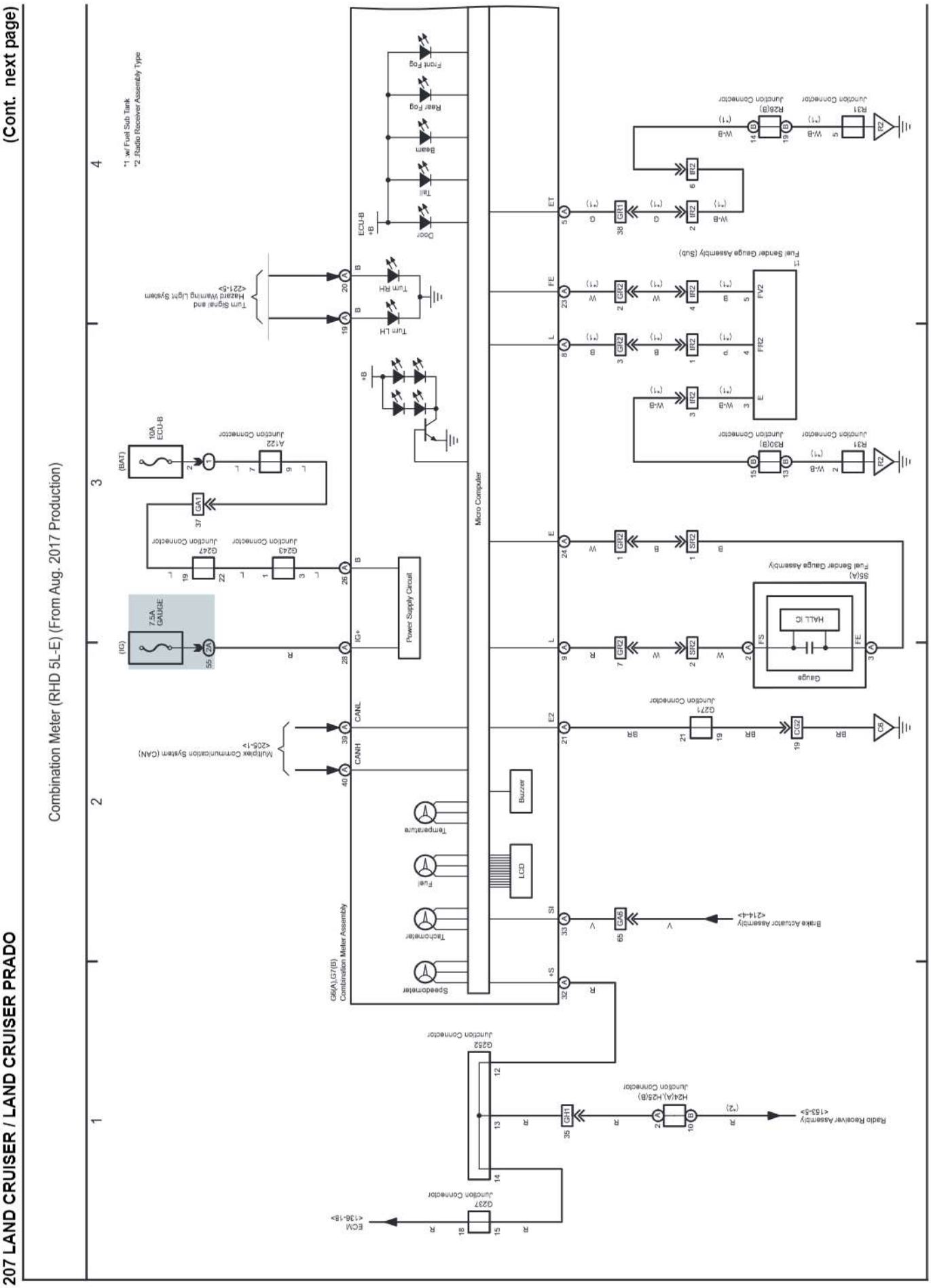

cardiagn.com

207 LAND CRUISER / LAND CRUISER PRADO (Cont'd)

Combination Meter (RHD 5L-E) (From Aug. 2017 Production)

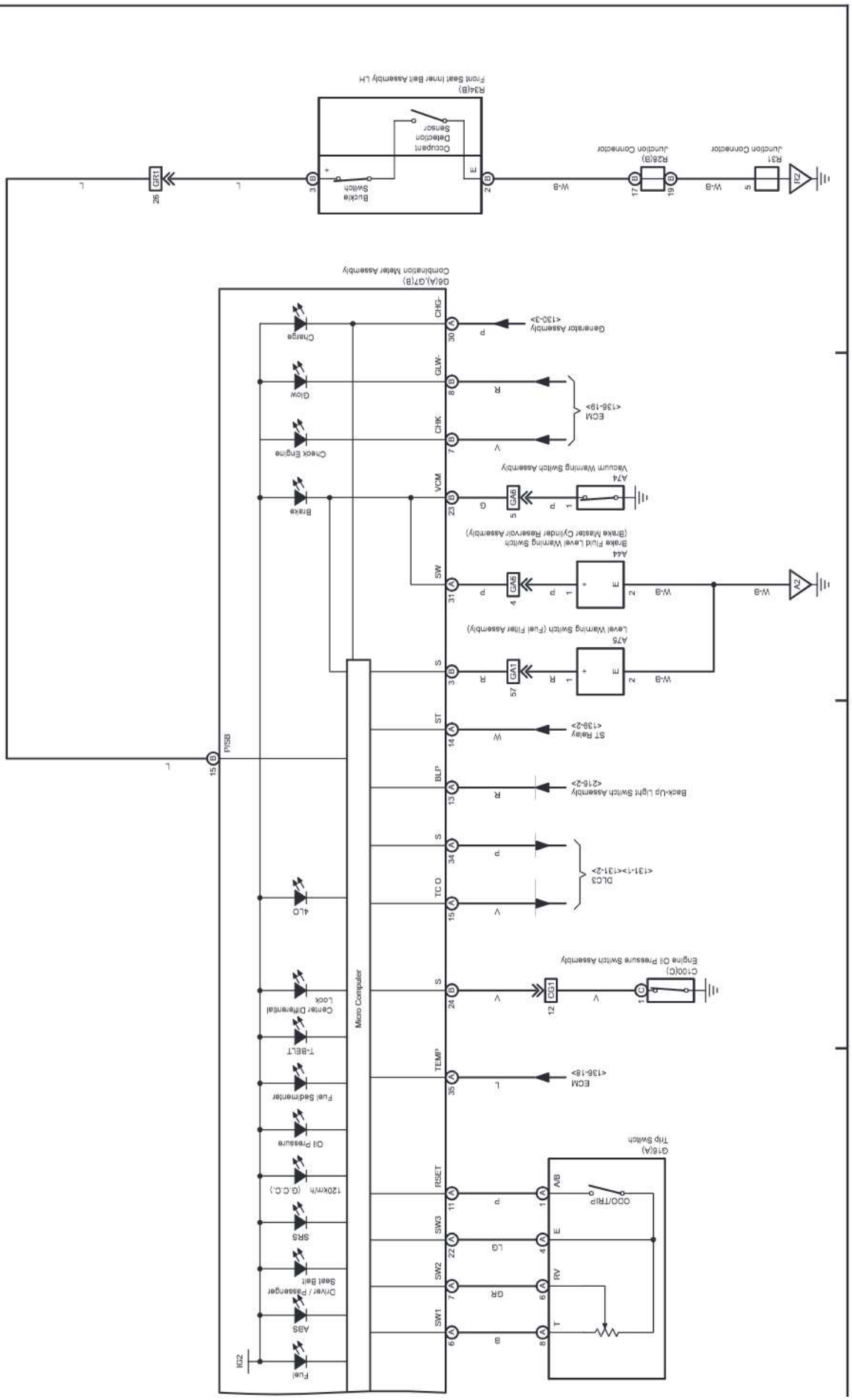

cardiagn.com

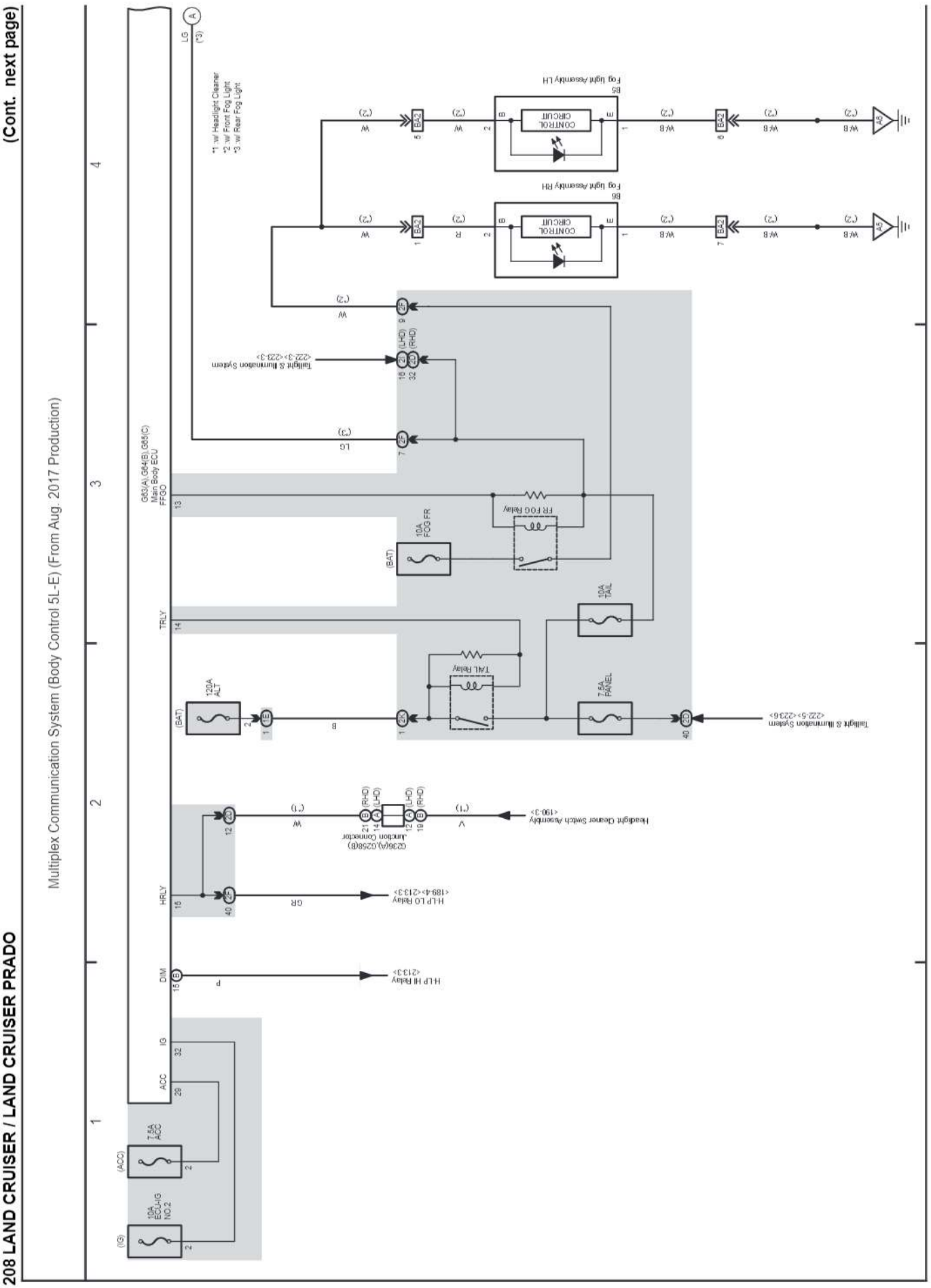

cardiagn.com

(Cont. next page)

Multiplex Communication System (Body Control 5L-E) (From Aug. 2017 Production)

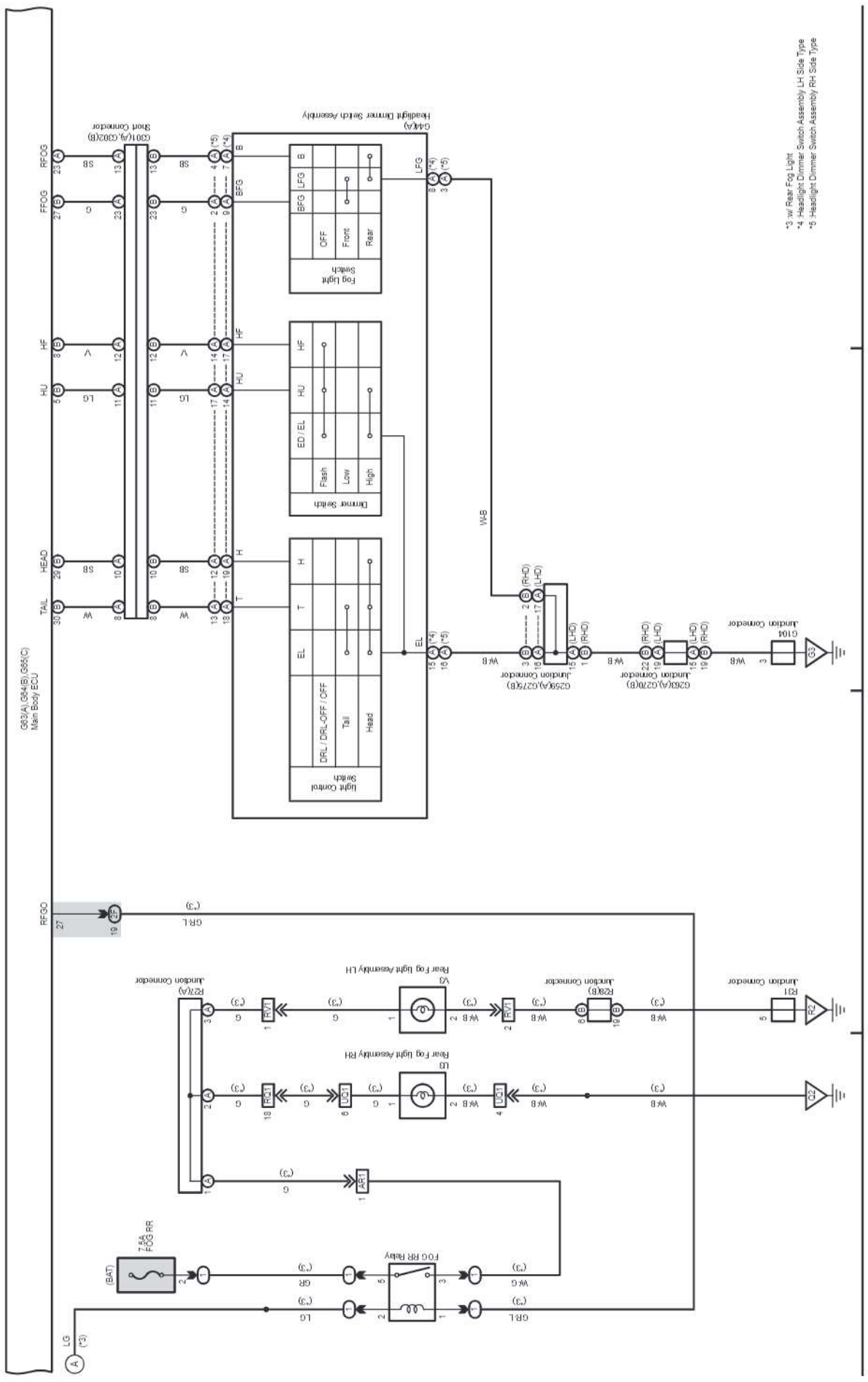

cardiagn.com

(Cont. next page)

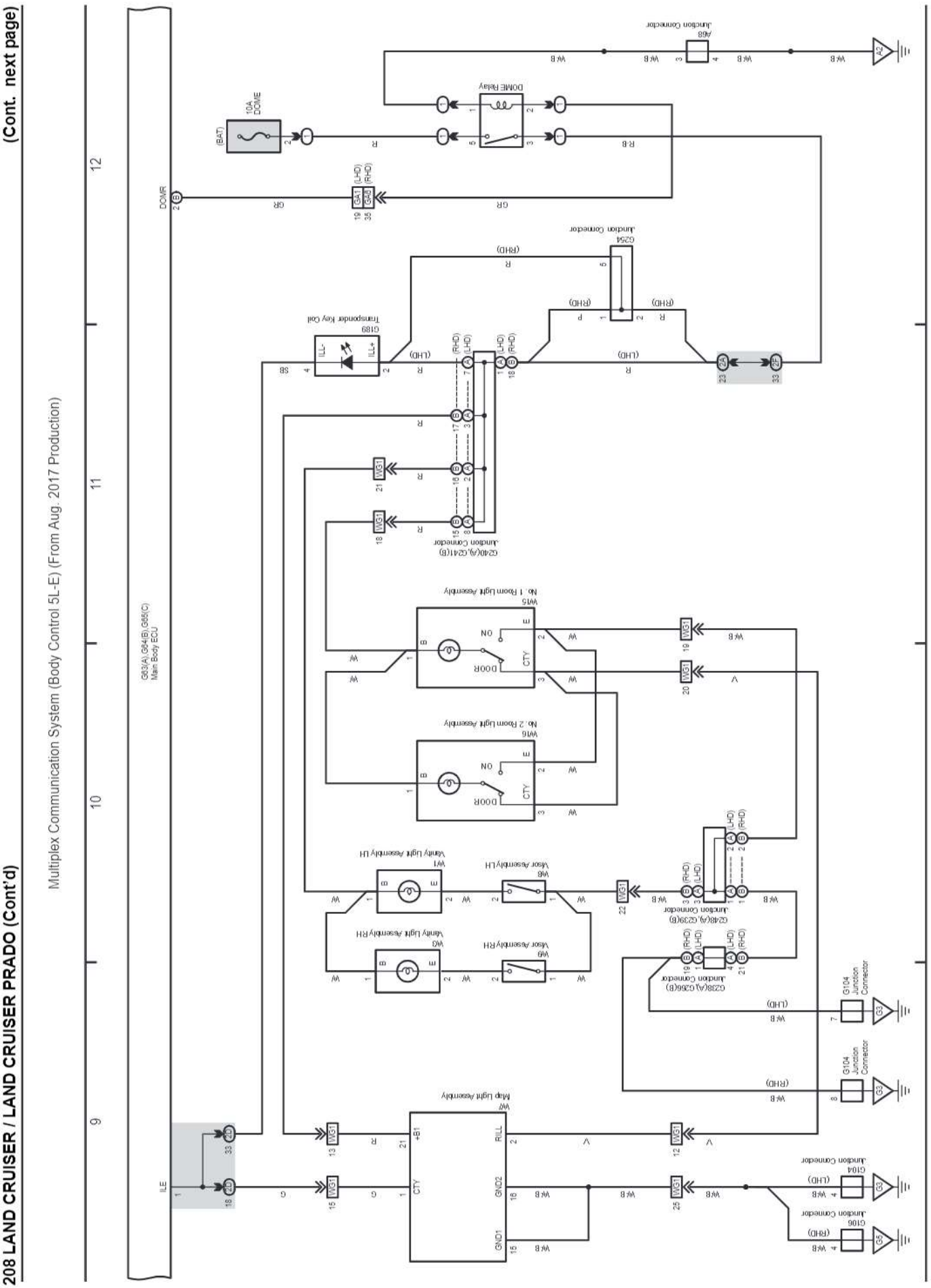

cardiagn.com

208 LAND CRUISER / LAND CRUISER PRADO (Cont'd)

(Cont. next page)

Multiplex Communication System (Body Control 5L-E) (From Aug. 2017 Production)

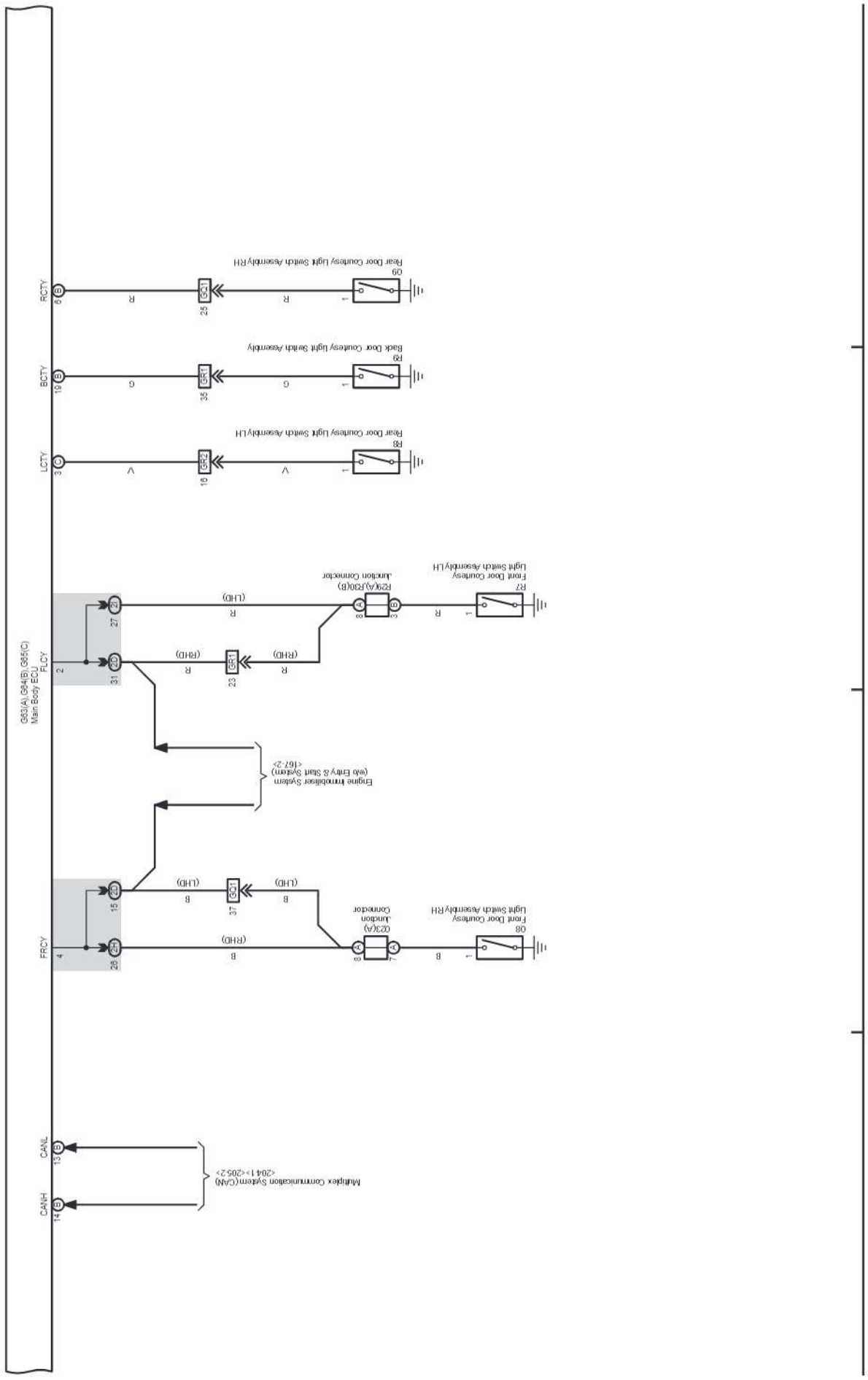

cardiagn.com

(Cont. next page)

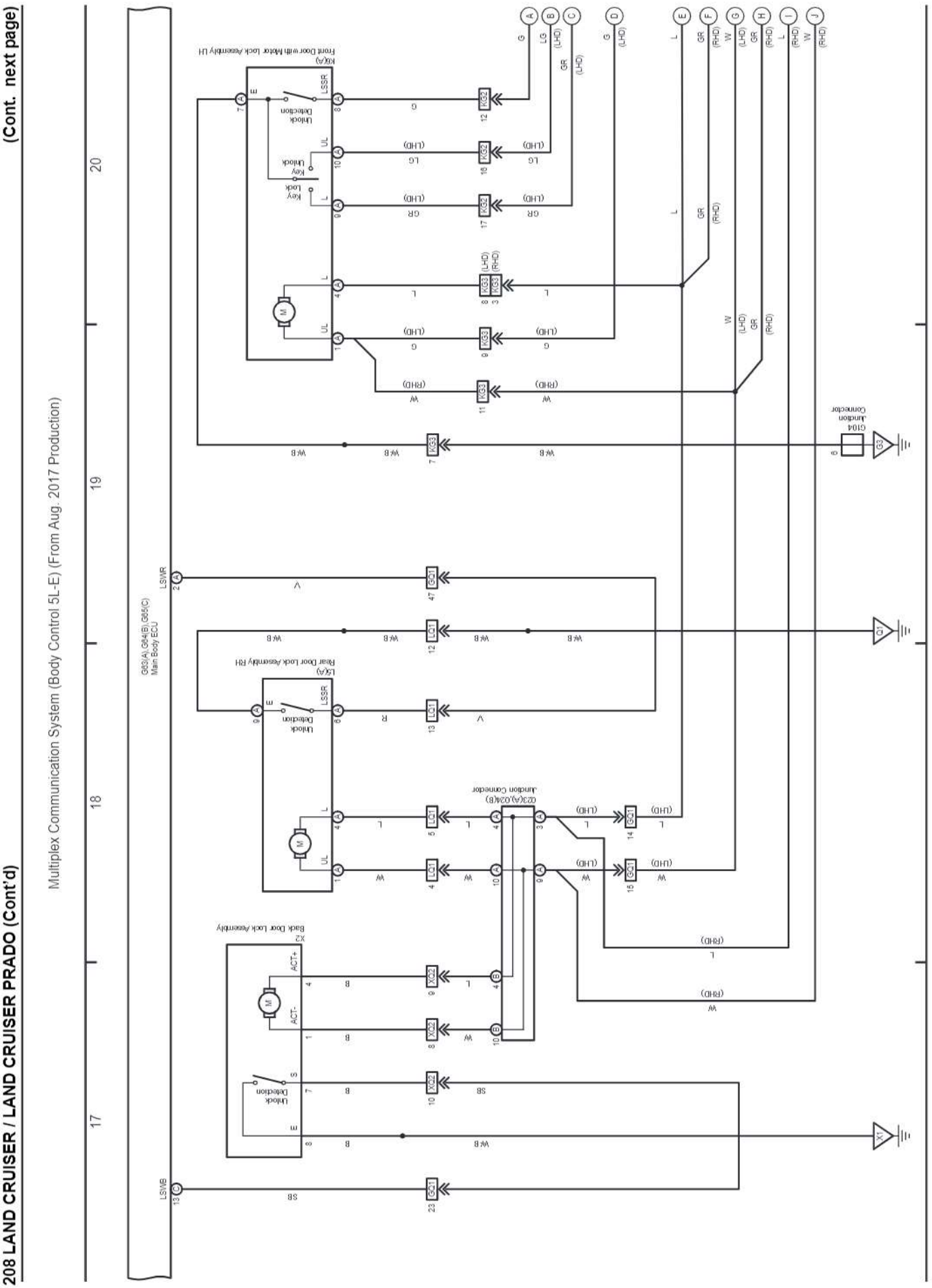

cardiagn.com

(Cont. next page)

Multiplex Communication System (Body Control 5L-E) (From Aug. 2017 Production)

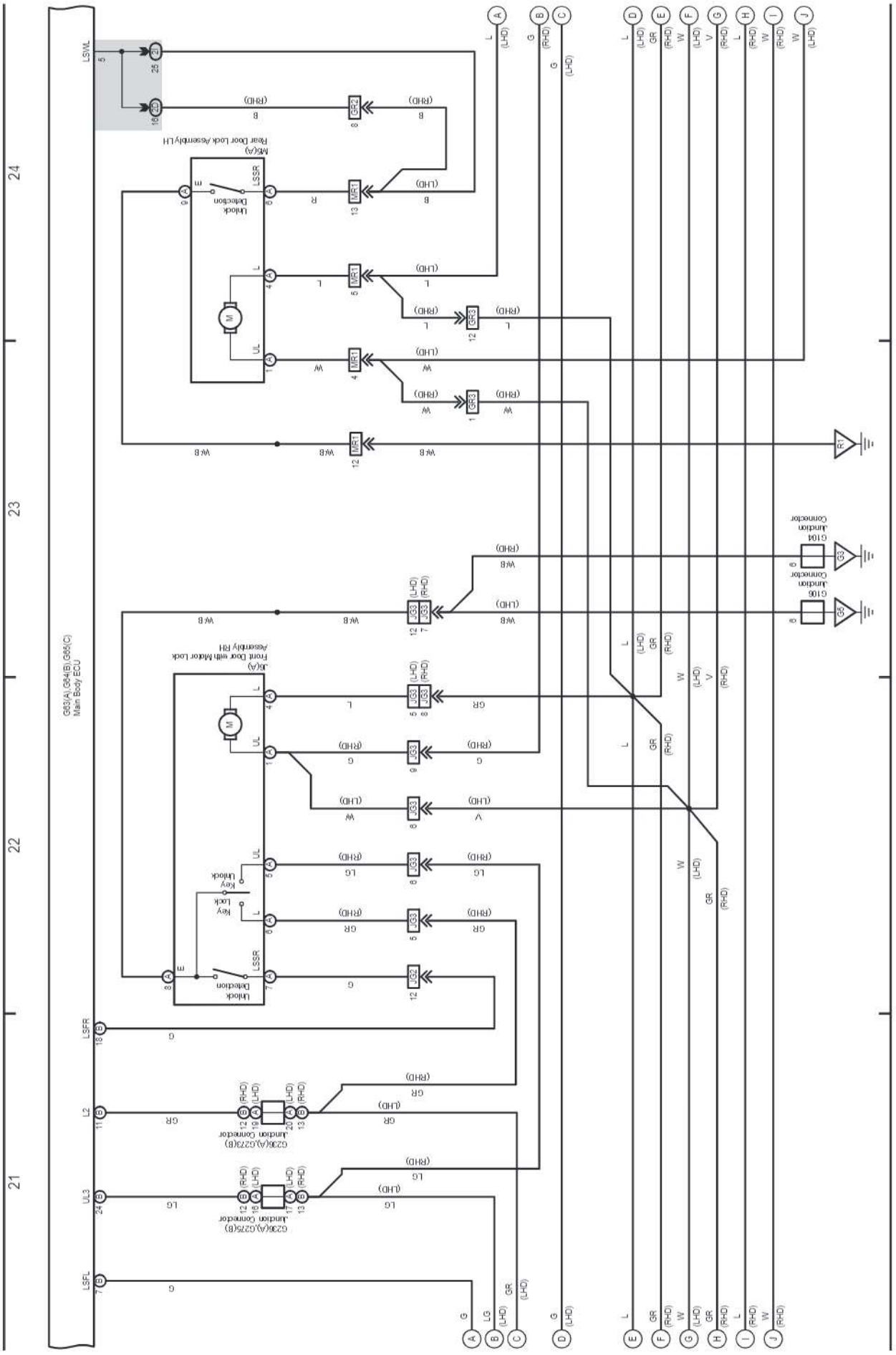

cardiagn.com

(Cont. next page)

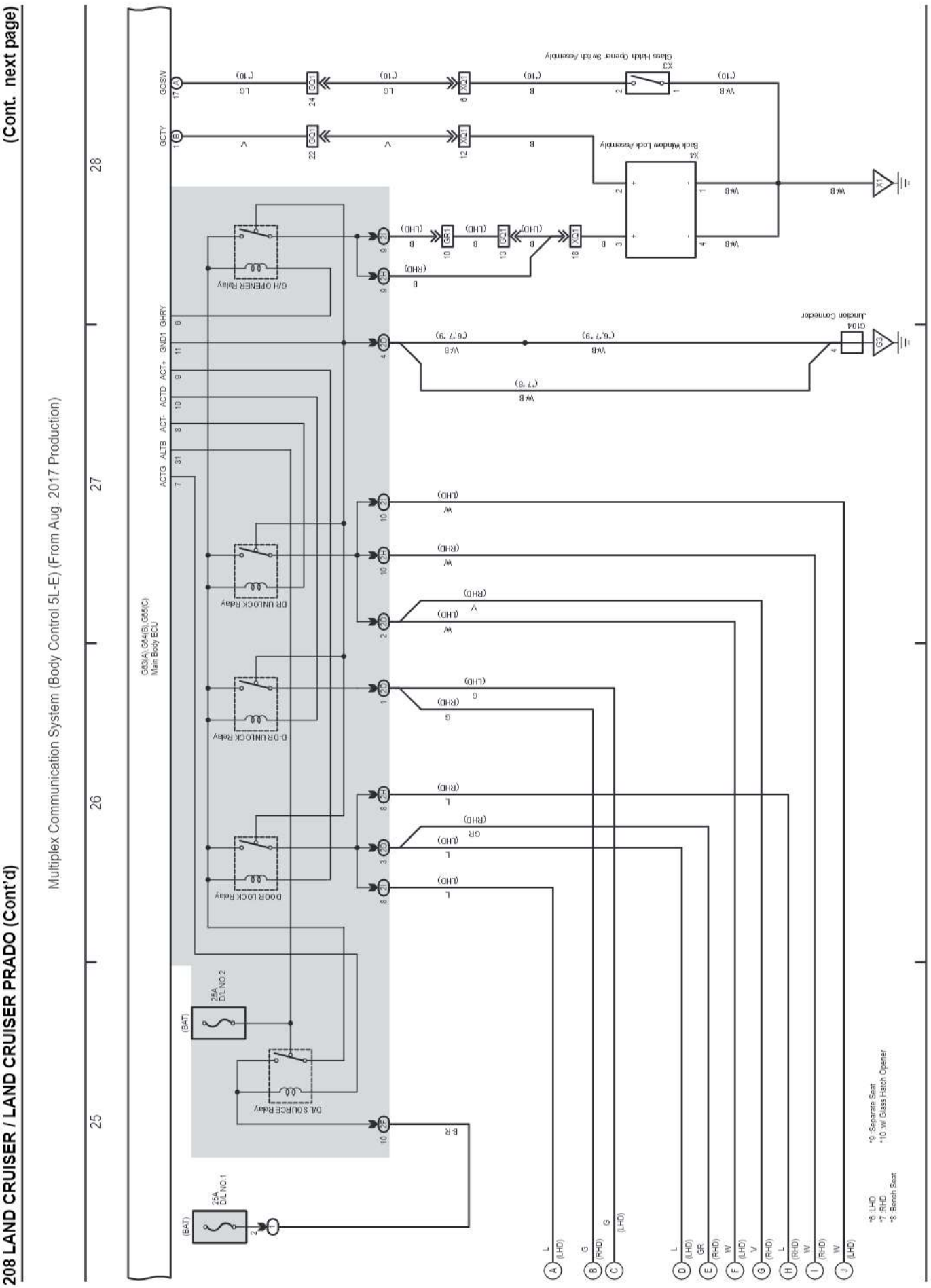

cardiagn.com

(Cont. next page)

Multiplex Communication System (Body Control 5L-E) (From Aug. 2017 Production)

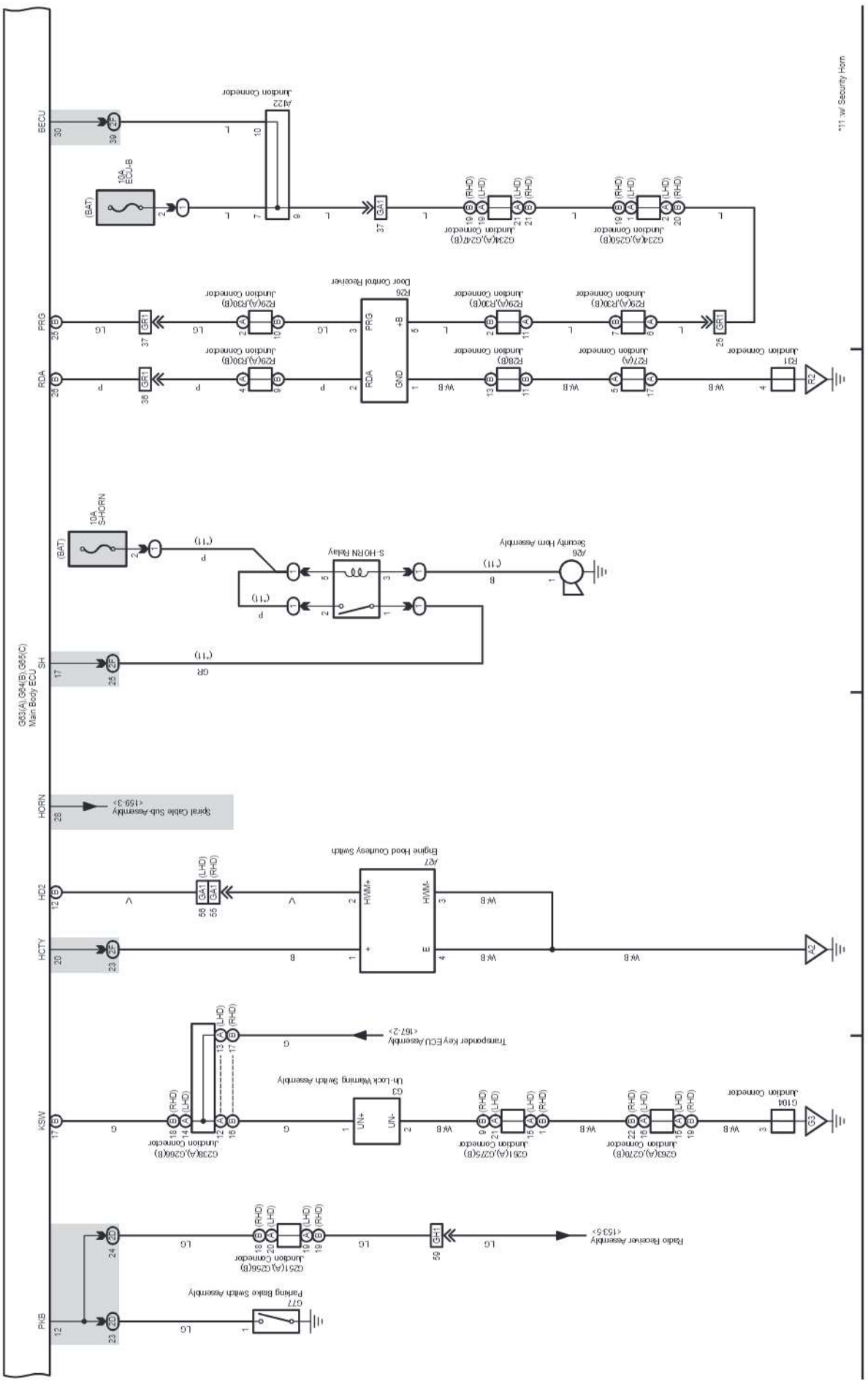

cardiagn.com

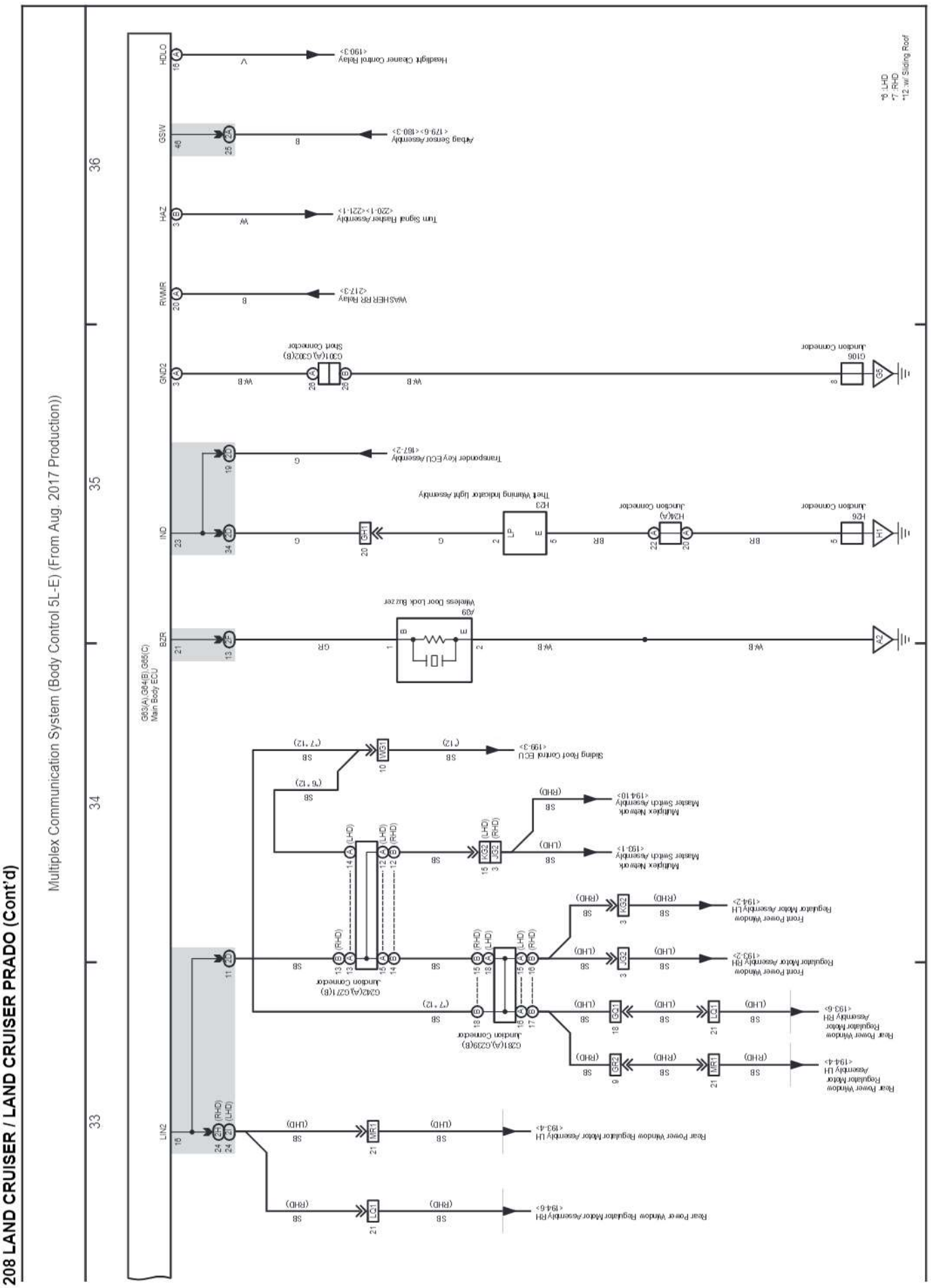

cardiagn.com

209 LAND CRUISER / LAND CRUISER PRADO

Mirror Heater (LHD w/ Automatic Retractable Mirror) (From Aug. 2017 Production),Remote Control Mirror (LHD w/ Automatic Retractable Mirror) (From Aug. 2017 Production)

(Cont. next page)

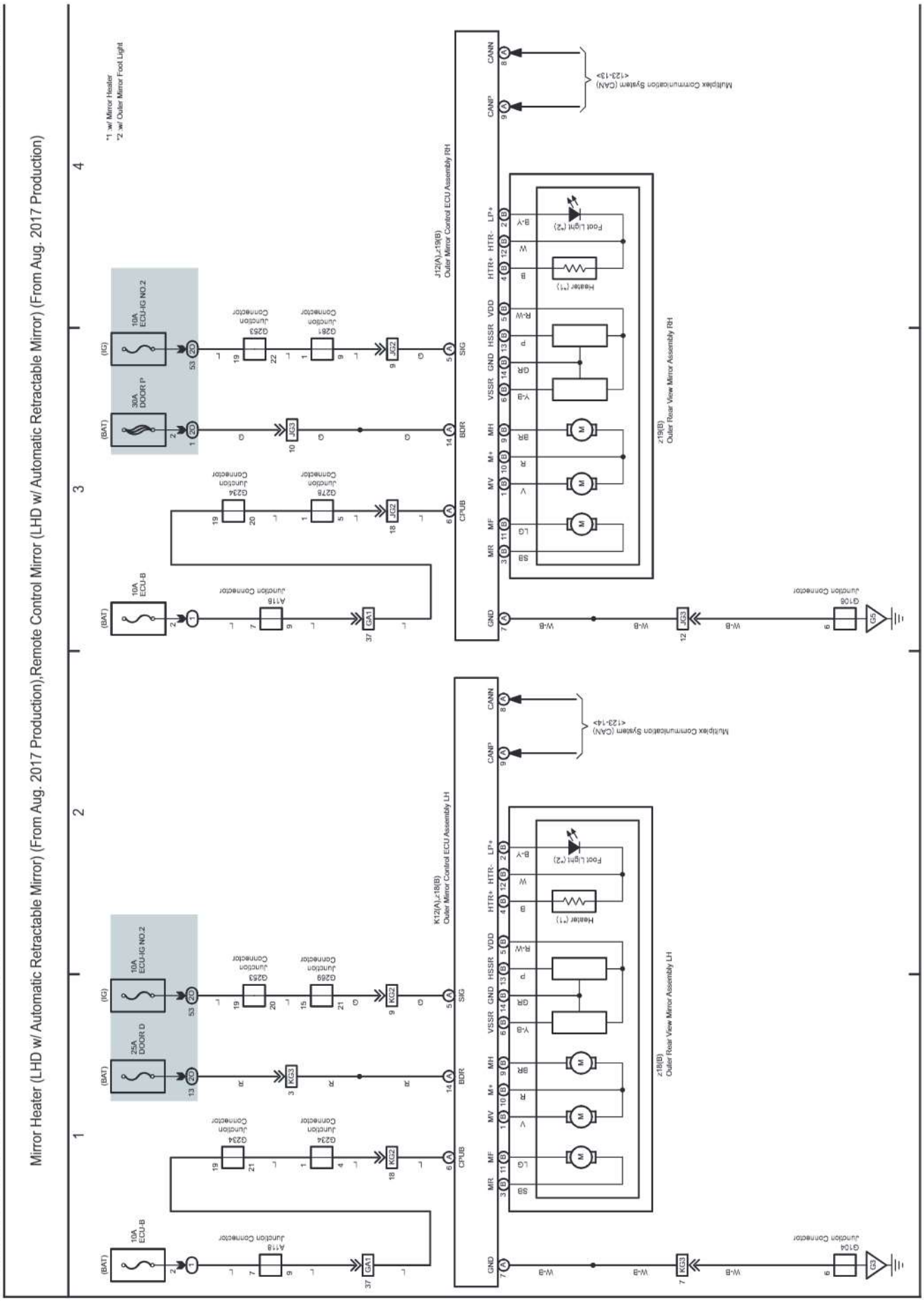

cardiagn.com

209 LAND CRUISER / LAND CRUISER PRADO (Cont'd)

Mirror Heater (LHD w/ Automatic Retractable Mirror) (From Aug. 2017 Production),Remote Control Mirror (LHD w/ Automatic Retractable Mirror) (From Aug. 2017 Production)

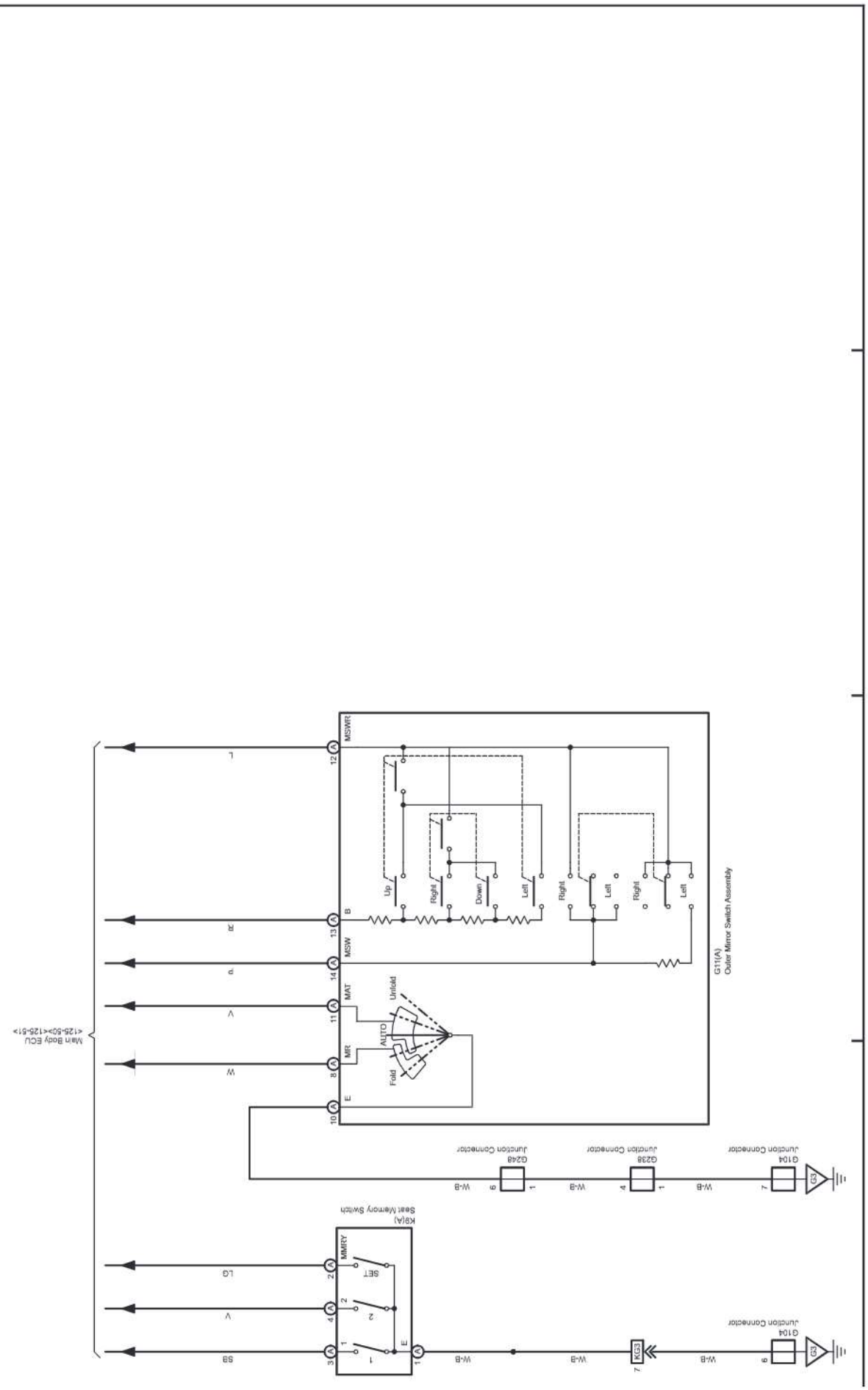

cardiagn.com

210 LAND CRUISER / LAND CRUISER PRADO

Mirror Heater (RHD w/ Automatic Retractable Mirror) (From Aug. 2017 Production),Remote Control Mirror (RHD w/ Automatic Retractable Mirror) (From Aug. 2017 Production)

(Cont. next page)

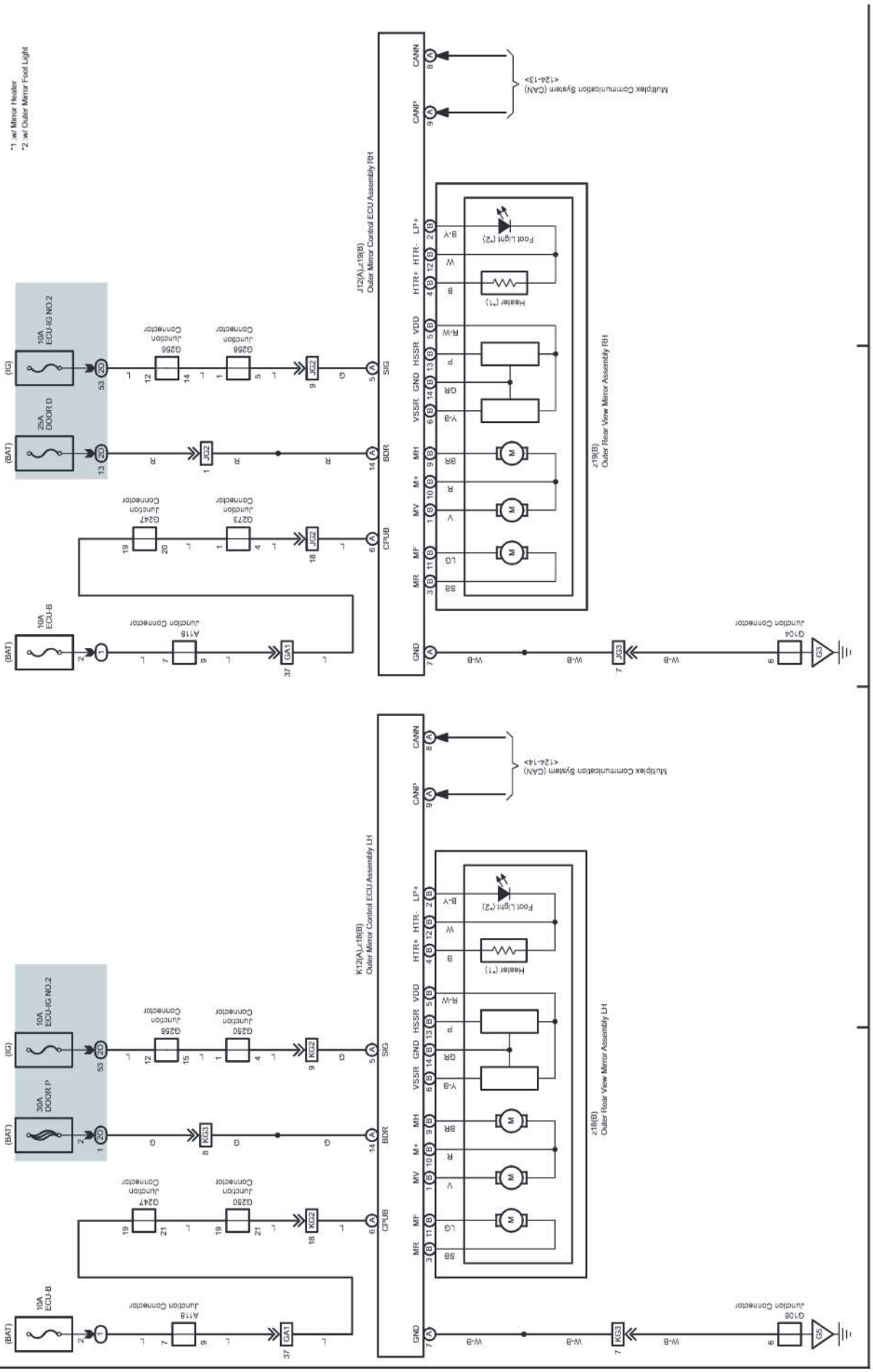

Mirror Heater (RHD w/ Automatic Retractable Mirror) (From Aug. 2017 Production),Remote Control Mirror (RHD w/ Automatic Retractable Mirror) (From Aug. 2017 Production)

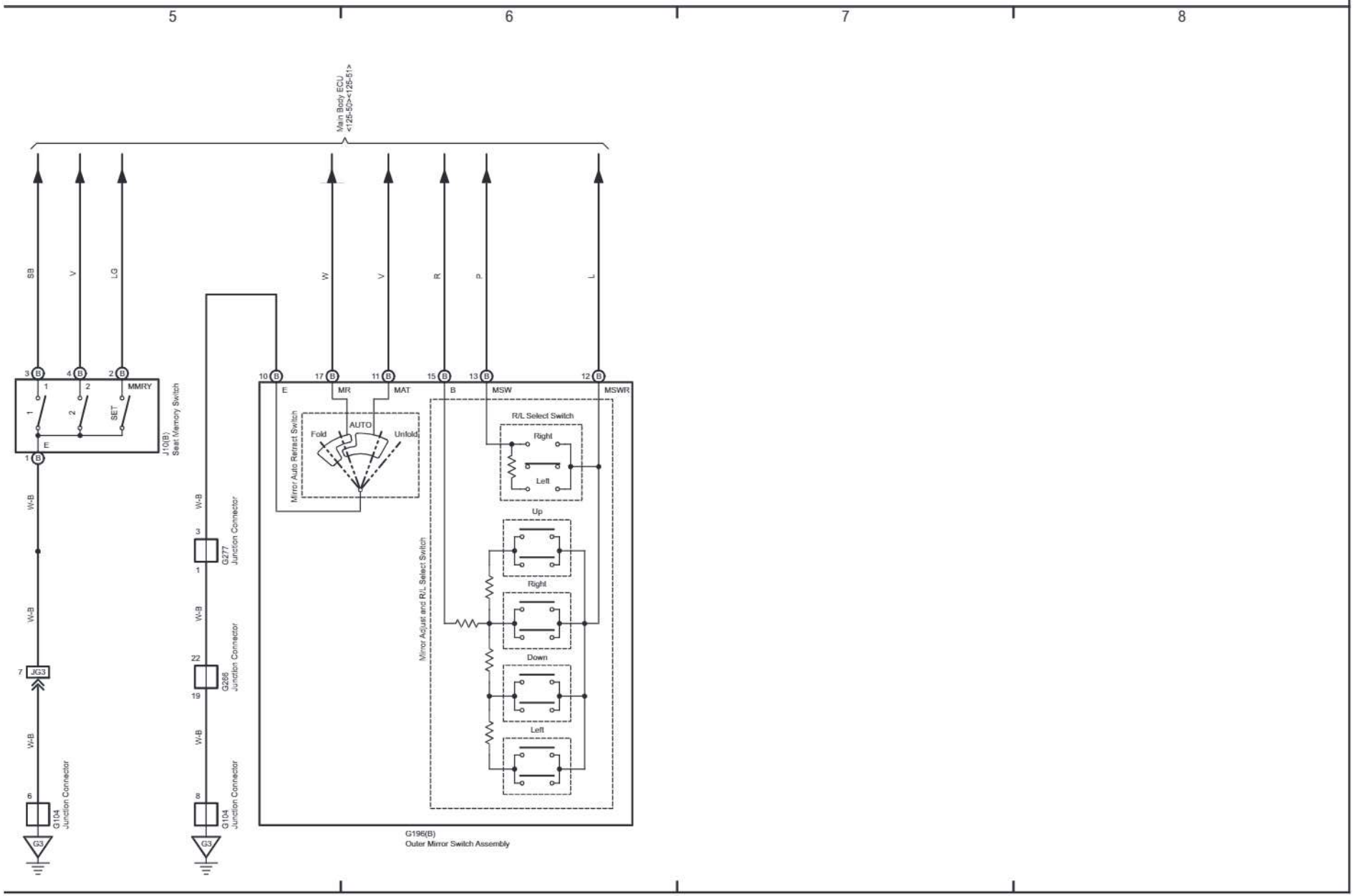

cardiagn.com

cardiagn.com

M OVERALL ELECTRICAL WIRING DIAGRAM

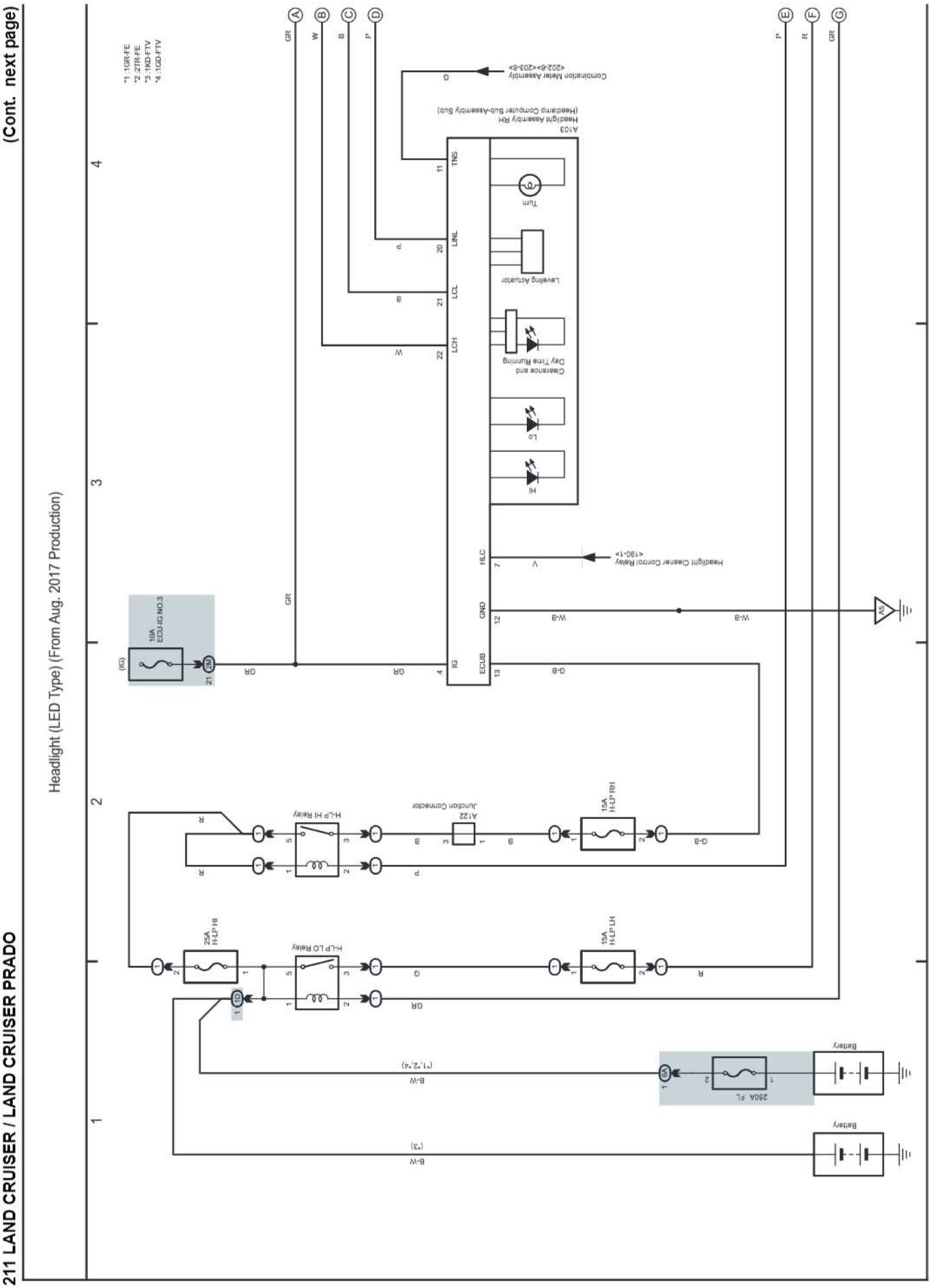

cardiagn.com

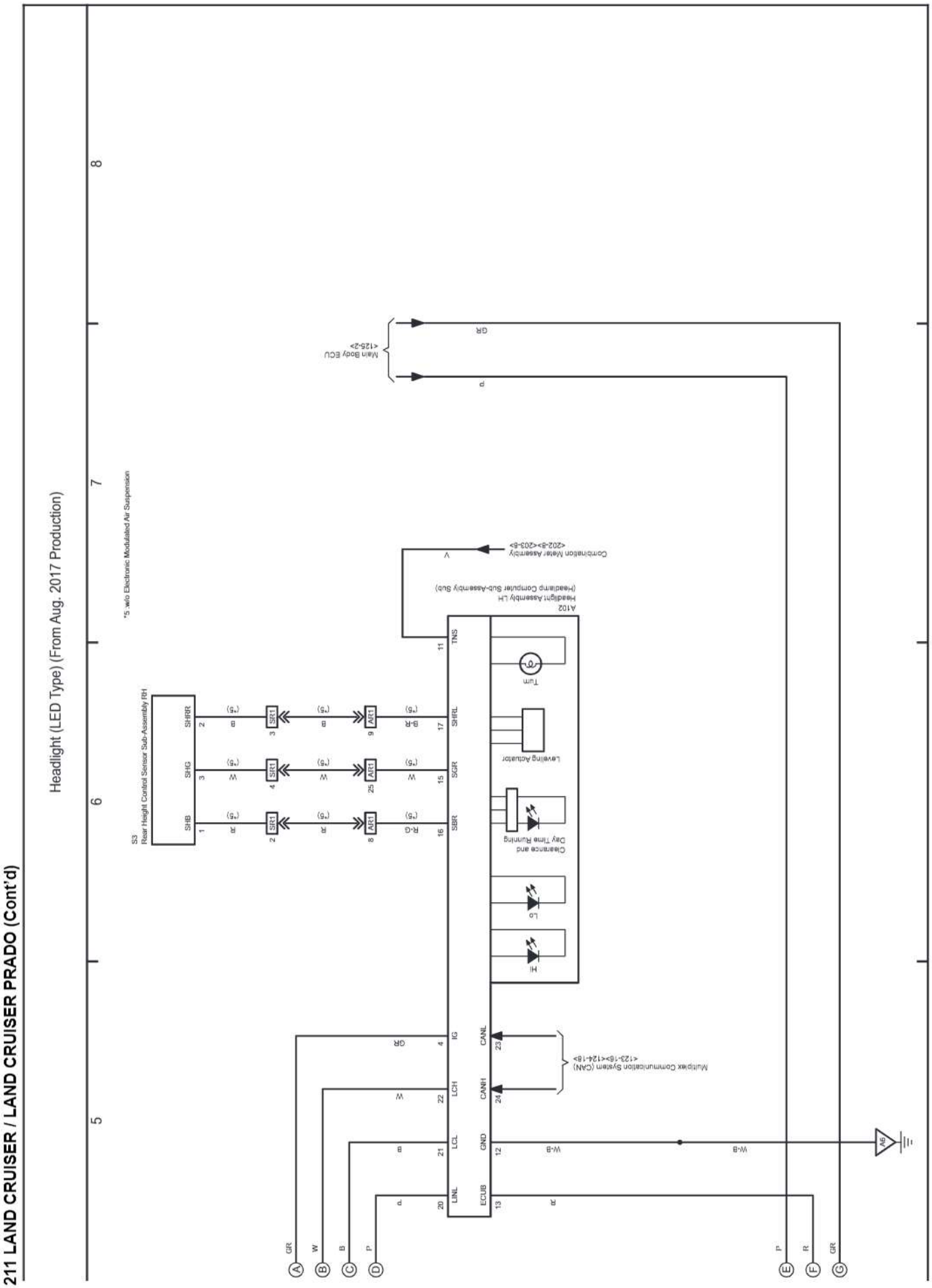

cardiagn.com

M OVERALL ELECTRICAL WIRING DIAGRAM

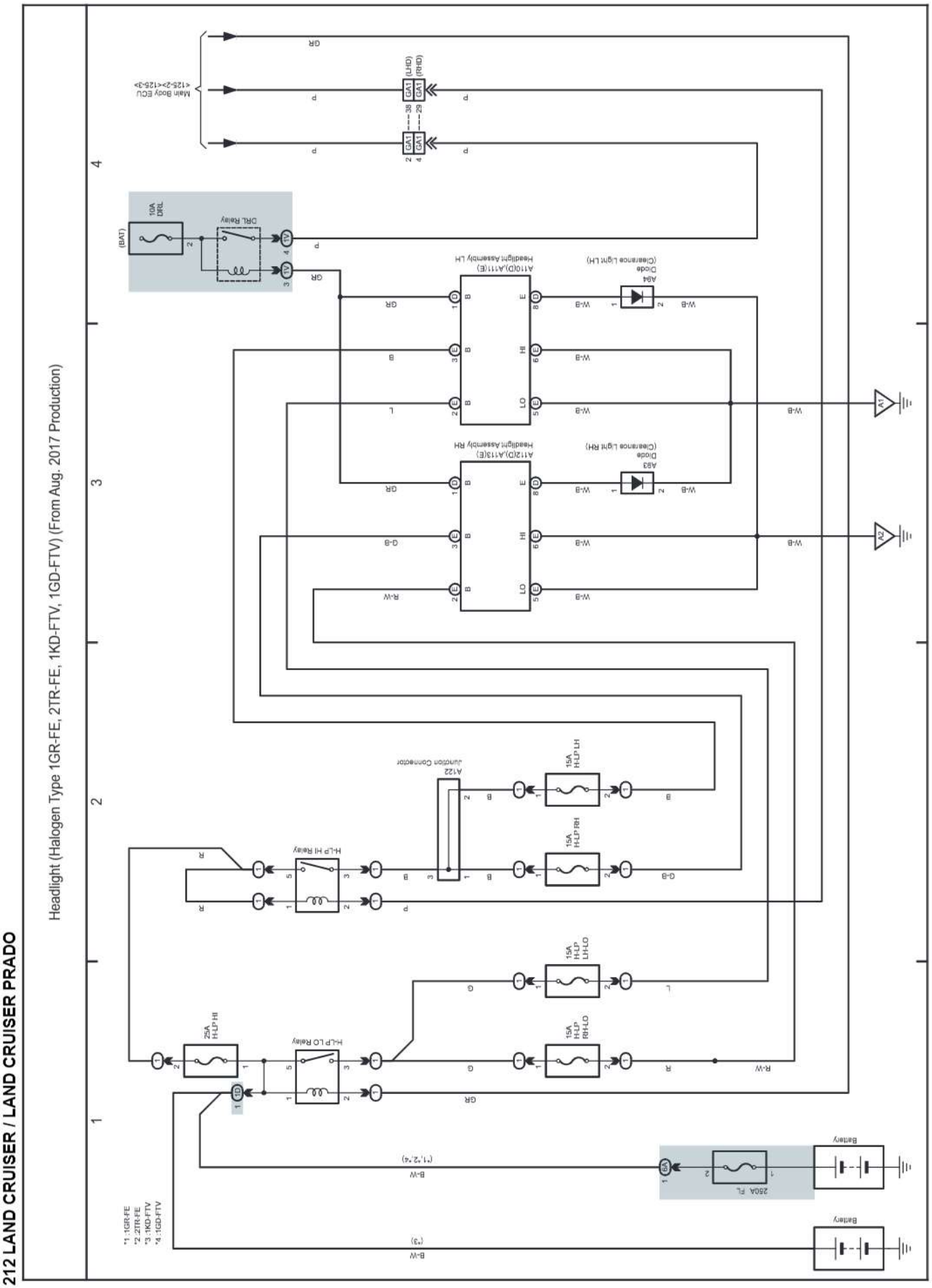

cardiagn.com

M OVERALL ELECTRICAL WIRING DIAGRAM

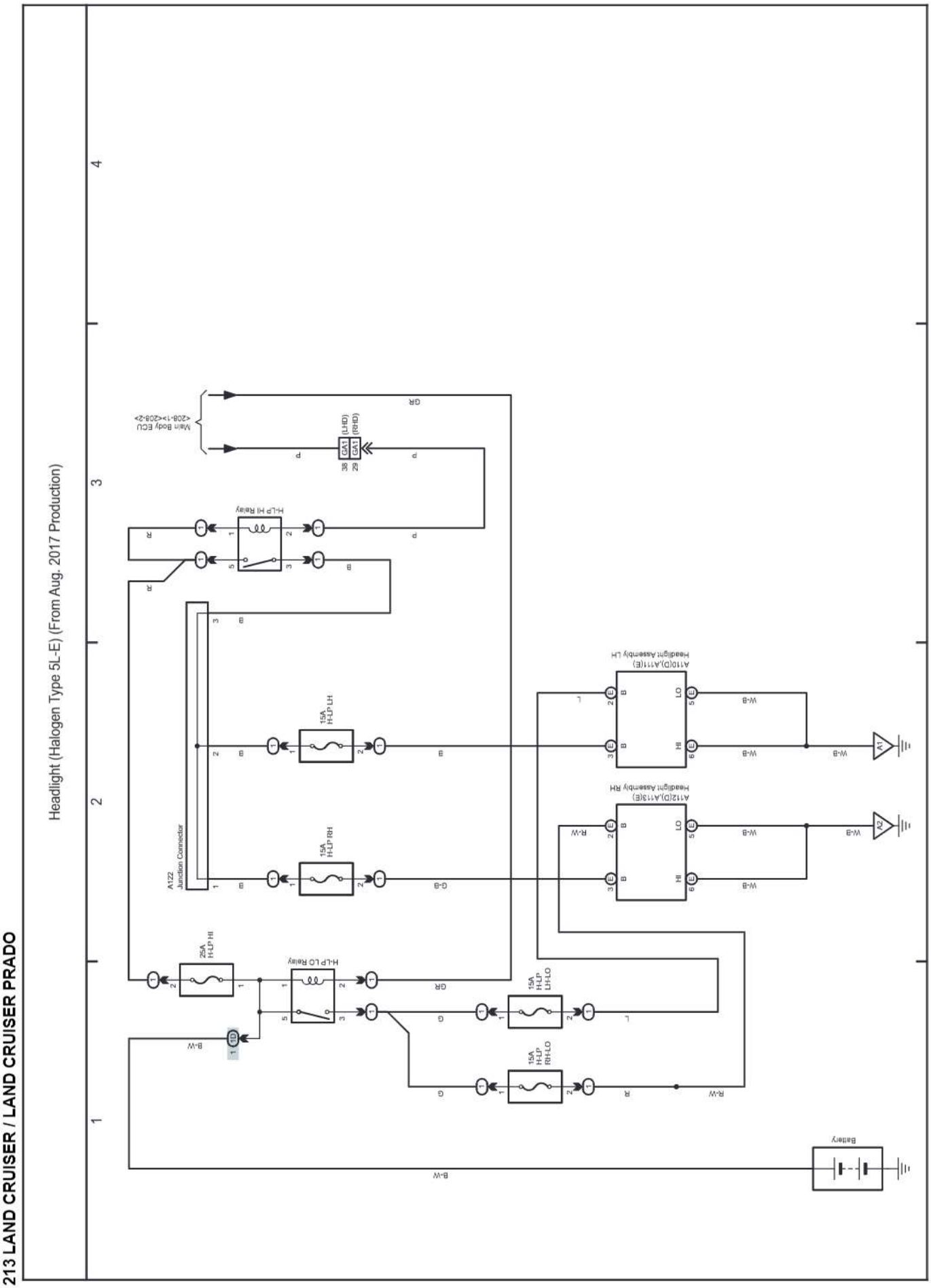

cardiagn.com

M OVERALL ELECTRICAL WIRING DIAGRAM

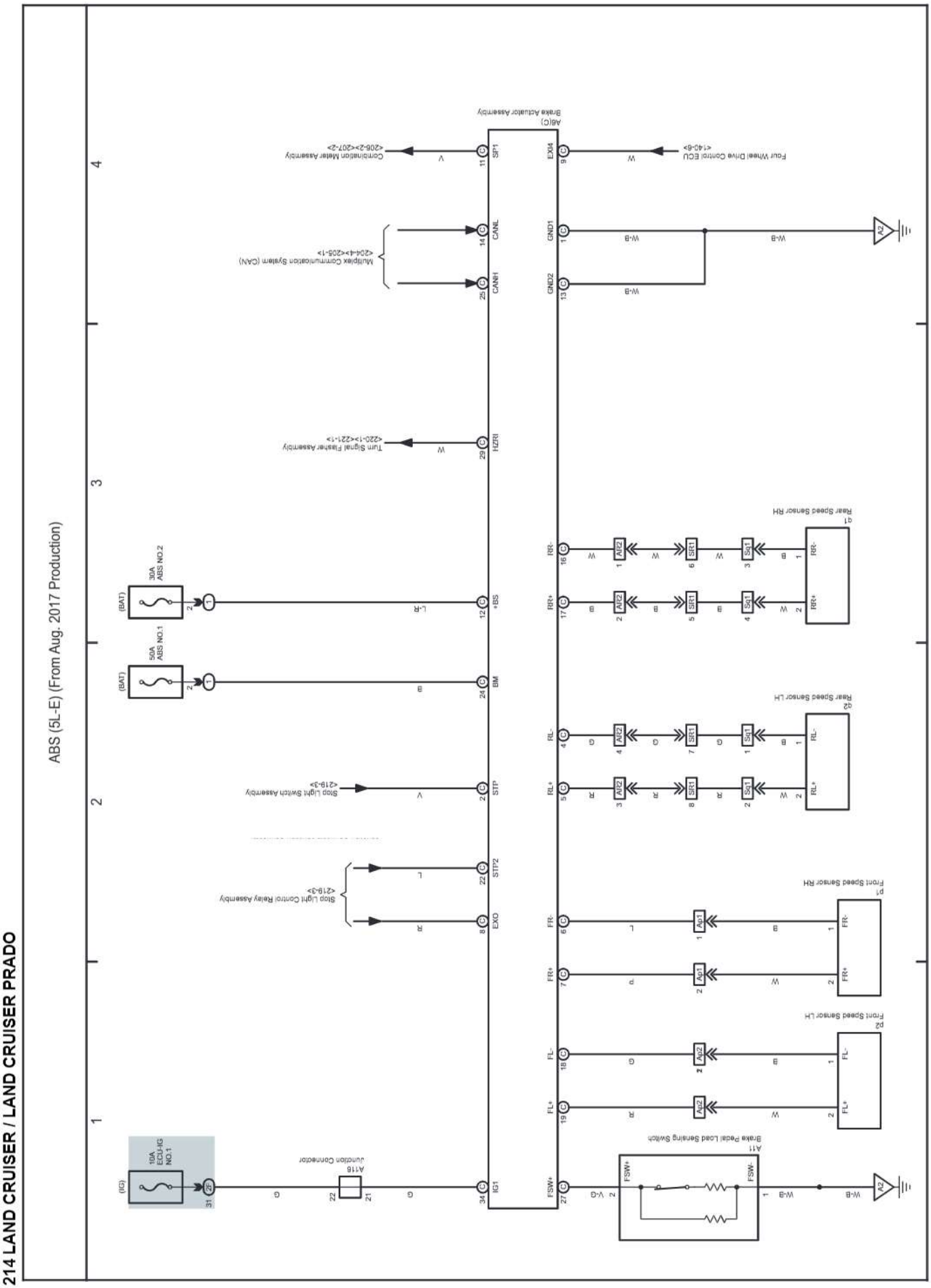

cardiagn.com

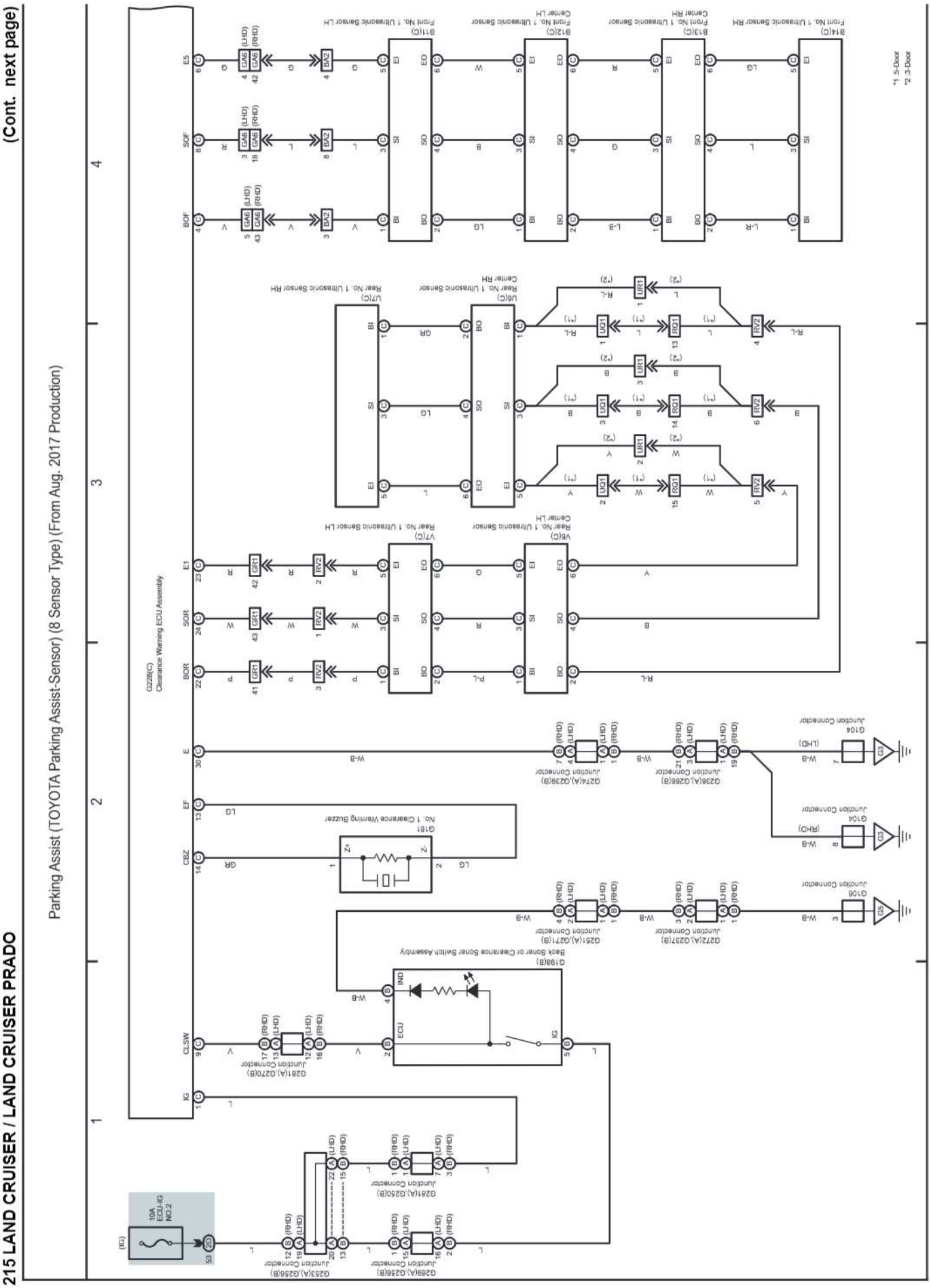

Parking Assist (TOYOTA Parking Assist-Sensor) (8 Sensor Type) (From Aug. 2017 Production)

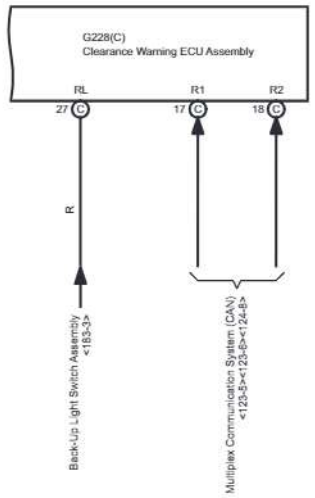

cardiagn.com

cardiagn.com

M OVERALL ELECTRICAL WIRING DIAGRAM

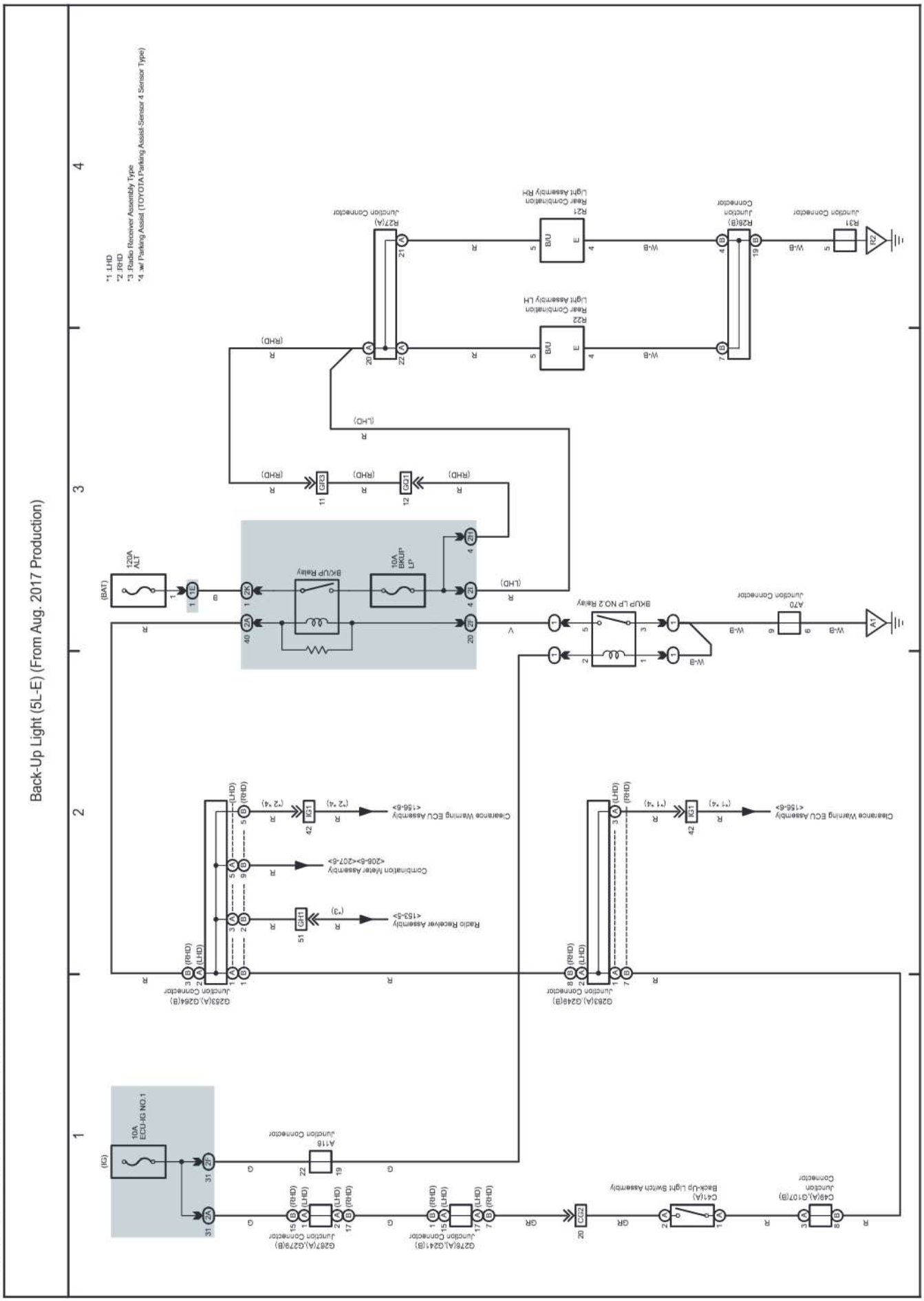

cardiagn.com

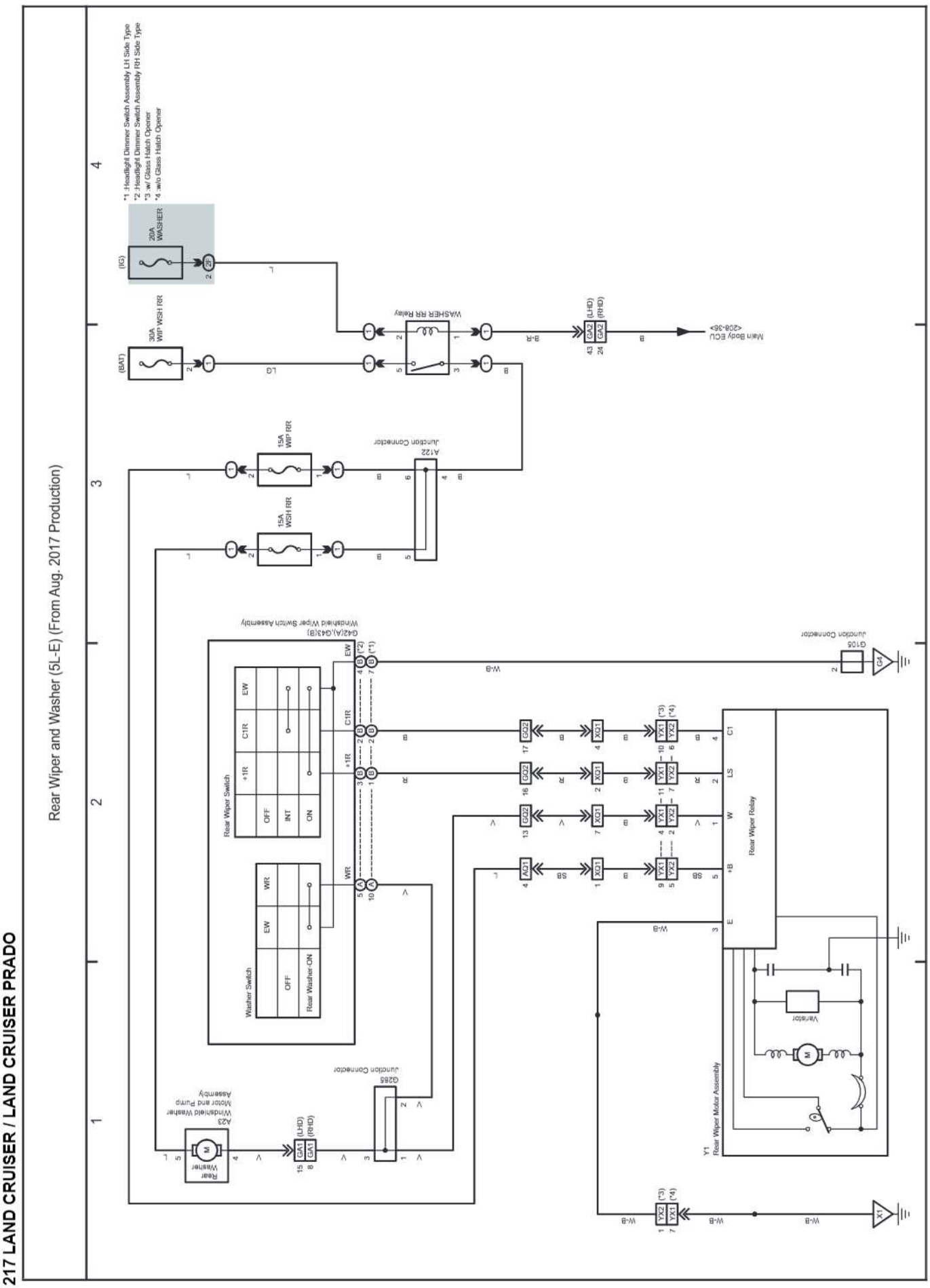

cardiagn.com

M OVERALL ELECTRICAL WIRING DIAGRAM

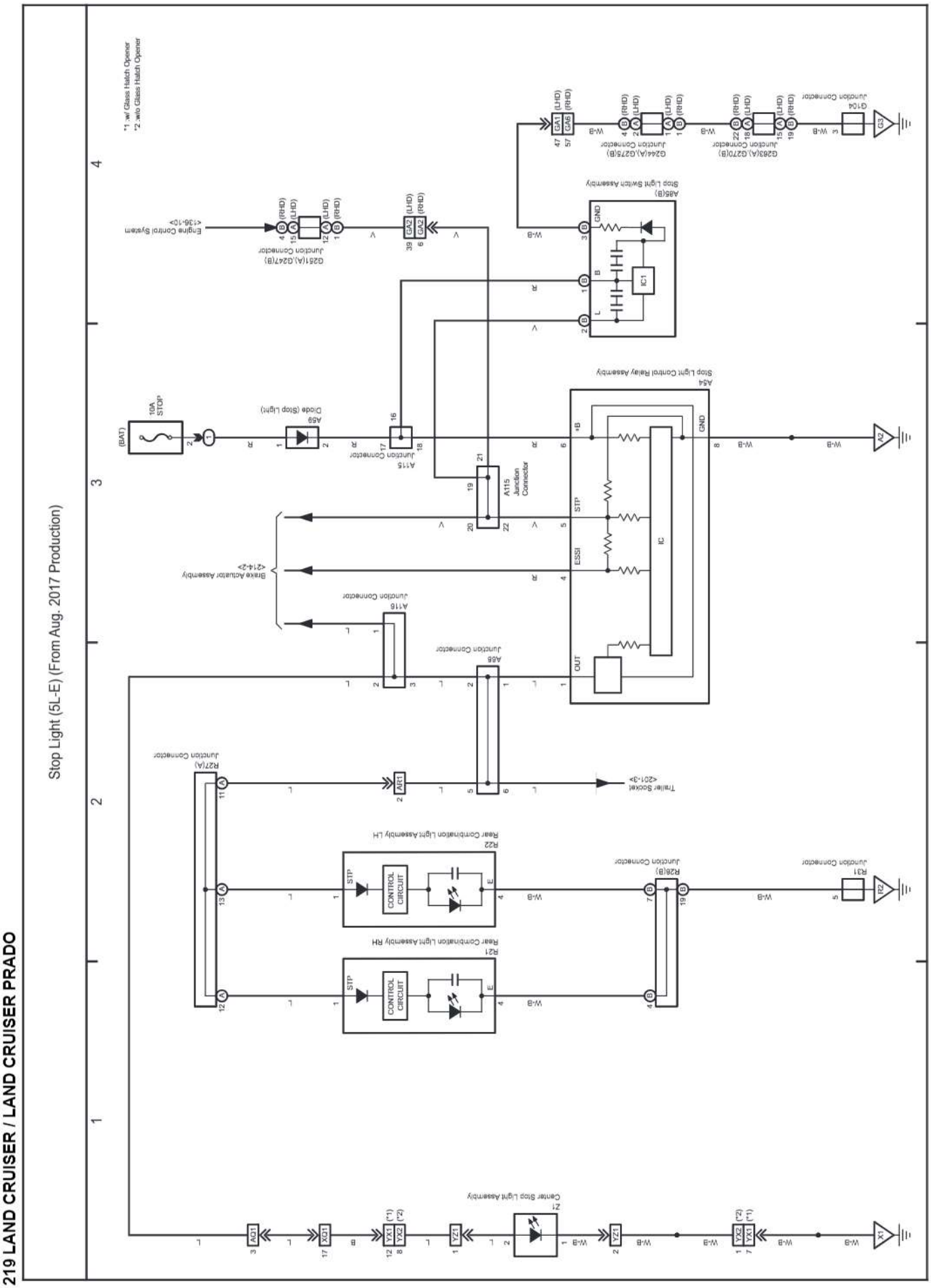

cardiagn.com

M OVERALL ELECTRICAL WIRING DIAGRAM

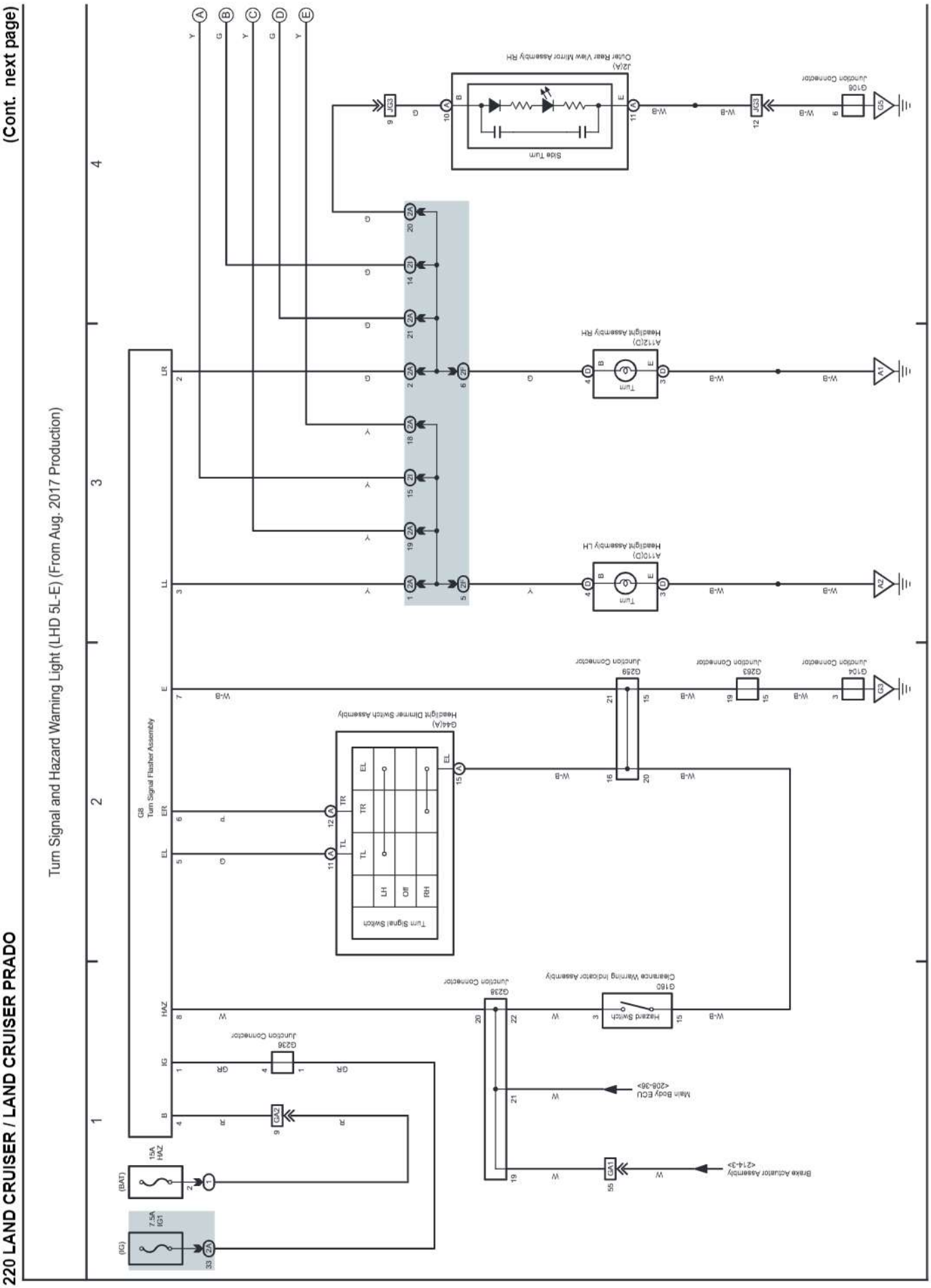

cardiagn.com

Turn Signal and Hazard Warning Light (LHD 5L-E) (From Aug. 2017 Production)

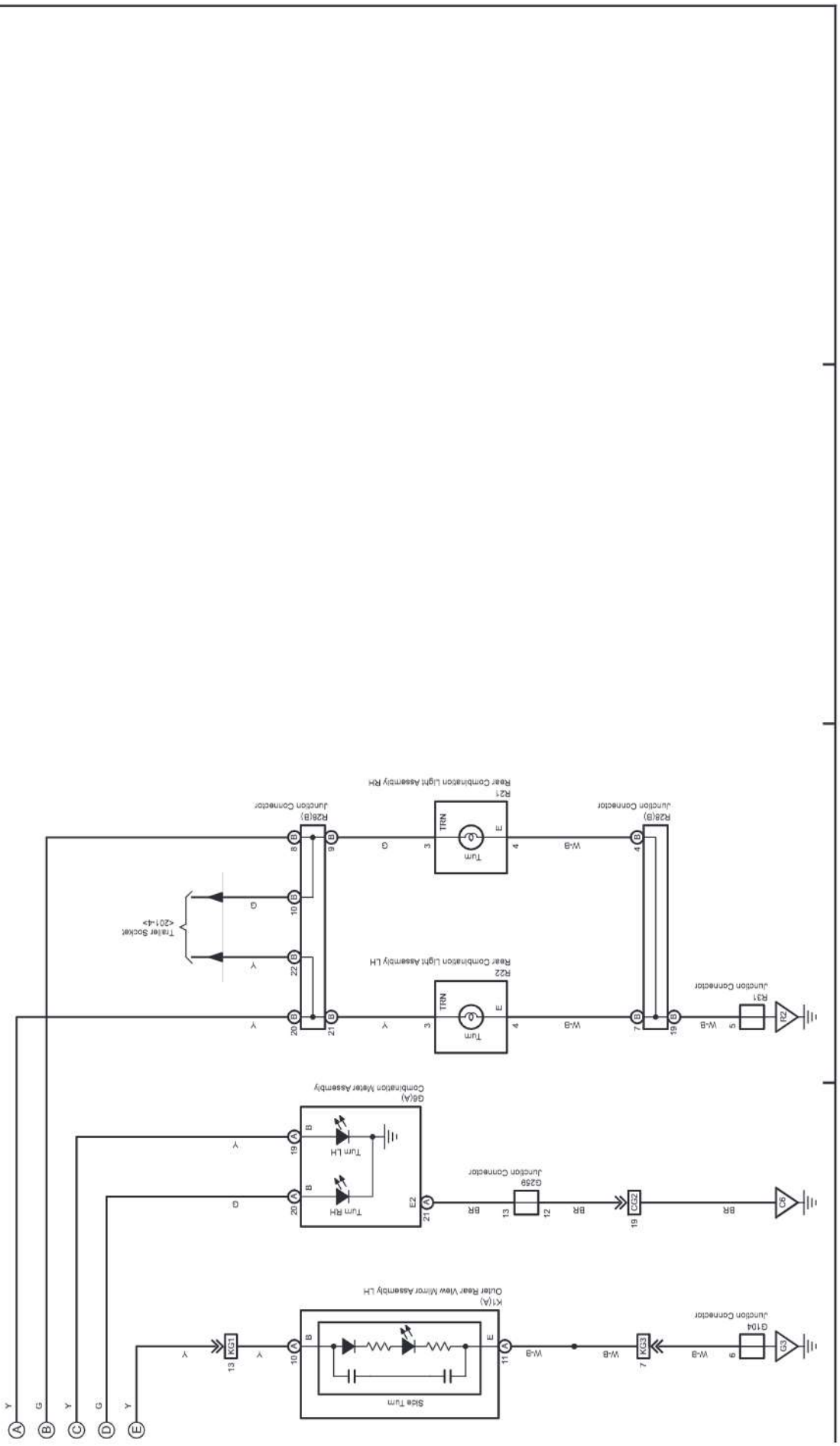

cardiagn.com

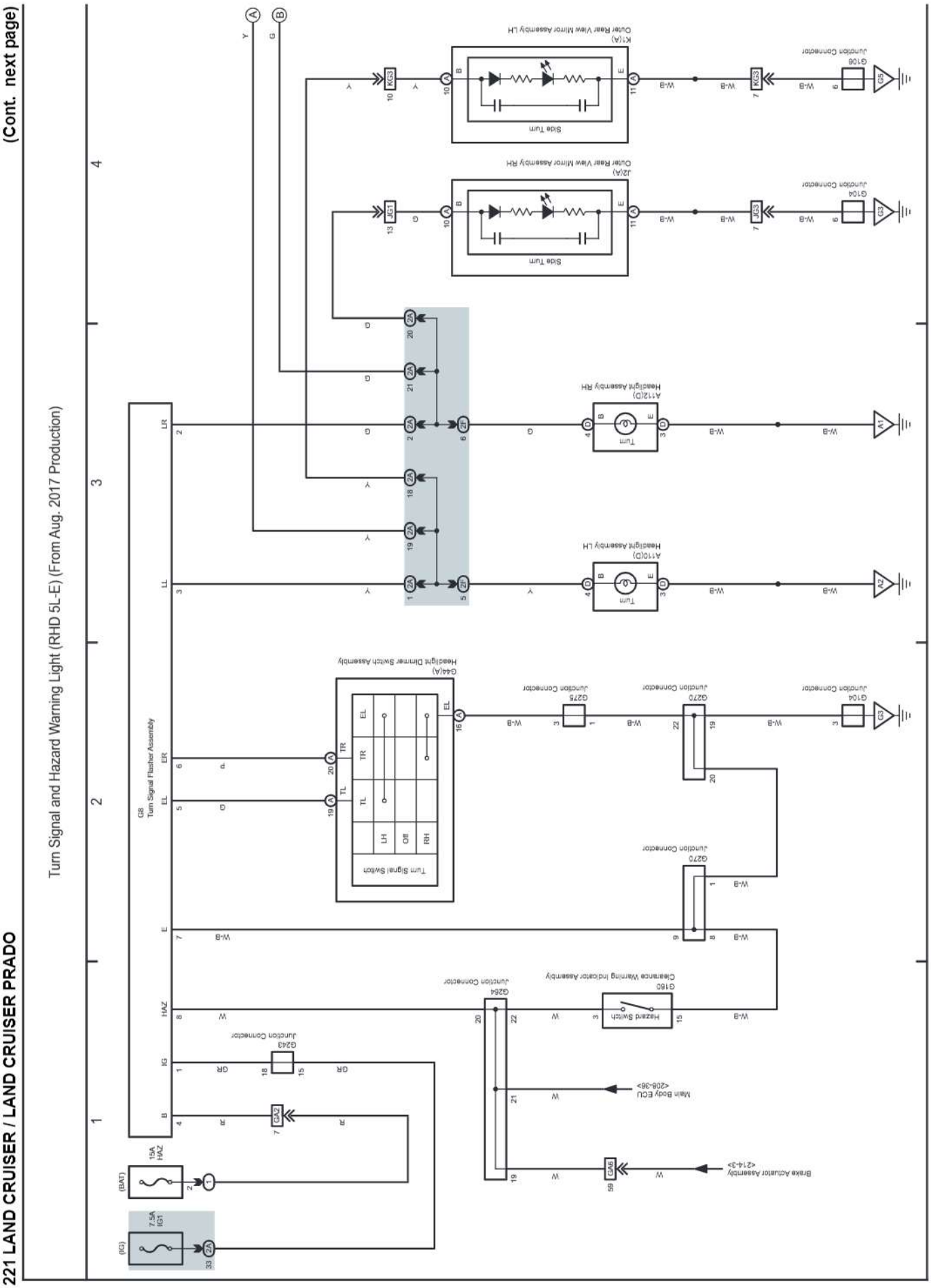

cardiagn.com

Turn Signal and Hazard Warning Light (RHD 5L-E) (From Aug. 2017 Production)

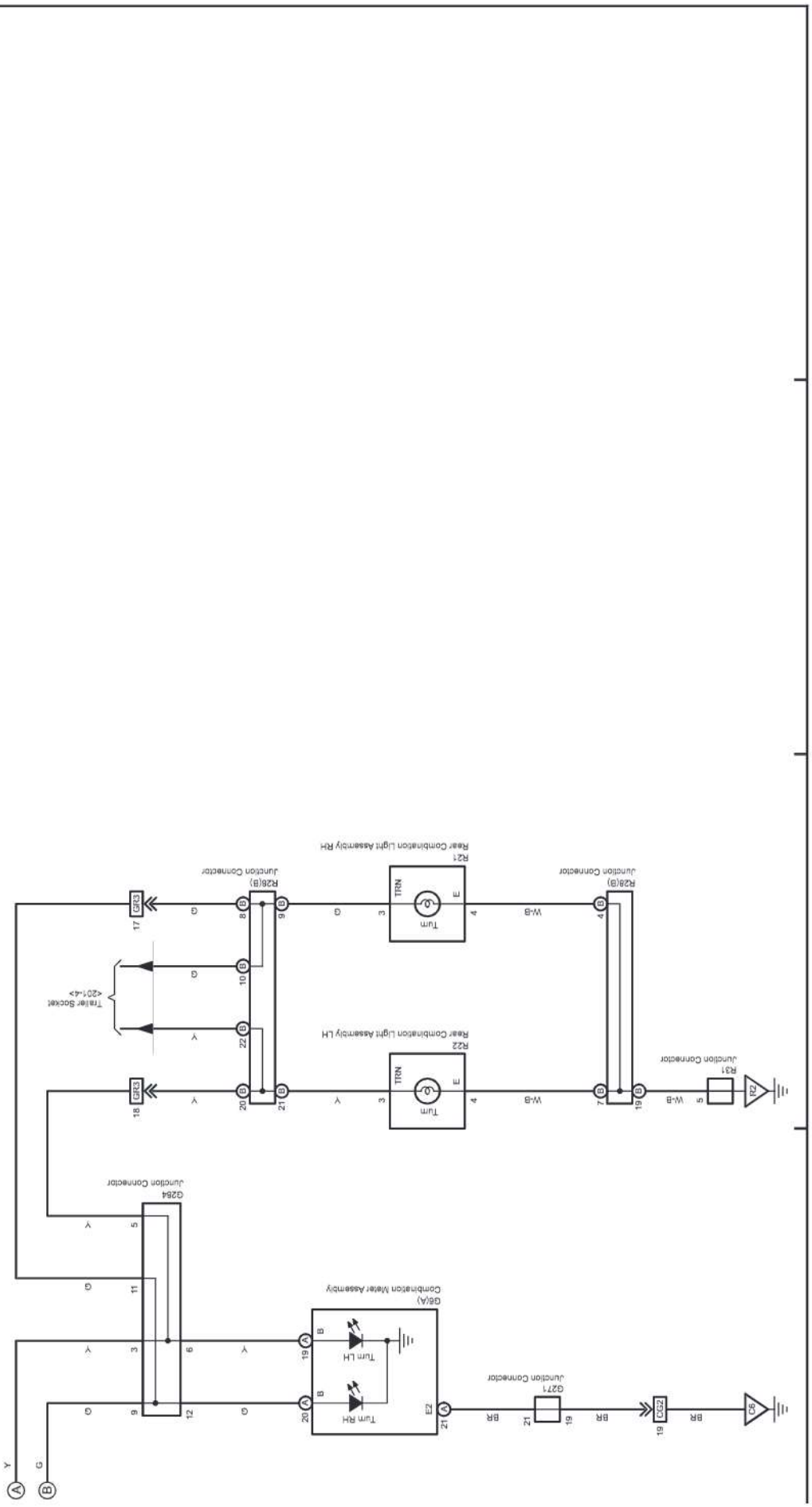

cardiagn.com

(Cont. next page)

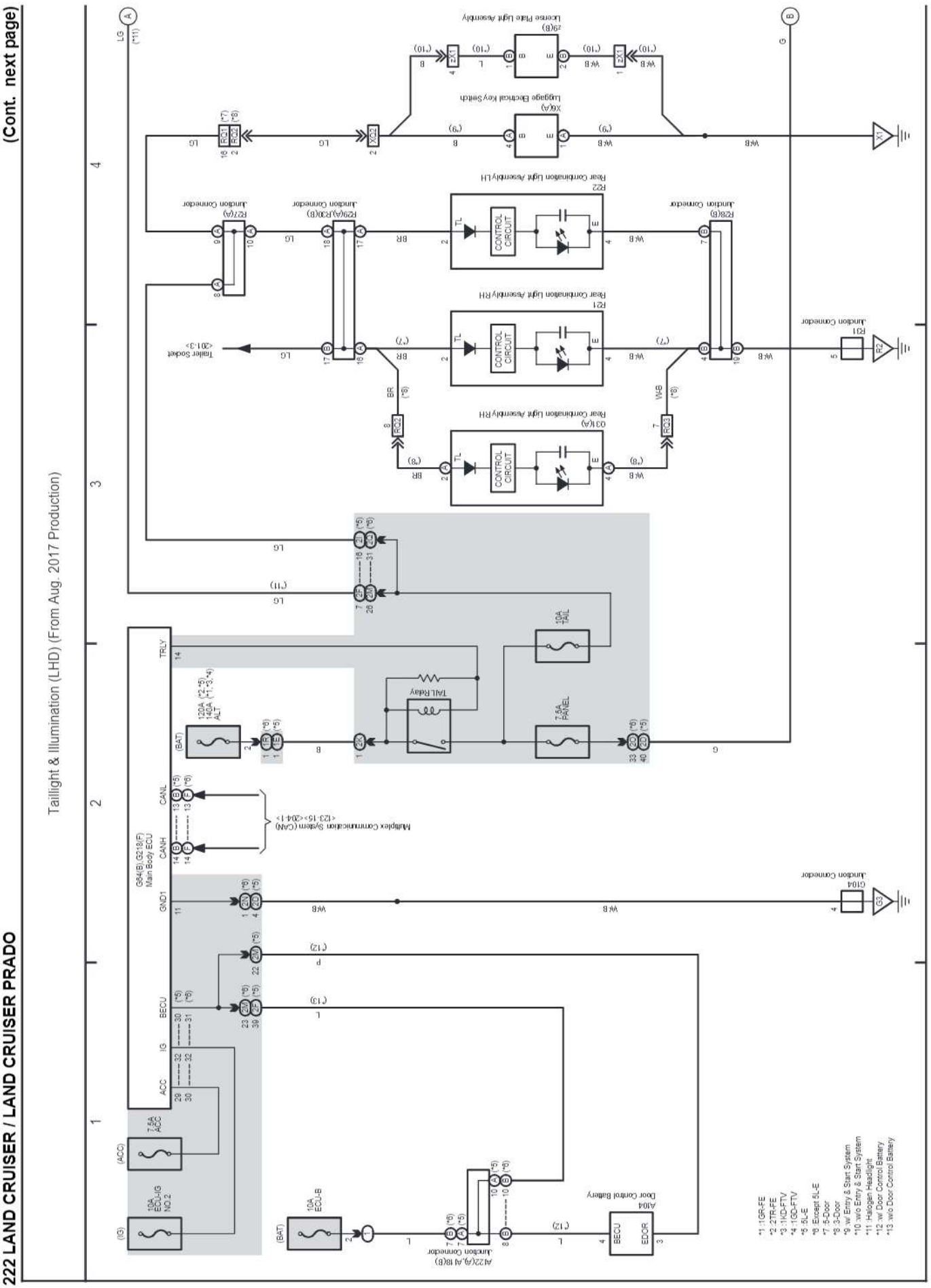

cardiagn.com

(Cont. next page)

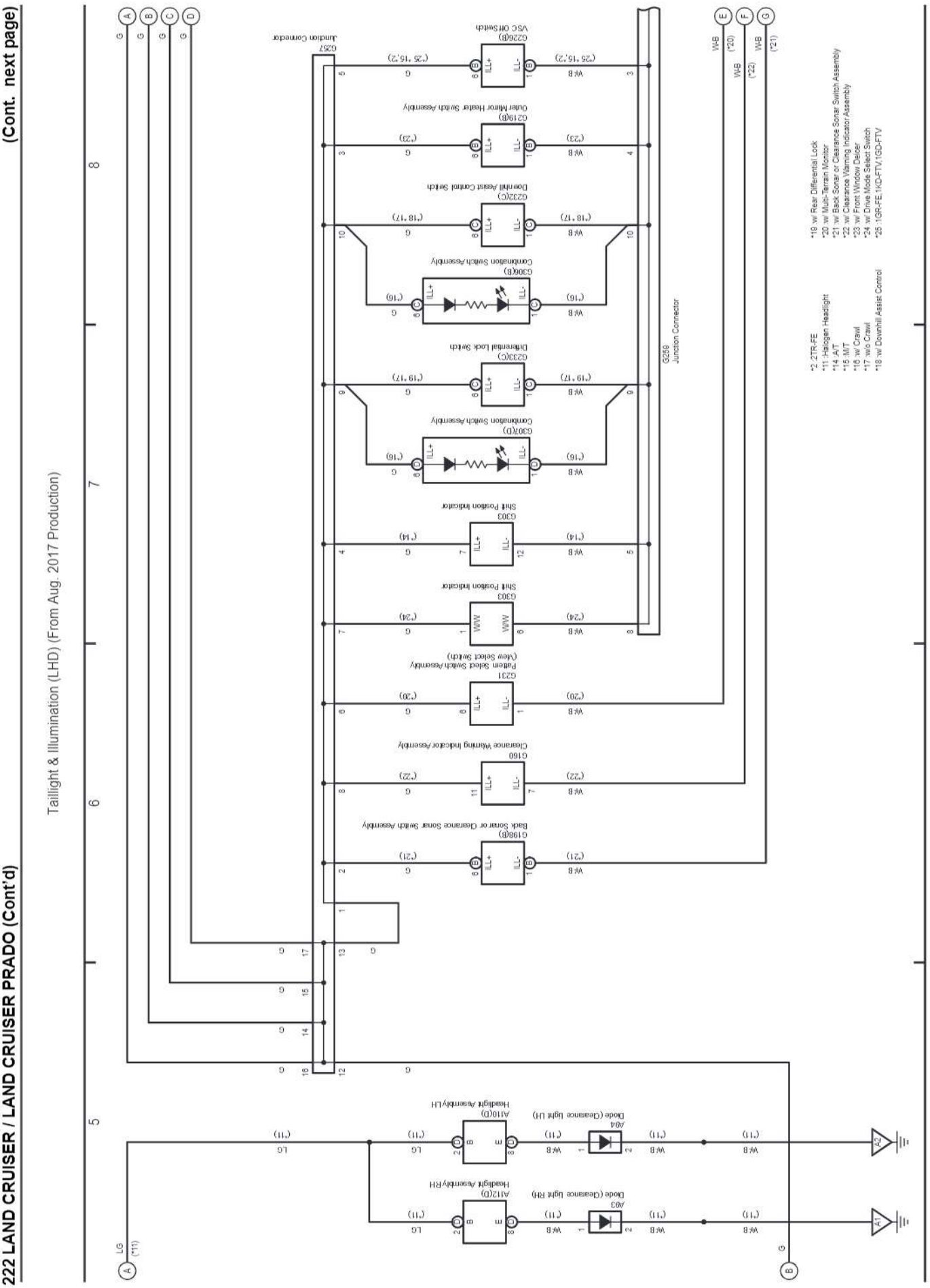

cardiagn.com

(Cont. next page)

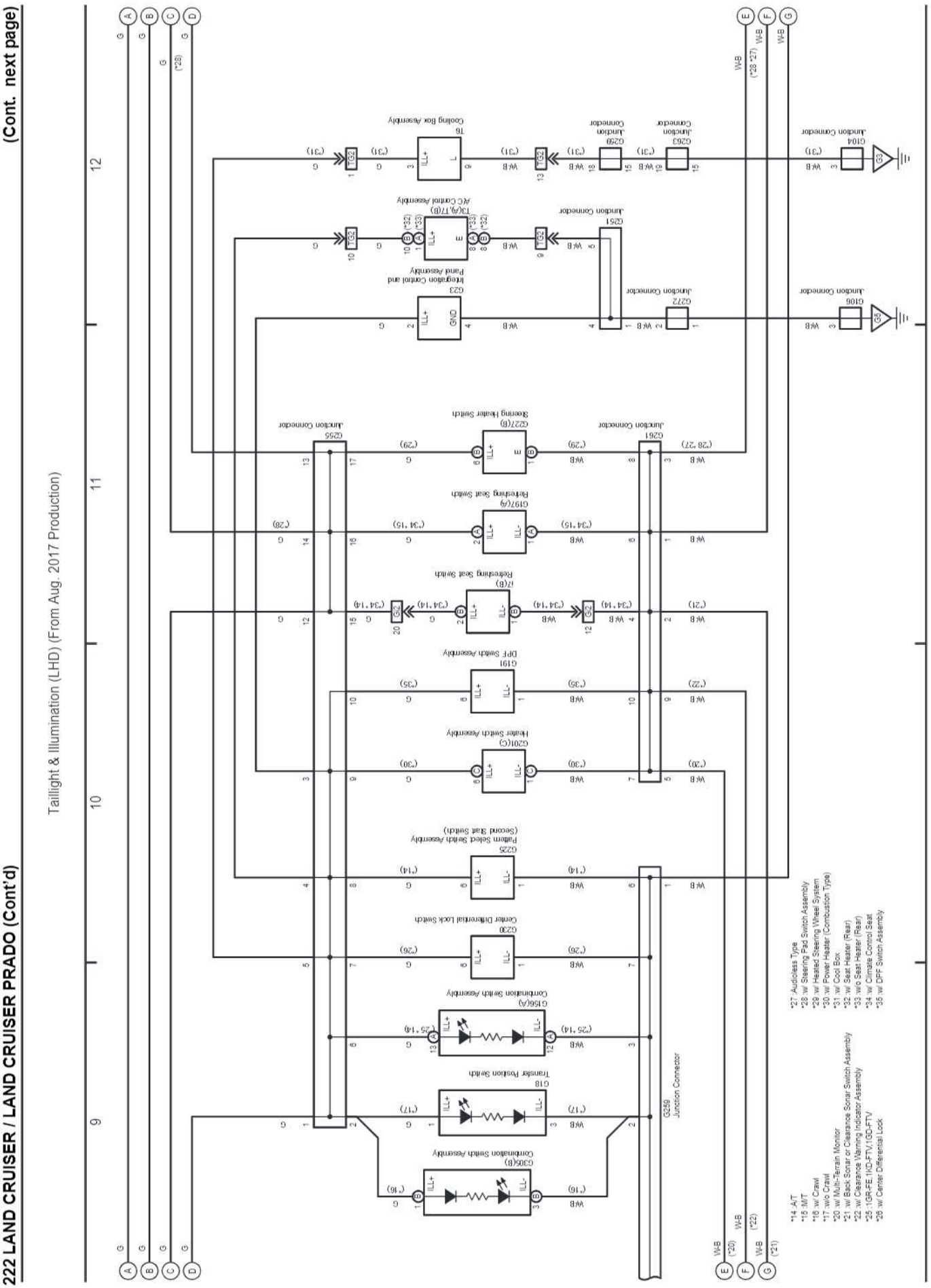

cardiagn.com

(Cont. next page)

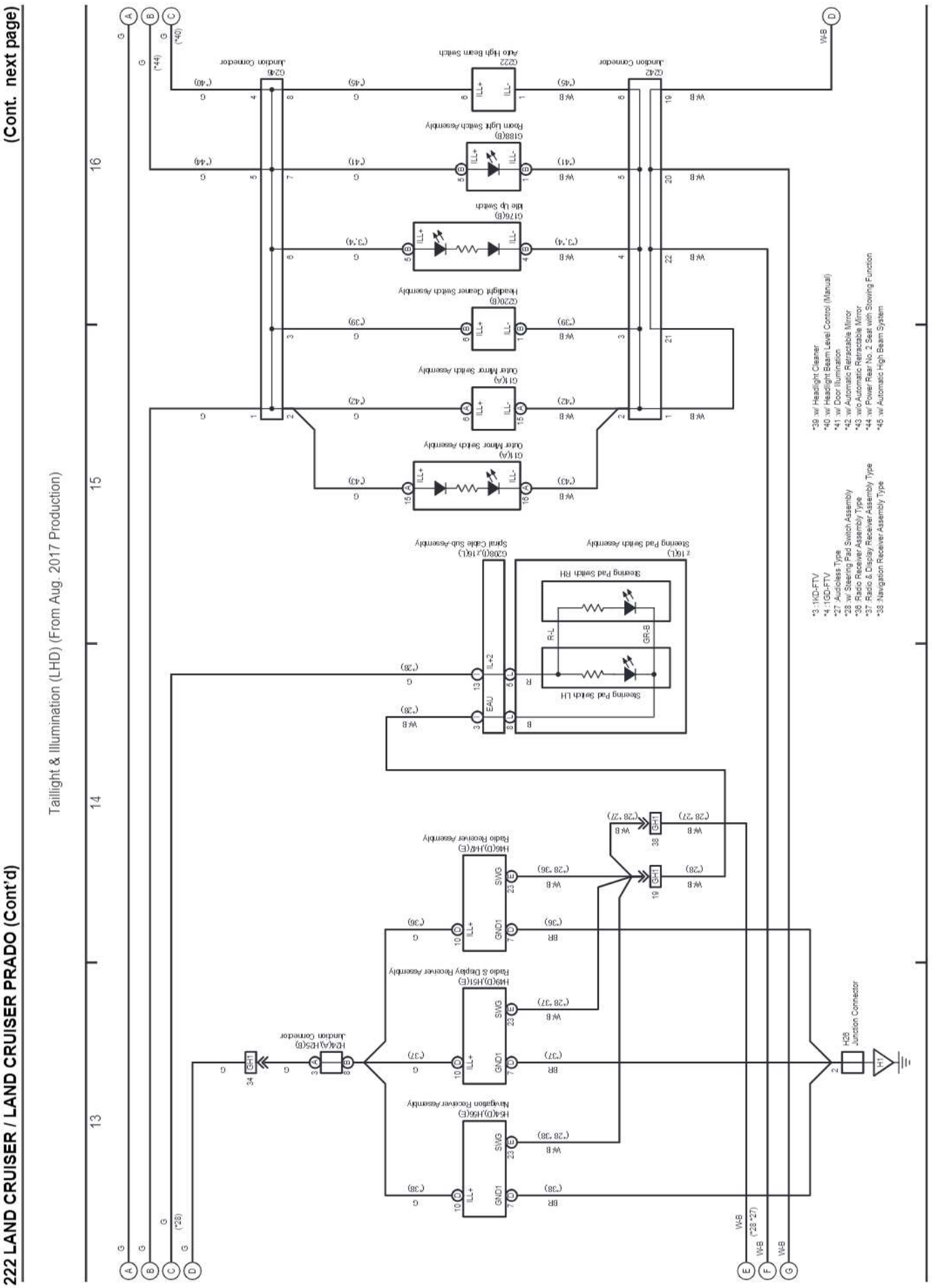

cardiagn.com

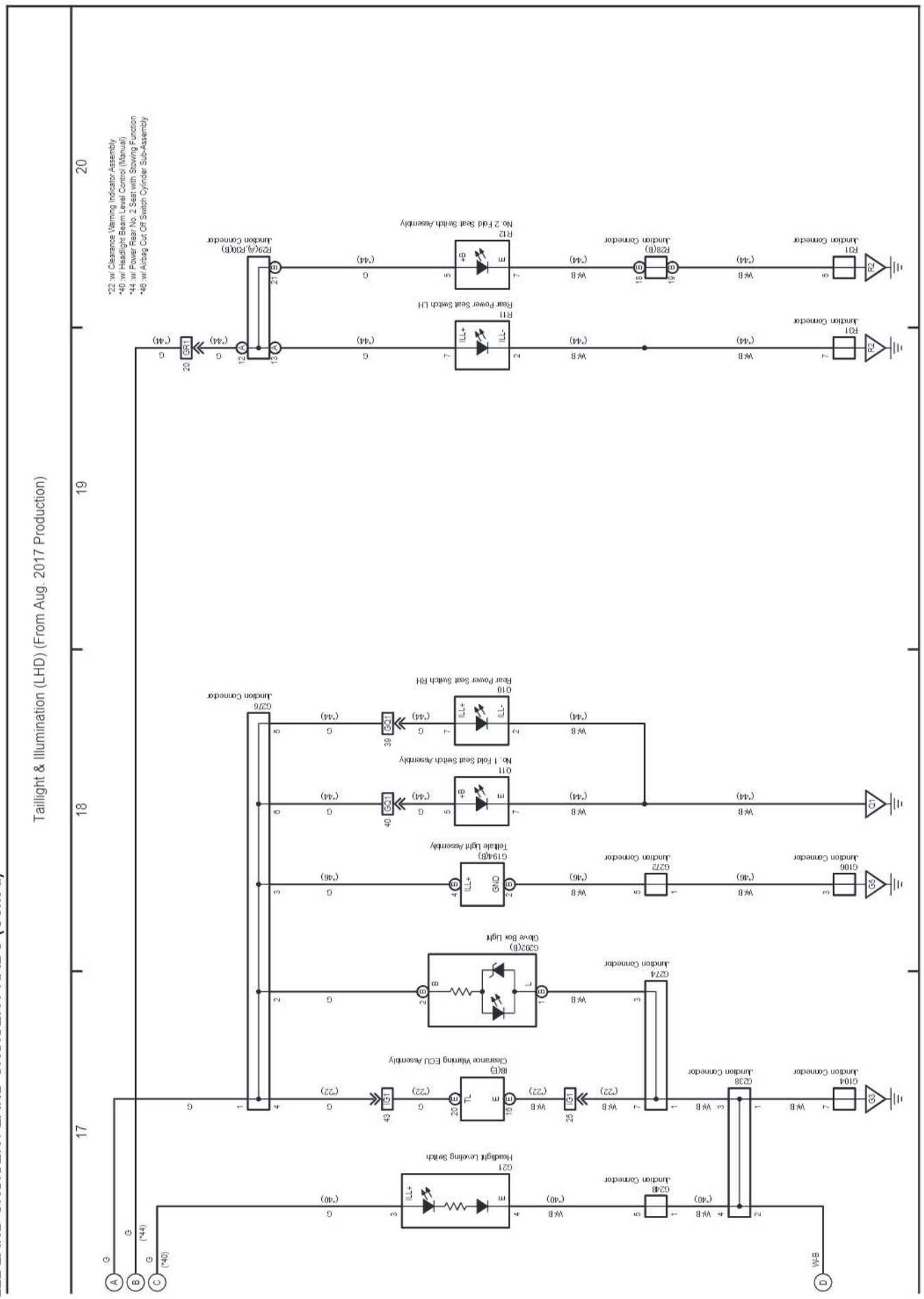

cardiagn.com

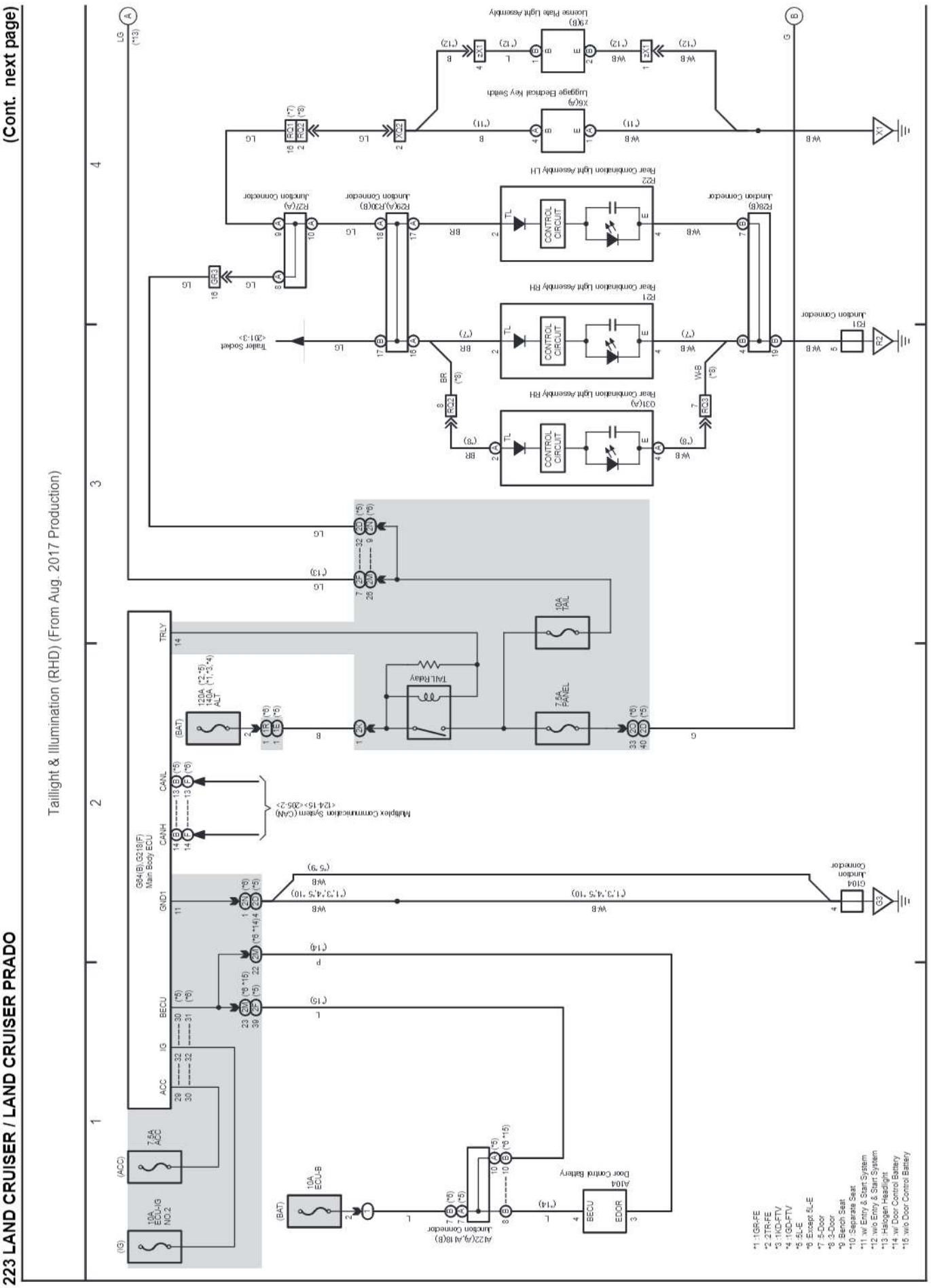

cardiagn.com

(Cont. next page)

223 LAND CRUISER / LAND CRUISER PRADO (Cont'd)

Taillight & Illumination (RHD) (From Aug. 2017 Production)

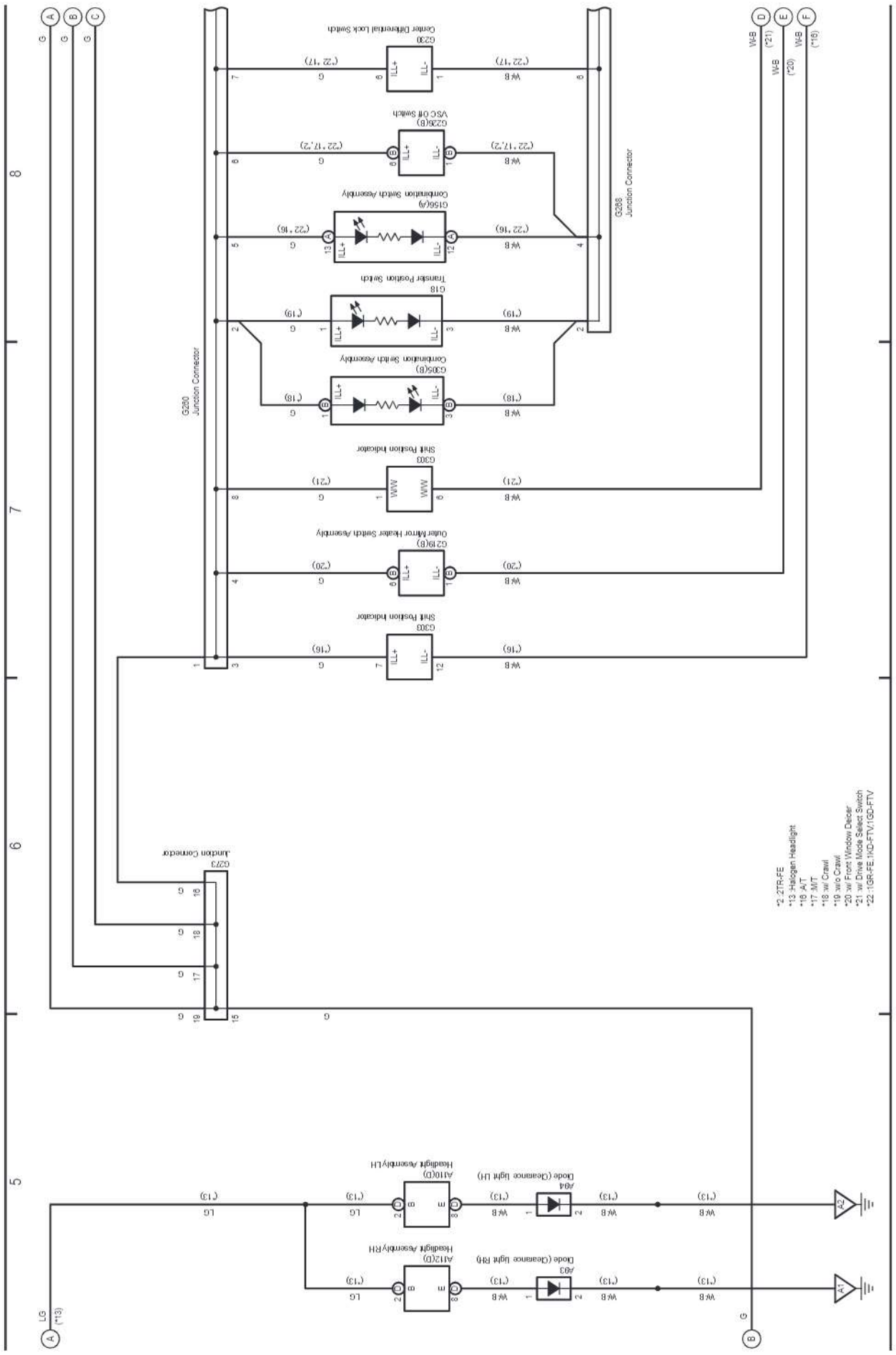

cardiagn.com

M OVERALL ELECTRICAL WIRING DIAGRAM

(Cont. next page)

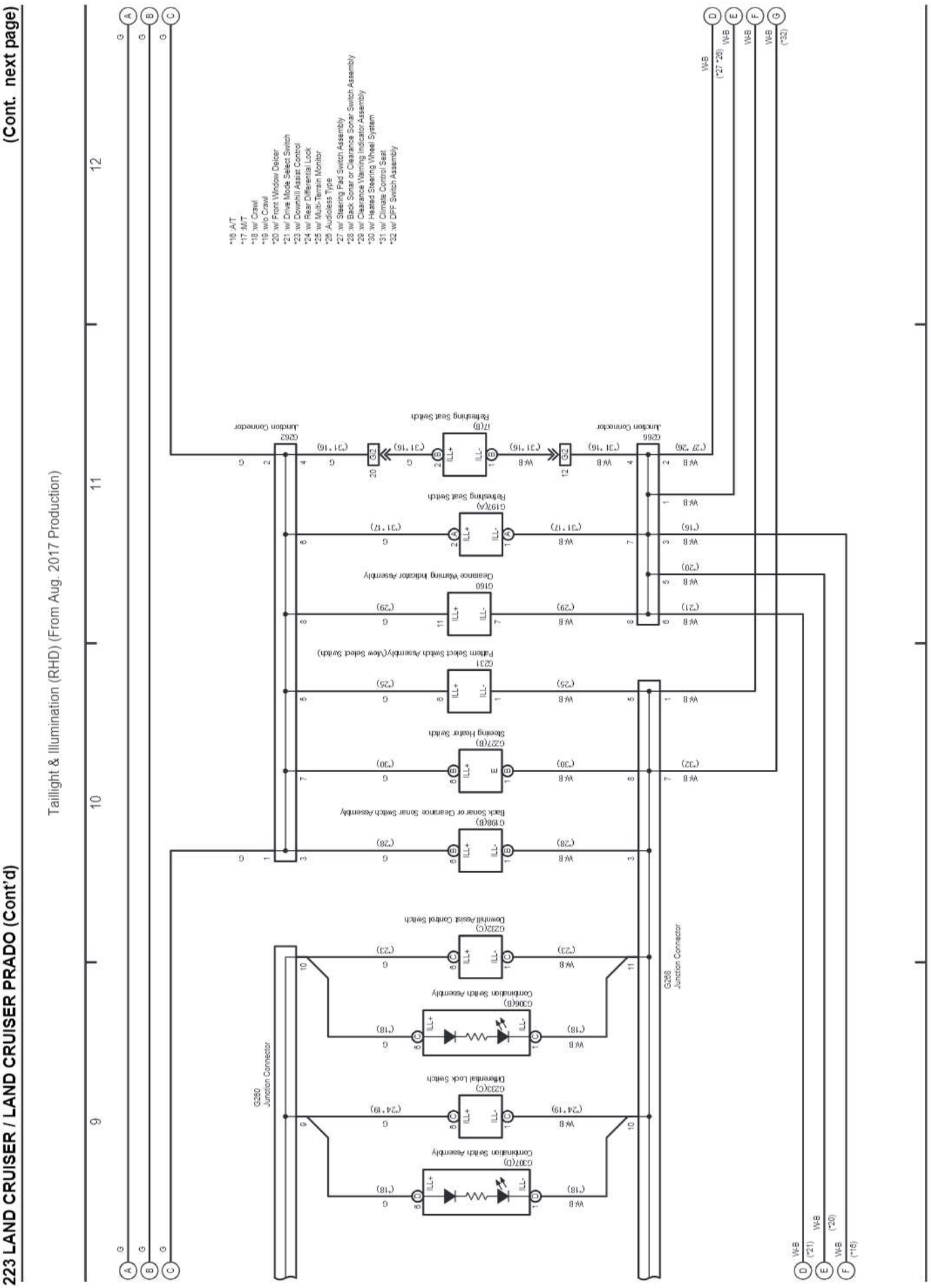

cardiagn.com

(Cont. next page)

Taillight & Illumination (RHD) (From Aug. 2017 Production)

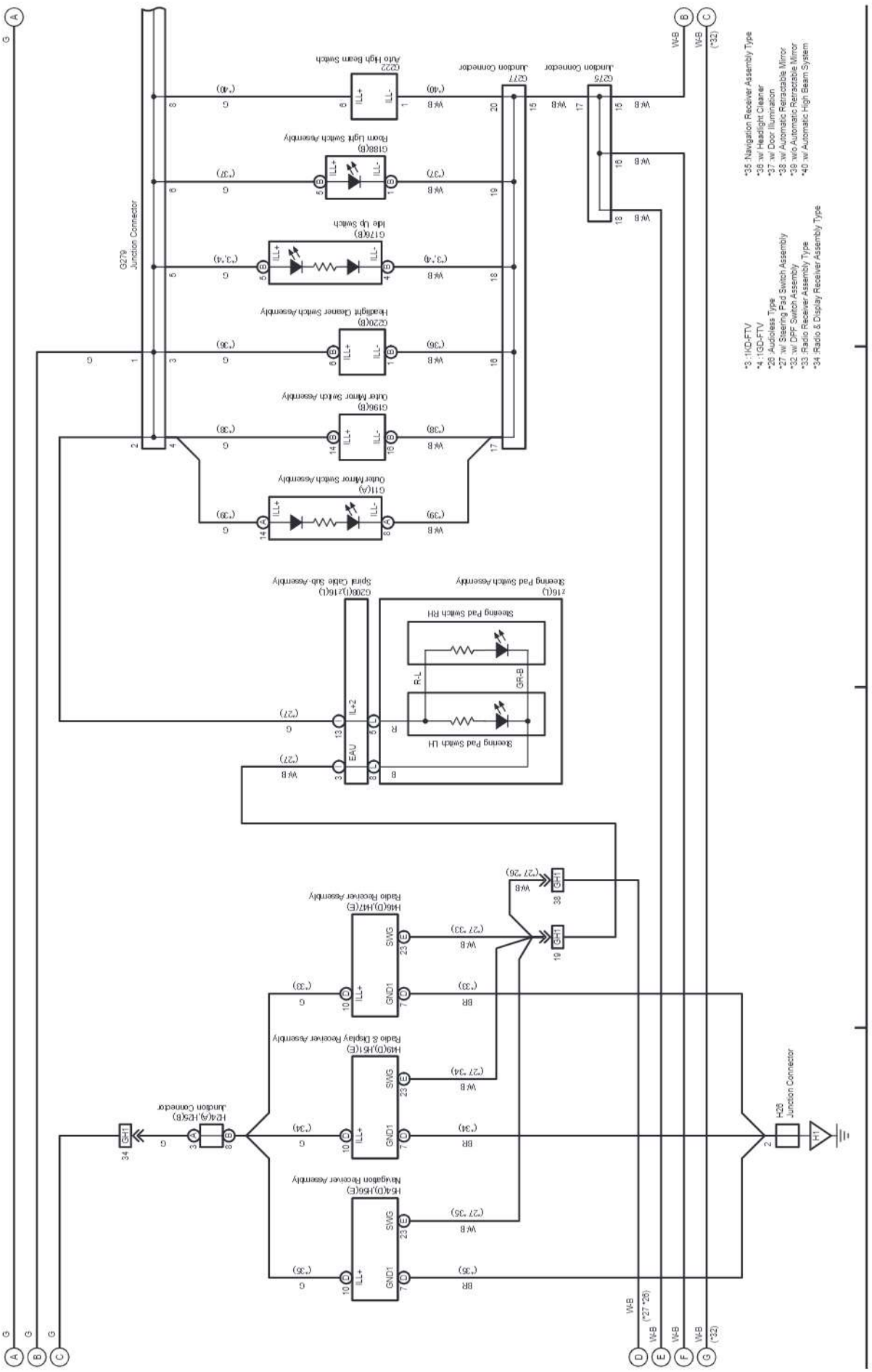

cardiagn.com

M OVERALL ELECTRICAL WIRING DIAGRAM

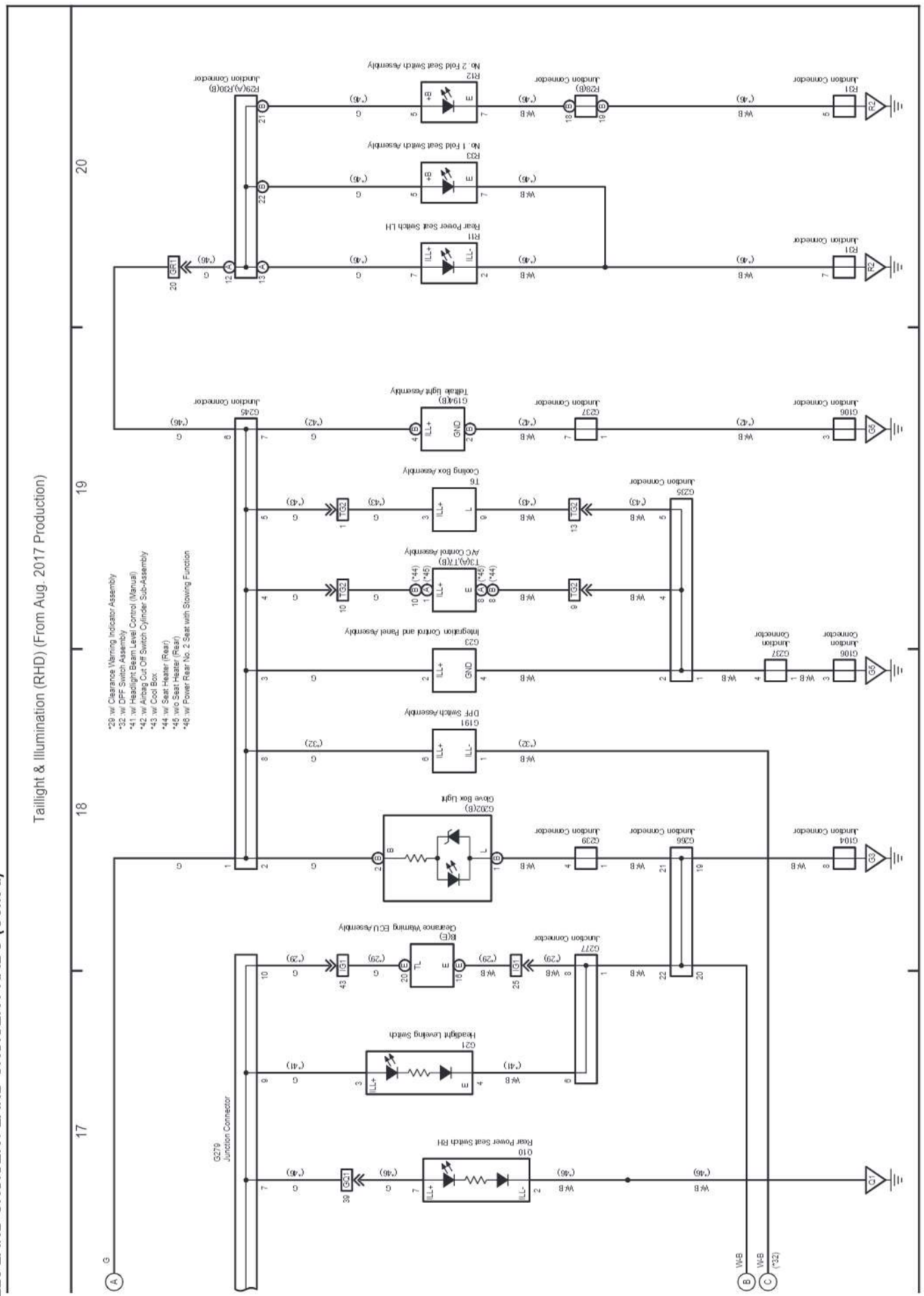

cardiagn.com

M OVERALL ELECTRICAL WIRING DIAGRAM

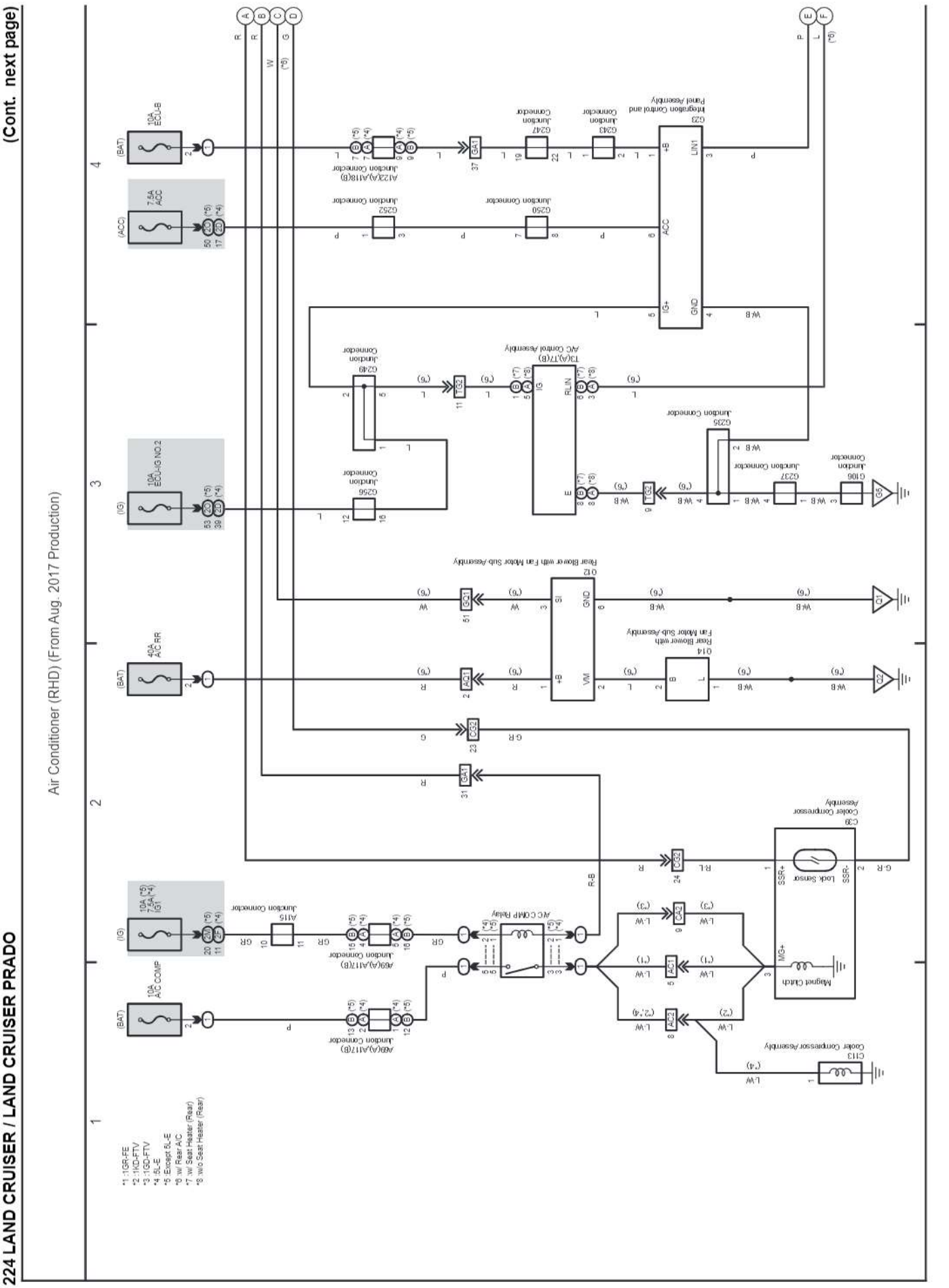

cardiagn.com

(Cont. next page)

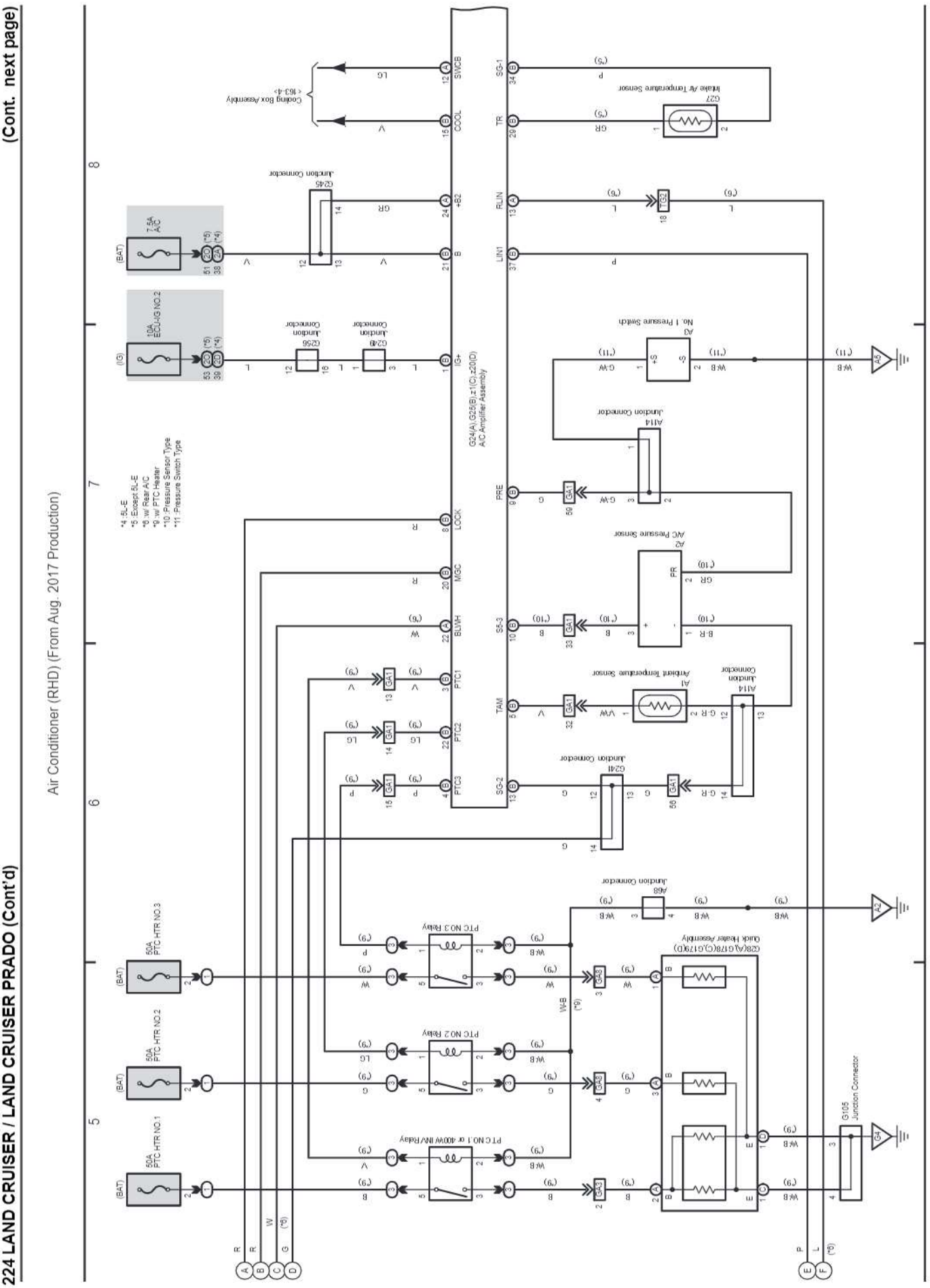

cardiagn.com

(Cont. next page)

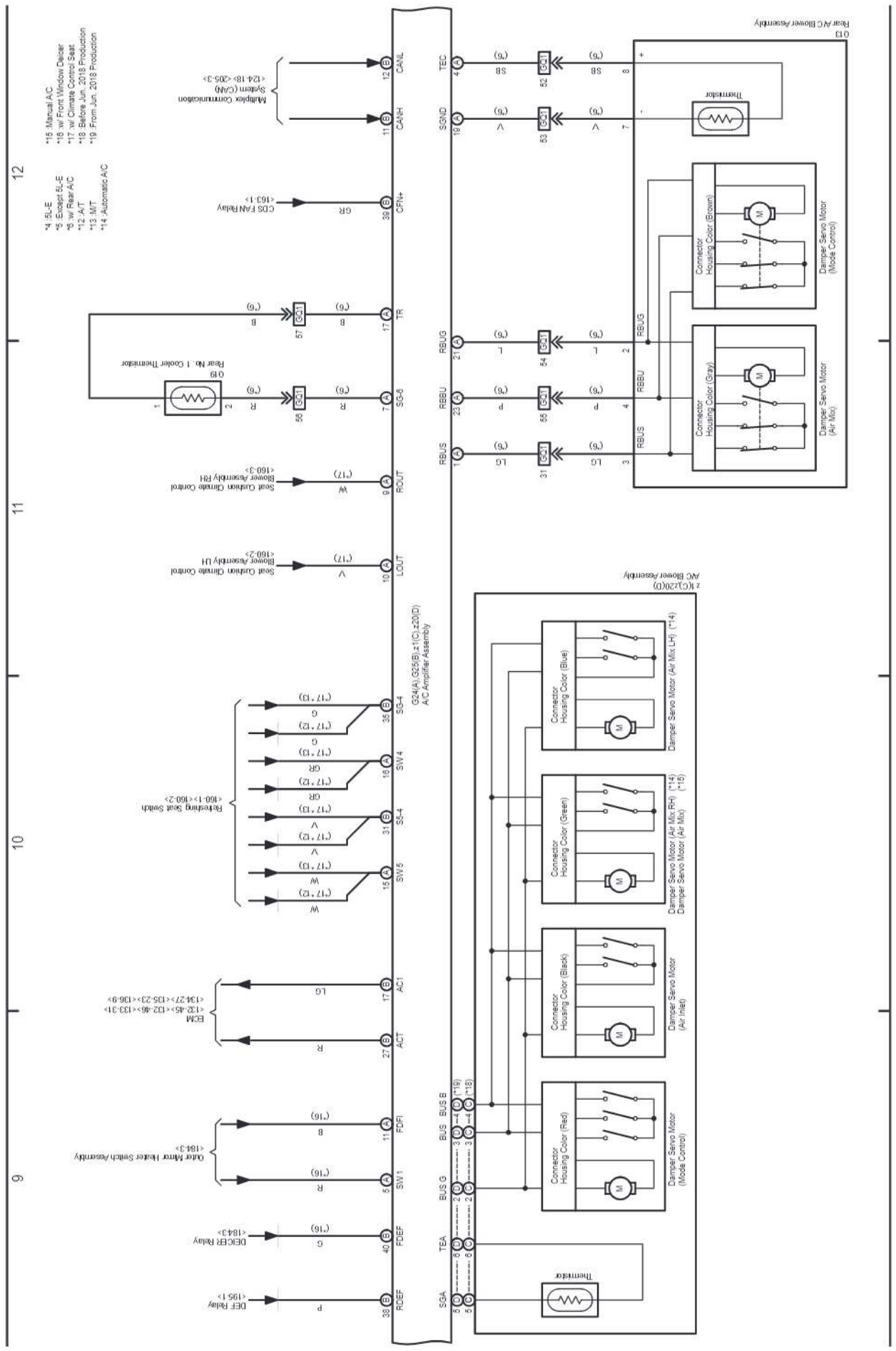

cardiagn.com

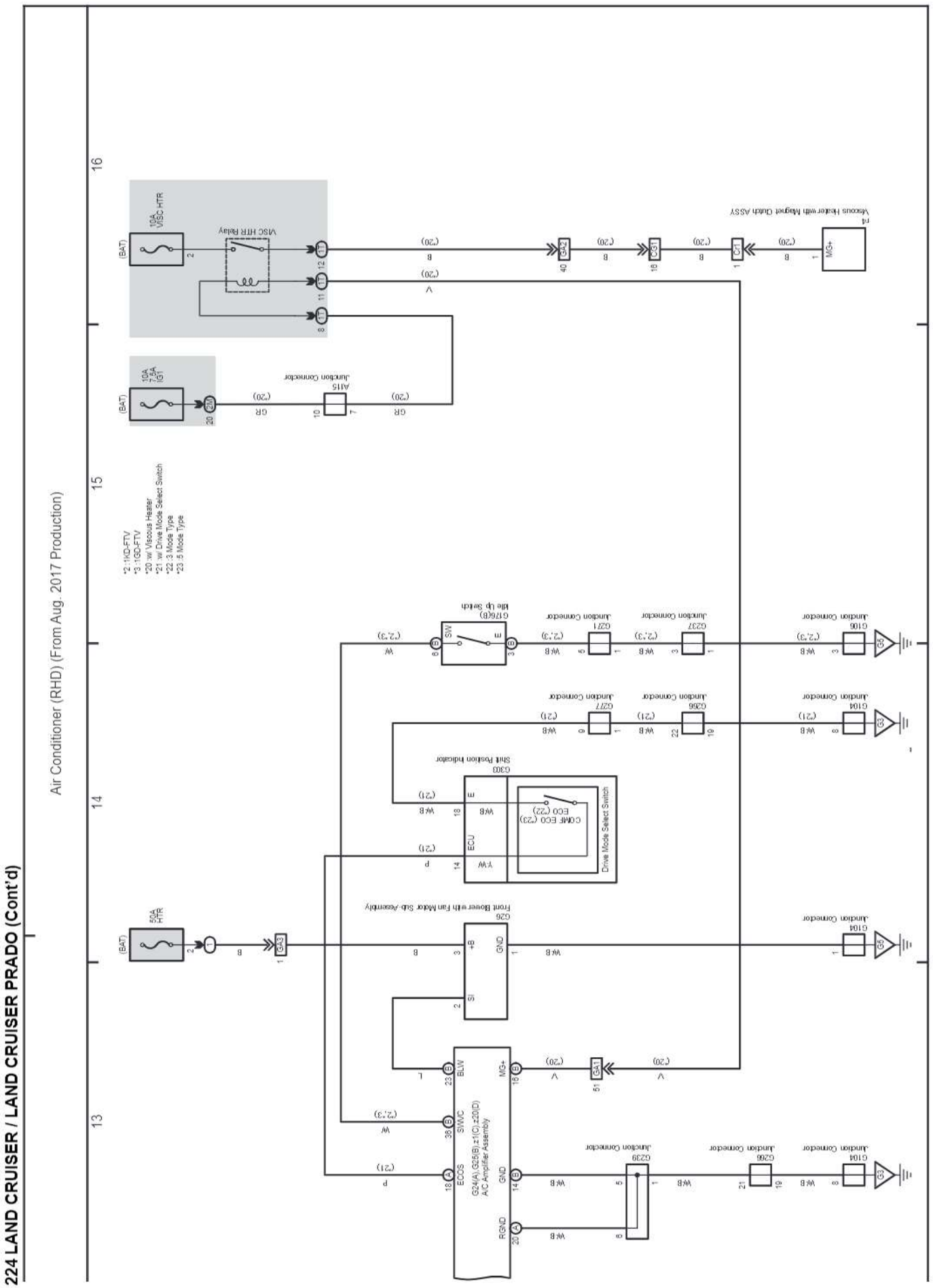

cardiagn.com

225 LAND CRUISER / LAND CRUISER PRADO

(Cont. next page)

Power Rear No. 2 Seat with Stowing Function (RHD) (From Aug. 2017 Production)

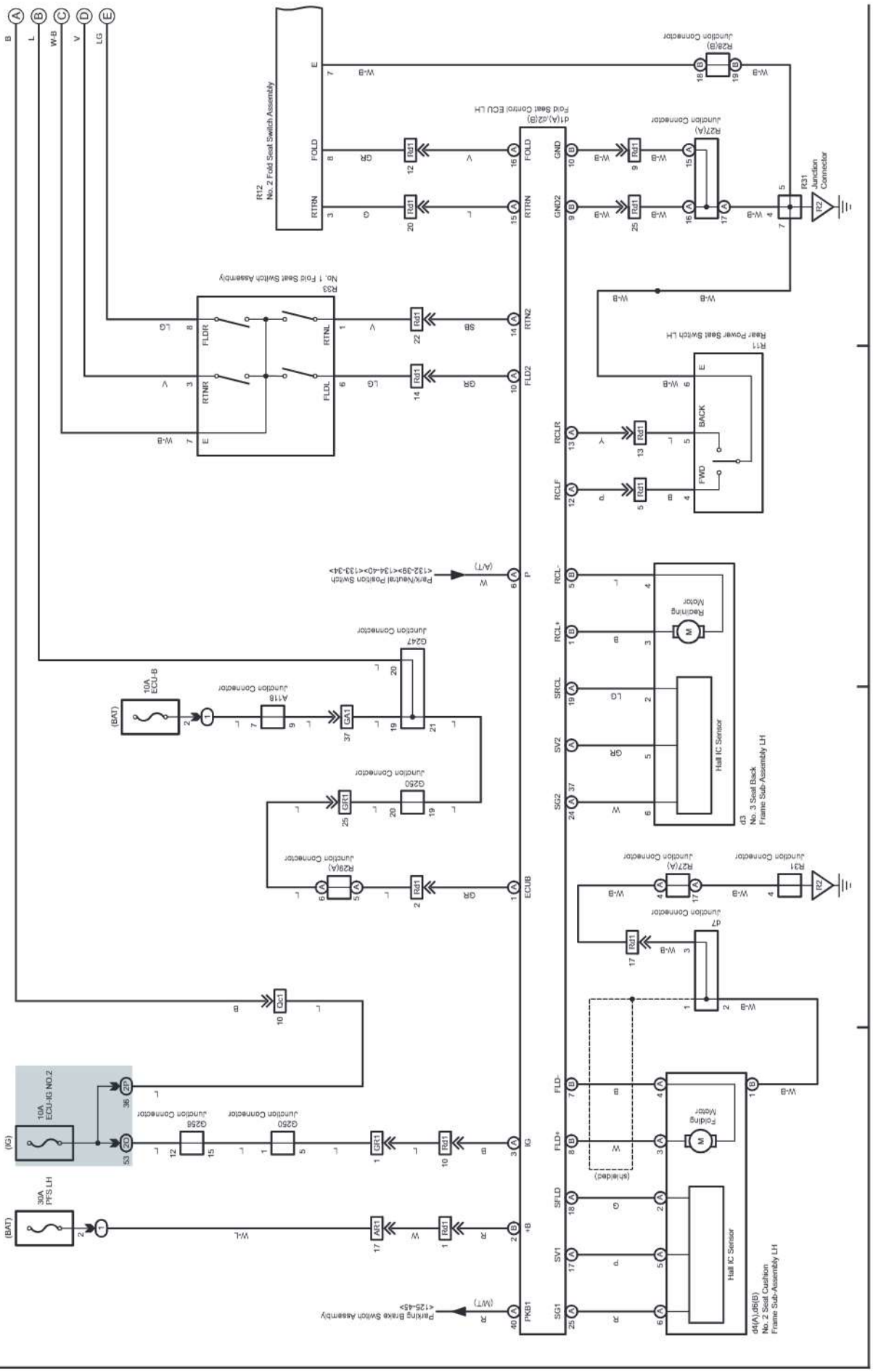

cardiagn.com

225 LAND CRUISER / LAND CRUISER PRADO (Cont'd)
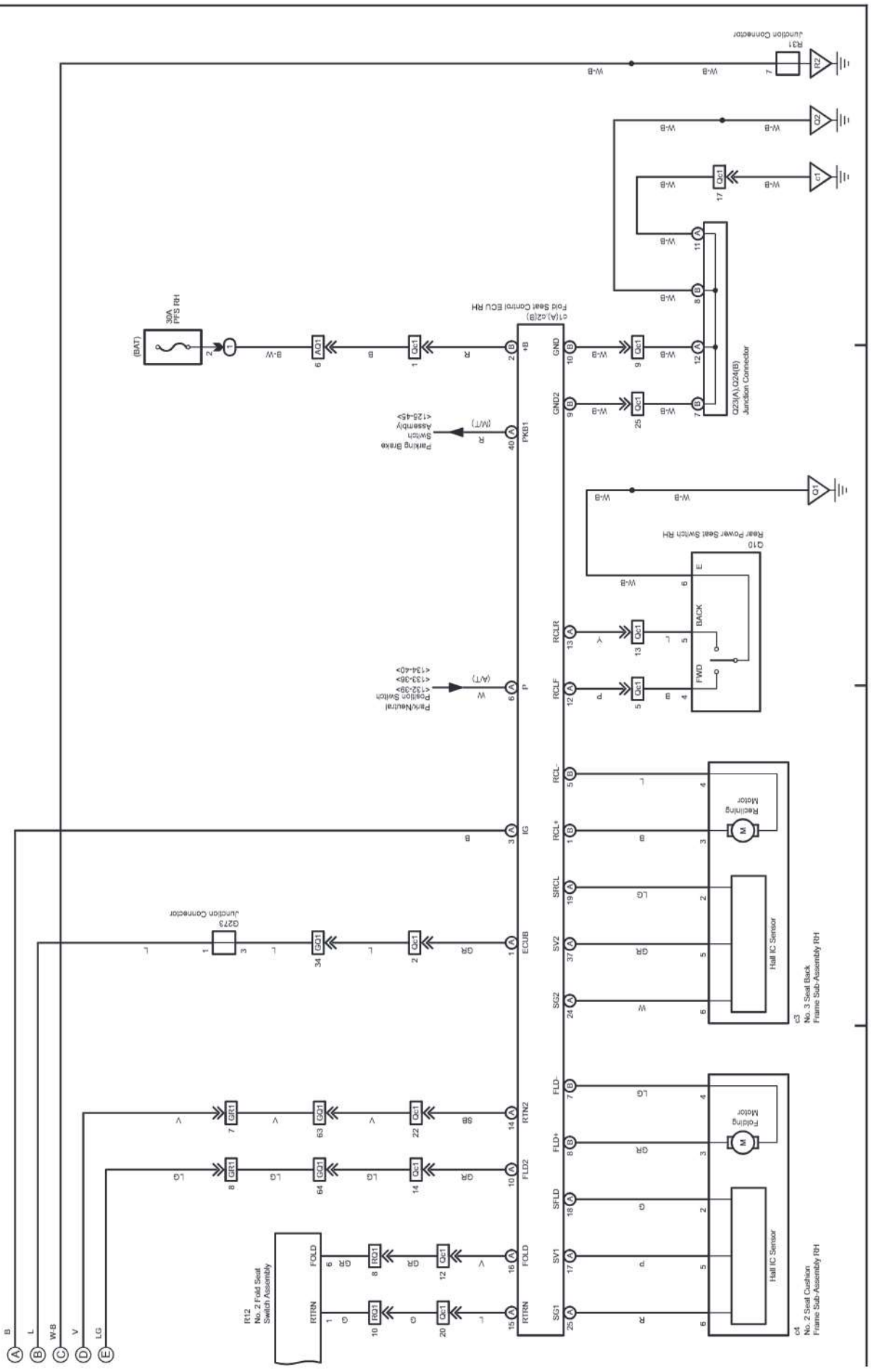
Power Rear No. 2 Seat with Stowing Function (RHD) (From Aug. 2017 Production)