HOW TO USE THIS MANUAL

IN002-0K

INDEX

An INDEX is provided on the first page of each section to guide you to the item to be repaired. To assist you in finding your way through the manual, the Section Title and major heading are given at the top of every page.

IN

GENERAL DESCRIPTION

At the beginning of each section, a General Description (Precautions) is given that pertains to all repair operations contained in that section.
Read these precautions before starting any repair task.

TROUBLESHOOTING

TROUBLESHOOTING tables are included for each system to help you diagnose the problem and find the cause.

PREPARATION

Preparation lists the SST (Special Service Tools), recommended tools, equipment, lubricant and SSM (Special Service Materials) which should be prepared before beginning the operation and explains the purpose of each one.

REPAIR PROCEDURES

Most repair operations begin with an overview illustration. It identifies the components and shows how the parts fit together.
Example:

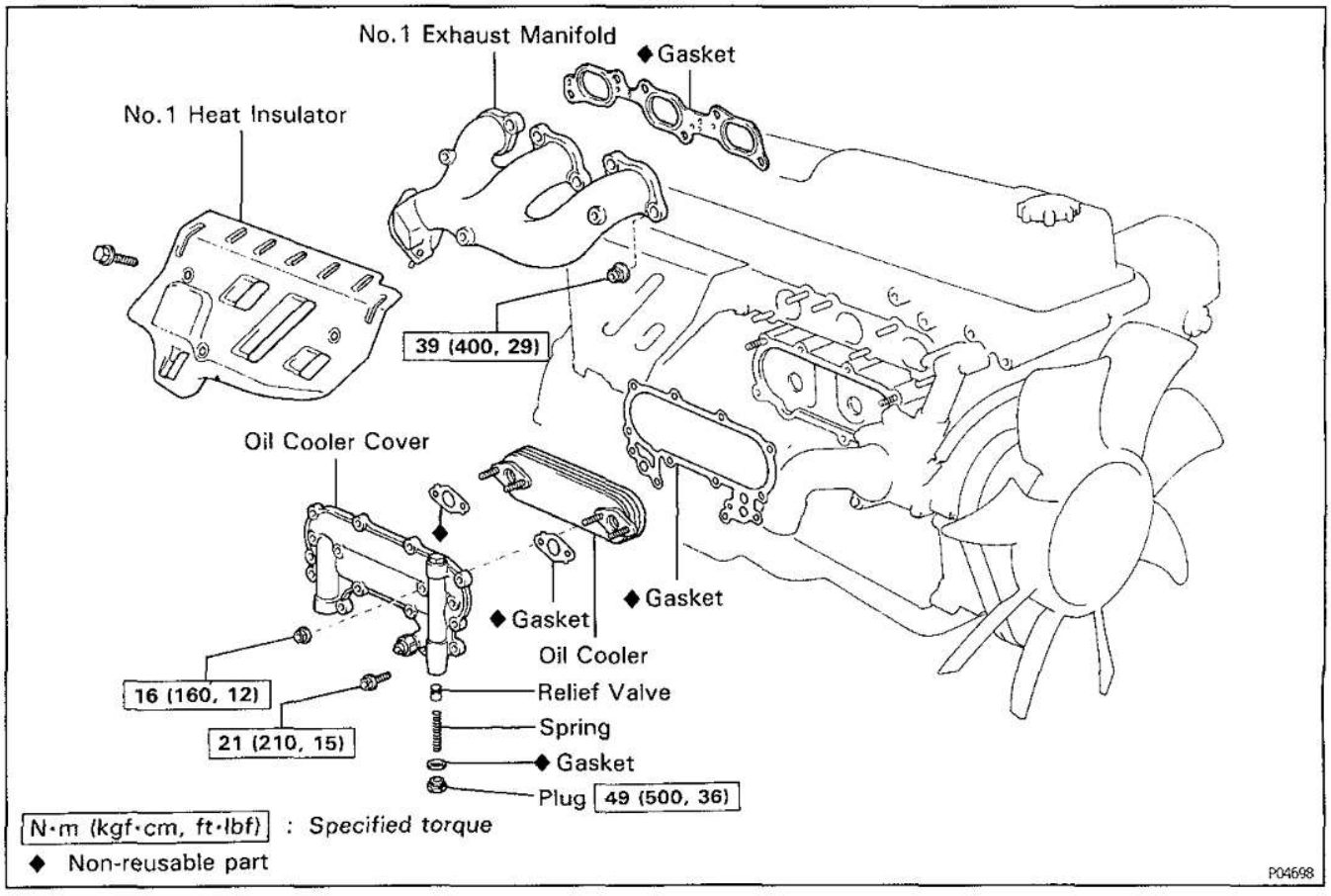

The procedures are presented in a step–by–step format:

- The illustration shows what to do and Where to do it.
- The task heading tells what to do.
- The detailed text tells how to perform the task and gives other information such as specifications and warnings.

Example:

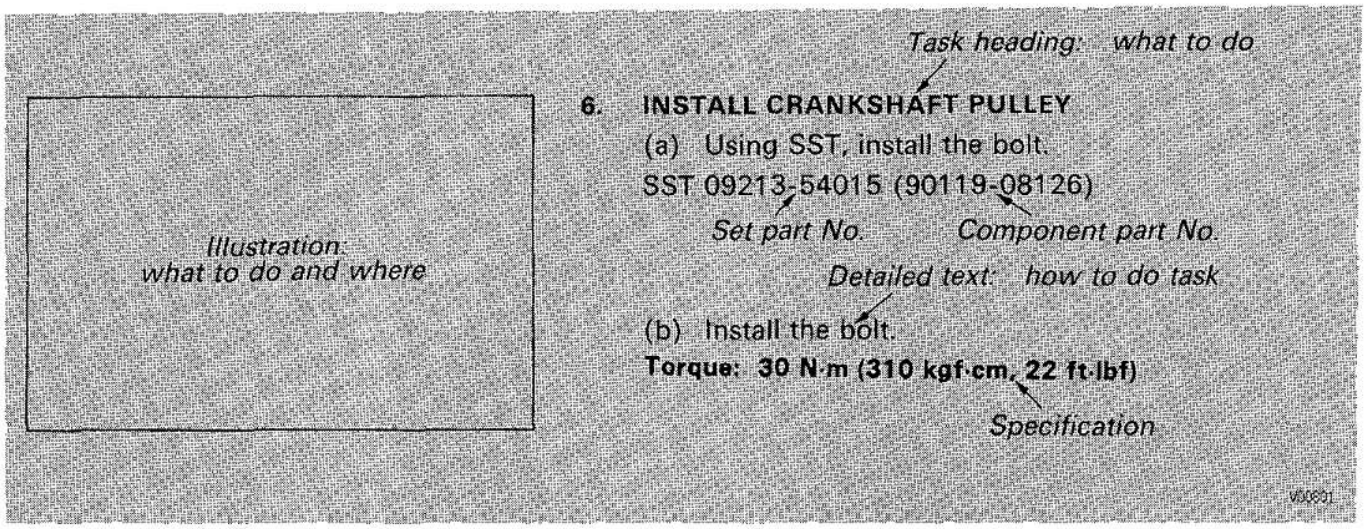

This format provides the experienced technician with a FAST TRACK to the information needed. The upper case task heading can be read at a glance when necessary, and the text below it provides detailed information. Important specifications and warnings always stand out in bold type.

REFERENCES

References have been kept to a minimum. However, when they are required you are given the page to refer to.

SPECIFICATIONS

Specifications are presented in bold type throughout the text where needed. You never have to leave the procedure to look up your specifications. They are also found at the end of each section, for quick reference.

CAUTIONS, NOTICES, HINTS:

- CAUTIONS are presented in bold type, and indicate there is a possibility of injury to you or other people.
- NOTICES are also presented in bold type, and indicate the possibility of damage to the components being repaired.
- HINTS are separated from the text but do not appear in bold. They provide additional information to help you efficiently perform the repair.

IN

SI UNIT

The UNIT given in this manual are primarily expressed with the SI UNIT (International System of Unit), and alternately expressed in the metric system and in the yard/pound system.
Example:
Torque: 30 N·m (310 kgf·cm, 22 ft·lbf)

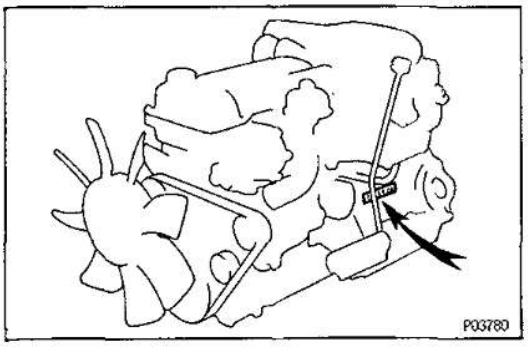

IDENTIFICATION INFORMATION

1N004-02

ENGINE SERIAL NUMBER

The engine serial number is stamped on the engine block as shown.

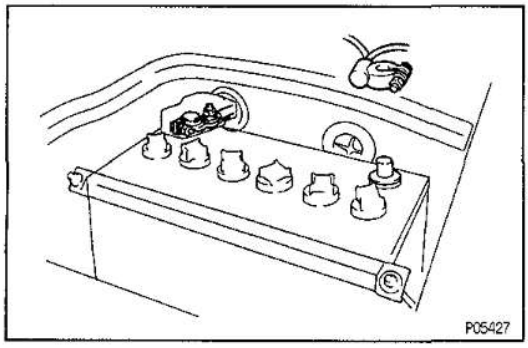

GENERAL REPAIR INSTRUCTIONS

IN00W-04

1. Use fender, seat and floor covers to keep the vehicle clean and prevent damage.
2. During disassembly, keep parts in the appropriate order to facilitate reassembly.
3. Observe the following:
   (a) Before performing electrical work, disconnect the negative cable from the battery terminal.
   (b) If it is necessary to disconnect the battery for inspection or repair, always disconnect the cable from the negative (−) terminal which is grounded to the vehicle body.
   (c) To prevent damage to the battery terminal post, loosen the terminal nut and raise the cable straight up without twisting or prying it.
   (d) Clean the battery terminal posts and cable terminals with a clean shop rag. Do not scrape them with a file or other abrasive objects.
   (e) Install the cable terminal to the battery post with the nut loose, and tighten the nut after installation. Do not use a hammer to tap the terminal onto the post.
   (f) Be sure the cover for the positive (+) terminal is properly in place.
4. Check hose and wiring connectors to make sure that they are secure and correct.
5. Non−reusable parts
   (a) Always replace cotter pins, gaskets, O−rings and oil seals etc. with new ones.
   (b) Non−reusable parts are indicated in the component illustrations by the "◆" symbol.

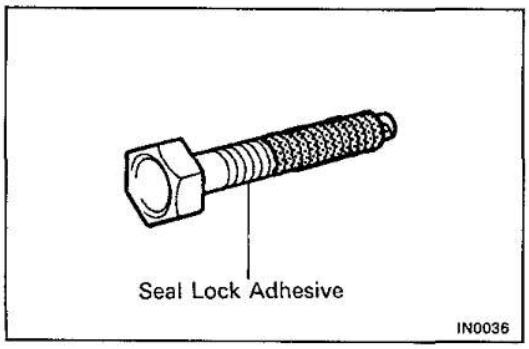

6. Precoated parts
   Precoated parts are bolts and nuts, etc. that are coated with a seal lock adhesive at the factory.
   (a) If a precoated part is retightened, loosened or caused to move in any way, it must be recoated with the specified adhesive.

(b) When reusing precoated parts, clean off the old adhesive and dry with compressed air. Then apply the specified seal lock adhesive to the bolt, nut or threads.

(c) Precoated parts are indicated in the component illustratiions by the "★" symbol.

7. When necessary, use a sealer on gaskets to prevent leaks.
8. Carefully observe all specifications for bolt tightening torques. Always use a torque wrench.
9. Use of special service tools (SST) and special service materials (SSM) may be required, depending on the nature of the repair. Be sure to use SST and SSM where specified and follow the proper work procedure. A list of SST and SSM can be found at the back of this manual.

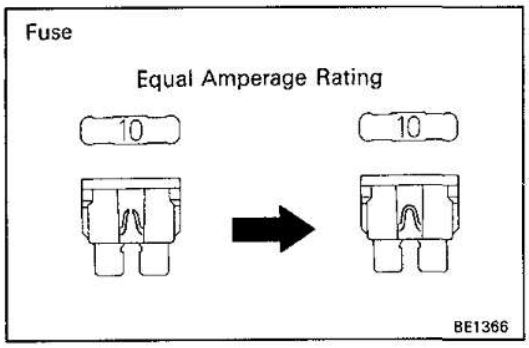

10. When replacing fuses, be sure the new fuse has the correct amperage rating. DO NOT exceed the rating or use one with a lower rating.
11. Care must be taken when jacking up and supporting the vehicle. Be sure to lift and support the vehicle at the proper locations.
    (a) If the vehicle is to be jacked up only at the front or rear end, be sure to block the wheels at the opposite end in order to ensure safety.
    (b) After the vehicle is jacked up, be sure to support it on stands. It is extremely dangerous to do any work on a vehicle raised on a jack alone, even for a small job that can be finished quickly.
12. Observe the following precautions to avoid damage to the p arts:
    (a) Do not open the cover or case of the ECU unless absolutely necessary. (If the IC terminals are touched, the IC may be destroyed by static electricity.)

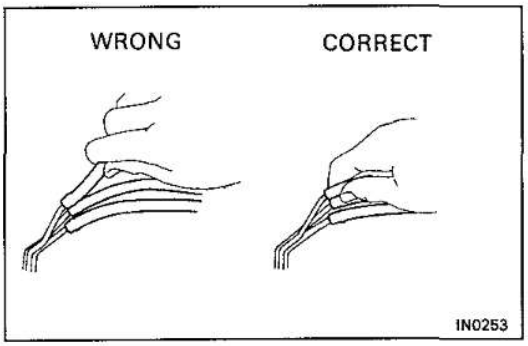

    (b) To disconnect vacuum hoses, pull on the end, not the middle of the hose.
    (c) To pull apart electrical connectors, pull on the connector itself, not the wires.
    (d) Be careful not to drop electrical components, such as sensors or relays. If they are dropped on a hard floor, they should be replaced and not reused.

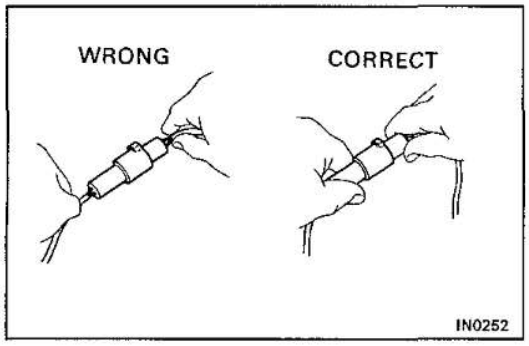

(e) When steam cleaning an engine, protect the distributor, air filter, and VCV from water.

(f) Never use an impact wrench to remove or install temperature switches or temperature sensors.

(g) When checking continuity at the wire connector, insert the tester probe carefully to prevent terminals from bending.

(h) When using a vacuum gauge, never force the hose onto a connector that is too large. Use a step—down adapter instead. Once the hose has been stretched, it may leak.

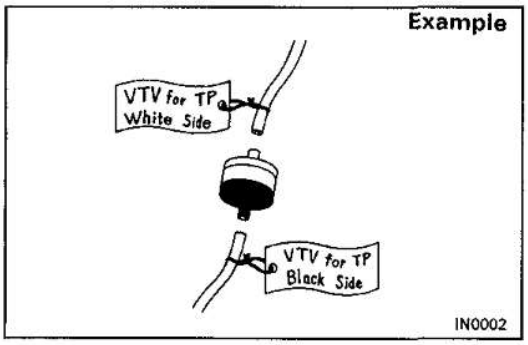

13. Tag hoses before disconnecting them:
    (a) When disconnecting vacuum hoses, use tags to identify how they should be reconnected.
    (b) After completing a job, double check that the vacuum hoses are properly connected. A label under the hood shows the proper layout.

IN

ABBREVIATIONS USED IN THIS MANUAL

IN024-01

AAP	Auxiliary Acceleration Pump
ASV	Air Switching Valve
A/T	Automatic Transmission
BTDC	Before Top Dead Center
CB	CHock Breaker
DOHC	Double Over Head Cam
DP	Dash Pot
ECU	Electronic Control Unit
ESA	Electronic Spark Advance
EX	Exhaust (Manifold, Valve)
Ex.	Except
FICB	Fast Idle Cam Breaker
FIPG	Formed in Place Gasket
FL	Fusible Link
IC	Integreated Circuit
IG	Ignition
IN	Intake (Manifold, Valve)
J/B	Junction Block
LH	Left—Hand
Max.	Maximum
Min.	Minimum
MP	Multipurpose
M/T	Manual Transmission
O/S	Oversize
OVCV	Outer Vent Control Valve
PCV	Positive Crankcase Ventilation
RH	Right—Hand
SSM	Special Service Materials
SST	Special Service Tools
STD	Standard
TCCS	Toyota Computer Controlled System
TDC	Top Dead Center
TEMP.	Temperature
TP	Throttle Positioner
U/S	Undersize
VCV	Vacuum Control Valve
VSV	Vacuum Switching Valve
w/	With
w/o	Without

STANDARD BOLT TORQUE SPECIFICATIONS

IN00V-01

IN

HOW TO DETERMINE BOLT STRENGTH

	Mark	Class
Hexagon head bolt	 Bolt head No. 4– 5– 6– 7– 8– 9– 10– 11–	4T 5T 6T 7T 8T 9T 10T 11T
	 No mark	4T
Hexagon flange bolt w/ washer hexagon bolt	 No mark	4T
Hexagon head bolt	 Two protruding lines	5T
Hexagon flange bolt w/ washer hexagon bolt	 Two protruding lines	6T
Hexagon head bolt	 Three protruding lines	7T
Hexagon head bolt	 Four protruding lines	8T

	Mark	Class
Stud bolt	 No mark	4T
	 Grooved	6T
Welded bolt	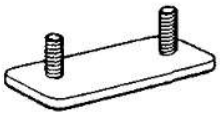	4T

V00078

IN

SPECIFIED TORQUE FOR STANDARD BOLTS

Class	Diameter mm	Pitch mm	Specified torque					
			Hexagon head bolt			Hexagon flange bolt		
			N·m	kgf·cm	ft·lbf	N·m	kgf·cm	ft·lbf
4T	6	1	5	55	48 in.·lbf	6	60	52 in.·lbf
	8	1.25	12.5	130	9	14	145	10
	10	1.25	26	260	19	29	290	21
	12	1.25	47	480	35	53	540	39
	14	1.5	74	760	55	84	850	61
	16	1.5	115	1,150	83	–	–	–
5T	6	1	6.5	65	56 in.·lbf	7.5	75	65 in.·lbf
	8	1.25	15.5	160	12	17.5	175	13
	10	1.25	32	330	24	36	360	26
	12	1.25	59	600	43	65	670	48
	14	1.5	91	930	67	100	1,050	76
	16	1.5	140	1,400	101	–	–	–
6T	6	1	8	80	69 in.·lbf	9	90	78 in.·lbf
	8	1.25	19	195	14	21	210	15
	10	1.25	39	400	29	44	440	32
	12	1.25	71	730	53	80	810	59
	14	1.5	110	1,100	80	125	1,250	90
	16	1.5	170	1,750	127	–	–	–
7T	6	1	10.5	110	8	12	120	9
	8	1.25	25	260	19	28	290	21
	10	1.25	52	530	38	58	590	43
	12	1.25	95	970	70	105	1,050	76
	14	1.5	145	1,500	108	165	1,700	123
	16	1.5	230	2,300	166	–	–	–
8T	8	1.25	29	300	22	33	330	24
	10	1.25	61	620	45	68	690	50
	12	1.25	110	1,100	80	120	1,250	90
9T	8	1.25	34	340	25	37	380	27
	10	1.25	70	710	51	78	790	57
	12	1.25	125	1,300	94	140	1,450	105
10T	8	1.25	38	390	28	42	430	31
	10	1.25	78	800	58	88	890	64
	12	1.25	140	1,450	105	155	1,600	116
11T	8	1.25	42	430	31	47	480	35
	10	1.25	87	890	64	97	990	72
	12	1.25	155	1,600	116	175	1,800	130

V00079

ENGINE MECHANICAL

DESCRIPTION

EG27C-01

The 1FZ—FE and 1FZ—F engine is an in—line, 6—cylinder, 4.5 liter DOHC 24 valve engine.

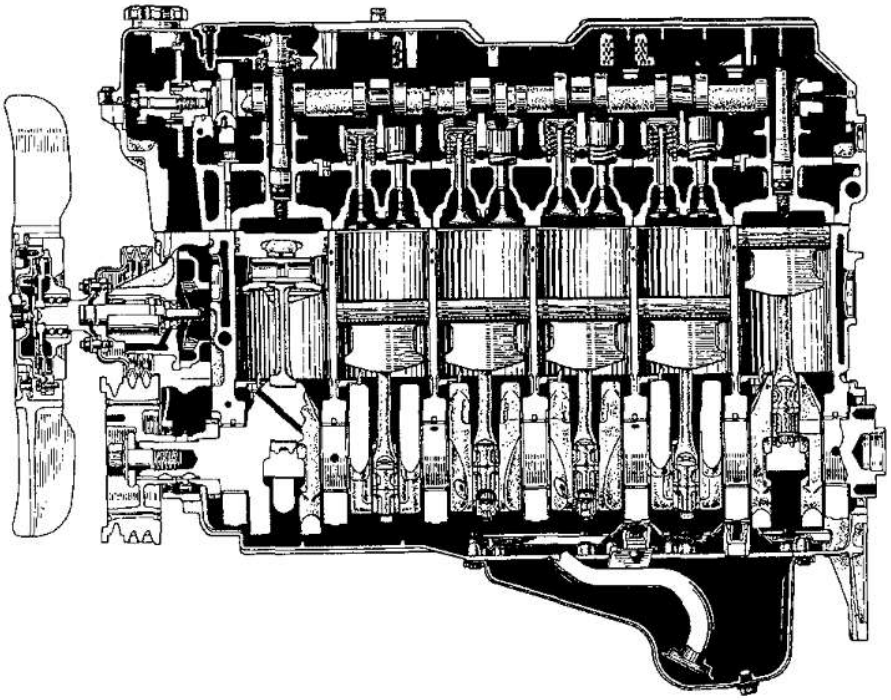

1FZ-FE

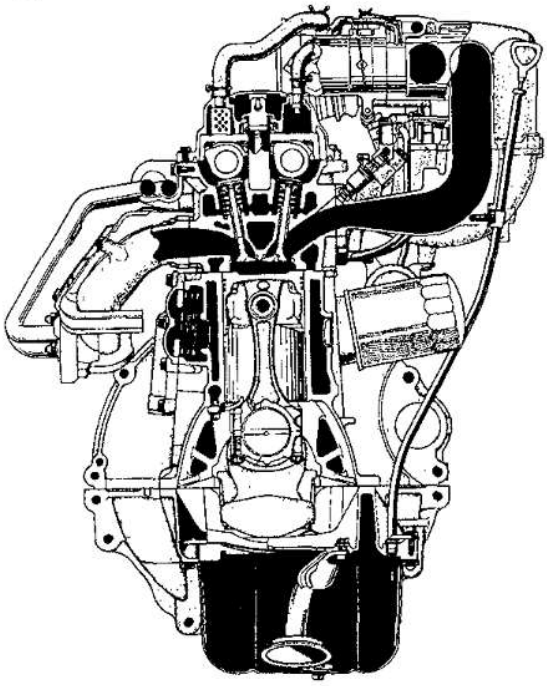

1FZ-F

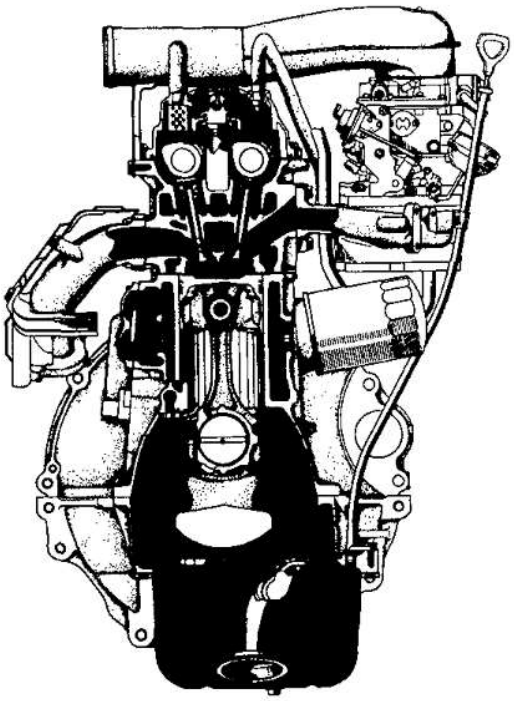

P09065
P09064 P05126

Z06448

The 1FZ–FE and 1FZ–F engines are an in–line, 6–cylinder engine with the cylinders numbered 1–2–3–4–5–6 from front. The crankshaft is supported by 7 bearings inside the crankcase. These bearings are made of aluminum alloy.
The crankshaft is integrated with 12 weights for balance. Oil holes are provided in the crankshaft to supply oil to the connecting rods, bearing, pistons and other components.
The firing order is 1–5–3–6–2–4. The cylinder head is made of aluminum alloy, with a cross flow type intake and exhaust layout and with pent–roof type combustion chambers. The spark plugs are located in the center of the combustion chambers.
Exhaust and intake valves are equipped with irregular pitch springs made of special valve spring carbon steel which are capable of following for the full range of engine speeds.
The intake camshaft is driven by a timing chain, and a gear on the intake camshaft engages with a gear on the exhaust camshaft to drive it. The cam journal is supported at 7 places between the valve lifters of each cylinder and on the front end of the cylinder head. Lubrication of the cam journals and gears is accomplished by oil being supplied through the oiler port in the center of the camshaft.
Valve adjusting shims are located above the valve lifters.
Pistons are made of high temperature–resistant aluminum alloy, and a depression is built into the piston head to prevent interference with the valves.
Piston pins are the full–floating type, with the pins fastened to neither the piston boss nor the connecting rods. Instead, snap rings are fitted on both ends of the pins, preventing the pins from falling out.
The No.1 compression ring is made of stianless steel and the No.2 compression ring is made of cast iron. The oil ring is made of a stainless steel. The outer diameter of each piston ring is slightly larger than the diameter of the piston and the flexibility of the rings allows them to hug the cylinder walls when they are mounted on the piston. No.1 and No.2 compression rings work to prevent gas leakage from the cylinder and the oil ring works to scrape oil off the cylinder walls to prevent it from entering the combustion chambers.
The cylinder block is made of cast iron. It has 6 cylinder which are approximately twice the length of the piston stroke. The top of each cylinder is closed off by the cylinder head and the lower end of the cylinders becomes the crankcase, in which the crankshaft is installed. In addition, the cylinder block contains a water jacket, through which coolant is pumped to cool the cylinders.
No.1 and No.2 oil pans are bolted onto the bottom of the cylinder block. The No.1 oil pan is an oil reservoir made of combination of aluminum alloy. The No.2 oil pan is an oil reservoir made of combination of pressed steel sheet. A dividing plate is included inside the oil pan to keep sufficient oil in the bottom of the pan even when the vehicle is tilted. This dividing plate also prevents the oil from making waves when the vehicle is stopped suddenly and the oil shifts away from the oil pump suction pipe.
Plastic region tightening bolts are used for the cylinder head, main bearing cap and connecting rod.

PREPARATION

SST (SPECIAL SERVICE TOOLS)

EQ0AY-0E

	09032-00100 Oil Pan Seal Cutter	
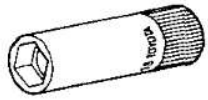	09155-16100 Spark Plug Wrench	
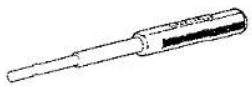	09201-15010 Valve Stem Guide Remover & Replacer	
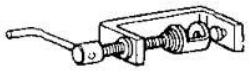	09202-70010 Valve Spring Compressor	
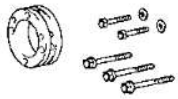	09213-58012 Crankshaft Pulley Hoolding Tool	
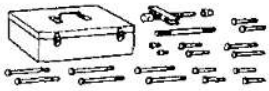	09213-60017 Crankshaft Pulley & Gear Puller Set	
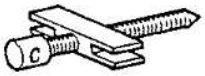	(09213-00020) Body With Bolt	
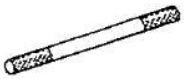	(09213-00030) Handle	
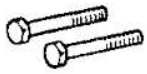	(09213-00060) Bolt Set	
	09213-36020 Timing Gear Remover	
	09223-15030 Oil Seal & Bearing Replacer	Crankshaft rear oil seal
	09228-44011 Oil Filter Wrench	
	09236-00101 Water Pump Overhaul Tool Set	

	(09236−15010) Bearing Stay	Valve stem oil seal
	09243−00020 Idle Adjusting Screw Wrench	
	09248−66011 Valve Clearance Adjust Tool Set	
	(09248−05310) Valve Lifter Press	
	(09248−06020) Valve Lifter Stopper	
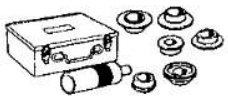	09316−60010 Transmission & Transfer Bearing Replacer	
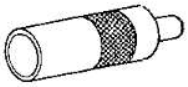	(09316−00010) Replacer Pipe	Crankshaft front oil seal
	(09316−00050) Replacer "D"	Crankshaft front oil seal
	09330−00021 Companion Flange Holding Tool	Crankshaft pulley
	09608−30012 Front Hub & Drive Pinion Bearing Tool Set	
	(09608−04020) Handle	Crankshaft rear oil seal Spark plug tube gasket
	(09608−04060) Front Hub Outer Bearing Cup Replacer	Spark plug tube gasket
	09631−20031 Oil Seal "B" Remover	Conecting rod bushing
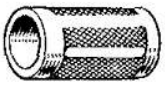	09636−20010 Upper Ball Joint Dust Cover Replacer	Crankshaft timing gear

	09816−30010	Oil Pressure Switch Socket	Knock sensor
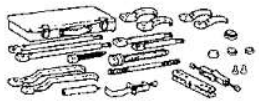	09950−20017	Universal Puller	

EG

RECOMMENDED TOOLS

EG0AZ−07

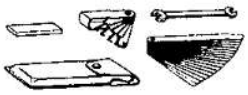	*09200−00010*	*Engine Adjust Kit*	
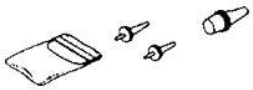	09258−00030	Hose Plug Set	Plug for the vacuum hose, fuel hose etc.

EQUIPMENT

EG090−01

Battery specific gravity gauge	
Caliper gauge	
CO/HC meter	
Compression gauge	
Connecting rod aligner	
Cylinder gauge	
Dial indicator	
Dye penetrant	
Engine tune−up tester	
Heater	
Magnetic finger	
Micrometer	
Piston ring compressor	
Piston ring expander	
Plastigage	
Precision straight edge	

Soft brush	
Spring tester	Valve spring
Steel square	Valve spring
Thermometer	
Torque wrench	
Valve seat cutter	
Vernier calipers	

SSM (SPECIAL SERVICE MATERIALS)

EG081-OM

08826-00080	Seal packing or equivalent	Over the space between the cylinder block and timing chain case Timing chain cover
08826-00080	Seal packing or equivalent	Semi-circular plug Oil pan Rear oil sear retainer
08833-00070	Adhesive 1324, THREE BOND 1324 or equivalent	Plug tube
08833-00080	Adhesive 1344, THREE BOND 1344, LOCTITE 242 or equivalent	BVSV

TROUBLESHOOTING

EG0V0-04

You will find the troubles easier using the table well shown below. In this table, each number shows the priority of causes in troubles. Check each part in order. If necessary, replace these parts.

EG

Symptom \ Suspect area		RPM Signal Circuit	Ignition Signal Circuit	Oxygen Sensor Circuit	Coolant Temp. Sensor Circuit	Intake Air Temp. Sensor Circuit	Air Flow Meter Circuit	Throttle Position Sensor Circuit	STA Signal Circuit	Knock Sensor Circuit	NSW Signal Circuit	A/C Signal Circuit	Fuel Pump Circuit	Fuel Pressure Regulator	Fuel Lines	Injectors	Fuel Pressure Control VSV Circuit
	See page	IG-13 IG-32	IG-6 IG-25	EG-216 EG-234	EG-211 EG-229	EG-210 EG-228	EG-208 EG-226	EG-206 EG-224	EG-212 EG-230	—	—	—	EG-235	EG-243	—	EG-246	EG-282
Does not start	Engine does not crank										2						
	Starter runs — engine does not crank																
	No initial combustion	12	1				5						6				
	No complete combustion				5		2							4		10	
Difficult to start	*Engine cranks slowly*											2					
	Under normal condition	13	14		5	15							8	7	9	17	
	Cold engine				1	6			2				8	7	9	10	
	Hot engine				1	6							8	7	9	10	5
Poor idling	Incorrect first idle				2												
	High engine idle speed				2	4		5			7	6				8	
	Low engine idle speed				1		4									5	
	Rough idling		18		3		13						8	7	9	17	
	Misfire		5		7		9									10	
Poor drivability	Hesitation Poor acceleration			12	10	11	9	8					14	13	15	18	
	Backfire			7	4	8	6	5					10	9	11	12	
	Muffler explosion (after fire)			8	3	7	5	6						4		9	
	Surging													2		5	
	Knocking									1							
Engine stall	Soon after starting				9		8						4	3	5	10	
	After accelerator pedal depressed						1	3						5	6	7	
	After accelerator pedal released						3										
	During A/C operation											1					
	When N to D shift										1						
Others	*Poor fuel economy*			19	14	20	16	15			17	18				12	13
	Engine overheat									9							
	Engine overcool																
	Excessive oil consumption																
	Low oil pressure																
	High oil pressure																
	Starter keeps running																
	Battery often discharges																

HINT: When inspecting a wire harness or circuit, the electrical wiring diagrams at the end of repair manual should be referred to and the circuits of related systems also should be checked.

V02791

ISC Valve Circuit	EFI Main Relay Circuit	Circuit Opening Relay	Fuel Cut System	ECU	Fuel Quality	Fuel Leakage	Coolant Leakage	Vaccum Leakage	Oil Leakage	Starter	Spark Plug	Distributor	EGR System	Accelerator Pedal Link	Brakes Drag Even when Released	Cooling Fan System	Compression	Valve Clearance	Valve Timing	Timing Chain
EG-214 232	EG-272	EG-273	EG-295	EG-291	—	—	—	—	—	ST-4	IG-10 29	IG-15 34	—	—	—	—	EG-35	EG-15	EG-112	EG-120
										1										
										1										
8	3	4		13	7							2					9		10	11
3									1								6		8	9
										1										
4				18	2				1		3	16	6				10		12	
5				11	4				3											
4				11	3				2											
3				4										1						
3				9										1						
2				6									3							
10				19	2				1		5	6	4				11	14	15	16
				11	2				1		4	6	3				8			
				19	3				1		5	6	4		2		7	16	17	
				13					1				2						3	
			1	10															2	
				6					1		3	4								
				10	2						3		4			7			5	
7				11	2				1				6							
				8							4		2							
1				4									2							
2				3																
2				3																
			6	2	2	1					7	8	5	3	4		9		11	
							1				8					2			7	5
																1				
								1									3			
								1												
										2										

V02792

EG

Symptom	Suspect area / See page	Water Pump EG-352	Valve Stem Guide Bushing EG-58	Oil Pump EG-368	Connecting Rod Bearing EG-138	Crankshaft Bearing EG-142	Cylinder Head EG-38	Piston Ring EG-150	Fly Wheel Drive Plate —	Radiator and Radiator Cap EG-358	Thermostat EG-355	Drive Belt CH-6	ECT Sender Gauge —	Oil Pressure Switch —	Alternator CH-10	Cylinder Block EG-135
Does not start	Engine does not crank															
	Starter runs — engine does not crank								2							
	No initial combustion															
	No complete combustion							7								
Difficult to start	Engine cranks slowly				3	4										
	Under normal condition							11								
	Cold engine															
	Hot engine															
Poor idling	Incorrect first idle															
	High engine idle speed															
	Low engine idle speed															
	Rough idling						20	12								
	Misfire															
Poor drivability	Hesitation Poor acceleration															
	Backfire															
	Muffler explosion (after fire)															
	Surging															
	Knocking	9								6	8					
Engine stall	Soon after starting															
	After accelerator pedal depressed															
	After accelerator pedal released															
	During A/C operation															
	When N to D shift															
Others	Poor fuel economy							10								
	Engine overheat	6		10			11			3	4		13			12
	Engine overcool										2		3			
	Excessive oil consumption		2				5	4								6
	Low oil pressure			2	3	4								5		
	High oil pressure			1										2		
	Starter keeps running															
	Battery often discharges											1			2	

V02793

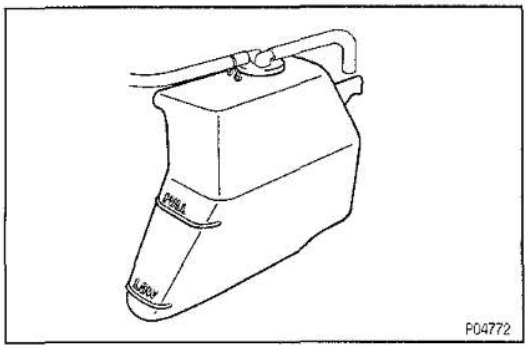

TUNE–UP

ENGINE COOLANT INSPECTION

EG1JN-01

1. CHECK ENGINE COOLANT LEVEL AT RESERVOIR TANK

The coolant level should be between the "LOW" and "FULL" lines at low temperature.

If low, check for leaks and add coolant up to the "FULL" line.

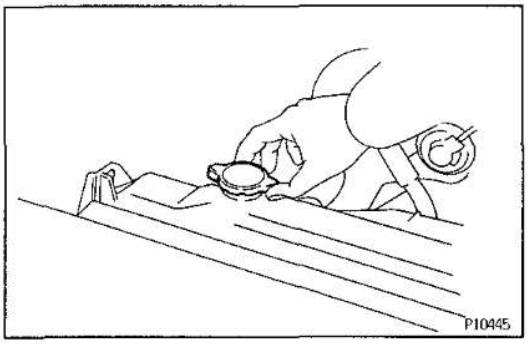

2. CHECK ENGINE COOLANT QUALITY

(a) Remove the radiator cap.

CAUTION: To avoid the danger of being burned, do not remove it while the engine and radiator are still hot, as fluid and steam can be blown out under pressure.

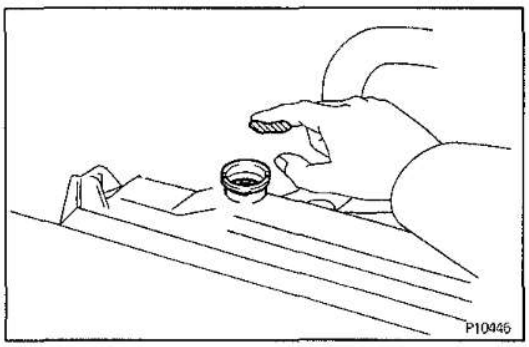

(b) There should not be any excessive deposits of rust or scales around the radiator cap or radiator filler hole, and the coolant should be free from oil.

If excessively dirty, replace the coolant.

(c) Reinstall the radiator cap.

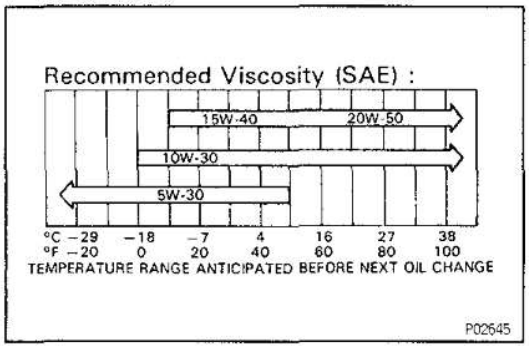

ENGINE OIL INSPECTION

EG094-0A

1. CHECK OIL QUALITY

Check the oil for deterioration, entry of water, discoloring or thinning.

If oil quality is poor, replace it.

Oil grade:

API grade SG or better

If it is impossible to get SG or better you may use SF grade

Recommended viscosity: Refer to illustration

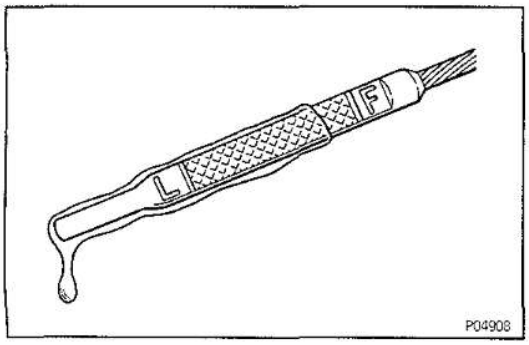

2. CHECK ENGINE OIL LEVEL

The oil level should be between the "L" and "F" marks on the dipstick.

If low, check for leakage and add oil up to the "F" mark.

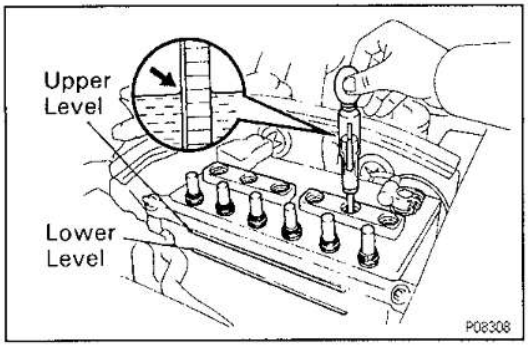

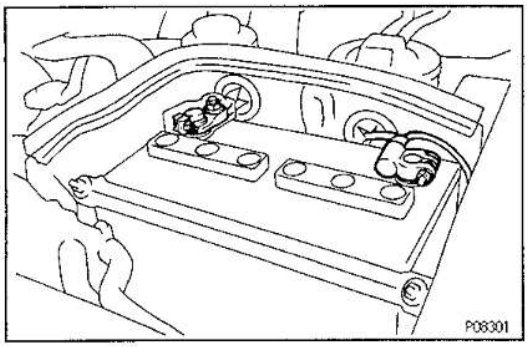

EG0V1-04

BATTERY INSPECTION

1. CHECK BATTERY SPECIFIC GRAVITY AND ELECTROLYTE LEVEL

(a) Check the electrolyte quantity of each cell.
If insufficient, refill with distilled (or purified) water.

(b) Check the specific gravity of each cell.
Standard specific gravity at 20°C (68°F):
1.27 — 1.28 105D31L
1.25 — 1.27 others
If not within specifications, charge the battery.

2. CHECK BATTERY TERMINALS, FUSIBLE LINKS AND FUSES

(a) Check that the battery terminals are not loose or corroded.

(b) Check the fusible links and fuses for continuity.

EG27D-01

AIR FILTER INSPECTION AND CLEANING

1. REMOVE AIR FILTER

Remove the air cleaner cap and air filter.

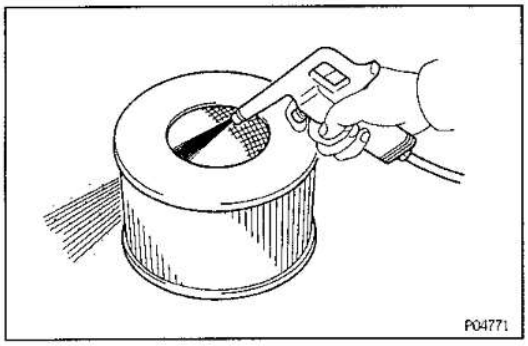

2. INSPECT AND CLEAN AIR FILTER

A. (Paper type)

(a) Visually check that the air filter is not excessively damaged or oily.
If necessary, replace the air filter.

(b) Clean the air filter with compressed air.
First blow from the inside thoroughly, then blow off the outside of the air filter.

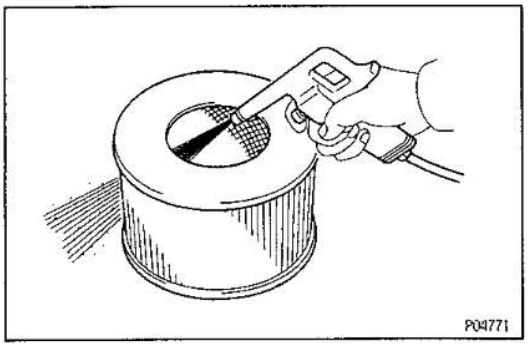

B. (Fabric type)

(a) Visually check that the element is not excessively dirty damaged or oily.

(b) Blow dirt off in the element with compressed air from the inside.

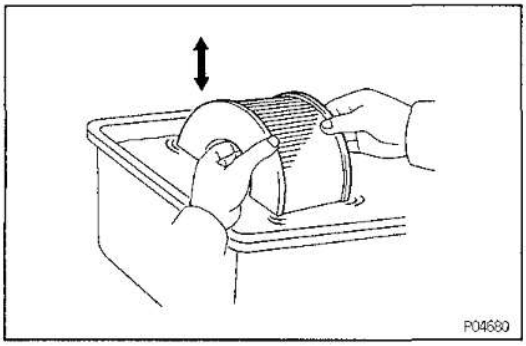

(c) Submerge the element in the water and agitate it up and down ten or more times.
(d) Repeat rinsing in clean water until rise water is clear.

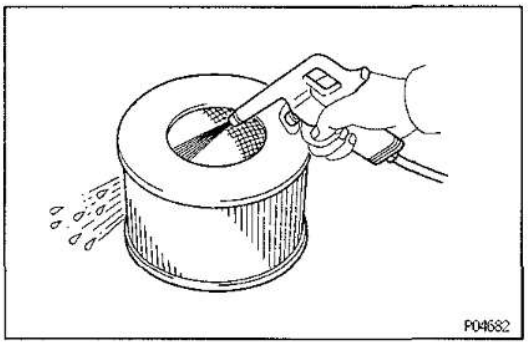

(e) Remove excess water by shaking the element or blowing with compressed air.
NOTICE: Do not beat or drop filter element.
(f) Wipe off dust on the air cleaner case interior.

3. REINSTALL AIR FILTER

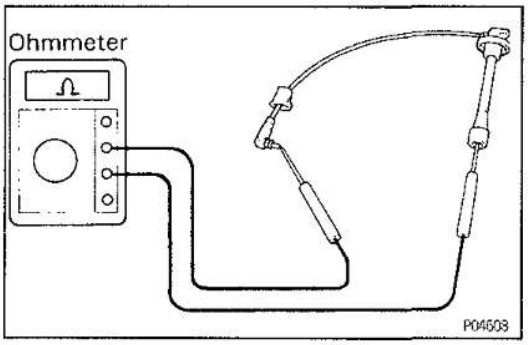

HIGH—TENSION CORDS INSPECTION

EG087—02

(See IG section)
Maximum resistance:
25 kΩ per cord

SPARK PLUGS INSPECTION

EG0NE—04

(See IG section)
Recommended spark plug:

ND	K16R—U
NGK	BKR5EYA

Correct electrode gap:
0.8 mm (0.031 in.)

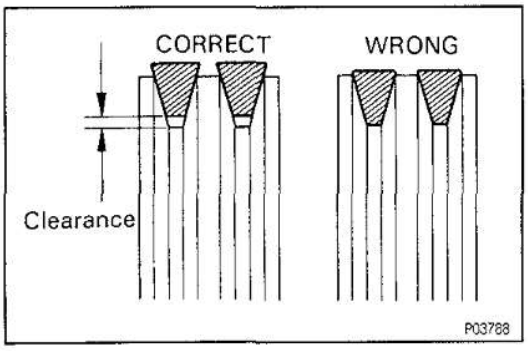

ALTERNATOR DRIVE BELT INSPECTION

EG27E-01

(See CH section)

INSPECT DRIVE BELTS

(a) Visually check the drive belt for cracks, oiliness or wear. Check that the belt does not touch the bottom of the pulley groove.
If necessary, replace the drive belts as a set.

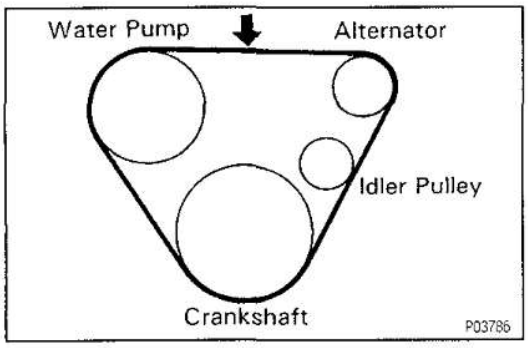

Drive belt deflection (w/ 98N (10kgf, 22lbf))

New belt

11 – 15 mm (0.43 – 0.59 in.)

Used belt

15 – 20 mm (0.59 – 0.79 in.)

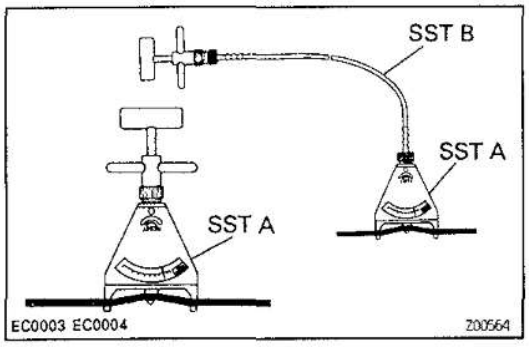

(b) (Reference)
Using SST, measure the belt tension.
SST 95506 – 00020

Drive belt tension(w/ SST):

New belt

33 – 57 kgf

Used belt

15 – 35 kgf

If the belt tension is not as specified, adjust it.

HINT:

- "New belt" refers to a belt which has been used less than 5 minutes on a running engine.
- "Used belt" refers to a belt which has been used on a running engine for 5 minutes or more.
- After installing a new belt, run the engine for about 5 miutes and recheck the belt tension.

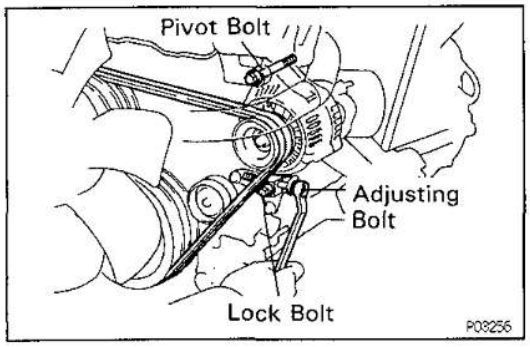

EG27F-01

VALVE CLEARANCE INSPECTION AND ADJUSTMENT

HINT: Inspect and adjust the valve clearance when the engine is cold.

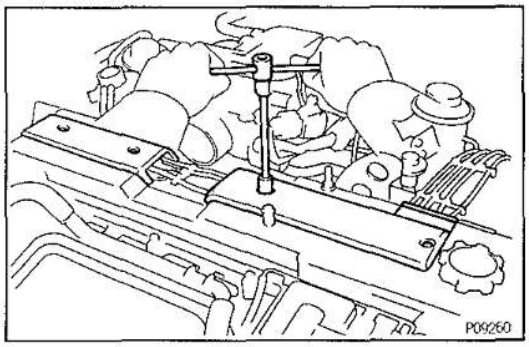

1. REMOVE NO.2 AND NO.3 CYLINDER HEAD COVERS

Remove the four bolts and head covers.

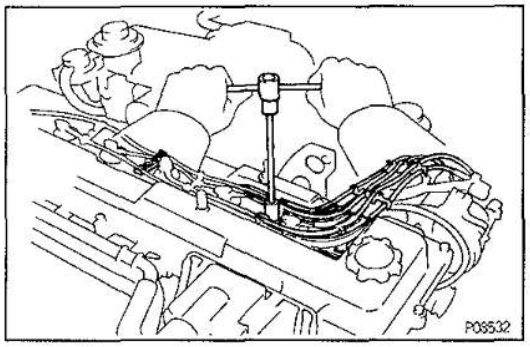

2. DISCONNECT HIGH—TENSION CORDS FROM SPARK PLUGS

(a) Remove the two mounting bolts of the No.1 and No.2 cord clamps.

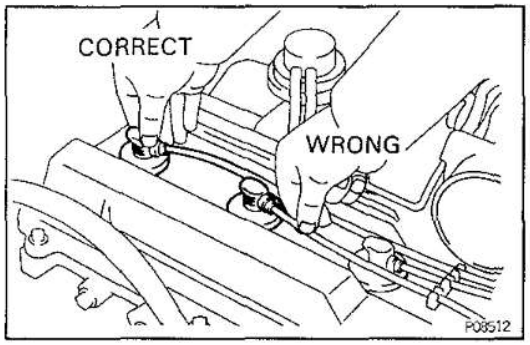

(b) Disconnect the high — tension cords at the rubber boot.
Do Not pull on the cords.
NOTICE: Pulling on or bending the cords may damage the conductor inside.

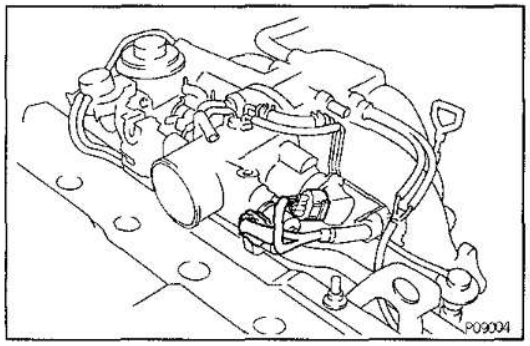

3. (1FZ—FE) REMOVE THROTTLE BODY

(a) Disconnect the throttle position sensor connector.
(b) Disconnect the ISC valve connector.

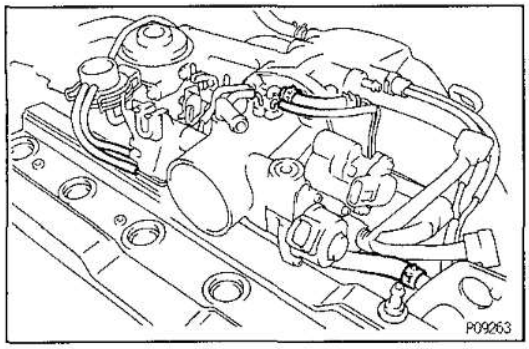

(c) Disconnect the three vacuum hoses.
(d) Disconnect the EVAP hose.
(e) Disconnect the water hose from the No.2 water by—pass pipe.

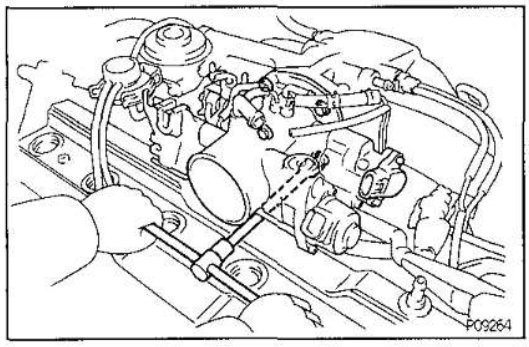

(f) Remove the four bolts, and disconnect the throttle body from the air intake chamber.
(g) Remove the throttle body gasket.

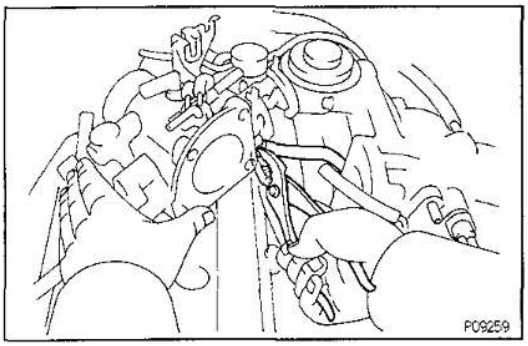

(h) *Disconnect the No.1 water by—pass hose from the* throttle body, and remove the throttle body.

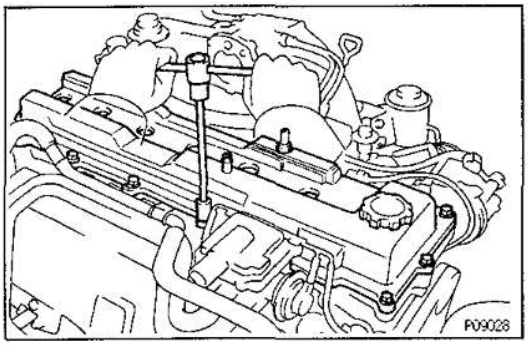

4. REMOVE CYLINDER HEAD COVER

Remove the 13 bolts, cylinder head cover and gasket.

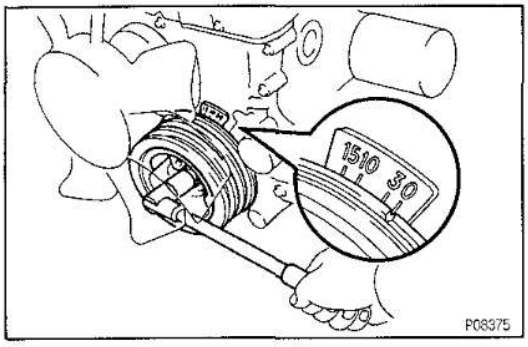

5. SET NO.1 CYLINDER TO TDC/COMPRESSION

(a) Turn the crankshaft pulley, and align its groove with the timing mark "0" of the timing chain cover.

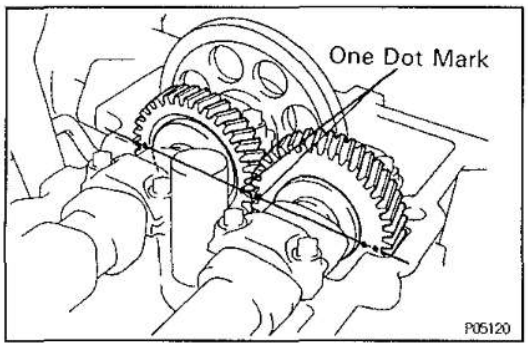

(b) Check that the timing marks (one and two dots) of the camshaft drive and driven gears are in straight line on the cylinder head surface as shown in the illustration. If not, turn the crankshaft one revolution (360°) and align the marks as above.

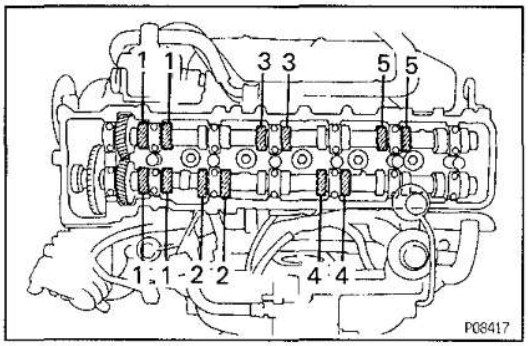

6. INSPECT VALVE CLEARANCE

(a) Check only the valves indicated.

- Using a thickness gauge, measure the clearance between the valve lifter and camshaft.
- Record the out — of — specification valve clearance measurements. They will be used later to determine the required replacement adjusting shim.

Valve clearance (Cold):

Intake

0.15 — 0.25 mm (0.006 — 0.010 in.)

Exhaust

0.25 — 0.35 mm (0.010 — 0.014 in.)

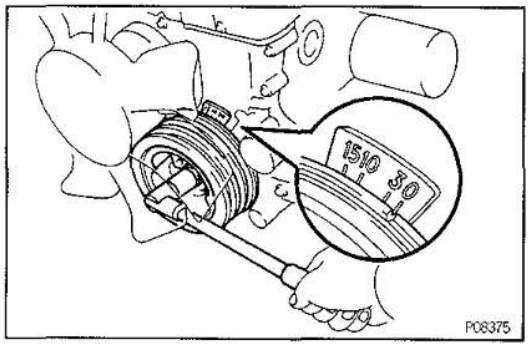

(b) Turn the crankshaft pulley one revolution (360°) and align the its groove with timing mark "0" of the timing chain cover.

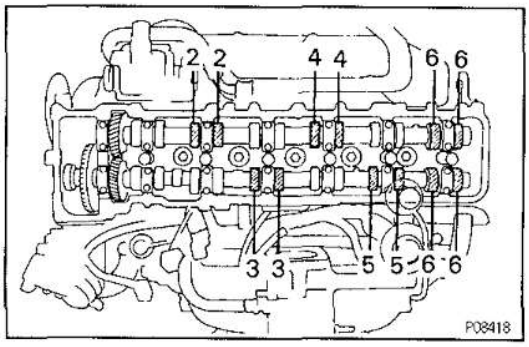

(c) Check only the valves indicated as shown. Measure the valve clearance. (See procedure in step (a))

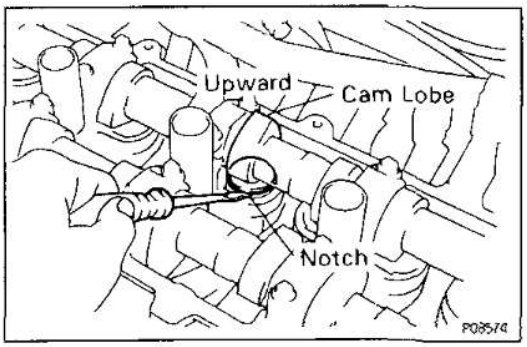

7. ADJUST VALVE CLEARANCE

A. except for Rear valves of No.6 cylinder

(a) Remove the adjusting shim.

- Turn the crankshaft to position the cam lobe of the camshaft on the the adjusting valve upward.
- Position the notch of the valve lifter toward the spark plug side.

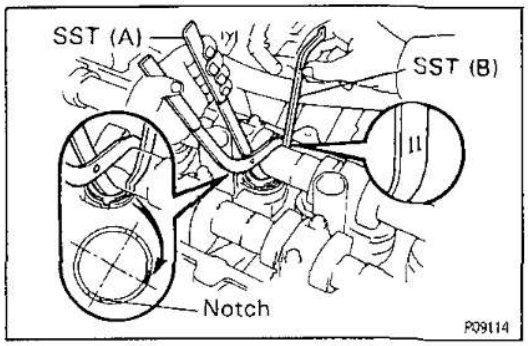

- Using SST (A), press down the valve lifter and place SST (B) between the camshaft and valve lifter flange. Remove SST (A).

SST 09248−66011 (09248−05310, 09248−06020)

HINT:

- Apply SST (B) at slight angle on the side marked with "11", at the position shown in the illustration.
- When SST (B) is inserted too deeply, it will get pinched by the shim. To prevent it from being stuck, insert it shallowly from the outside of the cylinder head, at a slight angle.
- Remove the adjusting shim with a small screwdriver and magnetic finger.

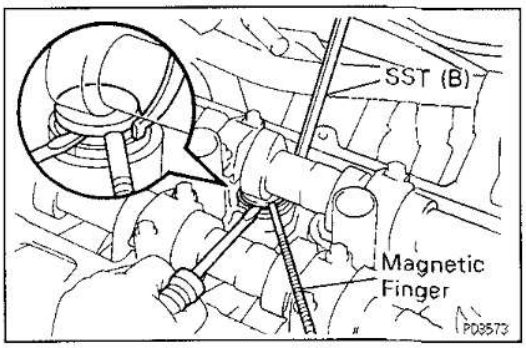

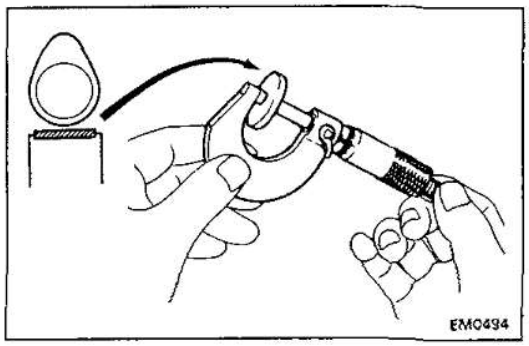

(b) Determine the replacement adjusting shim size by following the Formula or Charts:

- Using a micrometer, measure the thickness of the removed shim.
- Calculate the thickness of a new shim so that the valve cllearance comes within specified value.

T ..... Thickness of removed shim

A ..... Measured valve clearance

N ..... Thickness of new shim

Intake:

N=T + (A − 0.20 mm (0.008 in.))

Exhaust:

N=T + (A − 0.30 mm (0.012 in.))

- Select a new shim with a thickness as close as possible to the calculated value.

HINT: *Shims are available in 17 sized in increments* of 0.05 mm (0.0020 in.), from 2.50 mm (0.0984 in.) to 3.30 mm (0.1299 in.).

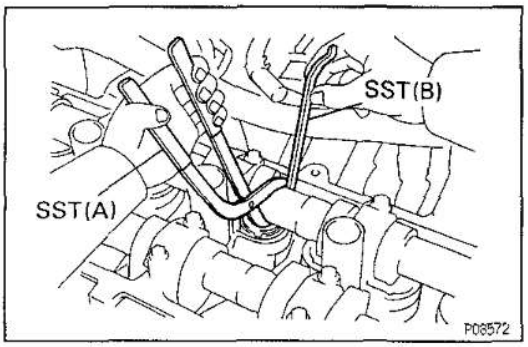

(c) Install a new adjusting shim.
- Place a new adjusting shim on the valve lifter.
- Using SST (A), press down the valve lifter and remove SST (B).

SST 09248−66011 (09248−05310, 09248−06020)

(d) Recheck the valve clearance.

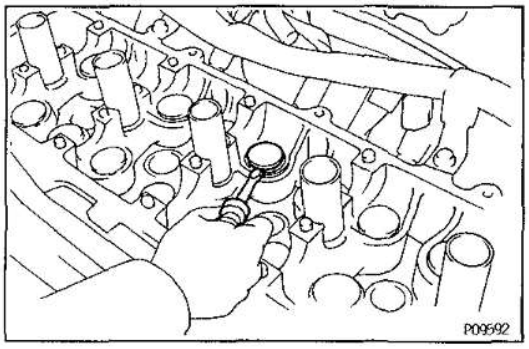

B. Rear valves of No.6 cylinder

(a) Remove the distributor.
(See IG section)

(b) Remove the camshafts.
(See step 39 on pages EG−49 to 51)

(c) Remove the adjusting shim with a small screwdriver.

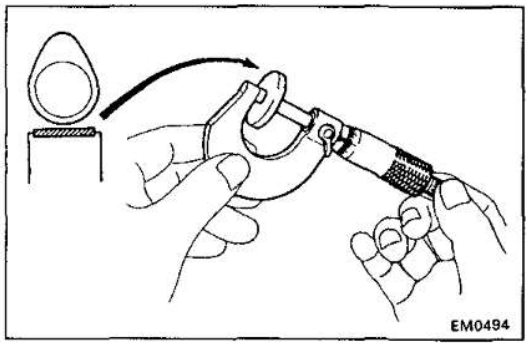

(d) Determine the replacement adjusting shim size by following the Formula or Charts:
- Using a micrometer, measure the thickness of the removed shim.
- Calculate the thickness of a new shim so that the valve cllearance comes within specified value.

T ..... Thickness of removed shim
A ..... Measured valve clearance
N ..... Thickness of new shim

Intake:

N=T + (A − 0.20 mm (0.008 in.))

Exhaust:

N=T + (A − 0.30 mm (0.012 in.))

- Select a new shim with a thickness as close as possible to the calculated value.

HINT: Shims are available in 17 sized in increments of 0.05 mm (0.0020 in.), from 2.50 mm (0.0984 in.) to 3.30 mm (0.1299 in.).

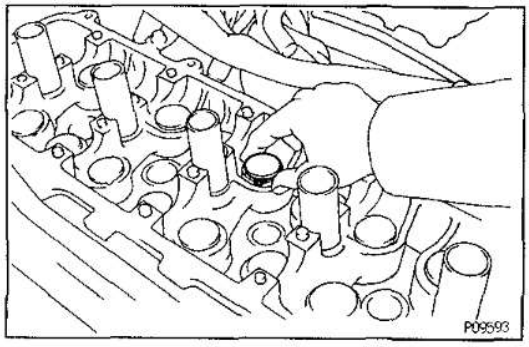

(e) Place a new adjusting shim on the valve lifters.

(f) Install the camshafts.
(See step 7 on pages EG−73 to 76)

(g) Recheck the valve clearance.

(h) Install the distributor.
(See IG section)

Adjusting Shim Selection Chart (Intake)

Installed shim thickness mm (in.) Measured clearance mm (in.)	2.500 (0.0984)	2.520 (0.0992)	2.540 (0.1000)	2.550 (0.1004)	2.560 (0.1008)	2.580 (0.1016)	2.600 (0.1024)	2.620 (0.1031)	2.640 (0.1039)	2.650 (0.1043)	2.660 (0.1047)	2.680 (0.1055)	2.700 (0.1063)	2.710 (0.1067)	2.720 (0.1071)	2.730 (0.1075)	2.740 (0.1079)	2.750 (0.1083)	2.760 (0.1087)	2.770 (0.1091)	2.780 (0.1094)	2.790 (0.1098)	2.800 (0.1102)	2.810 (0.1106)	2.820 (0.1110)	2.830 (0.1114)	2.840 (0.1118)	2.850 (0.1122)	2.860 (0.1126)	2.870 (0.1130)	2.880 (0.1134)	2.890 (0.1138)	2.900 (0.1142)	2.910 (0.1146)	2.920 (0.1150)	2.930 (0.1154)	2.940 (0.1157)	2.950 (0.1161)	2.960 (0.1166)	2.970 (0.1169)	2.980 (0.1173)	2.990 (0.1177)	3.000 (0.1181)	3.010 (0.1185)	3.020 (0.1189)	3.030 (0.1193)	3.040 (0.1197)	3.050 (0.1201)	3.060 (0.1205)	3.070 (0.1209)	3.080 (0.1213)	3.090 (0.1217)	3.100 (0.1220)	3.120 (0.1228)	3.140 (0.1236)	3.150 (0.1240)	3.160 (0.1244)	3.180 (0.1252)	3.200 (0.1260)	3.220 (0.1268)	3.240 (0.1276)	3.250 (0.1280)	3.260 (0.1283)	3.280 (0.1291)	3.300 (0.1299)
0.000 – 0.030 (0.0000 – 0.0012)										1	1	1	1	2	2	2	2	2	3	3	3	3	3	4	4	4	4	4	5	5	5	5	5	6	6	6	6	6	7	7	7	7	7	8	8	8	8	8	9	9	9	9	9	10	10	10	11	11	11	12	12	12	13	13	13
0.031 – 0.050 (0.0012 – 0.0020)								1	1	1	1	1	2	2	2	2	3	3	3	3	3	4	4	4	4	4	5	5	5	5	5	6	6	5	6	6	7	7	7	7	7	8	8	8	8	8	9	9	9	9	9	10	10	10	11	11	11	11	12	12	13	13	13	13	14
0.051 0.070 (0.0020 – 0.0028)							1	1	1	1	1	2	2	2	3	3	3	3	3	4	4	4	4	4	5	5	5	5	5	6	6	6	6	6	7	7	7	7	7	8	8	8	8	8	9	9	9	9	9	10	10	10	10	11	11	11	11	12	12	13	13	13	13	14	14
0.071 – 0.090 (0.0028 – 0.0035)						1	1	1	1	2	2	2	3	3	3	3	3	4	4	4	4	4	5	5	5	5	5	6	6	6	6	6	7	7	7	7	7	8	8	8	8	8	9	9	9	9	9	10	10	10	10	10	11	11	11	12	12	12	13	13	13	14	14	14	15
0.091 – 0.110 (0.0036 – 0.0043)					1	1	1	1	2	2	2	3	3	3	3	4	4	4	4	4	5	5	5	5	5	6	6	6	6	6	7	7	7	7	7	8	8	8	8	8	9	9	9	9	9	10	10	10	10	10	11	11	11	11	12	12	12	13	13	13	14	14	14	15	15
0.111 – 0.130 (0.0044 – 0.0051)			1	1	1	1	1	2	2	2	3	3	3	4	4	4	4	4	5	5	5	5	5	6	6	6	6	6	7	7	7	7	7	8	8	8	8	8	9	9	9	9	9	10	10	10	10	10	11	11	11	11	11	12	12	12	13	13	13	14	14	14	15	15	15
0.131 – 0.149 (0.0052 – 0.0059)		1	1	1	1	1	2	2	3	3	3	3	4	4	4	4	5	5	5	5	5	6	6	6	6	6	7	7	7	7	7	8	8	8	8	8	9	9	9	9	9	10	10	10	10	10	11	11	11	11	11	12	12	12	13	13	13	13	14	14	15	15	15	15	16
0.150 – 0.250 (0.0059 – 0.0098)																																																																	
0.251 – 0.270 (0.0099 – 0.0106)	2	3	3	3	3	4	4	5	5	5	5	6	6	6	7	7	7	7	7	8	8	8	8	8	9	9	9	9	9	10	10	10	10	10	11	11	11	11	11	12	12	12	12	12	13	13	13	13	13	14	14	14	14	15	15	15	15	16	16	17	17	17	17	17	
0.271 – 0.290 (0.0107 – 0.0114)	3	3	3	4	4	4	5	5	5	6	6	6	7	7	7	7	7	8	8	8	8	8	9	9	9	9	9	10	10	10	10	10	11	11	11	11	11	12	12	12	12	12	13	13	13	13	13	14	14	14	14	14	15	15	15	16	16	16	17	17	17	17	17		
0.291 – 0.310 (0.0115 – 0.0122)	3	3	4	4	4	5	5	5	6	6	6	7	7	7	7	8	8	8	8	8	9	9	9	9	9	10	10	10	10	10	11	11	11	11	11	12	12	12	12	12	13	13	13	13	13	14	14	14	14	14	15	15	15	15	16	16	16	17	17	17	17				
0.311 – 0.330 (0.0122 – 0.0130)	3	4	4	4	5	5	5	6	6	6	7	7	7	8	8	8	8	8	8	9	9	9	9	10	10	10	10	10	11	11	11	11	11	12	12	12	12	12	13	13	13	13	13	14	14	14	14	14	15	15	15	15	16	16	16	16	17	17	17	17					
0.331 – 0.350 (0.0130 – 0.0138)	4	4	5	5	5	5	6	6	7	7	7	7	8	8	8	8	9	9	9	9	9	10	10	10	10	10	11	11	11	11	11	12	12	12	12	12	13	13	13	13	13	14	14	14	14	14	15	15	15	15	15	16	16	16	16	17	17	17	17						
0.351 – 0.370 (0.0138 – 0.0146)	4	5	5	5	5	6	6	7	7	7	7	8	8	8	9	9	9	9	9	10	10	10	10	10	11	11	11	11	11	12	12	12	12	12	13	13	13	13	13	14	14	14	14	14	15	15	15	15	15	16	16	16	16	17	17	17	17	17							
0.371 – 0.390 (0.0146 – 0.0154)	5	5	5	6	6	6	7	7	7	8	8	8	9	9	9	9	9	10	10	10	10	10	11	11	11	11	11	12	12	12	12	12	13	13	13	13	13	14	14	14	14	14	15	15	15	15	15	16	16	16	16	16	17	17	17	17	17								
0.391 – 0.410 (0.0154 – 0.0161)	5	5	6	6	6	7	7	7	8	8	8	9	9	9	9	10	10	10	10	10	11	11	11	11	11	12	12	12	12	12	13	13	13	13	13	14	14	14	14	14	15	15	15	15	15	16	16	16	16	16	17	17	17	17	17										
0.411 – 0.430 (0.0162 – 0.0169)	5	6	6	6	7	7	7	8	8	8	9	9	9	10	10	10	10	10	11	11	11	11	11	12	12	12	12	12	13	13	13	13	13	14	14	14	14	14	15	15	15	15	15	16	16	16	16	16	17	17	17	17	17	17											
0.431 – 0.450 (0.0170 – 0.0177)	6	6	7	7	7	7	8	8	9	9	9	9	10	10	10	10	11	11	11	11	11	12	12	12	12	12	13	13	13	13	13	14	14	14	14	14	15	15	15	15	15	16	16	16	16	16	17	17	17	17	17	17	17												
0.451 – 0.470 (0.0178 – 0.0185)	6	7	7	7	7	8	8	9	9	9	9	10	10	10	11	11	11	11	11	12	12	12	12	12	13	13	13	13	13	14	14	14	14	14	15	15	15	15	15	16	16	16	16	16	17	17	17	17	17	17	17														
0.471 – 0.490 (0.0185 – 0.0193)	7	7	7	8	8	8	9	9	9	10	10	10	11	11	11	11	11	12	12	12	12	12	13	13	13	13	13	14	14	14	14	14	15	15	15	15	15	16	16	16	16	16	17	17	17	17	17	17	17																
0.491 – 0.510 (0.0193 – 0.0201)	7	7	8	8	8	9	9	9	10	10	10	11	11	11	11	12	12	12	12	12	13	13	13	13	13	14	14	14	14	14	15	15	15	15	15	16	16	16	16	16	17	17	17	17	17	17	17																		
0.511 – 0.530 (0.0201 – 0.0209)	8	8	8	8	9	9	9	10	10	10	11	11	11	12	12	12	12	12	13	13	13	13	13	14	14	14	14	14	15	15	15	15	15	16	16	16	16	16	17	17	17	17	17	17	17																				
0.531 – 0.550 (0.0209 – 0.0217)	8	8	9	9	9	9	10	10	11	11	11	11	12	12	12	12	13	13	13	13	13	14	14	14	14	14	15	15	15	15	15	16	16	16	16	16	17	17	17	17	17	17	17																						
0.551 – 0.570 (0.0217 – 0.0224)	8	9	9	9	9	10	10	11	11	11	11	12	12	12	13	13	13	13	13	14	14	14	14	14	15	15	15	15	15	16	16	16	16	16	17	17	17	17	17	17	17																								
0.571 – 0.590 (0.0225 – 0.0232)	9	9	9	10	10	10	11	11	11	12	12	12	13	13	13	13	13	14	14	14	14	14	15	15	15	15	15	16	16	16	16	16	17	17	17	17	17	17	17																										
0.591 – 0.610 (0.0233 – 0.0240)	9	9	10	10	10	11	11	11	12	12	12	13	13	13	13	14	14	14	14	14	15	15	15	15	15	16	16	16	16	16	17	17	17	17	17	17	17																												
0.611 – 0.630 (0.0241 – 0.0248)	10	10	10	10	11	11	11	12	12	12	13	13	13	14	14	14	14	14	15	15	15	15	15	16	16	16	16	16	17	17	17	17	17	17	17																														
0.631 – 0.650 (0.0248 – 0.0256)	10	10	11	11	11	11	12	12	13	13	13	13	14	14	14	14	15	15	15	15	15	16	16	16	16	16	17	17	17	17	17	17	17																																
0.651 – 0.670 (0.0256 – 0.0264)	10	11	11	11	11	12	12	13	13	13	13	14	14	14	15	15	15	15	15	16	16	16	16	16	17	17	17	17	17	17	17																																		
0.671 – 0.690 (0.0264 – 0.0272)	11	11	11	11	12	12	13	13	13	14	14	14	15	15	15	15	15	16	16	16	16	16	17	17	17	17	17	17	17																																				
0.691 – 0.710 (0.0272 – 0.0280)	11	11	12	12	12	13	13	13	14	14	14	15	15	15	15	16	16	16	16	16	17	17	17	17	17	17	17																																						
0.711 – 0.730 (0.0280 – 0.0287)	12	12	12	12	13	13	13	14	14	14	15	15	15	16	16	16	16	16	17	17	17	17	17	17	17																																								
0.731 – 0.750 (0.0288 – 0.0295)	12	12	13	13	13	13	14	14	15	15	15	15	16	16	16	16	17	17	17	17	17	17	17																																										
0.751 – 0.770 (0.0296 – 0.0303)	12	13	13	13	13	14	14	15	15	15	15	16	16	16	16	17	17	17	17	17	17																																												
0.771 – 0.790 (0.0304 – 0.0311)	13	13	13	13	14	14	15	15	15	16	16	16	17	17	17	17	17	17	17																																														
0.791 – 0.810 (0.0311 – 0.0319)	13	13	14	14	14	15	15	15	16	16	16	17	17	17	17	17	17																																																
0.811 – 0.830 (0.0319 – 0.0327)	14	14	14	14	15	15	15	16	16	16	17	17	17	17	17																																																		
0.831 – 0.850 (0.0327 – 0.0335)	14	14	15	15	15	15	16	16	17	17	17	17	17																																																				
0.851 – 0.870 (0.0335 – 0.0343)	14	15	15	15	15	16	16	17	17	17	17	17																																																					
0.871 – 0.890 (0.0343 – 0.0350)	15	15	15	15	16	16	17	17	17	17	17																																																						
0.891 – 0.910 (0.0351 – 0.0358)	15	15	16	16	16	17	17	17	17																																																								
0.911 – 0.930 (0.0359 – 0.0366)	16	16	16	16	17	17	17	17																																																									
0.931 – 0.950 (0.0367 – 0.0374)	16	16	17	17	17	17	17																																																										
0.951 – 0.970 (0.0374 – 0.0382)	16	17	17	17	17	17																																																											
0.971 – 0.990 (0.0382 – 0.0390)	17	17	17	17																																																														
0.991 – 1.010 (0.0390 – 0.0398)	17	17	17																																																															
1.011 – 1.030 (0.0398 – 0.0406)	17	17																																																																	
1.031 – 1.050 (0.0406 – 0.0413)	17																																																																		

V00831

Intake valve clearance (Cold):

0.15 — 0.25 mm (0.006 — 0.010 in.)

EXAMPLE: The 2.800 mm (0.1102 in.) shim is installed, and the measured clearance is 0.440 mm (0.0173 in.). Replace the 2.800 mm (0.1102 in.) shim with a No. 12 shim.

New shim thickness mm (in.)

Shim No.	Thickness	Shim No.	Thickness
1	2.500 (0.0984)	10	2.950 (0.1161)
2	2.550 (0.1004)	11	3.000 (0.1181)
3	2.600 (0.1024)	12	3.050 (0.1201)
4	2.650 (0.1043)	13	3.100 (0.1220)
5	2.700 (0.1063)	14	3.150 (0.1240)
6	2.750 (0.1083)	15	3.200 (0.1260)
7	2.800 (0.1102)	16	3.250 (0.1280)
8	2.850 (0.1122)	17	3.300 (0.1299)
9	2.900 (0.1142)		

HINT: New shims have the thickness in millimeters imprinted on the face.

Adjusting Shim Selection Chart (Exhaust)

Installed shim thickness mm (in.) Measured clearance mm (in.)	2.500 (0.0984)	2.520 (0.0992)	2.540 (0.1000)	2.550 (0.1004)	2.560 (0.1008)	2.580 (0.1016)	2.600 (0.1024)	2.620 (0.1031)	2.640 (0.1039)	2.650 (0.1043)	2.660 (0.1047)	2.680 (0.1055)	2.700 (0.1063)	2.710 (0.1067)	2.720 (0.1071)	2.730 (0.1075)	2.740 (0.1079)	2.750 (0.1083)	2.760 (0.1087)	2.770 (0.1091)	2.780 (0.1094)	2.790 (0.1098)	2.800 (0.1102)	2.810 (0.1106)	2.820 (0.1110)	2.830 (0.1114)	2.840 (0.1118)	2.850 (0.1122)	2.860 (0.1126)	2.870 (0.1130)	2.880 (0.1134)	2.890 (0.1138)	2.900 (0.1142)	2.910 (0.1146)	2.920 (0.1150)	2.930 (0.1154)	2.940 (0.1157)	2.950 (0.1161)	2.960 (0.1166)	2.970 (0.1169)	2.980 (0.1173)	2.990 (0.1177)	3.000 (0.1181)	3.010 (0.1185)	3.020 (0.1189)	3.030 (0.1193)	3.040 (0.1197)	3.050 (0.1201)	3.060 (0.1205)	3.070 (0.1209)	3.080 (0.1213)	3.090 (0.1217)	3.100 (0.1220)	3.120 (0.1228)	3.140 (0.1236)	3.150 (0.1240)	3.160 (0.1244)	3.180 (0.1252)	3.200 (0.1260)	3.220 (0.1268)	3.240 (0.1276)	3.250 (0.1280)	3.260 (0.1283)	3.280 (0.1291)	3.300 (0.1299)
0.000 – 0.030 (0.0000 – 0.0012)																		1	1	1	1	1	1	1	2	2	2	2	2	3	3	3	3	3	4	4	4	4	4	5	5	5	5	5	6	6	6	6	6	7	7	7	7	8	8	8	8	9	9	10	10	10	10	11	11
0.031 – 0.050 (0.0012 – 0.0020)															1	1	1	1	1	1	1	2	2	2	2	2	3	3	3	3	3	4	4	4	4	4	5	5	5	5	5	6	6	6	6	6	7	7	7	7	7	8	8	8	9	9	9	9	10	10	11	11	11	11	12
0.051 – 0.070 (0.0020 – 0.0028)													1	1	1	1	1	1	1	2	2	2	2	2	3	3	3	3	3	4	4	4	4	4	5	5	5	5	5	6	6	6	6	6	7	7	7	7	7	8	8	8	8	9	9	9	9	10	10	11	11	11	11	12	12
0.071 – 0.090 (0.0028 – 0.0035)												1	1	1	1	1	1	2	2	2	2	2	3	3	3	3	3	4	4	4	4	4	5	5	5	5	5	6	6	6	6	6	7	7	7	7	7	8	8	8	8	8	9	9	9	10	10	10	11	11	11	12	12	12	13
0.091 – 0.110 (0.0036 – 0.0043)											1	1	1	1	1	2	2	2	2	2	3	3	3	3	3	4	4	4	4	4	5	5	5	5	5	6	6	6	6	6	7	7	7	7	7	8	8	8	8	8	9	9	9	9	10	10	10	11	11	11	12	12	12	13	13
0.111 – 0.130 (0.0044 – 0.0051)									1	1	1	1	1	2	2	2	2	2	3	3	3	3	3	4	4	4	4	4	5	5	5	5	5	6	6	6	6	6	7	7	7	7	7	8	8	8	8	8	9	9	9	9	10	10	10	10	11	11	11	12	12	12	13	13	13
0.131 – 0.150 (0.0052 – 0.0059)								1	1	1	1	1	2	2	2	2	3	3	3	3	3	4	4	4	4	4	5	5	5	5	5	6	6	6	6	6	7	7	7	7	7	8	8	8	8	8	9	9	9	9	9	10	10	10	11	11	11	11	12	12	13	13	13	13	14
0.151 – 0.170 (0.0059 – 0.0067)							1	1	1	1	1	2	2	2	3	3	3	3	3	4	4	4	4	4	5	5	5	5	5	6	6	6	6	6	7	7	7	7	7	8	8	8	8	8	9	9	9	9	9	10	10	10	10	11	11	11	11	12	12	13	13	13	13	14	14
0.171 – 0.190 (0.0067 – 0.0075)						1	1	1	1	2	2	2	3	3	3	3	3	4	4	4	4	4	5	5	5	5	5	6	6	6	6	6	7	7	7	7	7	8	8	8	8	8	9	9	9	9	9	10	10	10	10	10	11	11	11	12	12	12	13	13	13	14	14	14	15
0.191 – 0.210 (0.0075 – 0.0083)					1	1	1	1	2	2	2	3	3	3	3	4	4	4	4	4	5	5	5	5	5	6	6	6	6	6	7	7	7	7	7	8	8	8	8	8	9	9	9	9	9	10	10	10	10	11	11	11	11	11	12	12	12	13	13	13	14	14	14	15	15
0.211 – 0.230 (0.0083 – 0.0091)			1	1	1	1	1	2	2	2	3	3	4	4	4	4	4	4	5	5	5	5	5	6	6	6	6	6	7	7	7	7	7	8	8	8	8	8	9	9	9	9	9	10	10	10	10	10	11	11	11	11	12	12	12	12	13	13	13	14	14	14	15	15	15
0.231 – 0.249 (0.0091 – 0.0098)		1	1	1	1	1	2	2	3	3	3	3	4	4	4	4	5	5	5	5	5	6	6	6	6	6	7	7	7	7	7	8	8	8	8	8	9	9	9	9	9	10	10	10	10	10	11	11	11	11	11	12	12	12	13	13	13	13	14	14	15	15	15	15	16
0.250 – 0.350 (0.0098 – 0.0138)																																																																	
0.351 – 0.370 (0.0138 – 0.0146)	2	3	3	3	3	4	4	5	5	5	5	6	6	6	7	7	7	7	7	8	8	8	8	8	9	9	9	9	9	10	10	10	10	10	11	11	11	11	11	12	12	12	12	12	13	13	13	13	13	14	14	14	14	14	15	15	15	16	16	17	17	17	17	17	
0.371 – 0.390 (0.0146 – 0.0154)	3	3	3	4	4	4	5	5	5	6	6	6	7	7	7	7	7	8	8	8	8	8	9	9	9	9	9	10	10	10	10	10	11	11	11	11	11	12	12	12	12	12	13	13	13	13	13	14	14	14	14	14	15	15	15	16	16	16	17	17	17	17	17		
0.391 – 0.410 (0.0154 – 0.0161)	3	3	4	4	4	5	5	5	6	6	6	7	7	7	7	8	8	8	8	8	9	9	9	9	9	10	10	10	10	10	11	11	11	11	11	12	12	12	12	12	13	13	13	13	13	14	14	14	14	14	15	15	15	15	16	16	16	17	17	17	17				
0.411 – 0.430 (0.0162 – 0.0169)	3	4	4	4	5	5	5	6	6	6	7	7	7	8	8	8	8	8	9	9	9	9	9	10	10	10	10	10	11	11	11	11	11	12	12	12	12	12	13	13	13	13	13	14	14	14	14	14	15	15	15	15	15	16	16	16	17	17	17	17					
0.431 – 0.450 (0.0170 – 0.0177)	4	4	5	5	5	5	6	6	7	7	7	7	8	8	8	8	9	9	9	9	9	10	10	10	10	10	11	11	11	11	11	12	12	12	12	12	13	13	13	13	13	14	14	14	14	14	15	15	15	15	15	16	16	16	17	17	17	17	17						
0.451 – 0.470 (0.0178 – 0.0185)	4	5	5	5	5	6	6	7	7	7	7	8	8	8	9	9	9	9	9	10	10	10	10	10	11	11	11	11	11	12	12	12	12	12	13	13	13	13	13	14	14	14	14	14	15	15	15	15	15	16	16	16	16	17	17	17	17	17							
0.471 – 0.490 (0.0185 – 0.0193)	5	5	5	6	6	6	7	7	7	8	8	8	9	9	9	9	9	10	10	10	10	10	11	11	11	11	11	12	12	12	12	12	13	13	13	13	13	14	14	14	14	14	15	15	15	15	15	16	16	16	16	16	17	17	17	17	17								
0.491 – 0.510 (0.0193 – 0.0201)	5	5	6	6	6	7	7	7	8	8	8	9	9	9	9	10	10	10	10	10	11	11	11	11	11	12	12	12	12	12	13	13	13	13	13	14	14	14	14	14	15	15	15	15	15	16	16	16	16	16	17	17	17	17	17										
0.511 – 0.530 (0.0201 – 0.0209)	5	6	6	6	7	7	7	8	8	8	9	9	9	10	10	10	10	10	11	11	11	11	11	12	12	12	12	12	13	13	13	13	13	14	14	14	14	14	15	15	15	15	15	16	16	16	16	16	17	17	17	17	17	17											
0.531 – 0.550 (0.0209 – 0.0217)	6	6	7	7	7	7	8	8	9	9	9	9	10	10	10	10	11	11	11	11	11	12	12	12	12	12	13	13	13	13	13	14	14	14	14	14	15	15	15	15	15	16	16	16	16	16	17	17	17	17	17	17	17												
0.551 – 0.570 (0.0217 – 0.0224)	6	7	7	7	7	8	8	9	9	9	9	10	10	10	11	11	11	11	11	12	12	12	12	12	13	13	13	13	13	14	14	14	14	14	15	15	15	15	15	16	16	16	16	16	17	17	17	17	17	17	17														
0.571 – 0.590 (0.0225 – 0.0232)	7	7	7	8	8	8	9	9	9	10	10	10	11	11	11	11	11	12	12	12	12	12	13	13	13	13	13	14	14	14	14	14	15	15	15	15	15	16	16	16	16	16	17	17	17	17	17	17	17																
0.591 – 0.610 (0.0233 – 0.0240)	7	7	8	8	8	9	9	9	10	10	10	11	11	11	11	12	12	12	12	12	13	13	13	13	13	14	14	14	14	14	15	15	15	15	15	16	16	16	16	16	17	17	17	17	17	17	17																		
0.611 – 0.630 (0.0241 – 0.0248)	7	8	8	8	9	9	9	10	10	10	11	11	11	12	12	12	12	12	13	13	13	13	13	14	14	14	14	14	15	15	15	15	15	16	16	16	16	16	17	17	17	17	17	17	17																				
0.631 – 0.650 (0.0248 – 0.0256)	8	8	9	9	9	9	10	10	11	11	11	11	12	12	12	12	13	13	13	13	13	14	14	14	14	14	15	15	15	15	15	16	16	16	16	16	17	17	17	17	17	17	17																						
0.651 – 0.670 (0.0256 – 0.0264)	8	9	9	9	9	10	10	11	11	11	11	12	12	12	13	13	13	13	13	14	14	14	14	14	15	15	15	15	15	16	16	16	16	16	17	17	17	17	17	17	17																								
0.671 – 0.690 (0.0264 – 0.0272)	9	9	9	10	10	10	11	11	11	12	12	12	13	13	13	13	13	14	14	14	14	14	15	15	15	15	15	16	16	16	16	16	17	17	17	17	17	17	17																										
0.691 – 0.710 (0.0272 – 0.0280)	9	9	10	10	10	11	11	11	12	12	12	13	13	13	13	14	14	14	14	14	15	15	15	15	15	16	16	16	16	16	17	17	17	17	17	17	17																												
0.711 – 0.730 (0.0280 – 0.0287)	9	10	10	10	11	11	11	12	12	12	13	13	13	14	14	14	14	14	15	15	15	15	15	16	16	16	16	16	17	17	17	17	17	17	17																														
0.731 – 0.750 (0.0288 – 0.0295)	10	10	11	11	11	11	12	12	13	13	13	13	14	14	14	14	15	15	15	15	15	16	16	16	16	16	17	17	17	17	17	17	17																																
0.751 – 0.770 (0.0296 – 0.0303)	10	11	11	11	11	12	12	13	13	13	13	14	14	14	15	15	15	15	15	16	16	16	16	16	17	17	17	17	17	17	17																																		
0.771 – 0.790 (0.0304 – 0.0311)	11	11	11	12	12	12	13	13	13	14	14	14	14	15	15	15	15	16	16	16	16	16	17	17	17	17	17	17	17																																				
0.791 – 0.810 (0.0311 – 0.0319)	11	11	12	12	12	13	13	13	14	14	14	15	15	15	15	16	16	16	16	16	17	17	17	17	17	17	17																																						
0.811 – 0.830 (0.0319 – 0.0327)	11	12	12	12	13	13	13	14	14	14	15	15	15	16	16	16	16	16	17	17	17	17	17	17	17																																								
0.831 – 0.850 (0.0327 – 0.0335)	12	12	13	13	13	13	14	14	15	15	15	15	16	16	16	16	17	17	17	17	17	17	17																																										
0.851 – 0.870 (0.0335 – 0.0343)	12	13	13	13	13	14	14	15	15	15	15	16	16	16	17	17	17	17	17	17	17																																												
0.871 – 0.890 (0.0343 – 0.0350)	13	13	13	14	14	14	15	15	15	16	16	16	16	17	17	17	17	17	17																																														
0.891 – 0.910 (0.0351 – 0.0358)	13	13	14	14	14	15	15	15	16	16	16	17	17	17	17	17	17																																																
0.911 – 0.930 (0.0359 – 0.0366)	13	14	14	14	15	15	15	16	16	16	17	17	17	17	17																																																		
0.931 – 0.950 (0.0367 – 0.0374)	14	14	15	15	15	15	16	16	17	17	17	17	17																																																				
0.951 – 0.970 (0.0374 – 0.0382)	14	15	15	15	15	16	16	17	17	17	17	17																																																					
0.971 – 0.990 (0.0382 – 0.0390)	15	15	15	16	16	16	17	17	17	17	17																																																						
0.991 – 1.010 (0.0390 – 0.0398)	15	15	16	16	16	17	17	17	17																																																								
1.011 – 1.030 (0.0398 – 0.0406)	15	16	16	16	17	17	17	17																																																									
1.031 – 1.050 (0.0406 – 0.0413)	16	16	17	17	17	17	17																																																										
1.051 – 1.070 (0.0414 – 0.0421)	16	17	17	17	17	17																																																											
1.071 – 1.090 (0.0422 – 0.0429)	17	17	17	17	17																																																												
1.091 – 1.110 (0.0430 – 0.0437)	17	17	17																																																														
1.111 – 1.130 (0.0437 – 0.0445)	17	17																																																															
1.131 – 1.150 (0.0445 – 0.0413)	17																																																																

V00832

Exhaust valve clearance (Cold):

0.25 – 0.35 mm (0.010 – 0.014 in.)

EXAMPLE: The 2.800 mm (0.1102 in.) shim is installed, and the measured clearance is 0.440 mm (0.0173 in.). Replace the 2.800 mm (0.1102 in.) shim with a No. 10 shim.

New shim thickness mm (in.)

Shim No.	Thickness	Shim No.	Thickness
1	2.500 (0.0984)	10	2.950 (0.1161)
2	2.550 (0.1004)	11	3.000 (0.1181)
3	2.600 (0.1024)	12	3.050 (0.1201)
4	2.650 (0.1043)	13	3.100 (0.1220)
5	2.700 (0.1063)	14	3.150 (0.1240)
6	2.750 (0.1083)	15	3.200 (0.1260)
7	2.800 (0.1102)	16	3.250 (0.1280)
8	2.850 (0.1122)	17	3.300 (0.1299)
9	2.900 (0.1142)		

HINT: New shims have the thickness in millimeters imprinted on the face.

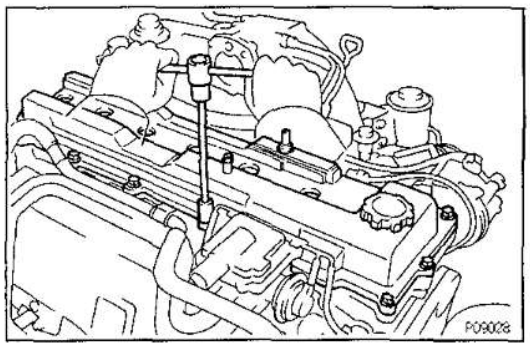

8. REINSTALL CYLINDER HEAD COVER

(a) Install the gasket to the cylinder head cover.

(b) Install the cylinder head cover with the 13 bolts.

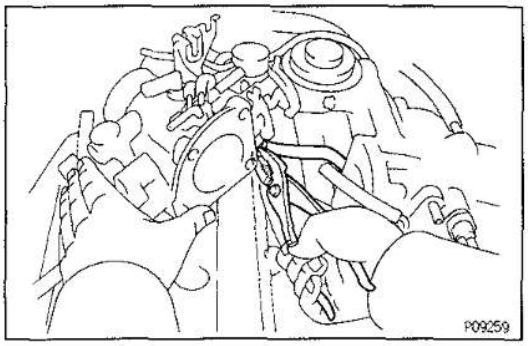

9. (1FZ–FE)
INSTALL THROTTLE BODY

(a) Connect the No.1 water by–pass hose to the throttle body.

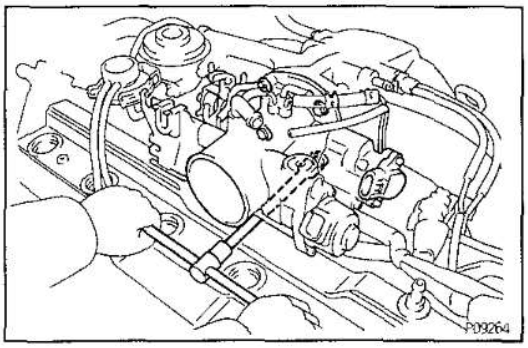

(b) Install a new gasket and throttle body with the four bolts.
Torque: 21 N·m (210 kgf·cm, 15 ft·lbf)

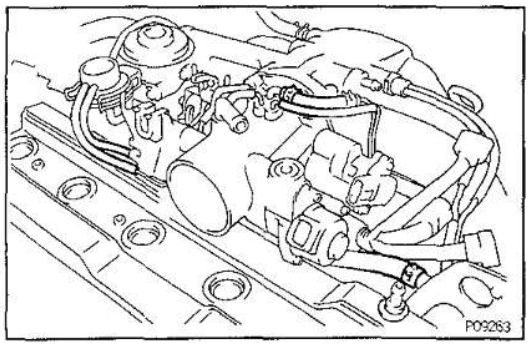

(c) Connect the water hose to the No.2 water by–pass pipe.

(d) Connect the EVAP hose.

(e) Connect the three vacuum hoses.

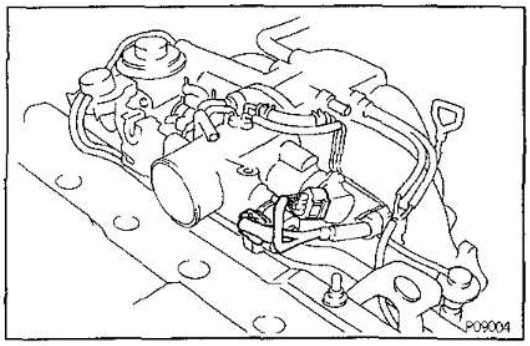

(f) Connect the ISC valve connector.

(g) Connect the throttle position sensor connector.

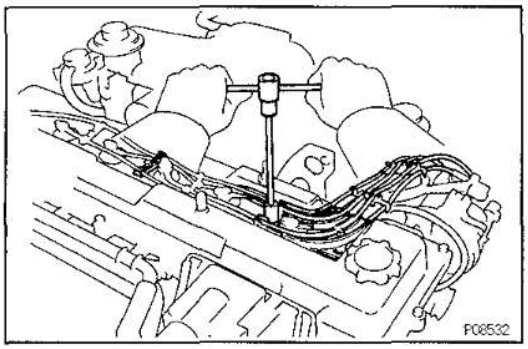

10. RECONNECT HIGH—TENSION CORDS TO SPARK PLUGS

(a) Connect the high—tension cords.

(b) Install the No.1 and No.2 cord clamps with the two bolts.

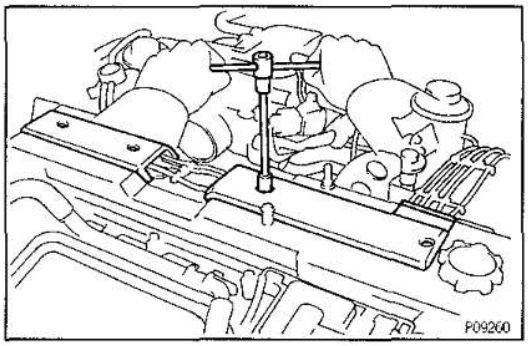

11. REINSTALL NO.2 AND NO.3 CYLINDER HEAD COVERS

Install the head covers with the four bolts.

EG27G-01

IGNITION TIMING INSPECTION AND ADJUSTMENT

1. WARM UP ENGINE

Allow the engine to warm up to normal operating temperature.

2. CONNECT TACHOMETER AND TIMING LIGHT

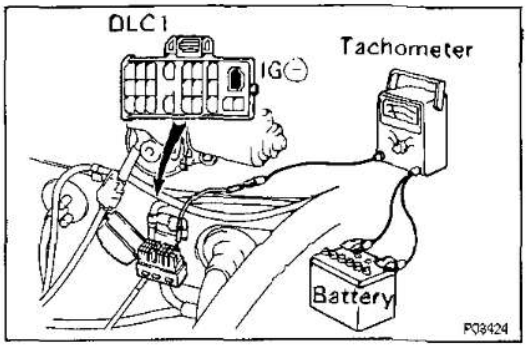

A. (1FZ—FE)

Connect the test probe of a tachometer to terminal IG ⊖ of the check connector.

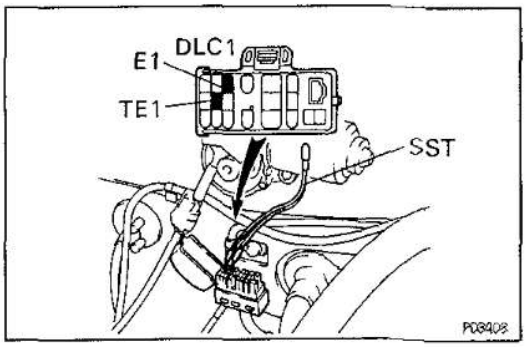

Using SST,connect terminals TE1 and E1 of the check *connector*

SST 09843—18020

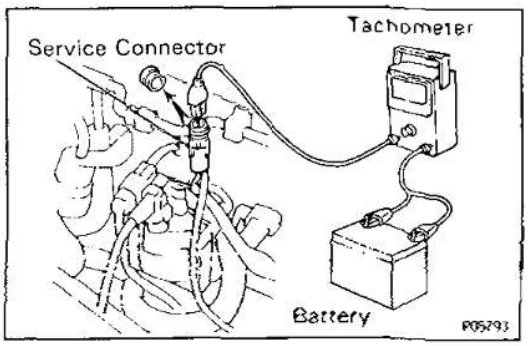

B. (1FZ—F)

Remove the cap and connect the test probe of a tester to the service connector from the igniter.

NOTICE:

- **NEVER allow the tachometer terminal to touch ground as it could result in damage to the igniter and/or ignition coil.**
- **As some tachometers are not compatible with this ignition system, we recommend that you confirm the compatibility of your unit before use.**

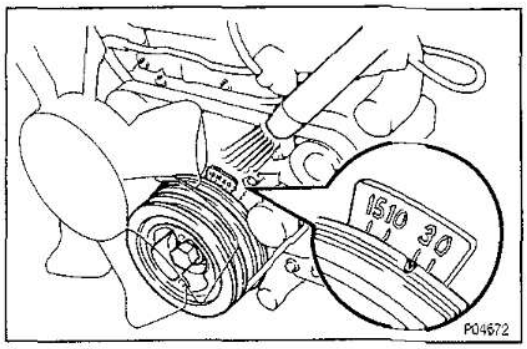

3. INSPECT AND ADJUST IGNITION TIMING

With the engine idling as specified, use a *timing light* to check the timing.

Ignition timing:

3° BTDC @ idle

(w/ Terminals TE1 and E1 connected for 1FZ—FE)

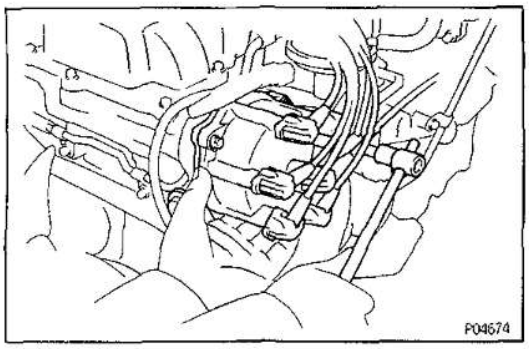

If necessary, loosen the distributor bolt and turn the distributor to align the marks. Recheck the timing after tightening the distributor bolt.
Torque: 21 N·m (210 kgf·cm, 15 ft·lbf)

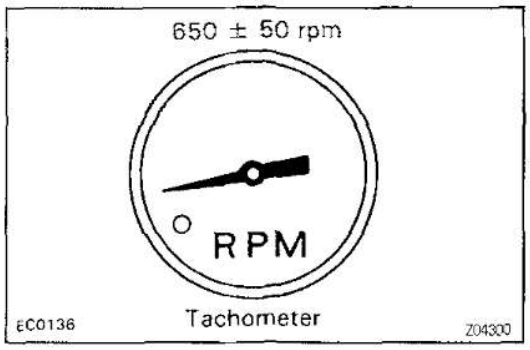

EG1JT-03

(1FZ–FE)
IDLE SPEED INSPECTION

HINT: Initial conditions (See step 1 on page EG–33)

Idle speed:
650 ± 50 rpm

EG0V6-02

(1FZ–F)
IDLE SPEED INSPECTION AND ADJUSTMENT

1. **WARM UP ENGINE**
   Allow the engine to warm up to normal operating temperature.
2. **CONNECT TACHOMETER**
3. **INSPECT IDLE SPEED**
   Idle speed:
   600 ± 50 rpm
   If not as specified, adjust according to the following procedure:
   CAUTION:
   - **Always use a CO meter when adjusting the idle mixture. It is not necessary to adjust with the idle mixture adjusting screw in most vehicles if they are in good condition.**
   - **If a CO meter is not available and it is absolutely necessary to adjust with the idle mixture adjusting screw, use the alternative method (See page EG–29).**

EG0V6-02

A. METHOD WITH CO METER

1. VISUALLY INSPECT CARBURETOR

(a) Check for loose screws or a loose mounting to the manifold.

(b) Check for wear in the linkage, missing snap rings or excessive looseness in the throttle shaft. Correct any problems found.

EG

2. INITIAL CONDITIONS

(a) Air cleaner installed

(b) Normal operating coolant temperature

(c) Choke fully open

(d) All accessories switched off

(e) All vacuum lines connected

(f) Ignition timing set correctly

(g) Transmission in the "N" range

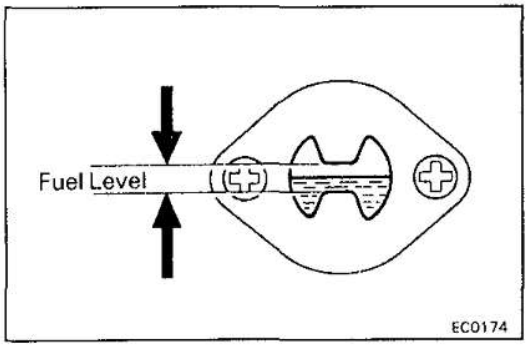

(h) *Fuel level should be about even with the correct level* in the sight glass

(i) CO meter operates normally

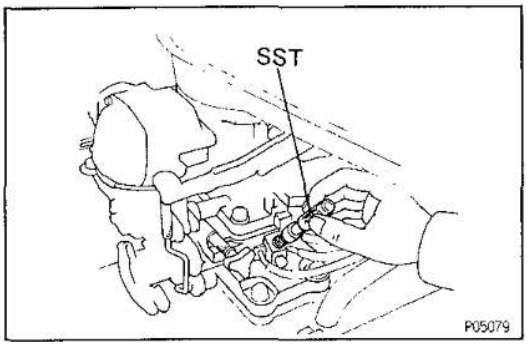

3. ADJUST IDLE SPEED AND IDLE MIXTURE

HINT: Use SST if necessary.

SST 09243−00020

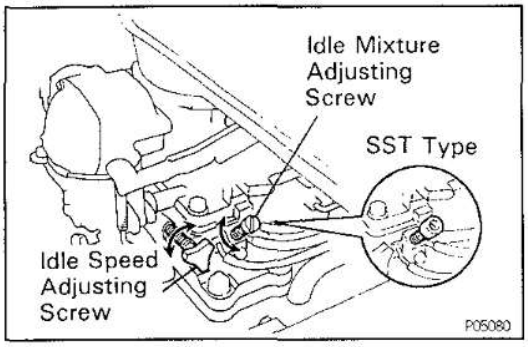

(a) Start the engine.

(b) Using a CO meter to measure the CO concentration in the exhaust, turn the idle speed and idle mixture adjusting screws to obtain the specified concentration value at idle speed.

Idle speed:

600 rpm

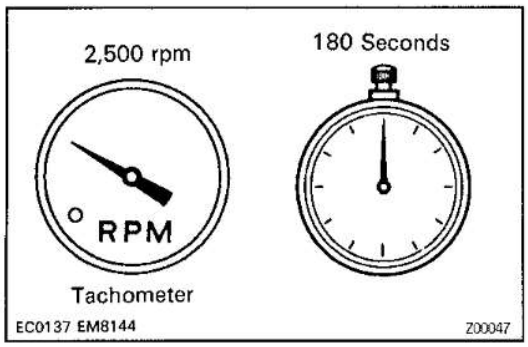

4. INSPECT CO CONCENTRATION

(a) Check that the CO meter is properly calibrated.

(b) Race the engine at 2,500 rpm for approx. 180 seconds before measuring concentration.

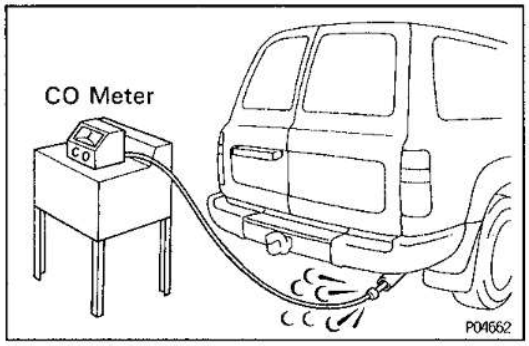

(c) Insert co Meter testing probe at least 40 cm (1.3 ft) into the tailpipe, during idling. Immediately check the co concentration at Idle.

Idle CO concentration:

1.5 ± 0.5 %

- If the CO concentration is within specification this adjustment is complete.
- If the CO concentration is not within specification, turn the idle mixture adjusting screw to obtain the specified concentration value.
- If the CO concentration cannot be corrected by adjusting the idle mixture, see table below for other possible causes.

TROUBLESHOOTING

CO	HC	Problems	Causes
Normal	High	Rough idle	1. Faulty ignition: • Incorrect timing • Fouled, shorted or improperly gapped plugs • Open or crossed ignition wires • Cracked distributor cap 2. Leaky exhaust valves 3. Leaky cylinder
Low	High	Rough idle (Fluctuating HC reading)	1. Vacuum leak: • Vacuum hose • Intake manifold • PCV line • Carburetor base
High	High	Rough idle (Black smoke from exhaust)	1. Restricted air filter 2. Plugged PCV valve 3. Faulty carburetion: • Faulty choke action • Incorrect float setting • Leaking needle or seat • Leaking power valve

V00833

EG0V7-01

B. ALTERNATIVE METHOD

To be used only if CO meter is not available.

1. VISUALLY INSPECT CARBURETOR

(a) Check for loose screws or loose a mounting to the manifold.

(b) Check for wear in the linkage, missing snap rings or excessive looseness in the throttle shaft. Correct any problems found.

EG

2. INITIAL CONDITIONS

(a) Air cleaner installed

(b) Normal operating coolant temperature

(c) Choke fully open

(d) All accessories switched off

(e) All vacuum lines connected

(f) Ignition timing set correctly

(g) Transmission in the "N" range

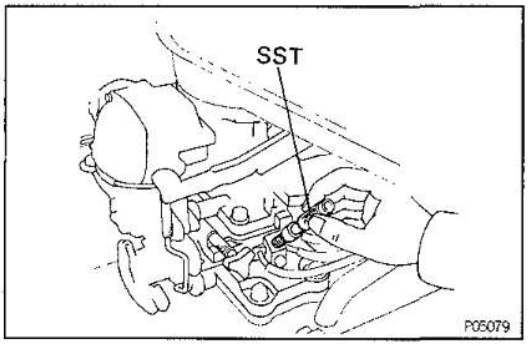

3. ADJUST IDLE SPEED AND IDLE MIXTURE

HINT: Use SST if necessary.

SST 09243—00020

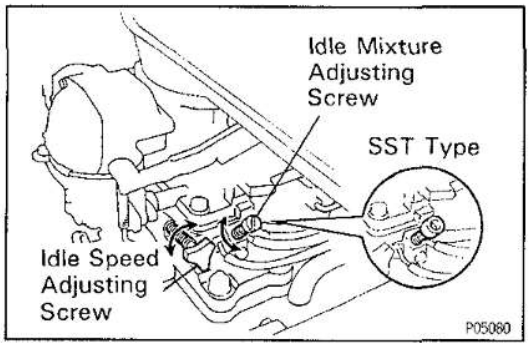

(a) Start the engine.

(b) Set to the maximum speed by turning the idle mixture adjusting screw.

(c) Set to the idle mixture speed by turning the idle speed adjusting screw.

Idle mixture speed:

650 rpm

(d) Before moving to the next step continue adjustments (b) and (c) until the maximum speed will not rise any further no matter how much the idle mixture adjusting screw is adjusted.

(e) Set to the idle speed by screwing in the idle mixture adjusting screw.

Idle speed:

600 rpm

This is Lean Drop Method for setting idle speed and mixture.

EGOV8-02

(1FZ—F)
FAST IDLE SPEED INSPECTION AND ADJUSTMENT

1. **WARM UP AND STOP ENGINE**
2. **CONNECT TACHOMETER TO ENGINE**

EG

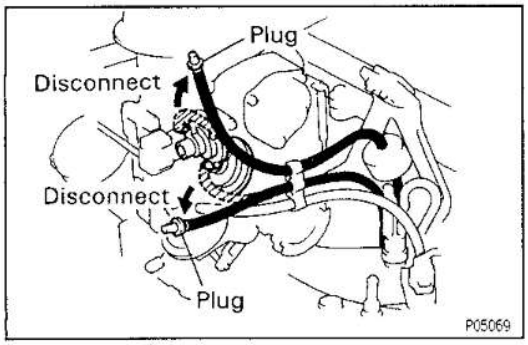

3. **CUT OPERATION OF FAST IDLE CAM BREAKER (FICB) SYSTEM**
   Disconnect the vacuum hoses from the FICB and CB, and plug the hose ends. This shuts off the FICB and CB systems.

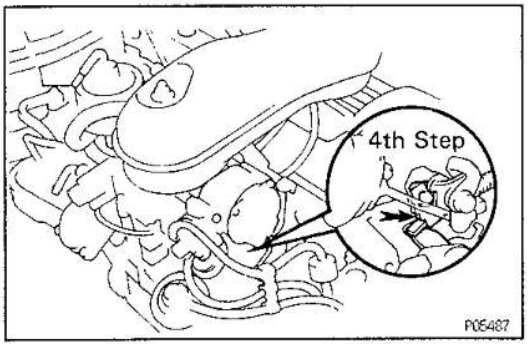

4. **SET FAST IDLE CAM**
   Lightly race the engine and release the throttle, and check that the fast idle cam is set at the 4th step.

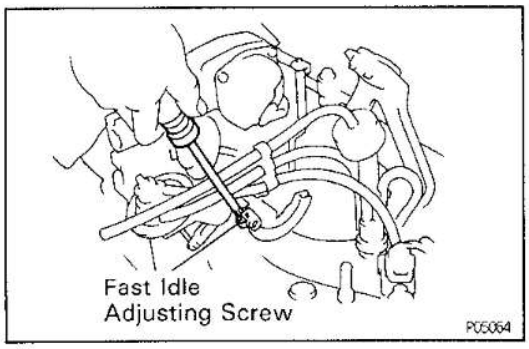

5. **INSPECT AND ADJUST FAST IDLE SPEED**
   (a) Check the fast idle speed.
   Fast idle speed:
   G.C.C.
   800 — 1,000 rpm
   Others
   1,100 — 1,300 rpm
   If the fast idle speed is not as specified, adjust the fast idle speed by turning the fast idle adjusting screw.
   Fast idle speed:
   G.C.C.
   900 rpm
   Others
   1,200 rpm
   (b) Lightly race the engine and release the throttle, and repeat steps 4 and 5.
6. **RECONNECT VACUUM HOSES TO FICB AND CB**

EG0V9-02

(1FZ—F)
DASH POT (DP) INSPECTION AND ADJUSTMENT

1. **WARM UP AND STOP ENGINE**
2. **CONNECT TACHOMETER TO ENGINE**
3. **START ENGINE**

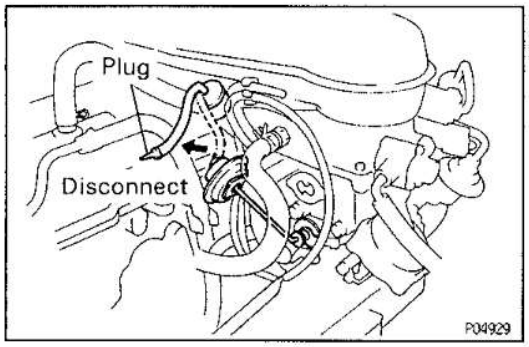

4. **INSPECT AND ADJUST DASH POT (DP) SETTING SPEED**

(a) Disconnect the vacuum hose from the DP and plug the hose end.

(b) Race the engine to 2,500 rpm for a few seconds, release the throttle and check the DP setting speed.
Dash pot setting speed:
1,400 — 1,600 rpm

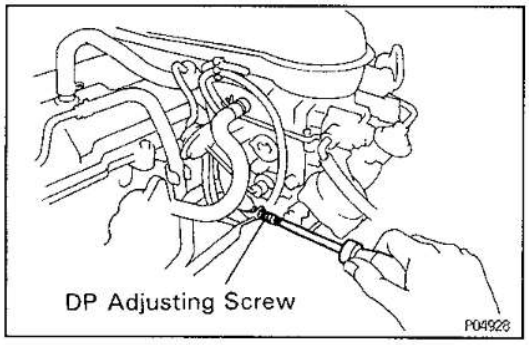

If the DP setting speed is not as specified, adjust the setting speed by turning the DP adjusting screw.
Dash pot setting speed:
1,500 rpm

(c) Race the engine to 2,500 rpm for a few seconds, release the throttle and recheck the DP setting speed.

(d) Reconnect the vacuum hose to the DP.

EG0VA-02

(1FZ-F)
THROTTLE POSTIONER (TP) SETTING SPEED INSPECTION AND ADJUSTMENT

1. **WARM UP AND STOP ENGINE**
2. **CONNECT TACHOMETER TO ENGINE**
3. **START ENGINE**

EG

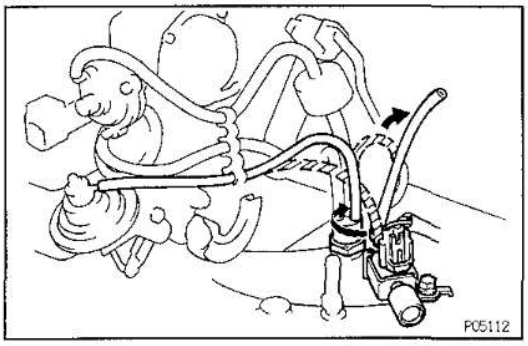

4. **INSPECT AND ADJUST THROTTLE POSITIONER (TP) SETTING SPEED**

(a) Disconnect the vacuum hoses from the gas filter and VSV.

(b) Connect the vacuum hose which you have disconnected from the VSV onto the gas filter.

(c) Check the TP setting speed.

TP setting speed:

1,150 — 1,250 rpm

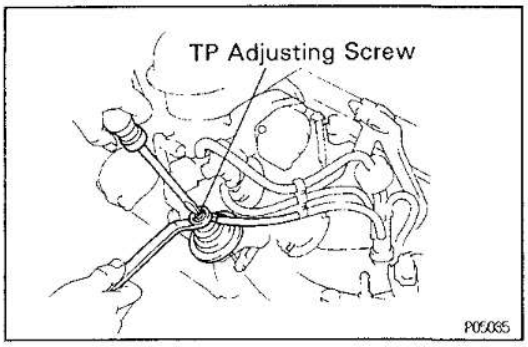

If the TP setting speed is not as specified, adjust the setting speed by turning the TP adjusting screw.

TP setting speed:

1,200 rpm

(d) Lightly race the engine and release the throttle, and recheck the TP setting speed.

(e) Reconnect the vacuum hoses to the proper locations.

IDLE CO/HC CHECK (1FZ–FE)

EG1JU-04

HINT: This check is used only to determine whether or not the idle CO/HC complies with regulations.

1. INITIAL CONDITIONS

(a) Engine at normal operating temperature
(b) Air cleaner installed
(c) All pipes and hoses of air induction system connected
(d) All accessories switched OFF
(e) All vacuum lines properly connected
HINT: All vacuum hoses for EGR systems, etc. should be properly connected.
(f) EFI system wiring connectors fully plugged
(g) Ignition timing set correctly
(h) Transmission in neutral position
(i) Tachometer and CO/HC meter calibrated by hand

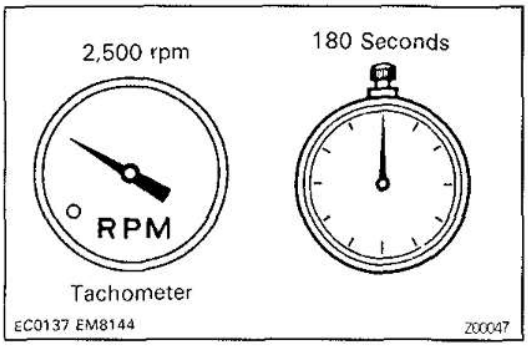

2. START ENGINE

3. RACE ENGINE AT 2,500 RPM FOR APPROX. 180 SECONDS

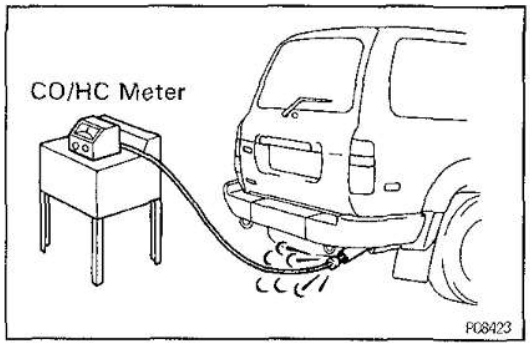

4. INSERT CO/HC METER TESTING PROBE INTO TAILPIPE AT LEAST 40 cm (1.3 ft) DURING IDLING

5. IMMEDIATTELY CHECK CO/HC CONCENTRATION AT IDLE

HINT: When performing the test, follow the measurement order prescribed by the applicable local regulations.

EG

Troubleshooting

If the CO/HC concentration does not comply with regulations, perform troubleshooting in the order given below.

(a) Check oxygen sensor operation.
(See page EG—290)

(b) See the table below for possible causes, and then inspect and correct the applicable causes if necessary.

HC	CO	Problems	Causes
High	Normal	Rough idle	1. Faulty ignitions: • Incorrect timing • Fouled, shorted or improperly gapped plugs • Open or crossed high-tension cords • Cracked distributor cap 2. Incorrect valve clearance 3. Leaky EGR valve 4. Leaky intake and exhaust valves 5. Leaky cylinder
High	Low	Rough idle (Fluctuating HC reading)	1. Vacuum leaks: • PCV hose • EGR valve • Intake manifold • Air intake chamber • Throttle body • ISC valve • Brake booster line 2. Lean mixture causing misfire
High	High	Rough Idle (Black smoke from exhaust)	1. Restricted air filter 2. Faulty EFI systems: • Faulty pressure regulator • Clogged fuel return line • Defective water temp. sensor • Faulty ECU • Faulty injector • Faulty throttle position sensor • Faulty air flow meter

V02672

COMPRESSION CHECK

EG27H-01

HINT: If there is lack of power, excessive oil consumption or poor fuel economy, measure the compression pressure.

1. **WARM UP AND STOP ENGINE**
Allow the engine to warm up to normal operating temperature.

2. **DISCONNECT DISTRIBUTOR CONNECTOR**

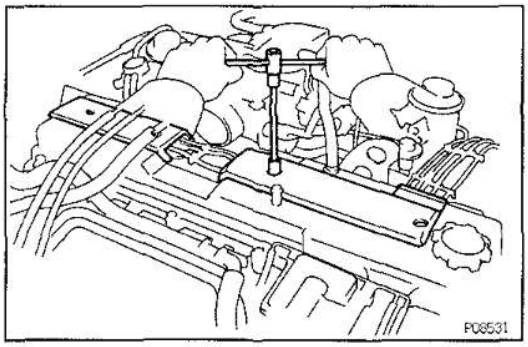

3. **REMOVE NO.2 AND NO.3 CYLINDER HEAD COVERS**
Remove the four bolts and head covers.

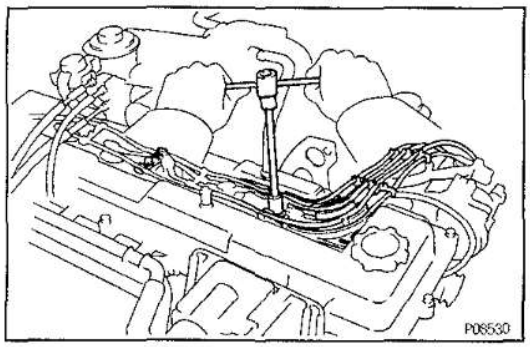

4. **DISCONNECT HIGH—TENSION CORDS FROM SPARK PLUGS**

(a) Remove the two mounting bolts of the No.1 and No.2 cord clamps.

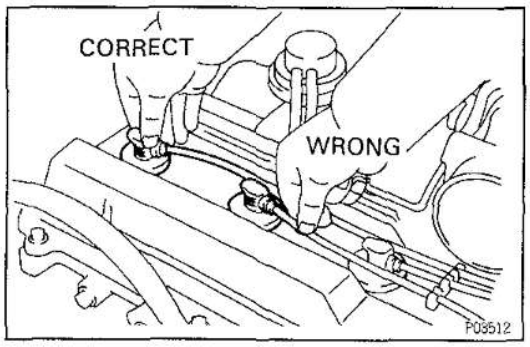

(b) Disconnect the high — tension cords at the rubber boot.
DO NOT pull on the cords.
NOTICE: Pulling on or bending the cords may damage the conductor inside.

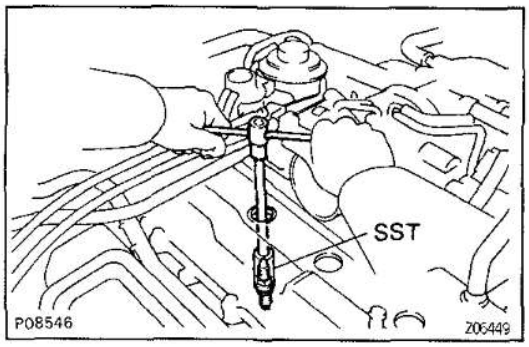

5. **REMOVE SPARK PLUGS**
Using SST, remove the spark plug.
SST 09155—16100

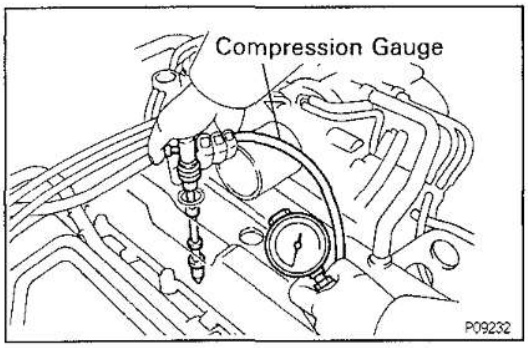

EG

6. CHECK CYLINDER COMPRESSION PRESSURE

(a) Insert a compression gauge into the spark plug hole.

(b) Fully open the throttle.

(c) While cranking the engine, measure the compression pressure.

HINT: Always use a fully charged battery to obtain engine speed of 250 rpm or more.

(d) Repeat steps (a) through (c) for each cylinder.

NOTICE: This measurement must be done in as short a time as possible.

Compression pressure:

1,176 kPa (12.0 kgf/cm², 171 psi) or more 1FZ–FE

900 kPa (9.2 kgf/cm², 131 psi) or more 1FZ–F (Low octane)

1,030 kPa (10.5 kgf/cm², 149 psi) or more 1FZ–F (Others)

Minimum pressure:

883 kPa (9.0 kgf/cm², 128 psi) 1FZ–FE

785 kPa (8.0 kgf/cm², 114 psi) 1FZ–F

Difference between each cylinder:

98 kPa (1.0 kgf/cm², 14 psi) or less

(e) If the cylinder compression in one or more cylinders is low, pour a small amount of engine oil into the cylinder through the spark plug hole and repeat steps (a) through (c) for cylinders with low compression.

- If adding oil helps the compression, chances are that the piston rings and/or cylinder bore are worn or damage.
- If pressure stays low, a valve may be sticking or seating is improper, or there may be leakage past the gasket.

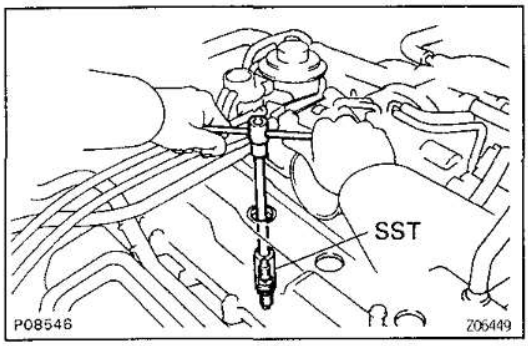

7. INSTALL SPARK PLUGS

Using SST, install the spark plug.

SST 09155–16100

Torque: 20 N·m (200 kgf·cm, 14 ft·lbf)

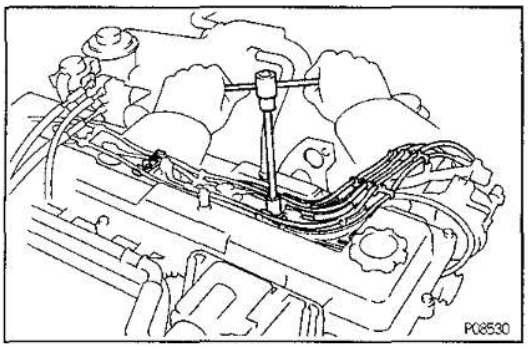

8. RECONNECT HIGH—TENSION CORDS TO SPARK PLUGS

(a) Reconnect the high—tension cords to the spark plugs.

(b) Install the No.1 and No.2 cord clamps with the two bolts.

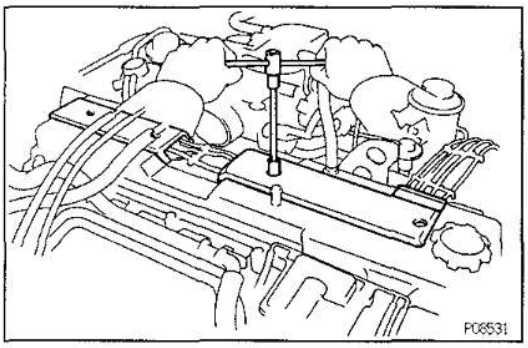

9. INSTALL NO.2 AND NO.3 CYLINDER HEAD COVERS

Install the head covers with the four bolts.

10. CONNECT DISTRIBUTOR CONNECTOR

CYLINDER HEAD (1FZ–FE) COMPONENTS

EG08K-06

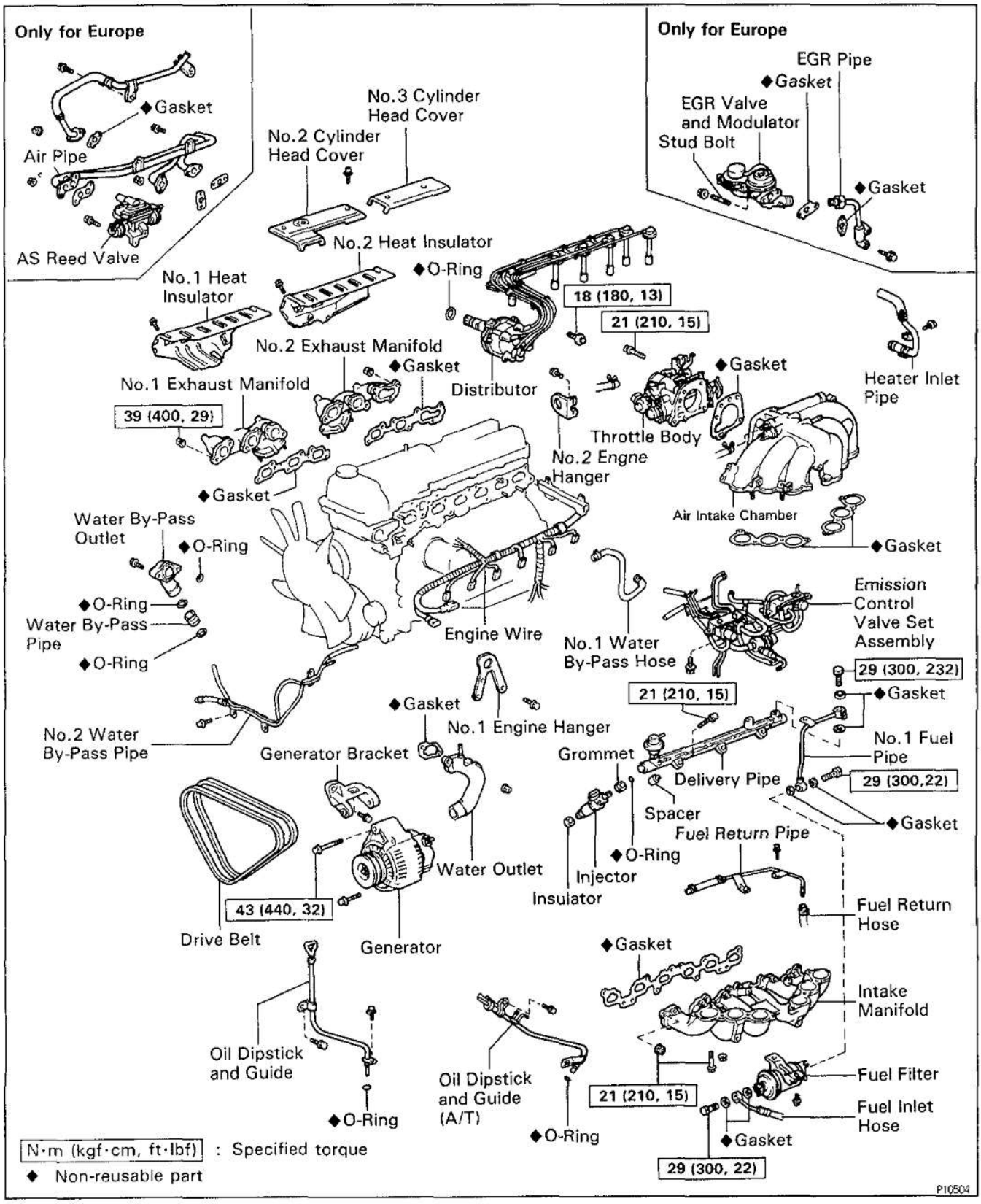

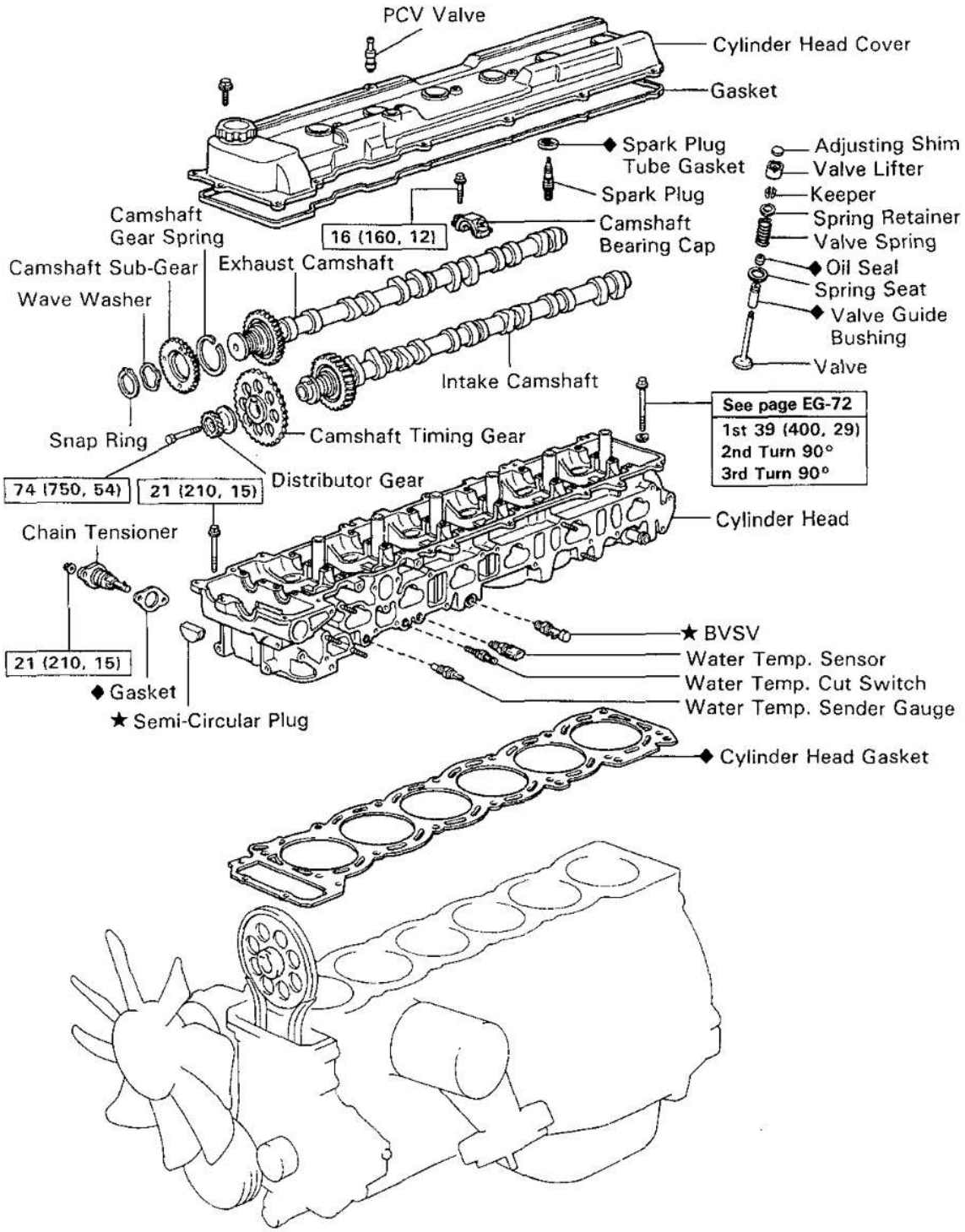

N·m (kgf·cm, ft·lbf) : Specified torque

◆ Non-reusable part

★ Precoated part

P08547

Z06501

EG27J-01

CYLINDER HEAD REMOVAL

(See Components for Removal and Installation)

EG

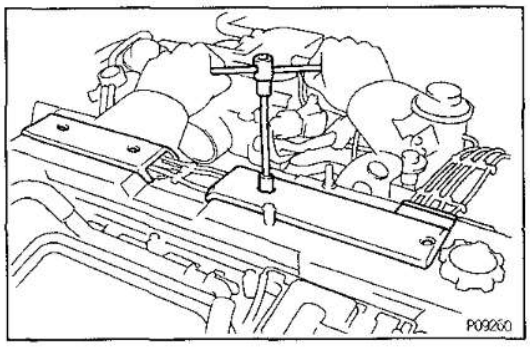

1. REMOVE NO.2 AND NO.3 CYLINDER HEAD COVERS

Remove the four bolts and head covers.

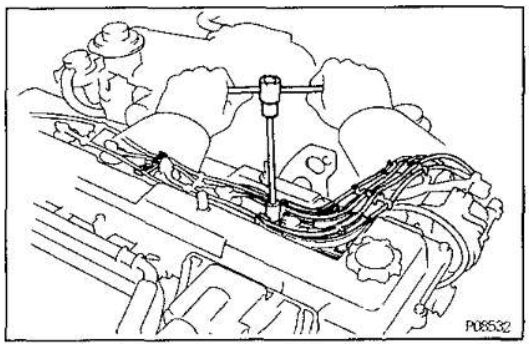

2. REMOVE DISTRIBUTOR

(a) Remove the two mounting bolts of the No.1 and No.2 cord clamps.

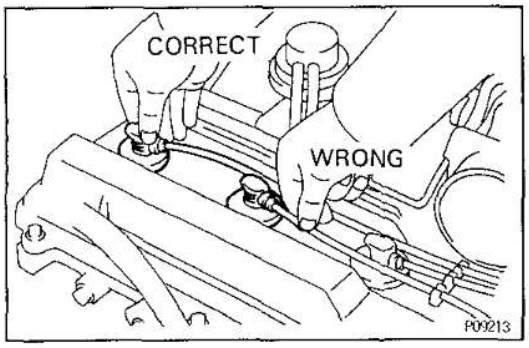

(b) Disconnect the high — tension cords at the rubber boot.
DO NOT pull on the cords.
NOTICE: Pulling on or bending the cords may damage the conductor inside.

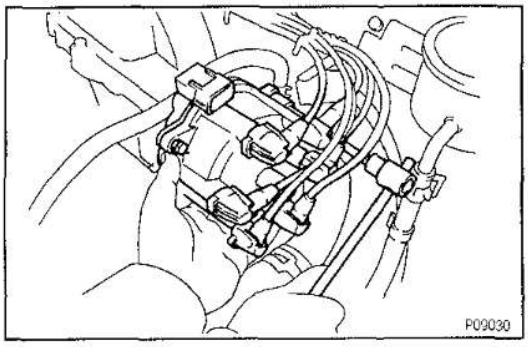

(c) Remove the hold—down bolt and distributor.

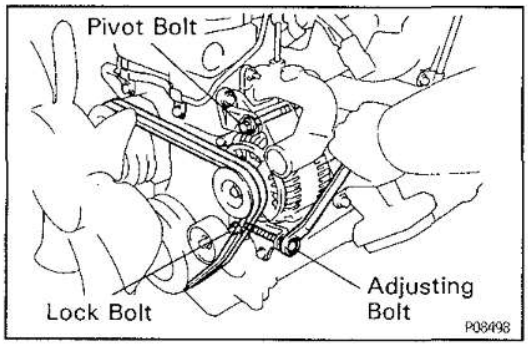

3. REMOVE ALTERNATOR

(a) Loosen the lock bolt, pivot bolt and adjusting bolt, and remove the drive belts.

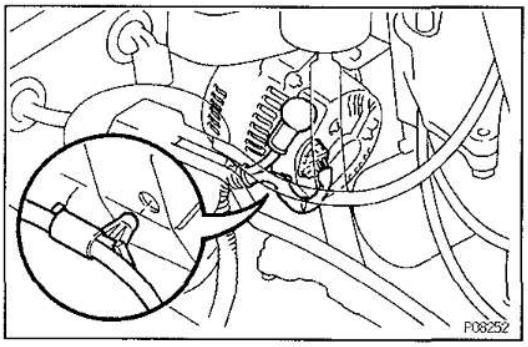

(b) Disconnect the alternator connector.
(c) Remove the nut, and disconnect the alternator wire.
(d) Disconnect the wire harness from the clip.

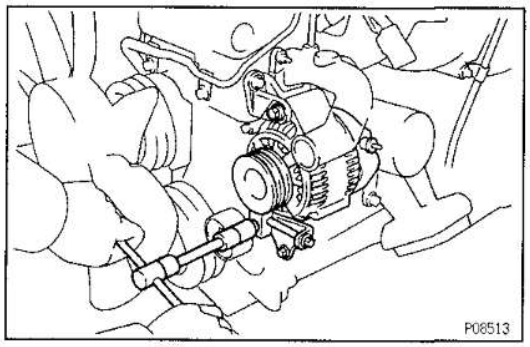

(e) Remove the lock bolt, bolt, nut and drive belt adjusting bar.
(f) Remove the pivot bolt and alternator.

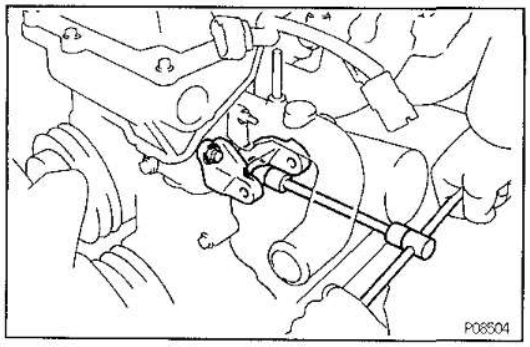

4. REMOVE ALTERNATOR BRACKET

Remove the two bolts and alternator bracket.

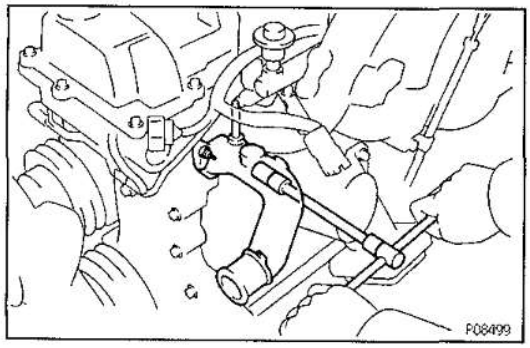

5. REMOVE WATER OUTLET

(a) Disconnect the radiator inlet hose.
(b) Disconnect the No.3 water by—pass hose.
(c) Remove the two nuts, water outlet and gasket.

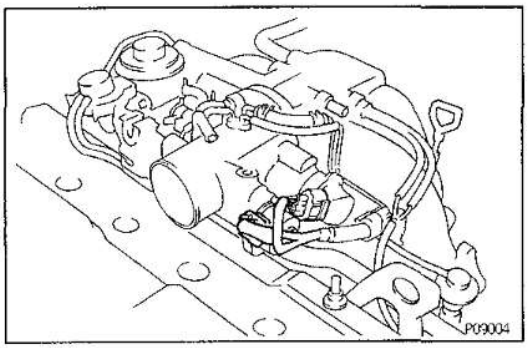

6. REMOVE THROTTLE BODY

(a) Disconnect the throttle position sensor connector.

(b) Disconnect the ISC valve connector.

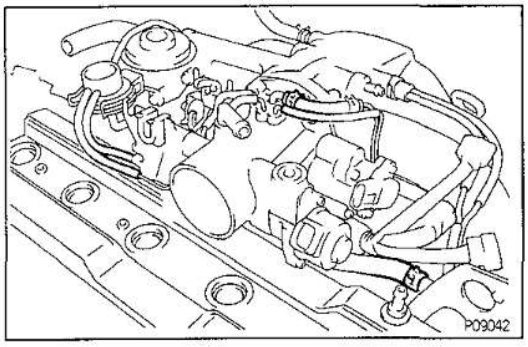

(c) Disconnect the three vacuum hoses.

(d) Disconnect the EVAP hose.

(e) Disconnect the water hose from the No.2 water by—pass pipe.

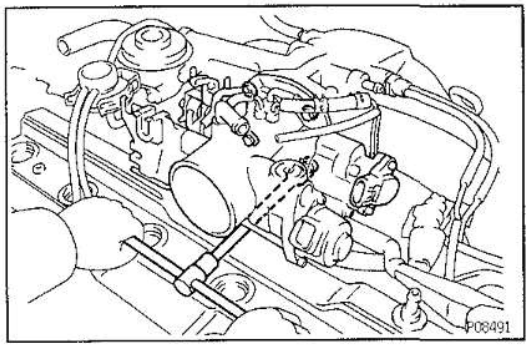

(f) Remove the four bolts, and disconnect the throttle body from the air intake chamber.

(g) Remove the throttle body gasket.

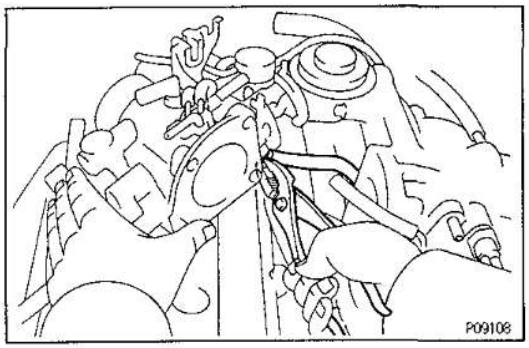

(h) Disconnect the No.1 water by—pass hose from the throttle body, and remove the throttle body.

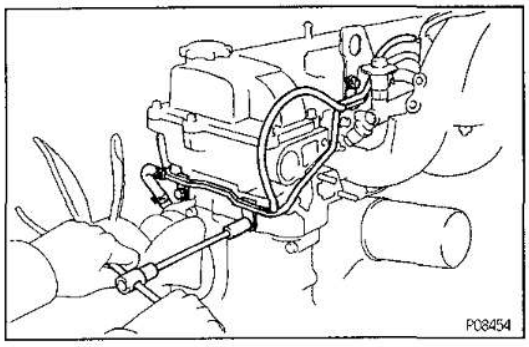

7. REMOVE NO.2 WATER BY—PASS PIPE WITH HOSES

(a) Disconnect the two vacuum hoses from the PAIR reed valve and No.2 emission control valve set.

(b) Disconnect the water hose from the timing chain cover.

(c) Remove the three bolts and No.2 water by—pass pipe with hoses.

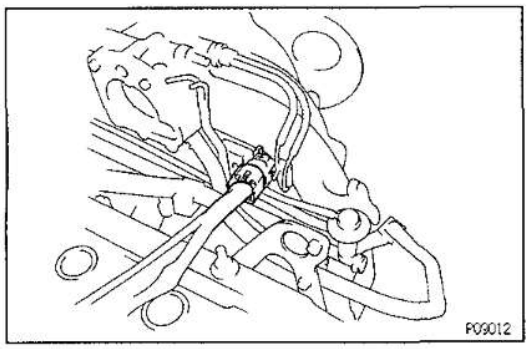

8. DISCONNECT CONNECTOR FOR EMISSION CONTROL VALVE SET ASSEMBLY

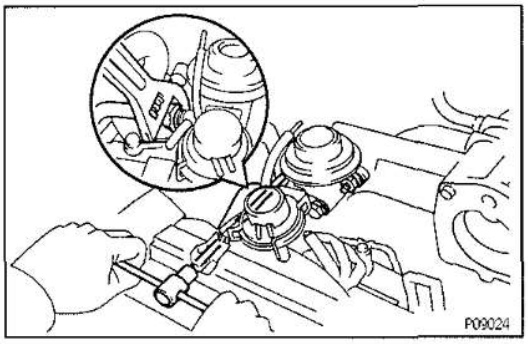

9. (Europe)
REMOVE EGR VALVE AND VACUUM MODULATOR

(a) Disconnect three vacuum hoses from the EGR valve.
(b) Loosen the EGR pipe union nut.
(c) Remove the two nuts holding the EGR valve and air intake chamber.

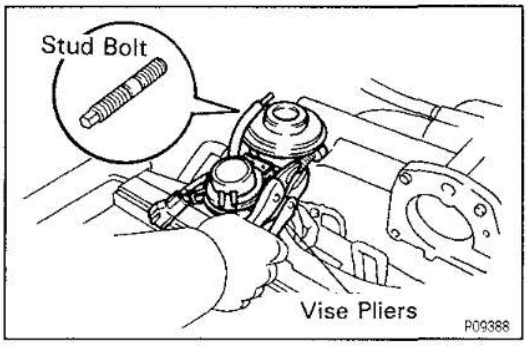

(d) Using vise pliers, remove the two stud bolts, EGR valve and vacuum modulator assembly and gasket.

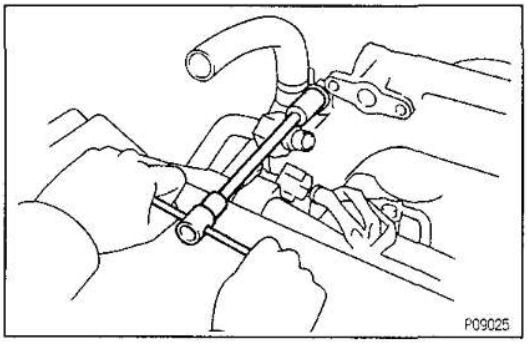

10. REMOVE BOLT HOLDING HEATER INLET PIPE AND AIR INTAKE CHAMBER

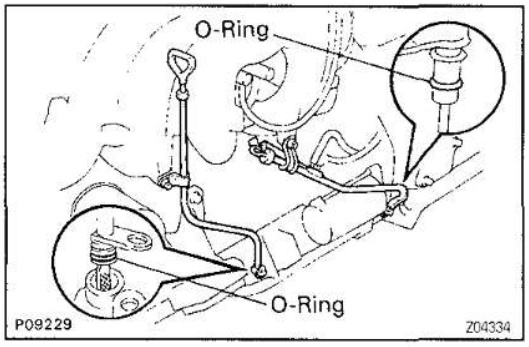

11. REMOVE OIL DIPSTICKS AND GUIDES FOR ENGINE AND TRANSMISSION

(a) Remove the two mounting bolts.
(b) Pull out the dipstick together with dipstick guide.
(c) Remove the O—ring from the dipstick guide.

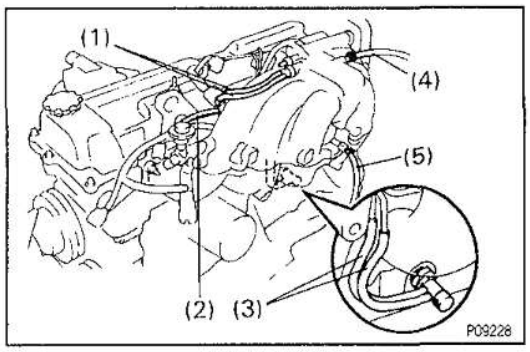

12. REMOVE AIR INTAKE CHAMBER

(a) Disconnect the following hoses:
- (1) Two vacuum hoses from gas filter
- (2) Vacuum hose from fuel pressure regulator
- (3) Two vacuum hoses from BVSV
- (4) Brake booster hose from brake booster union
- (5) EVAP hose from 3—way

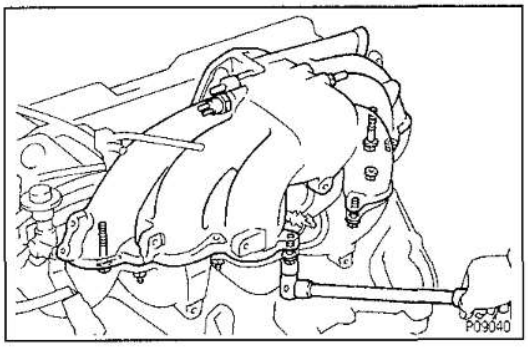

(b) Remove the four bolts, six nuts, air intake chamber and two gaskets.

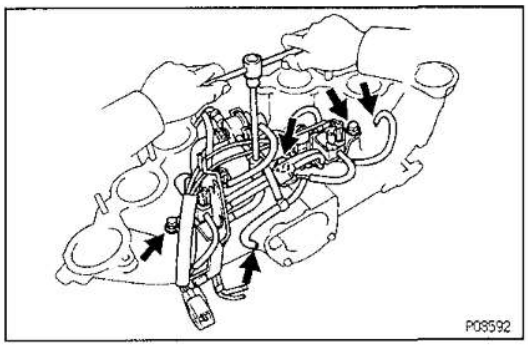

(c) Disconnect the air hose.

(d) Disconnect the vacuum hose

(e) Remove the four bolts and emission control valve set assembly from the air intake chamber.

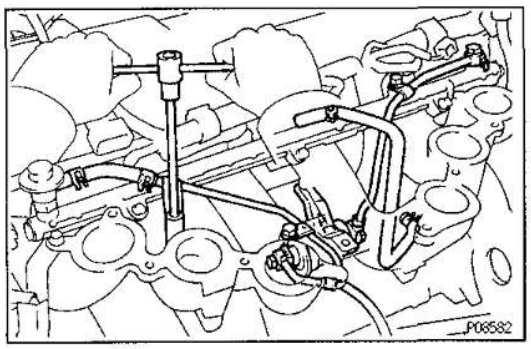

13. REMOVE FUEL RETURN PIPE

(a) Disconnect the fuel hose from the fuel pressure regulator.

(b) Remove the two bolts and fuel return pipe.

14. REMOVE NO.1 WATER BY—PASS HOSE

15. REMOVE NO.1 FUEL PIPE

Remove the two union bolts, bolt, four gaskets and No.1 fuel pipe.

16. DISCONNECT FUEL INLET HOSE

Remove the union bolt and two gaskets and disconnect the fuel inlet hose from the fuel filter.

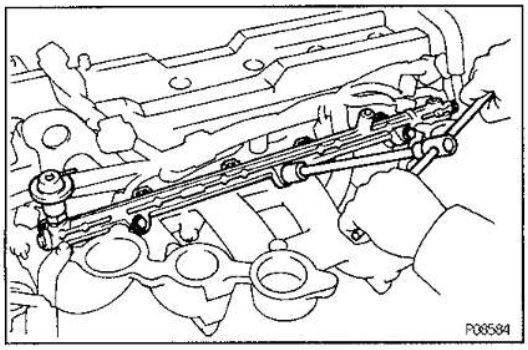

17. REMOVE DELIVERY PIPE AND INJECTORS

(a) Disconnect the six injector connectors.

(b) Remove the three bolts and delivery pipe together with the six injectors.

NOTICE: Be careful not to drop the injectors when removing the delivery pipe.

(c) Remove the six insulators and three spacers from the intake manifold.

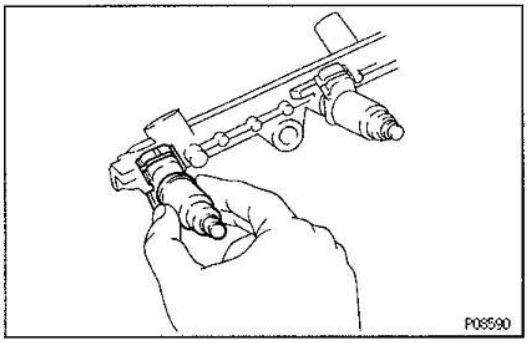

(d) Pull out the six injectors from the delivery pipe.

(e) Remove the O—ring and grommet from each injector.

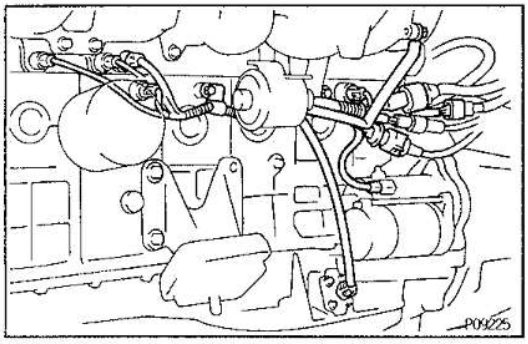

18. DISCONNECT ENGINE WIRE

(a) Disconnect the following connectors:

(1) Water temp. sender gauge connector
(2) Water temp. cut switch connector
(3) Water temp. sensor connector
(4) Two knock sensor connectors
(5) Oxygen sensor connector (with clamps)
(6) Four connectors from transmission
(7) Starter connector
(8) Oil level sensor connector

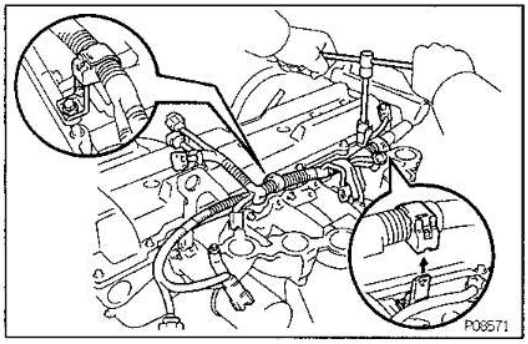

(b) Remove the bolt and disconnect the engine wire from the intake manifold.

(c) Remove the two bolts and disconnect the engine wire from the cylinder block.

(d) Disconnect the engine wire clamp.

(e) Remove the three bolts and disconnect the engine wire from the cylinder head and intake manifold.

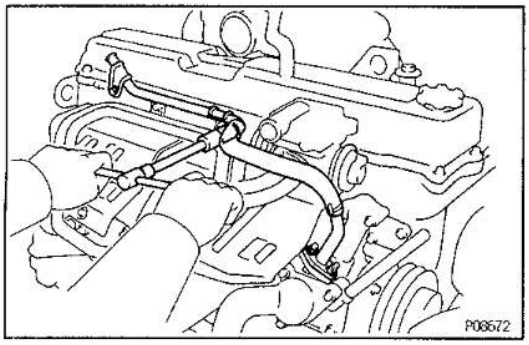

19. REMOVE HEATER PIPE

Remove the two bolts, two nuts, heater pipe and gasket.

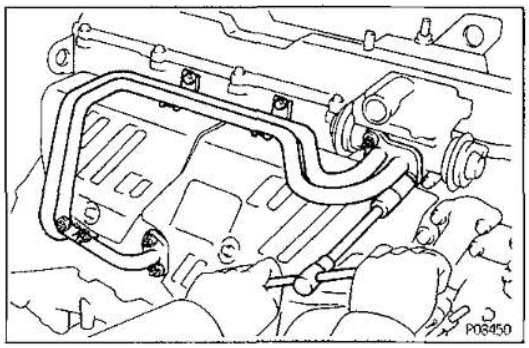

20. (Europe)
REMOVE AIR PIPE
Remove the two bolts, six nuts, air pipe and three gaskets.

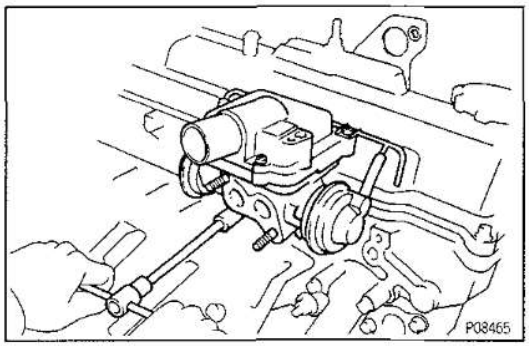

21. (Europe)
REMOVE AS REED VALVE
Remove the two bolts and AS reed valve.

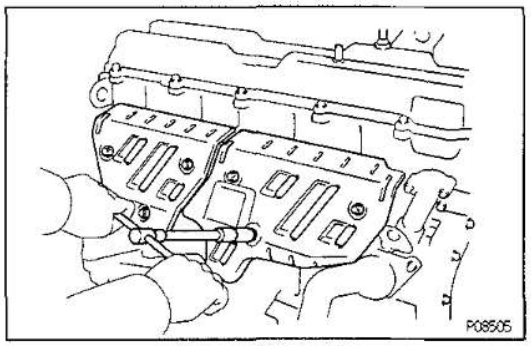

22. REMOVE NO.1 AND NO.2 EXHAUST MANIFOLDS
(a) Remove the six bolts, No.1 heat insulator and No.2 heat insulator.

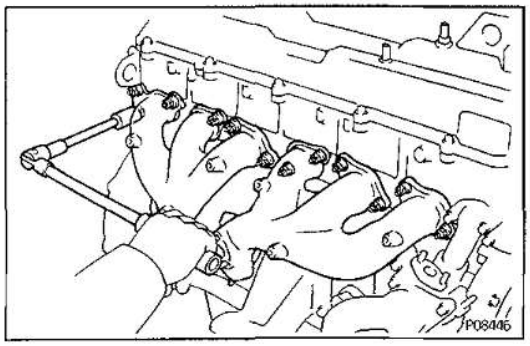

(b) Remove the 13 nuts, No.1 exhaust manifold, No.2 exhaust manifold and two gaskets.

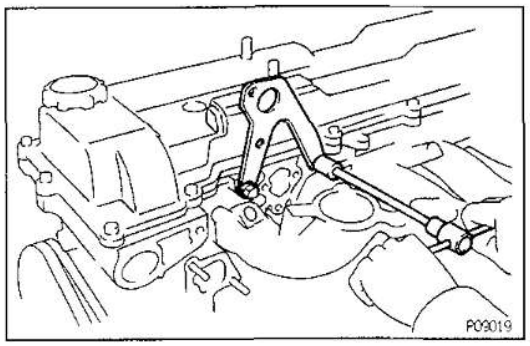

23. REMOVE NO.1 ENGINE HANGER
Remove the two bolts and No.1 engine hanger.

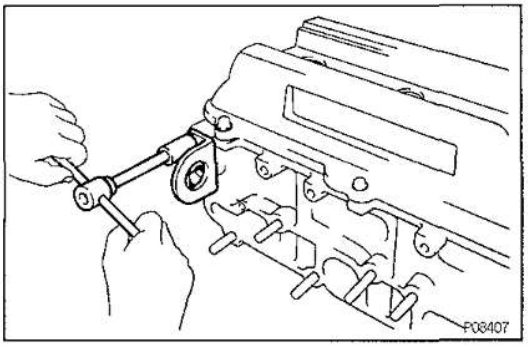

24. REMOVE NO.2 ENGINE HANGER

Remove the two bolts and No.2 engine hanger.

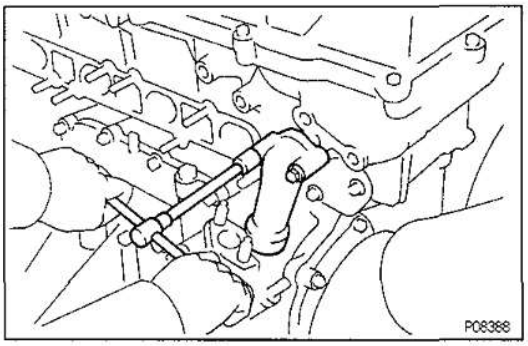

25. REMOVE WATER BY—PASS OUTLET AND PIPE

(a) Remove the two bolts and water by—pass outlet and pipe.

(b) Remove the three O—rings from the water by—pass outlet and pipe.

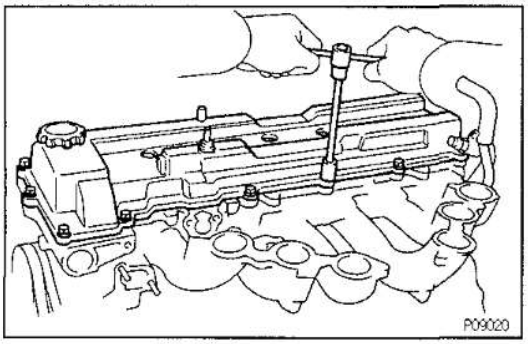

26. REMOVE CYLINDER HEAD COVER

Remove the 13 bolts, cylinder head cover and gasket.

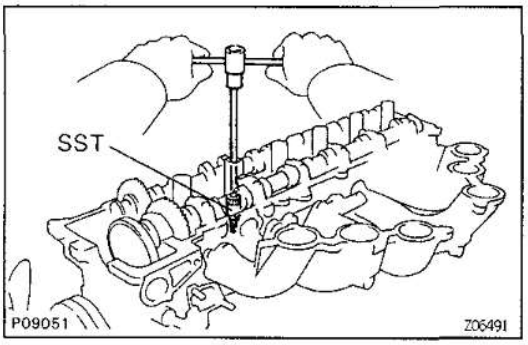

27. REMOVE SPARK PLUGS

Using SST, remove the spark plug.

SST 09155—16100

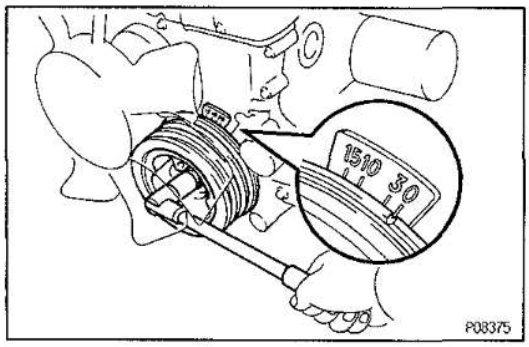

28. SET NO.1 CYLINDER TO TDC/COMPRESSION

(a) Turn the crankshaft pulley and align its groove with the "0" mark on the timing chain cover.

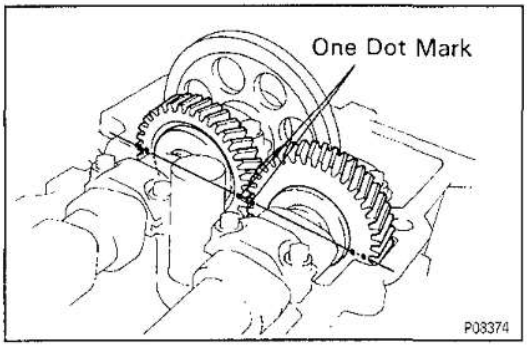

(b) Check that the timing marks (one and two dots) of the camshaft drive and driven gears are in straight line on the cylinder head surface as shown in the illustration. If not, turn the crankshaft one revolution (360°) and align the marks as above.

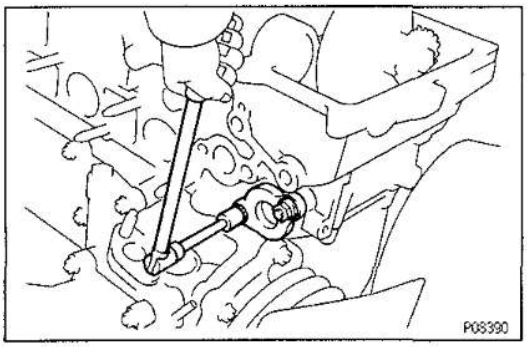

29. REMOVE CHAIN TENSIONER

Remove the two nuts, chain tensioner and gasket.

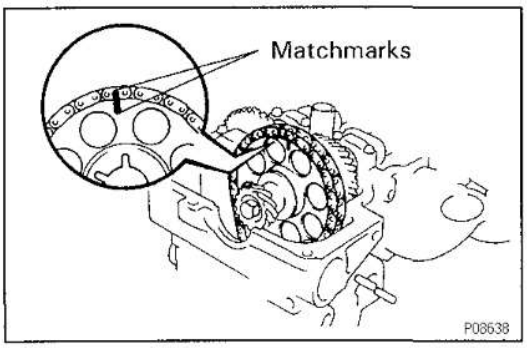

30. REMOVE CAMSHAFT TIMING GEAR

(a) Remove the semi—circular plug.

(b) Place the matchmarks on the camshaft timing gear and timing chain.

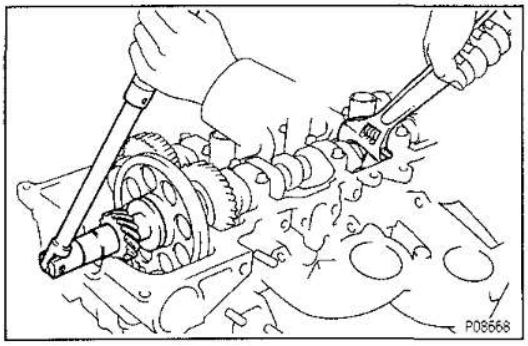

(c) Hold the intake camshaft with a wrench, remove the bolt and distributor gear.

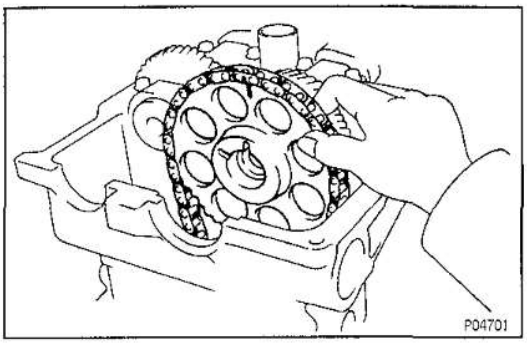

(d) Remove the camshaft timing gear and chain from the intake camshaft and leave on the slipper and damper.

31. REMOVE CAMSHAFTS

NOTICE: Since the thrust clearance of the camshaft is small, the camshaft must be kept level while it is being removed. If the camshaft is not kept level, the portion of the cylinder head receiving the shaft thrust may crack or be damaged, causing the camshaft to seize or break. To avoid this, the following steps should be carried out.

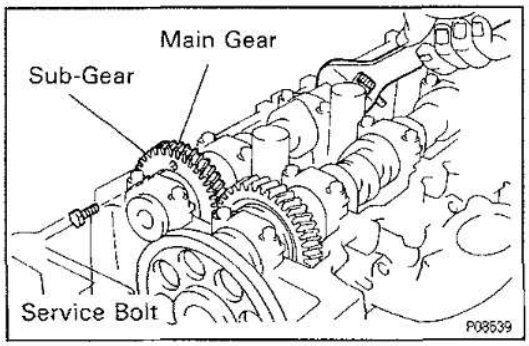

A. Remove exhaust camshaft

(a) Bring the service bolt hole of the driven sub—gear upward by turning the hexagon wrench head portion of the intake camshaft with a wrench.

(b) Secure the exhaust camshaft sub—gear to the driven gear with a service bolt.

Recommended service bolt:

Thread diameter	6 mm
Thread pitch	1.0 mm
Bolt length	16 — 20 mm (0.63 — 0.79 in.)

HINT: When removing the camshaft, make sure that the torsional spring force of the sub—gear has been eliminated by the above operation.

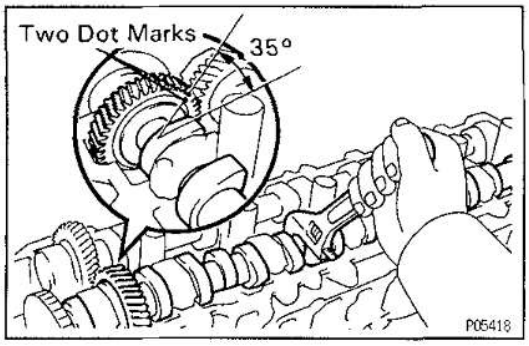

(c) Set the timing mark (two dot marks) of the camshaft driven gear at approx. 35° angle by turning the hexagon wrench head portion of the intake camshaft with a wrench.

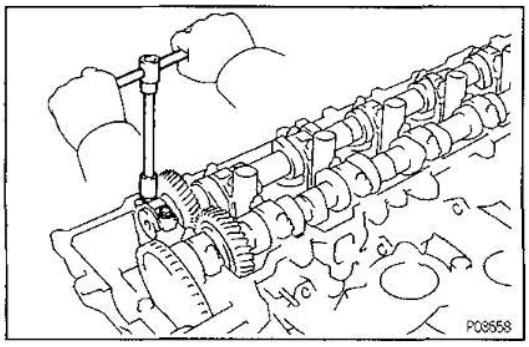

(d) Lightly push the camshaft towards the rear without applying excessive force.

(e) Loosen and remove the No.1 bearing cap bolts, alternately loosening the left and right bolts uniformly.

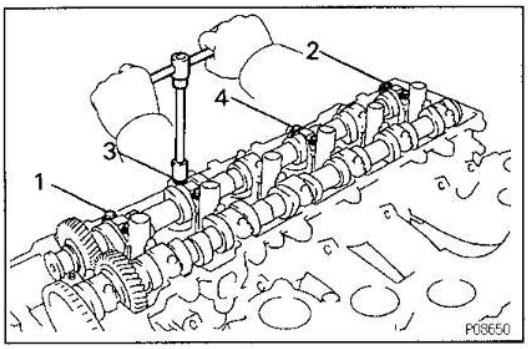

(f) Loosen and remove the No.2, No.3, No.5 and No.7 bearing cap bolts, alternately loosening the left and right bolts uniformly in several passes, in the sequence shown.

NOTICE: Do not remove the No.4 and No.6 bearing cap bolts at this stage.

(g) Remove the four bearing caps.

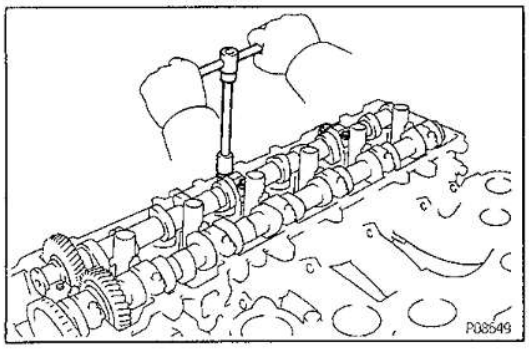

(h) Alternately and uniformly loosen and remove the No.4 and No.6 bearing cap bolts.

HINT:

- As the four No.4 and No.6 bearing cap bolts are loosened, make sure that the camshaft is lifted out straight and level.
- If the camshaft is not being lifted out straight and level, retighten the four No.4 and No.6 bearing cap bolts. Then reverse the order of above steps from (g) to (a) and repeat steps from (a) to (f) once again.

NOTICE: Do not pry on or attempt to force the camshaft with a tool or other object.

(i) Remove the two bearing caps and exhaust camshaft.

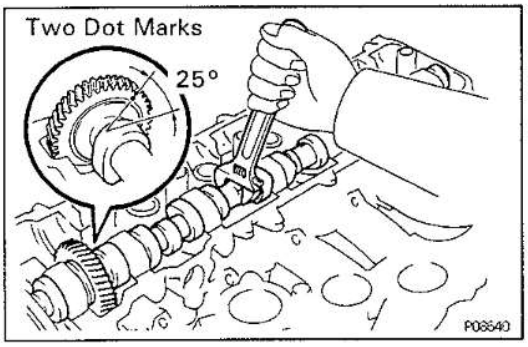

B. Remove intake camshaft

(a) Set the timing mark (two dot marks) of the camshaft drive gear at approx. 25° angle by turning the hexagon wrench head portion of the intake camshaft with a wrench.

HINT: The above angle arrows the No.1 and No.4 cylinder cam lobes of the intake camshaft to push their valve lifters evenly.

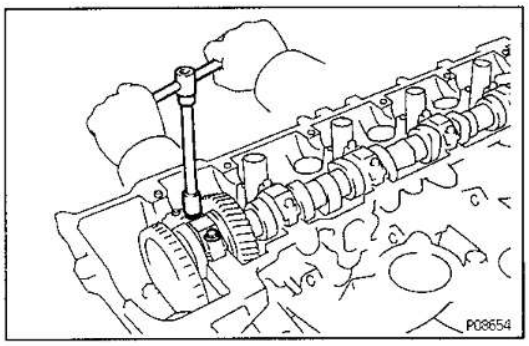

(b) Lightly push the intake camshaft towards the front without applying excessive force.

(c) Loosen and remove the No.1 bearing cap bolts, alternately loosening the left and right bolts uniformly.

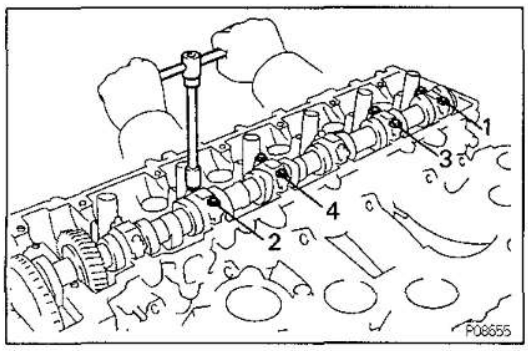

(d) Loosen and remove the No.3, No.4, No.6 and No.7 bearing cap bolts, alternately loosening the left and right bolts uniformly in several passes, in the sequence shown.

NOTICE: Do not remove the No.2 and No.5 bearing cap bolts at this stage.

(e) Remove the four bearing caps.

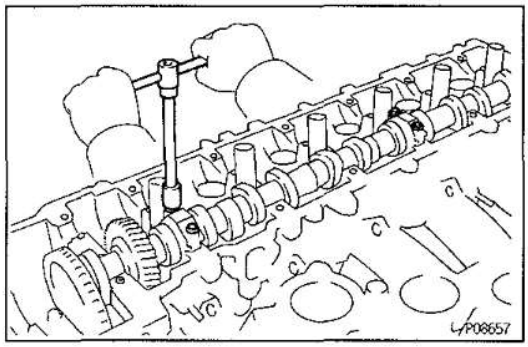

(f) Alternately and uniformly loosen and remove the No.2 and No.5 bearing cap bolts.

HINT:

- As the four No.2 and No.5 bearing cap bolts are loosened, make sure that the camshaft is lifted out straight and level.
- If the camshaft is not being lifted out straight and level, retighten the four No.2 and No.5 bearing cap bolts. Then reverse the order of above steps from (f) to (a) and repeat steps from (a) to (g) once again.

NOTICE: Do not pry on or attempt to force the camshaft with a tool or other object.

(g) Remove the two bearing caps and exhaust camshaft.

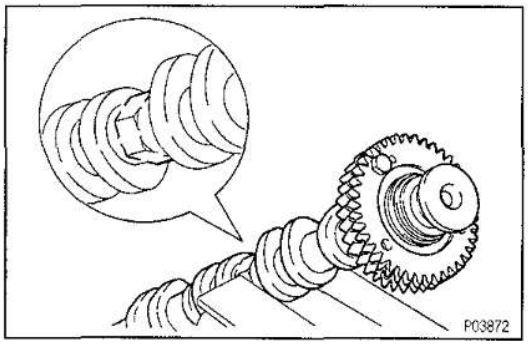

32. DISASSEMBLE EXHAUST CAMSHAFT

(a) Mount the hexagon wrench head portion of the camshaft in a vise.

NOTICE: Be careful not to damage the camshaft.

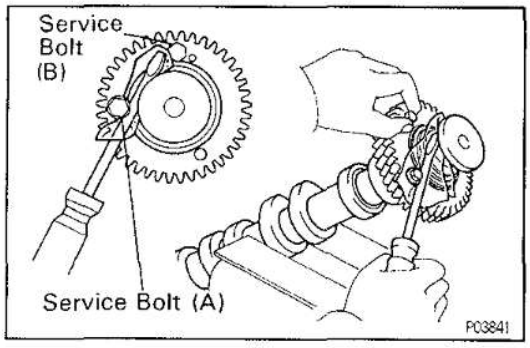

(b) Insert a service bolt (A) into the service hole of the camshaft sub—gear.

(c) Using a screwdriver, turn the sub—gear clockwise, and remove the service bolt (B).

NOTICE: Be careful not to damage the camshaft.

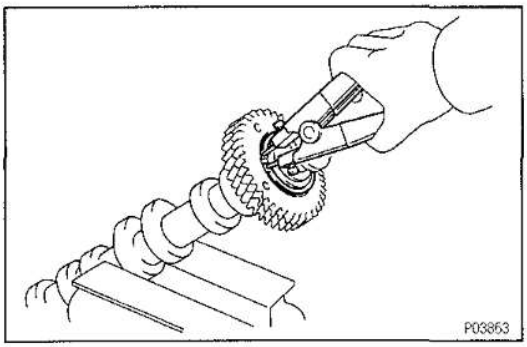

(d) Using snap ring pliers, remove the snap ring.

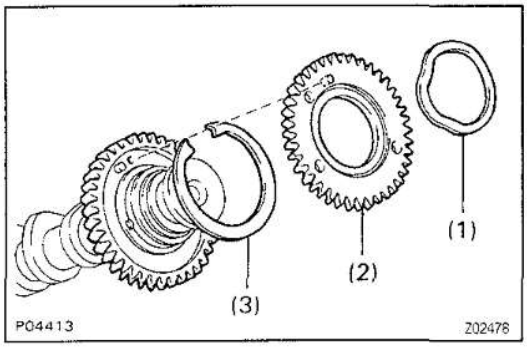

(e) Remove the following parts:
(1) Wave washer
(2) Camshaft sub—gear
(3) Camshaft gear spring

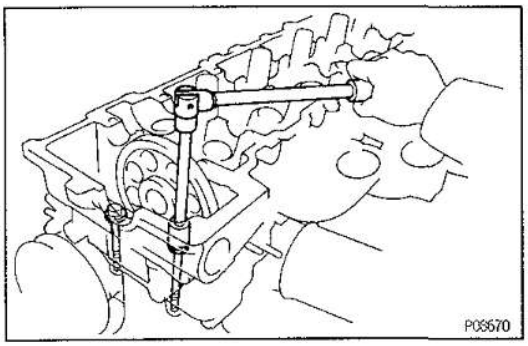

33. REMOVE CYLINDER HEAD

(a) Remove the two bolts in front of the head before the other head bolts are removed.

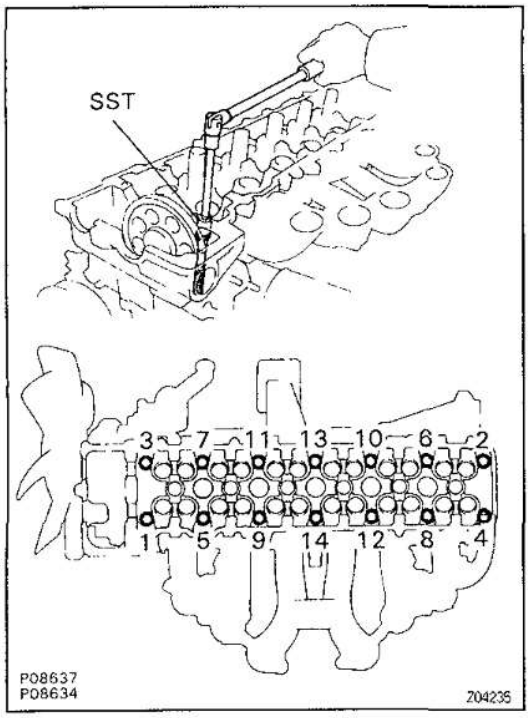

(b) Using SST, uniformly loosen and remove the 14 cylinder head bolts in several passes, in the sequence shown.
SST 09011—38121
NOTICE: Cylinder head warpage or cracking could result from removing bolts in incorrect order.

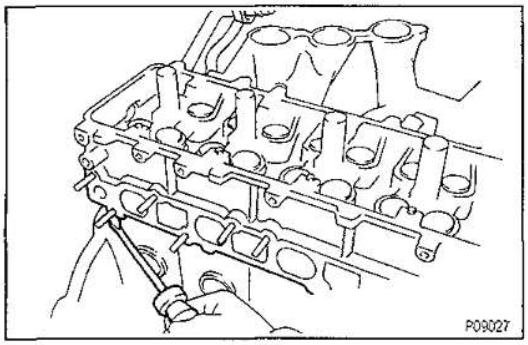

(c) Lift the cylinder head from the dowels on the cylinder block, and place the cylinder head on wooden blocks on a bench.
HINT: If the cylinder head is difficult to lift off, pry between the cylinder head and cylinder block with a screwdriver.
NOTICE: Be careful not to damage the contact surfaces of the cylinder head and cylinder block.

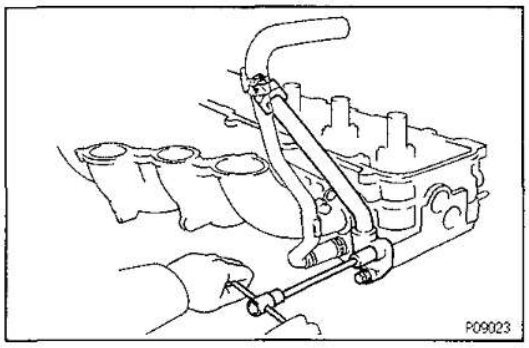

34. (Europe)
REMOVE EGR PIPE
Remove the two bolts, EGR pipe and gasket.

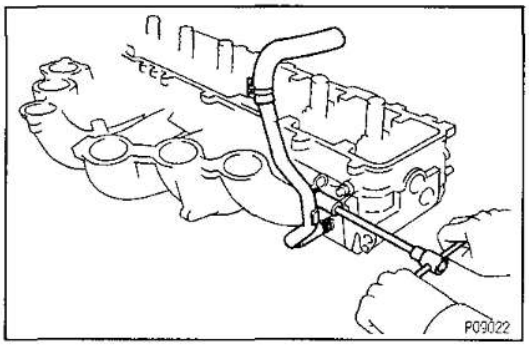

35. REMOVE HEATER INLET PIPE AND HOSE
Disconnect the heater hose, and remove the bolt and heater inlet pipe.

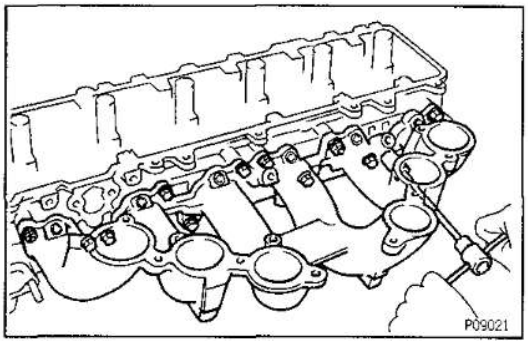

36. REMOVE INTAKE MANIFOLD WITH FUEL FILTER
Remove the six bolts, two nuts, intake manifold and gasket.

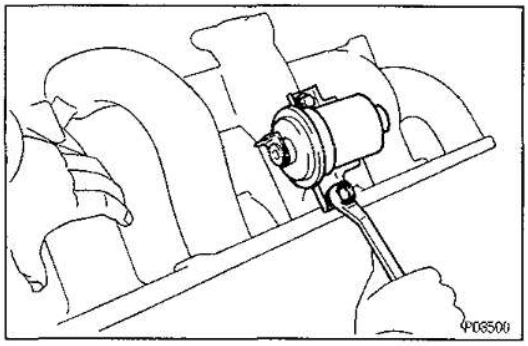

37. REMOVE FUEL FILTER
Remove the two bolts and fuel filter.

EG0VC-03

CYLINDER HEAD DISASSEMBLY

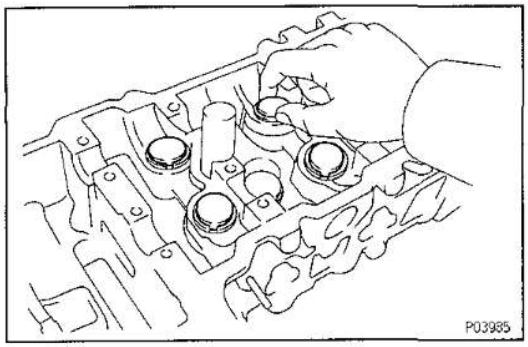

(See Components for Removal and Installation)

1. REMOVE VALVE LIFTERS AND SHIMS

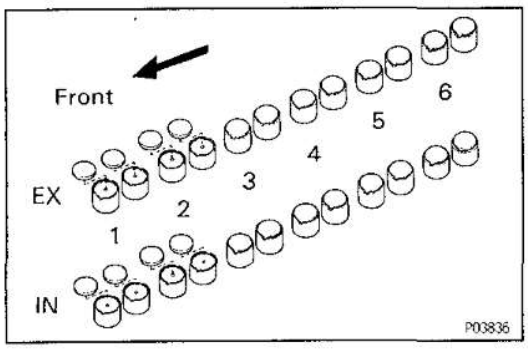

HINT: Arrange the valve lifters and shims in correct order.

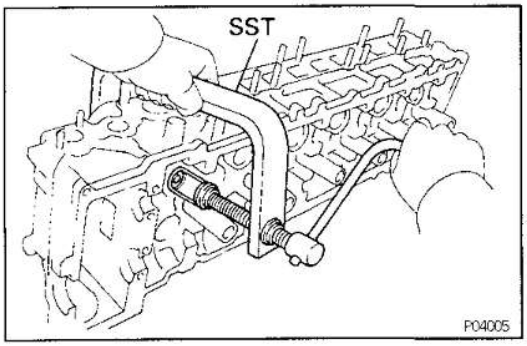

2. REMOVE VALVES

(a) Using SST, compress the valve spring and remove the two keepers.
SST 09202−70010

(b) Remove the spring retainer, valve spring and valve.

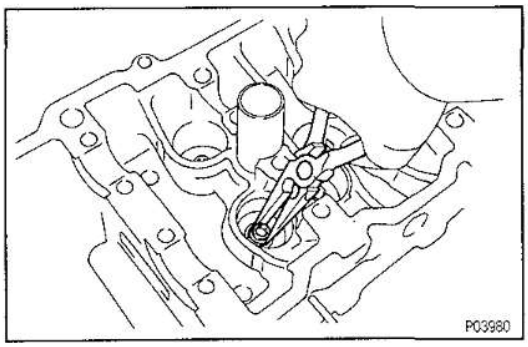

(c) Using needle−nose pliers, remove the oil seal.

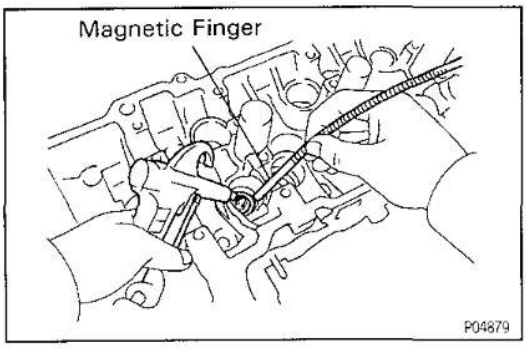

(d) Using compressed air and a magnetic finger, remove the spring seat by blowing air.

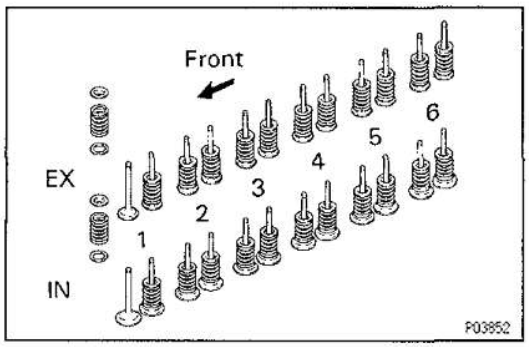

HINT: Arrange the valves, valve springs, spring seats and spring retainers in correct order.

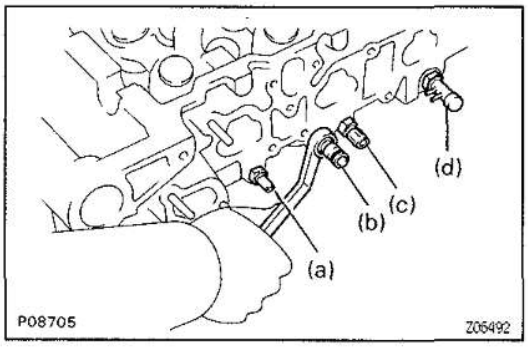

3. REMOVE FOLLOWING PARTS:

(a) Water temperature sender gauge
(b) Water temperature cut switch
(c) Water temperature sensor
(d) BVSV

EG1JX-02

CYLINDER HEAD COMPONENTS INSPECTION, CLEANING AND REPAIR

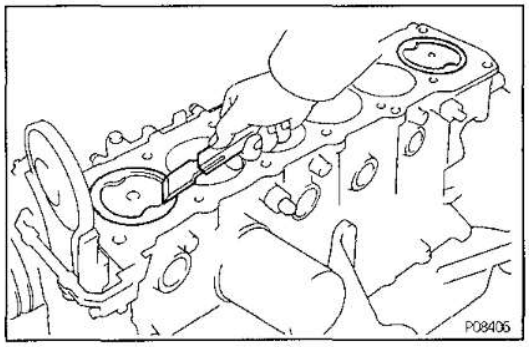

1. CLEAN TOP SURFACES OF PISTONS AND CYLINDER BLOCK

(a) Turn the crankshaft, and bring each piston to top dead center (TDC). Using a gasket scraper, remove all the carbon from the piston top surface.

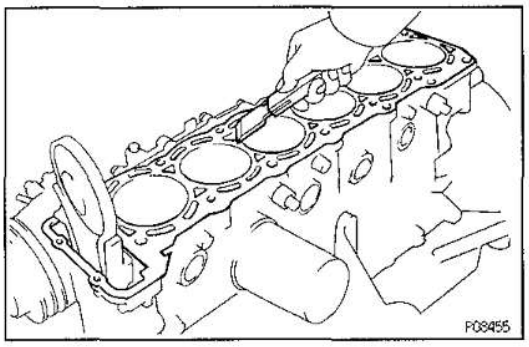

(b) Using a gasket scraper, remove all the gasket material from the cylinder block surface.

(c) Using compressed air, blow carbon and oil from the bolt holes.

CAUTION: Protect your eyes when using high—compressed air.

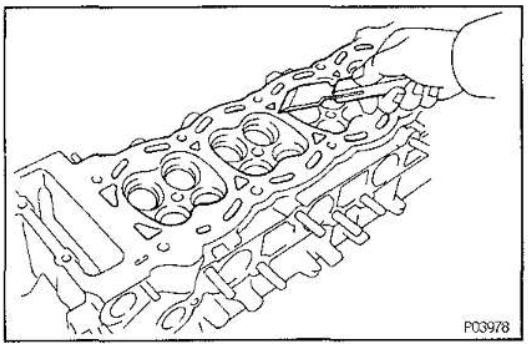

2. CLEAN CYLINDER HEAD

A. Remove gasket material

Using a gasket scraper, remove all the gasket material from the cylinder block contact surface.

NOTICE: Be careful not to scratch the cylinder block contact surface.

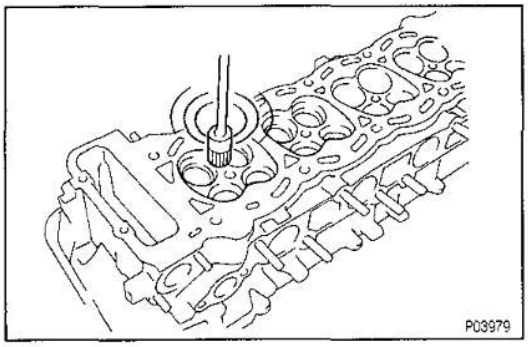

B. Clean combustion chambers

Using a wire brush, remove all the carbon from the combustion chambers.

NOTICE: Be careful not to scratch the cylinder block contact surface.

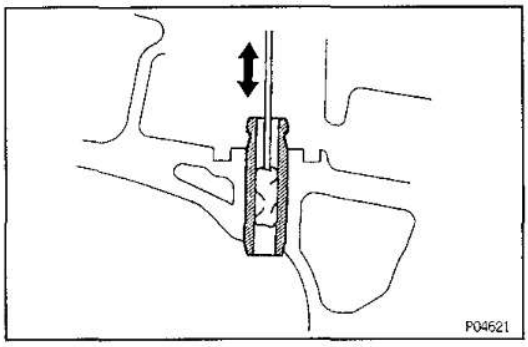

C. Clean valve guide bushings

Using a valve guide bushing brush and solvent, clean all the guide bushings.

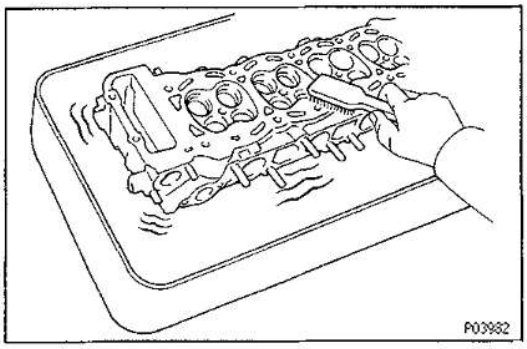

D. Clean cylinder head

Using a soft brush and solvent, thoroughly clean the cylinder head.

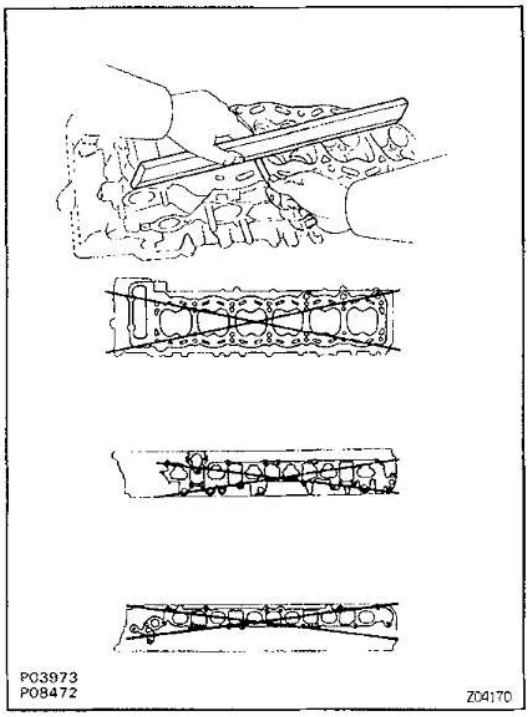

3. INSPECT CYLINDER HEAD

A. Inspect for flatness

Using a precision straight edge and thickness gauge, measure the surfaces contacting the cylinder block and the manifolds for warpage.

Maximum warpage:

Cylinder block side

0.15 mm (0.0059 in.)

Manifold side

0.10 mm (0.0039 in.)

If warpage is greater than maximum, replace the cylinder head.

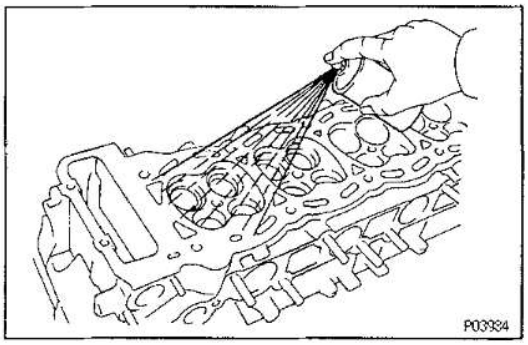

B. Inspect for cracks

Using a dye penetrant, check the combustion chambers, intake ports, exhaust ports and cylinder block surface for cracks.

If cracked, replace the cylinder head.

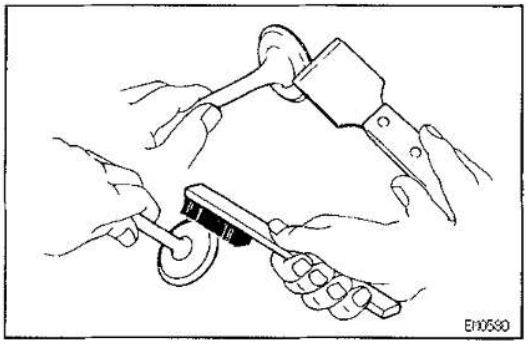

4. CLEAN VALVES

(a) Using a gasket scraper, chip off any carbon from the valve head.

(b) Using a wire brush, thoroughly clean the valve.

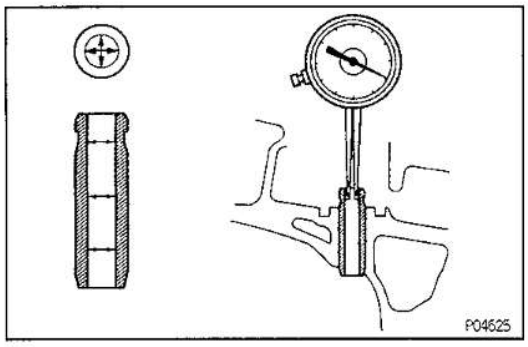

5. INSPECT VALVE STEMS AND GUIDE BUSHINGS

(a) Using a caliper gauge, measure the inside diameter of the guide bushing.

Bushing inside diameter:

7.010 — 7.030 mm (0.2760 — 0.2768 in.)

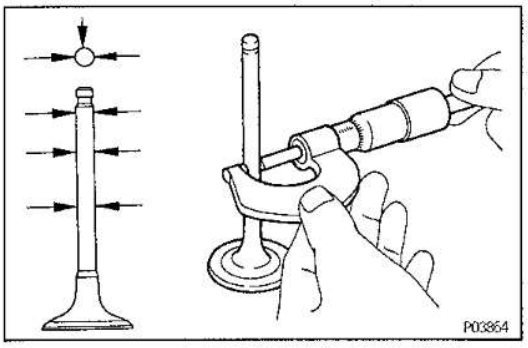

(b) Using a micrometer, measure the diameter of the valve stem.

Valve stem diameter:

Intake

6.970 — 6.985 mm (0.2744 — 0.2750 in.)

Exhaust

6.965 — 6.980 mm (0.2742 — 0.2748 in.)

(c) Subtract the valve stem diameter measurement from the guide bushing inside diameter measurement.

Standard oil clearance:

Intake

0.025 — 0.060 mm (0.0010 — 0.0024 in.)

Exhaust

0.030 — 0.065 mm (0.0012 — 0.0026 in.)

Maximum oil clearance:

Intake

0.08 mm (0.0031 in.)

Exhaust

0.10 mm (0.0039 in.)

If the clearance is greater than maximum, replace the valve and guide bushing.

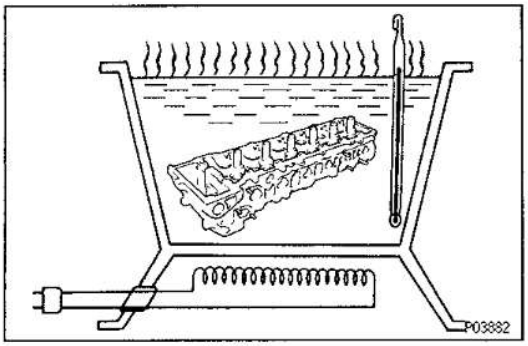

6. IF NECESSARY, REPLACE VALVE GUIDE BUSHINGS

(a) Gradually heat the cylinder head to 80 — 100°C (176 — 212°F).

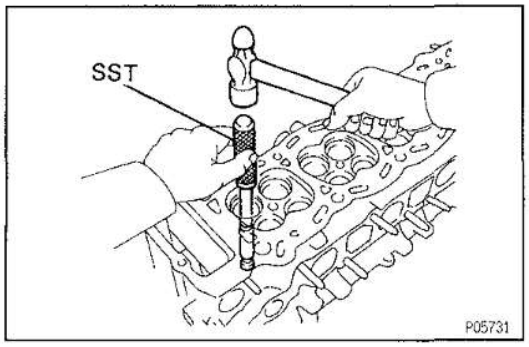

(b) Using SST and a hammer, tap out the guide bushing.
SST 09201 – 15010

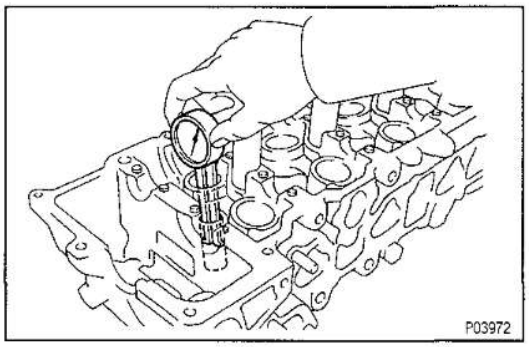

(c) Using a caliper gauge, measure the bushing bore diameter of the cylinder head.

Both intake and exhaust

Bushing bore diameter mm (in.)	Bushing size
11.492 – 11.513 (0.4524 – 0.4533)	Use STD
11.542 – 11.563 (0.4544 – 0.4552)	Use O/S 0.05

V00741

(d) Select a new guide bushing (STD size or O/S 0.05).
If the bushing bore diameter of the cylinder head is greater than 11.513 mm (0.4533 in.), machine the bushing bore to the following dimension:
11.542 – 11.563 mm (0.4544 – 0.4552 in.)
If the bushing bore diameter of the cylinder head is greater than 11.563 mm (0.4552 in.), replace the cylinder head.

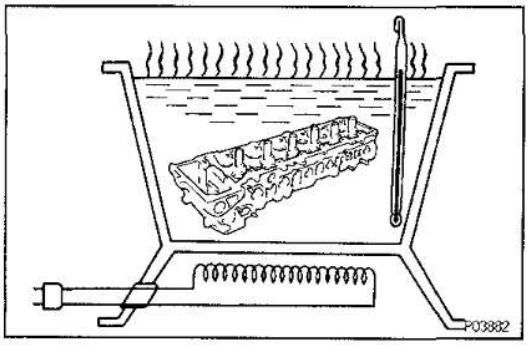

(e) Gradually heat the cylinder head to 80 – 100°C (176 – 212°F).

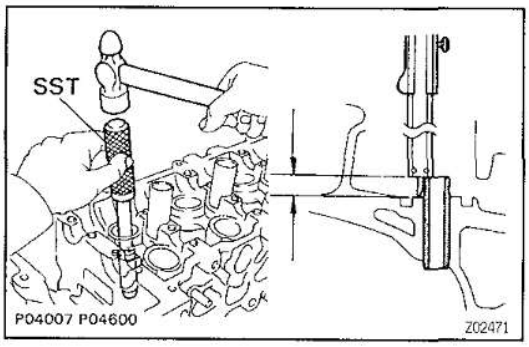

(f) Using SST and a hammer, tap in a new guide bushing to where there 8.2 – 8.6 mm (0.323 – 0.339 in.) protruding from the cylinder head.
SST 09201 – 15010

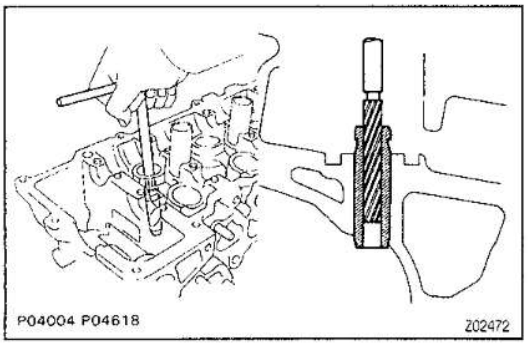

(g) Using a sharp 7 mm reamer, ream the guide bushing to obtain the standard specified clearance (See page EG—58) between the guide bushing and valve stem.

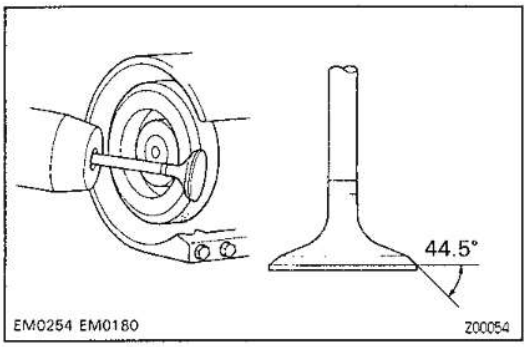

7. INSPECT AND GRIND VALVES

(a) Grind the valve enough to remove pits and carbon.

(b) Check that the valve is ground to the correct valve face angle.

Valve face angle:

44.5°

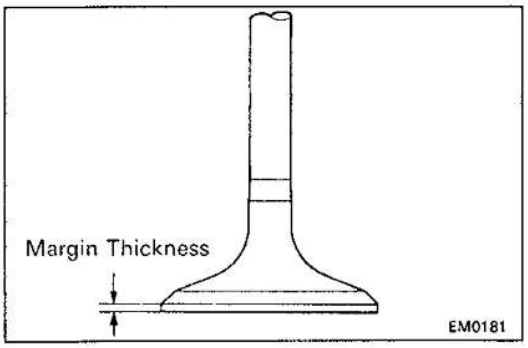

(c) Check the valve head margin thickness.

Standard margin thickness:

1.2 mm (0.047 in.)

Minimum margin thickness:

1.0 mm (0.039 in.)

If the margin thickness is less than minimum, replace the valve.

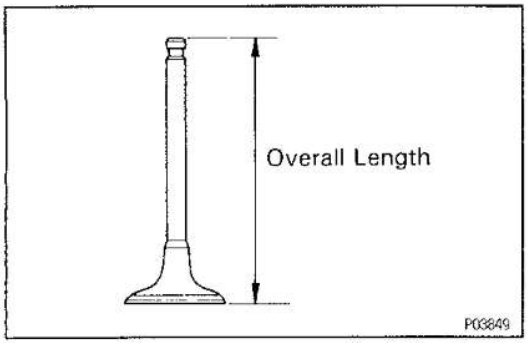

(d) Check the valve overall length.

Standard overall length:

Intake

98.4 mm (3.874 in.)

Exhaust

97.9 mm (3.854 in.)

Minimum overall length:

Intake

97.9 mm (3.854 in.)

Exhaust

97.4 mm (3.835 in.)

If the overall length is less than minimum, replace the valve.

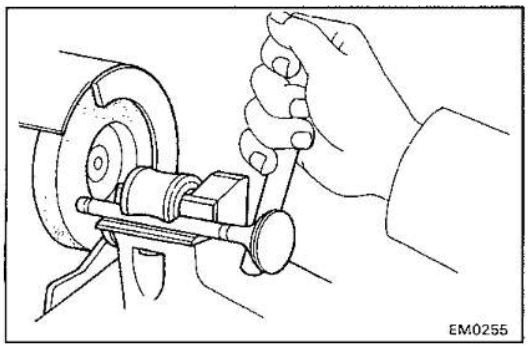

(e) Check the surface of the valve stem tip for wear.
If the valve stem tip is worn, resurface the tip with a grinder or replace the valve.
NOTICE: Do not grind off more than minimum.

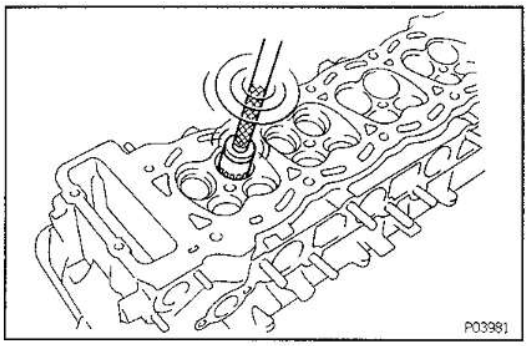

8. INSPECT AND CLEAN VALVE SEATS

(a) Using a 45° carbide cutter, resurface the valve seats. Remove only enough metal to clean the seats.

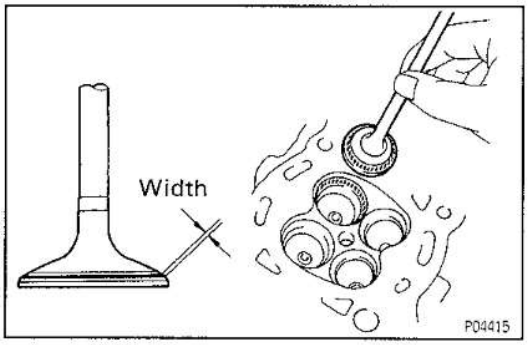

(b) Check the valve seating position.
Apply a light coat of prussian blue (or white lead) to the valve face. Lightly press the valve against the seat. Do not rotate valve.

(c) Check the valve face and seat for the following:

- If blue appears 360° around the face, the valve is concentric. If not, replace the valve.

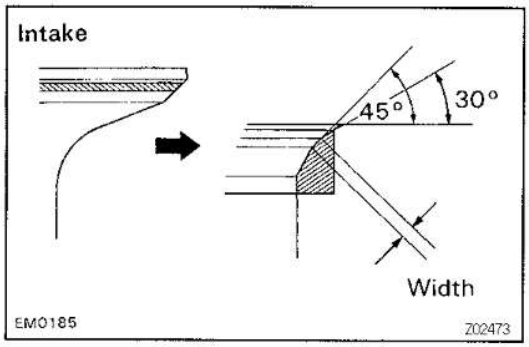

- If blue appears 360° around the valve seat, the guide and face are concentric. If not, resurface the seat.
- Check that the seat contact is in the middle of the valve face with the following width:
  Intake
  1.2 — 1.6 mm (0.047 — 0.063 in.)
  Exhaust
  1.0 — 1.4 mm (0.039 — 0.055 in.)

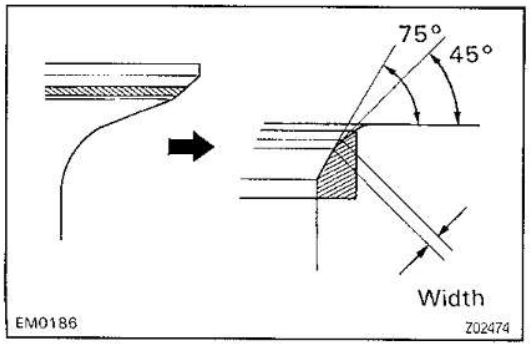

If not, correct the valve seats as follows:

(1) (Intake)
If the seating is too high on the valve face, use 30° and 45° cutters to correct the seat.

(2) If the seating is too low on the valve face, use 75° and 45° cutters to correct the seat.

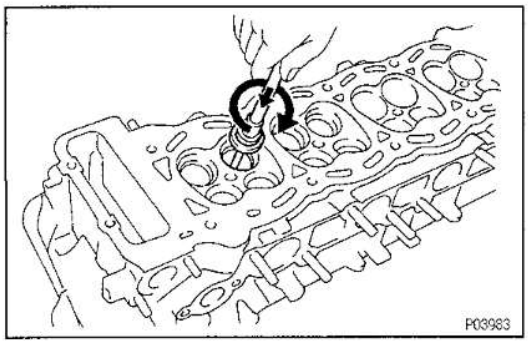

(d) Hand—lap the valve and valve seat with an abrasive compound.

(e) After hand—lapping, clean the valve and valve seat.

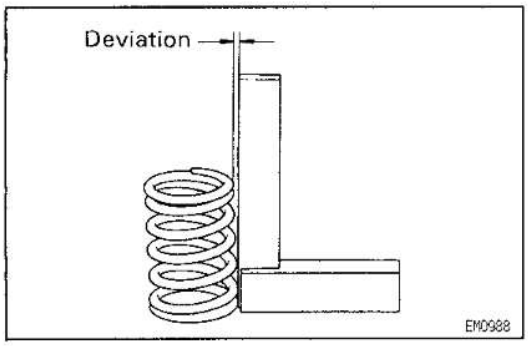

9. INSPECT VALVE SPRINGS

(a) Using a steel square, measure the squareness of the valve spring.

Maximum squareness:

2.0 mm (0.079 in.)

If the deviation is greater than maximum, replace the valve spring.

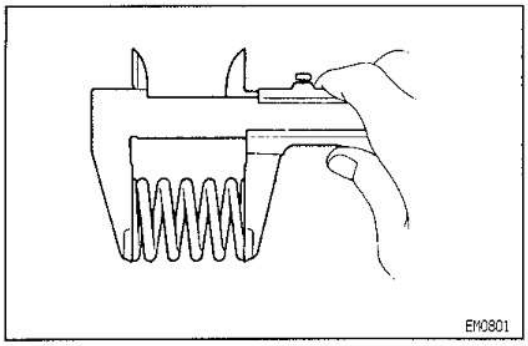

(b) Using a vernier caliper, measure the free length of the valve spring.

Free length:

43.94 — 45.06 mm (1.7299 — 1.7740 in.)

If the free length is not as specified, replace the valve spring.

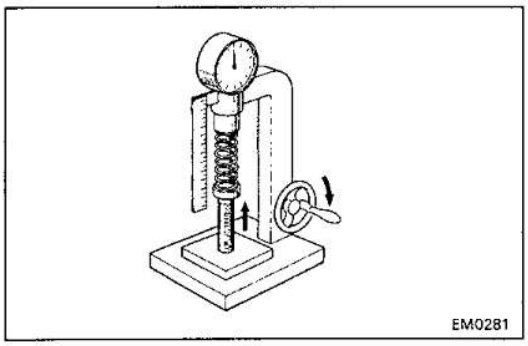

(c) Using a spring tester, measure the tension of the valve spring at the specified installed length.

Installed tension:

214 — 238 N (21.8 — 24.2 kgf, 48.1 — 53.4 lbf) at 36.5 mm (1.437 in.)

If the installed tension is not as specified, replace the valve spring.

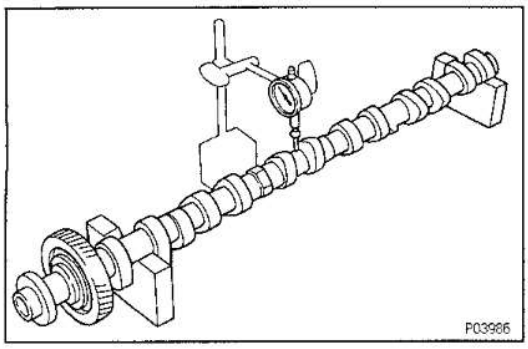

10. INSPECT CAMSHAFTS AND BEARINGS

A. Inspect camshaft for runout

(a) Place the camshaft on V—blocks.

(b) Using a dial indicator, measure the circle runout at the center journal.

Maximum circle runout:

0.06 mm (0.0024 in.)

If the circle runout is greater than maximum, replace the camshaft.

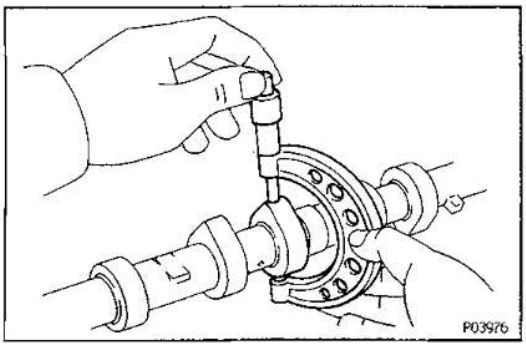

B. Inspect cam lobes

Using a micrometer, measure the cam lobe height.

Standard cam lobe height:

50.61 – 50.71 mm (1.9925 – 1.9965 in.)

Minimum cam lobe height:

50.51 mm (1.9886 in.)

If the cam lobe height is less than minimum, replace the camshaft.

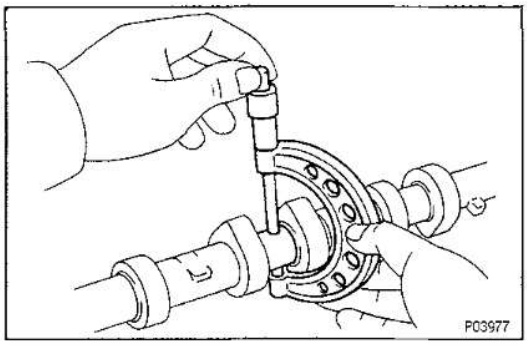

C. Inspect camshaft journals

Using a micrometer, measure the journal diameter.

Journal diameter:

26.959 – 26.975 mm(1.0614 – 1.0620 in.)

If the journal diameter is not as specified, check the oil clearance.

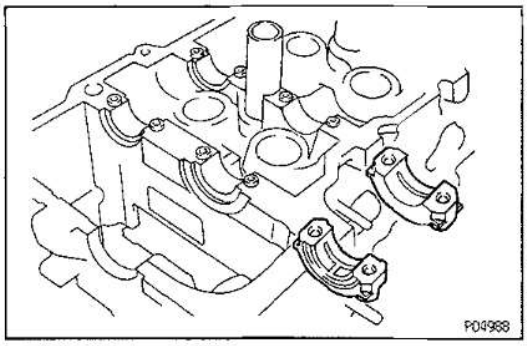

D. Inspect camshaft bearings

Check that bearings for flaking and scoring.

If the bearings are damaged, replace the bearing caps and cylinder head as a set.

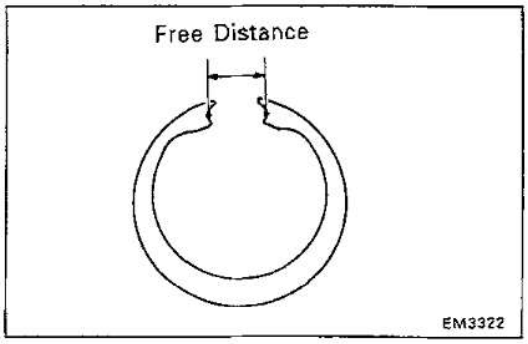

E. Inspect camshaft gear spring

Using a vernier caliper, measure the free distance between the spring ends.

Free distance:

18.2 – 18.8 mm (0.717 – 0.740 in.)

If the free distance is not as specified, replace the gear spring.

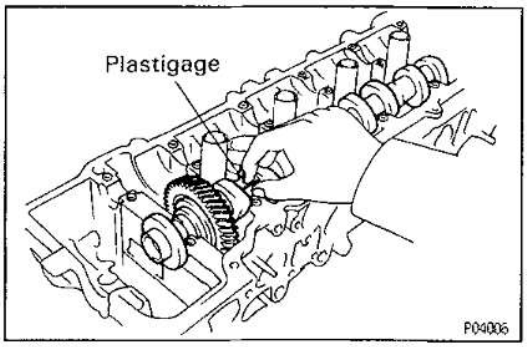

F. Inspect camshaft journal oil clearance

(a) Clean the bearing caps and camshaft journals.

(b) Place the camshafts on the cylinder head.

(c) Lay a strip of Plastigage across each of the camshaft journals.

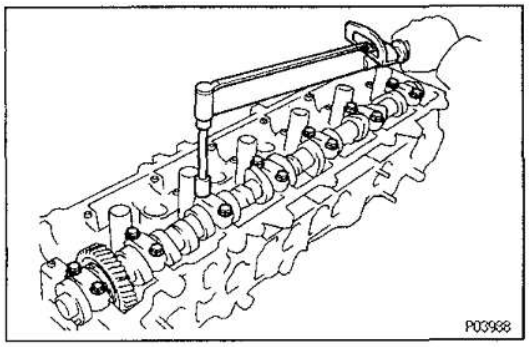

(d) Install the bearing caps.
(See step 7 on pages EG—73 to 74)
Torque: 16 N·m (160 kgf·cm, 12 ft·lbf)
NOTICE: Do not turn the camshaft.

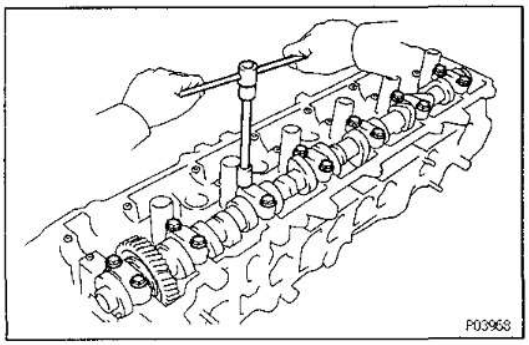

(e) Remove the bearing caps.

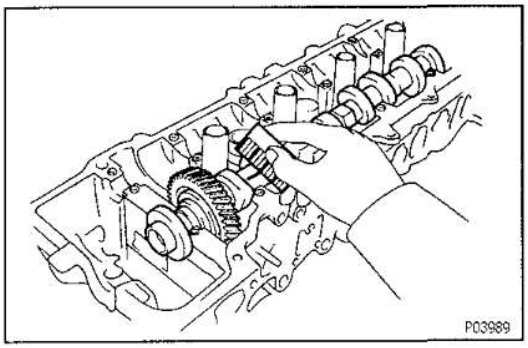

(f) Measure the Plastigage at its widest point.
Standard oil clearance:
0.025 — 0.062 mm (0.0010 — 0.0024 in.)
Maximum oil clearance:
0.10 mm (0.0039 in.)
If the oil clearance is greater than maximum, replace the camshaft. If necessary, replace the bearing caps and cylinder head as a set.

(g) Completely remove the Plastigage.

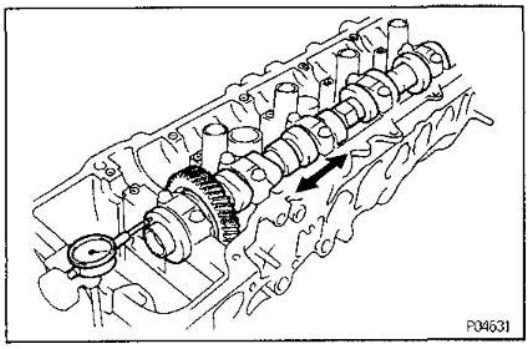

G. Inspect camshaft thrust clearance

(a) Install the camshaft.
(See step 7 on pages EG—73 to 74)

(b) Using a dial indicator, measure the thrust clearance while moving the camshaft back and forth.
Standard thrust clearance:
0.030 — 0.080 mm (0.0012 — 0.0031 in.)
Maximum thrust clearance:
0.10 mm (0.0039 in.)
If the thrust clearance is greater than maximum, replace the camshaft. If necessary, replace the bearing caps and cylinder head as a set.

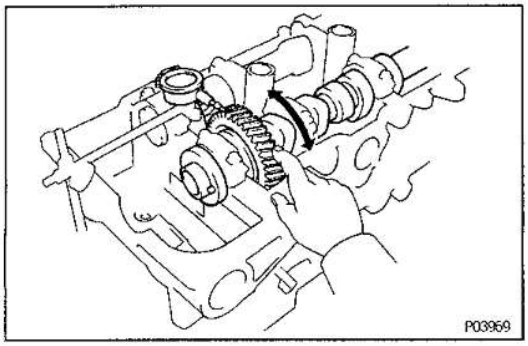

H. Inspect camshaft gear backlash

(a) Install the camshafts without installing the exhaust cam sub—gear.
(See step 7 on pages EG—73 to 74)

(b) Using a dial indicator, measure the backlash.
Standard backlash:
0.020 — 0.200 mm (0.0008 — 0.0079 in.)
Maximum backlash:
0.30 mm (0.0188 in.)
If the backlash is greater than maximum, replace the camshafts.

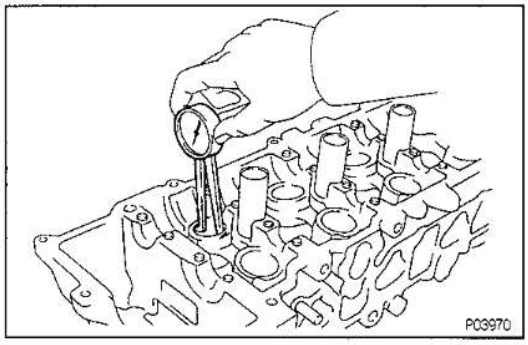

11. INSPECT VALVE LIFTERS AND LIFTER BORES

(a) Using a caliper gauge, measure the lifter bore diameter of the cylinder head.
Lifter bore diameter:
34.000 — 34.021 mm (1.3386 — 1.3394 in.)

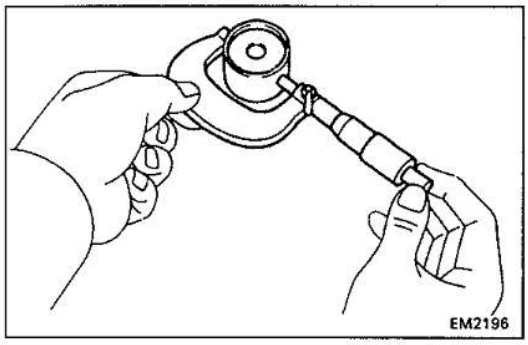

(b) Using a micrometer, measure the lifter diameter.
Lifter diameter:
33.966 — 33.976 mm (1.3372 — 1.3376 in.)

(c) Subtract the lifter diameter measurement from the lifter bore diameter measurement.
Standard oil clearance:
0.024 — 0.055 mm (0.0009 — 0.0022 in.)
Maximum oil clearance:
0.07 mm (0.0028 in.)
If the oil clearance is greater than maximum, replace the lifter. If necessary, replace the cylinder head.

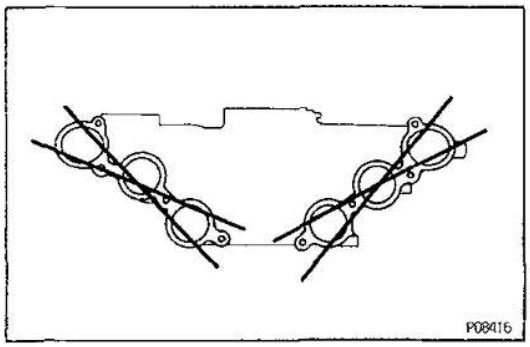

12. INSPECT AIR INTAKE CHAMBER

Using a precision straight edge and thickness gauge, measure the surface contacting the intake manifold for warpage.

Maximum warpage:

0.30 mm (0.0118 in.)

If warpage is greater than maximum, replace the air intake chamber.

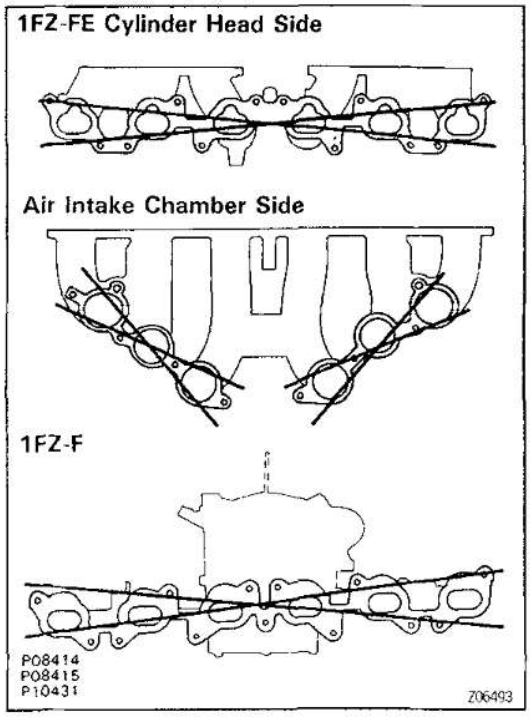

13. INSPECT INTAKE MANIFOLD

Using a precision straight edge and thickness gauge, measure the surface contacting the cylinder head and air intake chamber for warpage.

Maximum warpage:

0.30 mm (0.0118 in.)

If warpage is greater than maximum, replace the manifold.

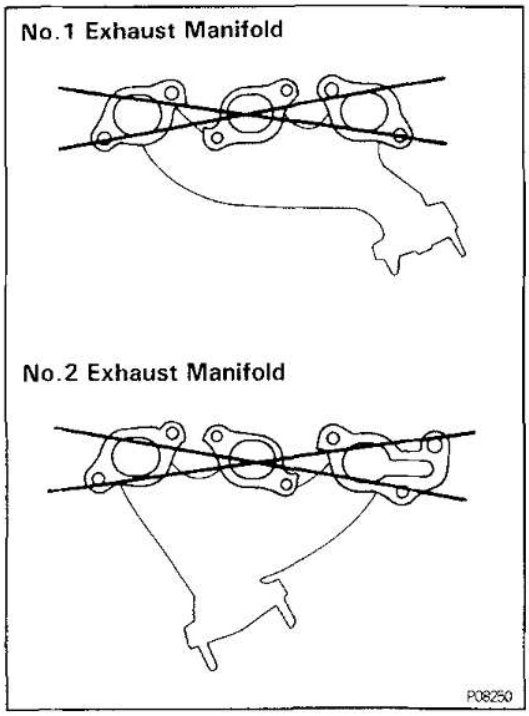

14. INSPECT EXHAUST MANIFOLDS

Using a precision straight edge and thickness gauge, measure the surface contacting the cylinder head for warpage.

Maximum warpage:

0.30 mm (0.0118 in.)

If warpage is greater than maximum, replace the manifold.

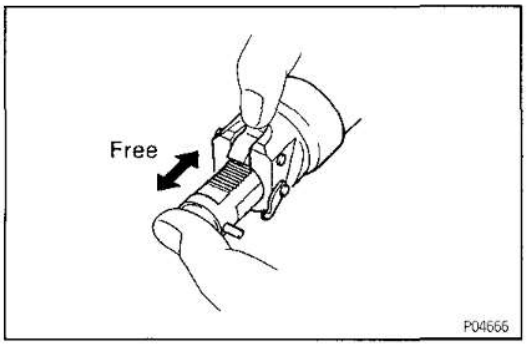

15. INSPECT CHAIN TENSIONER

(a) Check that the plunger moves smoothly when the ratchet pawl is raised with your finger.

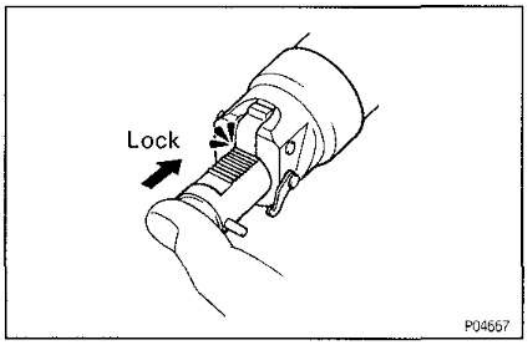

(b) Released the ratchet pawl and check that the plungeris locked in place by the ratchet pawl and does not move when pushed with your finger.

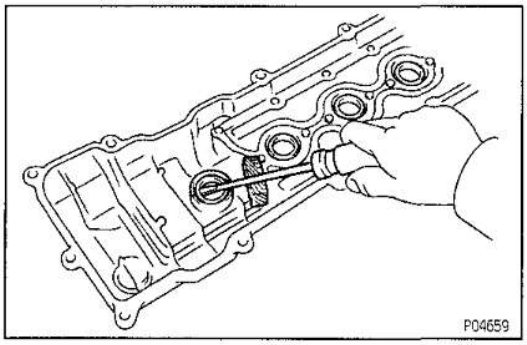

16. IF NECESSARY, REPLACE SPARK PLUG TUBE GASKETS

(a) Using a screwdriver, pry off the tube gasket.

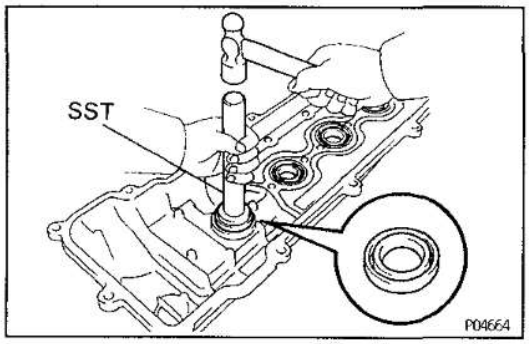

(b) Using SST and a hammer, tap in a new tube gasket as shown in the illustration.
SST 09608—60012 (09608—04020, 09608—04060)

(c) Apply a light coat of MP grease to the gasket lip.

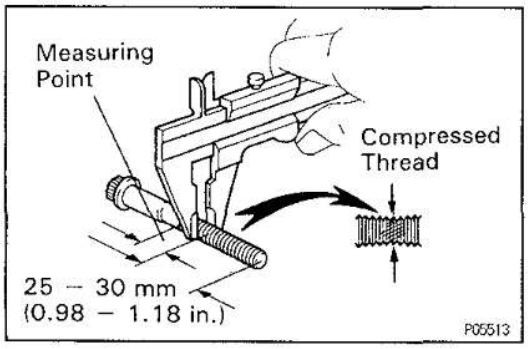

17. INSPECT CYLINDER HEAD BOLTS

Using vernier calipers, measure the thread outside diameter of the bolt.

Standard outside diameter:

10.85 — 11.00 mm (0.4272 — 0.4331 in.)

Minimum outside diameter:

10.6 mm (0.417 in.)

If the diameter is less than minimum, replace the bolt.

EG0VE-03

CYLINDER HEAD ASSEMBLY

(See Components for Removal and Installation)

HINT:

- Thoroughly clean all parts to be assembled.
- Before installing the parts, apply new engine oil to all sliding and rotating surfaces.
- Replace all gaskets and oil seals with new ones.

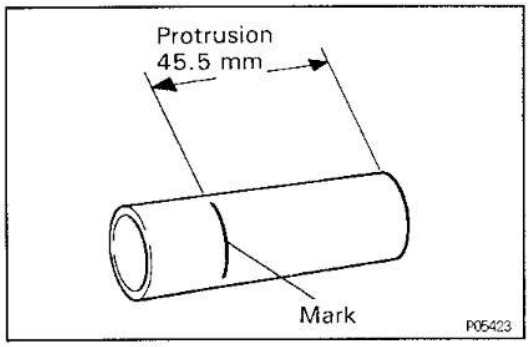

1. INSTALL SPARK PLUG TUBES

HINT: When using a new cylinder head, spark plug tubes must be installed.

(a) Mark the standard position away from the edge, onto the spark plug tube.

Standard protrusion:

45.5 mm (1.791 in.)

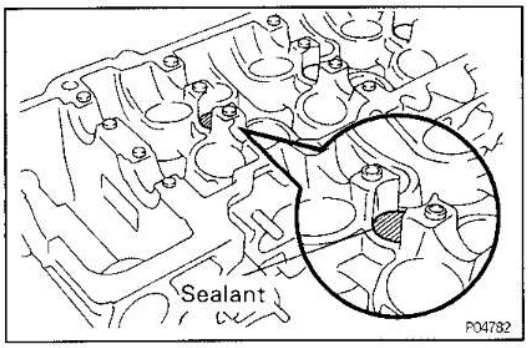

(b) Apply adhesive to the spark plug tube hole of the cylinder head.

Sealant:

Part No. 08833 — 00070, Adhesive 1324, THREE BOND 1324 or equivalent

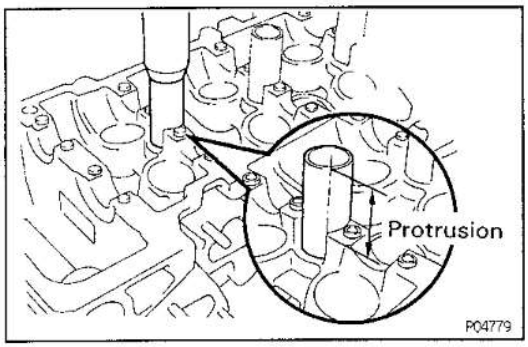

(c) Using a press, press in a new spark plug tube until there is 45.5 mm (1.791 in.) protruding from the camshaft bearing cap installation surface of the cylinder head.

NOTICE: Avoid pressing a new spark plug tube in too far by measuring the amount of protrusion while pressing.

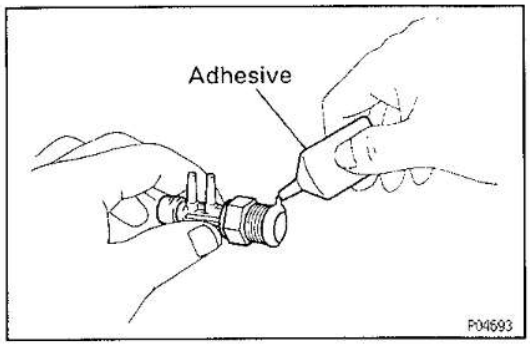

2. INSTALL FOLLOWING PARTS:

HINT: Apply adhesive to two or three threads of the TVV.

Adhesive:

Part No.08833—00080, THREE BOND 1344, LOCTITE 242 or equivalent

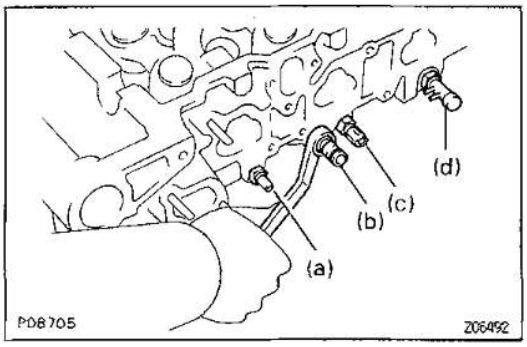

(a) Water temperature sender gauge
(b) Water temperature cut switch
(c) Water temperature sensor
(d) BVSV

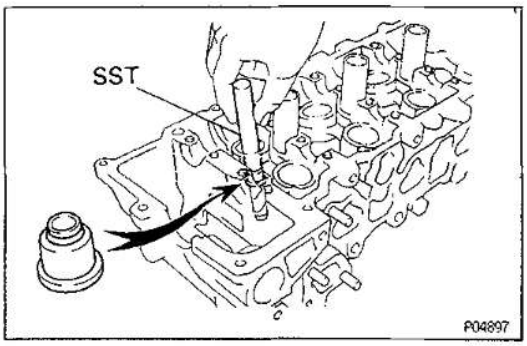

3. INSTALL VALVES

(a) Using SST, push in a new oil seal.
SST 09236−00101 (09236−15010)

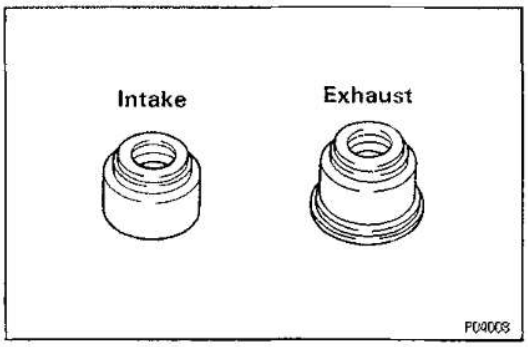

HINT: Different oil seals are used for the intake and exhaust.

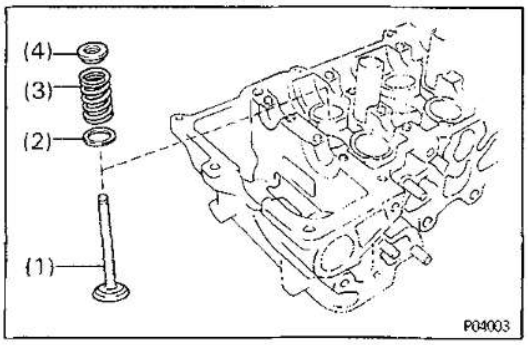

(b) Install the following parts:
(1) Valve
(2) Spring seat
(3) Valve spring
(4) Spring retainer

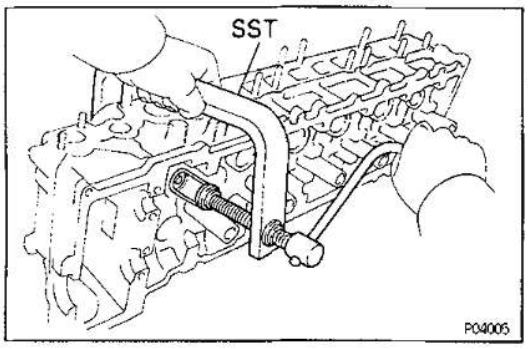

(c) Using SST, compress the valve spring and place the two keepers around the valve stem.
SST 09202−70010

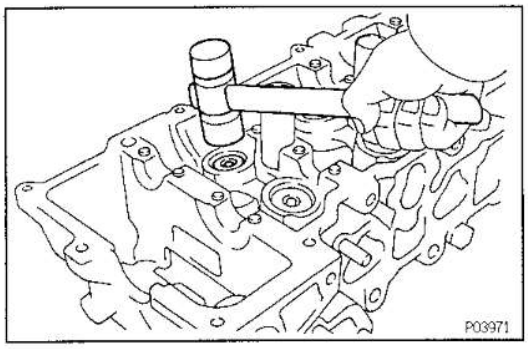

(d) Using a plastic—faced hammer, lightly tap the valve stem tip to assure proper fit.

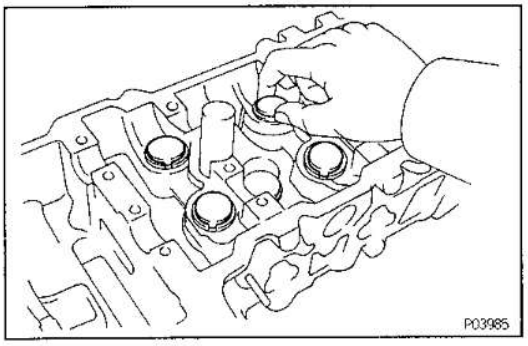

4. INSTALL VALVE LIFTERS AND SHIMS

(a) Install the valve lifter and shim.

(b) Check that the valve lifter rotates smoothly by hand.

EG27K-01

CYLINDER HEAD INSTALLATION

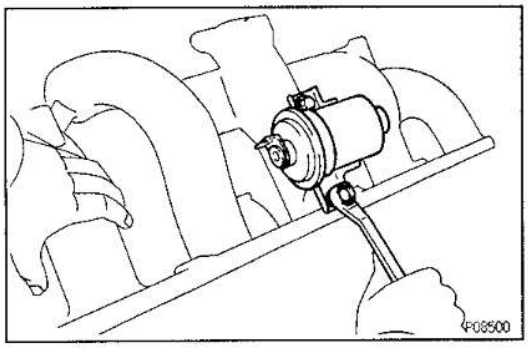

(See Components for Removal and Installation)

1. INSTALL FUEL FILTER TO INTAKE MANIFOLD

Install the fuel filter with the two bolts.

Torque: 21 N·m (210 kgf·cm, 15 ft·lbf)

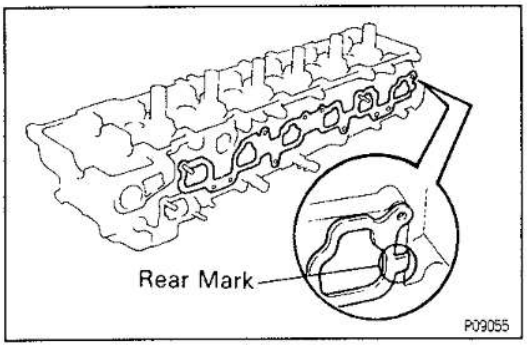

2. INSTALL INTAKE MANIFOLD

(a) Place a new gasket so that the rear mark is toward the rear side.

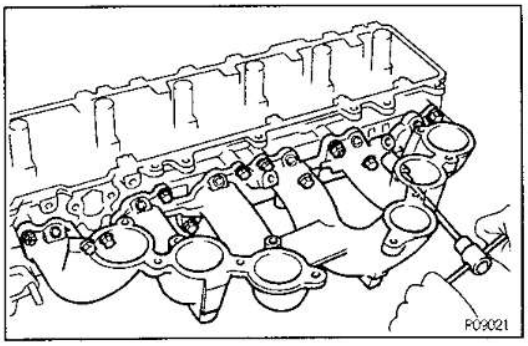

(b) Install the intake manifold with the six bolts and two nuts.

Torque: 21 N·m (210 kgf·cm, 15 ft·lbf)

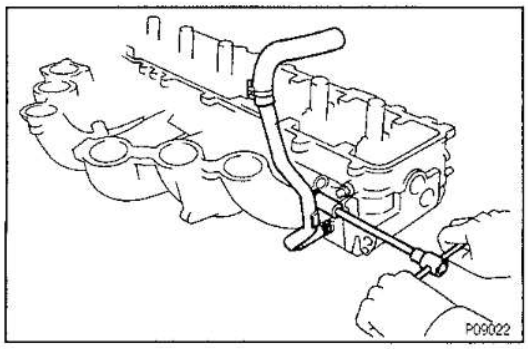

3. INSTALL HEATER INLET PIPE AND HOSE

Install the heater hose to the cylinder head, and connect the pipe to the intake manifold.

Torque: 21 N·m (210 kgf·cm, 15 ft·lbf)

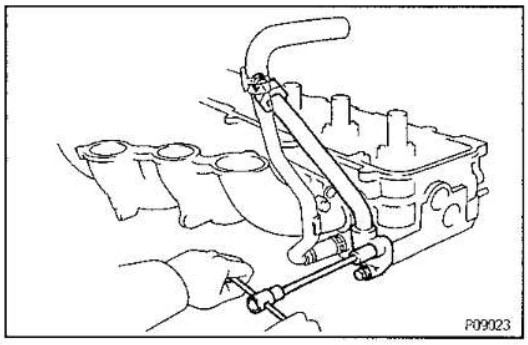

4. (Europe)

INSTALL EGR PIPE

Install a new gasket and the EGR pipe with the two bolts.

Torque: 21 N·m (210 kgf·cm, 15 ft·lbf)

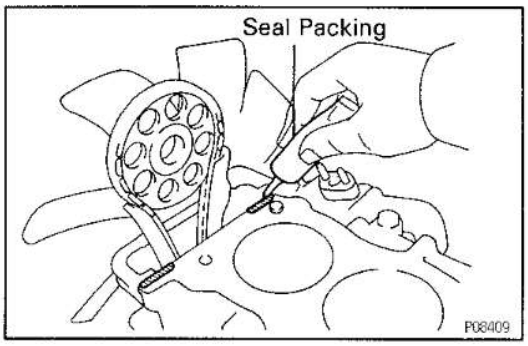

5. INSTALL CYLINDER HEAD

A. Place cylinder head on cylinder block

(a) Apply seal packing to two locations as shown.

Seal packing:

Part No.08826—00080 or equivalent

NOTICE: Do not apply too much seal packing

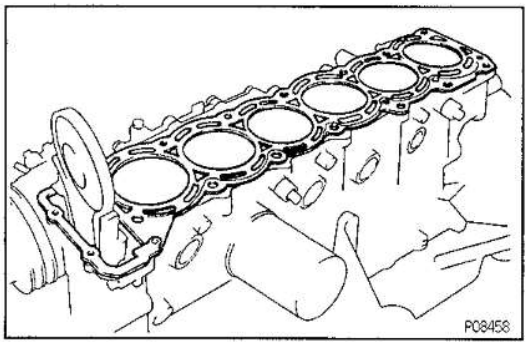

(b) Place a new cylinder head gasket in position on the cylinder block.

NOTICE: Be careful of the installation direction.

(c) Place the cylinder head in position on the cylinder head gasket.

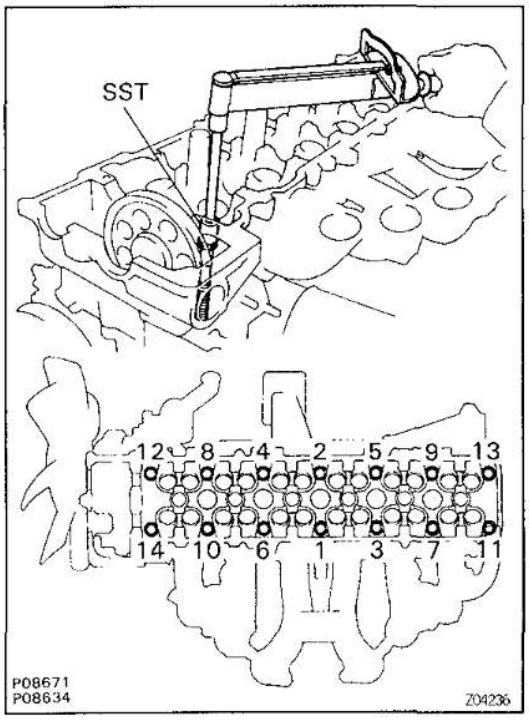

B. Install cylinder head bolts

HINT:

- The cylinder head bolts are tightened in two progressive steps (steps (b) and (d)).
- If any cylinder head bolt is broken or deformed, replace it.

(a) Apply a light coat of engine oil on the threads and under the heads of the cylinder head bolts.

(b) Using SST, install and uniformly tighten the 14 cylinder head bolts and plate washers in several passes, in the sequence shown.
SST 09011–38121
Torque: 39 N·m (400 kgf·cm, 29 ft·lbf)
If any one of the cylinder head bolts does not meet the torque specification, replace the cylinder head bolt.

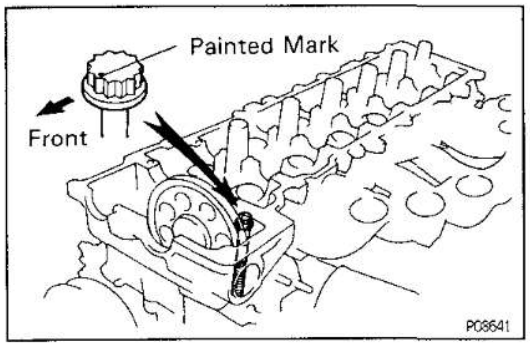

(c) Mark the front of the cylinder head bolt head with paint.

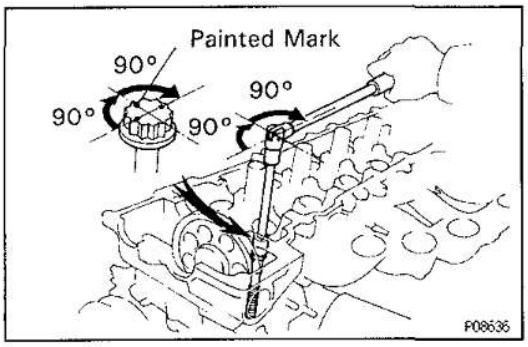

(d) Retighten the cylinder head bolts 90° in the numerical order shown.

(e) Retighten the cylinder head bolts by an additional 90°.

(f) Check that the painted mark is now facing rearward.

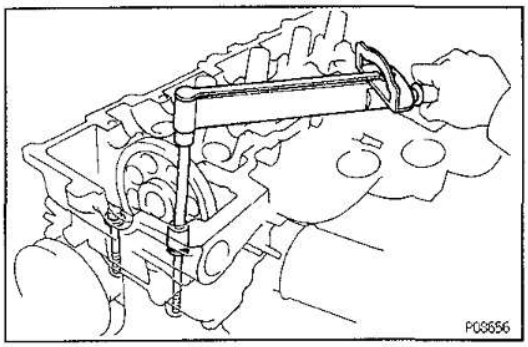

(g) Install and torque the two mounting bolts.
Torque: 21N·m (210kgf·cm, 15ft·lbf)

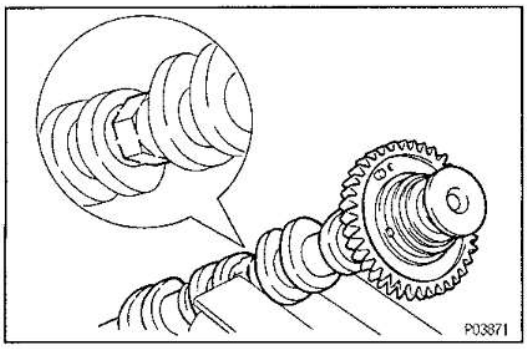

6. ASSEMBLY EXHAUST CAMSHAFT

(a) Mount the hexagon wrench head portion of the camshaft in a vise.

NOTICE: Be careful not to damage the camshaft.

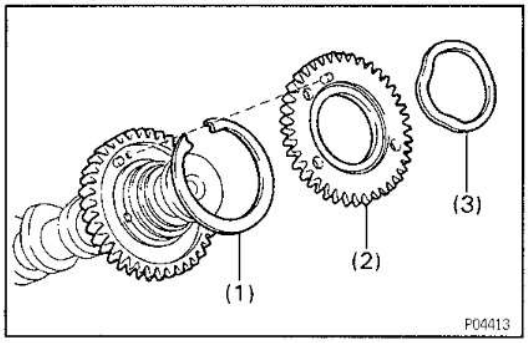

(b) Install the following parts:
(1) Camshaft gear spring
(2) Camshaft sub—gear
(3) Wave washer

HINT: Align the pins on the gears with the spring ends.

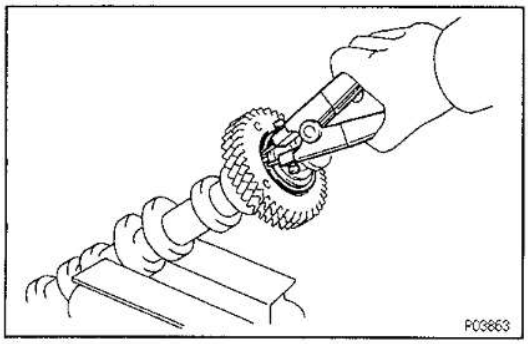

(c) Using snap ring pliers, install the snap ring.

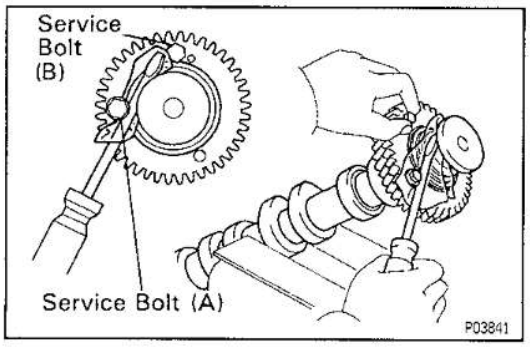

(d) Insert a service bolt (A) into the service hole of the camshaft sub—gear.

(e) Using a screwdriver, align the holes of the camshaft main gear and sub—gear by turning camshaft sub—gear clockwise, and install a service bolt (B).

NOTICE: Be careful not to damage the camshaft.

7. INSTALL CAMSHAFTS

NOTICE: Since the thrust clearance of the camshaft is small, the camshaft must be kept level while it is being installed. If the camshaft is not kept level, the portion of the cylinder head receiving the shaft thrust may crack or be damaged, causing the camshaft to seize or break. To avoid this, the following steps should be carried out.

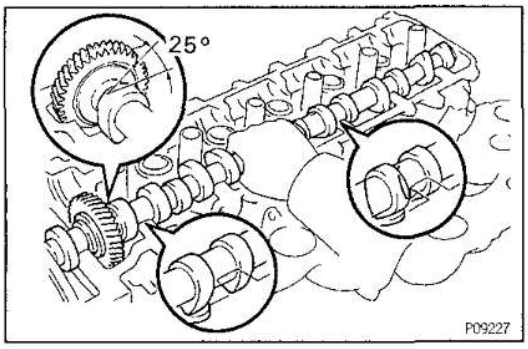

A. Install intake camshaft

(a) Apply engine oil to the thrust portion of the intake camshaft.

(b) Lightly place the intake camshaft on top of the cylinder head as shown in the illustration so that the No. 1 and No.4 cylinder cam lobes face downward.

(c) Lightly push the camshaft towards the front without applying excessive force.

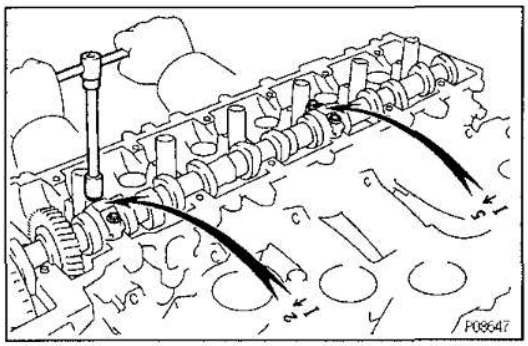

(d) Place the No.2 and No.5 bearing caps in their proper location.

(e) Temporarily tighten these bearing cap bolts uniformly and alternately in several passes until the bearing caps are snug with the cylinder head.

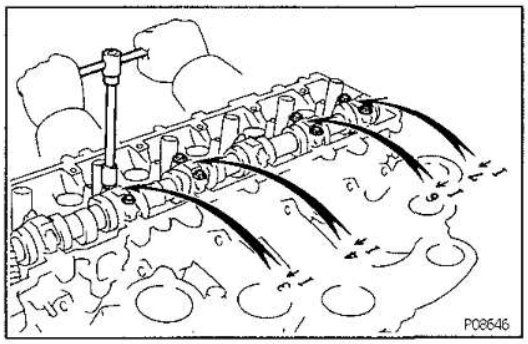

(f) Place the No.3, No.4, No.6 and No.7 bearing caps in their proper location.

(g) Temporarily tighten these bearing cap bolts, alternately tightening the left and right bolts uniformly.

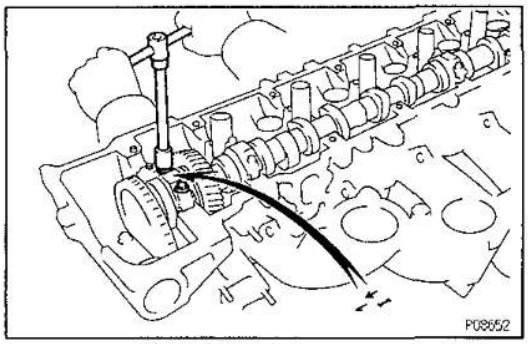

(h) Place the No.1 bearing cap in its proper location. When doing this, check that there is no gap between the cylinder head and the contact surface of bearing cap.

(i) Temporarily tighten the bearing cap bolts, alternately tightening the left and right bolts uniformly.

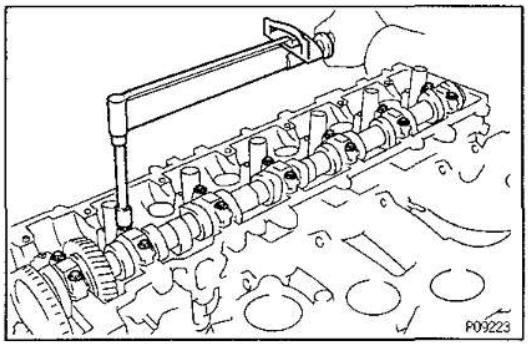

(j) Uniformly tighten the fourteen bearing cap bolts in several passes.
Torque: 16 N·m (160 kgf·cm, 12 ft·lbf)

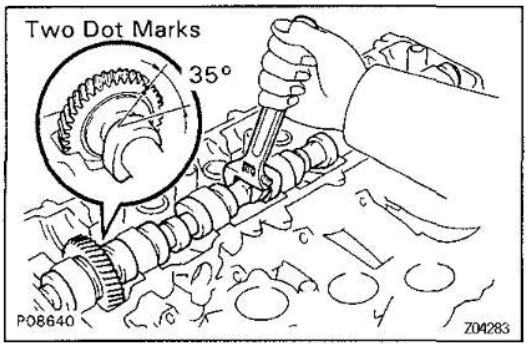

B. Install exhaust camshaft

(a) Set the timing mark (two dot marks) of the camshaft drive gear at approx. 35° angle by turning the hexagon wrench head portion of the intake camshaft with a wrench.

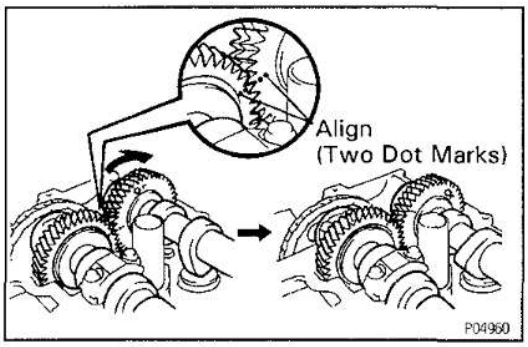

(b) Apply engine oil to thrust portion of the exhaust camshaft.

(c) Engage the exhaust camshaft gear to the intake camshaft gear by matching the timing marks (two dot marks) on each gear.

(d) Roll down the exhaust camshaft onto the bearing journals while engaging gears with each other.

(e) *Lightly push the intake camshaft towards the front* without applying excessive force.

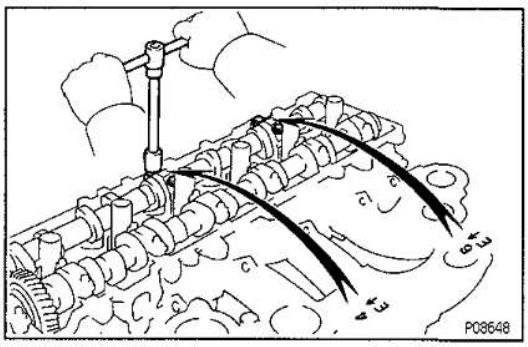

(f) Install the No.4 and No.6 bearing caps in their proper location.

(g) Temporarily tighten the bearing cap bolts uniformly and alternately in several passes until the bearing caps are snug with the cylinder head.

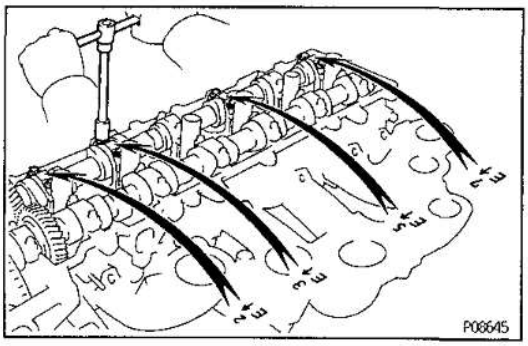

(h) Place the No.2, No.3, No.5 and No.7 bearing caps in their proper location.

(i) Temporarily tighten these bearing cap bolts, alternately tightening the left and right bolts uniformly.

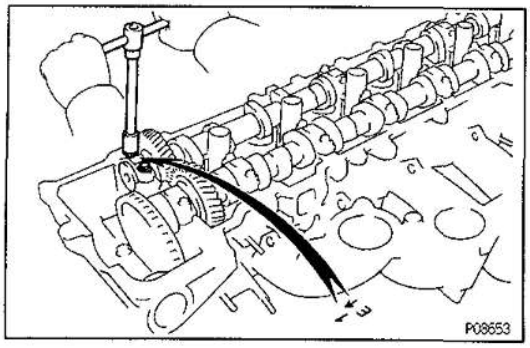

(j) Place the No.1 bearing cap in its proper location. When doing this, check that there is no gap between the cylinder head and the contact surface of bearing cap.

(k) Temporarily tighten the bearing cap bolts, alternately tightening the left and right bolts uniformly.

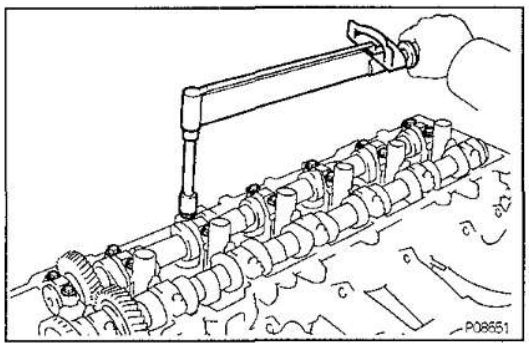

(l) Uniformly tighten the fourteen bearing cap bolts in several passes.
Torque: 16 N·m (160 kgf·cm, 12 ft·lbf)

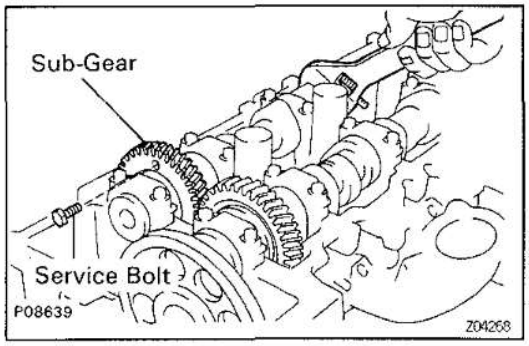

(m) Bring the service bolt installed in the driven sub—gear upward by turning the hexagon wrench head portion of the camshaft with a wrench.
(n) Remove the service bolt.
(o) Check that the intake and exhaust camshafts turn smoothly.

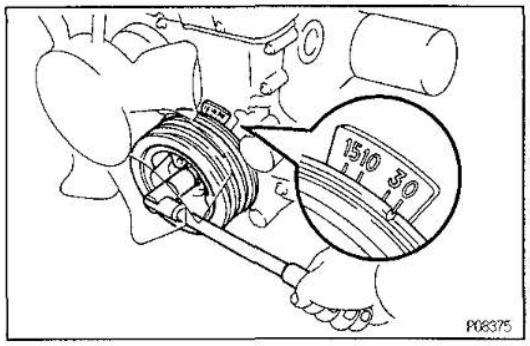

8. SET NO.1 CYLINDER TO TDC/COMPRESSION

(a) If necessaly turn the crankshaft pulley, and align its groove with the timing mark "0" of the timing chain cover.

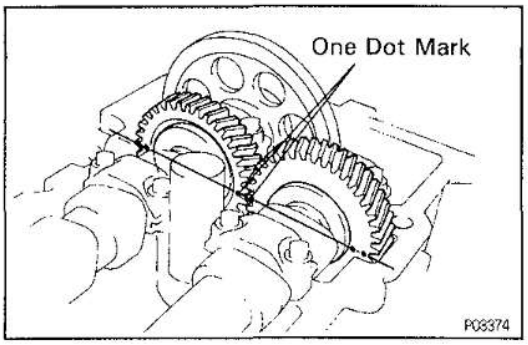

(b) Turn the camshafts so that the timing marks with one and two dots will be in straight line on the cylinder head surface as shown in the illustration.

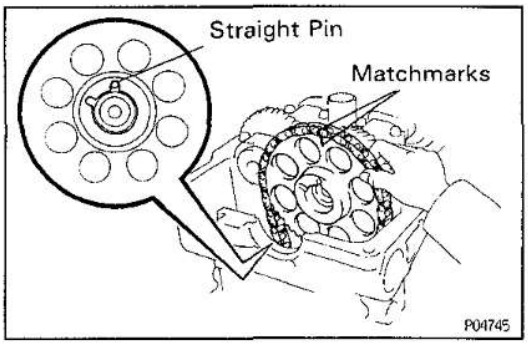

9. INSTALL CAMSHAFT TIMING GEAR

HINT: Check that the matchmarks on the camshaft timing gear and timing chain are aligned.

(a) Place the gear over the straight pin of the intake camshaft.

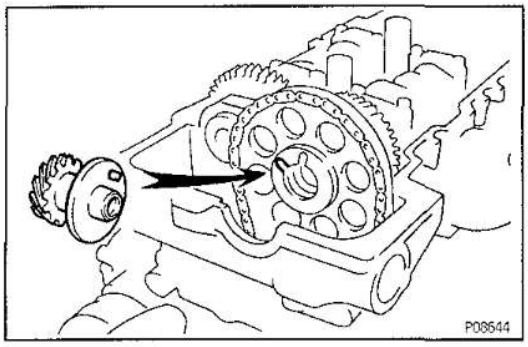

(b) Align the straight pin of distributor gear with the straight pin groove of the intake camshaft gear as shown.

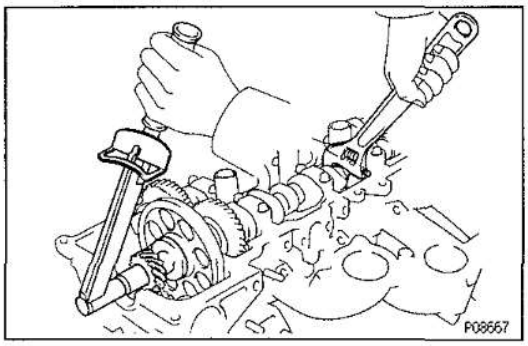

(c) Hold the intake camshaft with a wrench, install and torque the bolt.
Torque: 74 N·m (750 kgf·cm, 54 ft·lbf)

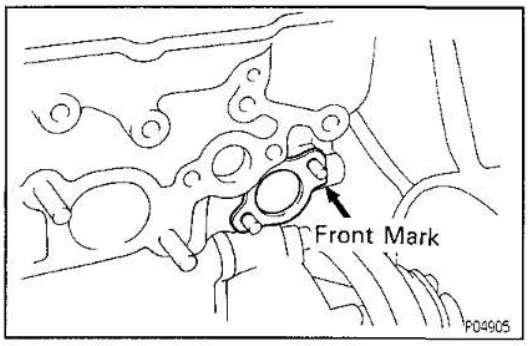

10. INSTALL CHAIN TENSIONER

(a) Place a new gasket so that the front mark is toward the front side.

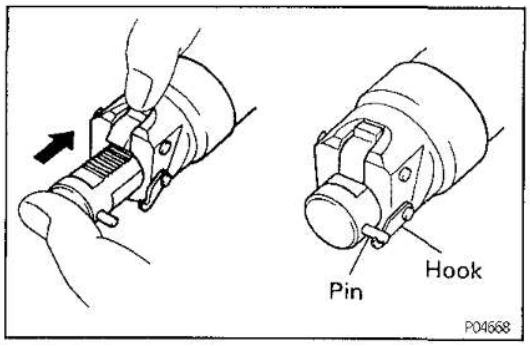

(b) Release the ratchet pawl, fully push in the plunger and apply the hook to the pin so that the plunger cannot spring out.

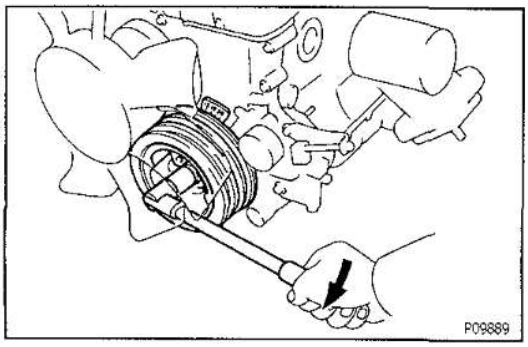

(c) Turn the crankshaft pulley clockwise to provide some slack for the chain on the tensioner side.
NOTICE: Do not turn the pulley counterclockwise.

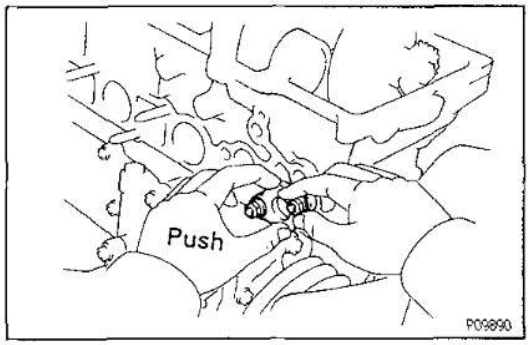

(d) Push the tensioner by hand until it touches the head installation surface, then install the two nuts.

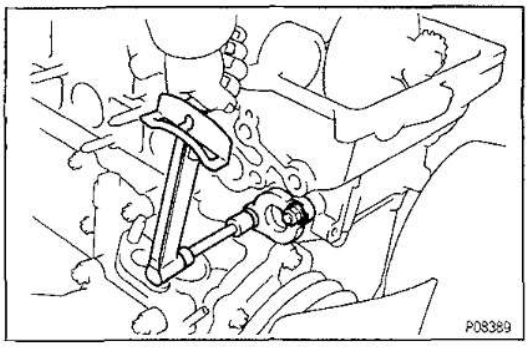

(e) Tighten the two nuts.
Torque: 21 N·m (210 kgf·cm, 15 ft·lbf)

(f) Check that the hook of the tensioner is not released.
NOTICE: If the plunger springs out during installation of the chain tensioner, repeat the operation in step (b) before installing the tensioner.

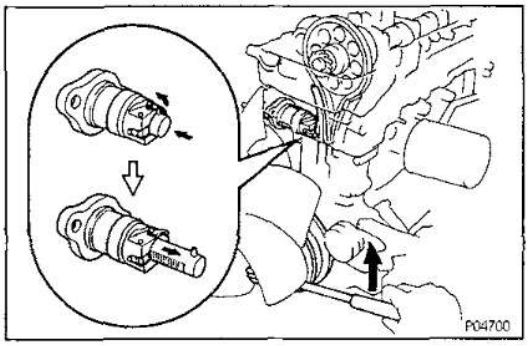

11. SET CHAIN TENSIONER

Turn the crankshaft to the left so that the hook of the chain tensioner is released from the pin of the plunger, causing the plunger to spring out and the slipper to be pushed into the chain.

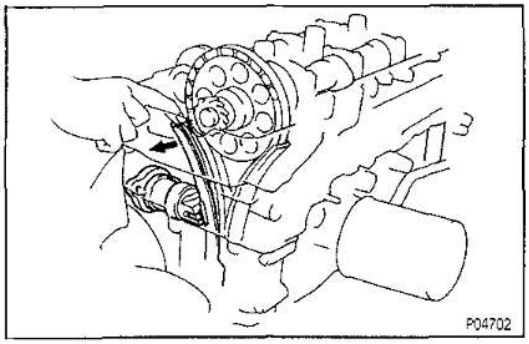

HINT: If the plunger does not spring out, press the slipper into the chain tensioner with a screwdriver or your finger so that the hook is released and the plunger springs out.

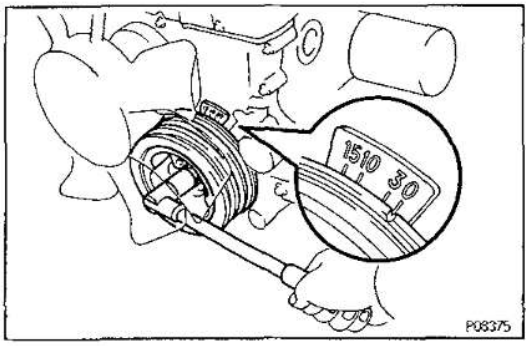

12. CHECK VALVE TIMING

(a) Turn the crankshaft pulley, and align its groove with the timimg mark "0" of the timing chain cover.
NOTICE: Always turn the crankshaft clockwise.

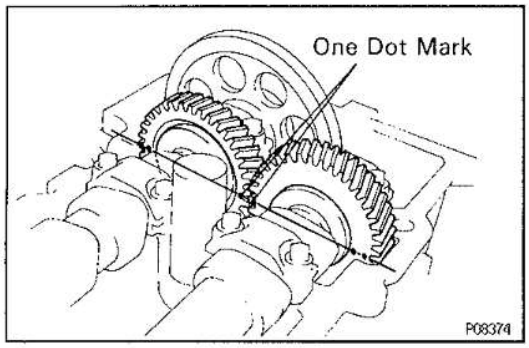

(b) Check that the timing marks (one and two dots) of the camshaft drive and driven gears are in straight line on the cylinder head surface as shown in the illustration. If not, turn the crankshaft one revolution (360°) and align the marks as above.

13. CHECK AND ADJUST VALE CLEARANCE
(See steps 6 to 7 on pages EG—17 to 18)
Turn the camshaft and position the cam lobe upward and check and adjust the valve clearance.
Valve clearance (Cold):
Intake
0.15 — 0.25 mm (0.006 — 0.010 in.)
Exhaust
0.25 — 0.35 mm (0.010 — 0.014 in.)

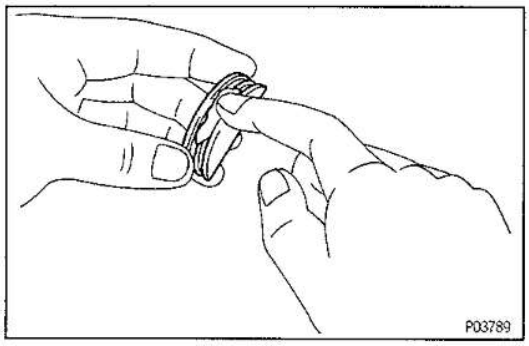

14. INSTALL SEMI—CIRCULAR PLUG
(a) Remove any old packing (FIPG) material.
(b) Apply seal packing to the cylinder head installation surface of the semi—circular plug.
Seal packing:
Part No. 08826—00080 or equivalent
(c) Install the semi—circular plug to the cylinder head.

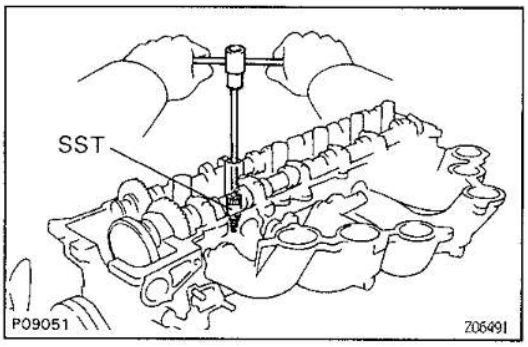

15. INSTALL SPARK PLUGS
Using SST, install the spark plug.
SST 09155—16100
Torque: 20 N·m (200 kgf·cm, 14 ft·lbf)

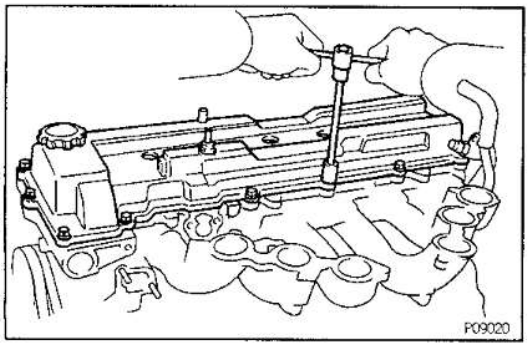

16. INSTALL CYLINDER HEAD COVER
(a) Install the gasket to the cylinder head cover.
(b) Install the cylinder head cover with the 13 bolts.

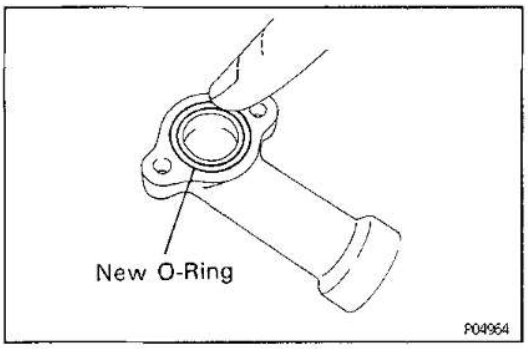

17. INSTALL WATER BY–PASS OUTLET AND PIPE

(a) Install a new O–ring to the water by–pass outlet.

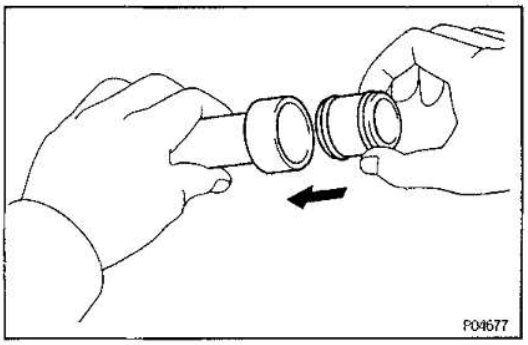

(b) Install two new O–rings to the water by–pass pipe.
(c) Apply soapy water to the O–rings.
(d) Assemble the water by–pass outlet and pipe.

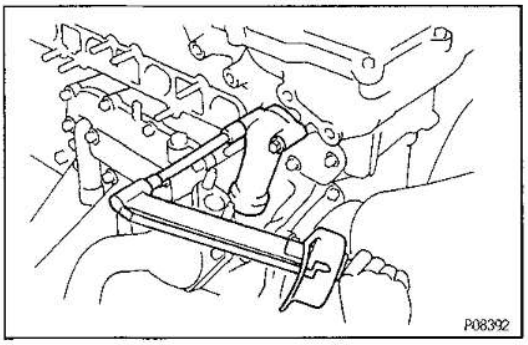

(e) Install the water by–pass outlet and pipe with the two bolts.
Torque: 21 N·m (210 kgf·cm, 15 ft·lbf)

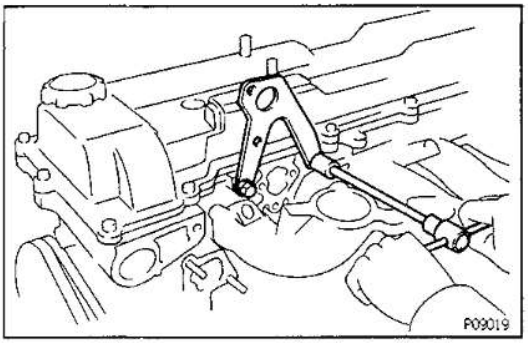

18. INSTALL NO.1 ENGINE HANGER

Install the No.1 engine hanger with the two bolts.
Torque: 41 N·m (420 kgf·cm, 30 ft·lbf)

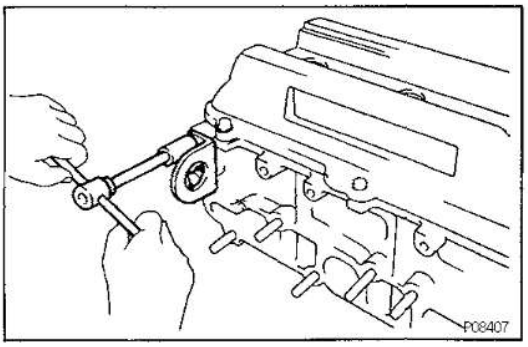

19. INSTALL NO.2 ENGINE HANGER

Install the No.2 engine hanger with the two bolts.
Torque: 41 N·m (420 kgf·cm, 30 ft·lbf)

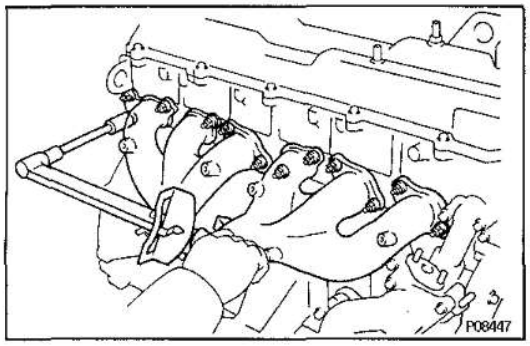

20. INSTALL NO.1 AND NO.2 EXHAUST MANIFOLDS

(a) Install two new gaskets, No.1 exhaust manifold and No.2 exhaust manifold with the 13 nuts.
Torque: 39 N·m (400 kgf·cm, 29 ft·lbf)

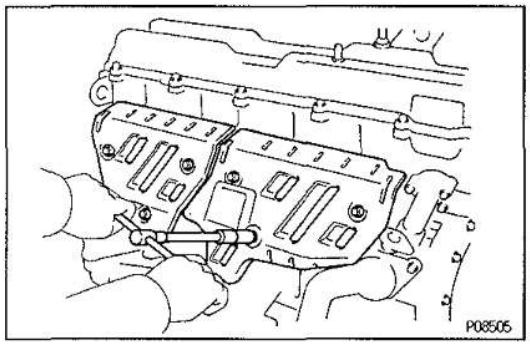

(b) Install the No.1 heat insulator and No.2 heat insulator with the six bolts.
Torque: 19 N·m (195 kgf·cm, 14 ft·lbf)

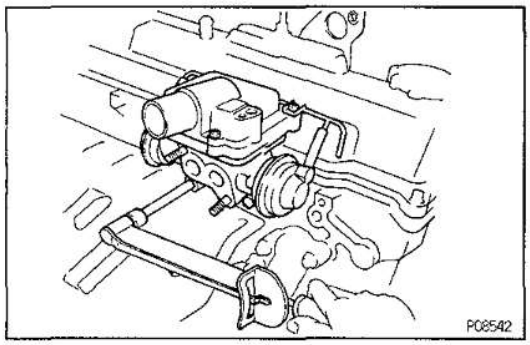

21. (Europe)
INSTALL AS REED VALVE
Install the PAIR reed valve with the two bolts.
Torque: 20 N·m (200 kgf·cm, 14 ft·lbf)

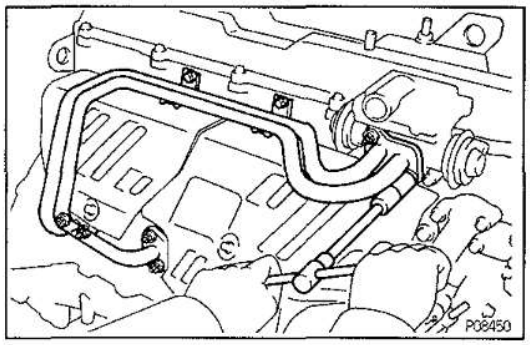

22. (Europe)
INSTALL AIR PIPE
Install three new gaskets and air pipe with the two bots and six nuts.
Torque: 20 N·m (200 kgf·cm, 14 ft·lbf) for Bolt
Torque: 21 N·m (210 kgf·cm, 15 ft·lbf) for Nut

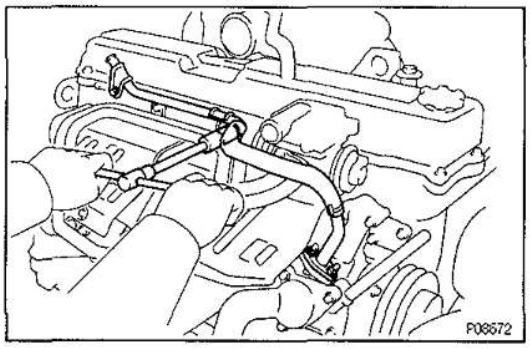

23. INSTALL HEATER PIPE
Install a new gasket and heater pipe with the two bolts and two nuts.
Torque: 20 N·m (200 kgf·cm, 14 ft·lbf) for Bolt
Torque: 21 N·m (210 kgf·cm, 15 ft·lbf) for Nut

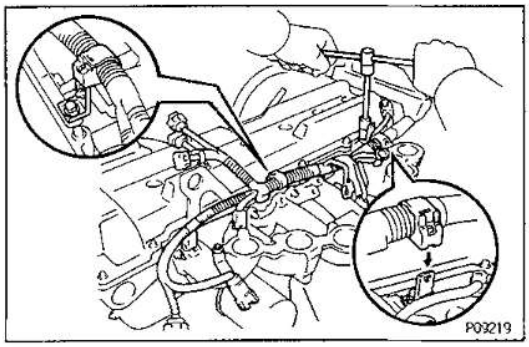

24. CONNECT ENGINE WIRE

(a) Connect the engine wire to the cylinder head and intake mamifold with the three bolts.

(b) Connect the engine wire clamp.

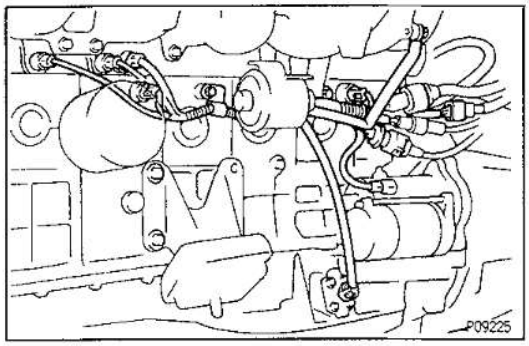

(c) Connect the engine wire to the cylinder block with the two bolts.

(d) Connect the following connectors:
- (1) Water temp. sender gauge connector
- (2) Water temp. cut switch
- (2) Water temp. sensor connector
- (4) Two knock sensor connectors
- (5) Oxygen sensor connector (with clamps)
- (6) Four connectors to transmission
- (7) Starter connector
- (8) Oil level sensor connector

(e) Connect the engine wire to the intake manifold with the bolt.

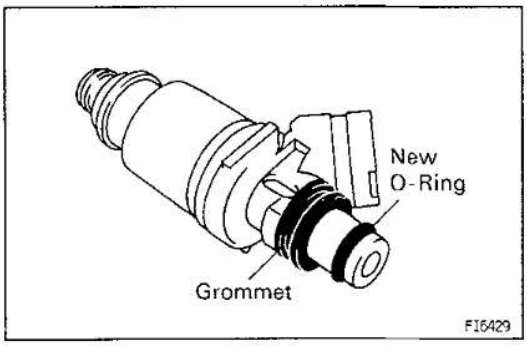

25. INSTALL INJECTORS AND DELIVERY PIPE

(a) Install a new grommet to the injector.

(b) Apply a light coat of gasoline to a new O—ring and install it to the injector.

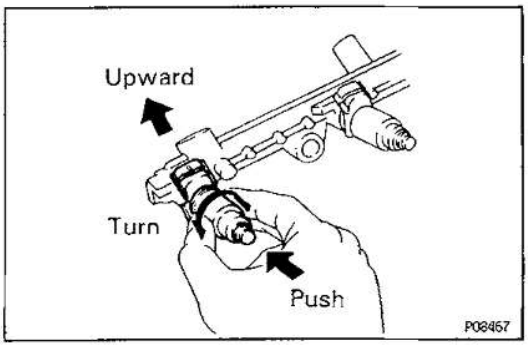

(c) While turning the injector left and right, install it to the delivery pipe. Install the six injectors.

(d) Position the injector connector upward.

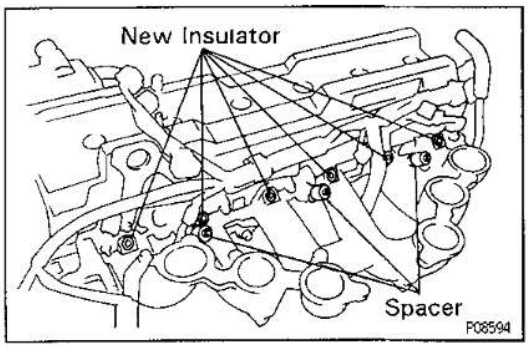

(e) Place six new insulators and the three spacers in position on the intake manifold.

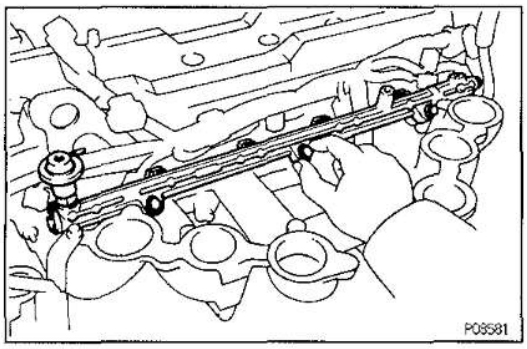

(f) Place the six injectors together with the delivery pipe in position on the intake manifold.

(g) Temporarily install the three bolts holding the delivery pipe to the intake manifold.

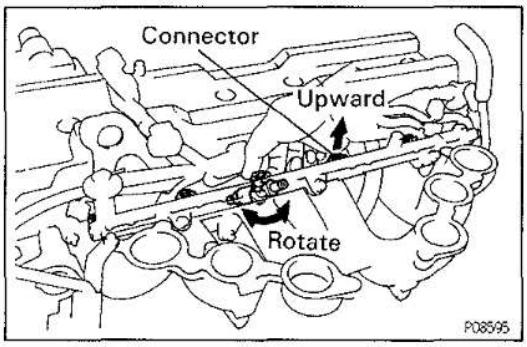

(h) Check that the injectors rotate smoothly.
HINT: If injectors do not rotate smoothly, the probable cause is incorrect installation of O—rings. Replace the O—rings.

(i) Position the injector connector upward.

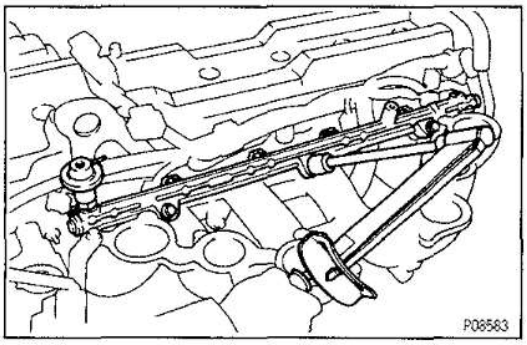

(j) Tighten the three bolts holding the delivery pipe to the intake manifold.
Torque: 21 N·m (210 kgf·cm, 15 ft·lbf)

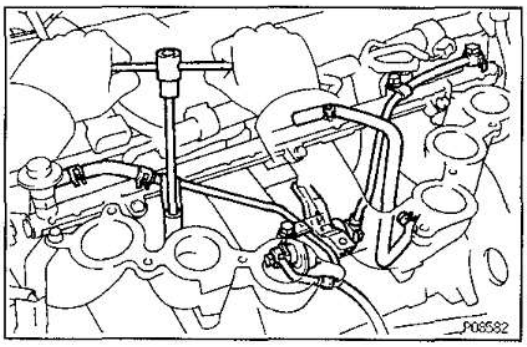

26. CONNECT FUEL INLET HOSE

Connect the fuel inlet hose to the fuel filter with two new gaskets and union bolt.
Torque: 29 N·m (300 kgf·cm, 22 ft·lbf)

27. INSTALL NO.1 FUEL PIPE

Install the No.1 fuel pipe with four new gaskets, the two union bolts and bolt.
Torque: 29 N·m (300 kgf·cm, 22 ft·lbf) for Union bolt
Torque: 20 N·m (200 kgf·cm, 14 ft·lbf) for Bolt

28. INSTALL NO.1 WATER BY—PASS HOSE

29. INSTALL FUEL RETURN PIPE

(a) Install the fuel return pipe with the two bolts.
Torque: 20 N·m (200 kgf·cm, 14 ft·lbf)

(b) Connect the fuel hose to the fuel pressure regulator.

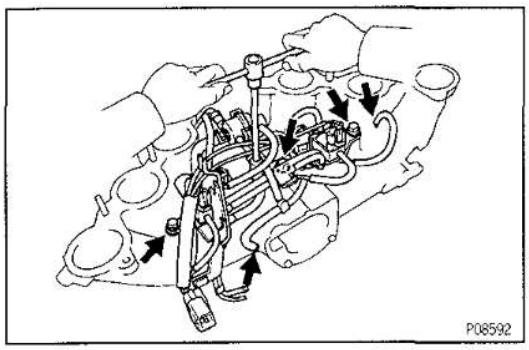

30. INSTALL AIR INTAKE CHAMBER

(a) Install the emission control valve set assembly to the air intake chamber with the four bolts.
Torque: 20 N·m (200 kgf·cm, 14 ft·lbf)

(b) Connect the air hose.

(c) Connect the vacuum hose.

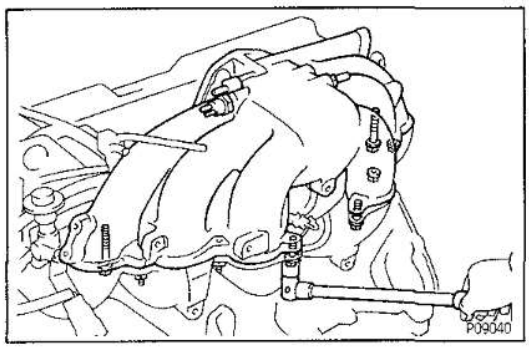

(d) Install two new gaskets and the air intake chamber with the four bolts and six nuts.
Torque: 21 N·m (210 kgf·cm, 15 ft·lbf)

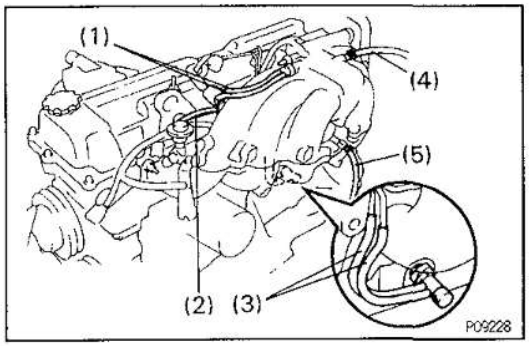

(e) Connect the following hoses:
(1) Two vacuum hoses to gas filter
(2) Vacuum hose to fuel pressure regulator
(3) Two vacuum hoses to BVSV
(4) EVAP hose to 3—way
(5) Brake booster hose to brake booster union

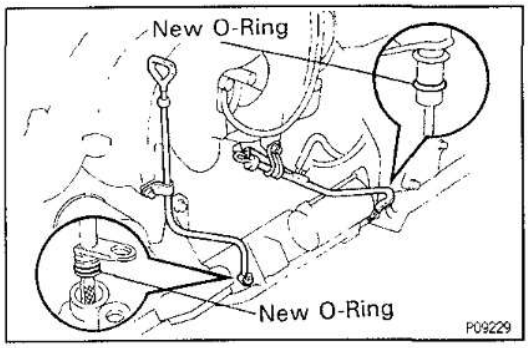

31. INSTALL OIL DIPSTICKS AND GUIDES FOR ENGINE AND TRANSMISSION

(a) Install a new O—ring to the dipstick guide.

(b) Apply light coat of engine oil on the O—ring.

(c) Push in the dipstick guide into the guide hole of the oil pan.

(d) Install the dipstick guide with the two bolts.
Torque: 20 N·m (200 kgf·cm, 14 ft·lbf)

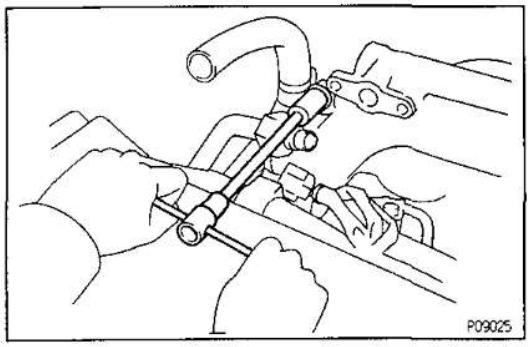

32. INSTALL BOLT HOLDING HEATER INLET PIPE AND AIR INTAKE CHAMBER
Torque: 20 N·m (200 kgf·cm, 14 ft·lbf)

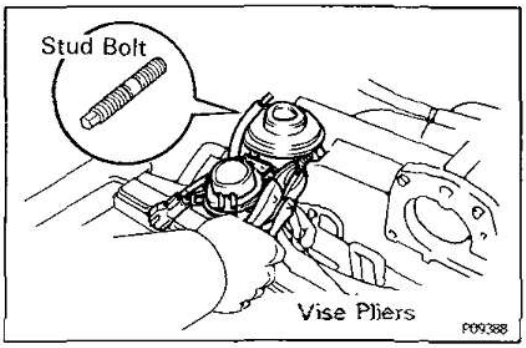

33. (Europe)
INSTALL EGR VALVE AND VACUUM MODULATOR

(a) Using vise pliers, temporarily install a new gasket, and EGR valve and vacumm modulator assembly with the two stud bolts.
Torque: 10 N·m (105 kgf·cm, 8 ft·lbf)

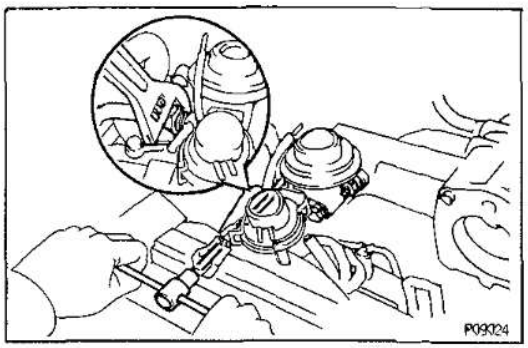

(b) Install the two nuts holding the EGR valve and air intake chamber.
Torque: 19 N·m (195 kgf·cm, 14 ft·lbf)

(c) Tighten the union nut of the EGR pipe.
Torque: 64 N·m (650 kgf·cm, 47 ft·lbf)

(d) Connect the vacuum hose to the EGR valve.

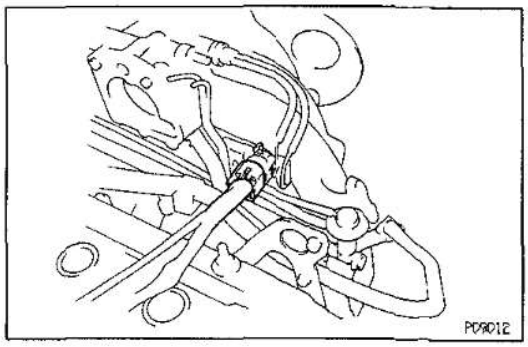

34. CONNECT CONNECTOR FOR EMISSION CONTROL VALVE SET ASSEMBLY

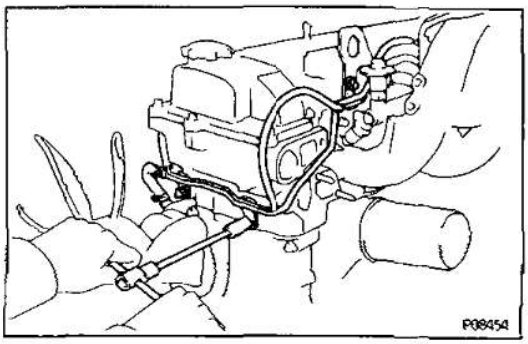

35. INSTALL NO.2 WATER BY—PASS PIPE AND HOSES

(a) Install the No.2 water by—pass pipe and hoses with the three bolts.
Torque: 20 N·m (200 kgf·cm, 14 ft·lbf)

(b) Connect the water hose to the timing chain cover.

(c) Connect the two vacuum hose to the PAIR reed valve and No.2 emission control valve set.

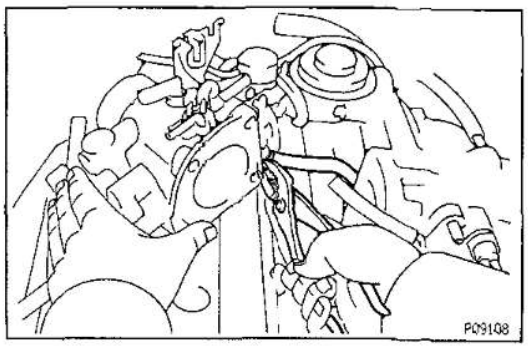

36. INSTALL THROTTLE BODY

(a) Connect the No.1 water by—pass hose to the throttle body.

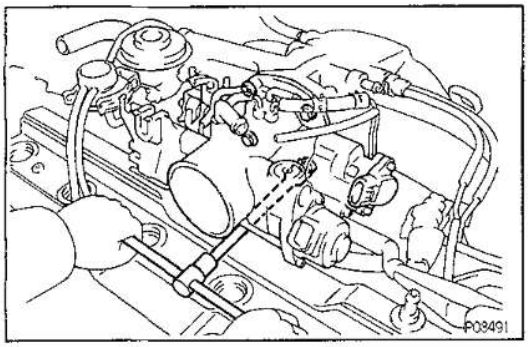

(b) Install a new gasket and throttle body with the four bolts.
Torque: 21 N·m (210 kgf·cm, 15 ft·lbf)

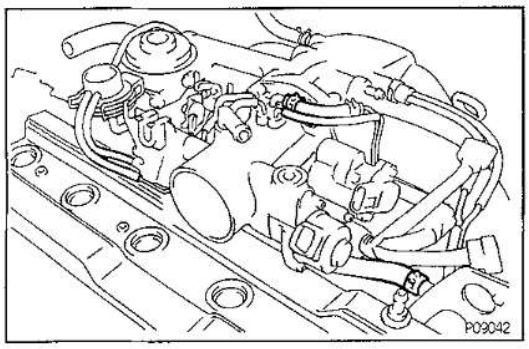

(c) Connect the water hose to the No.2 water by—pass pipe.
(d) Connect the EVAP hose.
(e) Connect the three vacuum hoses.

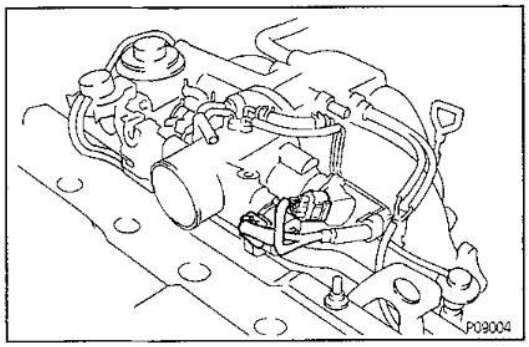

(f) Connect the ISC valve connector.
(g) Connect the throttle position sensor connector.

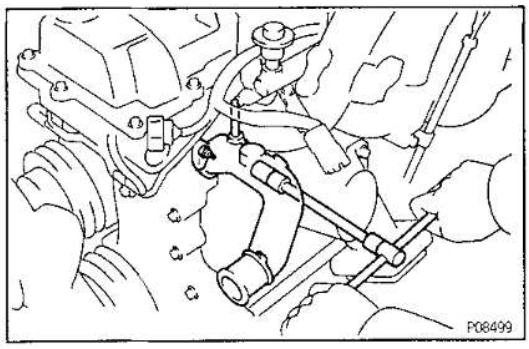

37. INSTALL WATER OUTLET

(a) Install a new gasket and water outlet with the two nuts.
Torque: 21 N·m (210 kgf·cm, 15 ft·lbf)
(b) Connect the No.3 water by—pass hose.
(c) Connect the radiator inlet hose.

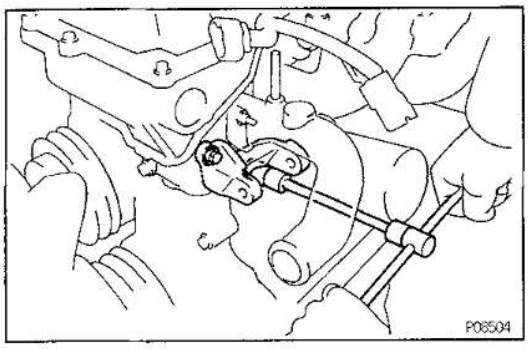

38. INSTALL ALTERNATOR BRACKET

Install the generator bracket with the two bolts.
Torque: 43 N·m (440 kgf·cm, 32 ft·lbf)

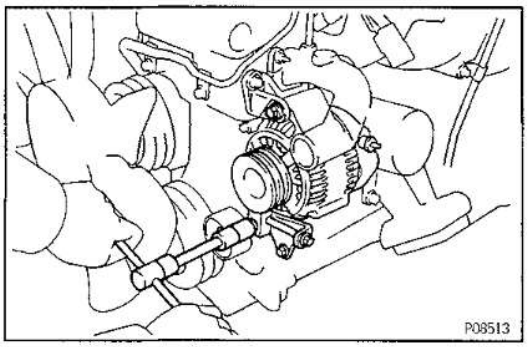

39. INSTALL ALTERNATOR AND DRIVE BELTS (See CH section)

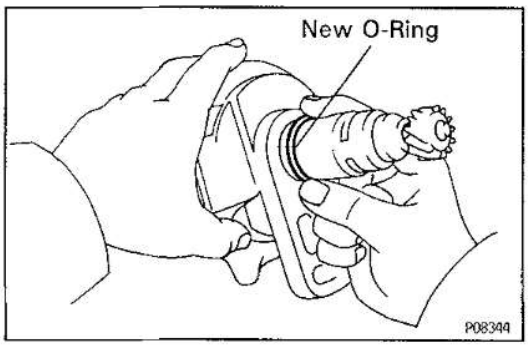

40. INSTALL DISTRIBUTOR

(a) Install a new O—ring to the distributor.
HINT: Always use a new O—ring when installing the distributor.

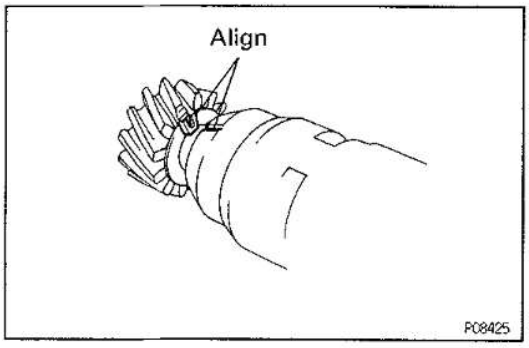

(b) Align the groove of the distributor housing with the protrusion on the driven gear.
(c) Apply a light coat of engine oil on the O—ring.

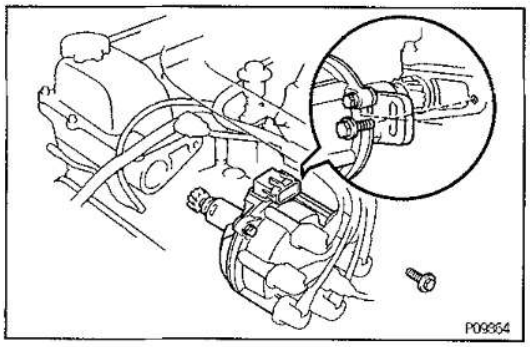

(d) Insert the distributor, aligning the center of the flange with that of the bolt hole on the cylinder head.
(e) Lightly tighten the hold—down bolt.
(f) Connect the high—tension cords.
Firing order:
1 — 5 — 3 — 6 — 2 — 4

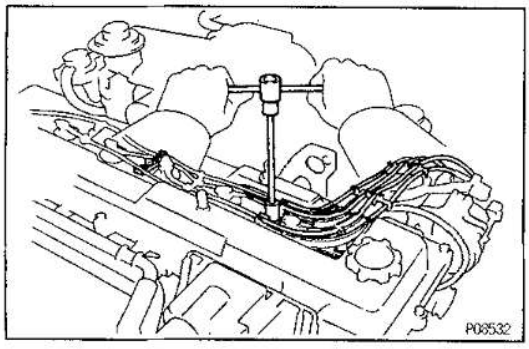

(g) Install the No. 1 and No. 2 cord clamps with two mounting bolts.

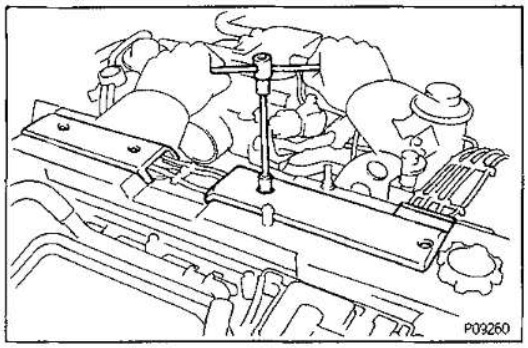

41. INSTALL NO.2 AND NO.3 CYLINDER HEAD COVERS

Install the head covers with the four bolts.

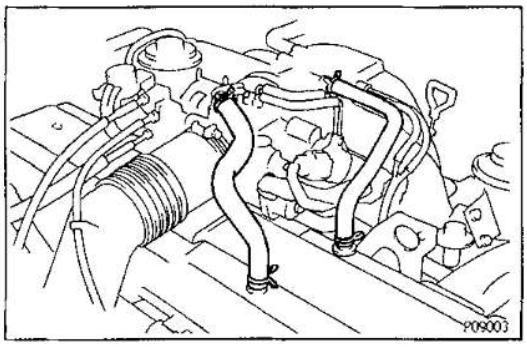

42. INSTALL NO.1 AND NO.2 PCV HOSES

CYLINDER HEAD (1FZ–F)

COMPONENTS

EG08K–02

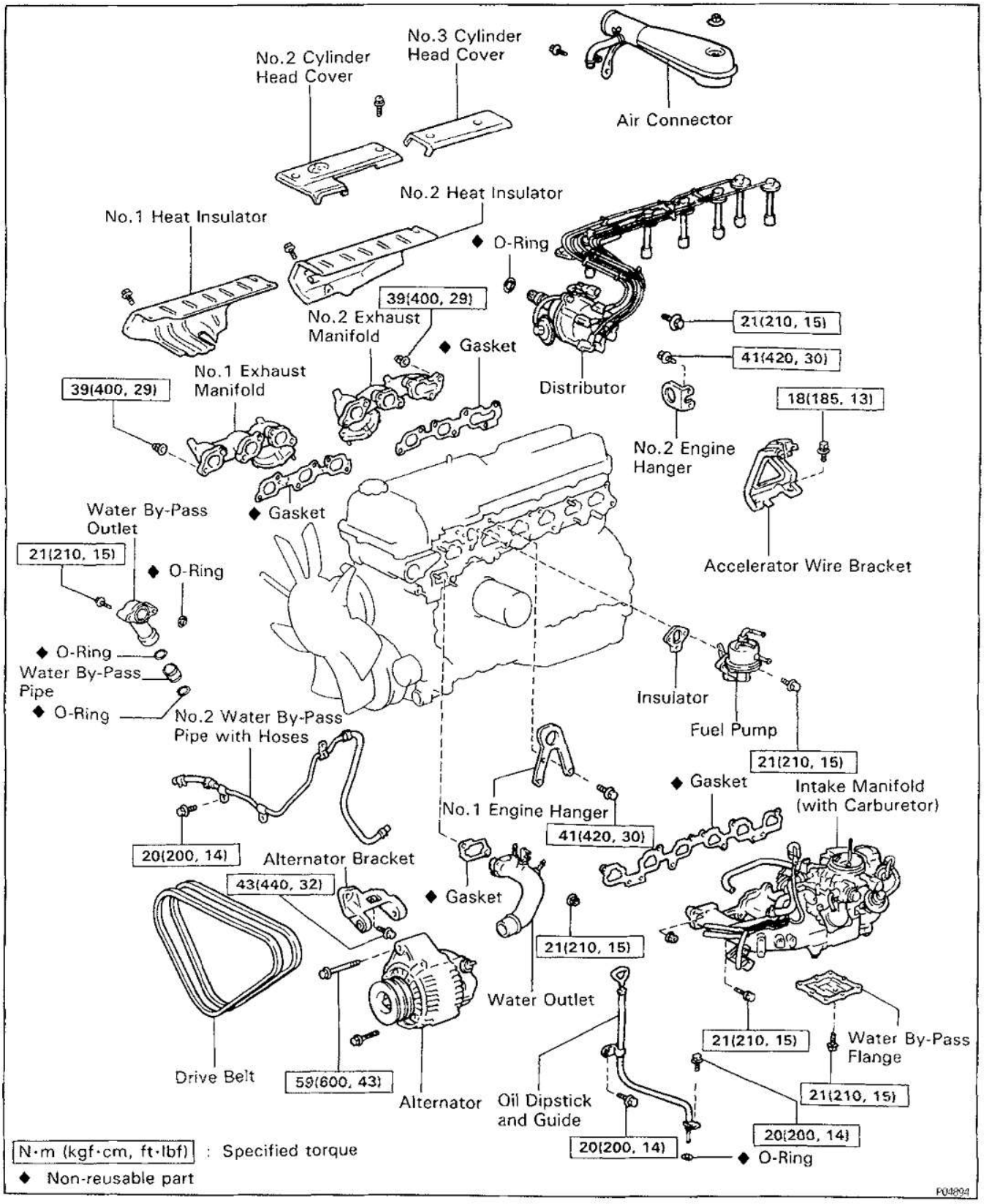

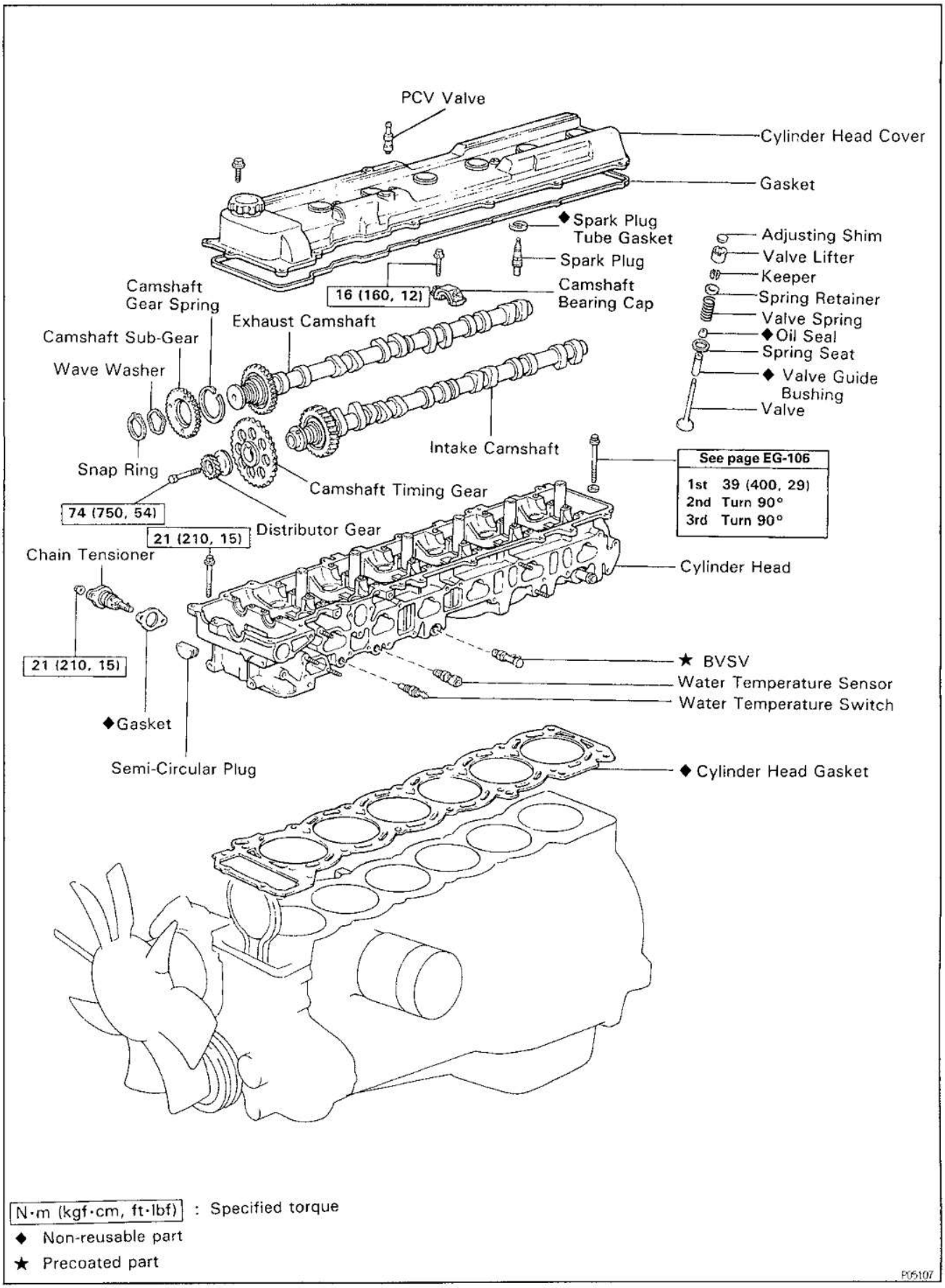
PCV Valve
Cylinder Head Cover
Gasket
◆Spark Plug Tube Gasket
Spark Plug
16 (160, 12)
Camshaft Bearing Cap
Adjusting Shim
Valve Lifter
Keeper
Spring Retainer
Valve Spring
◆Oil Seal
Spring Seat
◆ Valve Guide Bushing
Valve
Camshaft Gear Spring
Exhaust Camshaft
Camshaft Sub-Gear
Wave Washer
Intake Camshaft
Snap Ring
Camshaft Timing Gear
74 (750, 54)
Distributor Gear
21 (210, 15)
See page EG-106
1st 39 (400, 29)
2nd Turn 90°
3rd Turn 90°
Chain Tensioner
Cylinder Head
21 (210, 15)
★ BVSV
Water Temperature Sensor
Water Temperature Switch
◆Gasket
Semi-Circular Plug
◆ Cylinder Head Gasket
N·m (kgf·cm, ft·lbf) : Specified torque
◆ Non-reusable part
★ Precoated part
P05107

EGOV8-02

CYLINDER HEAD REMOVAL

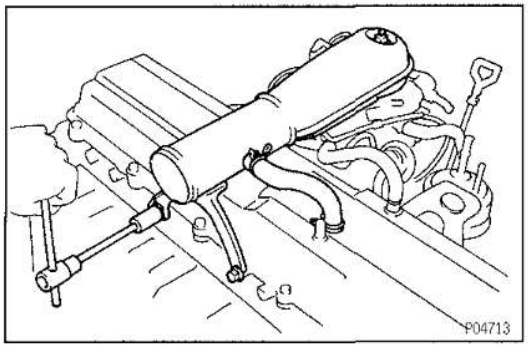

(See pages EG—89)

1. REMOVE INTAKE AIR CONNECTOR

(a) Disconnect the PCV hose.

(b) Remove the two bolts, nut and air connector.

EG

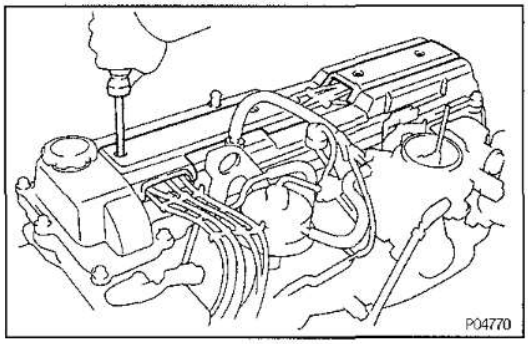

2. REMOVE NO. 2 AND NO. 3 CYLINDER HEAD COVERS

Remove the four bolts and head covers.

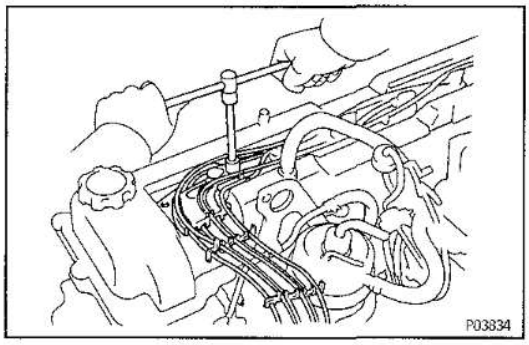

3. REMOVE DISTRIBUTOR

(a) Remove the No.1 cord clamp mounting bolt.

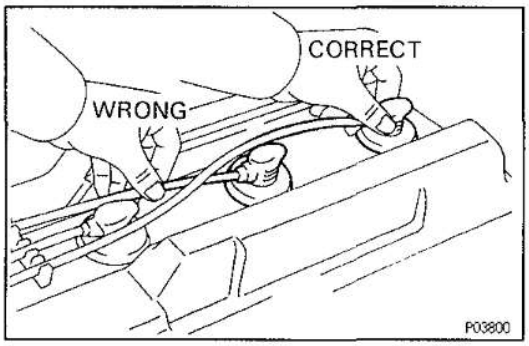

(b) Disconnect the high — tension cords at the rubber boot.

DO NOT pull on the cords.

NOTICE: Pulling on or bending the cords may damage the conductor inside.

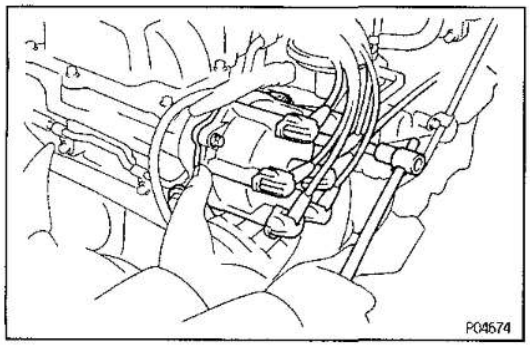

(c) Remove the bolt and distributor.

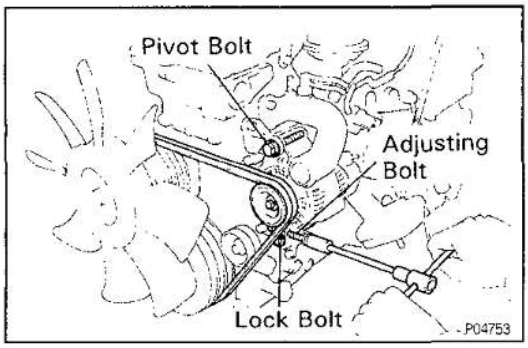

4. REMOVE ALTERNATOR

(a) Loosen the lock bolt, pivot bolt and adjusting bolt, and remove the drive belts.

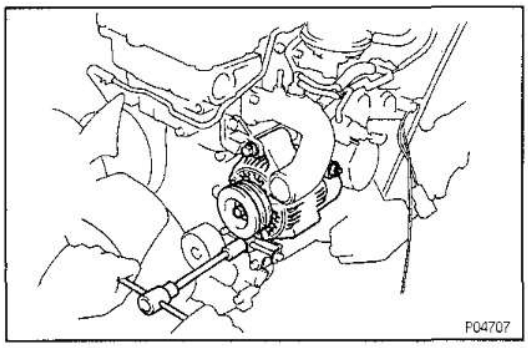

(b) Remove the pivot bolt, lock bolt and alternator.

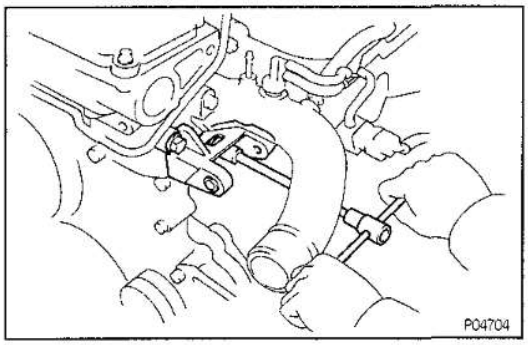

5. REMOVE ALTERNATOR BRACKET

Remove the two bolts and alternator bracket.

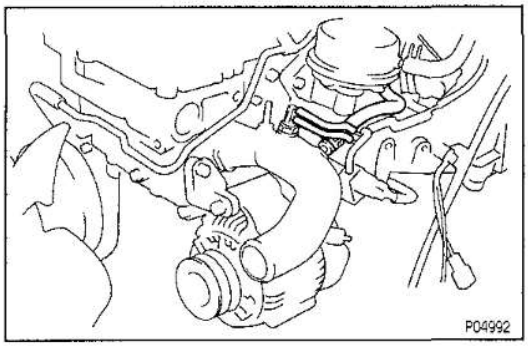

6. REMOVE WATER OUTLET

(a) Disconnect the vacuum hoses.

(b) Disconnect the No.1 water by—pass hose.

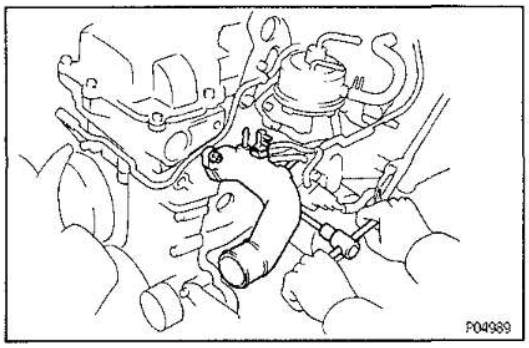

(c) Remove the two nuts, water outlet and gasket.

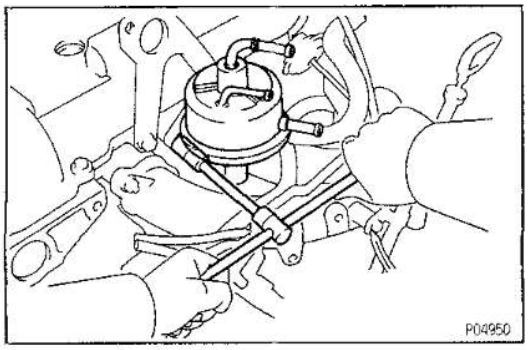

7. REMOVE FUEL PUMP

(a) Disconnect the fuel outlet hose.

(b) Remove the three bolts, fuel pump and gasket.

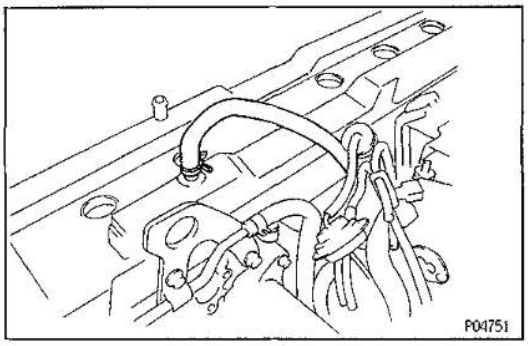

8. DISCONNECT PCV HOSE

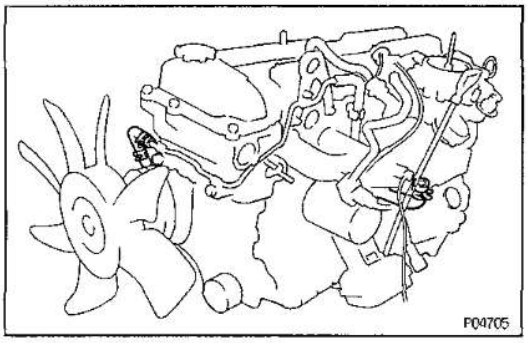

9. REMOVE NO. 2 WATER BY – PASS PIPE WITH HOSES

(a) Disconnect the two water hoses.

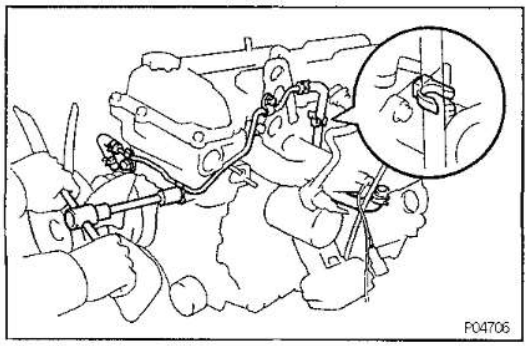

(b) Disconnect the hose clamp.

(c) Remove the three bolts and No.2 water by–pass pipe with hoses.

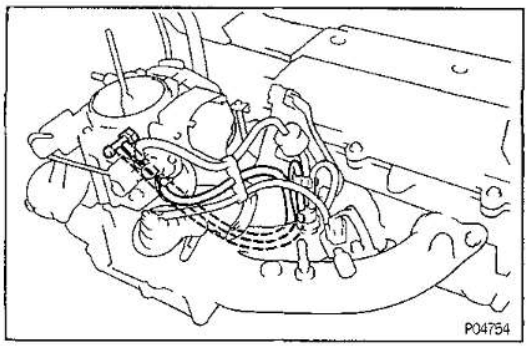

10. DISCONNECT TWO VACUUM HOSES FROM BVSV

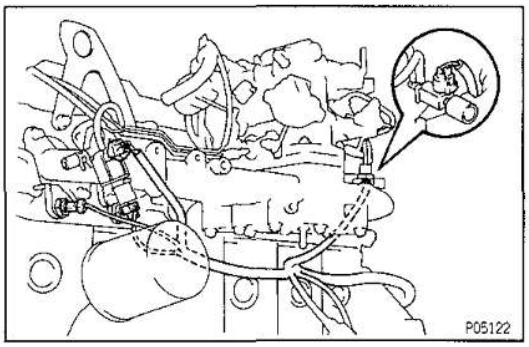

11. DISCONNECT FOLLOWING CONNETORS:

(a) Spark control VSV (for G.C.C.)
(b) Water temperature switch
(c) Water temperature sensor (for G.C.C.)
(d) TP VSV

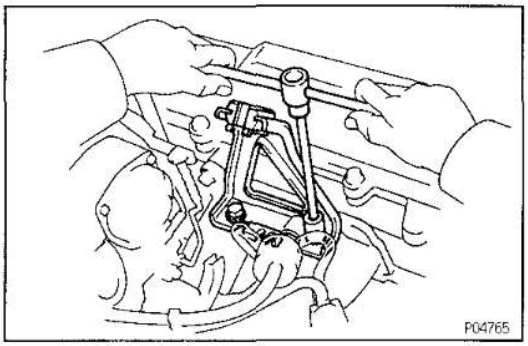

12. REMOVE ACCELERATOR CABLE BRACKET

Remove the two bolts and accelerator cable bracket.

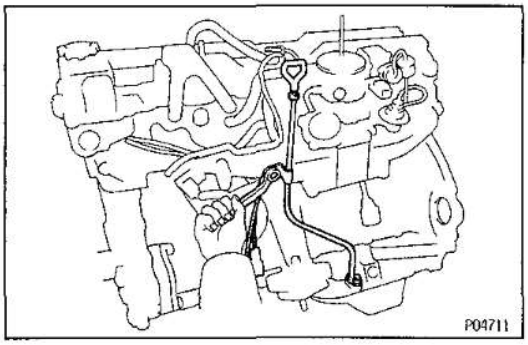

13. REMOVE OIL DIPSTICK AND GUIDE

(a) Remove the two mounting bolts and ground strap.
(b) Pull out the dipstick together with dipstick guide.
(c) Remove the O—ring from the dipstick guide.

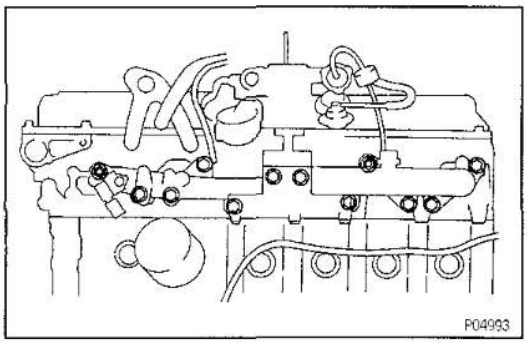

14. REMOVE INTAKE MANIFOLD WITH CARBURETOR

Remove the six bolts, two nuts, intake manifold and gasket.

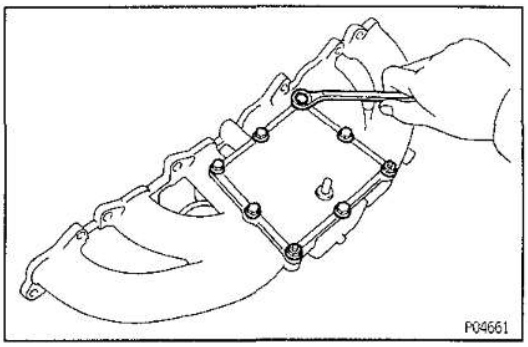

15. IF NECESSARY, REMOVE WATER BY — PASS FLANGE

(a) Remove the six bolts and two nuts.

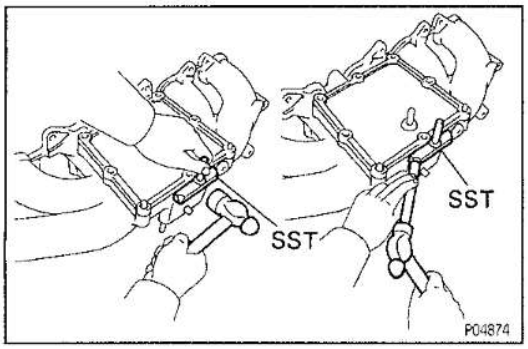

(b) Insert the blade of SST between the intake manifold and water by—pass flange, and cut off applied sealer and remove the flange.
SST 09302—00100
NOTICE: Be careful not to damage the intake manifold and flange.

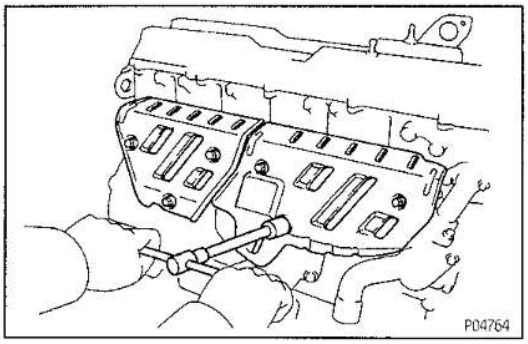

16. REMOVE NO.1 AND NO.2 EXHAUST MANIFOLDS

(a) Remove the six bolts, No.1 heat insulator and No.2 heat insulator.

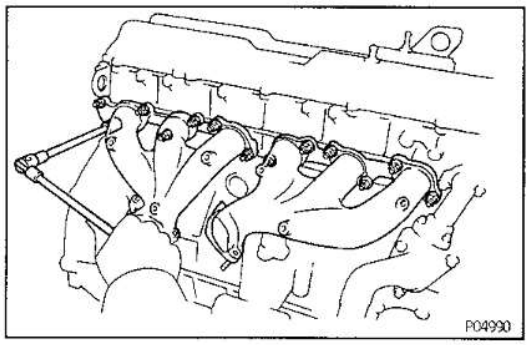

(b) Remove the 13 nuts, No.1 exhaust manifold, No.2 exhaust manifold and two gaskets.

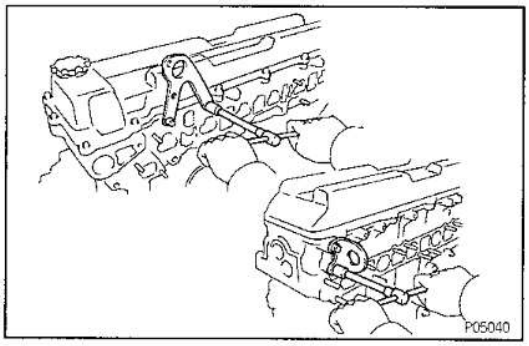

17. REMOVE NO.1 AND NO.2 ENGINE HANGERS

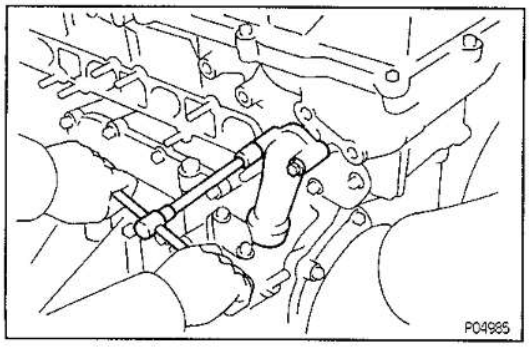

18. REMOVE WATER BY—PASS OUTLET AND PIPE

(a) Remove the two bolts and water by—pass outlet and pipe.

(b) Remove the three O—rings from the water by—pass outlet and pipe.

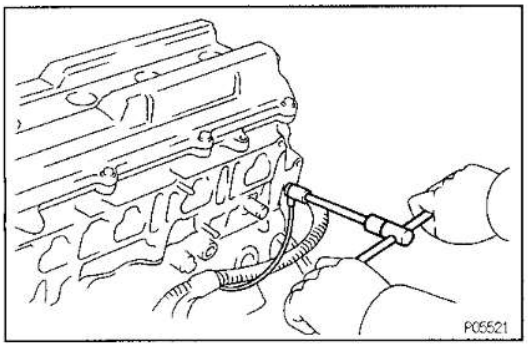

19. DISCONNECT ENGINE WIRE

Remove the bolt and disconnect the engine wire from the cylinder head.

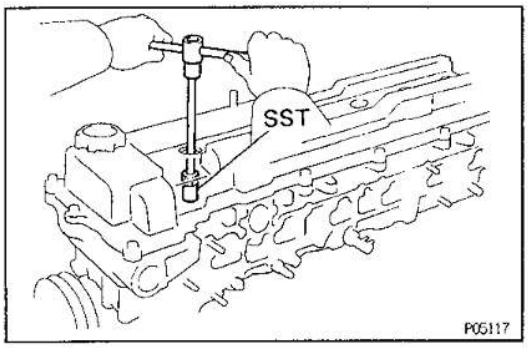

20. REMOVE SPARK PLUGS

Using SST, remove the spark plug.
SST 09155—16100

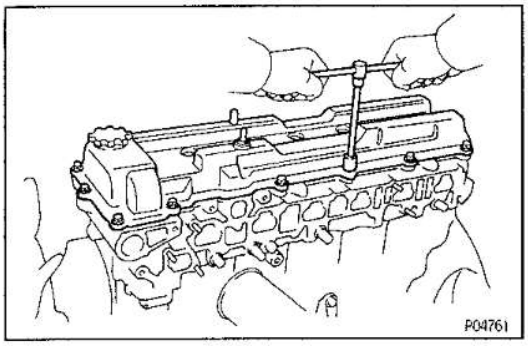

21. REMOVE CYLINDER HEAD COVER

Remove the 13 bolts, cylinder head cover and gasket.

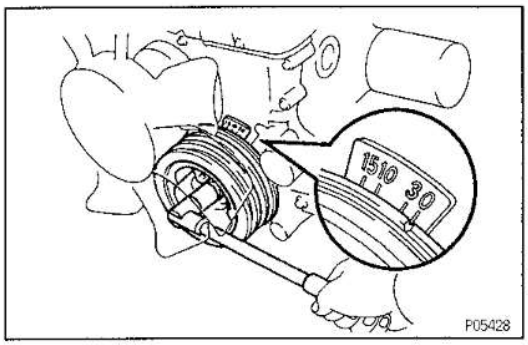

22. SET NO.1 CYLINDER TO TDC/COMPRESSION

(a) Turn the crankshaft pulley and align its groove with the "0" mark on the timing chain cover.

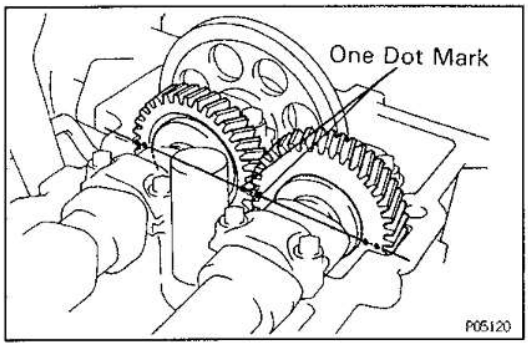

(b) Check that the timing marks (one and two dots) of the camshaft drive and driven gears are in straight line on the cylinder head surface as shown in the illustration. If not, turn the crankshaft one revolution (360°) and align the marks as above.

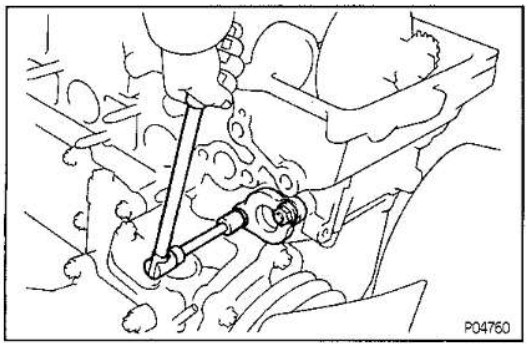

23. REMOVE CHAIN TENSIONER

Remove the two nuts, chain tensioner and gasket.

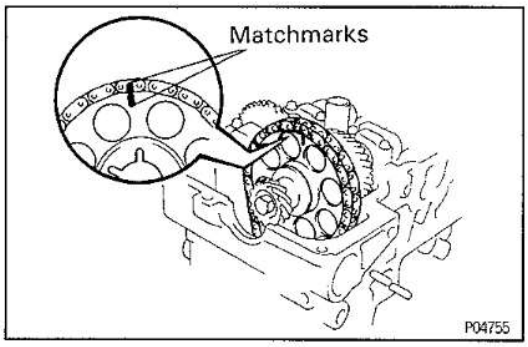

24. REMOVE CAMSHAFT TIMING GEAR

(a) Remove the harf–circular plug.

(b) Place the matchmarks on the camshaft timing gear and timing chain.

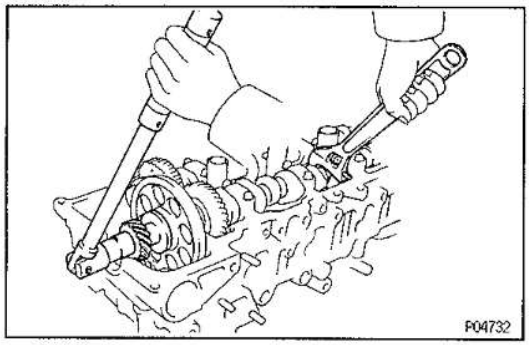

(c) Hold the intake camshaft with a wrench, remove the bolt and distributor gear.

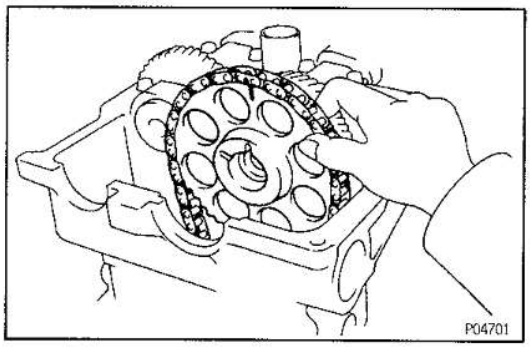

(d) Remove the camshaft timing gear and chain from the intake camshaft and leave on the slipper and damper.

25. REMOVE CAMSHAFTS

NOTICE: Since the thrust clearance of the camshaft is small, the camshaft must be kept level while it is being removed. If the camshaft is not kept level, the portion of the cylinder head receiving the shaft thrust may crack or be damaged, causing the camshaft to seize or break. To avoid this, the following steps should be carried out.

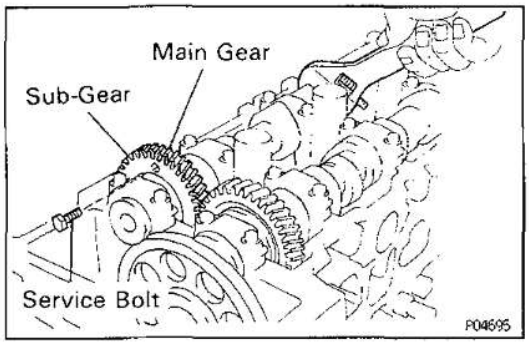

A. Remove exhaust camshaft

(a) Bring the service bolt hole of the driven sub–gear upward by turning the hexagon wrench head portion of the exhaust camshaft with a wrench.

(b) Secure the exhaust camshaft sub–gear to the driven gear with a service bolt.

Recommended service bolt:

Thread diameter	6 mm
Thread pitch	1.0 mm
Bolt length	16 – 20 mm (0.63 – 0.79 in.)

HINT: When removing the camshaft, make sure that the torsional spring force of the sub–gear has been eliminated by the above operation.

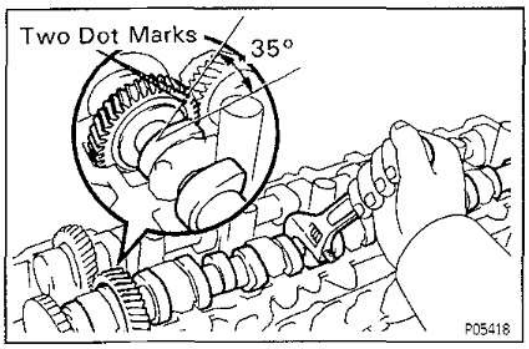

(c) Set the timing mark (two dot marks) of the camshaft driven gear at approx. 35° angle by turning the hexagon wrench head portion of the intake camshaft with a wrench.

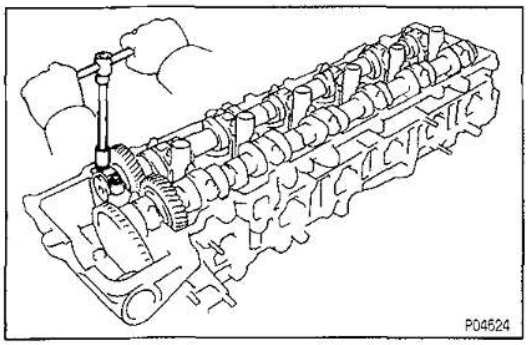

(d) Lightly push the camshaft towards the rear without applying excessive force.

(e) Loosen and remove the No.1 bearing cap bolts, alternately loosening the left and right bolts uniformly.

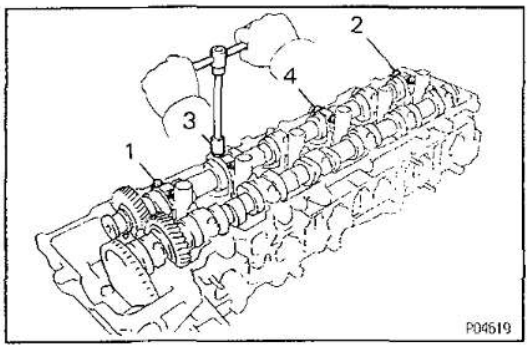

(f) Loosen and remove the No.2, No.3, No.5 and No.7 bearing cap bolts, alternately loosening the left and right bolts uniformly in several passes, in the sequence shown.

NOTICE: Do not remove the No.4 and No.6 bearing cap bolts at this stage.

(g) Remove the four bearing caps.

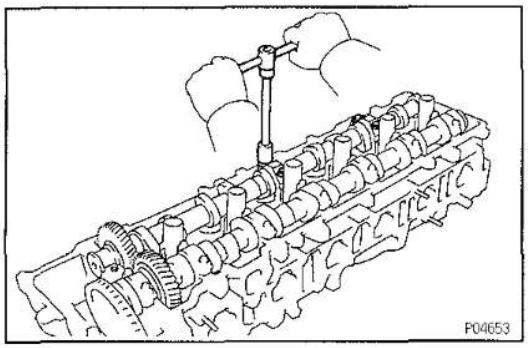

(h) Alternately and uniformly loosen and remove the No.4 and No.6 bearing cap bolts.
HINT:
- As the four No.4 and No.6 bearing cap bolts are loosened, make sure that the camshaft is lifted out straight and level.
- If the camshaft is not being lifted out straight and level, retighten the four No.4 and No.6 bearing cap bolts. Then reverse the order of above steps from (g) to (a) and repeat steps from (a) to (f) once again.

NOTICE: Do not pry on or attempt to force the camshaft with a tool or other object.

(i) Remove the two bearing caps and exhaust camshaft.

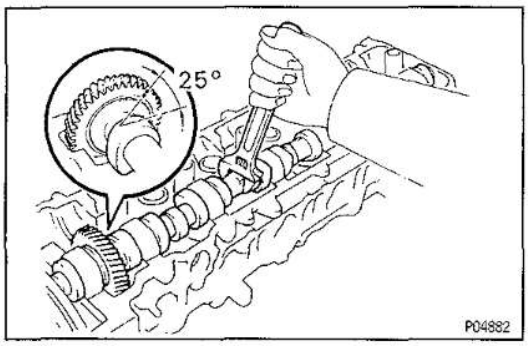

B. Remove intake camshaft

(a) Set the timing mark (two dot marks) of the camshaft drive gear at approx. 25° angle by turning the hexagon wrench head portion of the intake camshaft with a wrench.
HINT: The above angle arrows the No.1 and No.4 cylinder cam lobes of the intake camshaft to push their valve lifters evenly.

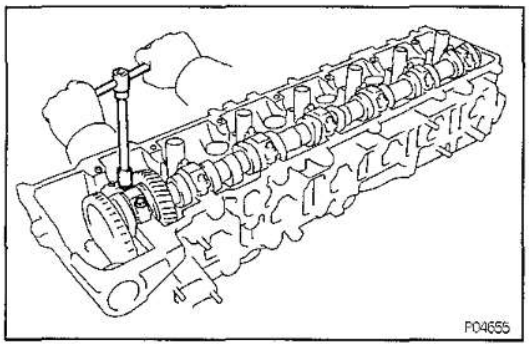

(b) Lightly push the intake camshaft towards the front without applying excessive force.

(c) Loosen and remove the No.1 bearing cap bolts, alternately loosening the left and right bolts uniformly.

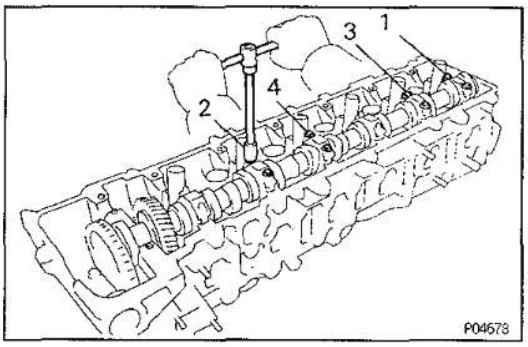

(d) Loosen and remove the No.3, No.4, No.6 and No.7 bearing cap bolts, alternately loosening the left and right bolts uniformly in several passes, in the sequence shown.
NOTICE: Do not remove the No.2 and No.5 bearing cap bolts at this stage.

(e) Remove the four bearing caps.

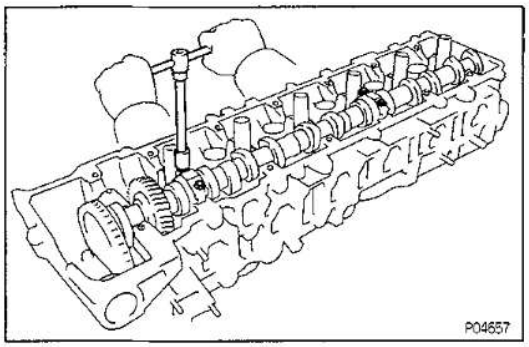

(f) Alternately and uniformly loosen and remove the No.2 and No.5 bearing cap bolts.
HINT:
- As the four No.2 and No.5 bearing cap bolts are loosened, make sure that the camshaft is lifted out straight and level.
- If the camshaft is not being lifted out straight and level, retighten the four No.2 and No.5 bearing cap bolts. Then reverse the order of above steps from (f) to (a) and repeat steps from (a) to (g) once again.

NOTICE: Do not pry on or attempt to force the camshaft with a tool or other object.

(g) Remove the two bearing caps and exhaust camshaft.

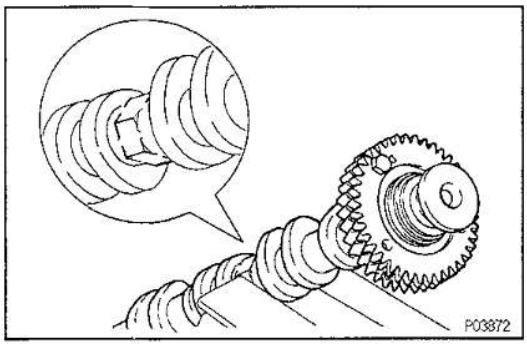

26. DISASSEMBLE EXHAUST CAMSHAFT

(a) Mount the hexagon wrench head portion of the camshaft in a vise.
NOTICE: Be careful not to damage the camshaft.

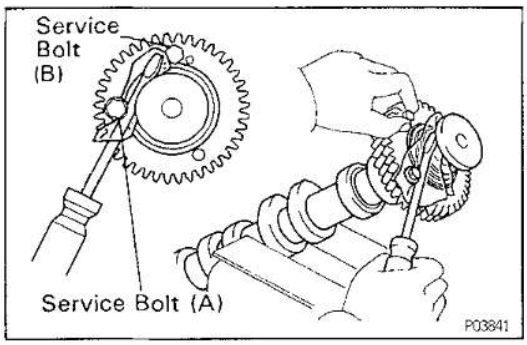

(b) Insert a service bolt (A) into the service hole of the camshaft sub—gear.

(c) Using a screwdriver, turn the sub—gear clockwise, and remove the service bolt (B).
NOTICE: Be careful not to damage the camshaft.

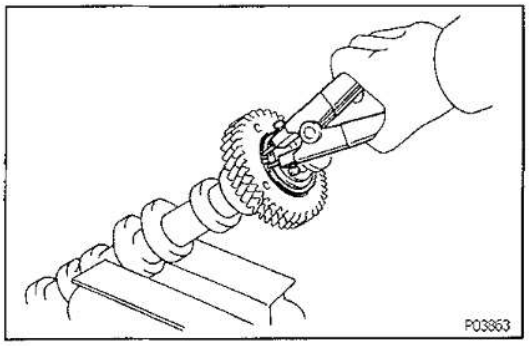

(d) Using snap ring pliers, remove the snap ring.

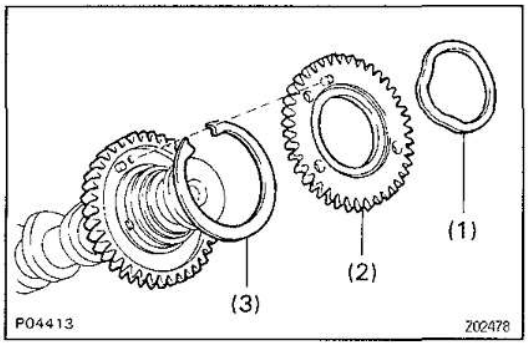

(e) Remove the following parts:
(1) Wave washer
(2) Camshaft sub—gear
(3) Camshaft gear spring

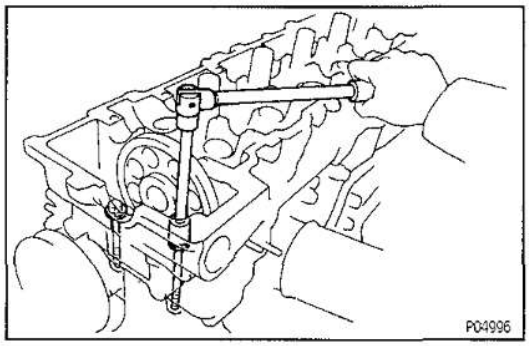

27. REMOVE CYLINDER HEAD

(a) Remove the two bolts in front of the head before the other head bolts are removed.

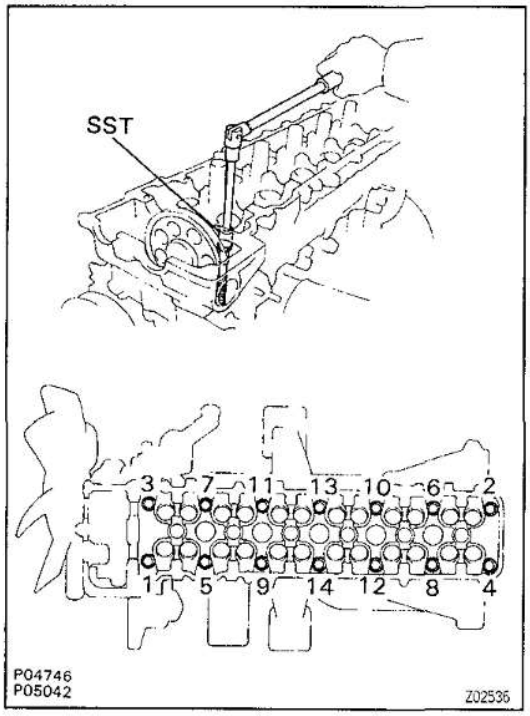

(b) Using SST, uniformly loosen and remove the 14 cylinder head bolts in several passes, in the sequence shown.
SST 09011—38121
NOTICE: Cylinder head warpage or cracking could result from removing bolts in incorrect order.

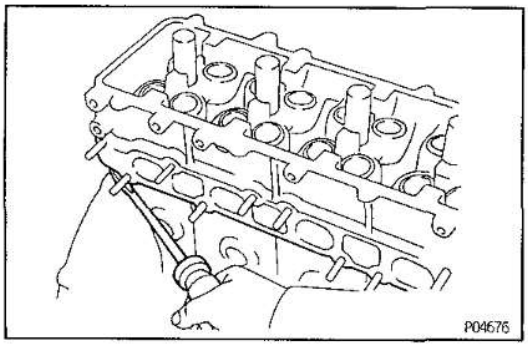

(c) Lift the cylinder head from the dowels on the cylinder block, and place the cylinder head on wooden blocks on a bench.
HINT: If the cylinder head is difficult to lift off, pry between the cylinder head and cylinder block with a screwdriver.
NOTICE: Be careful not to damage the contact surfaces of the cylinder head and cylinder block.

EG

EG0VC-01

CYLINDER HEAD DISASSEMBLY

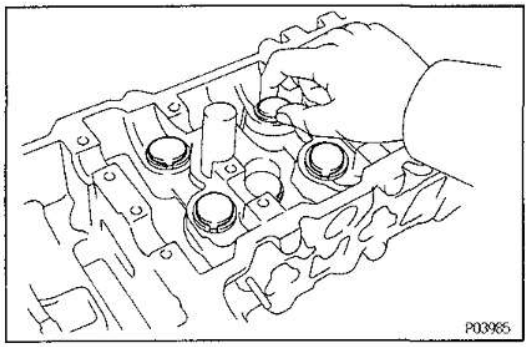

(See page EG—90)

1. REMOVE VALVE LIFTERS AND SHIMS

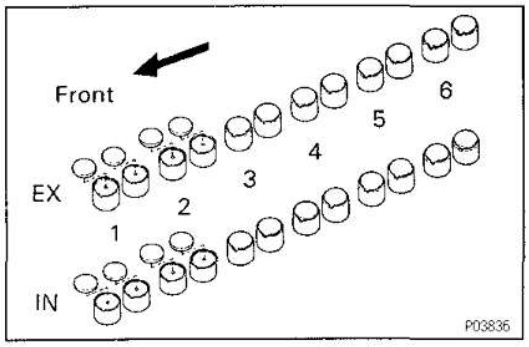

HINT: Arrange the valve lifters and shims in correct order.

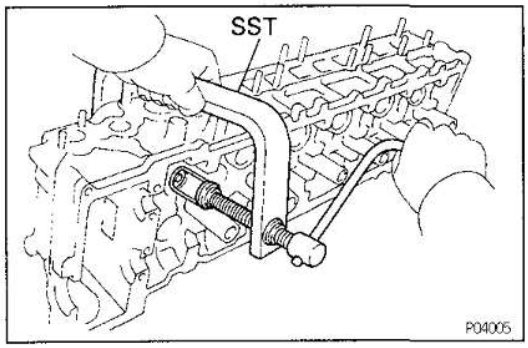

2. REMOVE VALVES

(a) Using SST, compress the valve spring and remove the two keepers.
SST 09202—70010

(b) Remove the spring retainer, valve spring and valve.

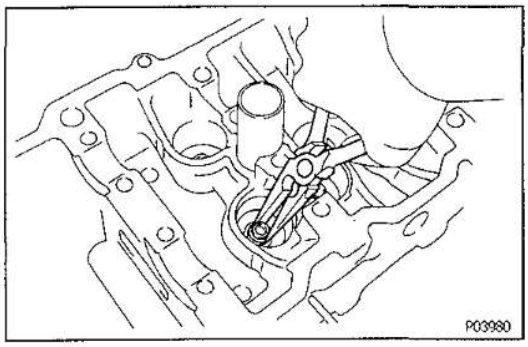

(c) Using needle—nose pliers, remove the oil seal.

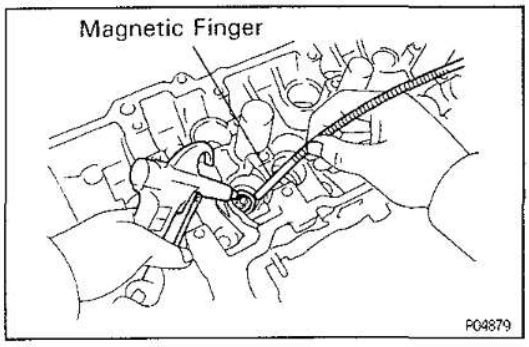

(d) Using compressed air and magnetic finger, remove the spring seat by blowing air.

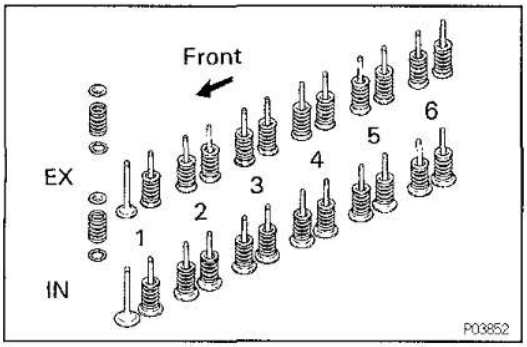

HINT: Arrange the valves, valve springs, spring seats and spring retainers in correct order.

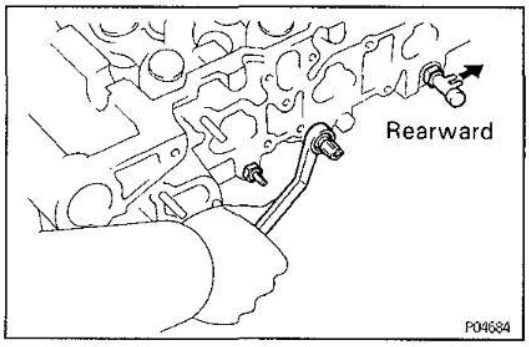

3. REMOVE FOLLOWING PARTS:

(a) Water temperature switch

(b) Water temperature sensor (for G.C.C.)

(c) BVSV

EG27L-01

CYLINDER HEAD COMPONENTS INSPECTION, CLEANING AND REPAIR

(See page EG—56)

EG0VE-01

CYLINDER HEAD ASSEMBLY

(See page EG—90)

HINT:

- Thoroughly clean all parts to be assembled.
- Before installing the parts, apply new engine oil to all sliding and rotating surfaces.
- Replace all gaskets and oil seals with new ones.

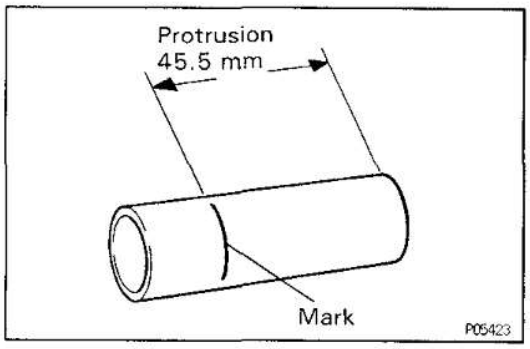

1. INSTALL SPARK PLUG TUBES

HINT: When using a new cylinder head, spark plug tubes must be installed.

(a) Mark the standard position away from the edge, onto the spark plug tube.

Standard protrusion:

45.5 mm (1.791 in.)

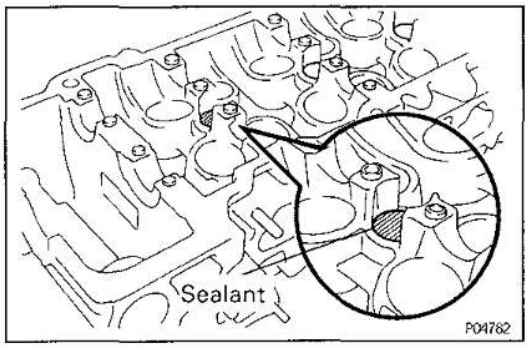

(b) Apply adhesive to the spark plug tube hole of the cylinder head.
Sealant:
Part No. 08833 – 00070, Adhesive 1324, THREE BOND 1324 or equivalent

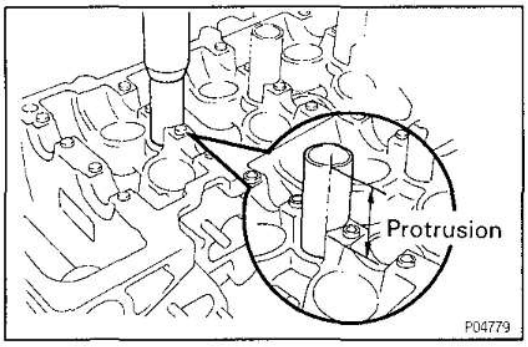

(c) Using a press, press in a new spark plug tube until there is 45.5 mm (1.791 in.) protruding from the camshaft bearing cap installation surface of the cylinder head.
NOTICE: Avoid pressing a new spark plug tube in too far by measuring the amount of protrusion while pressing.

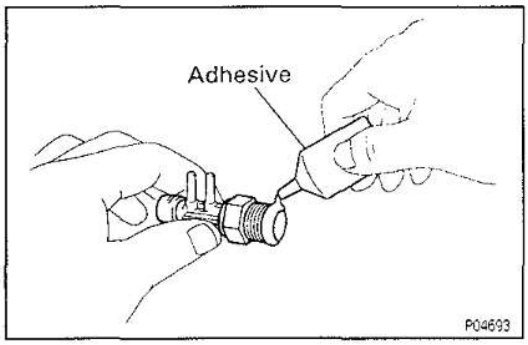

2. INSTALL FOLLOWING PARTS:
HINT: Apply adhesive to two or three threads of the BVSV.
Adhesive:
Part No.08833–00080, THREE BOND 1344, LOCTITE 242 or equivalent

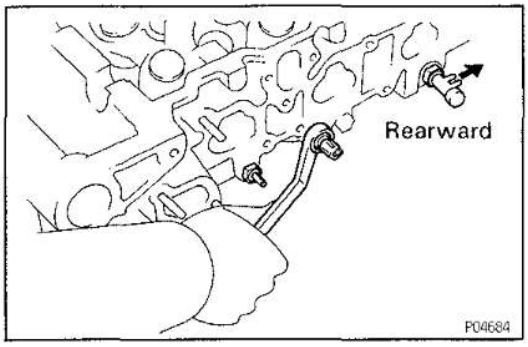

(a) Water temperature switch
(b) Water temperature sensor (for G.C.C.)
(c) BVSV

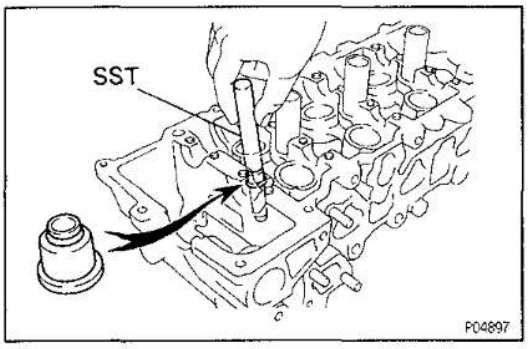

3. INSTALL VALVES
(a) Using SST, push in a new oil seal.
SST 09236–00101 (09236–15010)

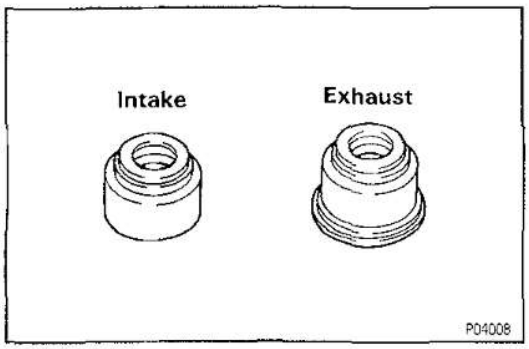

HINT: Different oil seals are used for the intake and exhaust.

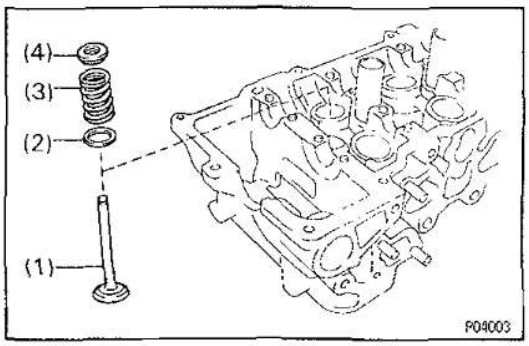

(b) Install the following parts:
(1) Valve
(2) Spring seat
(3) Valve spring
(4) Spring retainer

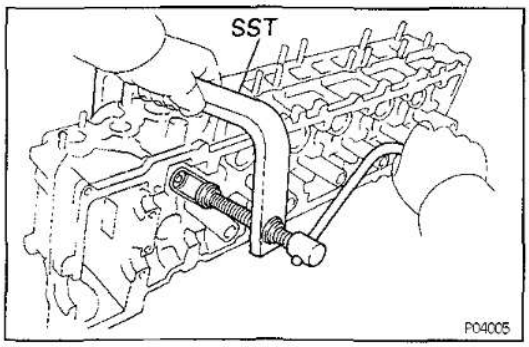

(c) *Using SST, compress the valve spring and place the* two keepers around the valve stem.
SST 09202−70010

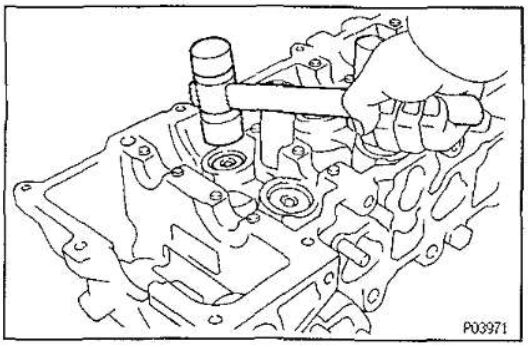

(d) Using a plastic−faced hammer, lightly tap the valve stem tip to assure proper fit.

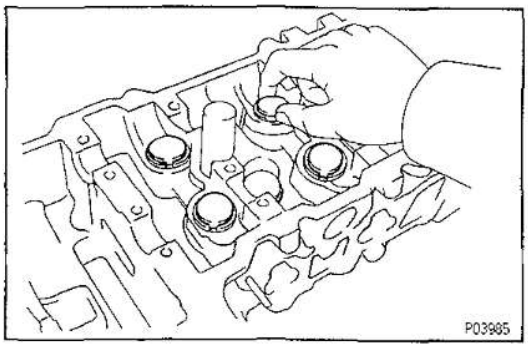

4. INSTALL VALVE LIFTERS AND SHIMS

(a) Install the valve lifter and shim.

(b) Check that the valve lifter rotates smoothly by hand.

EG0VF-04

CYLINDER HEAD INSTALLATION

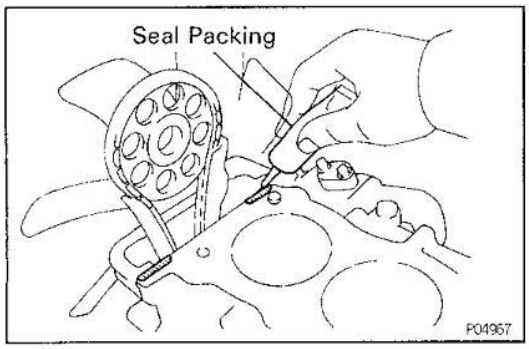

(See pages EG—89)

1. INSTALL CYLINDER HEAD

A. Place cylinder head on cylinder block

(a) Apply seal packing to two locations as shown.

Seal packing:

Part No.08826—00080 or equivalent

NOTICE: Do not apply too much seal packing

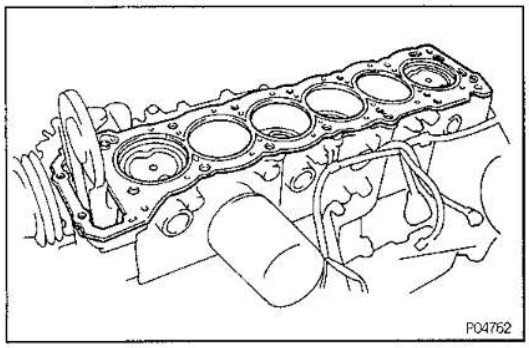

(b) Place a new cylinder head gasket in position on the cylinder block.

NOTICE: Be careful of the installation direction.

(c) Place the cylinder head in position on the cylinder head gasket.

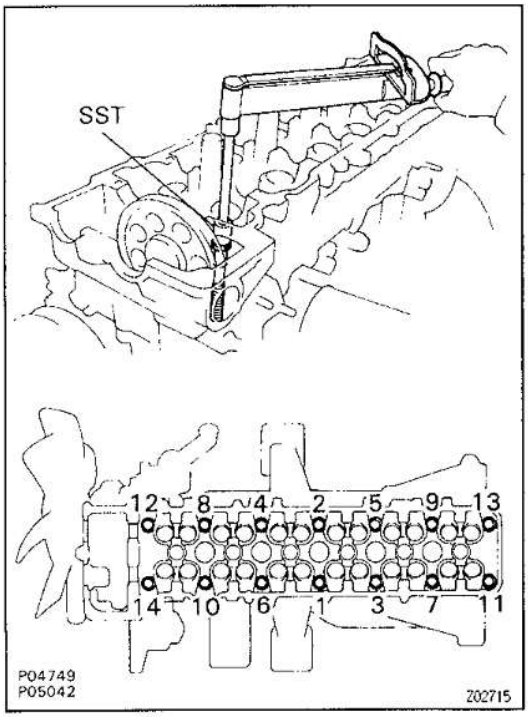

B. Install cylinder head bolts

HINT:

- The cylinder head bolts are tightened in two progressive steps (steps (b) and (d)).
- If any cylinder head bolt is broken or deformed, replace it.

(a) Apply a light coat of engine oil on the threads and under the heads of the cylinder head bolts.

(b) Using SST, install and uniformly tighten the 14 cylinder head bolts and plate washers in several passes, in the sequence shown.

SST 09011—38121

Torque: 39 N·m (400 kgf·cm, 29 ft·lbf)

If any one of the cylinder head bolts does not meet the torque specification, replace the cylinder head bolt.

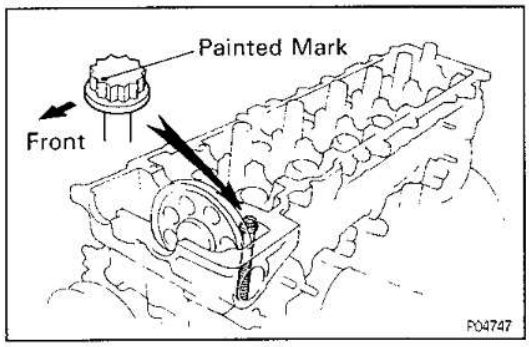

(c) Mark the front of the cylinder head bolt head with paint.

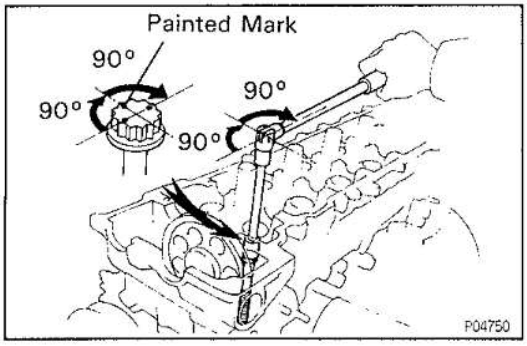

(d) Retighten the cylinder head bolts 90° in the numerical order shown.
(e) Retighten the cylinder head bolts by an additional 90°.
(f) Check that the painted mark is now facing rearward.

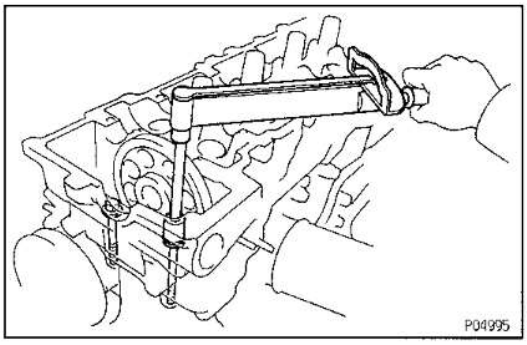

(g) Install and torque the two mounting bolts.
Torque: 21N·m (210kgf·cm, 15ft·lbf)

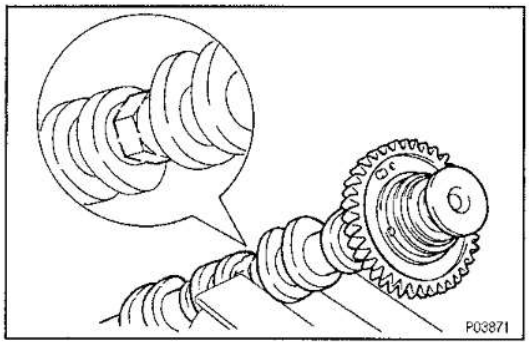

2. ASSEMBLY EXHAUST CAMSHAFT

(a) Mount the hexagon wrench head portion of the camshaft in a vise.
NOTICE: Be careful not to damage the camshaft.

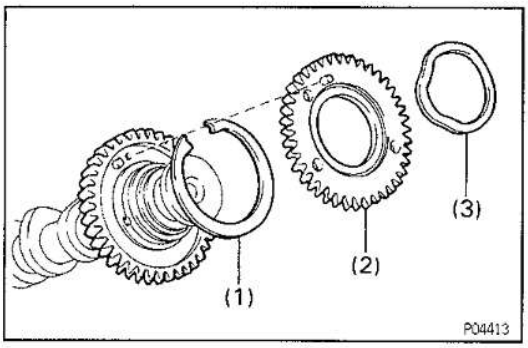

(b) Install the following parts:
(1) Camshaft gear spring
(2) Camshaft sub—gear
(3) Wave washer
HINT: Align the pins on the gears with the spring ends.

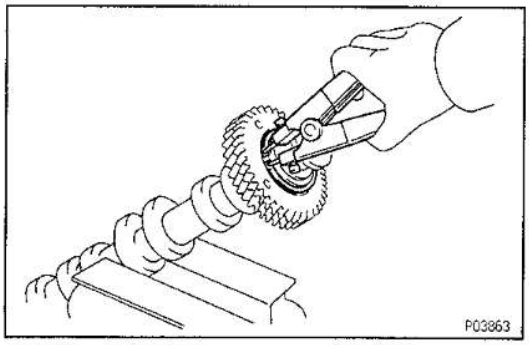

(c) Using snap ring pliers, install the snap ring.

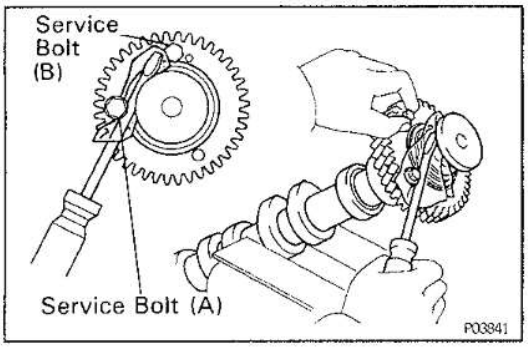

(d) Insert a service bolt (A) into the service hole of the camshaft sub—gear.

(e) Using a screwdriver, align the holes of the camshaft main gear and sub—gear by turning camshaft sub—gear clockwise, and install a service bolt (B).

NOTICE: Be careful not to damage the camshaft.

EG

3. INSTALL CAMSHAFTS

NOTICE: Since the thrust clearance of the camshaft is small, the camshaft must be kept level while it is being installed. If the camshaft is not kept level, the portion of the cylinder head receiving the shaft thrust may crack or be damaged, causing the camshaft to seize or break. To avoid this, the following steps should be carried out.

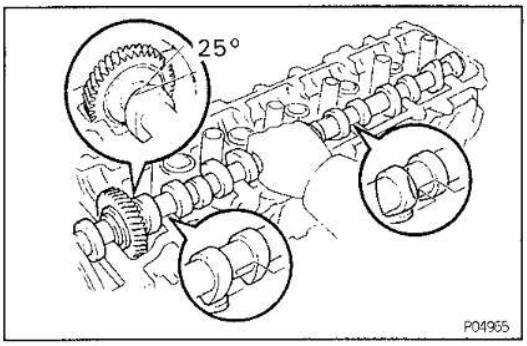

A. Install intake camshaft

(a) Apply engine oil to the thrust portion of the intake camshaft.

(b) Lightly place the intake camshaft on top of the cylinder head as shown in the illustration so that the No. 1 and No.4 cylinder cam lobes face downward.

(c) Lightly push the camshaft towards the front without applying excessive force.

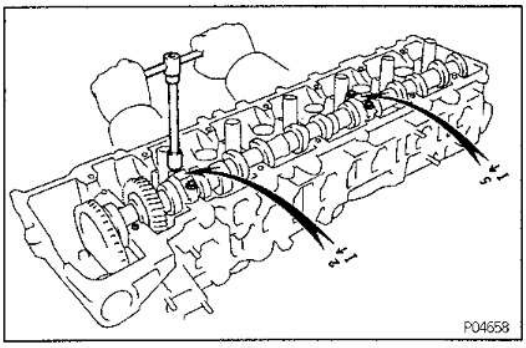

(d) Place the No.2 and No.5 bearing caps in their proper location.

(e) Temporarily tighten these bearing cap bolts uniformly and alternately in several passes until the bearing caps are snug with the cylinder head.

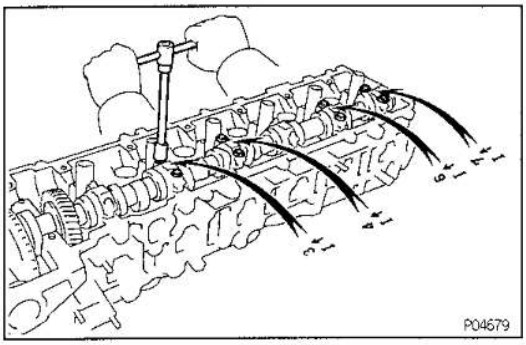

(f) Place the No.3, No.4, No.6 and No.7 bearing caps in their proper location.

(g) Temporarily tighten these bearing cap bolts, alternately tightening the left and right bolts uniformly.

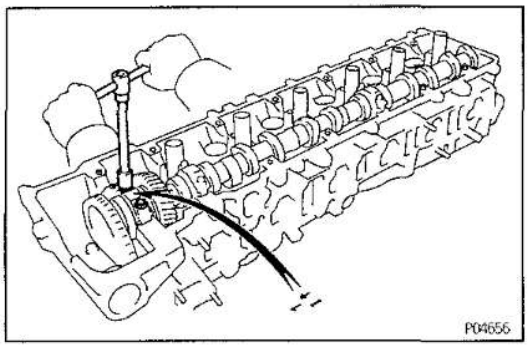

(h) Place the No.1 bearing cap in its proper location. When doing this, check that there is no gap between the cylinder head and the contact surface of bearing cap.

(i) Temporarily tighten the bearing cap bolts, alternately tightening the left and right bolts uniformly.

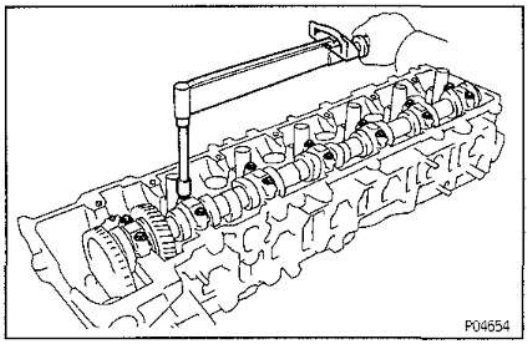

(j) Uniformly tighten the fourteen bearing cap bolts in several passes.
Torque: 16 N·m (160 kgf·cm, 12 ft·lbf)

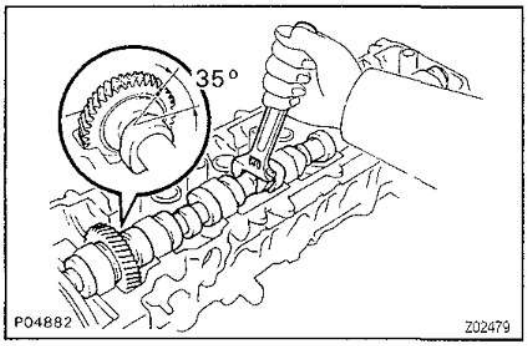

B. Install exhaust camshaft

(a) Set the timing mark (two dot marks) of the camshaft drive gear at approx. 35° angle by turning the hexagon wrench head portion of the intake camshaft with a wrench.

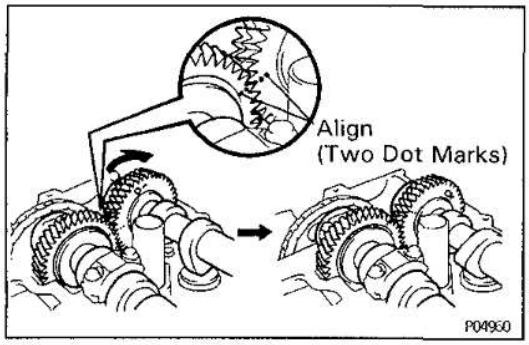

(b) Apply engine oil to thrust portion of the exhaust camshaft.

(c) Engage the exhaust camshaft gear to the intake camshaft gear by matching the timing marks (two dot marks) on each gear.

(d) Roll down the exhaust camshaft onto the bearing journals while engaging gears with each other.

(e) Lightly push the intake camshaft towards the front without applying excessive force.

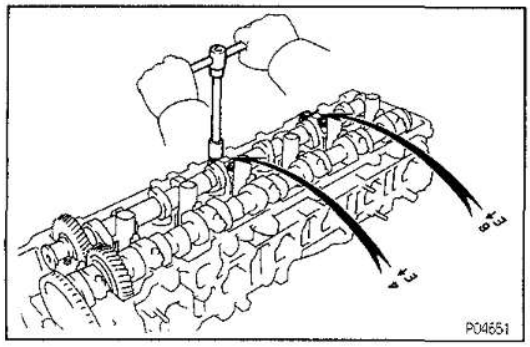

(f) Install the No.4 and No.6 bearing caps in their proper location.

(g) Temporarily tighten the bearing cap bolts uniformly and alternately in several passes until the bearing caps are snug with the cylinder head.

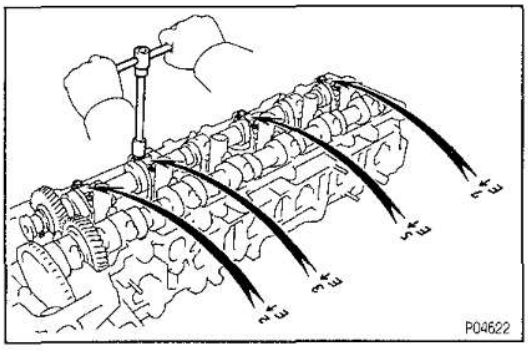

(h) Place the No.2, No.3, No.5 and No.7 bearing caps in their proper location.

(i) Temporarily tighten these bearing cap bolts, alternately tightening the left and right bolts uniformly.

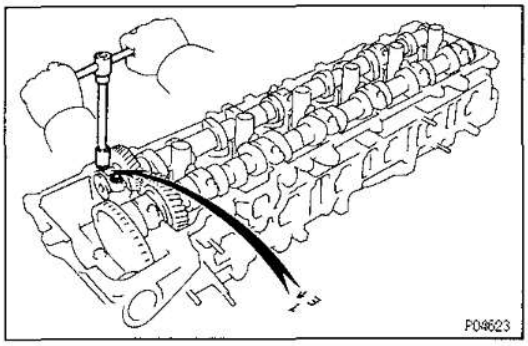

(j) Place the No.1 bearing cap in its proper location. When doing this, check that there is no gap between the cylinder head and the contact surface of bearing cap.

(k) Temporarily tighten the bearing cap bolts, alternately tightening the left and right bolts uniformly.

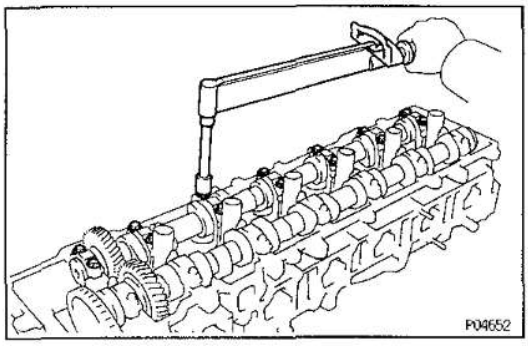

(l) Uniformly tighten the fourteen bearing cap bolts in several passes.
Torque: 16 N·m (160 kgf·cm, 12 ft·lbf)

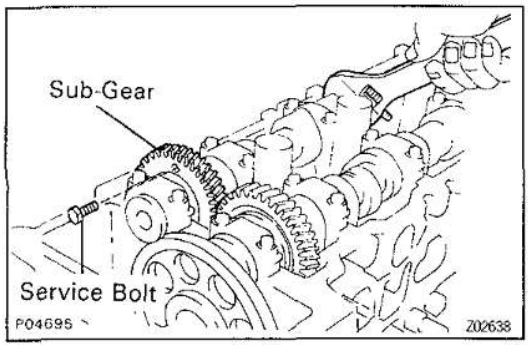

(m) Bring the service bolt installed in the driven sub—gear upward by turning the hexagon wrench head portion of the camshaft with a wrench.

(n) Remove the service bolt.

(o) Check that the intake and exhaust camshafts turn smoothly.

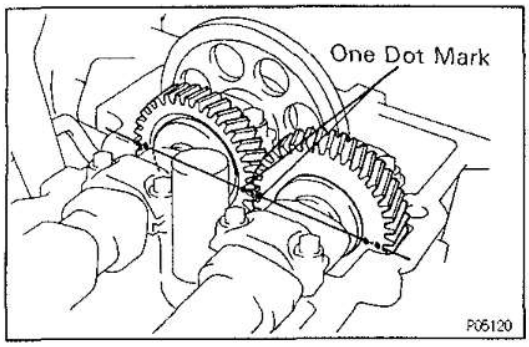

4. SET CAMSHAFTS TO FOLLOWING POSITION:
Turn the camshafts so that the timing marks with one and two dots will be in straight line on the cylinder head surface as shown in the illustration.

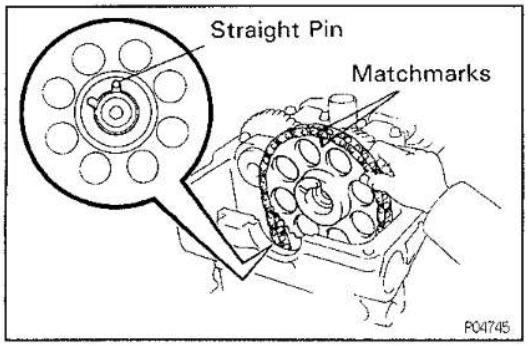

5. INSTALL CAMSHAFT TIMING GEAR

HINT: Check that the matchmarks on the camshaft timing gear and timing chain are aligned.

(a) Place the gear over the straight pin of the intake camshaft.

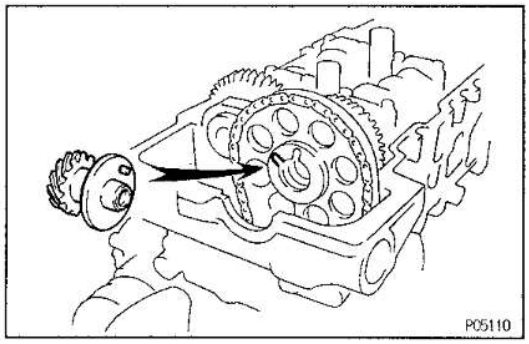

(b) Align the straight pin of distributor gear with the straight pin groove of the intake camshaft gear as shown.

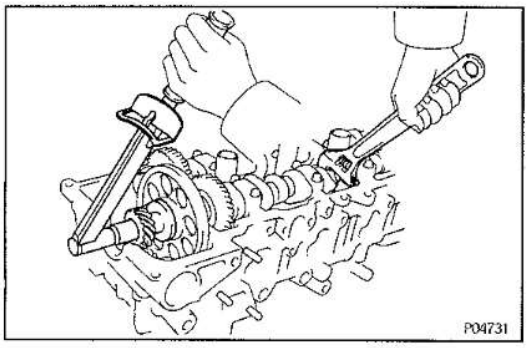

(c) Hold the intake camshaft with a wrench, install and torque the bolt.

Torque: 74 N·m (750 kgf·cm, 54 ft·lbf)

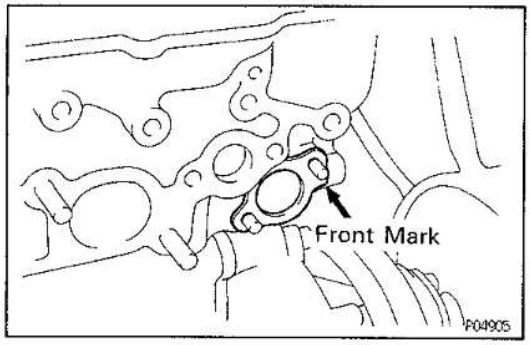

6. INSTALL CHAIN TENSIONER

(a) Place a new gasket so that the front mark is toward the front side.

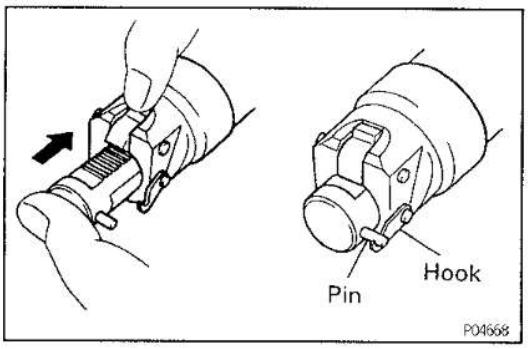

(b) Release the ratchet pawl, fully push in the plunger and apply the hook to the pin so that the plunger cannot spring out.

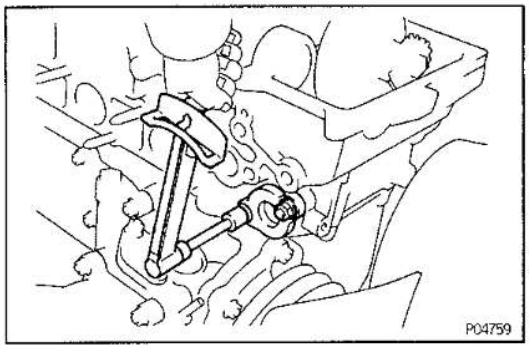

(c) Install the chain tensioner with the two nuts.
Torque: 21 N·m (210 kgf·cm, 15 ft·lbf)
NOTICE: If the plunger springs out during installation of the chain tensioner, repeat the operation in step (b) before installing the tensioner.

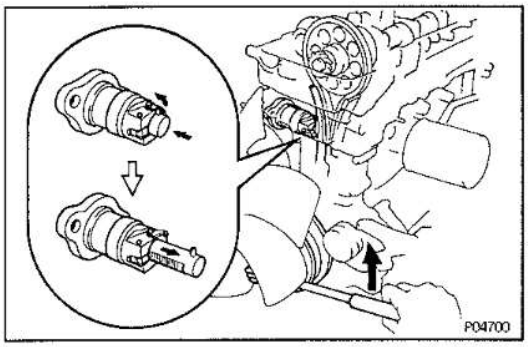

7. SET CHAIN TENSIONER
Turn the crankshaft to the left so that the hook of the chain tensioner is released from the pin of the plunger, causing the plunger to spring out and the slipper to be pushed into the chain.

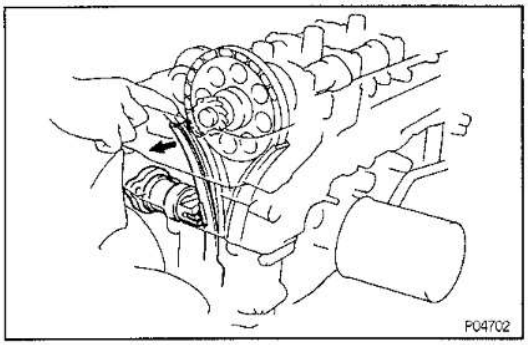

HINT: If the plunger does not spring out, press the slipper into the chain tensioner with a screwdriver or your finger so that the hook is released and the plunger springs out.

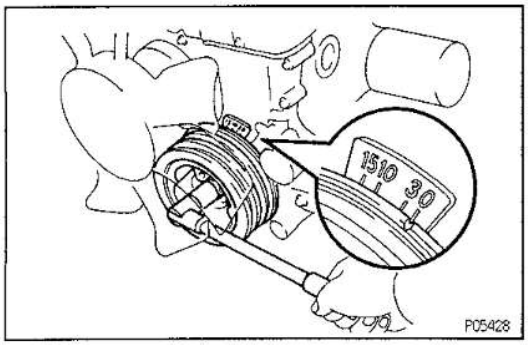

8. CHECK VALVE TIMING
(a) Turn the crankshaft pulley two revolutions from TDC to TDC.
NOTICE: Always turn the crankshaft clockwise.

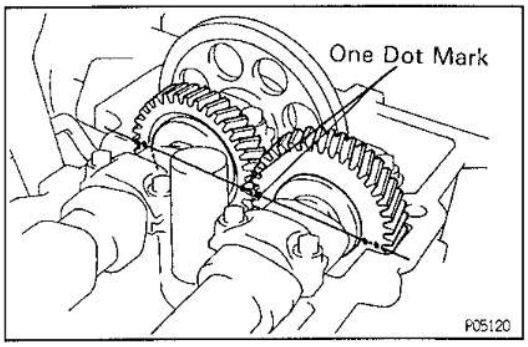

(b) Check that the timing marks (one and two dots) of the camshaft drive and driven gears are in straight line on the cylinder head surface as shown in the illustration. If not, turn the crankshaft one revolution (360°) and align the marks as above.

EG

9. CHECK AND ADJUST VALE CLEARANCE

(See page EG—17)

Turn the camshaft and position the cam lobe upward and check and adjust the valve clearance.

Valve clearance (Cold):

Intake

0.15 — 0.25 mm (0.006 — 0.010 in.)

Exhaust

0.25 — 0.35 mm (0.010 — 0.014 in.)

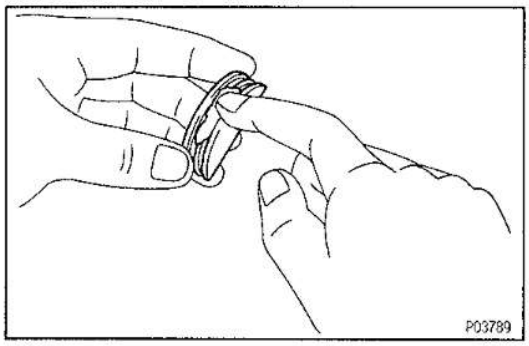

10. INSTALL SEMI—CIRCULAR PLUG

(a) Remove any old packing (FIPG) material.

(b) Apply seal packing to the cylinder head installation surface of the half—circular plug.

Seal packing:

Part No.08826—00080 or equivalent

(c) Install the half—circular plug to the cylinder head.

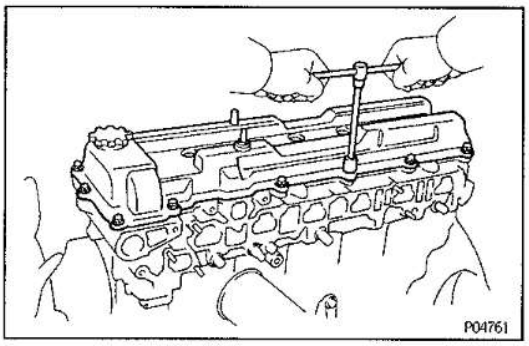

11. INSTALL CYLINDER HEAD COVER

(a) Install the gasket to the cylinder head cover.

(b) Install the cylinder head cover with the 13 bolts.

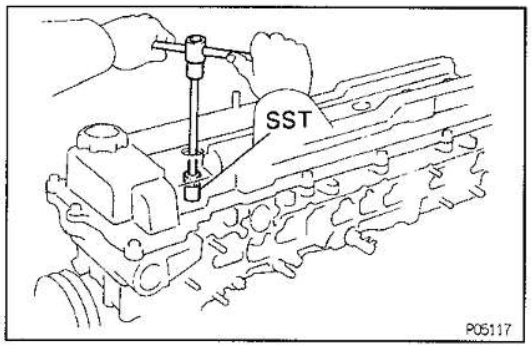

12. INSTALL SPARK PLUGS

Using SST, install the spark plug.

SST 09155—16100

Torque: 20 N·m (200 kgf·cm, 14 ft·lbf)

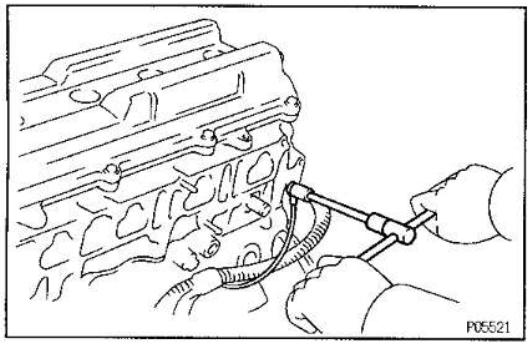

13. CONNECT ENGINE WIRE

Connect the engine wire to the cylinder head with the bolt.

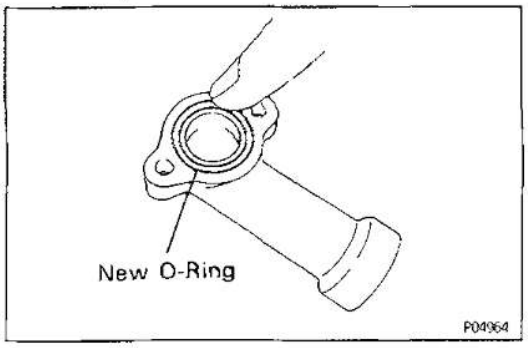

14. INSTALL WATER BY–PASS OUTLET AND PIPE

(a) Install a new O–ring to the water by–pass outlet.

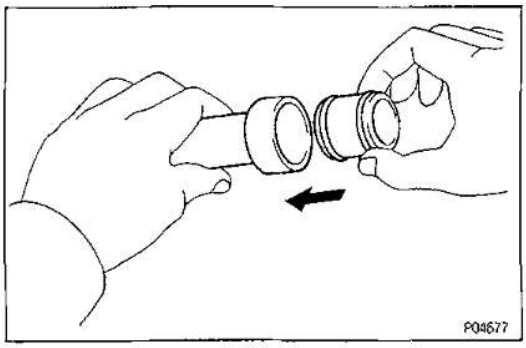

(b) Install two new O–rings to the water by–pass pipe.
(c) Apply soapy water to the O–rings.
(d) Assemble the water by–pass outlet and pipe.

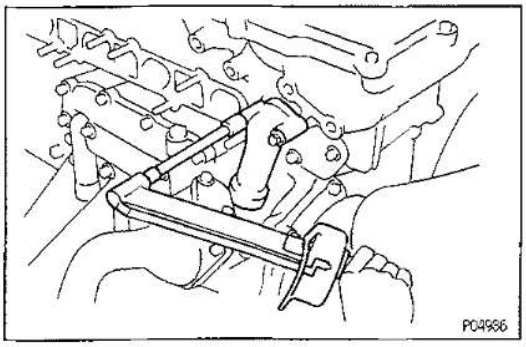

(e) Install the water by–pass outlet and pipe with the two bolts.
Torque: 21 N·m (210 kgf·cm, 15 ft·lbf)

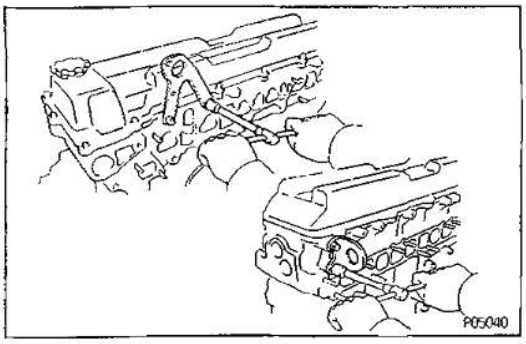

15. INSTALL NO.1 AND NO.2 ENGINE HANGERS
Torque: 41 N·m (420 kgf·cm, 30 ft·lbf)

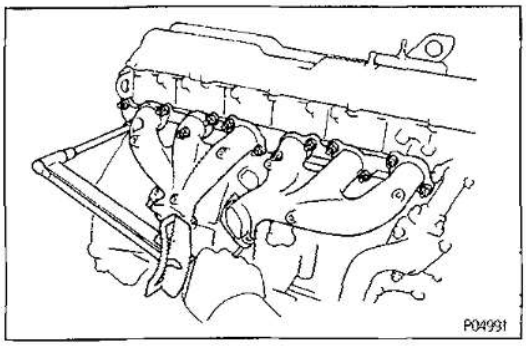

16. INSTALL NO.1 AND NO.2 EXHAUST MANIFOLDS

(a) Install two new gaskets, No.1 exhaust manifold and No.2 exhaust manifold with the 13 nuts.
Torque: 39 N·m (400 kgf·cm, 29 ft·lbf)

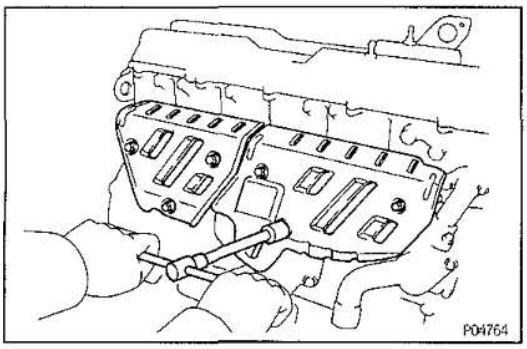

(b) Install the No.1 heat insulator and No.2 heat insulator with the six bolts.
Torque: 19 N·m (195 kgf·cm, 14 ft·lbf)

EG

17. INSTALL WATER BY—PASS FLANGE

(a) Remove any old packing (FIPG) material and be careful not to drop any oil on the contact surfaces of the water by—pass and intake manifold.
- Using a razor blade and gasket scraper, remove all the old packing (FIPG) material from the gasket surfaces and sealing grooves.
- Thoroughly clean all components to remove all the loose material.
- Using a non—residue solvent, clean both sealing surfaces.

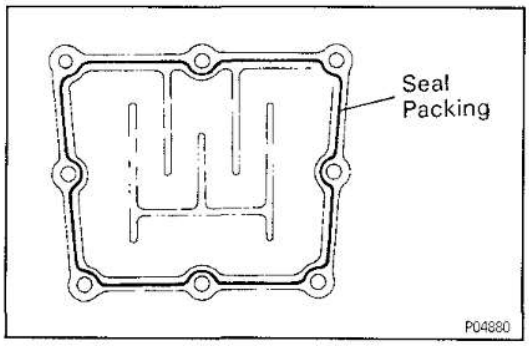

(b) Apply seal packing to the water by—pass flange as shown in the illustration.
Seal packing:
Part No.08826—00080 or equivalent
- Install a nozzle that has been cut to a 3 — 4 mm (0.12 — 0.16 in.) opening.

HINT: Avoid applying an excessive amount to the surface.
- Parts must be assembled within 5 minutes of application. Otherwise the material must be removed and reapplied.
- Immediately remove nozzle from the tube and reinstall cap.

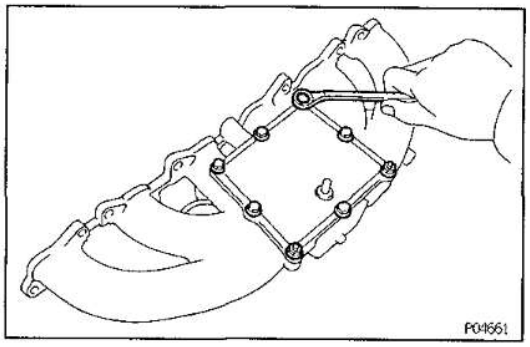

(c) Install the water by—pass flange with the six bolts and two nuts.
Torque: 21 N·m (210 kgf·cm, 15 ft·lbf)

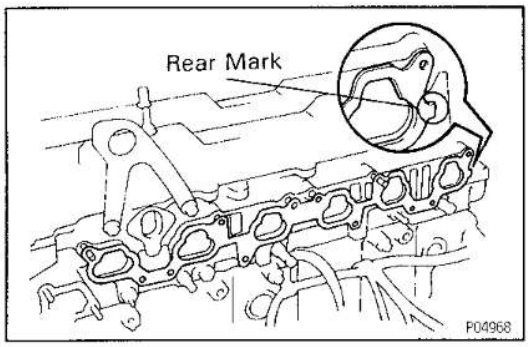

18. INSTALL INTAKE MANIFOLD WITH CARBURETOR

(a) Place a new gasket so that the rear mark is toward the rear side.

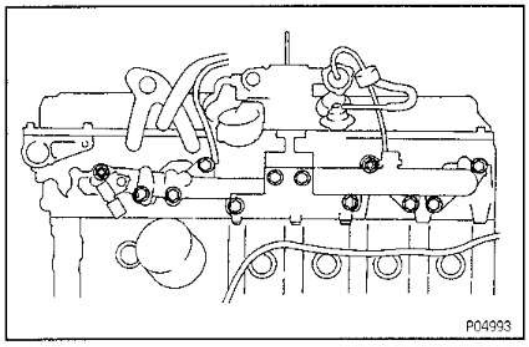

(b) Install the intake manifold and ground strap with the six bolts and two nuts.
Torque: 21 N·m (210 kgf·cm, 15 ft·lbf)

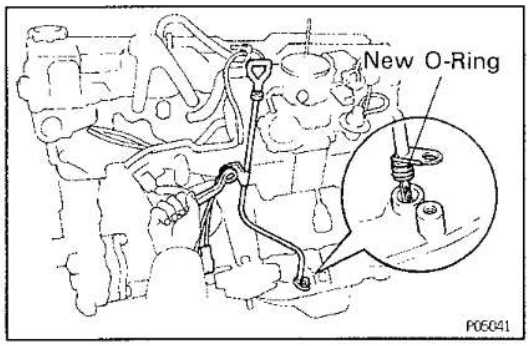

19. INSTALL OIL DIPSTICK AND GUIDE

(a) Install a new O—ring to the dipstick guide.
(b) Apply light coat of engine oil on the O—ring.
(c) Push in the dipstick guide into the guide hole of the No.1 oil pan.
(d) Install the ground strap and dipstick guide with the two bolts.
Torque: 20 N·m (200 kgf·cm, 14 ft·lbf)

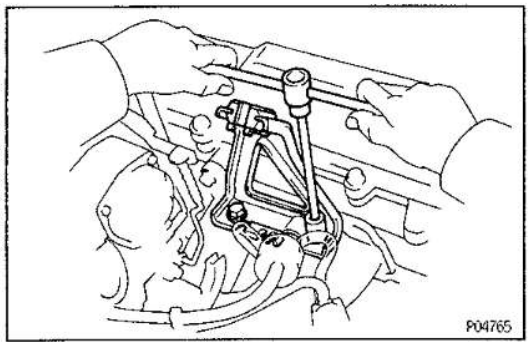

20. INSTALL ACCELERATOR CABLE BRACKET

Install the accelerator cable bracket with the two bolts.
Torque: 18 N·m (185 kgf·cm, 13 ft·lbf)

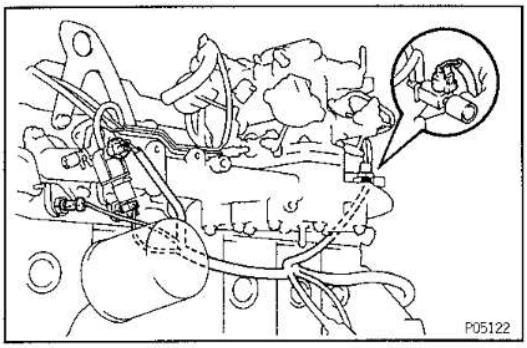

21. CONNECT FOLLOWING CONNECTORS:

(a) Spark control VSV (for G.C.C.)
(b) Water temperature switch
(c) Water temperature sensor (for G.C.C.)
(d) TP VSV

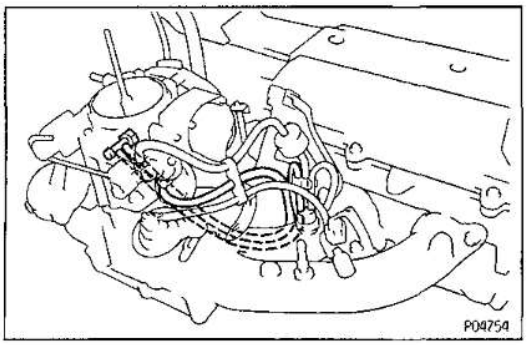

22. CONNECT TWO VACUUM HOSES TO BVSV

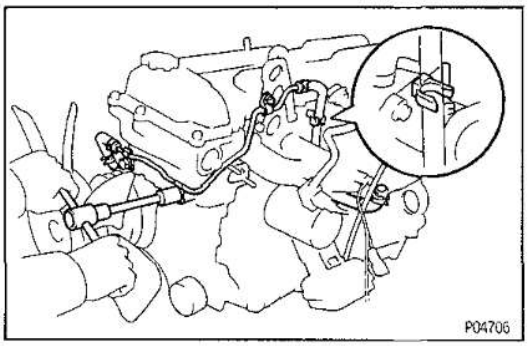

23. INSTALL NO.2 WATER BY—PASS PIPE AND HOSES

(a) Install the No.2 water by—pass pipe and hoses with the three bolts.
Torque: 20 N·m (200 kgf·cm, 14 ft·lbf)

(b) Connect the hose to the hose clamp.

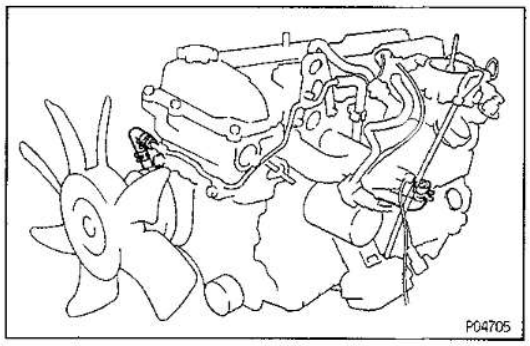

(c) Connect the two water hoses.

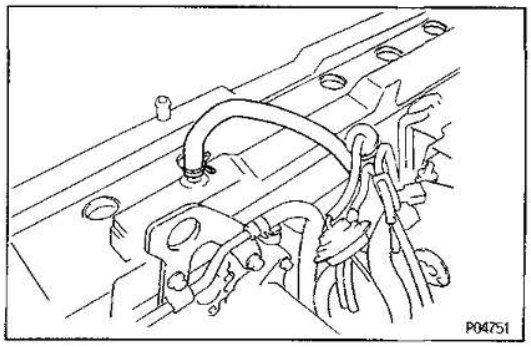

24. CONNECT PCV HOSE

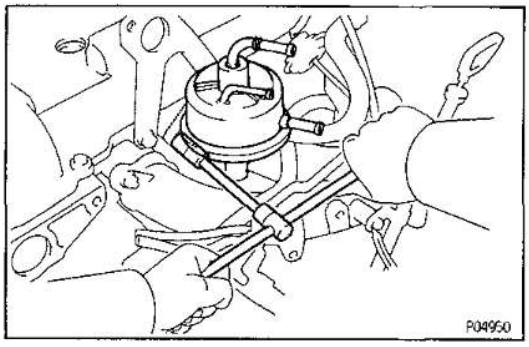

25. INSTALL FUEL PUMP

(a) Install a new insulator and fuel pump with the three bolts.
Torque: 21 N·m (210 kgf·cm, 15 ft·lbf)

(b) Connect the fuel outlet hose.

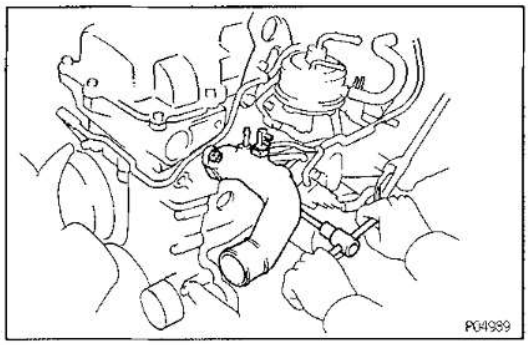

26. INSTALL WATER OUTLET

(a) Install a new gasket and water outlet with the two nuts.
Torque: 21 N·m (210 kgf·cm, 15 ft·lbf)

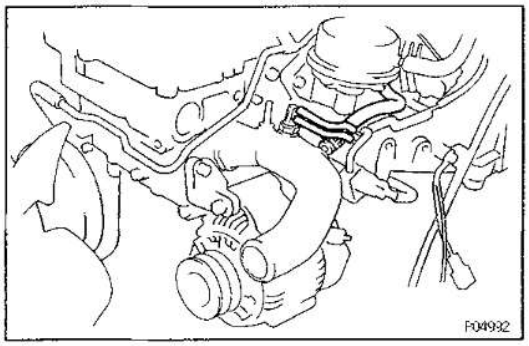

(b) Connect No.1 water by—pass hose.
(c) Connect the vacuum hoses.

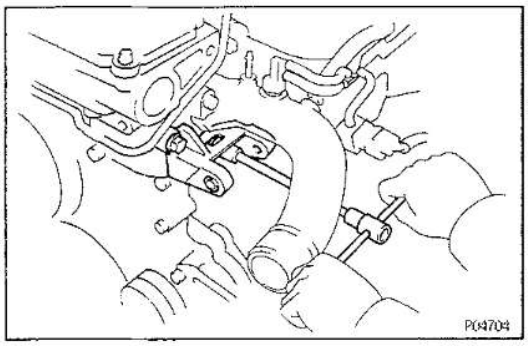

27. INSTALL ALTERNATOR BRACKET

Install the alternator bracket with the two bolts.
Torque: 43 N·m (440 kgf·cm, 32 ft·lbf)

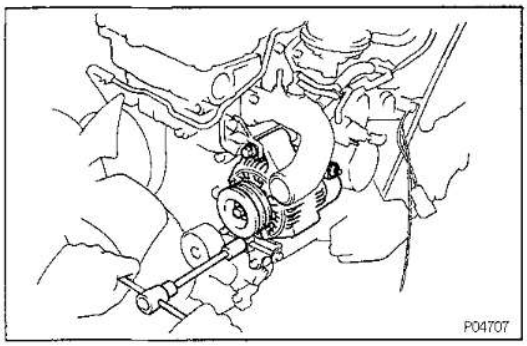

28. INSTALL ALTERNATOR AND DRIVE BELTS

(See CH section)

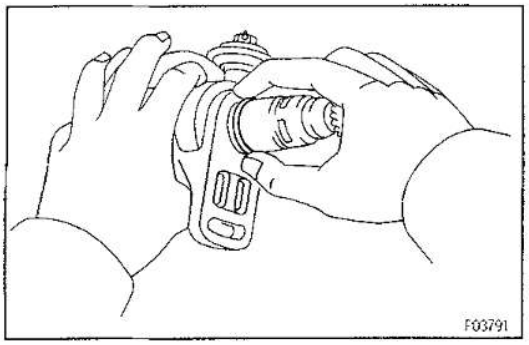

29. INSTALL DISTRIBUTOR

(a) Install a new O—ring to the distributor.
HINT: Always use a new O—ring when installing the distributor.

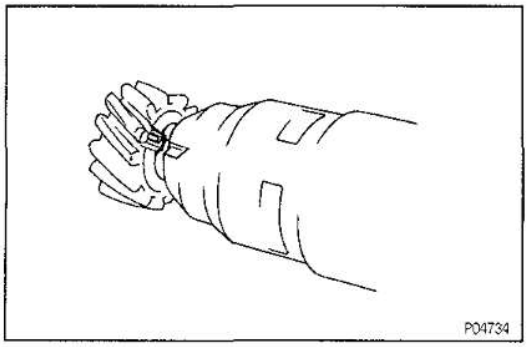

(b) Align the groove of the distributor housing with the protrusion on the driven gear.
(c) Apply a light coat of engine oil on the O—ring.

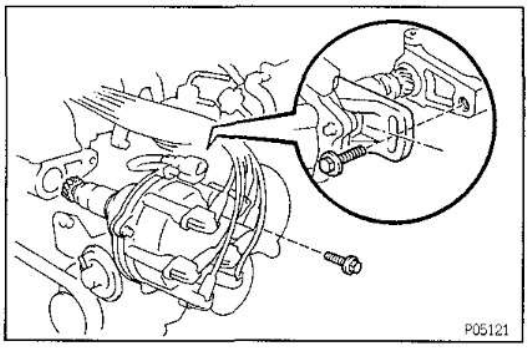

(d) Insert the distributor, aligning the center of the flange with that of the bolt hole on the cylinder head.
(e) Lightly tighten the hold—down bolts.
(f) Connect the high—tension cords.
Firing order:
1—5—3—6—2—4

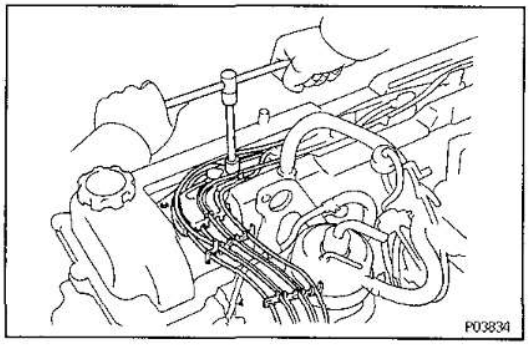

(g) Install the No.1 cord clamp mounting bolt.

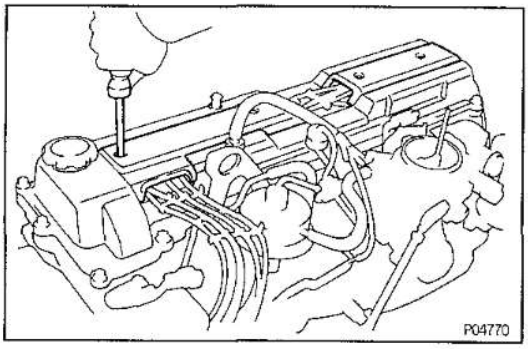

30. INSTALL NO. 2 AND NO. 3 CYLINDER HEAD COVERS
Install the head covers with the four bolts.

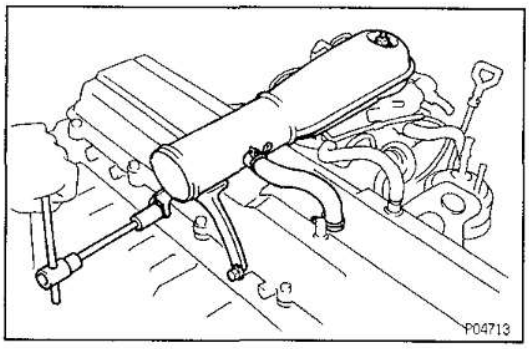

31. INSTALL INTAKE AIR CONNECTOR
(a) Install the air connector with the two bolts and nut.
Bolt
Torque: 20 N·m (200 kgf·cm, 14 ft·lbf)
Nut
Torque: 5.4 N·m (55 kgf·cm, 48 ft·lbf)
(b) Connect the PCV hose.

TIMING CHAIN

COMPONENTS FOR REMOVAL AND INSTALLATION

EG0VG-04

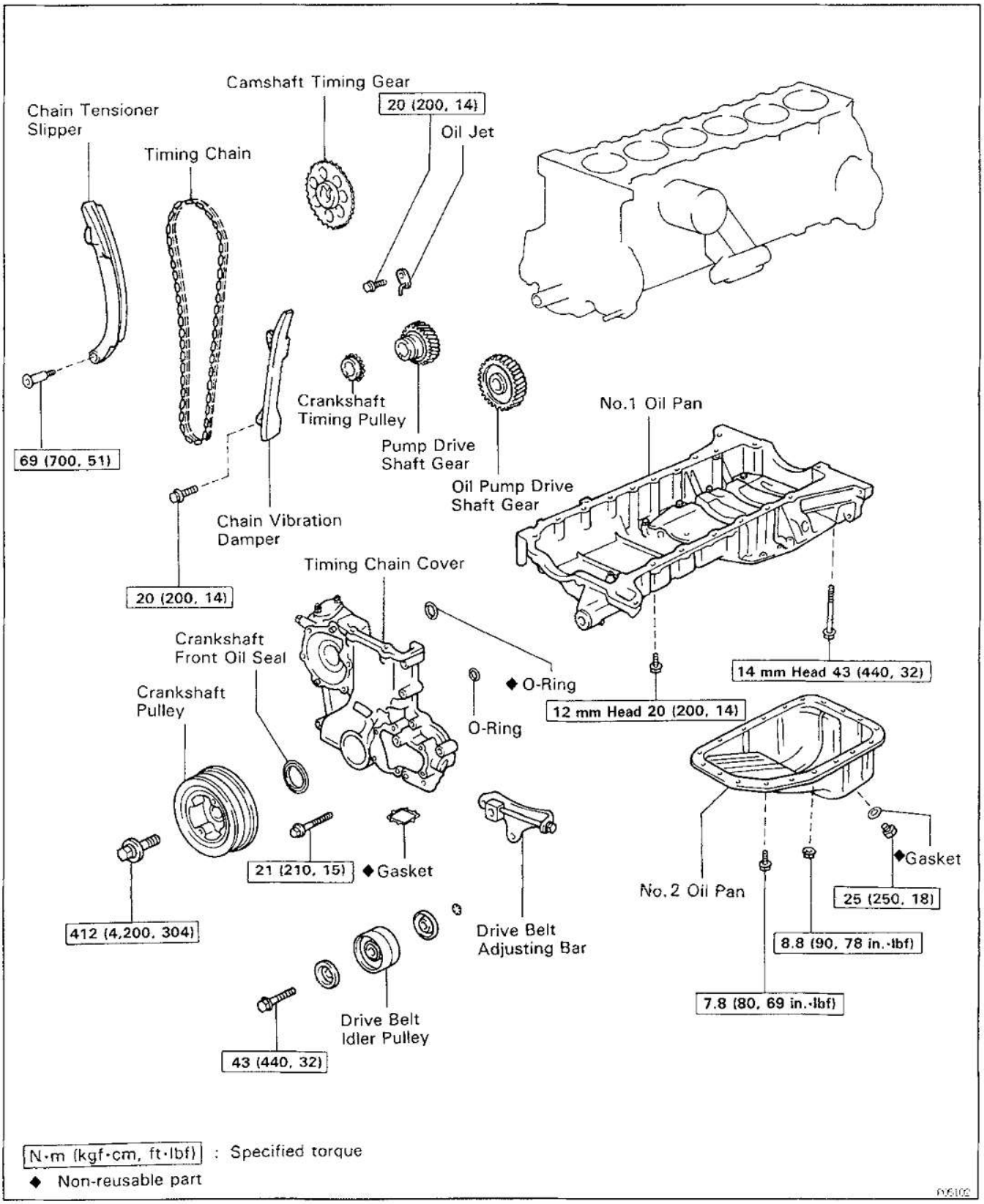

EG0VH-02

TIMING CHAIN REMOVAL

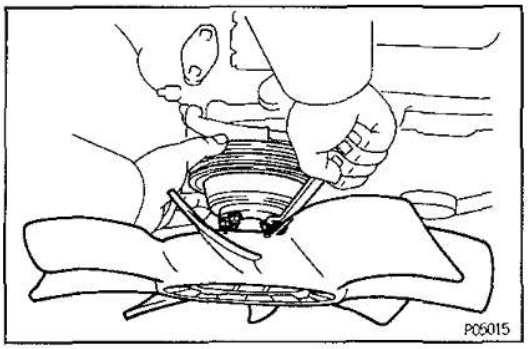

1. REMOVE WATER PUMP

(a) Stretch the belts and loosen the fan pulley mounting nuts.

(b) Loosen the pivot and adjusting bolts of the alternator, and remove the drive belts.

(c) Remove the four nuts, fan with fluid coupling and water pump pulley.

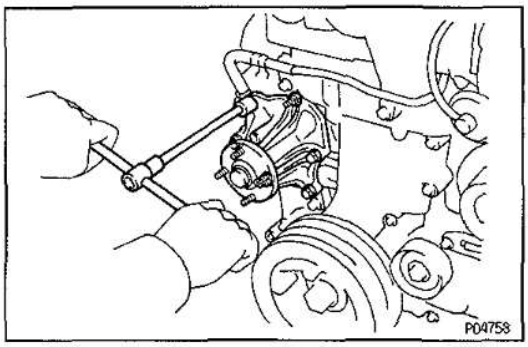

(d) Remove the four bolts, two nuts, water pump and gasket.

2. REMOVE CYLINDER HEAD
(See page EG—38 or 89)

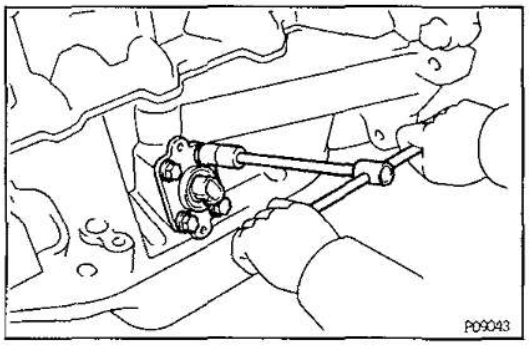

3. (Europe)
REMOVE OIL LEVEL SENSOR

(a) Remove the four bolts and level sensor.

(b) Remove the gasket from the level sensor.

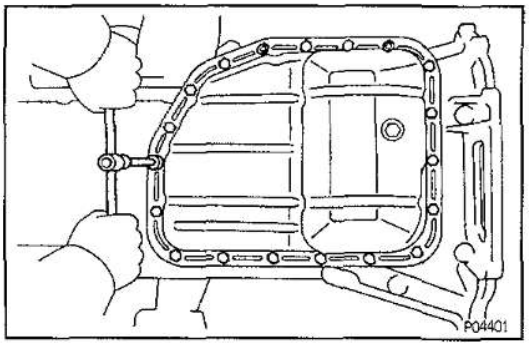

4. REMOVE NO.2 OIL PAN

(a) Remove the 17 mounting bolts and two nuts.

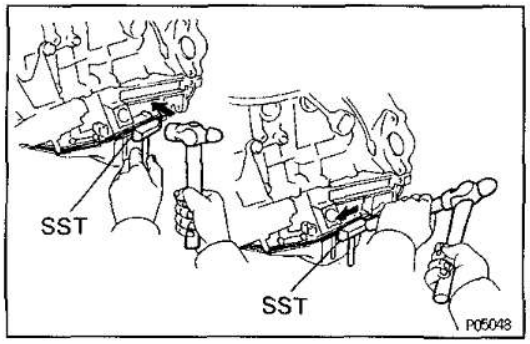

(b) Insert the blade of SST between the No.1 and No.2 oil pans, cut off applied sealer and remove the No.2 oil pan.
SST 09032—00100
NOTICE:
- ***Be careful not to damage the No.2 oil pan contact surface of the No.1 oil pan.***
- **Be careful not to damage the oil pan flange.**

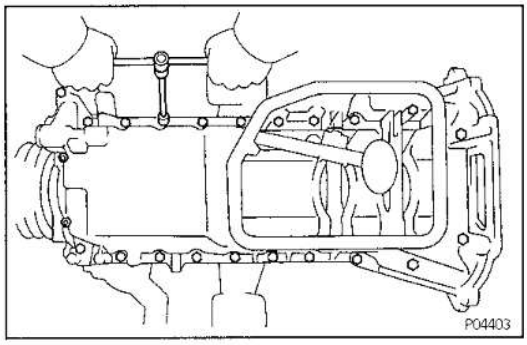

5. REMOVE NO.1 OIL PAN

(a) Remove the 21 mounting bolts and two nuts.

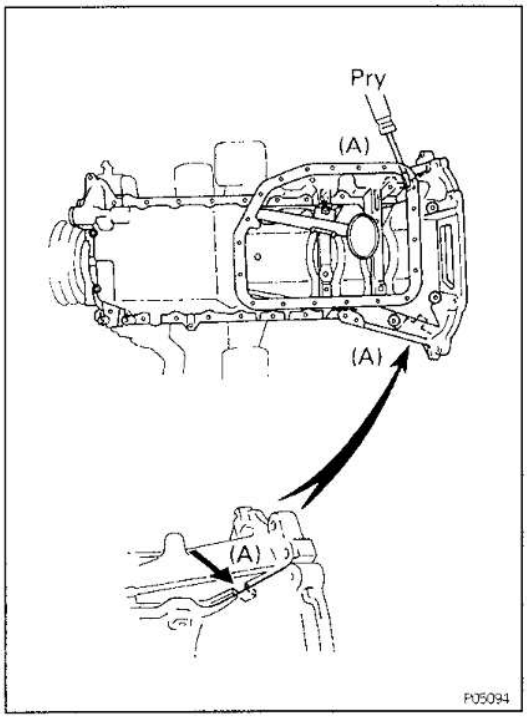

(b) Remove the No.1 oil pan by prying the portions (A) between the cylinder block and No.1 oil pan with a screwdriver.

NOTICE: Be careful not to damage the contact surfaces of the cylinder block and No.1 oil pan.

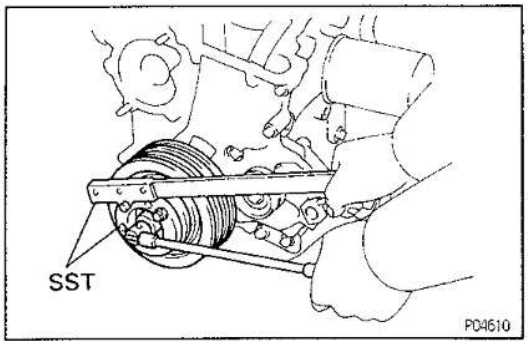

6. REMOVE CRANKSHAFT PULLEY

(a) Using SST, remove the pulley bolt.
SST 09213−58012, 09330−00021

(b) Remove the crankshaft pulley.

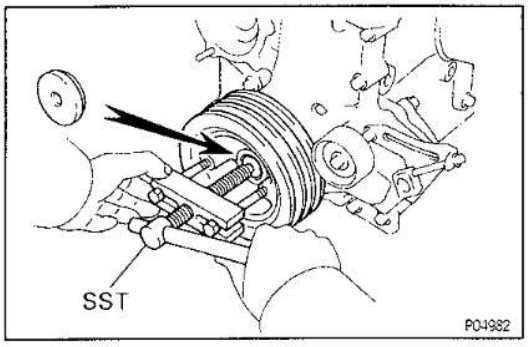

HINT: If necessary, remove the pulley with SST.
SST 09213−60017 (09213−00020, 09213−00030, 09213−00060), 09950−20017

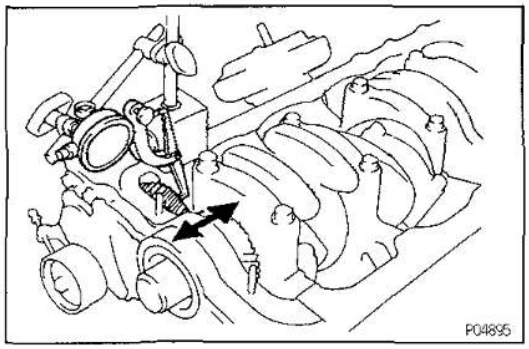

7. CHECK THRUST CLEARANCE OF OIL PUMP DRIVE SHAFT GEAR

Using a dial indicator with lever type attachment, measure the thrust clearance.

Standard thrust clearance:

0.050 — 0.150 mm (0.0020 — 0.0059 in.)

Maximum thrust clearance:

0.30 mm (0.0118 in.)

If the thrust clearance is greater than maximum, replace the oil pump drive shaft gear and/or timing chain cover.

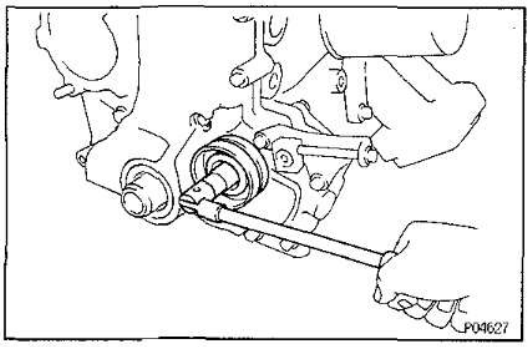

8. REMOVE DRIVE BELT IDLER PULLEY

Remove the bolt and idler pulley.

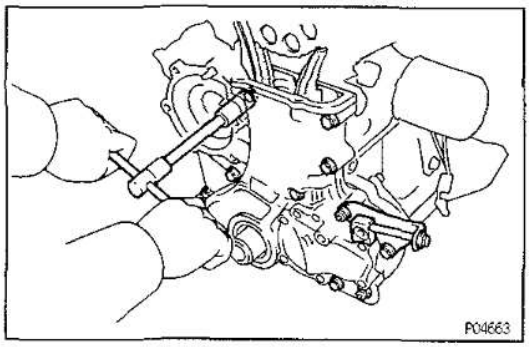

9. REMOVE TIMING CHAIN COVER

(a) Remove the nine mounting bolts, two mounting nuts and drive belt adjusting bar.

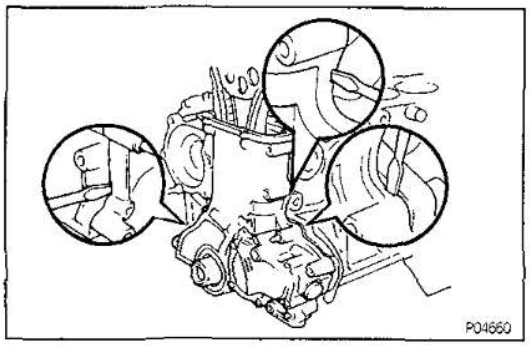

(b) Remove the timing chain cover by prying the portions between the cylinder block and timing chain cover with a screwdriver.

NOTICE: Be careful not to damage the contact surfaces of the cylinder block and oil pump.

(c) Remove the O—rings from the timing chain cover.

(d) Remove the gasket from the timing chain cover.

EG

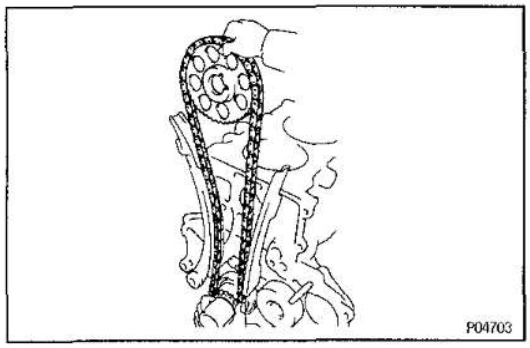

10. REMOVE TIMING CHAIN AND CAMSHAFT TIMING GEAR

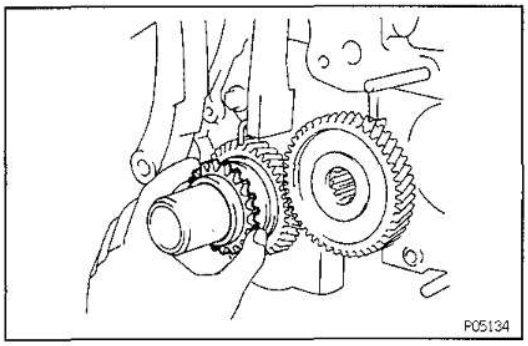

11. REMOVE CRANKSHAFT TIMING GEAR

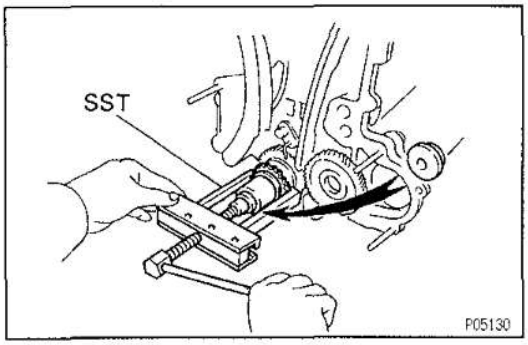

HINT: If necessary, remove the gear with SST.
SST 09213−36020, 09950−20017

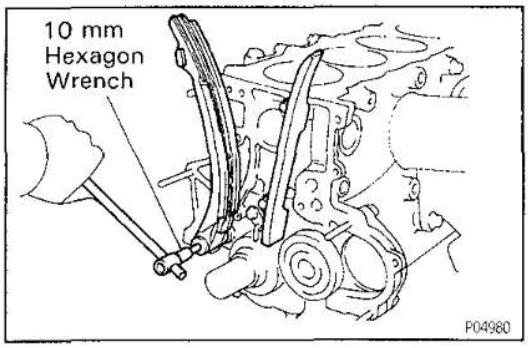

12. REMOVE CHAIN TENSIONER SLIPPER AND VIBRATION DAMPER

(a) Using a 10mm hexagon wrench, remove the bolt and slipper.

(b) Remove the two bolts and damper.

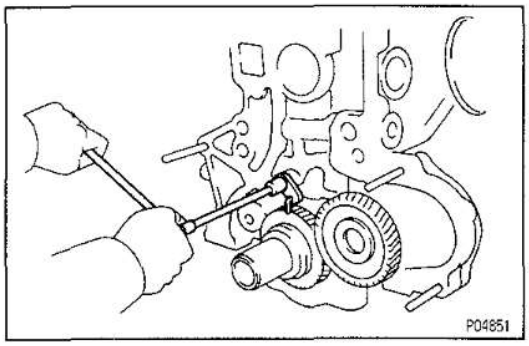

13. REMOVE OIL JET

Remove the bolt and oil jet.

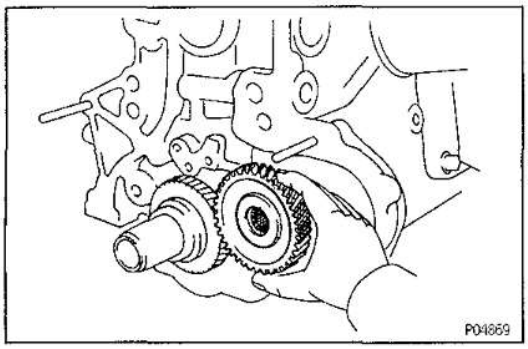

14. REMOVE OIL PUMP DRIVE SHAFT GEAR

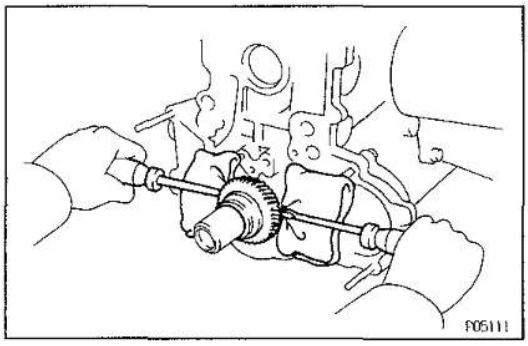

15. REMOVE PUMP DRIVE SHAFT GEAR

If the pump drive shaft gear cannot be removed by hand, use two screwdrivers.

NOTICE: Position shop rags as shown to prevent damage.

EG0VJ-02

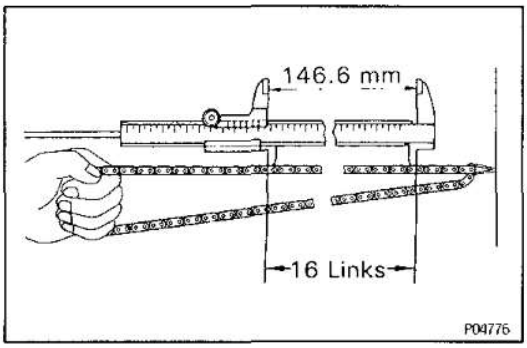

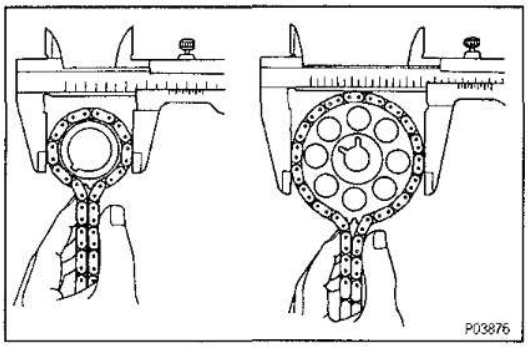

TIMING CHAIN COMPONENTS INSPECTION

1. INSPECT TIMING CHAIN AND TIMING GEARS

(a) Measure the length of 16 links with the chain fully stretched.

Maximum chain elongation:

146.6 mm (5.772 in.)

If the elongation is greater than maximum, replace the chain.

HINT: Make the same measurements pulling at three or more places selected at random.

(b) Warp the chain around the timing gear.

(c) Using vernier calipers, measure the timing gear diameter with the chain.

NOTICE: Vernier calipers must contact the chain rollers for measuring.

Minimum gear diameter (w/chain):

Crankshaft

126.0 mm (4.961 in.)

Camshaft

65.4 mm (2.575 in.)

If the diameter is less than minimum, replace the chain and gears.

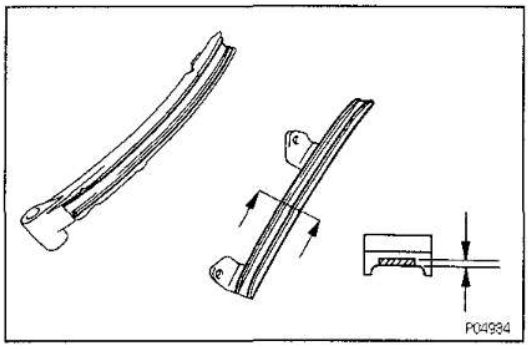

2. INSPECT CHAIN TENSIONER SLIPPER AND VIBRATION DAMPER

Measure the chain tensioner slipper and vibration damper wears.

Maximum wear:

1.0 mm (0.039 in.)

If the wear is greater than maximum, replace the slipper and/or damper.

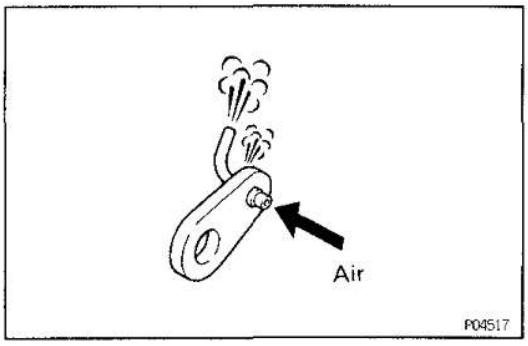

3. INSPECT OIL JET

Check the oil jet for damage or clogging.

If necessary, replace the oil jet.

EG0K0-03

CRANKSHAFT FRONT OIL SEAL REPLACEMENT

HINT: There are two methods (A and B) to replace the oil seal which are as follows:

EG

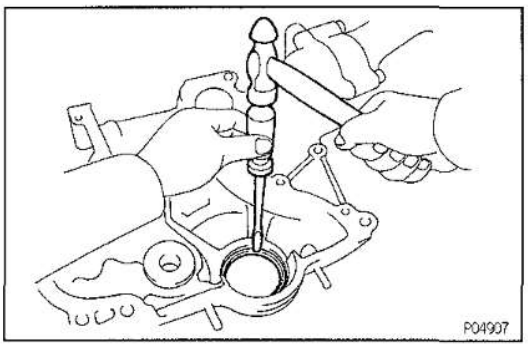

REPLACE CRANKSHAFT FRONT OIL SEAL

A. If timing chain cover is removed from cylinder block:

(a) Using a screwdriver and a hammer, tap out the oil seal.

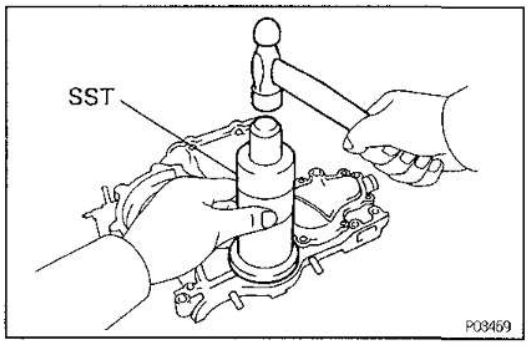

(b) Using SST and a hammer, tap in a new oil seal until its surface is flush with the timing chain cover edge.
SST 09316–60010 (09316–00010, 09316–00050)

(c) Apply MP grease to the oil seal lip.

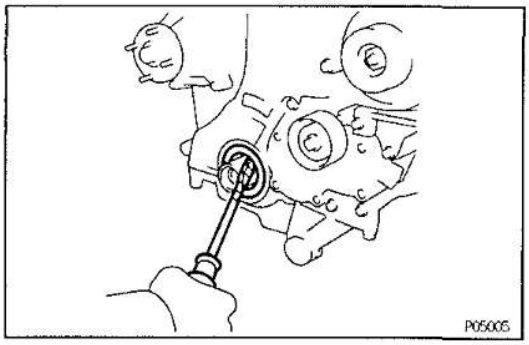

B. If timing chain cover is installed to the cylinder block:

(a) Using a screwdriver, pry out the oil seal.
NOTICE: Be careful not to damage the crankshaft. Tape the screwdriver tip.

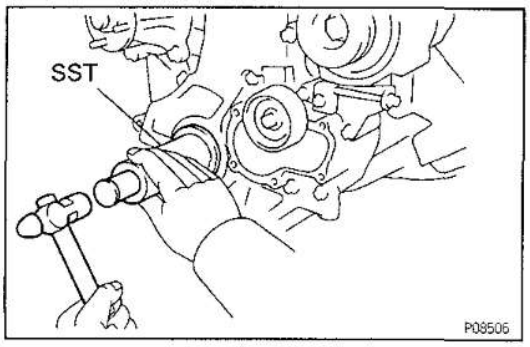

(b) Apply MP grease to a new oil seal lip.

(c) Using SST and a hammer, tap in the oil seal until its surface is flush with the timing chain cover edge.
SST 09316–60010 (09316–00010, 09316–00050)

EG27M-01

TIMING CHAIN INSTALLATION

(See page EG−120)

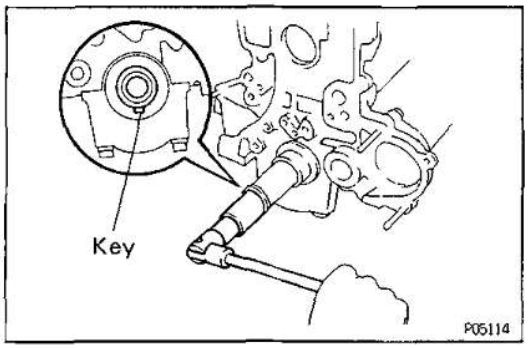

1. SET CRANKSHAFT

Turn the crankshaft until the set key on crankshaft facing downward.

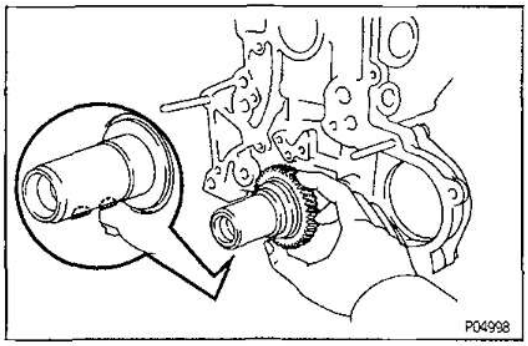

2. INSTALL PUMP DRIVE SHAFT GEAR

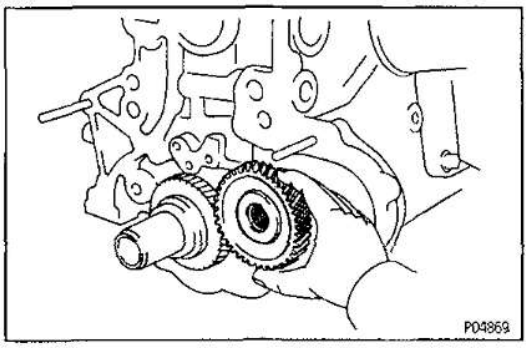

3. INSTALL OIL PUMP DRIVE SHAFT GEAR

(a) Apply light coat of engine oil on the shaft portion of the gear.

(b) Install the gear.

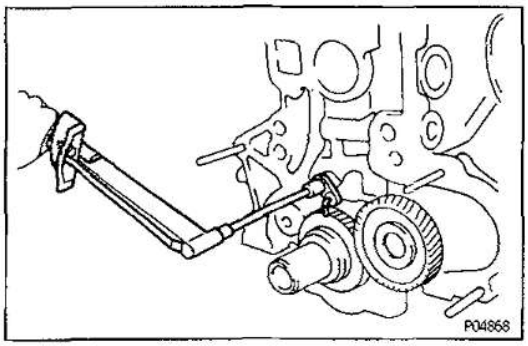

4. INSTALL OIL JET

Install the oil jet with the bolt.

Torque: 20 N·m (200 kgf·cm, 14 ft·lbf)

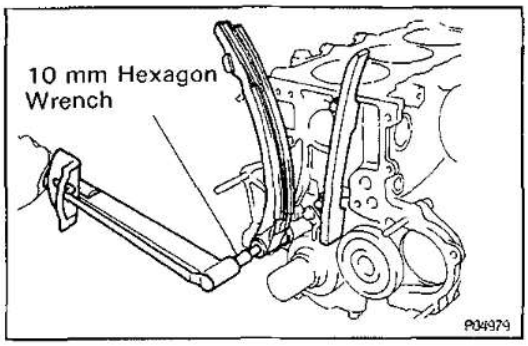

5. INSTALL CHAIN TENSIONER SLIPPER AND VIBRATION DAMPER

(a) Install the damper with the two bolts.

Torque: 20 N·m (200 kgf·cm, 14 ft·lbf)

(b) Using a 10 mm hexagon wrench, install the slipper with the bolt.

Torque: 69 N·m (700 kgf·cm, 51 ft·lbf)

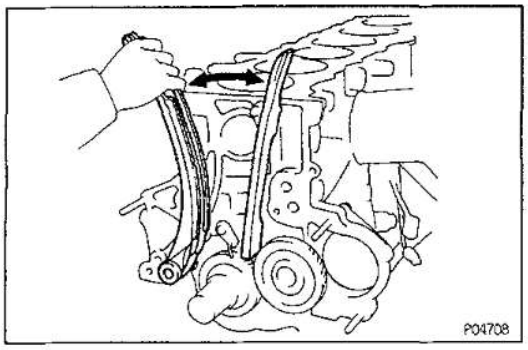

(c) Check that the slipper moves smoothly.

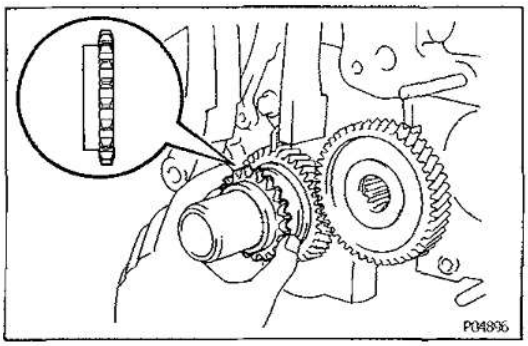

6. INSTALL CRANKSHAFT TIMING GEAR

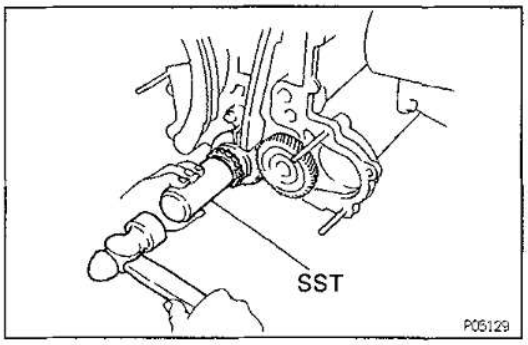

HINT: If necessary, install the gear with SST.
SST 09636−20010

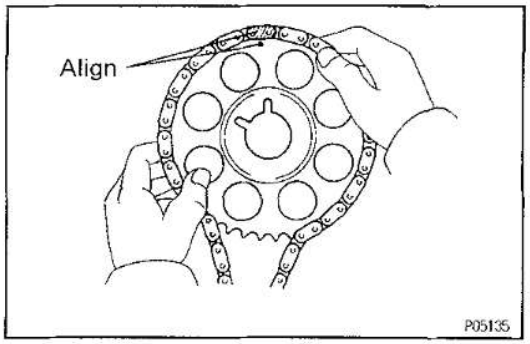

7. INSTALL TIMING CHAIN AND CAMSHAFT TIMING GEAR

(a) Install the timing chain on the camshaft timing gear with the bright link aligned with the timing mark on the camshaft timing gear.

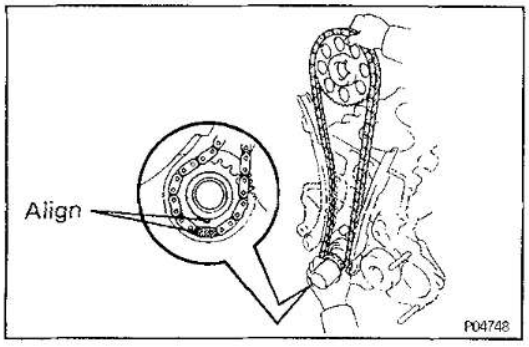

(b) Install the timing chain on the crankshaft timing gear with the other bright link aligned with the timing mark on the crankshaft timing gear.

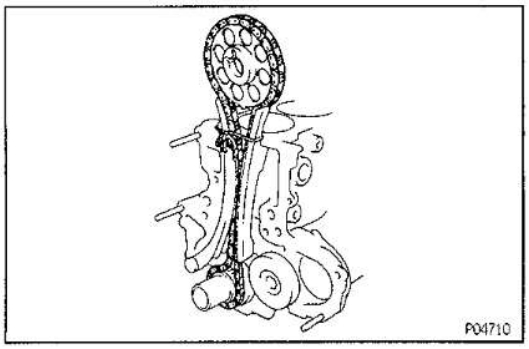

(c) Tie the timing chain with a cords as shown in the illustration and make sure it doesn't come loose.

EG

8. INSTALL TIMING CHAIN COVER

(a) Remove any old packing (FIPG) material and be careful not to drop any oil on the contact surfaces of the timing chain cover and cylinder block.

- Using a razor blade and gasket scraper, remove all the old packing (FIPG) material from the gasket surfaces and sealing grooves.
- Thoroughly clean all components to remove all the loose material.
- Using a non—residue solvent, clean both sealing surfaces.

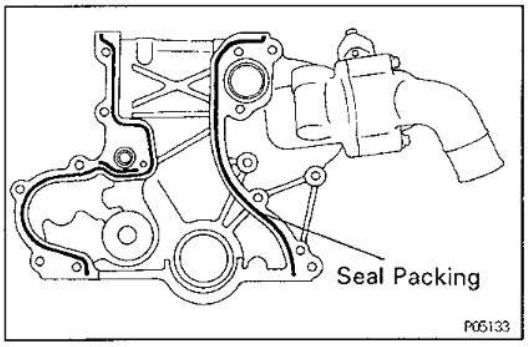

(b) Apply seal packing to the timing chain cover as shown in the illustration.

Seal packing:

Part No.08826—00080 or equivalent

- Install a nozzle that has been cut to a 2 — 3 mm (0.08 — 0.12 in.) opening.

HINT: Avoid applying an excessive amount to the surface.

- Parts must be assembled within 5 minutes of application. Otherwise the material must be removed and reapplied.
- Immediately remove nozzle from the tube and reinstall cap.

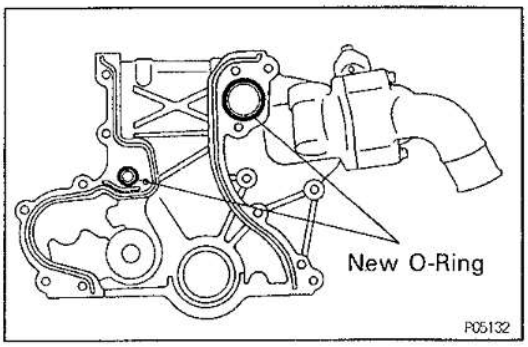

(c) Place two new O—ring in position on the timing chain cover.

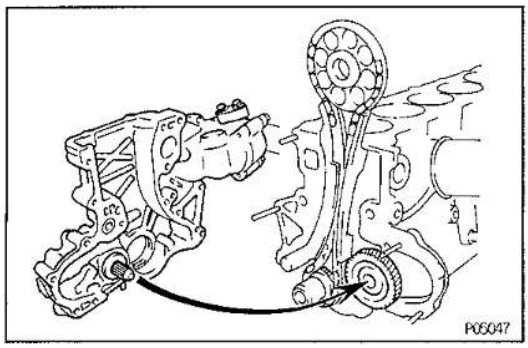

(d) Engage the gear of the oil pump drive rotor with the gear of the oil pump drive gear, and slide the oil pump.

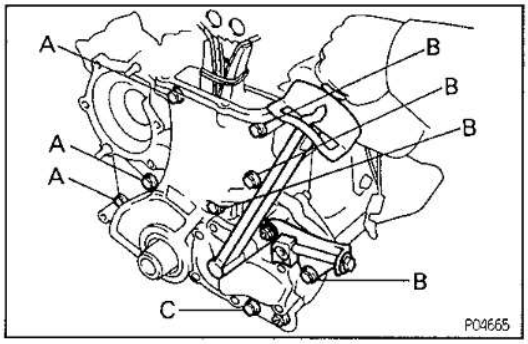

(e) Install the oil pump and drive belt adjusting bar with the nine bolts and two nuts.
Torque: 21 N·m (210 kgf·cm, 15 ft·lbf)
HINT: Each bolt length is indicated in the illustration.

A 30 mm (1.18 in.)
B 50 mm (1.97 in.)
C 60 mm (2.38 in.)

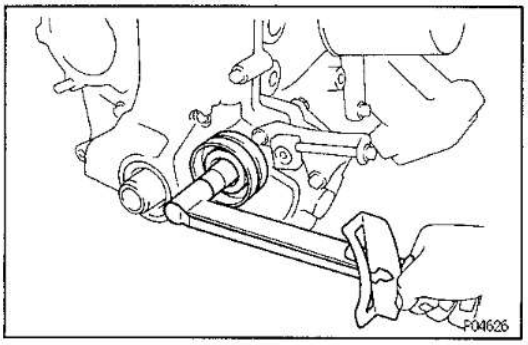

9. INSTALL DRIVE BELT IDLER PULLEY
Install the pulley with the bolt.
Torque: 43 N·m (440 kgf·cm, 32 ft·lbf)

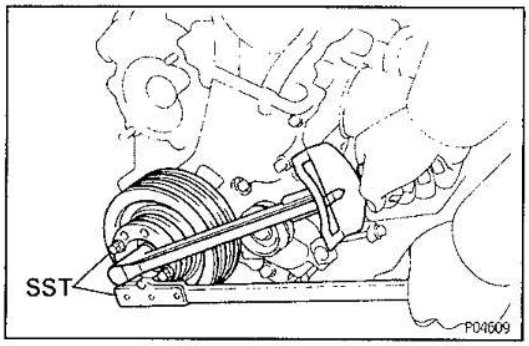

10. INSTALL CRANKSHAFT PULLEY
(a) Align the pulley set key with the key groove of the pulley, and slide on the pulley.
(b) Using SST, install and torque the pulley bolt.
SST 09213—58012, 09330—00021
Torque: 412 N·m (4,200 kgf·cm, 304 ft·lbf)

11. INSTALL NO.1 OIL PAN
(a) Remove any old packing (FIPG) material and be careful not to drop any oil on the contact surfaces of the timing chain cover and cylinder block.
- Using a razor blade and gasket scraper, remove all the old packing (FIPG) material from the gasket surfaces and sealing grooves.
- Thoroughly clean all components to remove all the loose material.

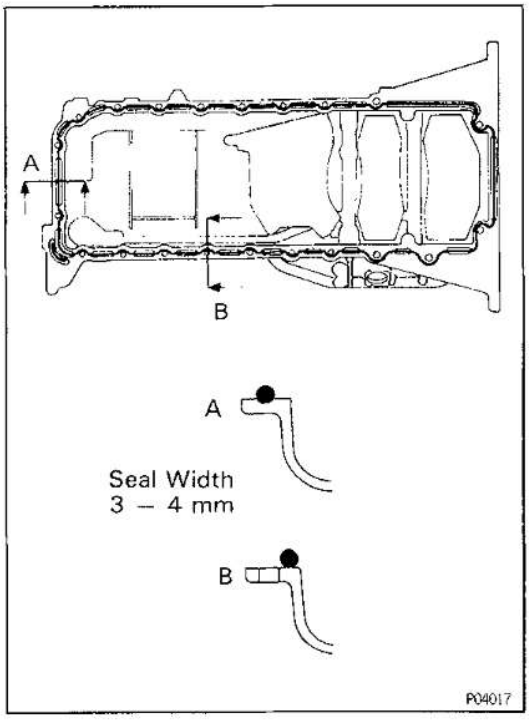

- Using a non—residue solvent, clean both sealing surfaces.

(b) Apply seal packing to the No.1 oil pan as shown in the illustration.

Seal packing:

Part No.08826—00080 or equivalent

- Install a nozzle that has been cut to a 3 – 4 mm (0.12 – 0.16 in.) opening.

HINT: Avoid applying an excessive amount to the surface.

- Parts must be assembled within 5 minutes of application. Otherwise the material must be removed and reapplied.
- Immediately remove nozzle from the tube and reinstall cap.

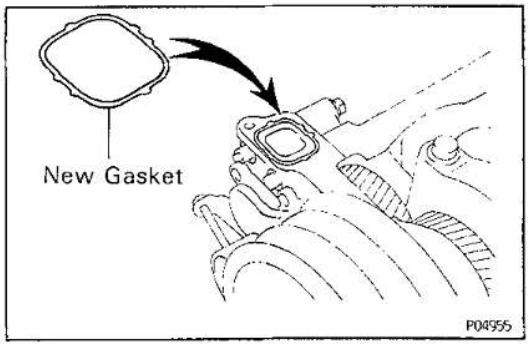

(c) Install a new gasket in position.

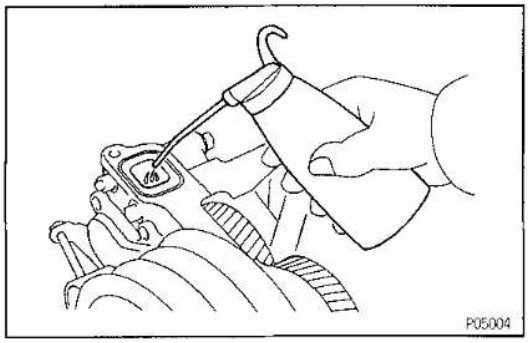

(d) Pour in approximately 15 cm^3 (0.9 cu in.) of engine oil in position.

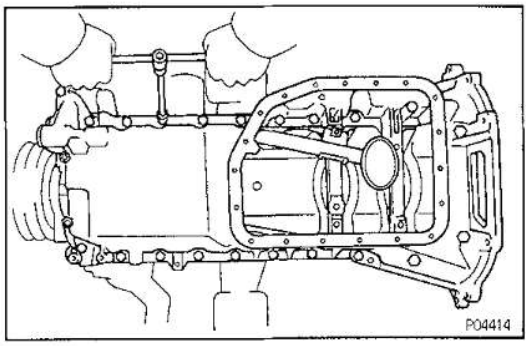

(e) Install the No.1 oil pan with the 21 bolts and two nuts.

14mm head
Torque: 43 N·m (440 kgf·cm, 32 ft·lbf)
12mm head
Torque: 20 N·m (200 kgf·cm, 14 ft·lbf)

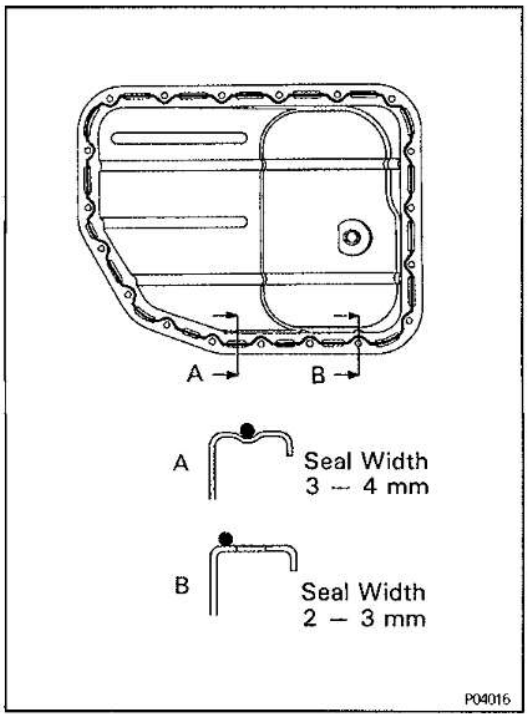

12. INSTALL NO.2 OIL PAN

(a) Remove any old packing (FIPG) material and be careful not to drop any oil on the contact surface of the No.1 oil pan.

- Using a razor blade and gasket scraper, remove all the old packing (FIPG) material from the gasket surfaces and sealing grooves.
- Thoroughly clean all components to remove all the loose material.
- Using a non—residue solvent, clean both sealing surfaces.

(b) Apply seal packing to the No.2 oil pan as shown in the illustration.

NOTICE: Do not use a solvent which will affect the painted surfaces.

Seal packing:

Part No.08826—00080 or equivalent

- Install a nozzle that has been cut to a 2 — 3 mm (0.08 — 0.12 in.) opening or 3 — 4 mm (0.012 — 0.016 in.) opening.

HINT: Avoid applying an excessive amount to the surface.

- Parts must be assembled within 5 minutes of application. Otherwise the material must be removed and reapplied.
- Immediately remove nozzle from the tube and reinstall cap.

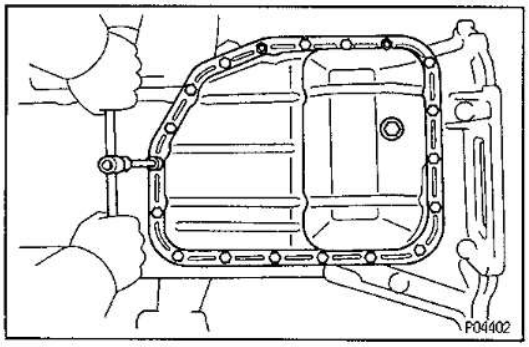

(c) Install the No.2 oil pan with the 17 bolts and two nuts.

Bolt

Torque: 7.8 N·m (80 kgf·cm, 69 in.·lbf)

Nut

Torque: 8.8 N·m (90 kgf·cm, 78 in.·lbf)

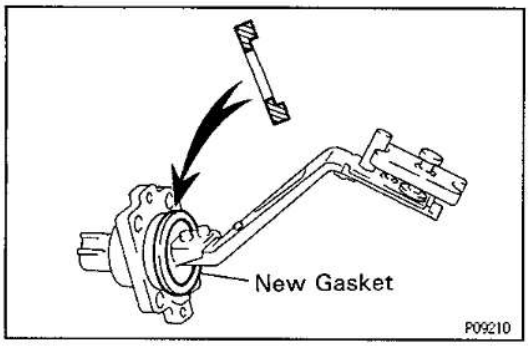

13. (Europe)

INSTALL OIL LEVEL SENSOR

(a) Install a new gasket to the level sensor.

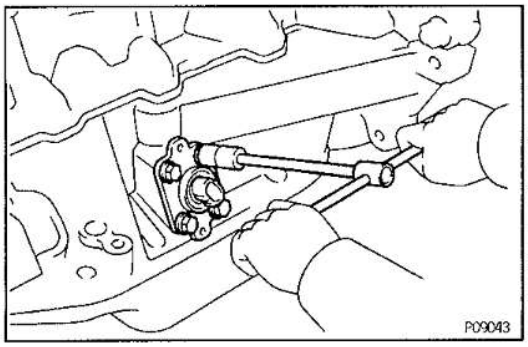

(b) Install the level sensor with the four bolts.
Torque: 5.4 N·m (55 kgf·cm, 48 in.·lbf)

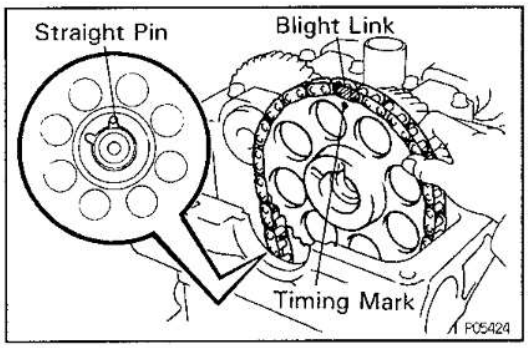

14. INSTALL CYLINDER HEAD (See page EG—70 or 106)

NOTICE: However, for the instllation of the camshaft timing gear and timing chain, follow the blow procedure. Align the blight link of the timing chain and camshaft timing gear mark, and install them to the camshaft.

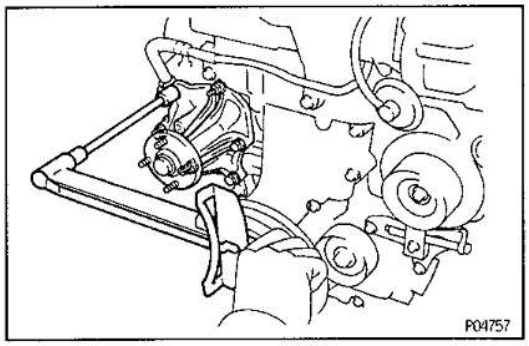

15. INSTALL WATER PUMP

Install a new gasket and water pump with the four bolts and two nuts.
Torque: 21N·m (210 kgf·cm, 14 ft·lbf)

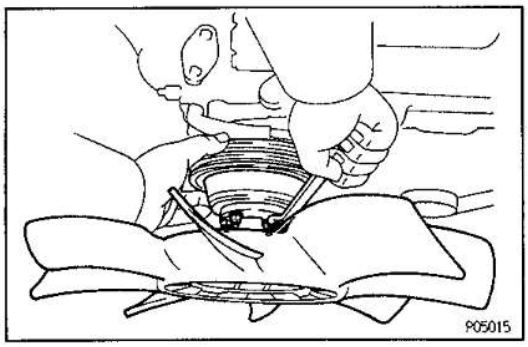

16. INSTALL WATER PUMP PULLEY, FAN WITH FLUID COUPLING AND DRIVE BELTS

(a) Install the water pump pulley and fan with fluid coupling with the four nuts.
(b) Place the drive belts on to each pulley.
(c) Stretch the belts tight and tighten the four nuts.
(d) Adjust the drive belts.

CYLINDER BLOCK

COMPONENTS FOR DISAEEMBLY AND ASSEMBLY

EG1K5-02

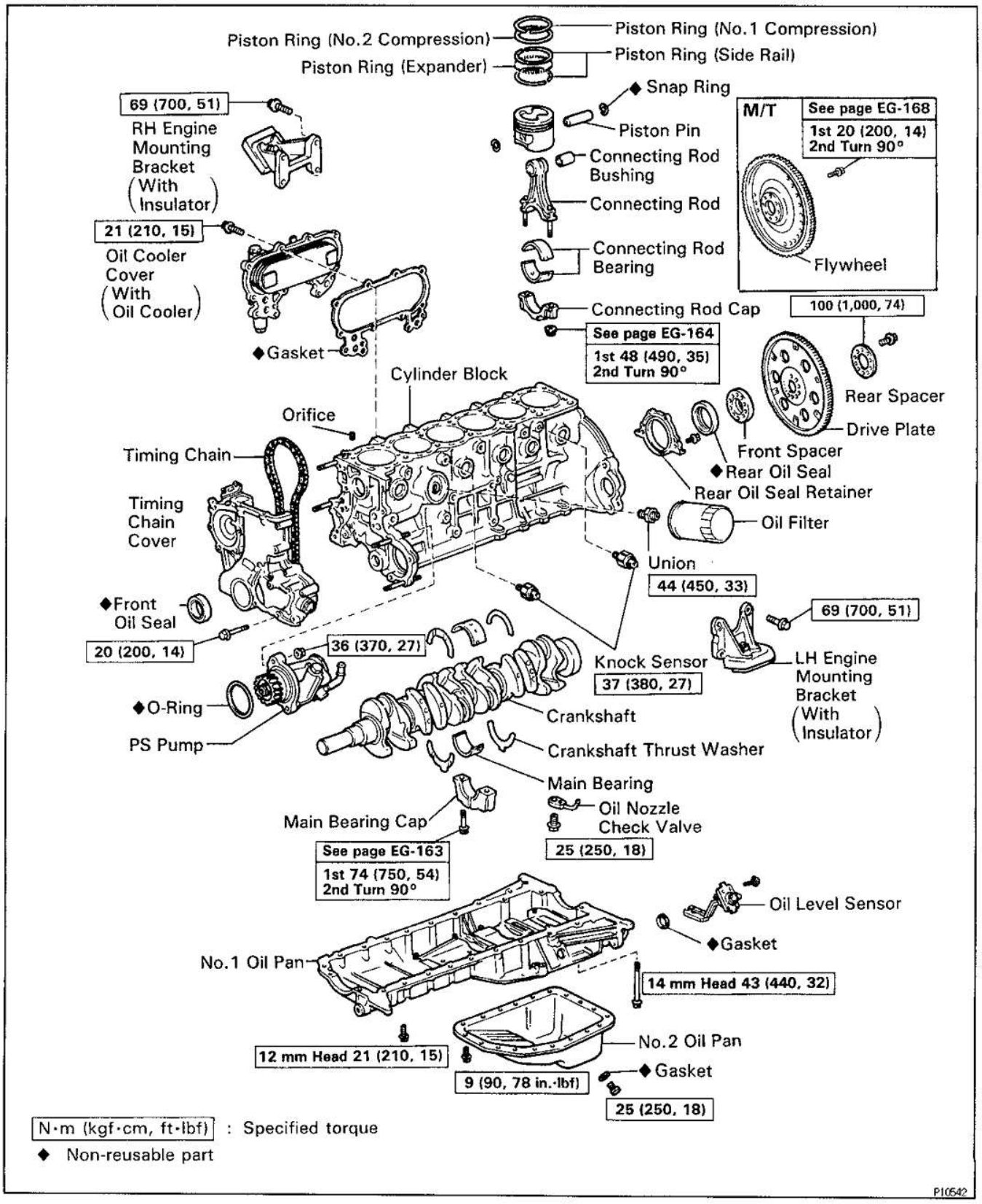

EG0VL-03

PREPARATION FOR DISASSEMBLY

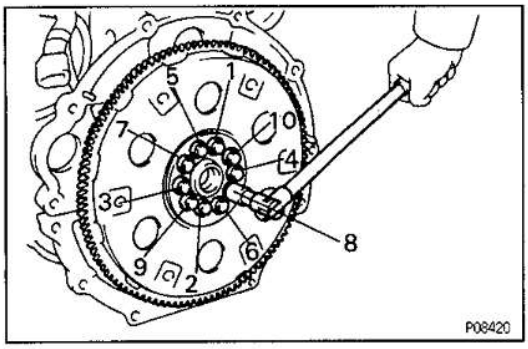

1. **REMOVE DRIVE PLATE**
   Uniformly loosen and remove the drive plate bolts in several passes, in the sequence shown.

2. **INSTALL ENGINE TO ENGINE STAND FOR DISASSEMBLY**
3. **REMOVE CYLINDER HEAD**
   (See page EG—38 or 89)
4. **REMOVE TIMING CHAIN AND GEARS**
   (See page EG—120)

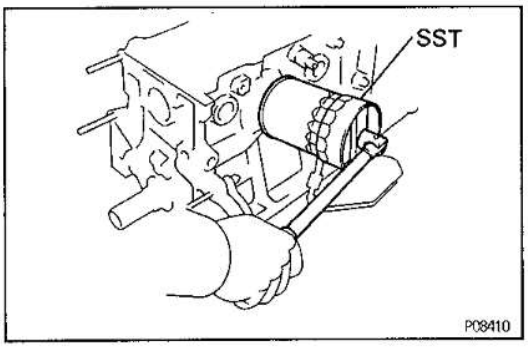

5. **REMOVE OIL FILTER**
   Using SST, remove the oil filter.
   SST 09228—44011

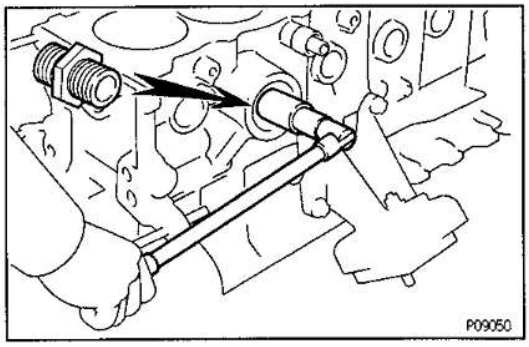

6. **REMOVE OIL FILTER UNION**

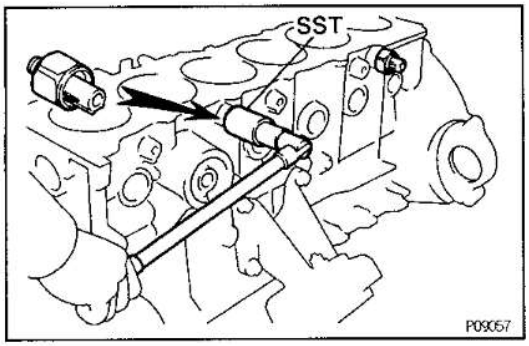

7. **(1FZ—FE)**
   REMOVE KNOCK SENSORS
   Using SST, remove the two knock sensors.
   SST 09816—30010

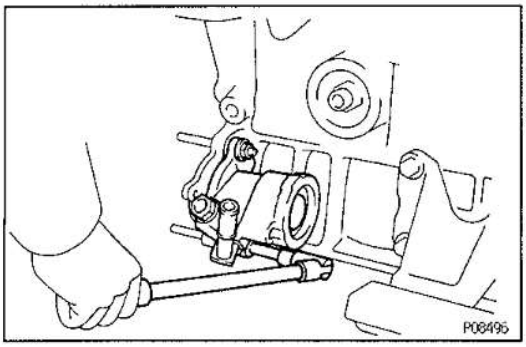

8. REMOVE PS PUMP

(a) Remove the two nuts and pump.

(b) Remove the O—ring from the pump.

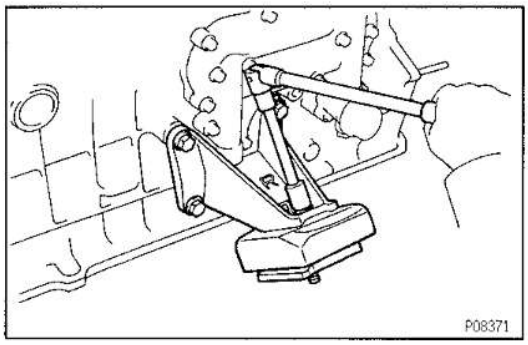

9. REMOVE RH ENGINE MOUNTING BRACKET

(a) Remove the nut and insulator.

(b) Remove the four bolts and bracket.

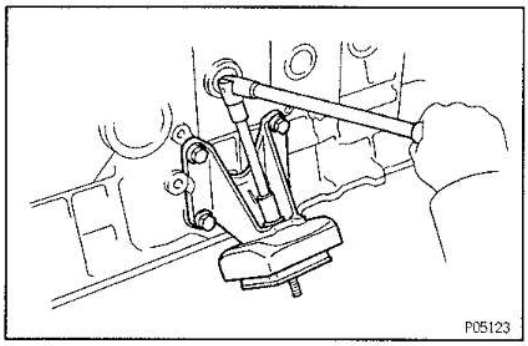

10. REMOVE LH ENGINE MOUNTING BRACKET

(a) Remove the nut and insulator.

(b) Remove the four bolts and bracket.

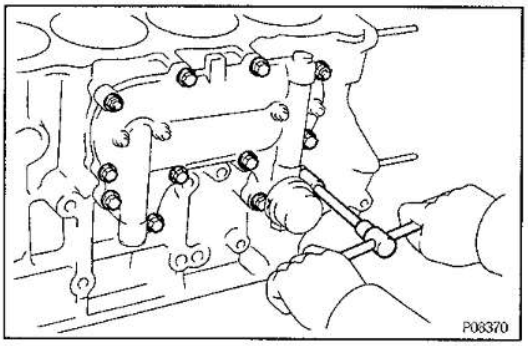

11. REMOVE OIL COOLER COVER AND OIL COOLER

Remove the ten bolts, two nuts, oil cooler cover with the oil cooler and gasket.

EG

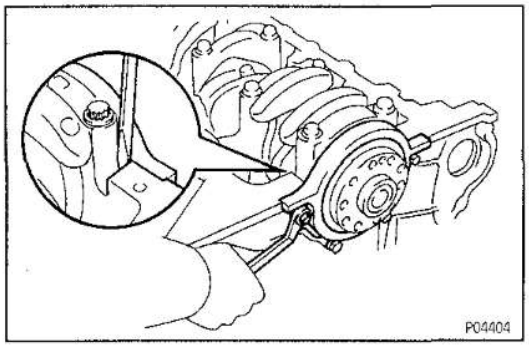

EG0VM-02

CYLINDER BLOCK DISASSEMBLY

(See Components for Disassembly and Assembly)

1. REMOVE REAR OIL SEAL RETAINER

Remove the four bolts and retainer.

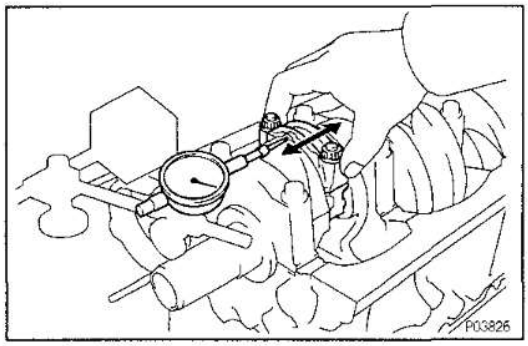

2. CHECK CONNECTING ROD THRUST CLEARANCE

Using a dial indicator, measure the thrust clearance while moving the connecting rod back and forth.

Standard thrust clearance:

0.160 — 0.262 mm (0.0063 — 0.0103 in.)

Maximum thrust clearance:

0.362 mm (0.0143 in.)

If the thrust clearance is greater than maximum, replace the connecting rod assembly. If necessary, replace the crankshaft.

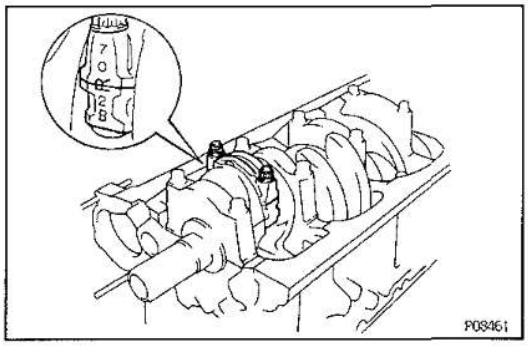

3. REMOVE CONNECTING ROD CAPS AND CHECK OIL CLEARANCE

(a) Check the matchmarks on the connecting rod and cap to ensure correct reassembly.

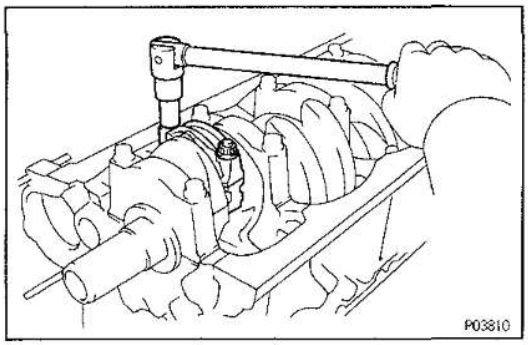

(b) Remove the connecting rod cap nuts.

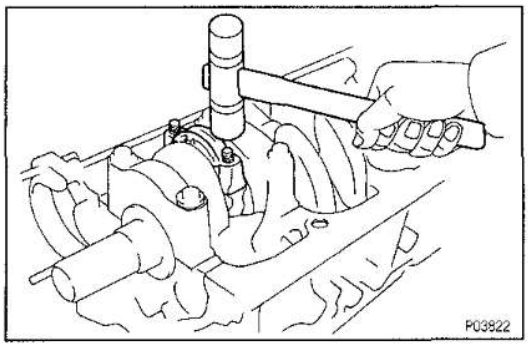

(c) Using a plastic—faced hammer, lightly tap the connecting rod bolts and lift off the connecting rod cap.
HINT: Keep the lower bearing inserted with the connecting rod cap.

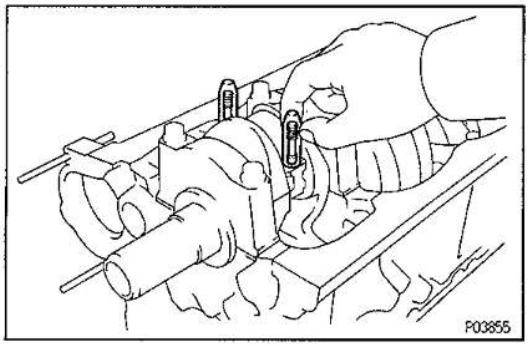

(d) Cover the connecting rod bolts with a short piece of hose to protect the crankshaft from damage.

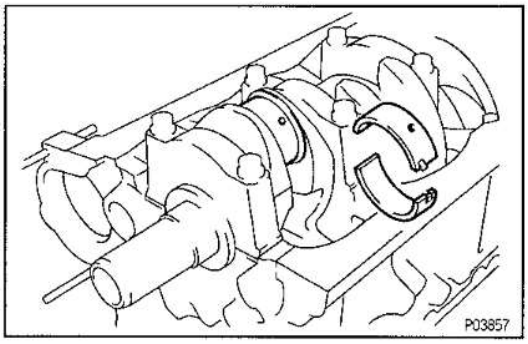

(e) Clean the crank pin and bearing.

(f) Check the crank pin and bearing for pitting and scratches.
If the crank pin or bearing is damaged, replace the bearings. If necessary, grind or replace the crankshaft.

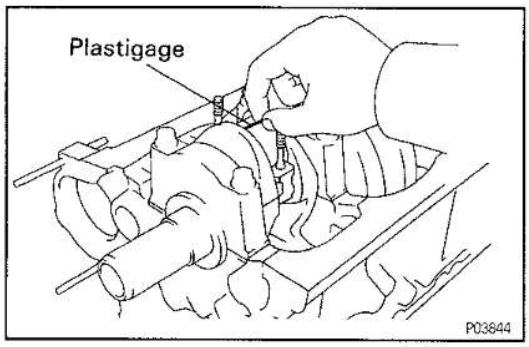

(g) Lay a strip of Plastigage across the crank pin.

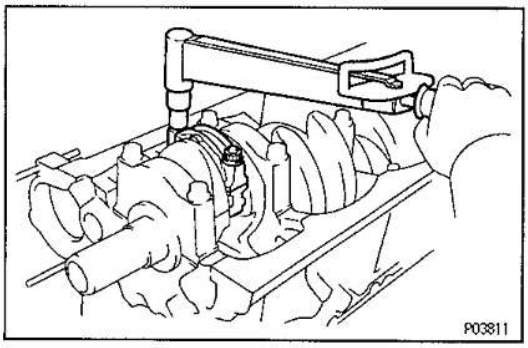

(h) Install the connecting rod cap with the two nuts.
(See step 8 on page EG—164)
1st
Torque: 48 N·m (490 kgf·cm, 35 ft·lbf)
2nd Turn 90°
NOTICE: Do not turn the crankshaft.

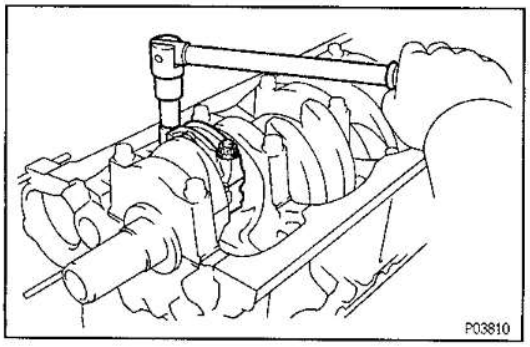

(i) Remove the two nuts and connecting rod cap.
(See procedure (b) and (c) above)

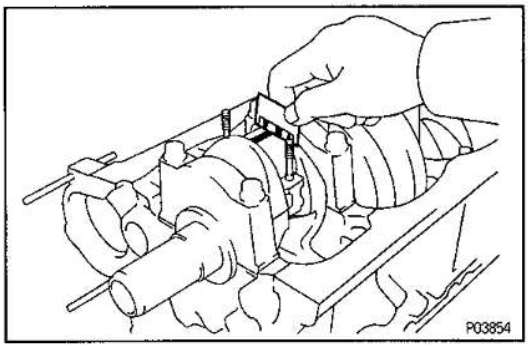

(j) Measure the Plastigage at its widest point.

Standard oil clearance:

STD

0.032 — 0.050 mm (0.0013 — 0.0020 in.)

U/S 0.25

0.033 — 0.073 mm (0.0013 — 0.0029 in.)

Maximum oil clearance:

0.10 mm (0.0039 in.)

If the oil clearance is greater than maximum, replace the bearings. If necessary, grind or replace the crankshaft.

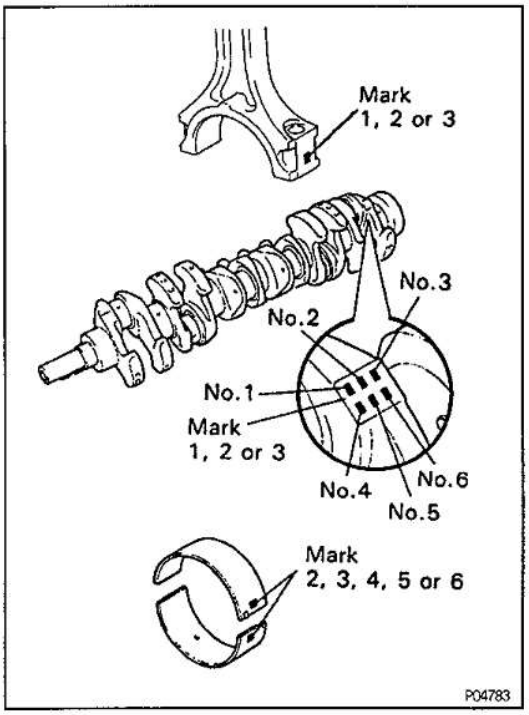

HINT: If using a standard bearing, replace with one having the same number. If the number of the bearing cannot be determined, select the correct bearing by adding together the numbers imprinted on the connecting rod and crankshaft, then selecting the bearing with the same number as the total. There are five sizes of standard bearings, marked "2", "3", "4", "5" and "6" accordingly.

	Number marked								
Connecting rod	1			2			3		
Crankshaft	1	2	3	1	2	3	1	2	3
Use bearing	2	3	4	3	4	5	4	5	6

EXAMPLE: Connecting rod "3" + Crankshaft "1"
= Total number 4 (Use bearing "4")

V04532

(Reference)

Connecting rod big end inside diameter:

Mark "1"

60.526 — 60.532 mm (2.3829 — 2.3831 in.)

Mark "2"

60.532 — 60.538 mm (2.3831 — 2.3834 in.)

Mark "3"

60.538 — 60.544 mm (2.3834 — 2.3836 in.)

Crankshaft crank pin diameter:

Mark "1"

56.994 – 57.000 mm (2.2439 – 2.2441 in.)

Mark "2"

56.988 – 56.994 mm (2.2436 – 2.2439 in.)

Mark "3"

56.982 – 56.988 mm (2.2434 – 2.2436 in.)

Standard sized bearing center wall thickness:

Mark "2"

2.489 – 2.492 mm (0.0980 – 0.0981 in.)

Mark "3"

2.492 – 2.495 mm (0.0981 – 0.0982 in.)

Mark "4"

2.495 – 2.498 mm (0.0982 – 0.0983 in.)

Mark "5"

2.498 – 2.501 mm (0.0983 – 0.0985 in.)

Mark "6"

2.501 – 2.504 mm (0.0985 – 0.0986 in.)

(k) Completely remove the Plastigage.

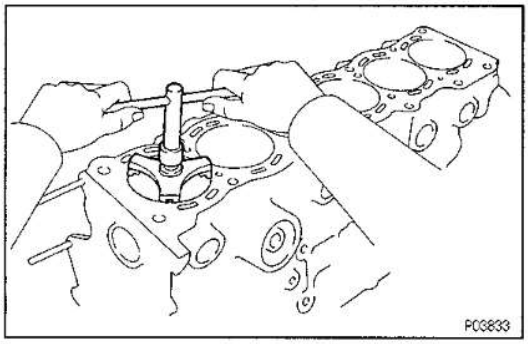

4. REMOVE PISTON AND CONNECTING ROD ASSEMBLIES

(a) Using a ridge reamer, remove the all carbon from the top of the cylinder.

(b) Push the piston, connecting rod assembly and upper bearing through the top of the cylinder block.

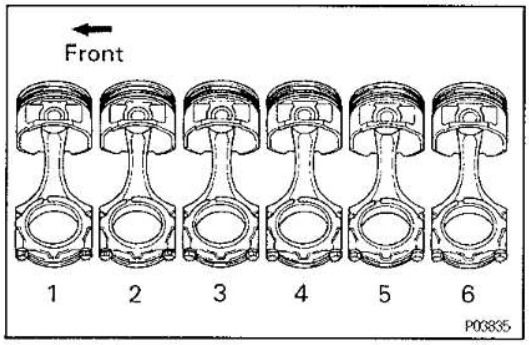

HINT:

- Keep the bearings, connecting rod and cap together.
- Arrange the piston and connecting rod assemblies in correct order.

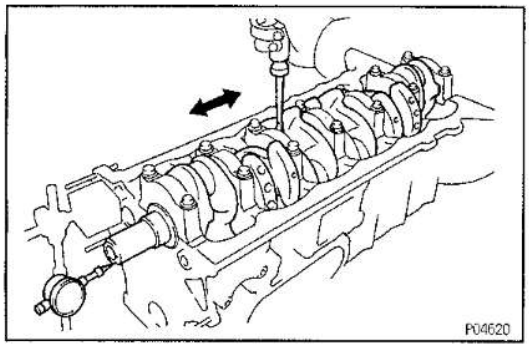

5. CHECK CRANKSHAFT THRUST CLEARANCE

Using a dial indicator, measure the thrust clearance while prying the crankshaft back and forth with a screwdriver.

Standard thrust clearance:

0.020 – 0.220 mm (0.0008 – 0.0087 in.)

Maximum thrust clearance:

0.30 mm (0.0118 in.)

If the thrust clearance is greater than maximum, replace the thrust washers as a set.

Thrust washer thickness:

STD

2.440 — 2.490 mm (0.0961 — 0.0980 in.)

O/S 0.125

2.503 — 2.553 mm (0.0985 — 0.1005 in.)

O/S 0.250

2.565 — 2.615 mm (0.1010 — 0.1030 in.)

EG

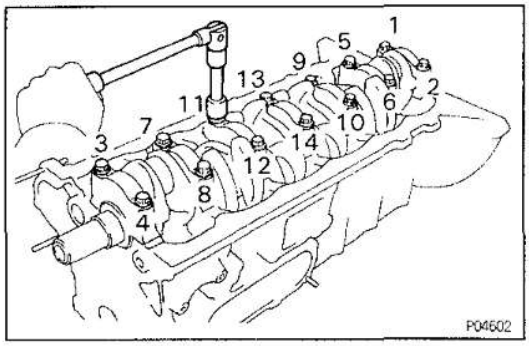

6. REMOVE MAIN BEARING CAPS AND CHECK OIL CLEARANCE

(a) Uniformly loosen and remove the main bearing cap bolts in several passes, in the sequence shown.

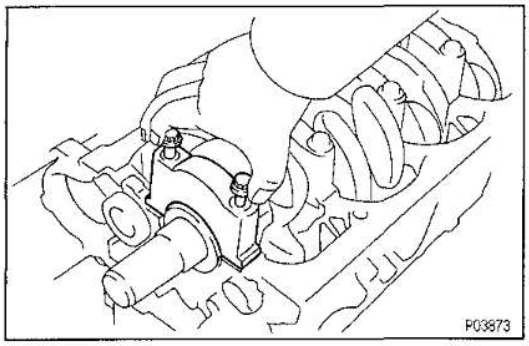

(b) Using the removed main bearing cap bolts, pry the main bearing cap back and forth, and remove the main bearing caps, lower bearings and lower thrust washers (No.4 main bearing cap only).

HINT:

- Keep the lower bearing and main bearing cap together.
- Arrange the main bearing caps and lower thrust washers in correct order.

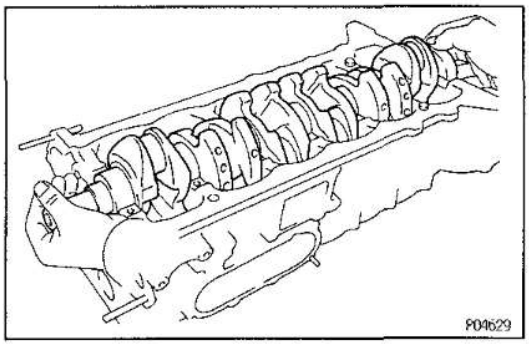

(c) Lift out the crankshaft.

HINT: Keep the upper bearing and upper thrust washers together with the cylinder block.

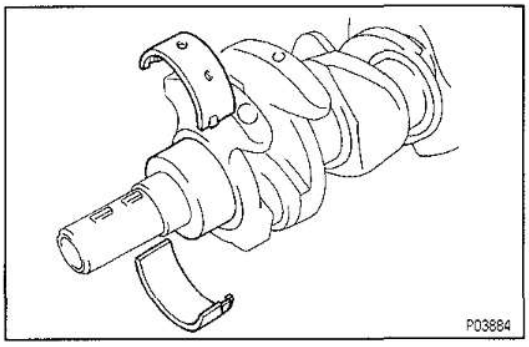

(d) Clean each main journal and bearing.

(e) Check each main journal and bearing for pitting and scratches.

If the journal or bearing is damaged, replace the bearings. If necessary, grind or replace the crankshaft.

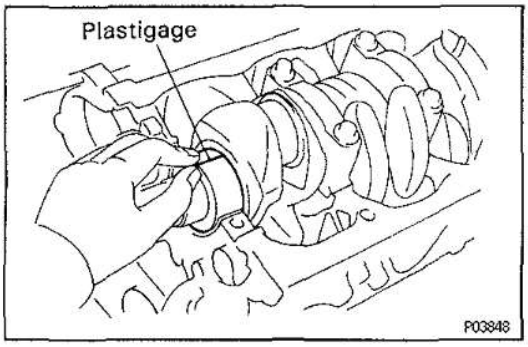

(f) Place the crankshaft on the cylinder block.

(g) Lay a strip of Plastigage across each journal.

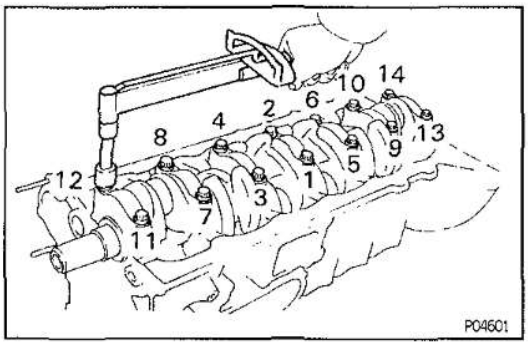

(h) Install the main bearing caps.
(See step 6 on page EG—162)
1st
Torque: 74 N·m (750 kgf·cm, 54 ft·lbf)
2nd Turn 90°
NOTICE: Do not turn the crankshaft.

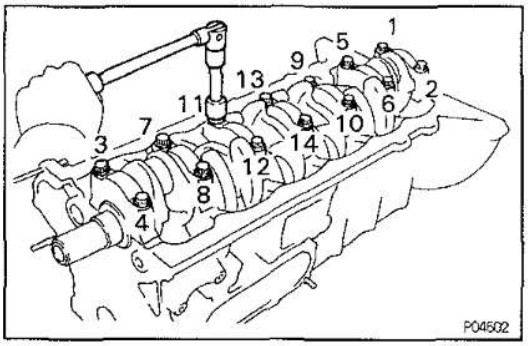

(i) Remove the main bearing caps.
(See procedure (a) and (b) above)

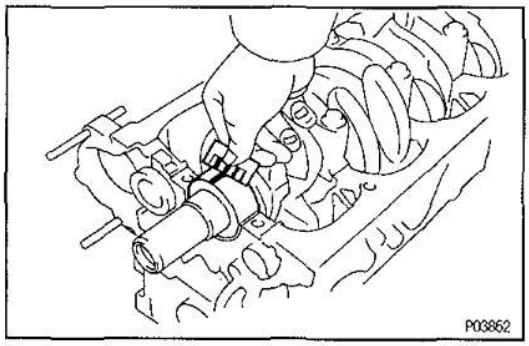

(j) Measure the Plastigage at its widest point.
Standard clearance:
STD
0.042 — 0.060 mm (0.0017 — 0.0024 in.)
U/S 0.25
0.041 — 0.081 mm (0.0016 — 0.0032 in.)
Maximum clearance:
0.10 mm (0.0039 in.)
If the oil clearance is greater than maximum, replace the bearings. If necessary, grind or replace the crankshaft.

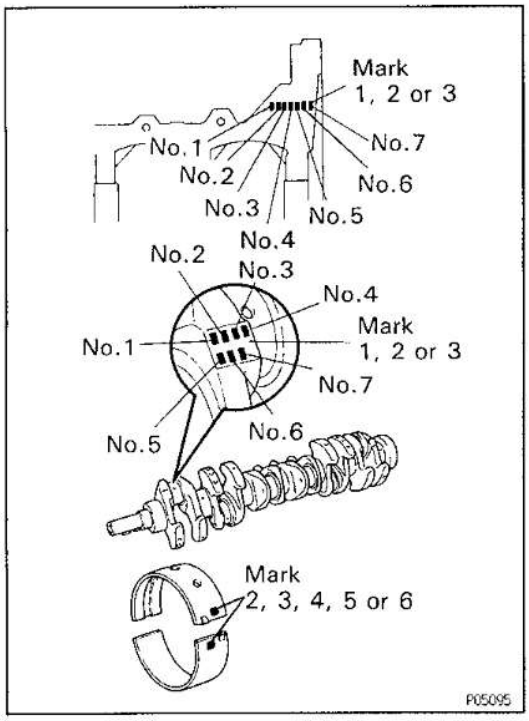

HINT: If using a standard bearing, replace with one having the same number. If the number of the bearing cannot be determined, select the correct bearing by adding together the numbers imprinted on the cylinder block and crankshaft, then selecting the bearing with the same number as the total. There are five sizes of standard bearings, marked "2", "3", "4", "5" and "6" accordingly.

	Number marked								
Cylinder block	1			2			3		
Crankshaft	1	2	3	1	2	3	1	2	3
Use bearing	2	3	4	3	4	5	4	5	6

EXAMPLE: Cylinder block ''2'' + Crankshaft ''1''
= Total number 3 (Use bearing ''3'')

V00739

(Reference)

Cylinder block main journal bore diameter:

Mark "1"

74.026 — 74.032 mm (2.9144 — 2.9146 in.)

Mark "2"

74.032 — 74.038 mm (2.9146 — 2.9149 in.)

Mark "3"

74.038 — 74.044 mm (2.9149 — 2.9151 in.)

Crankshaft journal diameter:

Mark "1"

68.994 — 69.000 mm (2.7163 — 2.7165 in.)

Mark "2"

68.988 — 68.994 mm (2.7161 — 2.7163 in.)

Mark "3"

68.982 — 68.988 mm (2.7158 — 2.7161 in.)

Standard sized bearing center wall thickness:

Mark "2"

2.489 — 2.492 mm (0.0980 — 0.0981 in.)

Mark "3"

2.492 — 2.495 mm (0.0981 — 0.0982 in.)

Mark "4"

2.495 — 2.498 mm (0.0982 — 0.0983 in.)

Mark "5"

2.498 — 2.501 mm (0.0983 — 0.0985 in.)

Mark "6"

2.501 — 2.504 mm (0.0985 — 0.0986 in.)

(k) Completely remove the Plastigage.

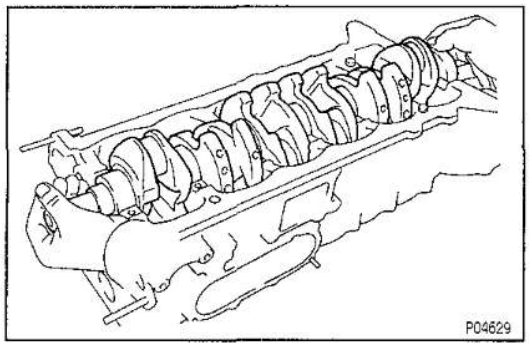

7. REMOVE CRANKSHAFT

(a) Lift out the crankshaft.

(b) Remove the upper main bearings and upper thrust washers from the cylinder block.

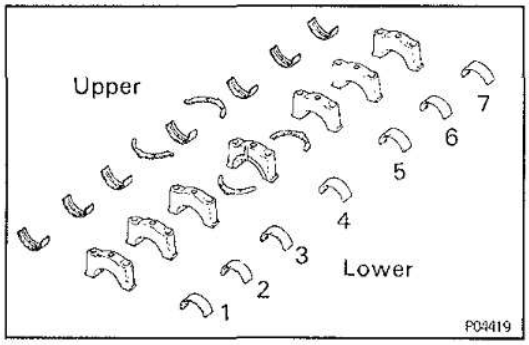

HINT: Arrange the main bearings and thrust washers in correct order.

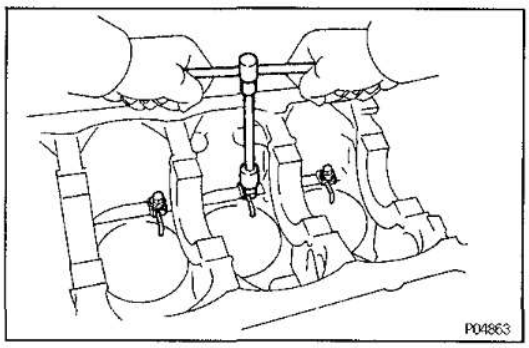

8. REMOVE CHECK VALVES AND OIL NOZZLES

Remove the six check valves and oil nozzles.

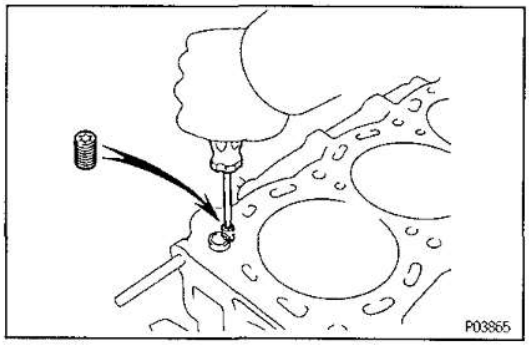

9. REMOVE CYLINDER BLOCK ORIFICE

EG0VV-03

CYLINDER BLOCK INSPECTION

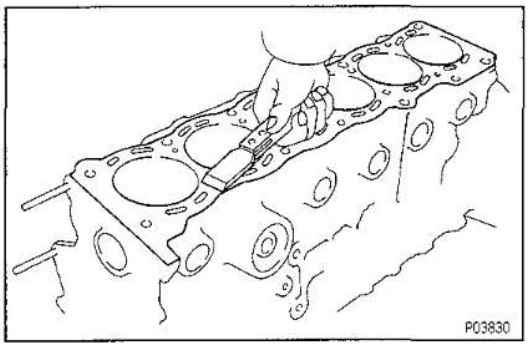

1. CLEAN CYLINDER BLOCK

A. Remove gasket material

Using a gasket scraper, remove all the gasket material from the top surface of the cylinder block.

B. Clean cylinder block

Using a soft brush and solvent, thoroughly clean the cylinder block.

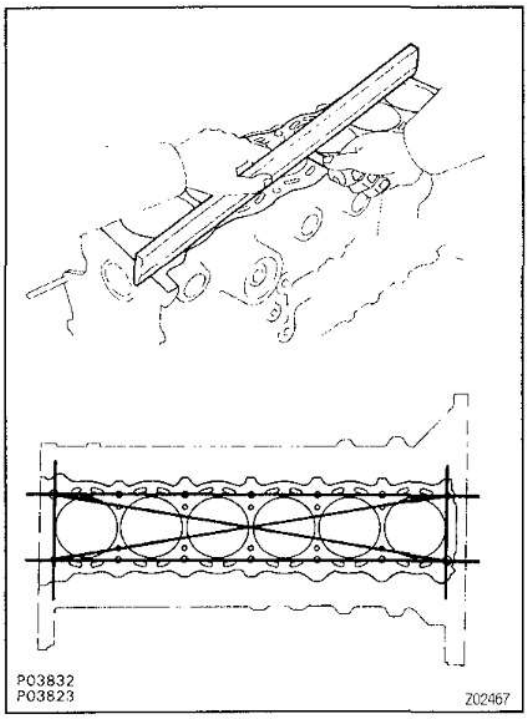

2. INSPECT TOP SURFACE OF CYLINDER BLOCK FOR FLATNESS

Using a precision straight edge and thickness gauge, measure the surfaces contacting the cylinder head gasket for warpage.

Maximum warpage:

0.05 mm (0.0020 in.)

If warpage is greater than maximum, replace the cylinder block.

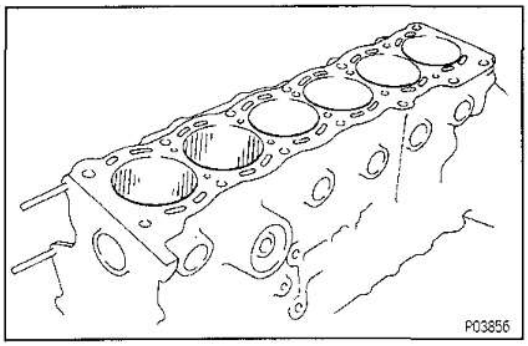

3. INSPECT CYLINDER FOR VERTICAL SCRATCHES

Visually check the cylinder for vertical scratches.

If deep scratches are present, rebore all the six cylinders. If necessary, replace the cylinder block.

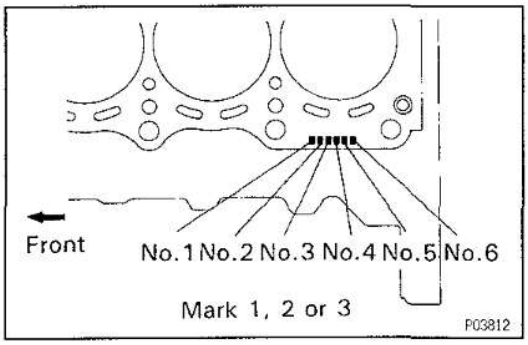

4. INSPECT CYLINDER BORE DIAMETER

HINT: There are three sizes of the standard cylinder bore diameter, marked "1", "2" and "3" accordingly. The mark is stamped on the top of the cylinder block.

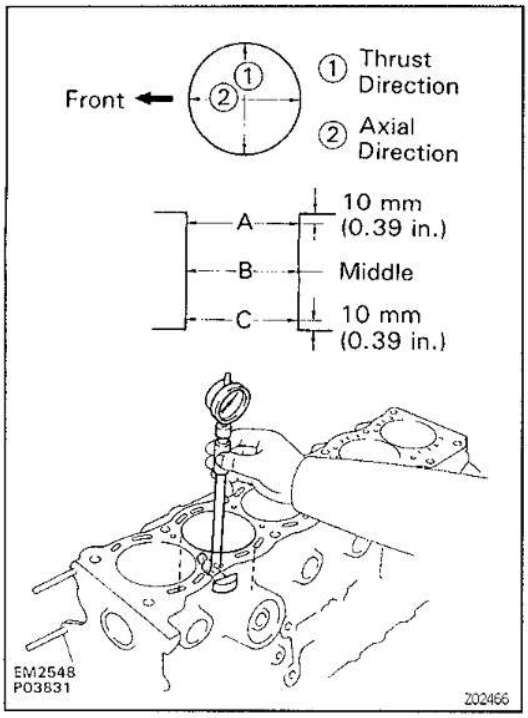

Using a cylinder gauge, measure the cylinder bore diameter at positions A, B and C in the thrust and axial directions.

Standard diameter:

STD

Mark "1"

100.000 — 100.010 mm (3.9370 — 3.9374 in.)

Mark "2"

100.010 — 100.020 mm (3.9374 — 3.9378 in.)

Mark "3"

100.020 — 100.030 mm (3.9378 — 3.9382 in.)

Maximum diameter:

STD

100.23 mm (3.9461 in.)

O/S 0.50

100.73 mm (3.9658 in.)

O/S 1.00

101.23 mm (3.9854 in.)

If the diameter is greater than maximum, rebore all the six cylinders. If necessary, replace the cylinder block.

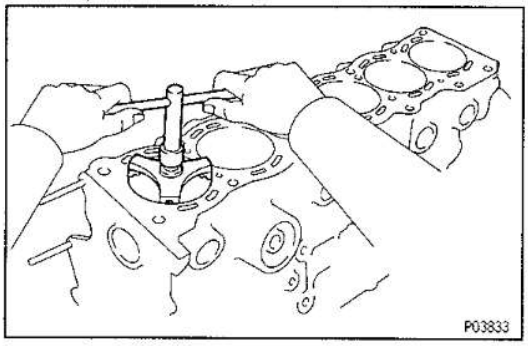

5. REMOVE CYLINDER RIDGE

If the wear is less than 0.2 mm (0.008 in.), using a ridge reamer, grind the top of the cylinder.

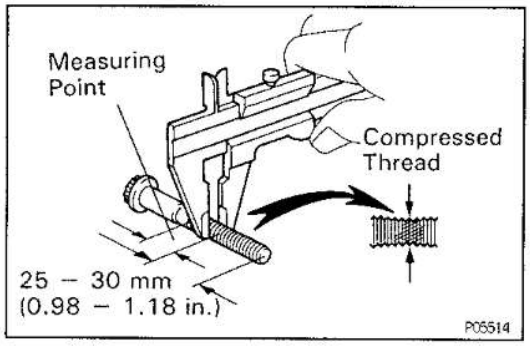

6. INSPECT MAIN BEARING CAP BOLTS

Using vernier calipers, measure the thread outside diameter of the bolt.

Standard outside diameter:

10.85 — 11.00 mm (0.4271 — 0.4331 in.)

Minimum outside diameter:

10.6 mm (0.417 in.)

If the diameter is less than minimum, replace the bolt.

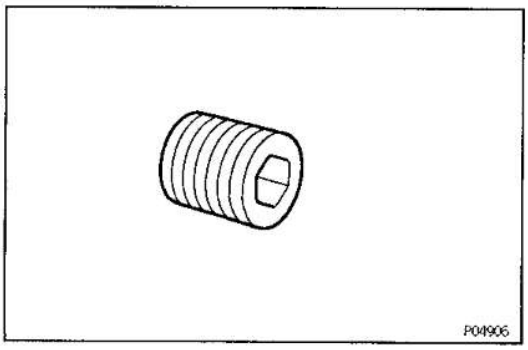

7. INSPECT CYLINDER BLOCK OLIFICE

Check the olifice for clogging.

If necessary, replace the olifice.

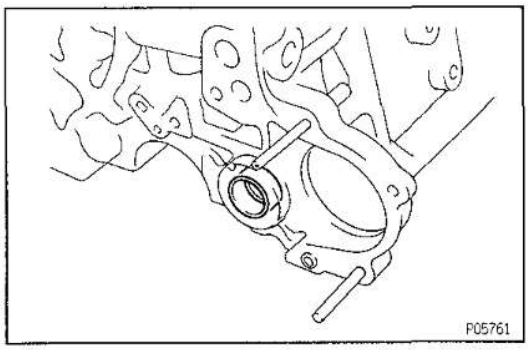

8. INSPECT BEARING OF OIL PUMP DRIVE SHAFT GEAR

Check the bearing for pitting and scratches.

If the bearing is damaged, replace the bearing.

EG

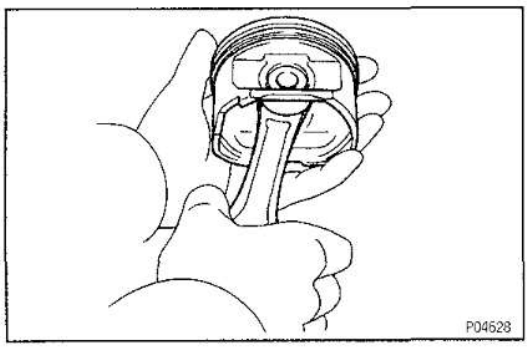

PISTON AND CONNECTING ROD ASSY DISASSEMBLY

EG08V-05

1. CHECK FIT BETWEEN PISTON AND PISTON PIN

Try to move the piston back and forth on the piston pin.

If any movement is felt, replace the piston and pin as a set.

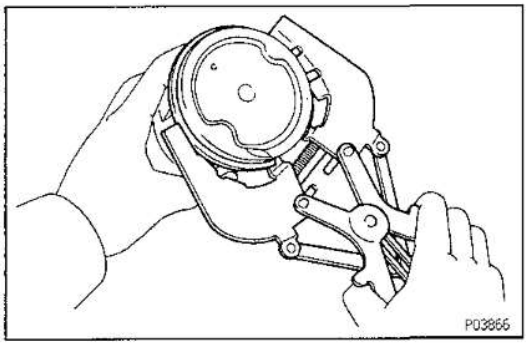

2. REMOVE PISTON RINGS

(a) Using a piston ring expander, remove the two compression rings.

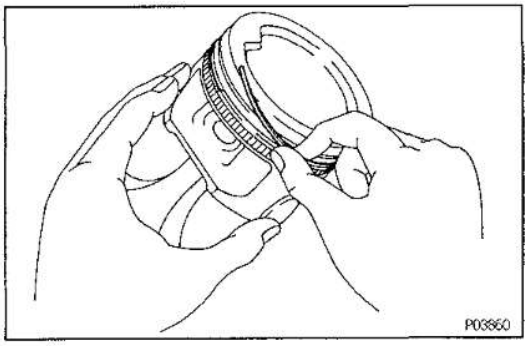

(b) Remove the two side rails and oil ring by hand.

HINT: Arrange the rings in correct order only.

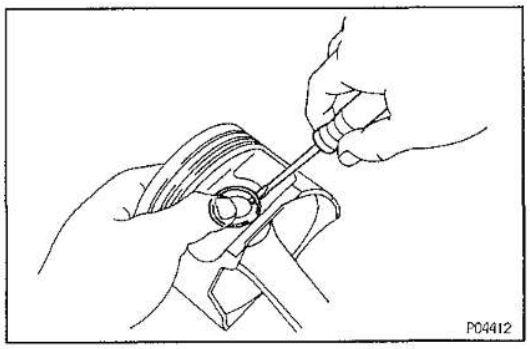

3. DISCONNECT CONNECTING ROD FROM PISTON

(a) Using a small screwdriver, pry out the two snap rings.

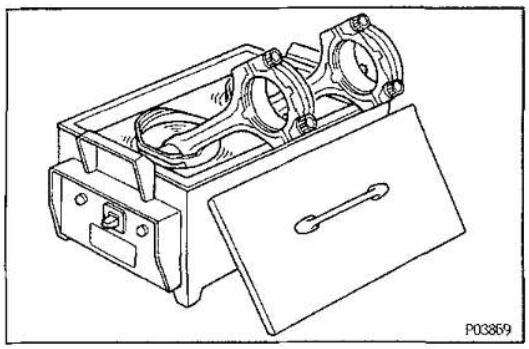

(b) Gradually heat the piston to 80 — 90°C (176 — 194°F).

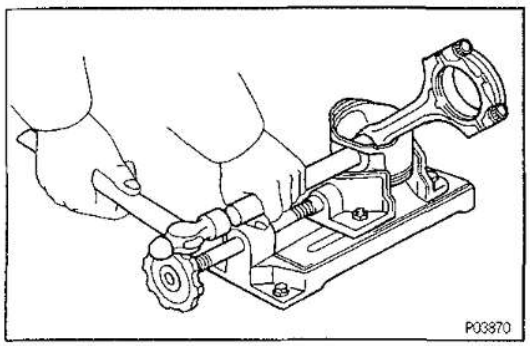

(c) Using plastic—faced hammer and brass bar, lightly tap out the piston pin and remove the connecting rod.

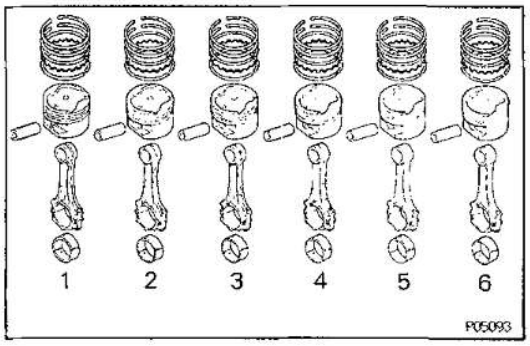

HINT:

- The piston and pin are a matched set.
- Arrange the pistons, pins, rings, connecting rods and bearings in correct order.

EG0VP—02

PISTON AND CONNECTING ROD INSPECTION

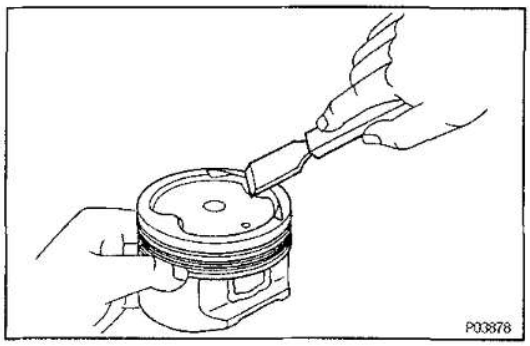

1. CLEAN PISTON

(a) Using a gasket scraper, remove the carbon from the piston top.

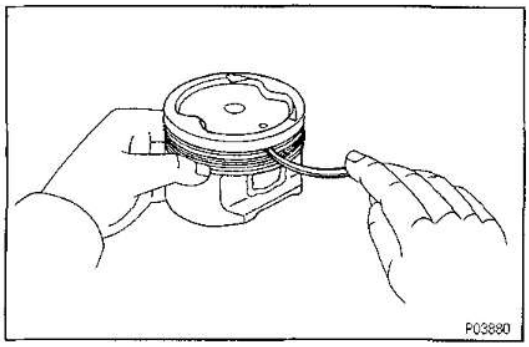

(b) Using a groove cleaning tool or broken ring, clean the piston ring grooves.

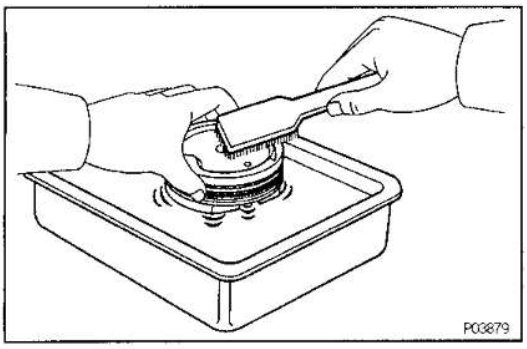

(c) Using solvent and a brush, thoroughly clean the piston.
NOTICE: Do not use a wire brush.

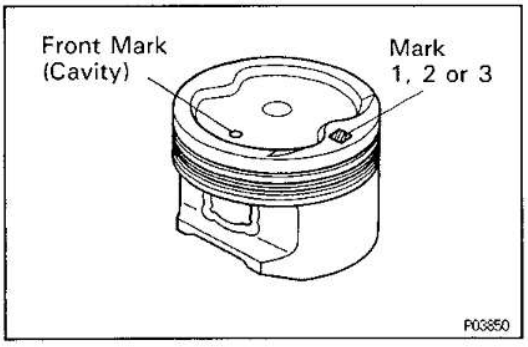

2. INSPECT PISTON AND PISTON RING

A. Inspect piston oil clearance

HINT: There are three sizes of the standard piston diameter, marked "1", "2" and "3" accordingly. The mark is stamped on the piston top.

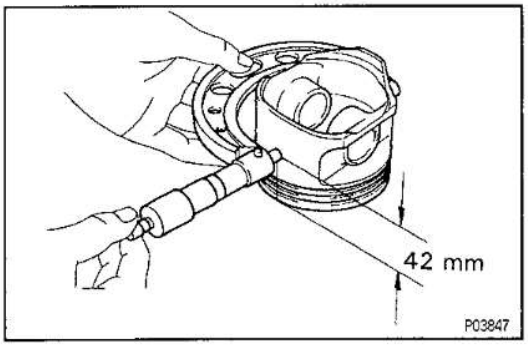

(a) Using a micrometer, measure the piston diameter at ring angles to the piston pin center line, 42 mm (1.65 in.) from the piston head.

Piston diameter:

STD

Mark "1"

99.950 — 99.960 mm (3.9350 — 3.9354 in.)

Mark "2"

99.960 — 99.970 mm (3.9354 — 3.9358 in.)

Mark "3"

99.970 — 99.980 mm (3.9358 — 3.9362 in.)

O/S 0.50

100.450 — 100.480 mm (3.9547 — 3.9559 in.)

O/S 1.00

100.950 — 100.980 mm (3.9744 — 3.9756 in.)

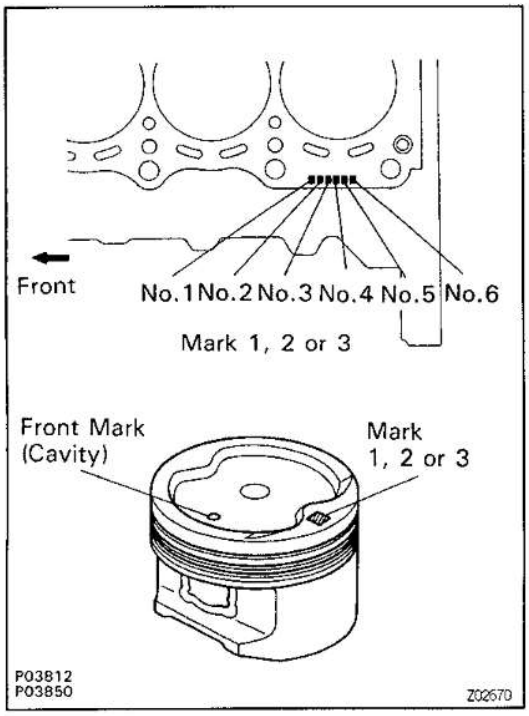

(b) Measure the cylinder bore diameter in the thrust directions.
(See step 4 on page EG—146)

(c) Subtract the piston diameter measurement from the cylinder bore diameter measurement.

Standard oil clearance:

0.040 — 0.060 mm (0.0016 — 0.0024 in.)

If the oil clearance is greater than maximum, replace all the six pistons and rebore all the six cylinders. If necessary, replace the cylinder block.

HINT (Use new cylinder block): Use a piston with the same number mark as the cylinder bore diameter marked on the cylinder block.

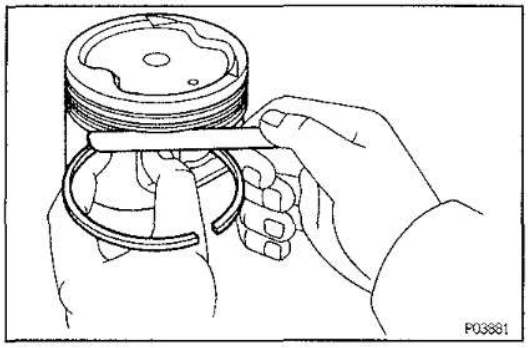

B. Inspect piston ring groove clearance

Using a thickness gauge, measure the clearance between new piston ring and the wall of the piston ring groove.

Ring groove clearance:

No.1

0.040 — 0.080 (0.0016 — 0.0031 in.)

No.2

0.030 — 0.070 (0.0012 — 0.0028 in.)

If the clearance is greater than maximum, replace the piston.

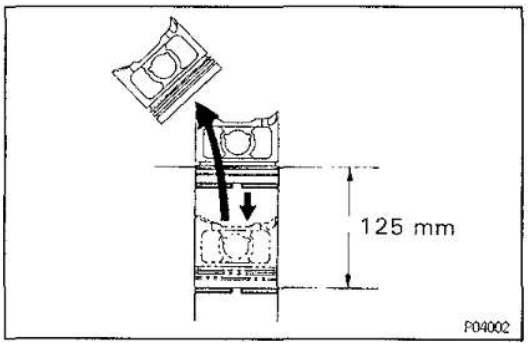

C. Inspect piston ring end gap

(a) Insert the piston ring into the cylinder bore.

(b) Using a piston, push the piston ring a little beyond the bottom of the ring travel, 125 mm (4.92 in.) from the top of the cylinder block.

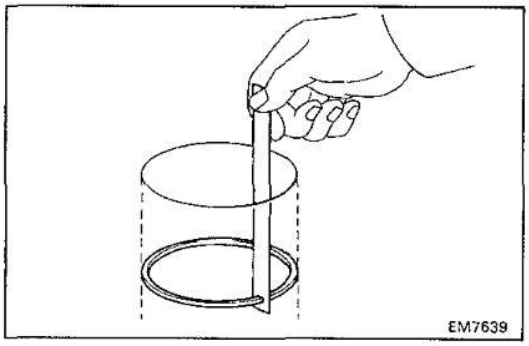

(c) Using a thickness gauge, measure the end gap.

Standard end gap:

No.1

0.300 — 0.520 mm (0.0118 — 0.0205 in.)

No.2

0.450 — 0.670 mm (0.0177 — 0.0264 in.)

Oil (Side rail)

0.150 — 0.520 mm (0.0059 — 0.0205 in.)

Maximum end gap:

No.1

1.12 mm (0.0441 in.)

No.2

1.17 mm (0.0461 in.)

Oil (Side rail)

1.12 mm (0.0441 in.)

If the end gap is greater than maximum, replace the piston ring. If the end gap is greater than maximum, even with a new piston ring, rebore all the six cylinders or replace the cylinder block.

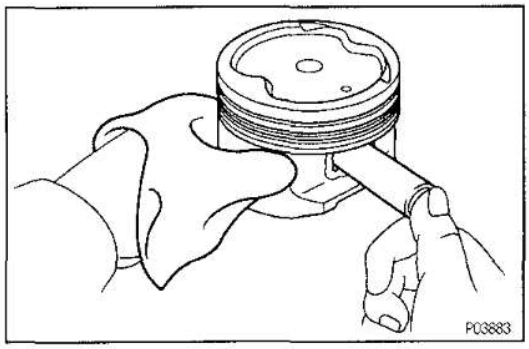

D. Inspect piston pin fit

At 80 — 90°C (176 — 194°F), you should be able to push the piston pin into the piston pin hole with your thumb.

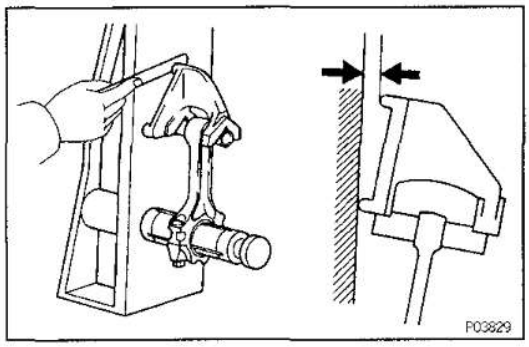

3. INSPECT CONNECTING ROD

A. Inspect connecting rod alignment

Using a rod aligner and thickness gauge, check the connecting rod alignment.

- Check for bend.

Maximum bend:

0.05 mm (0.0020 in.) per 100 mm (3.94 in.)

If bend is greater than maximum, replace the connecting rod assembly.

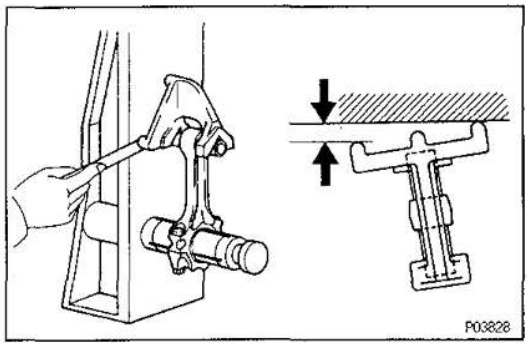

- Check for twist

Maximum twist:

0.15 mm (0.0059 in.) per 100 mm (3.94 in.)

If twist is greater than maximum, replace the connecting rod assembly.

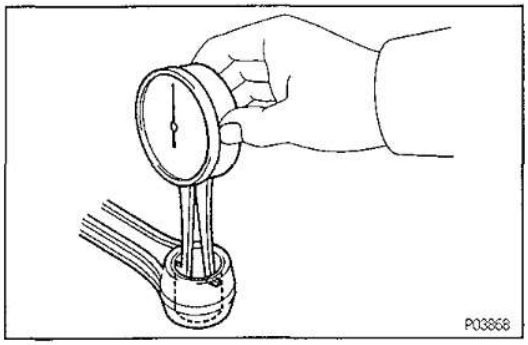

B. Inspect piston pin oil clearance

(a) Using a caliper gauge, measure the inside diameter of the connecting rod bushing.

Bushing inside diameter:

26.008 — 26.020 mm (1.0239 — 1.0244 in.)

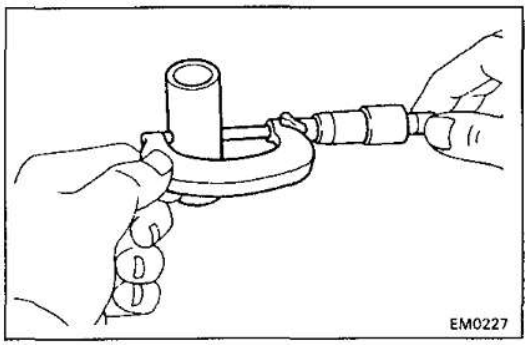

(b) Using a micrometer, measure the piston pin diameter.

Piston pin diameter:

26.000 — 26.012 mm (1.0236 — 1.0241 in.)

(c) Subtract the piston pin diameter measurement from the bushing inside diameter measurement.

Standard oil clearance:

0.004 — 0.012 mm (0.0002 — 0.0005 in.)

Maximum oil clearance:

0.05 mm (0.0020 in.)

If the oil clearance is greater than maximum, replace the bushing. If necessary, replace the piston and piston pin as a set.

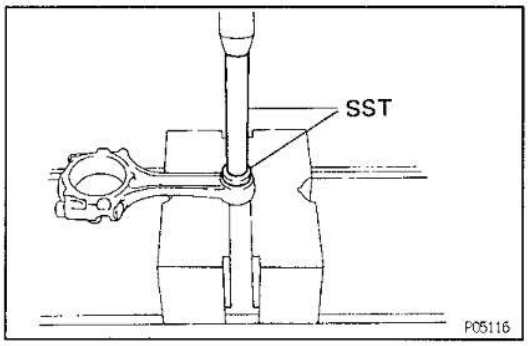

C. If necessary, replace connecting rod bushing

(a) Using SST and a press, press out the bushing.
SST 09608—30012, (09608—04020), 09631—20031

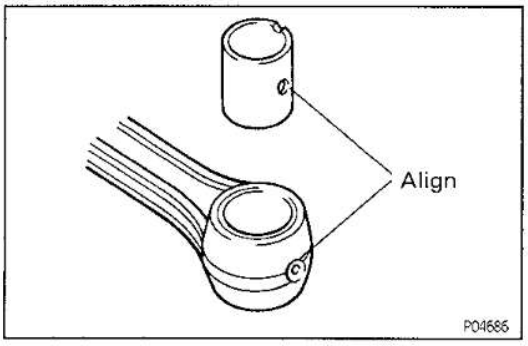

(b) Align the oil holes of a new bushing and the connecting rod.

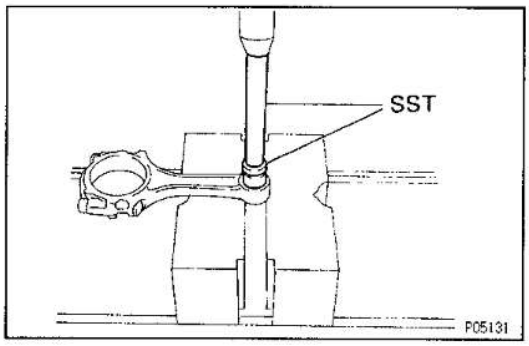

(c) Using SST and a press, press in the bushing.
SST 09608—30012, (09608—04020), 09631—20031

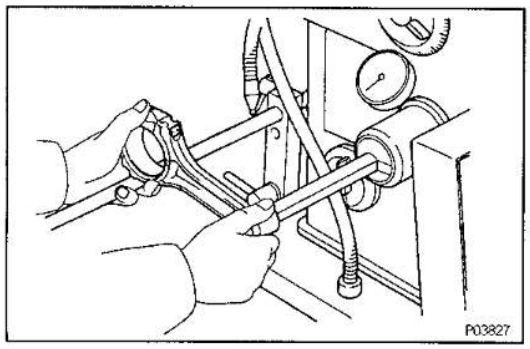

(d) Using a pin hole grinder, hone the bushing to obtain the standard specified clearance (see step B above) between the bushing and piston pin.

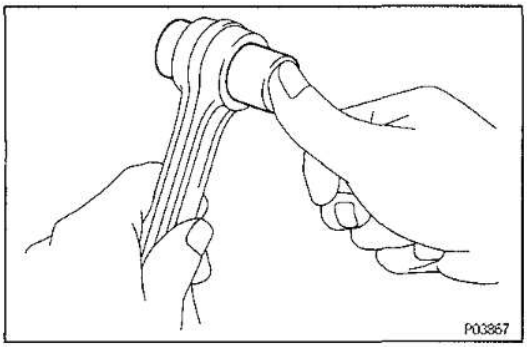

(e) Check the piston pin fit at normal room temperature. Coat the piston pin with engine oil, and push it into the connecting rod with your thumb.

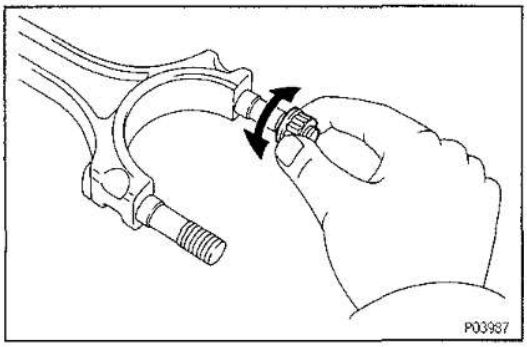

D. Inspect connecting rod bolts

(a) Install the cap nut to the connecting rod bolt. Check that the cap nut can be turned easily by hand to the end of the thread.

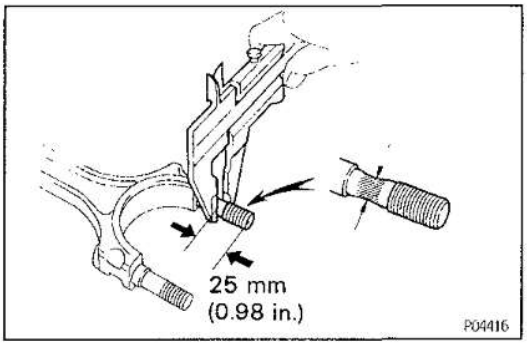

(b) If the cap nut cannot be turned easily, measure the outside diameter of the connecting rod bolt with vernier calipers.

Standard outside diameter:

8.40 – 8.60 mm (0.3307 – 0.3386 in.)

Minimum outside diameter:

8.00 mm (0.3150 in.)

HINT: If the location of this area cannot be judged by visual inspection, measure the outer diameter at the location shown in the illustration.

If the outside diameter is less than minimum, replace the connecting rod bolt and nut as a set.

EG1K6-01

CYLINDER BORING

HINT:

- Bore all the six cylinders for the oversized piston outside diameter.
- Replace all the piston rings with ones to match the oversized pistons.

1. SELECT OVERSIZED PISTONS

Oversized piston diameter:

O/S 0.50

100.450 – 100.480 mm (3.9547 – 3.9559 in.)

O/S 1.00

100.950 – 100.980 mm (3.9744 – 3.9756 in.)

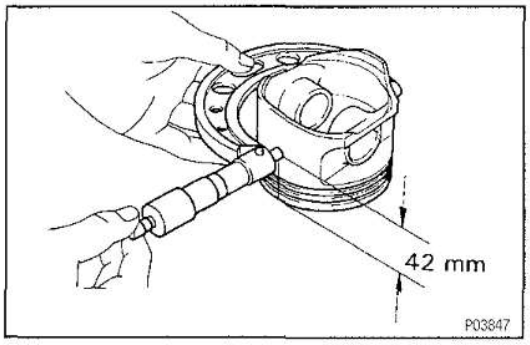

2. CALCULATE AMOUNT TO BORE CYLINDERS

(a) Using a micrometer, measure the piston diameter at right angles to the piston pin center line, 42 mm (1.65 in.) from the piston head.

(b) Calculate the amount of each cylinder is to be rebored as follows:

Size to be rebored = P + C – H

P = Piston diameter

C = Piston clearance

0.040 – 0.060 mm (0.0016 – 0.0024 in.)

H = Allowance for honing

0.20 mm (0.0008 in.) or less

3. BORE AND HONE CYLINDER TO CALCULATED DIMENSIONS

Maximum honing:

0.02 mm (0.0008 in.)

NOTICE: Excess honing will destroy the finished roundness.

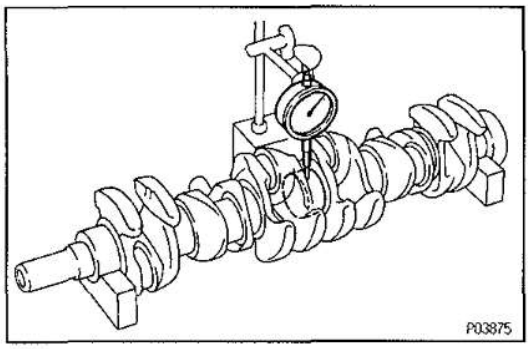

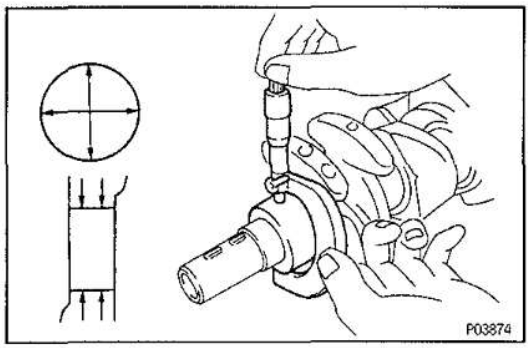

CRANKSHAFT INSPECTION AND REPAIR

EG08Y-0A

1. INSPECT CRANKSHAFT FOR RUNOUT

(a) Place the crankshaft on V—blocks.

(b) Using a dial indicator, measure the circle runout at the center journal.

Maximum circle runout:

0.06 mm (0.0024 in.)

If the circle runout is greater than maximum, replace the crankshaft.

2. INSPECT MAIN JOURNALS AND CRANK PINS

(a) Using a micrometer, measure the diameter of each main journal and crank pin.

Main journal diameter:

STD size

68.982 — 69.000 mm (2.7158 — 2.7165 in.)

U/S 0.25

68.745 — 68.755 mm (2.7065 — 2.7069 in.)

Crank pin diameter:

STD size

56.982 — 57.000 mm (2.2434 — 2.2441 in.)

U/S 0.25

56.745 — 56.755 mm (2.2341 — 2.2344 in.)

If the diameter is not as specified, check the oil clearance (See pages EG—142 to 144). If necessary, grind or replace the crankshaft.

(b) Check each main journal and crank pin for taper and out—of—round as shown.

Maximum taper and out—of—round:

0.02 mm (0.0008 in.)

If the taper and out—of—round is greater than maximum, replace the crankshaft.

3. IF NECESSARY, GRIND AND HONE MAIN JOURNALS AND/OR CRANK PINS

Grind and hone the main journals and/or crank pins to the finished undersized diameter (See procedure in step 2).

Install new main journal and/or crankshaft pin undersized bearings.

CRANKSHAFT OIL SEALS REPLACEMENT

EG0C0-C8

HINT: There are two methods (A and B) to replace the oil seal which are as follows:

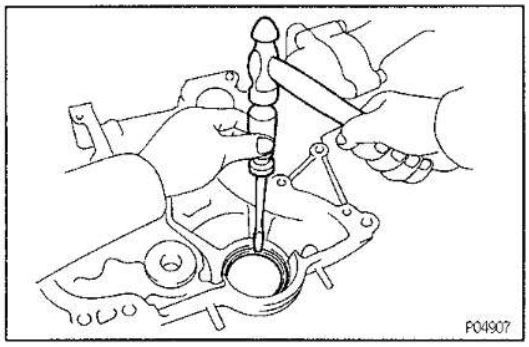

1. REPLACE CRANKSHAFT FRONT OIL SEAL

A. If timing chain cover is removed from cylinder block:

(a) Using a screwdriver and a hammer, tap out the oil seal.

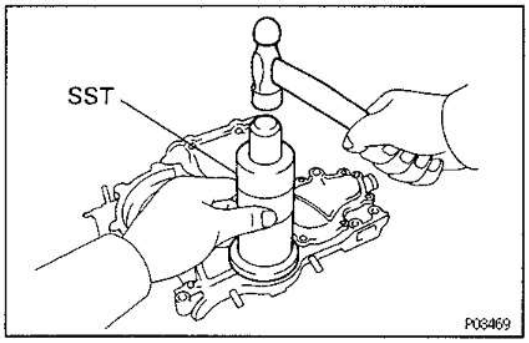

(b) Using SST and a hammer, tap in a new oil seal until its surface is flush with the timing chain cover edge.
SST 09316−60010 (09316−00010, 09316−00050)

(c) Apply MP grease to the oil seal lip.

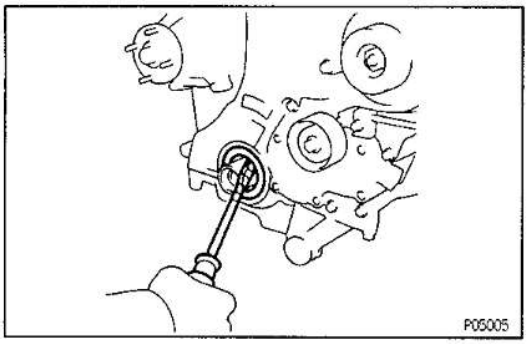

B. If timinh chain cover is installed to the cylinder block:

(a) Using a screwdriver, pry out the oil seal.
NOTICE: Be careful not to damage the crankshaft. Tape the screwdriver tip.

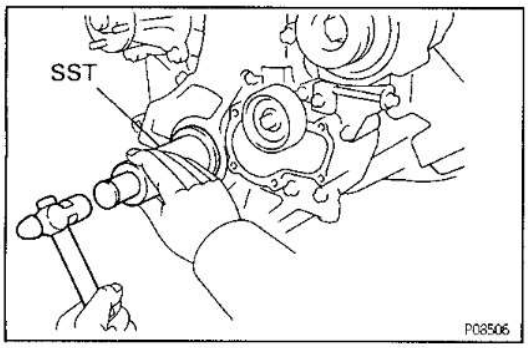

(b) Apply MP grease to a new oil seal lip.

(c) Using SST and a hammer, tap in the oil seal until its surface is flush with the timing chain cover edge.
SST 09316−60010 (09316−00010, 09316−00050)

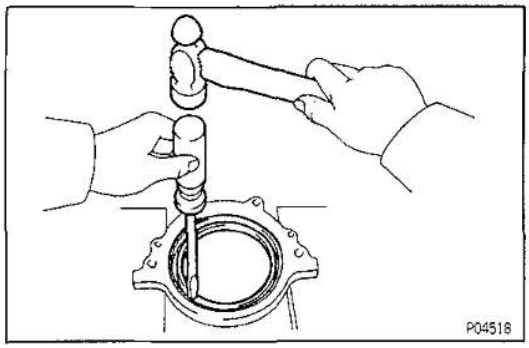

2. REPLACE CRANKSHAFT REAR OIL SEAL

A. If rear oil seal retainer is removed from cylinder block:

(a) Using a screwdriver and a hammer, tap out the oil seal.

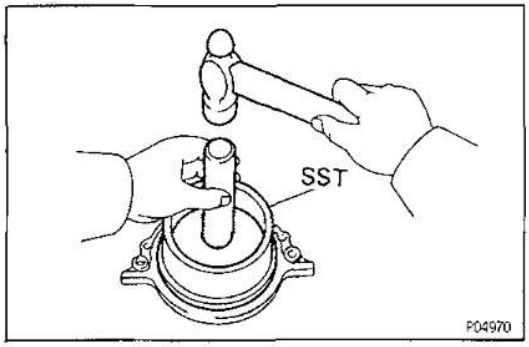

(b) Using SST and a hammer, tap in a new oil seal until its surface is flush with the rear oil seal edge.
SST 09223–15030, 09608–30012 (09608–04020)

(c) Apply MP grease to the oil seal lip.

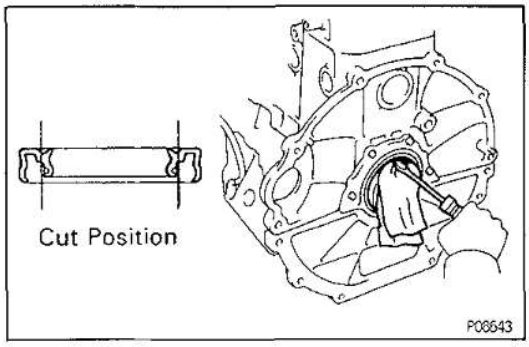

B. If rear oil seal retainer is installed to cylinder block:

(a) Using a knife, cut off the oil seal lip.

(b) Using a screwdriver, pry out the oil seal.
NOTICE: Be careful not to damage the crankshaft. Tape the screwdriver tip.

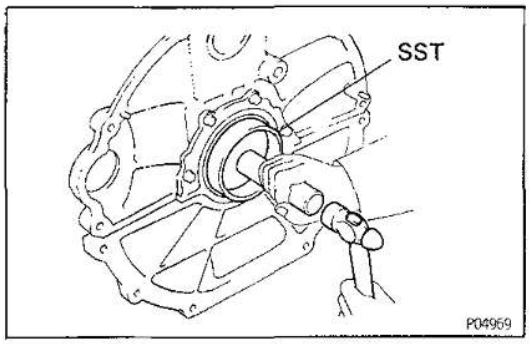

(c) Apply MP grease to a new oil seal lip.

(d) Using SST and a hammer, tap in the oil seal until its surface is flush with the rear oil seal retainer edge.
SST 09223–15030, 09608–30012 (09608–04020)

EG0C1-06

PISTON AND CONNECTING ROD ASSEMBLY

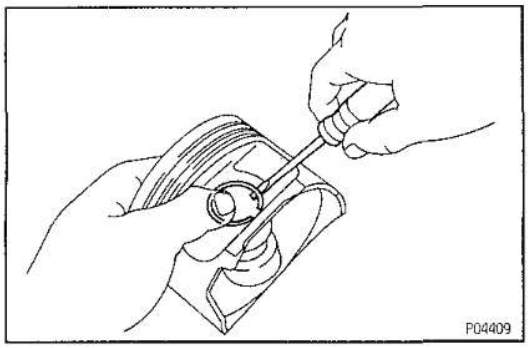

1. ASSEMBLE PISTON AND CONNECTING ROD

(a) Install a new snap ring on one side of the piston pin hole.

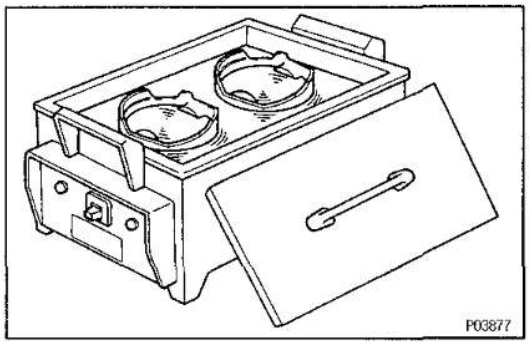

(b) Gradually heat the piston to 80—90°C (176—194°F).

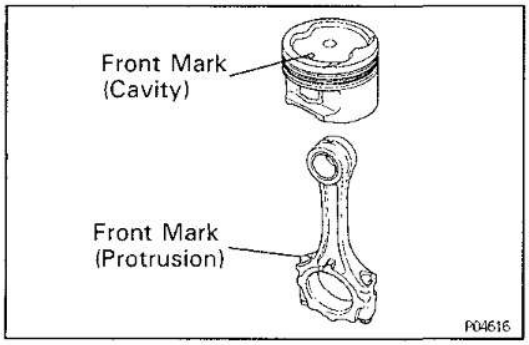

(c) Coat the piston pin with engine oil.

(d) Align the front marks of the piston and connecting rod, and push in the piston pin with your thumb.

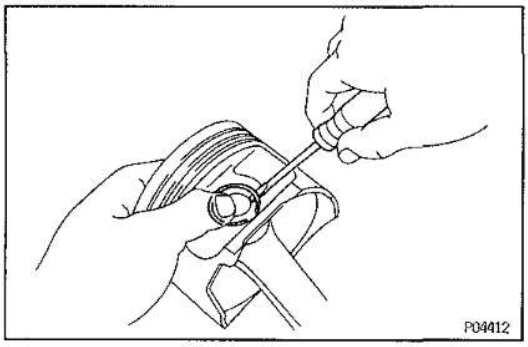

(e) Install a new snap ring on the other side of the piston pin hole.

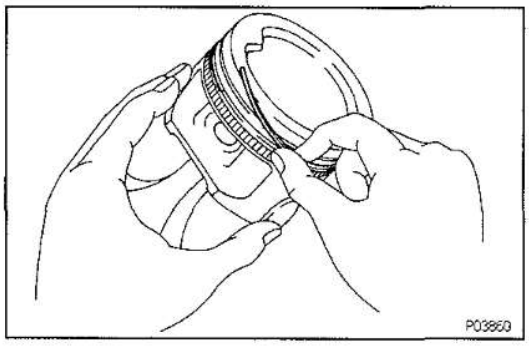

2. INSTALL PISTON RINGS

(a) Install the oil ring expander and two side rails by hand.

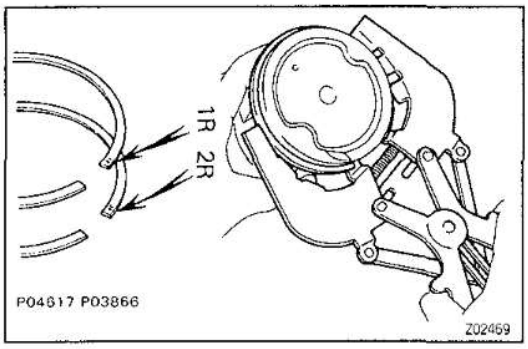

(b) Using a piston ring expander, install the two compression rings with the code mark facing upward.
Code mark:
No.1
1R
No.2
2R

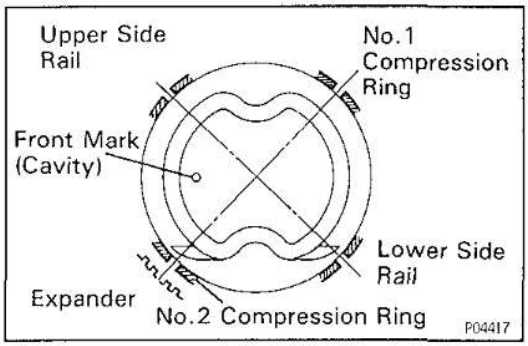

(c) Position the piston rings so that the ring ends are as shown.
NOTICE: Do not align the ring ends.

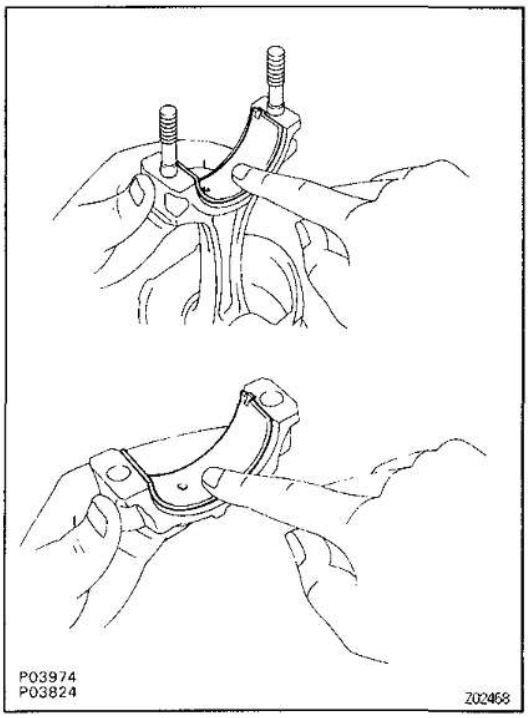

3. INSTALL BEARINGS

(a) Align the bearing claw with the groove of the connecting rod or connecting cap.

(b) Install the bearings in the connecting rod and connecting rod cap.

EGCVR-02

CYLINDER BLOCK ASSEMBLY

(See Components for Disassembly and Assembly)

HINT:

- Thoroughly clean all parts to be assembled.
- Before installing the parts, apply new engine oil to all sliding and rotating surfaces.
- Replace all gaskets, O—rings and oil seals with new parts.

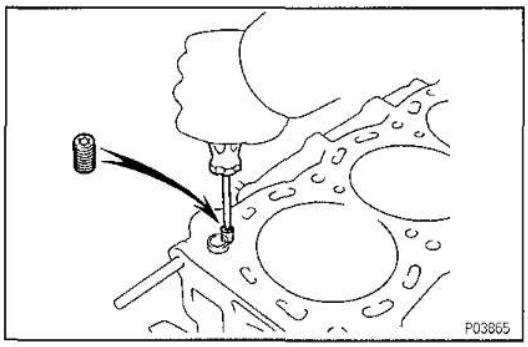

1. INSTALL CYLINDER BLOCK ORIFICE

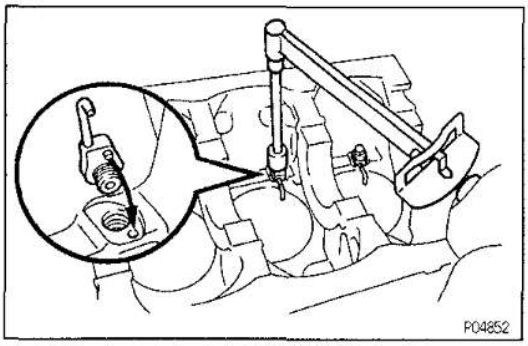

2. INSTALL OIL NOZZLES AND CHECK VALVES

(a) Align the pin of the oil nozzle with the pin hole of the cylinder block.

(b) Install the oil nozzle with the check valve. Install the six oil nozzles and check valves.
Torque: 25 N·m (250 kgf·cm, 18 ft·lbf)

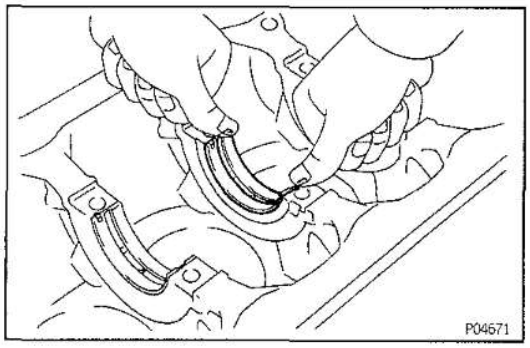

3. INSTALL MAIN BEARINGS

(a) Align the bearing claw with the claw groove of the cylinder block, and push in the seven upper bearings.

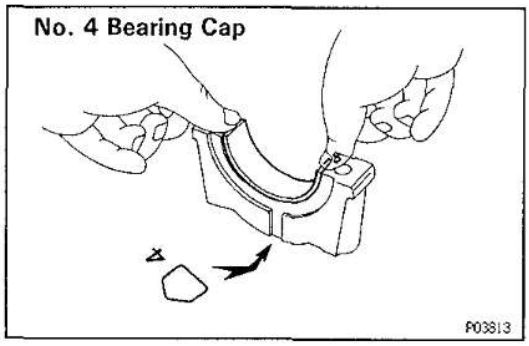

(b) Align the bearing claw with the claw groove of the main bearing cap, and push in the seven lower bearings.
HINT: A number is marked on each main bearing cap to indicate the installation position.

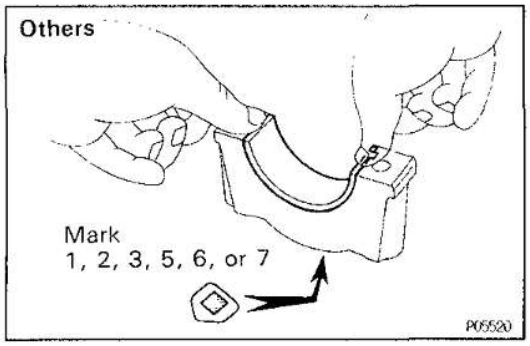

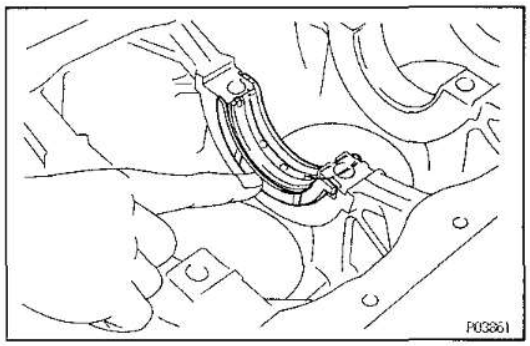

4. INSTALL UPPER THRUST WASHERS

Install the two thrust washers under the No.4 journal position of the cylinder block with the oil grooves facing outward.

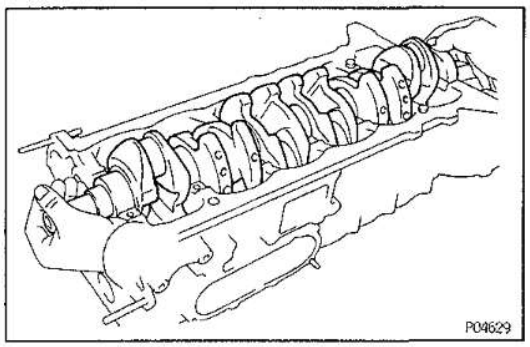

5. PLACE CRANKSHAFT ON CYLINDER BLOCK

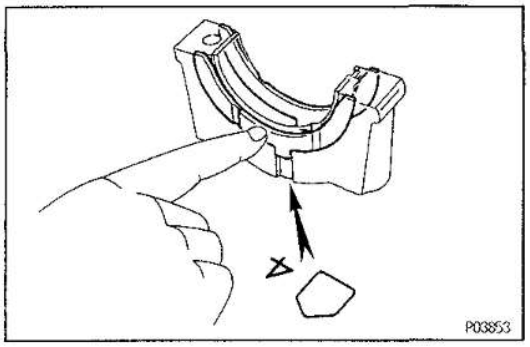

6. INSTALL MAIN BEARING CAPS AND LOWER THRUST WASHERS

A. Place main bearing cap and lower thrust washers on cylinder block

(a) Install the two thrust washers on the No.4 bearing cap with the grooves facing outward.

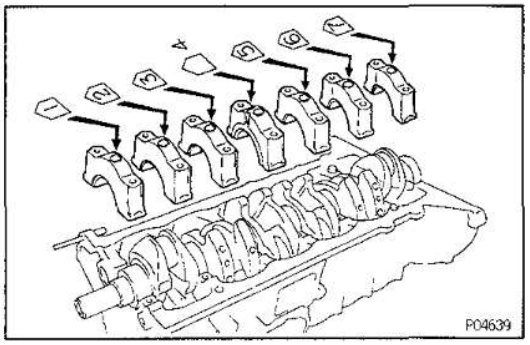

(b) Install the seven main bearing caps in their proper locations.
HINT: Each bearing cap has a number and front mark.

B. Install main bearing cap bolts

HINT:

- The main bearing cap bolts are tightened in two progressive steps (steps (b) and (d)).
- If any one of the main bearing cap bolts is broken or deformed, replace it.

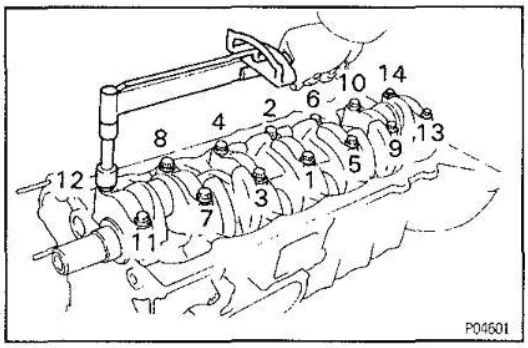

(a) Apply a light coat of engine oil on the threads and under the heads of the main bearing cap bolts.

(b) Install and uniformly tighten the 14 bolts of the main bearing caps in several passes, in the sequence shown.

Torque: 74 N·m (750 kgf·cm, 54 ft·lbf)

If any one of the main bearing cap bolts does not meet the torque specification, replace the main bearing cap bolt.

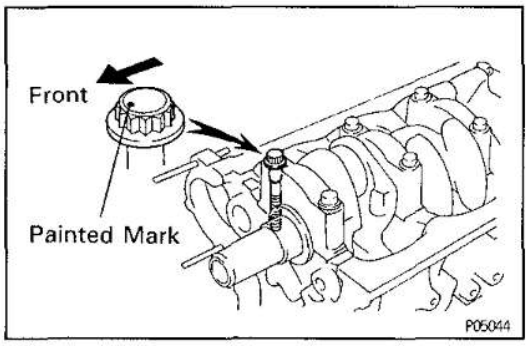

(c) Mark the front of the main bearing cap bolt with paint.

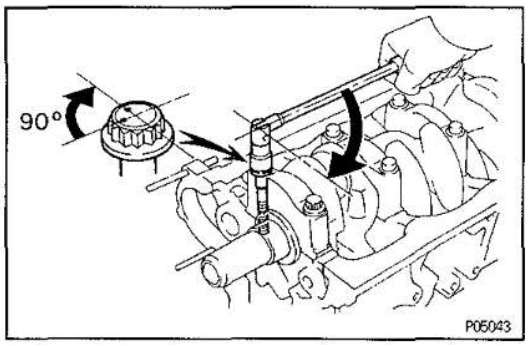

(d) Retighten the main bearing cap bolts 90° in the numerical order shown above.

(e) Check that the painted mark is now at a 90° angle to the front.

(f) Check that the crankshaft turns smoothly.

(g) Check the crankshaft thrust clearance.
(See step 5 on page EG—141)

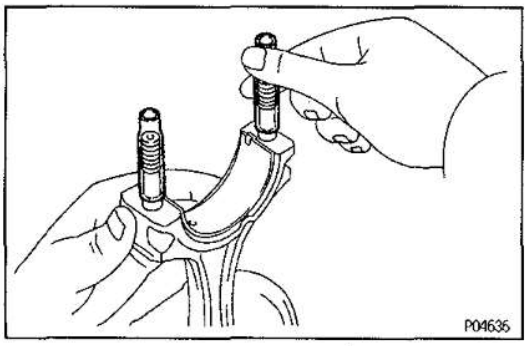

7. INSTALL PISTON AND CONNECTING ROD ASSEMBLIES

(a) Cover the connecting rod bolts with a short piece of hose to protect the crankshaft from damage.

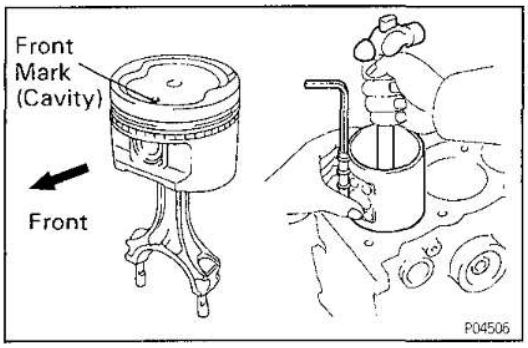

(b) Using a piston ring compressor, push the correctly numbered piston and connecting rod assemblies into each cylinder with the front mark of the piston facing forward.

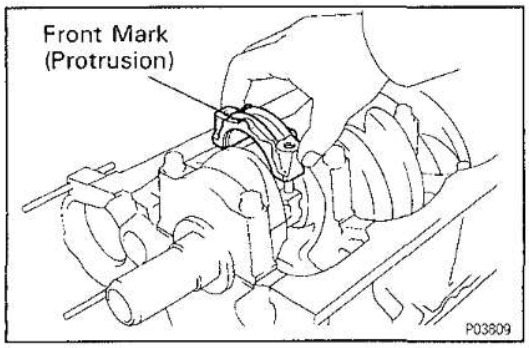

8. INSTALL CONNECTING ROD CAPS

A. Place connecting rod cap on connecting rod

(a) Match the numbered connecting rod cap with the connecting rod.

(b) Install the connecting rod cap with the front mark facing forward.

B. Install connecting rod cap nuts

HINT:

- The connecting rod cap nuts are tightened in two progressive steps (steps (b) and (d)).
- If any connecting rod bolt is broken or deformed, replace it.

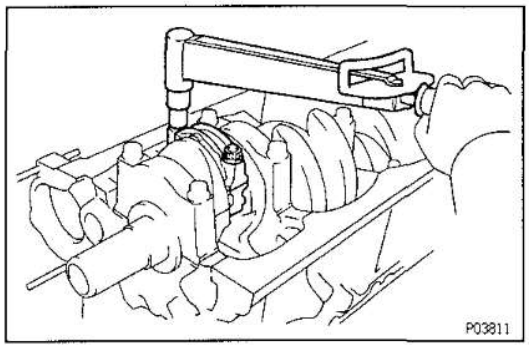

(a) Apply a light of engine oil on the threads and under the nuts of the connecting rod cap.

(b) Install and alternately tighten the nuts of the connecting rod cap in several passes.

Torque: 48 N·m (490 kgf·cm, 35 ft·lbf)

If any one of the connecting rod cap nuts does not meet the torque specification, replace the connecting rod bolt and cap nut as a set.

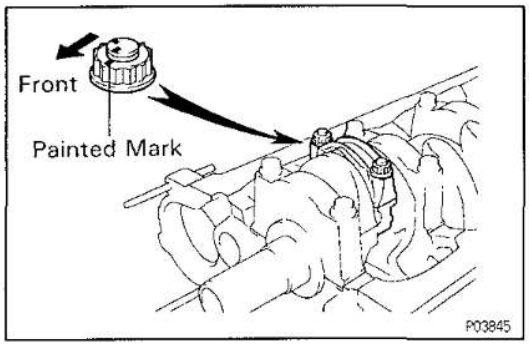

(c) Mark the front of the connecting rod cap nut and bolt with paint.

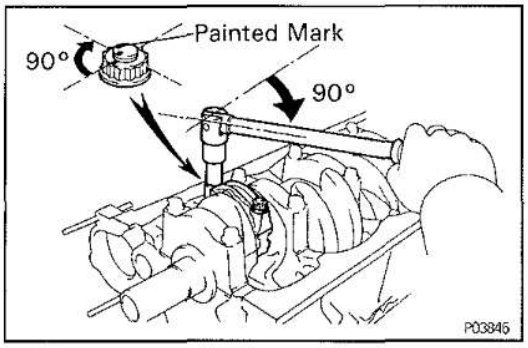

(d) Retighten the connecting rod cap nuts 90° as shown.

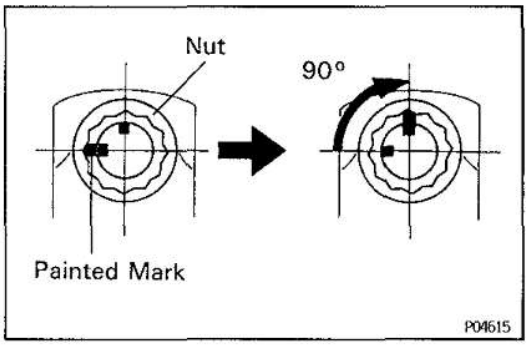

(e) Check that the painted mark on the nut is at 90° angle in relation to the mark on the bolt.
(f) Check that the crankshaft turns smoothly.
(g) Check the connecting rod thrust clearance.
(See step 2 on page EG—138)

9. INSTALL REAR OIL SEAL RETAINER

(a) Remove any old packing (FIPG) material and be careful not to drop any oil on the contact surfaces of the retainer and cylinder block.
- Using a razor blade and gasket scraper, remove all the old packing (FIPG) material from the gasket surfaces and sealing groove.
- Thoroughly clean all components to remove all the loose material.
- Using a non—residue solvent, clean both sealing surfaces.

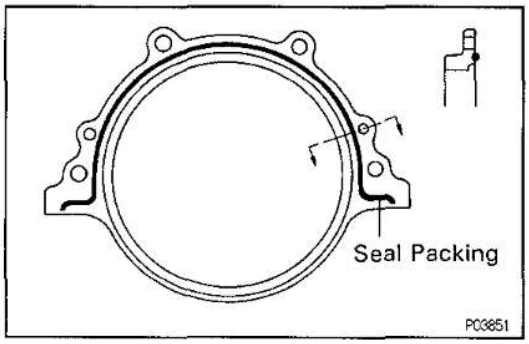

(b) Apply seal packing to the retainer as shown in the illustration.
Seal packing:
Part No. 08826—00080 or equivalent
- Install a nozzle that has been cut to a 2 — 3 mm (0.08 — 0.12 in.) opening.

HINT: Avoid applying an excessive amount to the surface.
- Parts must be assembled within 5 minutes of application. Otherwise the material must be removed and reapplied.
- Immediately remove nozzle from the tube and reinstall cap.

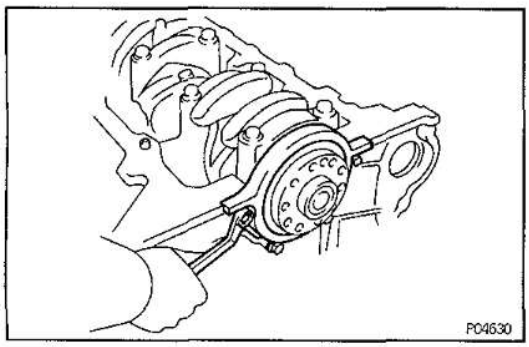

(c) Install the retainer with the four bolts.
Torque: 20 N·m (200 kgf·cm, 14 ft·lbf)

EG1K7-02

POST ASSEMBLY

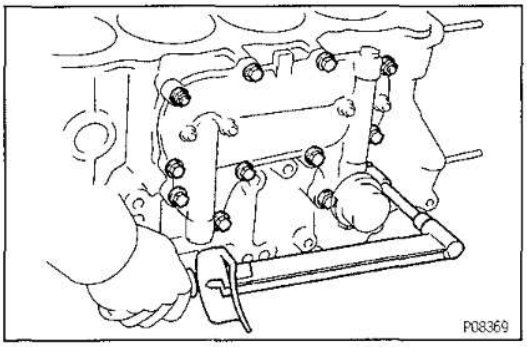

1. INSTALL OIL COOLER COVER AND OIL COOLER

Install a new gasket, oil cooler cover and oil cooler with the ten bolts and two nuts.

Torque: 21 N·m (210 kgf·cm, 15 ft·lbf)

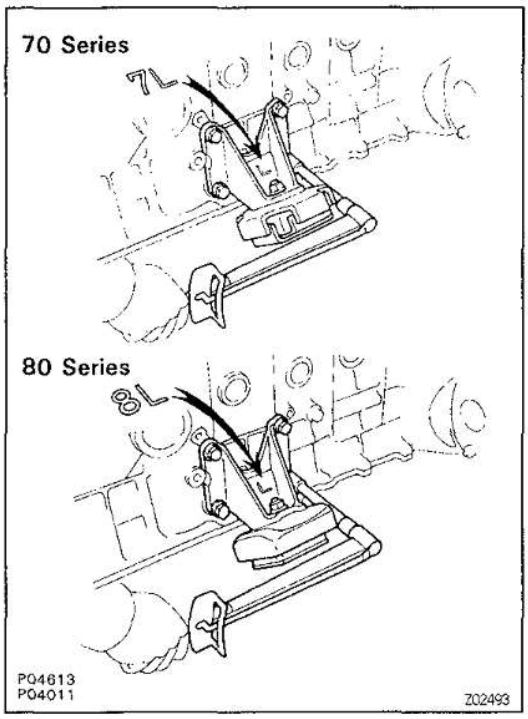

2. INSTALL LH ENGINE MOUNTING BRACKET

(a) Install the bracket with the four bolts.
Torque: 69 N·m (700 kgf·cm, 51 ft·lbf)

(b) Install the insulator with the nut.
Torque: 72 N·m (730 kgf·cm, 43 ft·lbf)

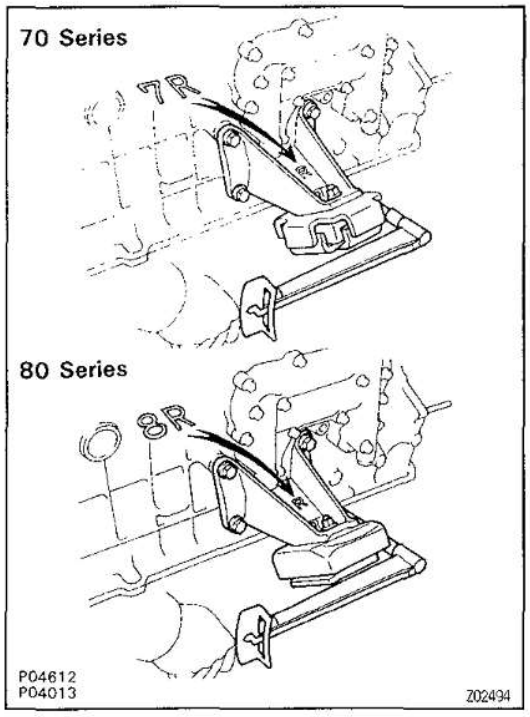

3. INSTALL RH ENGINE MOUNTING BRACKET

(a) Install the bracket with the four bolts.
Torque: 69 N·m (700 kgf·cm, 51 ft·lbf)

(b) Install the insulator with the nut.
Torque: 72 N·m (730 kgf·cm, 43 ft·lbf)

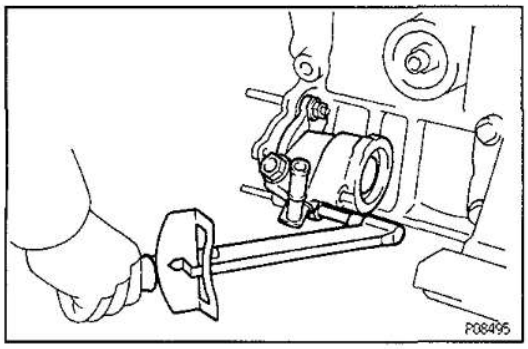

4. INSTALL PS PUMP

(a) Place a new O–ring to the pump.

(b) Install the pump with the two nuts.
Torque: 36 N·m (370 kgf·cm, 27 ft·lbf)

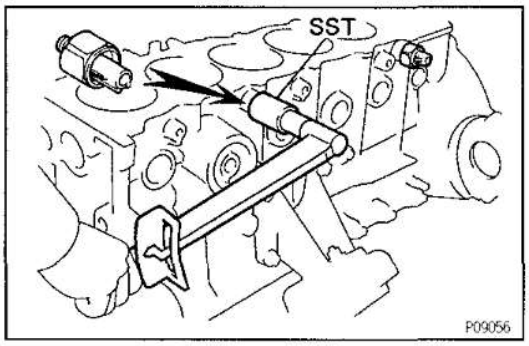

5. INSTALL KNOCK SENSORS

Uing SST, install the two knock sensors.
SST 09816–30010
Torque: 37 N·m (380 kgf·cm, 27 ft·lbf)

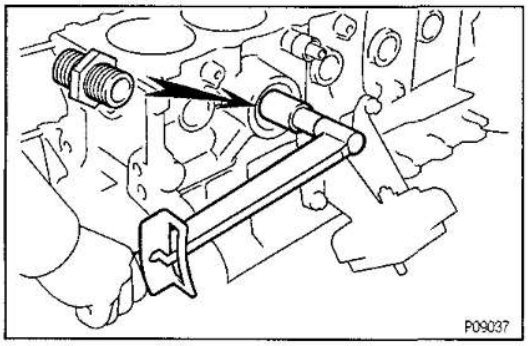

6. INSTALL OIL FILTER UNION

Torque: 44 N·m (450 kgf·cm, 33 ft·lbf)

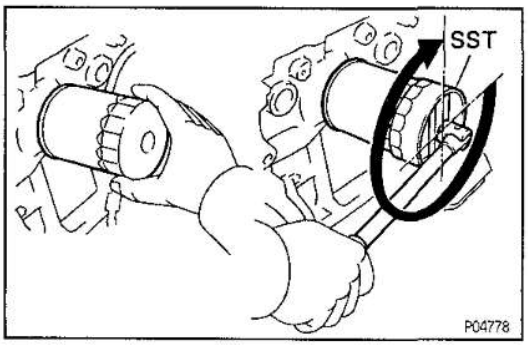

7. INSTALL OIL FILTER

(a) Lubricate the filter rubber gasket with engine oil.

(b) Tighten filter until the gasket contacts seat of the filter mounting. Then using SST, give it an additional 3/4 turn to seat the filter.
SST 09228–44011

8. INSTALL TIMING CHAIN
(See page EG–128)

9. INSTALL CYLINDER HEAD
(See page EG–70 or 106)

10. REMOVE ENGINE STAND

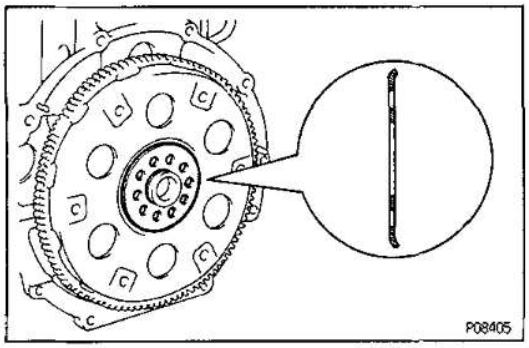

11. INSTALL DRIVE PLATE (A/T)

(a) Install the front spacer, drive plate and rear plate on the crankshaft.

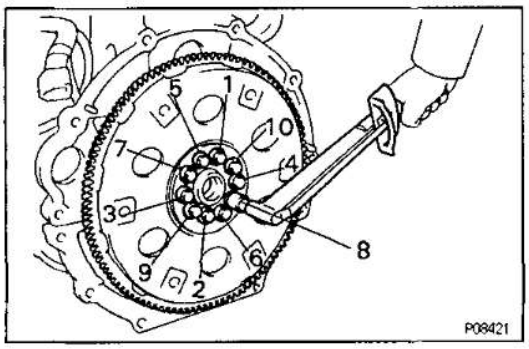

(b) Install and uniformly tighten the ten drive plate bolts in several passes, in the sequence shown.
Torque: 100 N·m (1,000 kgf·cm, 74 ft·lbf)

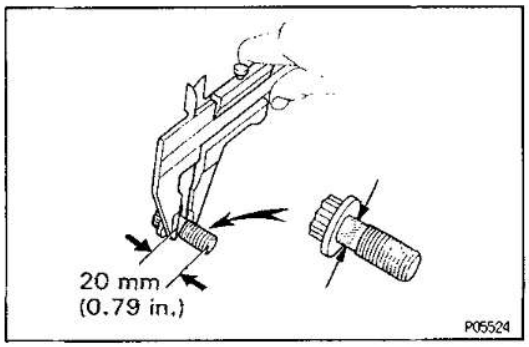

12. INSTALL FLYWHEEL (M/T)

A. Inspect flywheel bolts

Using vernier calipers, measure the outside diameter of the flywheel bolt.

Standard outside diameter:

10.3 – 10.5 mm (0.406 – 0.413 in.)

Minimum outside diameter:

9.5 mm (0.374 in.)

If the diameter is less than minimum, replace the bolt.

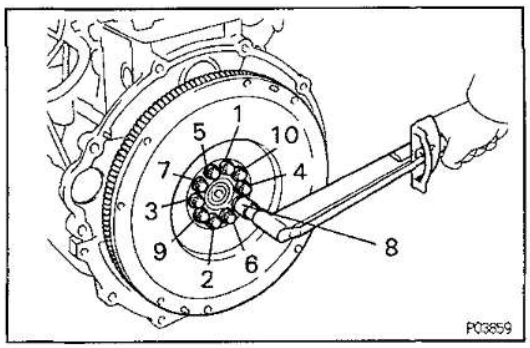

B. Install flywheel bolts

HINT:

- The flywheel bolts are tightened in two progressive steps (steps (b) and (d)).
- If any flywheel bolt is broken of deformed, replace it

(a) Apply a light of engine oil on the threads and under the heads of the flywheel bolts.

(b) Install and uniformly tighten the ten flywheel bolts in several passes, in the sequence shown.
Torque: 20 N·m (200 kgf·cm, 14 ft·lbf)
If any one of the flywheel bolts does not meet the torque specification, replace the flywheel bolt.

(c) Mark the flywheel bolt with paint.

(d) Retighten the flywheel bolts 90° in the numerical order shown above.

(e) Check that the painted mark is now at a 90° angle to (c).

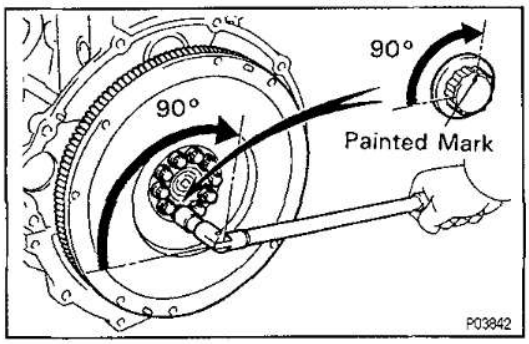

SERVICE SPECIFICATIONS
SERVICE DATA

EG0VT-04

Tune—up	Engine oil API grade		SG or better
	Battery specific gravity		1.25 — 1.27
			(when fully charged at 20°C (68°F))
	High—tension cord resistance	Limit	25 kΩ per cord
	Spark plug (Recommended spark plug)	ND	K16R—U
		NGK	BKR5EYA
	Spark plug (Correct electrode gap)		0.8 mm (0.031 in.)
	Alternator drive belt tension		
	New belt		11 — 15 mm (0.43 — 0.59 in.)
	Used belt		15 — 20 mm (0.59 — 0.79 in.)
	Alternator drive belt tension with SST		
	New belt		33 — 57 kgf
	Used belt		15 — 35 kgf
	Valve clearance (Cold)	Intake	mm (0.006 — 0.010 in.)
		Exhaust	0.25 — 0.35 mm (0.010 — 0.014 in.)
	Ignition timing		3° BTDC @ idle
	Idle speed		650 ± 50 rpm
	Idle CO concentration (General)		1.5 ± 0.5 %
	Fast idle speed (G.C.C.)		900 rpm
	Fast Idle speed (Others)		1,200 rpm
	DP setting speed		1,500 rpm
	TP setting speed		1,200 rpm
Compression pressure	at 250 rpm — STD	1FZ—FE	1,176 kPa (12.0 kgf/cm², 171 psi) or more
		1FZ—F (Low octane model)	900 kPa (9.2 kgf/cm², 131 psi) or more
		(Others)	1,030 kPa (10.5 kgf/cm², 149 psi) or more
	at 250 rpm — Limit	1FZ—FE	882 kPa (9.0 kgf/cm², 128 psi)
		1FZ—F	785 kPa (8.0 kgf/cm², 114 psi)
	Difference of pressure betweeneach cylinder		98 kPa (1.0 lgf/cm², 14 psi) or less
Intake manifold vacuum	at idle speed		63 kPa (473 mmHg, 18.6 in.Hg)
Cylinder head	Warpage — Cylinder block side (Limit)		0.15 mm (0.0059 in.)
	Warpage — Manifold side (Limit)		0.10 mm (0.0039 in.)
	Valve seat — Refacing angle (Intake)		30°, 45°, 75°
	Valve seat — Refacing angle (Exhaust)		45°, 75°
	Valve seat — Contacting angle		45°
	Valve seat — Contacting width (Intake)		1.2 — 1.6 mm (0.047 — 0.063 in.)
	Valve seat — Contacting width (Exhaust)		1.0 — 1.4 mm (0.039 — 0.055 in.)
	Cylinder head bolt outside diametr	STD	10.85 — 11.00 mm (0.4272 — 0.4331 in.)
		Limit	10.6 mm (0.417 in.)
Valve guide bushing	Inside diameter		7.010 — 7.030 mm (0.2760 — 0.2768 in.)
	Outside diameter (for repair part)	STD	11.492 — 11.513 mm (0.4524 — 0.4533 in.)
		O/S 0.05	11.542 — 11.563 mm (0.4544 — 0.4552 in.)
	Protrusion height		8.2 — 8.6 mm (0.323 — 0.339 in.)
	Replacing temperature (Cylinder head side)		80 — 100°C (176 —212°F)

EG

Valve	Valve overall length 1FZ−FE		
		STD (Intake)	98.4 mm (3.874 in.)
		(Exhaust)	97.9 mm (3.854 in.)
		Limit (Intake)	97.9 mm (3.854 in.)
		(Exhaust)	97.4 mm (3.835 in.)
	Valve overall length 1FZ−F		
		STD (Intake)	98.7 mm (3.886 in.)
		(Exhaust)	98.1 mm (3.862 in.)
		Limit (Intake)	98.2 mm (3.866 in.)
		(Exhaust)	97.6 mm (3.843 in.)
	Valve face angl		44.5°
	Stem diameter	(Intake)	6.970 − 6.985 mm (0.2744 − 0.2750 in.)
		(Exhaust)	6.965 − 6.980 mm (0.2742 − 0.2748 in.)
	Stem oil clearance	STD (Intake)	0.025 − 0.060 mm (0.0010 − 0.0024 in.)
		(Exhaust)	0.030 − 0.065 mm (0.0012 − 0.0026 in.)
		Limit (Intake)	0.08 mm (0.0031 in.)
		(Exhaust)	0.10 mm (0.0039 in.)
	Margin thickness 1FZ−FE		
		STD	1.2 mm (0.047 in.)
		Limit	1.0 mm (0.039 in.)
	Margin thickness 1FZ−F		
		STD (Intake)	1.5 mm (0.059 in.)
		(Exhaust)	1.4 mm (0.055 in.)
		Limit	1.0 mm (0.039 in.)
Valve spring	Deviation	Limit	2.0 mm (0.079 in.)
	Free length		43.94 − 45.06 mm (1.7299 − 1.7740 in.)
	Installed tension at 36.5 mm (1.437 in.)		214 − 238 N (21.8 − 24.2 kgf, 48.1 − 53.4 lbf)
Valve lifter	Lifter diameter		33.966 − 33.976 mm (1.3372 − 1.3376 in.)
	Lifter bore diameter		34.000 − 34.021 mm (1.3386 − 1.3394 in.)
	Oil clearance	STD	0.024 − 0.055 mm (0.0009 − 0.0022 in.)
		Limit	0.07 mm (0.0028 in.)
Manifold	Warpage	Limit	0.30 mm (0.0118 in.)
Air intake chamber	Warpage	Limit	0.30 mm (0.0118 in.)
Camshaft	Thrust clearance	STD	0.030 − 0.080 mm (0.0012 − 0.0031 in.)
		Limit	0.10 mm (0.0039 in.)
	Journal oil clearance	STD	0.0025 − 0.062 mm (0.0010 − 0.0024 in.)
		Limit	0.10 mm (0.0039 in.)
	Journal diameter		26.959 − 26.975 mm (1.0614 − 1.0620 in.)
	Circle rounout	Limit	0.06 mm (0.0024 in.)
	Cam lobe height	STD	50.61 − 50.71 mm (1.9925 − 1.9965 in.)
		Limit	50.51 mm (1.9886 in.)
	Camshaft gear backlash	STD	0.020 − 0.200 mm (0.0008 − 0.0079 in.)
		Limit	0.30 mm (0.0188 in.)
	Camshaft gear spring end free distance		18.2 − 18.8 mm (0.717 − 0.740 in.)
Spark plug tube	Protrusion		45.5 mm (1.791 in.)

Oil pump drive shaft gear	Thrust clearance	STD	0.050 – 0.150 mm (0.0020 – 0.0059 in.)
		Limit	0.30 mm (0.0118 in.)
Chain and timing gear	Chain elongation at 16 links	Limit	146.6 mm (5.772 in.)
	Crankshaft timing gear wear (w/ chain)	Limit	126.0 mm (4.961 in.)
	Camshaft timing gear wear (w/ chain)	Limit	65.4 mm (2.575 in.)
Chain tensioner slipper and vibration damper	Wear	Limit	1.0 mm (0.039 in.)
Cylinder block	Cylinder head surface warpage	Limit	0.05 mm (0.0020 in.)
	Cylinder bore diameter	STD (Mark 1)	100.000 – 100.010 mm (3.9370 – 3.9374 in.)
		(Mark 2)	100.010 – 100.020 mm (3.9374 – 3.9378 in.)
		(Mark 3)	100.020 – 100.030 mm (3.9378 – 3.9382 in.)
		Limit (STD)	100.23 mm (3.9461 in.)
		(O/S 0.50)	100.73 mm (3.9658 in.)
	Main bearing bolt outside diameter	STD	10.85 – 11.00 mm (0.4271 – 0.4331 in.)
		Limit	10.6 mm (0.417 in.)
Piston and piston ring	Piston diameter	STD (Mark 1)	99.950 – 99.960 mm (3.9350 – 3.9354 in.)
		(Mark 2)	99.960 – 99.970 mm (3.9354 – 3.9358 in.)
		(Mark 3)	99.970 – 99.980 mm (3.9358 – 3.9362 in.)
		O/S 0.50	100.450 – 100.480 mm (3.9547 – 3.9559 in.)
		1.00	100.950 – 100.980 mm (3.9744 – 3.9756 in.)
	Piston oil clearance	STD	0.040 – 0.060 mm (0.0016 – 0.0024 in.)
	Piston ring groove clearance	No.1	0.040 – 0.080 mm (0.0016 – 0.0031 in.)
		No.2	0.030 – 0.070 mm (0.0012 – 0.0028 in.)
	Piston ring end gap	STD (No.1)	0.300 – 0.520 mm (0.0118 – 0.0205 in.)
		(No.2)	0.450 – 0.670 mm (0.0177 – 0.0264 in.)
		(Oil)	0.150 – 0.520 mm (0.0059 – 0.0205 in.)
		Limit (No.1)	1.12 mm (0.0441 in.)
		(No.2)	1.17 mm (0.0461 in.)
		(Oil)	1.12 mm (0.0441 in.)
	Piston pin installing temperature		80 – 90°C (176 – 194°F)

EG

Connecting rod	Thrust clearance	STD	0.160 – 0.262 mm (0.0063 – 0.0103 in.)
		Limit	0.362 mm (0.0143 in.)
	Connecting rod bearing center wall thickness		
		STD (Mark 2)	2.489 – 2.492 mm (0.0980 – 0.0981 in.)
		STD (Mark 3)	2.492 – 2.495 mm (0.0981 – 0.0982 in.)
		STD (Mark 4)	2.495 – 2.498 mm (0.0982 – 0.0983 in.)
		STD (Mark 5)	2.498 – 2.501 mm (0.0983 – 0.0985 in.)
		STD (Mark 6)	2.501 – 2.504 mm (0.0985 – 0.0986 in.)
	Connecting rod oil clearance		
		STD (STD)	0.032 – 0.050 mm (0.0013 – 0.0020 in.)
		(U/S 0.25)	0.033 – 0.073 mm (0.0013 – 0.0029 in.)
		Limit	0.10 mm (0.0039 in.)
	Rod bending	Limit per 100 mm (3.94 in.)	0.05 mm (0.0020 in.)
	Rod twist	Limit per 100 mm (3.94 in.)	0.15 mm (0.0059 in.)
	Bushing inside diameter		26.008 – 26.020 mm (1.0239 – 1.0244 in.)
	Piston pin diameter		26.000 – 26.012 mm (1.0236 – 1.0241 in.)
	Piston pin oil clearance	STD	0.004 – 0.012 mm (0.0002 – 0.0005 in.)
		Limit	0.05 mm (0.0020 in.)
	Connecting rod bolt outside diameter	STD	8.40 – 8.60 mm (0.3307 – 0.3386 in.)
		Limit	8.0 mm (0.315 in.)
Crankshaft	Thrust clearance	STD	0.020 – 0.0220 mm (0.0008 – 0.0087 in.)
		Limit	0.30 mm (0.0118 in.)
	Thrust washer thickness	(STD)	2.440 – 2.490 mm (0.0961 – 0.0980 in.)
		(O/S 0.125)	2.503 – 2.553 mm (0.0985 – 0.1005 in.)
		(O/S 0.250)	2.565 – 2.615 mm (0.1010 – 0.1030 in.)
	Main journal oil clearance	STD (STD)	0.042 – 0.060 mm (0.0017 – 0.0024 in.)
		(U/S 0.25)	0.041 – 0.081 mm (0.0016 – 0.0032 in.)
		Limit	0.10 mm (0.0039 in.)
	Main journal diameter	STD	68.982 – 69.000 mm (2.7158 – 2.7165 in.)
		U/S 0.25	68.745 – 68.755 mm (2.7065 – 2.7069 in.)
	Main bearing center wall thickness		
		STD (Mark 2)	2.489 – 2.492 mm (0.0980 – 0.0981 in.)
		STD (Mark 3)	2.492 – 2.495 mm (0.0981 – 0.0982 in.)
		STD (Mark 4)	2.495 – 2.498 mm (0.0982 – 0.0983 in.)
		STD (Mark 5)	2.498 – 2.501 mm (0.0983 – 0.0985 in.)
		STD (Mark 6)	2.501 – 2.504 mm (0.0985 – 0.0986 in.)
	Crank pin diameter	STD	56.982 – 57.000 mm (2.2434 – 2.2441 in.)
		U/S 0.25	56.745 – 56.755 mm (2.2341 – 2.2344 in.)
	Circle runout	Limit	0.06 mm (0.0024 in.)
	Main journal taper and out–of–round	(Limit)	0.02 mm (0.0008 in.)
	Crank pin tape and out–of–round	(Limit)	0.02 mm (0.0008 in.)

EGOVU-04

TORQUE SPECIFICATIONS

Part tightened	N·m	kgf·cm	ft·lbf
Air intake connector x Cylinder head	20	200	14
Air intake connector x Carburetor	5.4	55	48 in.·lbf
Distributor x Cylinder head	21	210	15
Throttle body x Air intake chamber	21	210	15
Spark plug x Cylinder head	20	200	14
Fuel filter x Intake manifold	21	210	15
Intake manifold x Cylinder head	21	210	15
Heater inlet pipe x Intake manifold	21	210	15
EGR pipe x Cylinder head	21	210	15
Cylinder head x Cylinder block (1st)	39	400	29
Cylinder head x Cylinder block (2st)	Turn 90°	Turn 90°	Turn 90°
Cylinder head x Cylinder block (3rd)	Turn 90°	Turn 90°	Turn 90°
Cylinder head x Timing chain cover	21	210	15
Camshaft beairng cap x Cylinder head	16	160	12
Camshaft timing gear x Camshaft	74	750	54
Chain tensioner x Cylinder head	21	210	15
Water by—pass outlet x Cylinder head	21	210	15
Engine hanger x Cylinder head	41	420	30
Exhaust manifold x Cylinder head	39	400	29
Heat insulator x Exhaust manifold	19	195	14
PAIR reed valve x Cylinder head	20	200	14
Air pipe x PAIR reed valve	21	210	15
Air pipe x Exhaust manifold	21	210	15
Air pipe x Cylinder head	20	200	14
Heater pipe x Timing chain cover	21	210	15
Heater pipe x Cylinder head	20	200	14
Front exhaust pipe x Exhaust manifold	62	630	46
Intake manifold x Cylinder head	21	210	15
No.1 support bracket x Transmission	39	400	29
No.1 support bracket clamp bolt	19	195	14
Front exhaust pipe x No.3 front exhaust pipe	39	400	29
Fuel inlet hose x Fuel filter	29	300	22
Delivery pipe x Intake manifold	21	210	15
No.1 fuel pipe x Delivery pipe (Union bolt)	29	300	22
No.1 fuel pipe x Delivery pipe (Bolt)	20	200	14
No.1 fuel pipe x Fuel filter	29	300	22
Fuel return pipe x Intake manifold	20	200	14
Emission control valve set assembly x Intake manifold	20	200	14
Air intake chamber x Intake manifold	21	210	15
Oil dipstick guide x Intake manifold	20	200	14
Oil dipstick guide x No.1 oil pan	20	200	14
Heater inlet pipe x Air intake chamber	20	200	14
EGR pipe x EGR valve	64	650	47
No.2 water by—pass pipe x Cylinder head	20	200	14
No.2 water by—pass pipe x Engine hanger	20	200	14
Water outlet x Cylinder head	21	210	15
Alternator bracket x Cylinder head	43	440	32

EG

Distributor x Cylinder head	21	210	15
PS reservoir tank x Cylinder head	20	200	14
Oil jet x Cylinder block	20	200	14
Chain tensioner slipper x Cylinder block	69	700	51
Vibration damper x Cylinder block	20	200	14
Timing chain cover x Cylinder block	21	210	15
Drive belt idler pulley x Timing chain cover	43	440	32
Crankshaft pulley x Crankshaft	412	4,200	304
No.1 oil pan x Cylinder block (14 mm head bolt)	43	440	32
No.1 oil pan x Cylinder block (12 mm head bolt)	20	200	14
No.1 oil pan x Timing chain cover	20	200	14
No.2 oil pan x No.1 oil pan (Bolt)	7.8	80	69 in.·lbf
No.2 oil pan x No.1 oil pan (Nut)	8.8	90	78 in.·lbf
Transmission housing x No.1 oil pan	72	730	53
Oil level sensor x No.1 oil pan	5.4	55	48 in.·lbf
Radiator pipe x No.1 oil pan	21	210	15
A/C compressor bracket x No.1 oil pan	37	375	27
A/C compressor bracket x Cylinder block	37	375	27
A/C compressor x A/C compressor bracket	25	250	18
Water pump x Timing chain cover	21	210	15
Main bearing cap x Cylinder block (1st)	74	750	54
Main bearing cap x Cylinder block (2nd)	Turn 90°	Turn 90°	Turn 90°
Connecting rod cap x Connecting rod (1st)	48	490	35
Connecting rod cap x Connecting rod (2nd)	Turn 90°	Turn 90°	Turn 90°
Oil nozzle x Cylinder bracket	25	250	18
Rear oil seal retainer x Cylinder block	20	200	14
Oil cooler cover x Cylinder block	21	210	15
LH engine mounting bracket x Cylinder block	69	700	51
LH insulator x LH engine mounting bracket	72	730	43
RH engine mounting bracket x Cylinder block	69	700	51
RH insulator x RH engine mounting bracket	72	730	43
PS pump x Cylinder block	36	370	27
Knock sensor x Cylinder block	44	450	33
Oil filter union x Cylinder block	44	450	33
Drive plate x Crankshaft	100	1,000	74
Transmission x Cylinder block	72	730	43
Transmission x No.1 oil pan	72	730	43
Torque converter clutch x Drive plate	55	550	41
A/T oil cooler pipe x Union (Transmission)	34	350	25
Starter x Transmission	39	400	29
Frame crossmember x Frame	61	620	45
Frame crossmember x Engine rear mounting insulator	74	750	54
Engine front mounting insulator x Frame	74	750	54
Transfer under cover x Frame crossmember	28	290	21
Transfer shift lever x Transmission	18	185	13
Transmission shift lever assembly x Body	5.4	55	48 in.·lbf
Transmission control rod x Control shaft lever	13	130	9
Front propeller shaft x Front differential	74	750	54
Front propeller shaft x Transfer	74	750	54

Rear propeller shaft x Rear differential	88	900	65
Rear propeller shaft x Transfer	88	900	65
Stabilizer bar bracket mounting bolt	18	185	13
Stabilizer bar x Axle carrier	25	260	19

– MEMO –

EFI SYSTEM

DESCRIPTION

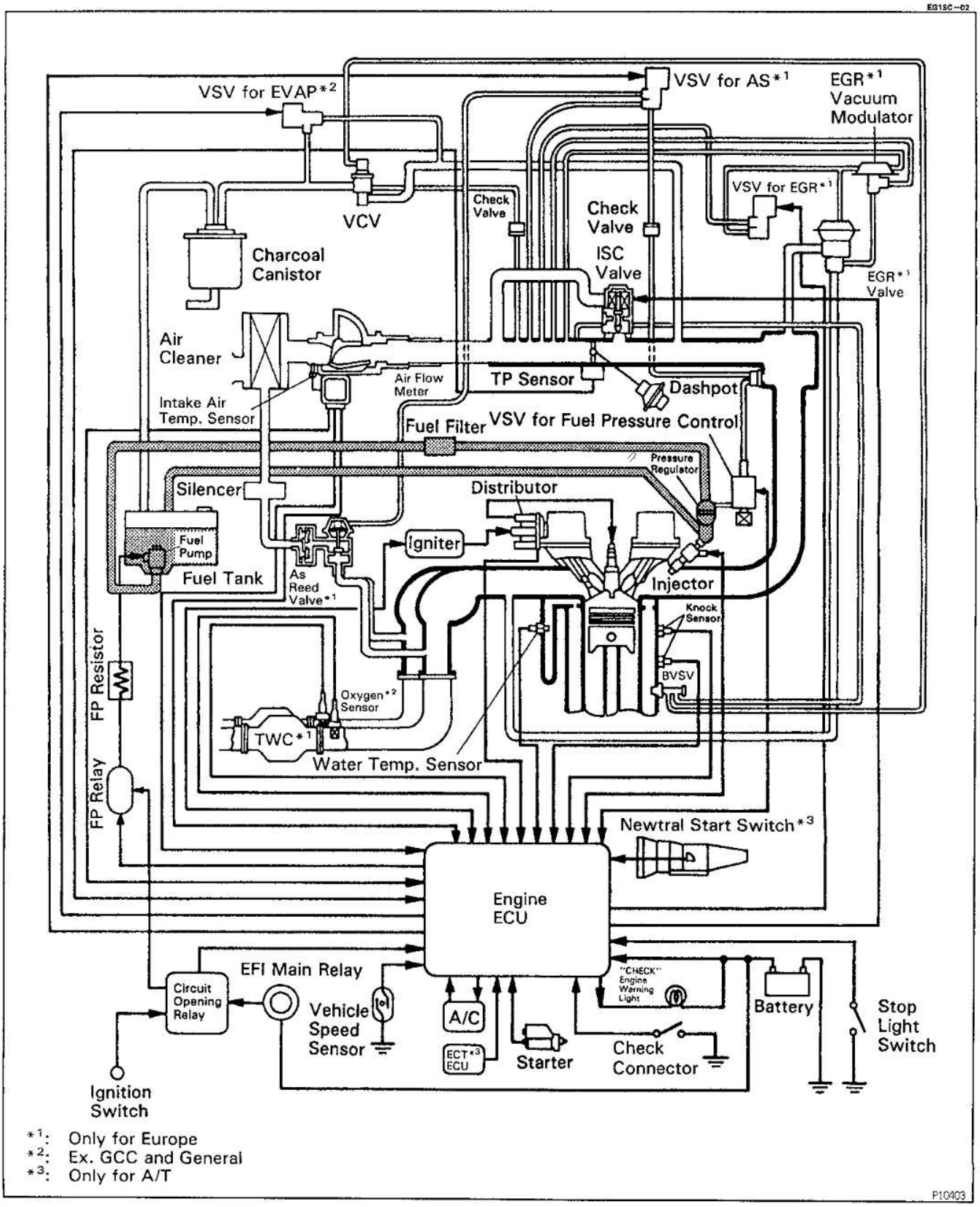

The EFI (Electronic Fuel Injection) system is composed of three basic sub—systems: Fuel, Air Induction and Electronic Control Systems.

FUEL SYSTEM

Fuel is supplied under constant pressure to the EFI injectors by an electric fuel pump. The injectors inject a metered quantity of fuel into the intake port in accordance with signals from the ECU (Electronic Control Unit).

AIR INDUCTION SYSTEM

The air induction system provides sufficient air for engine operation.

ELECTRONIC CONTROL SYSTEM

The 1FZ—FE engine is equipped with a TOYOTA Computer Controlled System (TCCS) which centrally controls the EFI, ESA, ISC diagnosis systems etc. by means of a Engine Control Unit (ECU)—formerly EFI computer) employing a microcomputer.
The ECU controls the following functions:

1. Electronic Fuel Injection (EFI)
   The ECU receives signals from various sensors indicating changing engine operation conditions such as:
   Intake air volume
   Intake air temperature
   Water temperature
   Engine speed
   Acceleration / deceleration
   Exhaust oxygen content etc.
   The signals are utilized by the ECU to determine the injection duration necessary for an optimum air—fuel ratio.
2. Electronic Spark Advance (ESA)
   The ECU is programmed with data for optimum ignition timing under any and all operating conditions. Using data provided by sensors which monitor various engine functions (engine speed, coolant temperature, etc.), the micro computer (ECU) triggers the spark at precisely the right instant.
3. Idle Speed Control (ISC)
   The ECU is programmed with target idling speed values to respond to different engine conditions (coolant temperature, air conditioning (A/C) ON/OFF, etc.). Sensors transmit signals to the ECU which controls the flow of air through the by—pass of the throttle valve and adjust idle speed to the target value.
4. Diagnosis
   The ECU detects any malfunctions and abnormalties in the sensor network and lights a "CHECK" engine warning light on the combination meter. At the same time, trouble is identified and a diagnostic code is recorded by the ECU. The diagnostic code can be read by the number of blinks of the "CHECK" engine warning light when terminals TE1 and E1 are connected. The diagnostic trouble codes are referred to the later page.
   (See Diagnostic Code Chrat in EG—194)
5. Fail—Safe Function
   In the event of the sensor malfunction, a back—up circuit will take over to provide minimum drivability, and the "CHECK" engine warning will illuminate.

EG0C7-07

SYSTEM CIRCUIT

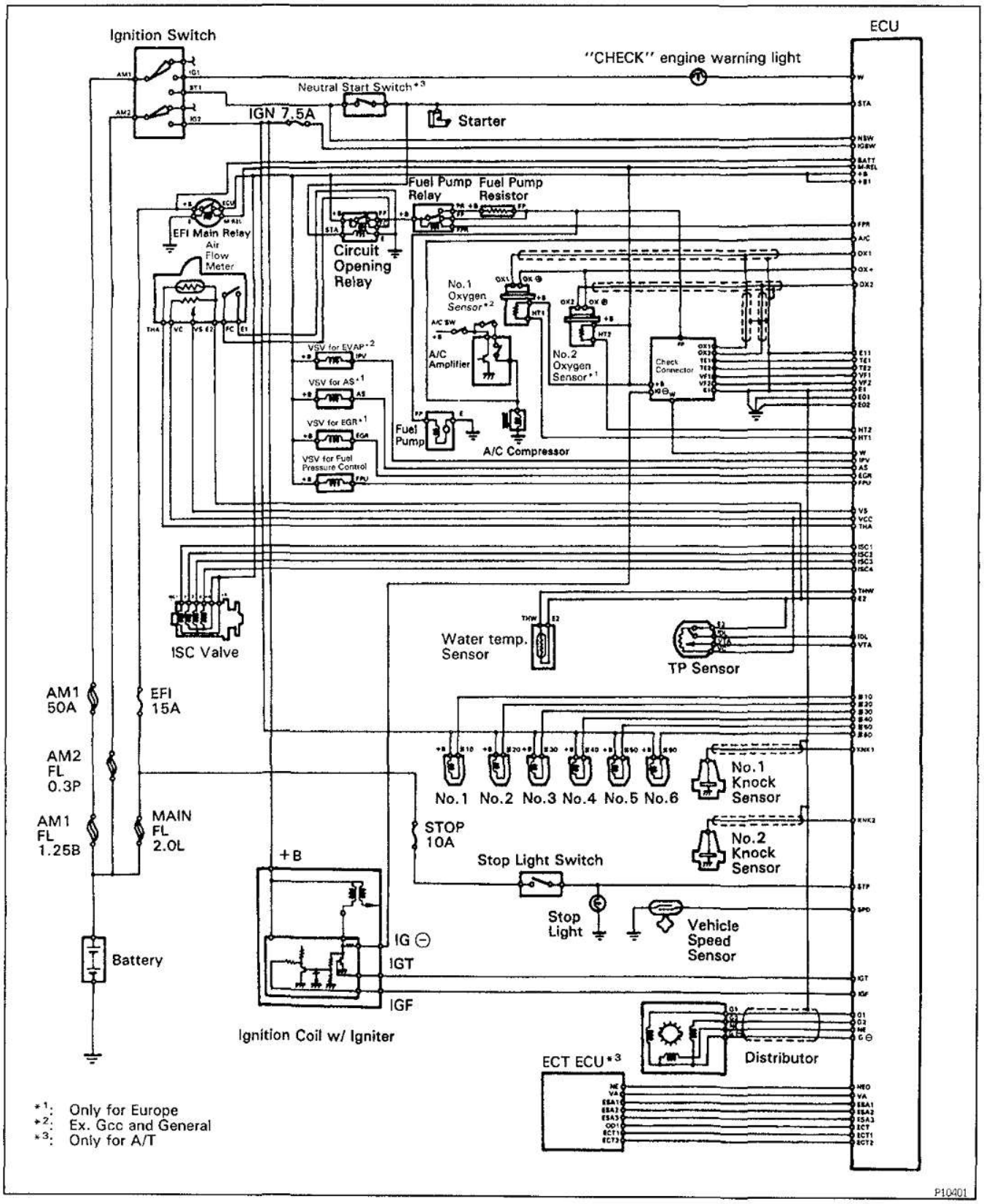

PREPARATION

SST (SPECIAL SERVICE TOOLS)

EG0CF-07

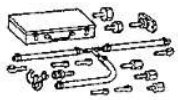	09268-41045	Injection Measuring Tool Set	
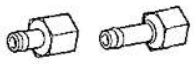	(09268-52010)	Injection Measuring Attachment	
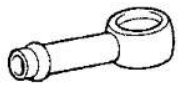	(90405-09015)	No.1 Union	
	09268-45012	EFI Fuel Pressure Gauge	
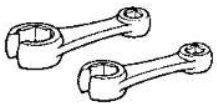	09631-22020	Power Steering Hose Nut 14 x 17 mm Wrench Set	Fuel line flare nut
	09816-30010	Oil Pressure Switch Socket	Knock sensor
	09842-30070	Wiring "F" EFI Inspection	
	09843-18020	Diagnosis Check Wire	

RECOMMENDED TOOLS

EG0CG-01

	09082-00015	TOYOTA Electrical Tester	
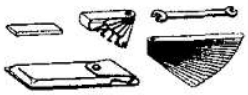	09200-00010	Engine Adjust Kit	
	09258-00030	Hose Plug Set	Plug for the vacuum hose, fuel hose etc.

EG0CH-01

EQUIPMEMT

Graduated cylinder	Injector
Carburetor cleaner	Throttle body
Sound scope	Injector
Tachometer	
Torque wrench	
Vacuum gauge	
Soft brush	Throttle body

EG

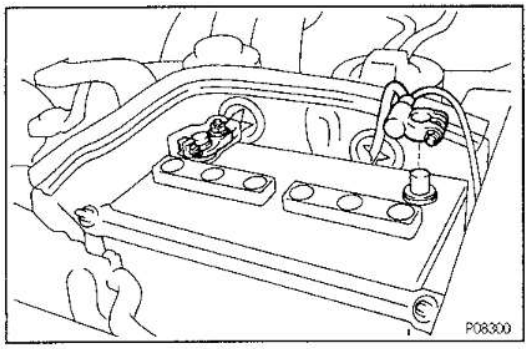

PRECAUTION

EG1A2-03

1. **Before working on the fuel system, disconnect the cable from negative (−) terminal of the battery.**
   HINT: Any diagnostic trouble code retained by the computer will be erased when the battery terminal is removed.
   Therefore, if necessary, read the diagnosis before removing the terminal.
2. **Do not smoke or work near an open flame when working on the fuel system.**
3. **Keep gasoline away from rubber or leather parts.**

MAINTENANCE PRECAUTIONS

EG11U-07

1. **CHECK CORRECT ENGINE TUNE−UP**
   (See page EG−11)

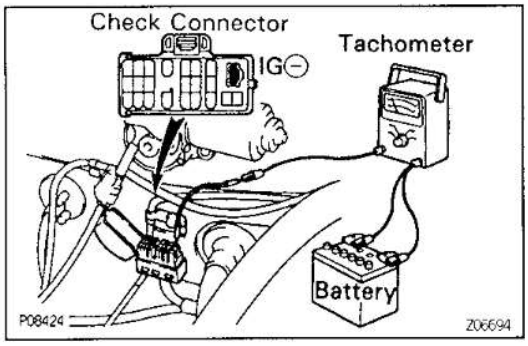

2. **PRECAUTION WHEN CONNECTING GAUGE**
   (a) Use battery as the power source for the timing light, tachometer, etc.
   (b) Connect the tester probe of a tachometer to the terminal IG⊖ of the check connector.

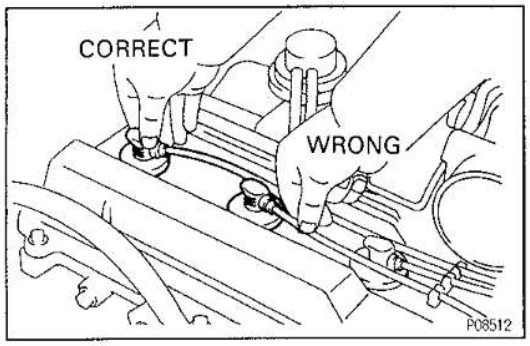

3. **IN EVENT OF ENGINE MISFIRE, FOLLOWING PRECAUTIONS SHOULD BE TAKEN**
   (a) Check proper connection of battery terminals, etc.
   (b) Handle high−tension cords carefully.
   (c) After repair work, check that the ignition coil terminals and all other ignition system lines are reconnected securely.
   (d) When cleaning the engine compartment, be especially careful to protect the electrical system from water.

4. **PRECAUTIONS WHEN HANDLING OXYGEN SENSORS**
   (a) Do not allow oxygen sensor to drop or hit against an object.
   (b) Do not allow the sensor to come into contact with water.

EG11V-08

IF VEHICLE IS EQUIPPED WITH MOBILE COMMUNICATION (HAM, CB, ETC.)

For vehicles with mobile communications systems such as two — way radios and cellular telephones, observe the following precautions.

1. Install the antenna as far as possible away from the ECM, ECU and sensors of the vehicle's electronic systems.
2. Install the antenna feeder at least 20 cm (7.87 in.) away from the ECM, ECU and sensors of the vehicle's electronics systems. For details about ECM, ECU and sensor locations, refer to the section on the applicable component.
3. Do not wind the antenna feeder together with any other wiring. As much as possible, also avoid running the antenna feeder parallel with other wire harnesses.
4. Confirm that the antenna and feeder are correctly adjusted.
5. Do not install powerful mobile communications systems.

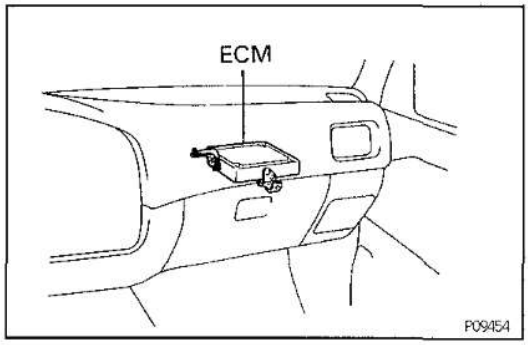

EG0CM-06

AIR INDUCTION SYSTEM

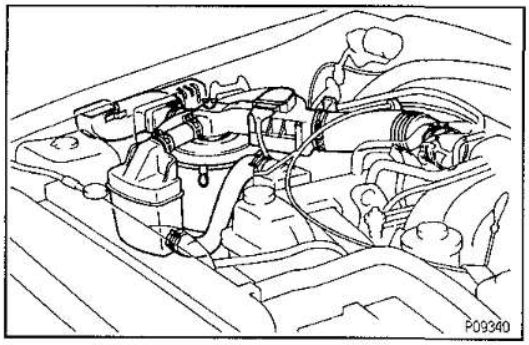

1. Separation of the engine oil dipstick, oil filler cap, PCV hose, etc. may cause the engine to run out of turn.
2. Disconnection, looseness or cracks in the parts of the air induction system between the air flow meter and cylinder head will allow air scution and cause the engine to run out of tune.

EG1A3-05

ELECTRONIC CONTROL SYSTEM

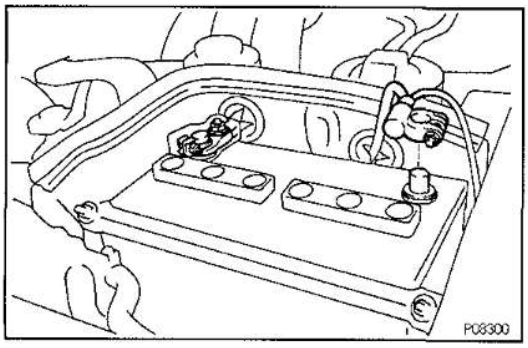

1. Before removing EFI wiring connectors, terminals, etc., first disconnect the power by either turning the ignition switch OFF or disconnecting the battery terminals.
   HINT: Always check the diagnostic trouble code before disconnecting the battery terminal.

EG

2. When installing the battery, be especially careful not to incorrectly connect the positive (+) and negative (−) cables.
3. Do not permit parts to receive a severe impact during removal or installation. Handle all EFI parts carefully, especially the ECU.
4. Do not be careless during troubleshooting as there are numerous transistor circuits and even slight terminal contact can further troublles.
5. Do not open the ECU cover.
6. When inspecting during rainy weather, take care to prevent entry of water. Also, when washing the engine compartment, prevent water from getting on the EFI parts and wiring connectors.
7. Parts should be replaced as an assembly.

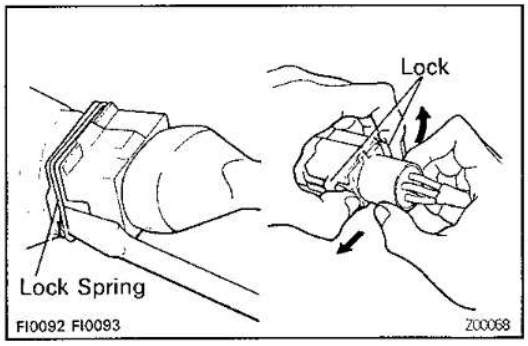

8. Care is required when pulling out and inserting wiring connectors.
(a) Release the lock and pull out the connector, pulling on the connectors.

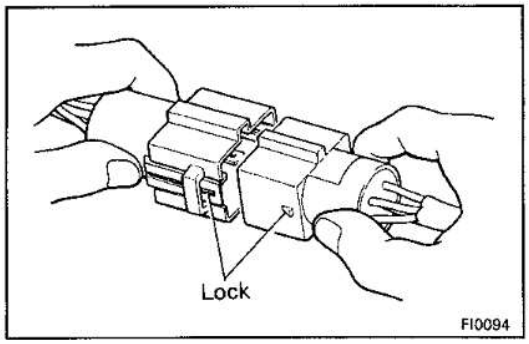

(b) Fully insert the connector and check that it is locked.

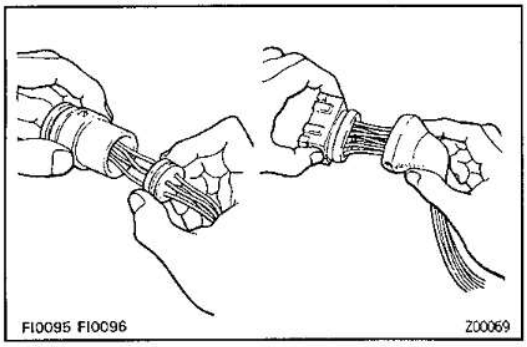

9. When inspecting a connector with a volt/ohmmeter.
(a) Carefully take out the water—proofing rubber if it is a water—proof type connector.

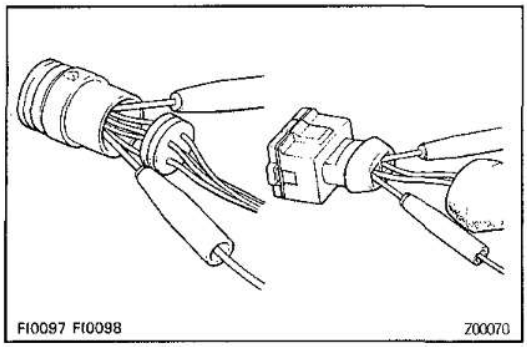

(b) Insert the test probe into the connector from wiring side when checking the continuity, amperage or voltage.
(c) Do not apply unnecessary force to the terminal.
(d) After checking, install the water—proofing rubber on the connector securely.

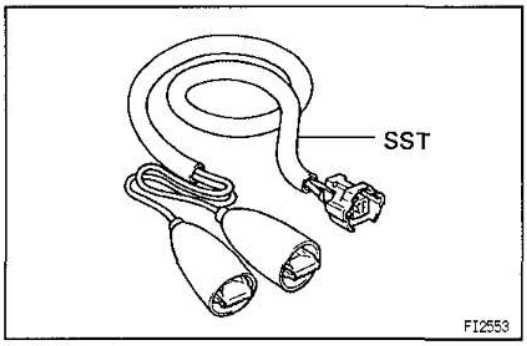

10. Use SST for inspection or test of the injector or its wiring connector.
SST 09842—30070

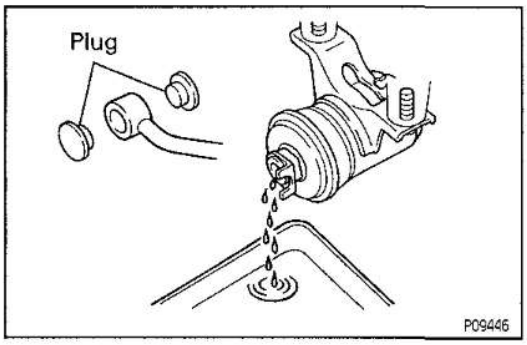

FUEL SYSTEM

EG1SD-02

1. When disconnecting the high fuel pressure line, a large amount of gasoline will spill out, so observe the following procedures:
(a) Put a container under the connection.
(b) Slowly loosen the connection.
(c) Disconnect the connection.
(d) Plug the connection with a rubber plug.

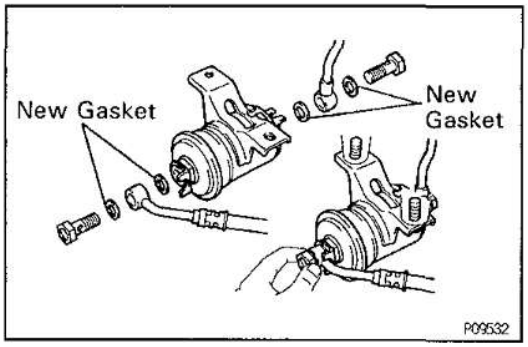

2. When connecting the flare nut or union bolt on the high pressure pipe union, observe the following procedures:
(Union Bolt Type)
(a) Always use a new gasket.
(b) Tighten the union bolt by hand.
(c) Tighten the union bolt to the specefied torque.
Torque: 29 N·m (300 kgf·cm, 22 ft·lbf)

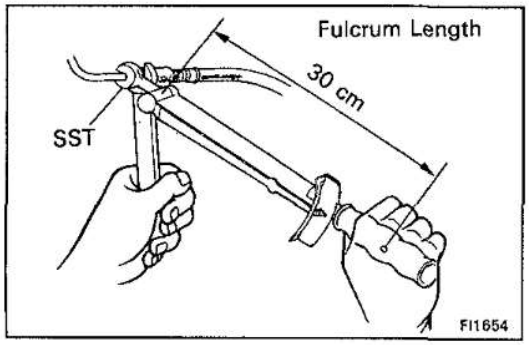

(Flare Nut Type)
(a) Apply a light coat of engine oil to the flare and tighten the flare nut by hand.
(b) Using SST, tighten the flare nut to the specified torque.
SST 09631—22020
Torque: 30 N·m (310 kgf·cm, 22 ft·lbf)
HINT: Use a torque wrench with a fulcrum length of 30 cm (11.81 in.).

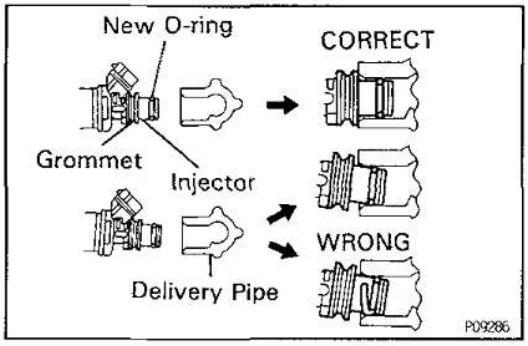

3. Observe the following precautions when removing and installing the injectors.
(a) Never reuse the O–ring.
(b) When placing a new O–ring on the injector, take care not to damage it in any way.
(c) Coat a new O–ring with spindle oil or gasoline before installing–never use engine, gear or brake oil.

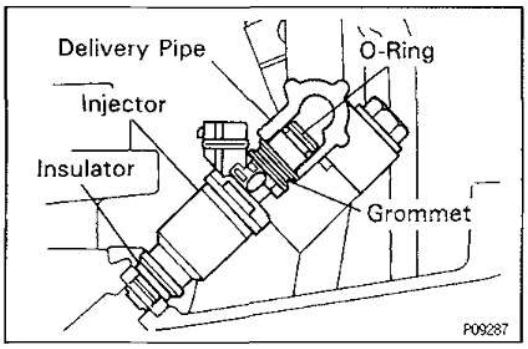

4. Install the injector to the delivery pipe and intake manifold as shown in the illustration.

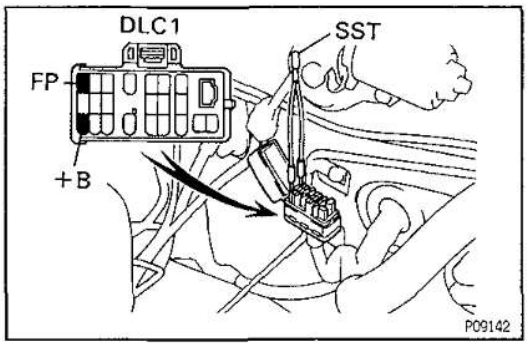

5. Check that there are no fuel leaks after performing any maintenance on the fuel system.
(a) Using SST, connect terminals +B and FP of the check connector.
SST 09843–18020

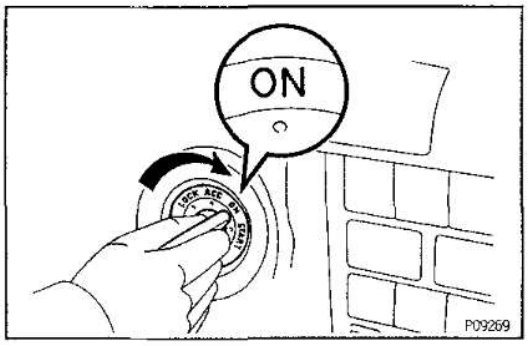

(b) Turn the ignition switch ON.
NOTICE: Do not start the engine.

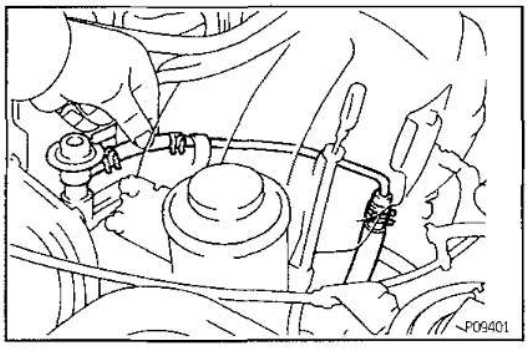

(c) When the fuel return hose is pinched, the pressure within high pressure line will rise to approx. 392 kPa (4 kgf/cm², 57 psi). In this state, check to see that there are no leaks from any part of the fuel system.
NOTICE: Always pinch the hose. Avoid bending as it may cause the hose to crack.

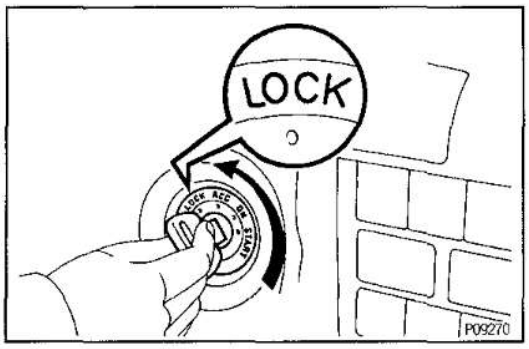

(d) Turn the ignition switch OFF.

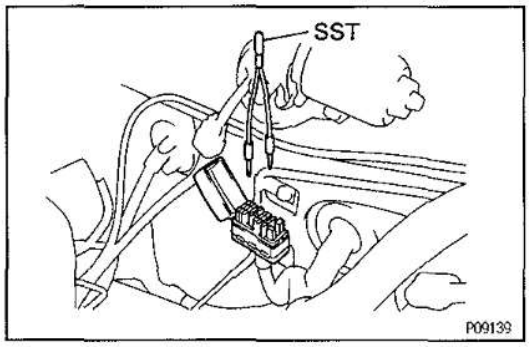

(e) Remove SST from the check connector.
SST 09843–18020

DIAGNOSIS SYSTEM

DESCRIPTION

EG11Z-04

EG

The ECU contains a built—in, self—diagnosis system by which troubles with the engine signal network are detected and a "CHECK" engine warning light on the combination meter lights up. By analyzing various signals as shown in the later table (See page EG—194) the ECU detects system malfunctions relating to the sensors or actuators.

The self—diagnosis system has two modes, a normal mode and a test moode.

If a malfunction is detected when in the normal mode, the ECU lights up the "CHECK" Engine warning light to inform the driver of the occurrence of a malfunction. (For some codes the light does not come on.) The light goes off automatically when the malfunction has been repaired. But the diagnostic trouble code(s) remains stored in the ECU memory. The ECU stores the code(s) until it is cleared by removing the EFI fuse with the ignition switch OFF.

The diagnostic trouble code can be read by the number of blinks of the "CHECK" Engine warning light when TE1 and E1 terminals on the check connector are connected. When 2 or more codes are indicated, the lowest number (code) will appear first.

If a malfunction is detected when in the test mode, the ECU lights up the "CHECK" Engine warning light to inform the technician of the occurrence of a malfunction (except for code Nos. 43, 51 and 53). In this case, TE2 and E1 terminals on the check connector should be connected as shown later. (See page EG—192).

In the test mode, even if the malfunction is corrected, the malfunction code is stored in the ECU memory even when the ignition switch is OFF (except code Nos.43, 51 and 53). This also applies in the normal mode. The diagnostic mode (normal or test) and the output of the "CHECK" Engine warning light can be selected by connecting the TE1, TE2 and E1 terminals on the check connector, as shown later.

A test mode function has been added to the functions of the self—diagnosis system of the normal mode for the purpose of detecting malfunctions such as poor contact, which are difficult to detect in the normal mode. This function fills up the self—diagnosis system. The test mode can be implemented by the technician following the appropriate procedures of check terminal connection and operation described later. (See page EG—192)

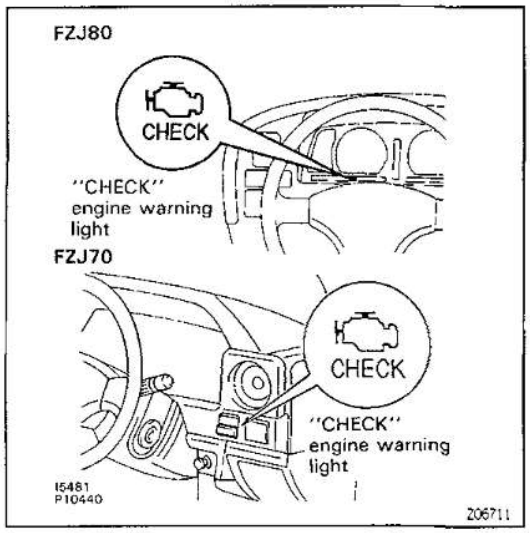

EG27N-01

"CHECK" ENGINE WARNING LIGHT

1. The "CHECK" engine warning light will come on when the ignition switch is placed at ON and the engine is not running.
2. When the engine is started, the "CHECK" engine warning light should go off.
   If the light remains on, the diagnosis system has detected a malfunction or abnormality in the system.

EG

EG122-03

DIAGNOSTIC CODES OUTPUT
(Normal mode)

To obtain an output of diagnostic trouble codes, proceed as follows:

1. Initial conditions
(a) Battery voltage 11 V or more
(b) Throttle valve fully closed (throttle position sensor IDL points closed)
(c) Transmission in neutral position
(d) Accessories switched OFF
(e) Engine at normal operating temperature
2. Turn the ignition switch ON. Do not start the engine.

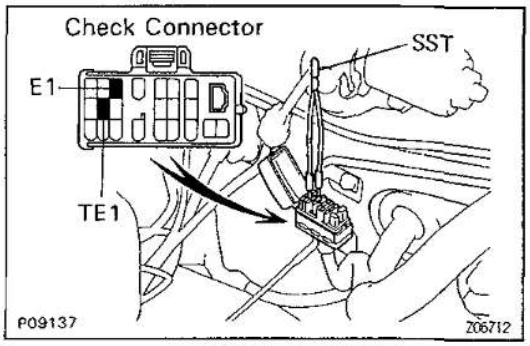

3. Using SST, connect terminals TE1 and E1 of the check connector.
   SST 09843-18020

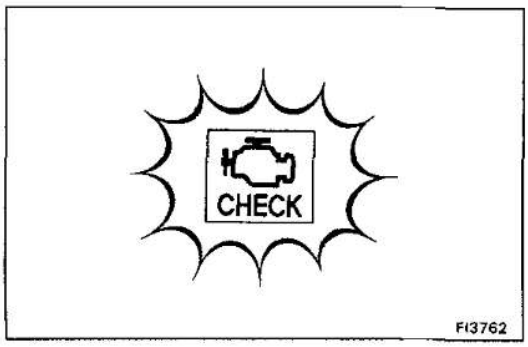

4. Read the diagnostic code as indicated by the number of flashes of the "CHECK" engine warning light.

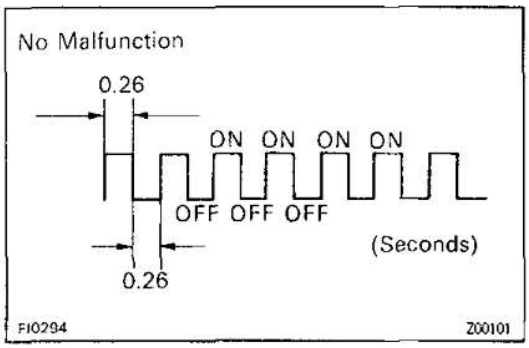

Diagnostic Codes (See page EG–194)

(a) Normal System Operation (no malfunction)

- The light will alternately blink ON and OFF at 0.26 seconds intervals.

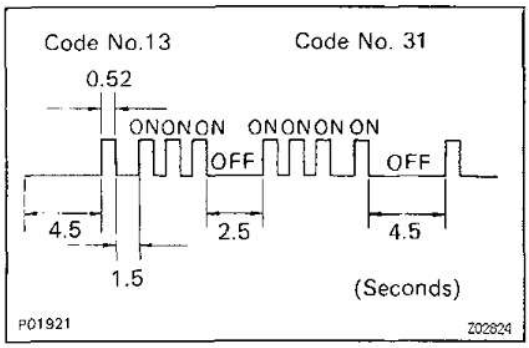

(b) Malfunction Code Indication

- In the event of a malfunction, the light will blink every 0.52 seconds. The first number of blinks will equal the first digit of a 2–digit diagnostic trouble code and, after a 1.5 seconds pause, the 2nd number of blinks will equal the 2nd. If there are two or more codes, there will be a 2.5 seconds pause between each code.

- After all the codes have been output, there will be a 4.5 seconds pause and they will all be repeated as long the terminals TE1 and E1 of the data link connector 1 are connected.

HINT: In the event of a number of trouble codes, indication will begin from the smaller value and continue to the larger.

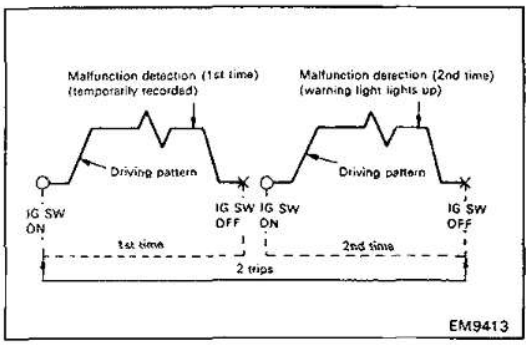

(c) (2 Trip Detection Logic)

Diagnostic code No. 25 use "2 trip detection logic". With this logic, when a malfunction is first detected, the malfunction is temporarily stored in the ECU memory. If the same case is detected again during the second drive test, this second detection causes the " CHECK" engine warning light to light up.

The 2 trip repeats the same mode a 2nd time. (However, the ignition switch must be turned OFF between the 1st time and 2nd time.) In the Test Mode, the "CHECK" engine warning light lights up the 1st time a malfunction is detected.

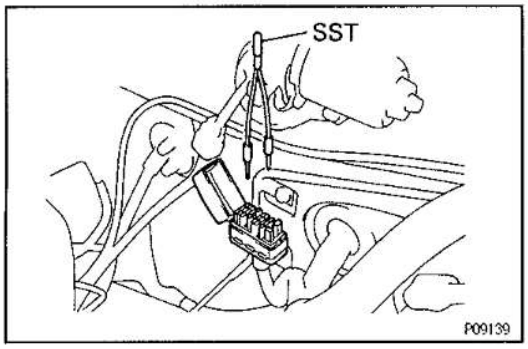

5. After the diagnosis check, remove SST.
SST 09843–18020

EG

(Test mode)

HINT:

- Compared to the normal mode, the test mode has high sensing ability to detect malfunctions.
- It can also detect malfunctions in the starter signal circuit, air conditioning signal and neutral start switch signal.
- Furthermore, the same diagnostic items which are detected in the normal mode can also be detected in the test mode.

To obtain an output of diagnostic trouble codes, proceed as follows:

1. Initial conditions
(a) Battery voltage 11 volts or more
(b) Transmission in neutral position
(c) Accessories switched OFF
(d) Engine at normal operation temperature

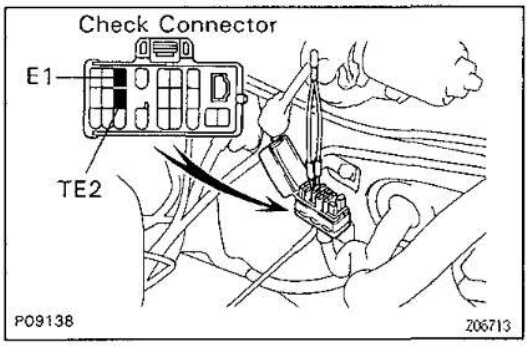

2. First using SST, connect terminals TE2 and E1 of the check connector.
SST 09843–18020

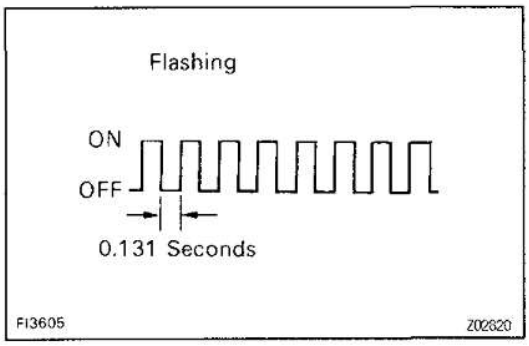

3. Turn the ignition switch ON.
HINT: To confirm that the test mode is operating, check that the "CHECK" engine warning light flashes when the ignition switch is turned ON.
4. Start the engine and drive the vehicle at a speed of 10 km/h (6 mph) or higher.
5. Simulate the conditions of the malfunction decribed by the customer.

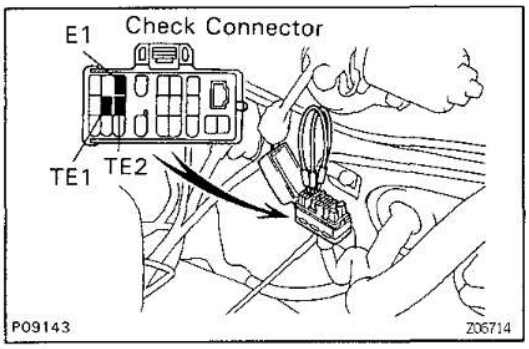

6. Using SST, connect terminals TE1 and E1 of the check connector.
SST 09843–18020
7. Read the diagnostic code as indicated by the number of flashes of the "CHECK" engine warning light.
(See page EG–194)

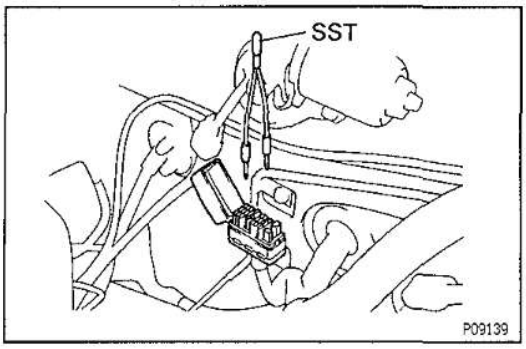

8. After the diagnosis check, remove SST.
   SST 09843–18020
   HINT:
   - The test mode will not start if terminals TE2 and E1 are connected after the ignition switch is turned ON.
   - The starter signal and vehicle speed signal will be diagnosed by the ECU as malfunctions, and code Nos.42 and 43 will be output, if the operation in step 4 is not performed.
   - When the automatic transmission shift lever is in the "D", "2", "L" or "R" shift position, or when the air conditioning is turn ON or when the accelerator pedal is depressed, code No.51 (Switch condition signal) is output, but this is not abnormal.

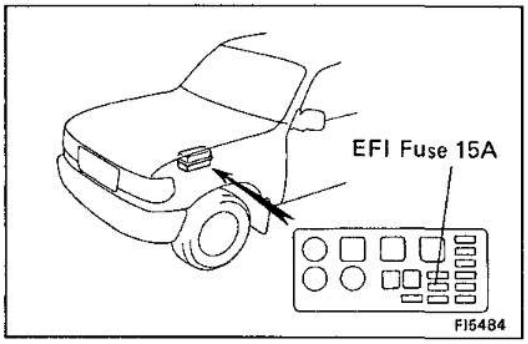

DIAGNOSTIC CODE CANCELLATION

EG123–03

1. After repair of the trouble area, the diagnostic code retained in memory by the ECU must be cancelled out by removing the EFI fuse (15A) for 30 seconds or more, depending on ambient temperature (the lower the temperature, the longer the fuse must be left out) with the ignition switch OFF.
   HINT:
   - Cancellation can also be done by removing the battery negative (–) terminal, but in this case, other memory systems (clock, radio ETR etc.) will also cancelled out.
   - If the diagnostic code is not cancelled out, it will be retained by the ECU and appear along with a new code in the event of future trouble.
   - If it is necessary to work on engine components requiring removal of the battery terminal, a check must first be made to see if a diagnostic code has been recorded.
2. After cancellation, perform road test of the vehicle to check that a normal code is now read on the "CHECK" engine warning light.
   If the same diagnostic code appears, it indicates that the trouble area has not been repaired thoroughly.

EG124-03

DIAGNOSIS INDICATION

(1) When 2 or more codes are indicated, the lowest number (code) will appear first.
(2) All detected diagnostic codes, except for code Nos.51 and 53 will be retained in memory by the ECU from the time of detection until canceled out.
(3) Once the malfunction is cleared, the "CHECK" engine warning light on the combination meter will go off but the diagnostic code(s) remain stored in ECU memory (except for code Nos.43, 51 and 53).

EG

EG27P-01

DIAGNOSTIC CODES

HINT:

- If a malfunction is detected during the diagnostic code check, refer to the circuit indicated in the table, and turn to the corresponding page.
- Your readings may vary from the parameters listed in the table, depending on the instruments used.

Code No.	Number of "CHECK" engine warning light Blinks	System	"CHECK" engine warning light *1		Diagnosis	Trouble area	Memory *2
			Normal Mode	Test Mode			
—	FI1604	Normal	—	—	No malfunctions detected.	—	—
12	FI1606	RPM Signal	ON	N.A.	No "NE" or "G1", "G2" signal to ECM within 2 seconds after cranking the engine.	• Distributor circuit • Distributor • Starter signal circuit • ECU	○
13	FI1607	RPM Signal	ON	ON	No "NE" signal is to ECU for 0.1 sec. or more when engine speed is above 1,000 rpm.	• Distributor circuit • Distributor • ECU	○
14	FI1608	Ignition Signal	ON	N.A.	No "IGF" signal to ECU 6 times in succession, and no signal input within 256 msec.	• Igniter and ignition coil circuit • Igniter and ignition coil • ECU	○
21 *4	FI1609	No.1 Oxygen Sensor Signal	ON	ON	At normal driving speed (below 100 km/h and engine speed is above 1,700 rpm), amplitude of oxygen sensor signal (OX1) is reduced to between 0.35 — 0.70 V continuously for 60 seconds or more.	• Oxygen sensor circuit • Oxygen sensor • ECU	○
		No.1 Oxygen Sensor Heater Signal			Open or short circuit in oxygen sensor heater. (HT1)	• Oxygen sensor circuit • Oxygen sensor • ECU	○
22	FI1610	Coolant Temp. Sensor Signal	ON	ON	Open or short circuit in coolant temp. sensor signal for 0.5 sec. or more. (THW)	• Coolant temp. sensor circuit • Coolant temp. sensor • ECU	○
24	FI1611	Intake Air Temp. Sensor Signal	*3 ON	ON	Open or short circuit in intake air temp. sensor signal for 0.5 sec. or more. (THA)	• Intake air temp. sensor circuit • Intake air temp. sensor • ECU	○

V02808

DIAGNOSTIC CODES (Cont'd)

Code No.	Number of "CHECK" engine warning light Blinks	System	"CHECK" engine warning light *1 Normal Mode	Test Mode	Diagnosis	Trouble area	Memory *2
*4 25	FI2562	Air-Fuel Ratio Lean Malfunction	ON	ON	(1) Heated oxygen sensor output at 2,000 rpm is less than 0.45 V for at least 90 seconds when warmed up. Applies only to code 25 and for California models, excepting high-altitude areas. *7 (2 trip detection logic) (1) — (3)	• Engine ground bolt loose • Open in E1 circuit • Injector circuit • Injector • Fuel line pressure • VAF meter • PAIR system • Heated oxygen sensor circuits • Heated oxygen sensors • Ignition system • ECM	○
*5 28	FI2698	No. 2 Oxygen Sensor Signal	ON	ON	At normal driving speed (below 100 km/h and engine speed is above 1,700 rpm), amplitude of heated oxygen sensor signal (OX2) is reduced to between 0.35 — 0.70 V continuously for 60 seconds or more.	• Oxygen sensor circuit • Oxygen sensor • ECU	○
		No. 2 Oxygen Sensor Heated Signal			Open or short circuit in heated oxygen sensor heater. (HT2)	• Oxygen sensor circuit • Oxygen sensor • ECU	
31	FI1612	Air Flow Meter Signal	ON	ON	When idle contacts are closed and engine speed is 1,500 rpm or less, there is an open circuit in VC and VS signal or a short circuit between VS and E2.	• Air flow meter circuit • Air flow meter • ECU	○
32	FI1613	Air Flow Meter Signal	ON	ON	Open circuit in E2 or short circuit between VC and VS.	• Air flow meter circuit • Air flow meter • ECU	○
35	FI2699	Vacuum Sensor Signal	ON *3	ON	Open or short circuit in Vacuum sensor signal for 0.5 sec. or more.	• ECU	○
41	FI1614	Throttle Position Sensor Signal	ON *3	ON	Open or short circuit in throttle position sensor signal for 0.5 sec. or more.	• TP sensor circuit • TP sensor • ECU	○
42	FI1615	Vehicle Speed Sensor Signal	OFF	OFF	No "SPD" signal for 8 seconds when engine speed 2,700 rpm or more and with vehicle not moving.	• Vehicle speed sensor circuit • Vehicle speed sensor • ECU	○
43	FI1616	Starter Signal	N.A.	OFF	No "STA" signal to ECU until engine speed reaches 800 rpm with vehicle not moving.	• Ignition switch circuit • Ignition switch • ECU	×
52	BE3935	No. 1 Knock Sensor Signal (front side)	ON	N.A.	No No. 1 Knock sensor signal to ECU for 6 crank revolutions with engine speed between 1,800 rpm and 5,200 rpm.	• Open or short in No. 1 knock sensor circuit. • No. 1 knock sensor (looseness) • ECU	○

V02809

EG

DIAGNOSTIC CODES (Cont'd)

Code No.	Number of "CHECK" engine warning light Blinks	System	"CHECK" engine warning light *1		Diagnosis	Trouble area	*2 Memory
			Normal Mode	Test Mode			
53	BE3935	Knock Control Signal	ON	N.A.	No knock control signal to ECU for 12 crank revolutions with engine speed between 1,800 rpm and 5,200 rpm.	• ECU	×
55	BE3935	No. 2 Knock Sensor Signal (rear side)	ON	N.A.	No No. 2 knock sensor signal to ECU for 6 crank revolutions with engine speed between 1,800 rpm and 5,200 rpm.	• Open or short in No. 2 knock sensor circuit • No. 2 knock sensor (looseness) • ECU	○
81 *6	P09304	ECT ECU Communication	ON	N.A.	Open in ECT1 circuit for 2 sec. or more.	• ECT1 circuit	○
83 *6	P09304	ECT ECU Communication	ON	N.A.	Open in ESA1 circuit for 0.5 sec., after 0.5 sec. at idle.	• ESA1 circuit	○
84 *6	P09304	ECT ECU Communication	ON	N.A.	Open in ESA2 circuit for 0.5 sec., after 0.5 sec. at idle.	• ESA2 circuit	○
85 *6	P09304	ECT ECU Communication	ON	N.A.	Open in ESA3 circuit for 0.5 sec., after 0.5 sec. at idle.	• ESA3 circuit	○
51	FI1617	Switch Condition Signal	N.A.	OFF	No "IDL" signal, "NSW" signal or "A/C" signal to ECM, with the DLC1 terminals E1 and TE1 connected.	• A/C switch circuit • A/C switch • A/C amplifire • TP sensor IDL circuit • NSW circuit • NSW • Acceleration pedal and cable • ECU	×

V02810

REMARKS

*1: "ON" displayed in the diagnosis mode column indicates that the "CHECK" engine warning light is lighted up when a malfunction is detected.
"OFF" indicates that the "CHECK" does not light up during malfunction is detected.

*2: "○" in the memory column indicates that a diagnostic trouble code is recorded in the ECU memory when a malfunction occurs. "X" indicates that a diagnostic trouble code is not recorded in the ECU memory even if a malfunction occurs.
Accordingly, output of diagnostic results is performed with the ignition switch ON.

*3: The malfunction indicator lamp comes on if malfunction occurs only for California specifications.

*4: Codes No.21 and 25 are used only for Europe and Australia specifications.

*5: Code No.28 is used only for Europe specifications.

*6: Codes No.81, 83, 84, 85, are used only for ECT specifications.

*7: "2 trip detection logic" (See page EG—190)

DIAGNOSTIC TROUBLE CODE DETECTION DRIVING PATTERN

Purpose of the driving pattern.

(a) To simulate diagnostic code detecting condition after diagnostic code is recorded.

(b) To check that the malfunction is corrected when the repair is completed, confirming that diagnostic code is no longer detected.

EG

Code No.	21, 28	Oxygen Sensor Circuit

Malfunction: Deterioration of Oxygen Sensor

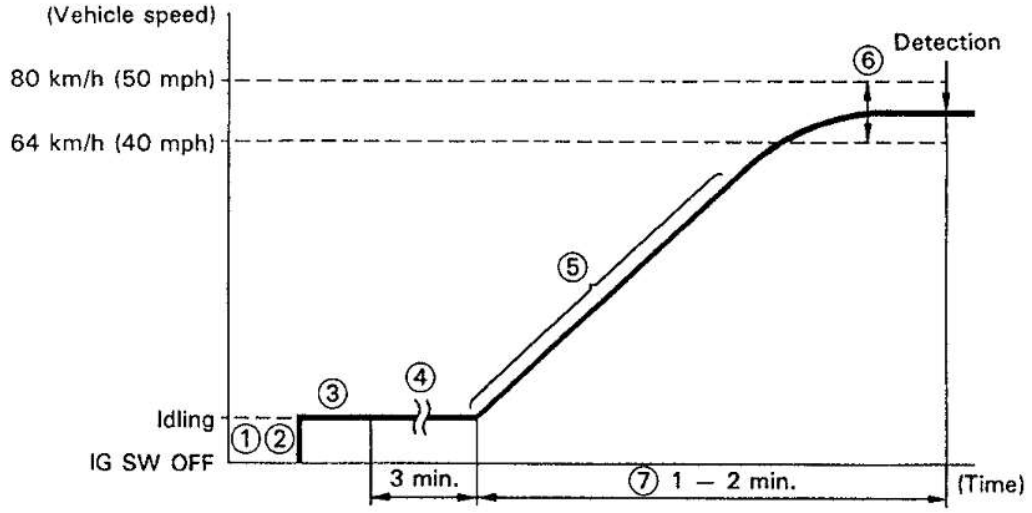

① Disconnect the EFI fuse (15 A) for 10 seconds or more, with ignition swith OFF.

② Initiate test mode: Connect terminals TE2 and E1 or Check Connector with ignition switch OFF.

③ Start the engine and warm the engine up with all accessory switches OFF.

④ After the engine is warmed up, let it idle for 3 minutes.

⑤ Accelerate gradually and maintain at approximately 1,500 rpm, or within the 1,300 to 1,700 rpm range. Turn the A/C ON, and drive in "D", upshift appropriately. Shift carefully so that the engine speed would not fall below 1,200 rpm. Depress the accelerator pedal gradually and maintain a steady speed to avoid engine braking.

⑥ Maintain the vehicle speed at 64 — 80 km/h (40 — 50 mph).

⑦ Keep the vehicle running for 1 — 2 minutes after starting acceleration.

HINT: If any malfunction is detected, the malfunction indicator lamp will light up during step ⑦.

NOTICE: If this procedure is not strictly followed, you cannot detect the malfunction.

V02811

DIAGNOSTIC CODE DETECTION DRIVING PATTERN (Cont'd)

Purpose of the driving pattern.

(a) To simulate diagnostic code detecting condition after diagnostic code is recorded.

(b) To check that the malfunction is corrected when the repair is completed, confirming that diagnostic code is no longer detected.

EG

Code No.	25	Air-Fuel Ratio Lean Malfunction

Malfunction: **Open or Short in Oxygen Sensor**

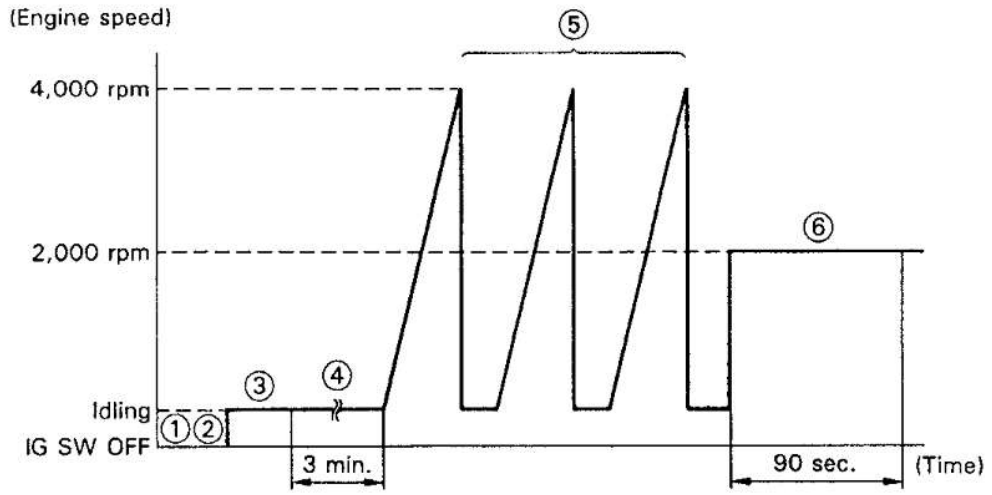

① Disconnect the EFI fuse (15 A) for 10 seconds or more, with ignition switch OFF.

② Initiate test mode: Connect terminal TE2 and E1 of Check connector with ignition switch OFF.

③ Start the engine and warm the engine up, with all accessory switches OFF.

④ After the engine is warmed up, let it idle for 3 minutes.

⑤ Accelerate rapidly to 4,000 rpm three times.

⑥ Maintain 2,000 rpm for 90 seconds.

HINT: If a malfunction is detected, the "CHECK" engine warning light will light up during step ⑥.

NOTICE: **If this procedure is not strictly followed, you cannot detect the malfunction.**

V02812

EG127-03

DIAGNOSIS CIRCUIT INSPECTION

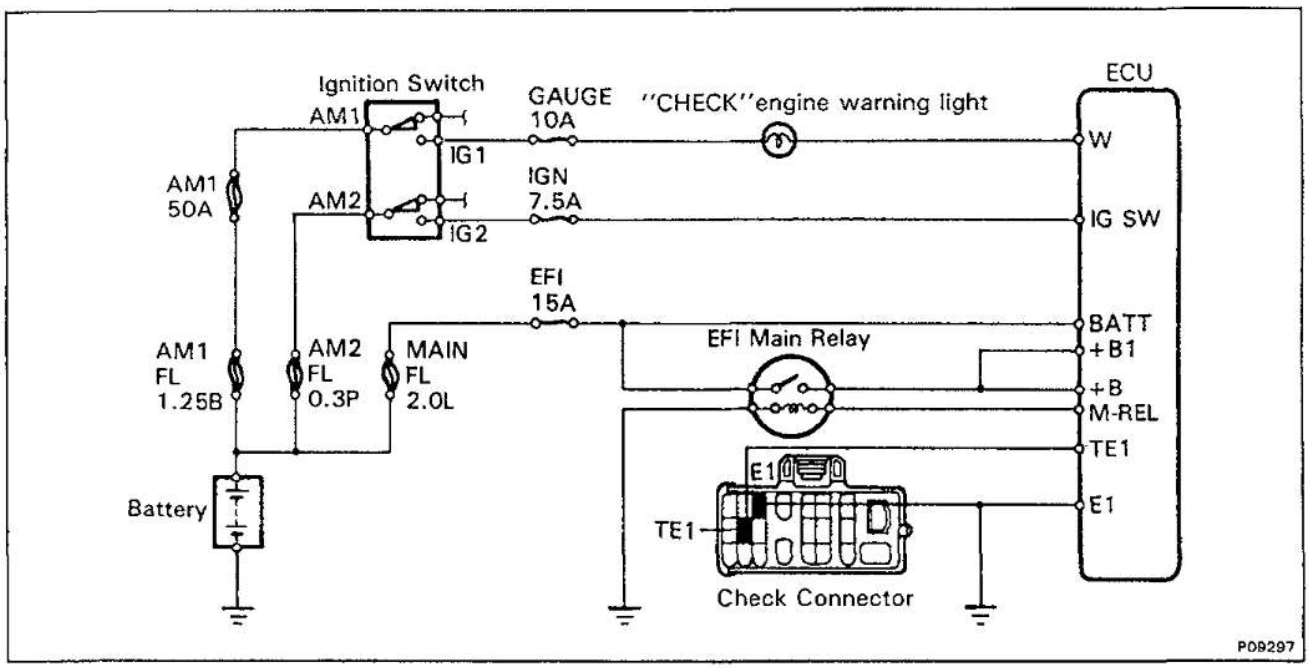

1. Does "CHECK" engine warning light come on when ignition switch is at ON?
   - YES → System normal.
   - NO → Does "CHECK" engine warning light come on when ECU terminal W is grounded to the body?
     - YES → Check wiring between ECU terminal E1 and body ground.
       - OK → Try another ECU.
       - BAD → Repair or replace.
     - NO → Check bulb, fuse and wiring between ECU and ignition switch.
       - BAD → Repair or replace.

2. Does "CHECK" engine warning light go off when the engine is started?
   - YES → System normal.
   - NO → Check wiring between ECU and "CHECK" engine warning light.
     - BAD → Repair.
     - OK → Is there diagnostic code output when check connector terminals TE1 and E1 connected?
       - NO → Check wiring between ECU terminal TE1 and check connector terminal TE1, and ECU terminal E1 and check connector terminal E1.
         - OK → Try another ECU.
       - YES → Does "CHECK" engine warning light go out after repair according to malfunction code?
         - NO → Further repair required.
         - YES → System OK → Cancel out diagnostic code.

V02813

TROUBLESHOOTING W/VOLT,OHMMETER (A/T)

EG0G8-03

HINT:

- The following troubleshooting procedures are designed for inspection of each separate system, and therefore the actual procedure may vary somewhat. However, troubleshooting should be performed while referring to the inspection methods described in this manual.
- Before beginning inspection, it is best to first make a simple check of the fuses, H–fuses, fusible links and the condition of the connectors.
- The following troubleshooting procedures are based on the supposition that the trouble lies in either a short or open circuit within the computer.
- If engine trouble occurs even though proper operating voltage is detected in the computer connector, then it can be assumed that the ECU is faulty and should be replaced.

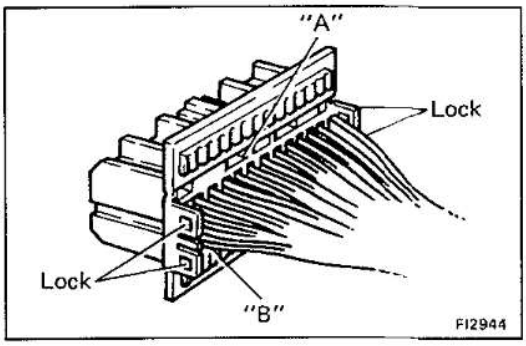

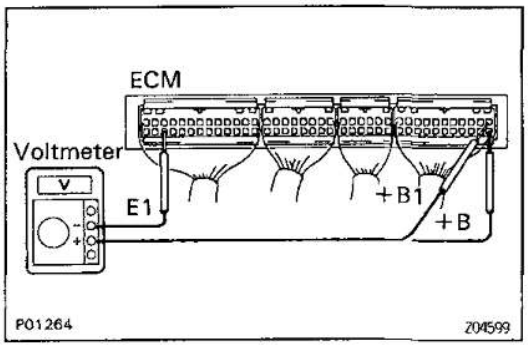

EFI SYSTEM CHECK PROCEDURE

EG0GA-03

PREPARATION

(a) Disconnect the connectors from the ECU.

(b) Remove the locks as shown in the illustration so that the tester probe(s) can easily come in.
NOTICE: Pay attention to sections "A" and "B" in the illustration which can be easily broken.

(c) Reconnect the connectors to the ECU.

(d) Using a voltmeter with high impedance (10 kΩ/V minimum), measure the voltage at each terminal of the wiring connectors.
HINT:
- Perform all voltage measurements with the connectors connected.
- Verify that the battery voltage is 11 V or more when the ignition switch is in "ON" position.

EG0CB-04

ECU Terminals (For A/T)

Symbol	Connection	Symbol	Connection	Symbol	Connection
E01	POWER GROUND		—	HT2*	NO.2 HEATED OXYGEN SENSOR
E02	POWER GROUND	E11	ECU GROUND		—
#10	INJECTOR (No.1)	TE1	Check Connector	STA	NSW SWITCH
#30	INJECTOR (No.3)	TE2	Check Connector	NSW	IGNITION SWITCH
#20	INJECTOR (No.2)	KNK1	NO.1 KNOCK SENSOR	NEO	ECT ECU
E1	ECU GROUND	KNK2	NO.2 KNOCK SENSOR		—
#40	INJECTOR (No.4)	OX1	NO.1 OXYGEN SENSOR	VA	ECT ECU
IGT	IGNITER	OX2*	NO.2 OXYGEN SENSOR	ECT1	ECT ECU
IPV	VSV FOR EVAP	THW	WATER TEMP. SENSOR	SPD	VEHICLE SPEED SENSOR
EGR*	VSV FOR EGR	OX+	OXYGEN SENSORS	ECT2	ECT ECU
AS*	VSV FOR AS	THA	AIR FLOW METER	A/C	A/C AMPLIFIE
FPU	VSV FOR FUEL PRESSURE CONTROL	IDL	TP SENSOR	ECT	ECT ECU
ISC1	ISC VALVE (No.1 Motor Coil)	VS	AIR FLOW METER		—
		VTA	TP SENSOR	ESA1	ECT ECU
ISC2	ISC VALVE (No.2 Motor Coil)	VCC	TP SENSOR		—
	—	E2	SENSOR GROUND	ESA2	ECT ECU
ISC3	ISC VALVE (No.3 Motor Coil)	G⊖	DISTRIBUTOR	W	"CHECK" ENGINE WARNING LIGHT
	—	NE	DISTRIBUTOR	ESA3	ECT ECU
ISC4	ISC VALVE (No.4 Motor Coil)		—	M-REL	EFI MAIN RELAY (COIL)
IGF	IGNITER	G1	DISTRIBUTOR	STP	STOP LIGHT SWITCH
FPR	FUEL PUMP RELAY		—	BATT	BATTERY B+
VF2	Check Connector	G2	DISTRIBUTOR	IGSW	IGNITION SWITCH
#50	INJECTOR (No.5)		—	+B1	EFI MAIN RELAY
VF1	Check Connector		—	+B	EFI MAIN RELAY
#60	INJECTOR (No.6)	HT1	NO.1 OXYGEN SENSOR		
	—		—		

*Only for Europe.

ECU Terminals

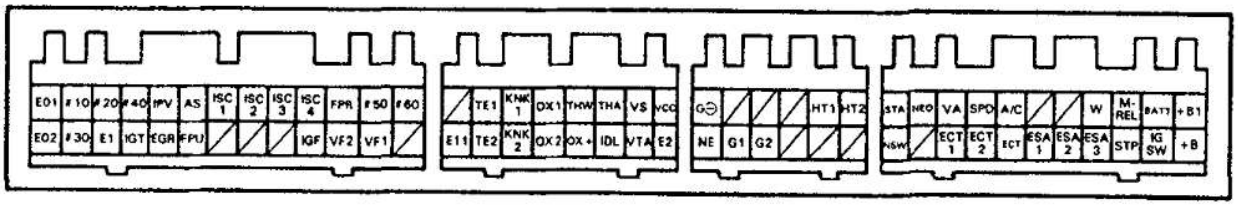

P01399

V02814

EG27Q-01

EG

ECU Wiring Connectors Voltage (For A/T)

No.	Terminals	Condition		STD voltage (V)	See page
1	BATT – E1	–		9 – 14	EG-203
	IG SW – E1	IG SW ON			
	M-REL – E1				
	+B, +B1 – E1				
2	IDL – E2	IG SW ON	Throttle valve open	9 – 14	EG-204
	VCC – E2		–	4.5 – 5.5	
	VTA – E2		Throttle valve fully closed (Throttle opener must be cancelled first)	0.3 – 0.8	
			Throttle valve fully open	3.2 – 4.9	
3	VCC – E2		–	4.5 – 5.5	EG-208
	VS – E2		Measuring plate fully closed	3.5 – 4.5	
			Measuring plate fully open	0.2 – 0.5	
		Idling		1.2 – 2.4	
		3,000 rpm		0.8 – 1.3	
4	#10 ~ #60 – E01, E02	IG SW ON		9 – 14	EG-209
5	THA – E2	IG SW ON	Intake air temp. 20°C (68°F)	0.5 – 3.4	EG-210
6	THW – E2		Engine coolant temp. 80°C (176°F)	0.2 – 1.0	EG-211
7	STA – E1	Cranking		6 or more	EG-212
8	IGT – E1	Idling		Pulse generation	EG-213
9	ISC1 ~ ISC4 – E1	IG SW ON		9 – 14	EG-214
10	W – E1	No trouble (malfunction indicator lamp light off) and engine running		9 – 14	EG-215

ECM Terminals

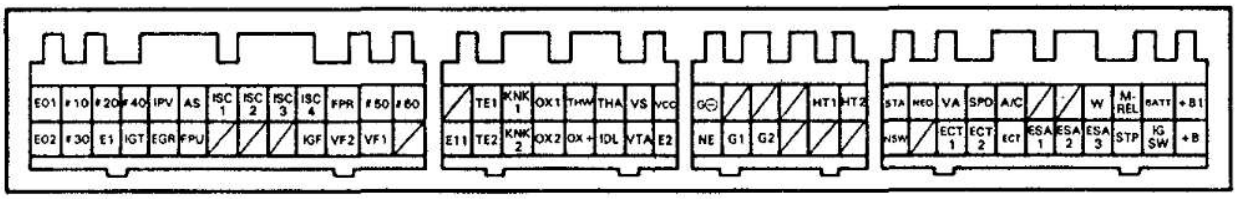

P01399

V02815

No.	Terminals	Trouble	Condition	STD voltage
1	BATT – E1	No voltage	–	9 – 14 V
	IG SW – E1	No voltage	IG SW ON	9 – 14 V
	M-REL – E1			
	+B (+B1) – E1			

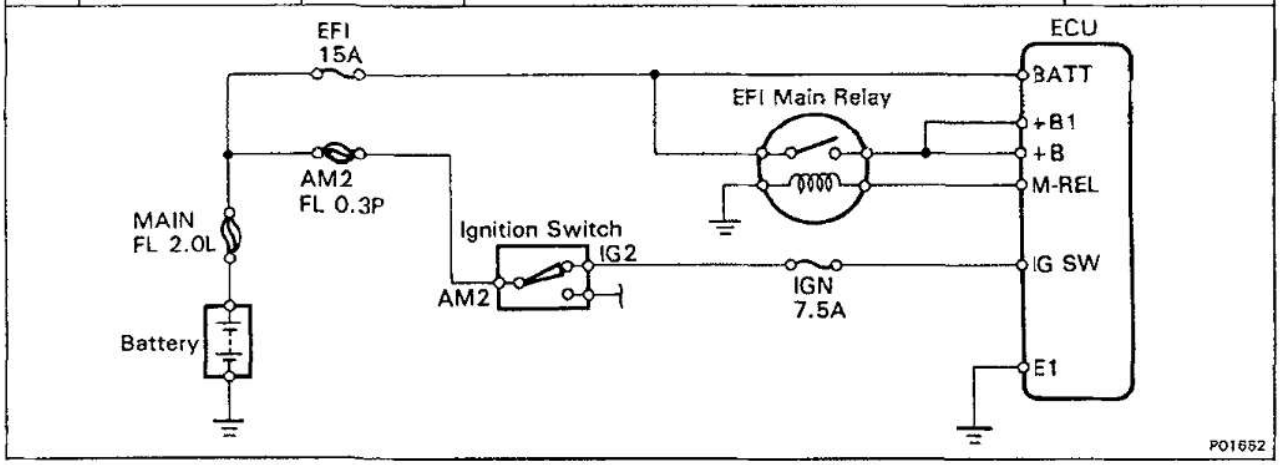

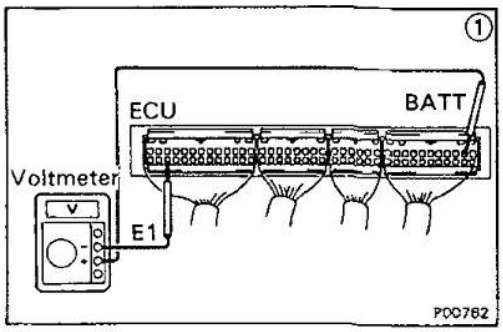

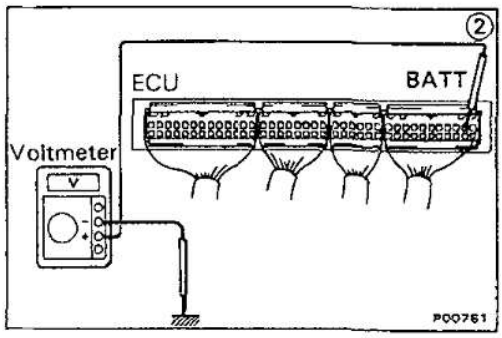

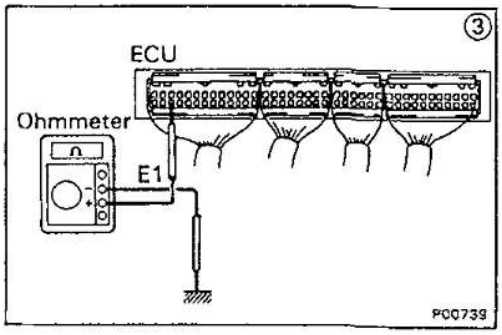

• **BATT – E1**

① There is no voltage between ECU terminals BATT and E1.

② Check that there is voltage between ECU terminal BATT and body ground.

- NO → Check fuse and fusible link.
- OK → ③ Check wiring between ECU terminal E1 and body ground.
  - OK → Try another ECU.
  - BAD → Repair or replace.

Check fuse and fusible link.
- BAD → Replace.
- OK → Check wiring between ECU terminal and battery.
  - BAD → Repair or replace.

V02816

EG

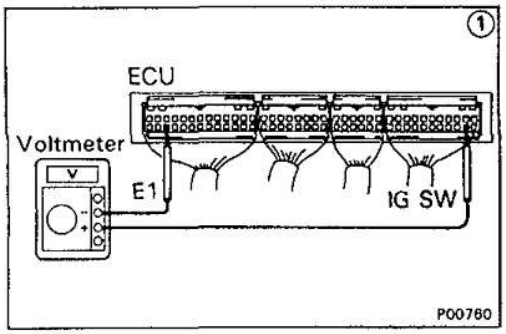

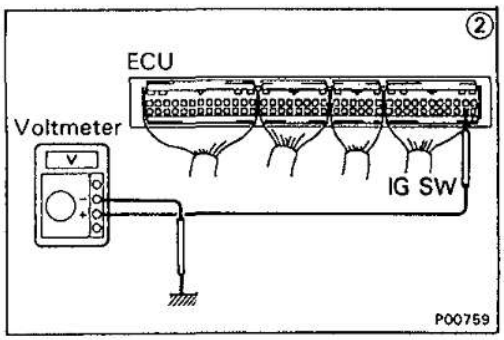

• **IG SW — E1**

1. There is no voltage between ECU terminals IG SW and E1. **(IG SW ON)**
2. Check that there is voltage between ECU terminal IG SW and body ground. **(IG SW ON)**
   - NO → Check fuses, fusible link and ignition switch. → BAD → Replair or replace.
   - OK → Check wiring between ECU terminal E1 and body ground.
     - OK → Try another ECU.
     - BAD → Repair or replace.

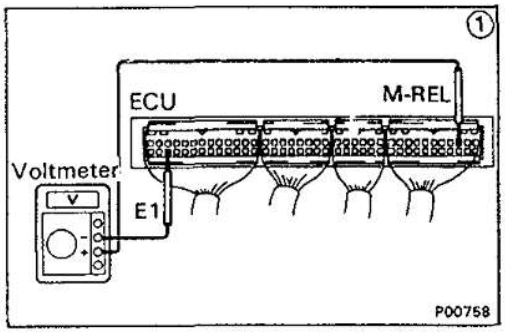

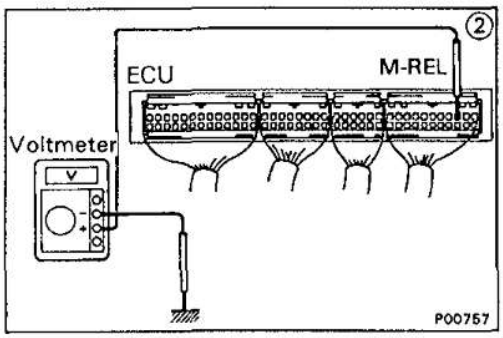

• **M-REL — E1**

1. There is no voltage between ECU terminals M-REL and E1. **(IG SW ON)**
2. Check that there is voltage between ECU terminal M-REL and body ground. **(IG SW ON)**
   - NO → Check EFI main relay and wiring harness. (See page EG-272) → BAD → Replace.
   - OK → Check wiring between ECU terminal E1 and body ground.
     - OK → Try another ECU.
     - BAD → Repair or replace.
   - OK → Try another ECU.

V02817

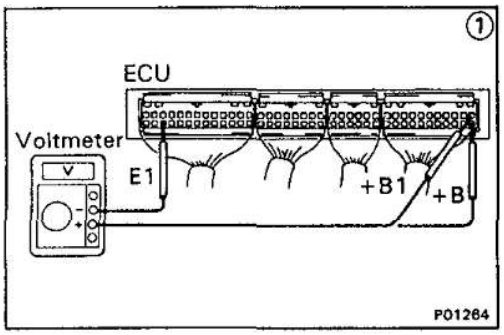

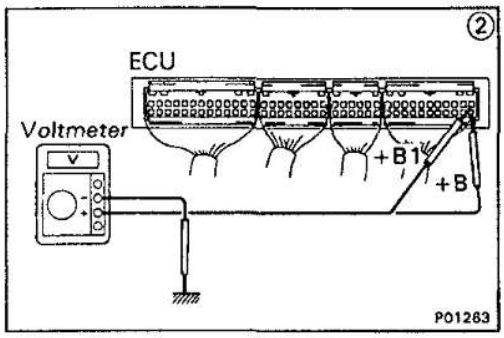

• **+B (+B1) — E1**

① There is no voltage between ECU terminals +B (+B1) and E1. **(IG SW ON)**

② Check that there is voltage between ECU terminal +B (+B1) and body ground. **(IG SW ON)**

- NO → Check fuse, fusible link and wiring harness.
  - BAD → Repair or replace.
  - OK → Check EFI main relay. (See page EG-272)
    - BAD → Replace.
    - OK → Refer to M-REL — E1 trouble section.
- OK → Check wiring between ECU terminal E1 and body ground.
  - OK → Try another ECU.
  - BAD → Repair or replace.

EG

V02818

EG

No.	Terminals	Trouble	Condition		STD voltage
2	IDL – E2	No voltage	IG SW ON	Throttle valve open	9 – 14 V
	VCC – E2			–	4.5 – 5.5 V
	VTA – E2			Throttle valve fully closed (Throttle opener must be cancelled first)	0.3 – 0.8 V
				Throttle valve fully open	3.2 – 4.9 V

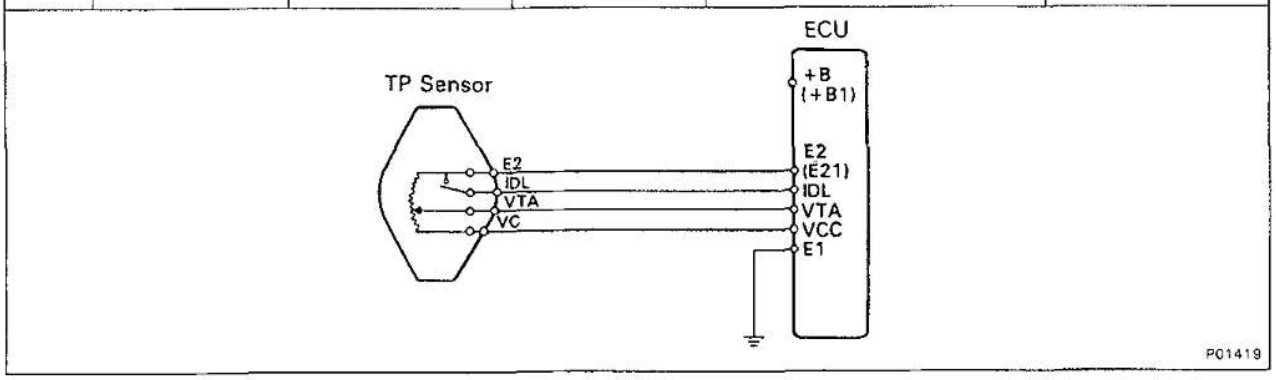

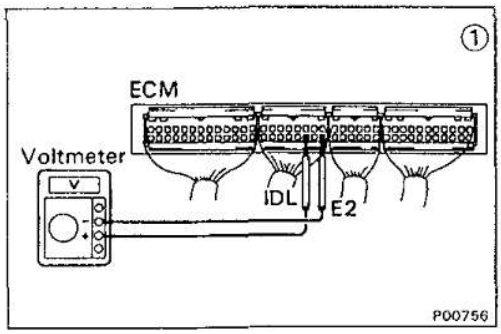

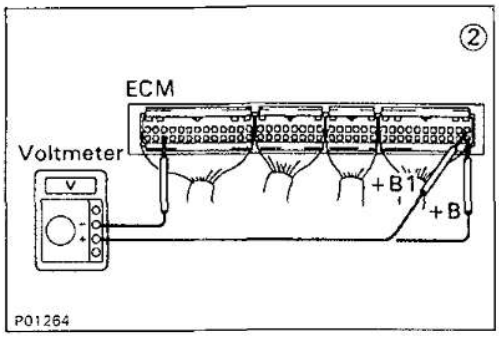

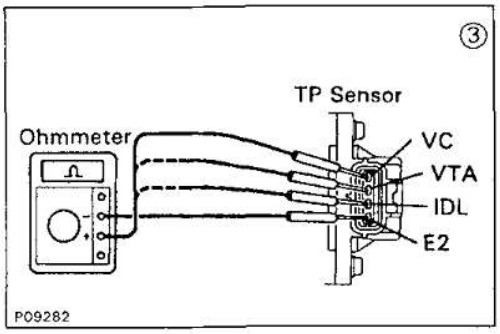

• IDL - E2

① There is no voltage between ECU terminals IDL and E2. **(IG SW ON)** (Throttle valve open)

② Check that there is voltage between ECU terminal +B (+B1) and body ground. **(IG SW ON)**

NO → Refer to No.1. (See page EG-203)

OK → Check wiring between ECU terminal E1 and body ground.

- OK → Try another ECU.
- BAD → Repair or replace.

Refer to No.1. (See page EG-203)

- BAD → Repair or replace.
- OK → ③ Check TP sensor. (See page EG-259)

③ Check TP sensor. (See page EG-259)

- BAD → Repair or replace TP sensor.
- OK → Check wiring between ECU and TP sensor.

Check wiring between ECU and TP sensor.

- BAD → Repair or replace.
- OK → Try another ECU.

V02819

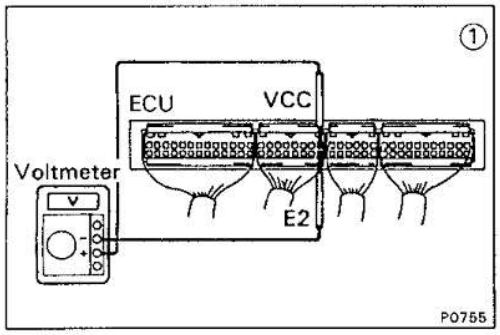

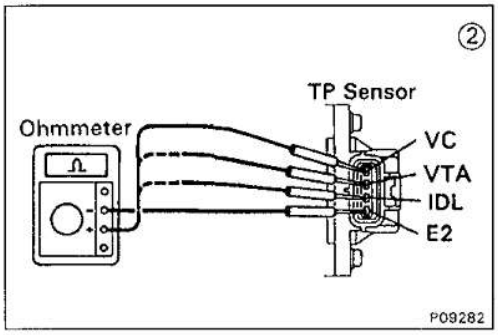

• **VC - E2**

① There is no voltage between ECU terminals VCC and E2. **(IG SW ON)**

↓

Check that there is voltage between ECU terminal +B (+B1) and body ground. **(IG SW ON)**

- OK → ② Check TP sensor. (See page EG-259)
  - BAD → Repair or replace.
  - OK → Check wiring between ECU and TP sensor.
    - OK → Try another ECU.
    - BAD → Repair or replace wiring.
- NO → Refer to No.1. (See page EG-203)

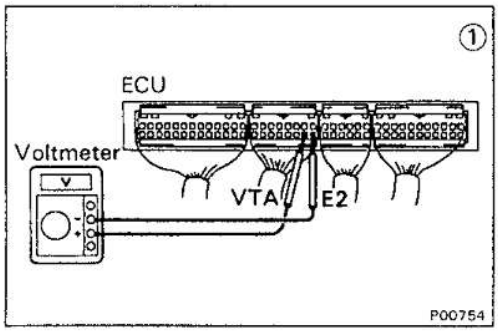

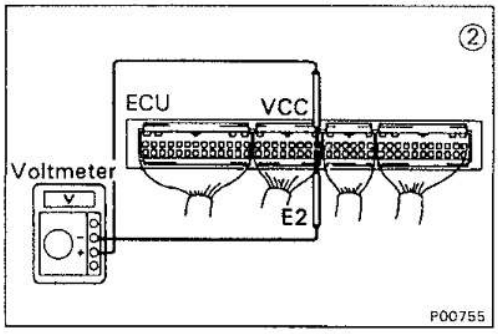

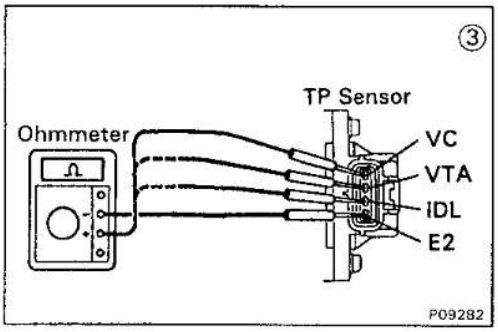

• **VTA - E2**

① There is no specified voltage at ECU terminals VTA and E2. **(IG SW ON)**

↓

② Check that there is voltage between ECU terminals VCC and E2. **(IG SW ON)**

- NO → Refer to VCC — E2 trouble section. → OK
- OK → ③ Check TP sensor. (See page EG-259)
  - BAD → Repair or replace.
  - OK → Check wiring between ECU and TP sensor.
    - BAD → Repair or replace.
    - OK → Try another ECU.

V02820

EG

No.	Terminals	Trouble	Condition		STD voltage
3	VCC – E2	No voltage	IG SW ON	–	4.5 – 5.5 V
	VS – E2			Measuring plate fully closed	3.5 – 4.5 V
	VS – E2			Measuring plate fully open	0.2 – 0.5 V
	VS – E2		Idling		1.2 – 2.4 V
	VS – E2		3,000 rpm		0.8 – 1.3 V

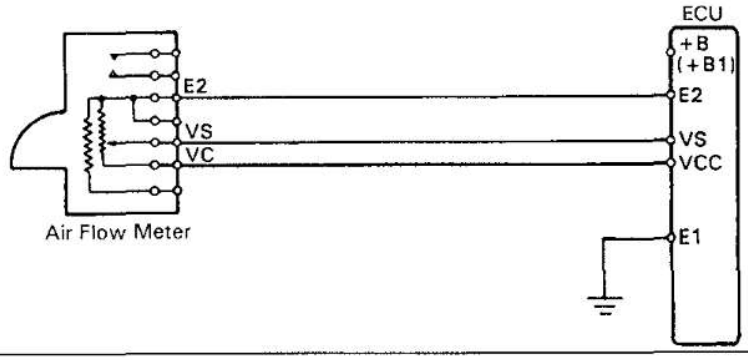

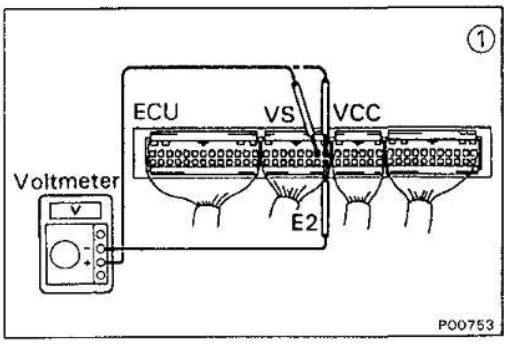

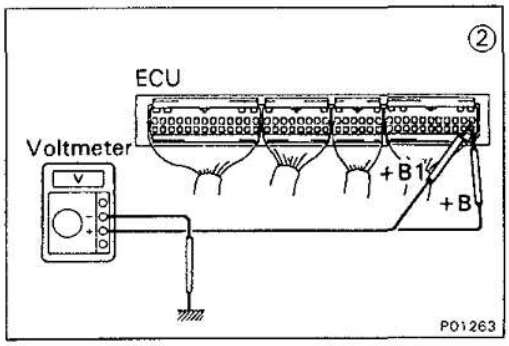

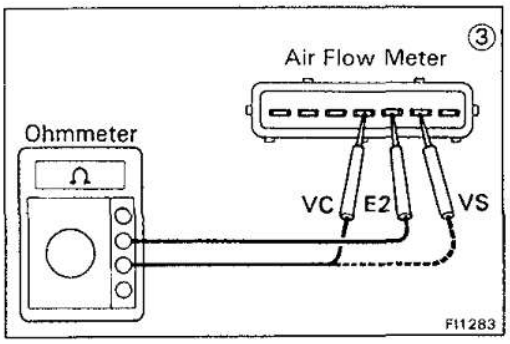

① There is no voltage between ECU terminals VCC or VS and E2. **(IG SW ON)**

↓

② Check that there is voltage between ECU terminal +B (+B1) and body ground. **(IG SW ON)**

- OK → Check wiring between ECU terminal E1 and body ground.
- NO → Refer to No.1 (See page EG-203)

Check wiring between ECU terminal E1 and body ground.

- OK → ③ Check Air Flow meter. (See page EG-267)
- BAD → Repair or replace.

③ Check Air Flow meter. (See page EG-267)

- BAD → Replace Air Flow meter.
- OK → Check wiring between ECU and Air Flow meter.

Check wiring between ECU and Air Flow meter.

- OK → Try another ECU.
- BAD → Repair or replace.

V02821

No.	Terminals	Trouble	Condition	STD voltage
4	#10 E01 ~ #60 E02	No voltage	IG SW ON	9 – 14 V

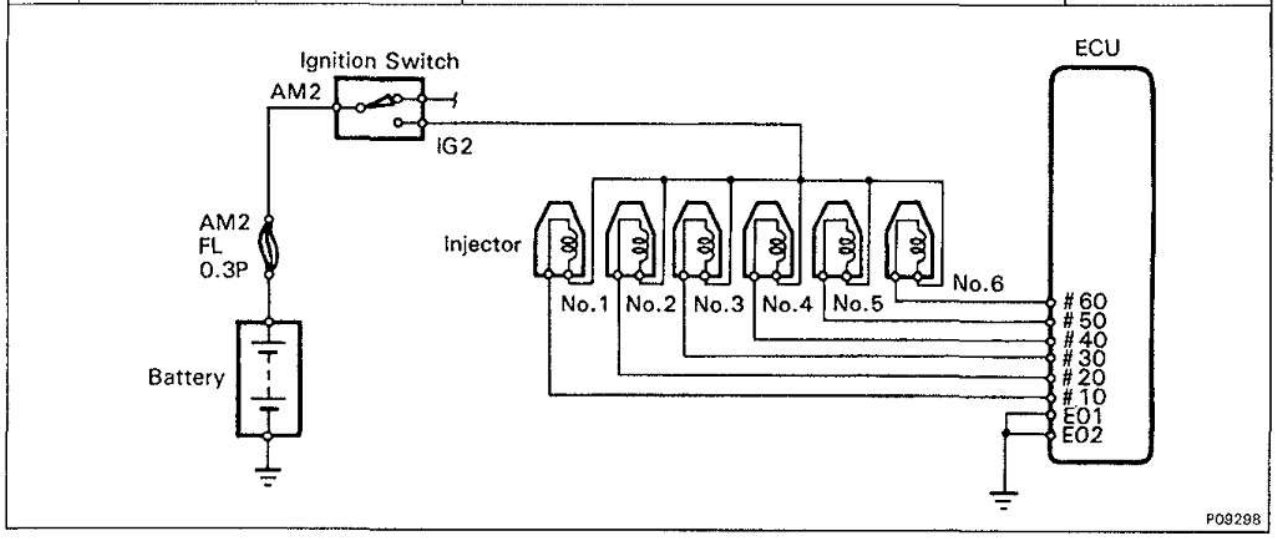

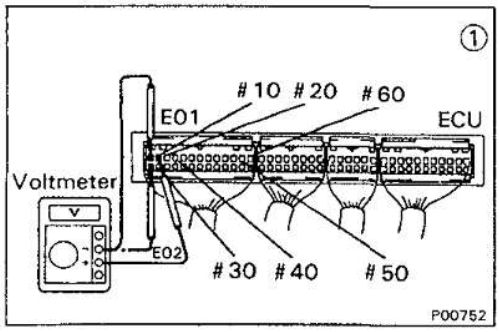

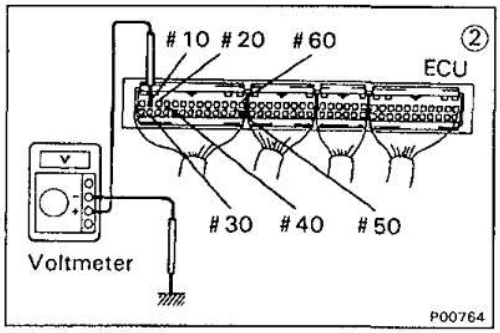

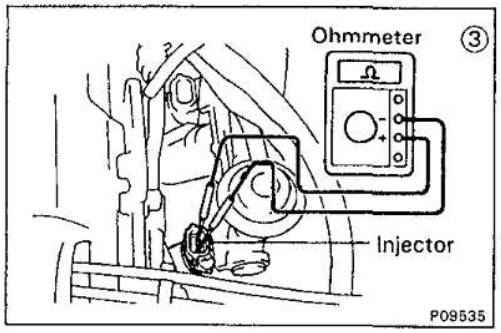

① There is no voltage between ECU terminals #10 ~ #60 and E01 and/or E02. **(IG SW ON)**

↓

② Check that there is voltage between ECU terminal #10 ~ #60 and body ground.

- NO → Check fusible link and ignition switch.
- OK → Check wiring between ECU terminal E01 and/or E02 and body ground.
  - OK → Try another ECU.
  - BAD → Repair or replace.

Check fusible link and ignition switch.
- BAD → Repair or replace.
- OK ↓

③ Check resistance of each injector.
STD resistance: Approx. 13.8 Ω
- OK ↓
- BAD → Replace injector.

Check wiring between ECU terminal #10 ~ #60 and battery.
- BAD → Repair or replace.

V02822

EG

No.	Terminals	Trouble	Condition		STD voltage
5	THA — E2	No voltage	IG SW ON	Intake air temperature 20 °C (68 °F)	0.5 — 3.4 V

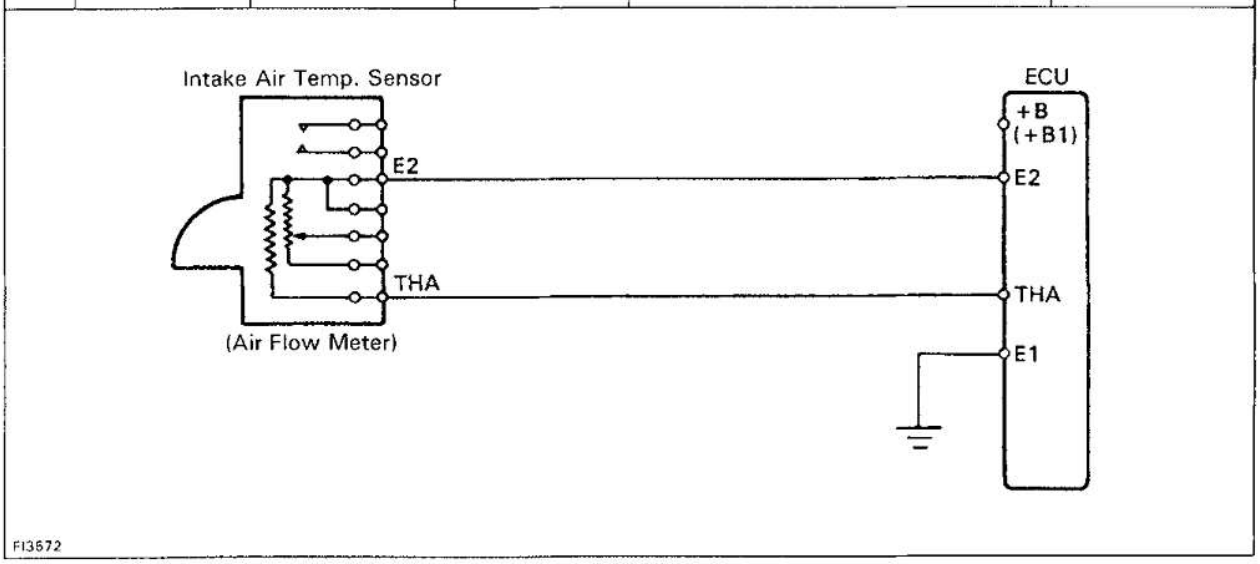

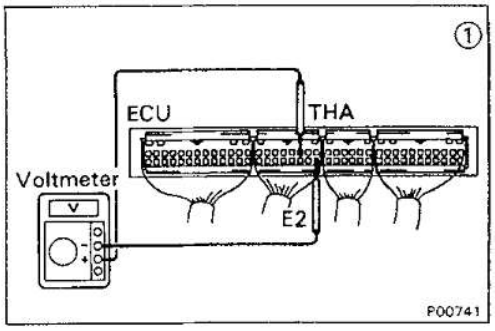

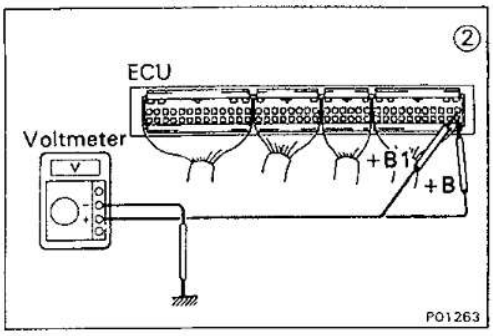

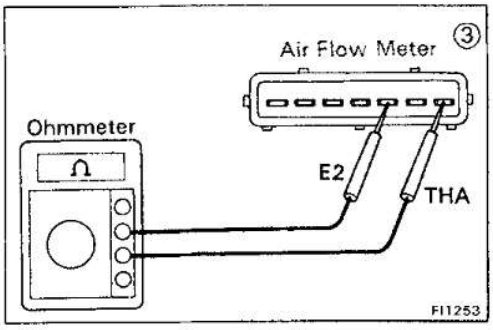

① There is no voltage between ECU terminals THA and E2. **(IG SW ON)**

↓

② Check that there is voltage between ECU terminal +B (+B1) and body ground. **(IG SW ON)**

- NO → Refer to No.1 (See page EG-203)
- OK ↓

Check wiring between ECU terminal E1 and body ground.

- BAD → Repair or replace.
- OK ↓

③ Check Intake air temp. sensor. (See page EG-268)

- BAD → Replace Air Flow meter.
- OK ↓

Check wiring between ECU and Intake air temp. sensor.

- BAD → Repair or replace.
- OK → Try another ECU.

V02823

No.	Terminals	Trouble	Condition		STD voltage
6	THW – E2	No voltage	IG SW ON	Engine coolant temperature 80 °C (176 °F)	0.2 – 1.0 V

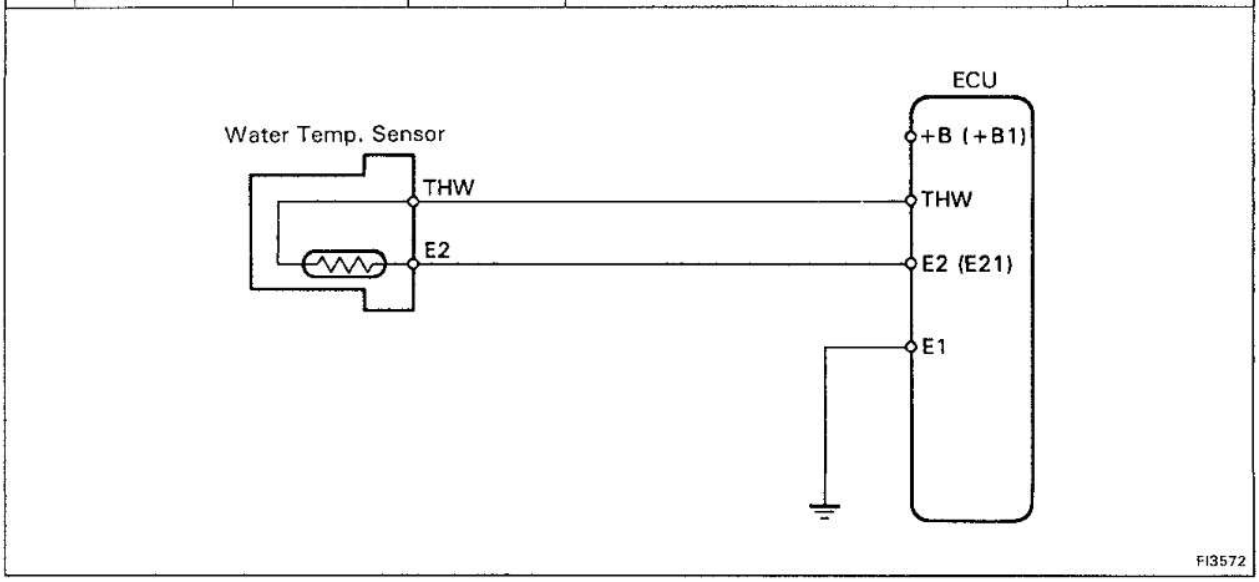

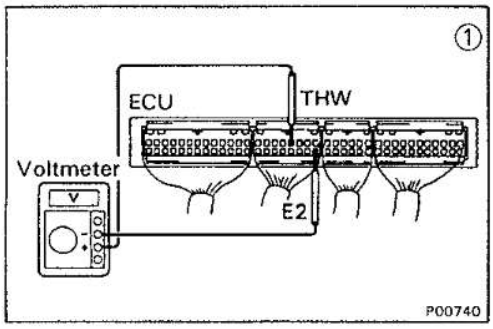

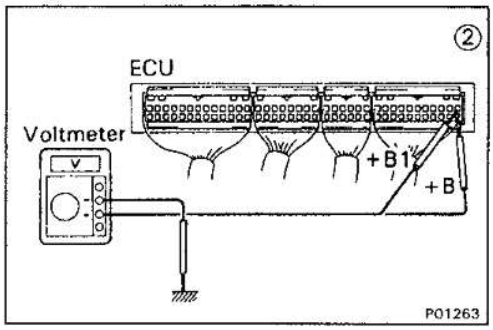

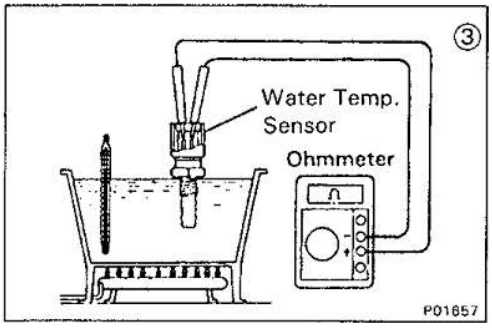

① There is no voltage between ECU terminals THW and E2. **(IG SW ON)**

② Check that there is voltage between ECU terminal +B (+B1) and body ground. **(IG SW ON)**

- OK → Check wiring between ECU terminal E1 and body ground.
- NO → Refer to No.1 (See page EG-203)

Check wiring between ECU terminal E1 and body ground.

- OK → ③ Check Water temp. sensor. (See page EG-275)
  - BAD → Replace Water temp. sensor.
  - OK → Check wiring between ECU and ECT sensor.
    - OK → Try another ECU.
    - BAD → Repair or replace.
- BAD → Repair or replace.

V02824

EG

No.	Terminals	Trouble	Condition	STD voltage
8	STA - E1	No voltage	Cranking	6 V or more

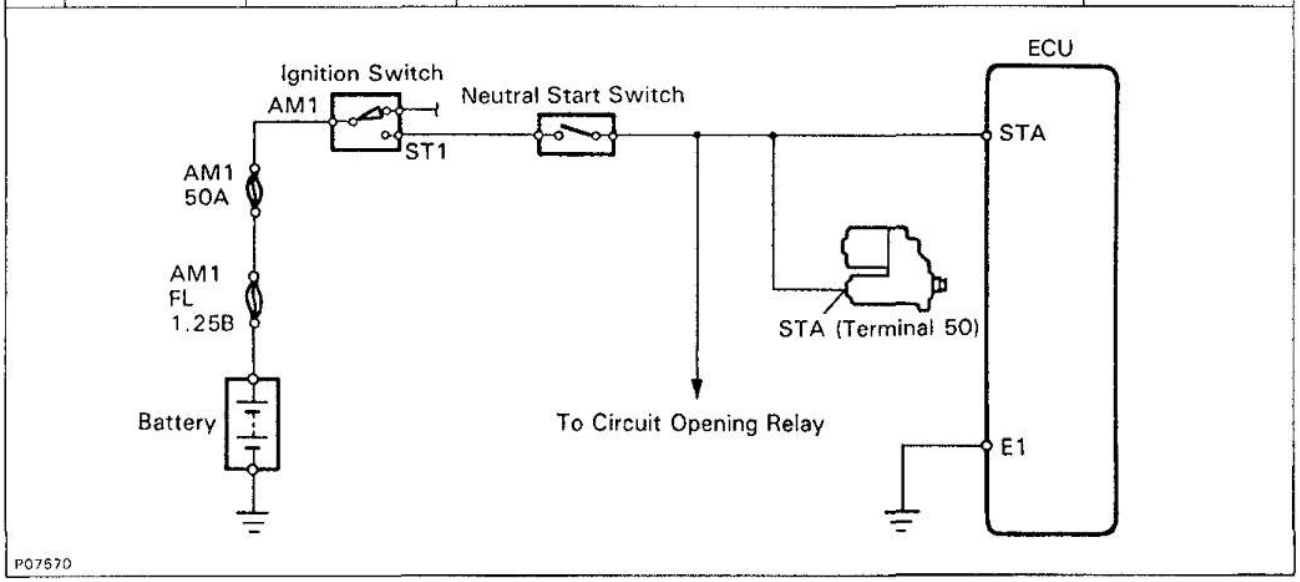

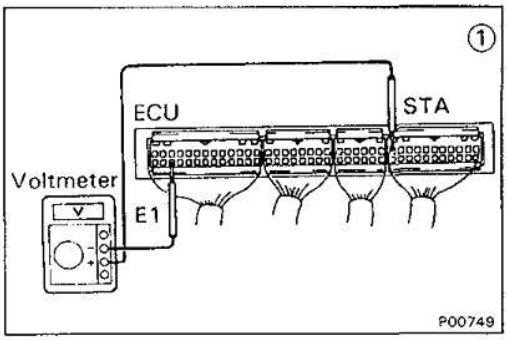

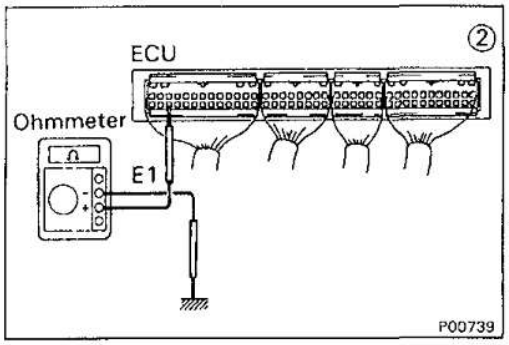

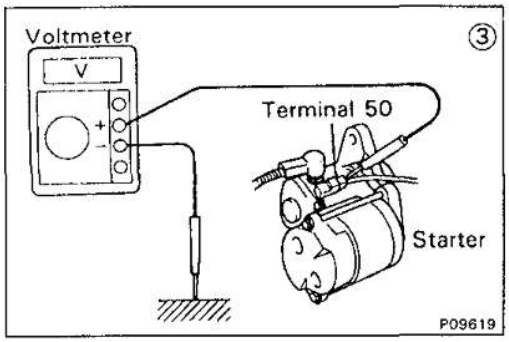

① There is no voltage between ECU terminals STA and E1. **(IG SW START)**

Check starter operation.
- OK → Check wiring between ECU terminal STA and ignition switch terminal ST1.
  - OK → ② Check wiring between ECU terminal E1 and body ground.
    - OK → Try another ECU.
    - BAD → Repair or replace.
  - BAD → Repair or replace.
- BAD → Check H-fuse, fusible link, battery, wiring, ignition switch and neutral start switch.
  - BAD → Repair or replace.
  - OK → ③ Check that there is voltage at starter terminal 50. **(IG SW START) STD voltage: 6 V or more**
    - OK → Check starter.
    - NO → Check wiring between ignition switch terminal ST1 and starter terminal 50.

V02825

No.	Terminals	Trouble	Condition	STD voltage
8	IGT – E1	No voltage	Idling	Pulse generation

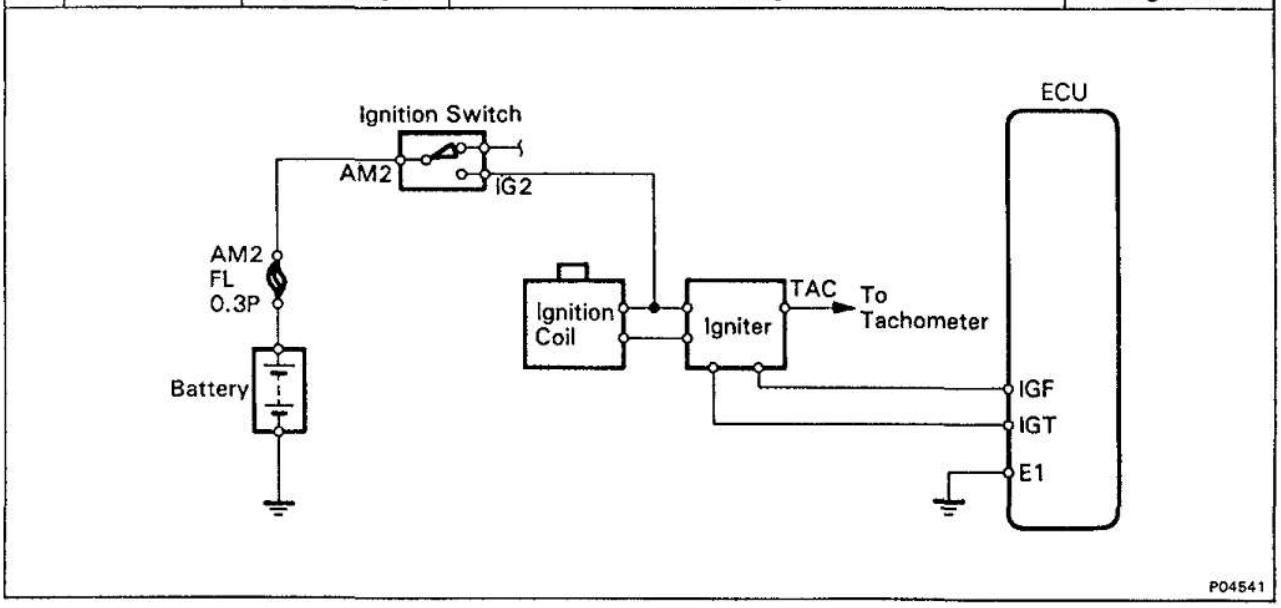

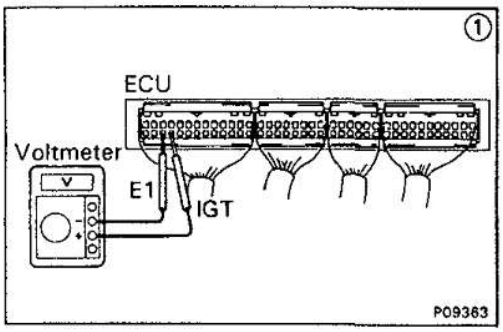

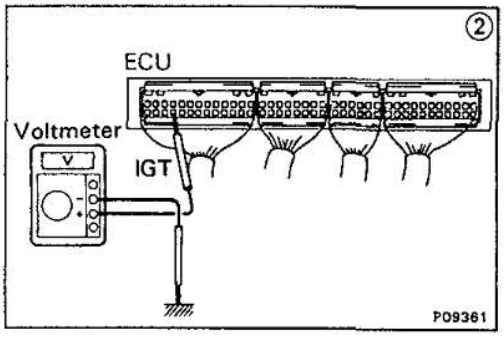

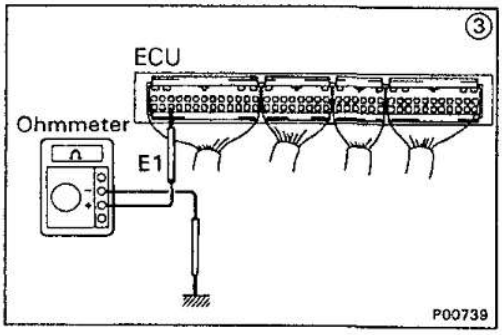

① There is no voltage between ECU terminals IGT and E1. **(Idling)**

② Check that there is voltage between ECU terminal IGT and body ground **(Idling)**

NO → Check fusible link and ignition switch.

OK → ③ Check wiring between ECU terminal E1 and body ground.

③ BAD → Repair or replace.

③ OK → *Try another ECU.*

Check fusible link and ignition switch. BAD → Repair or replace.

OK → Check distributor (See IG section) BAD → Repair or replace.

OK → Check wiring between ECU and battery. BAD → Repair or replace.

OK → Check igniter. (See IG section) BAD → Repair or replace.

W02826

No.	Terminals	Trouble	Condition	STD voltage
9	ISC1~ISC4—E1	No voltage	IG SW ON	9 — 14 V

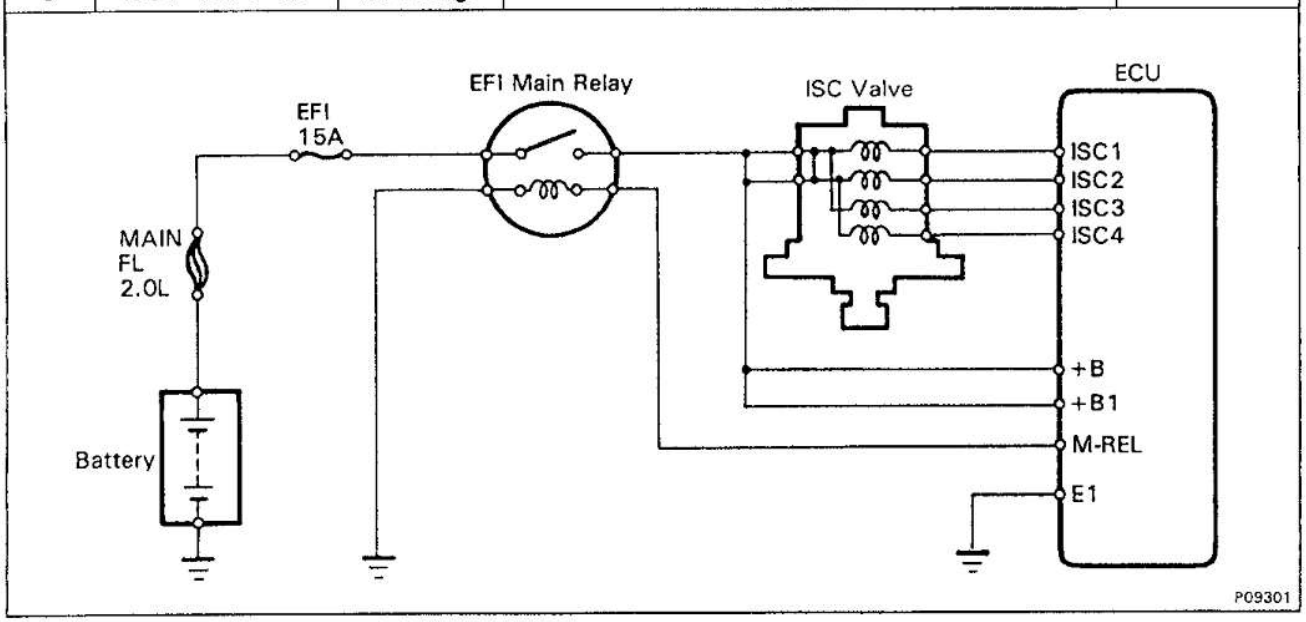

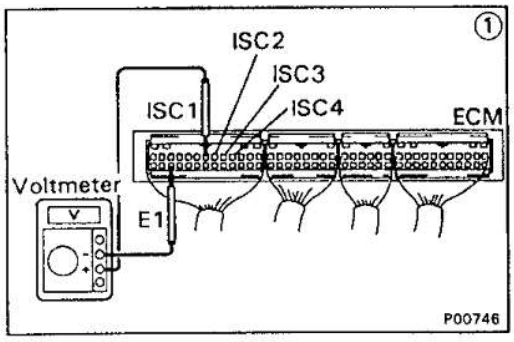

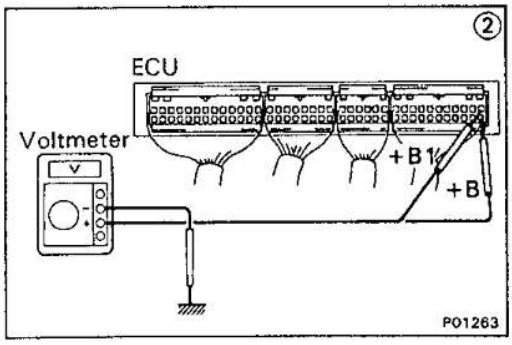

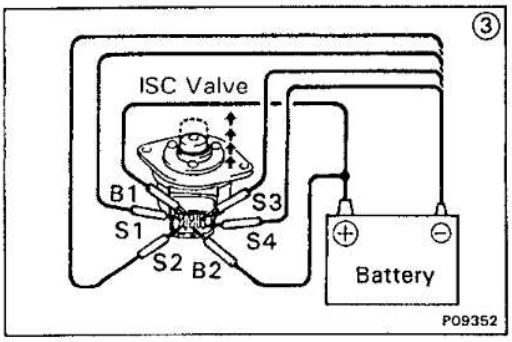

① There is no voltage between ECU terminals ISC1 ~ ISC4 and E1. **(IG SW ON)**

② Check that there is voltage between ECU terminal +B (+B1) and body ground **(IG SW ON)**

- NO → Refer to No. 1 (See page EG-203)
- OK ↓

Check wiring between ECU terminal E1 and body ground.

- BAD → Repair or replace.
- OK ↓

③ Check ISC valve. (See page EG-269)

- BAD → Replace ISC valve
- OK ↓

Check wiring between ECU and EFI main relay.

- BAD → Repair or replace.
- OK ↓

Try another ECU.

V02827

No.	Terminals	Trouble	Condition	STD voltage
10	W — E1	No voltage	No trouble (malfunction indicator lamp light off) and engine running.	9 — 14 V

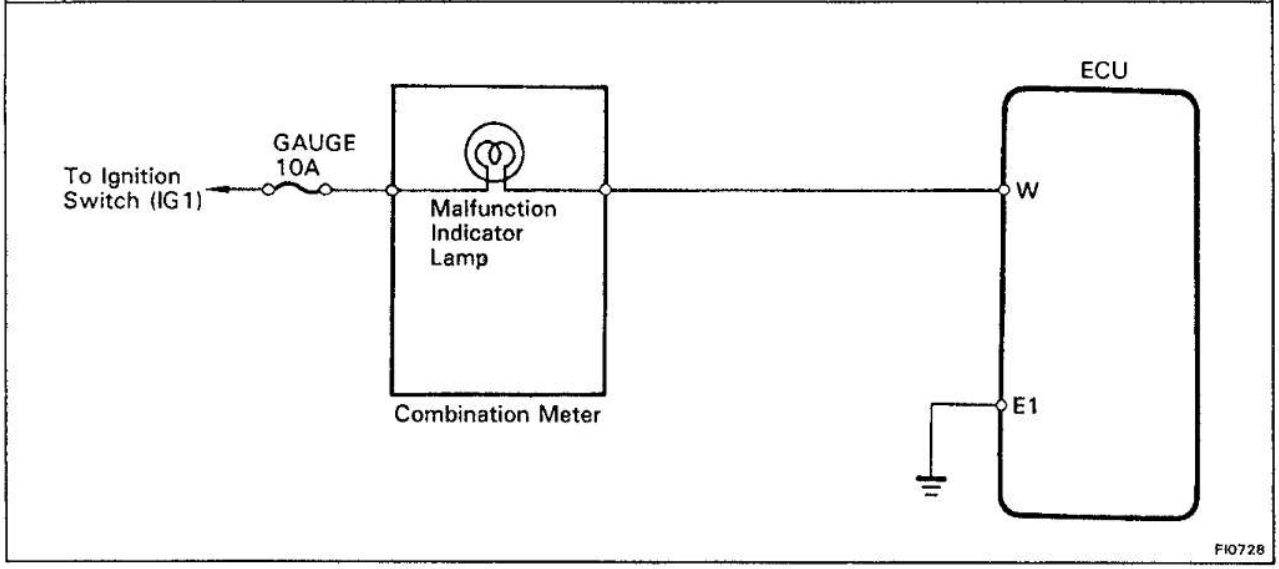

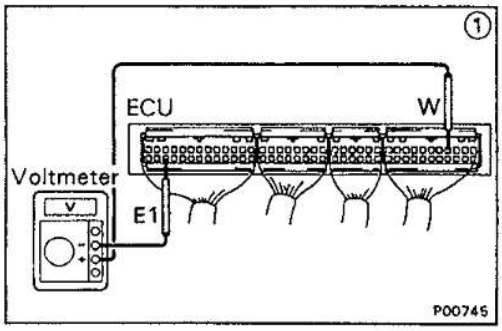

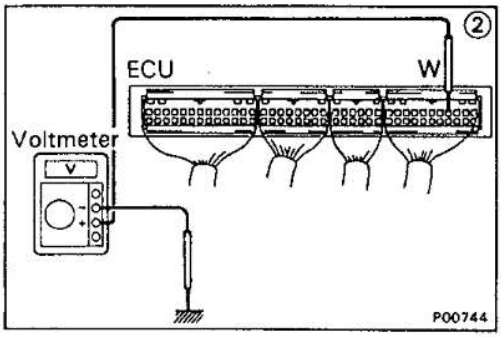

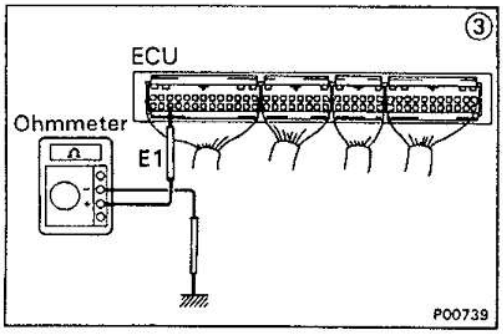

① There is no voltage between ECU terminals W and E1. (Idling)

↓

② Check that there is voltage between ECU terminal W and body ground.

- NO → Check GAUGE fuse (10A) and malfunction indicator lamp.
- OK → ③ Check wiring between ECUterminal E1 and body ground.
  - OK → Try another ECU.
  - BAD → Repair or replace.

Check GAUGE fuse (10A) and malfunction indicator lamp.

- OK → Check wiring between ECU terminal W and fuse.
- BAD → Repair or replace.
  - Fuse blows again → Check wiring between ECU terminal W and fuse.
    - BAD → Repair or replace.

V02828

EG

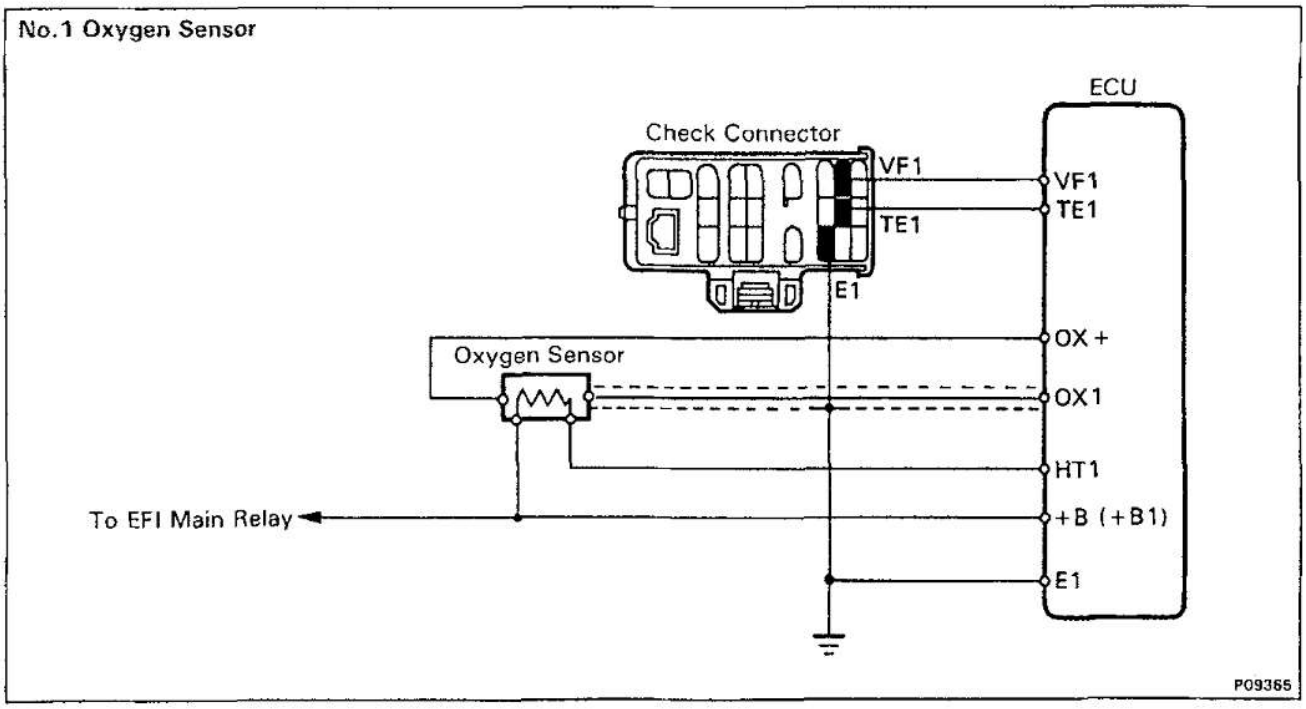

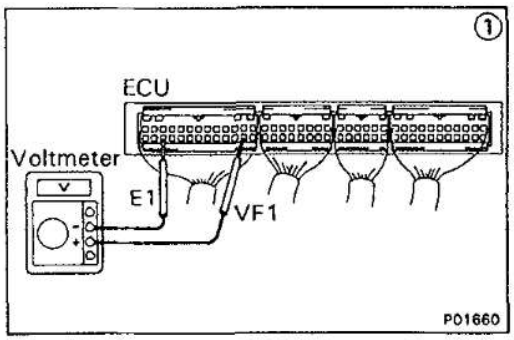

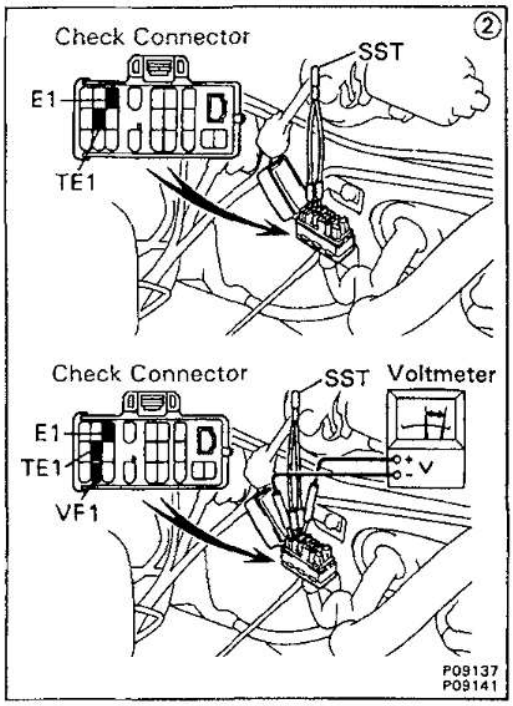

① There is no voltage between ECU terminals VF1 and E1.

Check that there is specified voltage between ECU terminal VF1 and body ground.

NO → Check for air suction of air into exhaust system.

OK → Check wiring between ECU terminal E1 and body ground.

- OK → Try another ECU.
- BAD → Repair or replace.

Check for air suction of air into exhaust system.
- BAD → Repair air suction.
- OK ↓

Check for air leak from air induction system.
- BAD → Repair air leak.
- OK ↓

Check spark plugs.
- BAD → Repair or replace.
- OK ↓

Check distributor and ignition system.
- BAD → Repair or replace.
- OK ↓

Check fuel pressure.
- BAD → Repair or replace.
- OK ↓

Check injectors.
- BAD → Repair or replace.
- OK ↓

Check air flow meter.
- BAD → Repair or replace.
- OK ↓

② Check operatin of oxygen sensor.
- OK → System normal.
- BAD ↓

Check wiring between oxygen sensor and ECU connectors.
- BAD → Repair wiring.
- OK ↓

Repair oxygen sensor.

V02829

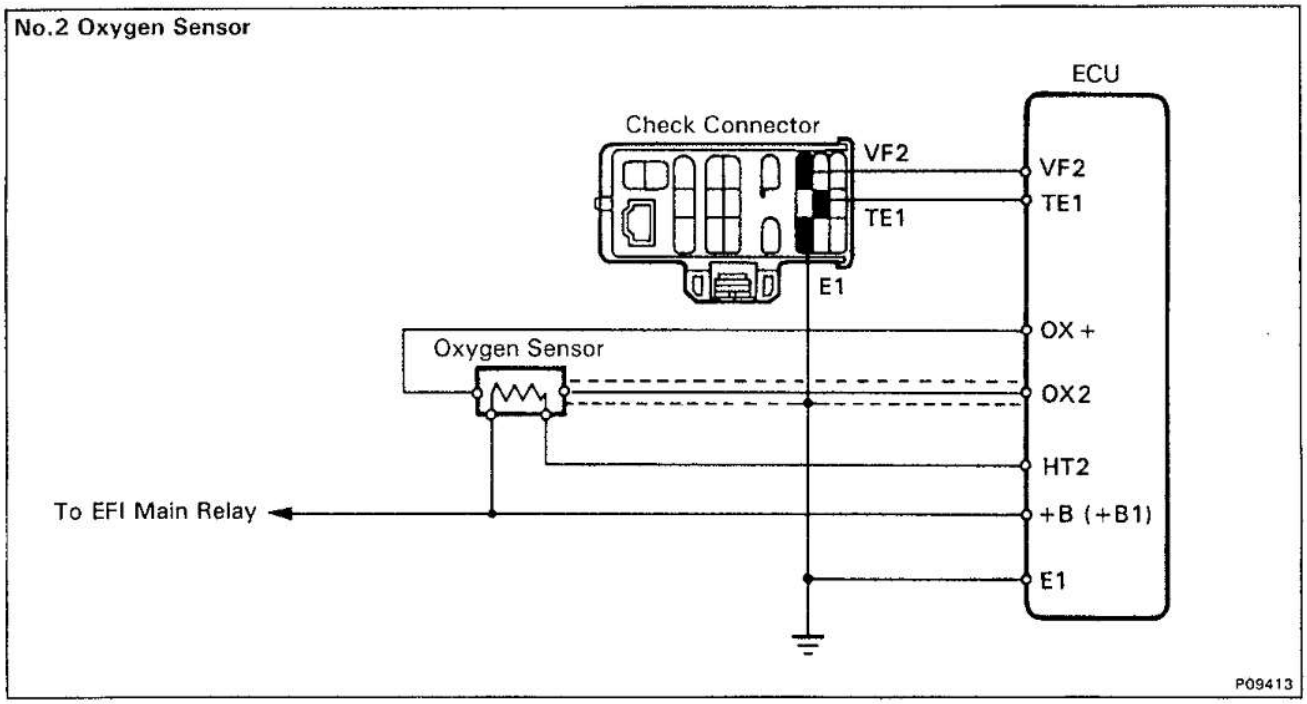

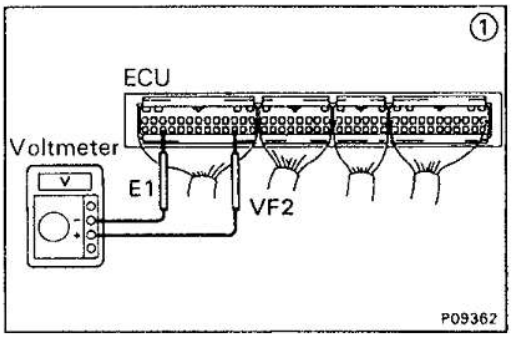

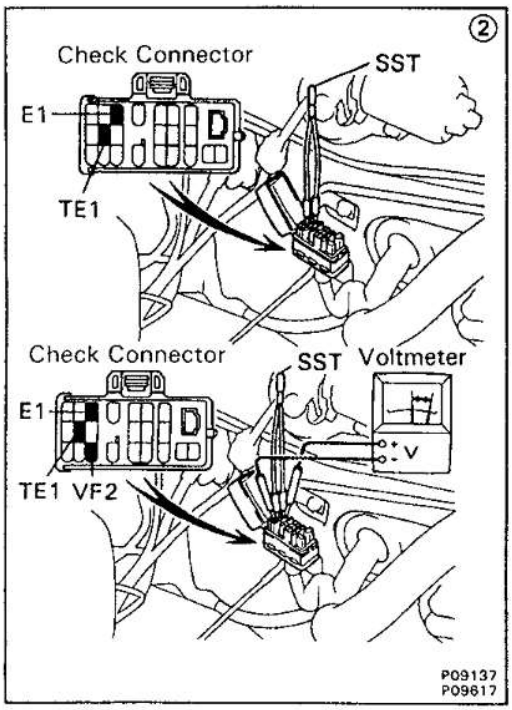

① There is no voltage between ECU terminals VF2 and E1.

Check that there is specified votage between ECU terminal VF2 and body ground.

NO → OK

Check wiring between ECU terminal E1 and body ground.

OK → Try another ECU.

BAD → Repair or replace.

Check for air suction of air into exhaust system. BAD → Repair air suction.

OK

Check for air leak from air induction system. BAD → Repair air leak.

OK

Check spark plugs. BAD → Repair or replace.

OK

Check distributor and ignition system. BAD → Repair or replace.

OK

Check fuel pressure. BAD → Repair or replace.

OK

Check injectors. BAD → Repair or replace.

OK

Check air flow meter. BAD → Repair or replace.

OK

② Check operatin of oxygen sensor. OK → System normal.

BAD

Check wiring between oxygen sensor and ECU connectors. BAD → Repair wiring.

OK

Repair oxygen sensor.

V02830

TROUBLESHOOTING W/VOLT,OHMMETER (M/T)

EG27R-01

HINT:

- The following troubleshooting procedures are designed for inspection of each separate system, and therefore the actual procedure may vary somewhat. However, troubleshooting should be performed while referring to the inspection methods described in this manual.
- Before beginning inspection, it is best to first make a simple check of the fuses, H—fuses, fusible links and the condition of the connectors.
- The following troubleshooting procedures are based on the supposition that the trouble lies in either a short or open circuit within the computer.
- If engine trouble occurs even though proper operating voltage is detected in the computer connector, then it can be assumed that the ECU is faulty and should be replaced.

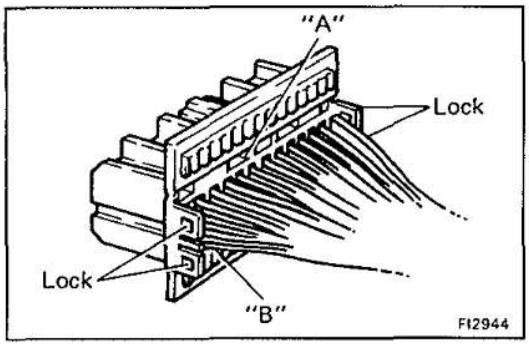

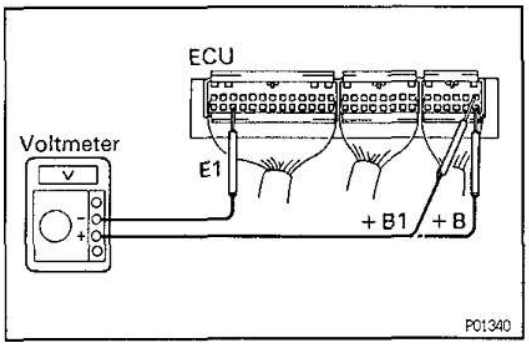

EFI SYSTEM CHECK PROCEDURE

EG27S-01

PREPARATION

(a) Disconnect the connectors from the ECU.

(b) Remove the locks as shown in the illustration so that the tester probe(s) can easily come in.
NOTICE: Pay attention to sections "A" and "B" in the illustration which can be easily broken.

(c) Reconnect the connectors to the ECM.

(d) Using a voltmeter with high impedance (10 kΩ/V minimum), measure the voltage at each terminal of the wiring connectors.
HINT:
- Perform all voltage measurements with the connectors connected.
- Verify that the battery voltage is 11 V or more when the ignition switch is in "ON" position.

EG27T-01

Engine ECU Terminals (M/T)

Symbol	Connection	Symbol	Connection	Symbol	Connection
E01	POWER GROUND	NE	DISTRIBUTOR	THA	INTAKE AIR TEMP. SENSOR
E02	POWER GROUND	G⊖	DISTRIBUTOR	VCC	VACUUM SENSOR THROTTLE POSITION SENSOR
#10	INJECTOR	IGF	IGNITER	VS	AIR FLOW METER
#20	INJECTOR	IPV	VSV FOR EVAP	VTA	THROTTLE POSITION SENSOR
#30	INJECTOR	STA	STARTER RELAY	HT1	OXYGEN SENSOR
E1	ENGINE GROUND	NSW	NEUTRAL START SWITCH	E2	SENSOR GROUND
ISC1	ISC VALVE	#50	INJECTOR	IGSW	IGNITION SWITCH
#40	INJECTOR	#60	INJECTOR		–
ISC2	ISC VALVE	VF1	CHECK CONNECTOR	STP	STOP LIGHT SWITCH
IGT	IGNITER	E11	SENSOR GROUND	SPD	SPEED SENSOR
ISC3	ISC VALVE	TE2	CHECK CONNECTOR		–
	–	TE1	CHECK CONNECTOR	AC	A/C AMPLIFIER
ISC4	ISC VALVE	OX1	OXYGEN SENSOR	M-REL	EFI MAIN RELAY
	–	KNK1	No. 1 KNOCK SENSOR		–
FPU	VSV FOR FUEL PRESSURE CONTROL	OX+	OXYGEN SENSOR	BATT	BATTERY
FPR	FUEL PUMP RELAY	KNK2	No. 2 KNOCK SENSOR	W	WARNING LIGHT
G1	DISTRIBUTOR	THW	WATER TEMP. SENSOR	+B1	EFI MAIN RELAY
G2	DISTRIBUTOR	IDL	THROTTLE POSITION SENSOR	+B	EFI MAIN RELAY

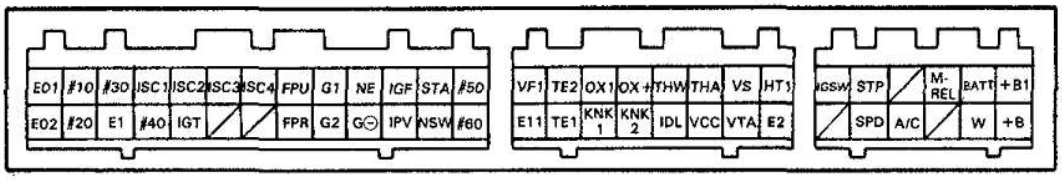

P01821

V02835

EG

ECU Wiring Connectors Voltage (M/T)

No.	Terminals	Condition		STD voltage (V)	See page
1	BATT – E1	–		9 – 14	EG-221
	IG SW – E1	IG SW ON			
	M-REL – E1				
	+B, +B1 – E1				
2	IDL – E2	IG SW ON	Throttle valve open	9 – 14	EG-224
	VCC – E2		–	4.5 – 5.5	
	VTA – E2		Throttle valve fully closed (Throttle opener must be cancelled first)	0.3 – 0.8	
			Throttle valve fully open	3.2 – 4.9	
3	VCC – E2		–	4.5 – 5.5	EG-226
	VS – E2		Measuring plate fully closed	3.5 – 4.5	
			Measuring plate fully open	0.2 – 0.5	
		Idling		1.2 – 2.4	
		3,000 rpm		0.8 – 1.3	
4	#10 ∫ #60 – E01, E02	IG SW ON		9 – 14	EG-227
5	THA – E2	IG SW ON	Intake air temp. 20°C (68°F)	0.5 – 3.4	EG-228
6	THW – E2		Engine coolant temp. 80°C (176°F)	0.2 – 1.0	EG-229
7	STA – E1	Cranking		6 or more	EG-230
8	IGT – E1	Idling		Pulse generation	EG-231
9	ISC1 ∫ ISC4 – E1	IG SW ON		9 – 14	EG-232
10	W – E1	No trouble (malfunction indicator lamp light off) and engine running		9 – 14	EG-233

ECM Terminals

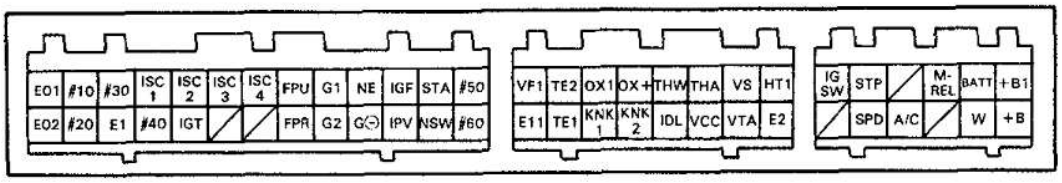

P01821

V02836

EG27U-01

No.	Terminals	Trouble	Condition	STD voltage
1	BATT — E1	No voltage	—	9 — 14 V
	IG SW — E1	No voltage	IG SW ON	9 — 14 V
	M-REL — E1			
	+B (+B1) — E1			

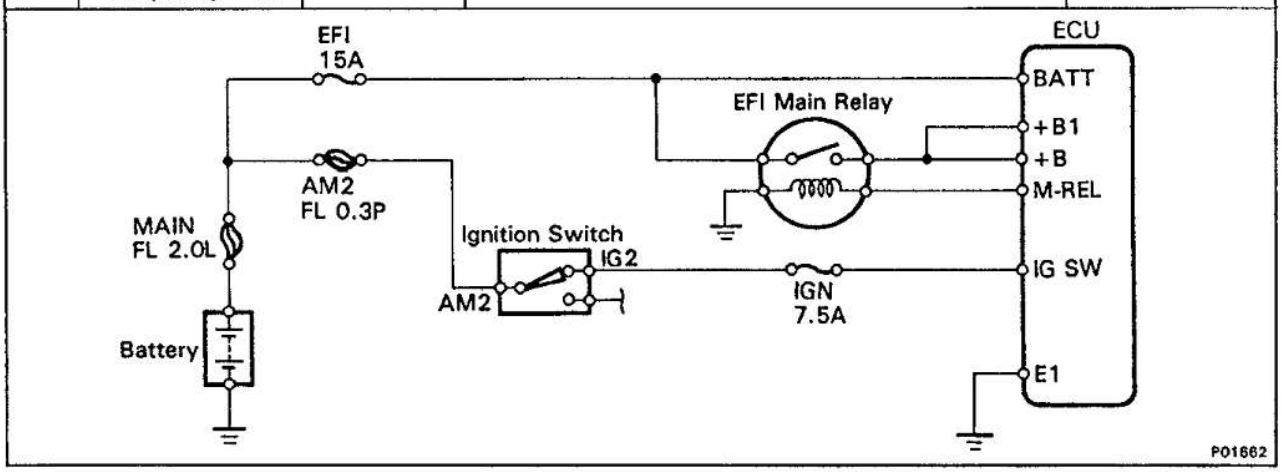

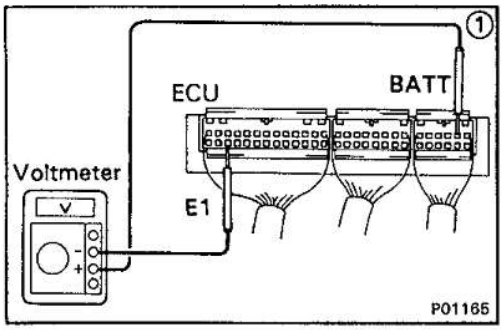

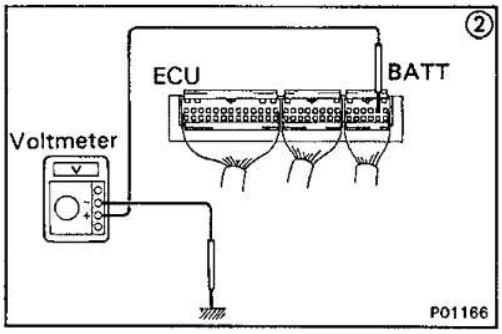

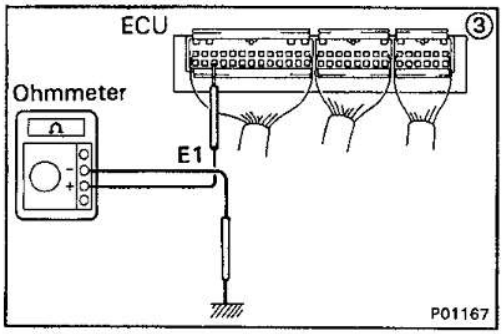

• **BATT — E1**

① There is no voltage between ECU terminals BATT and E1.

↓

② Check that there is voltage between ECU terminal BATT and body ground.

- NO → Check fuse and fusible link.
- OK → ③ Check wiring between ECU terminal E1 and body ground.
  - OK → Try another ECU
  - BAD → Repair or replace.

Check fuse and fusible link.
- BAD → Replace.
- OK → Check wiring between ECU terminal and battery.
  - BAD → Repair or replace.

V02837

EG

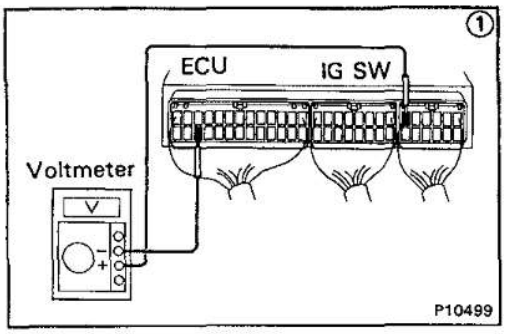

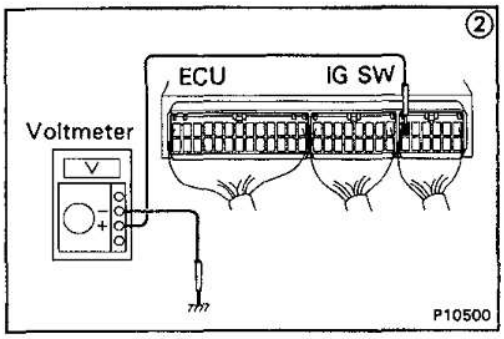

• **IG SW — E1**

1. There is no voltage between ECU terminals IG SW and E1. **(IG SW ON)**
2. Check that there is voltage between ECU terminal IG SW and body ground. **(IG SW ON)**
   - NO → Check fuses, fusible link and ignition switch. → BAD → Replair or replace.
   - OK → Check wiring between ECU terminal E1 and body ground.
     - OK → Try another ECU.
     - BAD → Repair or replace.

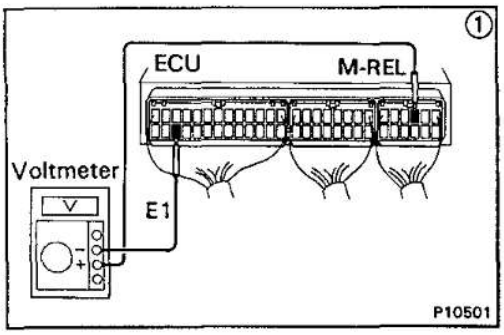

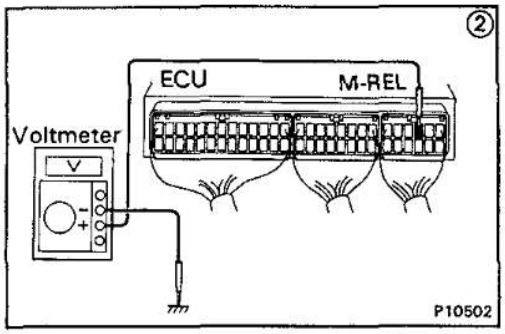

• **M-REL — E1**

1. There is no voltage between ECU terminals M-REL and E1. **(IG SW ON)**
2. Check that there is voltage between ECU terminal M-REL and body ground. **(IG SW ON)**
   - NO → Check EFI main relay and wiring harness. (See page EG-272) → BAD → Replace.
   - OK → Check wiring between ECU terminal E1 and body ground.
     - OK → Try another ECU.
     - BAD → Repair or replace.
   - OK → Try another ECU.

V02838

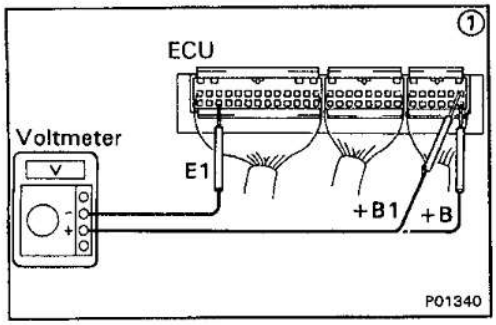

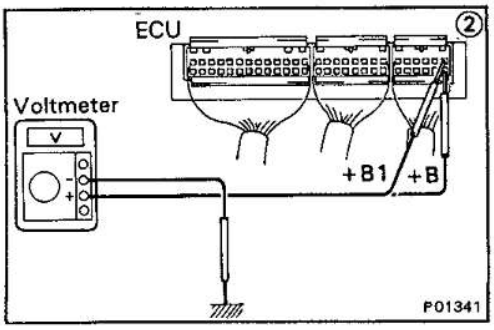

• **+B (+B1) — E1**

① There is no voltage between ECU terminals +B (+B1) and E1. **(IG SW ON)**

② Check that there is voltage between ECU terminal +B (+B1) and body ground. **(IG SW ON)**

NO → Check fuse, fusible link and wiring harness.

OK → Check wiring between ECU terminal E1 and body ground.

- OK → Try another ECU.
- BAD → Repair or replace.

Check fuse, fusible link and wiring harness.

- BAD → Repair or replace.
- OK → Check EFI main relay. (See page EG-272)

Check EFI main relay. (See page EG-272)

- BAD → Replace.
- OK → Refer to M-REL — E1 trouble section.

V02839

EG

EG

No.	Terminals	Trouble	Condition		STD voltage
2	IDL – E2	No voltage	IG SW ON	Throttle valve open	9 – 14 V
	VCC – E2			–	4.5 – 5.5 V
	VTA – E2			Throttle valve fully closed (Throttle opener must be cancelled first)	0.3 – 0.8 V
				Throttle valve fully open	3.2 – 4.9 V

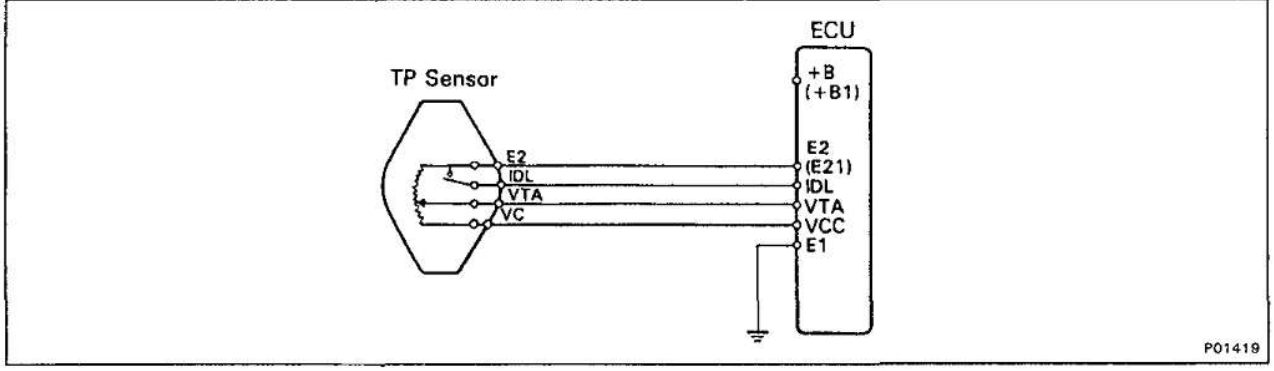

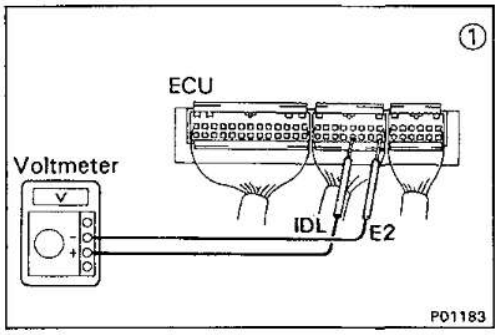

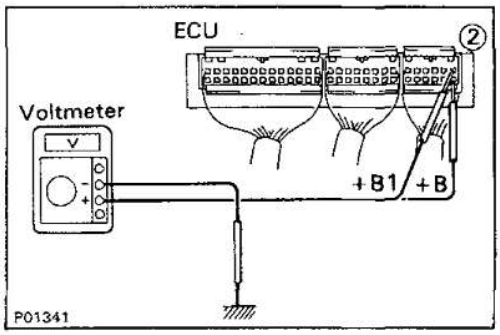

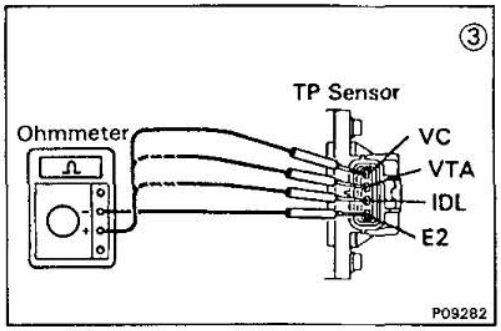

• **IDL - E2**

① There is no voltage between ECU terminals IDL and E2. **(IG SW ON)** (Throttle valve open)

② Check that there is voltage between ECU terminal +B (+B1) and body ground. **(IG SW ON)**

NO → Refer to No.1. (See page EG-221)

OK → Check wiring between ECU terminal E1 and body ground.

- OK → Try another ECU.
- BAD → Repair or replace.

Refer to No.1. (See page EG-221)

- BAD → Repair or replace.
- OK → ③ Check TP sensor. (See page EG-259)

③ Check TP sensor. (See page EG-259)

- BAD → Repair or replace TP sensor.
- OK → Check wiring between ECU and TP sensor.

Check wiring between ECU and TP sensor.

- BAD → Repair or replace.
- OK → Try another ECU.

V02840

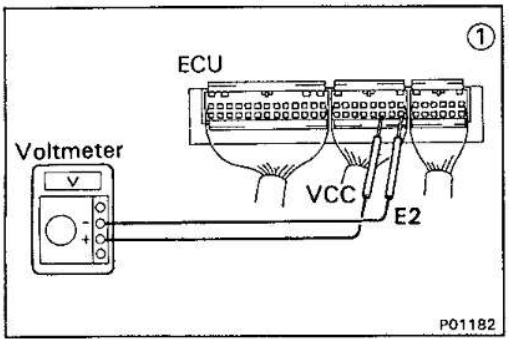

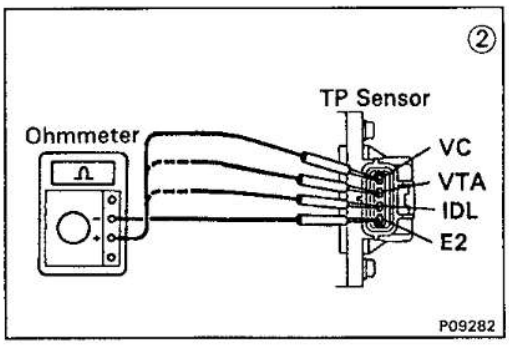

• **VCC - E2**

① There is no voltage between ECU terminals VCC and E2. **(IG SW ON)**

↓

Check that there is voltage between ECU terminal +B (+B1) and body ground. **(IG SW ON)**

- OK → ② Check TP sensor. (See page EG-259)
  - BAD → Repair or replace.
  - OK → Check wiring between ECU and TP sensor.
    - OK → Try another ECU.
    - BAD → Repair or replace wiring.
- NO → Refer to No.1. (See page EG-221)

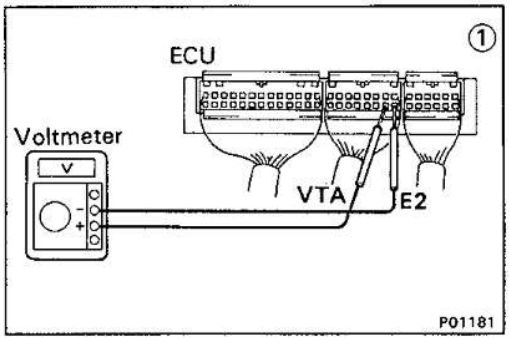

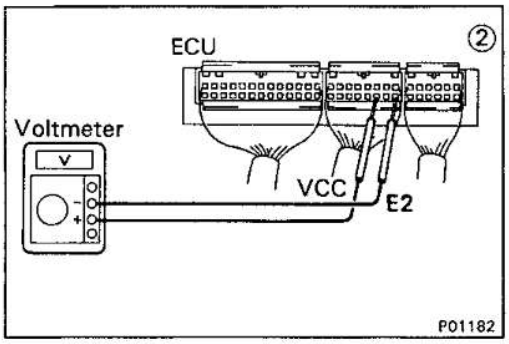

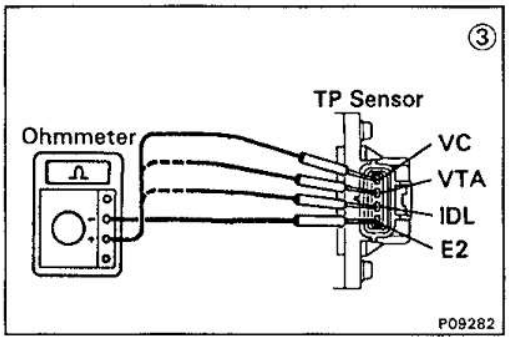

• **VTA - E2**

① There is no specified voltage at ECU terminals VTA and E2. **(IG SW ON)**

↓

② Check that there is voltage between ECU terminals VCC and E2. **(IG SW ON)**

- NO → Refer to VCC — E2 trouble section. → OK
- OK → ③ Check TP sensor. (See page EG-259)
  - BAD → Repair or replace.
  - OK → Check wiring between ECU and TP sensor.
    - BAD → Repair or replace.
    - OK → Try another ECU.

V02841

EG

No.	Terminals	Trouble	Condition		STD voltage
3	VCC — E2	No voltage	IG SW ON	—	4.5 — 5.5 V
	VS — E2			Measuring plate fully closed	3.5 — 4.5 V
	VS — E2			Measuring plate fully open	0.2 — 0.5 V
	VS — E2		Idling		1.2 — 2.4 V
	VS — E2		3,000 rpm		0.8 — 1.3 V

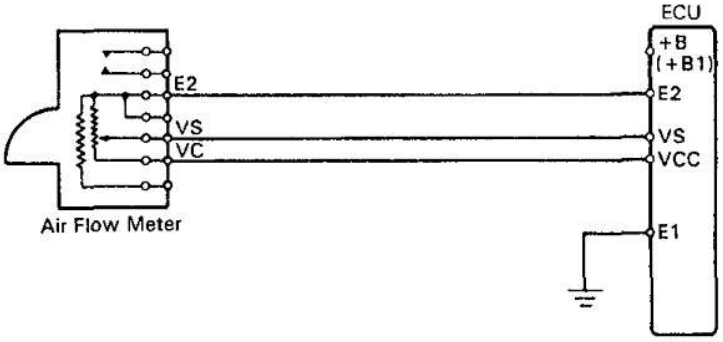

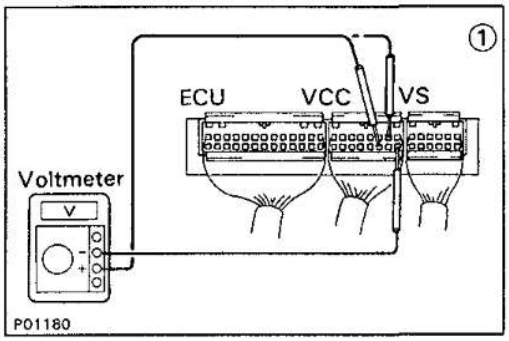

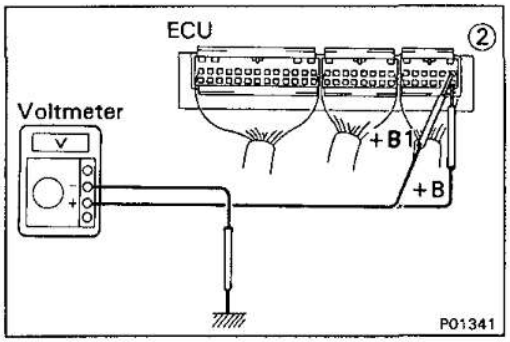

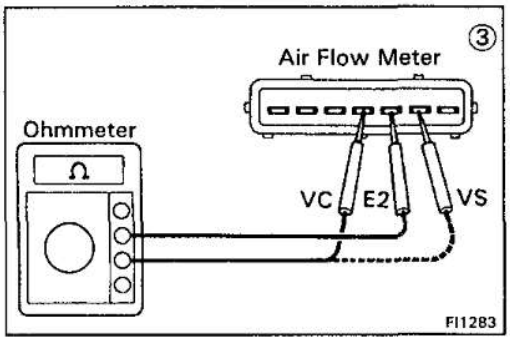

① There is no voltage between ECU terminals VCC or VS and E2. **(IG SW ON)**

↓

② Check that there is voltage between ECU terminal +B (+B1) and body ground. **(IG SW ON)**

- NO → Refer to No.1 (See page EG-221)
- OK ↓

Check wiring between ECU terminal E1 and body ground.

- BAD → Repair or replace.
- OK ↓

③ Check air flow meter. (See page EG-267)

- BAD → Replace air flow meter.
- OK ↓

Check wiring between ECU and air flow meter.

- BAD → Repair or replace.
- OK ↓

Try another ECU.

V02842

No.	Terminals	Trouble	Condition	STD voltage
4	#10 E01 ~ #60 E02	No voltage	IG SW ON	9 — 14 V

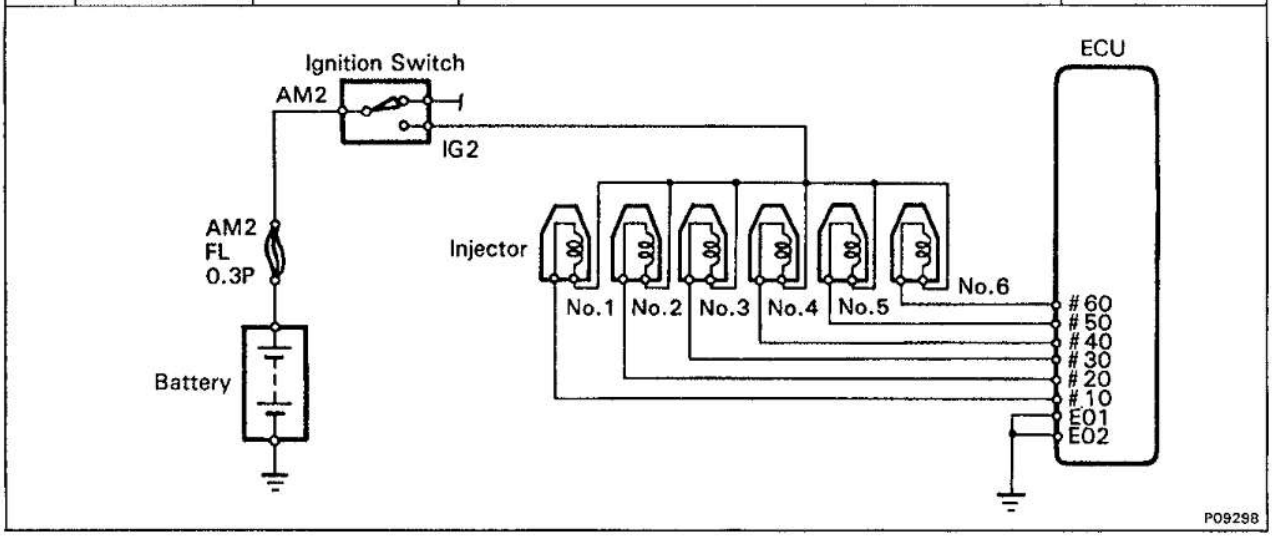

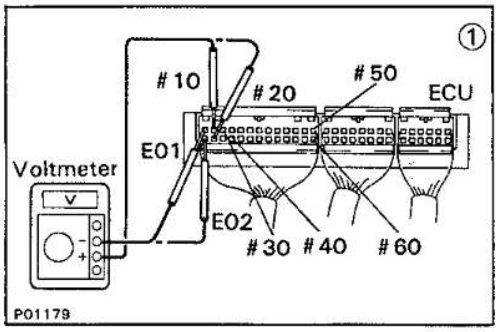

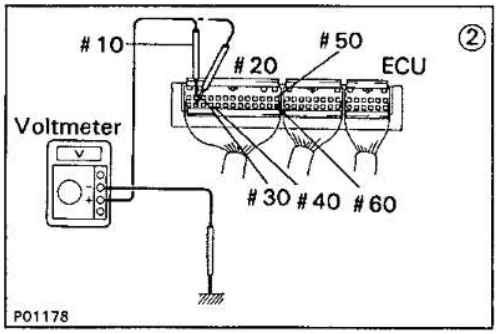

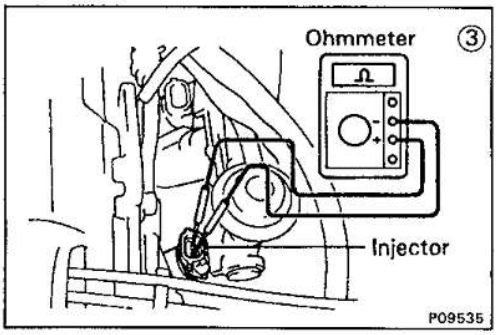

① There is no voltage between ECU terminals #10 ~ #60 and E01 and/or E02. **(IG SW ON)**

↓

② Check that there is voltage between ECU terminal #10 ~ #60 and body ground.

- NO → Check fusible link and ignition switch.
- OK → Check wiring between ECU terminal E01 and/or E02 and body ground.
  - OK → Try another ECU.
  - BAD → Repair or replace.

Check fusible link and ignition switch.
- BAD → Repair or replace.
- OK ↓

③ Check resistance of each injector.
STD resistance: Approx. 13.8 Ω
- OK ↓
- BAD → Replace injector.

Check wiring between ECU terminal #10 ~ #60 and battery.
- BAD → Repair or replace.

V02843

EG

No.	Terminals	Trouble	Condition		STD voltage
5	THA — E2	No voltage	IG SW ON	Intake air temperature 20 °C (68 °F)	0.5 — 3.4 V

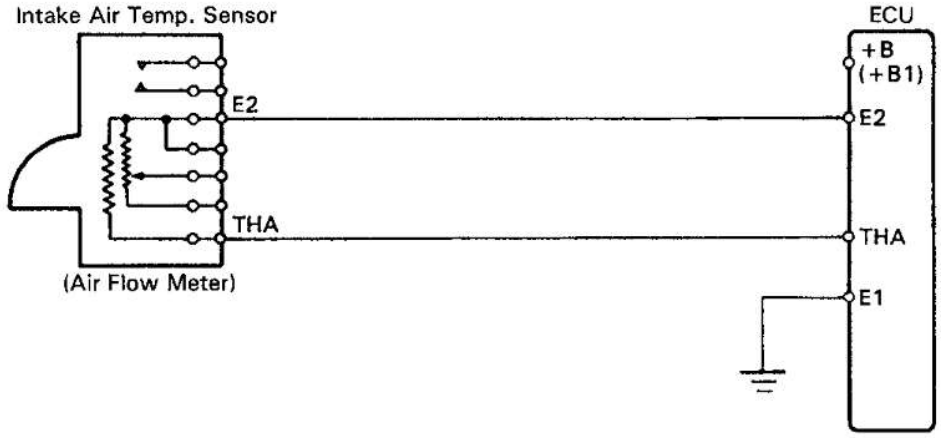

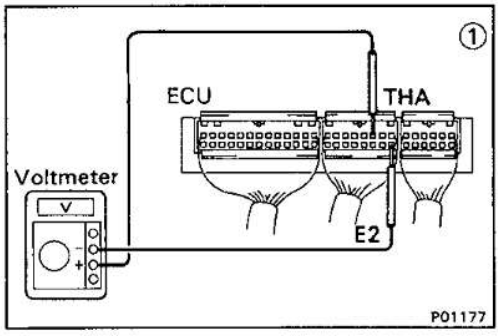

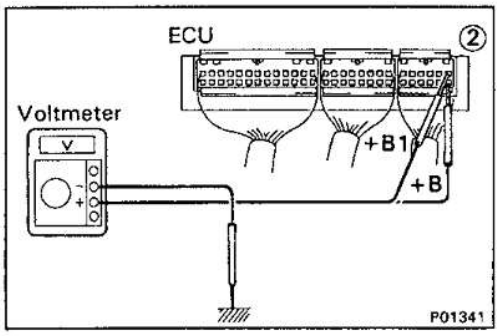

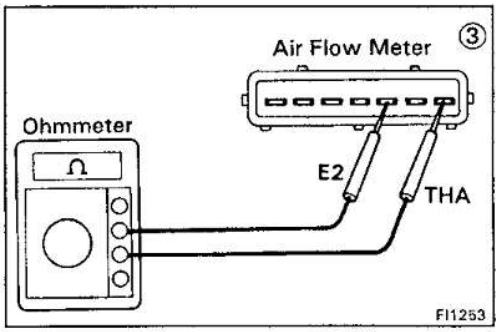

① There is no voltage between ECU terminals THA and E2. **(IG SW ON)**

2 Check that there is voltage between ECU terminal +B (+B1) and body ground. **(IG SW ON)**

- OK → Check wiring between ECU terminal E1 and body ground.
- NO → Refer to No.1 (See page EG-221)

Check wiring between ECU terminal E1 and body ground.

- OK → ③ Check Intake air temp. sensor. (See page EG-268)
- BAD → Repair or replace.

③ Check Intake air temp. sensor. (See page EG-268)

- BAD → Replace air flow meter.
- OK → Check wiring between ECU and Intake air temp. sensor.

Check wiring between ECU and Intake air temp. sensor.

- OK → Try another ECU.
- BAD → Repair or replace.

V02844

No.	Terminals	Trouble	Condition		STD voltage
6	THW — E2	No voltage	IG SW ON	Engine coolant temperature 80 °C (176 °F)	0.2 — 1.0 V

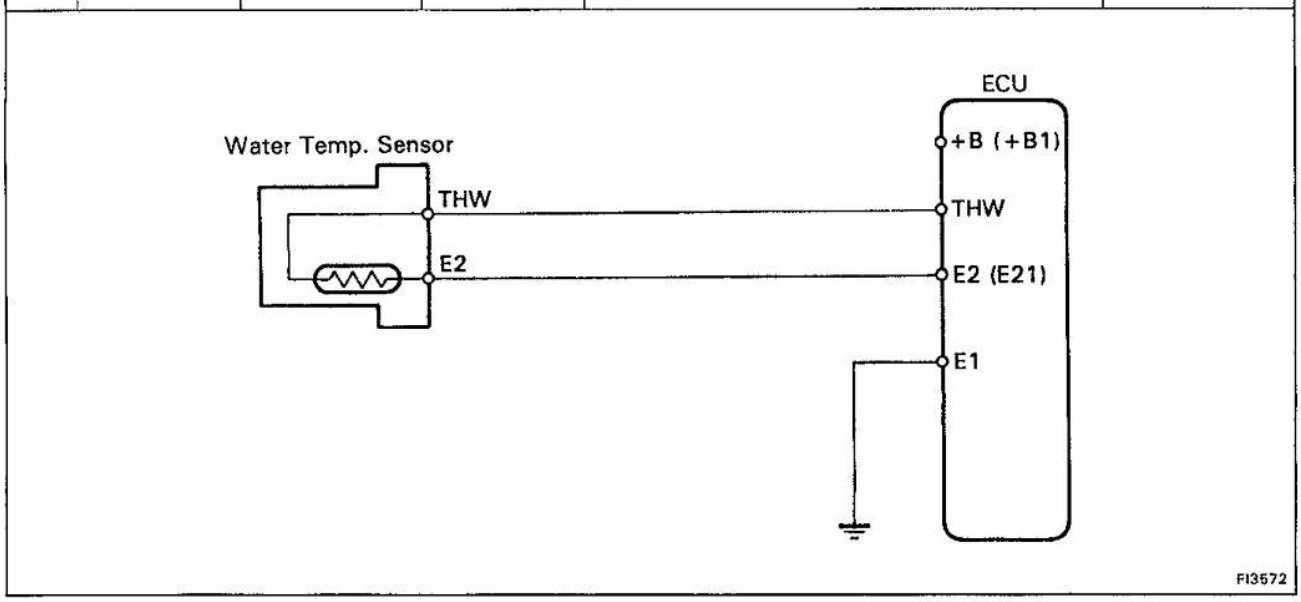

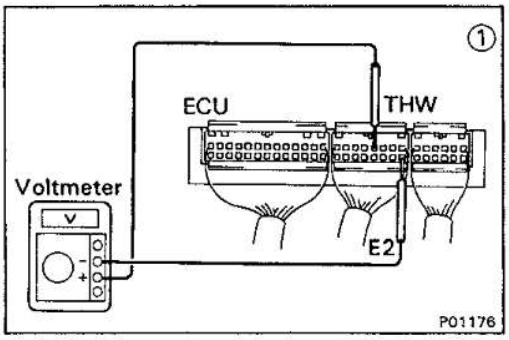

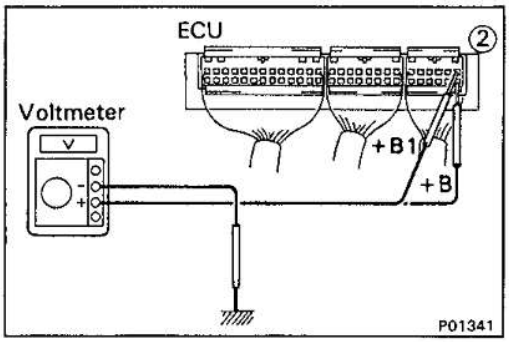

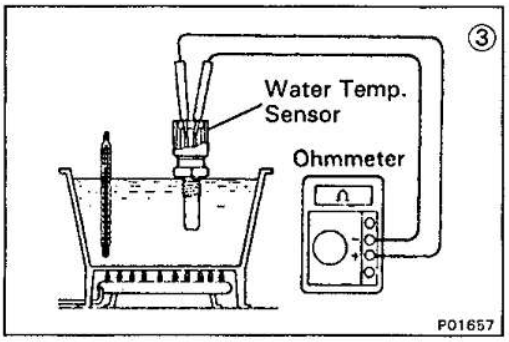

① There is no voltage between ECU terminals THW and E2. **(IG SW ON)**

↓

② Check that there is voltage between ECU terminal +B (+B1) and body ground. **(IG SW ON)**

- NO → Refer to No.1 (See page EG-221)
- OK ↓

Check wiring between ECU terminal E1 and body ground.

- BAD → Repair or replace.
- OK ↓

③ Check water temp. sensor. (See page EG-275)

- BAD → Replace water temp. sensor.
- OK → Check wiring between ECU and ECT sensor.
  - BAD → Repair or replace.
  - OK → Try another ECU.

V02845

No.	Terminals	Trouble	Condition	STD voltage
7	STA — E1	No voltage	Cranking	6 V or more

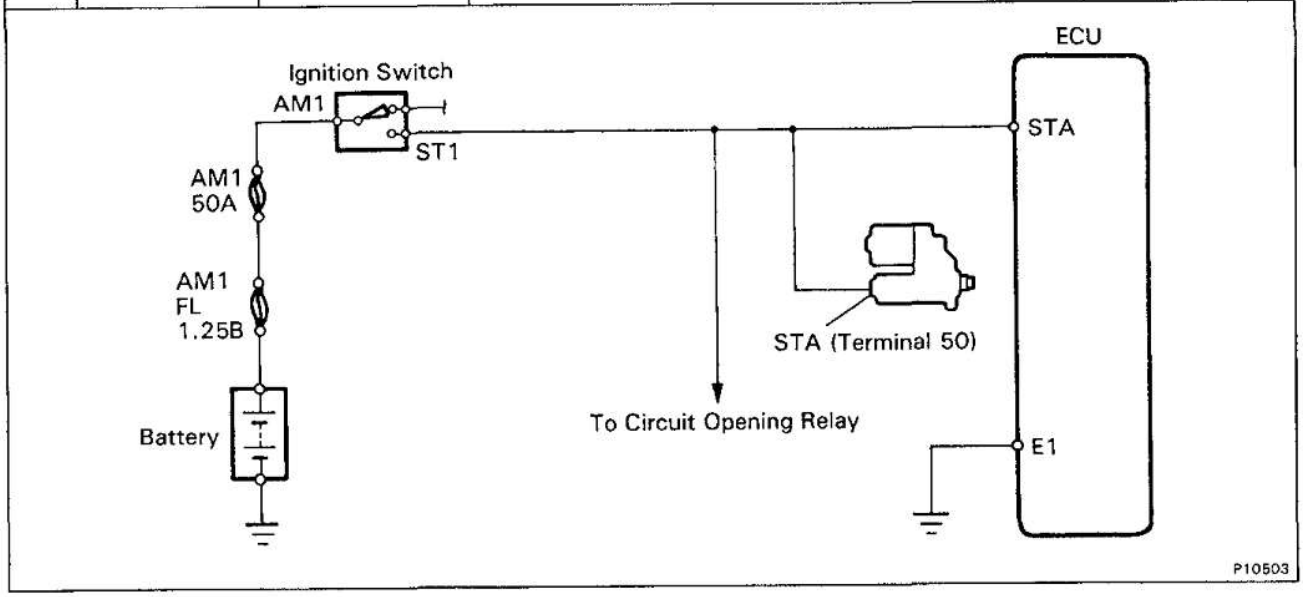

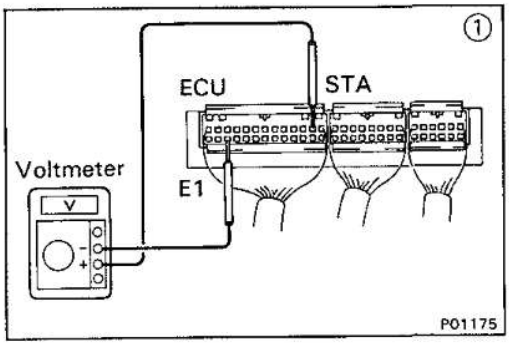

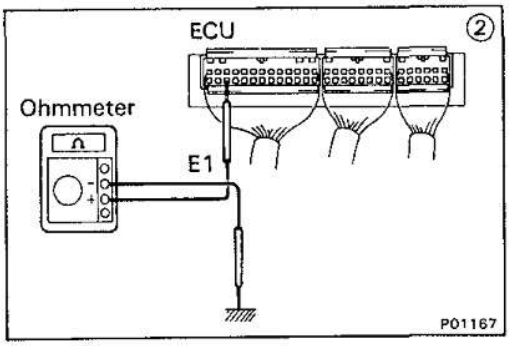

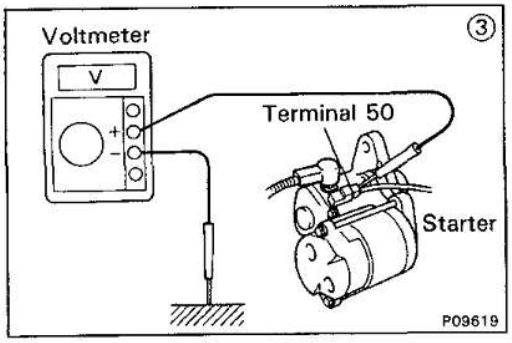

① There is no voltage between ECU terminals STA and E1. **(IG SW START)**

Check starter operation.
- OK → Check wiring between ECU terminal STA and ignition switch terminal ST1.
  - OK → ② Check wiring between ECU terminal E1 and body ground.
    - OK → Try another ECU.
    - BAD → Repair or replace.
  - BAD → Repair or replace.
- BAD → Check H-fuse, fusible link, battery, wiring, ignition switch and neutral start switch.
  - BAD → Repair or replace.
  - OK → ③ Check that there is voltage at starter terminal 50. **(IG SW START) STD voltage: 6 V or more**
    - OK → Check starter.
    - NO → Check wiring between ignition switch terminal ST1 and starter terminal 50.

V02846

No.	Terminals	Trouble	Condition	STD voltage
8	IGT — E1	No voltage	Idling	Pulse generation

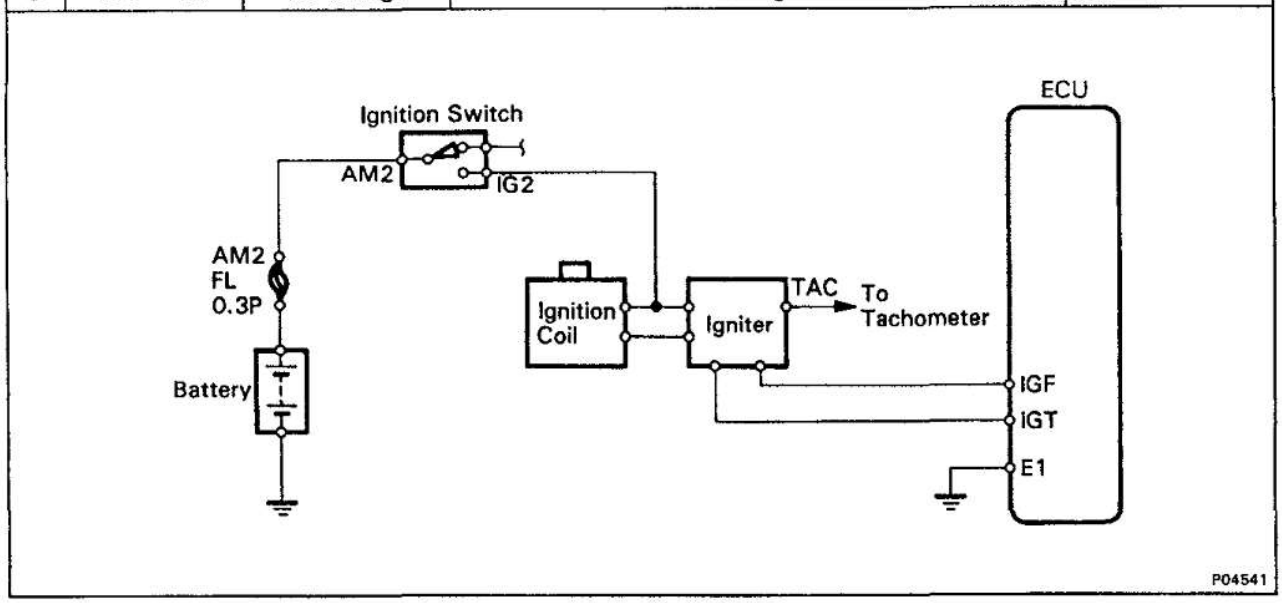

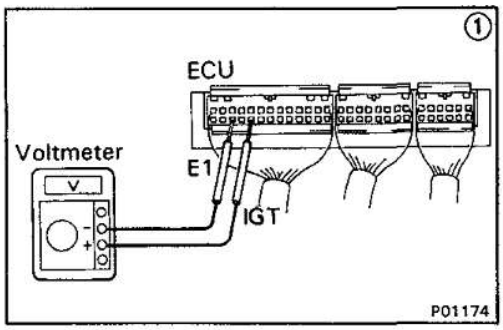

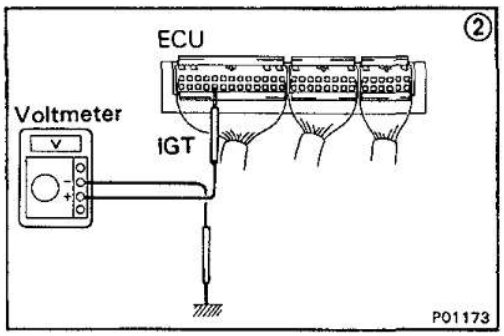

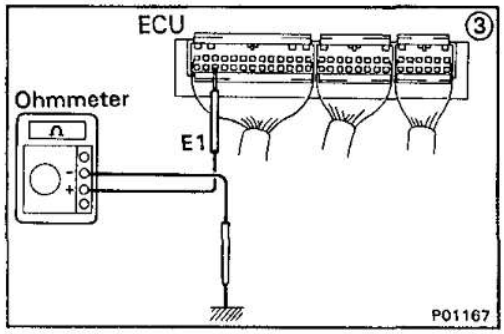

① There is no voltage between ECU terminals IGT and E1. **(Idling)**

② Check that there is voltage between ECU terminal IGT and body ground **(Idling)**

NO → Check fusible link and ignition switch.

OK → ③ Check wiring between ECU terminal E1 and body ground.

③ BAD → Repair or replace.

③ OK → Try another ECU.

Check fusible link and ignition switch. BAD → Repair or replace.

OK → Check distributor (See IG section) BAD → Repair or replace.

OK → Check wiring between ECU and battery. BAD → Repair or replace.

OK → Check igniter. (See IG section) BAD → Repair or replace.

V02847

EG

No.	Terminals	Trouble	Condition	STD voltage
9	ISC1 ~ ISC4 – E1	No voltage	IG SW ON	9 – 14 V

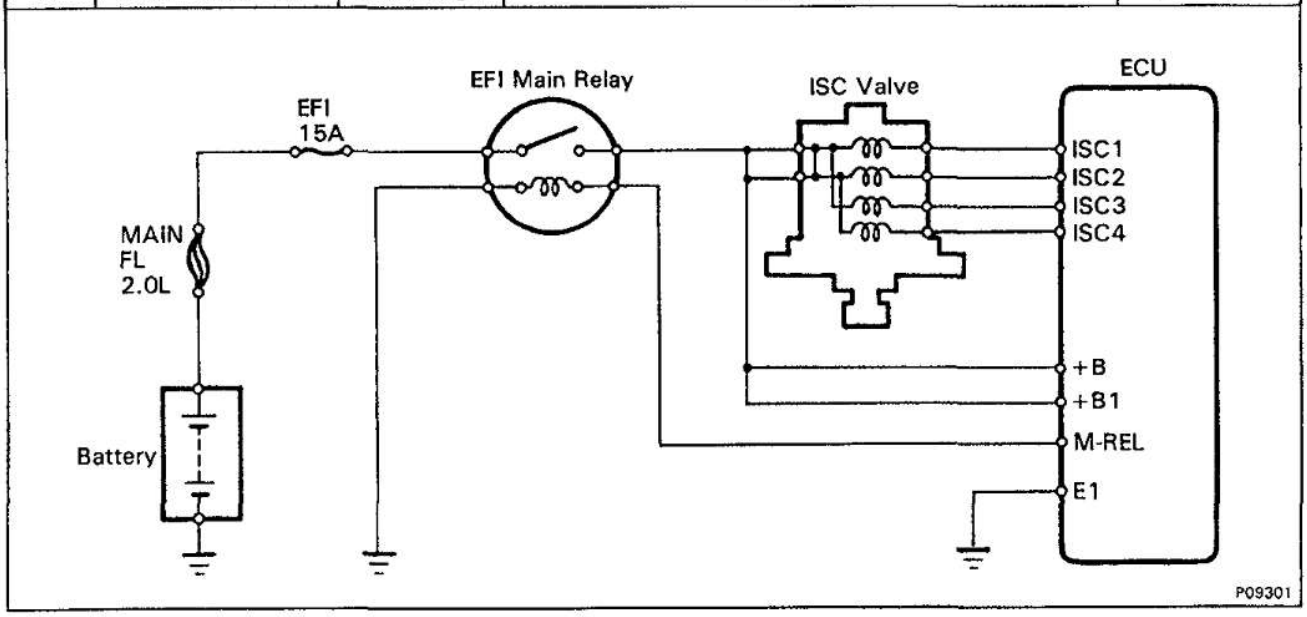

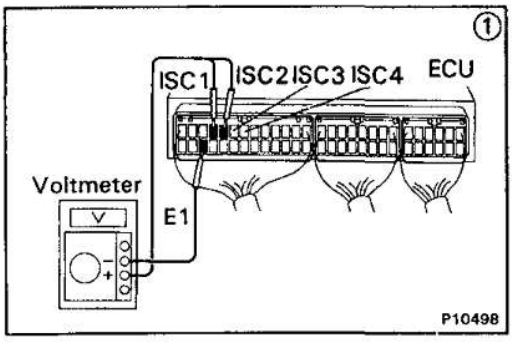

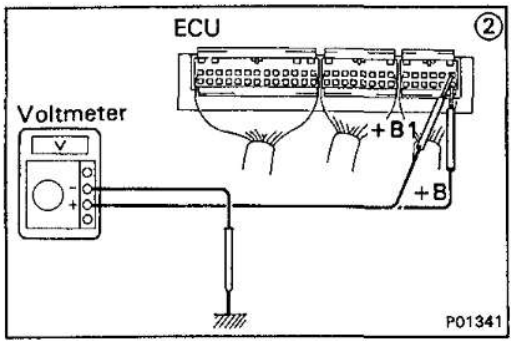

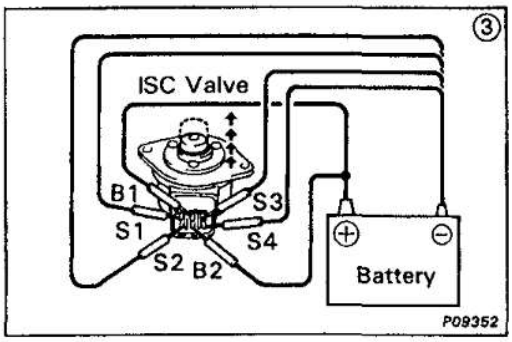

① There is no voltage between ECU terminals ISC1 ~ ISC4 and E1. **(IG SW ON)**

② Check that there is voltage between ECU terminal +B (+B1) and body ground. **(IG SW ON)**

- NO → Refer to No.1. (See page EG-221)
- OK ↓

Check wiring between ECU terminal E1 and body ground.

- BAD → Repair or replace.
- OK ↓

③ Check ISC valve. (See page EG-269)

- BAD → Replace ISC valve.
- OK ↓

Check wiring between ECU and EFI main relay.

- BAD → Repair or replace.
- OK ↓

Try another ECU.

V02848

No.	Terminals	Trouble	Condition	STD voltage
10	W — E1	No voltage	No trouble (malfunction indicator lamp light off) and engine running.	9 — 14 V

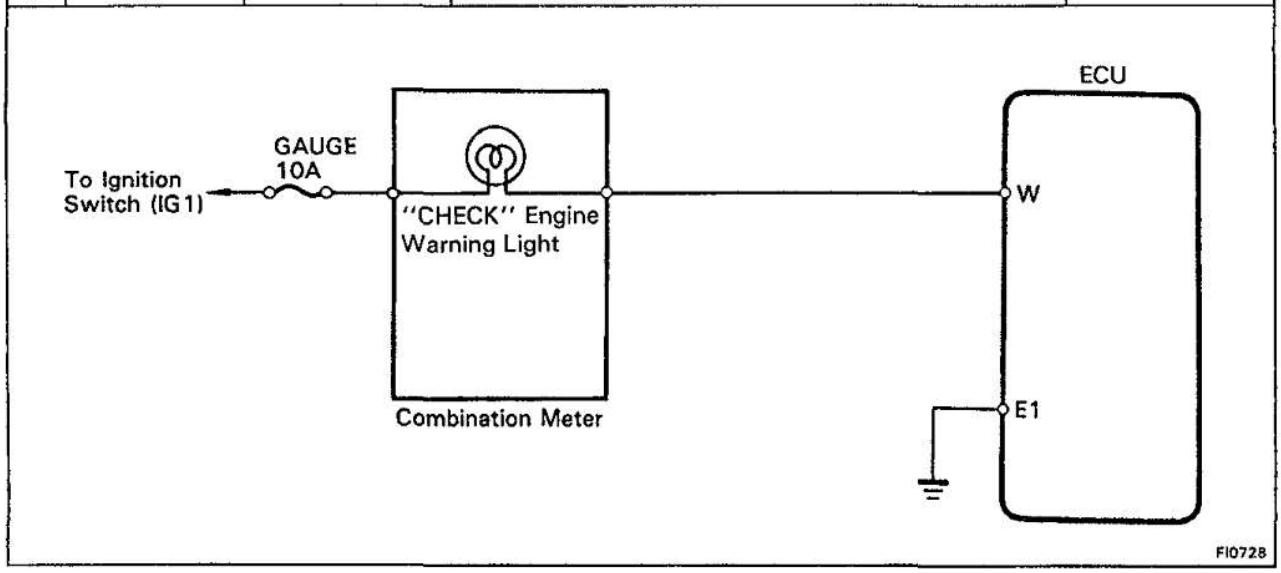

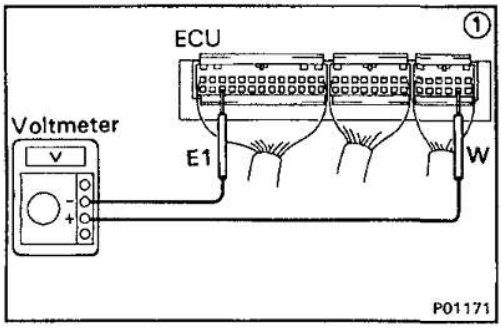

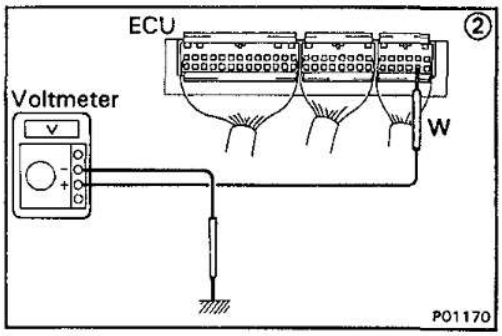

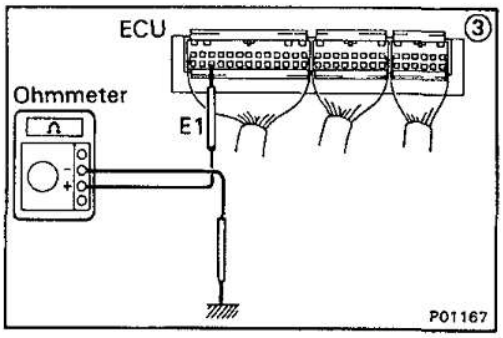

① There is no voltage between ECU terminals W and E1. **(Idling)**

↓

② Check that there is voltage between ECU terminal W and body ground.

- NO → Check GAUGE fuse (10A) and malfunction indicator lamp.
- OK → ③ Check wiring between ECU terminal E1 and body ground.
  - OK → Try another ECU.
  - BAD → Repair or replace.

Check GAUGE fuse (10A) and malfunction indicator lamp.

- OK → Check wiring between ECU terminal W and fuse.
- BAD → Repair or replace.
  - Fuse blows again → Check wiring between ECU terminal W and fuse.

Check wiring between ECU terminal W and fuse.

- BAD → Repair or replace.

V02849

EG

Oxygen Sensor

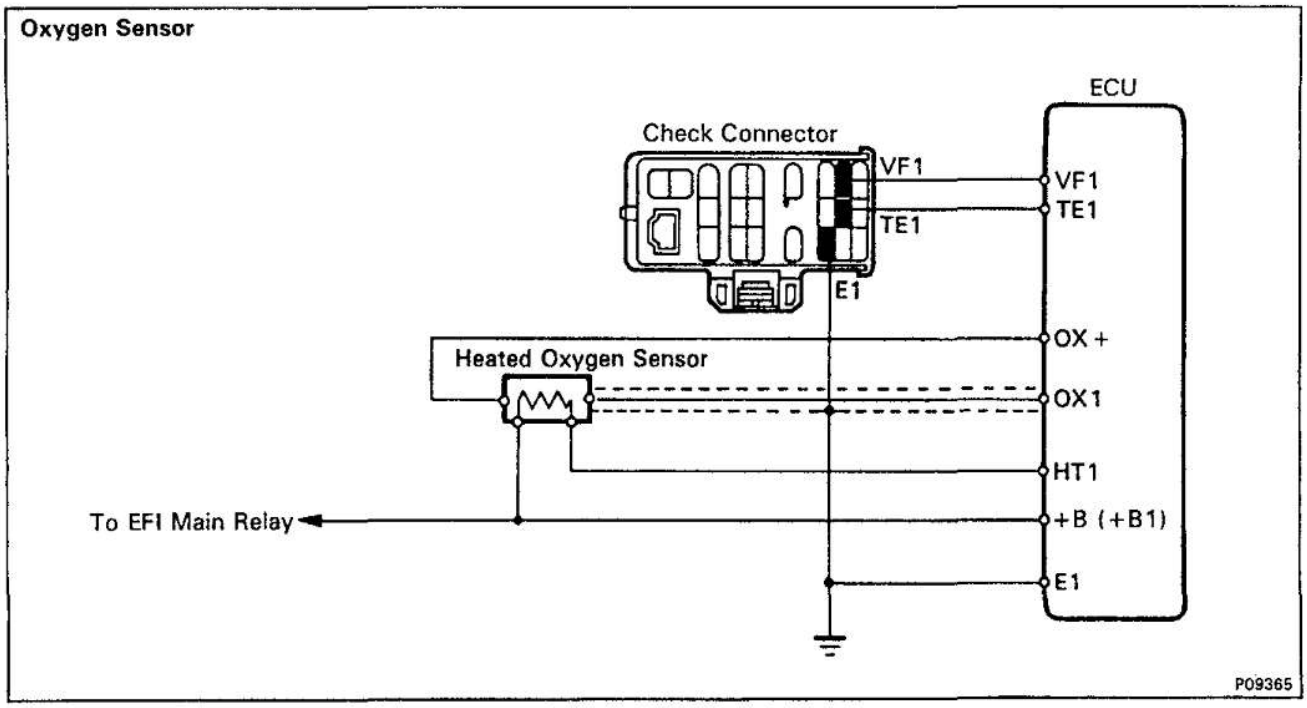

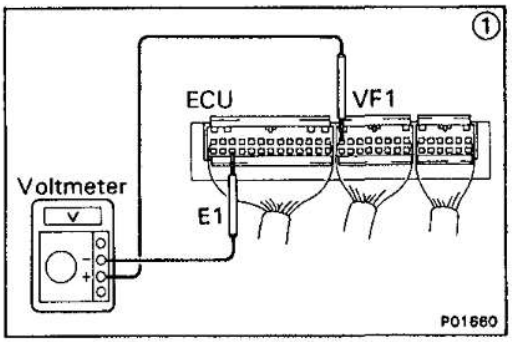

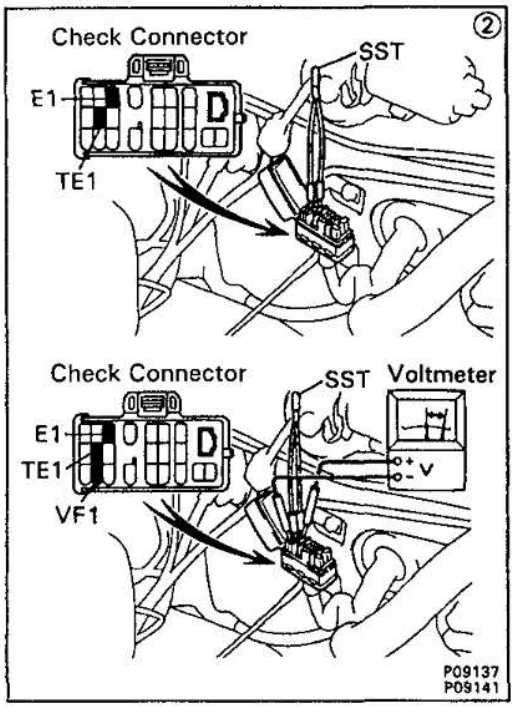

① There is no voltage between ECU terminals VF1 and E1.

Check that there is specified voltage between ECU terminal VF1 and body ground.

NO → OK

Check wiring between ECU terminal E1 and body ground.

OK → Try another ECU.

BAD → Repair or replace.

Check for air suction of air into exhaust system. BAD → Repair air suction.

OK

Check for air leak from air induction system. BAD → Repair air leak.

OK

Check spark plugs. BAD → Repair or replace.

OK

Check distributor and ignition system. BAD → Repair or replace.

OK

Check fuel pressure. BAD → Repair or replace.

OK

Check injectors. BAD → Repair or replace.

OK

Check air flow meter. BAD → Repair or replace.

OK

② Check operation of oxygen sensor. OK → System normal.

BAD

Check wiring between oxygen sensor and ECU connectors. BAD → Repair wiring.

OK

Repair oxygen sensor.

V02850

FUEL PUMP
SYSTEM CIRCUIT

EG0CY-09

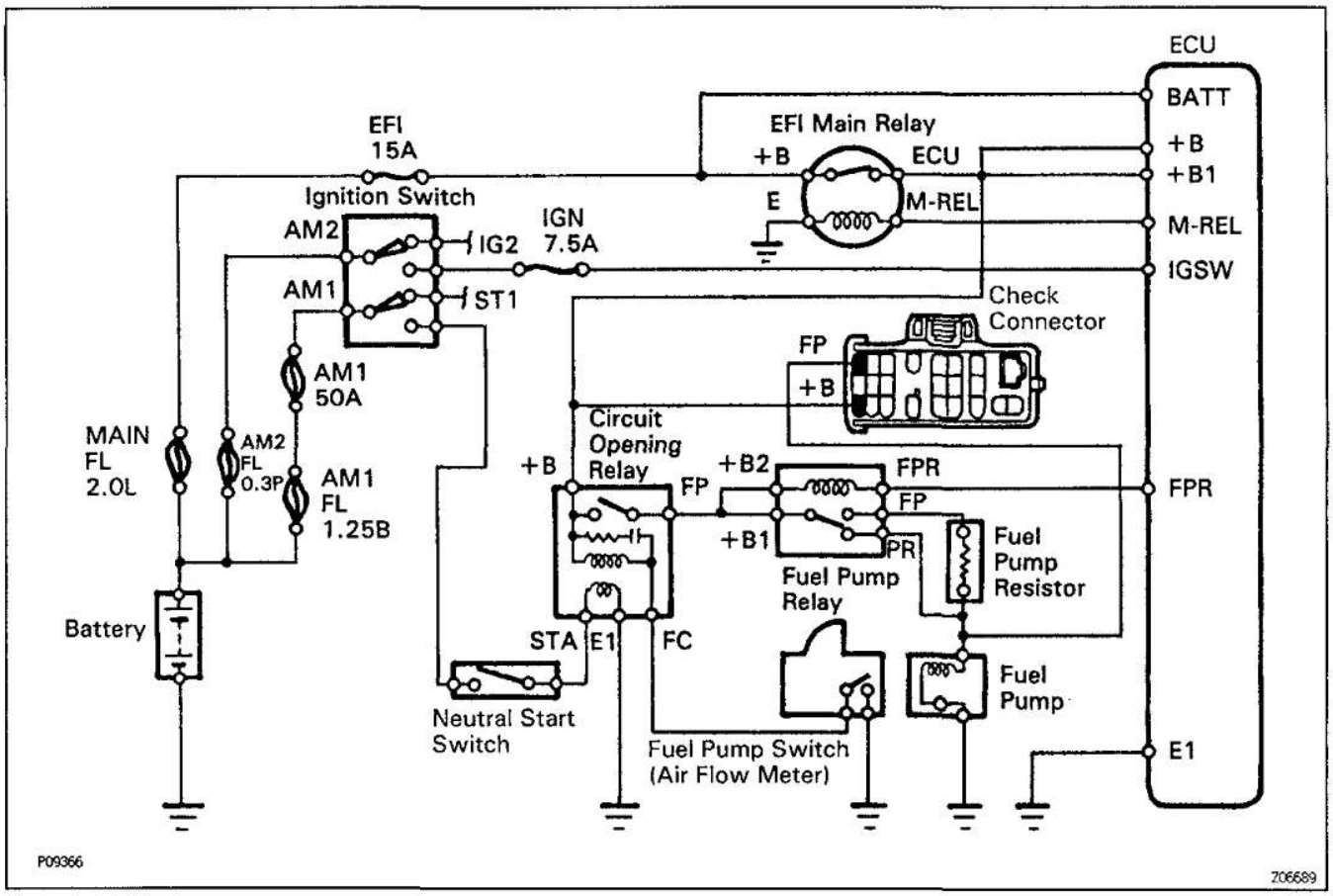

EG1A5-04

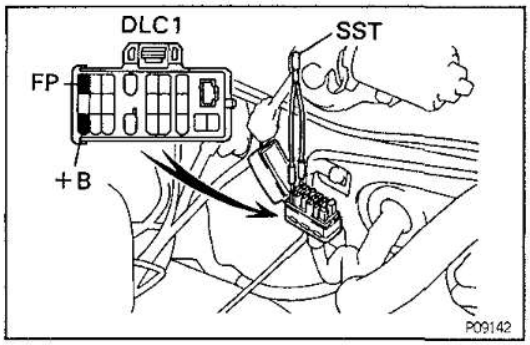

ON-VEHICLE INSPECTION

1. CHECK FUEL PUMP OPERATION

(a) Using SST, connect terminals +B and FP of the check connector.
SST 09843-18020

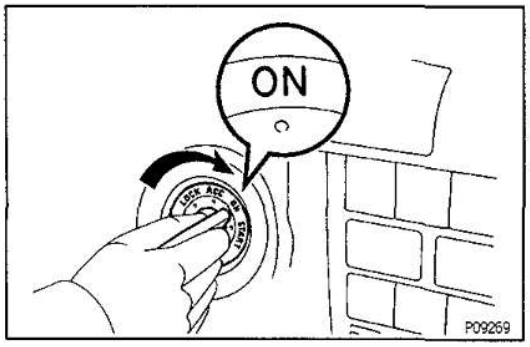

(b) Turn the ignition switch ON.
NOTICE: Do not start the engine.

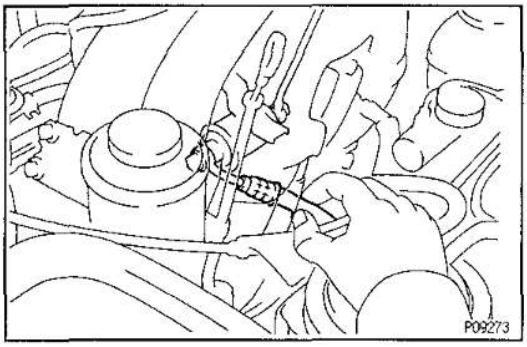

(c) Check that there is pressure in the hose from the fuel filter.
HINT: At this time, you will hear fuel return noise.
If there is no pressure, check the following parts:
- Fusible links (MAIN 2.0L, AM2 0.3P)
- Fuses (EFI 15A, IGN 7.5A)
- EFI main relay
- Fuel pump
- ECU
- Wiring connections

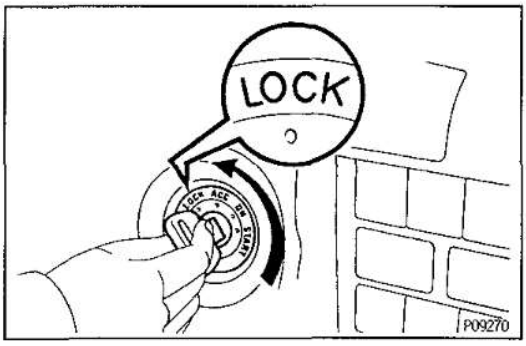

(d) Turn the ignition switch OFF.
(e) Remove SST.
SST 09843–18020

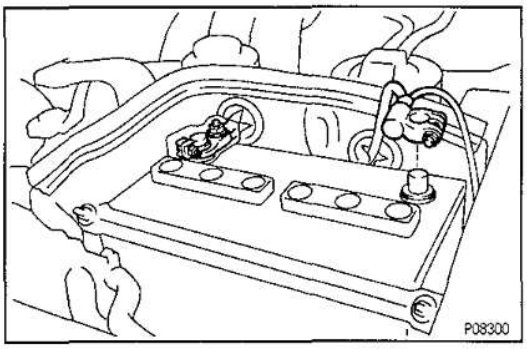

2. CHECK FUEL PRESSURE

(a) Check that the battery voltages is above 12 volts.
(b) Disconnect the cable from the negative (–) terminal of the battery.

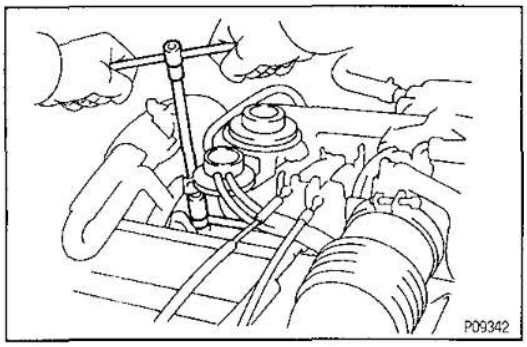

(c) Remove the union bolt and two gaskets, and disconnect the No.1 fuel pipe from the delivery pipe.
HINT:
- Put a suitable container or shop towel under the delivery pipe.
- Slowly loosen the union bolt.

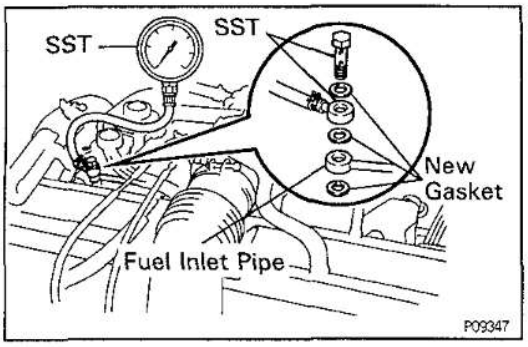

(d) Install the No.1 fuel pipe and SST (pressure gauge) to the delivery pipe with three new gaskets and SST (union bolt).
SST 09268–45012
Torque: 29 N·m (300 kgf·cm, 22 ft·lbf)
(e) Wipe off any splattered gasoline.

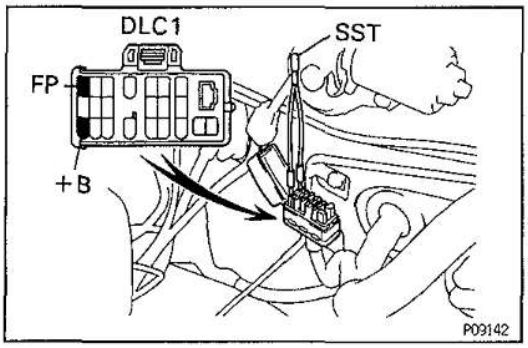

(f) Using SST, connect terminals +B and FP of the check connector.
SST 09843–18020

(g) Reconnect the battery negative (–) cable.

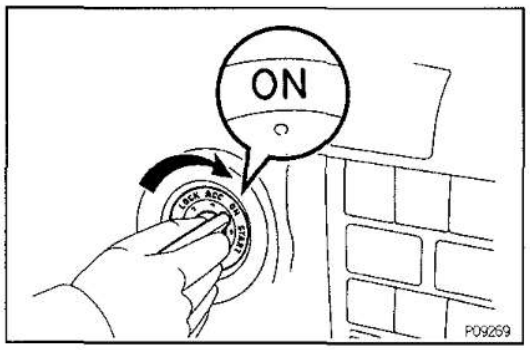

(h) Turn the ignition switch ON.

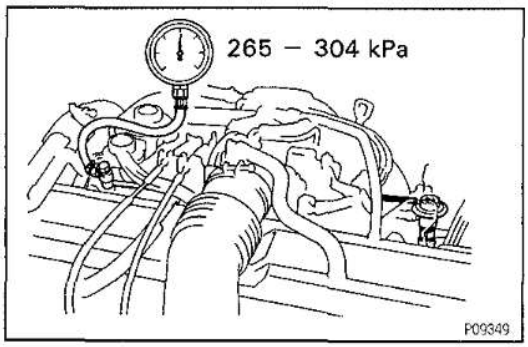

(i) Measure the fuel pressure.
Fuel pressure:
265–304 kPa (2.7–3.1 kgf/cm², 38–44 psi)
If pressure is high, replace the fuel pressure regulator.
If pressure is low, check the following parts:
- Fuel hoses and connections
- Fuel pump
- Fuel filter
- Fuel pressure regulator
- Fuel pume relay
- Fuel pump resistor
- Injectors

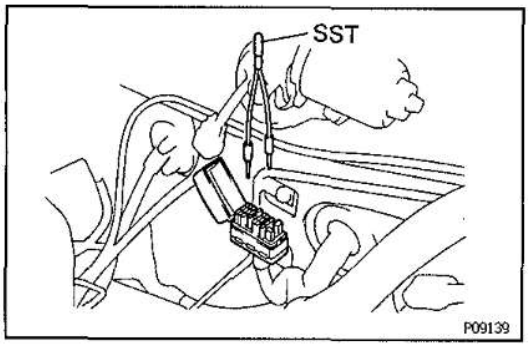

(j) Remove SST from the check connector.
SST 09843–18020

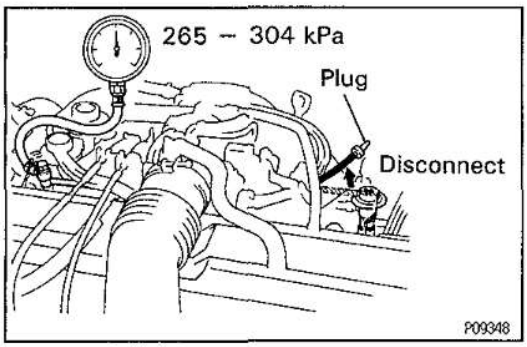

(k) Start the engine.

(l) Disconnect the vacuum sensing hose from the fuel pressure regulator, and plug the hose end.

(m) Measure the fuel pressure at idle.

Fuel pressure:

265–304 kPa (2.7–3.1 kgf/cm², 38–44 psi)

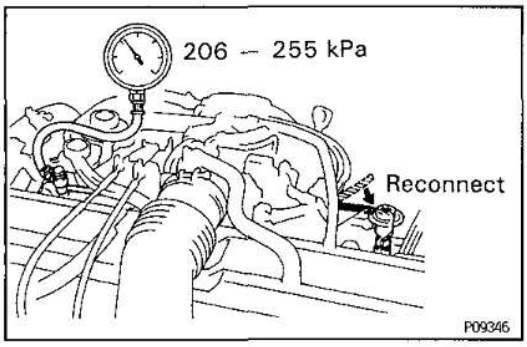

(n) Reconnect the vacuum sensing hose to the fuel pressure regulator.

(o) Measure the fuel pressure at idle.

Fuel pressure:

206–255 kPa (2.1–2.6 kgf/cm², 31–37 psi)

If pressure is not as specified, check the vacuum sensing hose and fuel pressure regulator.

(p) Stop the engine.

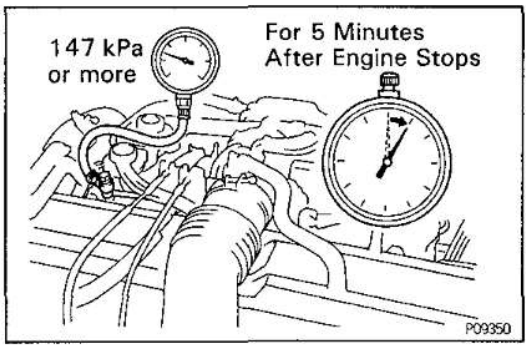

(q) Check that the fuel pressure remains as specified for 5 minutes after the engine is stops.

Fuel pressure:

147 kPa (1.5 kgf/cm², 21 psi) or more

If pressure is not as specified, check the fuel pump, pressure regulator and/or injector.

(r) After checking fuel pressure, disconnect the battery negative (–) cable and carefully remove SST to prevent gasoline from splashing.

SST 09268–45012

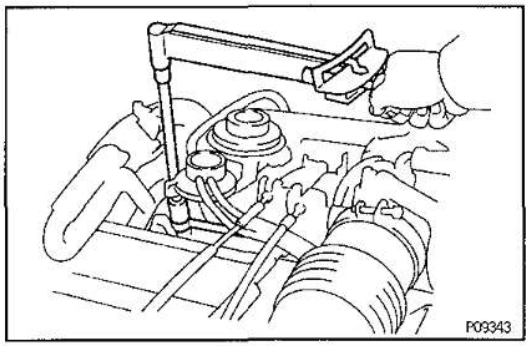

(s) Reconnect the No.1 fuel pipe to the delivery pipe with two new gaskets and the union bolt.

Torque: 29 N·m (300 kgf·cm, 22 ft·lbf)

(t) Reconnect the cable to the negative (–) terminal of the battery.

(u) Check for fuel leakage.

EG27V-01

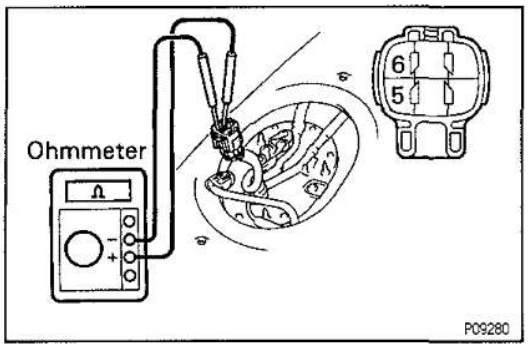

FUEL PUMP INSPECTION

A. Inspect fuel pump resistance

Using an ohmmeter, measure the resistance between the terminals 5 and 6.

Resistance (Cold):

0.2 — 3.0 Ω

If the resistance is not as specified, replace the fuel pump.

EG

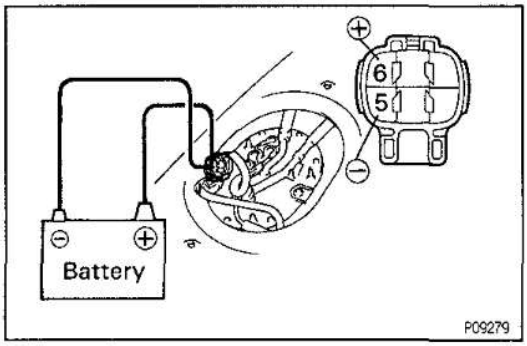

B. Inspect fuel pump operation

Connect the positive (+) lead from the battery to terminal 6 of the connector, and the negative (−) lead to terminal 5. Check that the fuel pump operates.

NOTICE:

- **These tests must be performed quickly (within 10 seconds) to prevent the coil from burning out.**
- **Keep the fuel pump as far away from the battery as possible.**
- **Always perform switching at the battery side.**

If operation is not as specified, replace the fuel pump.

EG0D1-07

COMPONENTS FOR DISASSEMBLY AND ASSEMBLY

EG

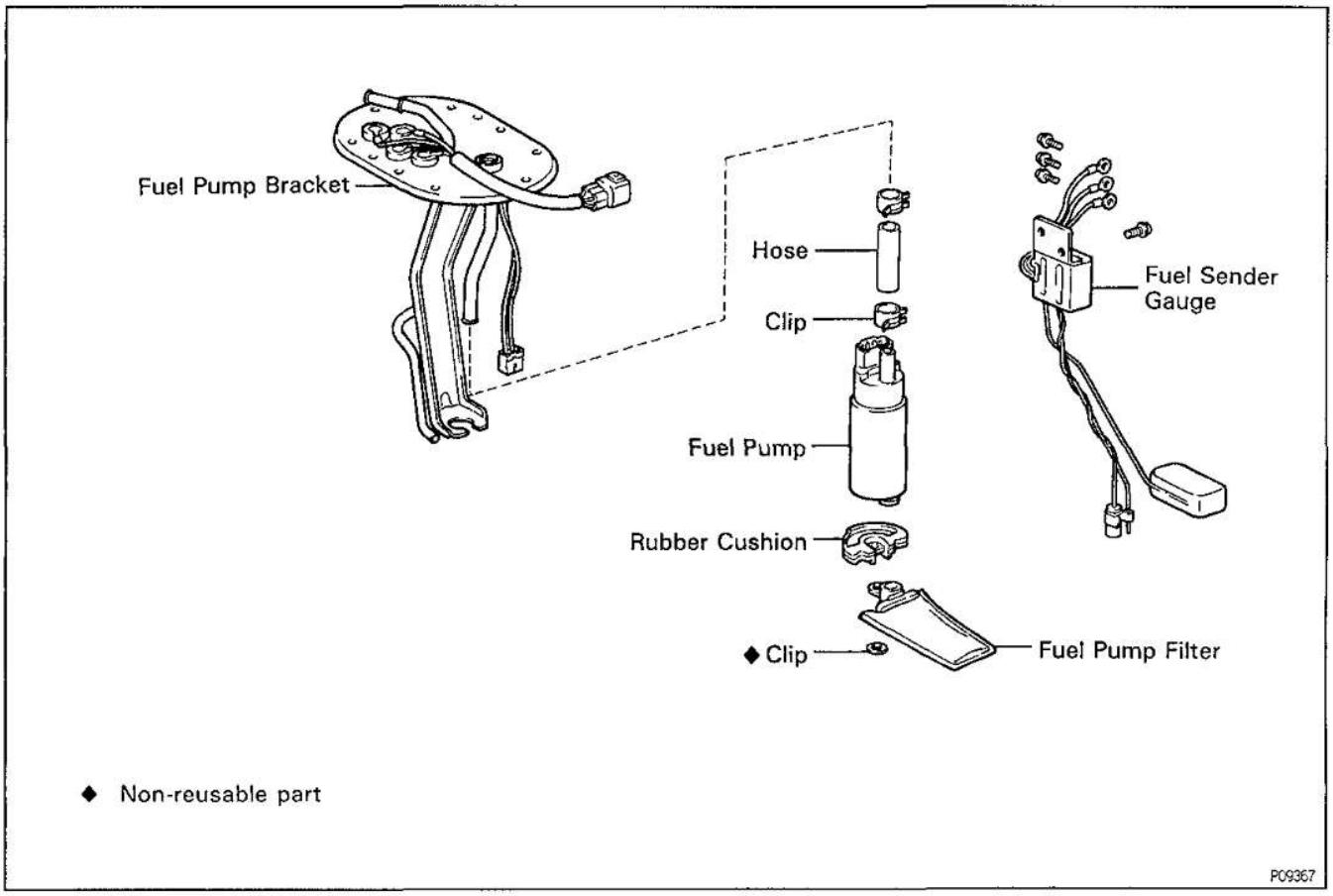

EG1SE-01

FUEL PUMP DISASSEMBLY

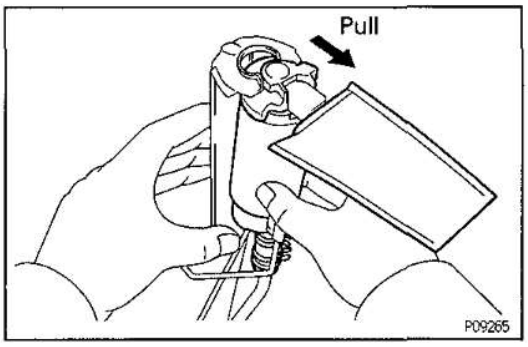

1. REMOVE FUEL PUMP FROM FUEL PUMP BRACKET

(a) Pull off the lower side of the fuel pump from the pump bracket.

(b) Disconnect the fuel pump connector.

(c) Disconnect the fuel hose from the fuel pump, and remove tthe fuel pump.

(d) Remove the rubber cushion from the fuel pump.

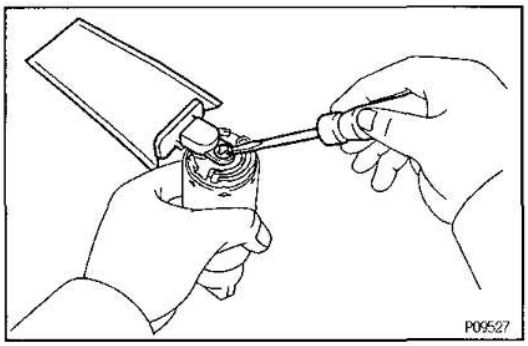

2. REMOVE FUEL PUMP FILTER FROM FUEL PUMP

(a) Using a small screwdriver, remove the clip.

(b) Pull out the pump filter.

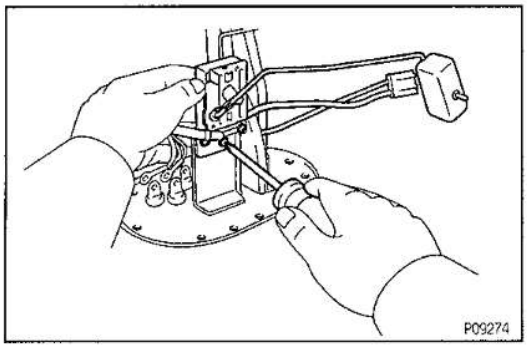

3. REMOVE FUEL SENDER GAUGE FROM FUEL PUMP BRACKET

(a) Remove the three screws and diconnect the lead wires from the pump bracket.

(b) Remove the three screws and sender gauge.

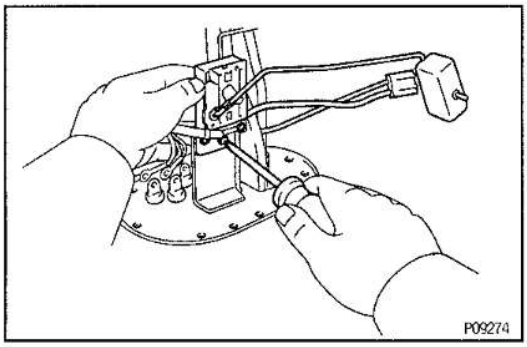

FUEL PUMP ASSEMBLY

EG0D3-06

1. INSTALL FUEL SENDER GAUGE TO FUEL PUMP BRACKET

(a) Install the sender gauge with the three screws.

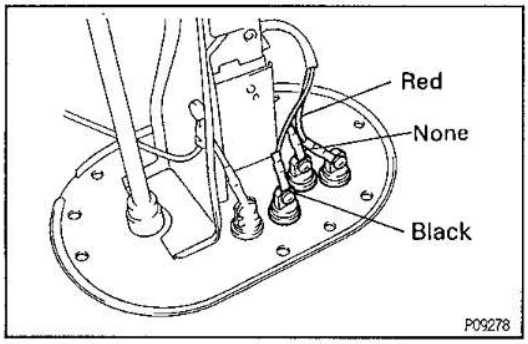

(b) Connect the three lead wires to the pump bracket with the screws as shown.

2. INSTALL FUEL PUMP FILTER TO FUEL PUMP

Install the pump filter with a new clip.

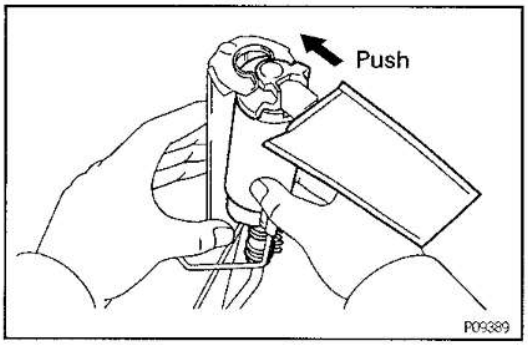

3. INSTALL FUEL PUMP TO FUEL PUMP BRACKET

(a) Install the rubber cushion to the fuel pump.

(b) Connect the fuel hose to the outlet port of the fuel pump.

(c) Install the fuel pump connector.

(d) Install the fuel pump by pushing the lower side of the fuel pump.

FUEL FILTER

ON—VEHICLE INSPECTION

EG1A8-02

INSPECT FUEL PRESSURE

(See step 2 on page EG—235)

EG1A9-02

COMPONENTS FOR REMOVAL AND INSTALLATION

EG

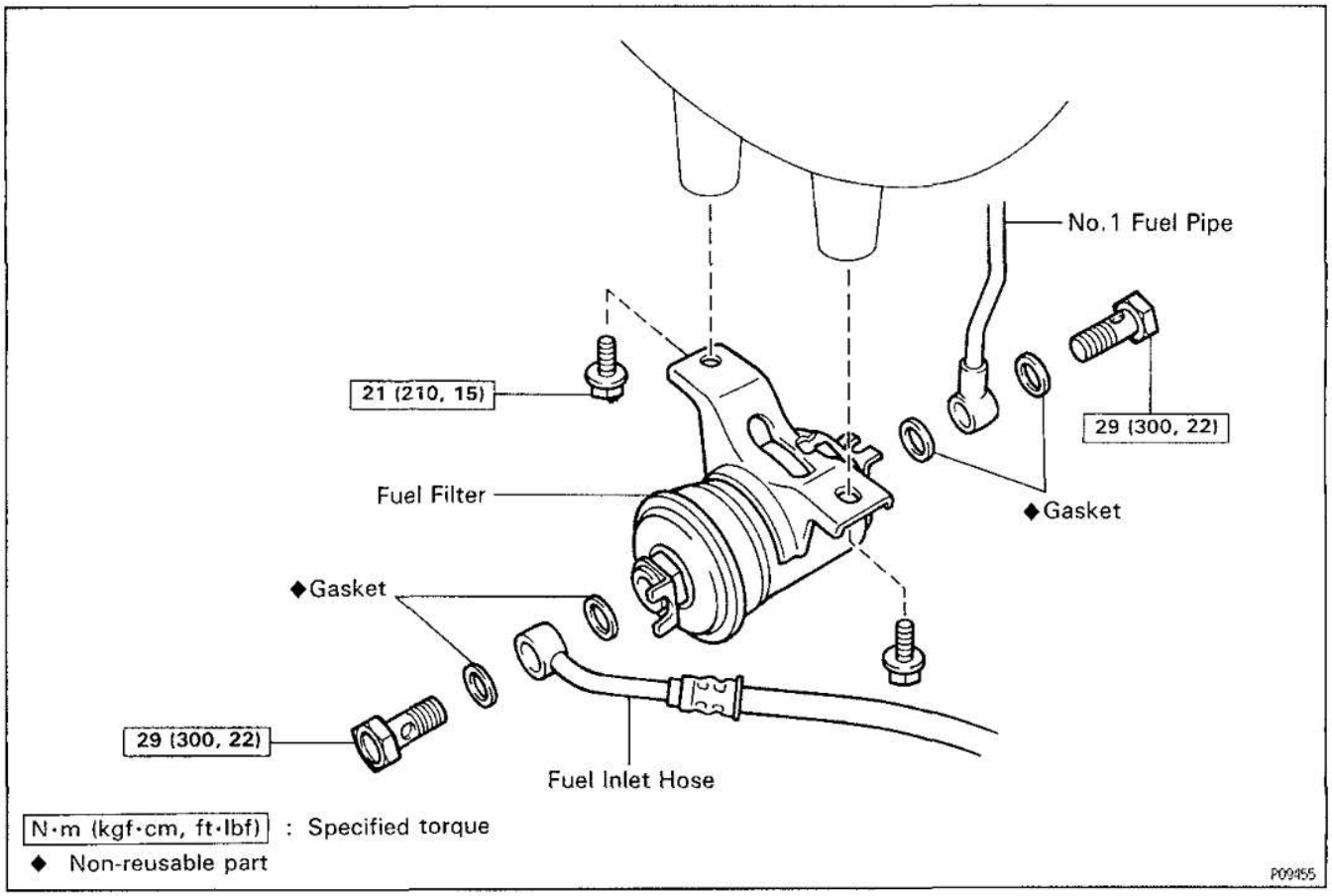

FUEL PRESSURE REGULATOR

EG1T5-01

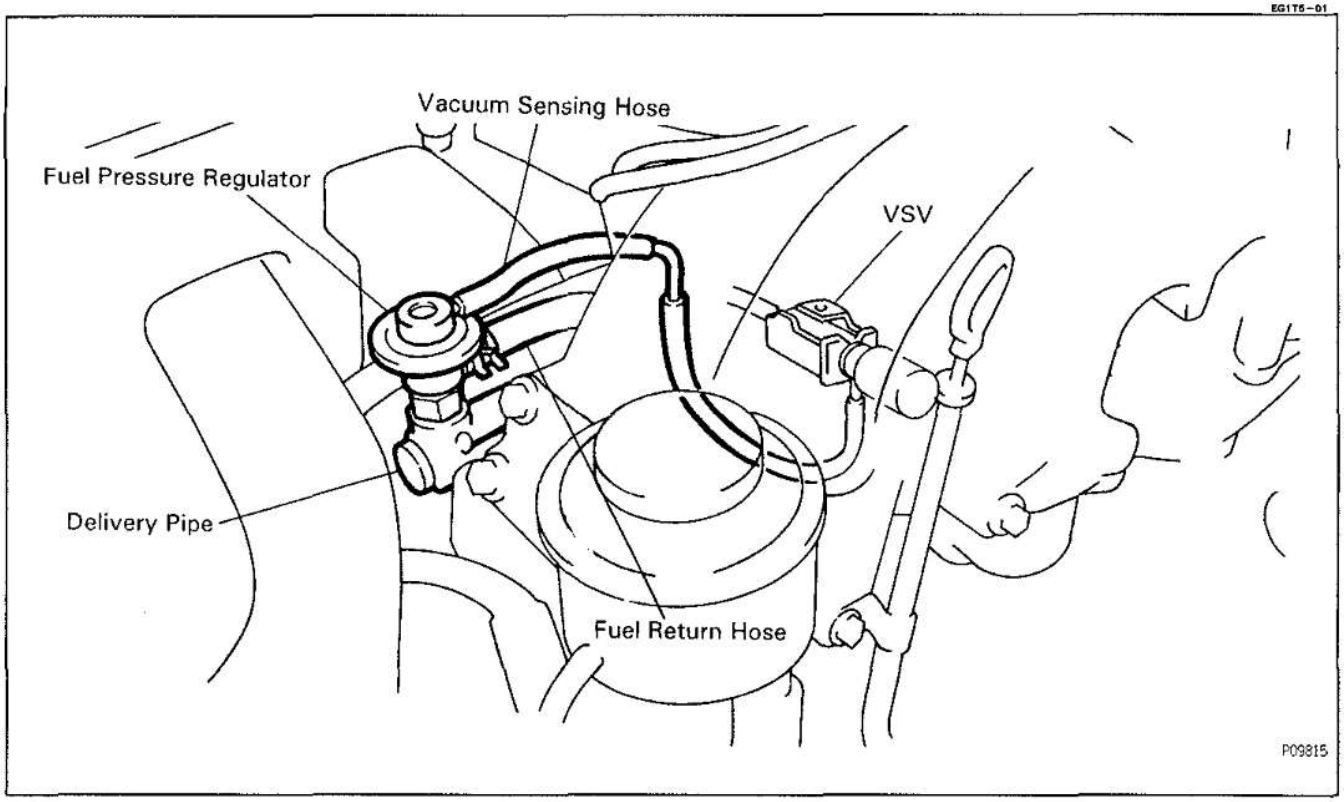

EG

EG0D5-04

ON—VEHICLE INSPECTION

INSPECT FUEL PRESSURE
(See step 2 on page EG—236)

EG1AC-02

COMPONENTS FOR REMOVAL AND INSTALLATION

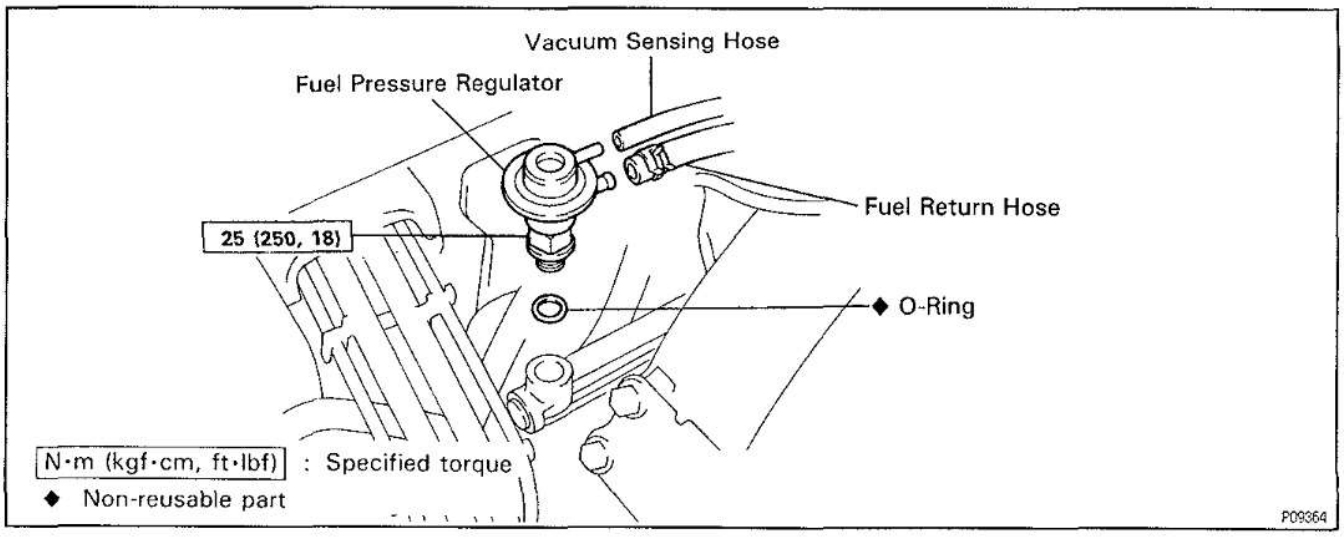

EG

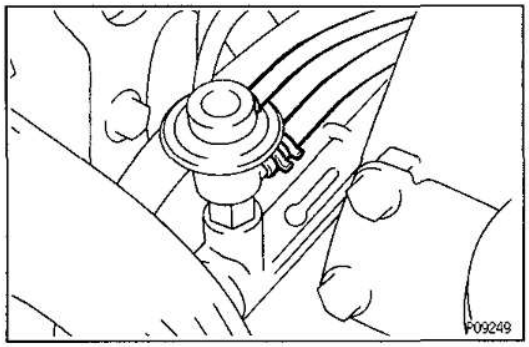

FUEL PRESSURE REGULATOR REMOVAL

EG1AD-03

1. **DISCONNECT VACUUM SENSING HOSE FROM FUEL PRESSURE REGULATOR**
2. **DISCONNECT FUEL RETURN HOSE FROM FUEL PRESSURE REGULATOR**
   HINT: Put a suitable container or shop towel under the pressure regulator.

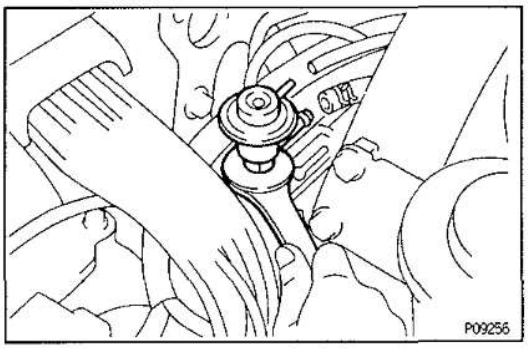

3. **REMOVE FUEL PRESSURE REGULATOR**
   Loosen the lock nut, and remove the fuel pressure regulator.

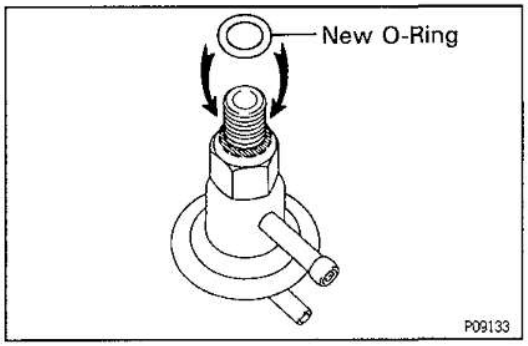

FUEL PRESSURE REGULATOR INSTALLATION

EG1AE-03

1. **INSTALL FUEL PRESSURE REGULATOR**

(a) Fully loosen the lock nut of the fuel pressure regulator.

(b) Apply a light coat of gasoline to a new O—ring and install it to the fuel pressure regulator.

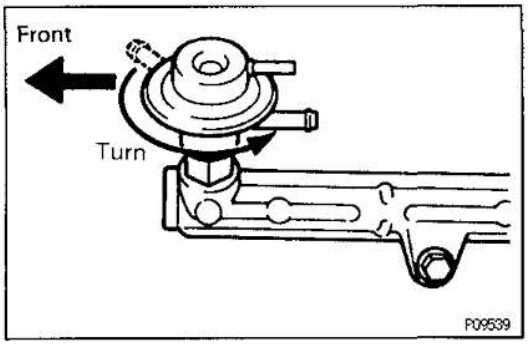

(c) Thrust the fuel pressure regulator completely into the delivery pipe by hand.

(d) Turn the fuel pressure regulator counterclockwise until the outlet faces in the direction indicated in the illustration.

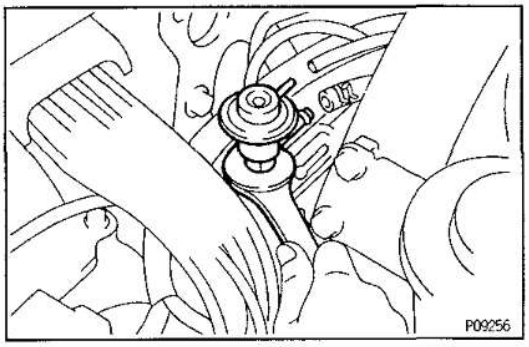

(e) Torque the lock nut.
Torque: 25 N·m (250 kgf·cm, 18 ft·lbf)

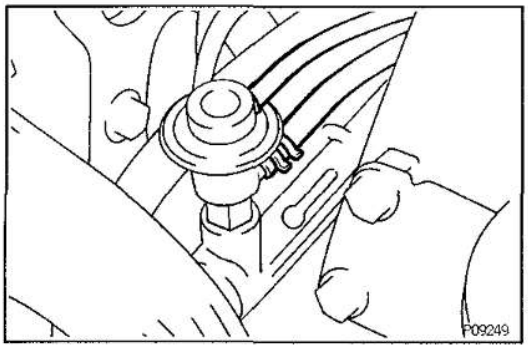

2. **CONNECT FUEL RETURN HOSE TO FUEL PRESSURE REGULATOR**
3. **CONNECT VACUUM SENSING HOSE TO FUEL PRESSURE REGULATOR**

4. **START ENGINE AND CHECK FOR FUEL LEAKAGE**

INJECTOR

EG12Y-06

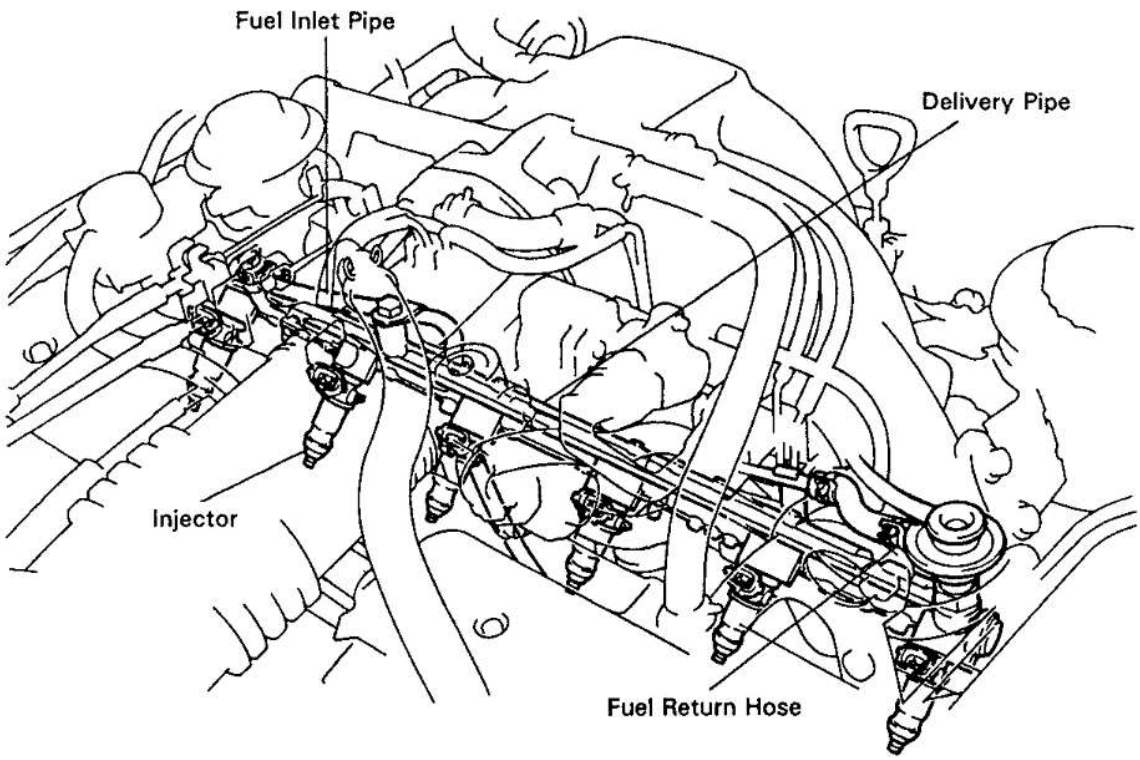

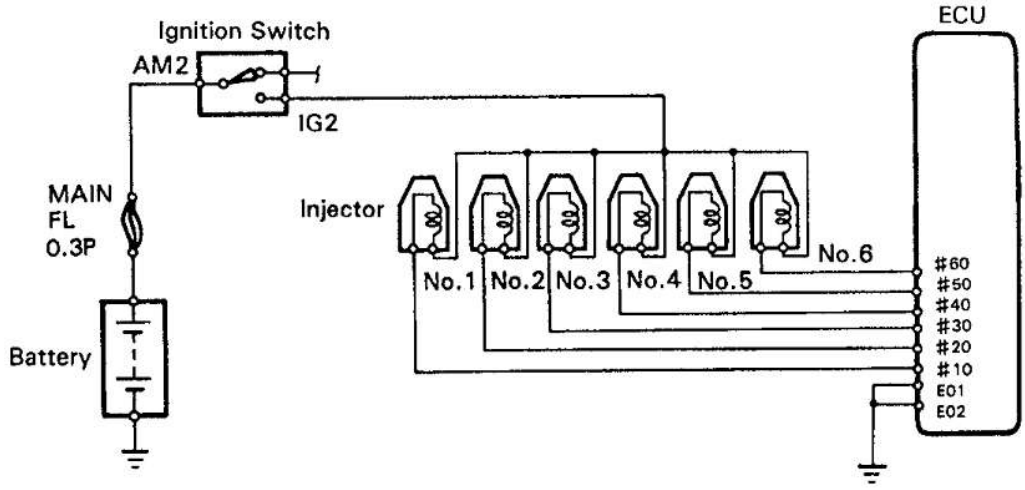

P09371
P09298

Z06690

EG0D8-09

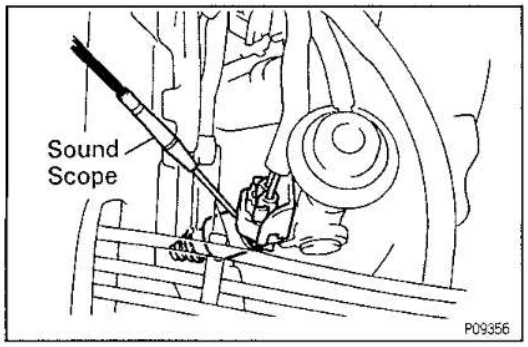

ON—VEHICLE INSPECTION

1. INSPECT INJECTOR OPERATION

Check operation sound from each injector.

(a) With the engine running or cranking, use a sound scope to check that there is normal operating noise in proportion to engine speed.

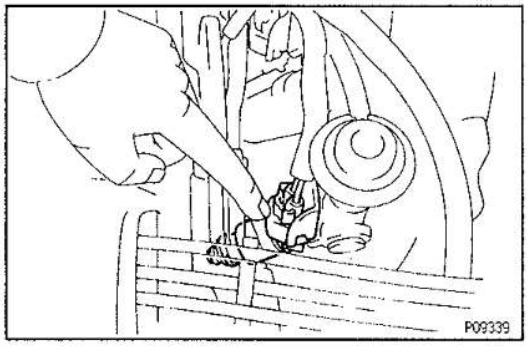

(b) If you have no sound scope, you can check the injector transmission operation with your finger.
If no sound or unusual sound is heard, check the wiring connector, injector or injection signal from the ECU.

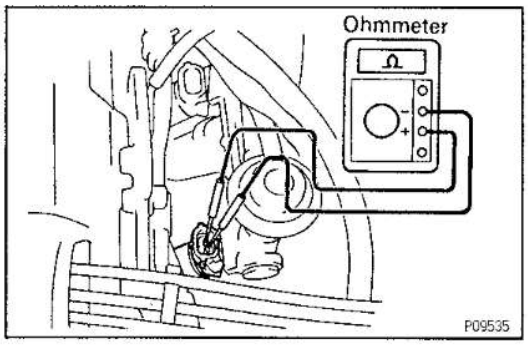

2. INSPECT INJECTOR RESISTANCE

(a) Remove the throttle body. (See page EG—262)

(b) Disconnect the injector connectors.

(c) Using an ohmmeter, measure the resistance between the terminals.

Resistance:

12 to 16 Ω

If the resistance is not as specified, replace the injector.

(d) Reconnect the injector connectors.

(e) Reinstall the throttle body. (See page EG—265)

EG130-06

COMPONENTS FOR REMOVAL AND INSTALLATION

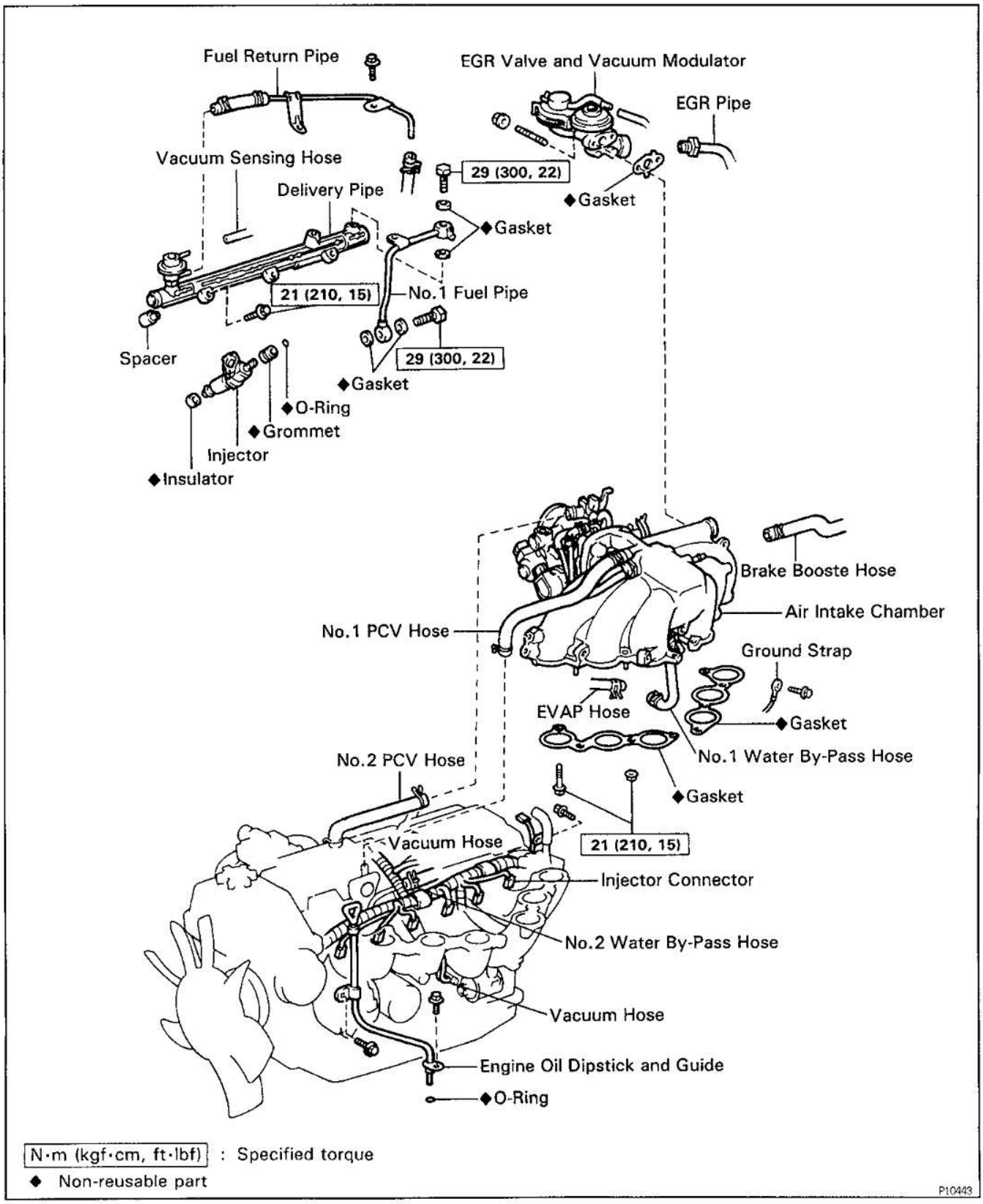

EG27W-01

INJECTORS REMOVAL

1. **DISCONNECT CABLE FROM NEGATIVE TERMINAL OF BATTERY**
2. **DRAIN ENGINE COOLANT**

EG

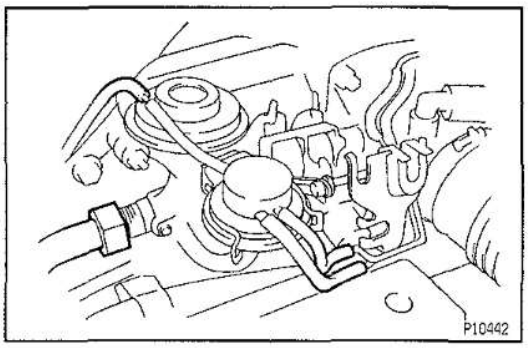

3. **(For Europe)**
   REMOVE EGR VALVE AND VACUUM MODULATOR
   (a) Disconnect three vacuum hoses.
   (b) Loosen the EGR pipe union nut.

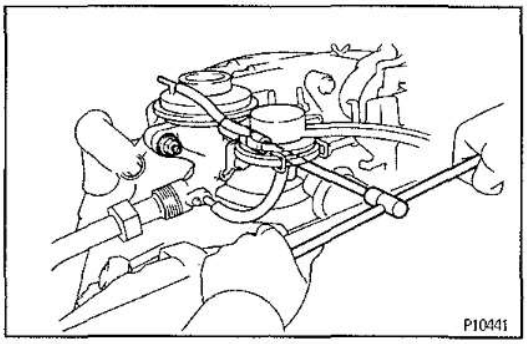

   (c) Remove the two nuts holding the EGR valve and air intake chamber.
   (d) Remove the two stud bolts, EGR valve and vacuum modulator assembly and gasket.

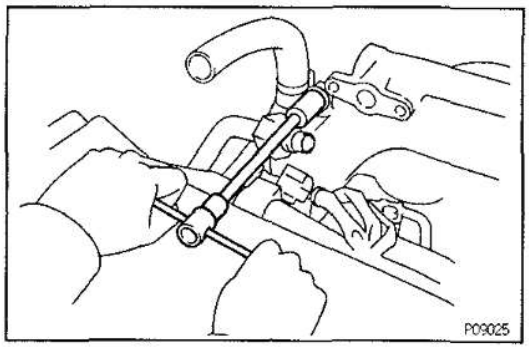

4. **REMOVE BOLT HOLDING HEATER INLET PIPE AND AIR INTAKE CHAMBER**

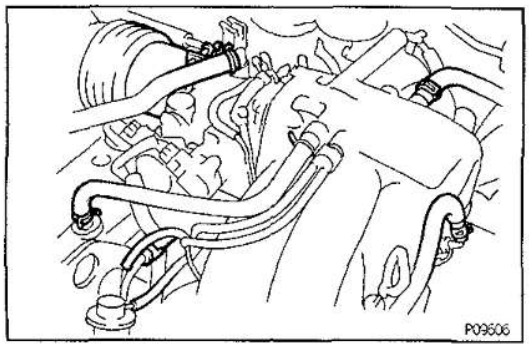

5. **DISCONNECT NO.1 AND NO.2 PCV HOSES**
6. **DISCONNECT VACUUM HOSES**
7. **DISCONNECT NO.2 WATER BY-PASS HOSE**
8. **DISCONNECT EVAP HOSE**

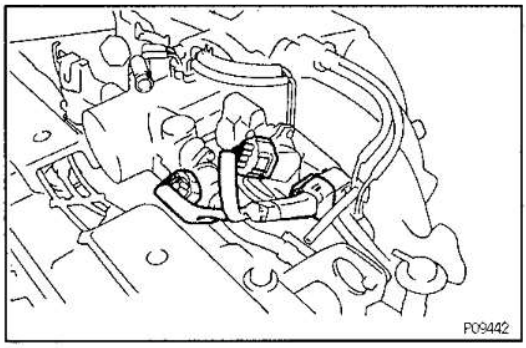

9. DISCONNECT THROTTLE POSITION SENSOR CONNECTOR

10. DISCONNECT IDLE SPEED CONTROL VALVE CONNECTOR

11. DISCONNECT CONNECTOR FOR EMISSION CONTROL VALVE SET ASSEMBLY

12. REMOVE ENGINE OIL DIPSTICK AND GUIDE

(a) Remove the two mounting bolts.

(b) Pull out the dipstick together with dipstick guide.

(c) Remove the O—ring from the dipstick guide.

13. DISCONNECT GROUND STARP

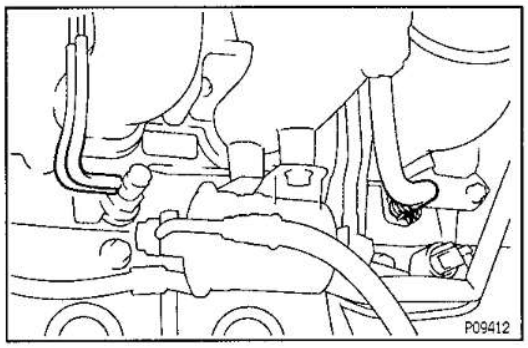

14. REMOVE AIR INTAKE CHAMBER

(a) Disconnect the two vacuum hoses from the BVSV.

(b) Disconnect the No.1 water by—pass hose from the cylinder head.

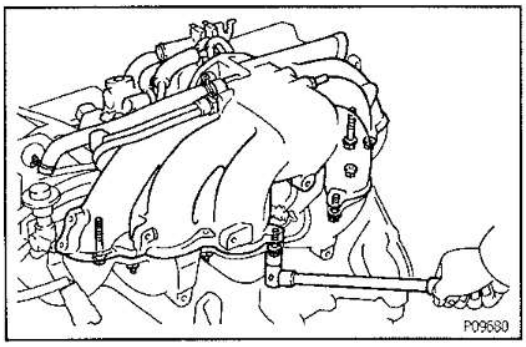

(c) Remove the four bolts, four nuts, air intake chamber and two gaskets.

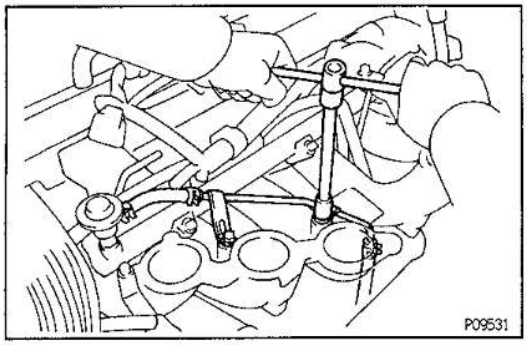

15. REMOVE RETURN PIPE

(a) Disconnect the fuel hose from the fuel pressure regulator.

(b) Remove the two bolts and fuel return pipe.

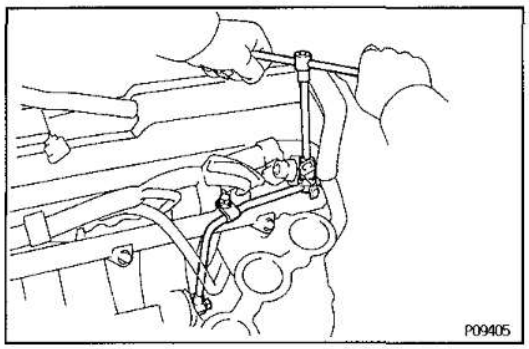

16. REMOVE NO.1 FUEL PIPE

Remove the two union bolts, bolt, four gaskets and No.1 fuel pipe.

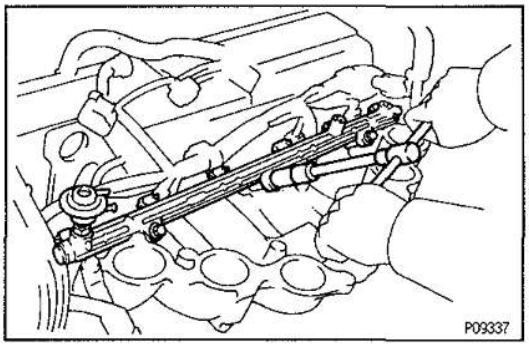

17. REMOVE DELIVERY PIPE AND INJECTORS

(a) Disconnect the six injector connectors.

(b) Remove the three bolts and delivery pipe together with the six injectors.

NOTICE: Be careful not to drop the injectors when removing the delivery pipe.

(c) Remove the six insulators and three spacers from the intake manifold.

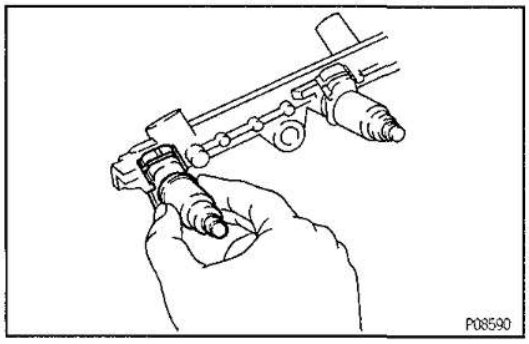

(d) Pull out the six injectors from the delivery pipe.

(e) Remove the O—ring and grommet from each injector.

EG1SG-02

INJECTORS INSPECTION

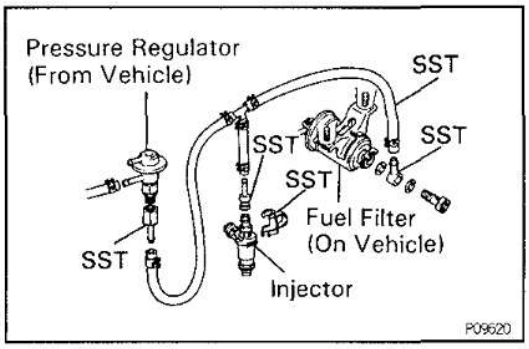

1. INSPECT INJECTOR INJECTION

CAUTION: Keep injector clean of sparks during the test.

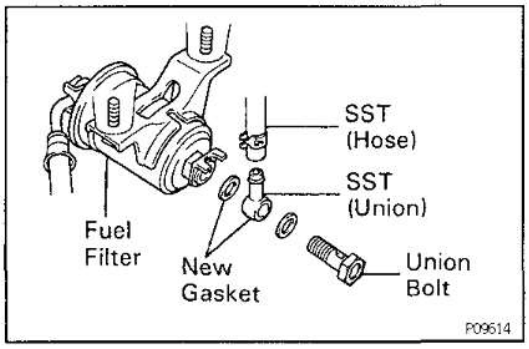

(a) Connect SST (union and hose) to the fuel filter outlet with two new gaskets and the union bolt.
SST 09268—41045 (90405—09015)
Torque: 29 N·m (300 kgf·cm, 22 ft·lbf)

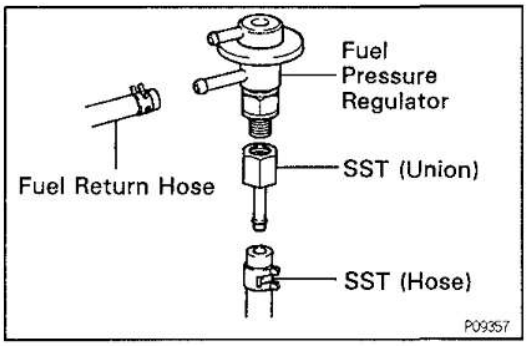

(b) Remove the fuel pressure regulator.
(c) Install a new O—ring to the fuel inlet of pressure regulator.
(d) Connect SST (hose) to the fuel inlet of the pressure regulator with SST (union).
SST 09268—41045 (09268—52010)
Torque: 25 N·m (250 kgf·cm, 18 ft·lbf)
(e) Connect the fuel return hose to the fuel outlet of the pressure regulator.

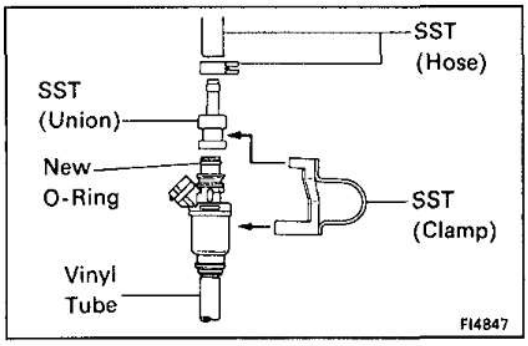

(f) Install the grommet and a new O—ring to the injector.
(g) Connect SST (union and hose) to the injector, and hold the injector and union with SST (clamp).
SST 09268—41045
(h) Put the injector into the graduated cylinder.
HINT: Install a suitable vinyl hose onto the injector to prevent gasoline from splashing out.

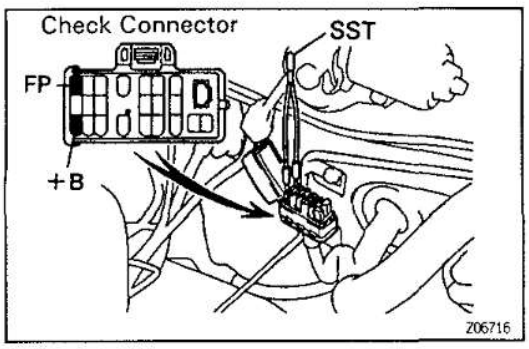

(i) Using SST, connect terminals +B and FP of the check connector.
SST 09843—18020
(j) Reconnect the battery negative (—) cable.

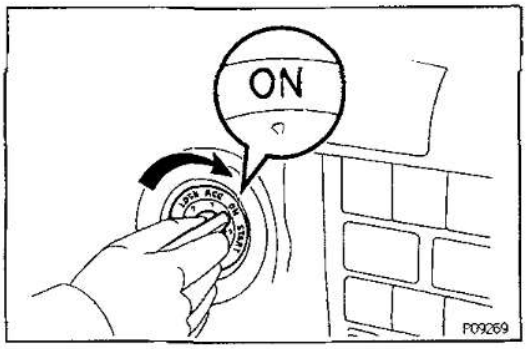

(k) Turn the ignition switch ON.
NOTICE: Do not start the engine.

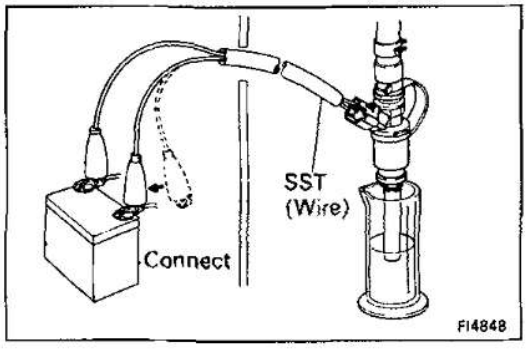

(l) Connect SST (wire) to the injector and battery for 15 seconds, and measure the injection volume with a graduated cylinder. Test each injector two or three times.
SST 09842–30070
Volume:
66 – 82 cm³ (4.0 – 5.0 cu in.) per 15 seconds
Difference between each injector:
5 cm³ (0.3 cu in.) or less
If the injection volume is not as specified, replace the injector.

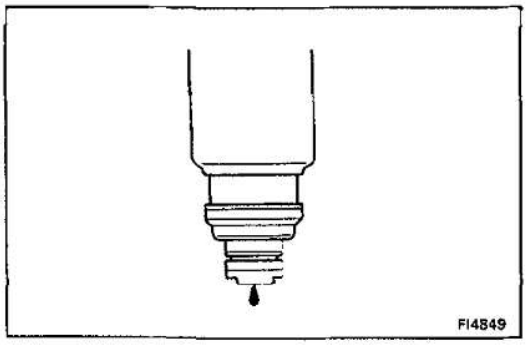

2. INSPECT LEAKAGE

(a) In the condition above, disconnect the test probes of SST (wire) from the battery and check the fuel leakage from the injector.
SST 09842–30070
Fuel drop:
One drop or less per minute

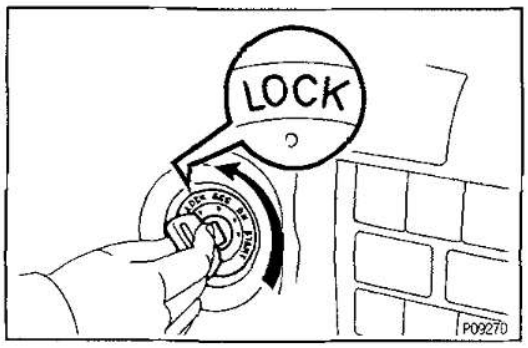

(b) Turn the ignition switch OFF.
(c) Disconnect the battery negative (–) cable.
(d) Remove SST.
SST 09268–41045, 09843–18020
(e) Reinstall the fuel pressure regulator to the delivery pipe.

EG

EG27X-01

INJECTORS INSTALLATION

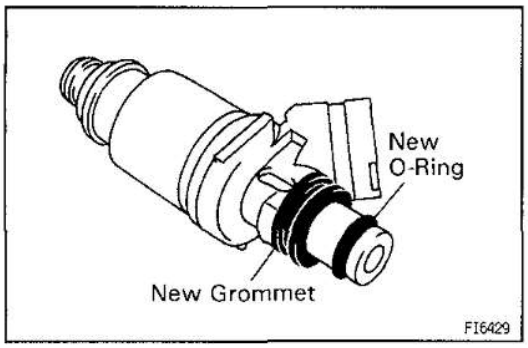

(See Components for Removal and Installation)

1. INSTALL INJECTORS AND DELIVERY PIPE

(a) Install a new grommet to the injector.

(b) Apply a light coat of gasoline to a new O—ring and install it to the injector.

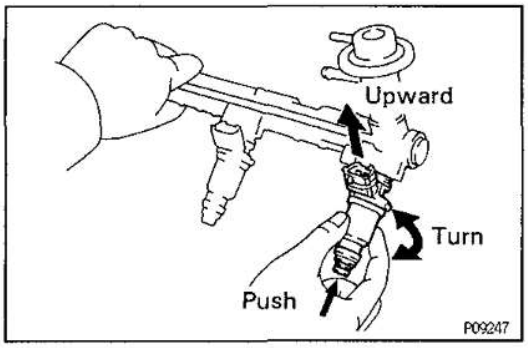

(c) While turning the injector left and right, install it to the delivery pipe. Install the six injectors.

(d) Position the injector connector upward.

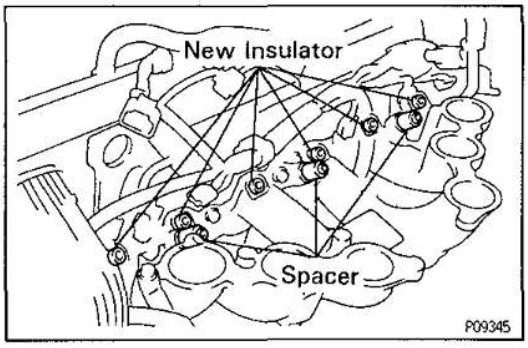

(e) Place six new insulators and the three spacers in position on the intake manifold.

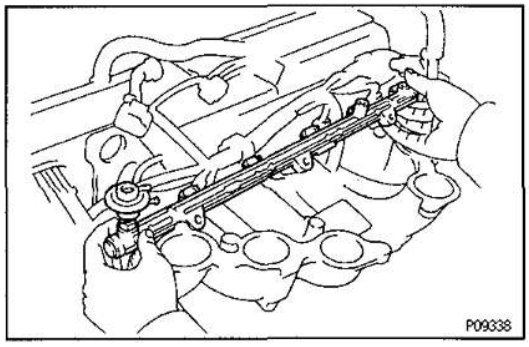

(f) Place the six injectors together with the delivery pipe in position on the intake manifold.

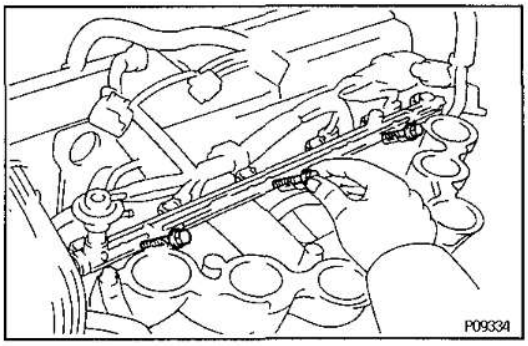

(g) Temporarily install the three bolts holding the delivery pipe to the intake manifold.

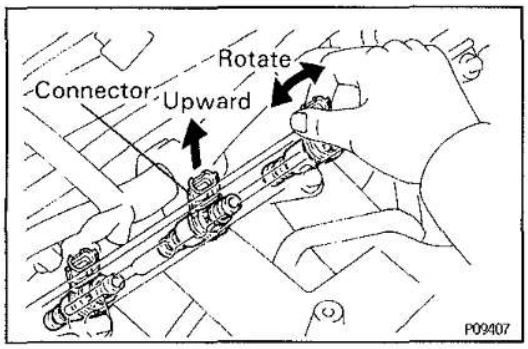

(h) Check that the injectors rotate smoothly.
HINT: If injectors do not rotate smoothly, the probable cause is incorrect installation of O—rings. Replace the O—rings.

(i) Position the injector connector upward.

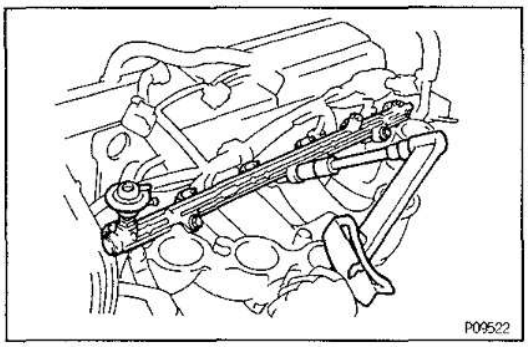

(j) Tighten the three bolts holding the delivery pipe to the intake manifold.
Torque: 21 N·m (210 kgf·cm, 15 ft·lbf)

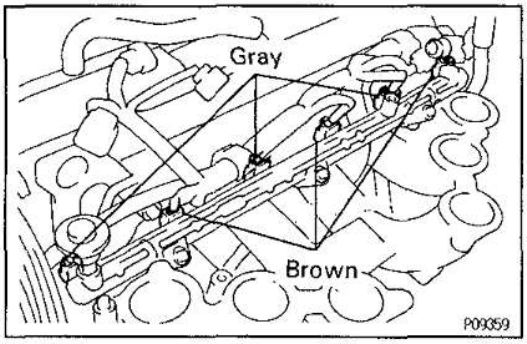

(k) Connect the six injector connectors as shown.

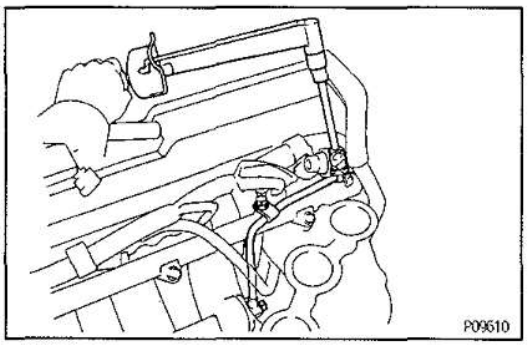

2. INSTALL NO.1 FUEL PIPE

Install the No.1 fuel pipe with four new gaskets, the two union bolts and bolt.
Torque: 29 N·m (300 kgf·cm, 22 ft·lbf) for Union bolt
Torque: 20 N·m (200 kgf·cm, 14 ft·lbf) for Bolt

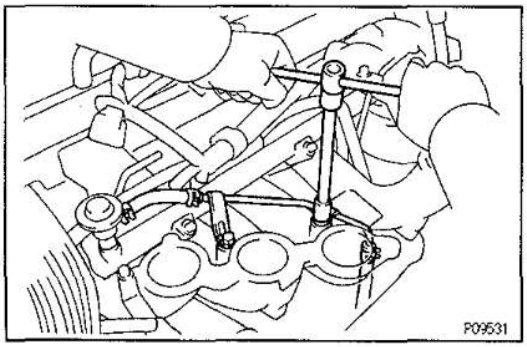

3. INSTALL RETURN PIPE

(a) Install the fuel return pipe with the two bolts.
Torque: 20 N·m (200 kgf·cm, 14 ft·lbf)

(b) Connect the fuel hose to the fuel pressure regulator.

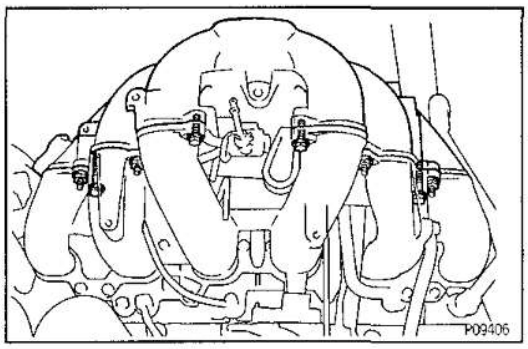

4. INSTALL AIR INTAKE CHAMBER

(a) Install two new gaskets and the air intake chamber with the four bolts and four nuts.
Torque: 21 N·m (210 kgf·cm, 15 ft·lbf)

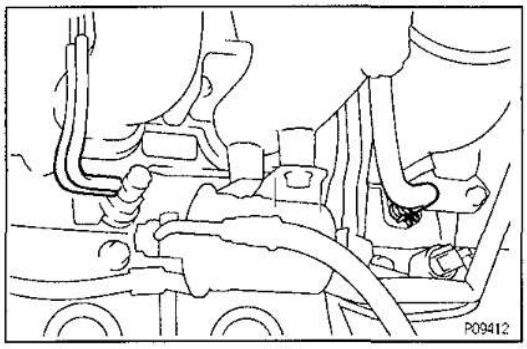

(b) Connect the No.1 water by—pass hose to the cylinder head.

(c) Connect the two vacuum hoses to the BVSV.

5. CONNECT GROUND STARP

6. INSTALL ENGINE OIL DIPSTICK AND GUIDE

(a) Install a new O—ring to the dipstick guide.

(b) Apply light coat of engine oil on the O—ring.

(c) Push in the dipstick guide into the guide hole of the oil pan.

(d) Install the dipstick guide with the two bolts.
Torque: 20 N·m (200 kgf·cm, 14 ft·lbf)

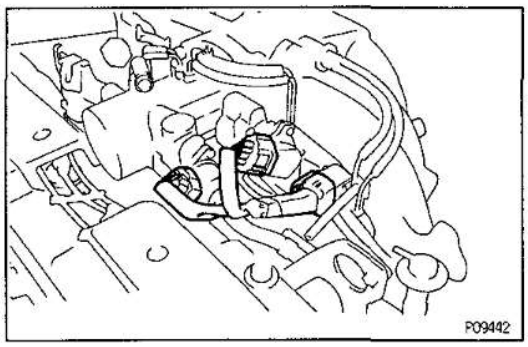

7. CONNECT CONNECTOR FOR EMISSION CONTROL VALVE SET ASSEMBLY

8. CONNECT IDLE AIR CONTROL VALVE CONNECTOR

9. CONNECT THROTTLE POSITION SENSOR CONNECTOR

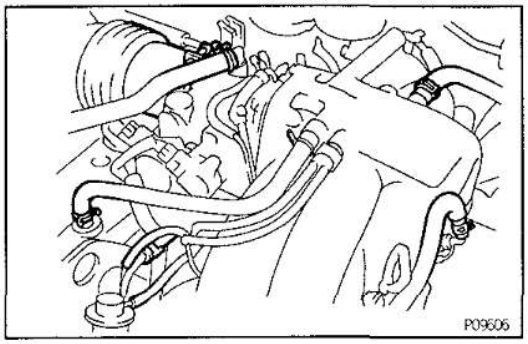

10. CONNECT EVAP HOSE

11. CONNECT NO.2 WATER BY—PASS HOSE

12. CONNECT VACUUM HOSES

13. CONNECT NO.1 AND NO.2 PCV HOSES

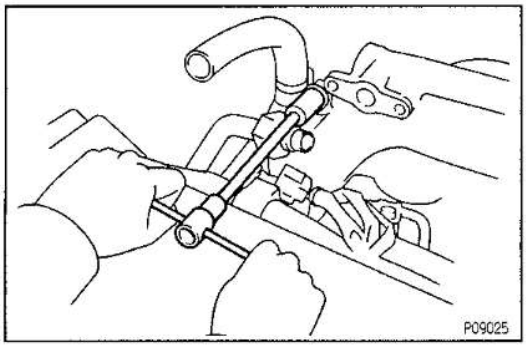

14. INSTALL BOLT HOLDING HEATER INLET PIPE AND AIR INTAKE CHAMBER
Torque: 20 N·m (200 kgf·cm, 14 ft·lbf)

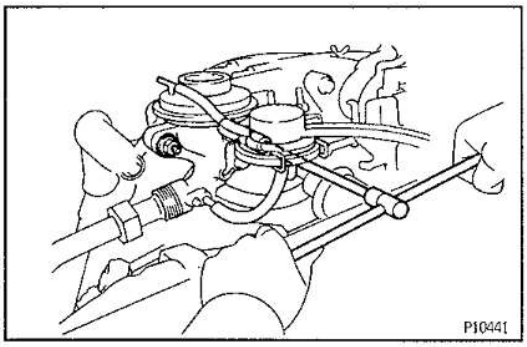

15. (For Europe)
INSTALL EGR VALVE AND VACUUM MODULATOR

(a) Temporarily install a new gasket, and EGR valve and vacumm modulator assembly with the two stud bolts.
Torque: 10 N·m (105 kgf·cm, 8 ft·lbf)

(b) Install the two nuts holding the EGR valve and air intake chamber.
Torque: 19 N·m (195 kgf·cm, 14 ft·lbf)

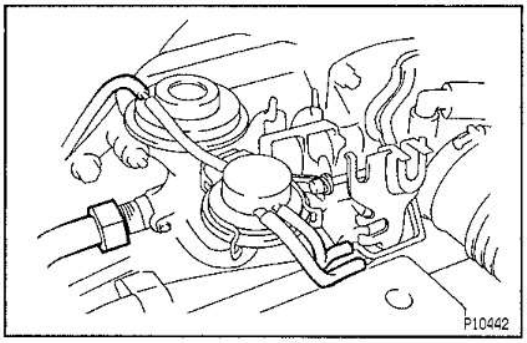

(c) Tighten the union nut of the EGR pipe.
Torque: 64 N·m (650 kgf·cm, 47 ft·lbf)

(d) Connect the three vacuum hoses.

THROTTLE BODY

EG1AH-03

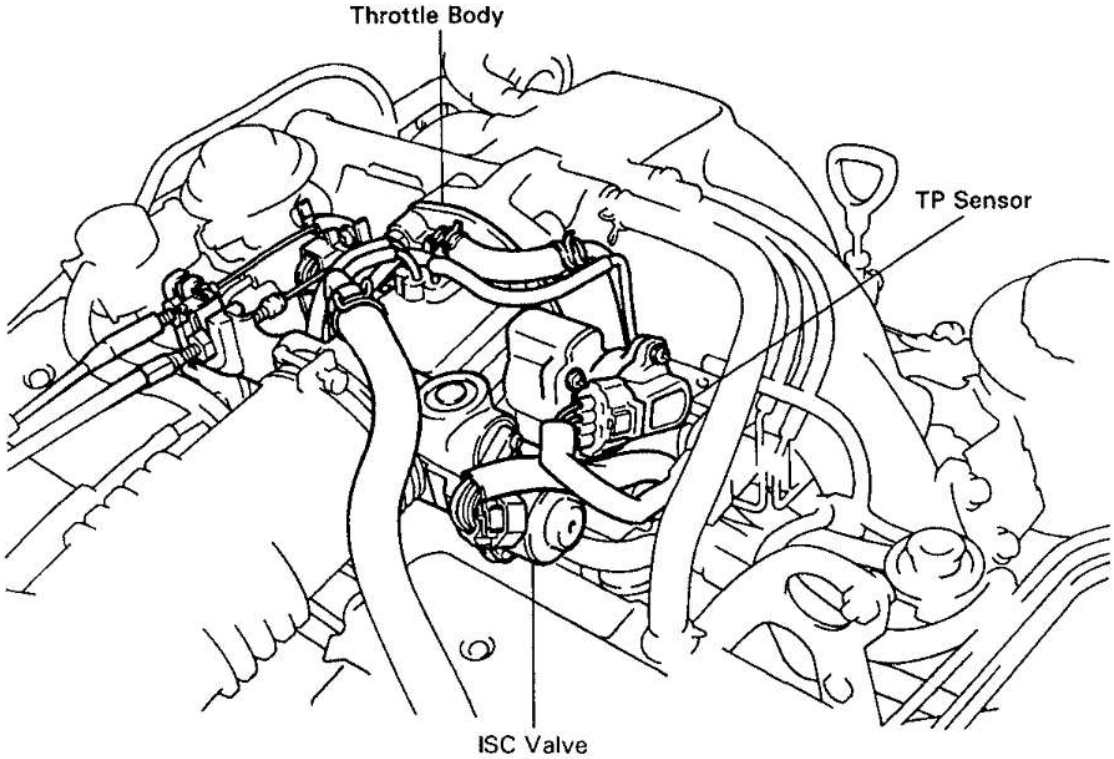

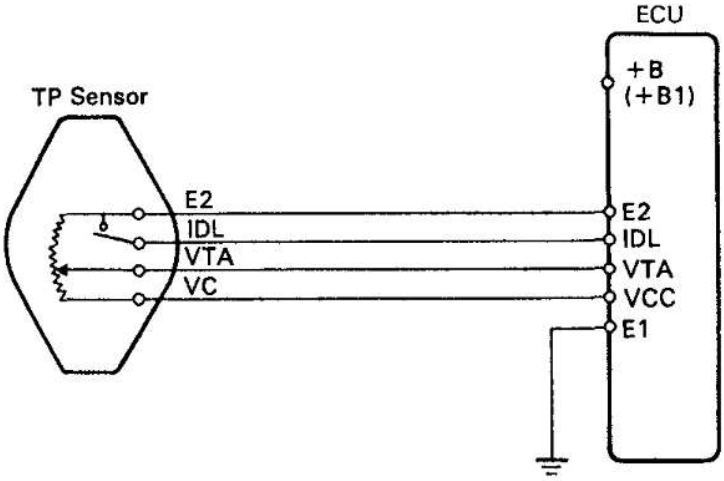

P09370
FI1366

Z06691

EG1SH-02

ON-VEHICLE INPSECTION

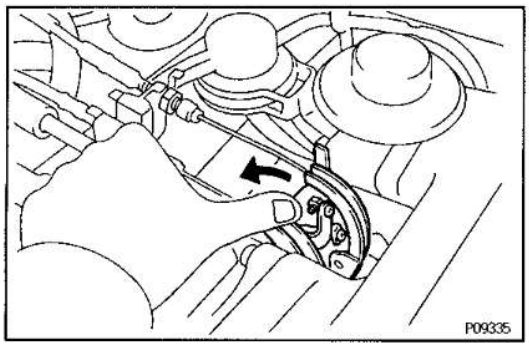

1. INSPECT THROTTLE BODY

(a) Check that the throttle linkage moves smoothly.

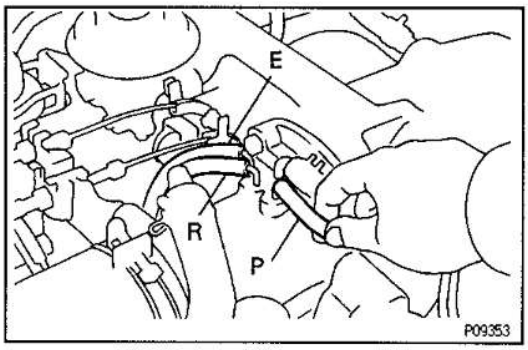

(b) Check the vacuum at each port.
- Start the engine.
- Check the vacuum with your finger.

Port name	At idle	At 3,500 rpm
P	No vacuum	Vacuum
E	No vacuum	Vacuum
R	No vacuum	Vacuum

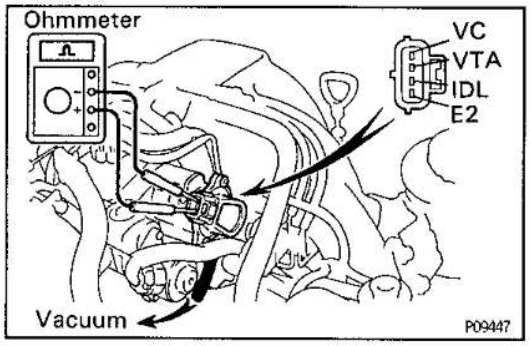

2. INSPECT THROTTLE POSITION SENSOR

(a) Disconnect the TP sensor connector.

(b) Apply vacuum to the throttle opener.

(c) Using an ohmmeter, measure the resistance between each terminal.

Throttle valve condition	Between terminals	Resistance
Fully closed	VTA — E2	0.2 — 5.7 kΩ
Fully closed	IDL — E2	2.3 kΩ or less
Open	IDL — E2	Infinity
Fully open	VTA — E2	2.0 — 10.2 kΩ
—	VC — E2	2.5 — 5.9 kΩ

(d) Reconnect the TP sensor connector.

3. INSPECT AND ADJUST DASHPOT

A. Warm up engine

Allow the engine to warm up to normal operating temperature.

B. Connect tachometer

Connect the test probe of a tachometer to terminal IG ⊖ of the check conncetor.

NOTICE:
- **Never allow the tachometer terminal to touch ground as it could result in damage to the igniter and/or ignition coil.**
- **As some tachometers are not compatible with this ignition system, we recommend that you confirm the compatibility of your unit before use.**

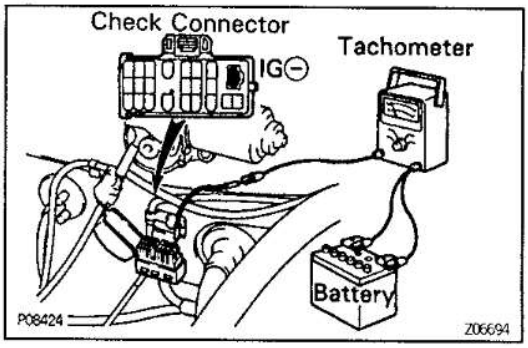

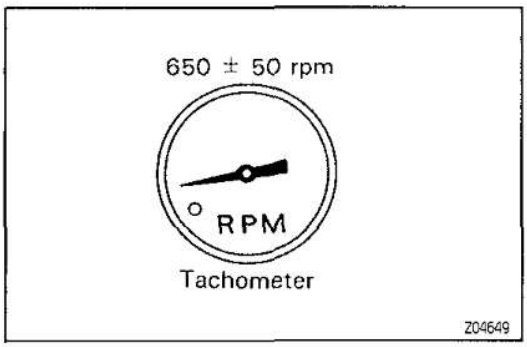

C. Check idle speed

Idle speed :

650 ± 50 rpm (N position)

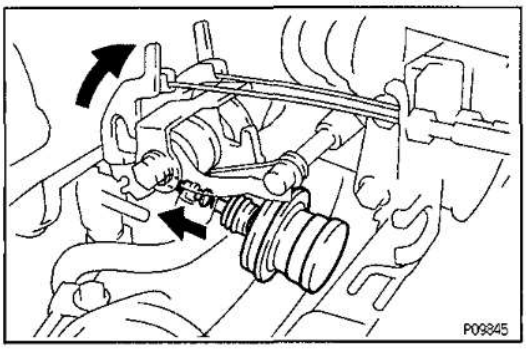

D. Check and adjust dashpot setting speed

(a) Open the throttle valve until the throttle lever separates from the dashpot end.

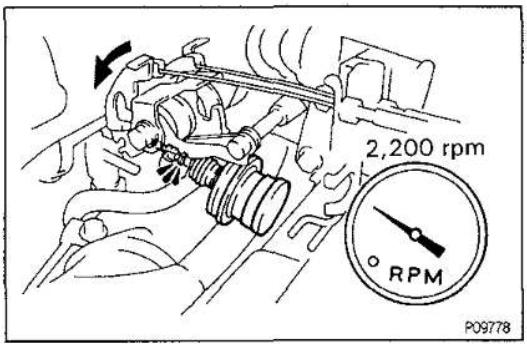

(b) Release the throttle valve gradually, and check the dashpot setting speed when the throttle lever touched the dashpot end.

Dashpot setting speed:

2,200 ± 300 rpm

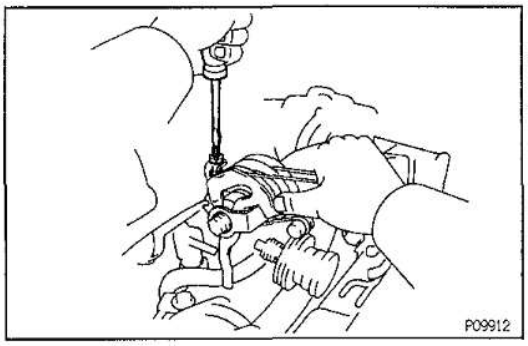

If not as specified, adjust using the following proceduce:

(a) Stop the engine.

(b) Loosen the lock nut of the stopper bolt.

(c) Adjust the dashpot setting speed by turning the stopper bolt.

(d) Start the engine and check the dashpot setting speed.

(e) Retighten the lock nut.

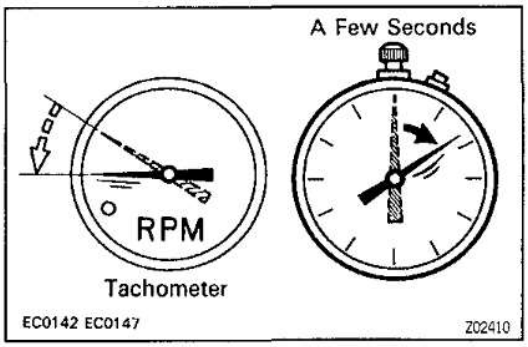

E. Check VTV operation

(a) Maintain the engine at 3,500 rpm.

(b) Release the throttle valve, and check that the engine returns to idle in a few seconds.

F. Disconnect tachometer

4. INSPECT THROTTLE OPENER

A. Warm up engine

Allow the engine to warm up to normal operating temperature.

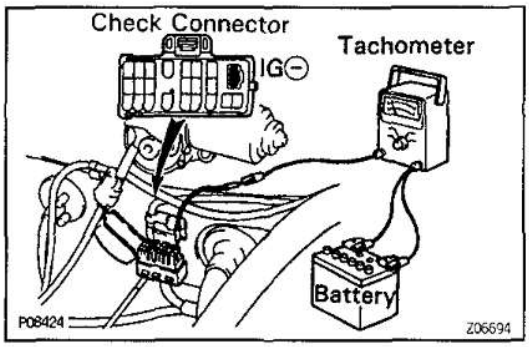

B. Connect tachometer

Connect the test probe of a tachometer to terminal IG ⊖ of the check conncetor.

NOTICE:

- **Never allow the tachometer terminal to touch ground as it could result in damage to the igniter and/or ignition coil.**
- **As some tachometers are not compatible with this ignition system, we recommend that you confirm the compatibility of your unit before use.**

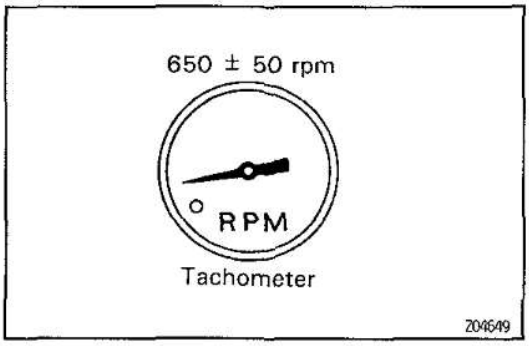

C. Check idle speed

Idle speed:

650 ± 50 rpm (N position)

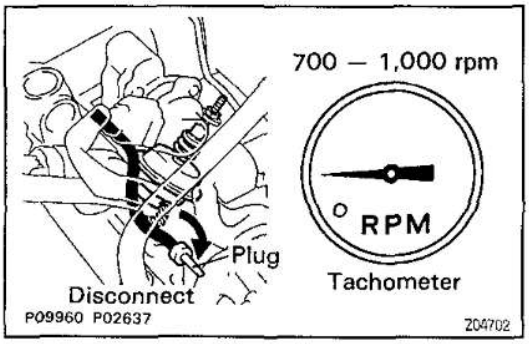

D. Check throttle opener setting speed

(a) Disconnect the vacuum hose from the throttle opener, and plug the hose end.

(b) Check the throttle opener setting speed.

Throttle opener setting speed:

700 — 1,000 rpm

If the throttle opener setting is not as specified, replace the throttle body.

(c) Stop the engine.

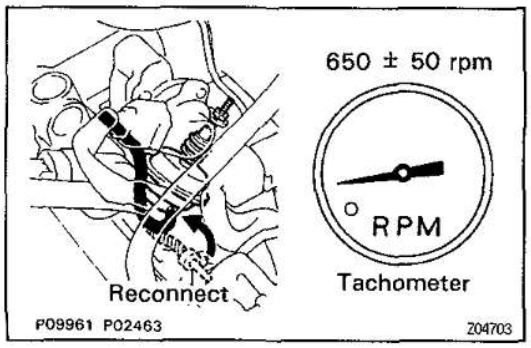

(d) Reconnect the vacuum hose to the throttle opener.

(e) Start the engine, and check that the idle speed returns to the correct speed.

Idle speed:

650 ± 50 rpm (N position)

E. Disconnect tachometer

EG13G-05

COMPONENTS FOR REMOVAL AND INSTALLATION

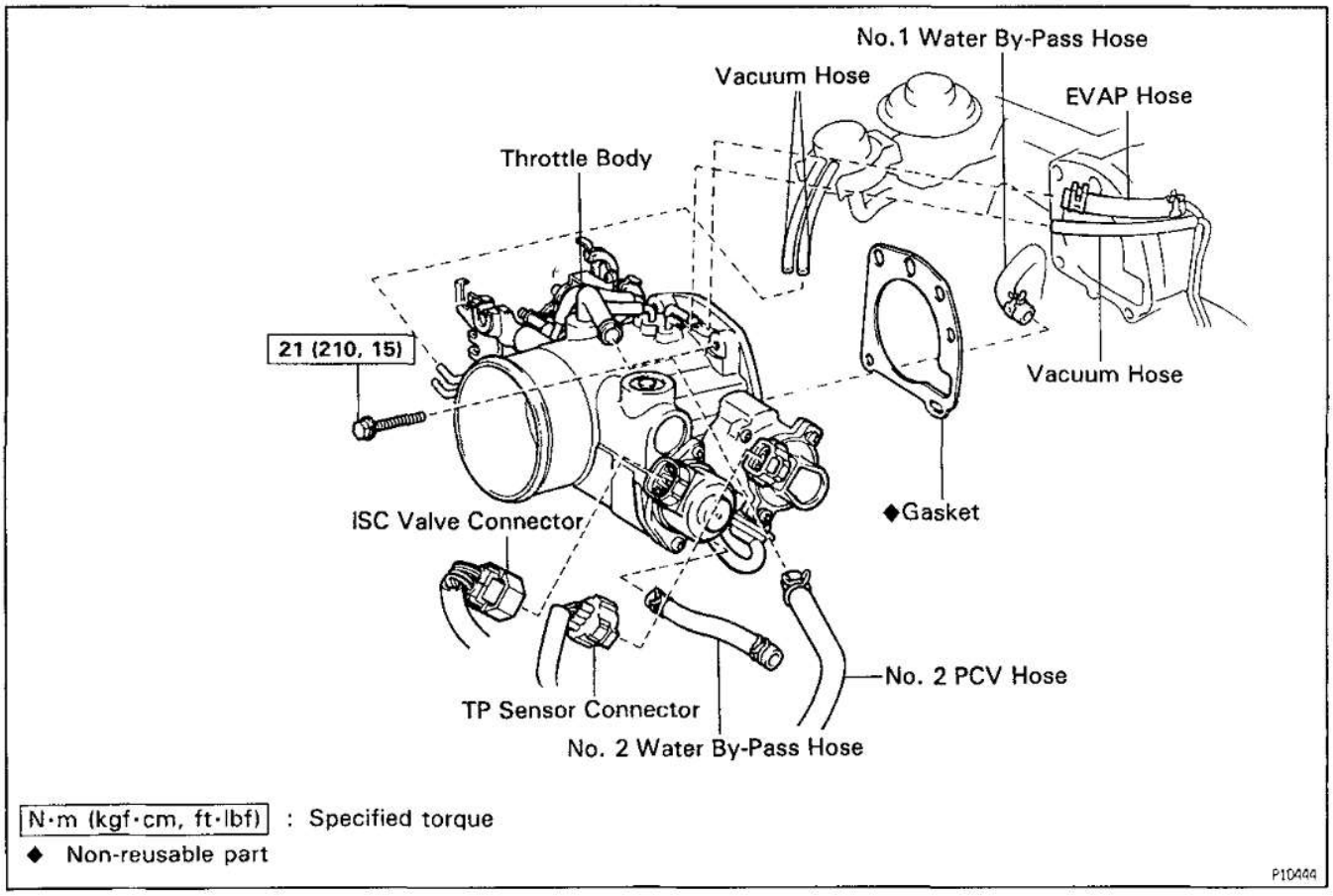

EG27Y-01

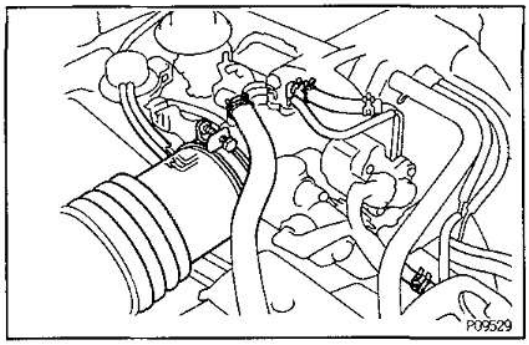

THROTTLE BODY REMOVAL

1. DISCONNECT NO.2 PCV HOSE
2. DISCONNECT EVAP HOSE
3. DISCONNECT VACUUM HOSES
4. DISCONNECT NO.2 WATER BY—PASS HOSE
5. DISCONNECT THROTTLE POSITION SENSOR CONNECTOR
6. DISCONNECT IDLE SPEED CONTROL VALVE CONNECTOR

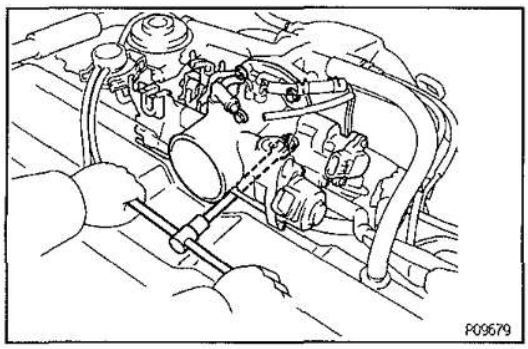

7. REMOVE THROTTLE BODY

(a) Remove the four bolts, and disconnect the throttle body from the air intake chamber.

(b) Remove the throttle body gasket.

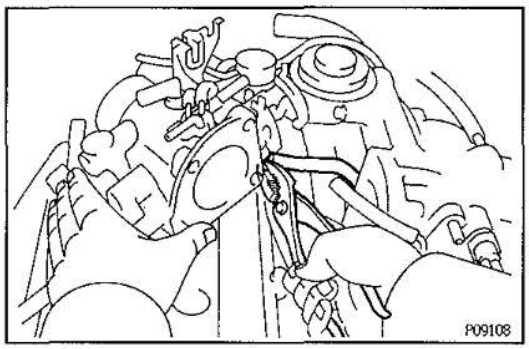

(c) Disconnect the No.1 water by–pass hose from the throttle body, and remove the throttle body.

(d) Disconnect the No.2 water by–pass hose from the throttle body.

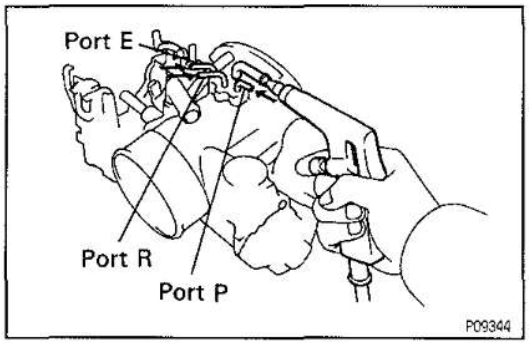

THROTTLE BODY INSPECTION

EG0DH–06

1. CLEAN THROTTLE BODY

(a) Using a soft brush and carburetor cleaner, clean the cast parts.

(b) Using compressed air, clean all the passanges and apertures.

NOTICE: To prevent deterioration, do not clean the TP sensor, dashpot and IAC valve.

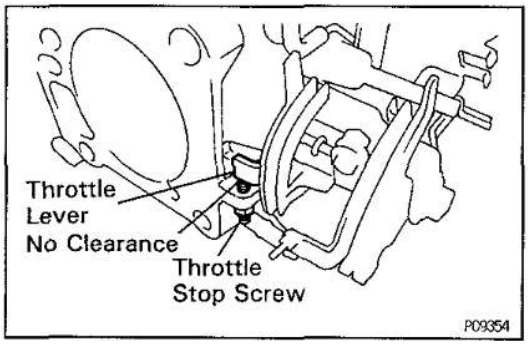

2. INSPECT THROTTLE VALVE

(a) Apply vacuum to the throttle opener.

(b) Check that there is no clearance between the throttle stop screw and throttle lever when the closed throttle position.

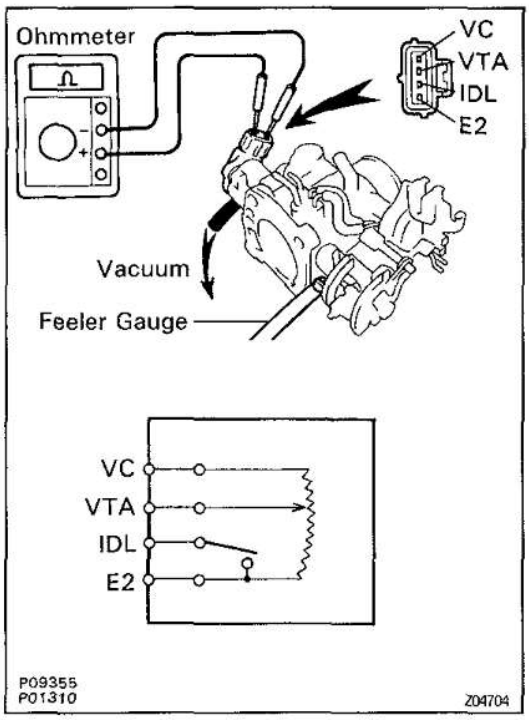

3. INSPECT THROTTLE POSITION SENSOR

(a) Apply vacuum to the throttle opener.

(b) Insert a feeler gauge between the throttle stop screw and stop lever.

(c) Using an ohmmeter, measure the resistance between each terminal.

Clearance between lever and stop screw	Between terminals	Resistance
0 mm (0 in.)	VTA – E2	0.2 – 5.7 kΩ
0.50 mm (0.020 in.)	IDL – E2	2.3 kΩ or less
0.75 mm (0.030 in.)	IDL – E2	Infinity
Throttle valve fully open	VTA – E2	2.0 – 10.2 kΩ
–	VC – E2	2.5 – 5.9 kΩ

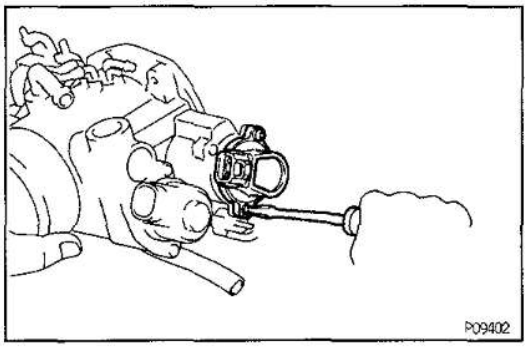

4. IF NECESSARY, ADJUST THROTTLE POSITION SENSOR

(a) Loosen the two set screws of the TP sensor.

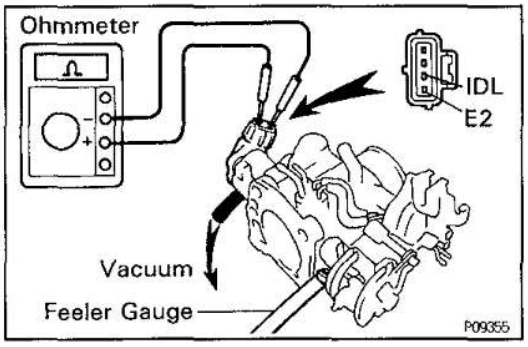

(b) Apply vacuum to the throttle opener.

(c) Insert a 0.62 mm (0.024 in.) feeler gauge between the throttle stop screw and stop lever.

(d) Connect the test probe of an ohmmeter to the terminals IDL and E2 of the TP sensor.

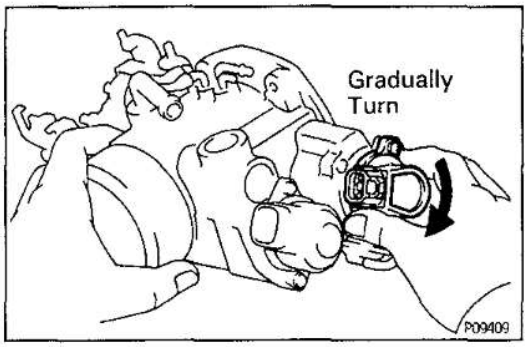

(e) Gradually turn the TP sensor clockwise until the ohmmeter deflects, and secure it with the two set screws.

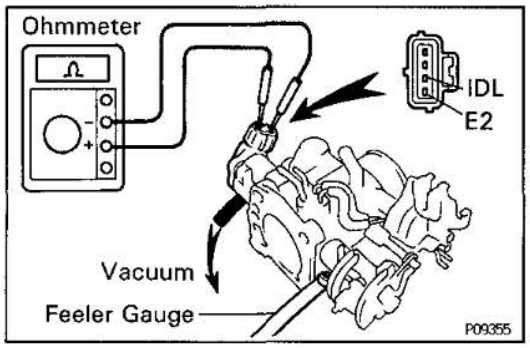

(f) Recheck the continuity between terminals IDL and E2.

Clearance between lever and stop screw	Continuity (IDL — E2)
0.50 mm (0.020 in.)	Continuity
0.75 mm (0.030 in.)	No continuity

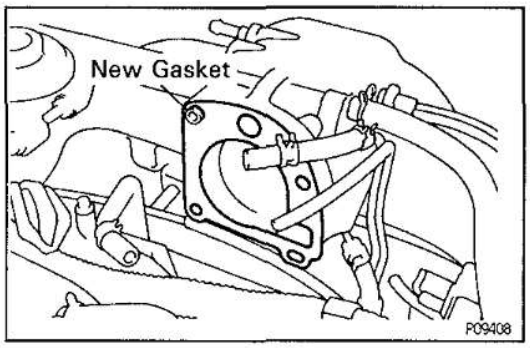

THROTTLE BODY INSTALLATION

EG27Z-01

(See Components for Removal and Installation)

1. INSTALL THROTTLE BODY

(a) Install the No.2 water by—pass hose to the throttle body.

(b) Install a new gasket on the air intake chamber.

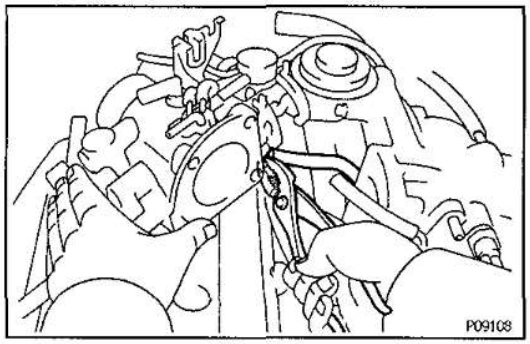

(c) Connect the No.1 water by—pass hose to the throttle body.

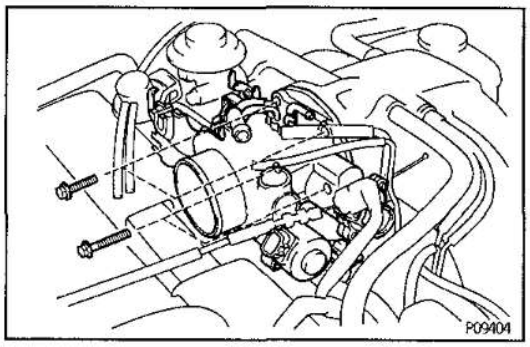

(d) Install the throttle body with the four bolts.
Torque: 21 N·m (210 kgf·cm, 15 ft·lbf)

2. CONNECT IDLE SPEED CONTROL VALVE CONNECTOR

3. CONNECT THROTTLE POSITION SENSOR CONNECTOR

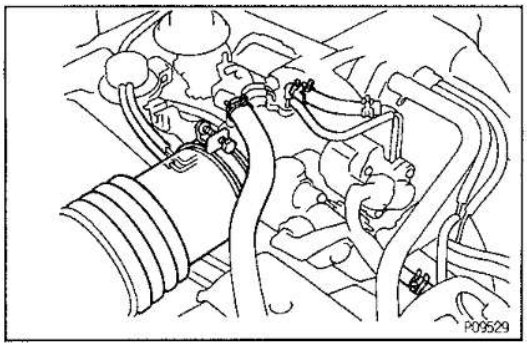

4. CONNECT NO.2 WATER BY–PASS HOSE
5. CONNECT VACUUM HOSES
6. CONNECT EVAP HOSE
7. CONNECT NO.2 PCV HOSE

AIR FLOW METER

EG0YG-03

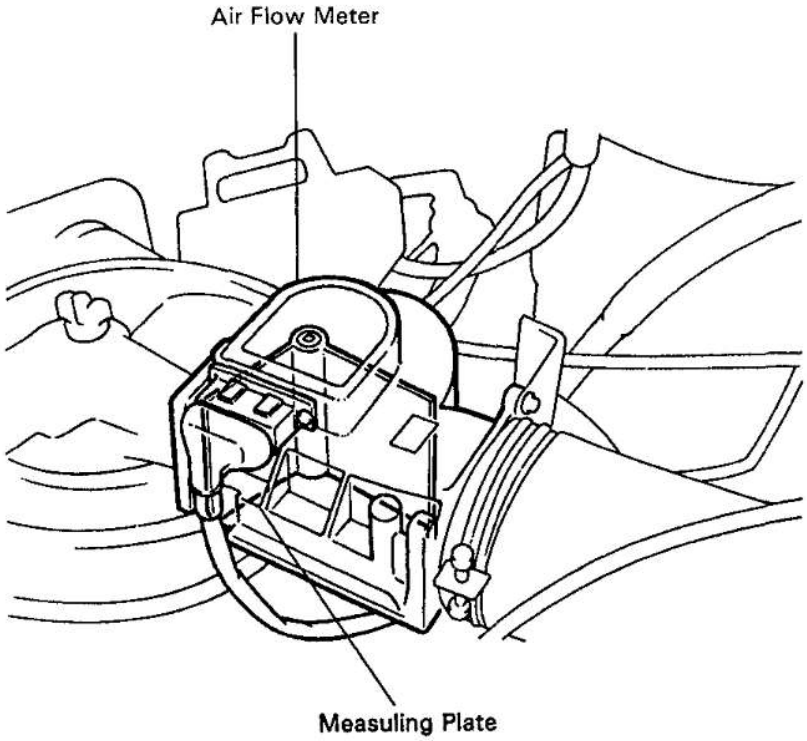

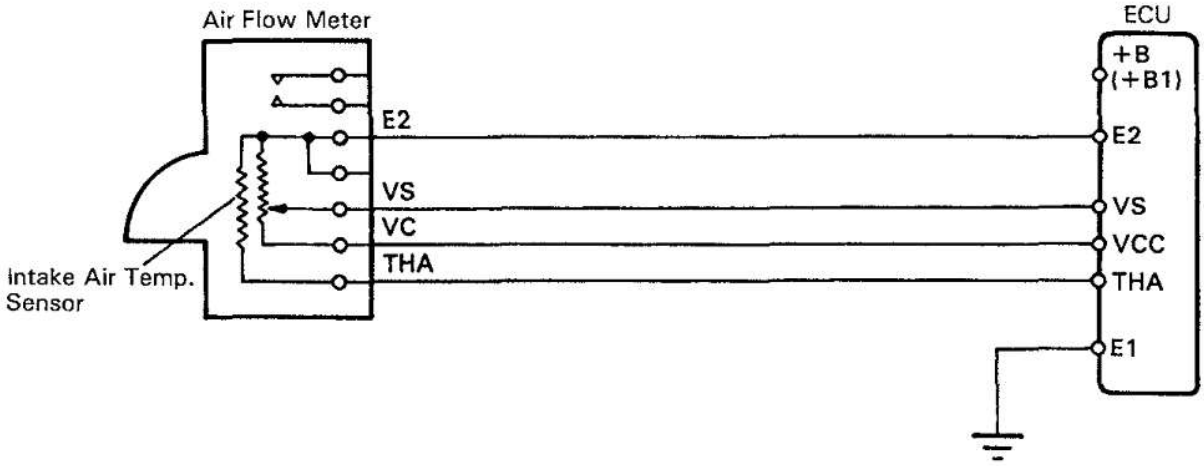

P09822
P05967

Z06695

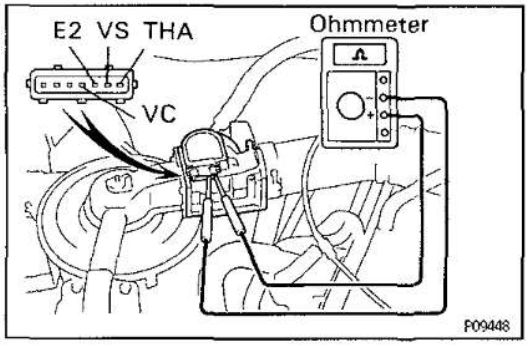

EG0YH-03

ON—VEHICLE INSPECTION

INSPECT RESISTANCE OF AIR FLOW METER

(a) Disconnect the air flow meter connector.

(b) Using an ohmmeter, measure the resistance between each terminal.

Between terminals	Resistance	Temperature
VS — E2	200 — 600Ω	—
VC — E2	200 — 400Ω	—
THA — E2	10 — 20 kΩ	−20°C (−4°F)
THA — E2	4 — 7 kΩ	0°C (32°F)
THA — E2	2 — 3 kΩ	20°C (68°F)
THA — E2	0.9 — 1.3 kΩ	40°C (104°F)
THA — E2	0.4 — 0.7 kΩ	60°C (140°F)

If the resistance is not as specified, replace the air flow meter.

(c) Reconnect the air flow meter connector.

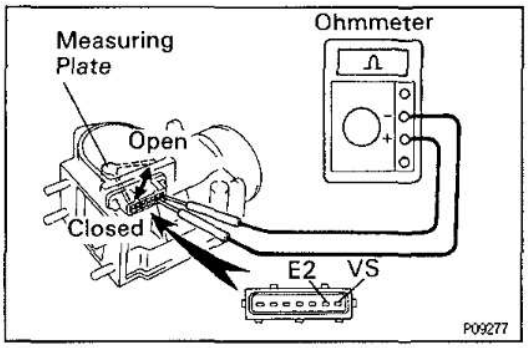

EG0H2-03

AIR FLOW METER INSPECTION

INSPECT AIR FLOW METER

Using an ohmmeter, measure the resistance between terminals VS and E2 by moving the measuring plate.

Resistance:

200 — 600 Ω at fully closed

20 — 1,200Ω at fully open

HINT: Resistance will change in a wave pattern as the measuring plate slowly opens.

If the resistance is not as specified, replace the air flow meter.

ISC VALVE

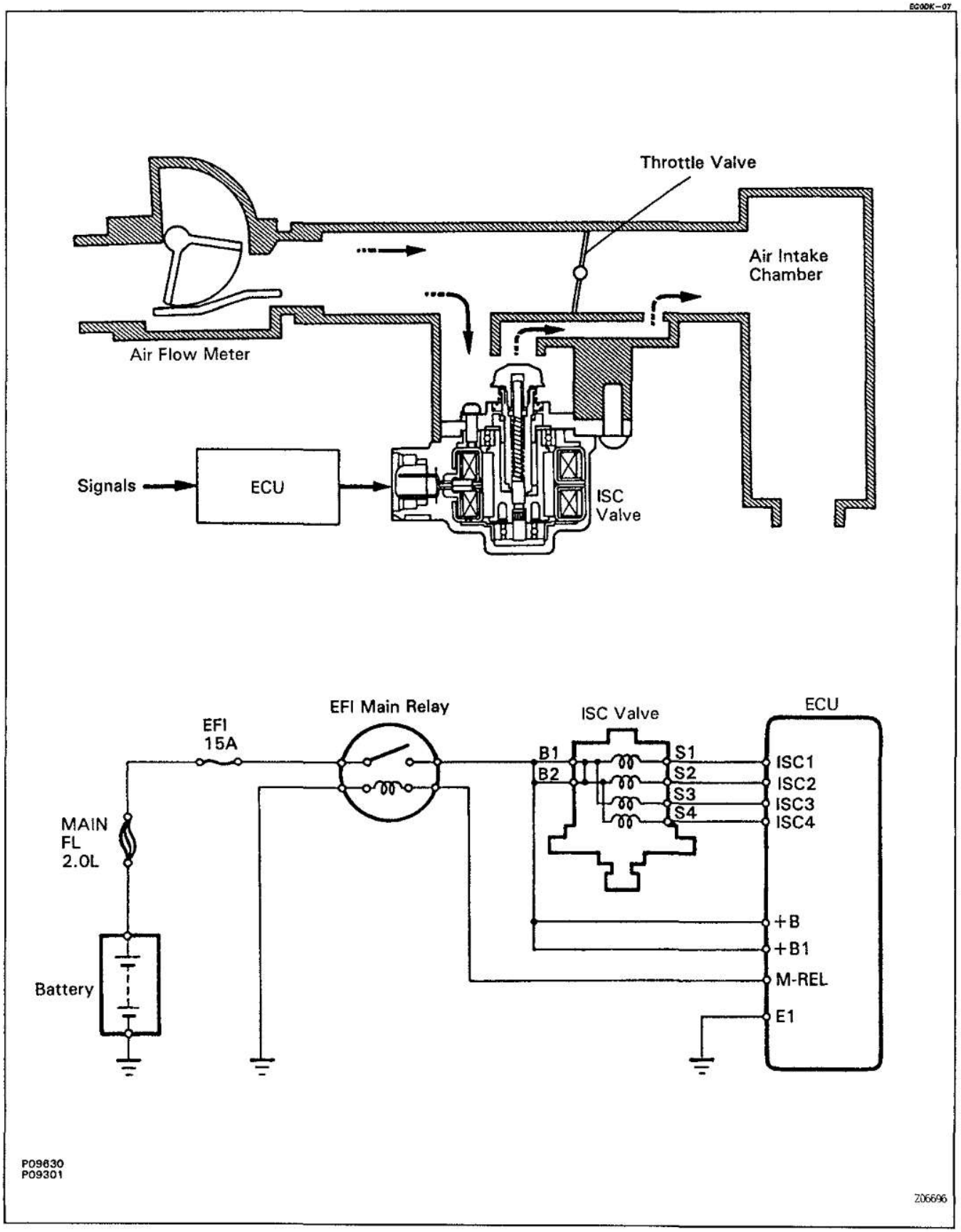
EG00K-07
Throttle Valve
Air Intake Chamber
Air Flow Meter
Signals
ECU
ISC Valve
EFI Main Relay
EFI 15A
ISC Valve
ECU
B1
B2
S1
S2
S3
S4
ISC1
ISC2
ISC3
ISC4
MAIN FL 2.0L
+B
+B1
M-REL
E1
Battery
P09630
P09301
Z06696

EG

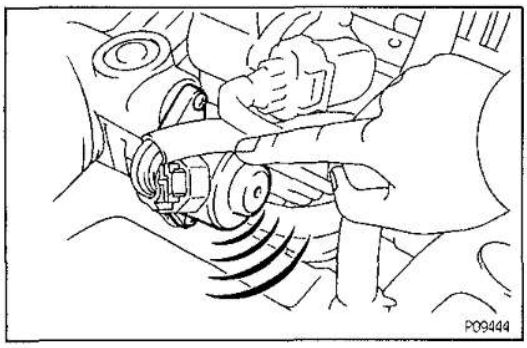

EG1SL-02

ON—VEHICLE INSPECTION

1. INSPECT IDLE SPEED CONTROL VALVE FOR OPERATING SOUND

Check that there is a clicking sound immediately after stopping the engine.

If the operation is not as specified, check the ISC valve, wiring and ECU.

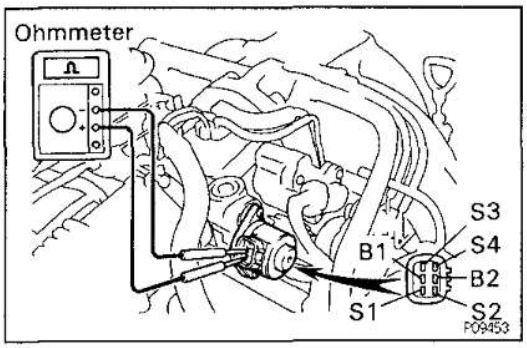

2. INSPECT IDLE SPEED CONTROL VALVE RESISTANCE

(a) Disconnect the ISC valve connector.

(b) Using an ohmmeter, measure the resistance between the terminals (B1—S1 and S3, B2—S2 and S4).

Resistance:

10—30 Ω

If resistance is not as specified, replace the ISC valve.

(c) Reconnect the ISC valve connector.

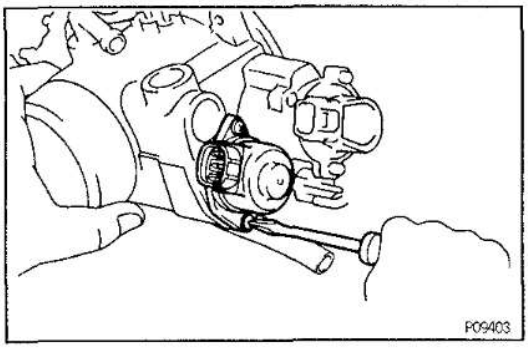

EG13S-04

IDLE SPEED CONTROL VALVE REMOVAL

1. REMOVE THROTTLE BODY

(See page EG—262)

2. REMOVE IDLE SPEED CONTROL VALVE

Remove the two screws, ISC valve and O—ring.

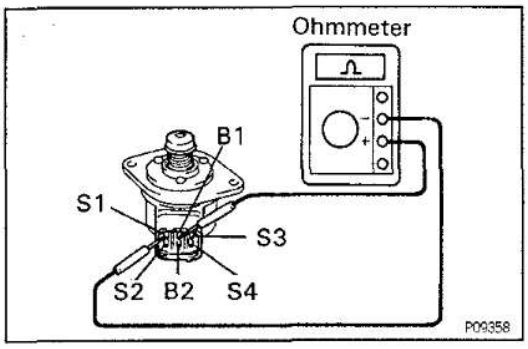

EG1SM-02

IDLE SPEED CONTROL VALVE INSPECTION

1. INSPECT IDLE SPEED CONTROL VALVE RESISTANCE

Using an ohmmeter, measure the resistance between the terminals (B1—S1 and S3, B2—S2 and S4).

Resistance:

10—30 Ω

If resistance is not as specified, replace the IAC valve.

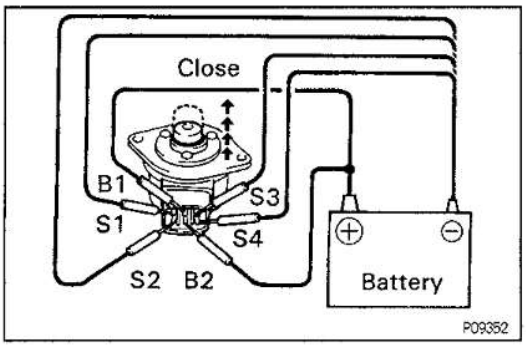

2. INSPECT IDLE SPEED CONTROL VALVE OPERATION

(a) Apply battery voltage to terminals B1 and B2, and while repeatedly grounding S1—S2—S3—S4—S1 in sequence, and check that the valve moves toward the closed position.

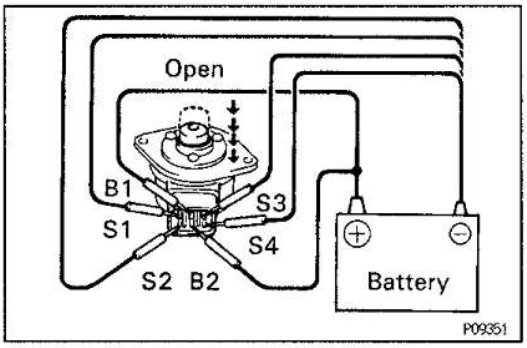

(b) Apply battery voltage to terminals B1 and B2, and while repeatedly grounding S4—S3—S2—S1—S4 in sequence, and check that the valve moves toward the open position.
If operation is not as specified, replace the IAC valve.

EG00P-08

IDLE SPEED CONTROL VALVE INSTALLATION

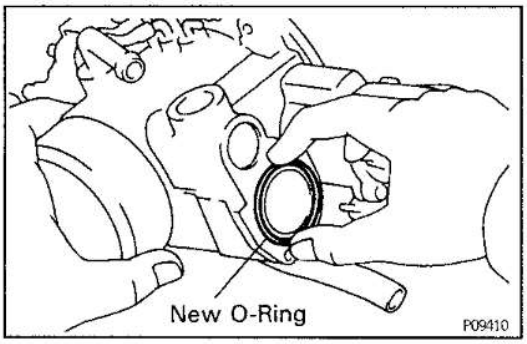

1. INSTALL IDLE SPEED CONTROL VALVE

(a) Place a new O—ring on the throttle body.

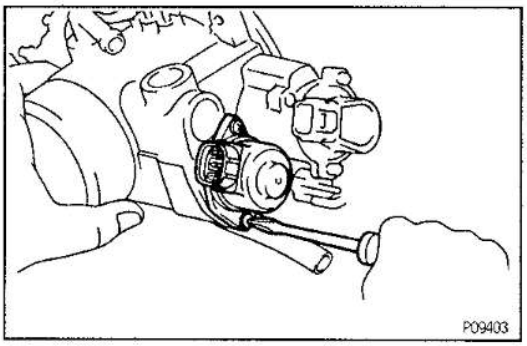

(b) Install the ISC valve with the two screws.

2. INSTALL THROTTLE BODY
(See page EG—265)

EFI MAIN RELAY

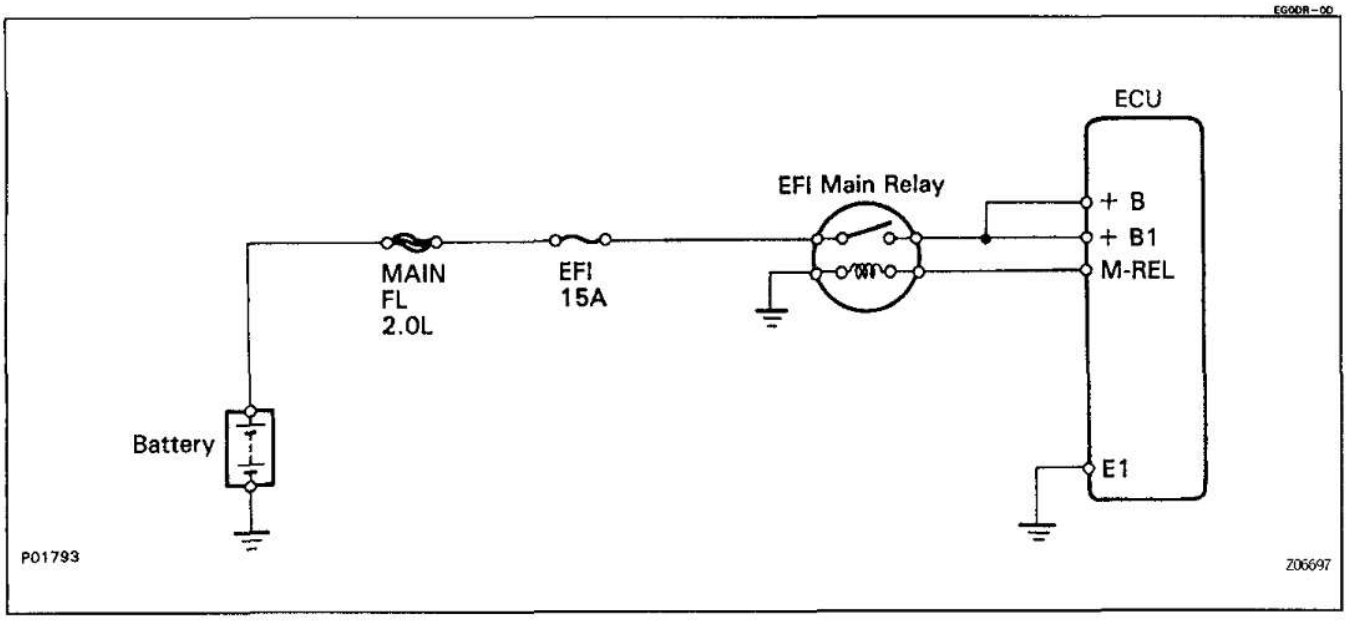

EG13W-03

EFI MAIN RELAY INSPECTION

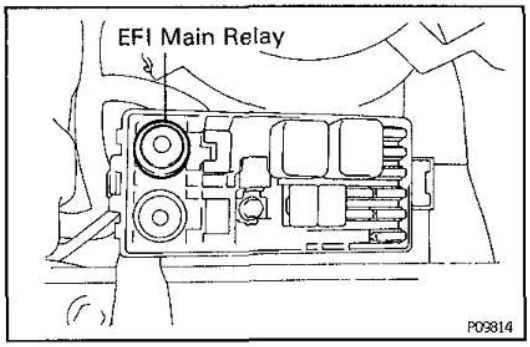

1. REMOVE EFI MAIN RELAY

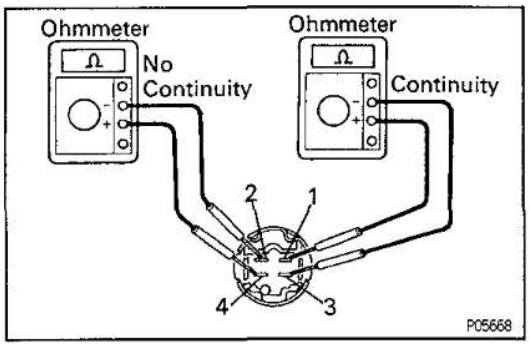

2. INSPECT EFI MAIN RELAY

A. Inspect relay continuity

(a) Using an ohmmeter, check that there is continuity between terminals 1 and 3.

(b) Check that there is no continuity between terminals 2 and 4.

If continuity is not as specified, replace the relay.

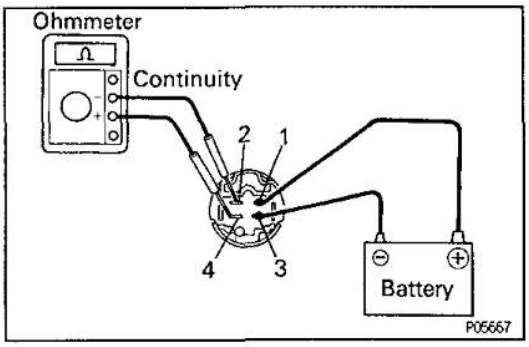

B. Inspect relay operation

(a) Apply battery voltage across terminals 1 and 3.

(b) Using an ohmmeter, check that there is continuity between terminals 2 and 4.

If operation is not as specified, replace the relay.

3. REINSTALL EFI MAIN RELAY

CIRCUIT OPENING RELAY

EG0DT-09

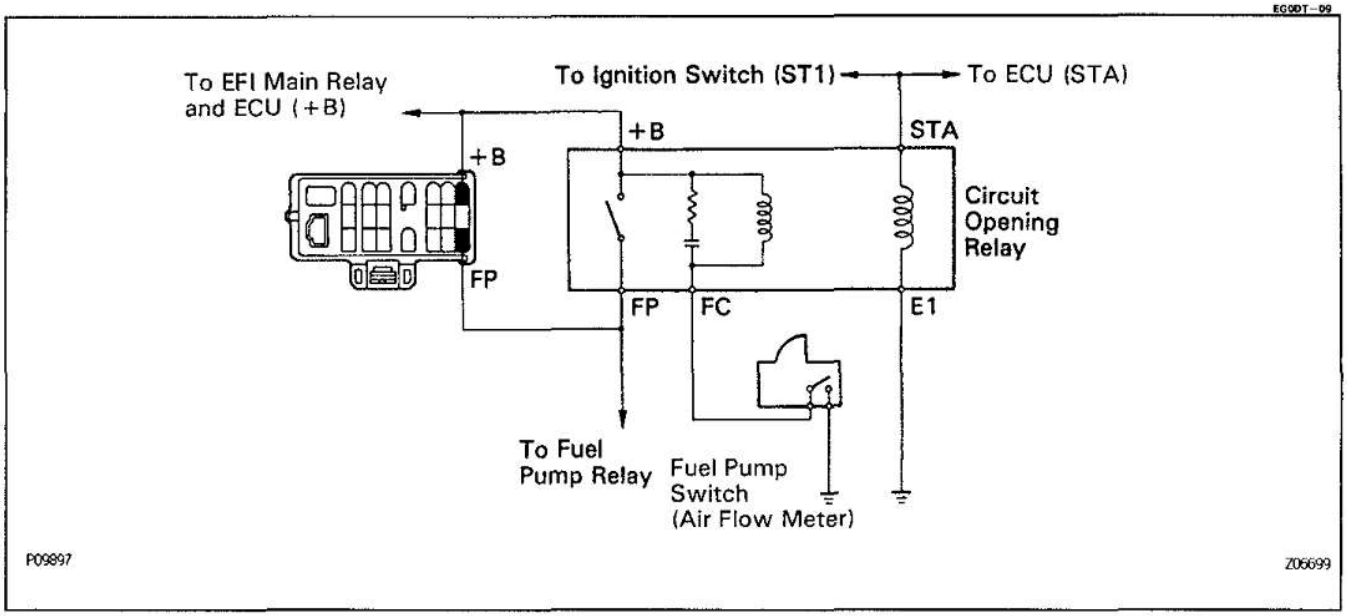

EG1T6-01

COMPONENTS FOR REMOVAL AND INSTALLATION

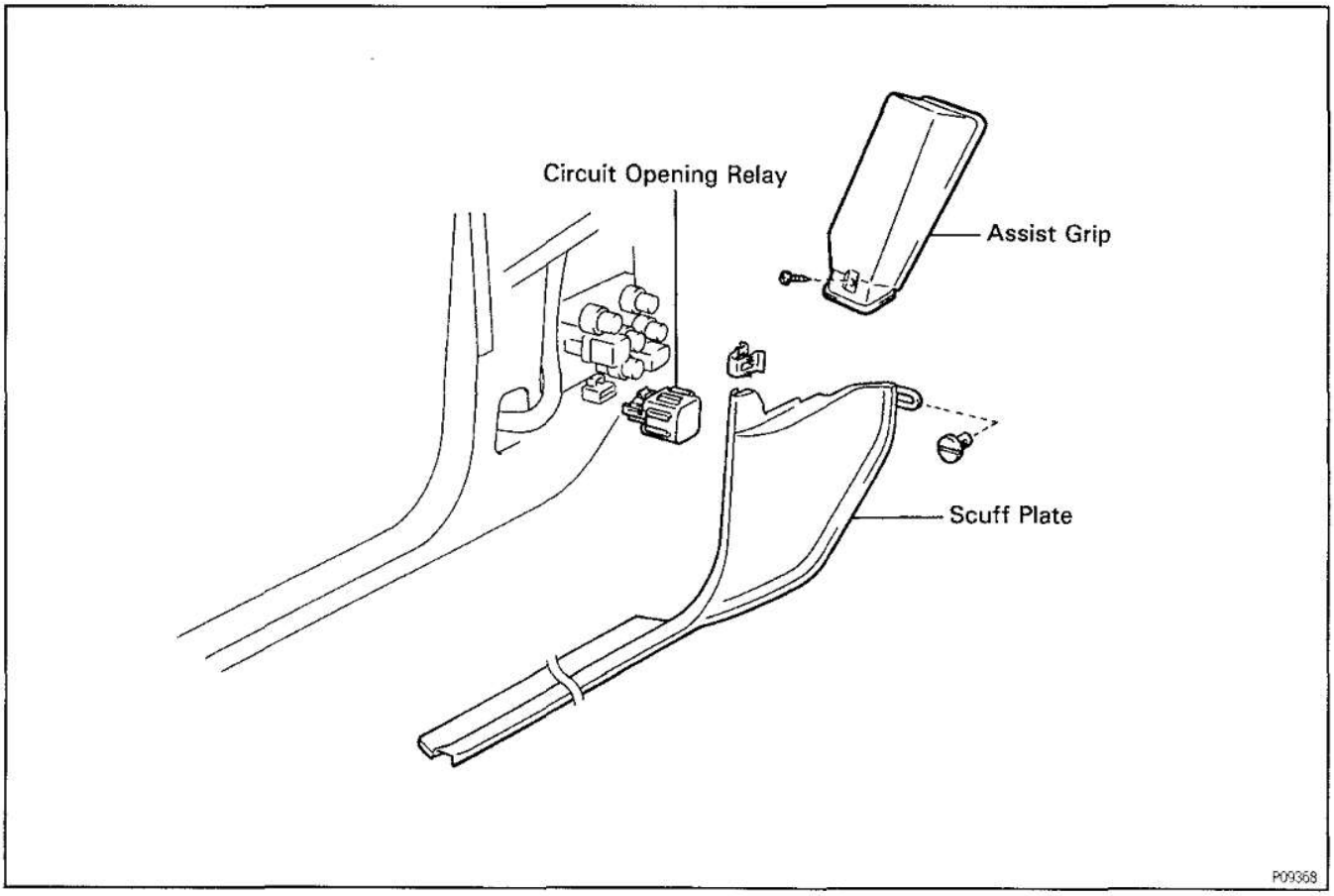

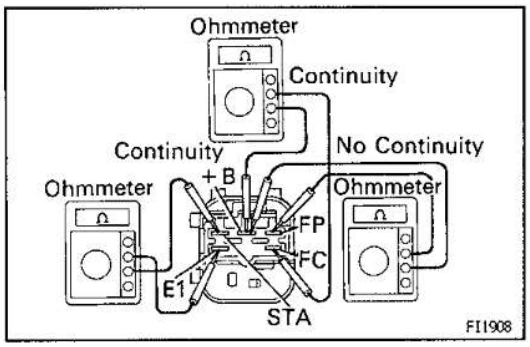

CIRCUIT OPENING RELAY INSPECTION EG1SN-02

1. INSPECT CIRCUIT OPENING RELAY

A. Inspect relay continuity

(a) Using an ohmmeter, check that there is continuity between terminals STA and E1.

(b) Check that there is continuity between terminals +B and FC.

(c) Check that there is no continuity between terminals +B and FP.

If continuity is not as specified, replace the relay.

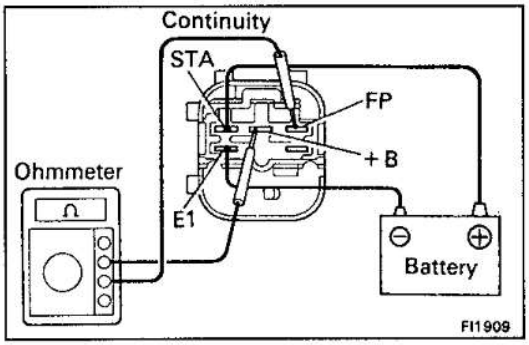

B. Inspect relay operation

(a) Apply battery voltage across terminals STA and E1.

(b) Using an ohmmeter, check that there is continuity between terminals +B and FP.

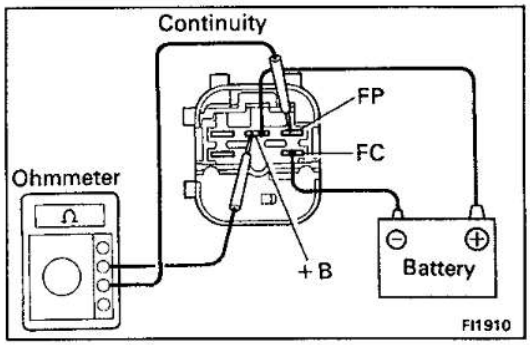

(c) Apply battery voltage across terminals +B and FC.

(d) Check that there is continuity between terminals +B and FP.

If operation is not as specified, replace the relay.

WATER TEMPERATURE SENSOR

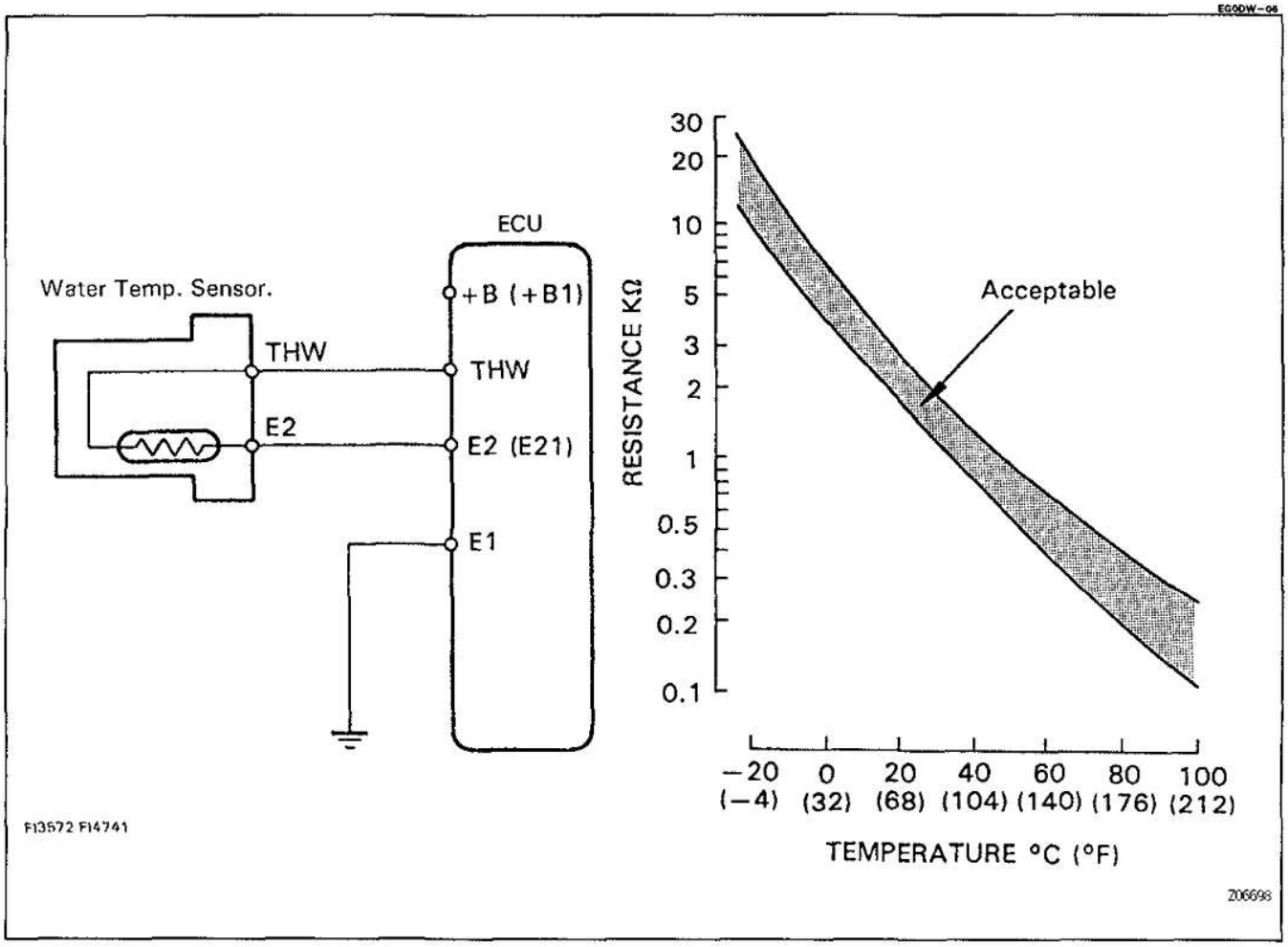

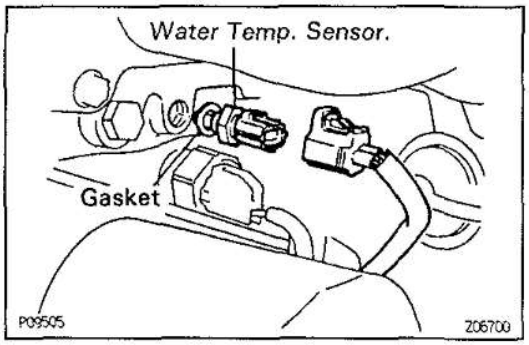

EG1SP-02

ENGINE COOLANT TEMPERATURE SENSOR INSPECTION

1. DRAIN ENGINE COOLANT

2. REMOVE WATER TEMPERATURE SENSOR

(a) Disconnect the water temp. sensor connector.

(b) Using a 19 mm deep socket wrench, remove the water temp. sensor and gasket.

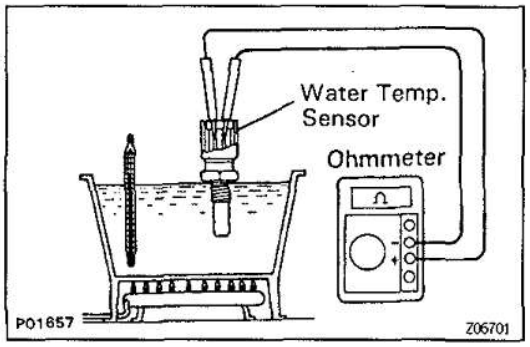

3. INSPECT WATER TEMPERATURE SENSOR

Using an ohmmeter, measure the resistance between the terminals.

Resistance:

Refer to the chart graph above

If the resistance is not as specified, replace the water temp. sensor.

4. REINSTALL WATER TEMPERATURE SENSOR

(a) Using a 19 mm deep socket wrench, install the water temp. sensor and gasket.
Torque: 20 N·m (200 kgf·cm, 14 ft·lbf)

(b) Connect the water temp. sensor connector.

5. REFILL ENGINE COOLANT

FUEL PUMP RELAY AND RESISTOR

EG0E0-09

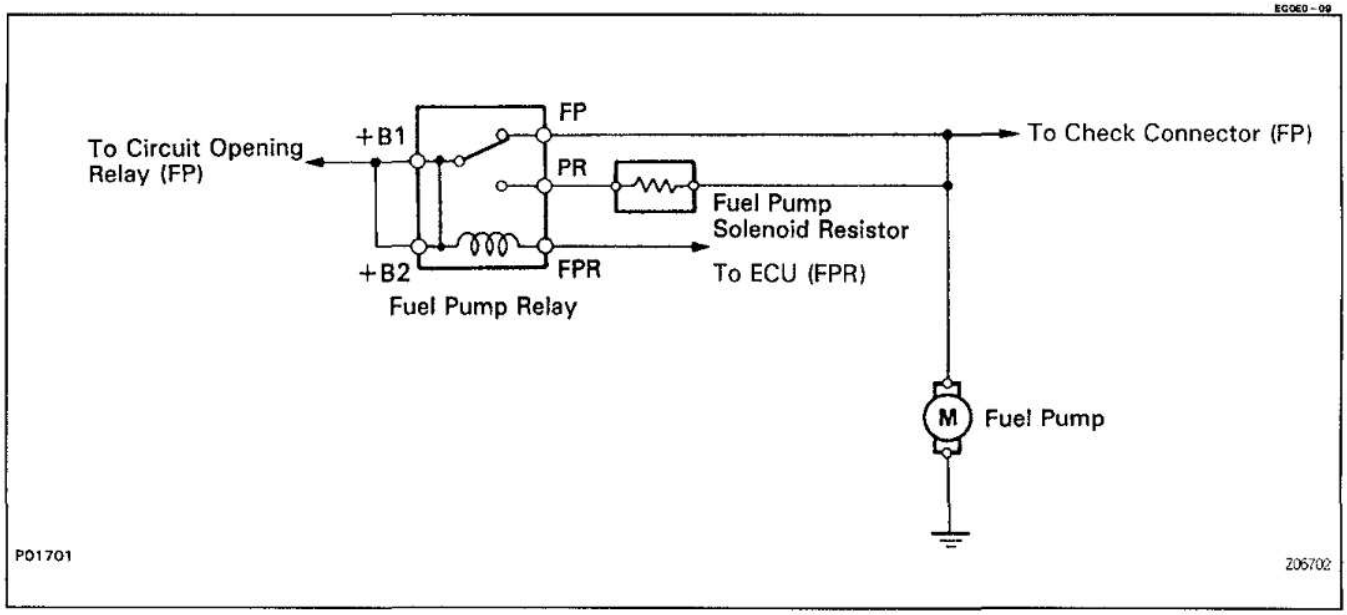

EG

EG0E1-04

FUEL PUMP RELAY INSPECTION

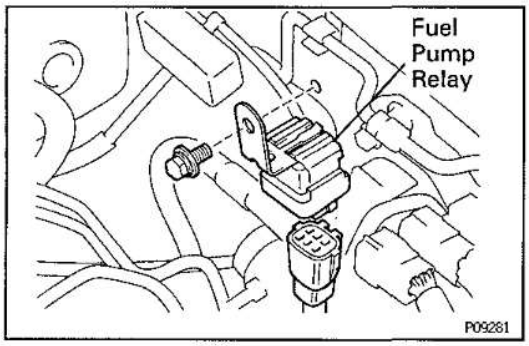

1. REMOVE FUEL PUMP RELAY

(a) Disconnect the fuel pump relay connector.

(b) Remove the bolt and fuel pump relay.

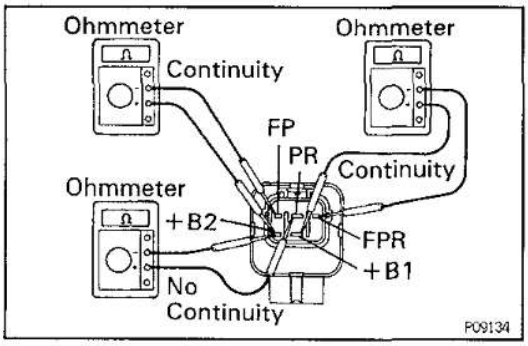

2. INSPECT FUEL PUMP RELAY

A. Inspect relay continuity

(a) Using an ohmmeter, check that there is continuity between terminals +B1 and FPR.

(b) Check that there is continuity between terminals +B2 and FP.

(c) Check that there is no continuity between terminals +B2 and PR.

If continuity is not as specified, replace the relay.

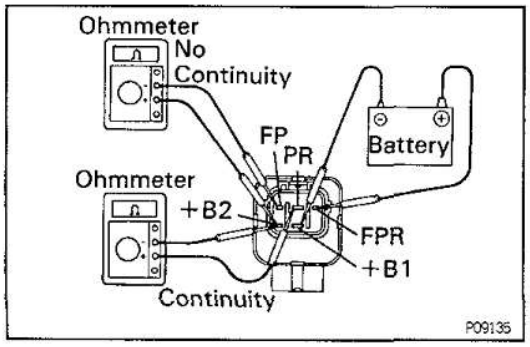

B. Inspect relay operation

(a) Apply battery voltage across terminals +B1 and FPR.

(b) Using an ohmmeter, check that there is no continuity between the +B2 and FP.

(c) Check that there is continuity between terminals +B2 and PR.

If operation is not as specified, replace the relay.

3. REINSTALL FUEL PUMP RELAY

FUEL PUMP RELAY AND RESISTOR

EG0E0-09

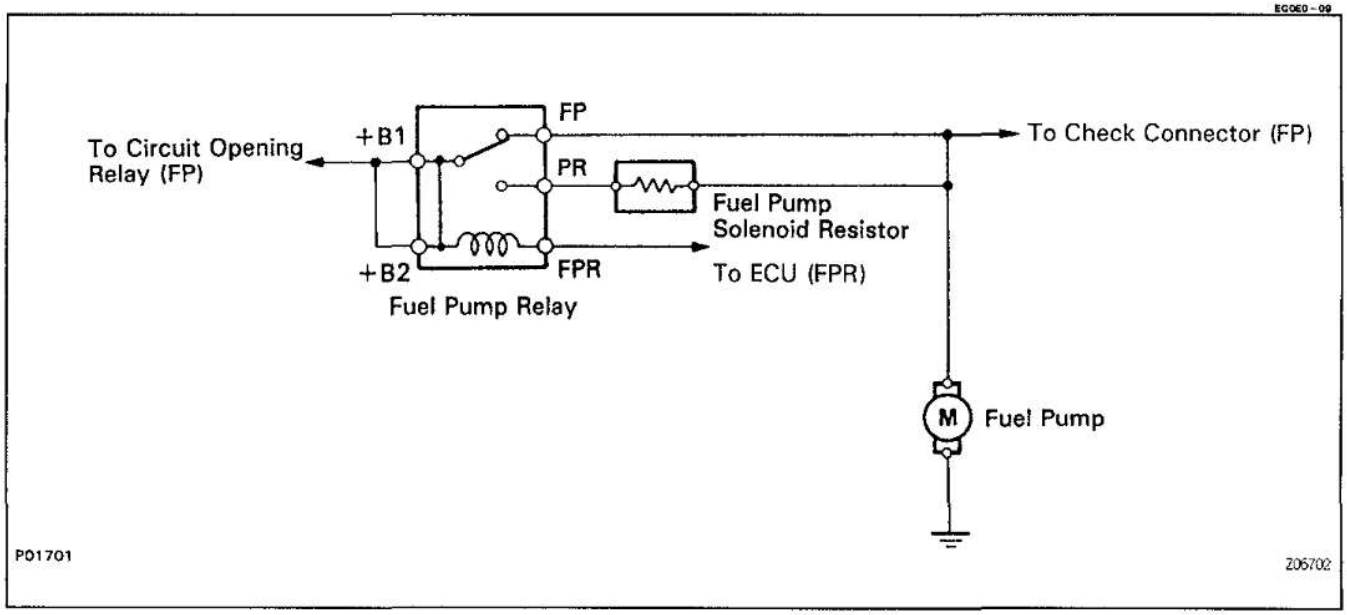

EG

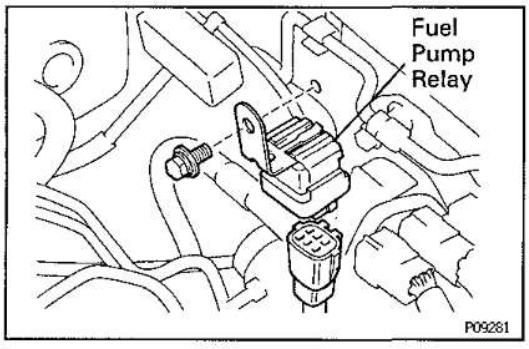

EG0E1-04

FUEL PUMP RELAY INSPECTION

1. REMOVE FUEL PUMP RELAY

(a) Disconnect the fuel pump relay connector.

(b) Remove the bolt and fuel pump relay.

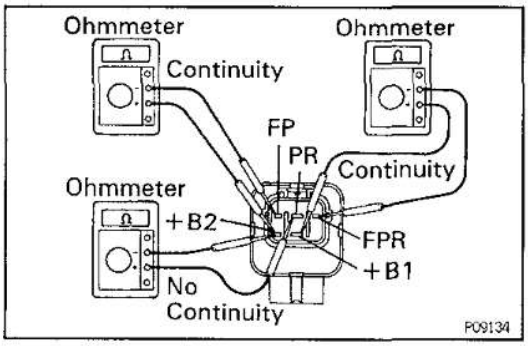

2. INSPECT FUEL PUMP RELAY

A. Inspect relay continuity

(a) Using an ohmmeter, check that there is continuity between terminals +B1 and FPR.

(b) Check that there is continuity between terminals +B2 and FP.

(c) Check that there is no continuity between terminals +B2 and PR.

If continuity is not as specified, replace the relay.

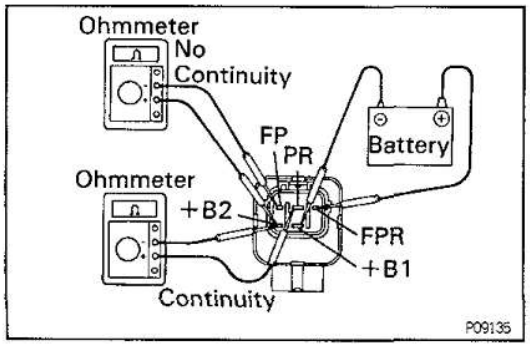

B. Inspect relay operation

(a) Apply battery voltage across terminals +B1 and FPR.

(b) Using an ohmmeter, check that there is no continuity between the +B2 and FP.

(c) Check that there is continuity between terminals +B2 and PR.

If operation is not as specified, replace the relay.

3. REINSTALL FUEL PUMP RELAY

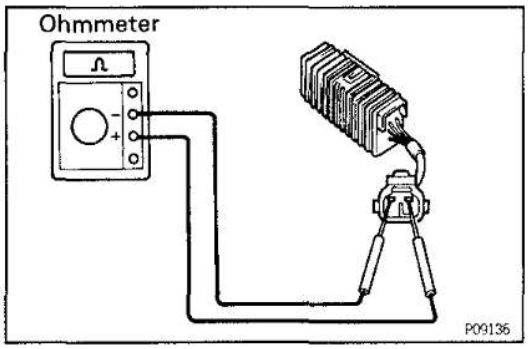

EG282-01

FUEL PUMP RESISTOR INSPECTION

1. **DISCONNECT FUEL PUMP RESISTOR CONNECTOR**
2. **INSPECT FUEL PUMP RESISTOR**
   Using an ohmmeter, measure the resistance between the terminals.
   Resistance (Cold):
   Approx. 0.73 Ω
   If there is no continuity, replace the resistor.
3. **RECONNECT FUEL PUMP RESISTOR CONNECTOR**

KNOCK SENSOR

EG0TU-03

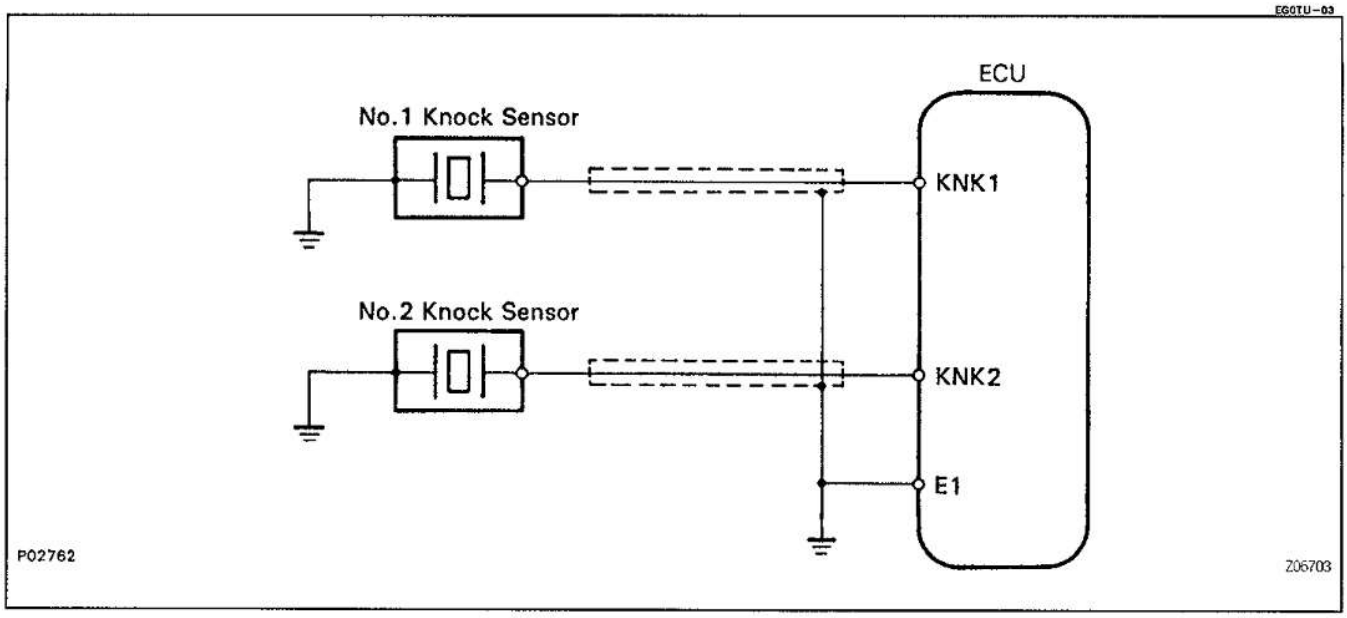

EG0TV-02

KNOCK SENSORS INSPECTION

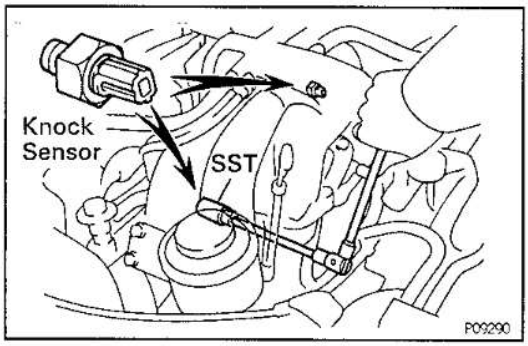

1. REMOVE KNOCK SENSOR

(a) Disconnect the knock sensor connector.

(b) Using SST, remove the knock sensor.
SST 09816−30010

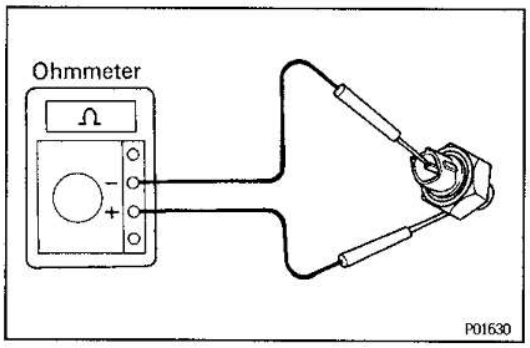

2. INSPECT KNOCK SENSOR

Using an ohmmeter, check that there is no continuity between the terminal and body.
If there is continuity, replace the sensor.

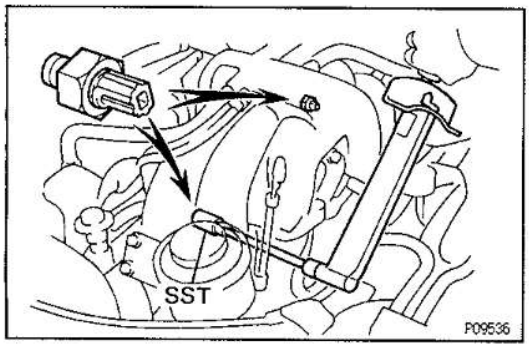

3. REINSTALL KNOCK SENSOR

(a) Using SST, install the knock sensor.
SST 09816−30010
Torque: 44 N·m (450 kgf·cm, 33 ft·lbf)

(b) Connect the knock sensor connector.

VSV FOR EVAP

EG0U0-05

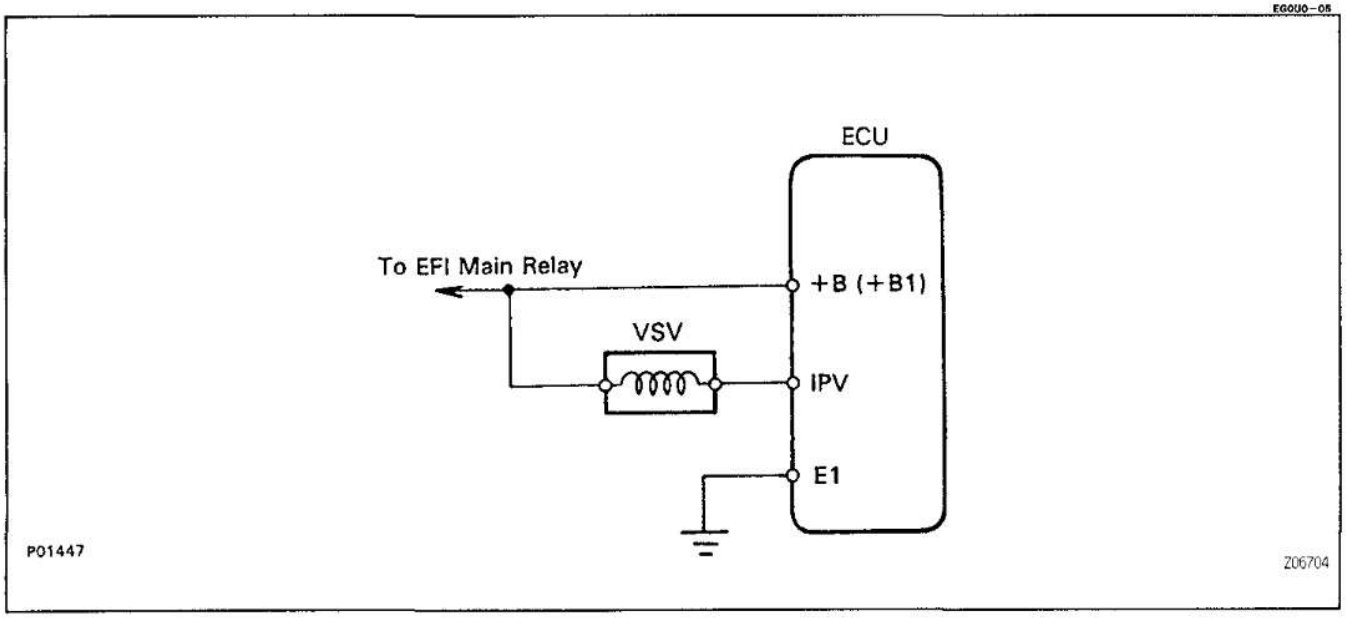

EG1SQ-01

VSV INSPECTION

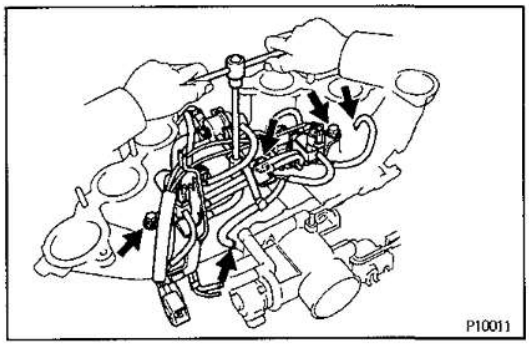

1. **REMOVE AIR INTAKE CHAMBER**
   (See pages EG—249 and 250)
2. **REMOVE VSV**

(a) Disconnect the air hose and vacuum hose from the air intake chamber.

(b) Remove the four bolts and emission control valve set assembly.

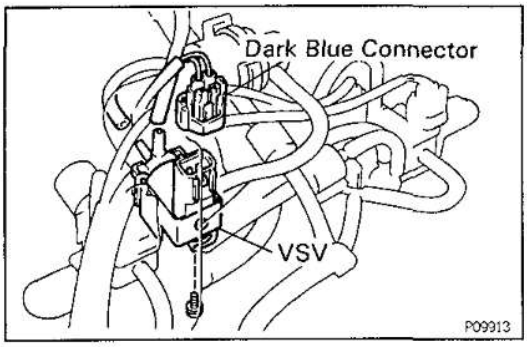

(c) Disconnect the connector and two vacuum hoses, and remove the screw and VSV.

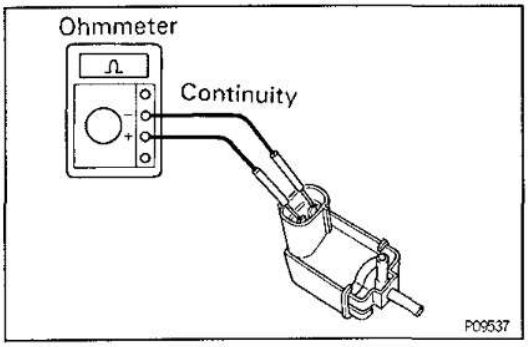

3. **INSPECT VSV**

A. **Inspect VSV for open circuit**

Using an ohmmeter, check that there is continuity between the terminals.

Resistance:

30 — 33 Ω at 20°C (68°F)

If there is no continuity, replace the VSV.

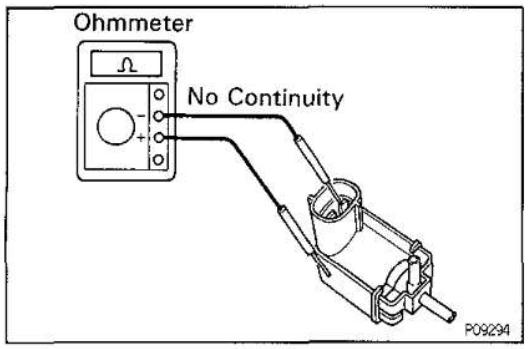

B. Inspect VSV for ground

Using an ohmmeter, check that there is no continuity between each terminal and the body.
If there is continuity, replace the VSV.

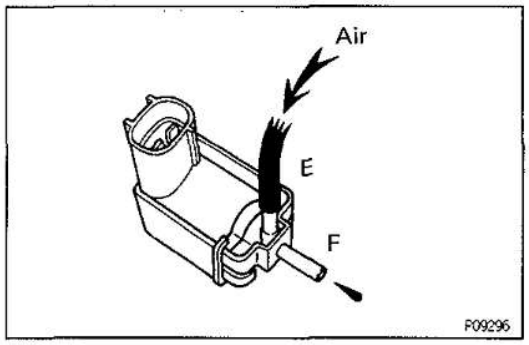

C. Inspect VSV operation

(a) Check that the air does not flow from pipe E to pipe F.

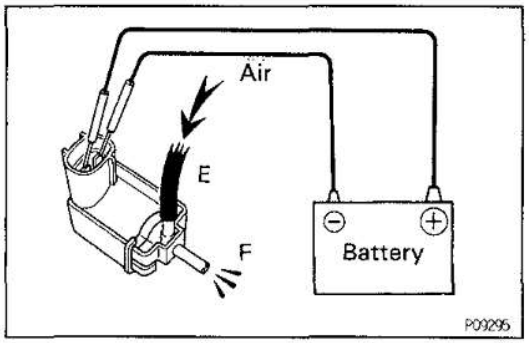

(b) Apply battery voltage across the terminals.
(c) Check that the air flows from pipe E to the pipe F.
If operation is not as specified, replace the VSV.

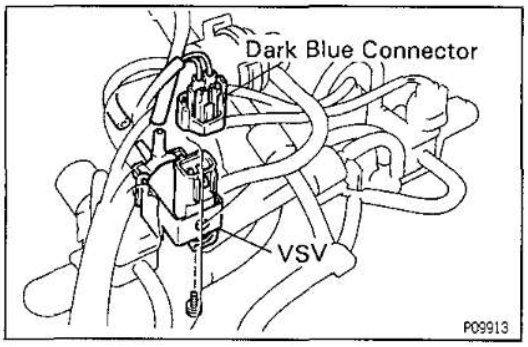

4. REINSTALL VSV

(a) Install the VSV with the screws.
(b) Connect the connector and two vacuum hoses to the VSV.

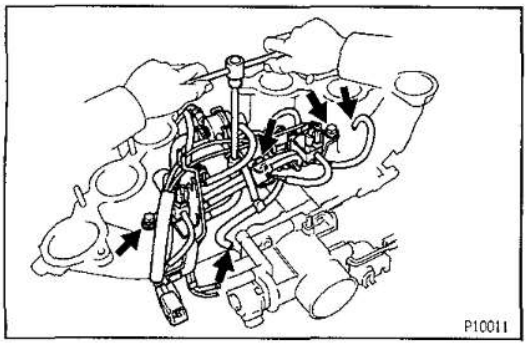

(c) Install the emission control valve set assembly with the four bolts.
Torque: 20 N·m (200 kgf·cm, 14 ft·lbf)
(d) Connect the air hose and vacuum hose to the air intake chamber.

5. REINSTALL AIR INTAKE CHAMBER
(See pages EG–256 and 257)

VSV FOR FUEL PRESSURE CONTROL

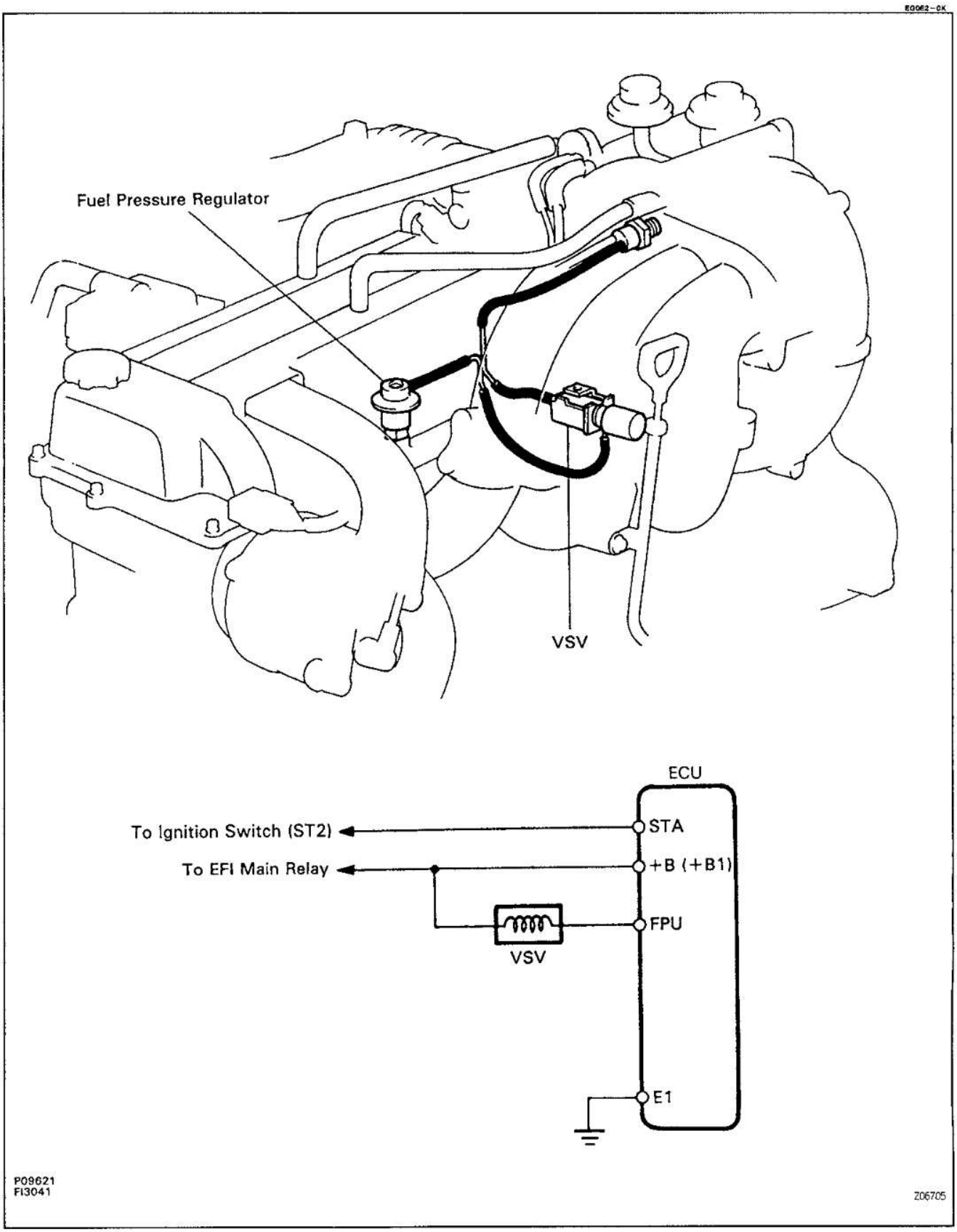

EG1SR-01

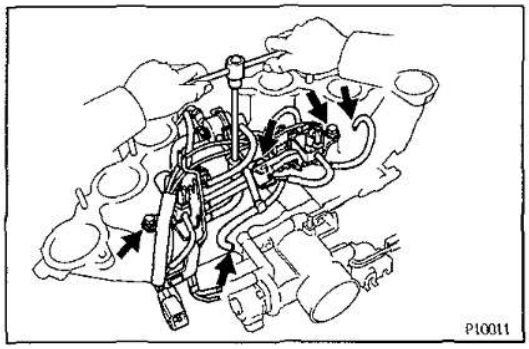

VSV INSPECTION

1. REMOVE AIR INTAKE CHAMBER
(See pages EG—249 and 250)

2. REMOVE VSV

(a) Disconnect the air hose and vacuum hose from the air intake chamber.

(b) Remove the four bolts and emission control valve set assembly.

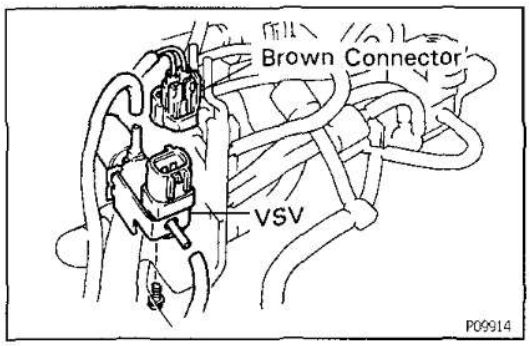

(c) Disconnect the connector and two vacuum hoses, and remove the screw and VSV.

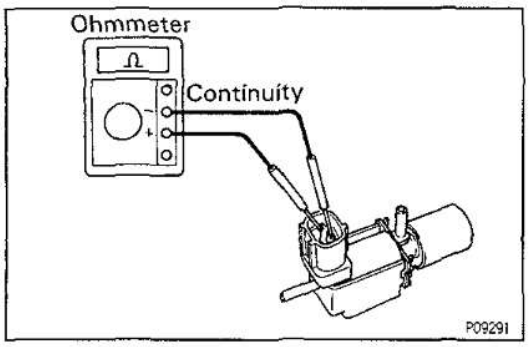

3. INSPECT VSV

A. Inspect VSV for open circuit

Using an ohmmeter, check that there is continuity between the terminals.

Resistance:

37 — 44 Ω at 20°C (68°F)

If there is no continuity, replace the VSV.

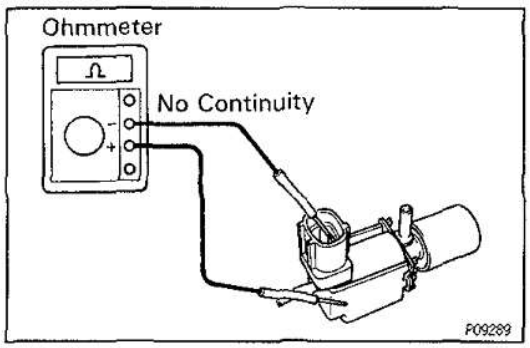

B. Inspect VSV for ground

Using an ohmmeter, check that there is no continuity between each terminal and the body.

If there is continuity, replace the VSV.

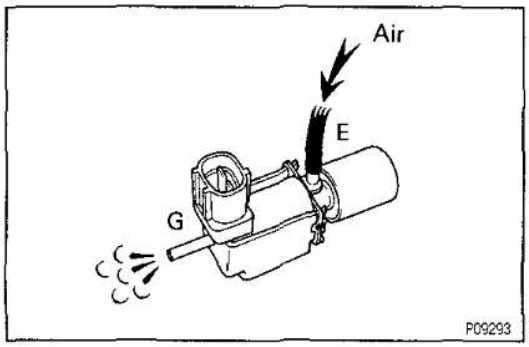

C. Inspect VSV operation

(a) Check that the air flows from pipe E to pipe G.

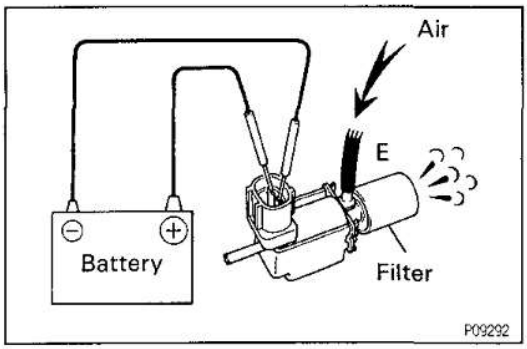

(b) Apply battery voltage across the terminals.

(c) Check that the air flows from pipe E to the filter.
If operation is not as specified, replace the VSV.

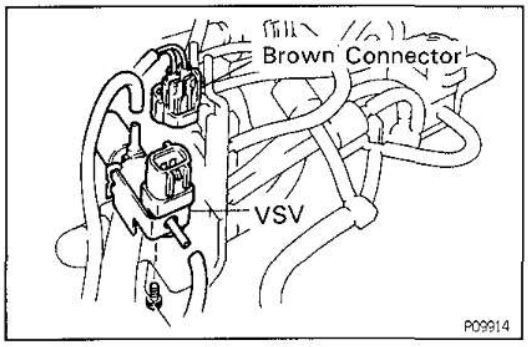

4. REINSTALL VSV

(a) Install the VSV with the screws.

(b) Connect the connector and two vaccum hoses to the VSV.

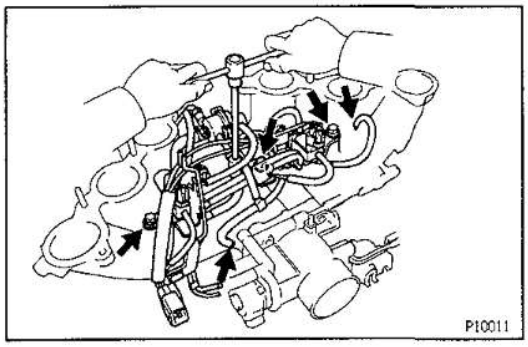

(c) Install the emission control valve set assembly with the four bolts.
Torque: 20 N·m (200 kgf·cm, 14 ft·lbf)

(d) Connect the air hose and vacuum hose to the air intake chamber.

5. REINSTALL AIR INTAKE CHAMBER
(See pages EG–256 and 257)

VSV FOR EGR
(Europe)

EG0U6-08

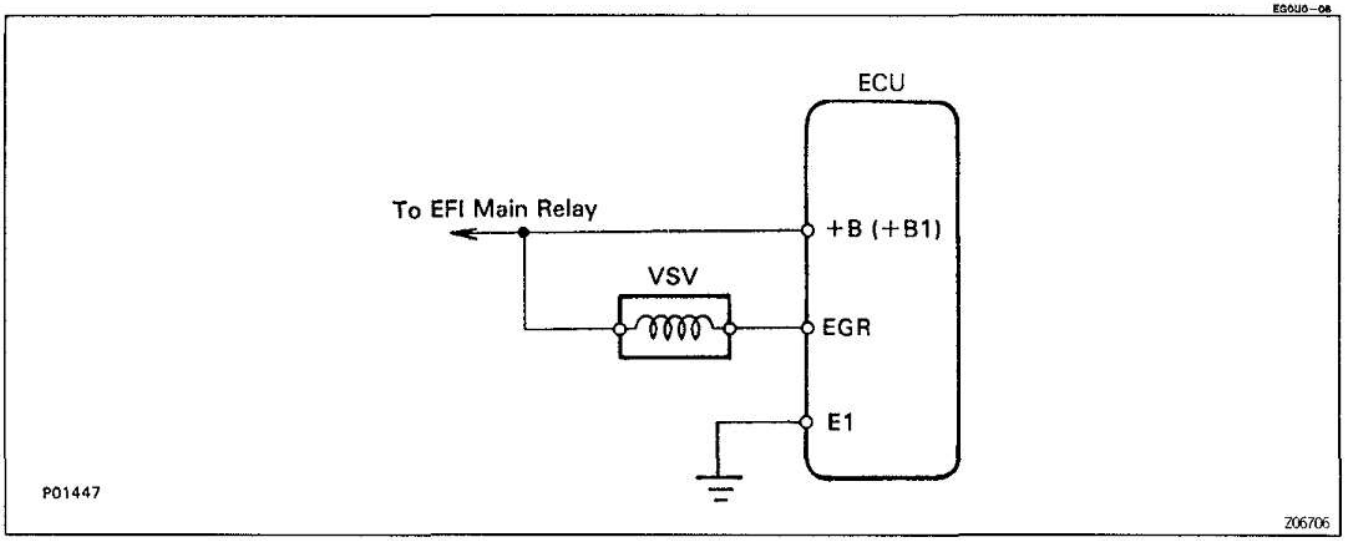

EG1T7-01

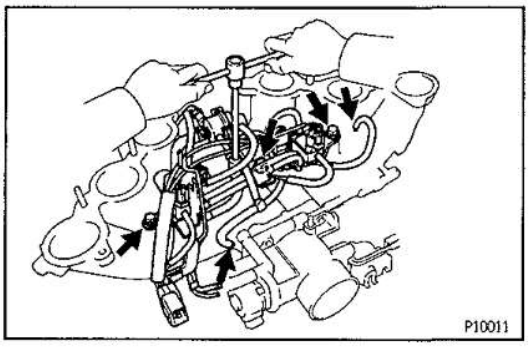

VSV INSPECTION

1. **REMOVE AIR INTAKE CHAMBER (See pages EG—249 and 250)**
2. **REMOVE VSV**

(a) Disconnect the air hose and vacuum hose from the air intake chamber.

(b) Remove the four bolts and emission control valve set assembly.

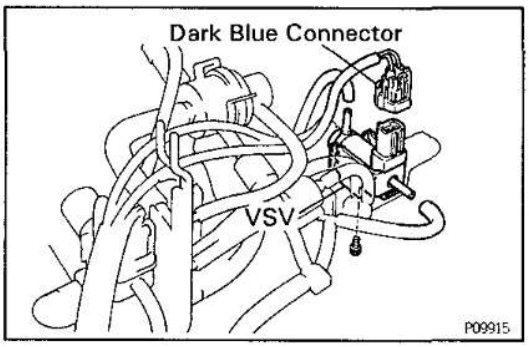

(c) Disconnect the connector and two vacuum hoses, and remove the screw and VSV.

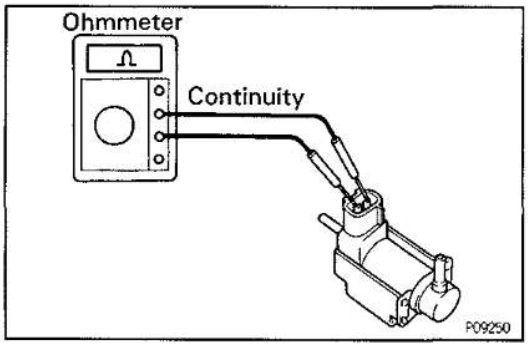

3. **INSPECT VSV**

A. **Inspect VSV for open circuit**

Using an ohmmeter, check that there is continuity between the terminals.

Resistance:

30 — 34 Ω at 20°C (68°F)

If there is no continuity, replace the VSV.

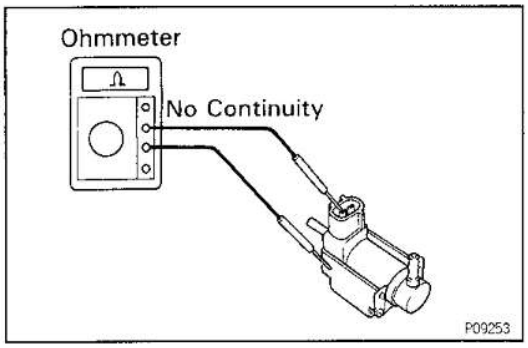

B. Inspect VSV for ground

Using an ohmmeter, check that there is no continuity between each terminal and the body.
If there is continuity, replace the VSV.

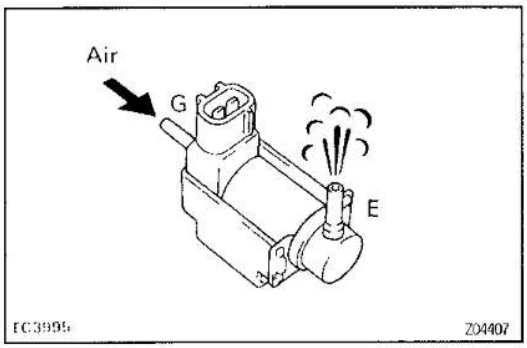

C. Inspect VSV operation

(a) Check that the air flows from pipe G to pipe E.

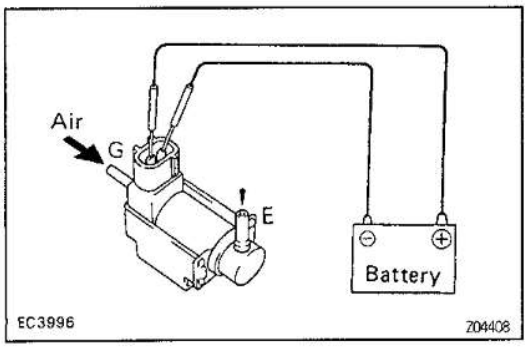

(b) Apply battery voltage across the terminals.

(c) Check that the air does not flows from pipe G to pipe E.
If operation is not as specified, replace the VSV.

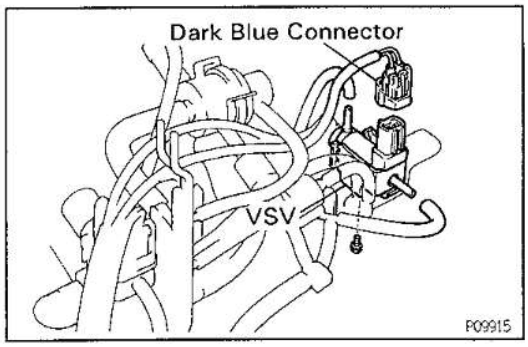

4. REINSTALL VSV

(a) Install the VSV with the screws.

(b) Connect the connector and two vacuum hoses to the VSV.

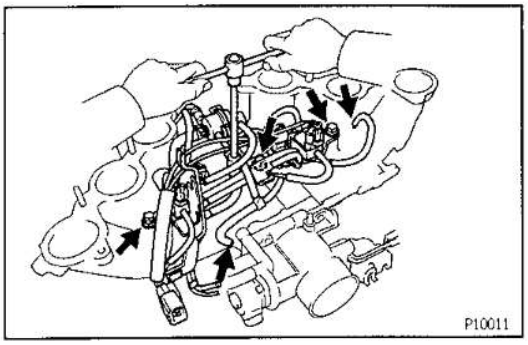

(c) Install the emission control valve set assembly with the four bolts.
Torque: 20 N·m (200 kgf·cm, 14 ft·lbf)

(d) Connect the air hose and vacuum hose to the air intake chamber.

5. REINSTALL AIR INTAKE CHAMBER
(See pages EG–256 and 257)

VSV FOR AS (Europe)

EG0U0-07

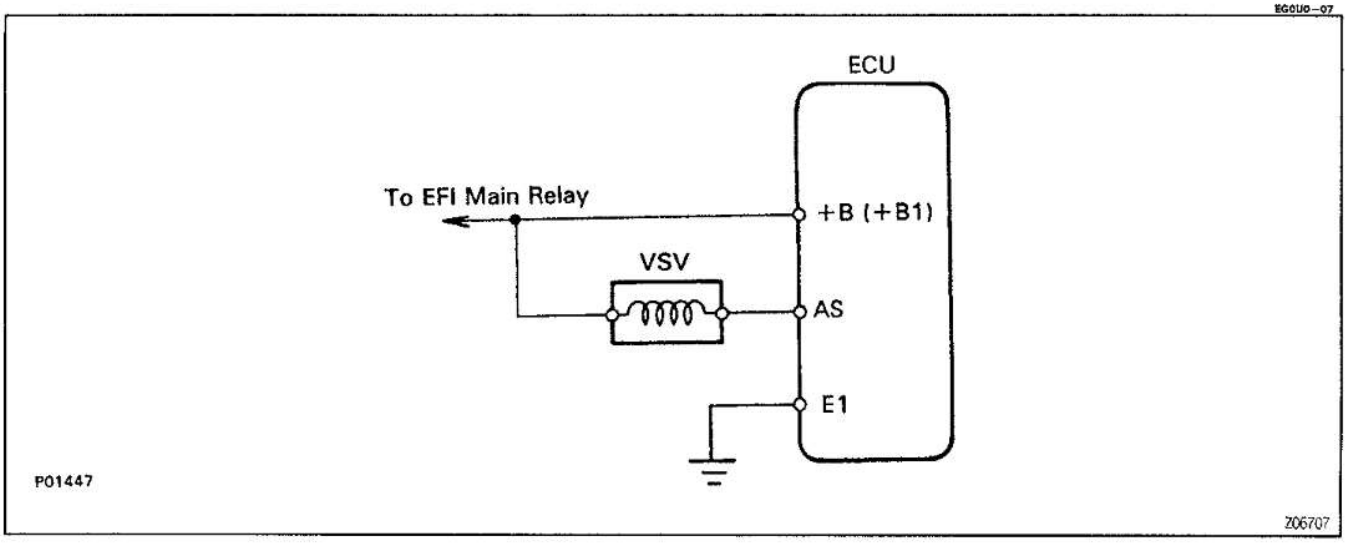

EG1T6-01

VSV INSPECTION

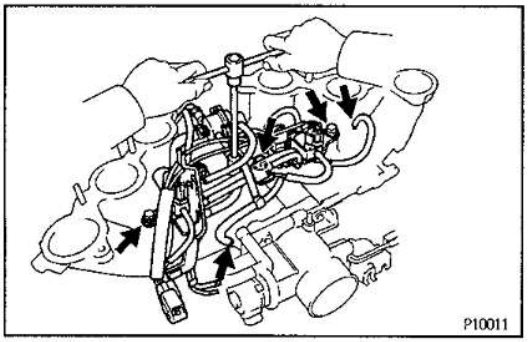

1. **REMOVE AIR INTAKE CHAMBER (See pages EG—249 and 250)**
2. **REMOVE VSV**

(a) Disconnect the air hose and vacuum hose from the air intake chamber.

(b) Remove the four bolts and emission control valve set assembly.

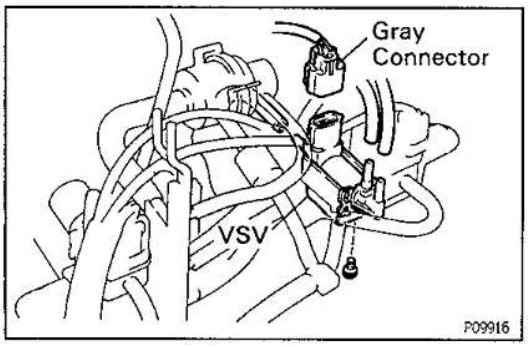

(c) Disconnect the connector and three vacuum hoses, and remove the screw and VSV.

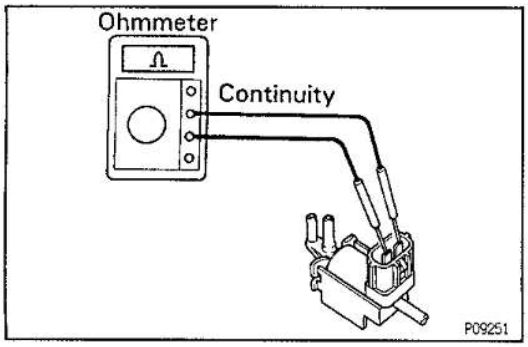

3. **INSPECT VSV**

A. **Inspect VSV for open circuit**

Using an ohmmeter, check that there is continuity between the terminals.

Resistance:

37 — 44 Ω at 20°C (68°F)

If there is no continuity, replace the VSV.

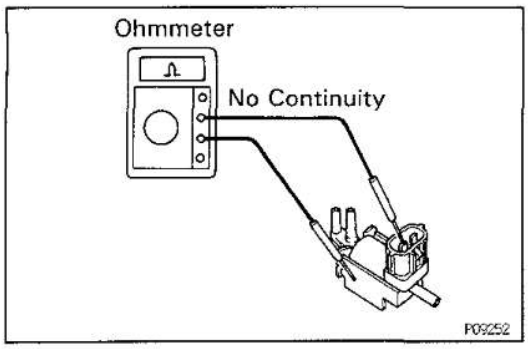

B. Inspect VSV for ground

Using an ohmmeter, check that there is no continuity between each terminal and the body.
If there is continuity, replace the VSV.

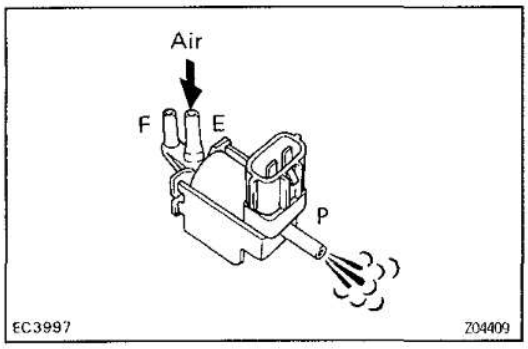

C. Inspect VSV operation

(a) Check that the air flows from pipe E to the pipe P.

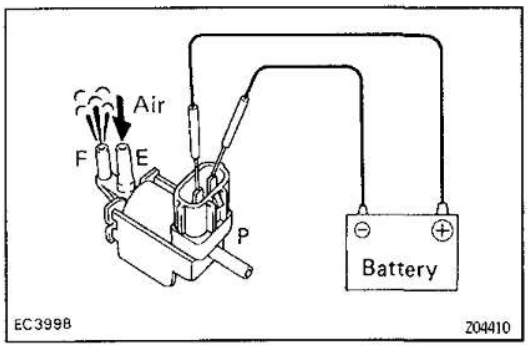

(b) Apply battery voltage across the terminals.
(c) Check that the air flows from pipe E to pipe F.
If operation is not as specified, replace the VSV.

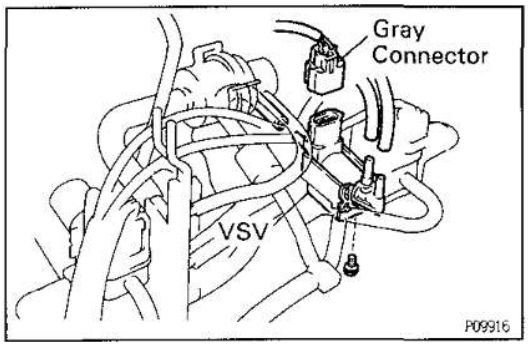

4. REINSTALL VSV

(a) Install the VSV with the screws.
(b) Connect the connector and three vacuum hoses to the VSV.

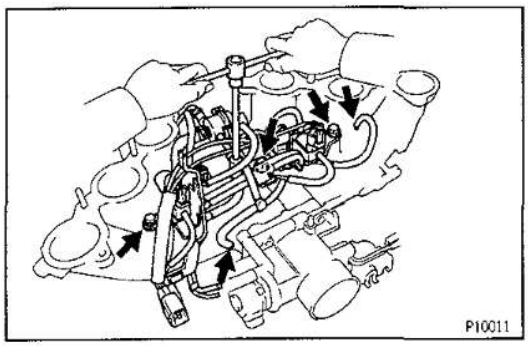

(c) Install the emission control valve set assembly with the four bolts.
Torque: 20 N·m (200 kgf·cm, 14 ft·lbf)
(d) Connect the air hose and vacuum hose to the air intake chamber.

5. REINSTALL AIR INTAKE CHAMBER
(See pages EG—256 and 257)

OXYGEN SENSOR

EG027-03

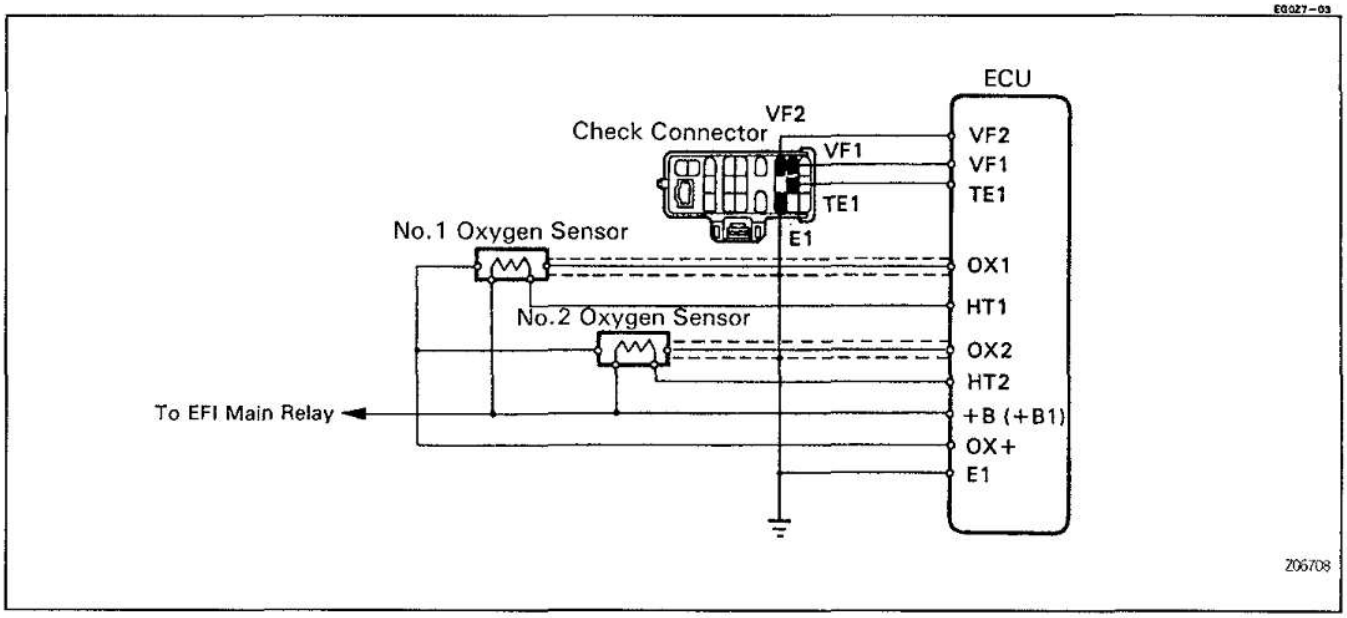

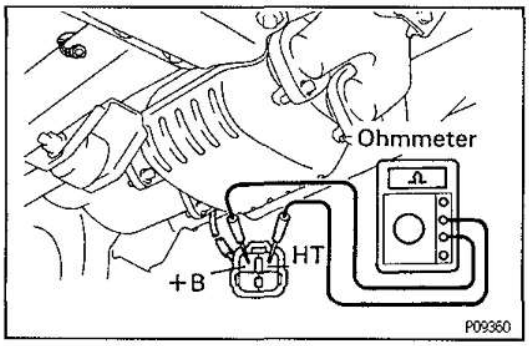

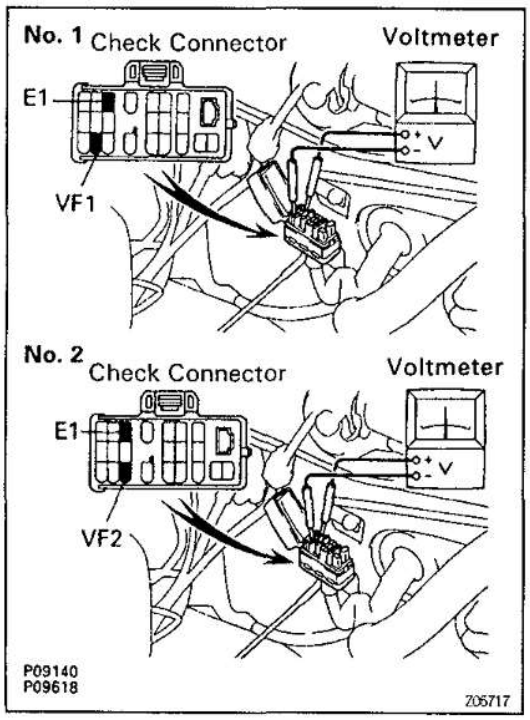

EG1SS-02

OXYGEN SENSORS INSPECTION

1. INSPECT HEATER RESISTANCE OF OXYGEN SENSOR

(a) Disconnect the oxygen sensor connector.

(b) Using an ohmmeter, measure the resistance between terminals +B and HT.

Resistance:

5.0 — 6.5 Ω at 20°C (68°F)

If resistance is not as specified, replace the oxygen sensor.

(c) Reconnect the heated oxygen sensor connector.

2. WARM UP ENGINE

Allow the engine to warm up to normal operating temperature.

3. INSPECT FEEDBACK VOLTAGE

Connect the positive (+) probe of a voltmeter to terminal VF1 or VF2 of the check connector, and negative (−) probe to terminal E1. Perform the test as follows:

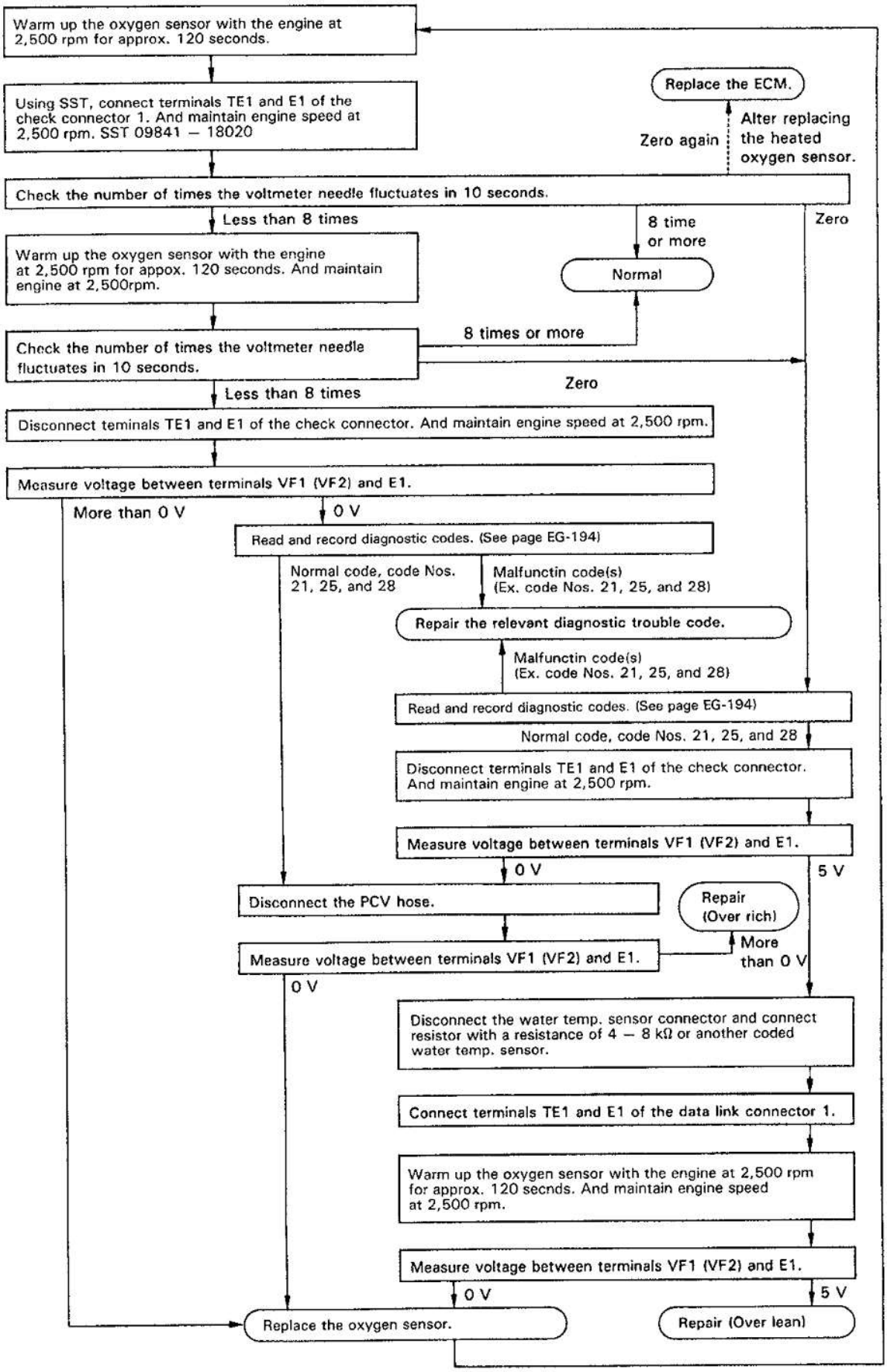

ECU
ELECTRONIC CONTROL UNIT

EG0E8-07

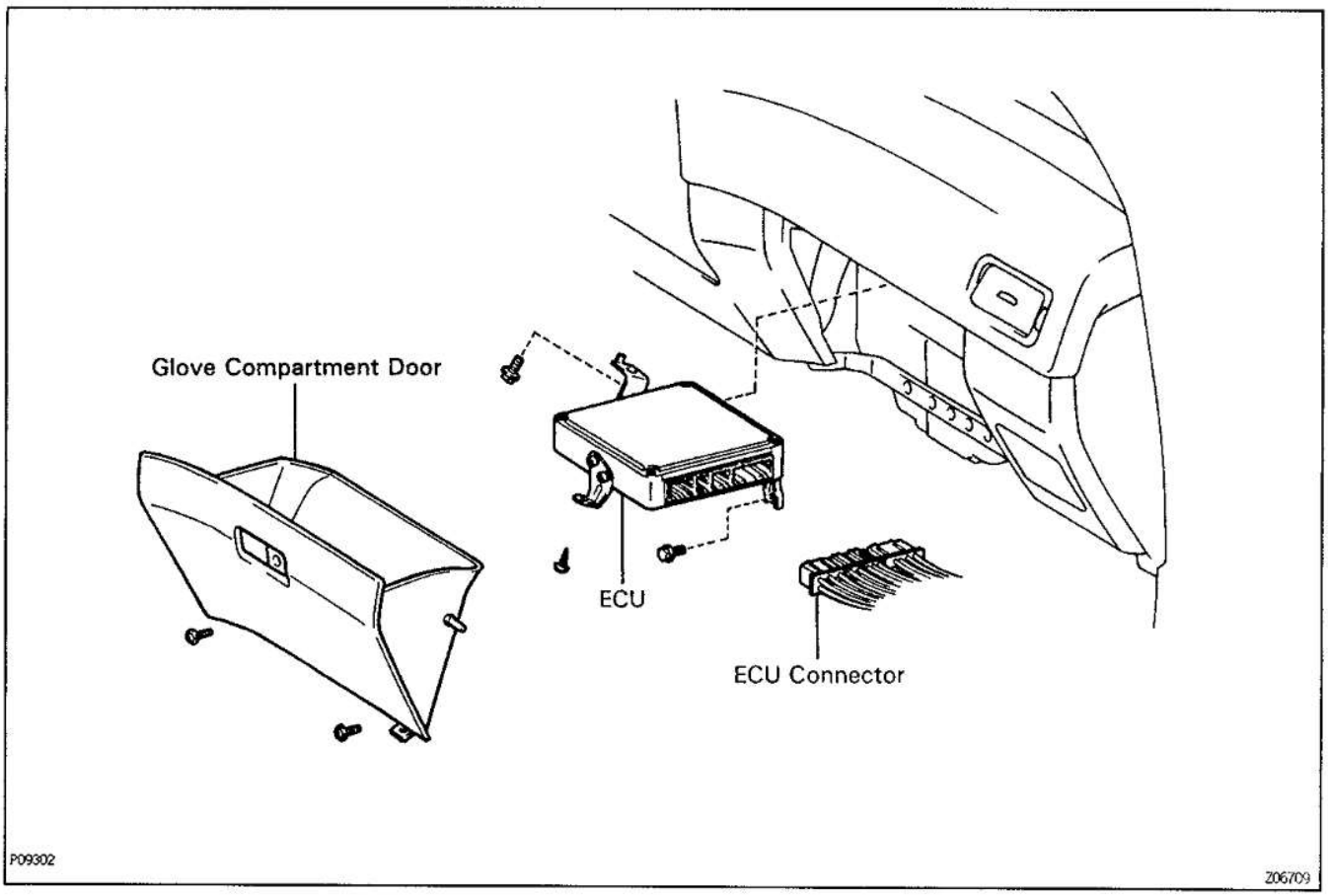

EG1ST-02

ECU INSPECTION

HINT: The EFI circuit can be checked by measuring the resistance and voltage at the wiring connectors of the ECU.

1. **REMOVE GLOVE COMPARTMENT DOOR**

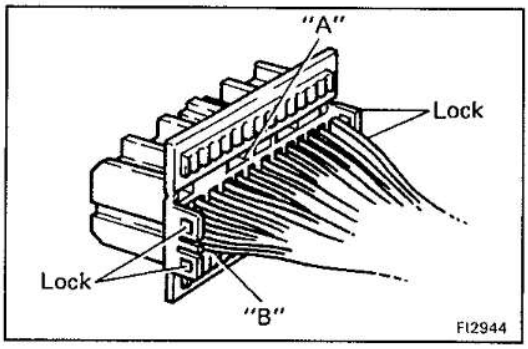

2. **PREPARATION**

(a) Disconnect the four connectors from the ECU.

(b) Remove the locks as shown in the illustration so that the tester probe(s) can easily come in.
NOTICE: Pay attention to sections "A" and "B" in the illustration which can easily broken.

(c) Reconnect the four connectors to the ECU.

EG

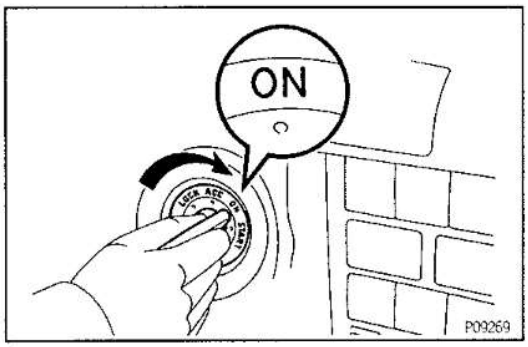

3. INSPECT VOLTAGE OF ECU

(a) Turn the ignition switch ON.

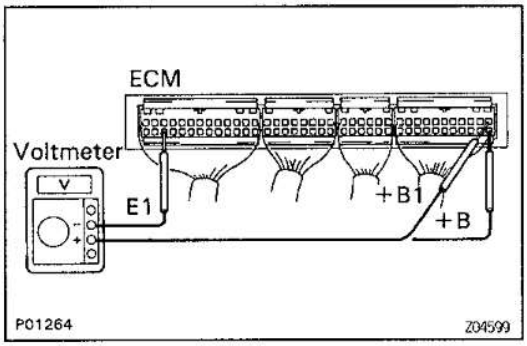

(b) Measure the voltage between each terminal of the wiring connectors.

HINT:

- Perform all voltage measurements with the connectors connected.
- Verify that the battery voltage is 11 V or more when the ignition switch is ON.

ECU Wiring Connectors Voltage

Terminals	Condition		STD voltage (V)
BATT – E1	–		9 – 14
IG SW – E1	IG SW ON		
M-REL – E1			
+B, +B1 – E1			
IDL – E2	IG SW ON	Throttle valve open	9 – 14
VCC – E2		–	4.5 – 5.5
VTA – E2		Throttle valve fully closed (Throttle opener must be cancelled first)	0.3 – 0.8
		Throttle valve fully open	3.2 – 4.9
VCC – E2		–	4.5 – 5.5
VS – E2		Measuring plate fully closed	3.5 – 4.5
		Measuring plate fully open	0.2 – 0.5
	Idling		1.2 – 2.4
	3,000 rpm		0.8 – 1.3

A/T

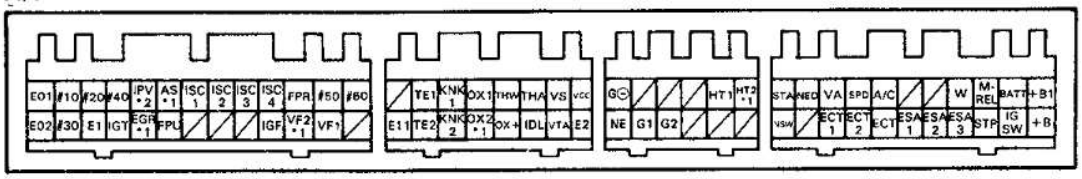

*1: Only for Europe

*2: Ex. GCC

M/T

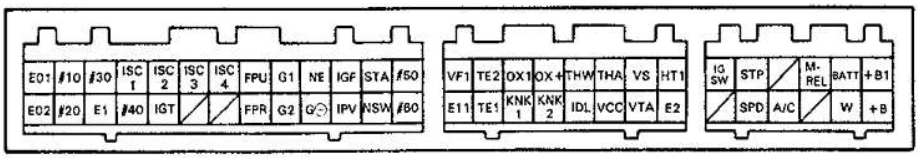

P01399
P01821

V02833

ECU Wiring Connectors Voltage (Cont'd)

Terminals	Condition		STD voltage (V)
#10 ~ #60 — E01 E02	IG SW ON		9 — 14
THA — E2	IG SW ON	Intake air temp. 20°C (68°F)	0.5 — 3.4
THW — E2		Engine coolant temp. 80°C (176°F)	0.2 — 1.0
STA — E1	Cranking		6 or more
IGT — E1	Idling		Pulse generation
ISC1 ~ ISC4 — E1	IG SW ON		9 — 14
W — E1	No trouble (malfunction indicator lamp light off) and engine running		9 — 14
IGF — E1	IG SW ON		2.0 or less
G1 G2 — G⊖	Idling		Pulse generation
NE — G⊖			
KNK1 KNK2 — E1			
VF1 VF2*1 — E1	Maintain engine speed at 2,500 rpm for 120 seconds after warming up then return to idling		1.8 — 3.2
NSW — E1	IG SW ON	Shift position P or N	3 or less
		Ex. shift position P or N	9 — 14
SPD — E1		Rotate driving wheel slowly	Pulse generation
TE1 TE2 — E1		Data link connector 1 TE1 — E1 not connected	9 — 14
		Data link connector 1 TE1 — E1 connected	1.5 or less
A/C — E1		Air conditioning ON	7.5 — 14
		Air conditioning OFF	1.5 or less
STP — E1	Stop light SW ON (Brake pedal depressed)		7.5 — 14
	Stop light SW OFF		1.5 or less

A/T

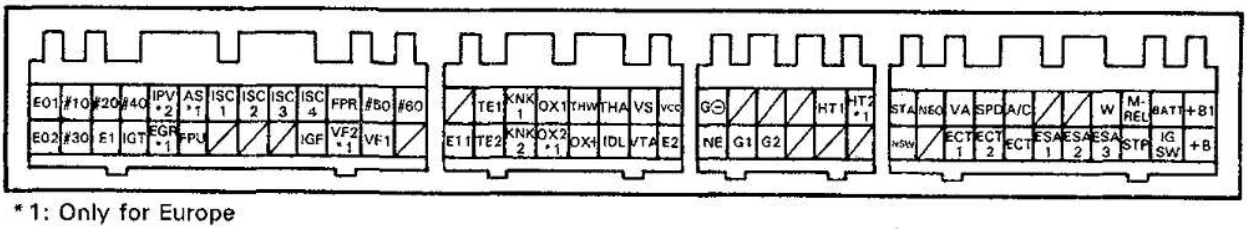

*1: Only for Europe

*2: Ex. GCC

M/T

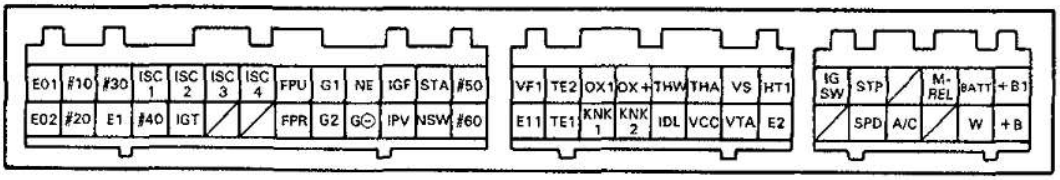

P01399
P01821

V02832

EG

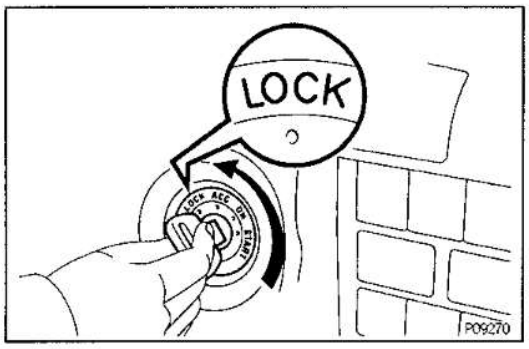

4. INSPECT RESISTANCE OF ECU MODULE

(a) Turn the ignition switch OFF.

(b) Disconnect the four connectors from the ECU.

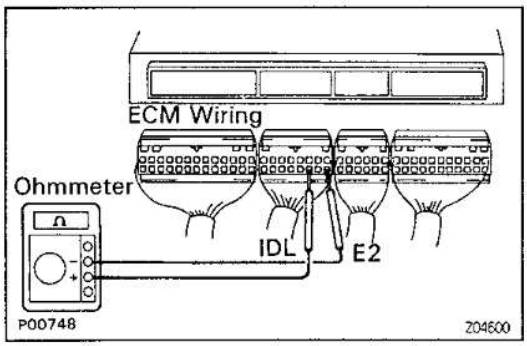

(c) Measure the resistance between each terminal of the wiring connectors.

NOTICE:

- **Do not touch the ECU terminals.**
- **The tester probe should be inserted in the wiring connector from the wiring side.**

ECU Wiring Connectors Resistance

Terminals	Condition	STD resistance (Ω)
IDL — E2	Throttle valve open	Infinity
	Throttle valve fully closed (Throttle opener must be cancelled first)	2,300 or less
VTA — E2	Throttle valve fully open	2,000 — 10,200
	Throttle valve fully closed (Throttle opener must be cancelled first)	200 — 5,700
VCC — E2	—	2,500 — 5,900
VS — E2	Measuring plate fully closed	200 — 600
	Measuring plate fully open	20 — 1,200
THA — E2	Intake air temp. 20°C (68°F)	2,000 — 3,000
THW — E2	Engine coolant temp. 80°C (176°F)	200 — 400
G1, G2 — G⊖	Cold (−10°C (14°F) to 50°C (122°F))	185 — 275
	Hot (50°C (122°F) to 100°C (212°F))	240 — 325
NE — G⊖	Cold (−10°C (14°F) to 50°C (122°F))	185 — 275
	Hot (50°C (122°F) to 100°C (212°F))	240 — 325
ISC1 ~ ISC4 — +B, +B1	—	10 — 30

A/T

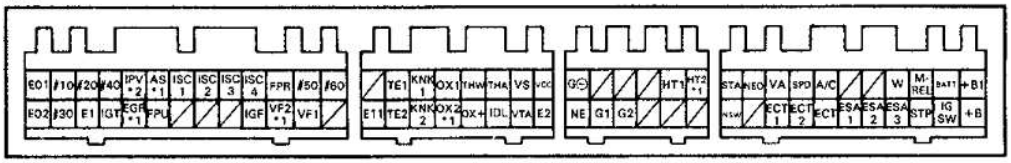

*1: Only for Europe

*2: Ex. GCC

M/T

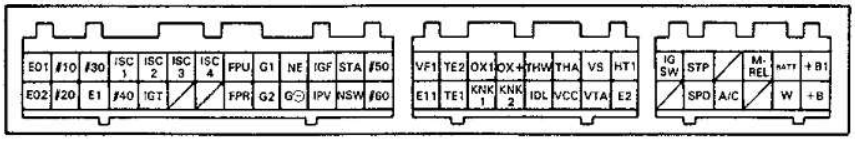

P01399
P01821

V02834

FUEL CUT RPM

EG151-04

FUEL CUT PRM INSPECTION

1. WARM UP ENGINE

Allow the engine to warm up to normal operating temperature.

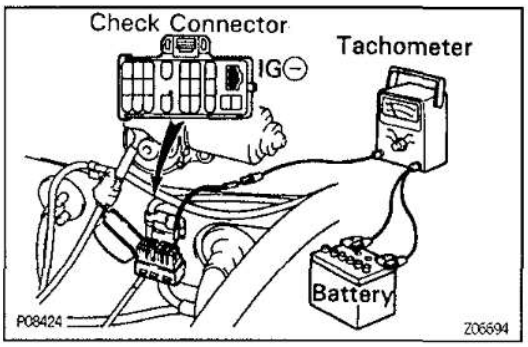

2. CONNECT TACHOMETER TO ENGINE

Connect the test probe of a tachometer to terminal IG ⊖ of the check connector.

NOTICE:

- **Never allow the tachometer terminal to touch ground as it could result in damage to the igniter and/or ignition coil.**
- **As some tachometers are not compatible with this ignition system, we recommend that you confirm the compatibility of your before use.**

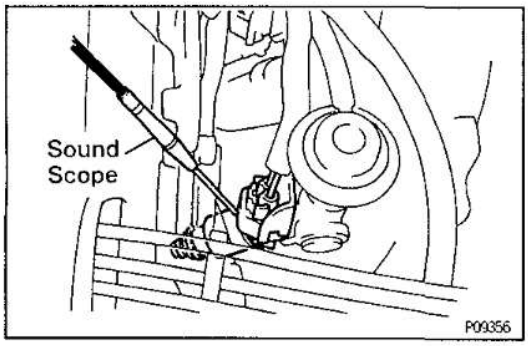

3. INSPECT FUEL CUT PRM

(a) Increase the engine speed to at least 3,000 rpm.

(b) Using a sound scope, check for injector operating sound.

(c) Check that when the throttle lever is released, injector operation sound stops momentarily and then resumes.

HINT: Measure with the A/C OFF.

Fuel return speed:

1,200 rpm

4. DISCONNECT TACHOMETER

SERVICE SPECIFICATIONS

SERVICE DATA

EG0ZA-03

EG

Fuel pressure regulator	Fuel pressure	at no vacuum	265 — 304 kPa (2.7 — 3.1 kgf/cm², 38 — 44 psi)
Fuel pump	Resistance (Cold)		0.2 — 3.0 Ω
Injector	Resistance		12 — 16 Ω
	Injection volume		66 — 82 cm³ (4.0 — 5.0 cu in.) per 15 seconds
	Difference between each cylinder		5 cm³ (0.3 cu in.) or less
	Fuel leakage		One drop or less per minute
Air flow meter	Resistance	Terminals	Resistance
		VS — E2	200 — 600 Ω (Measuring plate fully closed)
		VS — E2	20 — 1,200 Ω (Measuring plate fully open)
		VC — E2	200 — 400 Ω
		THA — E2	10 — 20 kΩ at −20°C (−4°F)
		THA — E2	4 — 7 kΩ at 0°C (32°F)
		THA — E2	2 — 3 kΩ at 20°C (68°F)
		THA — E2	0.9 — 1.3 kΩ at 40°C (104°F)
		THA — E2	0.4 — 0.7 kΩ at 60°C (140°F)
Throttle body	Throttle valve fully closed angle		6°
	Dashpot setting speed		2,200 ± 300 rpm
	Throttle opener setting speed		700 — 1,000 rpm
TP sensor	Clearance between stop screw and lever	Terminals	Resistance
	0 mm (0 in.)	VTA — E2	0.2 — 5.7 kΩ
	0.50 mm (0.020 in.)	IDL — E2	2.3 kΩ or less
	0.75 mm (0.030 in.)	IDL — E2	Infinity
	Throttle valve fully open	VTA — E2	2.0 — 10.2 kΩ
	—	VC — E2	2.5 — 5.9 kΩ
ISC valve	Resistance	B1 — S1, S3	10 — 30 Ω
		B2 — S2, S4	10 — 30 Ω
Water temp. sensor	Resistance		10 — 20 kΩ at −20°C (−4°F) 4 — 7 kΩ at 0°C (32°F) 2 — 3 kΩ at 20°C (68°F) 0.9 — 1.3 kΩ at 40°C (104°F) 0.4 — 0.7 kΩ at 60°C (140°F) 0.2 — 0.4 kΩ at 80°C (176°F)
Fuel pump resistor	Resistance (Cold)		Approx. 0.73 Ω
VSV for EVAP	Resistance		30 — 33 Ω at 20°C (68°F)
VSV for fuel pressure control	Resistance		37 — 44 Ω at 20°C (68°F)
VSV for EGR	Resistance		30 — 34 Ω at 20°C (68°F)
VSV for AS	Resistance		37 — 44 Ω at 20°C (68°F)
Oxygen sensor	Heater coil resistance		5.0 — 6.5 Ω at 20°C (68°F)

ECU	Condition	Terminals	Voltage
	—	BATT — E1	9 — 14 V
	IG SW ON	IG SW — E1	9 — 14 V
	IG SW ON	M—REL — E1	9 — 14 V
	IG SW ON	+B, +B1 — E1	9 — 14 V
	IG SW ON — Throttle valve open	IDL — E2	9 — 14 V
	IG SW ON	VCC — E2	4.5 — 5.5 V
	IG SW ON — Throttle valve fully closed (Throttle opener must be cancelled first)	VTA — E2	0.3 — 0.8 V
	IG SW ON — Throttle valve fully open	VTA — E2	3.2 — 4.9 V
	IG SW ON — Measuring plate fully closed	VS — E2	3.5 — 4.5 V
	IG SW ON — Measuring plate fully open	VS — E2	0.2 — 0.5 V
	Idling	VS — E2	1.2 — 2.4 V
	3,000 rpm	VS — E2	0.8 — 1.3 V
	IG SW ON	10 ~ 60 — E01	9 — 14 V
	IG SW ON	10 ~ 60 — E02	9 — 14 V
	IG SW ON — Intake air temp. 20°C (68°F)	THA — E2	0.5 — 3.4 V
	IG SW ON — Water temp. 80°C (176°F)	THW — E2	0.2 — 1.0 V
	Cranking	STA — E1	6 V or more
	Idling	IGT — E1	Pulse generation
	IG SW ON	ISC1 ~ ISC4 — E1	9 — 14 V
	No trouble and engine running	W — E1	9 — 14 V
	IG SW ON	IGF — E1	2 V or less
	Idling	IGF — E1	Pulse generation
	Idling	G1, G2 — G⊖	Pulse generation
	Idling	NE — G⊖	Pulse generation
	Idling	KNK1, KNK2 — E1	Pulse generation
	Maintain engine speed at 2,500 rpm for 120 seconds after warning up then return to idling	VF1, VF2 — E1	1.8 — 3.2 V
	IG SW ON — Shift position P or N	NSW — E1	3 V or less
	IG SW ON — Ex. shift position P or N	NSW — E1	9 — 14 V
	IG SW ON — Rotate driving wheel slowly	SPD — E1	Pulse generation
	IG SW ON — Check connector TE1 — E1 not connected	TE1, TE2 — E1	9 — 14 V
	IG SW ON — Check connector TE1 — E1 connected	TE1, TE2 — E1	1.5 V or less
	IG SW ON — A/C ON	A/C — E1	7.5 — 14 V
	IG SW ON — A/C OFF	A/C — E1	1.5 V or less
	Stop light SW ON (Brake pedal depressed)	STP — E1	7.5 — 14 V
	Stop light SW OFF	STP — E1	1.5 V or less

EG

EG

ECU	Condition	Terminals	Resistance
	Throttle valve open	IDL — E2	Infinity
	Throttle valve fully closed (Throttle opener must be cancelled first)	IDL — E2	2,300 Ω or less
	Throttle valve fully open	VTA — E2	2,000 — 10,200 Ω
	Throttle valve fully closed (Throttle opener must be cancelled first)	VTA — E2	200 — 5,700 Ω
	—	VCC — E2	2,500 — 5,900 Ω
	Measuring plate fully closed	VS — E2	200 — 600 Ω
	Measuring plate fully open	VS — E2	20 — 1,200 Ω
	IAT 20°C (68°F)	THA — E2	2,000 — 3,000 Ω
	ECT 80°C (176°F)	THW — E2	200 — 400 Ω
	Cold (−10°C (14°F) to 50°C (122°F))	G1, G2 — G⊖	185 — 275 Ω
	Hot (50°C (122°F) to 100°C (212°F))	G1, G2 — G⊖	240 — 325 Ω
	Cold (−10°C (14°F) to 50°C (122°F))	NE — G⊖	185 — 275 Ω
	Hot (50°C (122°F) to 100°C (212°F))	NE — G⊖	240 — 325 Ω
	—	+B, +B1 — ISC1 ~ ISC4	10 — 30 Ω
Fuel cut speed			or more
Fuel return speed			1,200 rpm

EG0EE-06

TORQUE SPECIFICATIONS

Part tightened	N·m	kgf·cm	ft·lbf
Fuel line (Union bolt type)	29	300	22
Fuel line (Flare nut type)	30	310	22
Fuel pump bracket assembly x Fuel tank	3.9	40	35 in.·lbf
Second seat x Body	39	400	29
Drain plug x Fuel tank	6.5	65	57 in.·lbf
Fuel tank brether tube x Fuel tank	1.5	15	13 in.·lbf
Fuel tank filler pipe x Fuel tank	3.5	35	31 in.·lbf
Fuel tank band x Body	39	400	29
Fuel pressure regulator x Delivery pipe	25	250	18
Fuel inlet hose x Fuel filter	29	300	22
Delivery pipe x Intake manifold	21	210	15
No.1 fuel pipe x Delivery pipe (Union bolt)	29	300	22
No.1 fuel pipe x Delivery pipe (Bolt)	20	200	14
No.1 fuel pipe x Fuel filter	29	300	22
Fuel return pipe x Intake manifold	20	200	14
Air intake chamber x Intake manifold	21	210	15
PS reservoir tank x Air intake chamber	18	185	13
Oil dipstick guide x Intake manifold	20	200	14
Oil dipstick guide x No.1 oil pan	20	200	14
Heater inlet pipe x Air intake chamber	20	200	14
EGR valve x Air intake chamber (Stud bolt)	10	105	8
EGR valve x Air intake chamber (Nut)	19	195	14
EGR valve x EGR pipe	64	650	47
VAF meter x Bracket	4.9	50	43 in.·lbf
VAF meter x Air cleaner cap	10	100	7
Throttle body x Air intake chamber	21	210	15
ECT sensor x Cylinder head	20	200	14
Knock sensor x Cylinder block	44	450	33

FUEL SYSTEM

DESCRIPTION

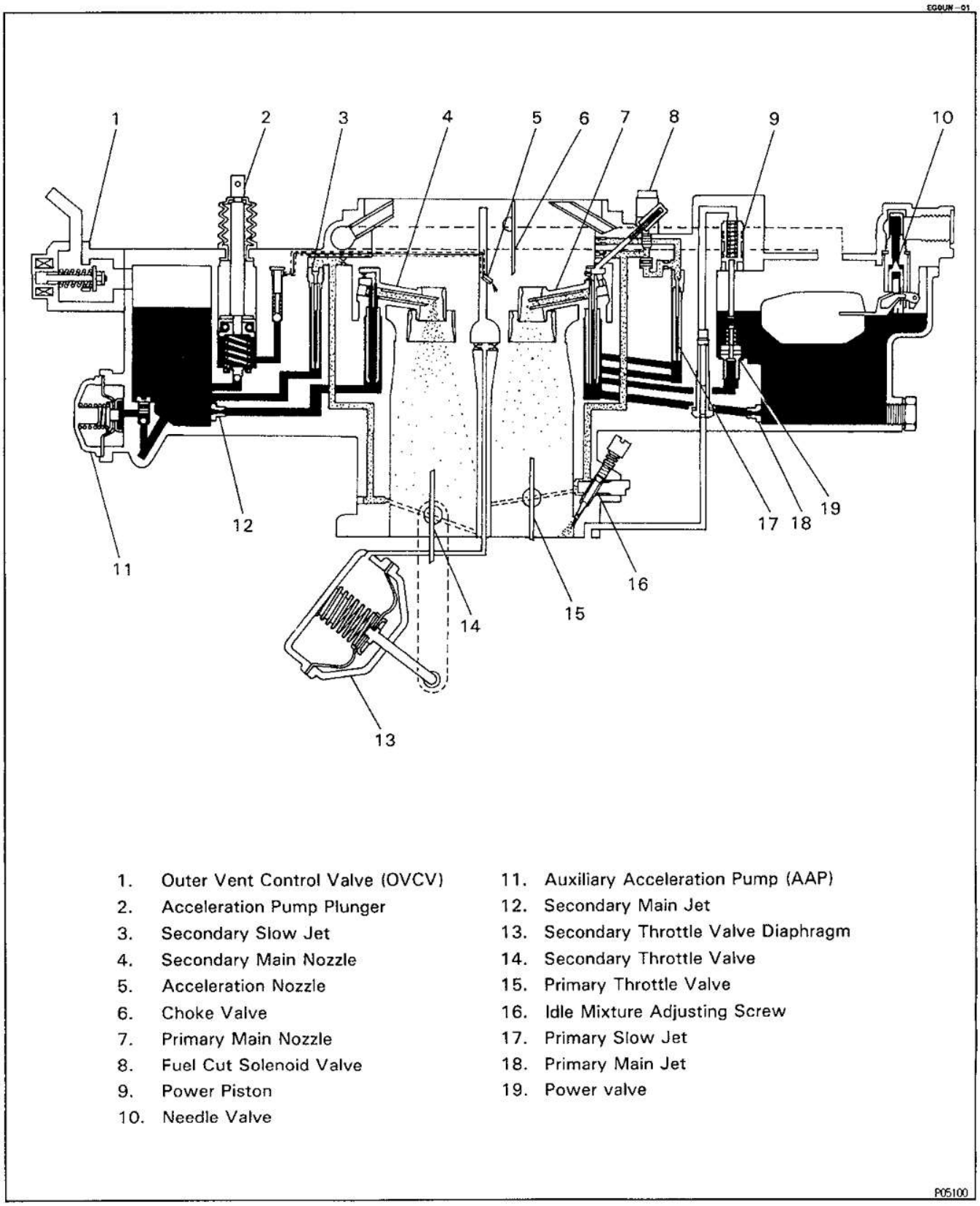

1. Outer Vent Control Valve (OVCV)
2. Acceleration Pump Plunger
3. Secondary Slow Jet
4. Secondary Main Nozzle
5. Acceleration Nozzle
6. Choke Valve
7. Primary Main Nozzle
8. Fuel Cut Solenoid Valve
9. Power Piston
10. Needle Valve
11. Auxiliary Acceleration Pump (AAP)
12. Secondary Main Jet
13. Secondary Throttle Valve Diaphragm
14. Secondary Throttle Valve
15. Primary Throttle Valve
16. Idle Mixture Adjusting Screw
17. Primary Slow Jet
18. Primary Main Jet
19. Power valve

CARBURETOR

In this type of double barrel carburetor, air and fuel are mixed in a single barrel (venturi chamber) when the engine is under comparatively light loads, as when driving at low to medium speeds. When the engine is under a heavy load or is running at high speeds, air and fuel are mixed in both barrels (venturi chambers).

The carburetor utilizes venturi vacuum to spray the required gasoline mixture through the main nozzle to the intake manifold. The carburetor consists of a venturi which detects the airflow, a main jet and nozzle which measures the amount of fuel, and a throttle valve and other parts which are used to adjust the intake air pressure. Gasoline fed from the fuel pump accumulates for a short time in the float chamber, with float assuring that the amount is always constant. In the engine intake process, when a piston moves downward inside a cylinder, the air in the chamber becomes thin. This causes air to flow into the cylinder from air cleaner through the carburetor and intake manifold. The speed of this air is increased when it passes through the narrowed portion of the carburetor body, that is, the venturi. The pressure drops in this area and results in gasoline being sprayed from the main nozzle in a jet. The amount of gasoline sprayed is determined mainly by the airflow in response to the amount the throttle valve is opened, and by the venturi vacuum. The sprayed gasoline is scattered by the flow of high speed air and vaporized, then this gas mixture is conducted into intake manifold.

Float System

The float system temporarily stores gasoline sent from the fuel pump and also serves the function of maintaining the amount of accumulated fuel (the fuel level) at a constant level.

Primary Low Speed System

The primary low speed system is used to supply gasoline for low engine speeds, when the throttle valve is opened only an extremely small amount.

Solenoid Valve

Turning off the ignition switch closes the solenoid valve and stops the supply of fuel to the low speed circuit. Turning the ignition switch on causes current to flow through the solenoid valve coil, opening the valve and allowing the supply of fuel to the low speed circuit.

Primary High Speed System

The primary high speed system is the most used operating system, in which the negative pressure generated by the passage of air through the venturi is used to suck out gasoline. This system operates to mix fuel for a wide range of speeds, and therefore has a great influence on the performance of the carburetor. The high speed system is designed to deliver an economical mixing ratio. However, auxiliary systems such as the acceleration system or the power system are used when a larger output is required.

Secondary Low Speed System

The flow rate through the venturi on the secondary side is low when the secondary throttle valve is opened only a little, and no gasoline is sprayed from the secondary main nozzle. Only air is sucked in from the secondary side. Since the gas mixture is lean, the secondary side low speed system is prevented from operating.

Secondary High Speed System

The primary high speed side operates during low output, when only a small amount of air is sucked in. However, during medium or high output, when a large amount of air is sucked in, the primary high speed side is inadequate for supplying enough fuel mixture. Therefore, the throttle valve on the secondary side opens, permitting use of both high speed systems. The construction of the secondary high speed system is the same as that of the primary high speed system, but since the secondary high speed system is used when the engine is delivering a greater output, the secondary high speed system is designed with larger nozzle, venturi and jet than the primary side.

Power System

The primary high speed system is designed to use fuel economically. However, when the engine's output is high, a greater quantity of fuel is required than can be delivered by the primary high speed system. The extra fuel required for high output is supplied through the power system, which delivers a rich gas mixture to the high speed system.

Acceleration System

Depressing the accelerator pedal suddenly during normal driving requires an increase in the engine's output, and at such a time, the carburetor must supply a rich gas mixture to the engine. However, even though the amount of air is increased immediately when the throttle valve is opened, the gas mixture becomes temporarily diluted due to the weight of the gasoline being greater than that of air. The acceleration system has been adopted to prevent this delay by supplying a rich gas mixture during acceleration.

The acceleration pump always operates, regardless of the coolant temperature, but the auxiliary acceleration pump (AAP) operates only when the coolant temperature is low.

Choke System

The choke system makes it easier to start the engine when the temperature is low. At such times, cranking speed is lower and as a result, the intake negative pressure is also lower, reducing the amount of fuel supplied. In addition, since the intake manifold is cold, gasification of fuel is poor and the gas mixture delivered to the combustion chamber is thin, making starting difficult. The choke system supplies a rich gas mixture to the intake manifold to overcome this problem.

Outer Vent Control Valve (OVCV)

While the engine is stopped, if gasoline vapor from the float chamber passes through the air vent and a large amount collects in the intake manifold, engine restartability will decline. To prevent this, an outer vent control valve (OVCV) is fitted. When the engine is stopped, this valve opens and releases the gasoline vapor from the carburetor to be absorbed by charcoal cannister, from where it is drawn to the engine during.

FUEL FILTER

Gasoline used for fuel contains a small proportion of dirt or moisture. If permitted to reach the narrow channels of the carburetor or the jet nozzle, these contaminants would soon clog them and cause the engine to stall. The fuel filter is designed to remove the dirt and moisture from fuel. Fuel passes through an element in the filter. This element slows the rate of flow of the fuel, causing the moisture and particles of dirt, etc. to settle out. The lighter contaminants are filtered by the filter element.

FUEL PUMP

The fuel pump pumps fuel from the fuel tank and delivers it to the carburetor. The fuel pump in this engine is a mechanical type (diaphragm type) pump which is operated directly by the camshaft.

The diaphragm type fuel pump uses a diaphragm, which moves up and down in a pump chamber. Two valves are located in the each pump chamber opposite the direction of operation. This up and down motion of the diaphragm creates a pumping action.

PRECAUTIONS

EG0UP-01

1. Before working on the fuel system, disconnect the cable from the negative battery terminal.

2. When working on the fuel system, keep away from possible fire hazards and do not smoke.

3. Keep gasoline off rubber or leather parts.

4. Work on only one component group at a time to help avoid confusion between similar looking parts.

5. Keep work area clean to avoid contamination of the carburetor and components.

6. Be careful not to mix up or lose clips or springs.

PREPARATION

SST (SPECIAL SERVICE TOOLS)

EG0UQ-01

	09860-11011 Carburetor Driver Set	
	09240-00014 Carburetor Adjusting Gauge Set	
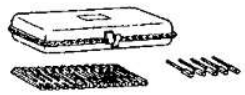	09240-00020 Wire Gauge Set	

EG

RECOMMENDED TOOLS

EG0UR-01

	09082-00015 TOYOTA Electrical Tester	
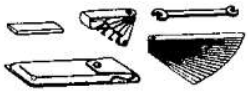	09200-00010 Engine Adjust Kit	

EQUIPMENT

EG0US-01

Torque wrench	

ON—VEHICLE INSPECTION

EG0UT-01

1. REMOVE INTAKE AIR CONNECTOR FROM CARBURETOR

2. INSPECT CARBURETOR AND LINKAGE

(a) Check that the various set screws, plugs and union bolts are tight and correctly installed.

(b) Check the linkage for excessive wear and missing snap rings.

(c) Check that the throttle valves open fully when the accelerator pedal is fully depressed.

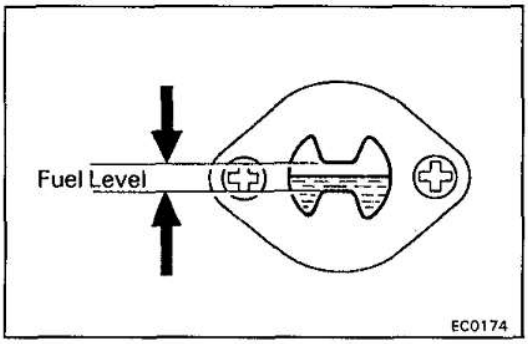

3. INSPECT FLOAT LEVEL

Check that the float level is about even with the correct level in the sight glass.

If not, check the carburetor needle valve and float level, and adjust or repair, as necessary.

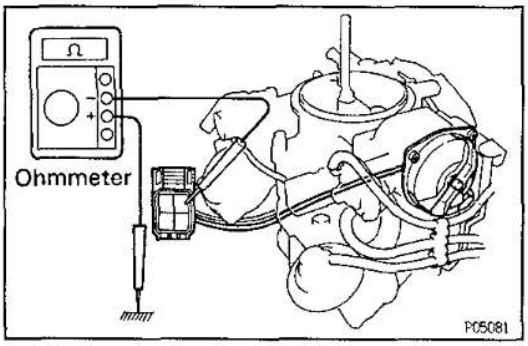

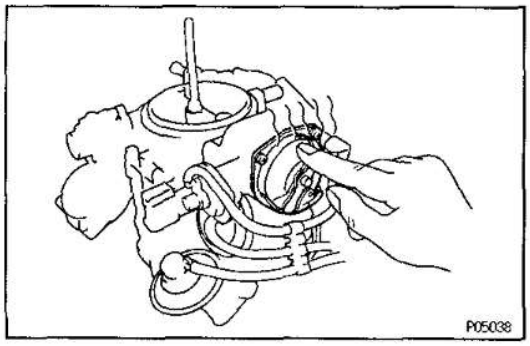

COLD ENGINE

4. INSPECT AUTOMATIC CHOKE SYSTEM

(a) Disconnect the wiring connector.

(b) Using an ohmmeter, measure the resistance between the coil housing terminal (red wire) and body ground.

Resistance:

17 — 19 Ω at 20°C (68°F)

(c) Connect the wiring connector.

(d) Start the engine.

(e) Shortly after, check that the choke valve begins to open and the coil housing (choke heater) is heated.

(f) Stop the engine.

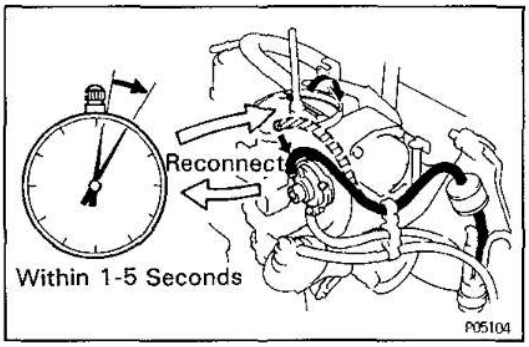

5. INSPECT CHOKE BREAKER (CB) SYSTEM

(a) Start the engine.

(b) Disconnect the vacuum hose from the CB and check that the choke valve moves.

(c) Reconnect the vacuum hose to the CB and check that the choke valve moves within the specified time after *reconnecting the hose.*

Time:

1 — 5 seconds

(d) Stop the engine.

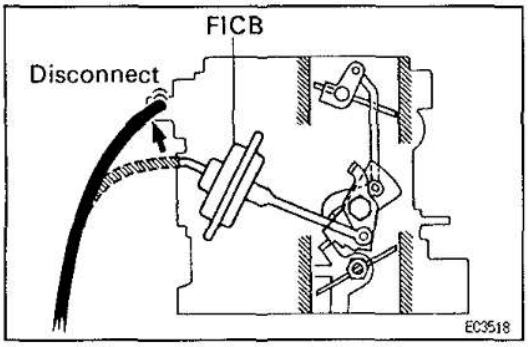

6. INSPECT FAST IDLE CAM BREAKER (FICB) SYSTEM

(a) Disconnect the vacuum hose from the FICB.

(b) With the coolant temperature below 40°C (104°F), step down on the accelerator pedal and release it.

(c) Start the engine.

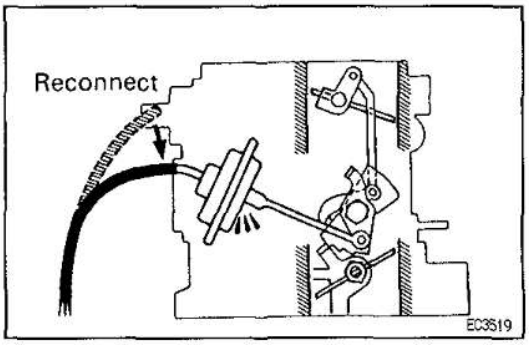

(d) Reconnect the vacuum hose and check that the choke linkage does not move.

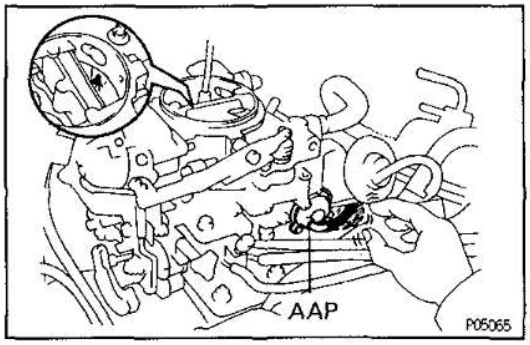

7. INSPECT AUXILIARY ACCELERATION PUMP (AAP) SYSTEM

(a) Check that the coolant tempeature is below 50°C (122°F).

(b) Start the engine.

(c) Pinch the AAP hose, and stop the engine.

(d) Release the hose.

(e) Check that gasoline spurts out from the acceleration *nozzle.*

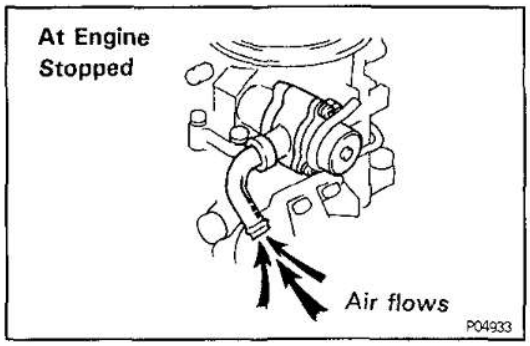

8. INSPECT OUTER VENT CONTROL VALVE (OVCV) OPERATION

(a) Disconnect the outer vent hose from the carburetor.

(b) Blow air into the outer vent pipe and check that the OVCV is open.

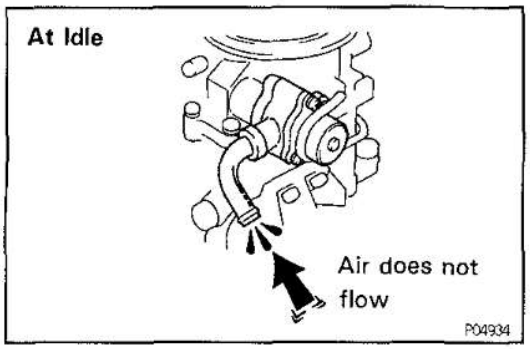

(c) Start the engine.
(d) With the engine idling, blow air into the outer vent pipe and check that the OVCV is closed.

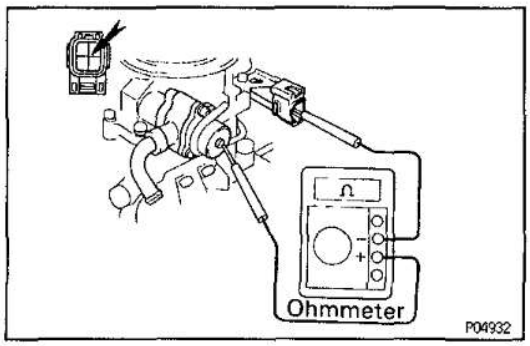

(e) Disconnect the carburetor connector.
(f) Using an ohmmeter, measure the resistance between the OVCV terminal of the carburetor connector and body ground.
Resistance (Cold):
32 – 38 Ω
(g) Reconnect the outer vent hose.

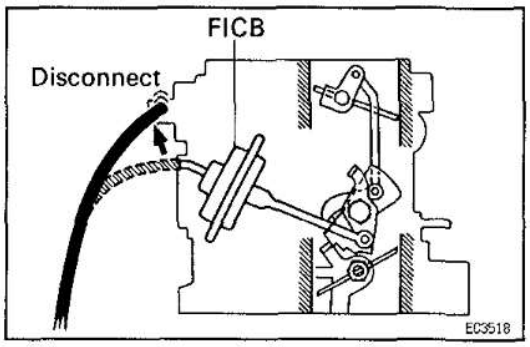

HOT ENGINE

9. CHECK FAST IDLE CAM BREAKER (FICB) SYSTEM

(a) Warm up the engine to normal operating temperature and stop the engine.
(b) Disconnect the vacuum hose from the FICB.

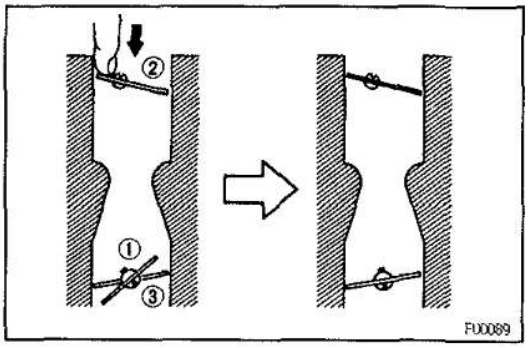

(c) Set the fast idle cam. While holding the throttle slightly open, push the choke valve closed, and hold it closed as you release the throttle valve.
(d) Start the engine, but to do not touch the accelerator pedal.

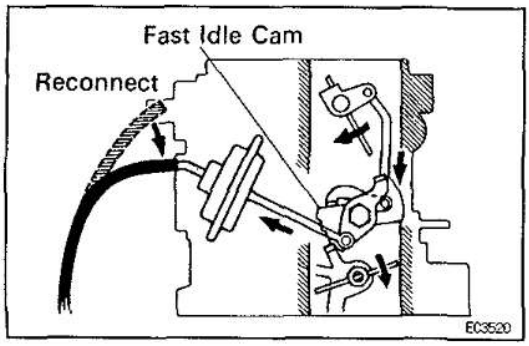

(e) Reconnect the vacuum hose, and check that the choke linkage moves, and that the fast idle cam is released to the 4th step.

10. INSPECT CHOKE VALVE

Check that the choke valve opens fully.

EG

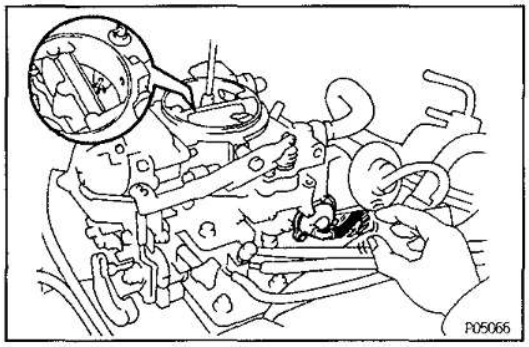

11. INSPECT AUXILIARY ACCELERATIONS PUMP (AAP) SYSTEM

(a) *Warm up the engine to normal operating temperature.*

(b) Start the engine.

(c) Pinch the AAP hose, and stop the engine.

(d) Release the hose.

(e) Check that gasoline does not spurt out from the acceleration nozzle.

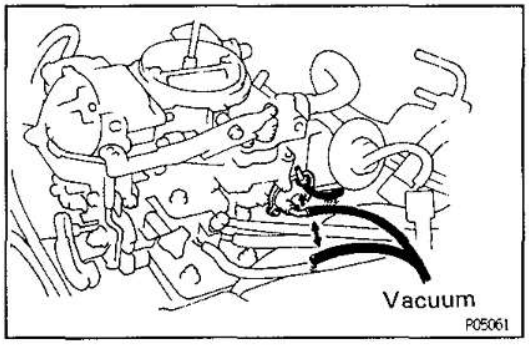

12. INSPECT AUXILIARY ACCELERATION PUMP (AAP) DIAPHRAGM

(a) Start the engine.

(b) Disconnect the hose from the AAP.

(c) Apply and release the vacuum directly to the AAP at idle.

(d) *Check that the engine rpm changes by releasing vacuum.*

(e) Reconnect the AAP hose.

If a problem is found, replace the AAP diaphragm.

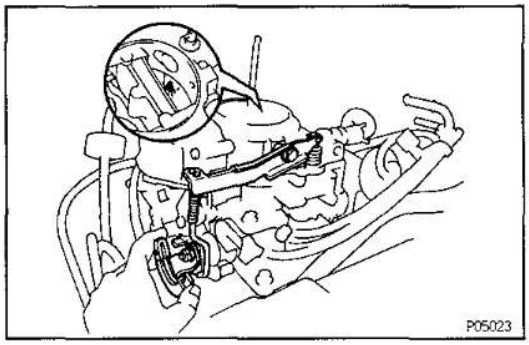

13. INSPECT ACCELERATION PUMP

Open the throttle valve, and check that gasoline spurts out from the acceleration nozzle.

14. INSTALL AIR INTAKE CONNECTOR

15. CHECK AND ADJUST IDLE SPEED AND IDLE MIXTURE

16. CHECK AND ADJUST FAST IDLE SPEED

17. CHECK AND ADJUST DASH POT (DP) SETTING SPEED

18. CHECK AND ADJUST THROTTLE POSITIONER (TP) SETTING SPEED

CARBURETOR

CARBURETOR REMOVAL

EG0UA-01

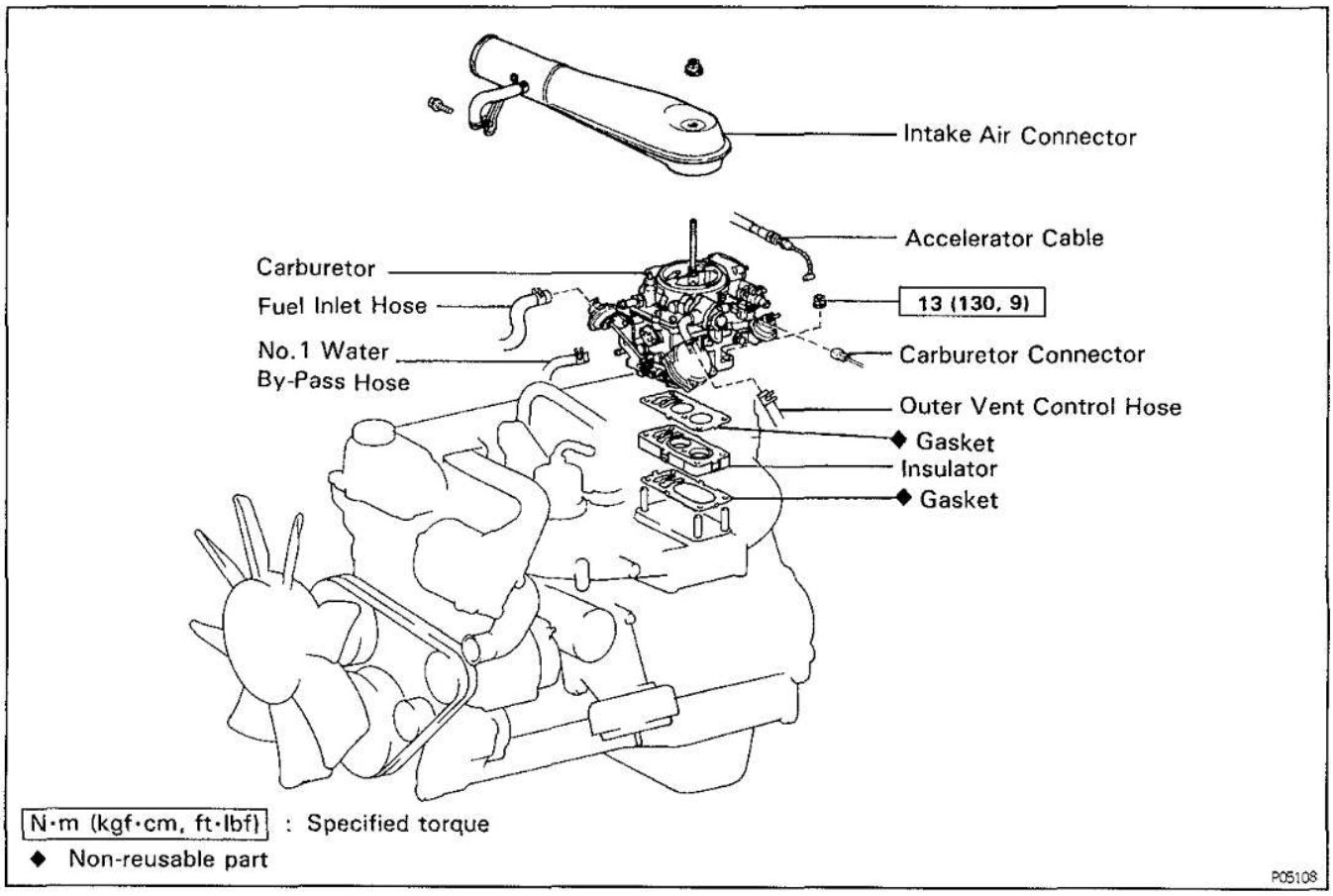

1. **DRAIN COOLANT**
   Disconnect the No.2 water by—pass hose from the intake manifold and drain the coolant from the manifold.
2. **REMOVE INTAKE AIR CONNECTOR**
3. **DISCONNECT ACCELERATOR CABLE FROM CARBURETOR**
4. **DISCONNECT CARBURETOR CONNECTOR**

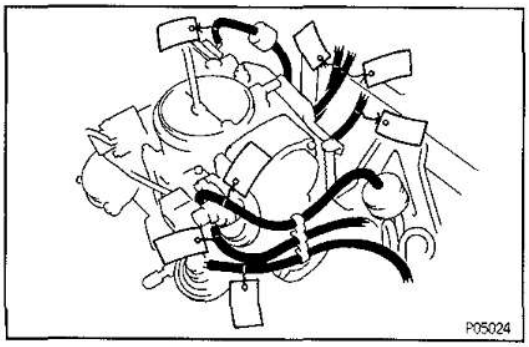

5. **DISCONNECT FOLLOWING HOSES:**
   (a) Fuel inlet hose
   (b) Outer vent control hose
   (c) No.1 water by—pass hose
   (d) Emission control hoses
   HINT: Before disconnecting the emission control hoses, use tag to identify how they should be reconnected.

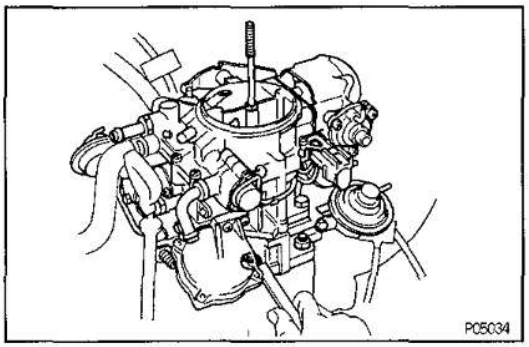

6. REMOVE CARBURETOR

(a) Remove the four carburetor mounting nuts.

(b) Lift out the carburetor.

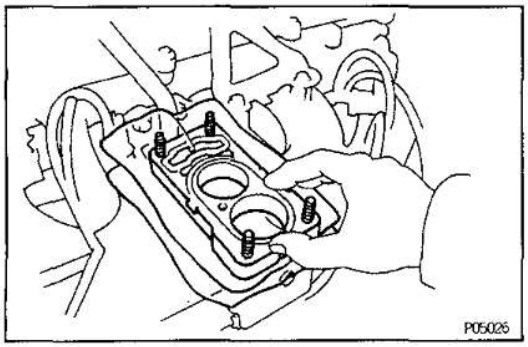

(c) Cover the inlet hole of the intake manifold with a cloth.

EG0UB-01

COMPONENTS

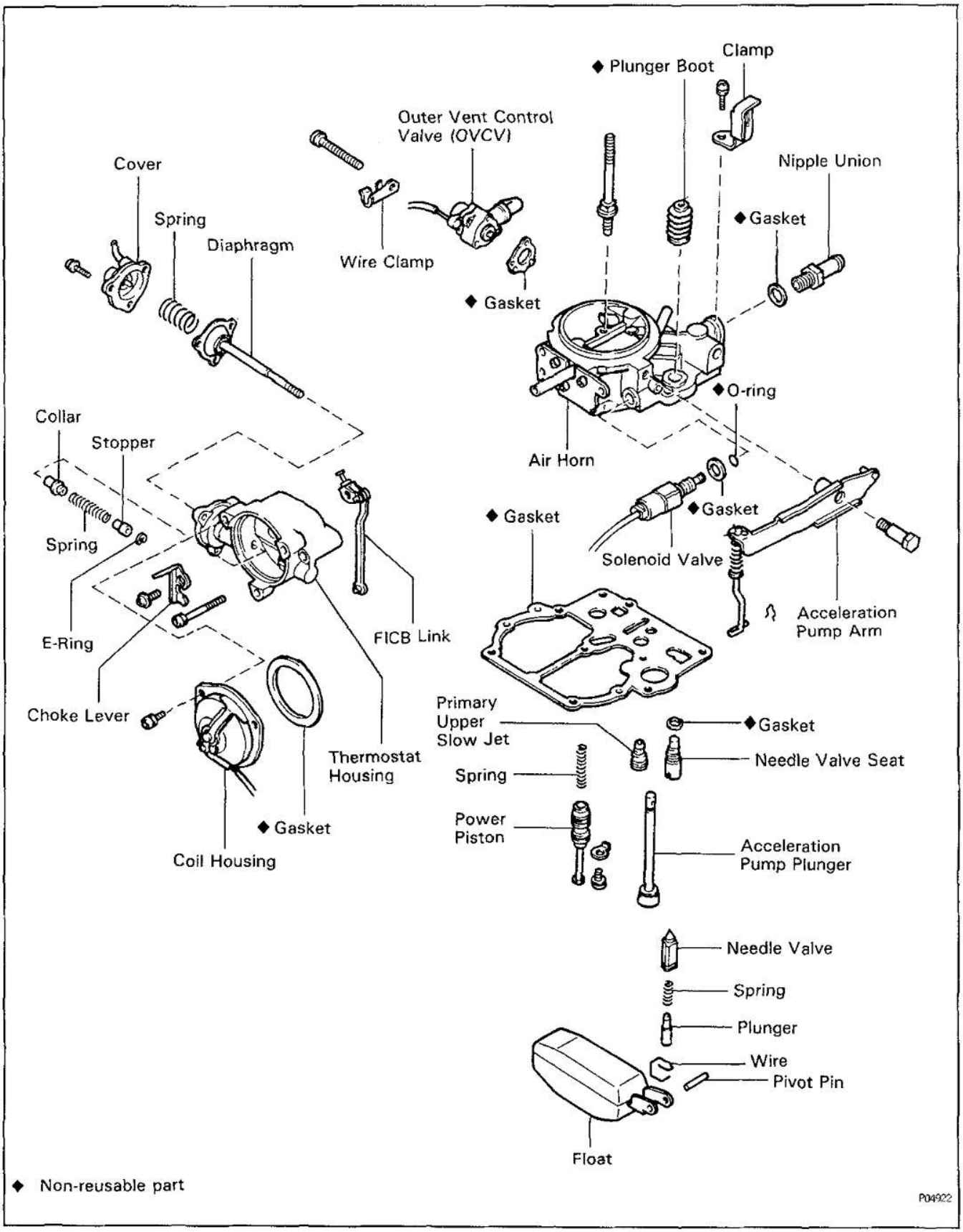

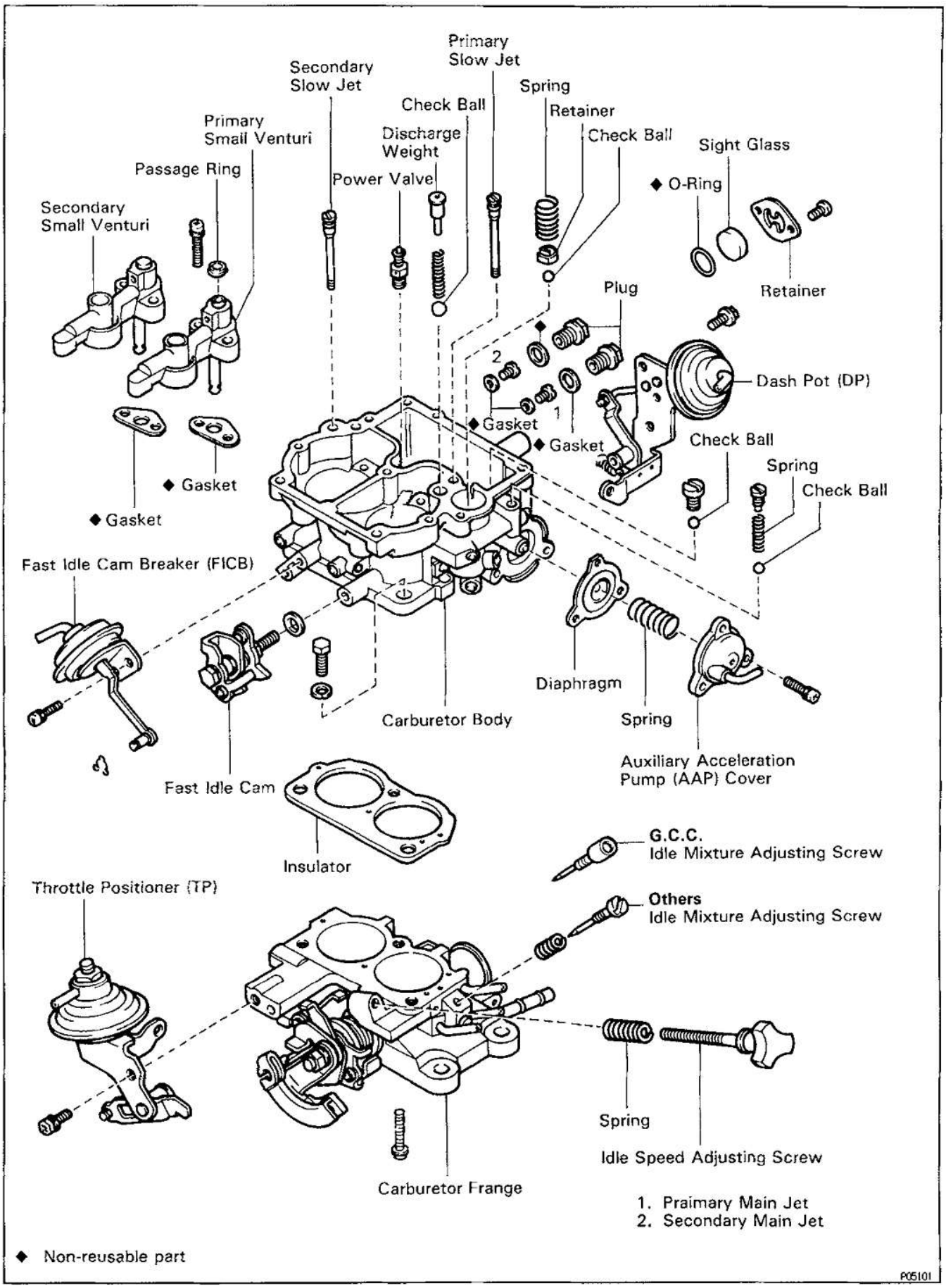

EG0UC-01

CARBURETOR DISASSEMBLY

HINT: The following instructions are organized sothat you will work only one component group at a time.
This will help you avoid confusion between similar looking parts from different subassemblies being on your workbench at the same time.

(a) To facilitate reassembly, arrange parts in order.
(b) Be careful not to mix up or lose balls, clips or springs.

(c) Use SST (carburetor driver set).
SST 09860—11011

EG0UD-01

Air Horn Disassembly

(See page EG—311)

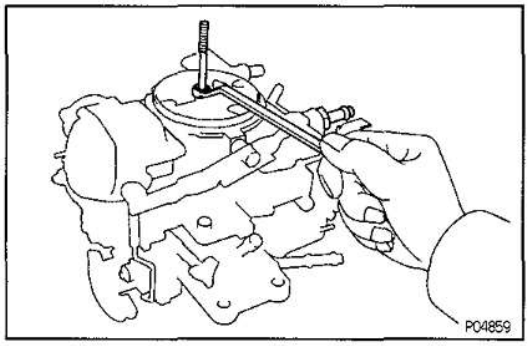

1. REMOVE CABURETOR STUD BOLT AND NIPPLE UNION

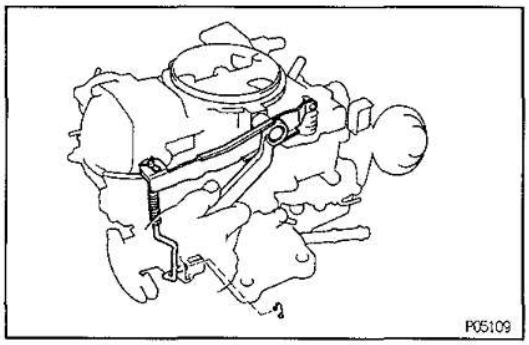

2. REMOVE ACCELERATION PUMP ARM
(a) Remove the snap ring from the pump connecting link.

(b) Remove the pivot bolt.
(c) Disconnect the pump arm from the pump plunger.
(d) Disconnect the pump connecting link from the throttle lever and remove the pump arm and pump connecting link.

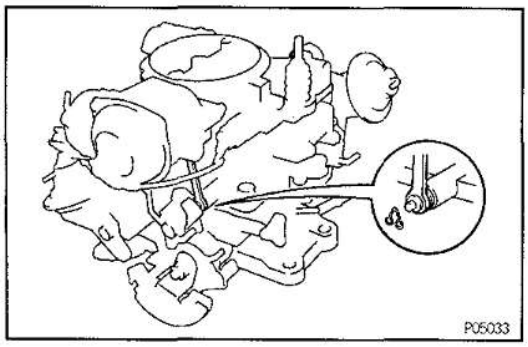

3. DISCONNECT FAST IDLE CAM BREAKER (FICB) LINK

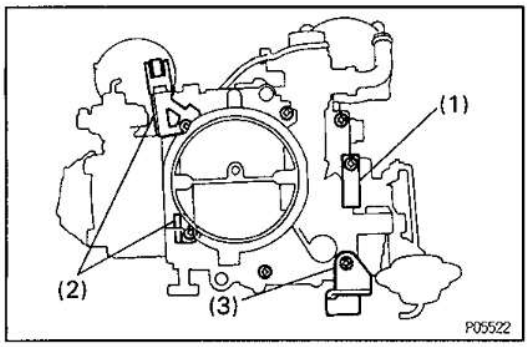

4. REMOVE AIR HORN ASSEMBLY

(a) Remove the seven screws and following parts:
  (1) Number plate
  (2) Wire clamps
  (3) Vacuum hose clamp

(b) Lift off the air horn assembly together with the air horn gasket.

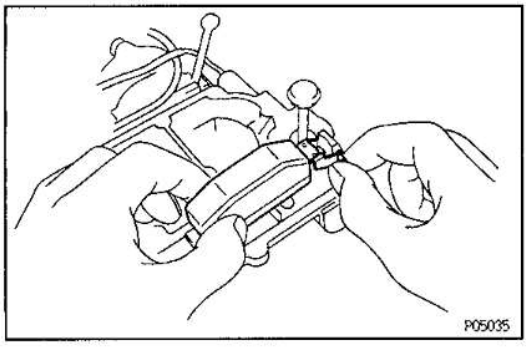

5. REMOVE FLOAT AND NEEDLE VALVE

Remove the float pivot pin, float and needle valve subassembly.

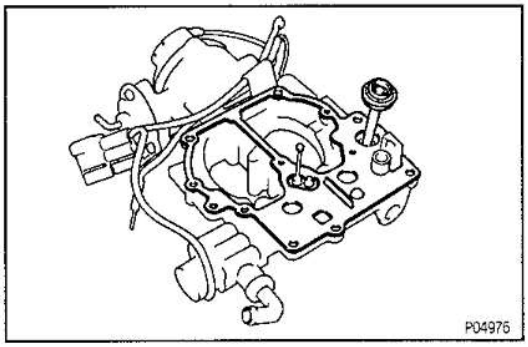

6. REMOVE ACCELERATION PUMP PLUNGER

Remove the pump plunger and boot.

7. REMOVE AIR HORN GASKET

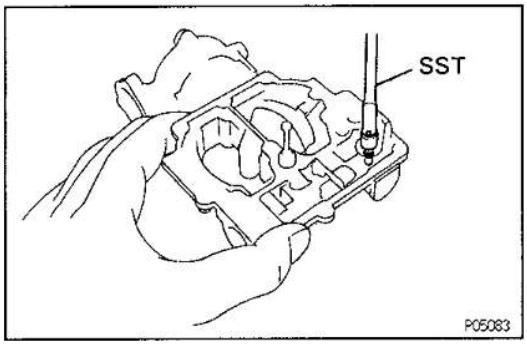

8. REMOVE NEEDLE VALVE SEAT

Remove the needle valve seat and gasket.

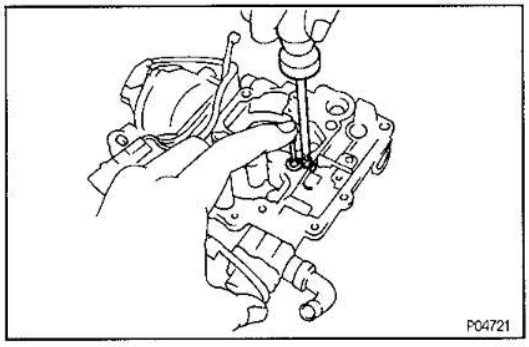

9. REMOVE POWER PISTON

Remove the screw, retainer, power piston and spring.

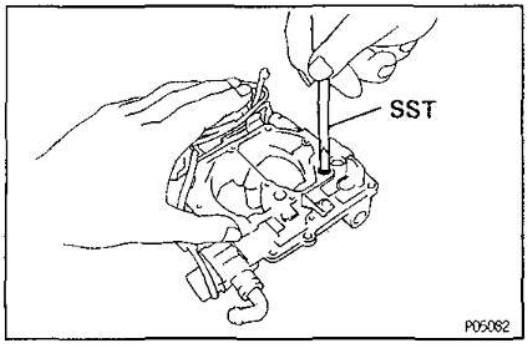

10. REMOVE PRIMARY UPPER SLOW JET

11. DISCONNECT WIRES FROM CARBURETOR CONNECTOR

Pry up the locking lugs with a screwdriver and pull out the terminal.

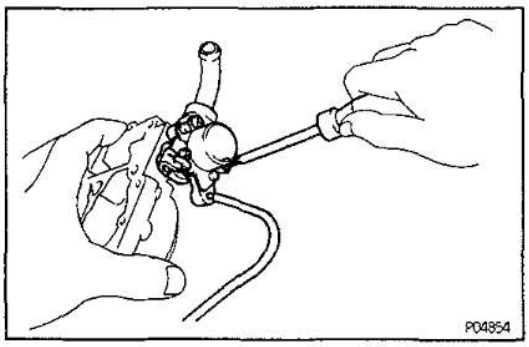

12. REMOVE OUTER VENT CONTROL VALVE (OVCV)

Remove the three screws, wire clamp, OVCV and gasket.

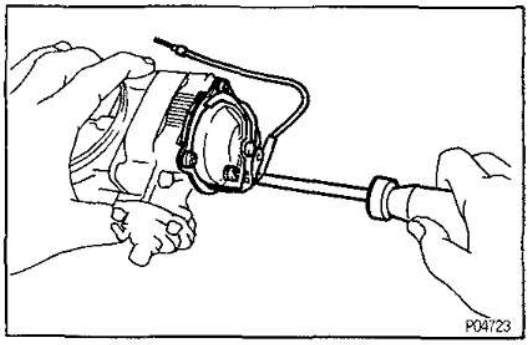

13. REMOVE COIL HOUSING

Remove the three screws, retainer, coil housing and gasket.

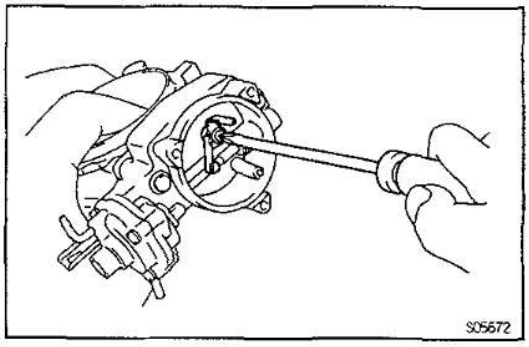

14. REMOVE CHOKE LEVER

Remove the screw and choke lever.

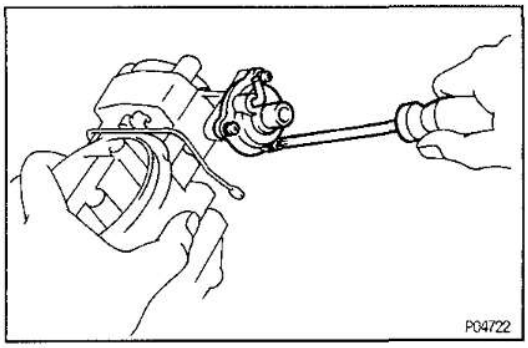

15. REMOVE CHOKE BREAKER (CB)

(a) Remove the three screws, cover and spring.

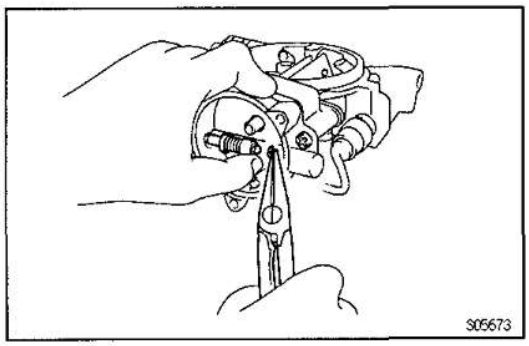

(b) Remove the E–ring, stopper, spring collar and diaphragm.

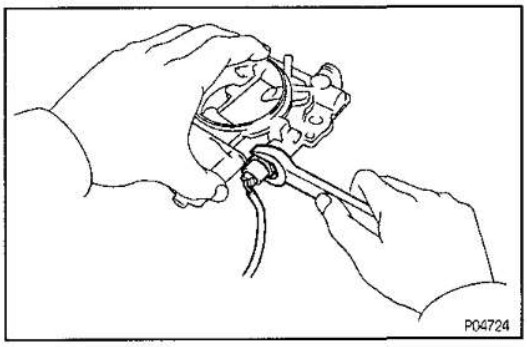

16. REMOVE FUEL CUT SOLENOID VALVE

Remove the solenoid valve and gasket.

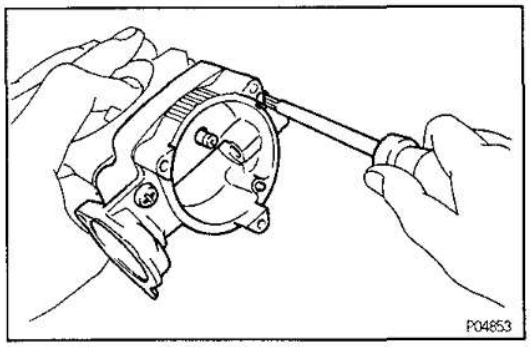

17. REMOVE THERMOSTAT HOUSING

Remove the two screws and thermostat housing.

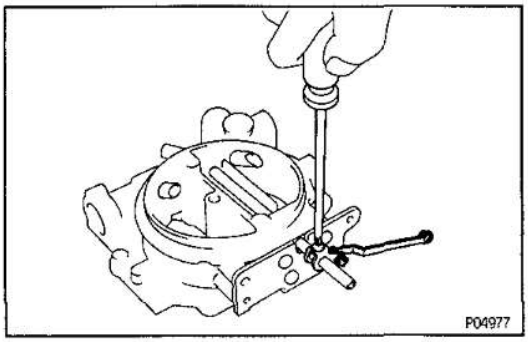

18. REMOVE FAST IDLE CAM BREAKER (FICB) LINK

Remove the screw and FICB link.

EG0UE-01

Carburetor Body Disassembly

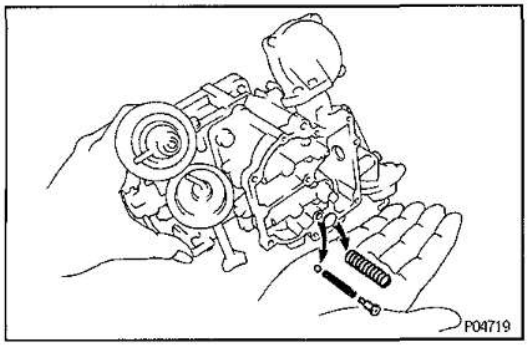

(See page EG—312)

1. REMOVE CHECK BALLS FOR ACCELERATION PUMP

(a) Remove the pump discharge weight, spring and large ball.

(b) Remove the plunger spring.

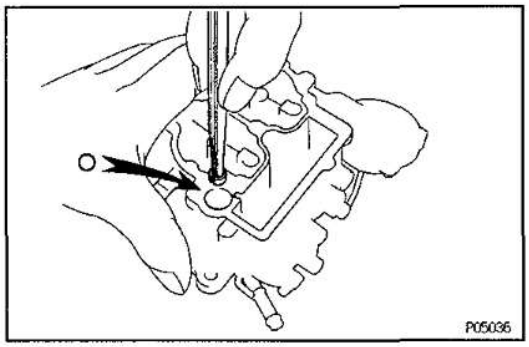

(c) Using tweezers, remove the ball retainer.

(d) Remove the small ball.

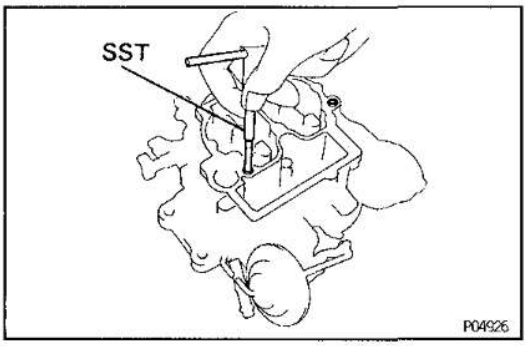

2. REMOVE SLOW JETS

(a) Remove the primary slow jet.

(b) Remove the secondary slow jet.

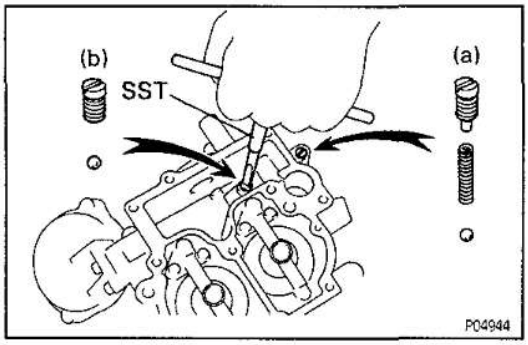

3. REMOVE CHECK BALLS FOR AUXILIARY ACCELERATION PUMP (AAP)

(a) Remove the plug, spring and ball.

(b) Remove the plug and ball.

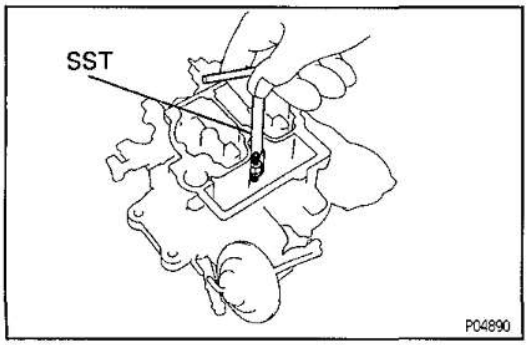

4. REMOVE POWER VALVE

EG

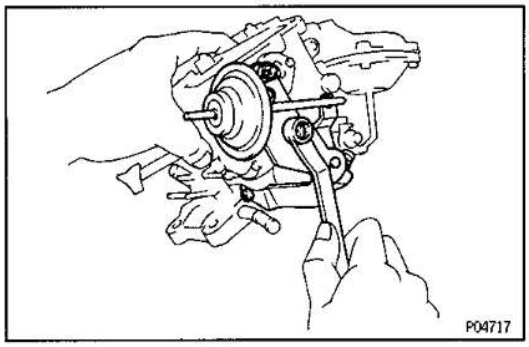

5. REMOVE DASH POT (DP)

Remove the three screws and DP.

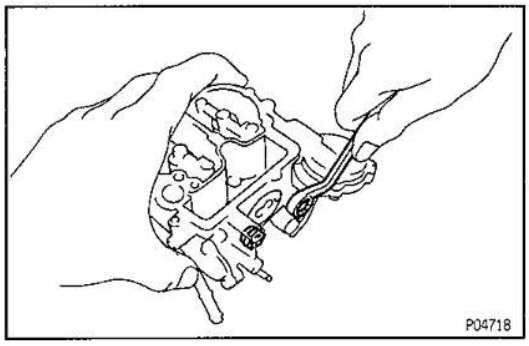

6. REMOVE PRIMARY AND SECONDARY MAIN JETS

(a) Remove the two passage plugs and gaskets.

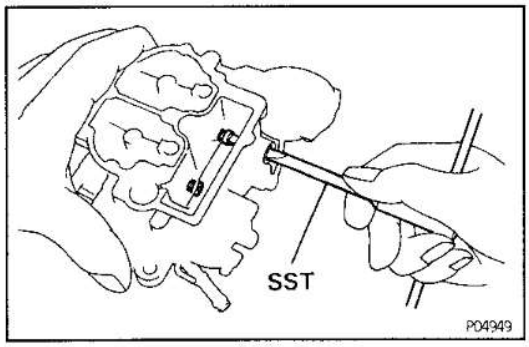

(b) Remove the primary and secondary main jets and gaskets.

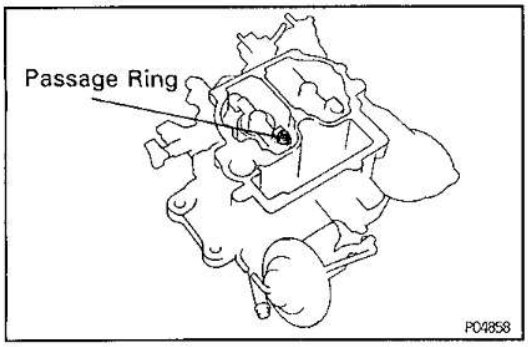

7. REMOVE SMALL VENTURIES

(a) Remove the passage ring.

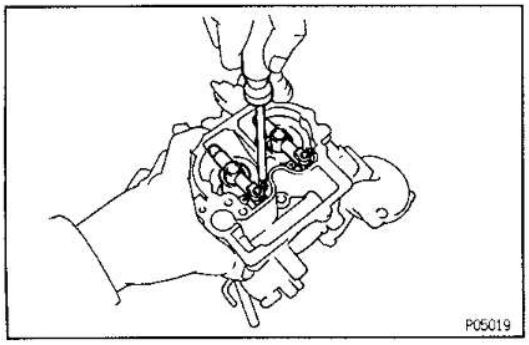

(b) Remove the two screws, primary small venturi and gasket.

(c) Remove the two screws, secondary small venturi and gasket.

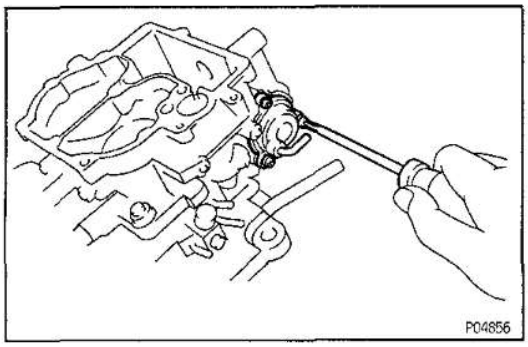

8. REMOVE AUXILIARY ACCELERATION PUMP (AAP)

Remove the three screws, pump housing, spring and diaphragm.

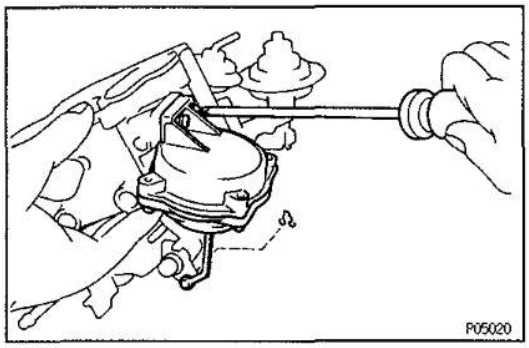

9. REMOVE SECONDARY THROTTLE VALVE DIAPHRAGM

(a) Remove the snap ring and disconnect the diaphragm link.

(b) Remove the two screws, throttle valve diaphragm assembly and gasket.

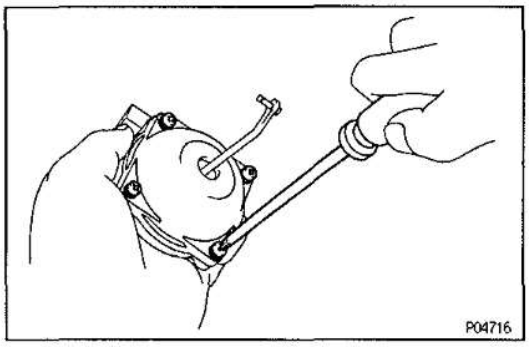

(c) If necessary, remove the four screws and disassembly the throttle valve diaphragm.

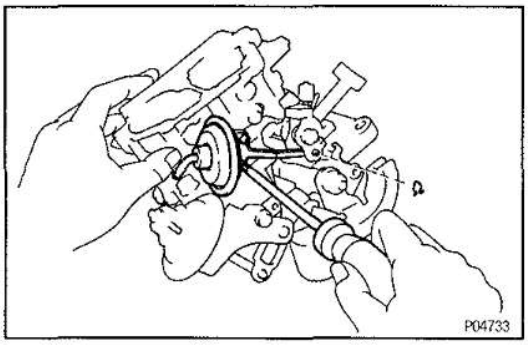

10. REMOVE FAST IDLE CAM BREAKER (FICB)

(a) Remove the snap ring.

(b) Remove the two screws.

(c) Disconnect the link, and remove the FICB.

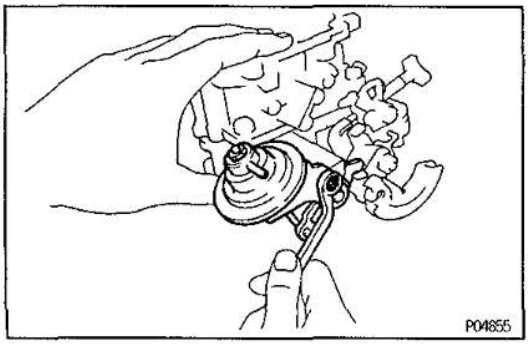

11. REMOVE THROTTLE POSITIONER (TP)

Remove the two screws and TP.

EG

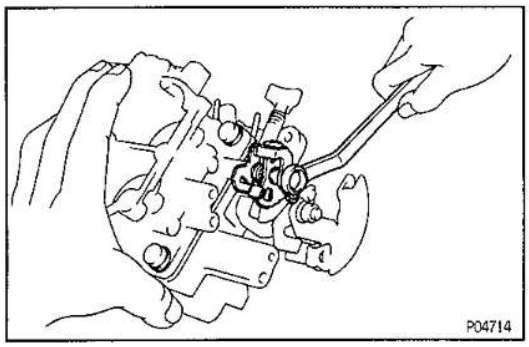

12. REMOVE FAST IDLE CAM

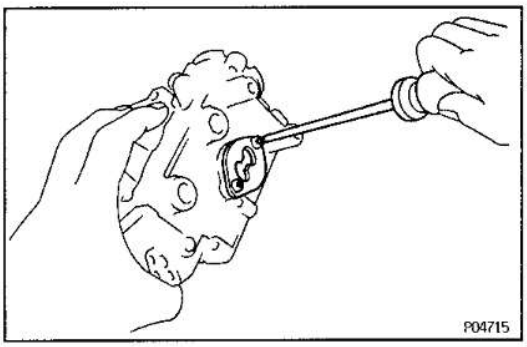

13. REMOVE SIGHT GLASS

Remove the two screws, retainer, sight glass and O—ring.

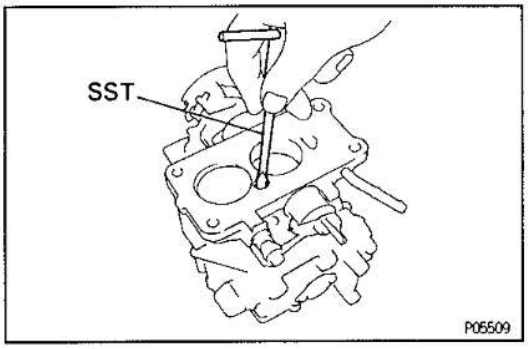

14. SEPARATE CARBURETOR BODY AND FLANGE

(a) Remove the passage screw and spring washer.

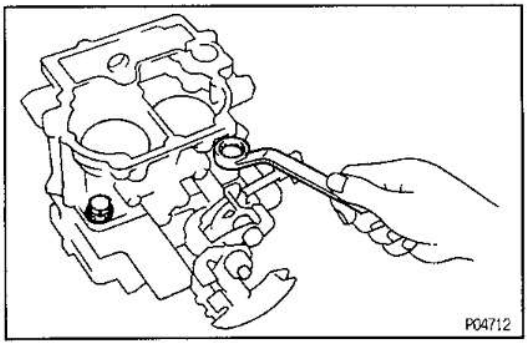

(b) Remove the two bolts.

(c) Separate the body and flange.

(d) Remove the insulator.

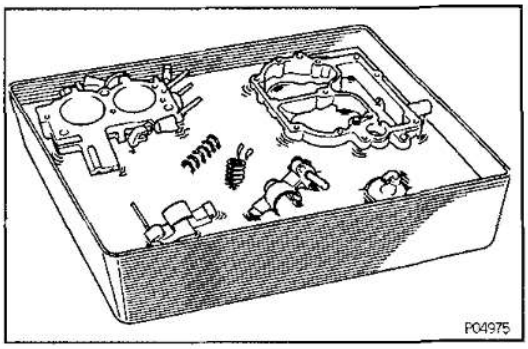

EGGUF-01

GENERAL CLEANING PROCEDURE

CLEAN DISASSEMBLED PARTS BEFORE INSPECTION

(a) With a soft brush wash and clean the cast parts in carburetor cleaner.
(b) Clean off the carbon around the throttle valve.
(c) Wash the other parts thoroughly in carburetor cleaner.
(d) Blow all dirt and other foreign material from the jets, fuel passages and restrictions in the body.

EG

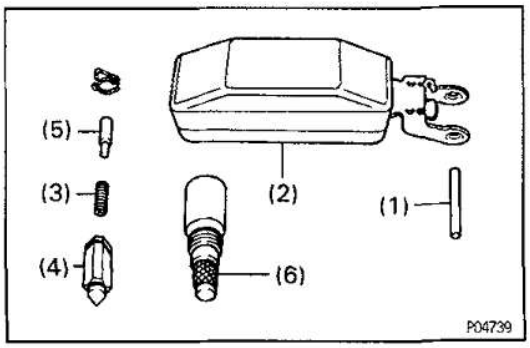

EGGUG-01

INSPECTION OF CARBURETOR

1. INSPECT FLOAT AND NEEDLE VALVE

(a) Inspect the pivot pin (1) for scratches and excessive wear.
(b) Inspect the float (2) for broken lips and wear in the pivot pin holes.
(c) Inspect the spring (3) for breaks and deformation.
(d) Inspect the needle valve (4) and plunger (5) for wear or damage.
(e) Inspect the strainer (6) for rust and breaks.

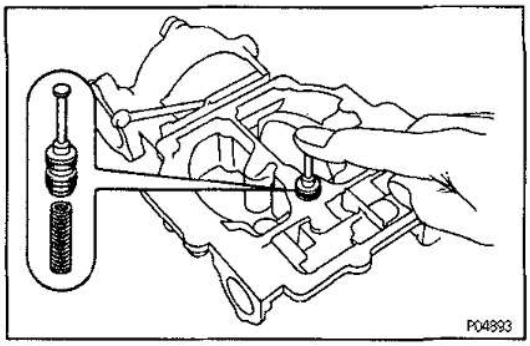

2. INSPECT POWER PISTON

Check that the power piston moves smoothly.

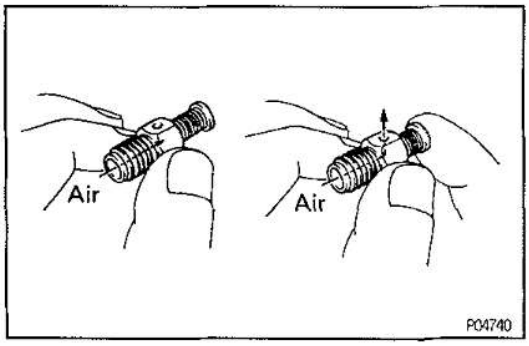

3. INSPECT POWER VALVE

Check for faulty opening and closing action.

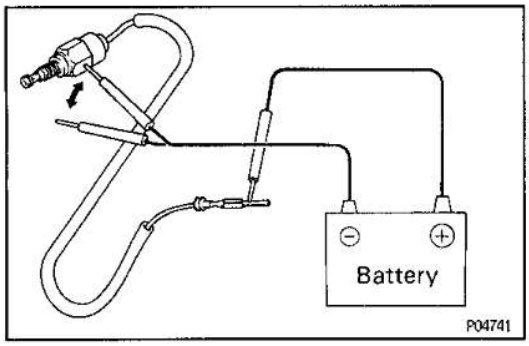

4. INSPECT FUEL CUT SOLENOID VALVE

(a) Connect the connector terminals to the battery terminals.

(b) You should feel a "click" from the solenoid valve when the battery power is connected and disconnected.
If the solenoid valve is not operating properly, replace it.

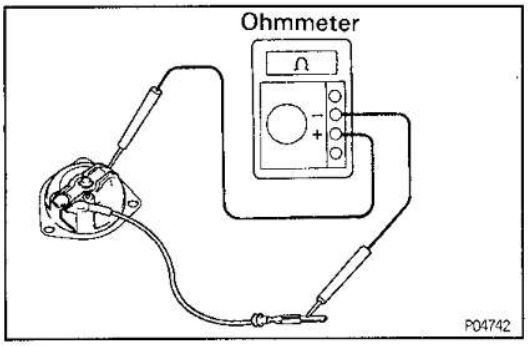

5. INSPECT CHOKE HEATER (COIL HOUSING)

Using an ohmmeter, measure the resistance between the terminals.

Resistance (Cold):

1.7 – 1.9 Ω at 20°C (68°F)

If a problem is found, replace the choke heater.

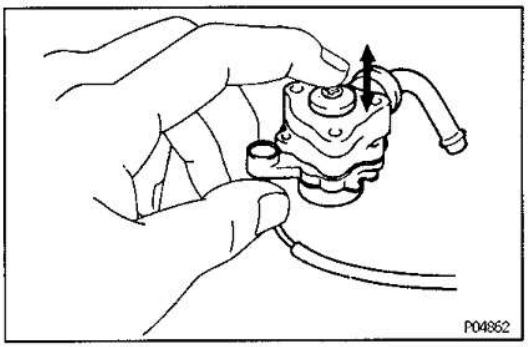

6. INSPECT OUTER VENT CONTROL VALVE (OVCV)

(a) Check the valve and seats for damage.

(b) Check the valve rod moves smoothly.

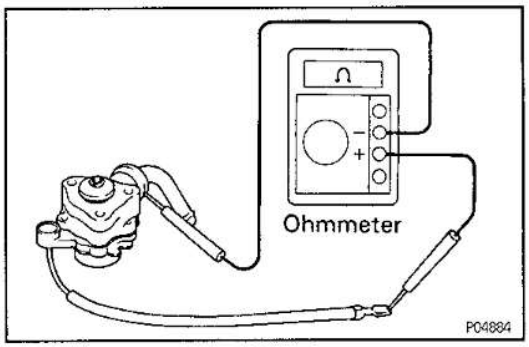

(c) Using an ohmmeter, measure the resistance between the wire terminal and body.

Resistance (Cold):

32 – 38 Ω

If the resistance is not within specification, replace the OVCV.

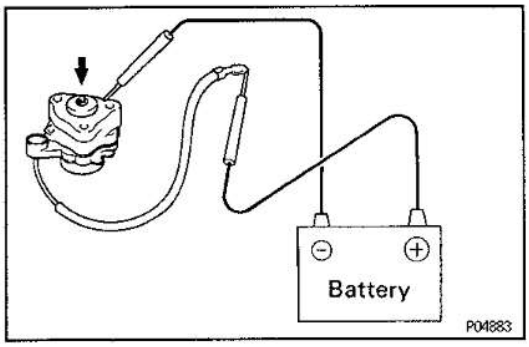

(d) Connect the OVCV body and wire terminal to the battery terminals and check that the valve is retracted.
If the OVCV is not operating properly, replace it.

CARBURETOR ASSEMBLY

EG0UH-01

HINT: Use new gaskets and O—rings throughout.

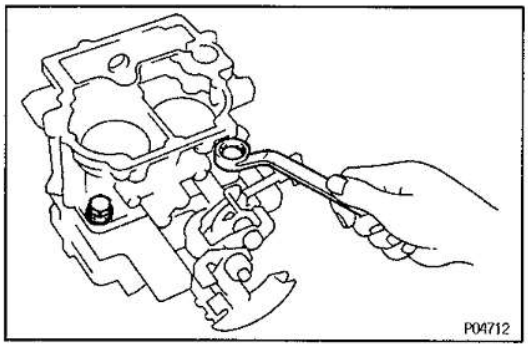

Carburetor Body Assembly

EG0UJ-01

(See page EG—312)

1. ASSEMBLE CARBURETOR BODY AND FLANGE

(a) Assemble the flange and body together with a new insulator.

(b) Install the two bolts.

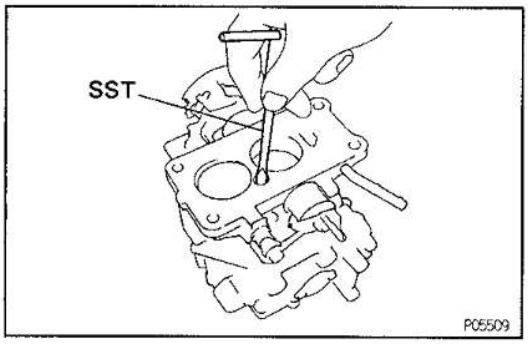

(c) Install the passage screw together with the spring washer.

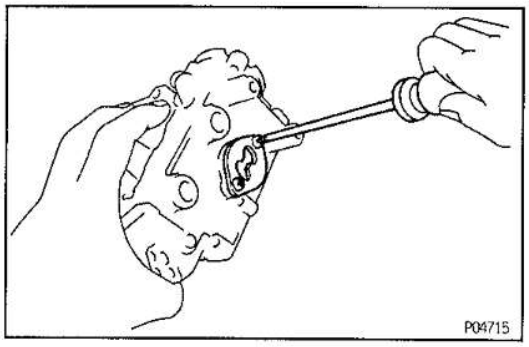

2. INSTALL SIGHT GLASS

Install a new O—ring, the sight glass and retainer with the two screws.

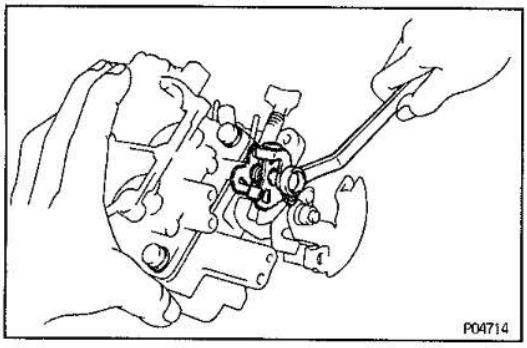

3. INSTALL FAST IDLE CAM

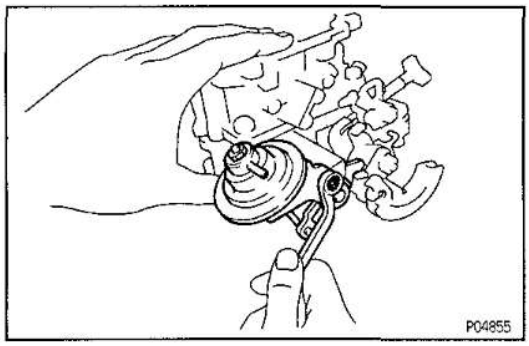

4. INSTALL THROTTLE POSITIONER (TP)

Install the TP with the two screws.

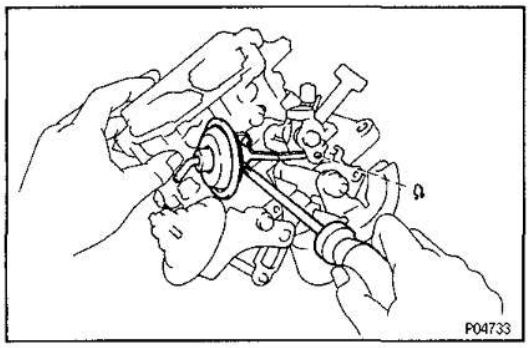

5. INSTALL FAST IDLE CAM BREAKER (FICB)

(a) Connect the link, and install the FICB with the two screws.

(b) Secure the link with the snap ring.

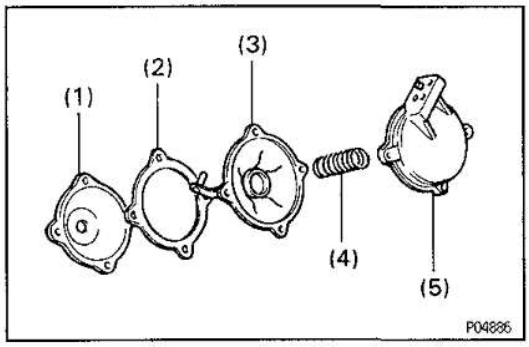

6. INSTALL SECONDARY THROTTLE VALVE DIAPHRAGM

(a) Assemble the housing (1), a new gasket (2), the diaphragm (3), spring (4) and cover (5).

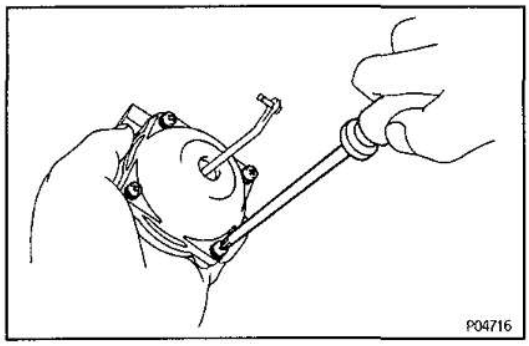

(b) Install the four screws.

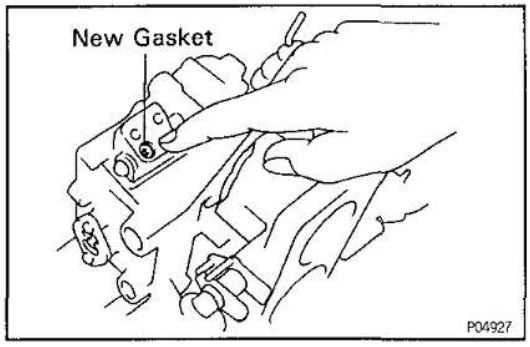

(c) Place a new gasket in position on the carburetor body.

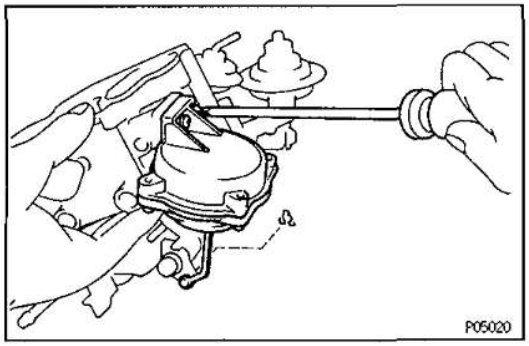

(d) Install the throttle valve diaphragm with the two screws.

(e) Connect the diaphragm link with the snap ring.

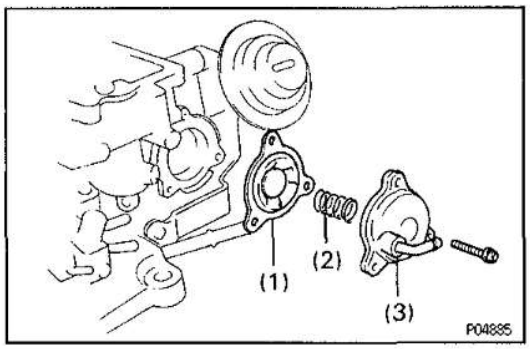

7. INSTALL AUXILIARY ACCELERATION PUMP (AAP)

Install the following parts with the three screws.

(1) Diaphragm
(2) Spring
(3) Cover

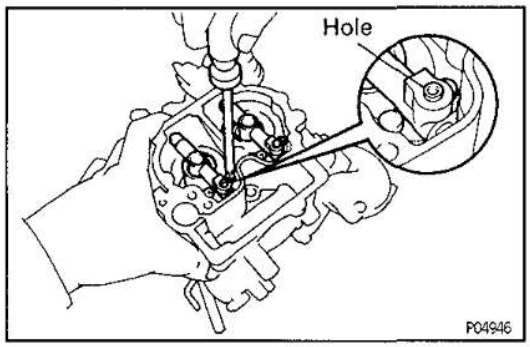

8. INSTALL SMALL VENTURIES

(a) Install a new gasket and the primary venturi with the two screws.

(b) Install a new gasket and the secondary venturi with the two screws.

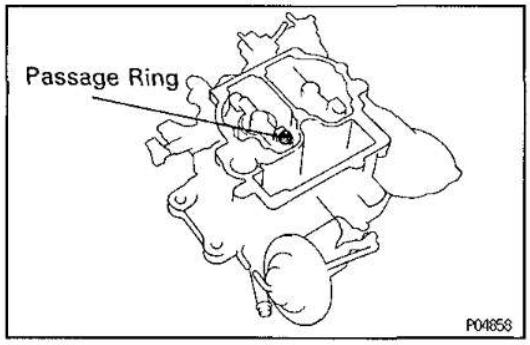

(c) Install the passage ring.

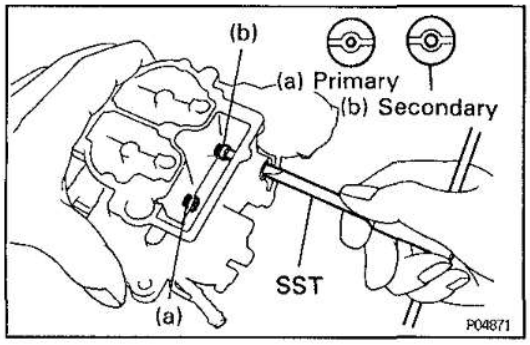

9. INSTALL PRIMARY AND SECONDARY MAIN JETS

(a) Install the primary and secondary main jets with new gaskets.

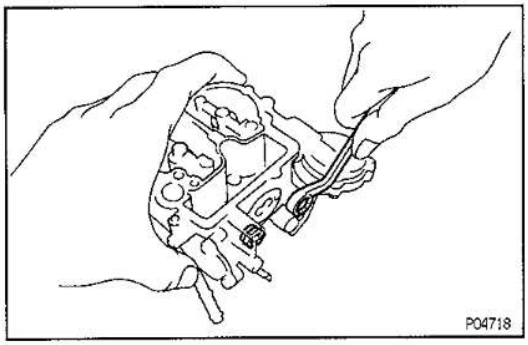

(b) Install the primary and secondary passage plugs with new gaskets.

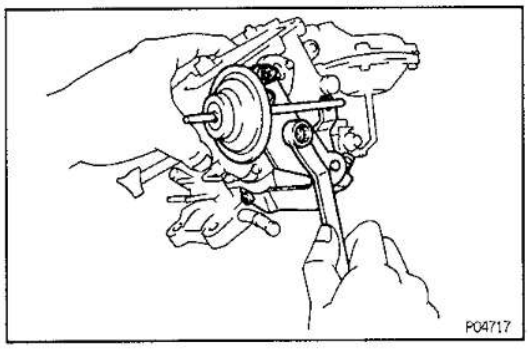

10. INSTALL DASH POT (DP)

Install the DP with the three screws.

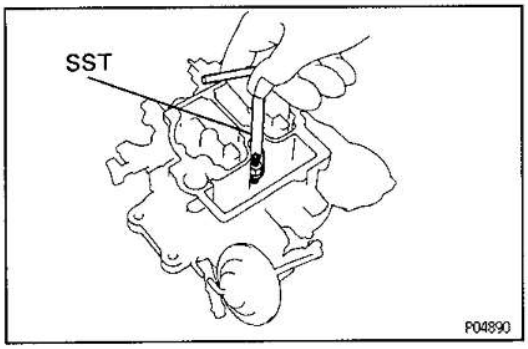

11. INSTALL POWER VALVE

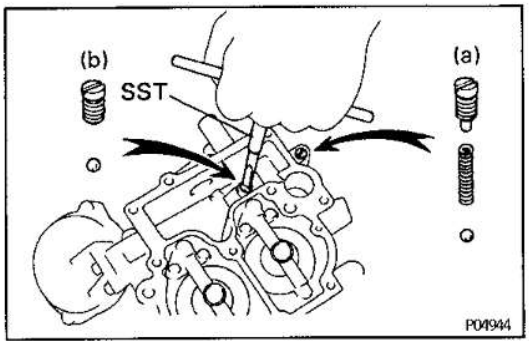

12. INSTALL CHACK BALLS FOR AUXILIARY ACCELERATION PUMP (AAP)

(a) Install the ball, spring and plug.

(b) Install the ball and plug.

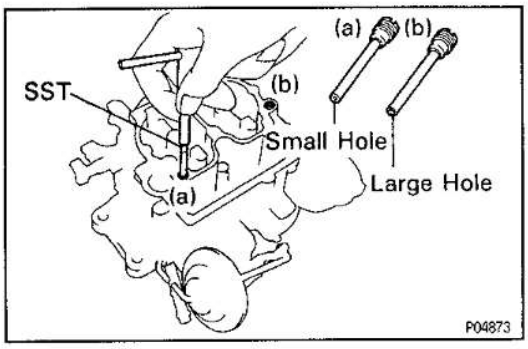

13. INSTALL SLOW JETS

(a) Install the primary slow jet.

(b) Install the secondary slow jet.

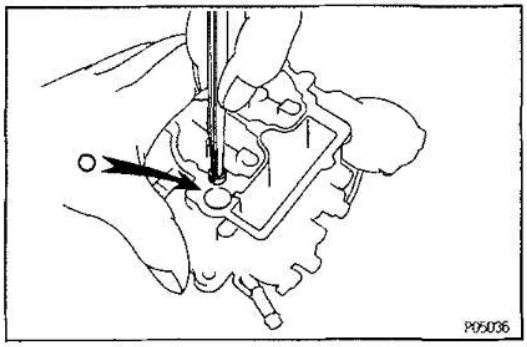

14. INSTALL CHECK BALLS FOR ACCELERATION

(a) Install the plunger small ball.

(b) Using tweezers, install the ball retainer.

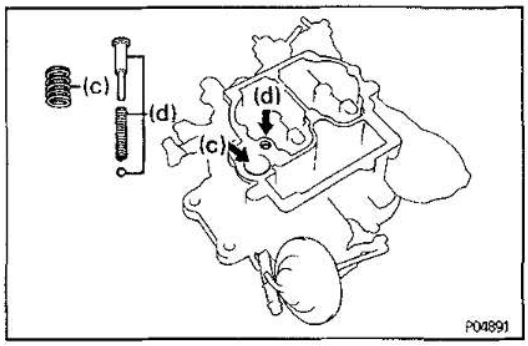

(c) Install the plunger spring.

(d) Install the pump discharge large ball, spring and weight.

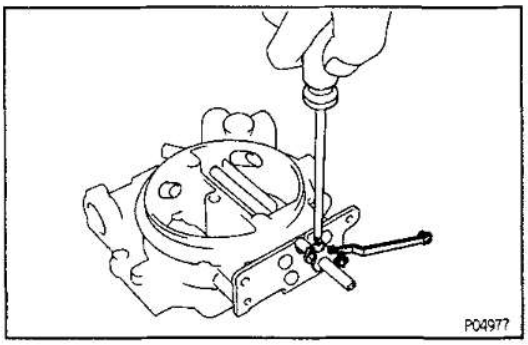

Air Horn Assembly

EG0UK-02

(See page EG—311)

1. INSTALL FAST IDLE CAM BREAKER (FICB) LINK

Install the FICB link with the screw.

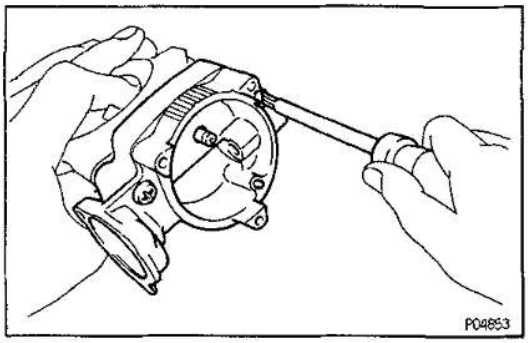

2. INSTALL THERMOSTAT HOUSING

Install the thermostat housing with the two screws.

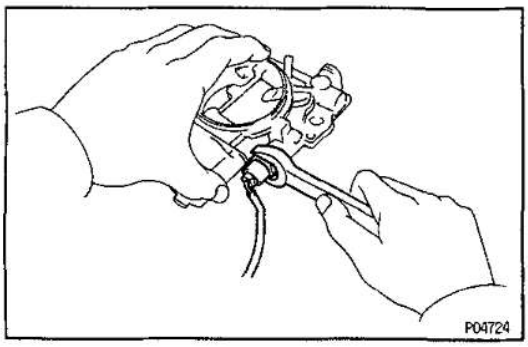

3. INSTALL FUEL CUT SOLENOID VALVE

(a) Install a new O—ring to the solenoid valve.

(b) Install the solenoid valve together with a new gasket.

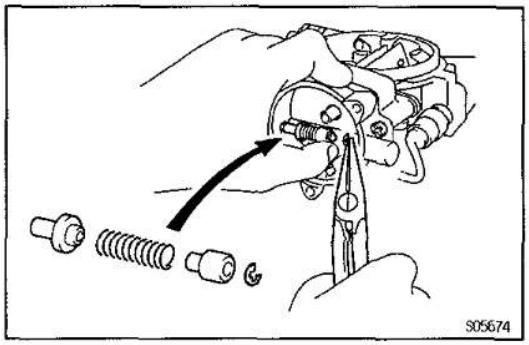

4. INSTALL CHOKE BREAKER (CB)

(a) Insert the diaphragm into the thermostat case, and install the collar, spring and stopper with the E–ring.

(b) Insert the shaft of the diaphragm into the hole of the thermostat case.

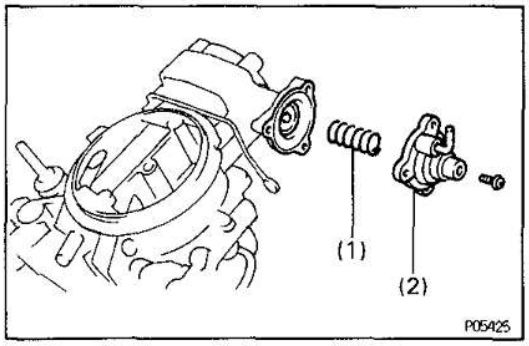

(c) Install the following parts with the three screws:
(1) Spring
(2) Cover

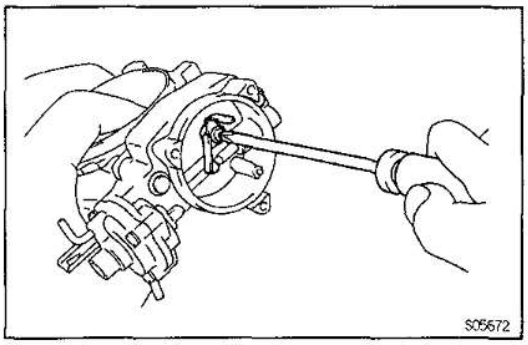

5. INSTALL CHOKE LEVER

Install the choke lever with the screw.

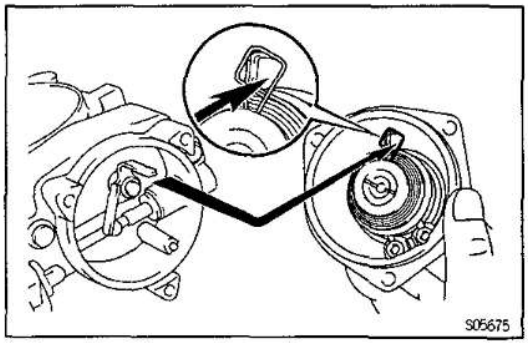

6. INSTALL COIL HOUSING

(a) Install the gasket to the thermostat case.

(b) Align the bi–metal spring with the wire spring and install the coil housing, aligning the choke lever as shown in the illustration.

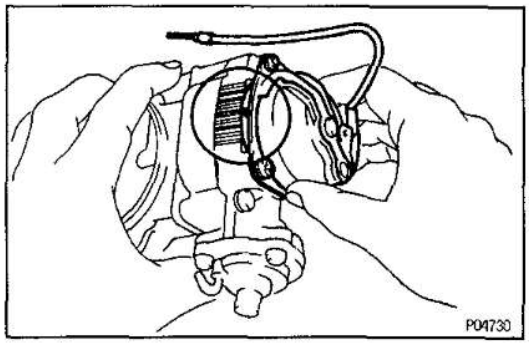

(c) Align the scale center line of the thermostat case with the coil housing line, and install the plate with the three screws.

(d) Check the choke valve action.

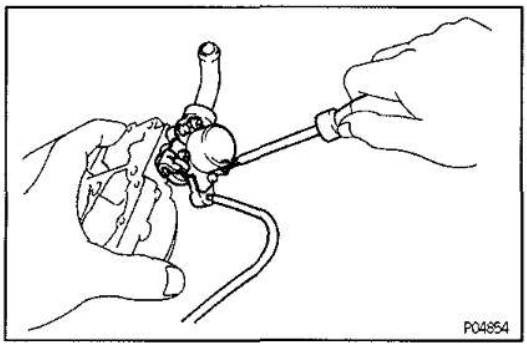

7. INSTALL OUTER VENT CONTROL VALVE (OVCV)

Install a new gasket, the wire clamp and OVCV with the three screws.

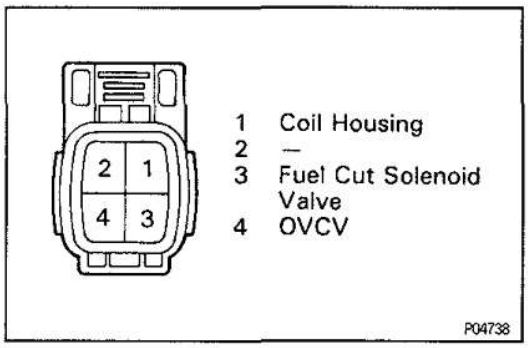

8. CONNECT WIRES TO CONNECTOR

(a) Push in the terminal until it is securely locked in the connecting lug.

(b) Pull on the wire to check that it is securely locked.

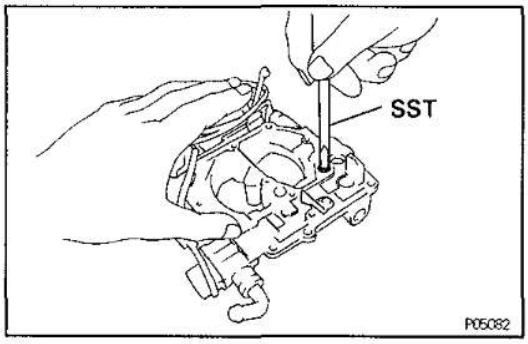

9. INSTALL PRIMARY UPPER SLOW JET

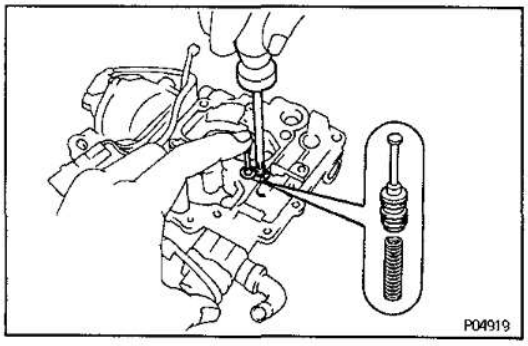

10. INSTALL POWER PISTON

Install the spring and power piston with the retainer and screw.

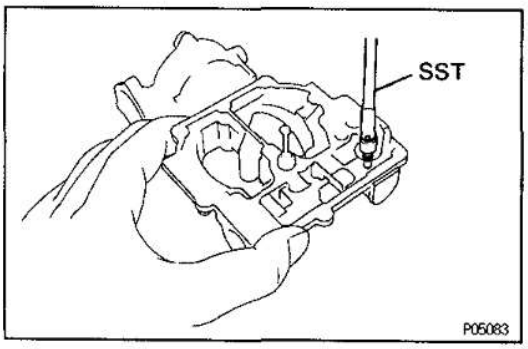

11. INSTALL NEEDLE VALVE SEAT

Install the valve seat together with a new gasket.

EG

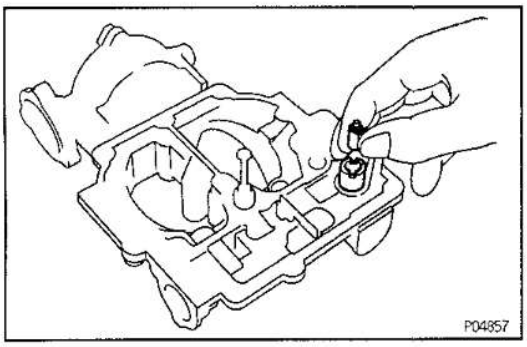

12. ADJUST FLOAT LEVEL

(a) Insert the needle valve, spring and plunger into the needle valve seat.
HINT: After adjusting the float level, install the clip onto the needle valve.

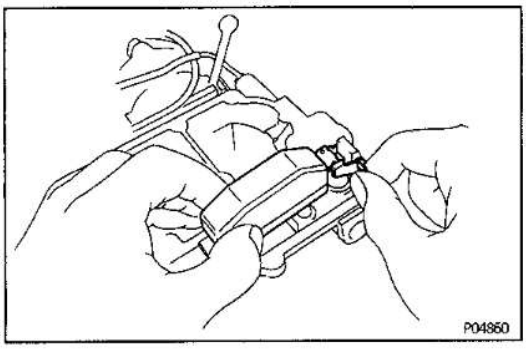

(b) Install the float with the pivot pin.

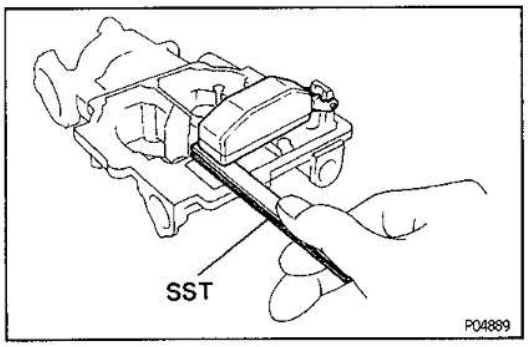

(c) Allow the float to hang down by its own weight.
Using SST, measure the clearance between the float tip and air horn.
SST 09240–00014
Float level (Raised position):
7.0 mm (0.276 in.)
HINT: This measurement should be made without a gasket on the air horn.

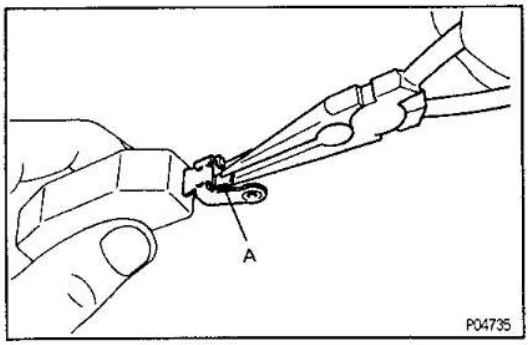

(d) Adjust by bending the portion of the float lip marked A.

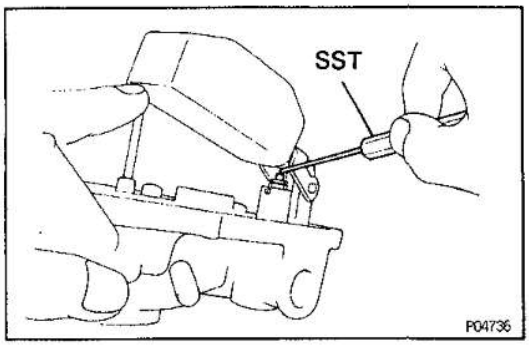

(e) Lift up the float.
Using SST, measure the clearance between the needle valve plunger and float lip.
SST 09240–00020
Float level (Lowered position):
0.9 – 1.1 mm (0.035 – 0.043 in.)

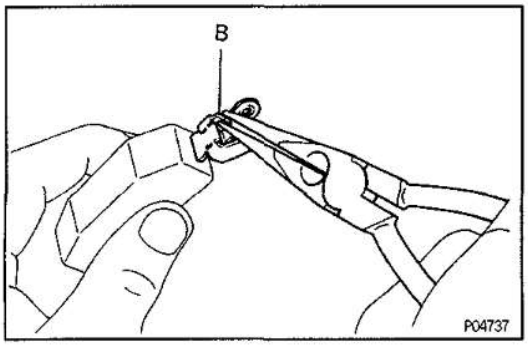

(f) Adjust by bending the position of the float lip marked B.

(g) After adjusting the float level, remove the float, plunger, spring and needle valve.

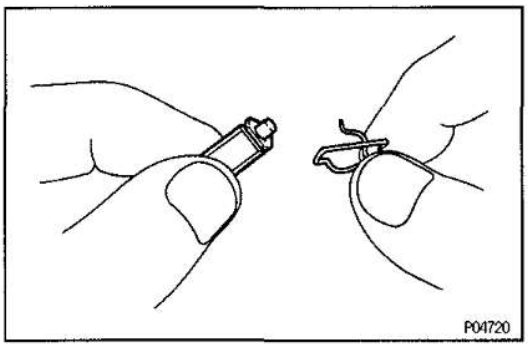

(h) Assemble the clip onto the needle valve.

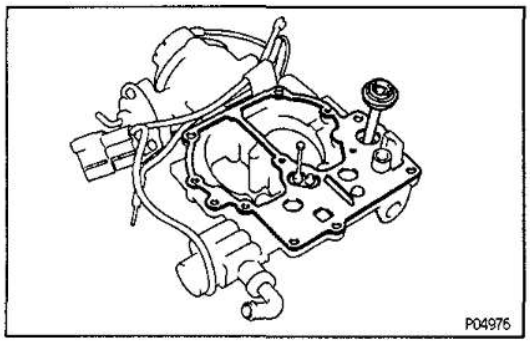

13. *INSTALL NEW AIR HORN GASKET*

Place the air horn gasket on the air horn.

14. INSTALL ACCELERATION PUMP PLUNGER

Install a new boot and the pump plunger.

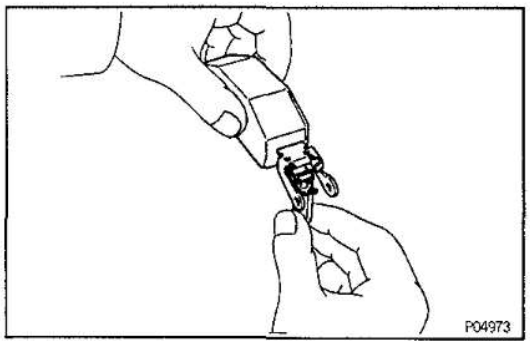

15. INSTALL NEEDLE VALVE AND FLOAT

(a) Hook the needle valve clip to the lip portion of the float.

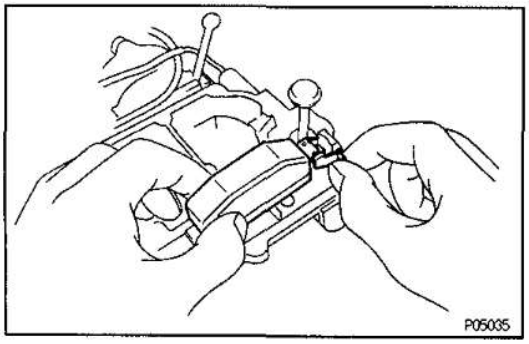

(b) Install the float and secure it with the pivot pin.

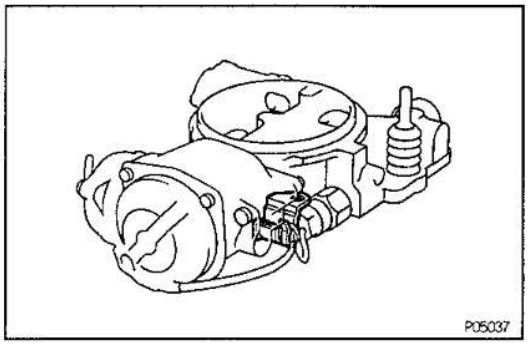

16. INSTALL AIR HORN ASSEMBLY

(a) Install the wire clamp in position.

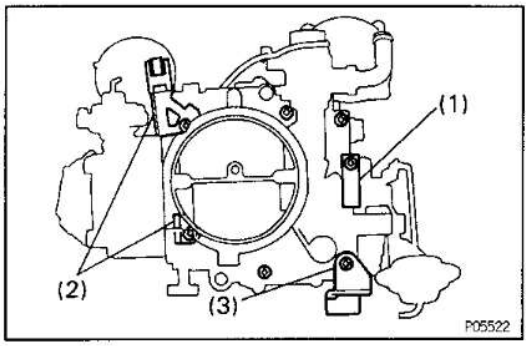

(b) Place the air horn in the carburetor body.

(c) Install the following parts with the seven screws:
   (1) Number plate
   (2) Wire clamps
   (3) Vacuum hose clamp

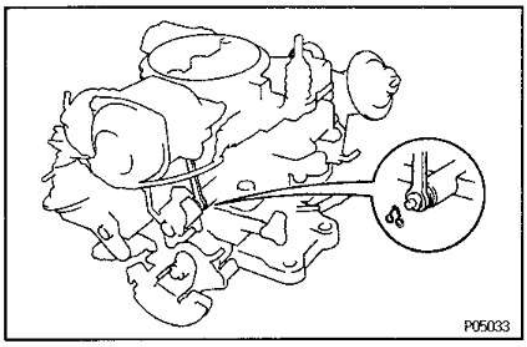

17. CONNECT FAST IDLE CAM BREAKER (FICB) LINK

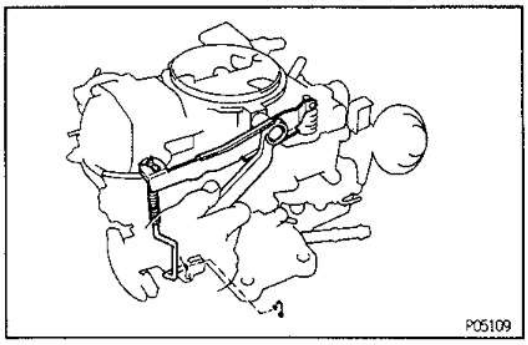

18. INSTALL ACCELERATION PUMP ARM

(a) Connect the pump connecting link to the throttle lever.

(b) Connect the pump arm to the pump plunger.

(c) Install the pump arm with the pivot bolt.

(d) Secure the link with the snap ring.

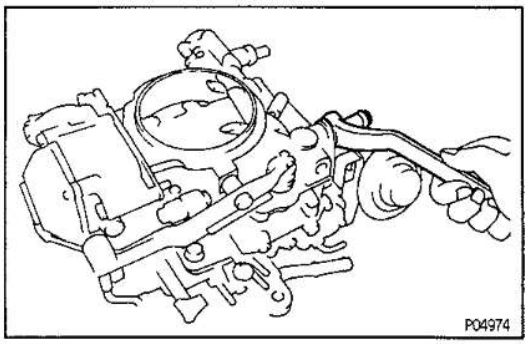

19. INSTALL NIPPLE UNION

Install a new gasket and nipple union

20. CHECK FOR SMOOTH OPERATION OF EACH PART

EG0UL-01

CARBURETOR ADJUSTMENT

HINT: Use SST 09240-00014 to make adjustment.

EG

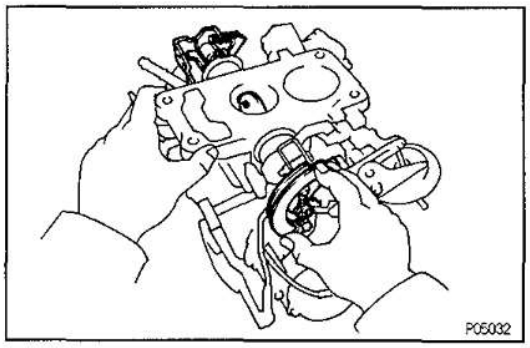

1. CHECK AND ADJUST THROTTLE VALVE OPENING

(a) Check the full opening angle of the primary throttle valve.
Standard angle:
90° from horizontal

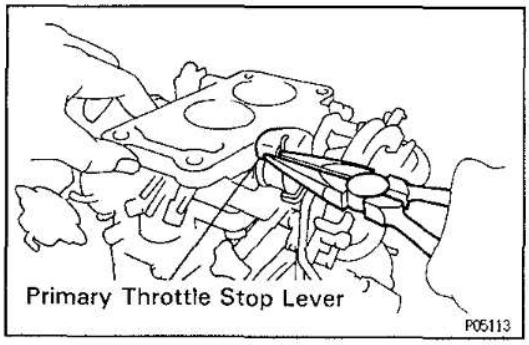

(b) Adjust by bending the primary throttle stop lever.

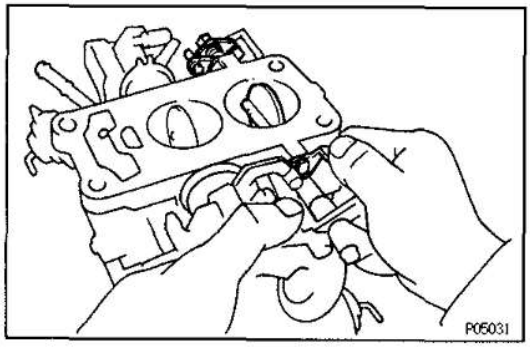

(c) Check the full opening angle of the secondary throttle valve.
Standard angle:
90° from horizontal

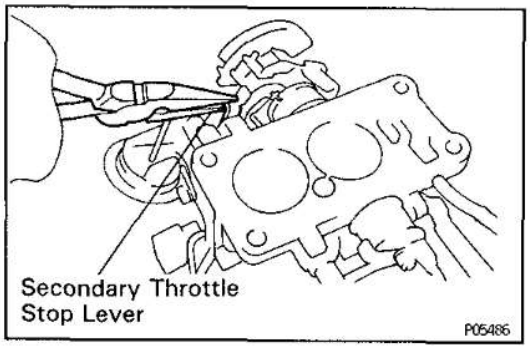

(d) Adjust by bending the secondary throttle stop lever.

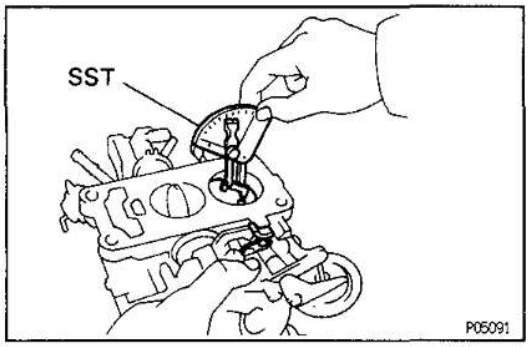

2. CHECK AND ADJUST KICK–UP SETTING

(a) With the primary throttle valve fully opened, check the opening angle of the secondary throttle valve.

Standard angle:

23° from horizontal

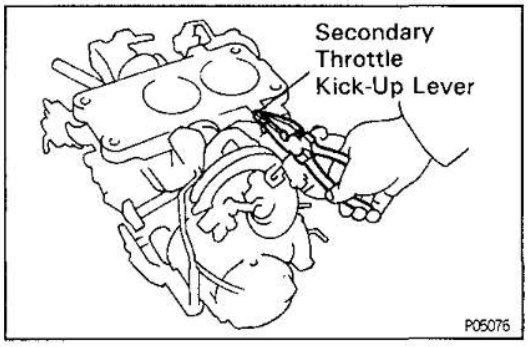

(b) Adjust by bending the secondary throttle kick–up lever.

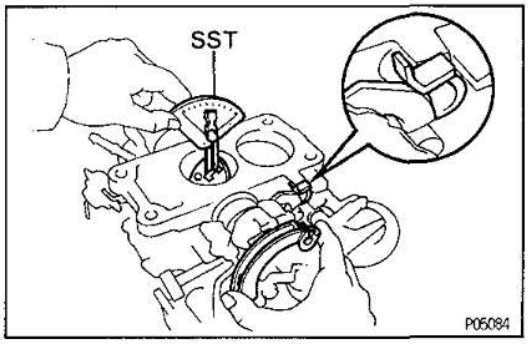

3. CHECK AND ADJUST SECONDARY TOUCH ANGLE

(a) Check the primary throttle valve opening angle at the same time the primary kick lever just touches the secondary kick lever.

Standard angle:

67° from horizontal

(b) If the angle is not within specification, replace the carburetor flange.

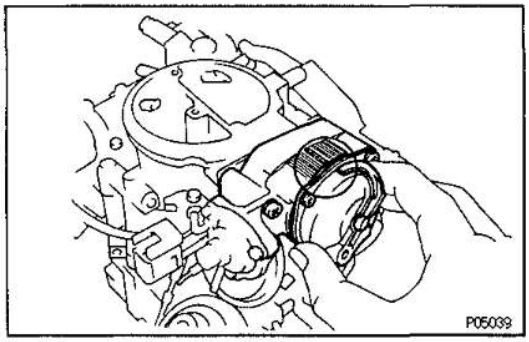

4. SET AUTOMATIC CHOKE

(a) Set the coil housing line so that it is aligned with the center line of the thermostat housing.

HINT: The choke valve becomes fully closed when the atmospheric temperature reaches 30°C (86°F).

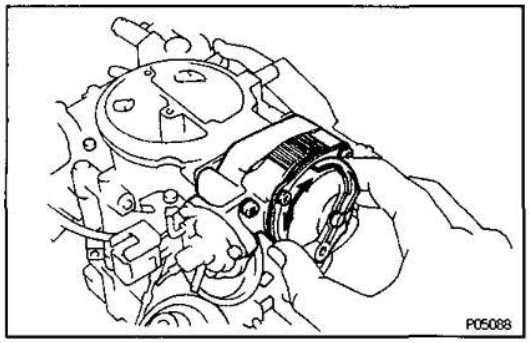

(b) Depending on vehicle operating conditions, turn the coil housing and adjust the engine starting mixture.

If too rich ..... Turn clockwise

If too lean ..... Turn counterclockwise

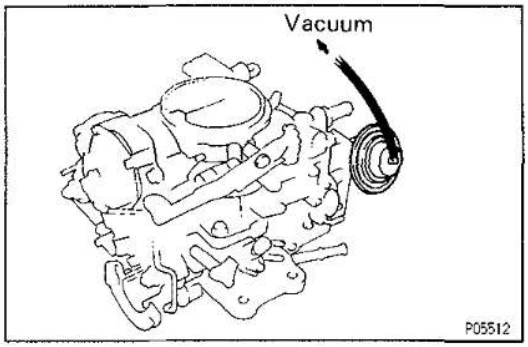

5. CHECK AND ADJUST FAST IDLE SETTING

(a) Apply vacuum to the dash pot (DP).

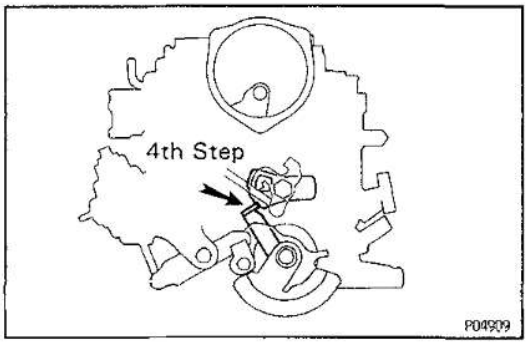

(b) Position the fast idle lever onto the 4th step as shown.

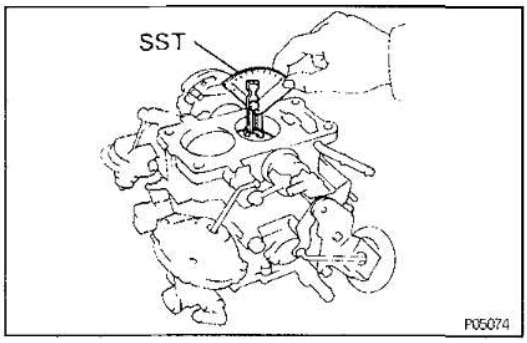

(c) Check the primary throttle valve angle.

Standard angle:

G.C.C.

15.5 — 17.5° from horizontal

Others

17.0 — 19.0° from horizontal

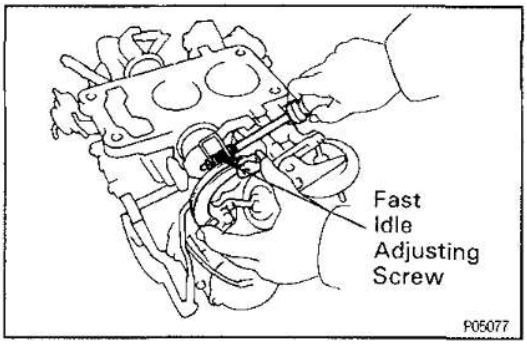

(d) Adjust by turning the fast idle adjusting screw.

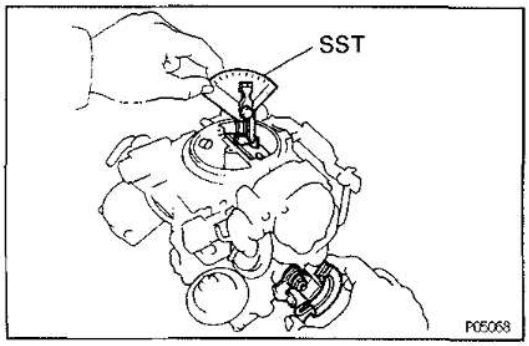

6. CHECK AND ADJUST UNLOADER

(a) With the primary throttle valve fully opened, check the choke valve angle.

Standard angle:

35 — 39° from horizontal

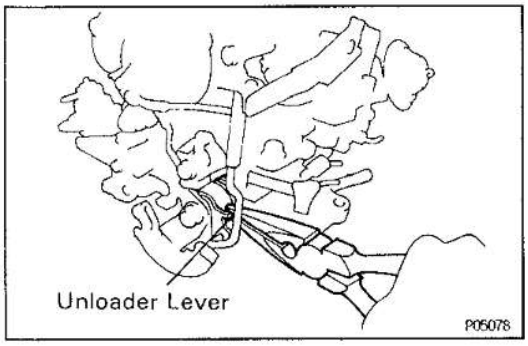

(b) Adjust by bending the unloader lever.

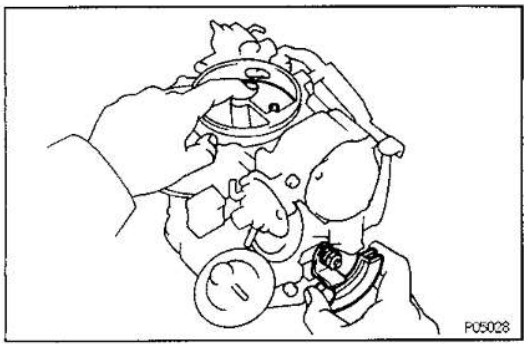

7. CHECK AND ADJUST FAST IDLE CAM BREAKER (FICB)

(a) Set the fast idle cam.

(1) While holding the throttle slightly open, push the choke valve closed, and hold it closed as you release the throttle valve.

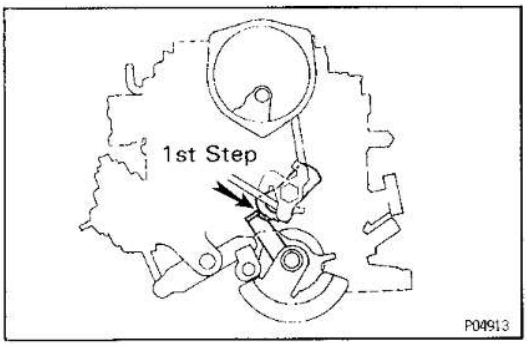

(2) Check that the fast idle lever is a set in the 1st step of the fast idle cam as shown.

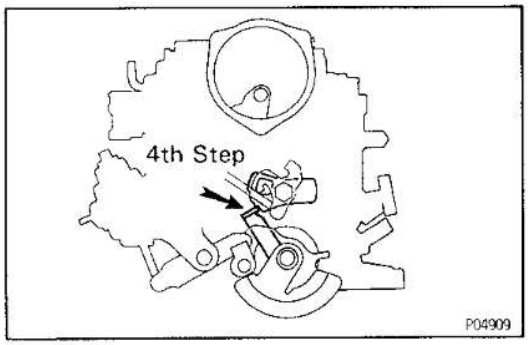

(b) Apply vacuum to the FICB and release it.

(c) Check that the choke linkage moves, and that the fast idle cam is released to the 4th step.

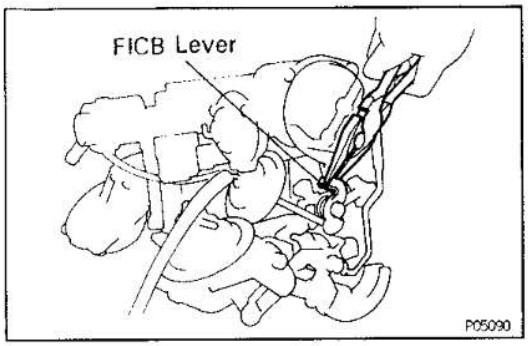

(d) Adjust by bending the FICB lever.

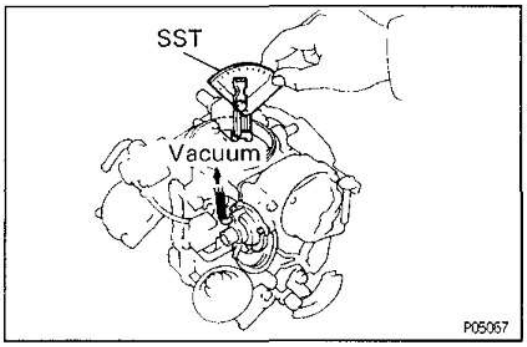

8. CHECK AND ADJUST CHOKE BREAKER (CB)

(a) Set the fast idle cam. (See step 8)

(b) Apply vacuum to the CB.

(c) Check the choke valve angle.

Standard angle:

44 – 46° from horizontal

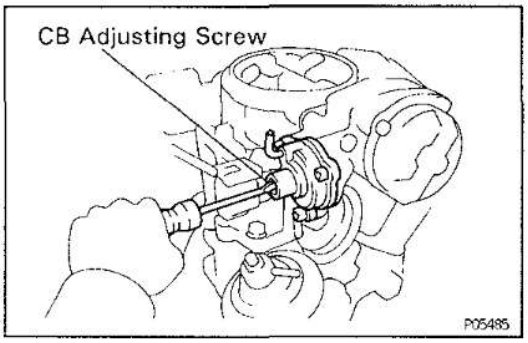

(d) Adjust by turning the CB adjusting screw.

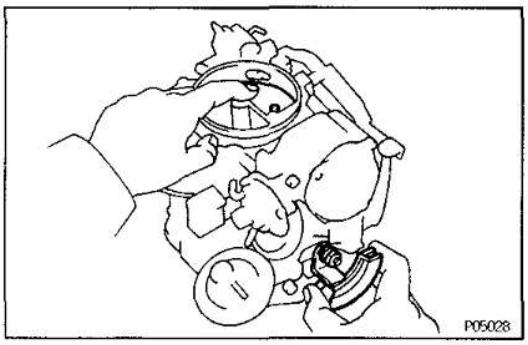

9. CHECK AND ADJUST DASH POT (DP)

(a) Open the throttle valve and then close it with the choke valve fully open.

HINT: Check that fast idle is not operating.

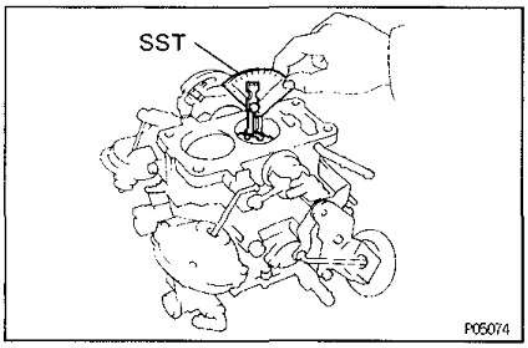

(b) Check the primary throttle valve angle.

Standard angle:

19 – 21° from horizontal

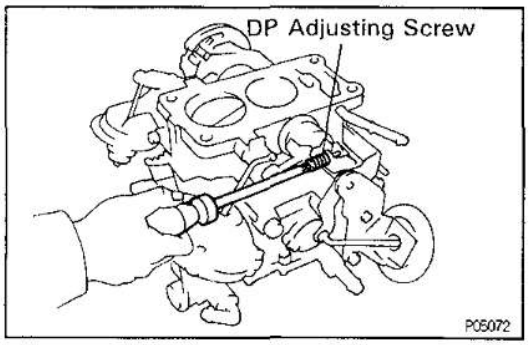

(c) Adjust by turning the DP adjusting screw.

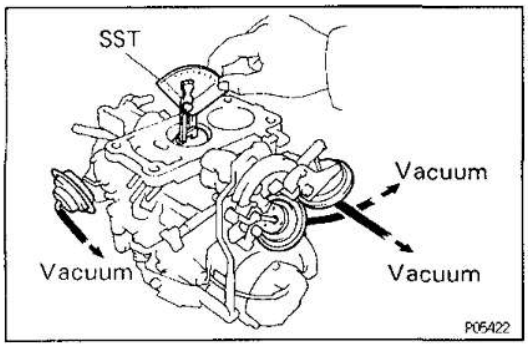

10. CHECK AND ADJUST THROTTLE POSITIONER (TP)

(a) Apply vacuum to dash pot (DP), fast idle cam breaker (FICB) and throttle positioner (TP).

(b) Check the primary throttle valve angle.

Standard angle:

17.5 — 19.5° from horizontal

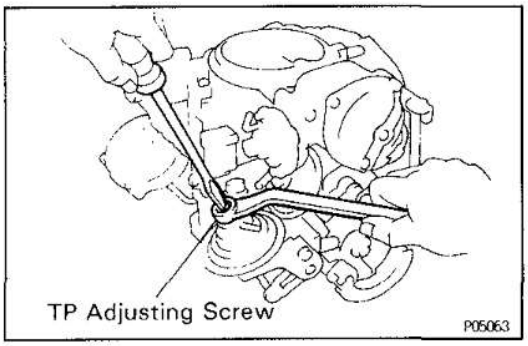

(c) Adjust by turning the TP adjusting screw.

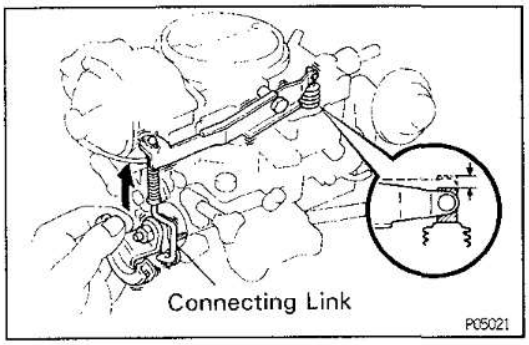

11. CHECK AND ADJUST ACCELERATION PUMP

(a) Apply vacuum to dash pot (DP), fast idle cam breaker (FICB) and throttle positioner (TP).

(b) Rotate the throttle shaft and check that the length of the stroke.

Standard stroke:

10.9 mm (0.429 in.)

(c) Adjust the pump stroke by bending the connecting link.

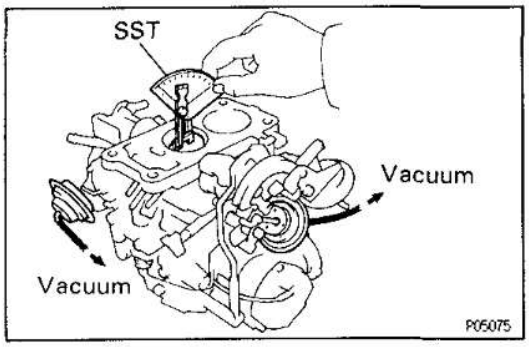

12. PRESET IDLE SPEED ADJUSTING SCREW

(a) Apply vacuum to dash pot (DP) and fast idle cam breaker (FICB).

(b) Check the primary throttle valve angle.

Standard angle:

14° from horizontal

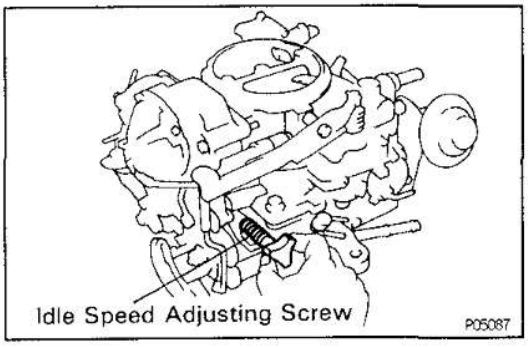

(c) Adjust turning the idle speed adjusting screw.

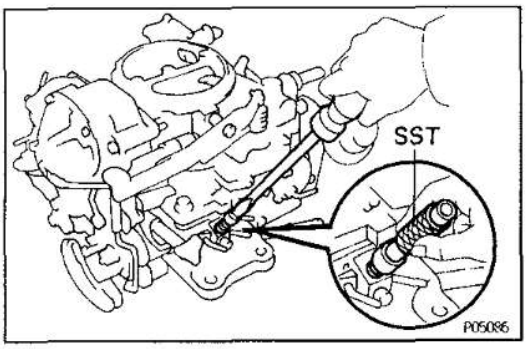

13. PRESET IDLE MIXTURE ADJUSTING SCREW

If the idle mixture adjusting screw has been removed, fully screw it in and then unscrew it the following amount.

Standard:

Return 2 1/4 turns from fully closed position

HINT: Use SST if necessary.

SST 09243–00020

NOTICE: Use care not to screw it in too tightly and damage the screw tip.

14. CHECK FOR SMOOTH OPERATION OF EACH PART

15. INSTALL CABURETOR STUD BOLT

EG0UM-01

CARBURETOR INSTALLATION

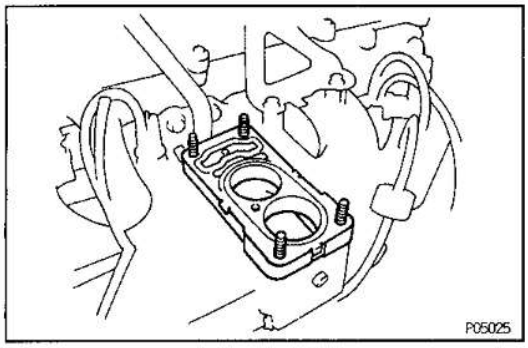

(See page EG—309)

1. INSTALL CARBURETOR

(a) Place the insulator and new gaskets on the intake manifold.

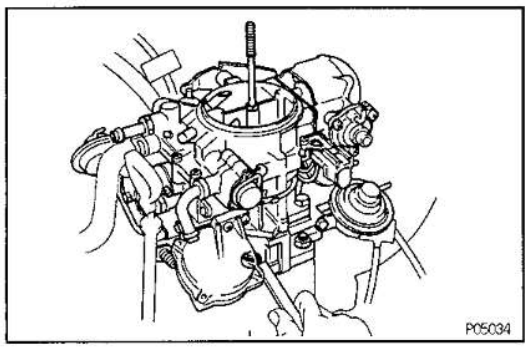

(b) Place the carburetor on the insulator.

(c) Install the four carburetor mounting nuts.
Torque: 13 N·m (130 kgf·cm, 9 ft·lbf)

2. CONNECT FOLLOWING HOSES

(a) Emission control hoses

(b) Fuel inlet hose

(c) Outer vent control hose

(d) No.1 water by—pass hose

3. CONNECT CARBURETOR CONNECTOR

4. CONNECT ACCELERATOR CABLE

5. INSTALL INTAKE AIR CONNECTOR

6. FILL WITH COOLANT

7. ADJUST IDLE SPEED AND IDLE MIXTURE

8. ADJUST FAST IDLE SPEED

9. ADJUST DASH POT (DP) SETTING SPEED

10. ADJUST THROTTLE POSITIONER (TP) SETTING SPEED

FUEL PUMP

FUEL PUMP REMOVAL

EG0UU-01

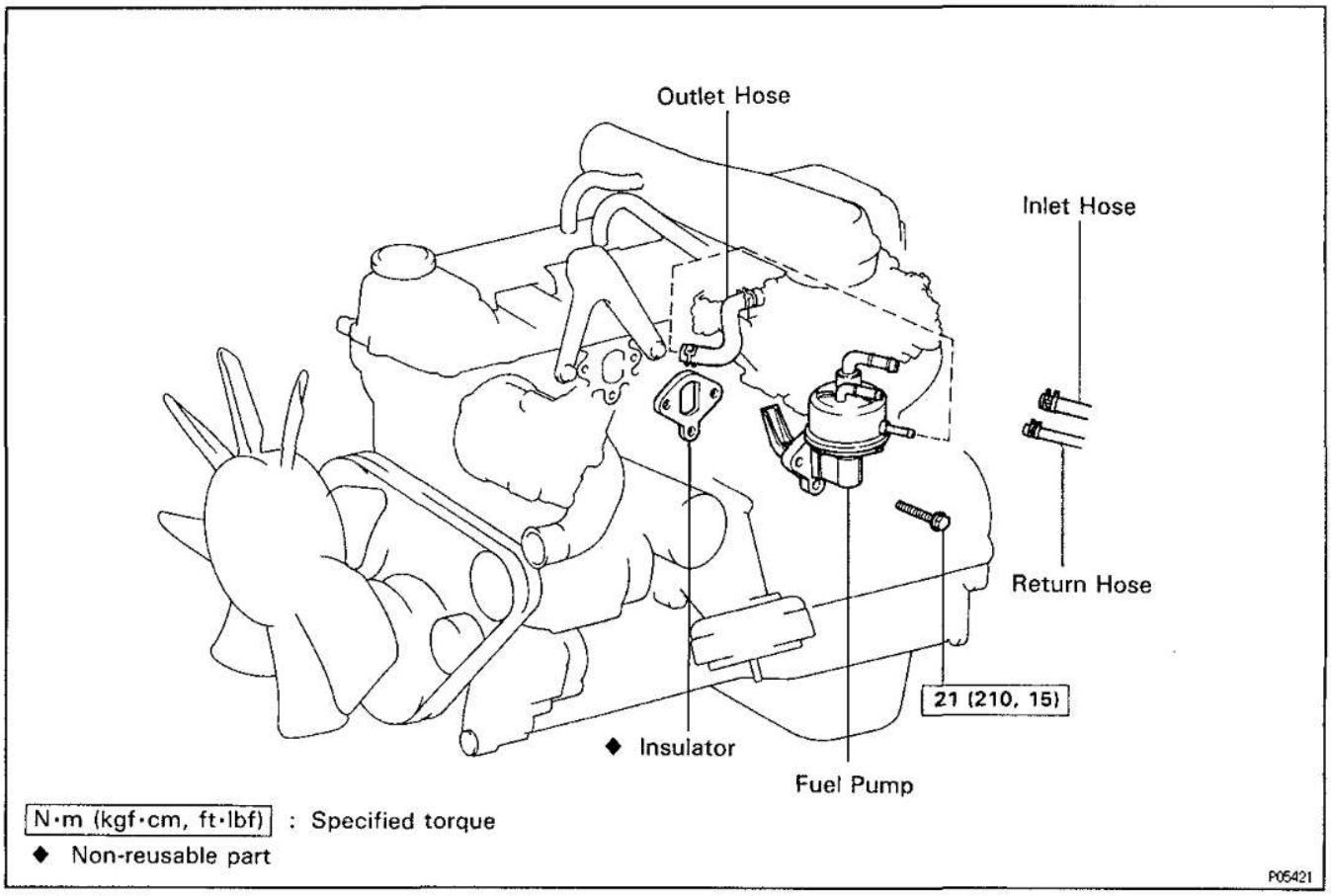

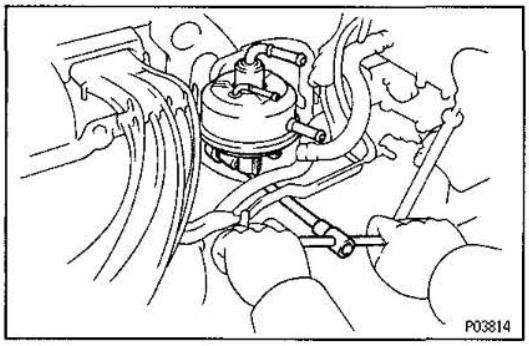

1. **DISCONNECT FUEL HOSES FROM FUEL PUMP**
2. **REMOVE FUEL PUMP**
   Remove the three bolts, fuel pump and insulator.

FUEL PUMP INSPECTION (Airtight Test) EG6UV-01

CUTAWAY VIEW

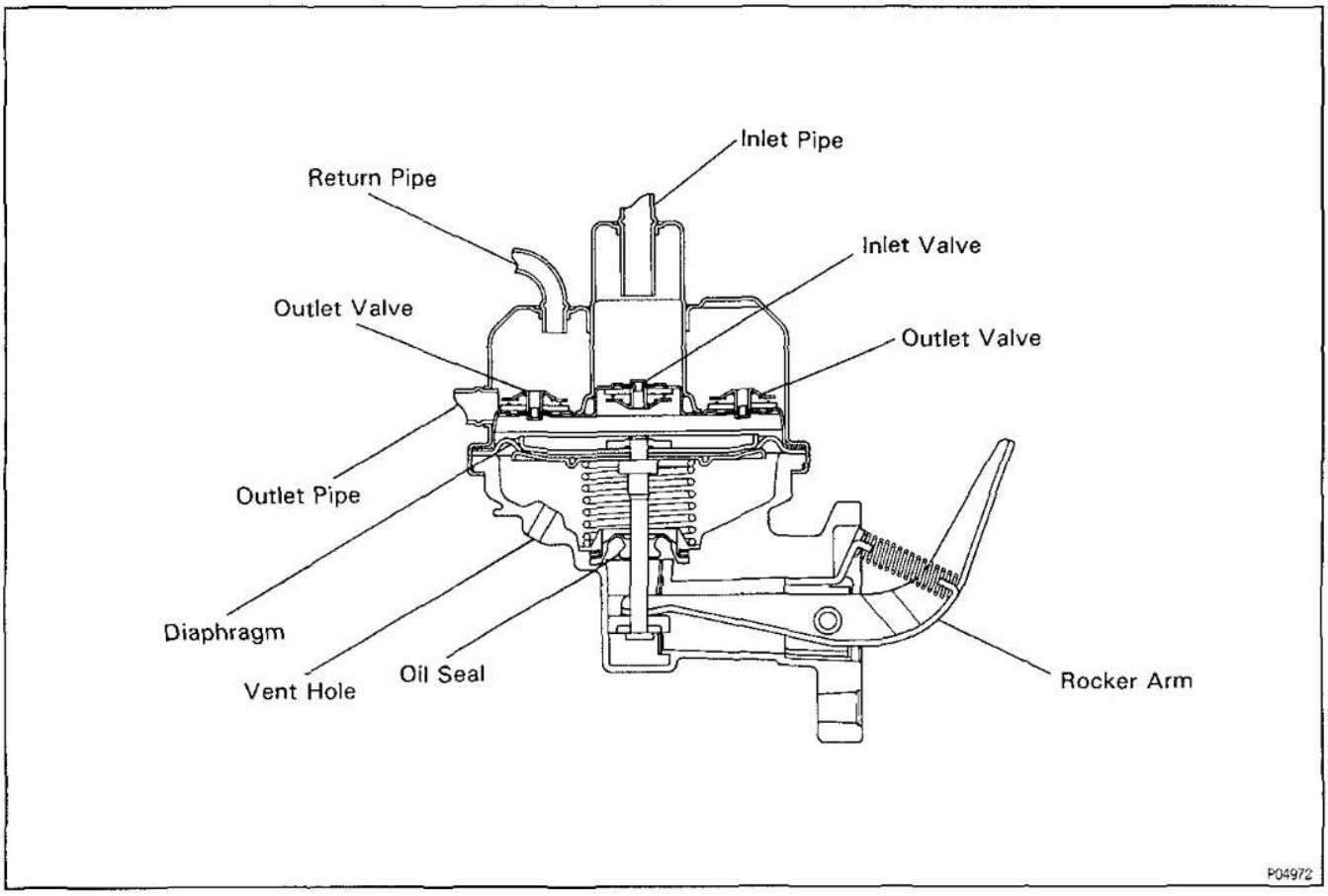

PRECHECKS

Before performing the following checks on the fuel pump:

(a) Run some fuel through the pump to insure that the check valves seal tightly (a dry check valve may not seal properly).

(b) Without blocking off any pipes, operate the rocker arm and check the amount of force necessary for operation and the amount of arm play. This same amount of force should be used in the checks.

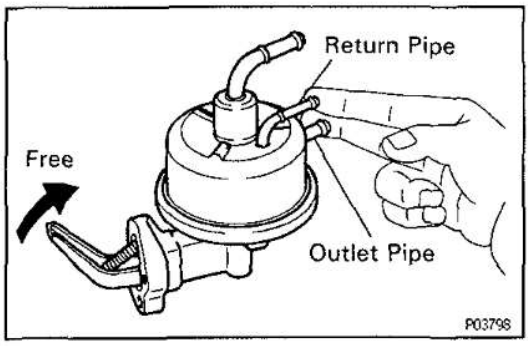

1. CHECK INLET VALVE

Block off the outlet and return pipes with your finger and check that there is an increase in rocker arm play and that the rocker arm moves freely (no reaction force).

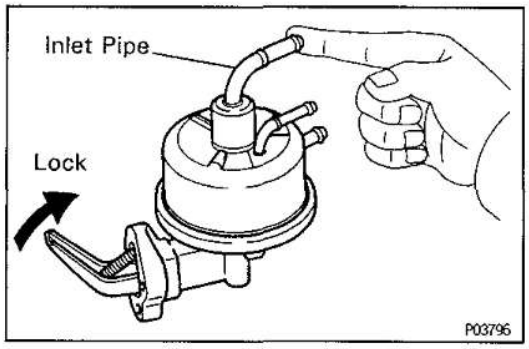

2. CHECK OUTLET VALVE

Block off the inlet pipe with your finger and check that the rocker arm locks (does not operate with same amount of force used in the precheck above).

HINT: Never use more force than that used in the precheck. This applies to checks 3 and 4 also.

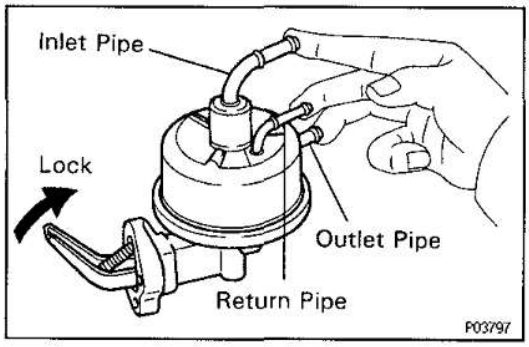

3. CHECK DIAPHRAGM

Block off the inlet, outlet and return pipes and check that the rocker arm locks.

HINT: If all three of these checks are not as specified, the caulking (sealing) of the body and upper casing is defective.

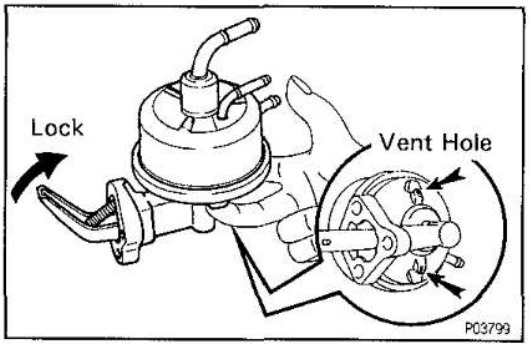

4. CHECK OIL SEAL

Block off the vent hole with your finger and check that the rocker arm locks.

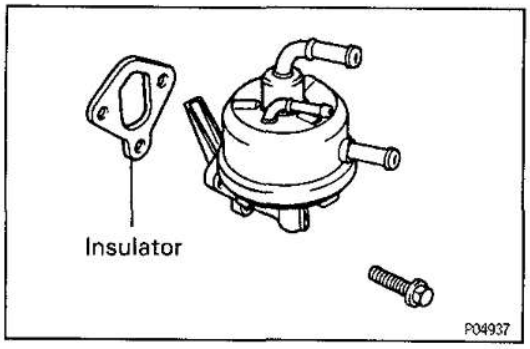

FUEL PUMP INSTALLATION

EG6UW-01

1. INSTALL FUEL PUMP

Install a new insulator and fuel pump with the three bolts.

Torque: 21 N·m (210 kgf·cm, 15 ft·lbf)

2. CONNECT FUEL HOSES TO FUEL PUMP

3. START ENGINE AND CHECK FOR LEAKS

SERVICE SPECIFICATIONS

SERVICE DATA

EG0UX-01

EG

Carburetor	Part. No.	21100—66010
		21100—66020
		21100—66030
	Float level (Raised positiion)	7.0 mm (0.276 in.)
	Float level (Lowered position)	0.9 — 1.1 mm (0.035—0.043 in.)
	Throttle valve closed angle (Primary)	9° from horizontal
	Throttle valve closed angle (Secondary)	20° from horizontal
	Secondary throttle valve full open angle (Primary)	90° from horizontal
	Secondary throttle valve full open angle (Secondary)	90° from horizontal
	Secondary throttle valve kickup angle	23° from horizontal
	Secondary touch angle	58° from horizontal
	Fast idle angle (Pre—setting)—G.C.C.	15.5 — 17.5° from horizontal
	Fast idle angle (Pre—setting)—Others	17 — 19° from horizontal
	Choke valve closed angle	20° from horizontal
	Unloder angle	35 — 39° from horizontal
	Choke breaker angle	44 — 46° from horizontal
	DP angle	19 — 21° from horizontal
	Throttle positioner angle	17.5 — 19.5° from horizontal
	Idle speed angle (Pre—setting)	14° from horizontal
	Idle mixture adjusting screw (Pre—setting)	Screw out approx. 2 1/4 turns
	Acceleration pump stroke	1.09 mm (0.429 in.)
(	Choke heater resistance	1.7 — 1.9 Ω
	OVCV resistance	32 — 38 Ω

TORQUE SPECIFICATIONS

EG0UY-01

Part tightened	N·m	kgf·cm	ft·lbf
Carbulator x Intake manifold	13	130	9
Fuel pump x Cylinder head	21	210	15

COOLING SYSTEM

DESCRIPTION

EG1HY-03

This engine utilizes a pressurized forced circulation cooling system which includes a thermostat equipped with a by—pass valve mounted on the inlet side.

OPERATION

EC286-01

1FZ-FE

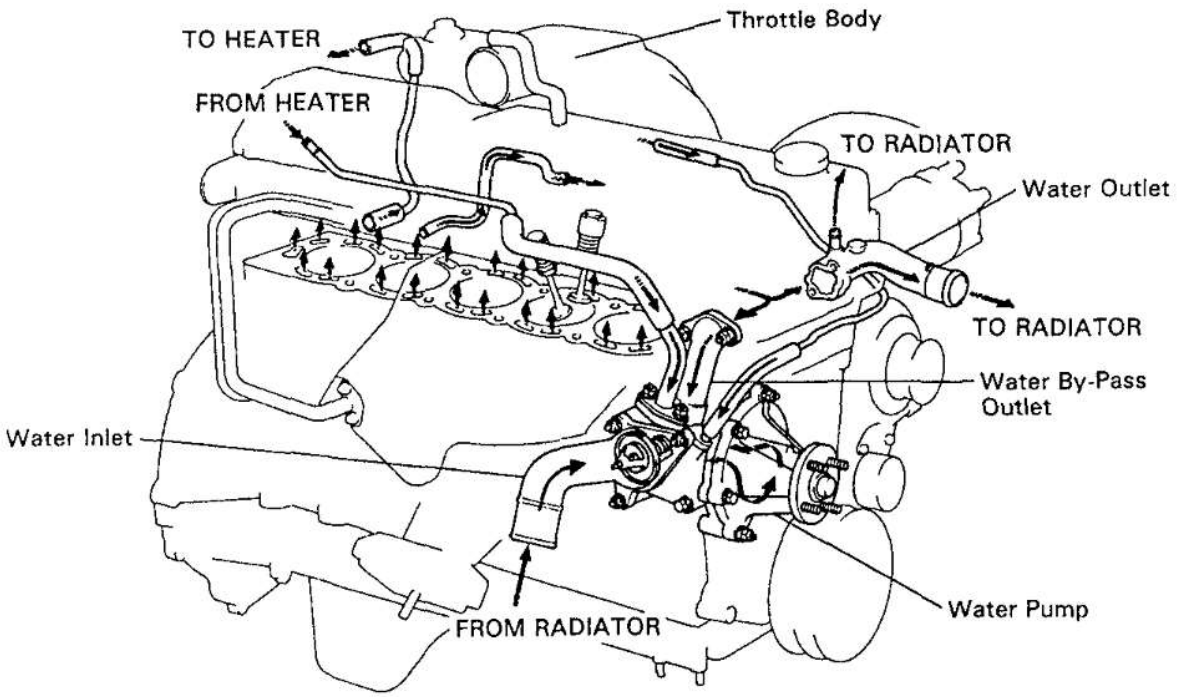

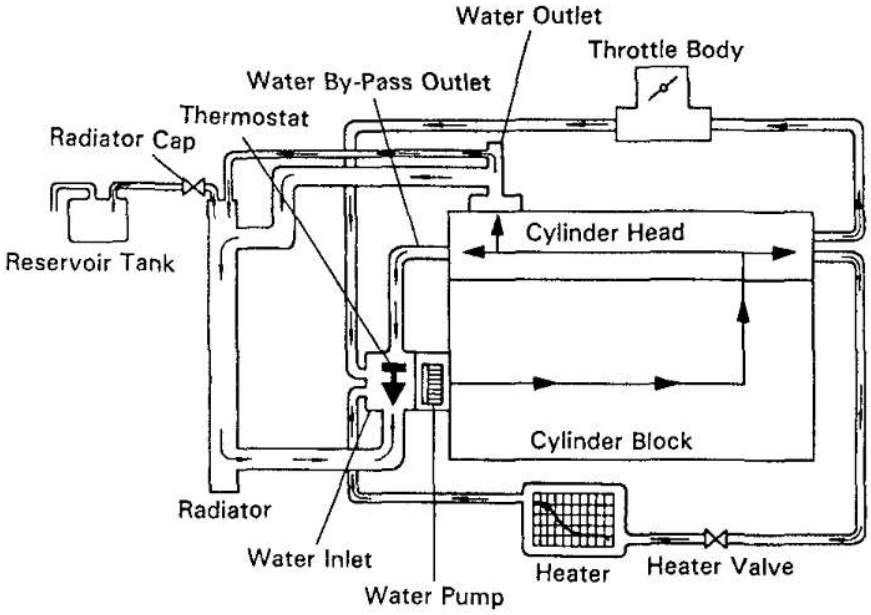

P08427
P08380

Z06726

1FZ-F

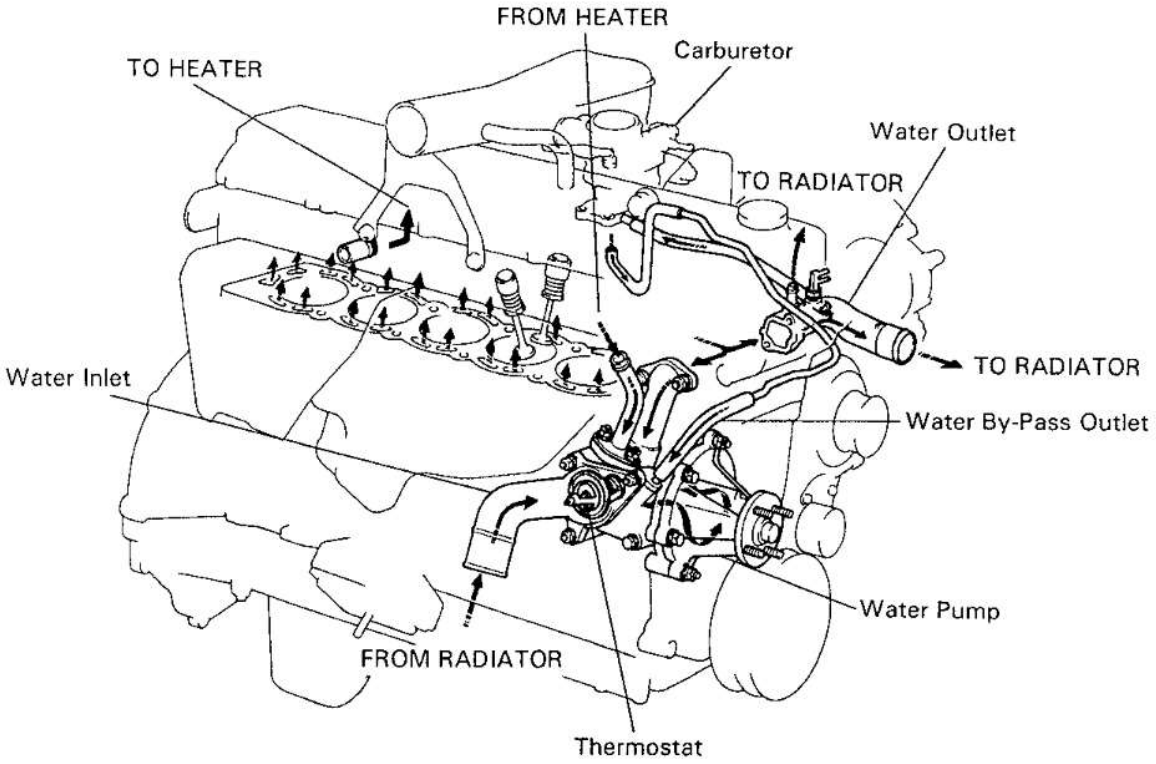

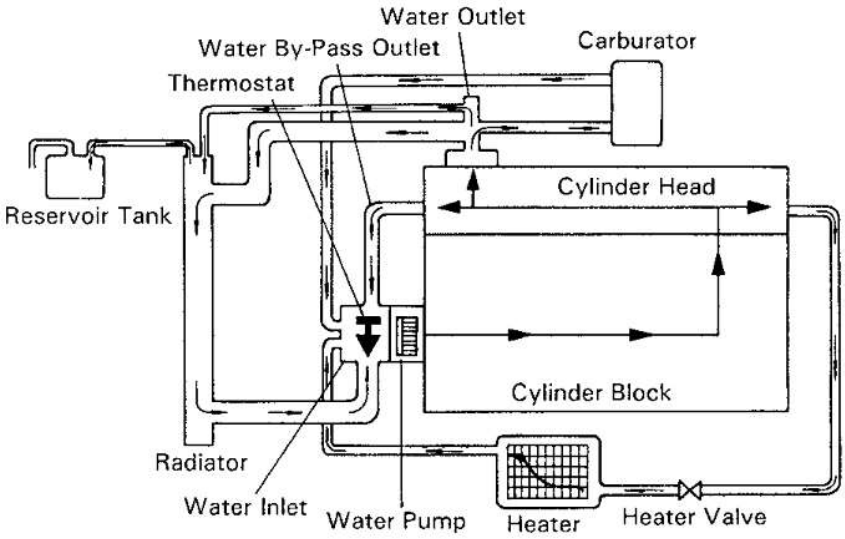

P05441
P05442

Z06727

The cooling system is composed of the water jacket (inside the cylinder block and cylinder head), radiator, water pump, thermostat, cooling fan, hoses and other components.
Coolant which is heated in the water jacket is pumped to the radiator, through which an cooling fan blows air to cool the coolant as it passes through. Coolant which has been cooled is then sent back to the engine by the water pump, where it cools the engine.
The water jacket is a network of channels in the shell of the cylinder block and cylinder head through which coolant passes. It is designed to provide adequate cooling of the cylinders and combustion chambers which become heated during engine operation.

RADIATOR

The radiator performs the function of cooling the coolant which has passed through the water jacket and become hot, and it is mounted in the front of the vehicle. The radiator consists of an upper tank and lower tank, and a core which connects the two tanks. The upper tank contains the inlet for coolant from the water jacket and the filler inlet. It also has a hose attached through which excess coolant or steam can flow. The lower tank has an outlet and drain cock for the coolant. The core contains many tubes through which coolant flows from the upper tank to the lower tank as well as to cooling fins which radiate heat away from the coolant in the tubes. The air sucked through the radiator by the cooling fan, as well as the wind generated by the vehicle's travel, passes through the radiator, cooling the coolant. An automatic transmission fluid cooler is built into the lower tank of the radiator. A cooling fan with fluid coupling is mounted behind the radiator to assist the flow of air through the radiator.

RADIATOR CAP

The radiator cap is a pressure type cap which seals the radiator, resulting in pressurization of the radiator as the coolant expands. The pressurization prevents the coolant from boiling even when the coolant temperature exceeds 100°C (212°F). A relief valve (pressurization valve) and a vacuum valve (negative pressure valve) are built into the radiator cap. The relief valve opens and lets steam escape through the overflow pipe when the pressure generated inside the cooling system exceeds the limit (coolant temperature: 110—120°C (230—248°F), pressure; 59—103 kPa (0.6—1.05 kgf/cm^2, 8.5—14.9 psi). The vacuum valve opens to alleviate the vacuum which develops in the cooling system after the engine is stopped and the coolant temperature drops. The valve's opening allows the coolant in the reservoir tank to return to the cooling system.

RESERVOIR TANK

The reservoir tank is used to catch coolant which overflows from the cooling system as a result of volumetric expansion when the coolant is heated. The coolant in the reservoir tank returns to the radiator when the coolant temperature drops, thus keeping the radiator full at all times and avoiding needless coolant loss.

Check the reservoir tank level to learn if the coolant needs to be replenished.

WATER PUMP

The water pump is used for forced circulation of coolant through the cooling system. It is mounted on the front of the cylinder block and driven by two drive belts.

THERMOSTAT

The thermostat has a wax type by—pass valve and is mounted in the water inlet housing. The thermostat includes a type of automatic valve operated by fluctuations in the coolant temperature. This valve closes when the coolant temperature drops, preventing the circulation of coolant through the engine and thus permitting the engine to warm up rapidly. The valve opens when the coolant temperature has risen, allowing the circulation of coolant. Wax inside the thermostat expands when heated and contracts when cooled. Heating the wax thus generates pressure which overpowers the force of the spring which keeps the valve closed, thus opening the valve. When the wax cools, its contraction causes the force of the spring to take effect once more, closing the valve. The thermostat in this engine operates at a temperature of 82°C (180°F).

PREPARATION

SST (SPECIAL SERVICE TOOLS)

EG18K-02

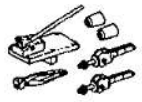	09230-00010 Radiator Service Tool Set	
	(09231-00060) No.3 Plug	This Part No. is a component part of 09230-01010

EG

EQUIPMENT

EG06U-02

Heater	Thermostat
Radiator cap tester	
Thermometer	Thermostat
Torque wrench	

COOLANT CAPACITY (Reference)

EG06V-06

Item	1FZ-FE (liters (US qts, Imp.qts)	1ZF-F (liters (US qts, Imp.qts)
w/o Heater	12.2 (12.9, 10.7)	12.5 (13.2, 11.0)
w/ Front Heater	13.2 (14.0, 11.6)	13.5 (14.2, 11.9)
w/ Front and Rear Heater	14.2 (15.0, 12.5)	14.5 (15.3, 12.8)

* Classification: Ethylene-glycol base.

EG

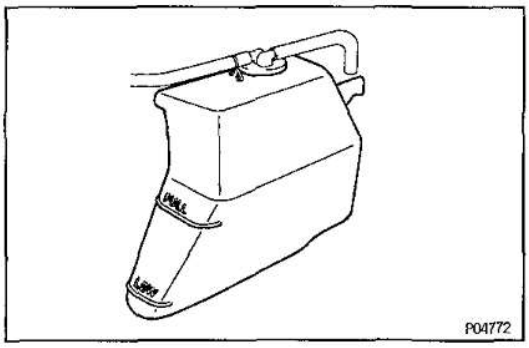

COOLANT CHECK AND REPLACEMENT

1. CHECK ENGINE COOLANT LEVEL AT RESERVOIR TANK EG1J0-02

The coolant level should be between the "LOW" and "FULL" lines.

If low, check for leaks and add coolant up to the "FULL" line.

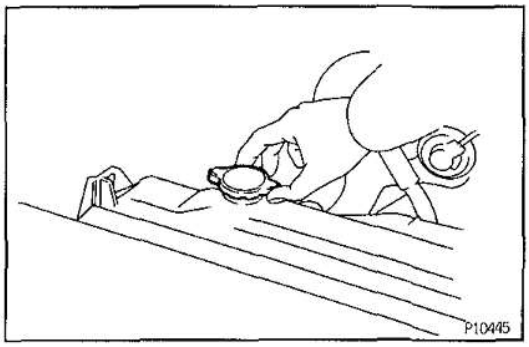

2. CHECK ENGINE COOLANT QUALITY

(a) Remove the radiator cap.

CAUTION: To avoid the danger of being burned, do not remove it while the engine and radiator are still hot, as fluid and steam can be blown out under pressure.

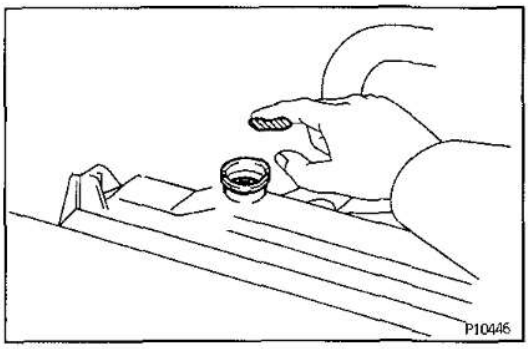

(b) There should not be any excessive deposits of rust or scales around the radiator cap or radiator filler hole, and the coolant should be free from oil.

If excessively dirty, replace the coolant.

(c) Reinstall the radiator cap.

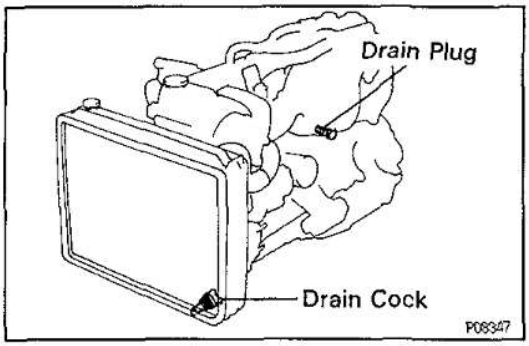

3. REPLACE ENGINE COOLANT

(a) Remove the radiator cap.

CAUTION: To avoid the danger of being burned, do not remove it while the engine and radiator are still hot, as fluid and steam can be blown out under pressure.

(b) Drain the coolant from the radiator drain cock and engine drain plug. (Engine drain plug at the left of engine block.)

(c) Close the drain cock and plug.

Torque (Engine drain plug):

29 N·m (300 kgf·cm, 22 ft·lbf)

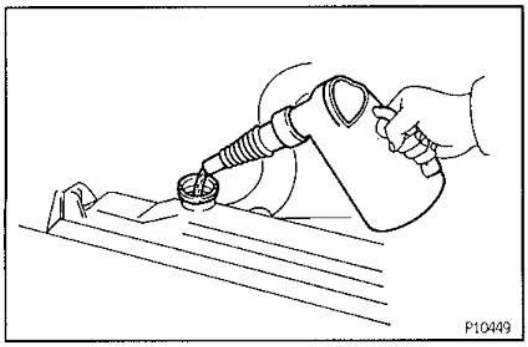

(d) Slowly fill the system with coolant.
- Use a good brand of ethylene—glycol base coolant and mix it according to the manufacturer's directions.
- Using coolant which includes more than 50 % ethylene—glycol (but not more than 70 %) is recommended.

NOTICE:
- **Do not use a alcohol type coolant.**
- **The coolant should be mixed with demineralized water or distilled water.**

Capacity (w/ Heater):

14.2 liters (15.0 US qts, 12.4 Imp. qts)

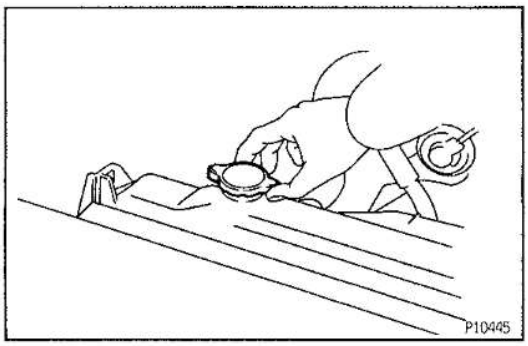

(e) Reinstall the radiator cap.
(f) Warm up the engine and check for leaks.
(g) Recheck the coolant level and refill as necessary.

EG

WATER PUMP

EG06X-06

COMPONENTS FOR REMOVAL AND INSTALLATION

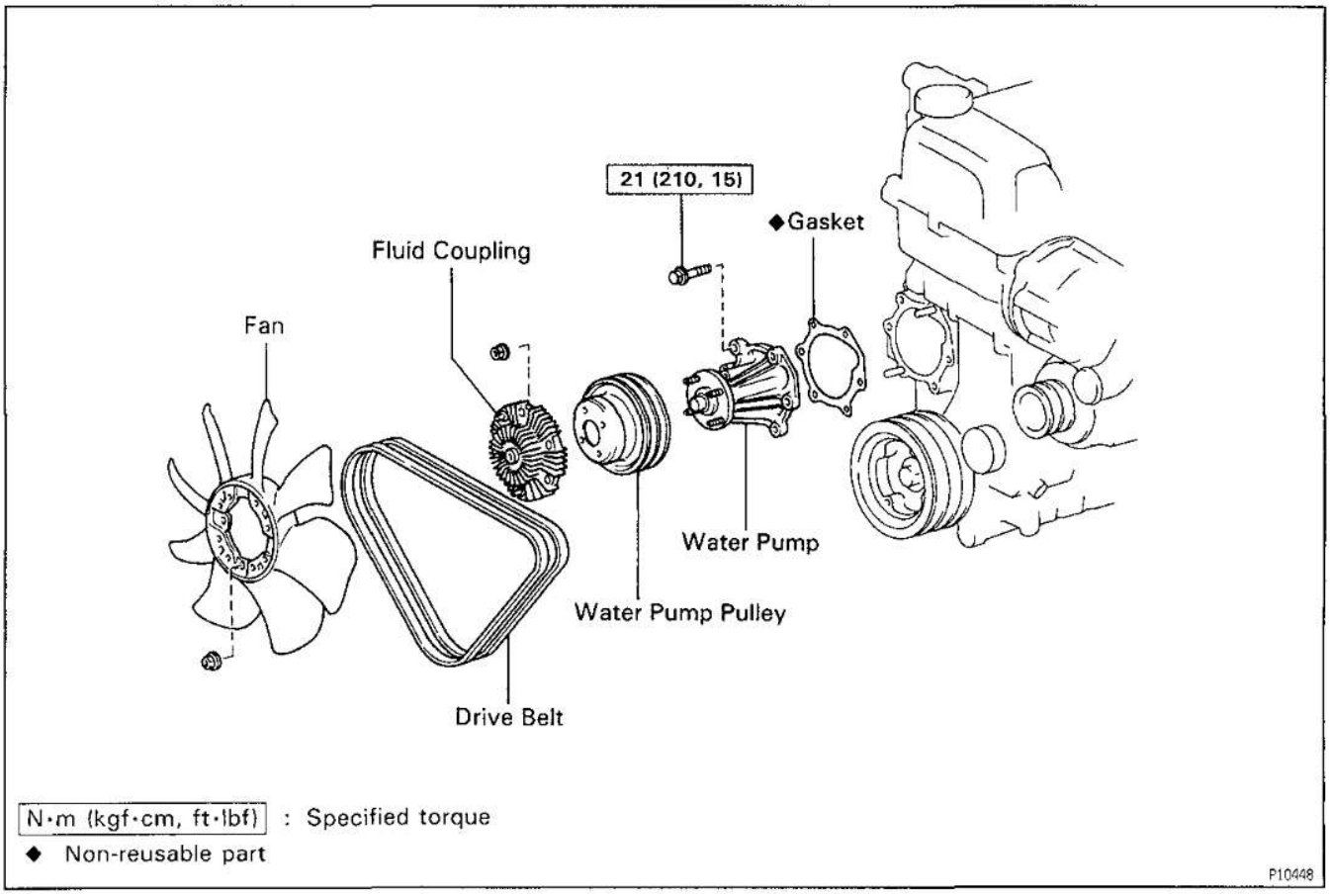

EG287-01

WATER PUMP REMOVAL

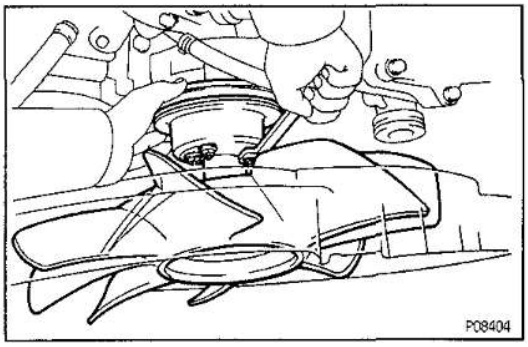

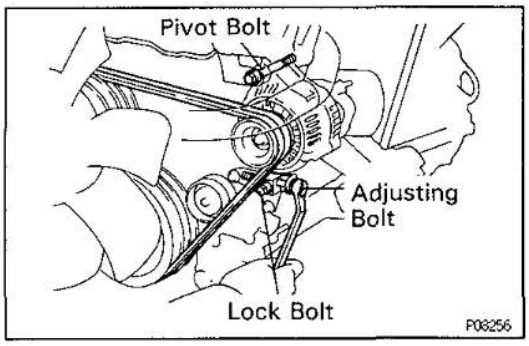

1. **DRAIN ENGINE COOLANT**
2. **DISCONNECT NO.3 WATER BY—PASS HOSE**
3. **DISCONNECT RADIATOR INLET HOSE**
4. **REMOVE DRIVE BELTS, FAN WITH FLUID COUPLING, WATER PUMP PULLEY AND FAN SHROUD**

(a) Stretch the belts and loosen the water pump pulley mounting nuts.

(b) Loosen the lock, pivot and adjusting bolts of the generator, and remove the drive belts.

(c) Remove the two bolts holding the fan shroud to the radiator.

(d) Remove the four water pump pulley mounting nuts.

(e) Pull out the fan with fluid coupling, water pump pulley and fan shroud.

(f) Remove the fan from the fluid coupling.

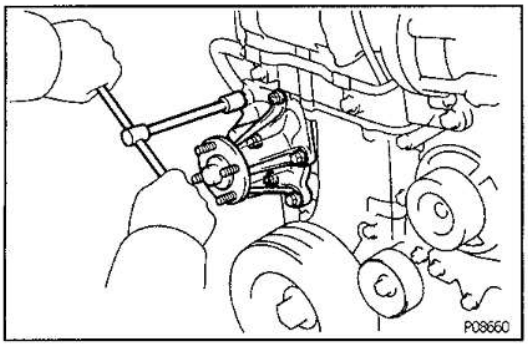

5. REMOVE WATER PUMP

Remove the four bolts, two nuts, water pump and gasket.

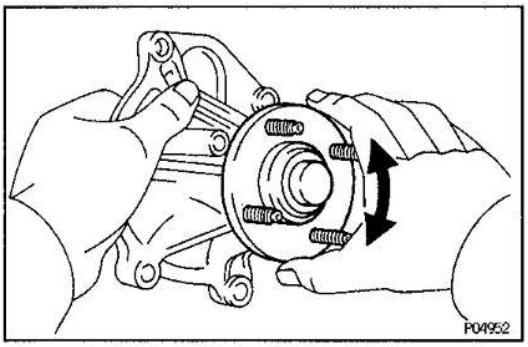

WATER PUMP COMPONENTS INSPECTION

EG0NG-01

1. INSPECT WATER PUMP

Turn the pulley seat and check that the water pump bearing is not rough or noisy.

If necessary, replace the water pump.

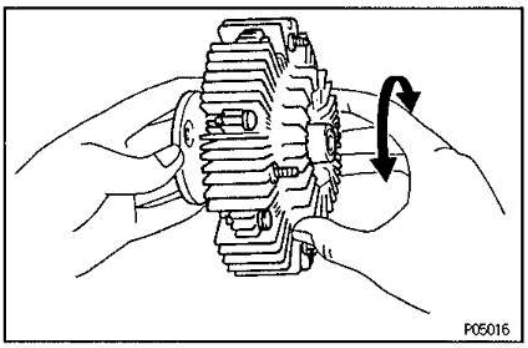

2. INSPECT FLUID COUPLING

Check the fluid coupling for damage and silicon oil leakage.

If necessary, replace the fluid coupling.

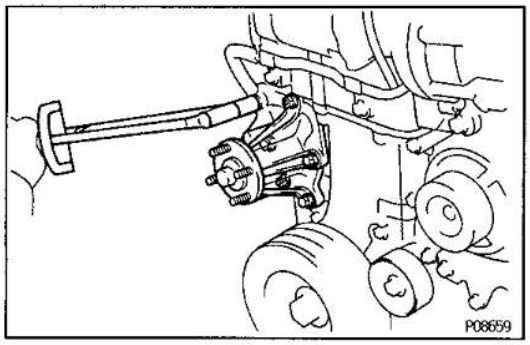

WATER PUMP INSTALLATION

EG2S8-01

(See Components for Removal and Installation)

1. INSTALL WATER PUMP

Install a new gasket and water pump with the four bolts and two nuts.

Torque: 21 N·m (210 kgf·cm, 15 ft·lbf)

2. INSTALL WATER PUMP PULLEY, FAN SHROUD, FAN WITH FLUID COUPLING AND DRIVE BELTS

(a) Install fan to the fluid coupling.

(b) Place the fan with fluid coupling, water pump pulley and fan shroud in position.

(c) Temporarily install the fan pulley mounting nuts.

(d) Install the fan shroud with the two bolts.

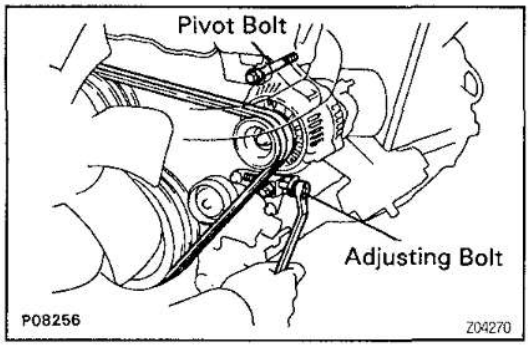

(e) Install the drive belts with the adjusting bolt and pivot bolt.

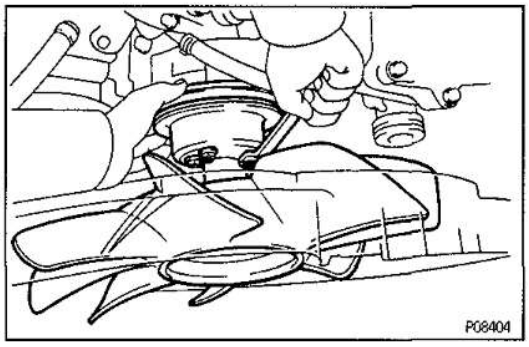

(f) Stretch the belts tight and tighten the four water pump pulley mounting nuts.

(g) Adjust the drive belts.
(See CH section)

3. CONNECT NO.3 WATER BY–PASS HOSE

4. CONNECT RADIATOR INLET HOSE

5. FILL WITH ENGINE COOLANT

6. START ENGINE AND CHECK FOR LEAKS

THERMOSTAT

EG19D-02

COMPONENTS FOR REMOVAL AND INSTALLATION

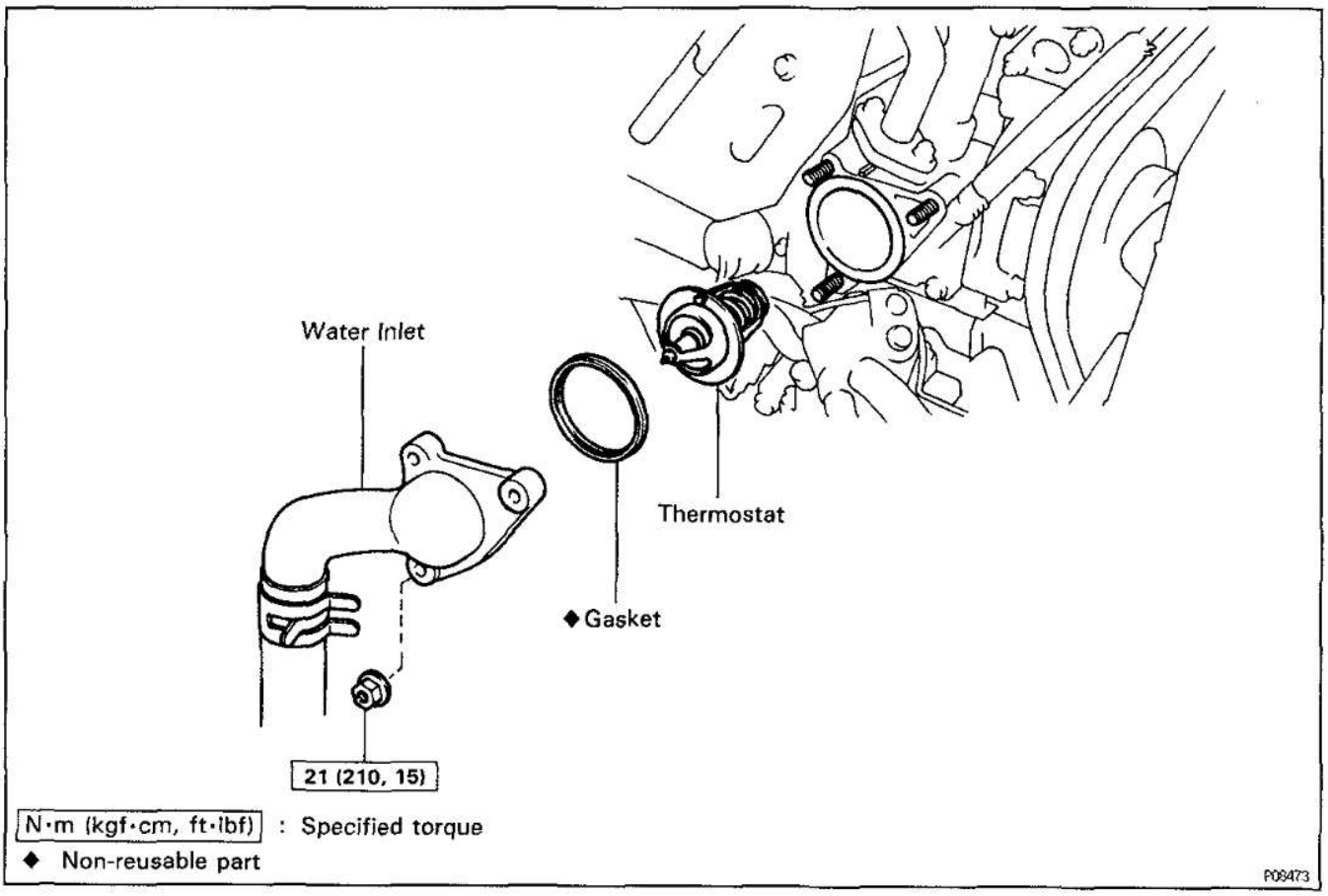

EG

THERMOSTAT REMOVAL

EG1J2-01

HINT: Removal of the thermostat would have an adverse effect, causing a lowering of cooling efficiency. Do not remove the thermostat, even if the engine tends to overheat.

1. DRAIN ENGINE COOLANT

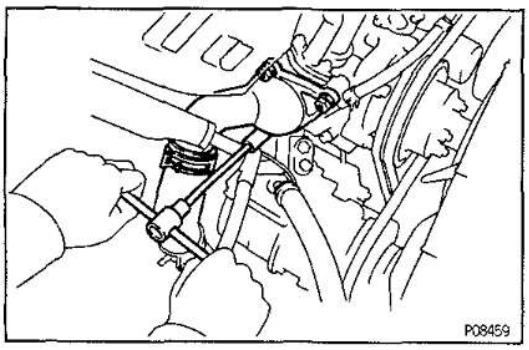

2. REMOVE WATER INLET AND THERMOSTAT

(a) Remove the three nuts holding the water inlet to the inlet housing, and disconnect the water inlet from the inlet housing.

(b) Remove the thermostat.

(c) Remove the gasket from the thermostat.

EG072-02

THERMOSTAT INSPECTION

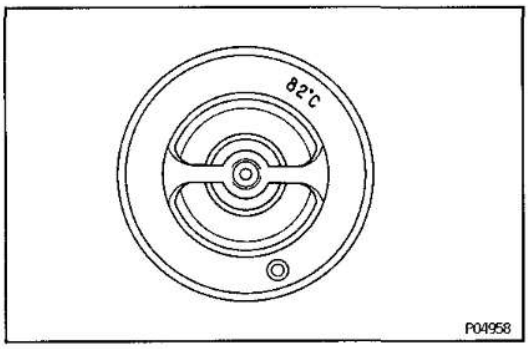

INSPECT THERMOSTAT

HINT: The thermostat is numbered with the valve opening temperature.

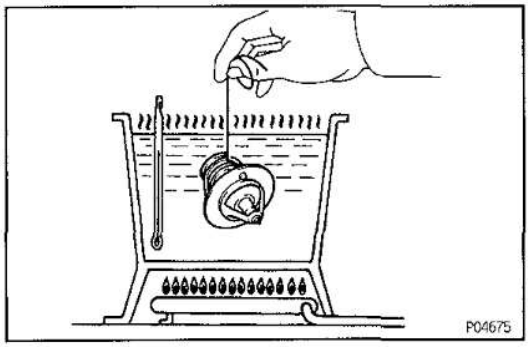

(a) Immerse the thermostat in water and gradually heat the water.

(b) Check the valve opening temperature.

Valve opening temperature:

80 — 84°C (176 — 183°F)

If the valve opening temperature is not as specified, replace the thermostat.

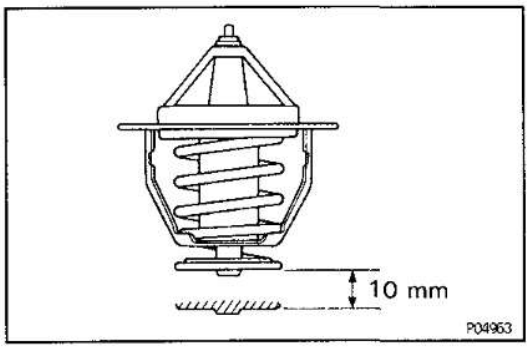

(c) Check the valve lift.

Valve lift:

10 mm (0.39 in.) or more at 95°C (203°F)

If the valve lift is not as specified, replace the thermostat.

(d) Check that the valve spring is tight when the thermostat is fully closed.

If not closed, replace the thermostat.

EG1J4-01

THERMOSTAT INSTALLATION

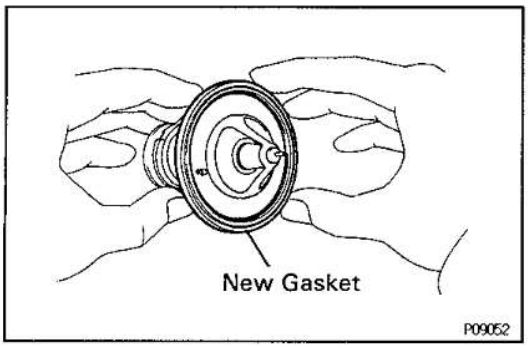

(See Components for Removal and Installation)

1. PLACE THERMOSTAT IN WATER PUMP

(a) Install a new gasket to the thermostat.

EG

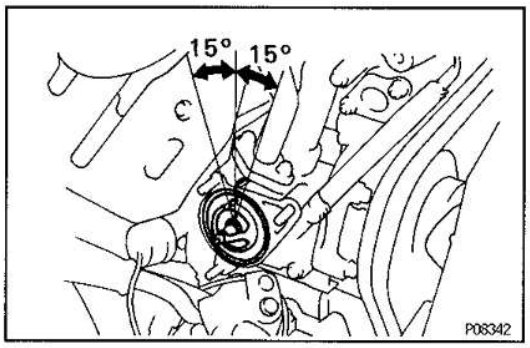

(b) Align the jiggle valve of the thermostat with the protrusion of the water inlet housing, and insert the thermostat in the water inlet housing.
HINT: The jiggle valve may be set within 15° of either side of the prescribed position.

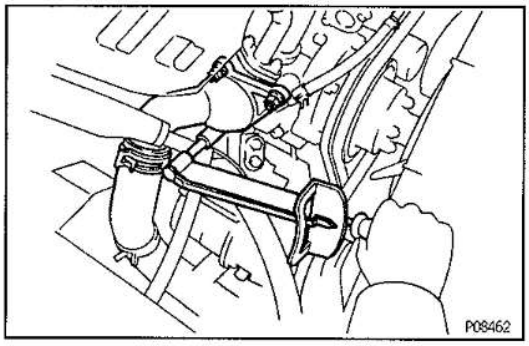

2. INSTALL WATER INLET

Install the water inlet with the three nuts.
Torque: 21 N·m (210 kgf·cm, 15 ft·lbf)

3. FILL WITH ENGINE COOLANT

4. START ENGINE AND CHECK FOR LEAKS

EG

RADIATOR

RADIATOR CLEANING

EG074-01

Using water or a steam cleaner, remove any mud and dirt from the radiator core.

NOTICE: If using a high pressure type cleaner, be careful not to deform the fins of the radiator core. If the cleaner nozzle pressure is 2,942 — 3,432 kPa (30 — 35 kgf/cm², 427 — 498 psi), keep a distance of at least 40 — 50 cm (15.75 — 19.69 in.) between the radiator core and cleaner nozzle.

RADIATOR INSPECTION

EG1J5-03

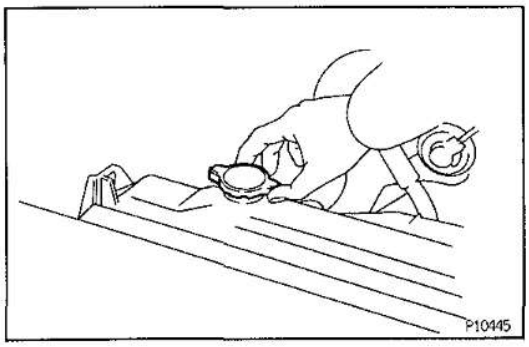

1. REMOVE RADIATOR TANK CAP

CAUTION: To avoid the danger of being burned, do not remove it while the engine and radiator are still hot, as fluid and steam can be blown out under pressure.

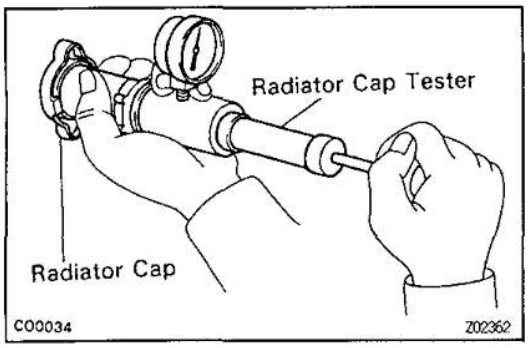

2. INSPECT RADIATOR CAP

Using a radiator cap tester, pump the tester and measure the relief valve opening pressure.

Standard opening pressure:

74 — 103 kPa

(0.75 — 1.05 kgf/cm², 10.7 — 14.9 psi)

Minimum opening pressure:

59 kPa (0.6 kgf/cm², 8.5 psi)

If the opening pressure is less than minimum, replace the radiator cap.

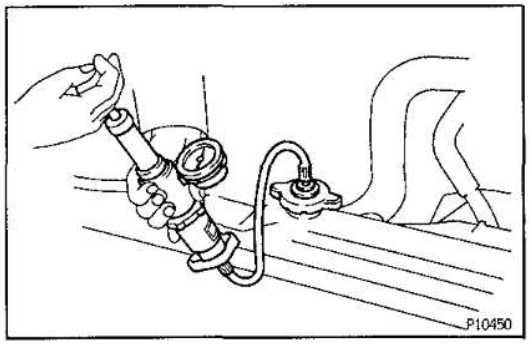

3. INSPECT COOLING SYSTEM FOR LEAKS

(a) Fill the radiator with coolant and attach a radiator cap tester.

(b) Warm up the engine.

(c) Pump it to 118 kPa (1.2 kgf/cm², 17.1 psi), and check that the pressure does not drop.

If the pressure drops, check the hoses, radiator or water pump for leaks. If no external leaks are found, check the heater core, cylinder block and head.

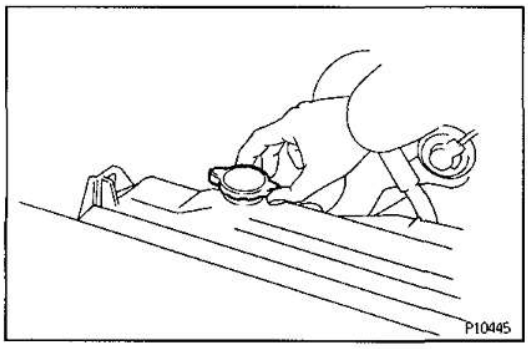

4. REINSTALL RADIATOR CAP

SERVICE SPECIFICATIONS

SERVICE DATA

EG07L-02

Thermostat	Valve opening temperature	80 — 84°C (176 — 183°F)
	Valve lift at 95°C (203°F)	10 mm (0.39 in.) or more
Radiator cap	Relief valve opening pressure (STD)	74 — 103 kPa (0.75 — 1.05 kgf/cm², 10.7 — 14.9 psi)
	Relief valve opening pressure (Limit)	59 kPa (0.6 kgf/cm², 8.5 psi)

EG

TORQUE SPECIFICATIONS

EG07M-09

Part tightened	N·m	kgf·cm	ft·lbf
Cylinder block x Drain plug	29	300	22
Water pump x Cylinder block	21	210	15
Water inlet x Water inlet housing	21	210	15
Radiator support x Radiator tank	13	130	9
Radiator x Bracket	12	120	9
Radiator mounting bolt	18	185	13
Radiator mounting nut	12	120	9
Radiator lower tank x Nut (for Oil cooler)	10	100	7
Radiator lower tank x Pipe (for Oil cooler)	15	150	11

LUBRICATION SYSTEM

DESCRIPTION

EG1JD-01

A fully pressurized, fully filtered lubrication system has been adopted for this engine.

OPERATION

EG

EG1JE-03

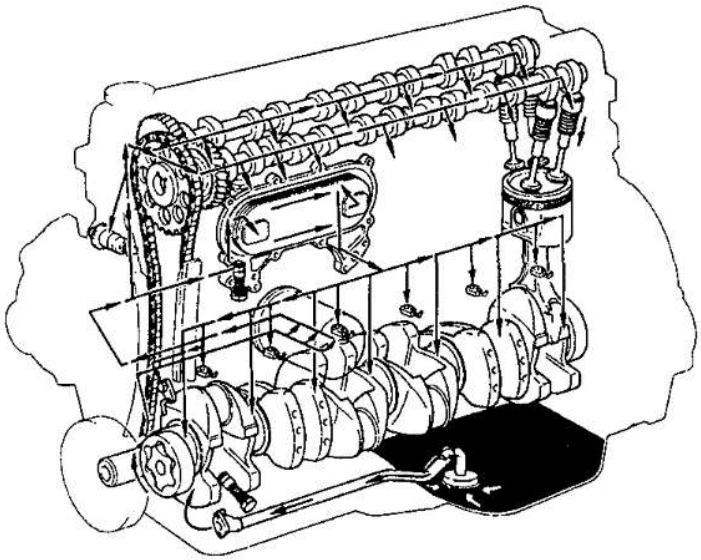

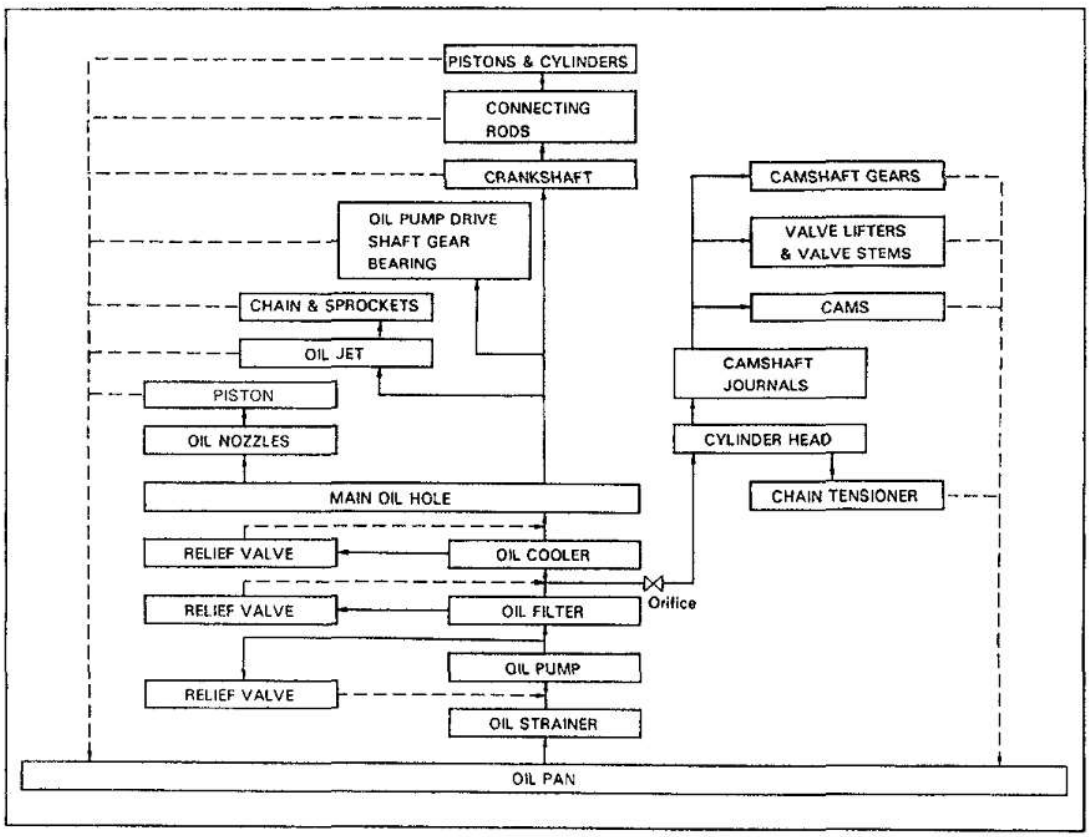

Z04444

A pressure feeding lubrication system has been adopted to supply oil to the moving parts of this engine. The lubrication system consists of an oil pan, oil pump, oil filter and other external parts which supply oil to the moving parts in the engine block. The oil circuit is shown in the illustration at the top of the previous page. Oil from the oil pan is pumped up by the oil pump. After it passes through the oil filter, it is through the various oil holes in the crankshaft and cylinder block. After passing through the cylinder block and performing its lubricating function, the oil is returned by gravity to the oil pan. A dipstick on the center left side of the cylinder block is provided to check the oil level.

OIL PUMP

The oil pump pumps up oil from the oil pan and feeds it under pressure to the various parts of the engine. An oil strainer is mounted in front of the inlet to the oil pump to remove impurities. The oil pump itself is a trochoid type pump, inside of which is a drive rotor and a driven rotor. When the drive rotor rotates, the driven rotor rotates in the same direction, and since the axis of the drive rotor shaft is different from the center of the driven rotor, the space between the two rotors is changed as they rotate. Oil is drawn in when the space widens and is discharged when the space becomes narrow.

OIL PRESSURE REGULATOR (RELIEF VALVE)

At high engine speeds, the engine oil supplied by the oil pump exceeds the capacity of the engine to utilize it. For that reason, the oil pressure regulator works to prevent an oversupply of oil. During normal oil supply, a coil spring and valve keep the by—pass closed, but when too much oil is being fed, the pressure becomes extremely high, overpowering the force of the spring and opening the valves. This allows the excess oil to flow through the valve and return to the oil pump inlet.

OIL FILTER

The oil filter is a full flow type filter with a relief valve built into the paper filter element. Particles of metal from wear, airborne dirt, carbon and other impurities can get into the oil during use and could cause accelerated wear or seizing it allowed to circulate through the engine. The oil filter, integrated into the oil line, removes these impurities as the oil passes through it. The filter is mounted outside the engine to simplify replacement of the filter element. A relief valve is also included ahead of the filter element to relieve the high oil pressure in case the filter element becomes clogged with impurities. The relief valve opens when the oil pressure overpowers the force of the spring. Oil passing through the relief valve by—passes the oil filter and flows directly into the main oil hole in the engine.

PREPARATION

SST (SPECIAL SERVICE TOOLS)

EG077F-08

	09032-00100 Oil Pan Seal Cutter	
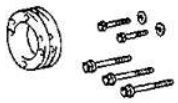	09213-58012 Crankshaft Pulley Hoolding Tool	
	09213-60017 Crankshaft Pulley & Gear Puller Set	
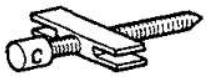	(09213-00020) Body With Bolt	
	(09213-00030) Handle	
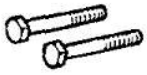	(09213-00060) Bolt Set	
	09223-46011 Crankshaft Front Oil Seal Replacer	
	09228-44011 Oil Filter Wrench	
	09316-60010 Transmission & Transfer Bearing Replacer	
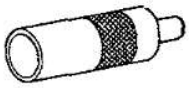	(09316-00010) Replacer Pipe	Crankshaft front oil seal
	(09316-00050) Replacer "D"	Crankshaft front oil seal
	09330-00021 Companion Flange Holding Tool	Crankshaft pulley
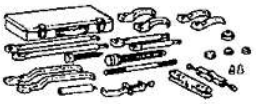	09950-20017 Universal Puller	

EG

RECOMMENDED TOOLS

EG07Q-03

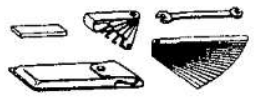	09200-00010 Engine Adjust Kit	

EQUIPMENT

EG07R-04

EG

Oil pressure gauge	
Precision straight edge	Oil pump
Torque wrench	

LUBRICANT

EG07S-07

Item	Capacity	Classification
Engine oil		
Dry fill	8.0 liters (8.5 US qts, 7.0 Imp. qts)	API grade SG or better.
Drain and refill		If it is impossible to get SG or better, you
w/ Oil filter change	7.4 liters (7.8 US qts, 6.5 Imp. qts)	may use SF grade.
w/o Oil filter change	6.9 liters (7.3 US qts, 6.1 Imp. qts)	

SSM (SPECIAL SERVICE MATERIALS)

EG07T-02

08826-00080	Seal packing or equivalent	Oil pump Oil pan (Timing chain cover)
08833-00080	Adhesive 1344, THREE BOND 1344, LOCTITE 242 or equivalent	Oil pressure switch

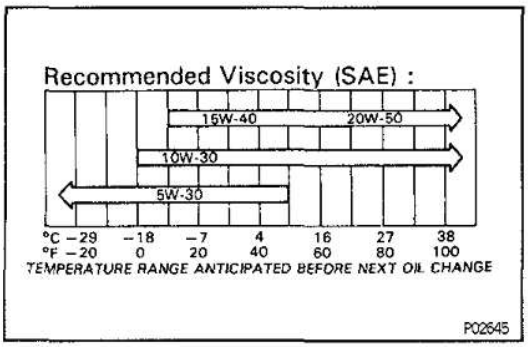

OIL PRESSURE CHECK

EG0KM-03

1. CHECK ENGINE OIL QUALITY

Check the oil for deterioration, entry of water, discoloring or thinning.

If the quality is poor, replace the oil.

Oil grade:

API grade SG or better, recommended viscosity is as shown.

If it is impossible to get SG or better, you may use SF grade.

EG

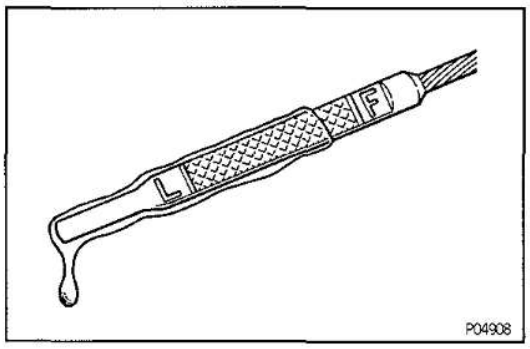

2. CHECK ENGINE OIL LEVEL

The oil level should be between the "L" and "F" marks on the dipstick.

If low, check for leakage and add oil up to "F" mark.

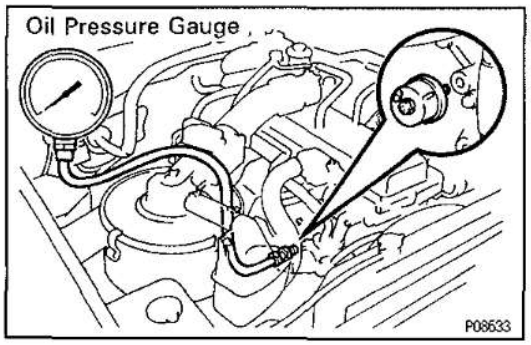

3. REMOVE OIL PRESSURE SWITCH, AND INSTALL OIL PRESSURE GAUGE

4. WARM UP ENGINE

Allow the engine to warm up to normal operating temperature.

5. CHECK OIL PRESSURE

Oil pressure:

At idle

29 kPa (0.3 kgf/cm², 4.3 psi) or more

At 3,000 rpm

245 — 490 kPa (2.5 — 5.0 kgf/cm², 36 — 71 psi)

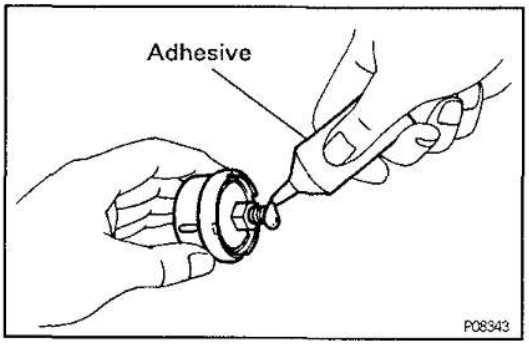

6. REMOVE OIL PRESSURE GAUGE AND REINSTALL OIL PRESSURE SWITCH

(a) Remove the oil pressure gauge.

(b) Apply adhesive to two or three threads of the oil pressure switch.

Adhesive:

Part No. 08833—00080, THREE BOND 1344, LOCTITE 242 or equivalent

(c) Reinstall the oil pressure switch.

7. START ENGINE AND CHECK FOR LEAKS

OIL AND FILTER REPLACEMENT

EG07V-03

CAUTION:

- **Prolonged and repeated contact with mineral oil will result in the removal of natural fats from the skin, leading to dryness, irritation and dermatitis. In addition, used engine oil contains potentially harmful contaminants which may cause skin cancer.**
- **Care should be taken, therefore, when changing engine, oil to minimize the frequency and length of time your skin is exposed to used engine oil. Protective clothing and gloves that cannot be penetrated by oil should be worn. The skin should be thoroughthly washed with soap and water, or use water — less hand cleaner, to remove any used engine oil. Do not use gasoline, thinners, or solvents.**
- **In order to preserve the environment, used oil and used oil filter must be disposed of only at designated disposal sites.**

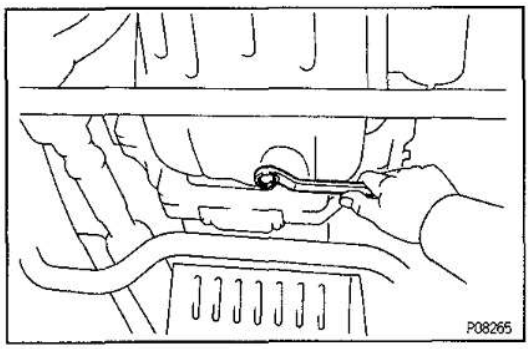

1. DRAIN ENGINE OIL

(a) Remove the oil filler cap.

(b) Remove the oil drain plug, and drain the oil into a container.

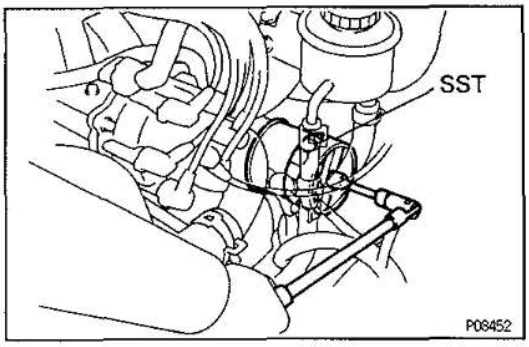

2. REPLACE OIL FILTER

(a) Using SST, remove the oil filter.
SST 09228—44011

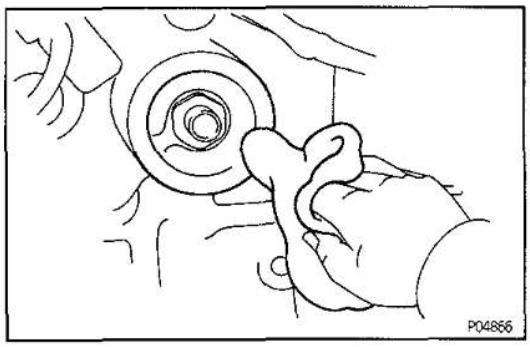

(b) Check and clean the oil filter installation surface.

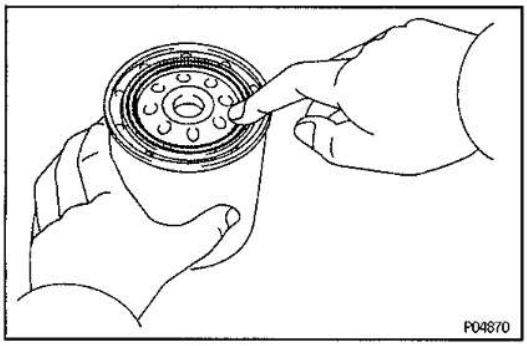

(c) Apply clean engine oil to the gasket of a new oil filter.

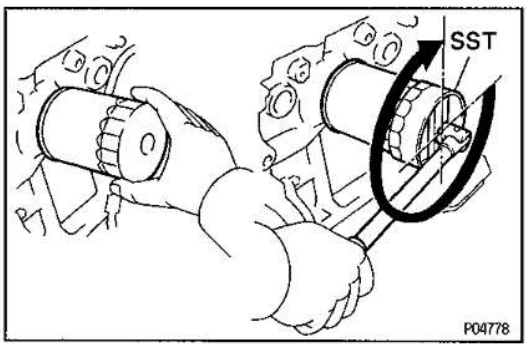

(d) Lightly screw the oil filter into place, and tighten it until the gasket contacts the seat.

(e) Using SST, tighten it an additional 3/4 turn.
SST 09228—44011

3. FILL WITH ENGINE OIL

(a) Clean and install the oil drain plug with a new gasket.
Torque: 25 N·m (250 kgf·cm, 18 ft·lbf)

(b) Fill with new engine oil.
Oil grade:
See step 1 on page EG—365
Capacity:
Drain and refill
w/ Oil filter change
7.4 liters (7.8 US qts, 6.5 Imp. qts)
w/o Oil filter change
6.9 liters (7.3 US qts, 6.1 Imp. qts)
Dry fill
8.0 liters (8.5 US qts, 7.0 Imp. qts)

(c) Reinstall the oil filler cap.

4. START ENGINE AND CHECK FOR LEAKS

5. RECHECK ENGINE OIL LEVEL

OIL PUMP

COMPONENTS FOR REMOVAL AND INSTALLATION

EG07X-07

EG

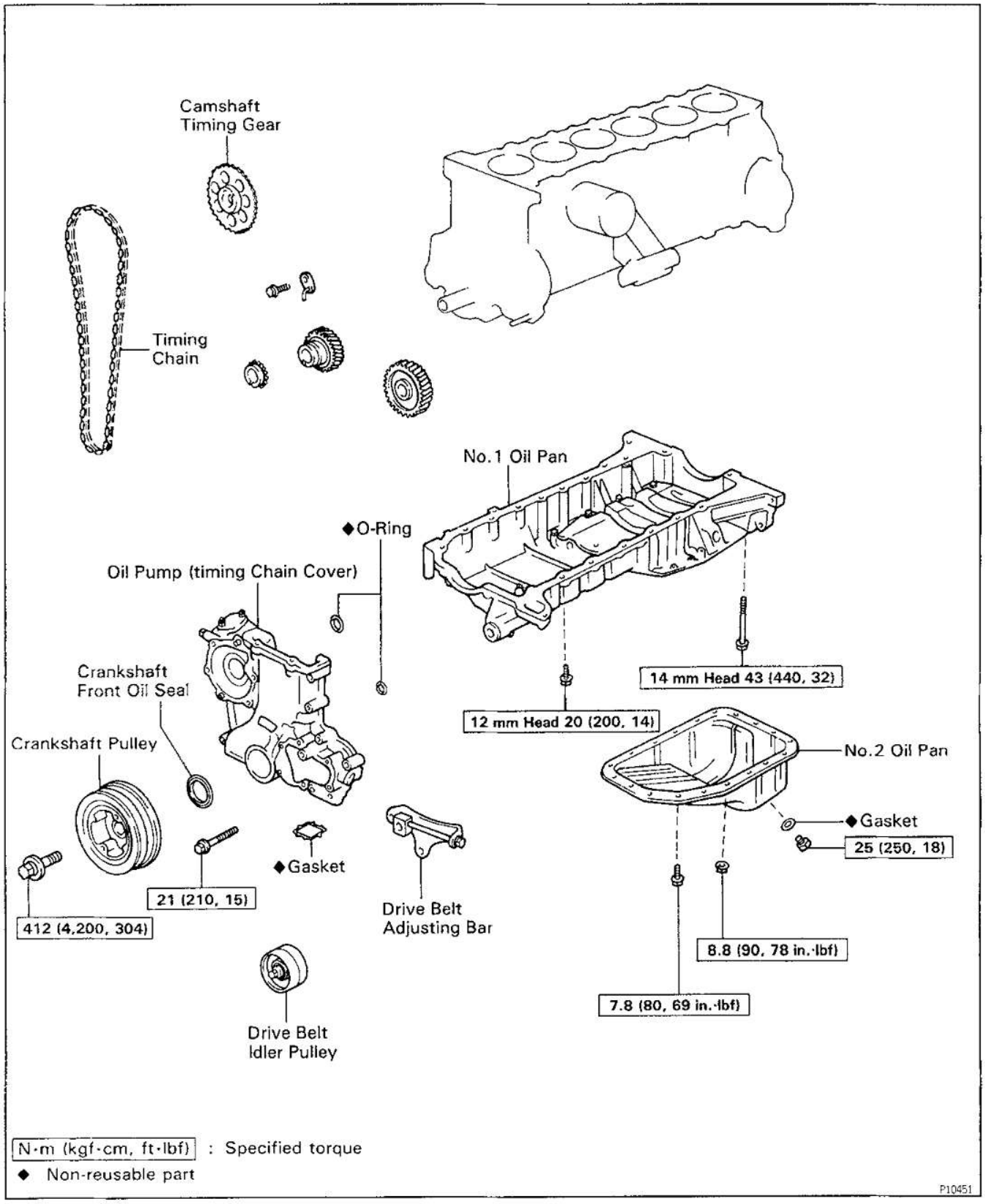

EG281-01

OIL PUMP REMOVAL

HINT: When repairing the oil pump, the oil pan and strainer should be removed and cleaned.

1. DRAIN ENGINE OIL

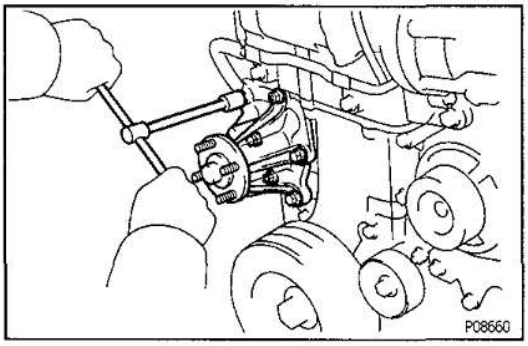

2. REMOVE WATER PUMP
Remove the four bolts, two nuts, water pump and gasket.

3. REMOVE CYLINDER HEAD
(See page EG−38 or 89)

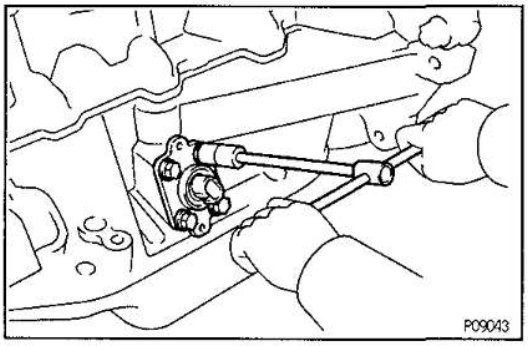

4. (Europe)
REMOVE OIL LEVEL SENSOR
(a) Remove the four bolts and level sensor.
(b) Remove the gasket from the level sensor.

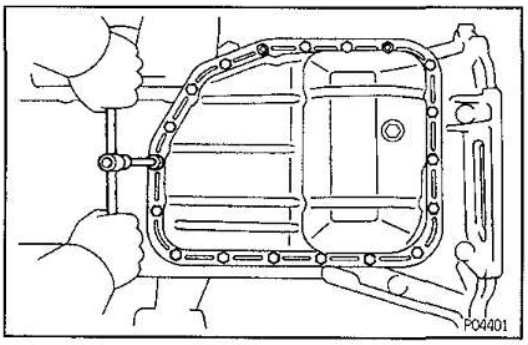

5. REMOVE NO.2 OIL PAN
(a) Remove the 17 mounting bolts and two nuts.

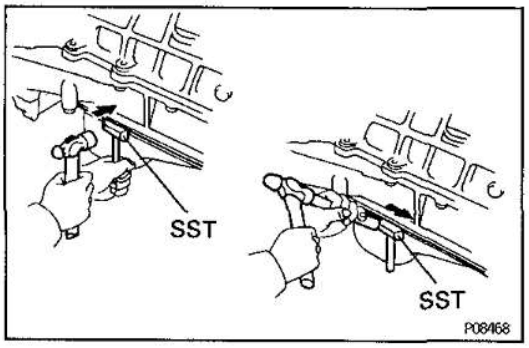

(b) Insert the blade of SST between the No.1 and No.2 oil pans, cut off applied sealer and remove the No.2 oil pan.
SST 09032−00100
NOTICE:
- **Be careful not to damage the No.2 oil pan contact surface of the No.1 oil pan.**
- **Be careful not to damage the oil pan flange.**

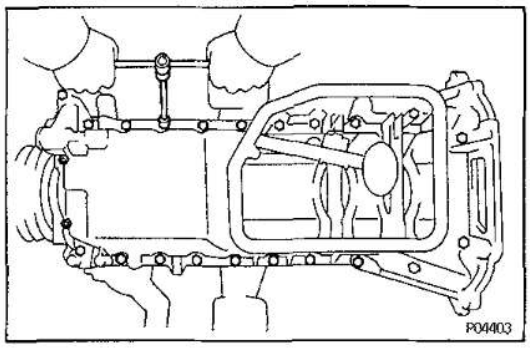

6. REMOVE NO.1 OIL PAN

(a) Remove the 21 mounting bolts and two nuts.

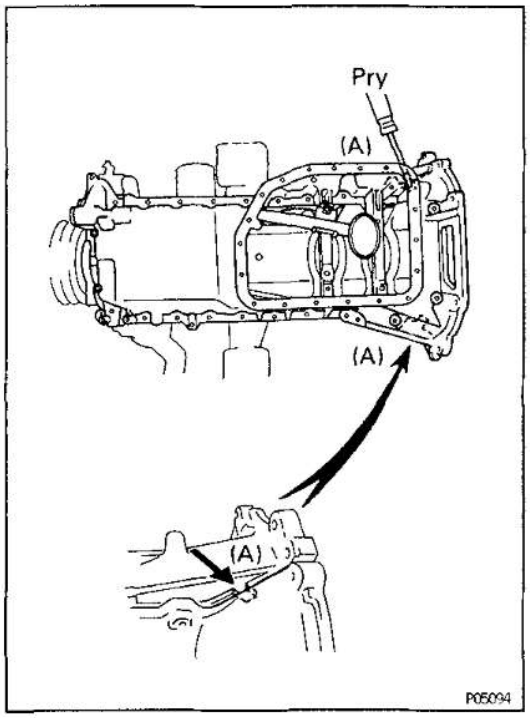

(b) Remove the No.1 oil pan by prying the portions (A) between the cylinder block and No.1 oil pan with a screwdriver.

NOTICE: Be careful not to damage the contact surfaces the cylinder block and No.1 oil pan.

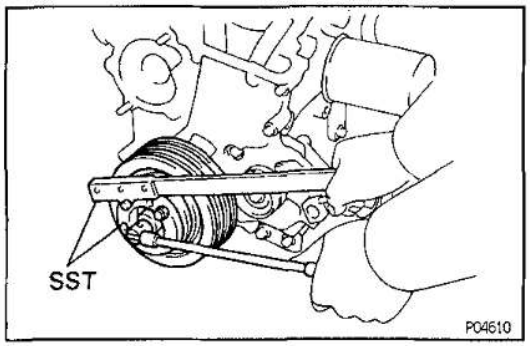

7. REMOVE CRANKSHAFT PULLEY

(a) Using SST, remove the pulley bolt.
SST 09213−58012, 09330−00021

(b) Remove the crankshaft pulley.

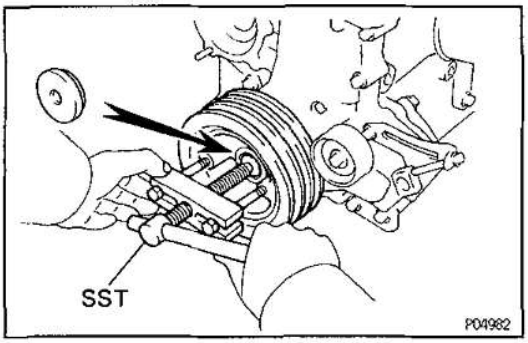

HINT: If necessary, remove the pulley with SST.
SST 09213−60017 (09213−00020, 09213−00030, 09213−00060), 09950−20017

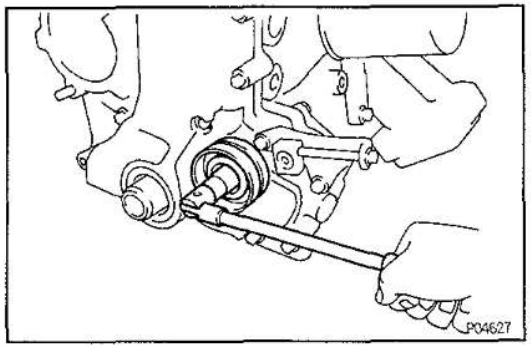

8. REMOVE DRIVE BELT IDLER PULLEY

Remove the bolt and idler pulley.

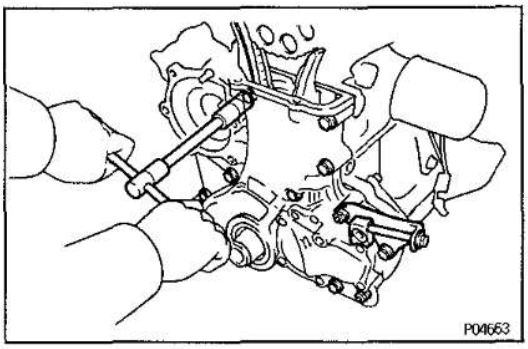

9. REMOVE OIL PUMP (TIMING CHAIN COVER)

(a) Remove the nine mounting bolts, two mounting nuts and drive belt adjusting bar.

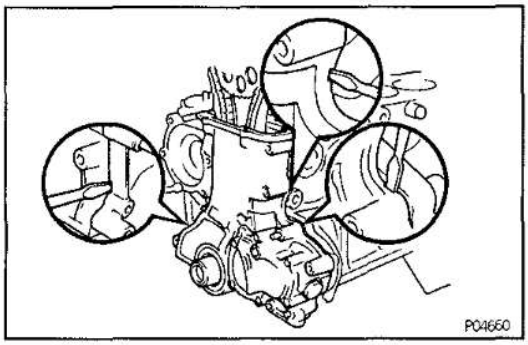

(b) Remove the oil pump by prying the portions betweeen the cylinder block and oil pump with a screwdriver.
NOTICE: Be careful not to damage the contact surfaces of the cylinder block and oil pump.

(c) Remove the O—rings from the oil pump.

(d) Remove the gasket from the oil pump.

EG

COMPONENTS FOR DISASSEMBLY AND ASSEMBLY

EG1JG-01

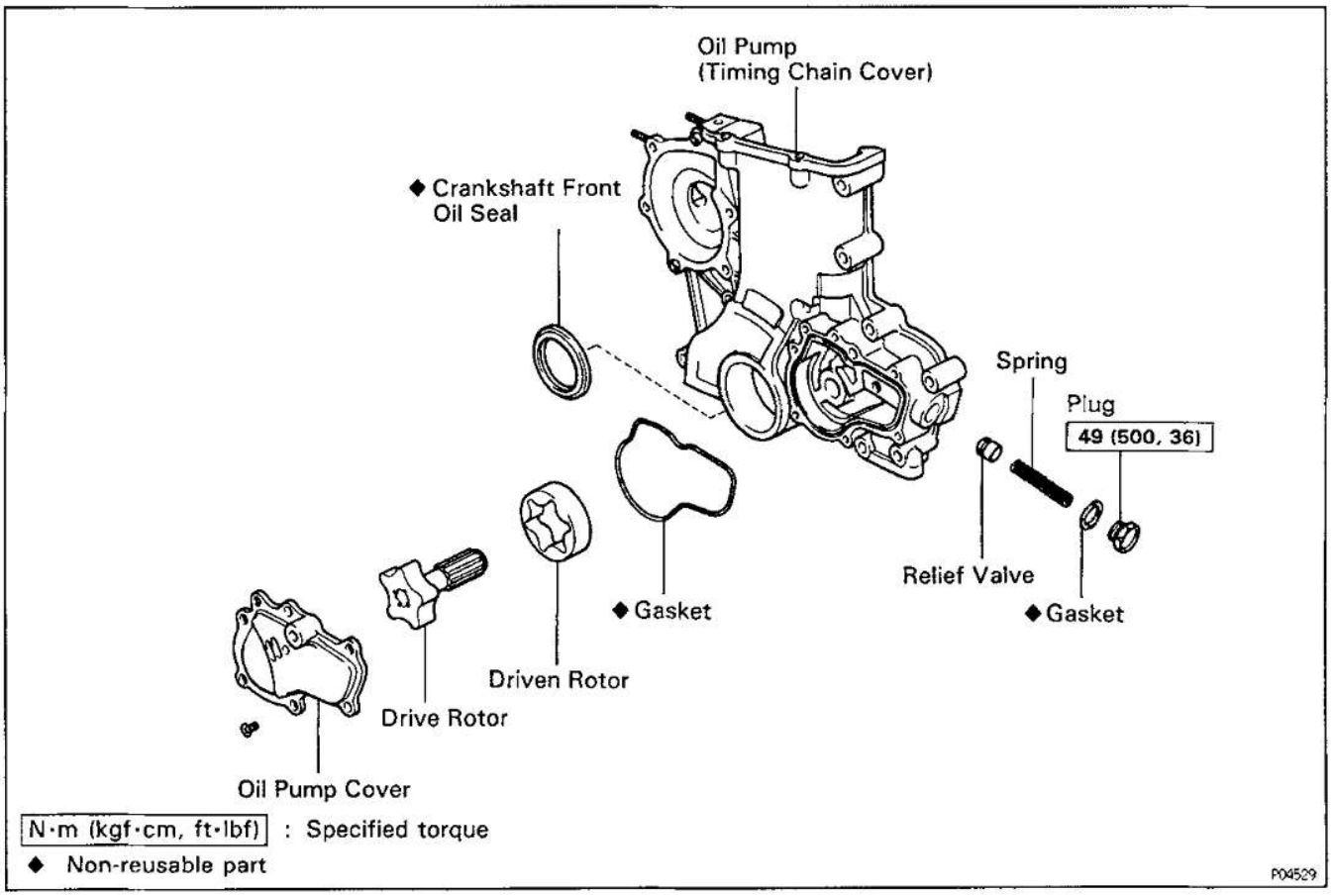

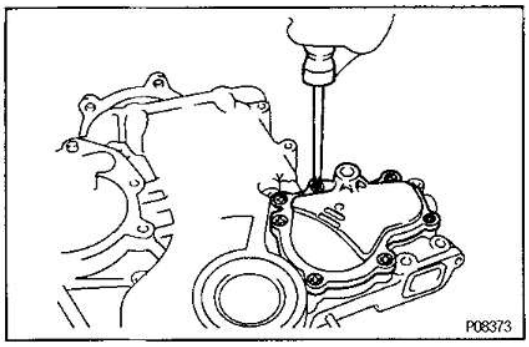

OIL PUMP DISASSEMBLY

EC0NP-02

1. **REMOVE DRIVE AND DRIVEN ROTORS**
   Remove the seven screws, pump cover, drive rotor, driven rotor and gasket.

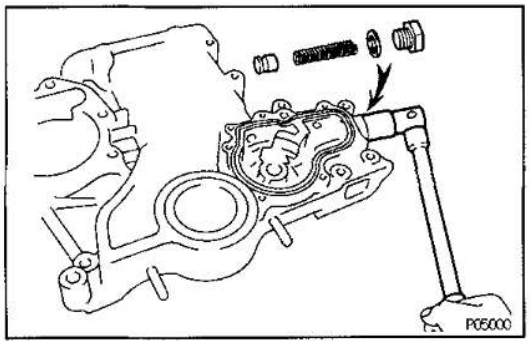

2. **REMOVE RELIEF VALVE**
   Remove the plug, gasket, spring and relief valve.

EC098-03

OIL PUMP INSPECTION

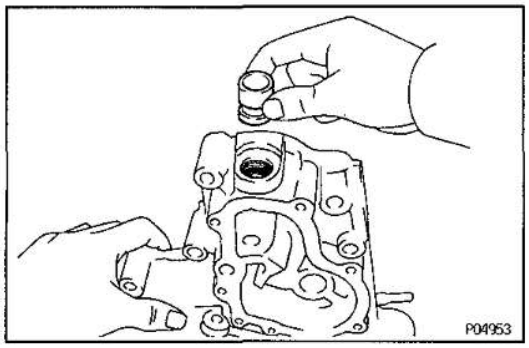

1. INSPECT RELIEF VALVE

Coat the valve with engine oil and check that it falls smoothly into the valve hole by its own weight.

If it does not, replace the relief valve. If necessary, replace the oil pump assembly.

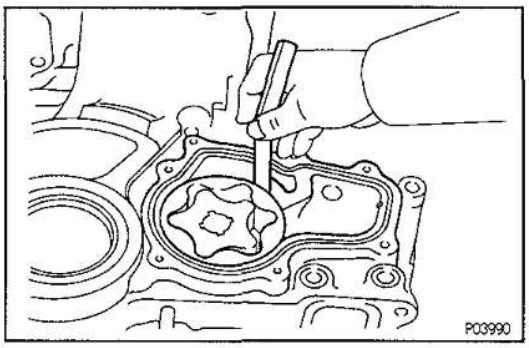

2. INSPECT DRIVE AND DRIVEN ROTORS

A. Inspect rotor body clearance

Using a thickness gauge, measure the clearance between the driven rotor and body.

Standard body clearance:

0.100 – 0.170 mm (0.0039 – 0.0067 in.)

Maximum body clearance:

0.30 mm (0.0118 in.)

If the body clearance is greater than maximum, replace the rotors as a set. If necessary, replace the oil pump assembly.

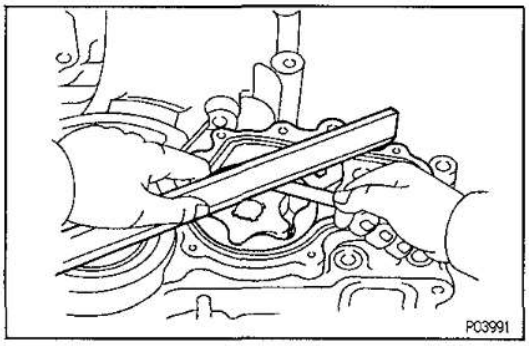

B. Inspect rotor side clearance

Using a thickness gauge and precision straight edge, measure the clearance between the rotors and precision straight edge.

Standard side clearance:

0.030 – 0.090 mm (0.0012 – 0.0035 in.)

Maximum side clearance:

0.15 mm (0.0059 in.)

If the side clearance is greater than maximum, replace the rotors as a set. If necessary, replace the oil pump assembly.

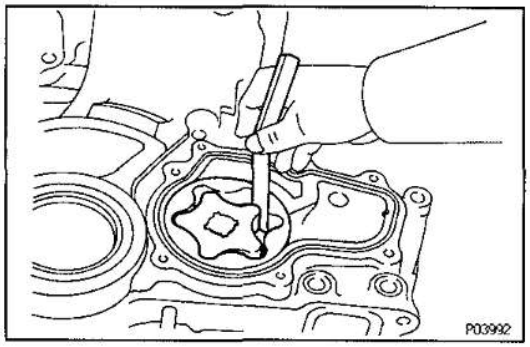

C. Inspect rotor tip clearance

Using a thickness gauge, measure the clearance between the drive and driven rotor tips.

Standard tip clearance:

0.030 – 0.160 mm (0.0012 – 0.0063 in.)

Maximum tip clearance:

0.25 mm (0.0098 in.)

If the tip clearance is greater than maximum, replace the rotors as a set.

EG081-04

CRANKSHAFT FRONT OIL SEAL REPLACEMENT

HINT: There are two methods (A and B) to replace the oil seal which are as follows:

EG

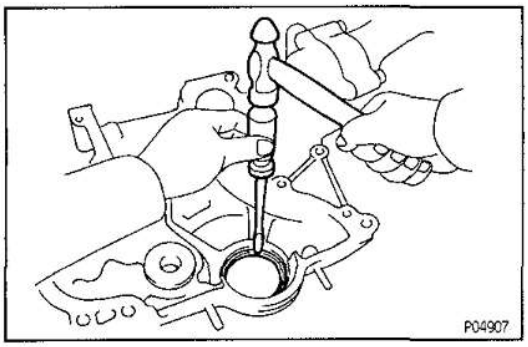

REPLACE CRANKSHAFT FRONT OIL SEAL

A. If oil pump is removed from cylinder block:

(a) Using a screwdriver and a hammer, tap out the oil seal.

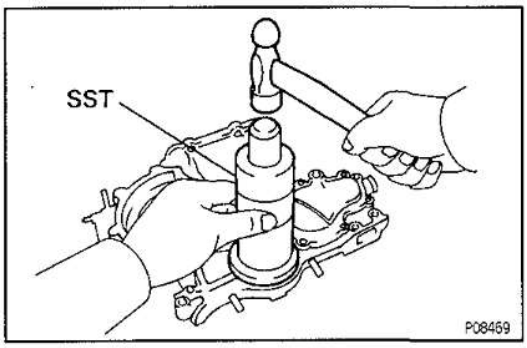

(b) Using SST and a hammer, tap in a new oil seal until its surface is flush with the oil pump case edge.
SST 09316—60010 (09316—00010, 09316—00050)

(c) Apply MP grease to the oil seal lip.

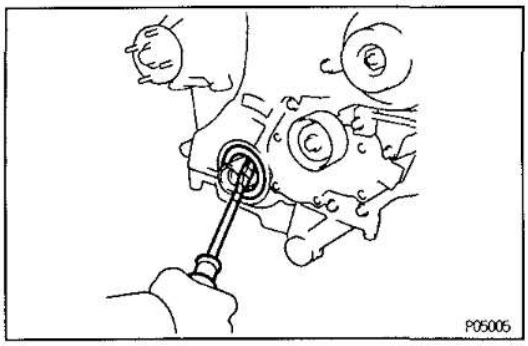

B. If oil pump is installed to the cylinder block:

(a) Using a screwdriver, pry out the oil seal.
NOTICE: Be careful not to damage the crankshaft. Tape the screwdriver tip.

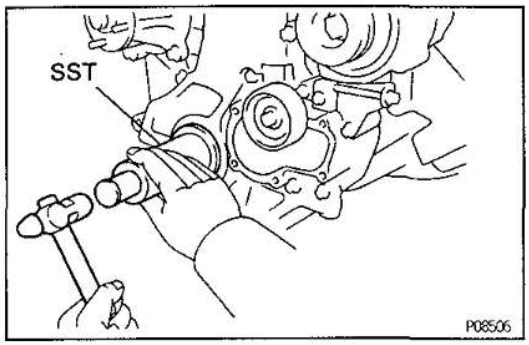

(b) Apply MP grease to a new oil seal lip.

(c) Using SST and a hammer, tap in the oil seal until its surface is flush with the oil pump case edge.
SST 09316—60010 (09316—00010, 09316—00050)

EG0NO-03

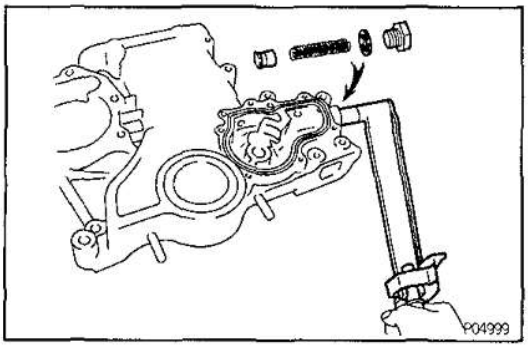

OIL PUMP ASSEMBLY

(See Components for Removal and Installation)

1. INSTALL RELIEF VALVE

(a) Insert the relief valve and spring into the pump body hole.

(b) Install a new gasket to the plug.

(c) Install and torque the plug.
Torque: 49 N·m (500 kgf·cm, 36 ft·lbf)

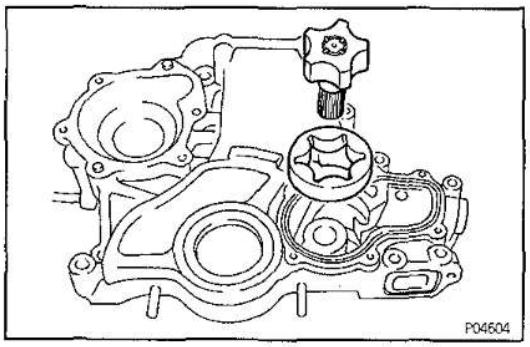

2. INSTALL DRIVE AND DRIVEN ROTORS

(a) Place the drive and driven rotors into the pump body.
NOTICE: Apply engine oil to drive and driven rotors.

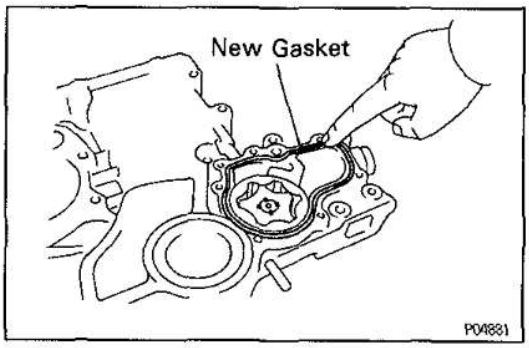

(b) Place a new gasket on the pump body.

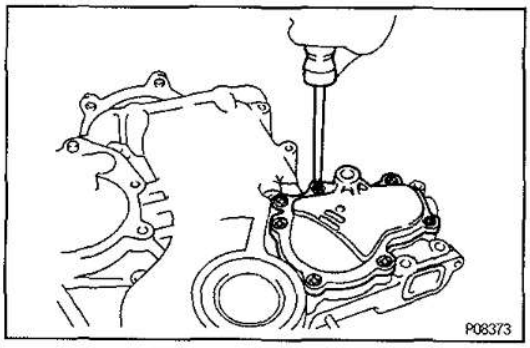

(c) Install the pump cover with the seven screws.

EG

EG283-01

OIL PUMP INSTALLATION

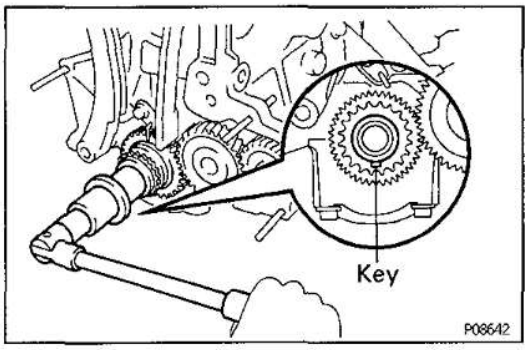

(See Components for Removal and Installation)

1. SET CRANKSHAFT

Turn the crankshaft until the set key on the crankshaft facing downward.

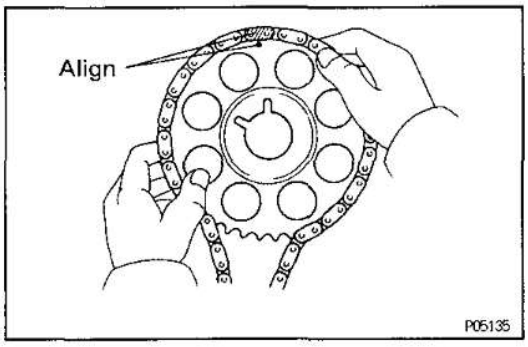

2. INSTALL TIMING CHAIN AND CAMSHAFT TIMING GEAR

(a) Install the timing chain on the camshaft timing gear with the bright link aligned with the timing mark on the camshaft timing gear.

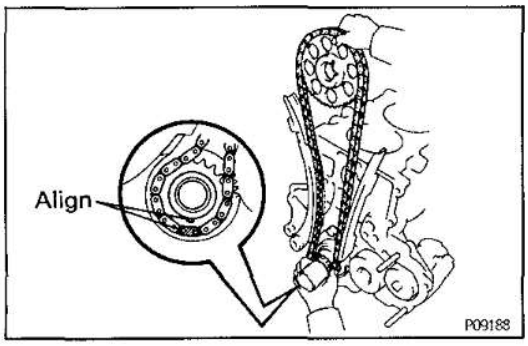

(b) Install the timing chain on the crankshaft timing gear with the other bright link aligned with the timing mark on the crankshaft timing gear.

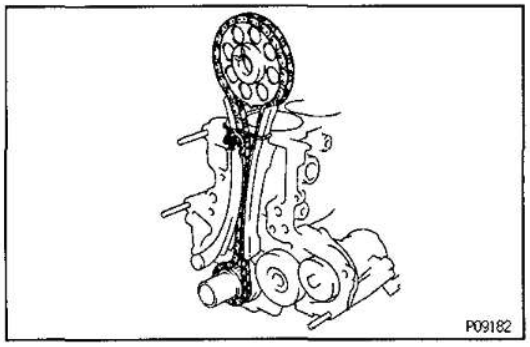

(c) Tie the timing chain with a cord as shown in the illustration and make sure it doesn't come loose.

3. INSTALL OIL PUMP (TIMING CHAIN COVER)

(a) Remove any old packing (FIPG) material and be careful not to drop an oil on the contact surfaces of the oil pump and cylinder block.

- Using a razor blade and gasket scraper, remove all the old packing (FIPG) material from the gasket surfaces and sealing grooves.
- Thoroughly clean all components to remove all the loose material.

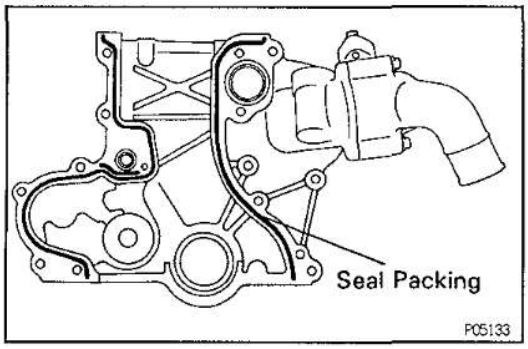

- Using a non—residue solvent, clean both sealing surfaces.

(b) Apply seal packing to the oil pump as shown in the illustration.

Seal packing:

Part No. 08826—00080 or equivalent

- Install a nozzle that has been cut to a 2 — 3 mm (0.08 — 0.12 in.) opening.

HINT: Avoid applying an excessive amount to the surface.

- Parts must be assembled within 5 minutes of application. Otherwise the material must be removed and reapplied.
- Immediately remove nozzle from the tube and reinstall cap.

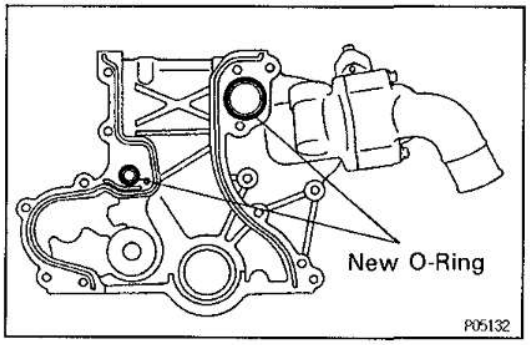

(c) Place two new O—ring in position on the oil pump.

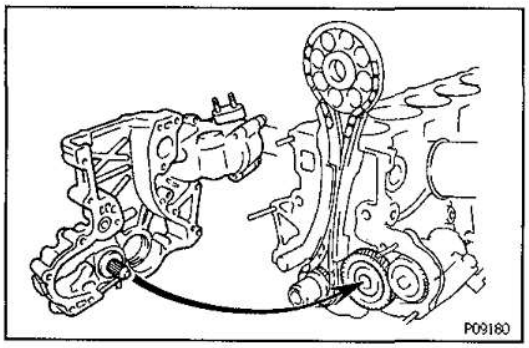

(d) Engage the gear of the oil pump drive rotor with the gear of the oil pump drive gear, and slide the oil pump.

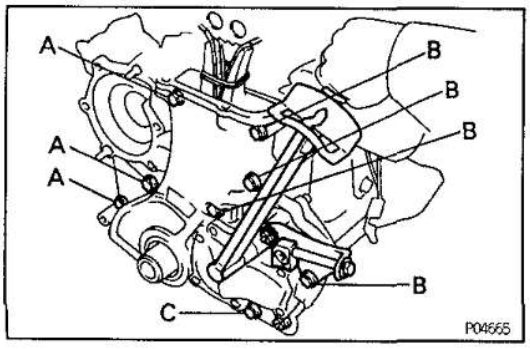

(e) Install the oil pump and drive belt adjusting bar with the nine bolts and two nuts.

Torque: 21 N·m (210 kgf·cm, 15 ft·lbf)

HINT: Each bolt length is indicated in the illustration.

A 30 mm (1.18 in.)
B 50 mm (1.97 in.)
C 60 mm (2.38 in.)

(f) Remove the cord from the chain.

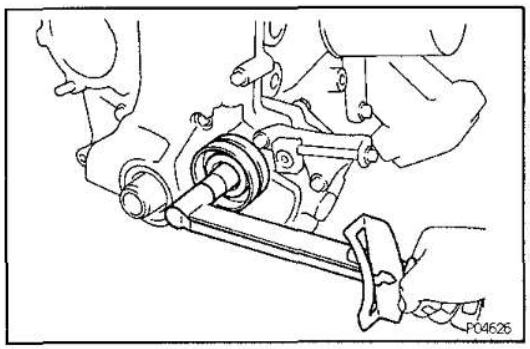

4. INSTALL DRIVE BELT IDLER PULLEY

Install the pulley with the bolt.

Torque: 43 N·m (440 kgf·cm, 32 ft·lbf)

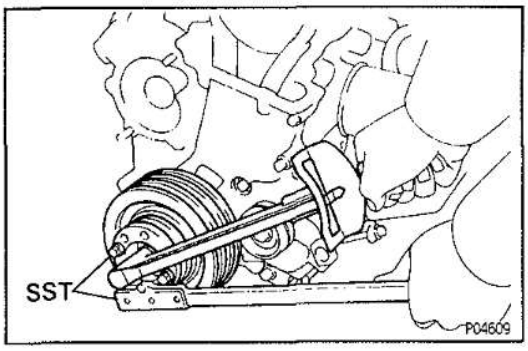

5. INSTALL CRANKSHAFT PULLEY

(a) Align the pulley set key with the key groove of the pulley, and slide on the pulley.

(b) Using SST, install and torque the pulley bolt.
SST 09213—58012, 09330—00021
Torque: 412 N·m (4,200 kgf·cm, 304 ft·lbf)

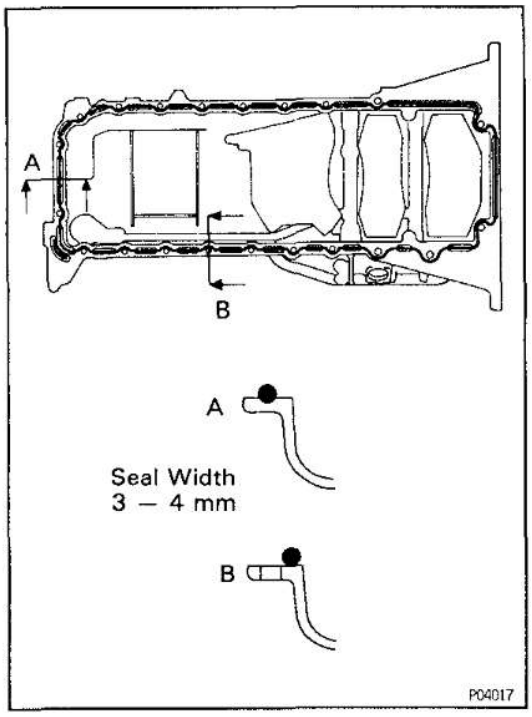

6. INSTALL NO.1 OIL PAN

(a) Remove any old packing (FIPG) material and be careful not to drop any oil on the contact surfaces of the oil pan, oil pump and cylinder block.
- Using a razor blade and gasket scraper, remove all the old packing (FIPG) material from the gasket surfaces and sealing grooves.
- Thoroughly clean all components to remove all the loose material.
- Using a non—residue solvent, clean both sealing surfaces.

(b) Apply seal packing to the No.1 oil pan as shown in the illustration.
Seal packing:
Part No. 08826—00080 or equivalent
- Install a nozzle that has been cut to a 3 — 4 mm (0.12 — 0.16 in.) opening.

HINT: Avoid applying an excessive amount to the surface.
- Parts must be assembled within 5 minutes of application. Otherwise the material must be removed and reapplied.
- Immediately remove nozzle from the tube and reinstall cap.

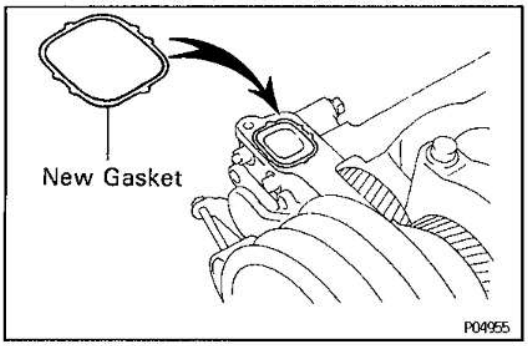

(c) Install a new gasket in position.

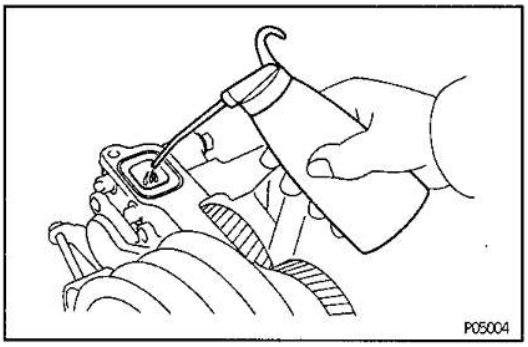

(d) Pour in approximately 15 cm^3 (0.9 cu in.) of engine oil in position.

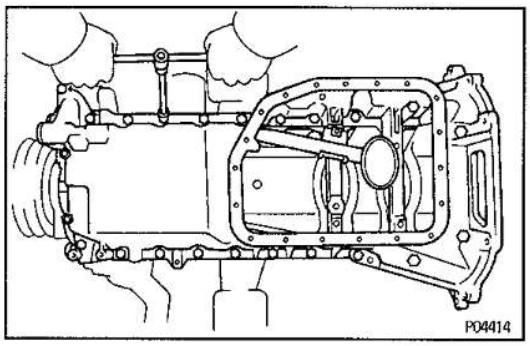

(e) Install the No.1 oil pan with the 21 bolts and two nuts.
14 mm head
Torque: 43 N·m (440 kgf·cm, 32 ft·lbf)
12 mm head
Torque: 20 N·m (200 kgf·cm, 14 ft·lbf)

7. INSTALL NO.2 OIL PAN

(a) Remove any old packing (FIPG) material and be careful not to drop any oil on the contact surface of the No.1 oil pan.
- Using a razor blade and gasket scraper, remove all the old packing (FIPG) material from the gasket surfaces and sealing grooves.
- Thoroughly clean all components to remove all the loose material.
- Using a non—residue solvent, clean both sealing surfaces.

(b) Apply seal packing to the No.2 oil pan as shown in the illustration.
NOTICE: Do not use a solvent which will affect the painted surfaces.
Seal packing:
Part No. 08826—00080 or equivalent

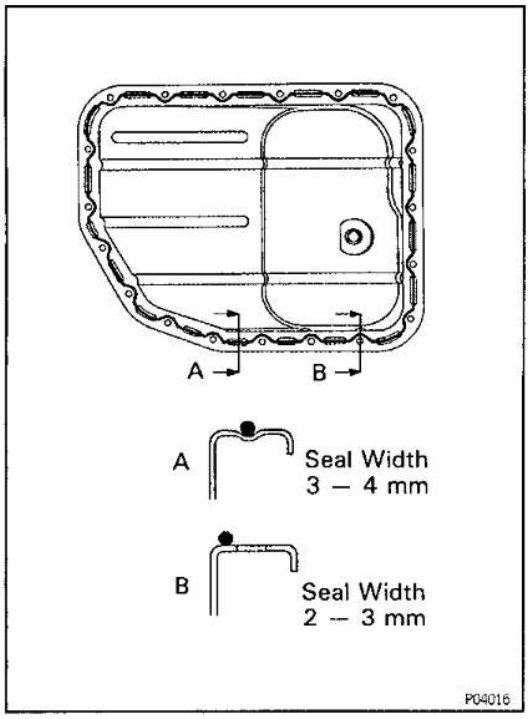

- Install a nozzle that has been cut to a 2 — 3 mm (0.08 — 0.12 in.) opening or 3 — 4 mm (0.012 — 0.016 in.) opening.

HINT: Avoid applying an excessive amount to the surface.

- Parts must be assembled within 5 minutes of application. Otherwise the material must be removed and reapplied.
- Immediately remove nozzle from the tube and reinstall cap.

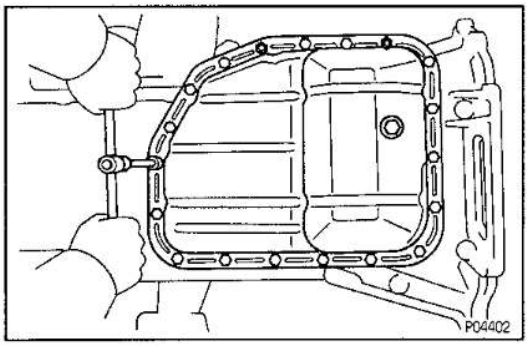

(c) Install the No.2 oil pan with the 17 bolts and two nuts.
Torque: 7.8 N·m (80 kgf·cm, 69 in.·lbf) for Bolt
Torque: 8.8 N·m (90 kgf·cm, 78 in.·lbf) for Nut

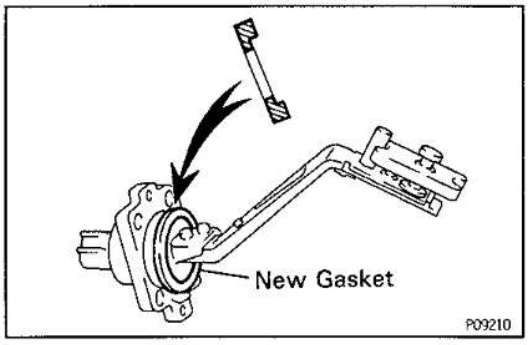

8. (Europe)
INSTALL OIL LEVEL SENSOR

(a) Install a new gasket to the level sensor.

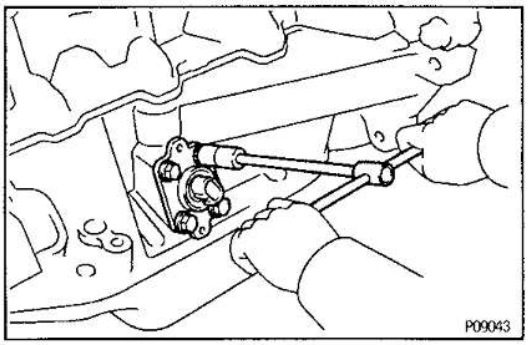

(b) Install the level sensor with the four bolts.
Torque: 5.4 N·m (55 kgf·cm, 48 in.·lbf)

9. INSTALL CYLINDER HEAD
(See page EG—70 or 106)

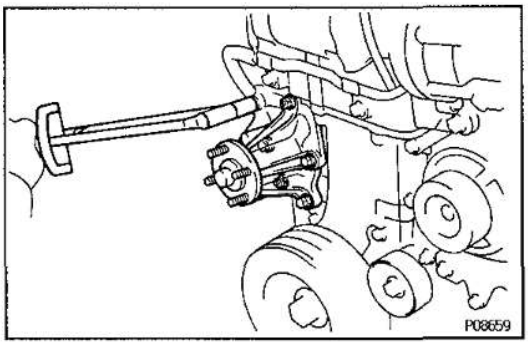

10. INSTALL WATER PUMP
Install a new gasket and water pump with the four bolts and two nuts.
Torque: 21 N·m (210 kgf·cm, 15 ft·lbf)

OIL COOLER

COMPONENTS FOR REMOVAL AND INSTALLATION

EG0PT-03

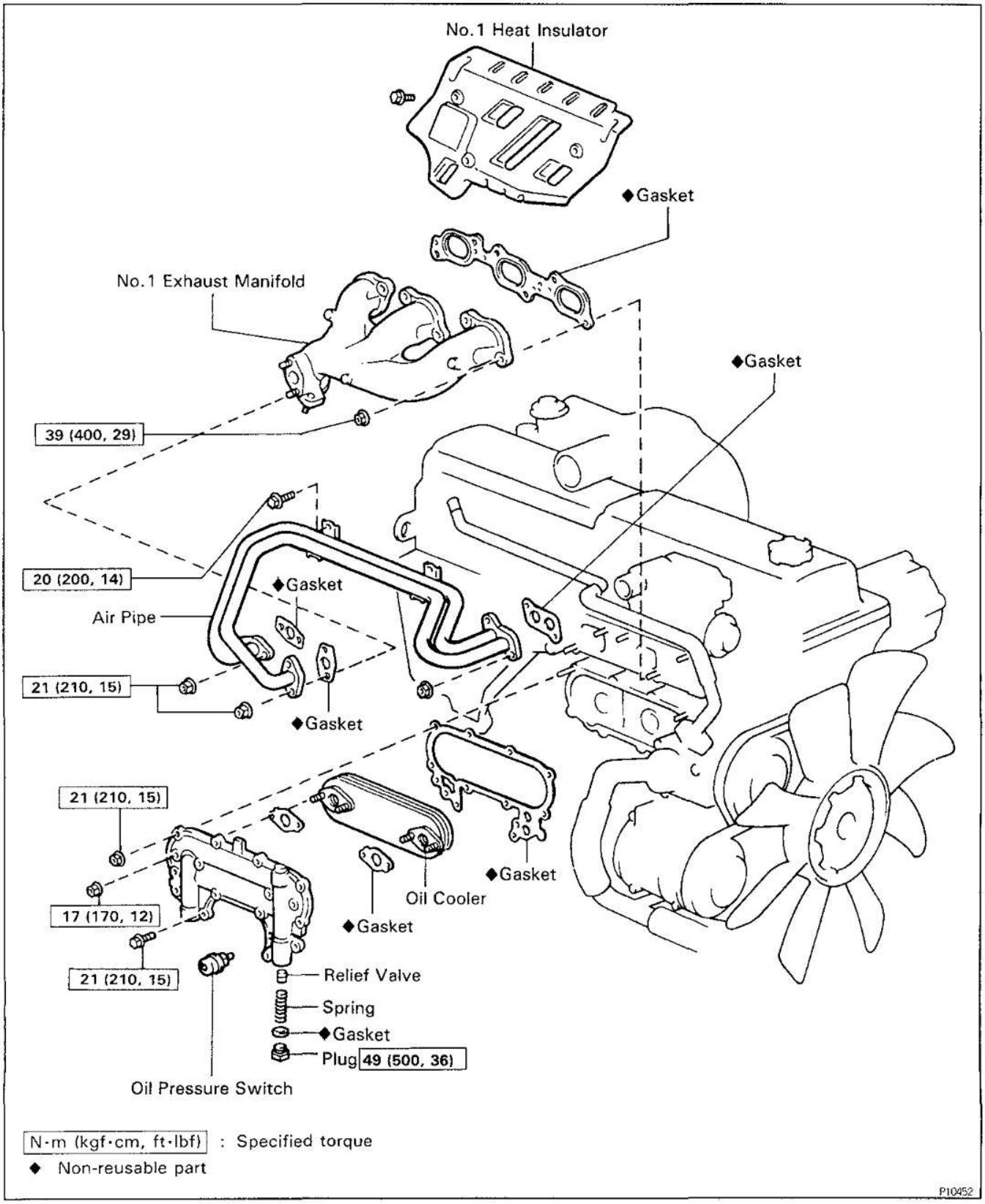

EG284—01

OIL COOLER REMOVAL

(See Components for Removal and Installation)

1. DRAIN ENGINE COOLANT

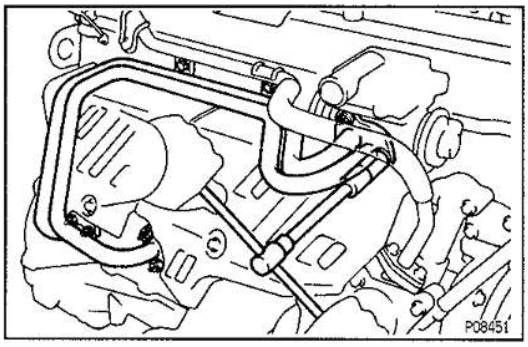

2. (Europe)
REMOVE AIR PIPE
Remove the two bolts, six nuts, air pipe and three gaskets.

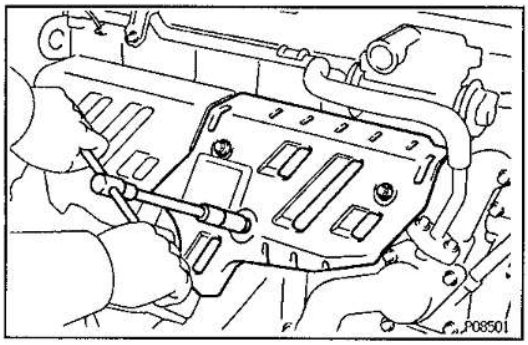

3. REMOVE NO.1 EXHAUST MANIFOLD
(a) Remove the three bolts and No.1 heat insulator.

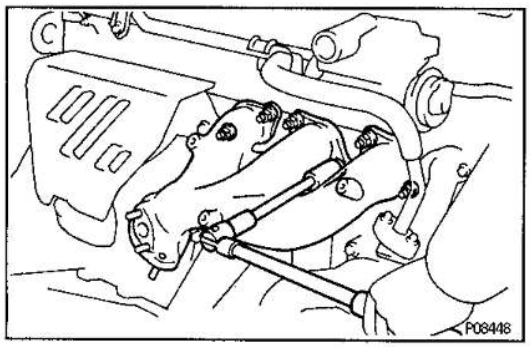

(b) Remove the six nuts, exhaust manifold and gasket.

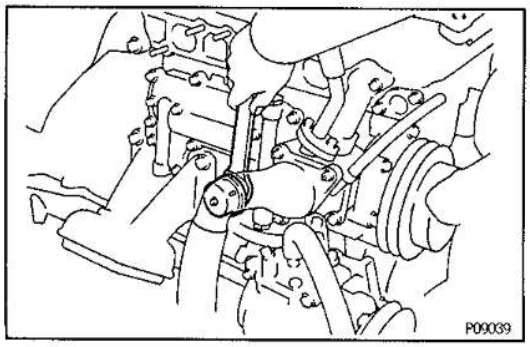

4. (1FZ—FE)
REMOVE OIL PRESSURE SWITCH

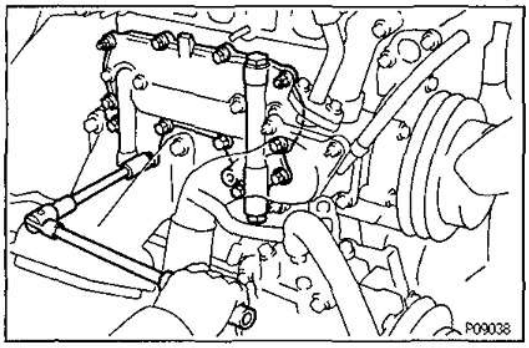

5. REMOVE OIL COOLER AND OIL COOLER COVER ASSEMBLY

Remove the ten bolts, two nuts, oil cooler and oil cooler cover assembly and gasket.

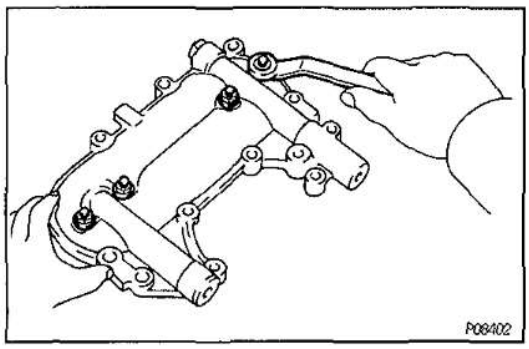

6. SEPARATE OIL COOLER AND OIL COOLER COVER

Remove the four nuts, oil cooler and two gaskets from the oil cooler cover.

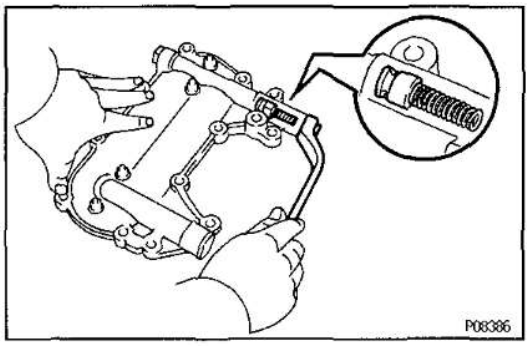

7. REMOVE RELIEF VALVE

Remove the plug, gasket, spring and relief valve.

EG0N5-01

OIL COOLER INSPECTION

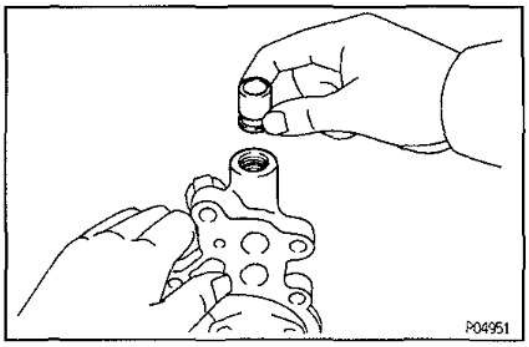

1. INSPECT RELIEF VALVE

Coat the valve with engine oil and check that it falls smoothly into the valve hole by its own weight.
If it doesn't, replace the relief valve. If necessary, replace the oil cooler cover.

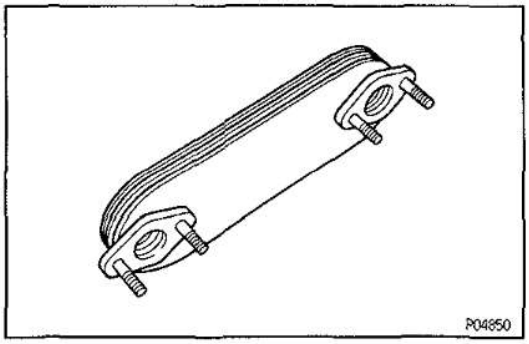

2. INSPECT OIL COOLER

Check the oil cooler for damage or clogging.
If necessary, replace the oil cooler.

EG285-01

OIL COOLER INSTALLATION

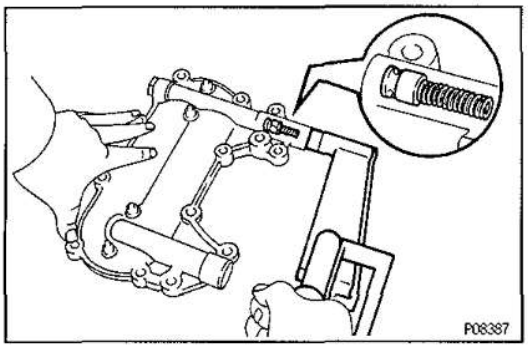

(See Components for Removal and Installation)

1. **INSTALL RELIEF VALVE**
   Install the relief valve, spring and a new gasket with the plug.
   Torque: 49 N·m (500 kgf·cm, 36 ft·lbf)

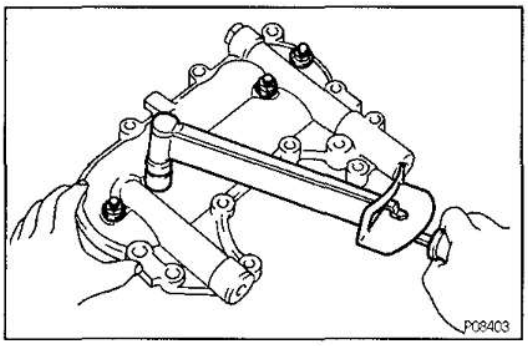

2. **ASSEMBLE OIL COOLER AND OIL COOLER COVER**
   Install two new gaskets and the oil cooler to the oil cooler cover with the four nuts.
   Torque: 17 N·m (170 kgf·cm, 12 ft·lbf)

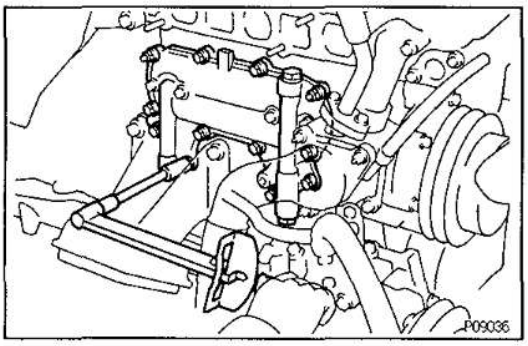

3. **INSTALL OIL COOLER AND OIL COOLER COVER ASSEMBLY**
   Install a new gasket, the oil cooler and oil cooler cover assembly with the ten bolts and two nuts.
   Torque: 21 N·m (210 kgf·cm, 15 ft·lbf)

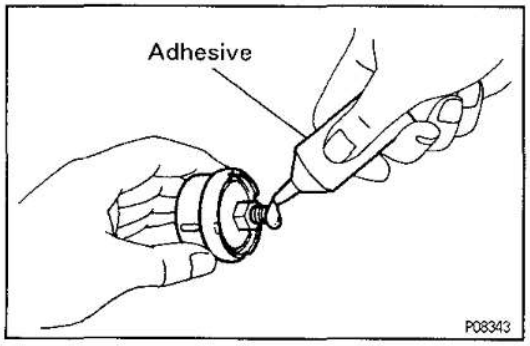

4. **(1FZ–FE)**
   INSTALL OIL PRESSURE SWITCH

(a) Apply adhesive to two or three threads of the oil pressure switch.
Adhesive:
Part No. 08833–00080, THREE BOND 1344, LOCTITE 242 or equivalent

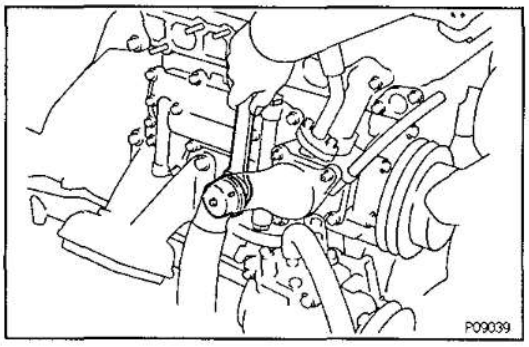

(b) Install the oil pressure switch.

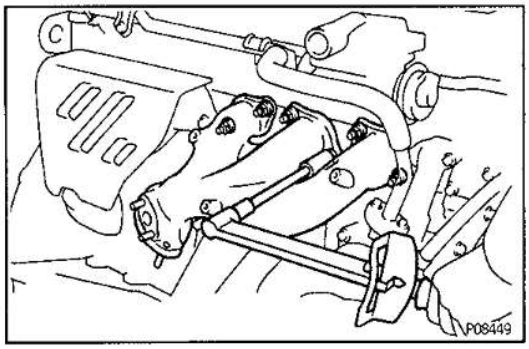

5. INSTALL NO.1 EXHAUST MANIFOLD

(a) Install a new gasket and the exhaust manifold with the six nuts.
Torque: 39 N·m (400 kgf·cm, 29 ft·lbf)

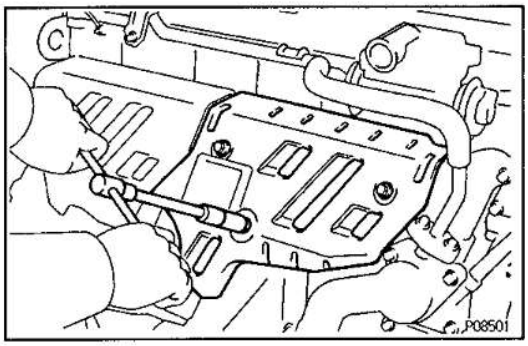

(b) Install the heat insulator with the three bolts.
Torque: 20 N·m (195 kgf·cm, 14 ft·lbf)

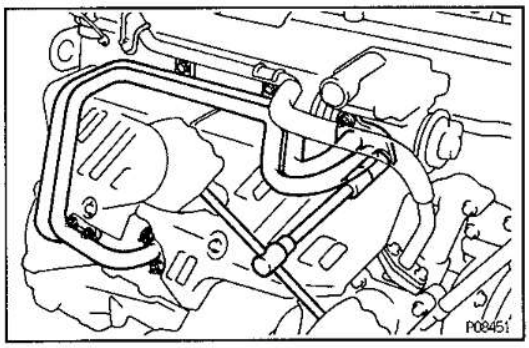

6. INSTALL AIR PIPE

Install three new gaskets and air pipe with the two bolts and six nuts.
Torque: 20 N·m (200 kgf·cm, 14 ft·lbf) for Bolt
Torque: 21 N·m (210 kgf·cm, 15 ft·lbf) for Nut

OIL NOZZLE

EG0NU-02

COMPONENTS FOR REMOVAL AND INSTALLATION

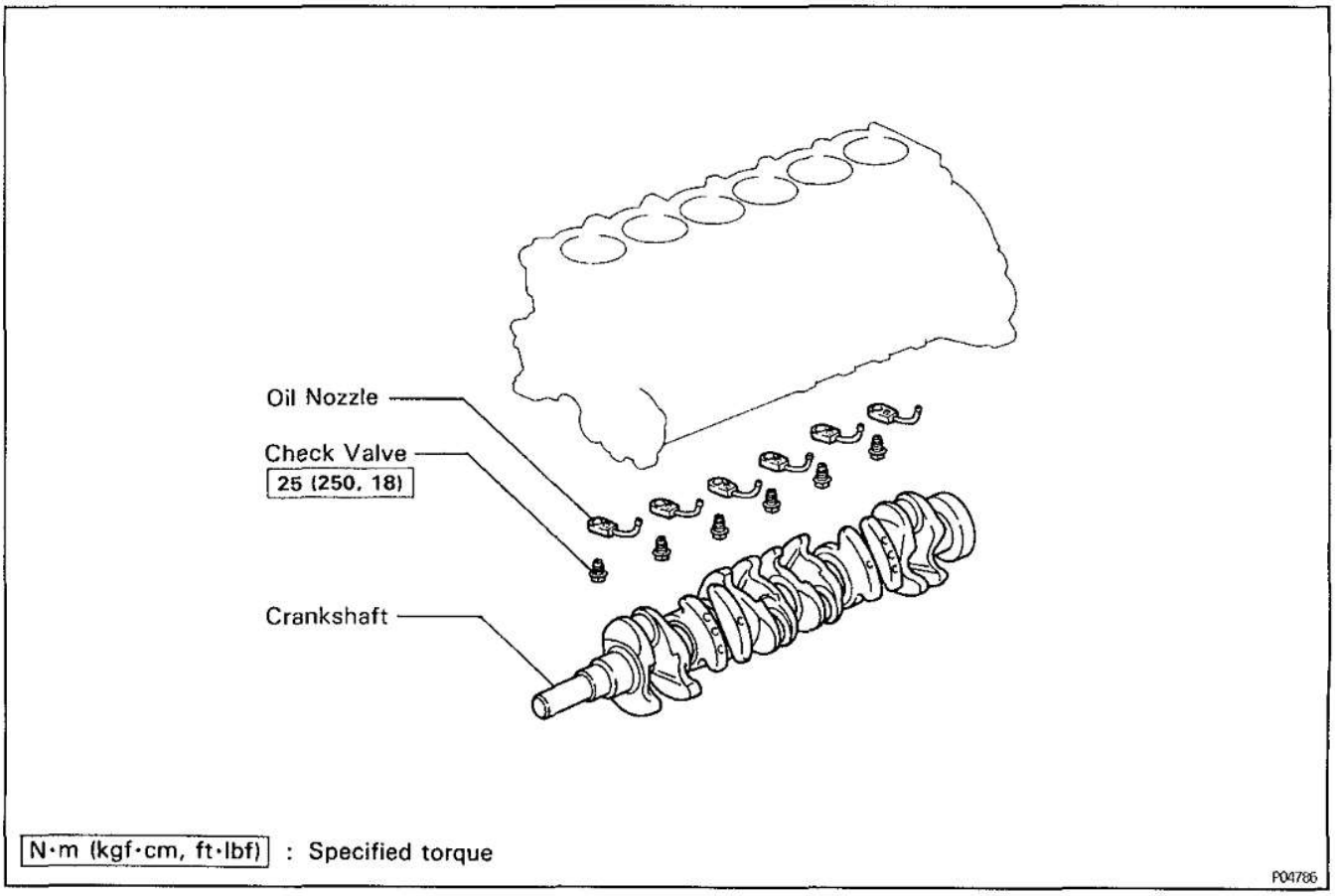

EG0NV-02

OIL NOZZLES REMOVAL

1. **REMOVE CRANKSHAFT**
   (See pages EG-105)

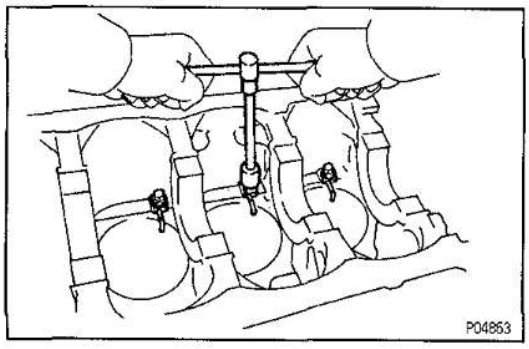

2. **REMOVE OIL NOZZLES**
   Remove the six check valves and oil nozzles.

EG

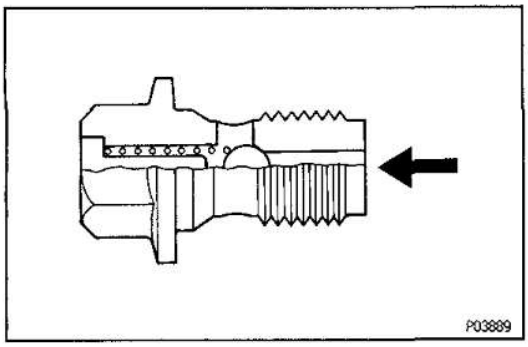

OIL NOZZLES COMPONENTS INSPECTION

EG0NW-02

1. INSPECT CHECK VALVES

Push the valve with a wooden stick to check if it is stuck.

If stuck, replace the check valve.

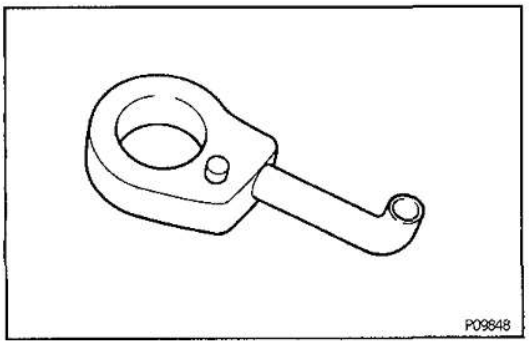

2. INSPECT OIL NOZZLES

Check the oil nozzles for damage or clogging.

If necessary, replace the oil nozzle.

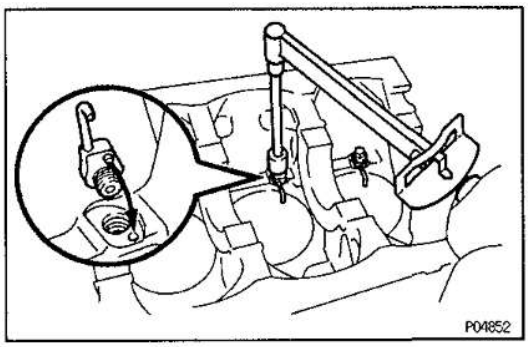

OIL NOZZLES INSTALLATION

EG0NX-02

(See Components for Removal and Installation)

1. INSTALL OIL NOZZLES

(a) Align the pin of the oil nozzle with the pin hole of the cylinder block.

(b) Install the oil nozzle with the check valve. Install the six oil nozzles.

Torque: 25 N·m (250 kgf·cm, 18 ft·lbf)

2. INSTALL CRANKSHAFT

(See pages EG—161)

SERVICE SPECIFICATIONS

SERVICE DATA

EG09H-02

Oil pressure	At idle speed (normal operating temperature)	29 kPa (0.3 kgf/cm², 4.3 psi) or more
	At 3,000 rpm (normal operating temperature)	245 — 490 kPa (2.5 — 5.0 kgf/cm², 36 — 71 psi)
Oil pump	Body clearance (STD)	0.100 — 0.170 mm (0.0039 — 0.0067 in.)
	Body clearance (Maximum)	0.30 mm (0.0118 in.)
	Tip clearance (STD)	0.030 — 0.160mm (0.0012 — 0.0063 in.)
	Tip clearance (Maximum)	0.25 mm (0.0098 in.)
	Side clearance (STD)	0.030 — 0.090 mm (0.0012 — 0.0035 in.)
	Side clearance (Maximum)	0.15 mm (0.0059 in.)

EG

TORQUE SPECIFICATIONS

EG0NY-02

Part tightened	N·m	kgf·cm	ft·lbf
Oil pan x Drain plug	25	250	18
Oil pump x Relief valve plug	49	500	36
Oil pump cover x Oil pump	10	105	8
Oil pump x Cylinder block	21	210	15
Drive belt idler pulley x Oil pump	43	440	32
Oil strainer x No.1 oil pan	20	200	14
Baffle plate x No.1 oil pan	7.8	80	69 in.·lbf
No.1 oil pan x Cylinder block (14 mm head bolt)	43	440	32
No.1 oil pan x Cylinder block (12 mm head bolt)	20	200	14
No.1 oil pan x Oil pump (Timing chain cover)	20	200	14
No.2 oil pan x No.1 oil pan (Bolt)	7.8	80	69 in.·lbf
No.2 oil pan x No.1 oil pan (Nut)	8.8	90	78 in.·lbf
No.1 oil pan x Transmission housing	72	730	53
Oil level sensor x No.1 oil pan	5.4	55	48 in.·lbf
Radiator pipe x No.1 oil pan	21	210	15
A/C compressor bracket x No.1 oil pan	37	375	27
A/C compressor bracket x Cylinder block	37	375	27
A/C compressor x A/C compressor bracket	25	250	18
Oil cooler x Oil cooler cover	17	170	12
Oil cooler cover x Cylider block	21	210	15
No.1 exhaust manifold x Cylinder head	39	400	29
No.1 exhaust manifold x Heat insulator	20	195	14
Air pipe x Cylinder head	20	200	14
Air pipe x Exhaust manifold	21	210	15
Air pipe x PAIR reed valve	21	210	15
Front exhaust pipe assembly x Exhaust manifold	62	630	46
No.1 suuport bracket x Transmission housing	39	400	29
Front exhaust pipe assembly x No.3 front exhaust pipe	39	400	29
Oil check valve x Cylinder block	25	250	18

— MEMO —

EG

(1FZ–FE)

DESCRIPTION

IG072–01

The ECU is programmed with data for optimum ignition timing under any and all operating conditions.

Using data provided by sensors which monitor various engine functions (Engine RPM, intake air volume, engine coolant temperature, etc.), the microcomputer (ECU) triggers the spark at precisely the right instant.

IG

The ECU monitors the engine condition by signals from each sensor, calculates the ignition timing and sends an ignition signal to the igniter. High voltage from the ignition is distributed to each spark plug in the appropriate order to generate a spark between the electrodes, which ignites the air–fuel mixture.

IGNITER

The igniter temporarily interrupts the primary current with the ignition signal (IGT signal) from the ECU and generates sparks at the spark plug. Also, as a fail–safe measure, when ignition occurs an ignition confirmation signal (IGF signal) is sent to the ECU.

IGNITION COIL

The ignition coil uses a closed core coil with the primary coil wrapped around the core and the secondary coil wrapped around the primary coil. This allows the generation of a high voltage sufficient to cause a spark to jump across the spark plug gap.

DISTRIBUTOR

This correctly distributes high voltage to the spark plug of each cylinder in the specified ignition order.

PICKUP COILS

The NE coil detects the crankshaft position, and the G1 and G2 coils detect the camshaft position.

PRECAUTIONS

IG03D—03

1. Do not leave the ignition switch on for more than 10 minutes if the engine does not start.

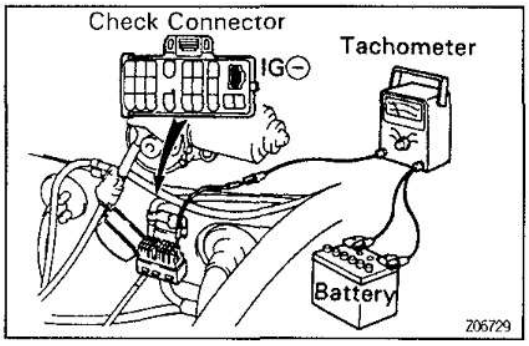

2. With a tachometer connected to the system, connect the test probe of the tachometer to the IG⊖ of the check connector.

3. As some tachometers are not compatible with this ignition system, we recommend that you confirm the compatibility of your unit before use.

4. NEVER allow the tachometer terminals to touch ground as it could result in damage to the igniter and/or ignition coil.

5. Do not disconnect the battery while the engine is running.

6. Check that the igniter is properly grounded to the body.

SYSTEM CIRCUIT

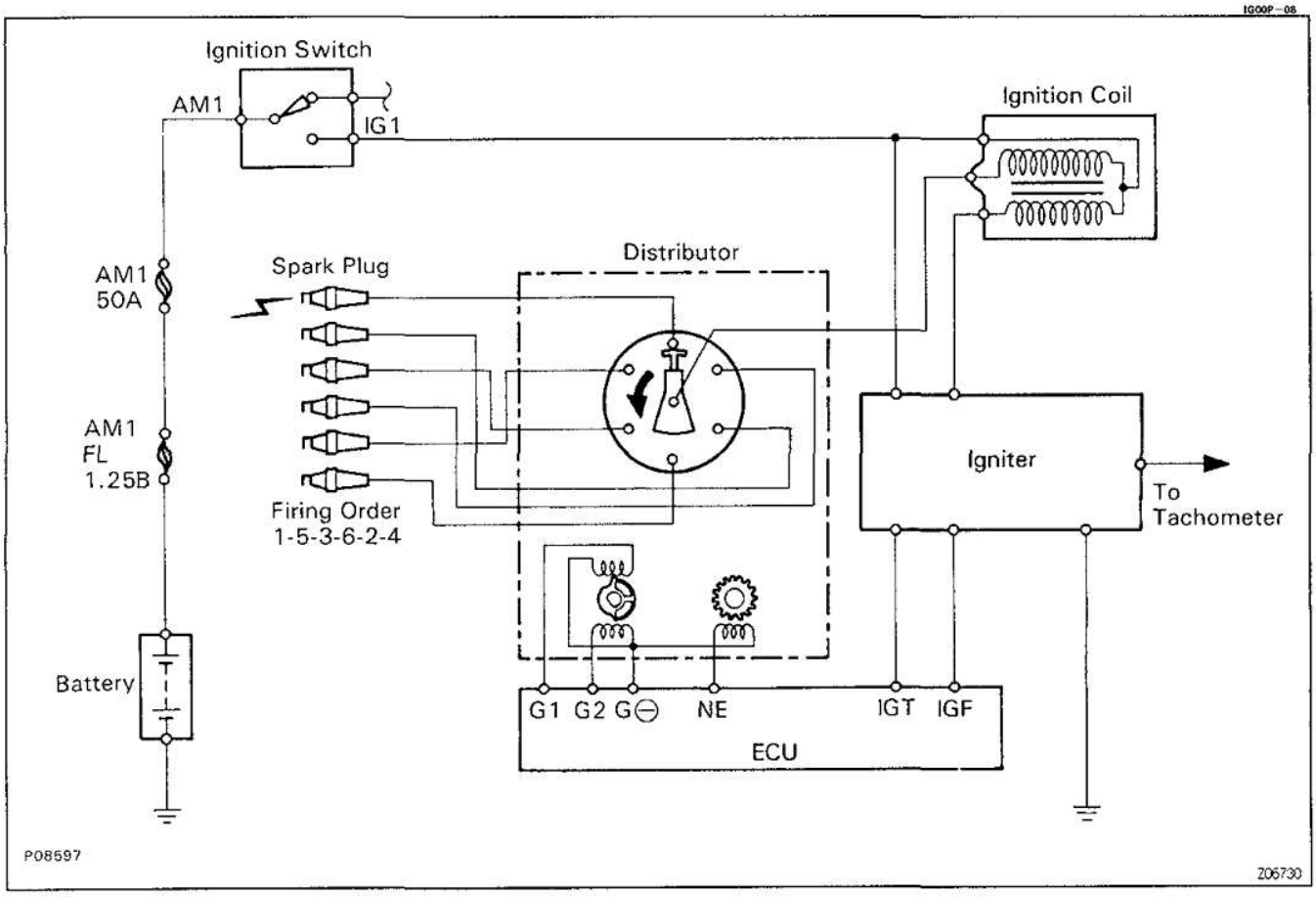

OPERATION

IG034-03

To maintain the most appropriate ignition timing, the ECU sends a control signal so that the igniter sends current to the ignition coil and the spark plugs produce a spark.

PREPARATION

SST (SPECIAL SERVICE TOOLS)

IG00R—05

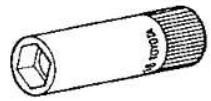	09155—16100 Spark Plug Wrench	
	09843—18020 Diagnosis Check Wire	

IG

RECOMMENDED TOOLS

IG00S—01

	09082—00015 TOYOTA Electrical Tester	
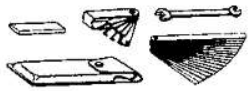	09200—00010 Engine Adjust Kit	

EQUIPMENT

IG00T—05

Spark plug cleaner	
Tachometer	
Torque wrench	
Timing light	Ignition timing

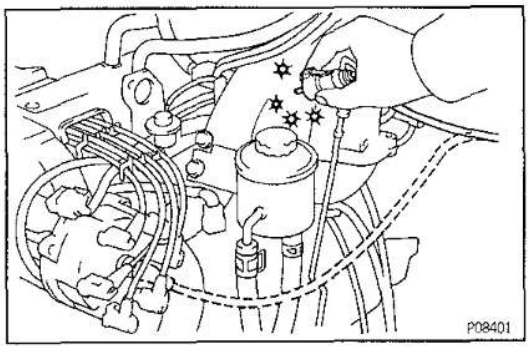

ON–VEHICLE INSPECTION

IG00V–04

SPARK TEST

CHECK THAT SPARK OCCURS

(a) Disconnect the high–tension cords (from the ignition coil) from the distributor cap.

(b) Hold the end approx. 12.5 mm (0.50 in.) from the body ground.

(c) Check if spark occurs while engine is being cranked.
HINT: To prevent gasoline from being injected from injectors during this test, crank the engine for no more than 1 – 2 seconds at a time.
If the spark does not occur, perform the test as follows:

SPARK TEST

↓ NO

CHECK CONNECTION OF IGNITION COIL, IGNITER AND DISTRIBUTOR CONNECTOR → BAD → Connect securely.

↓ OK

CHECK RESISTANCE OF HIGH-TENSION CORD (See page IG-8)
Maximum resistance: 25 kΩ per cord → BAD → Replace the cord(s).

↓ OK

CHECK POWER SUPPLY TO IGNITION COIL AND IGNITER
1. Turn ignition switch to ON.
2. Check that there is battery voltage at ignition coil positive (+) terminal.

→ BAD → Check wiring between ignition switch to ignition coil and igniter.

↓ OK

CHECK RESISTANCE OF IGNITION COIL (See page IG-12)

Resistance:	(Cold)	(Hot)
Primary	0.36 – 0.55 Ω	0.45 – 0.65 Ω
Secondary	9.0 – 15.4 kΩ	11.4 – 18.1 kΩ

→ BAD → Replace the ignition coil.

↓ OK

CHECK RESISTANCE OF SIGNAL GENERATOR (PICKUP COIL) (See page IG-14)

Resistance:	(Cold)	(Hot)
G1 and G⊖	185 – 275 Ω	240 – 325 Ω
G2 and G⊖	185 – 275 Ω	240 – 325 Ω
NE and G⊖	185 – 275 Ω	240 – 325 Ω

→ BAD → Replace the distributor housing assembly.

↓ OK

CHECK AIR GAP OF DISTRIBUTOR (See page IG-13)
Air gap: 0.2 – 0.4 mm (0.008 – 0.016 in.) → BAD → Replace the distributor housing assembly.

↓ OK

CHECK IGT SIGNAL FROM ECU (See page EG-213) → BAD → Check wiring between ECU, distributor and igniter, and then try another ECU.

↓ OK

TRY ANOTHER IGNITER

V01730

IG073–01

HIGH–TENSION CORDS INSPECTION

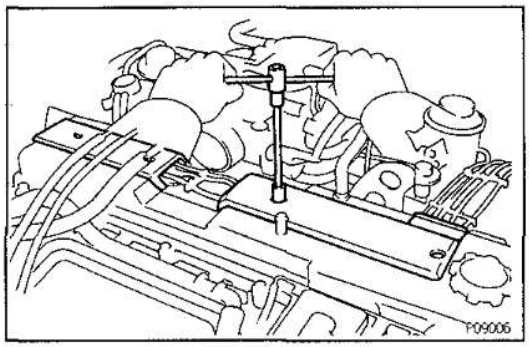

1. REMOVE NO.2 AND NO.3 CYLINDER HEAD COVERS

Remove the four bolts and head covers.

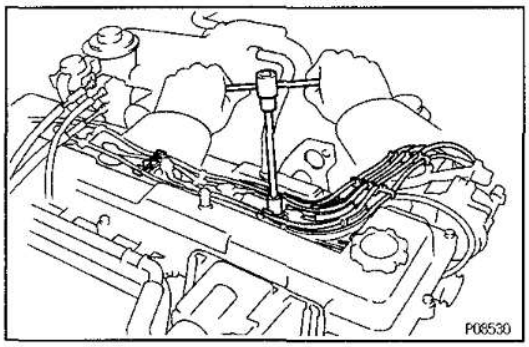

2. DISCONNECT HIGH–TENSION CORDS FROM SPARK PLUGS

(a) Remove the two mounting bolts of the No.1 and No.2 cord clamps.

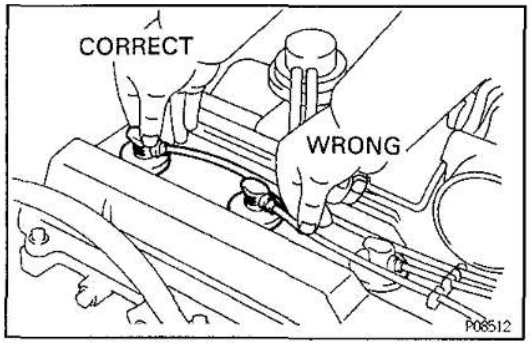

(b) Disconnect the high – tension cords at the rubber boot.
DO NOT pull on the cords.
NOTICE: Pulling on or bending the cords may damage the conductor inside.

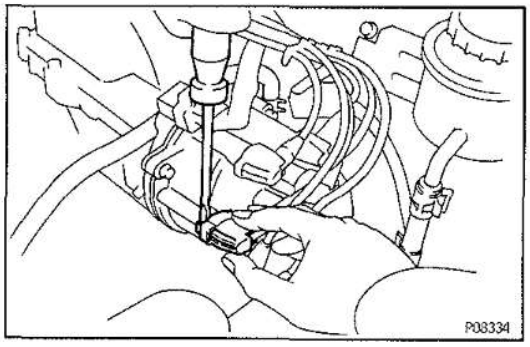

3. DISCONNECT HIGH–TENSION CORDS FROM DISTRIBUTOR CAP AND IGNITION COIL

(a) Using a screwdriver, lift up the lock claw and disconnect the holder from the distributor cap (ignition coil).

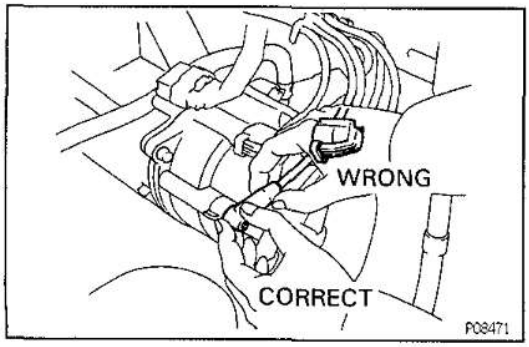

(b) Disconnect the high–tension cord at the grommet.
DO NOT pull on the cord.
NOTICE:
- **Pulling on or bending the cords may damage the conductor inside.**
- **Do not wipe any of the oil from the grommet after the high–tension cord is disconnected.**

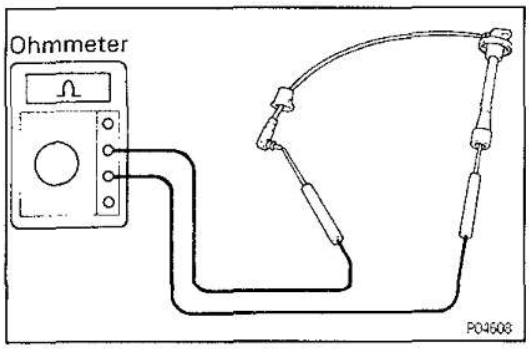

4. INSPECT HIGH—TENSION CORD RESISTANCE

Using an ohmmeter, measure the resistance.

Maximum resistance:

25 kΩ per cord

If the resistance is greater than maximum, check the terminals. If necessary, replace the high — tension cord.

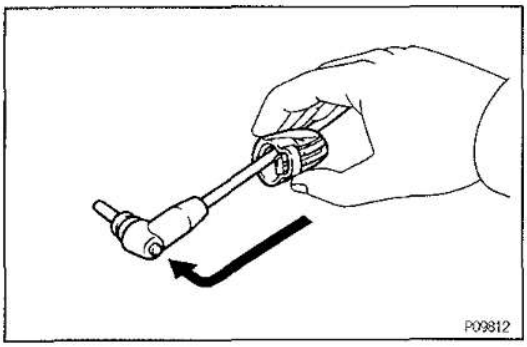

5. RECONNECT HIGH—TENSION CORDS TO DISTRIBUTOR CAP AND IGNITION COIL

(a) Assemble the holder and grommet.

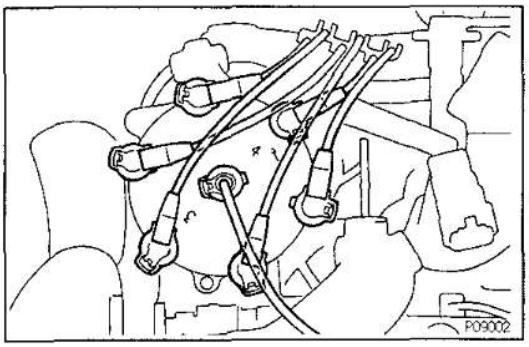

HINT: Connect the high—tension cords to the distributor cap as shown in the illustration.

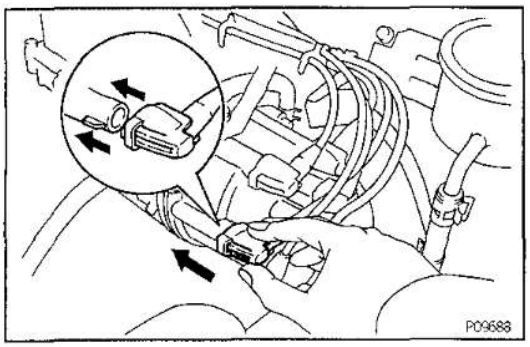

(b) Align the spline of the distributor (ignition coil) with the spline of the holder, and push in the cord.

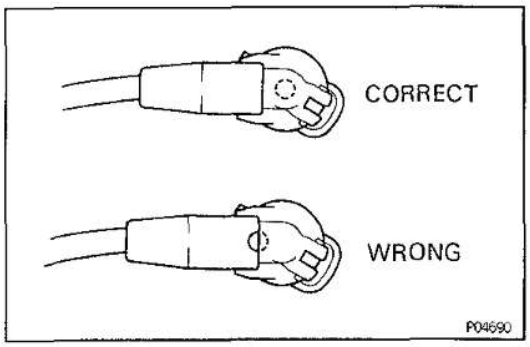

NOTICE: Check that the holder is correctly installed to the grommet and distributor cap as shown in the illustration.

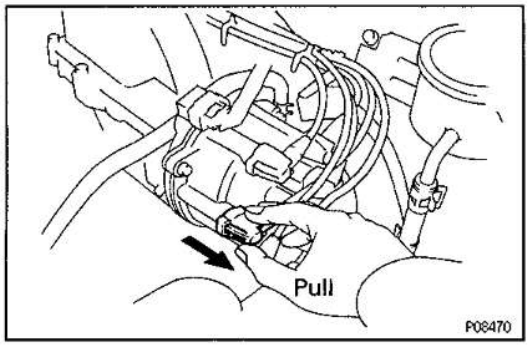

(c) Check that the lock claw of the holder is engaged by lightly pulling the holder.

6. RECONNECT HIGH—TENSION CORDS TO SPARK PLUGS

(a) Secure the high—tension cords with the clamps see the illustration on the next page.

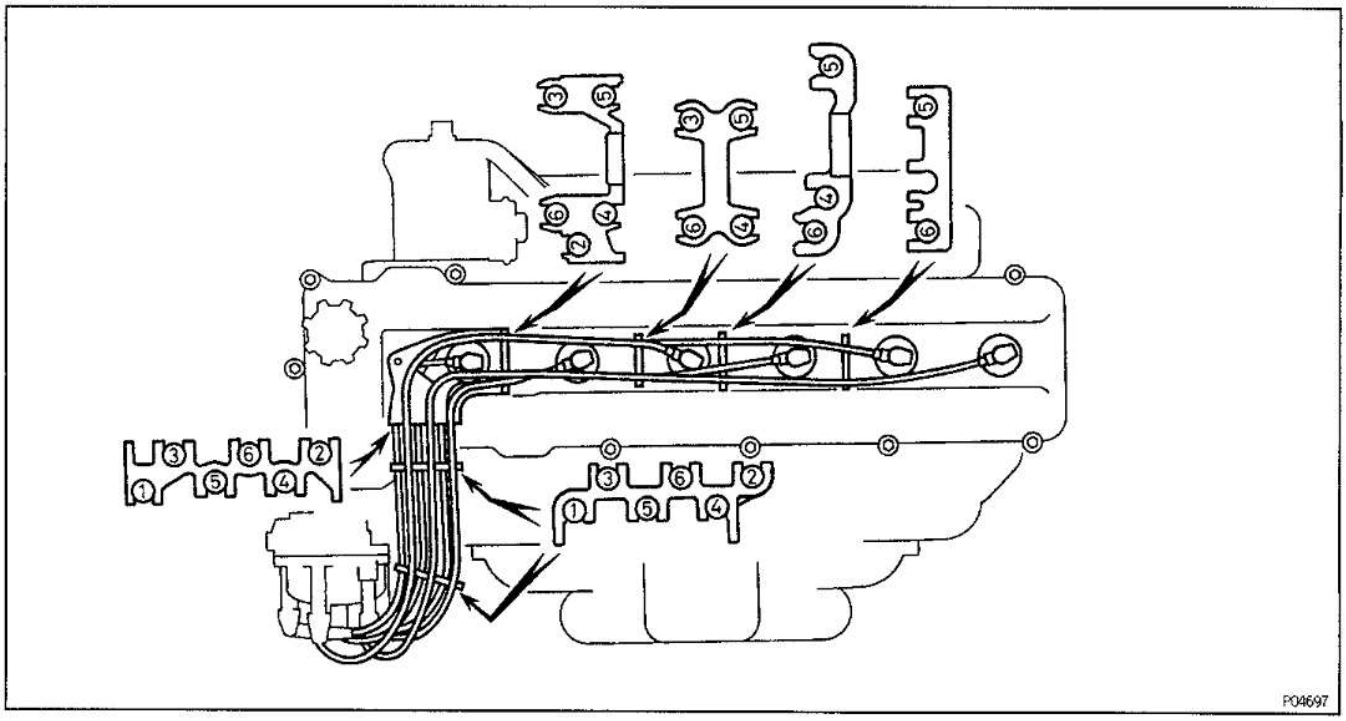

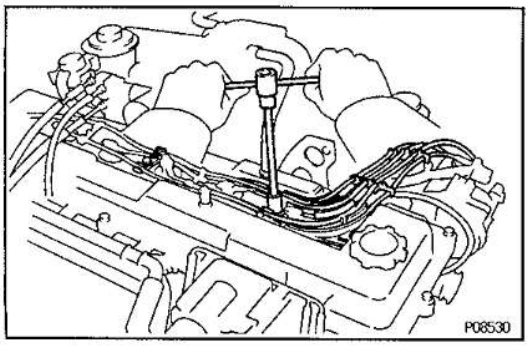

(b) Install the No.1 and No.2 cord clamps with the two bolts.

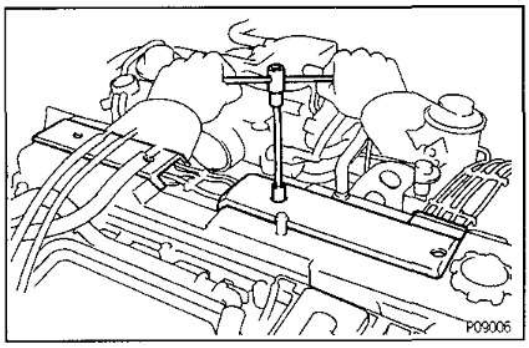

7. INSTALL NO.2 AND NO.3 CYLINDER HEAD COVERS

Install the head covers with the four bolts.

IG

IG074-01

SPARK PLUGS INSPECTION

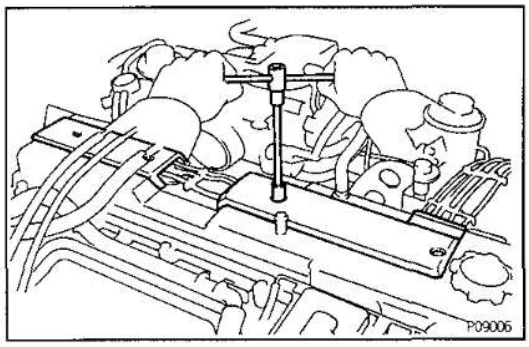

1. REMOVE NO.2 AND NO.3 CYLINDER HEAD COVERS

Remove the four bolts and head covers.

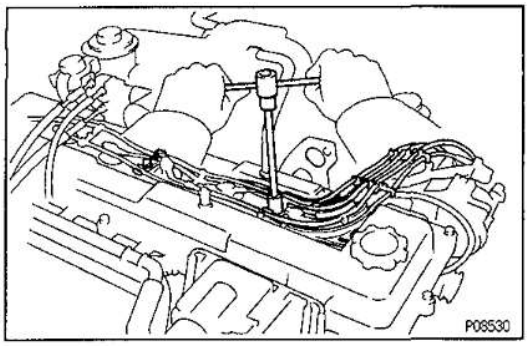

2. DISCONNECT HIGH–TENSION CORDS FROM SPARK PLUGS

(a) Remove the two mounting bolts of the No.1 and No.2 cord clamps.

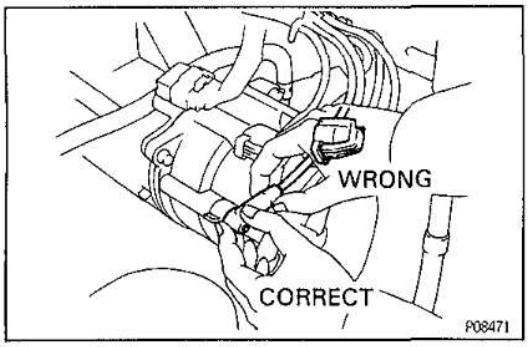

(b) Disconnect the high – tension cords at the rubber boot.
DO NOT pull on the cords.
NOTICE: Pulling on or bending the cords may damage the conductor inside.

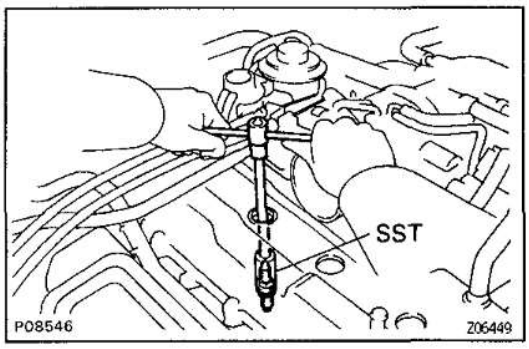

3. REMOVE SPARK PLUGS

Using a 16 mm plug wrench, remove the spark plug.

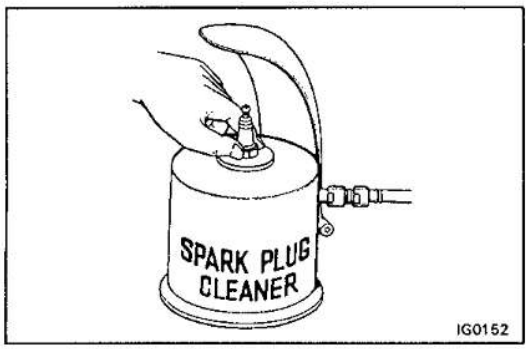

4. CLEAN SPARK PLUGS

Using a spark plug cleaner or wire brush, clean the spark plug.

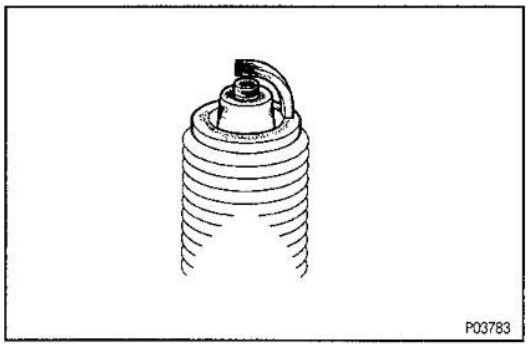

5. VISUALLY INSPECT SPARK PLUGS

Check the spark plug for electrode wear, threads damage and insulator damage.

If abnormal, replace the plugs.

Recommended spark plugs:

ND K16R–U

NGK BKR5EYA

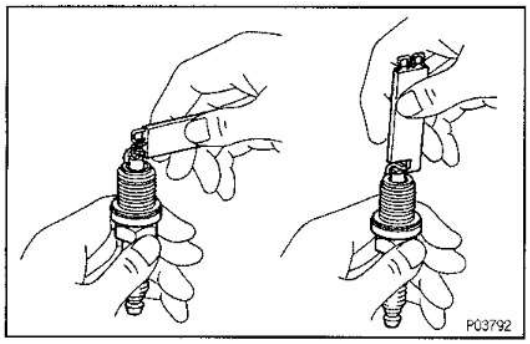

6. ADJUST ELECTRODE GAP

Carefully bend the outer electrode to obtain the correct electrode gap.

Correct electrode gap:

0.8 mm (0.031 in.)

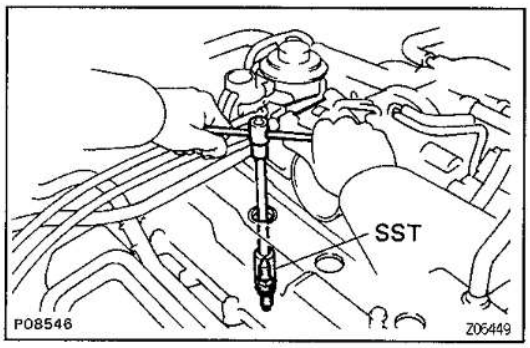

7. INSTALL SPARK PLUGS

Using a 16 mm plug wrench, install the spark plug.

Torque: 20 N·m (200 kgf·cm, 14 ft·lbf)

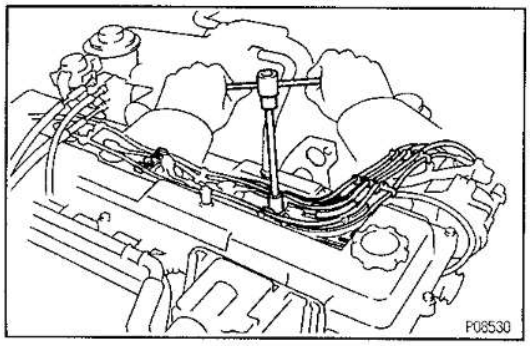

8. RECONNECT HIGH–TENSION CORDS TO SPARK PLUGS

(a) Reconnect the high–tension cords to the spark plugs.

(b) Install the No.1 and No.2 cord clamps with the two bolts.

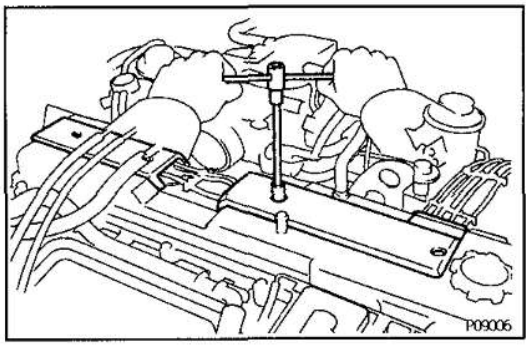

9. INSTALL NO.2 AND NO.3 CYLINDER HEAD COVERS

Install the head covers with the four bolts.

IG

IG036—02

IGNITION COIL INSPECTION

NOTICE: "Cold" and "Hot" in the following sentences express the temperature of the coils themselves. "Cold" is from —10°C (14°F) to 50°C (122°F) and "Hot" is from 50°C (122°F) to 100°C (212°F).

1. DISCONNECT IGNITION COIL CONNECTOR

2. DISCONNECT HIGH—TENSION CORD

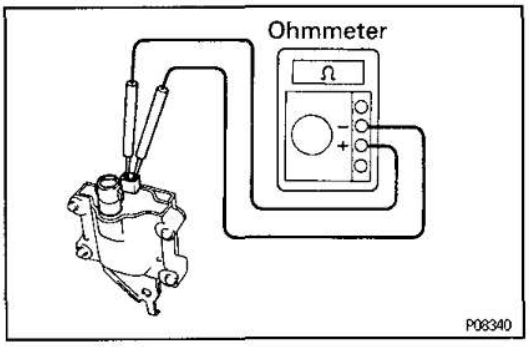

3. INSPECT PRIMARY COIL RESISTANCE

Using an ohmmeter, measure the resistance between the positive (+) and negative (—) terminals.

Primary coil resistance (Cold):

0.36 — 0.55 Ω

Primary coil resistance (Hot):

0.45 — 0.65 Ω

If the resistance is not as specified, replace the ignition coil.

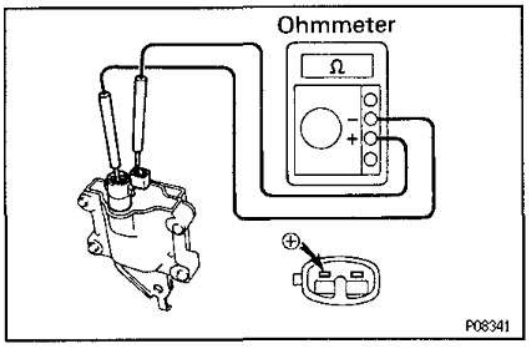

4. INSPECT SECONDARY COIL RESISTANCE

Using an ohmmeter, measure the resistance between the positive (+) and high—tension terminals.

Secondary coil resistance (Cold):

9.0 — 15.4 kΩ

Secondary coil resistance (Hot):

11.4 — 18.1 kΩ

If the resistance is not as specified, replace the ignition coil.

5. RECONNECT HIGH—TENSION CORD

6. RECONNECT IGNITION COIL CONNECTOR

IG05J—02

DISTRIBUTOR INSPECTION

NOTICE: "Cold" and "Hot" in the following sentences express the temperature of the coils themselves. "Cold" is from —10°C (14°F) to 50°C (122°F) and "Hot" is from 50°C (122°F) to 100°C (212°F).

1. DISCONNECT DISTRIBUTOR CONNECTOR

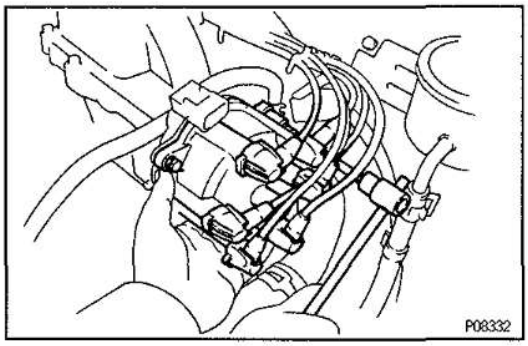

2. REMOVE DISTRIBUTOR CAP WITHOUT DISCONNECTING HIGH—TENSION CORDS

3. REMOVE ROTOR

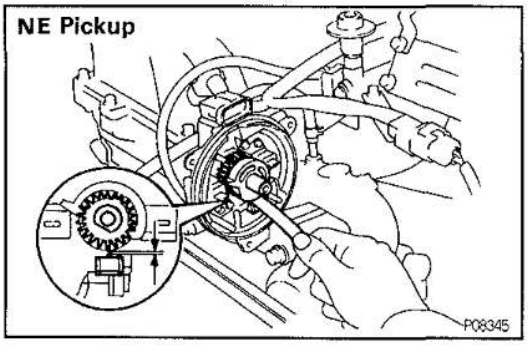

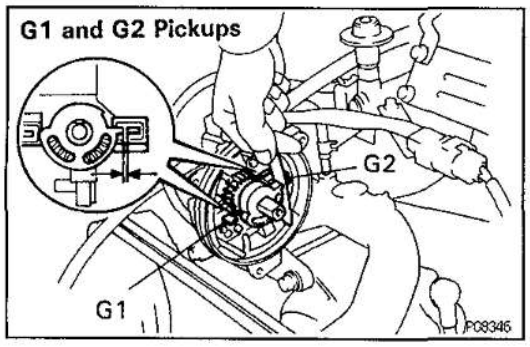

4. INSPECT AIR GAPS

Using a thickness gauge, measure the gap between the signal rotor and the pickup coil projection.

Air gap:

0.2 — 0.4 mm (0.008 — 0.016 in.)

If the gap is not as specified, replace the distributor housing.

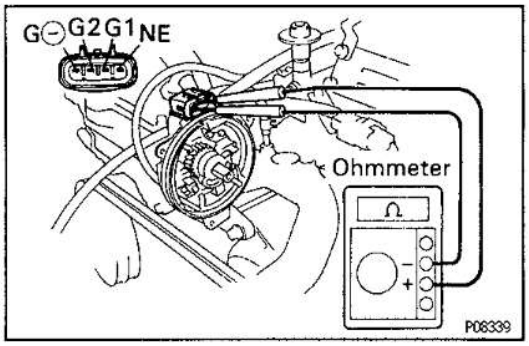

5. INSPECT SIGNAL GENERATOR (PICKUP COIL) RESISTANCE

Using an ohmmeter, check that the resistance of the pickup coil.

Pickup coil resistance (Cold):

G1 and G⊖

185 — 275 Ω

G2 and G⊖

185 — 275 Ω

NE and G⊖

185 — 275 Ω

Pickup coil resistance (Hot):

G1 and G⊖

240 — 325 Ω

G2 and G⊖

240 — 325 Ω

NE and G⊖

240 — 325 Ω

If the resistance is not as specified, replace the distributor housing.

6. REINSTALL ROTOR

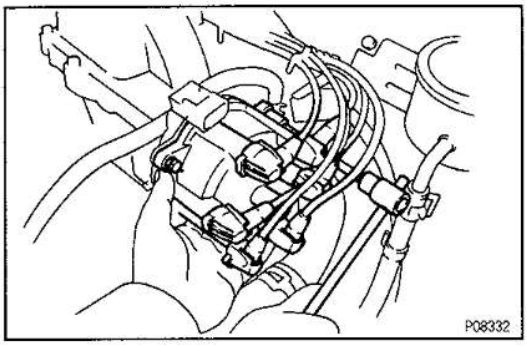

7. REINSTALL DISTRIBUTOR CAP

8. RECONNECT DISTRIBUTOR CONNECTOR

IG00Z—03

IGNITER INSPECTION

(See procedure Spark Test on page IG—6)

DISTRIBUTOR

IG039-01

COMPONENTS FOR REMOVAL AND INSTALLATION

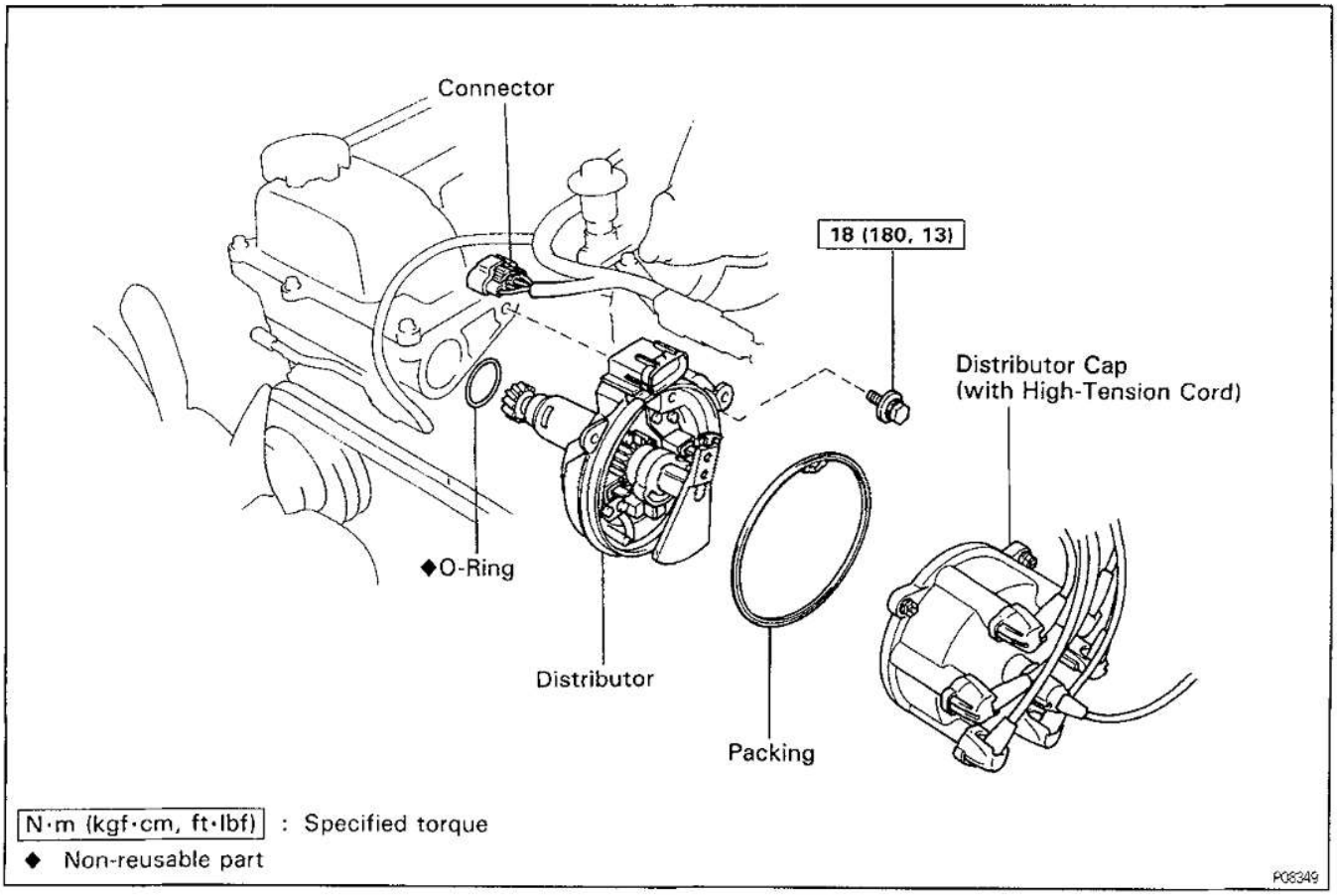

IG06K-01

DISTRIBUTOR REMOVAL

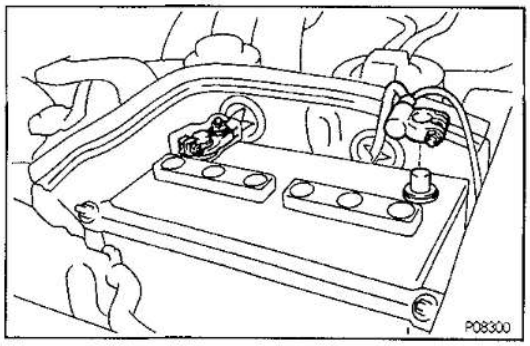

1. DISCONNECT CABLE FROM NEGATIVE TERMINAL OF BATTERY
2. DISCONNECT DISTRIBUTOR CONNECTOR

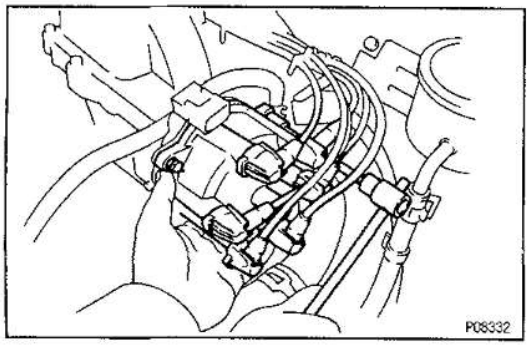

3. REMOVE DISTRIBUTOR CAP WITHOUT DISCONNECTING HIGH—TENSION CORDS

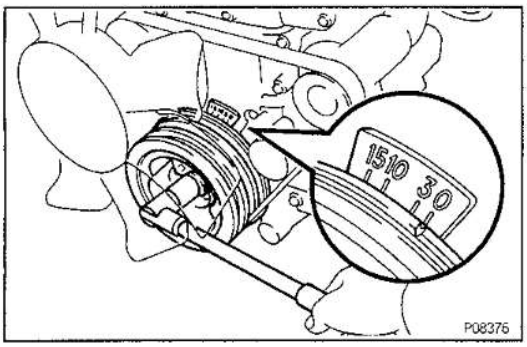

4. SET NO.1 CYLINDER TO TDC/COMPRESSION

(a) Turn the crankshaft pulley until the timing mark is aligned with "0" mark on the timing chain cover.

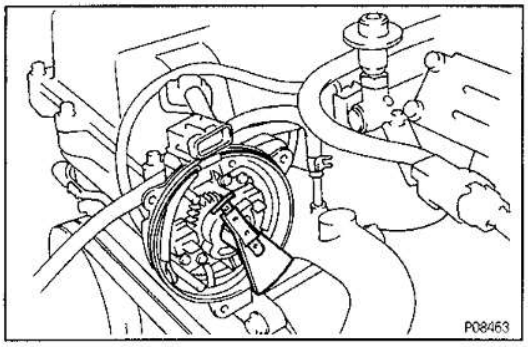

(b) Check that the distributor rotor direction is as shown. If not, turn the crankshaft pulley one complete revolution.

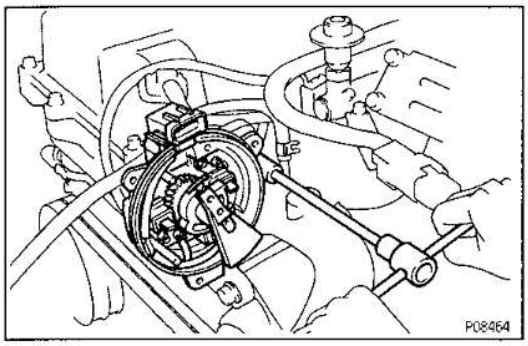

5. REMOVE DISTRIBUTOR

(a) Remove the hold—down bolt and pull out the distributor.

(b) Remove the O—ring from the distributor housing.

IG05L—01

DISTRIBUTOR INSTALLATION

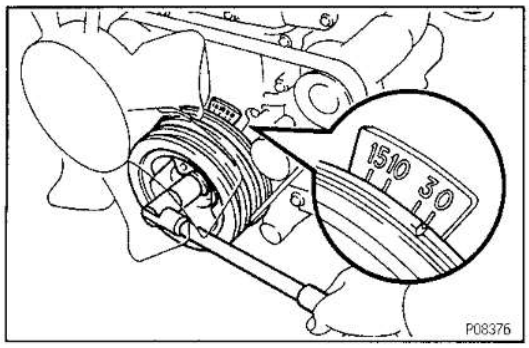

(See Components for Removal and Installation)

1. CHECK NO.1 CYLINDER TO TDC/COMPRESSION

If nescessary, remove the cylinder head cover, and check the following conditions:

- Turn the crankshaft pulley and align its groove with the timing mark "0" of the timing chain cover.

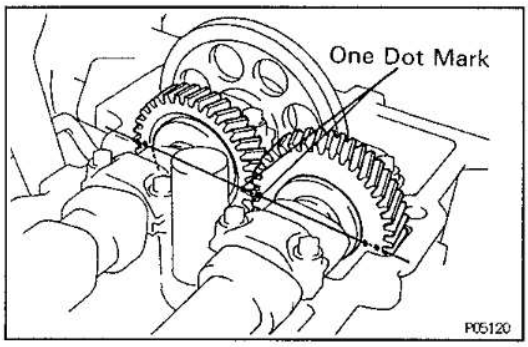

- Verify taht the timing marks with one and two dots are in straight line on the cylinder head surface as shown in the illustration.

If not, turn the crankshaft one revolution (360°) and align the mark as above.

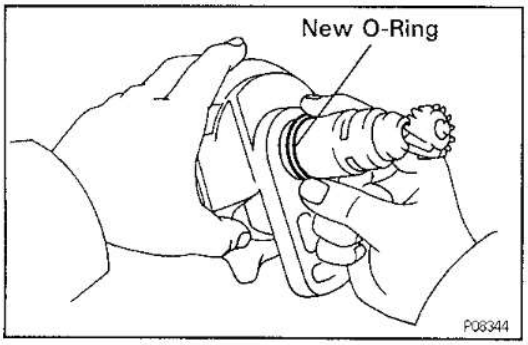

2. INSTALL DISTRIBUTOR

(a) Install a new O—ring to the distributor.
HINT: Always use a new O—ring when installing the distributor.

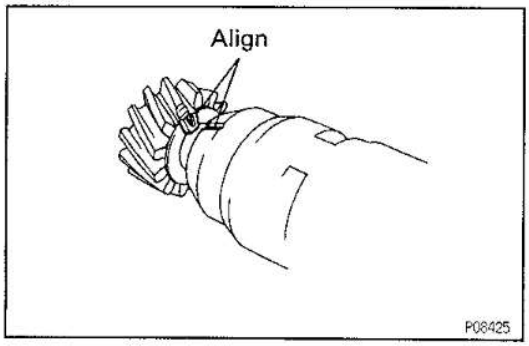

(b) Align the groove of the distributor housing with the protrusion on the driven gear.

(c) Apply a light coat of engine oil on the O—ring.

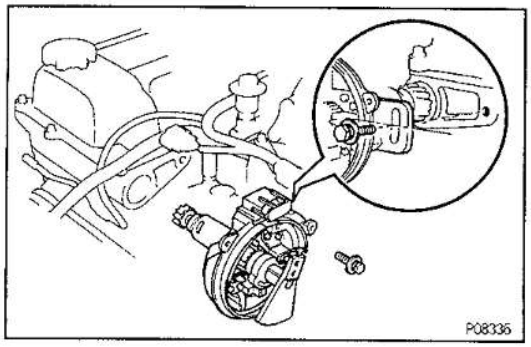

(d) Insert the distributor, aligning the center of the flange with that of the bolt hole on the cylinder head.

(e) Lightly tighten the hold—down bolt.

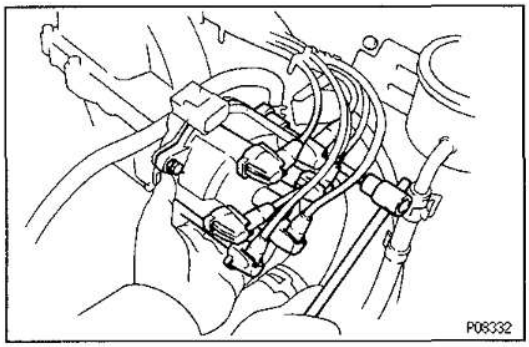

4. INSTALL DISTRIBUTOR CAP

IG

5. CONNECT DISTRIBUTOR CONNECTOR

6. CONNECT CABLE TO NEGATIVE TERMINAL OF BATTERY

7. WARM UP ENGINE

Allow the engine to warm up to normal operating temperature.

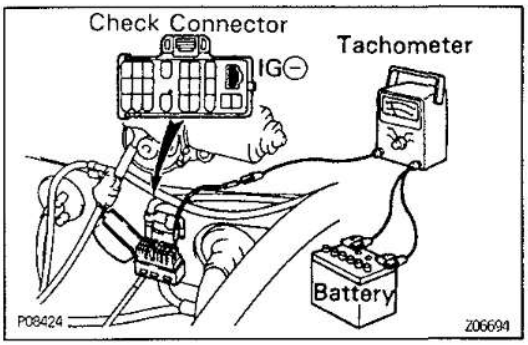

8. CONNECT TACHOMETER AND TIMING LIGHT

Connect the test probe of a tachometer to terminal IG ⊖ of the data link connector 1.

NOTICE:

- **NEVER allow the tachometer terminal to touch ground as it could result in damage to the igniter and/or ignition coil.**
- **As some tachometers are not compatible with this ignition system, we recommend that you confirm the compatibility of your unit before use.**

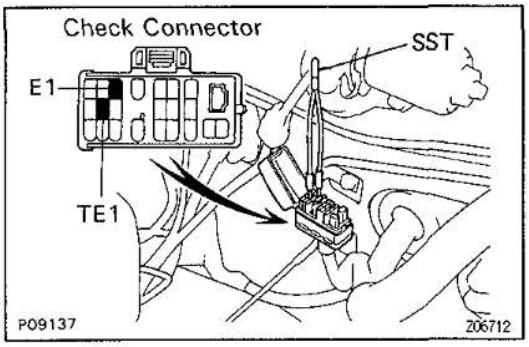

9. ADJUST IGNITION TIMING

(a) Using SST, connect terminals TE1 and E1 of the data link connector 1.
SST 09843–18020

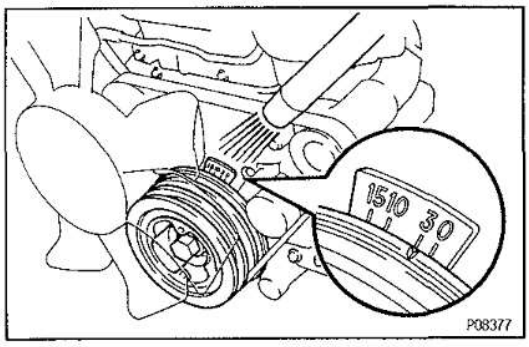

(b) Using a timing light, check the ignition timing.
Ignition timing:
3° BTDC @ idle
(Transmission in neutral position and A/C OFF)

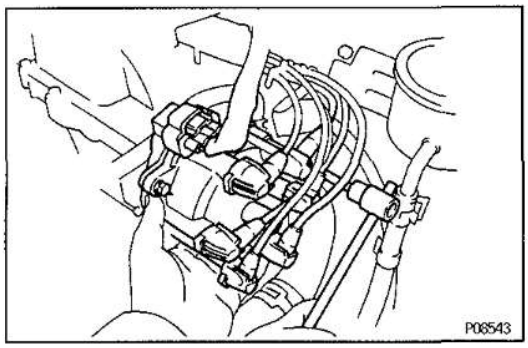

(c) Loosen the hold—down bolt, and adjust by turning the distributor.

(d) Tighten the hold—down bolt, and recheck the ignition timing.
Torque: 18 N·m (180 kgf·cm, 13 ft·lbf)

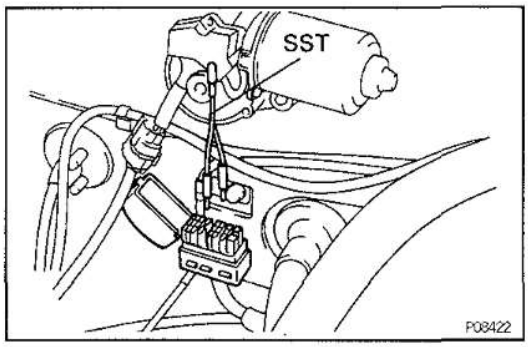

(e) Remove SST from the data link connector 1.
SST 09843—18020

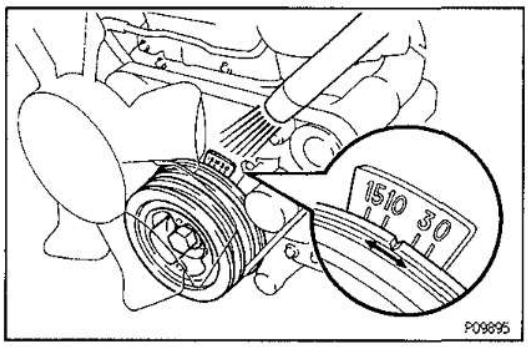

10. FURTHER CHECK IGNITION TIMING

Ignition timing:

2 — 13° BTDC @ idle

(Transmission in neutral position and A/C OFF)

HINT: The timing mark moves in a range between 2° and 13°.

11. DISCONNECT TACHOMETER AND TIMING LIGHT FROM ENGINE

SERVICE SPECIFICATIONS

SERVICE DATA

IG05M—02

Ignition timing	w/ Terminals TE1 and E1 connected	3° BTDC @ idle
Firing order	—	1 — 5 — 3 — 6 — 2 — 4
High—tension cord	Resistance (Maximum)	25 kΩ per cord
Spark plug	Recommended spark plug ND	K16R—U
	Recommended spark plug NGK	BKR5EYA
	Correct electrode gap	0.8 mm (0.031 in.)
Ignition coil	Primary coil resistance (Cold)	0.36 — 0.55 Ω
	Primary coil resistance (Hot)	0.45 — 0.65 Ω
	Secondary coil resistance (Cold)	9.0 — 15.4 kΩ
	Secondary coil resistance (Hot)	11.4 — 18.1 kΩ
Distributor	Air gap	0.2 — 0.4 mm (0.008 — 0.016 in.)
	Signal generator (pickup coil) resistance (Cold)	
	G1 — G⊖	185 — 275 Ω
	G2 — G⊖	185 — 275 Ω
	NE — G⊖	185 — 275 Ω
	Signal generator (pickup coil) resistance (Hot)	
	G1 — G⊖	240 — 325 Ω
	G2 — G⊖	240 — 325 Ω
	NE — G⊖	240 — 325 Ω

TORQUE SPECIFICATIONS

IG017—02

Part tightened	N·m	kgf·cm	ft·lbf
Spark plug x Cylinder head	20	200	14
Distributor x Cylinder head	18	180	13

(1FZ–F)

DESCRIPTION

IG033-01

This engine features a breakerless transister ignition system.

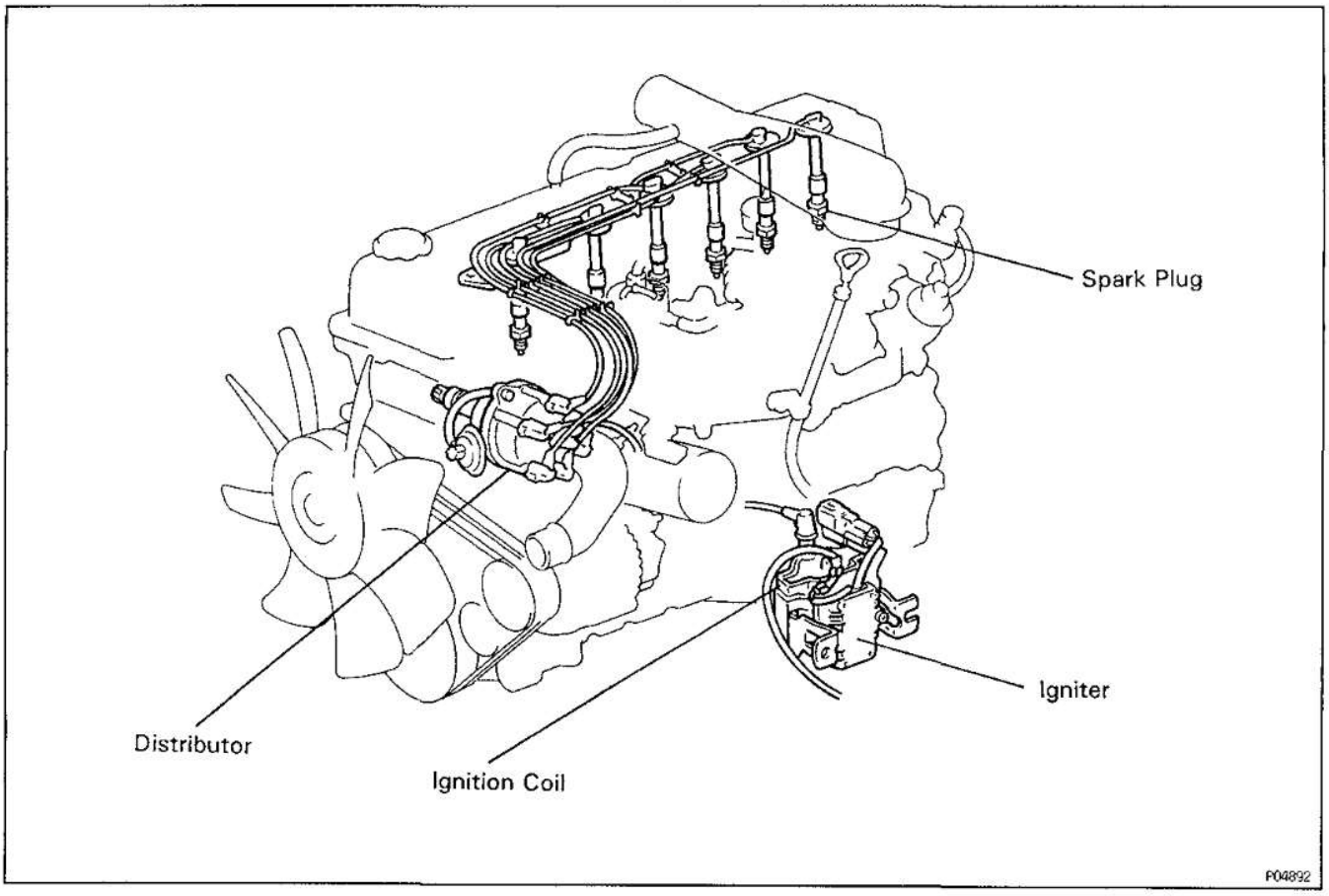

This ignition system is comprised of a distributor, ignition coil, igniter, spark plugs and other *componentes*.

IGNITER

The igniter turns the primary current of the ignition coil ON and OFF.

IGINITION COIL

The ignition coil uses a closed core coil with the primary coil wrapped around the core and the secondary coil wrapped around the primary coil. This allows the generation of a high voltage sufficient to cause a spark to jump across the spark plug gap.

DISTRIBUTOR

This correctly distributes high voltage to the spark plug of each cylinder in the specified ignition order.

PRECAUTIONS

IG03D–01

1. Do not leave the ignition switch on for more than 10 minutes if the engine does not start.

IG

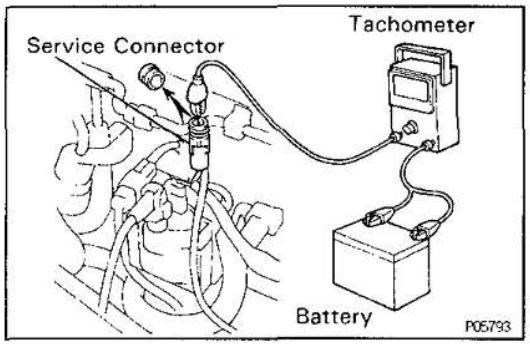

2. With a tachometer connected to the system, connect the test probe of the tachometer to the service connector from the igniter.

3. As some tachometers are not compatible with this ignition system, we recommend that you confirm the compatibility of your unit before use.

4. NEVER allow the tachometer terminals to touch ground as it could result in damage to the igniter and/or ignition coil.

5. Do not disconnect the battery while the engine is running.

6. Check that the igniter is properly grounded to the body.

SYSTEM CIRCUIT

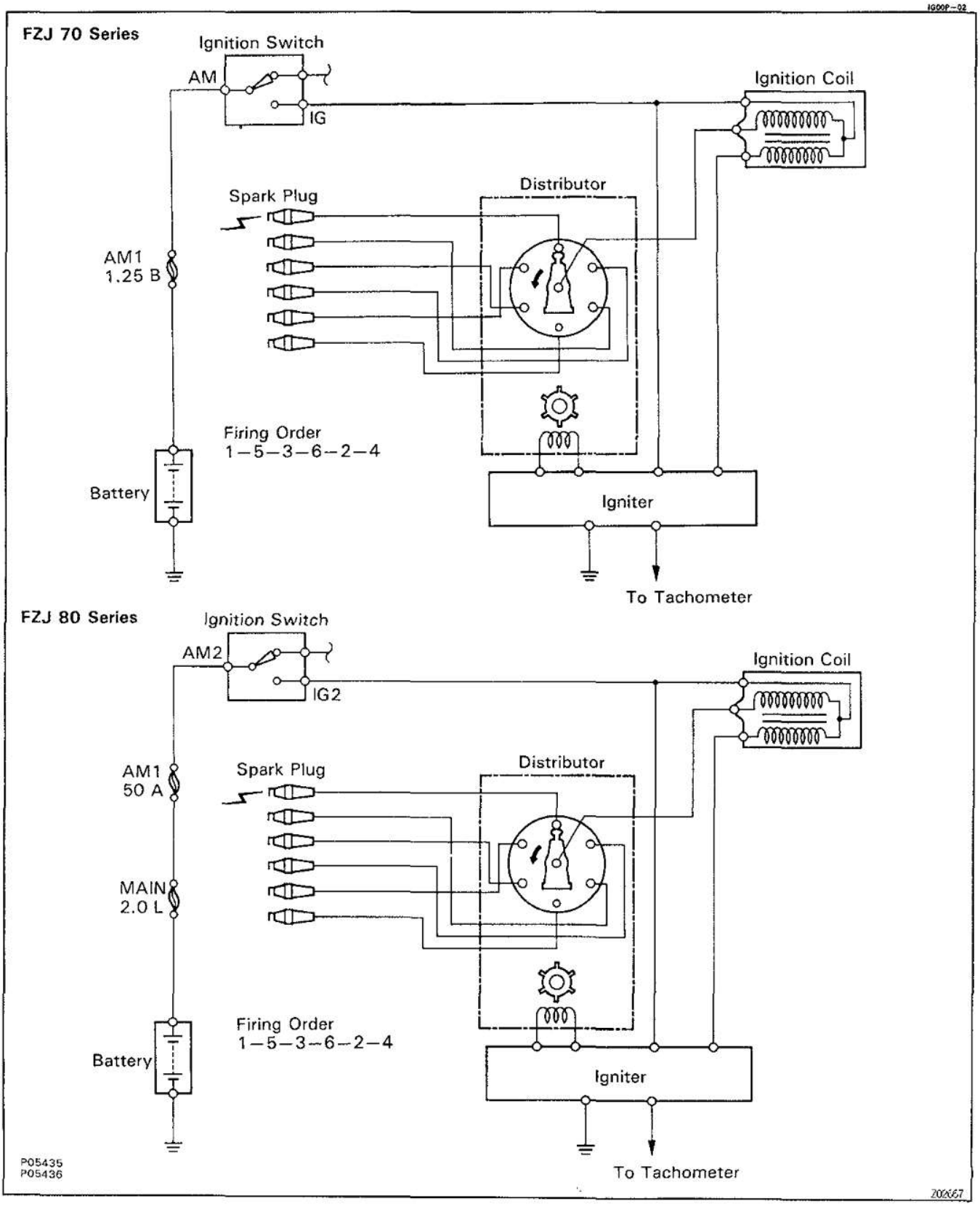

OPERATION

IG034-01

The function of the ignition system is to distribute spark to the cylinders at appropriate timing in accordance with the piston position.

PREPARATION

SST (SPECIAL SERVICE TOOLS)

IG00R-02

IG

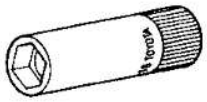	09155–16100 Spark Plug Wrench	

RECOMMENDED TOOLS

IG00S-01

	09082–00015 TOYOTA Electrical Tester	
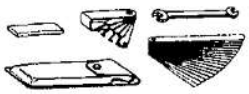	09200–00010 Engine Adjust Kit	

EQUIPMENT

IG00T-02

Megger insulation resistancemeter	
Spark plug cleaner	
Torque wrench	

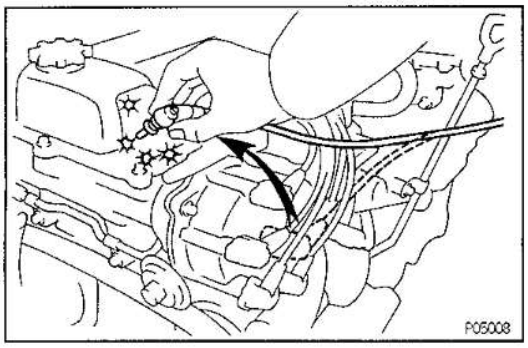

ON—VEHICLE INSPECTION

IG00V-02

SPARK TEST

CHECK THAT SPARK OCCURS

(a) Disconnect the high—tension cords (from the ignition coil) from the distributor cap.

(b) Hold the end approx. 12.5 mm (0.50 in.) from the body ground.

(c) Check if spark occurs while engine is being cranked. If the spark does not occur, perform the test as follows:

IG

SPARK TEST

↓ NO

CHECK CONNECTION OF DISTRIBUTOR CONNECTOR → BAD → Connect securely.

↓ OK

CHECK RESISTANCE OF HIGH-TENSION CORD (See page IG-27)
Maximum resistance: 25 kΩ per cord → BAD → Replace the cord(s).

↓ OK

CHECK POWER SUPPLY TO IGNITION COIL
1. Turn ignition switch ON.
2. Check that there is battery voltage at ignition coil positive (+) terminal.

→ BAD → Check wiring between ignition switch and ignition coil.

↓ OK

CHECK RESISTANCE OF IGNITION COIL (See page IG-31)
Resistance (Cold):
Primary 0.36 — 0.55 Ω
Secondary 9.0 — 15.4 kΩ
Resistance (Hot):
Primary 0.45 — 0.65 Ω
Secondary 11.4 — 18.1 kΩ

→ BAD → Replace the ignition coil.

↓ OK

CHECK RESISTANCE OF SIGNAL GENERATOR (PICKUP COIL) (See page IG-32)
Resistance (Cold): 185 — 275 Ω
Resistance (Hot): 240 — 325 Ω

→ BAD → Replace the signal generator (pickup coil).

↓ OK

CHECK AIR GAP OF DISTRIBUTOR (See page IG-32)
Air gap: 0.2 — 0.4 mm (0.008 — 0.016 in.) → BAD → Adjust the air gap.

↓ OK

TRY ANOTHER IGNITER

V00795

IG035–01

HIGH–TENSION CORDS INSPECTION

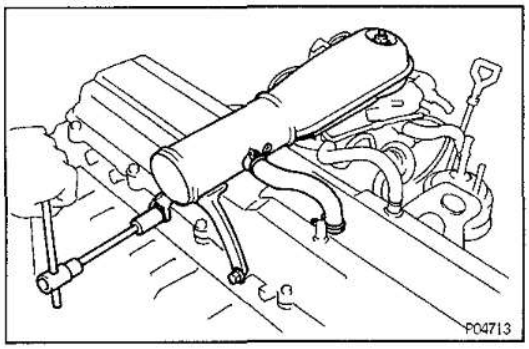

1. REMOVE INTAKE AIR CONNECTOR

(a) Disconnect the PCV hose.

(b) Remove the two bolts, nut and air connector.

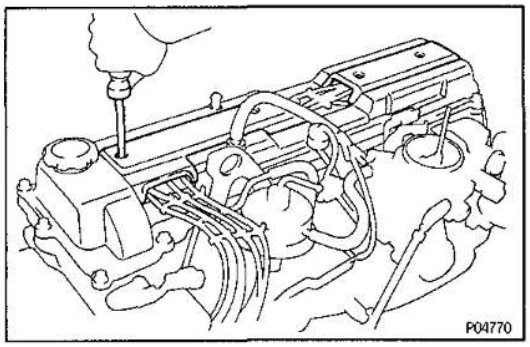

2. REMOVE NO. 2 AND NO. 3 CYLINDER HEAD COVERS

Remove the four bolts and head covers.

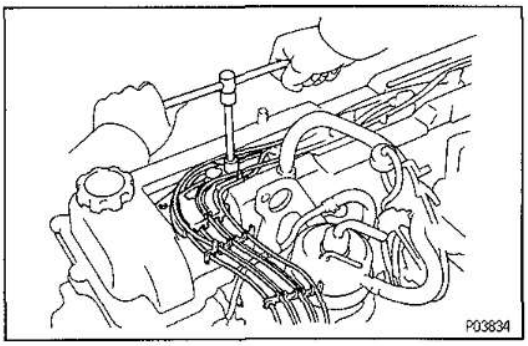

3. DISCONNECT HIGH – TENSION CORDS FROM SPARK PLUGS

(a) Remove the No.1 cord clamp mounting bolt.

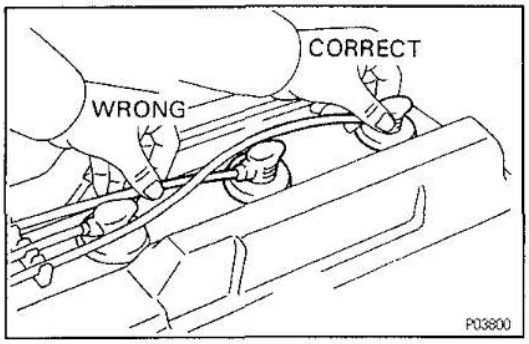

(b) Disconnect the high – tension cords at the rubber boot.

DO NOT pull on the cords.

NOTICE: Pulling on or bending the cords may damage the conductor inside.

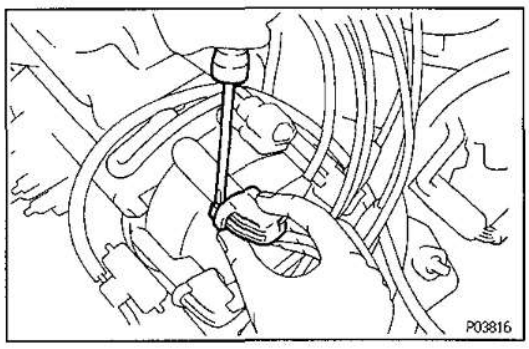

4. DISCONNECT HIGH–TENSION CORDS FROM DISTRIBUTOR CAP AND IGNITION COIL

(a) Using a screwdriver, lift up the lock claw and disconnect the holder from the distributor cap (ignition coil).

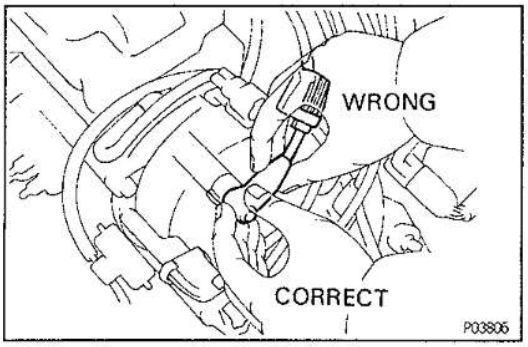

(b) Disconnect the high—tension cord at the grommet. DO NOT pull on the cord.

NOTICE:

- **Pulling on or bending the cords may damage the conductor inside.**
- **Do not wipe any of the oil from the grommet after the high—tension cord is disconnected.**

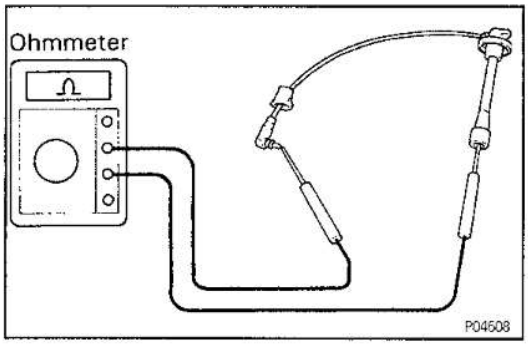

5. INSPECT HIGH—TENSION CORD RESISTANCE

Using an ohmmeter, measure the resistance.

Maximum resistance:

25 kΩ per cord

If the resistance is greater than maximum, check the terminals. If necessary, replace the high — tension cord.

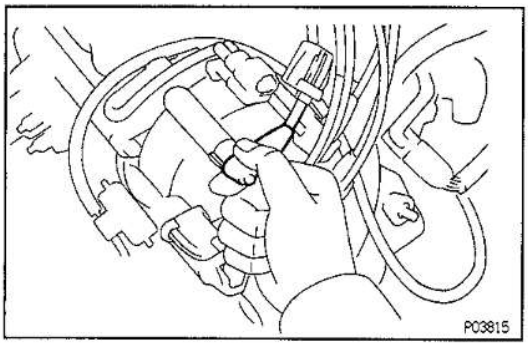

6. RECONNECT HIGH—TENSION CORDS TO DISTRIBUTOR CAP AND IGNITION COIL

(a) Insert the grommet portion into the terminal hole of the distributor cap (ignition coil).

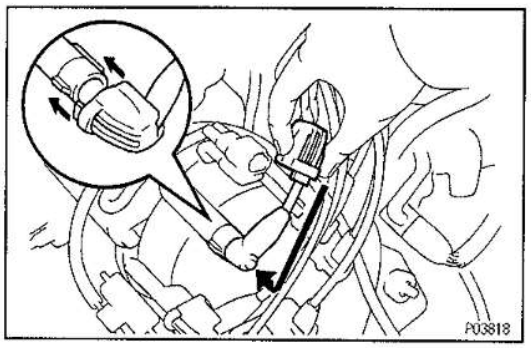

(b) Align the spline of the distributor (ignition coil) with the spline of the holder, and slide on the holder.

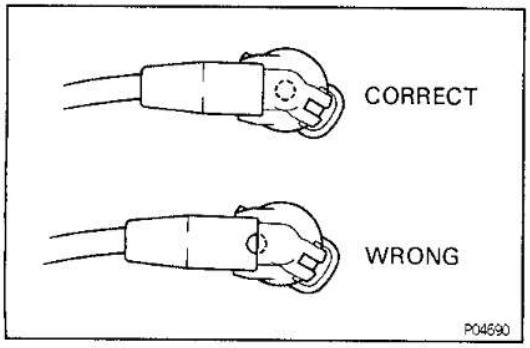

NOTICE: Check that the holder is corretly installed to the grommet and distributor cap as shown in the illustration.

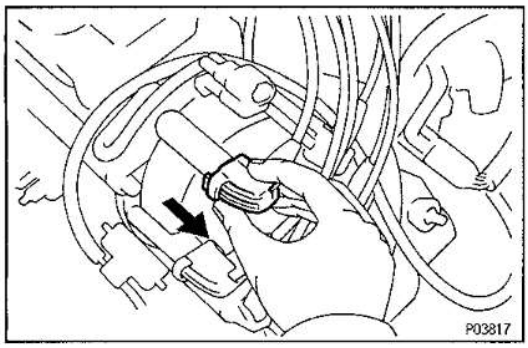

(c) Check that the lock claw of the holder is engaged by lightly pulling the holder.

(d) Insert the grommet and holder together.

IG

7. RECONNECT HIGH–TENSION CORDS TO SPARK PLUGS

(a) Secure the high–tension cords with the clamps as shown in the illustration.

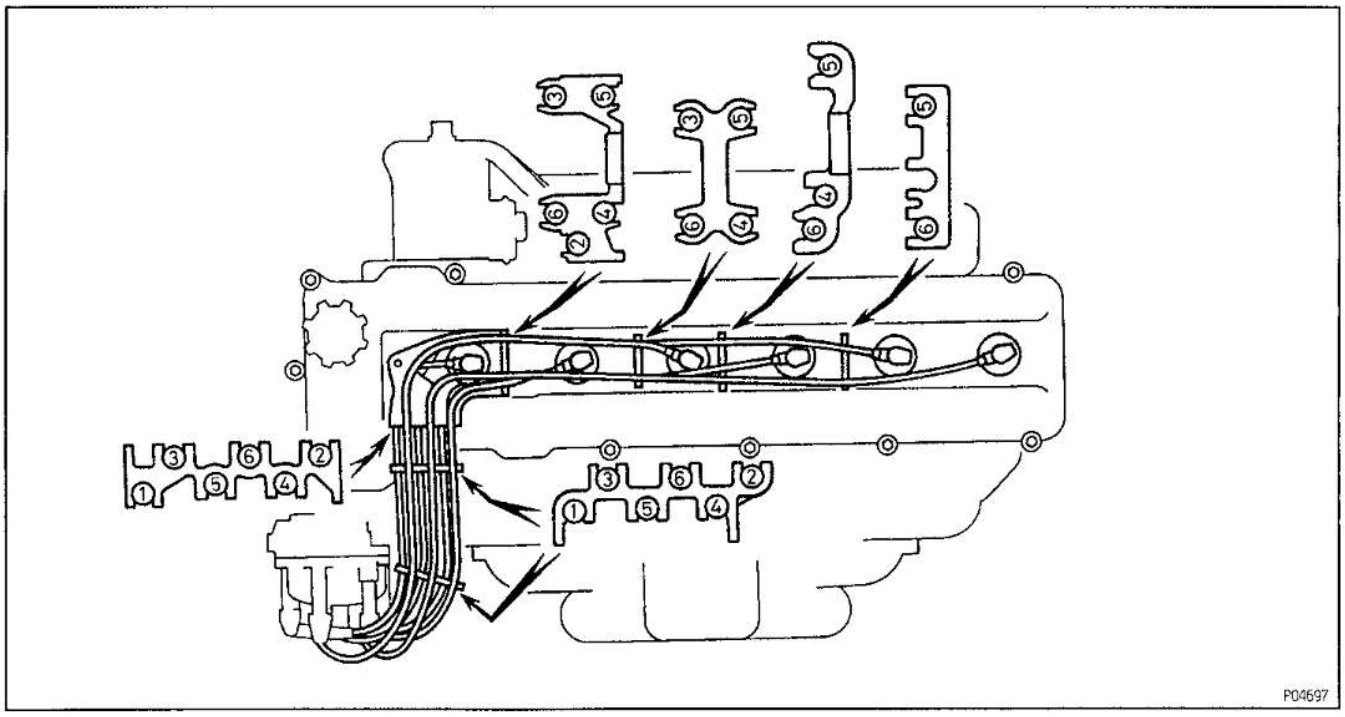

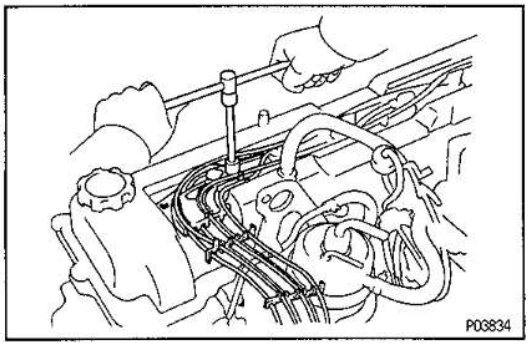

(b) Install the No.1 cord clamp with the bolt.

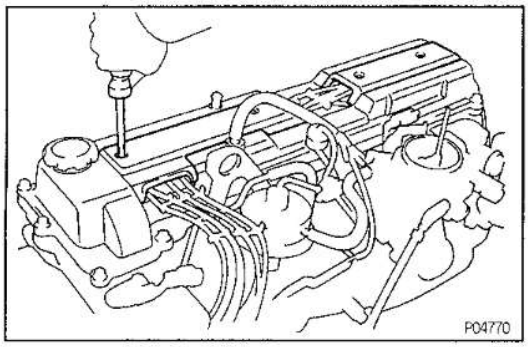

8. INSTALL NO. 2 AND NO. 3 CYLINDER HEAD COVERS

Install the head covers with the four bolts.

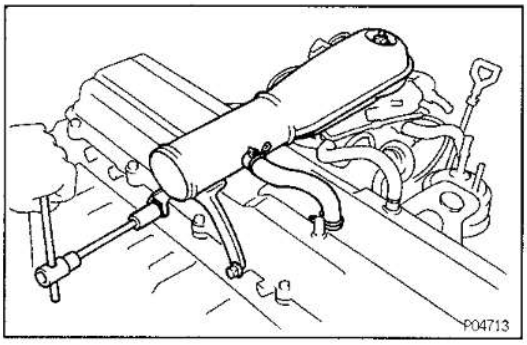

9. INSTALL INTAKE AIR CONNECTOR

(a) Install the air connector with the two bolts and nut.

Bolt

Torque: 20 N·m (200 kgf·cm, 14 ft·lbf)

Nut

Torque: 5.4 N·m (55 kgf·cm, 48 in.·lbf)

(b) Connect the PCV hose.

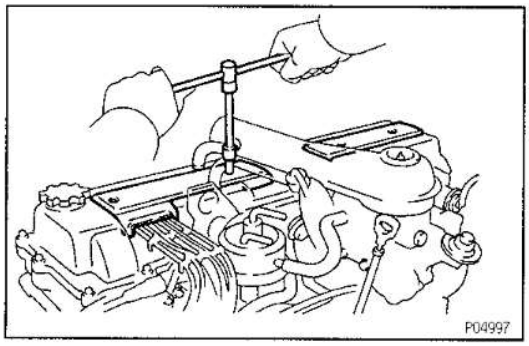

SPARK PLUGS INSPECTION

IG03F-01

1. REMOVE NO. 2 AND NO. 3 CYLINDER HEAD COVERS

Remove the four bolts and head covers.

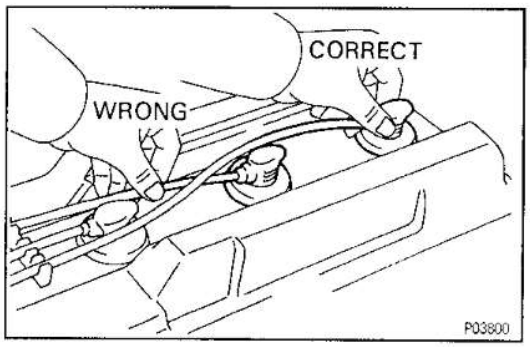

2. DISCONNECT HIGH — TENSION CORDS FROM SPARK PLUGS

Disconnect the high — tension cords at the rubber boot.

DO NOT pull on the cords.

NOTICE: Pulling on or bending the cords may damage the conductor inside.

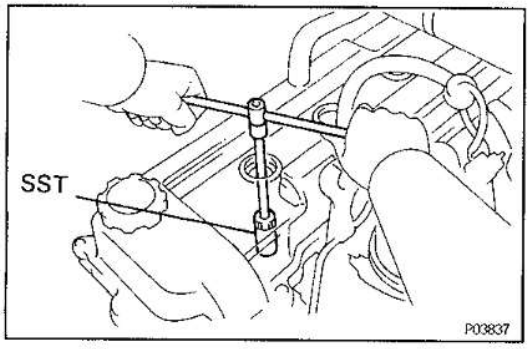

3. REMOVE SPARK PLUGS

Using SST, remove the spark plug.

SST 09155—16100

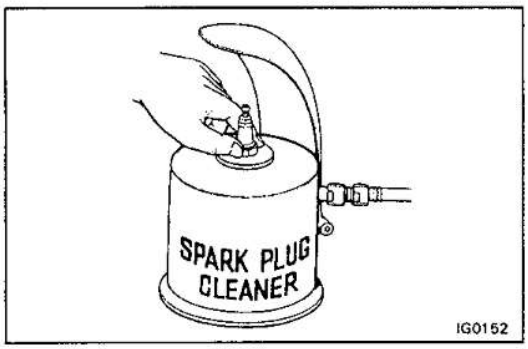

4. CLEAN SPARK PLUGS

Using a spark plug cleaner or wire brush, clean the spark plug.

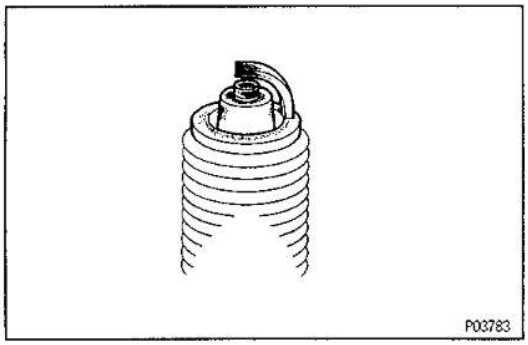

5. VISUALLY INSPECT SPARK PLUGS

Check the spark plug for electrode wear, threads damage and insulator damage.
If abnormal, replace the plugs.

Recommended spark plugs:

ND K16R—U
NGK BKR5EYA

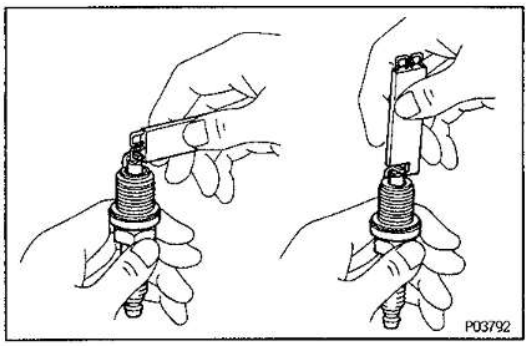

6. ADJUST ELECTRODE GAP

Carefully bend the outer electrode to obtain the correct electrode gap.

Correct electrode gap:

0.8 mm (0.031 in.)

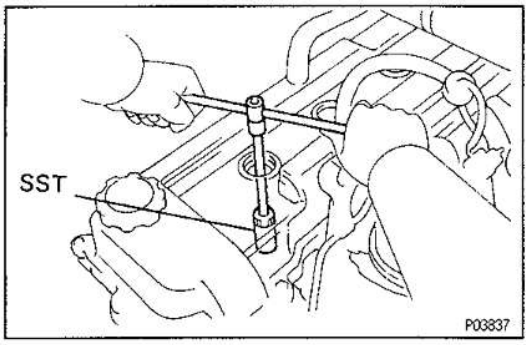

7. INSTALL SPARK PLUGS

Using SST, install the spark plug.
SST 09155—16010
Torque: 20 N·m (200 kgf·cm, 14 ft·lbf)

8. RECONNECT HIGH—TENSION CORDS TO SPARK PLUGS

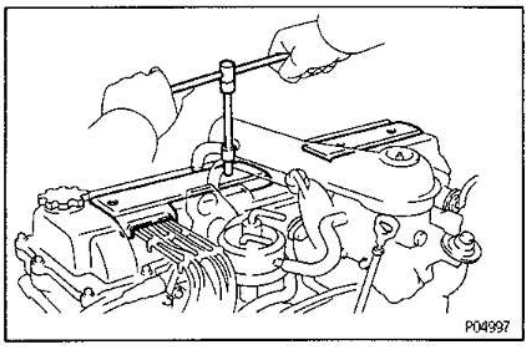

9. INSTALL NO. 2 AND NO. 3 CYLINDER HEAD COVERS

Install the head covers with the four bolts.

IG036–01

IGNITION COIL INSPECTION

NOTICE: "Cold" and "Hot" in the following sentences express the temperature of the coils themselves. "Cold" is from –10°C (14°F) to 50°C (122°F) and "Hot" is from 50°C (122°F) to 100°C (212°F).

1. DISCONNECT IGNITION COIL CONNECTOR

2. DISCONNECT HIGH–TENSION CORD

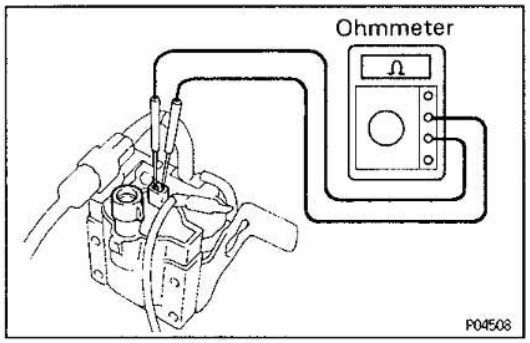

3. INSPECT PRIMARY COIL RESISTANCE

Using an ohmmeter, measure the resistance between the positive (+) and negative (–) terminals.

Primary coil resistance (Cold):

0.36 – 0.55 Ω

Primary coil resistance (Hot):

0.45 – 0.65 Ω

If the resistance is not as specified, replace the ignition coil.

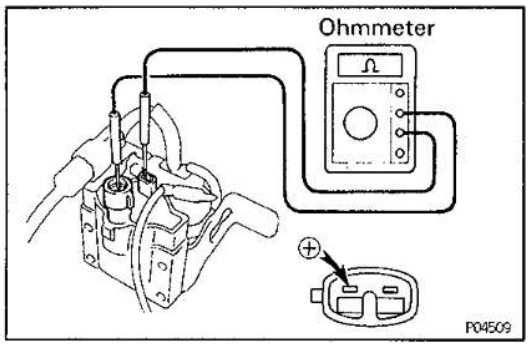

4. INSPECT SECONDARY COIL RESISTANCE

Using an ohmmeter, measure the resistance between the positive (+) and high–tension terminals.

Secondary coil resistance (Cold):

9.0 – 15.4 kΩ

Secondary coil resistance (Hot):

11.4 – 18.1 kΩ

If the resistance is not as specified, replace the ignition coil.

5. RECONNECT HIGH–TENSION CORD

6. RECONNECT IGNITION COIL CONNECTOR

IG037–01

DISTRIBUTOR INSPECTION

NOTICE: "Cold" and "Hot" in the following sentences express the temperature of the coils themselves. "Cold" is from –10°C (14°F) to 50°C (122°F) and "Hot" is from 50°C (122°F) to 100°C (212°F).

IG

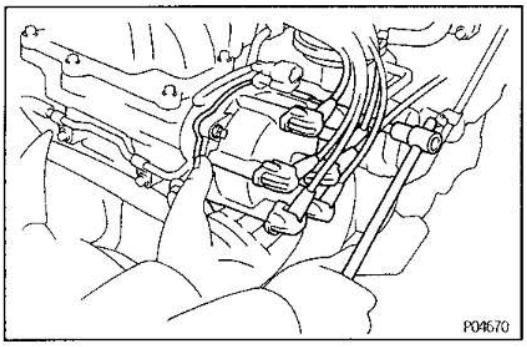

1. **DISCONNECT DISTRIBUTOR CONNECTOR**
2. **REMOVE DISTRIBUTOR CAP WITHOUT DISCONNECTING HIGH–TENSION CORDS**

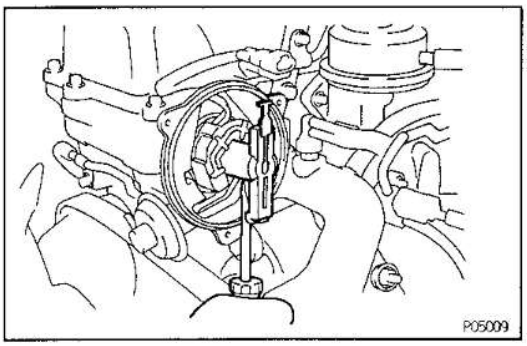

3. **REMOVE ROTOR**
   Remove the screw and rotor.
4. **REMOVE DUST PROOF COVER**

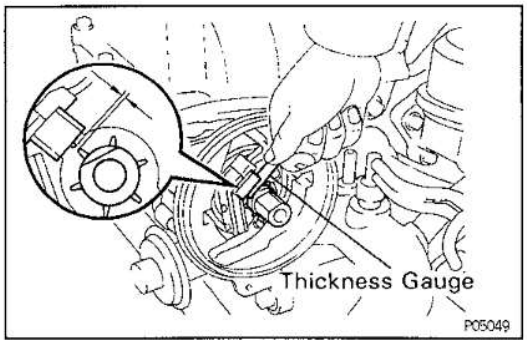

5. **INSPECT AIR GAP**
   Using a thickness gauge, measure the gap between the signal rotor and the pickup coil projection.
   Air gap:
   0.2 – 0.4 mm (0.008 – 0.016 in.)
   If the gap is not within specification, adjust the gap.
   - Loosen the two screws and move the signal generator (pickup coil) until the gap is correct. Tighten the screws and recheck the gap.

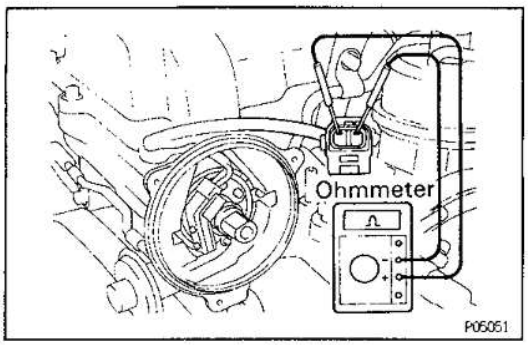

6. **INSPECT SIGNAL GENERATOR (PICKUP COIL) RESISTANCE**
   Using an ohmmeter, check that the resistance of the pickup coil.
   Pickup coil resistance (Cold):
   185 – 275 Ω
   Pickup coil resistance (Hot):
   240 – 325 Ω
   If the resistance is not as specified, replace the signal generator (pickup coil).

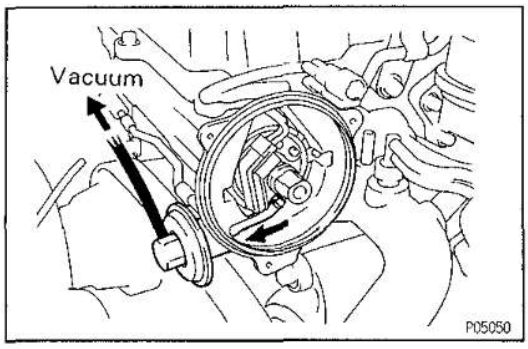

7. INSPECT VACUUM ADVANCE

(a) Disconnect the vacuum hose and connect a vacuum pump to the vacuum advancer.

(b) Apply vacuum and check that the vacuum advancer moves.
If the vacuum advancer does not work, repair or replace if necessary.

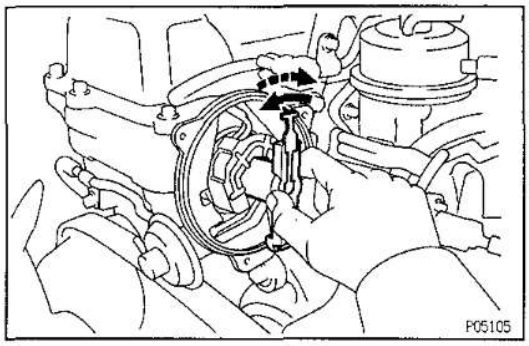

8. INSPECT GOVERNOR ADVANCE

(a) Turn the rotor shaft counterclockwise, release it and check that the rotor returns quickly clockwise.

(b) Check that the rotor is not excessively loose.

9. INSTALL DUST PROOF COVER

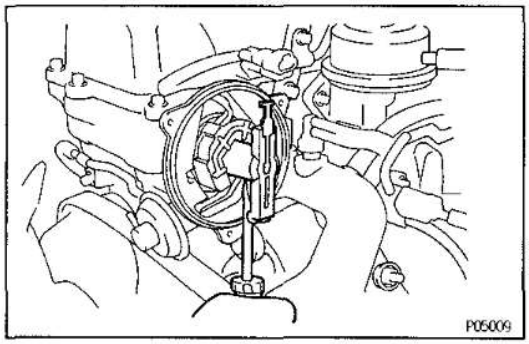

10. REINSTALL ROTOR

Install the rotor with the screw.

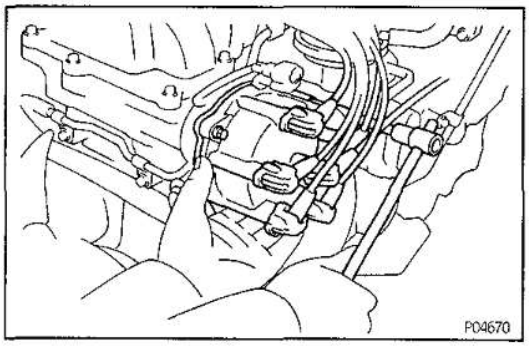

11. REINSTALL DISTRIBUTOR CAP

12. RECONNECT DISTRIBUTOR CONNECTOR

IGNITER INSPECTION

IG00Z-01

(See Spark Test procedure on page IG—25)

DISTRIBUTOR

DISTRIBUTOR REMOVAL

IG038-01

IG

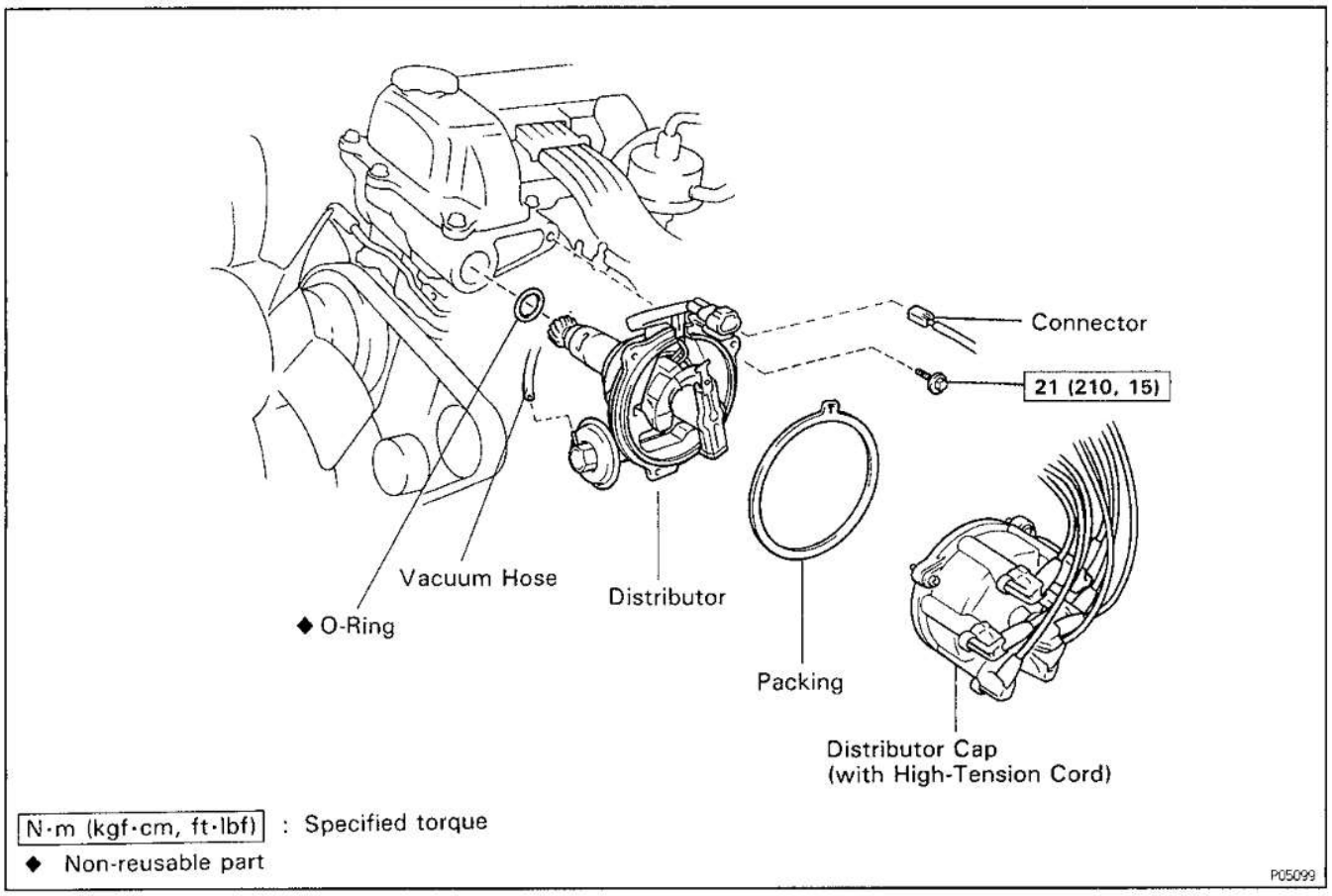

1. **DISCONNECT CABLE FROM NEGATIVE TERMINAL OF BATTERY**
2. **DISCONNECT DISTRIBUTOR CONNECTOR**
3. **DISCONNECT VACUUM HOSE FROM VACUUM ADVANCER**

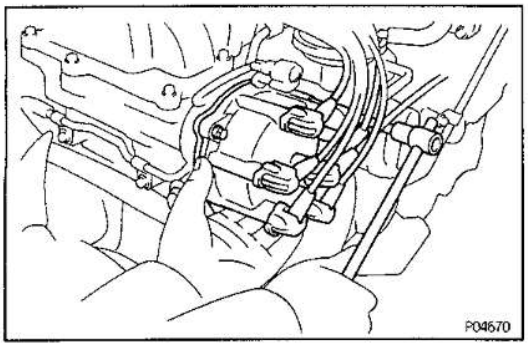

4. **REMOVE DISTRIBUTOR CAP WITHOUT DISCONNECTING HIGH—TENSION CORDS**

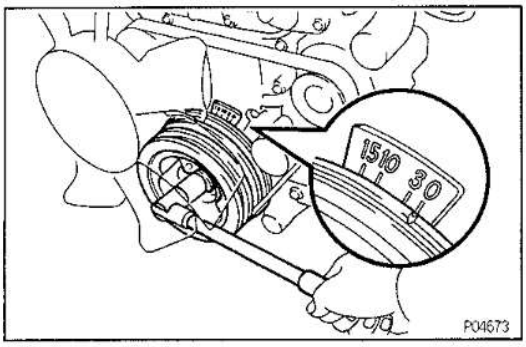

5. SET NO.1 CYLINDER TO TDC/COMPRESSION

(a) Turn the crankshaft pulley until the timing mark is aligned with "0" mark on the timing chain cover.

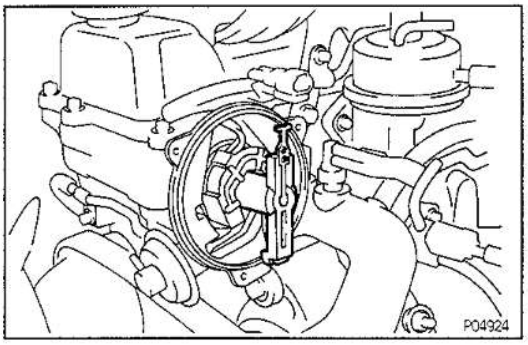

(b) Check that the distributor rotor direction is as shown.

If not, turn the crankshaft pulley one complete revolution.

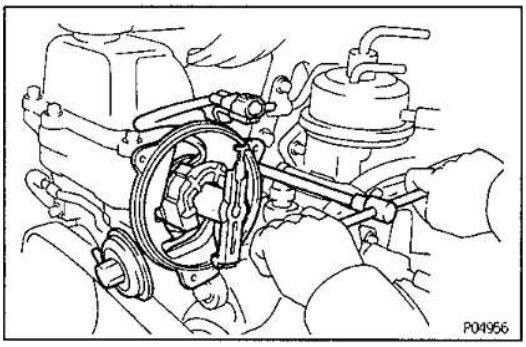

6. REMOVE DISTRIBUTOR

(a) Remove the hold–down bolt and pull out the distributor.

(b) Remove the O–ring from the distributor housing.

IG039–01

COMPONENTS

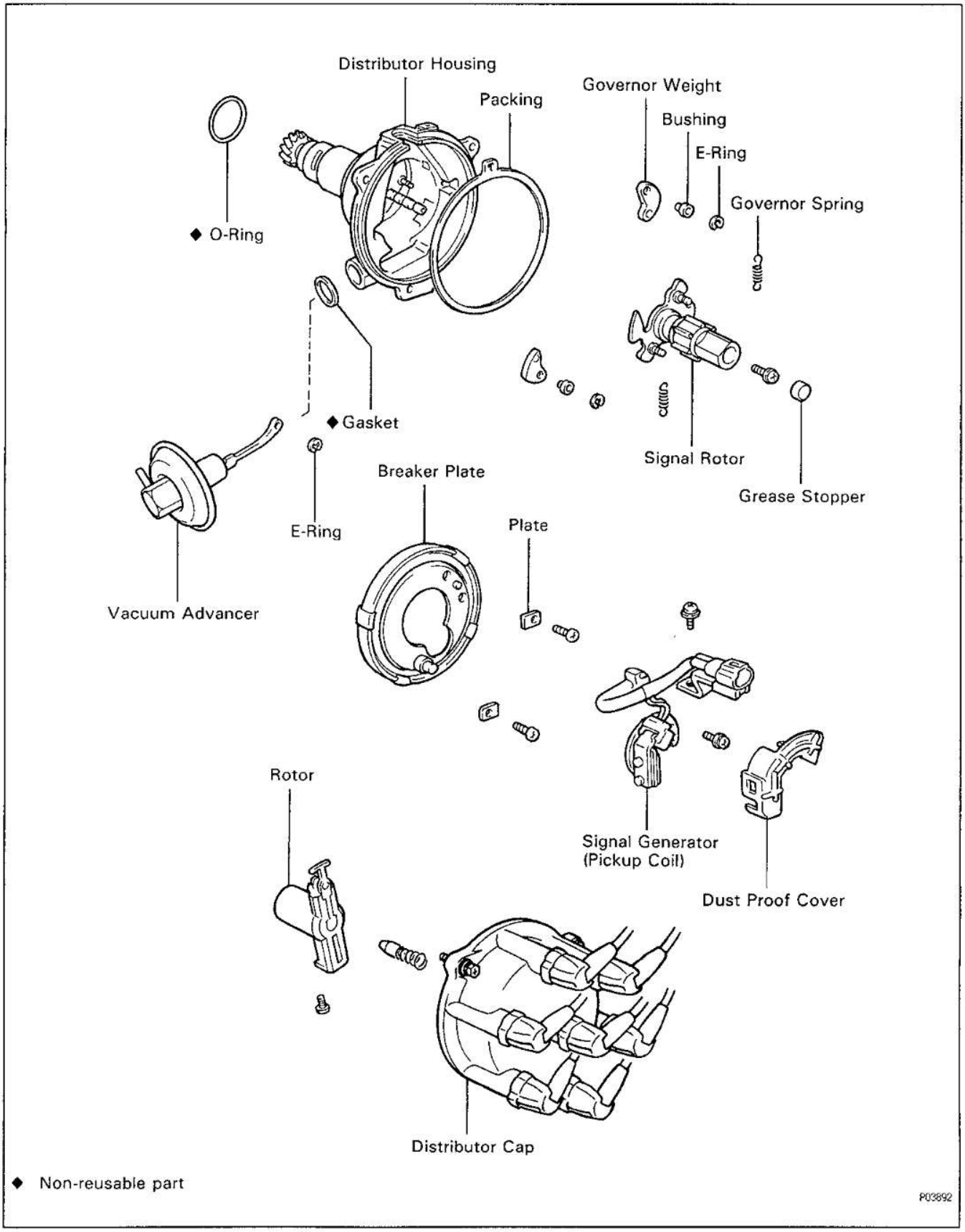

IG03A—01

DISTRIBUTOR DISASSEMBLY

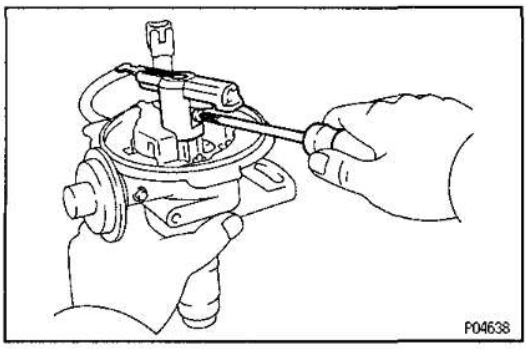

(See page IG—36)

1. **REMOVE DISTRIBUTOR CAP PACKING**
2. **REMOVE ROTOR**
   Remove the screw and rotor.

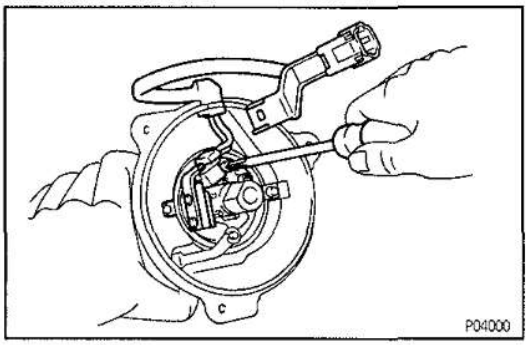

3. **REMOVE SIGNAL GENERATOR**
   (a) Remove the signal generator dust proof cover.
   (b) Remove the connector clamp bolt.
   (c) Remove the two screws and signal generator.

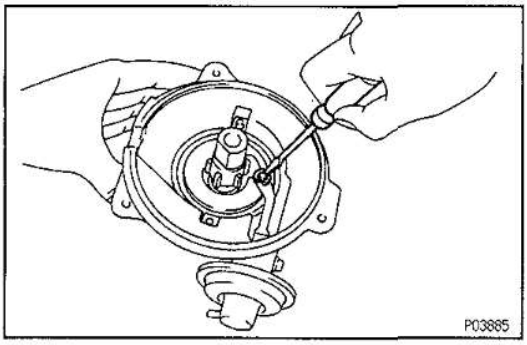

4. **REMOVE VACUUM ADVANCER**
   (a) Using a screwdriver, remove the E—ring.

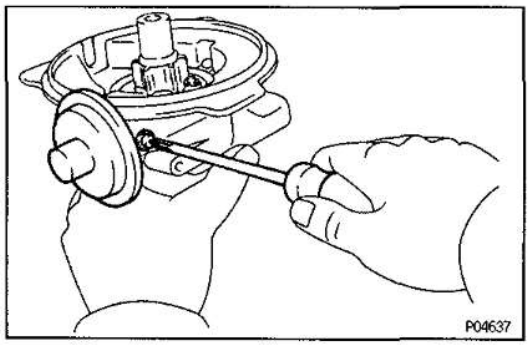

   (b) Remove the screw and pull out the vacuum advancer.

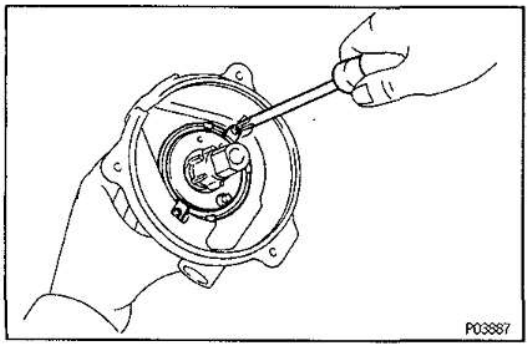

5. **REMOVE BREAKER PLATE**
   (a) Remove the two screws and plate washers.
   (b) Pull out the breaker plate.

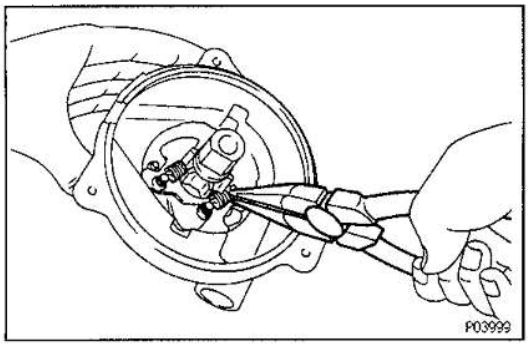

6. REMOVE GOVERNOR SPRINGS

Using needle—nose pliers, remove the two springs.

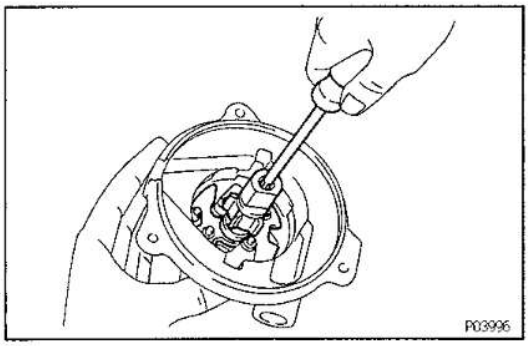

7. REMOVE SIGNAL ROTOR

(a) Remove the grease stopper.
(b) Remove the screw at the top of the governor shaft.
(c) Pull out the signal rotor.

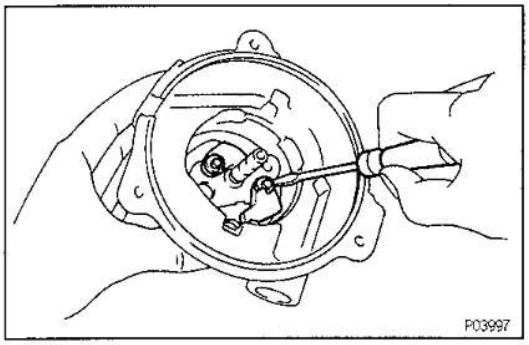

8. REMOVE GOVERNOR WEIGHTS

Using a small screwdriver, remove the E—rings and pull out the weights.

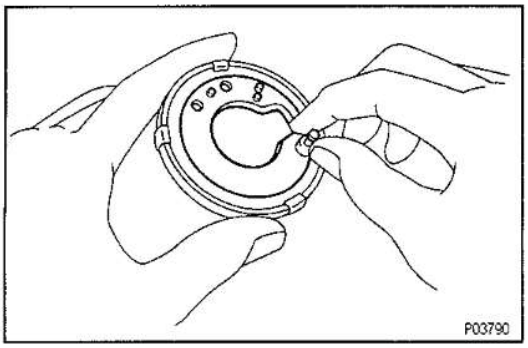

DISTRIBUTOR COMPONENTS INSPECTION

IG03B-01

1. **INSPECT BREAKER PLATE**
   Turn the breaker plate and check that it moves with a slight drag.
   If it sticks or strongly resists, replace the breaker plate.

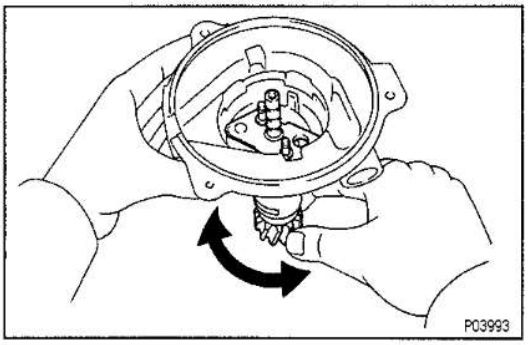

2. **INSPECT GOVERNOR SHAFT**
   Turn the governor shaft and check that it is not rough or worn.
   If it feels rough or worn, replace the distributor housing.

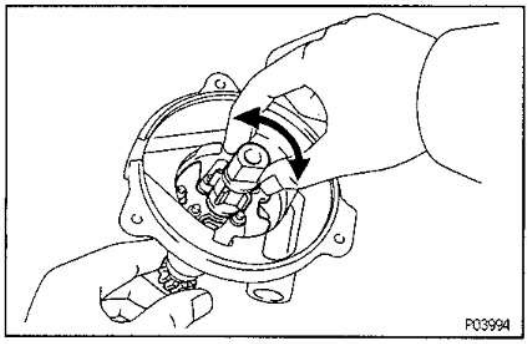

3. **INSPECT SIGNAL ROTOR**
   Temporarily install the signal rotor to the governor shaft and check that they fit together correctly.
   If necessary, replace the signal rotor or distributor housing.

IG03E–01

DISTRIBUTOR ASSEMBLY

(See page IG–36)

1. INSTALL GOVERNOR WEIGHTS

(a) Install the bushing to the governor weight.

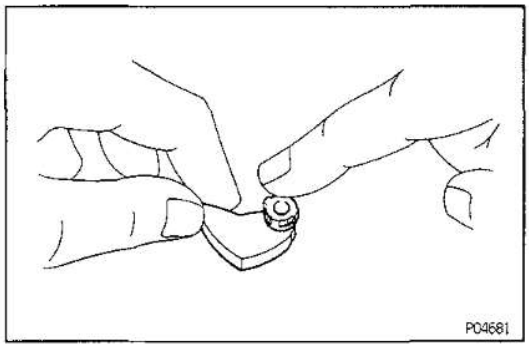

IG

(b) Lightly coat the pivot pin of the governor shaft with high–temperature grease.
(c) Slide the weights over the small shafts.
(d) Using needle–nose pliers, install the E–rings.

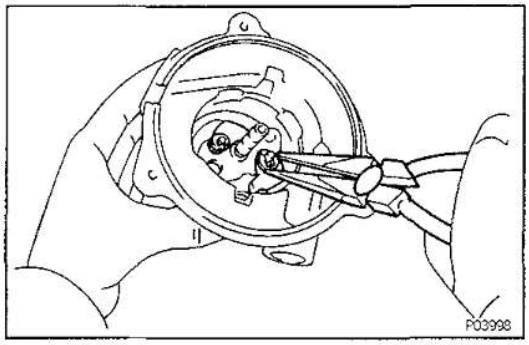

2. INSTALL SIGNAL ROTOR

(a) Lightly coat the governor shaft with high–temperature grease.
(b) Align the cutout of the signal rotor with the protrusion of the gear.

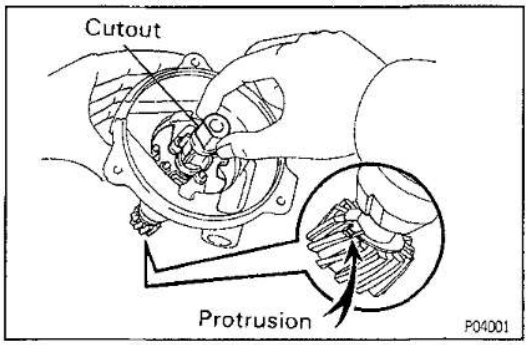

(c) Install the screw.

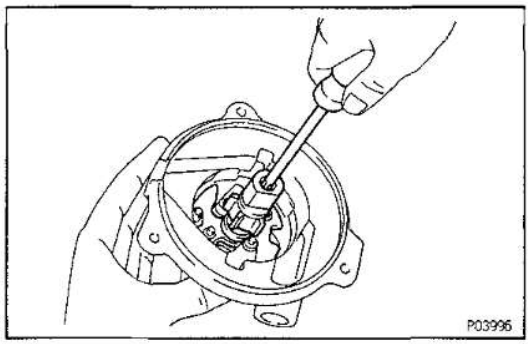

(d) Pack high–temperature grease into the signal rotor.
(e) Push on the grease stopper with your finger.

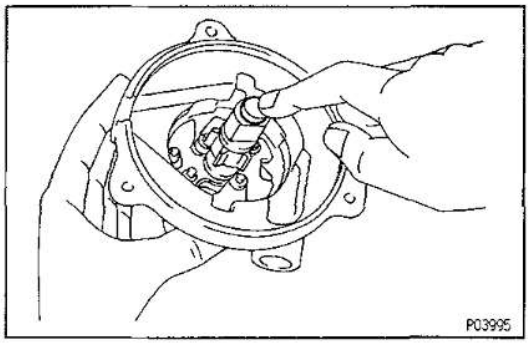

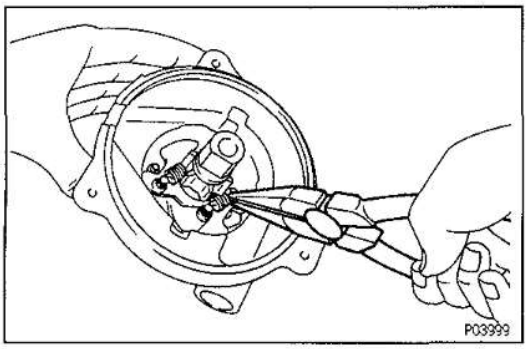

3. INSTALL GOVERNOR SPRINGS

Using needle—nose pliers, install the two springs.

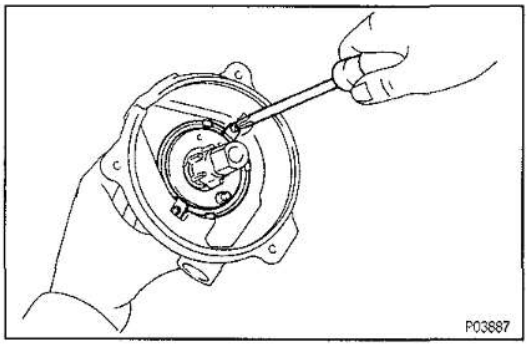

4. INSTALL BREAKER PLATE

(a) Align the four clips on the breaker plate with cutout parts of the housing, and install the breaker plate.

(b) Secure the breaker plate with the two screws and plate washers.

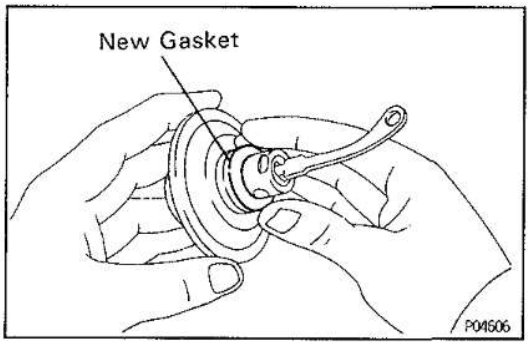

5. INSTALL VACUUM ADVANCER

(a) Install a new gasket to the advancer.

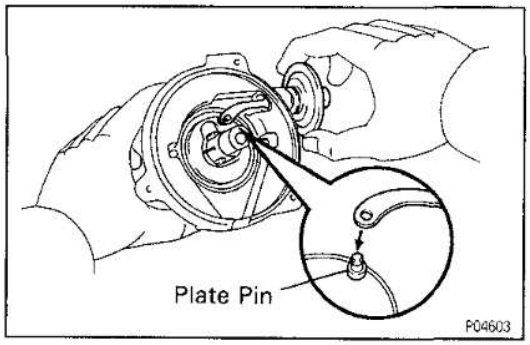

(b) Insert the vacuum advancer with the packing into the housing and position the advancer lever hole over the breaker plate pin.

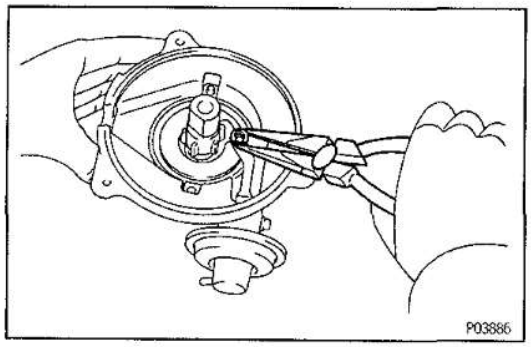

(c) Using needle—nose pliers, install the E—ring.

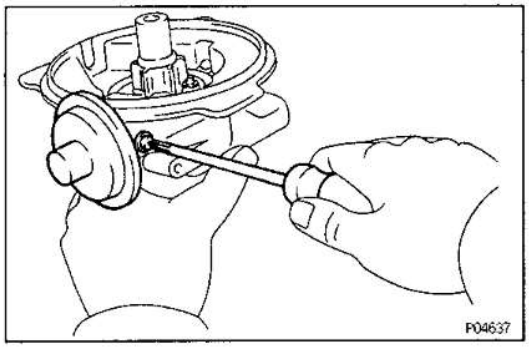

(d) Secure the vacuum advancer with the screw.

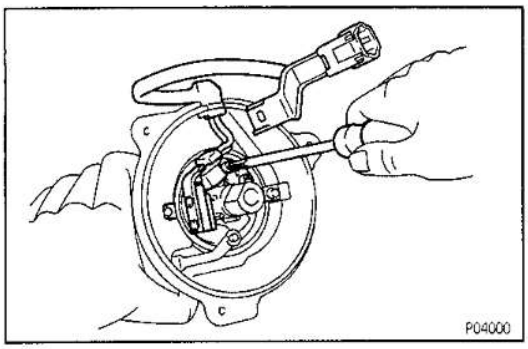

6. INSTALL AND ADJUST SIGNAL GENERATOR

(a) Loosely install the signal generator with the two screws.

(b) Install the connector clamp screw.

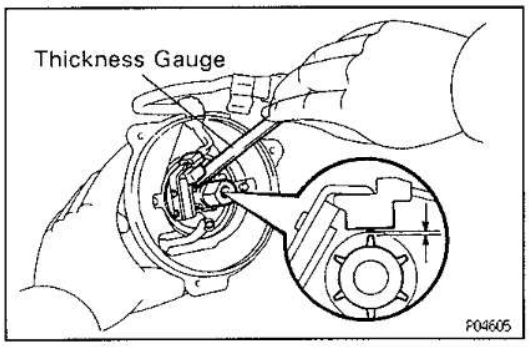

(c) Using a thickness gauge, adjust the gap between the signal generator projection with governor shaft projection.

Air gap:

0.2—0.4 mm (0.008—0.016 in.)

(d) Install the dust proof cover.

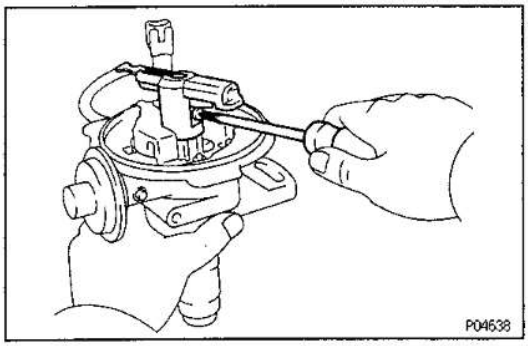

7. INSTALL ROTOR

Install the rotor with the screw.

8. INSTALL PACKING TO DISTRIBUTOR CAP

IG03G—01

DISTRIBUTOR INSTALLATION

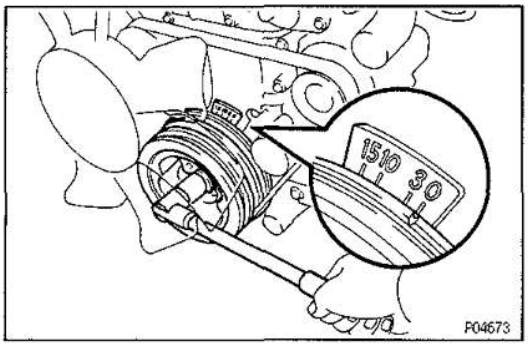

(See page IG—34)

1. CHECK NO.1 CYLINDER TO TDC/COMPRESSION

If nescessary, remove the cylinder head cover, and check the following conditions:

- Turn the crankshaft pulley and align its groove with the timing mark "0" of the timing chain cover.

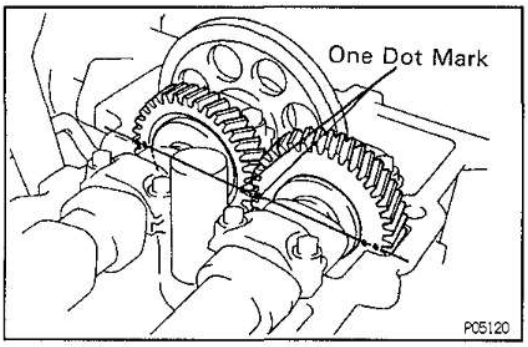

- Verify taht the timing marks with one and two dots are in straight line on the cylinder head surface as shown in the illustration.

If not, turn the crankshaft one revolution (360°) and align the mark as above.

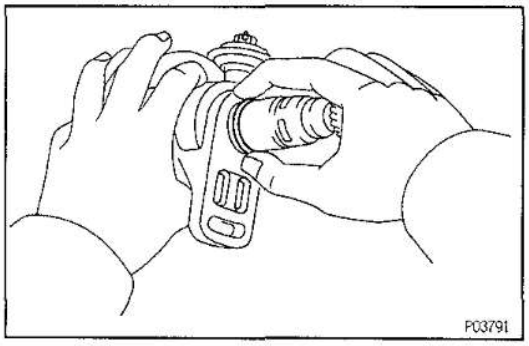

2. INSTALL DISTRIBUTOR

(a) Install a new O—ring to the distributor.
HINT: Always use a new O—ring when installing the distributor.

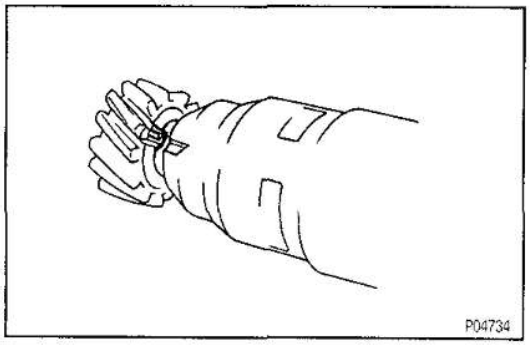

(b) Align the groove of the distributor housing with the protrusion on the driven gear.
(c) Apply a light coat of engine oil on the O—ring.

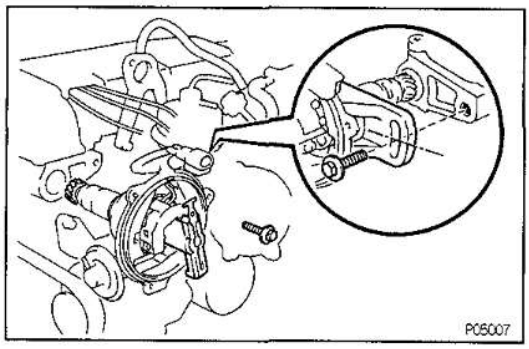

(d) Insert the distributor, aligning the center of the flange with that of the bolt hole on the cylinder head.
(e) Lightly tighten the hold—down bolt.

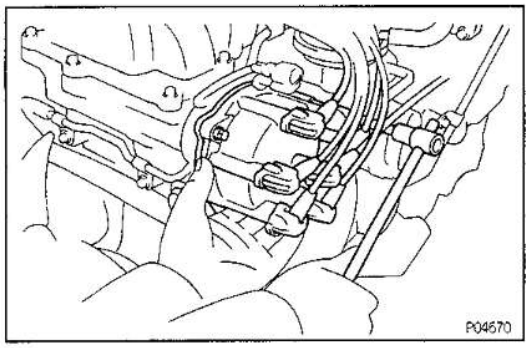

4. **INSTALL DISTRIBUTOR CAP**

5. **CONNECT VACUUM HOSE**
6. **CONNECT DISTRIBUTOR CONNECTOR**
7. **CONNECT CABLE TO NEGATIVE TERMINAL OF BATTERY**
8. **ADJUST IGNITION TIMING (See EG section)**

SERVICE SPECIFICATIONS

SERVICE DATA

IG03C-01

Firing order	—		1—5—3—6—2—4
High—tension cord	Resistance (Maximum)		25 kΩ per cord
Spark plug	Recommended spark plug Recommended spark plug Correct electrode gap	ND NGK	K16R-U BKR5EYA 0.8 mm (0.031 in.)
Ignition coil	Primary coil resistance (Cold) Primary coil resistance (Hot) Secondary coil resistance (Cold) Secondary coil resistance (Hot)		0.36 — 0.55 Ω 0.45 — 0.65 Ω 9.0 — 15.4 kΩ 11.4 — 18.1 kΩ
Distributor	Air gap Signal generator (pickup coil) resistance (Cold) Signal generator (pickup coil) resistance (Hot)		0.2 — 0.4 mm (0.008 — 0.016 in.) 185 — 275 Ω 240 — 325 Ω

Distributor advance angle (Part No.)	Governor		Vacuum	
	Dis. rpm	Advance angle	kPa (mmHg, in.Hg)	Advance angle
19100-66010	500 740 1,150 1,626 2,659 3,000	Advance begins 2.3° 7.0° 6.4° 14.0° 13.8°	13.3 (100, 3.94) 25.3 (190, 7.48) 36.0 (270, 10.62)	Advance begins 4.7° 8.5°

V00796

TORQUE SPECIFICATIONS

IG017-02

Part tightened	N·m	kgf·cm	ft·lbf
Spark plug x Cylinder head	20	200	14
Distributor x Cylinder head	18	180	13

— MEMO —

IG

DESCRIPTION

ST040-01

The starter is a reduction type with a small, high—speed motor used to drive the pinion gear.

SYSTEM CIRCUIT

ST

ST000-0A

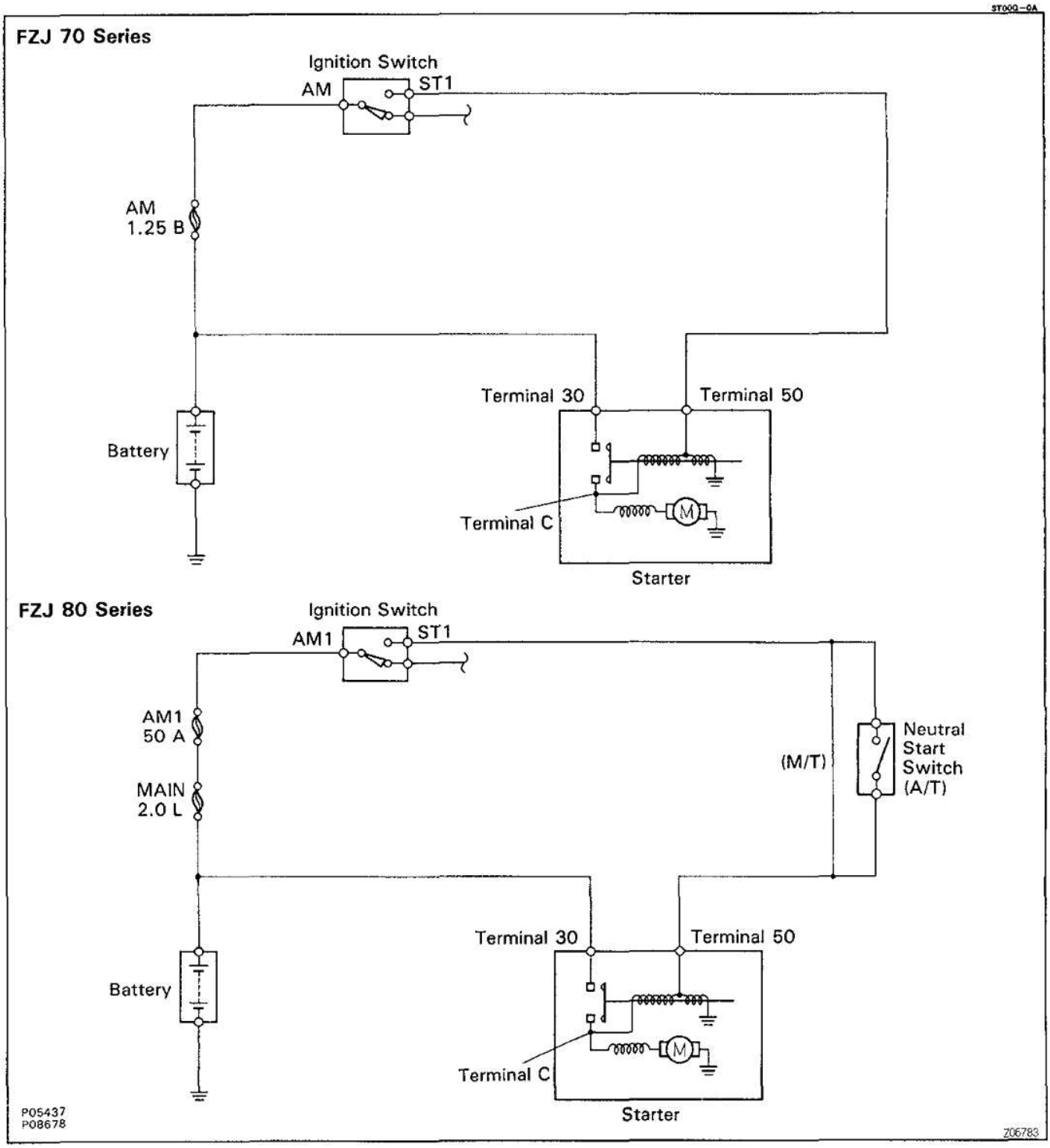

OPERATION

ST00R-04

When the ignition switch is turned to START position, current flows from terminal 50 to the coil of the solenoid and the plunger is pulled by the magnetic force of the coil. When the plunger is pulled to the left as shown above, the contact plate of the plunger allows current from the battery to flow directly from terminal 30 to the motor, and the starter rotates.
When the engine is running and the ignition switch is returned to ON, the magnetic force of the coil disappears and the contact plate of the plunger is returned to its original position by the return spring. Battery voltage no longer flows from terminal 30, so the motor stops.

PREPARATION

ST00S-02

SST (SPECIAL SERVICE TOOLS)

	09286-46011	Injection Pump Spline Shaft Puller	Armature bearing for 1.4 kW type Armature front bearing for 2.2 kW type
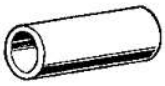	09820-00030	Alternator Rear Bearing Replacer	Armature rear bearing for 1.4 kW type
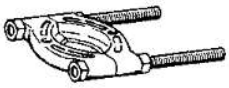	09950-00020	Bearing Remover	Armature rear bearing for 2.2 kW type

RECOMMENDED TOOLS

ST00T-01

	09082-00015	TOYOTA Electrical Tester	

EQUIPMENT

ST00U-01

Dial indicator	Commutator
Magnetic finger	
Pull scale	Brush spring
Sandpaper	Commutator
Torque wrench	
V-block	
Vernier calipers	Commutator, Brush

STARTER
(1.4 kW)

ST03K-01

COMPONENTS FOR REMOVAL AND INSTALLATION

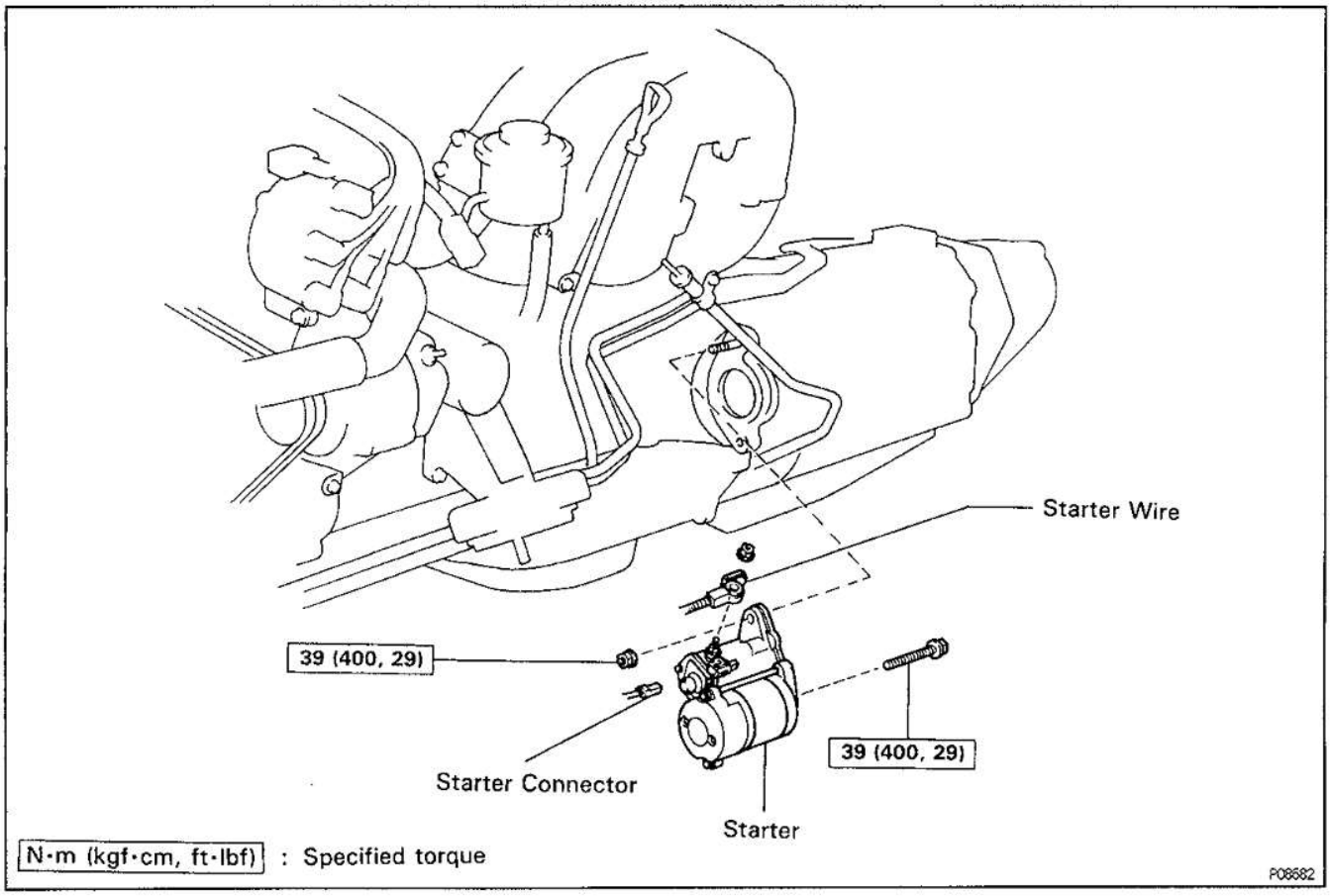

ST02K-03

STARTER REMOVAL

1. **DISCONNECT CABLE FROM NEGATIVE TERMINAL OF BATTERY**

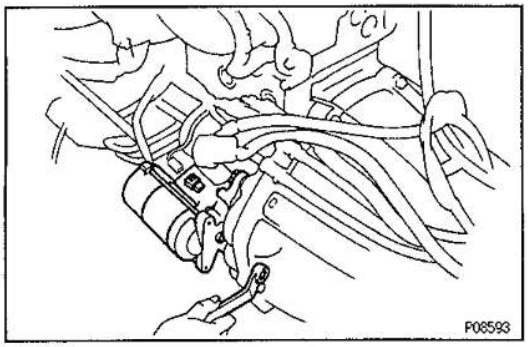

2. **REMOVE STARTER**
   (a) Disconnect the starter connector.
   (b) Remove the nut, and disconnect the starter wire.
   (c) Remove the bolt, nut and starter.

ST00W-0A

COMPONENTS FOR DISASSEMBLY AND ASSEMBLY

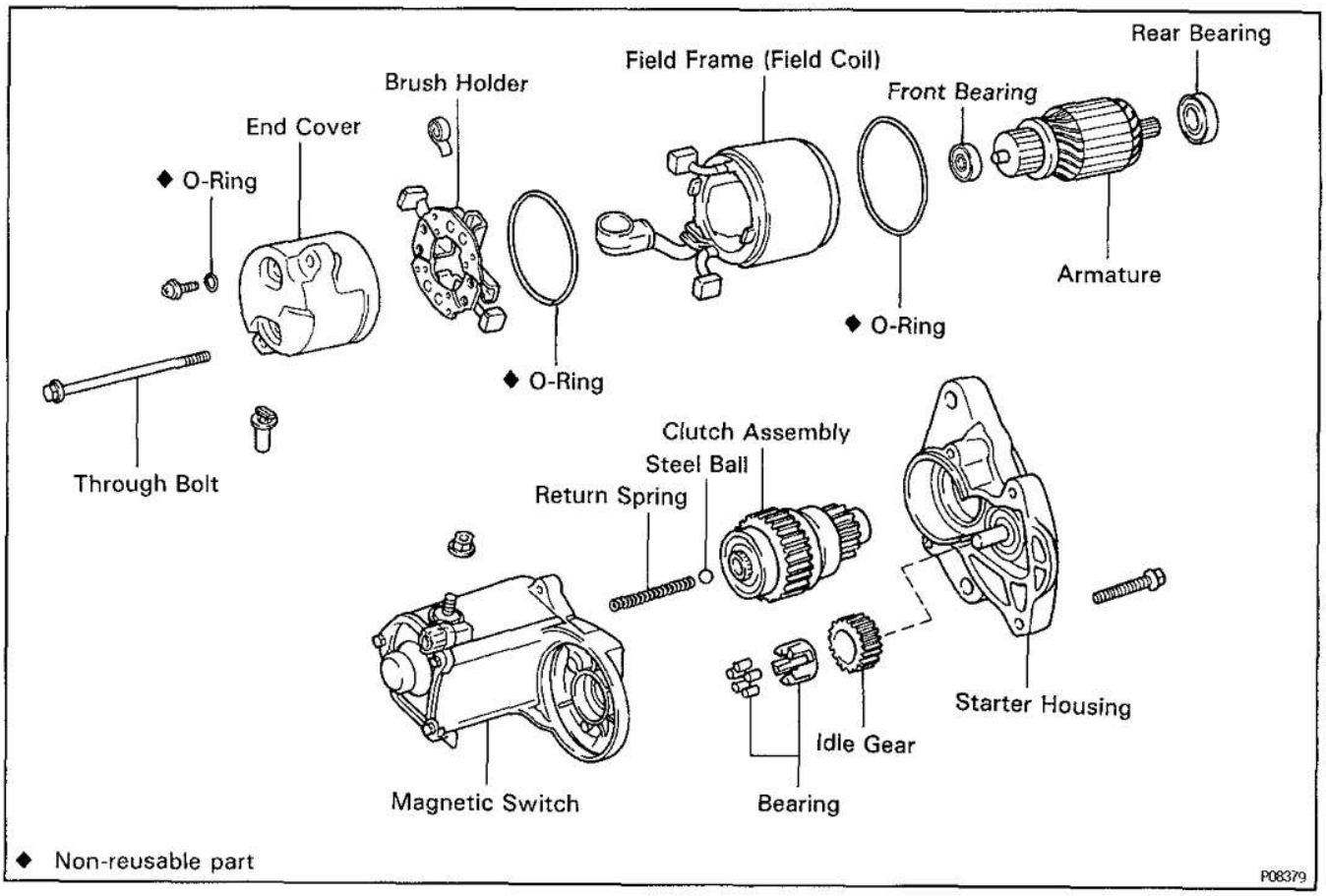

ST00X-04

STARTER DISASSEMBLY

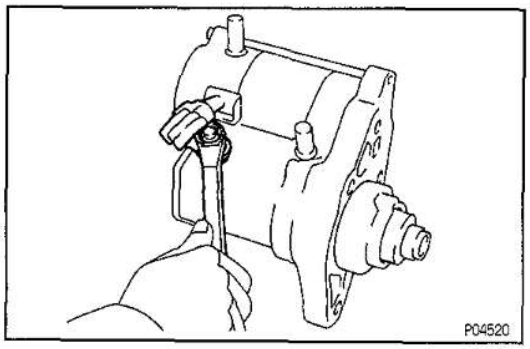

1. REMOVE FIELD FRAME AND ARMATURE

(a) Remove the nut, and disconnect the lead wire from the magnetic switch terminal.

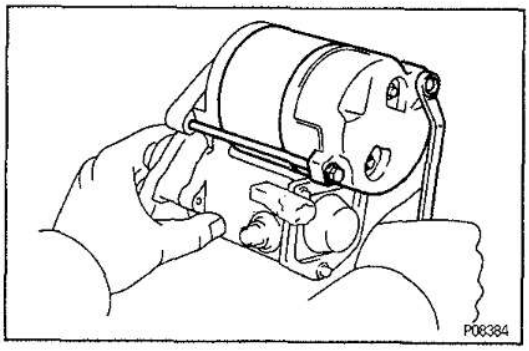

(b) Remove the two through bolts.

(c) Pull out the field frame with the armature from the magnetic switch assembly.

(d) Remove the O—ring.

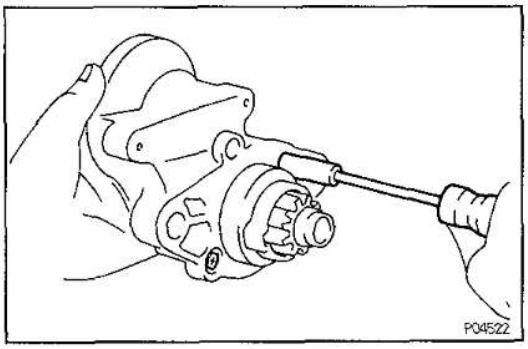

2. REMOVE STARTER HOUSING, CLUTCH ASSEMBLY AND GEAR

(a) Remove the two screws.

ST

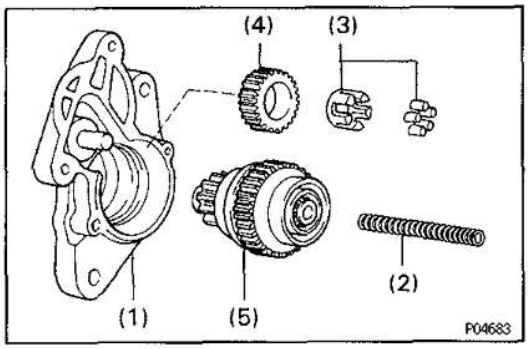

(b) Remove the following parts from the magnetic switch assembly:
- (1) Starter housing
- (2) Return spring
- (3) Bearing
- (4) Idler gear
- (5) Clutch assembly

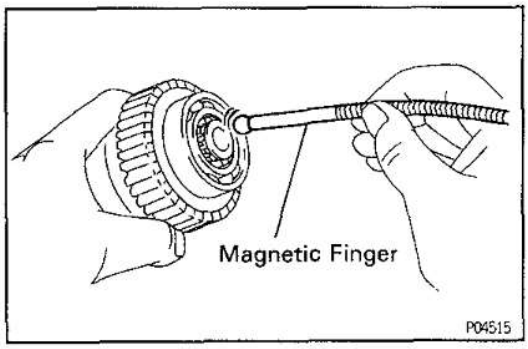

3. REMOVE STEEL BALL

Using a magnetic finger, remove the steel ball from the clutch shaft hole.

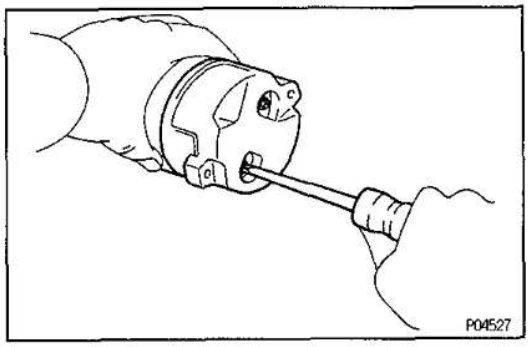

4. REMOVE BRUSH HOLDER

(a) Remove the two screws and end cover from the field frame.

(b) Remove the O—ring from the field frame.

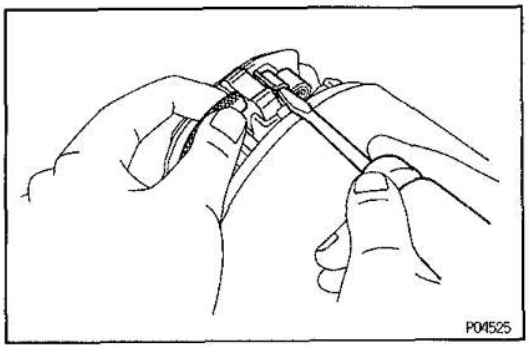

(c) Using a screwdriver, hold the spring back and disconnect the brush from the brush holder. Disconnect the four brushes and remove the brush holder.

5. REMOVE ARMATURE FROM FIELD FRAME

ST03L-02

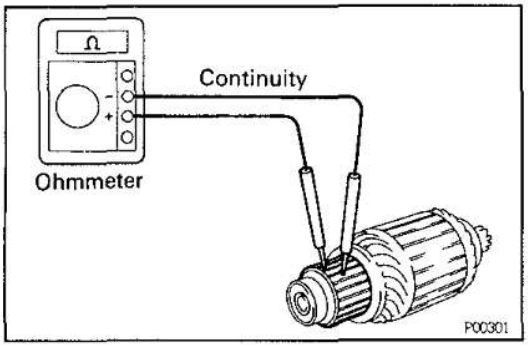

STARTER INSPECTION AND REPAIR

Armature Coil

1. INSPECT COMMUTATOR FOR OPEN CIRCUIT

Using an ohmmeter, check that there is continuity between the segments of the commutator.
If there is no continuity between any segment, replace the armature.

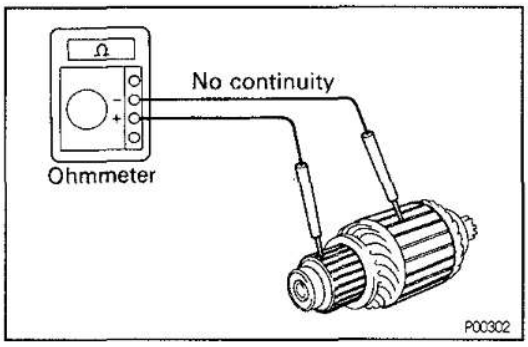

2. INSPECT COMMUTATOR FOR GROUND

Using an ohmmeter, check that there is no continuity between the commutator and armature coil core.
If there is continuity, replace the armature.

ST

Commutator

1. INSPECT COMMUTATOR FOR DIRTY AND BURNT SURFACES

If the surface is dirty or burnt, correct it with sandpaper (No. 400) or on a lathe.

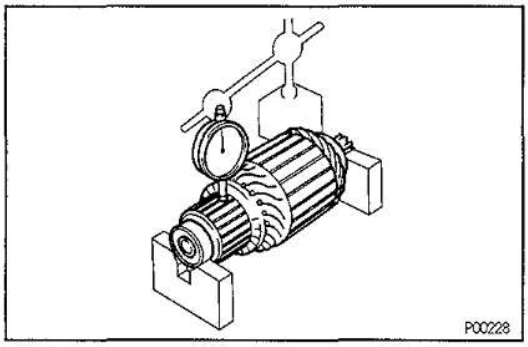

2. INSPECT COMMUTATOR CIRCLE RUNOUT

(a) Place the commutator on V—blocks.
(b) Using a dial gauge, measure the circle runout.
Maximum circle runout:
0.05 mm (0.0020 in.)
If the circle runout is greater than maximum, correct it on a lathe.

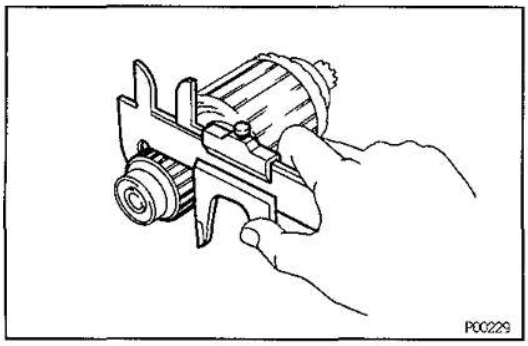

3. INSPECT COMMUTATOR DIAMETER

Using a vernier caliper, measure the commutator diameter.
Standard diameter:
30 mm (1.18 in.)
Minimum diameter:
29 mm (1.14 in.)
If the diameter is less than minimum, replace the armature.

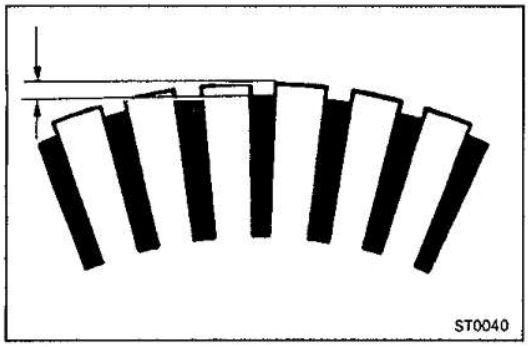

4. INSPECT UNDERCUT DEPTH

Check that the undercut depth is clean and free of foreign materials. Smooth out the edge.

Standard undercut depth:

0.6 mm (0.024 in.)

Minimum undercut depth:

0.2 mm (0.008 in.)

If the undercut depth is less than minimum, correct it with a hacksaw blade.

ST

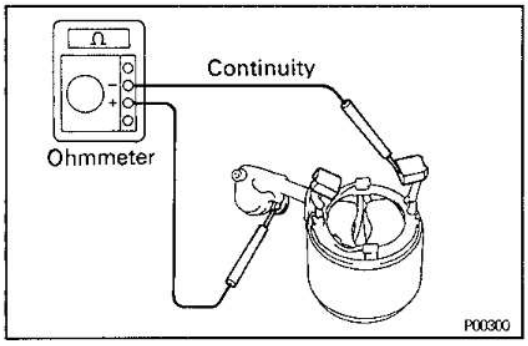

Field Frame (Field Coil)

1. INSPECT FIELD COIL FOR OPEN CIRCUIT

Using an ohmmeter, check that there is continuity between the lead wire and field coil brush lead.

If there is no continuity, replace the field frame.

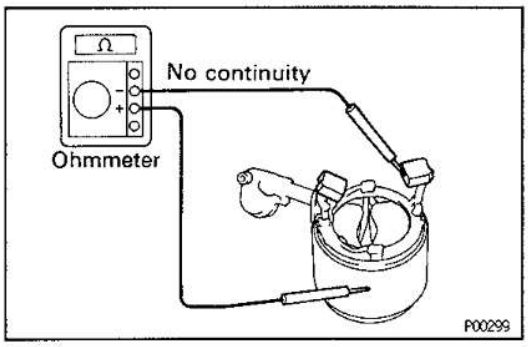

2. INSPECT FIELD COIL FOR GROUND

Using an ohmmeter, check that there is no continuity between the field coil end and field frame.

If there is continuity, repair or replace the field frame.

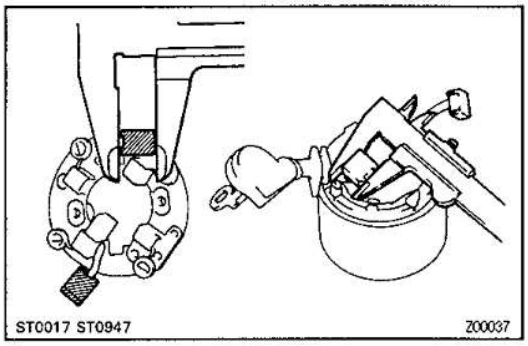

Brushes

INSPECT BRUSH LENGTH

Using a vernier caliper, measure the brush length.

Standard length:

15.0 mm (0.591 in.)

Minimum length:

10.0 mm (0.394 in.)

If the length is less than minimum, replace the brush holder and field frame.

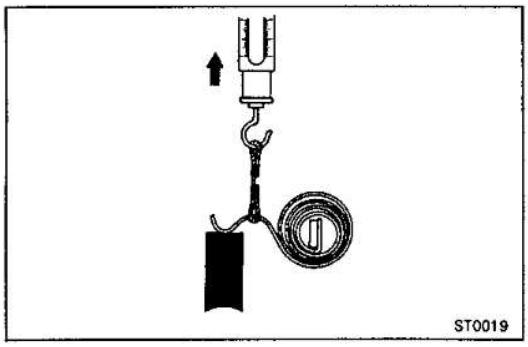

Brush Springs

INSPECT BRUSH SPRING LOAD

Take the pull scale reading the instant the brush spring separates from the brush.

Spring installed load:

18 — 24 N (1.79 — 2.41 kgf, 3.9 — 5.3 lbf)

If the installed load is not within specification, replace the brush springs.

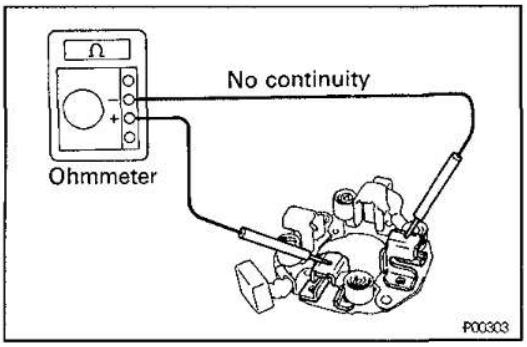

Brush Holder

INSPECT BRUSH HOLDER INSULATION

Using an ohmmeter, check that there is no continuity between the positive (+) and negative (−) brush holders.

If there is continuity, repair or replace the brush holder.

Clutch and Gears

ST

1. **INSPECT GEAR TEETH**

Check the gear teeth on the pinion gear, idle gear and clutch assembly for wear or damage.

If damaged, replace the gear or clutch assembly.

If damaged, also check the drive plate ring gear for wear or damage.

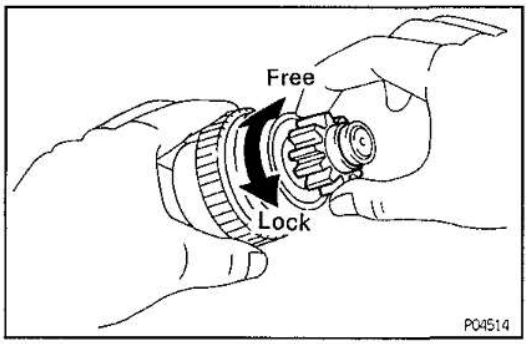

2. **INSPECT CLUTCH PINION GEAR**

Hold the starter clutch and rotate the pinion gear clockwise, and check that it turns freely. Try to rotate the pinion gear counterclockwise and check that it locks.

If necessary, replace the clutch assembly.

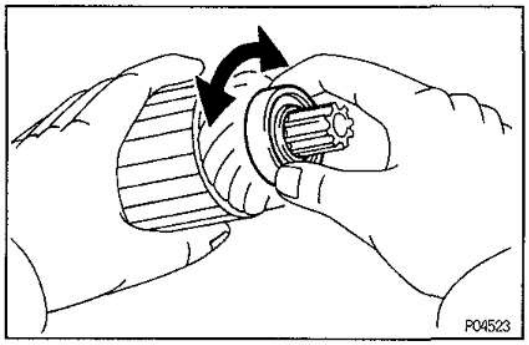

Bearings

1. **INSPECT BEARINGS**

Turn each bearing by hand while applying inward force.

If resistance is felt or the bearing sticks, replace the bearing.

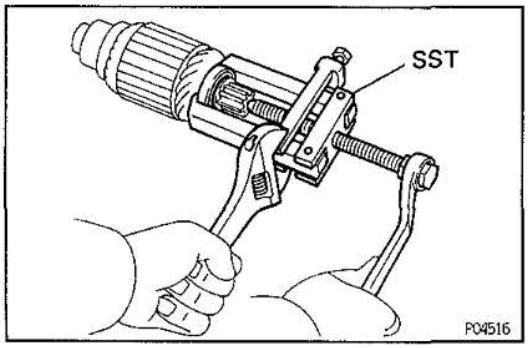

2. **IF NECESSARY, REPLACE BEARING**

(a) Using SST, remove the bearing.
SST 09286−46011

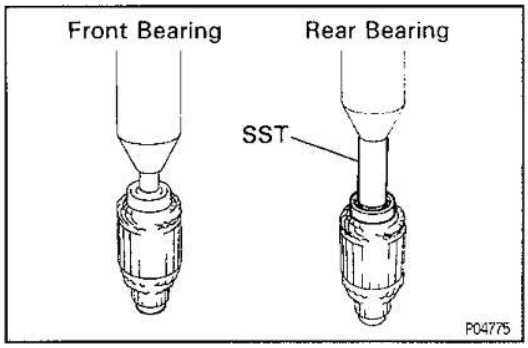

(b) Using a press, press in a new front bearing.
(c) Using SST and a press, press in a new rear bearing.
SST 09820−00030

ST

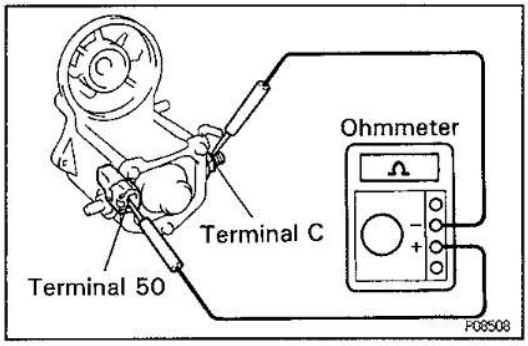

Magnetic Switch

1. **PERFORM PULL−IN COIL OPEN CIRCUIT TEST**
Using an ohmmeter, check that there is continuity between terminals 50 and C.
If there is no continuity, replace the magnetic switch.

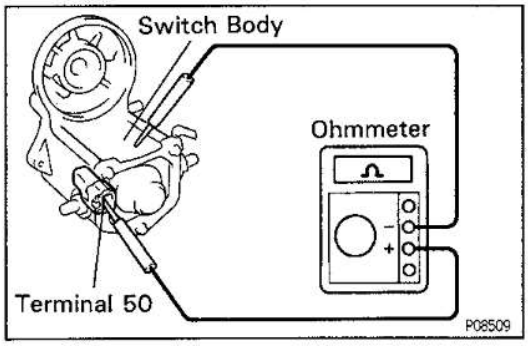

2. **PERFORM HOLD−IN COIL OPEN CIRCUIT TEST**
Using an ohmmeter, check that there is continuity between terminal 50 and the switch body.
If there is no continuity, replace the magnetic switch.

ST00Z-03

STARTER ASSEMBLY

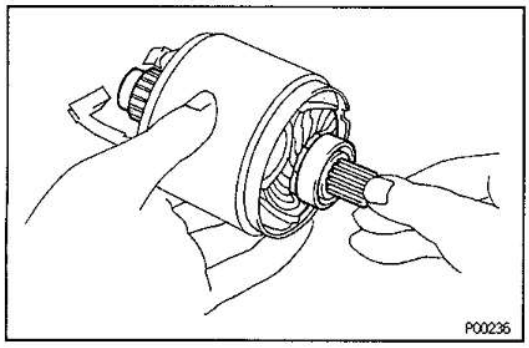

(See Components for Disassembly and Assembly)

HINT: Use high—temperature grease to lubricate the bearings and gears when assembling the starter.

1. PLACE ARMATURE INTO FIELD FRAME

Apply grease to the armature bearings, and insert the armature into the field frame.

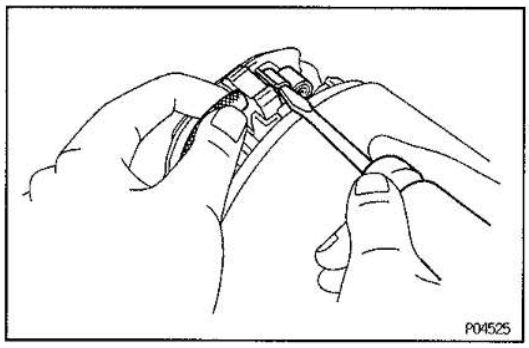

2. INSTALL BRUSH HOLDER

(a) Place the brush holder on the armature.

(b) Using a screwdriver, hold the brush spring back, and connect the brush into the brush holder. Connect the four brushes.

NOTICE: Check that the positive (+) lead wires are not grounded.

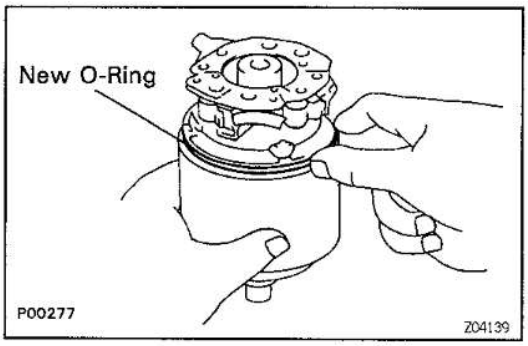

(c) Place a new O—ring in position on the field frame.

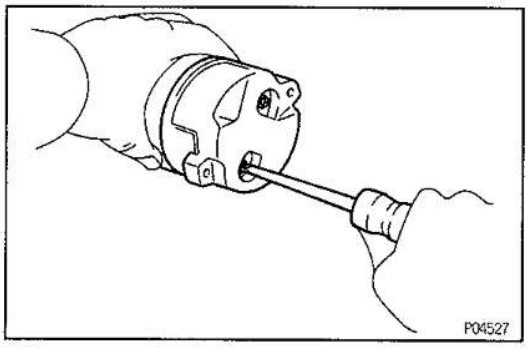

(d) Install a new O—ring to the the end cover screw.

(e) Install the end cover to the field frame with the two screws.

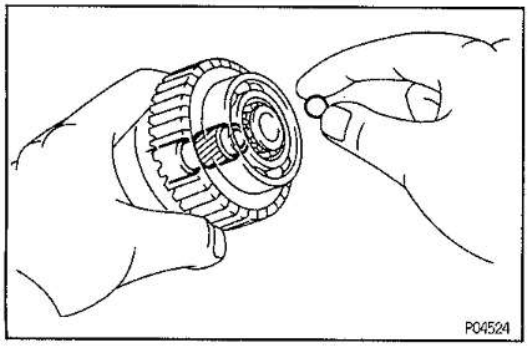

3. INSERT STEEL BALL INTO CLUTCH SHAFT HOLE

(a) Apply grease to the steel ball.

(b) Insert the steel ball into the clutch shaft hole.

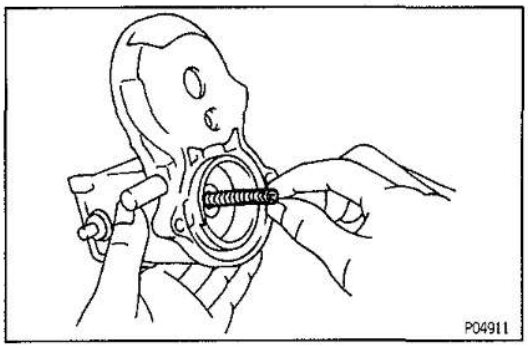

4. INSTALL STARTER HOUSING, CLUTCH ASSEMBLY AND GEAR

(a) Apply grease to the return spring.

(b) Insert the return spring into the magnetic switch hole.

ST

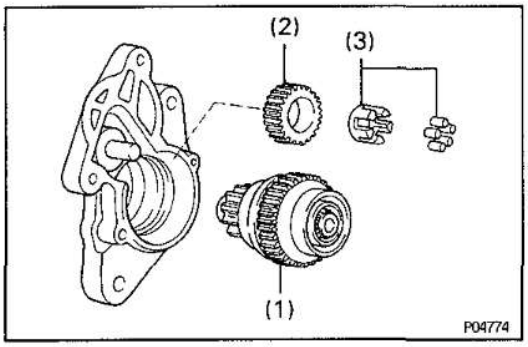

(c) Place the following parts in position on the starter housing:
   (1) Clutch assembly
   (2) Idler gear
   (3) Bearing

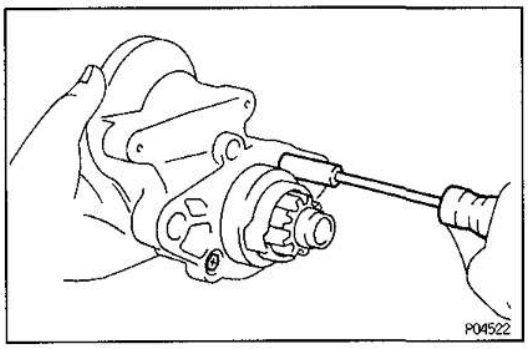

(d) Assemble the starter housing and magnetic switch assembly and install the two screws.

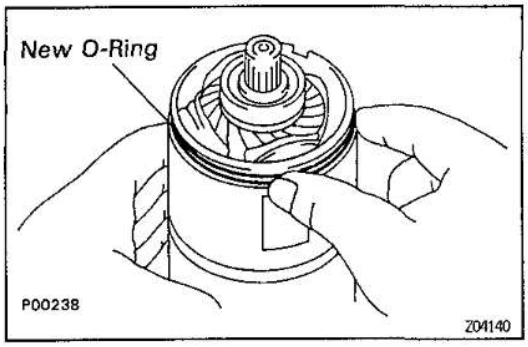

5. INSTALL FIELD FRAME AND ARMATURE ASSEMBLY

(a) Place a new O—ring in position on the field frame.

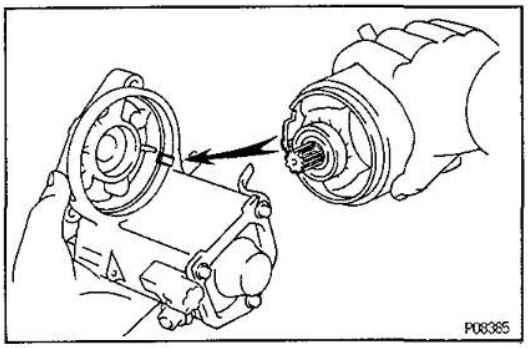

(b) Align the protrusion of the field frame with the cutout of the magnetic switch.

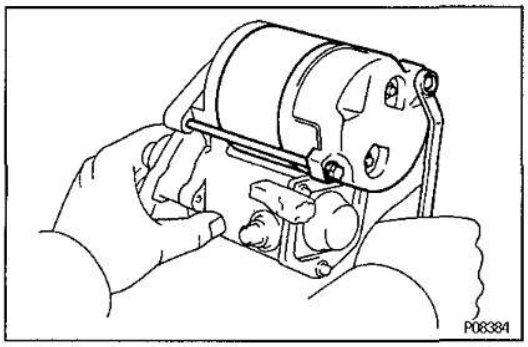

(c) Install the field frame and armature assembly with the two through bolts.

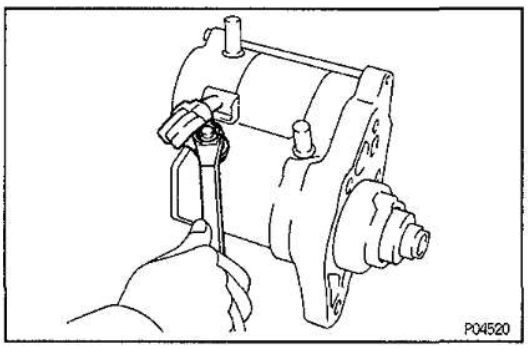

(d) Connect the lead wire to terminal C, and install the nut.

ST

ST010-06

STARTER PERFORMANCE TEST

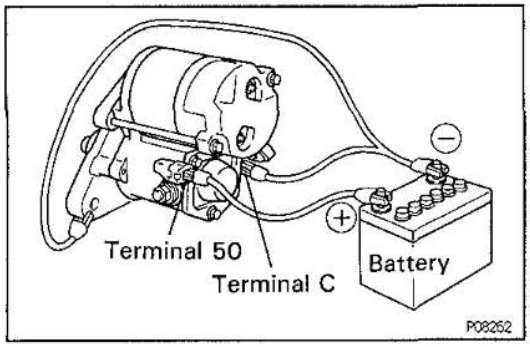

NOTICE: These tests must be performed within 3 to 5 seconds to avoid burning out the coil.

1. PERFORM PULL—IN TEST

(a) Disconnect the field coil lead wire from terminal C.

(b) Connect the battery to the magnetic switch as shown. Check that the clutch pinion gear moves outward. If the clutch pinion gear does not move, replace the magnetic switch assembly.

ST

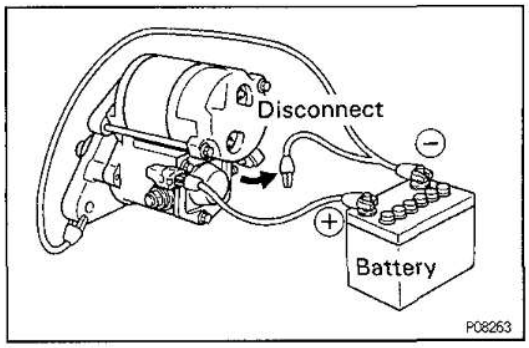

2. PERFORM HOLD—IN TEST

With battery connected as above with the clutch pinion gear out, disconnect the negative (—) lead from terminal C. Check that the pinion gear remains out. If the clutch pinion gear returns inward, replace the magnetic switch assembly.

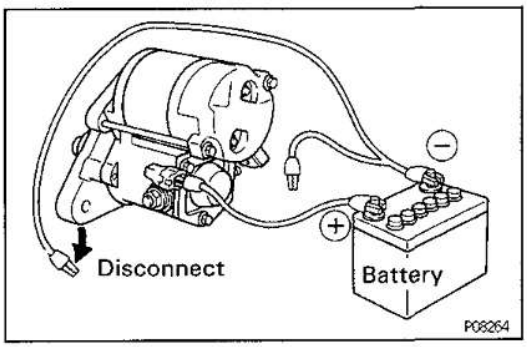

3. INSPECT CLUTCH PINION GEAR RETURN

Disconnect the negative (—) lead from the switch body.

Check that the clutch pinion gear returns inward.

If the clutch pinion gear does not return, replace the magnetic switch assembly.

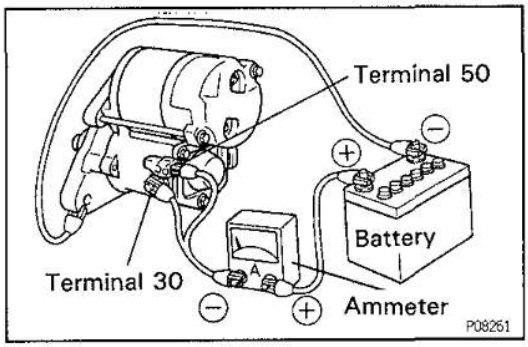

4. PERFORM NO—LOAD PERFORMANCE TEST

(a) Connect the battery and ammeter to the starter as shown.

(b) Check that the starter rotates smoothly and steadily with the pinion gear moving out. Check that the ammeter shows the specified current.

Specified current:

90 A or less at 11.5 V

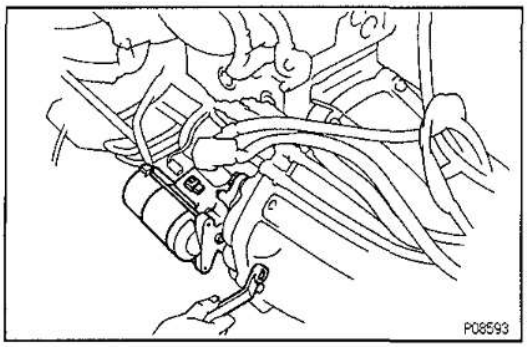

ST02M-02

STARTER INSTALLATION

(See Components for Removal and Installation)

1. INSTALL STARTER

(a) Install the starter with the bolt and nut.
Torque: 39 N·m (400 kgf·cm, 29 ft·lbf)

(b) Connect the starter wire with the nut.
Torque: 8.8 N·m (90 kgf·cm, 78 in.·lbf)

(c) Connect the starter connector.

2. CONNECT CABLE TO NEGATIVE TERMINAL OF BATTERY

3. CHECK THAT ENGINE STARTS

ST

STARTER (2.2 kW)

ST044-01

COMPONENTS FOR REMOVAL AND INSTALLATION

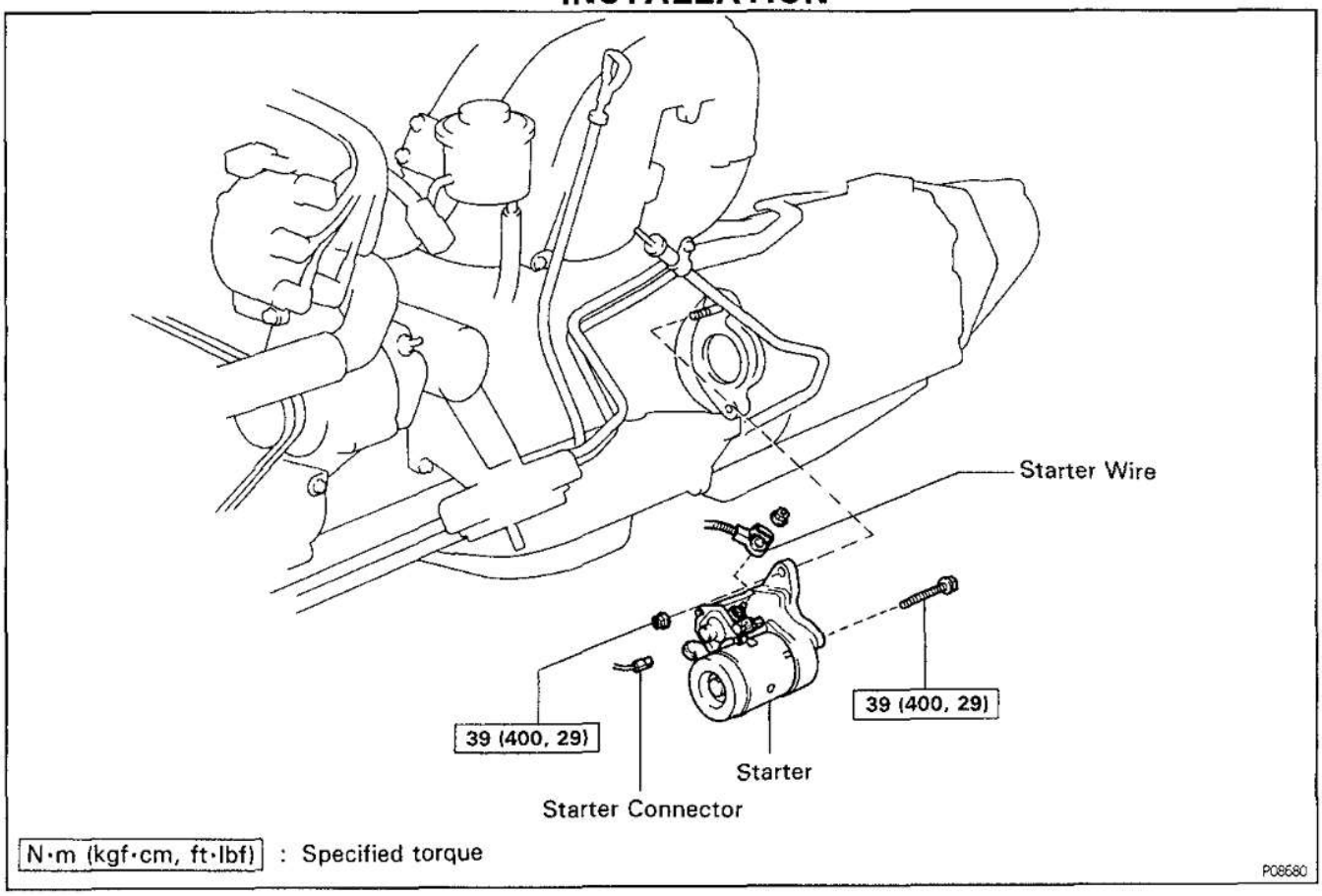

ST02N-02

STARTER REMOVAL

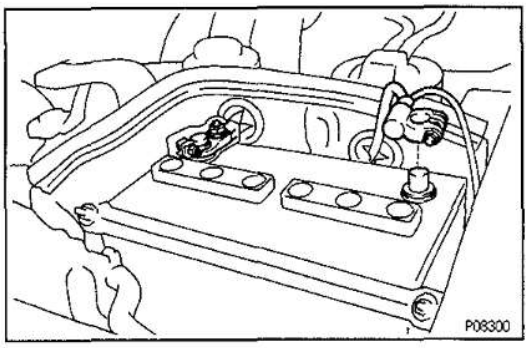

1. **DISCONNECT CABLE FROM NEGATIVE TERMINAL OF BATTERY**

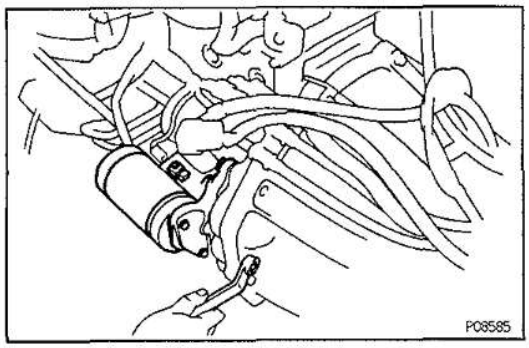

2. **REMOVE STARTER**
(a) Disconnect the starter connector.
(b) Remove the nut, and disconnect the starter wire.
(c) Remove the bolt, nut and starter.

COMPONENTS FOR DISASSEMBLY AND ASSEMBLY

ST00W-08

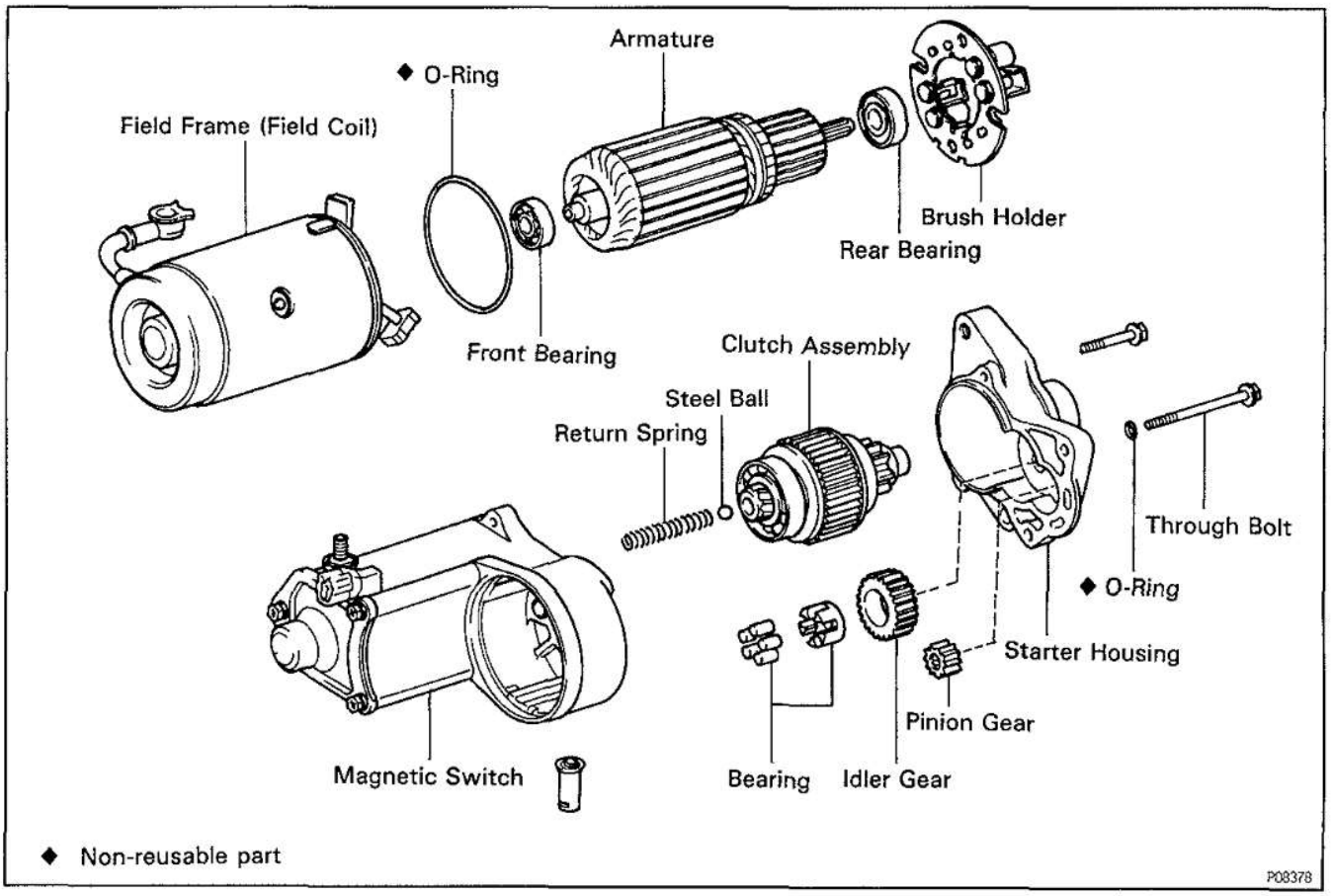

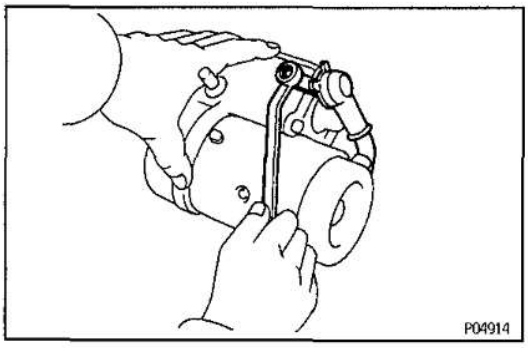

STARTER DISASSEMBLY

ST00X-06

1. REMOVE FIELD FRAME AND ARMATURE

(a) Remove the nut, and disconnect the lead wire from the magnetic switch terminal.

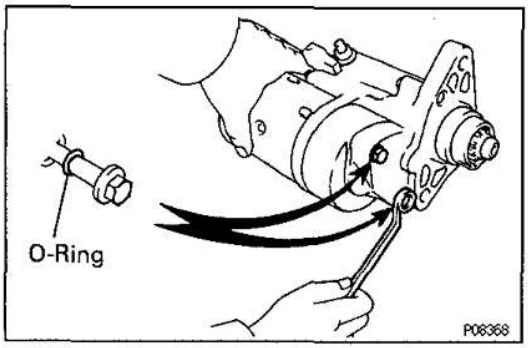

(b) Remove the two through bolts and O—rings.

(c) Pull out the field frame with the armature from the magnetic switch assembly.

(d) Remove the O—ring from the field frame.

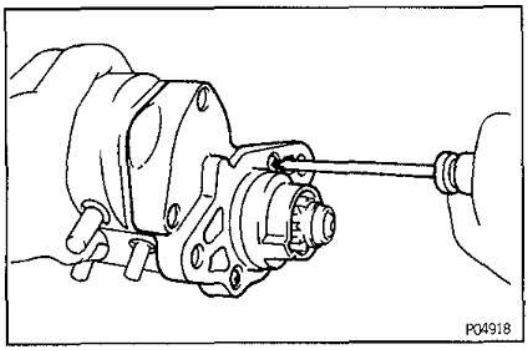

2. REMOVE STARTER HOUSING, CLUTCH ASSEMBLY AND GEARS

(a) Remove the two screws.

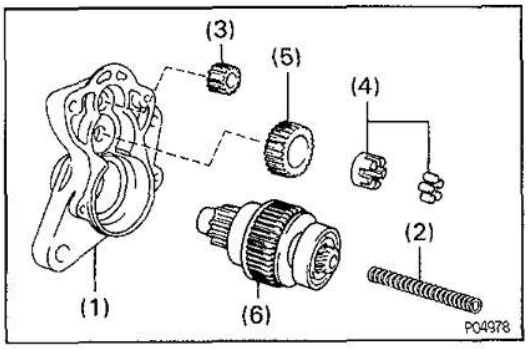

(b) Remove the following parts from the magnetic switch assembly:
(1) Starter housing
(2) Return spring
(3) Pinion gear
(4) Bearing
(5) Idler gear
(6) Clutch assembly

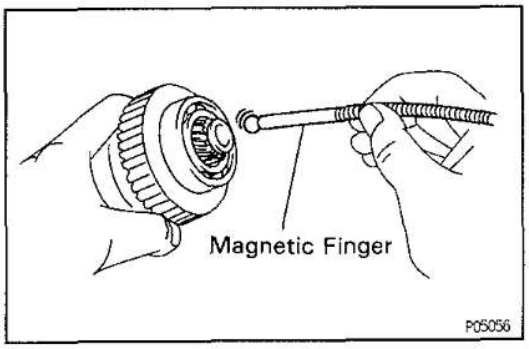

3. REMOVE STEEL BALL

Using a magnetic finger, remove the steel ball from the clutch shaft hole.

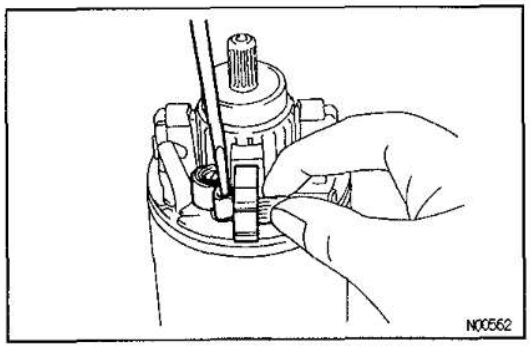

4. REMOVE BRUSH HOLDER

Using a screwdriver, hold the spring back and disconnect the brush from the brush holder. Disconnect the four brushes and remove the brush holder.

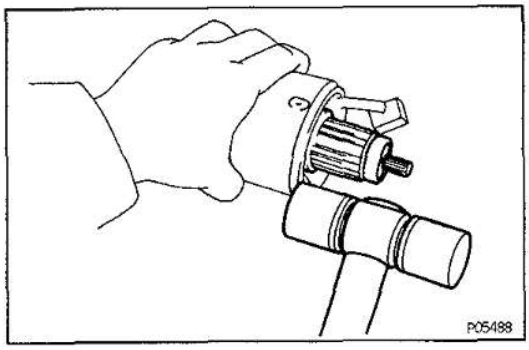

5. REMOVE ARMATURE FROM FIELD FRAME

Using a plastic hammer, tap the frame end to remove the armature from the field frame.

ST02P-02

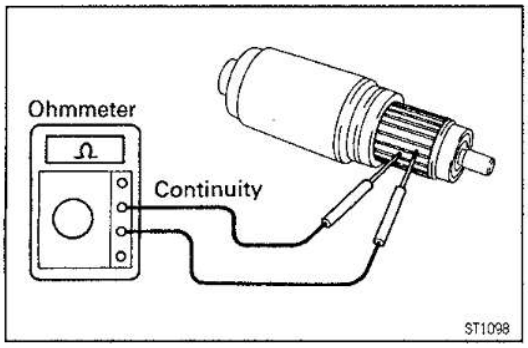

STARTER INSPECTION AND REPAIR

Armature Coil

1. INSPECT COMMUTATOR FOR OPEN CIRCUIT

Using an ohmmeter, check that there is continuity between the segments of the commutator.
If there is no continuity between any segment, replace the armature.

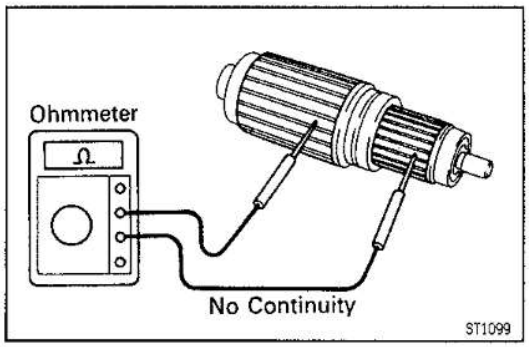

2. INSPECT COMMUTATOR FOR GROUND

Using an ohmmeter, check that there is no continuity between the commutator and armature coil core.
If there is continuity, replace the armature.

ST

Commutator

1. INSPECT COMMUTATOR FOR DIRTY AND BURNT SURFACES

If the surface is dirty or burnt, correct it with sandpaper (No. 400) or on a lathe.

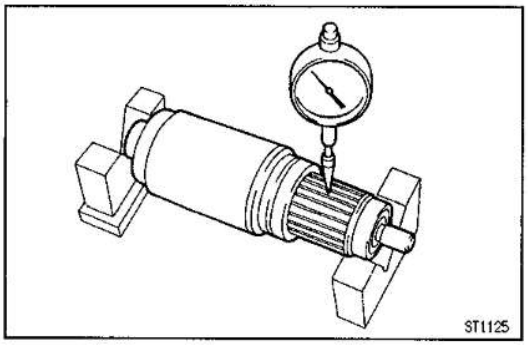

2. INSPECT COMMUTATOR CIRCLE RUNOUT

(a) Place the commutator on V—blocks.

(b) Using a dial gauge, measure the circle runout.

Maximum circle runout:

0.05 mm (0.0020 in.)

If the circle runout is greater than maximum, correct it on a lathe.

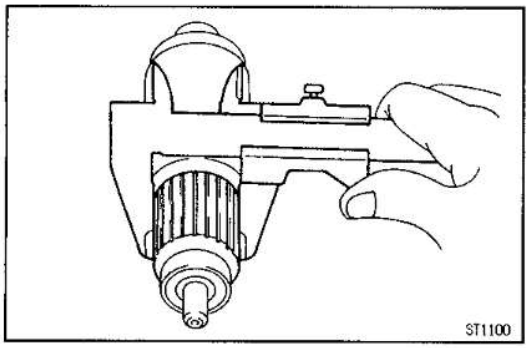

3. INSPECT COMMUTATOR DIAMETER

Using a vernier caliper, measure the commutator diameter.

Standard diameter:

35 mm (1.38 in.)

Minimum diameter:

34 mm (1.34 in.)

If the diameter is less than minimum, replace the armature.

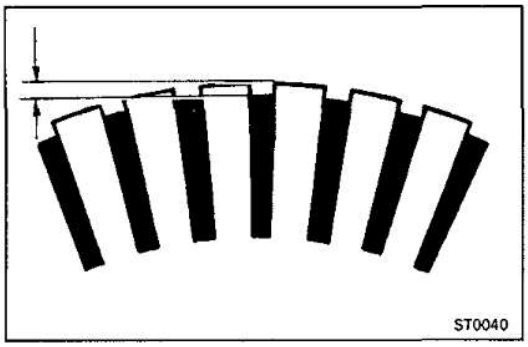

4. INSPECT UNDERCUT DEPTH

Check that the undercut depth is clean and free of foreign materials.Smooth out the edge.

Standard undercut depth:

0.7 — 0.9 mm (0.028 — 0.035 in.)

Minimum undercut depth:

0.2 mm (0.008 in.)

If the undercut depth is less than minimum, correct it with a hacksaw blade.

ST

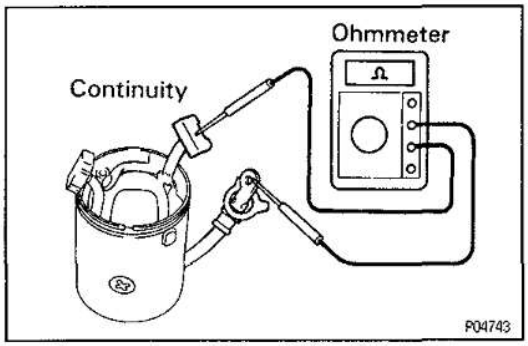

Field Frame (Field Coil)

1. INSPECT FIELD COIL FOR OPEN CIRCUIT

Using an ohmmeter, check that there is continuity between the lead wire and field coil brush lead.

If there is no continuity, replace the field frame.

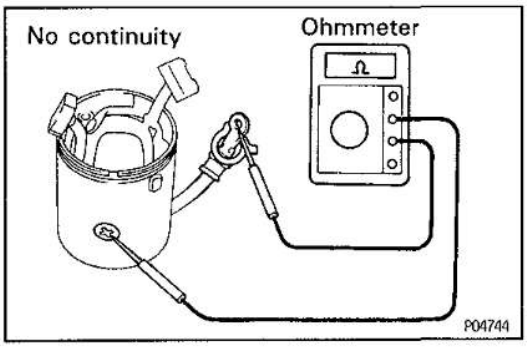

2. INSPECT FIELD COIL FOR GROUND

Using an ohmmeter, check that there is no continuity between the field coil end and field frame.

If there is continuity, repair or replace the field frame.

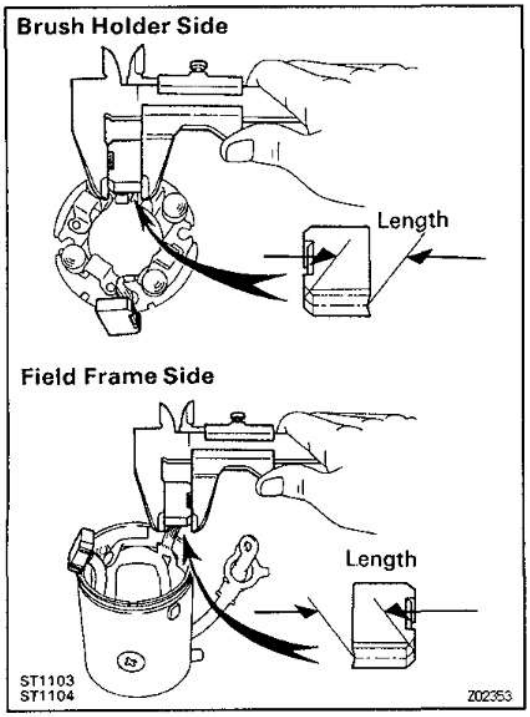

Brushes

INSPECT BRUSH LENGTH

Using a vernier caliper, measure the brush length.

Standard length:

15.0 — 15.5 mm (0.591 — 0.610 in.)

Minimum length:

9.5 mm (0.374 in.)

If the length is less than minimum, replace the brush holder and field frame.

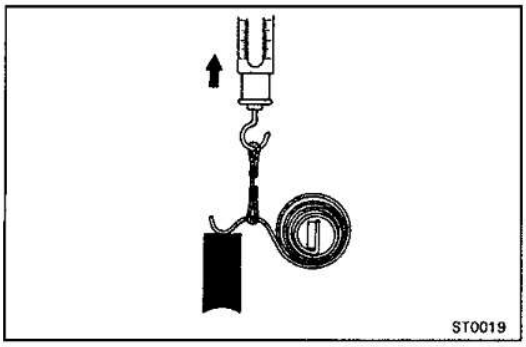

Brush Springs

INSPECT BRUSH SPRING LOAD

Take the pull scale reading the instant the brush spring separates from the brush.

Spring installed load:

26 – 32 N (2.7 – 3.3 kgf, 6.0 – 7.3 lbf)

If the installed load is not within specification, replace the brush springs.

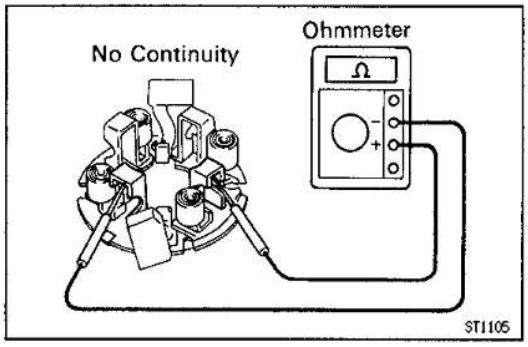

Brush Holder

INSPECT BRUSH HOLDER INSULATION

Using an ohmmeter, check that there is no continuity between the positive (+) and negative (–) brush holders.

If there is continuity, repair or replace the brush holder.

Clutch and Gears

1. **INSPECT GEAR TEETH**

Check the gear teeth on the pinion gear, idle gear and clutch assembly for wear or damage.

If damaged, replace the gear or clutch assembly.

If damaged, also check the drive plate ring gear for wear or damage.

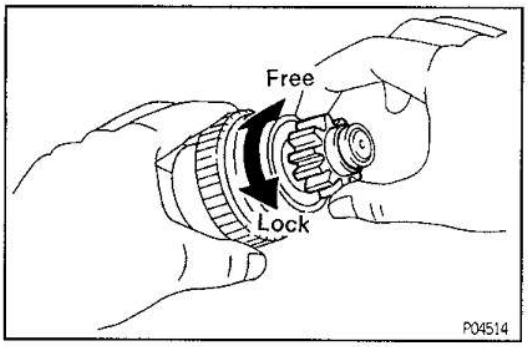

2. **INSPECT CLUTCH PINION GEAR**

Hold the starter clutch and rotate the pinion gear clockwise, and check that it turns freely. Try to rotate the pinion gear counterclockwise and check that it locks.

If necessary, replace the clutch assembly.

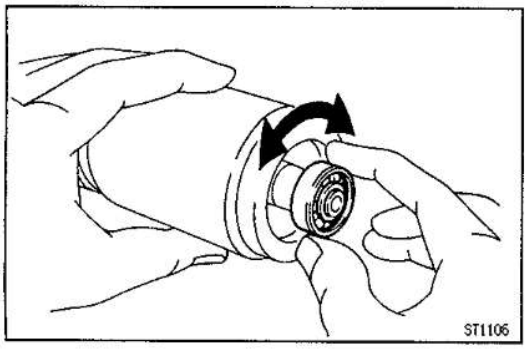

Bearings

1. **INSPECT FRONT BEARING**

Turn the bearing by hand while applying inward force.

If resistance is felt or the bearing sticks, replace the bearing.

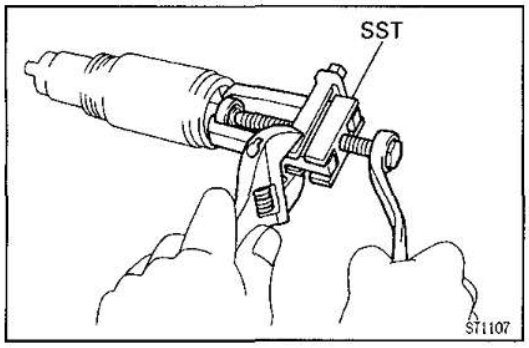

2. IF NECESSARY, REPLACE FRONT BEARING

(a) Using SST, remove the bearing.
SST 09286—46011

ST

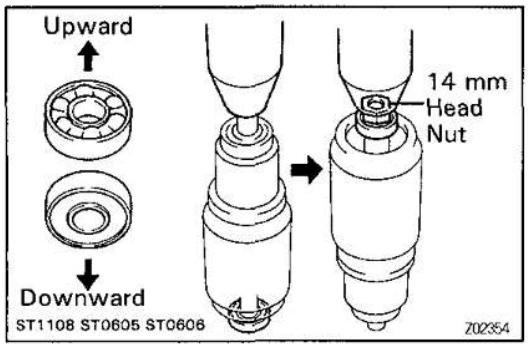

(b) Using a 14 mm head nut and press, press in a new bearing.
NOTICE: Be careful of the bearing installation direction.

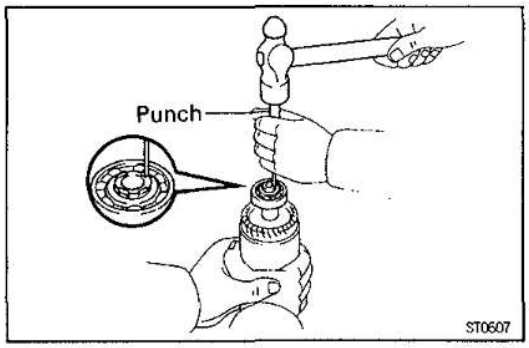

(c) Using a punch, stake the armature shaft.

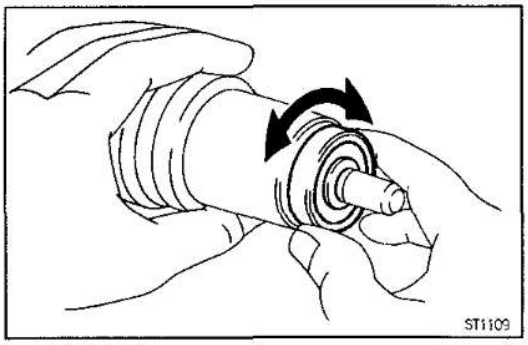

3. INSPECT REAR BEARING

Turn the bearing by hand while applying inward force. If resistance is felt or the bearing sticks, replace the bearing.

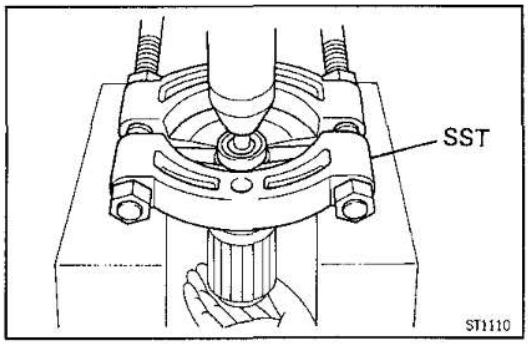

4. IF NECESSARY, REPLACE REAR EARING

(a) Using SST and a press, press out the bearing.
SST 09950—00020

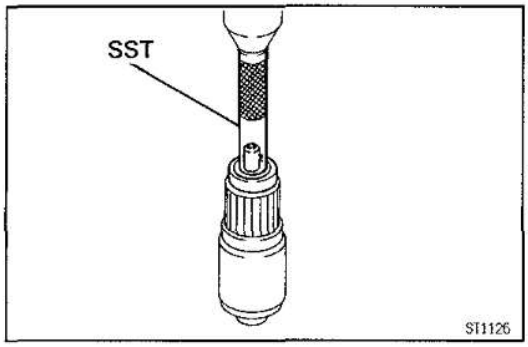

(b) Using SST and a press, press in a new bearing.
SST 09201 – 41020

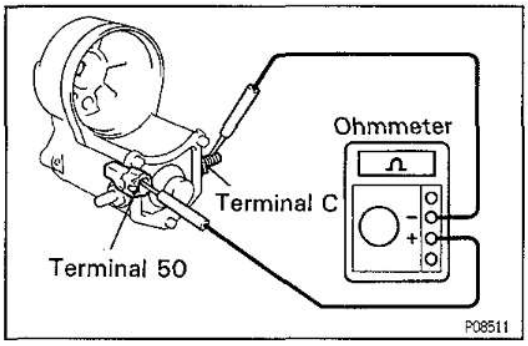

Magnetic Switch

ST

1. **PERFORM PULL – IN COIL OPEN CIRCUIT TEST**
Using an ohmmeter, check that there is continuity between terminals 50 and C.
If there is no continuity, replace the magnetic switch.

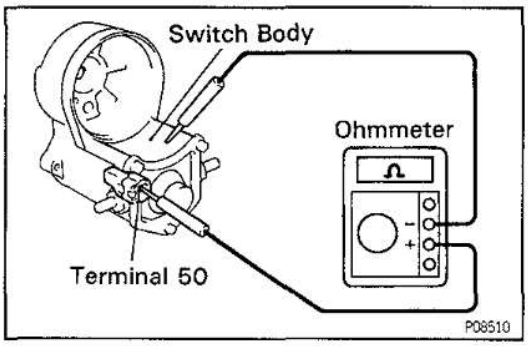

2. **PERFORM HOLD – IN COIL OPEN CIRCUIT TEST**
Using an ohmmeter, check that there is continuity between terminal 50 and the switch body.
If there is no continuity, replace the magnetic switch.

ST02Q-02

STARTER ASSEMBLY

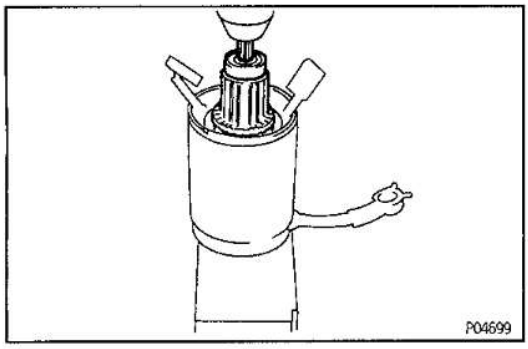

(See Components for Disassembly and Assembly)

HINT: Use high—temperature grease to lubricate the bearings and gears when assembling the starter.

1. PLACE ARMATURE INTO FIELD FRAME

(a) Apply grease to the armature bearings.

(b) Using a press, press the armature into the field frame.

ST

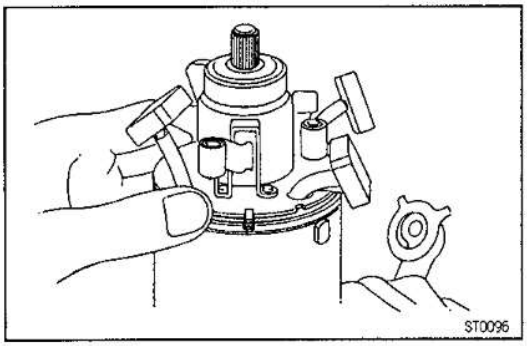

2. INSTALL BRUSH HOLDER

(a) Align the claw of the brush holder with the claw groove of the field frame.

(b) Place the brush holder on the field frame.

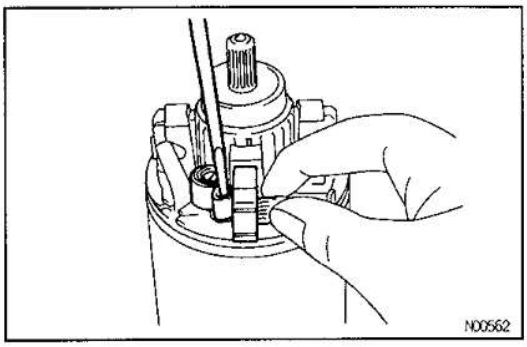

(c) Using a screwdriver, hold the brush spring back, and connect the brush into the brush holder. Connect the four brushes.

NOTICE: Check that the positive (+) lead wires are not grounded.

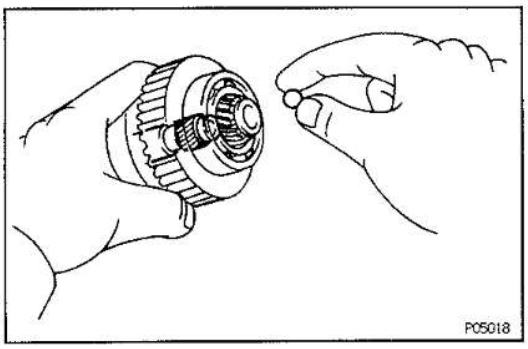

3. INSERT STEEL BALL INTO CLUTCH SHAFT HOLE

(a) Apply grease to the steel ball.

(b) Insert the steel ball into the clutch shaft hole.

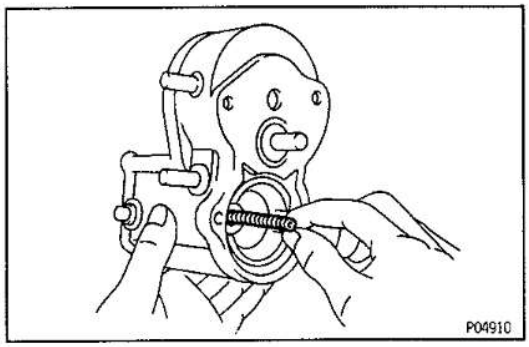

4. INSTALL STARTER HOUSING, CLUTCH ASSEMBLY AND GEARS

(a) Apply grease to the return spring.

(b) Insert the return spring into the magnetic switch hole.

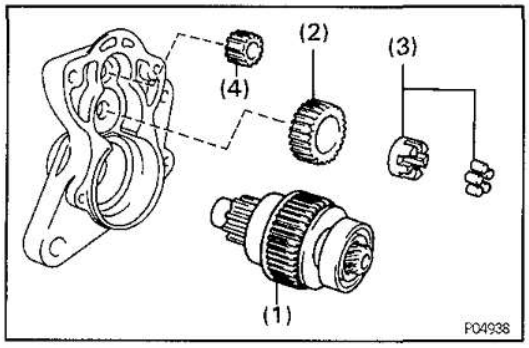

(c) Place the following parts in position on the starter housing:
(1) Clutch assembly
(2) Idler gear
(3) Bearing
(4) Pinion gear

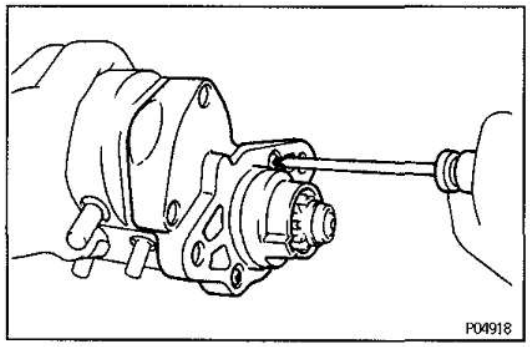

(d) Assemble the starter housing and magnetic switch assembly and install the two screws.

ST

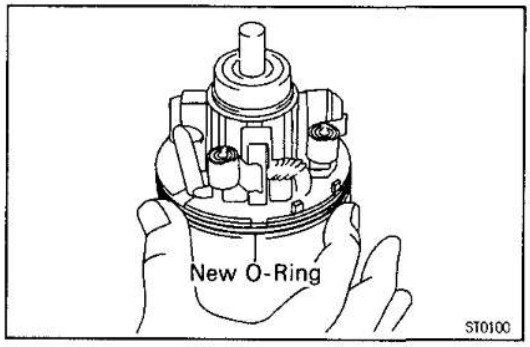

5. INSTALL FIELD FRAME AND ARMATURE ASSEMBLY

(a) Place a new O—ring in position on the field frame.

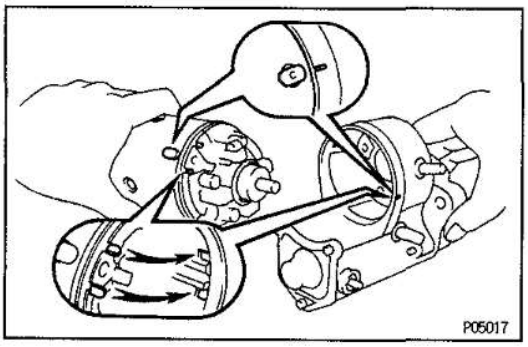

(b) Align the claws of the brush holder with the grooves of the magnetic switch, and install the field frame and amature shaft assembly.

(c) Align the punch mark of the field frame with the line of the magnet switch.

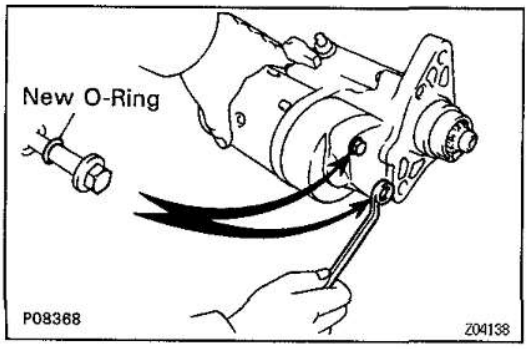

(d) Install new O—rings to the through bolts.

(e) Install the field frame and armature assembly with the two through bolts.

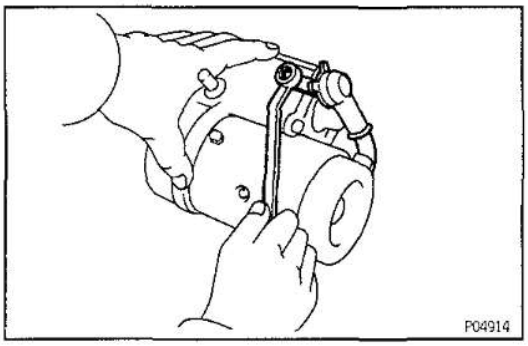

(f) Connect the lead wire to terminal C, and install the nut.

ST

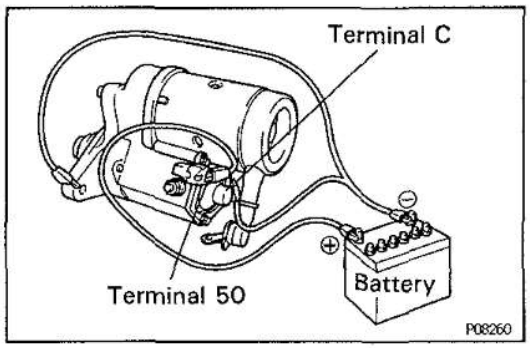

STARTER PERFORMANCE TEST

ST010-07

NOTICE: These tests must be performed within 3 to 5 seconds to avoid burning out the coil.

1. PERFORM PULL—IN TEST

(a) Disconnect the field coil lead wire from terminal C.

(b) Connect the battery to the magnetic switch as shown. Check that the clutch pinion gear moves outward. If the clutch pinion gear does not move, replace the magnetic switch assembly.

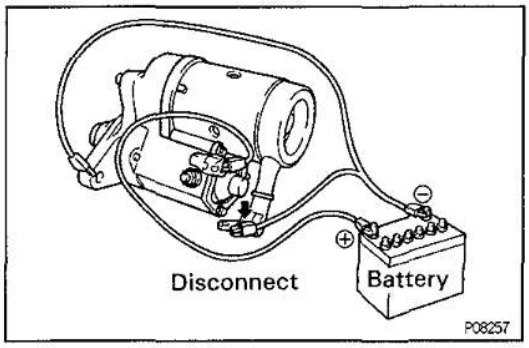

2. PERFORM HOLD—IN TEST

With battery connected as above with the clutch pinion gear out, disconnect the negative (—) lead from terminal C. Check that the pinion gear remains out. If the clutch pinion gear returns inward, replace the magnetic switch assembly.

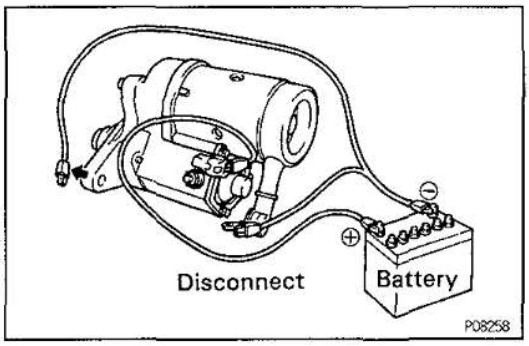

3. INSPECT CLUTCH PINION GEAR RETURN

Disconnect the negative (—) lead from the switch body.
Check that the clutch pinion gear returns inward.
If the clutch pinion gear does not return, replace the magnetic switch assembly.

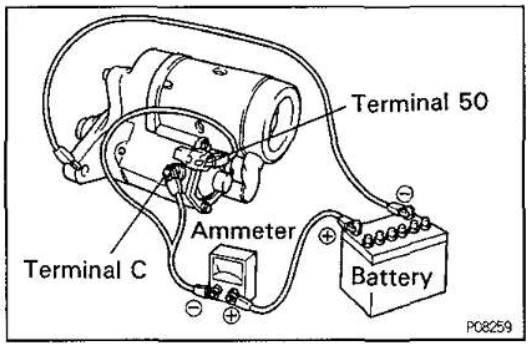

4. PERFORM NO—LOAD PERFORMANCE TEST

(a) Connect the battery and ammeter to the starter as shown.

(b) Check that the starter rotates smoothly and steadily with the pinion gear moving out. Check that the ammeter shows the specified current.

Specified current:

120 A or less at 11.5 V

ST02R-02

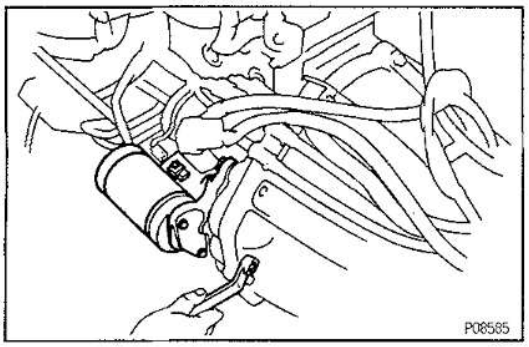

STARTER INSTALLATION

(See Components for Removal and Installation)

1. INSTALL STARTER

(a) Install the starter with the bolt and nut.
Torque: 39 N·m (400 kgf·cm, 29 ft·lbf)

(b) Connect the starter wire with the nut.
Torque: 8.8 N·m (90 kgf·cm, 78 in.·lbf)

(c) Connect the starter connector.

2. CONNECT CABLE TO NEGATIVE TERMINAL OF BATTERY

3. CHECK THAT ENGINE STARTS

ST

SERVICE SPECIFICATIONS

SERVICE DATA

ST015-02

Starter (1.4 kW type)	Rated voltage and ou 〈ctput power	12 V 1.4 kW
	No—load characteristics (Current)	90 A or less at 11. 5 V
	No—load characteristics (rpm)	3,000 rpm or more
	Brush length (STD)	15.0 mm (0.591 in.)
	Bursh length (Minimum)	10.0 mm (0.394 in.)
	Spring installed load	18 — 24 N (1.79 — 2.41 kgf, 3.9 — 5.3 lbf)
	Commutator	
	Diameter (STD)	30 mm (1.18 in.)
	Diameter (Minimum)	29 mm (1.14 in.)
	Undercut depth (STD)	0.6 mm (0.024 in.)
	Undercut depth (Minimum)	0.2 mm (0.008 in.)
	Circle runout (Maximum)	0.05 mm (0.0020 in.)
Starter (2.2 kW type)	Rated voltage and output power	12 V 2.2 kW
	No—load characteristics (Current)	120 A or less at 11. 5 V
	No—load characteristics (rpm)	3,300 rpm or more
	Brush length (STD)	15.0 — 15.5 mm (0.591 — 0.610 in.)
	Bursh length (Minimum)	9.5 mm (0.374 in.)
	Spring installed load	26 — 32 N (2.7 — 3.3 kgf, 6.0 — 7.3 lbf)
	Commutator	
	Diameter (STD)	35 mm (1.38 in.)
	Diameter (Minimum)	34 mm (1.34 in.)
	Undercut depth (STD)	0.7 — 0.9 mm (0.024 in. — 0.035 in.)
	Undercut depth (Minimum)	0.2 mm (0.008 in.)
	Circle runout (Maximum)	0.05 mm (0.0020 in.)

ST016-03

TORQUE SPECIFICATIONS

Part tightened	N·m	kgf·cm	ft·lbf
Starter mounting bolt	39	400	29
Starter mounting nut	39	400	29
Starter wire mounting nut	8.8	90	78 in.·lbf

DESCRIPTION

CH043-01

The alternator is a small, high speed, high performance type with an IC regulator incorporated. The IC regulator uses integrated circuits and controls the voltage produced by the alternator.

PRECAUTIONS

CH00J-04

1. **Check that the battery cables are connected to the correct terminals.**
2. **Disconnect the battery cables when the battery is given a quick charge.**
3. **Do not perform tests with a high voltage insulation resistance tester.**
4. **Never disconnect the battery while the engine is running.**

CH

SYSTEM CIRCUIT

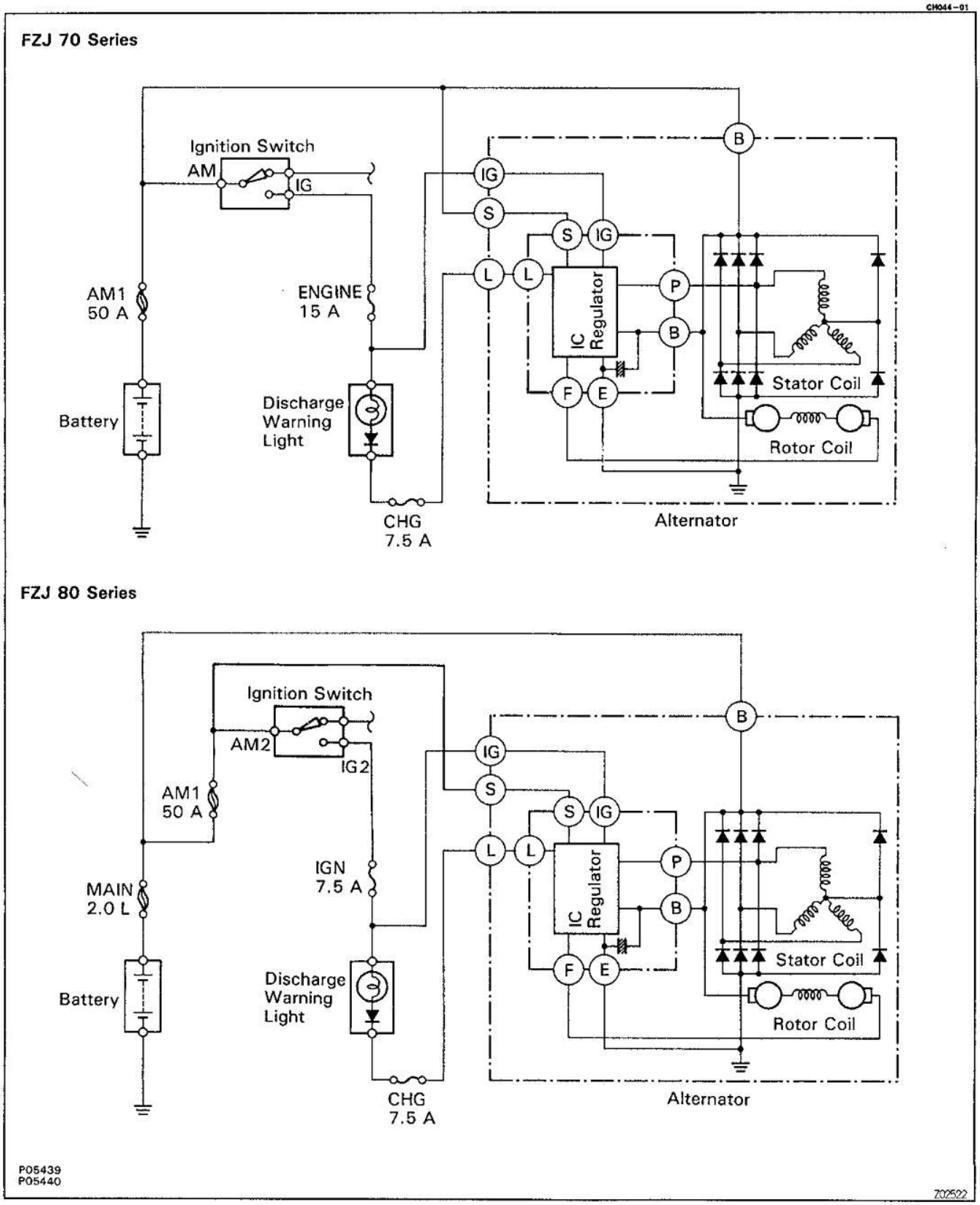

FZJ80 EFI

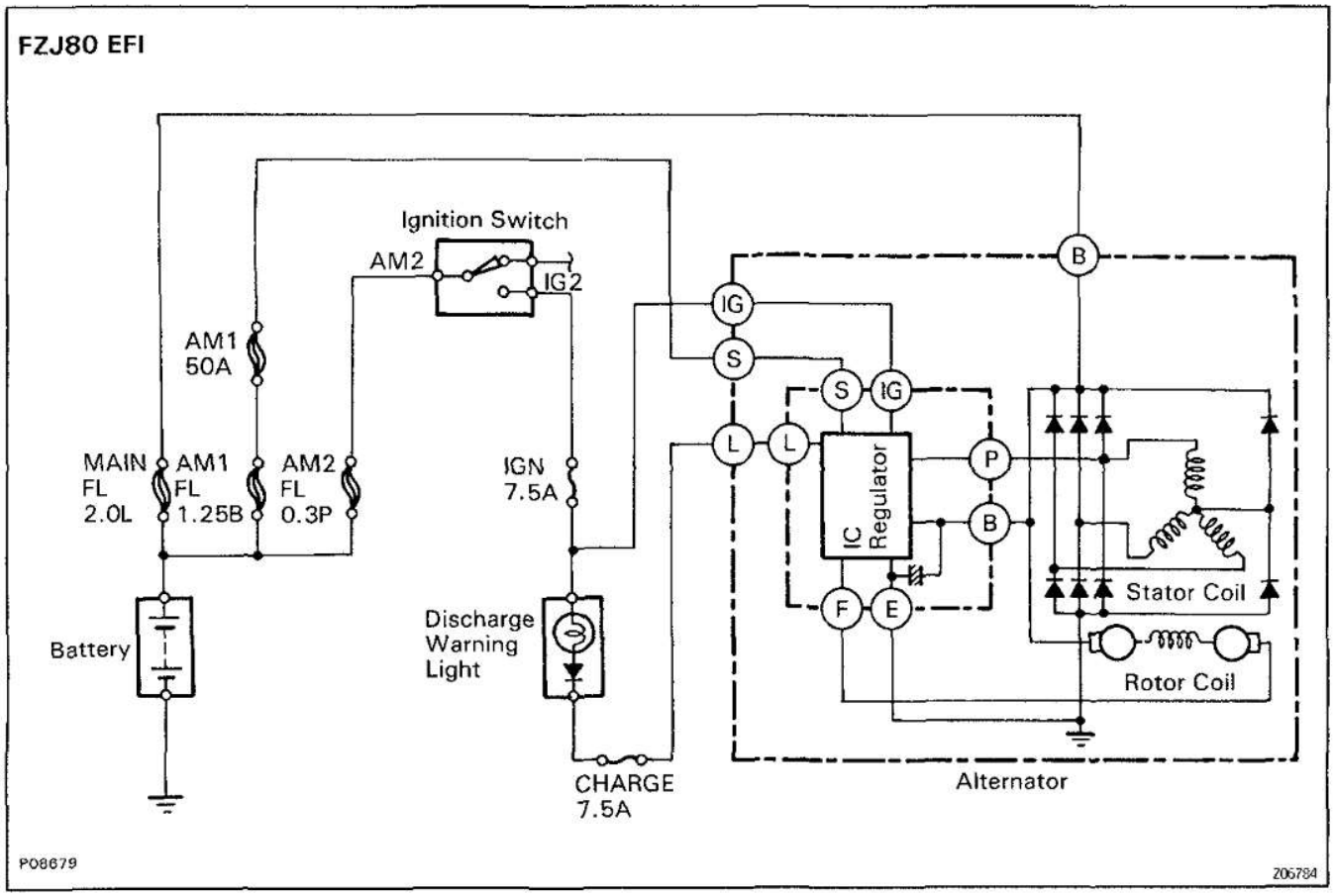

OPERATION

CH00N-07

When the ignition switch is turned ON, current from the battery flows from terminal L of the alternator through the IC regulator to terminal E, causing the discharge warning light to light up. Then when the engine is started, the voltage output increases as the alternator speed increases. When the voltage output becomes greater than the battery voltage, current for recharging flows from terminal B. Simultaneously, voltage at terminal L increases and the potential difference between battery and terminal L disappears, causing the discharge warning light to go off. When the voltage output exceeds the regulator adjustment voltage, the transistor inside the IC regulator regulates the voltage so that the voltage from the alternator remains constant.

PREPARATION

SST (SPECIAL SERVICE TOOLS)

CH00D-04

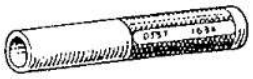	09285-76010	Injection Pump Camshaft Bearing Cone Replacer	Rotor rear bearing cover
	09286-46011	Injection Pump Spline Shaft Puller	Rectifier end frame
	09608-20012	Front Hub & Drive Pinion Bearing Tool Set	
	(09608-00030)	Replacer	Rotor front bearing
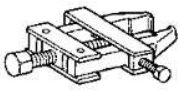	09820-00021	Alternator Rear Bearing Puller	
	09820-00030	Alternator Rear Bearing Replacer	Rotor rear bearing
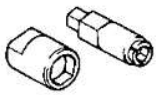	09820-63010	Alternator Pulley Set Nut Wrench Set	

RECOMMENDED TOOLS

CH00S-01

	09082-00015	TOYOTA Electrical Tester	

EQUIPMENT

CH00U-01

Ammeter(A)	
Battery specific gravity gauge	
Belt tension gauge	
Torque wrench	
Vernier calipers	Rotor (Slip ring), Brush

CH

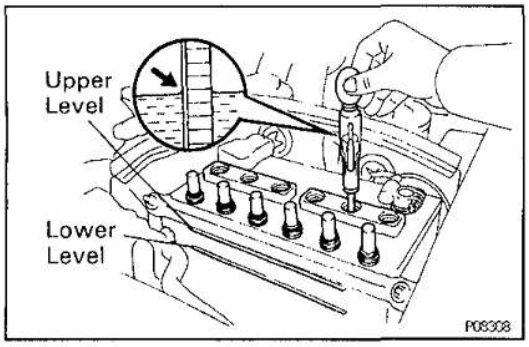

ON—VEHICLE INSPECTION

CH045—01

1. CHECK BATTERY SPECIFIC GRAVITY AND ELECTROLYTE LEVEL

(a) Check the electrolyte quantity of each cell.
If insufficient, refill with distilled (or purified) water.

(b) Check the specific gravity of each cell.
Standard specific gravity at 20°C (68°F):
1.27 — 1.29 105D31L Battery
1.25 — 1.27 others
If the gravity is less than specification, charge the battery.

CH

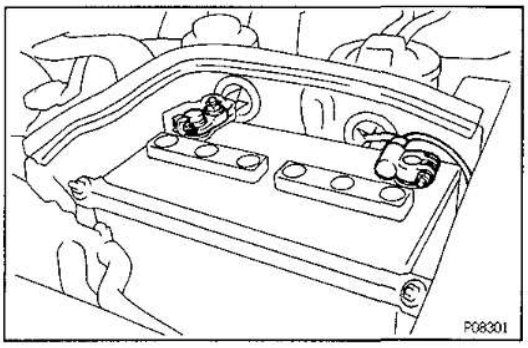

2. CHECK BATTERY TERMINALS, FUSIBLE LINK AND FUSES

(a) Check that the battery terminals are not loose or corroded.

(b) Check the fusible link, H—fuses and fuses for continuity.
Fusible link:
MAIN 2.0 L
AM1 1.25 B
AM2 0.3 P
H—Fuse:
AM1 50A
Fuse:
IGN 7.5A
CHARGE 7.5A

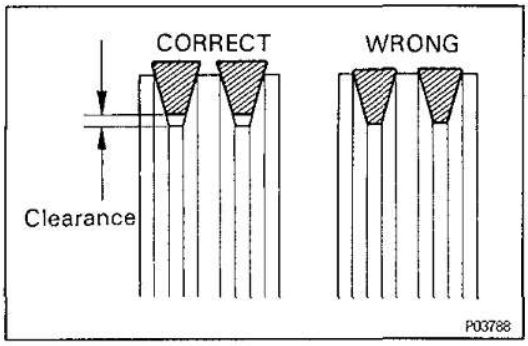

3. INSPECT DRIVE BELTS

(a) Visually check the drive belt for cracks, oiliness or wear. Check that the belt does not touch the bottom of the pulley groove.
If necessary, replace the drive belts as a set.

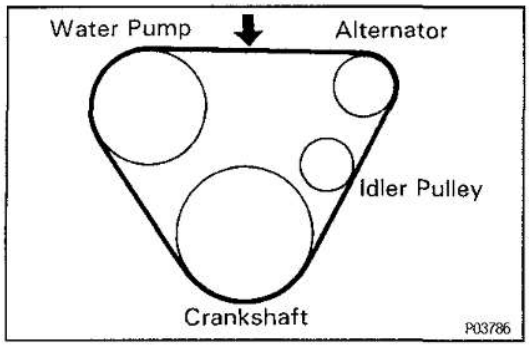

(b) Check the drive belt deflection by pressing on the belt at the points indicated in the illustration with 98 N (10 kgf, 22 lbf) of pressure.

Drive belt deflection:

New belt

11 – 15 mm (0.43 – 0.59 in.)

Used belt

15 – 20 mm (0.59 – 0.79 in.)

If necessary, adjust the drive belt deflection.

HINT:

- "New belt" refers to a belt which has been used less than 5 minutes on a running engine.
- "Used belt" refers to a belt which has been used on a running engine for 5 minutes or more.
- After installing a new belt, run the engine for about 5 minutes and recheck the deflection.

CH

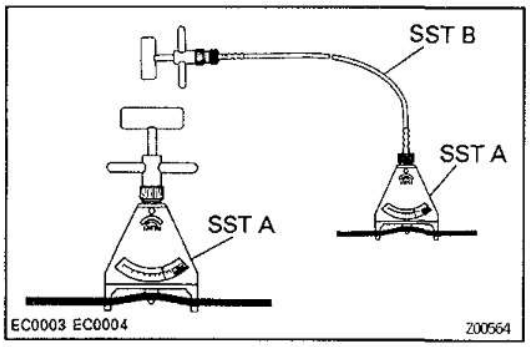

Reference

Using SST, check the drive belt tension.

SST A 09216–00020

SST B 09216–00030

Drive belt tension:

New belt

33 – 57 kgf

Used belt

15 – 35 kgf

If the belt tension is not as specified, adjust it.

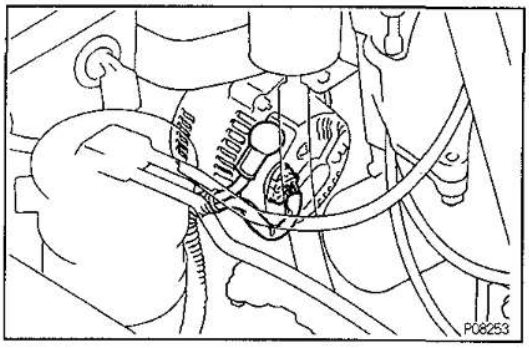

4. VISUALLY CHECK ALTERNATOR WIRING AND LISTEN FOR ABNORMAL NOISES

(a) Check that the wiring is in good condition.

(b) Check that there is no abnormal noise from the alternator while the engine is running.

5. INSPECT DISCHARGE WARNING LIGHT CIRCUIT

(a) Turn the ignition switch "ON". Check that the discharge warning light comes on.

(b) Start the engine. Check that the light goes off.
If the light does not operate as specified, troubleshoot the discharge warning light circuit.

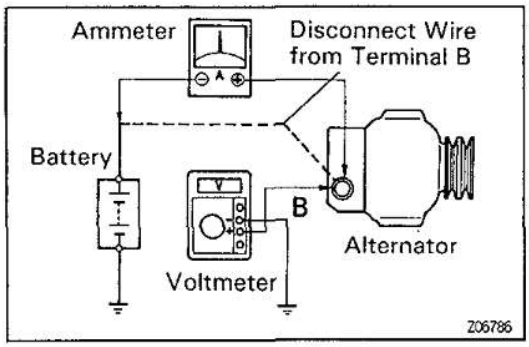

6. INSPECT CHARGING CIRCUIT WITHOUT LOAD

HINT: If a battery / alternator tester is available, connect the tester to the charging circuit as per the manufacturer's instructions.

(a) If a tester is not available, connect a voltmeter and ammeter to the charging circuit as follows:

- Disconnect the wire from terminal B of the alternator and connect it to the negative (−) lead of the ammeter.
- Connect the positive (+) lead of the ammeter to terminal B of the alternator.
- Connect the positive (+) lead of the voltmeter to terminal B of the alternator.
- Ground the negative (−) lead of the voltmeter.

CH

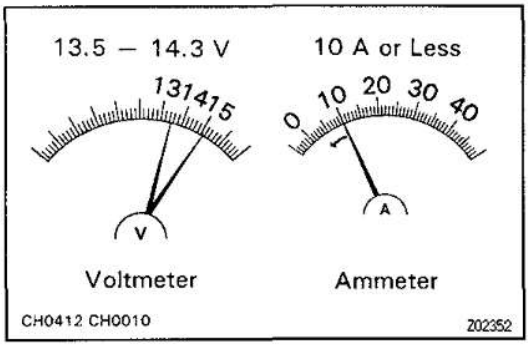

(b) Check the charging circuit as follows:
With the engine running from idle to 2,000 rpm, check the reading on the ammeter and voltmeter.

Standard amperage:

10 A or less

Standard voltage:

14.0 — 15.0 V at 25°C (77°F)

13.5 — 14.3 V at 115°C (239°F)

If the voltmeter reading is more than standard voltage, replace the IC regulator.

If the voltmeter reading is less than the standard voltage, check the IC regulator and alternator as follows:

- With terminal F grounded, start the engine and check the voltmeter reading of terminal B.
- If the voltmeter reading is more than standard voltage, replace the IC regulator.
- If the voltmeter reading is less than standard voltage, check the alternator.

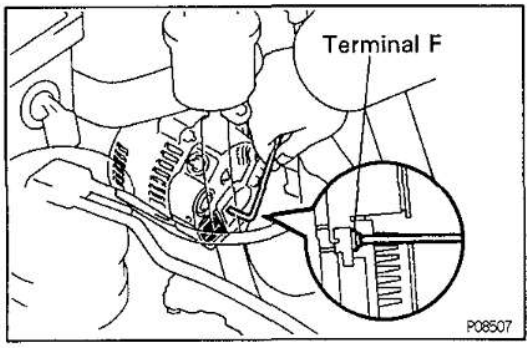

7. INSPECT CHARGING CIRCUIT WITH LOAD

(a) With the engine running at 2,000 rpm, turn on the high beam headlights and place the heater blower switch at "HI".

(b) Check the reading on the ammeter.

Standard amperage:

30 A or more

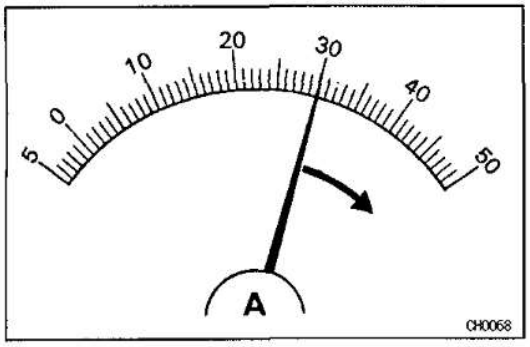

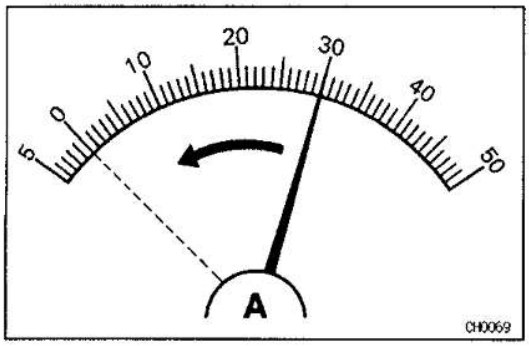

If the ammeter reading is less than standard amperage, repair the alternator.

HINT: If the battery is fully charged, the indication will sometimes be less than standard amperage.

ALTERNATOR

CH03G-02

COMPONENTS FOR REMOVAL AND INSTALLATION

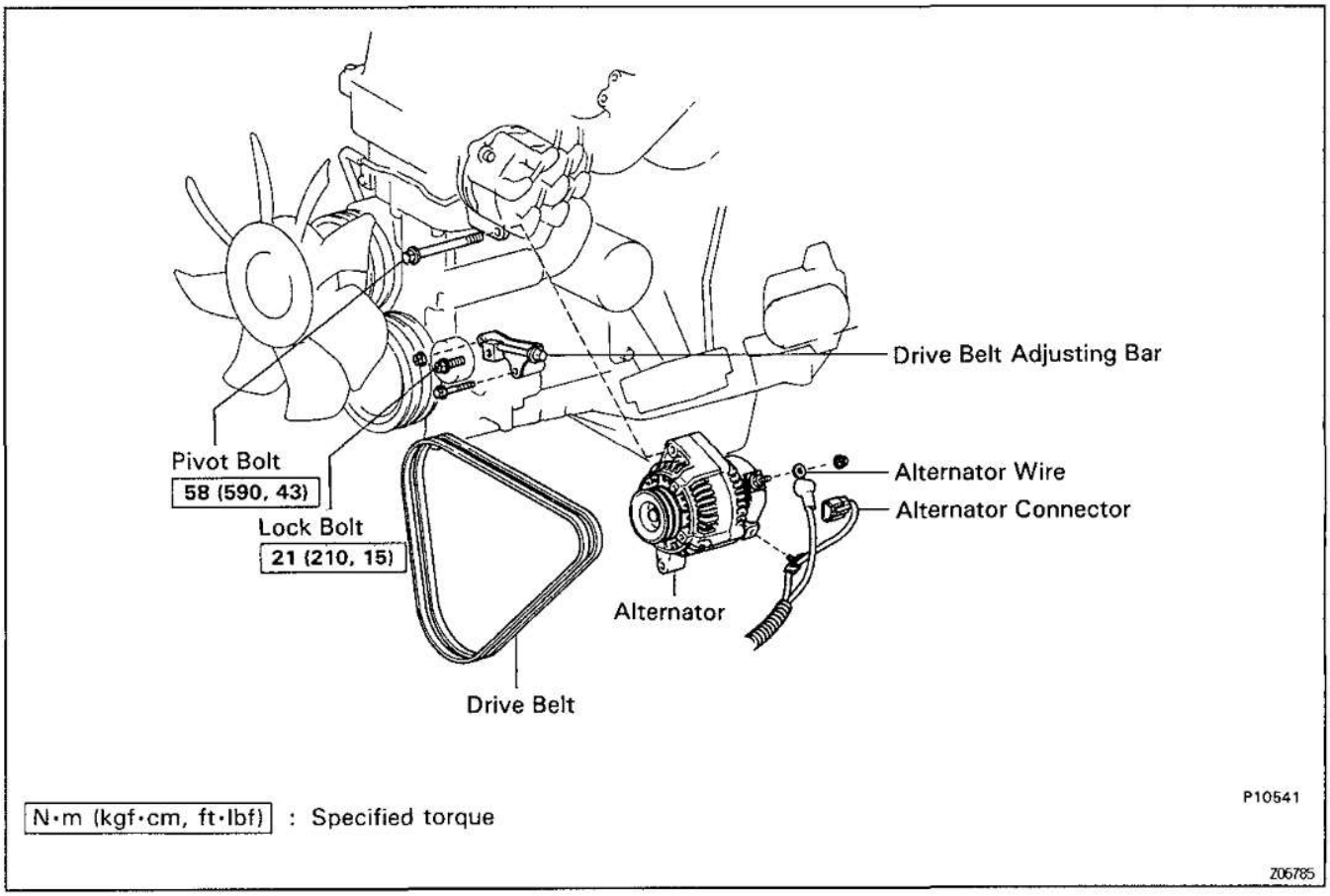

CH046-01

ALTERNATOR REMOVAL

1. **DISCONNECT CABLE FROM NEGATIVE TERMINAL OF BATTERY**
   Remove the three bolts, and disconnect the reservoir tank.

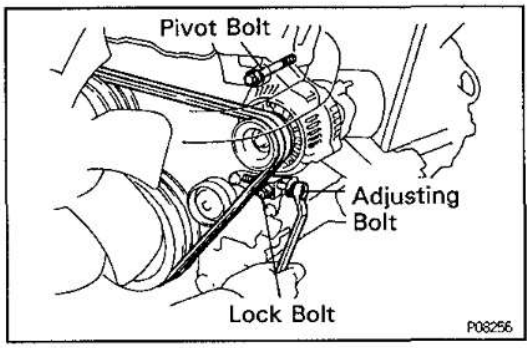

2. **REMOVE DRIVE BELTS**
   (a) Loosen the lock bolt, pivot bolt and adjusting bolt.
   (b) Remove the two drive belts.

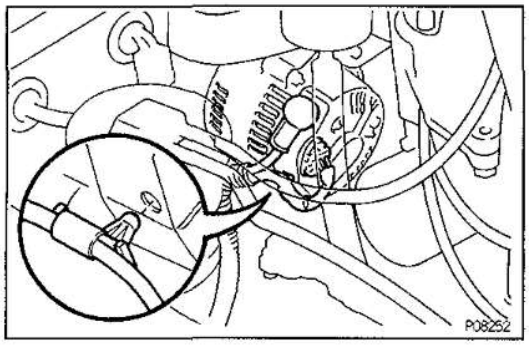

3. REMOVE ALTERNATOR

(a) Disconnect the alternator connector.

(b) Remove the nut, and disconnect the alternator wire.

(c) Disconnect the wire harness from the clip.

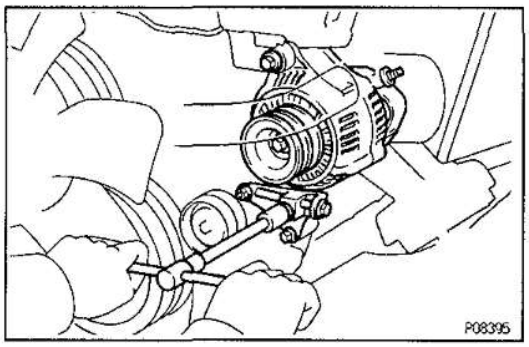

(d) Remove the lock bolt, bolt, nut and drive belt adjusting bar.

(e) Remove the pivot bolt and alternator.

CH

CH011-02

COMPONENTS FOR DISASSEMBLY AND ASSEMBLY

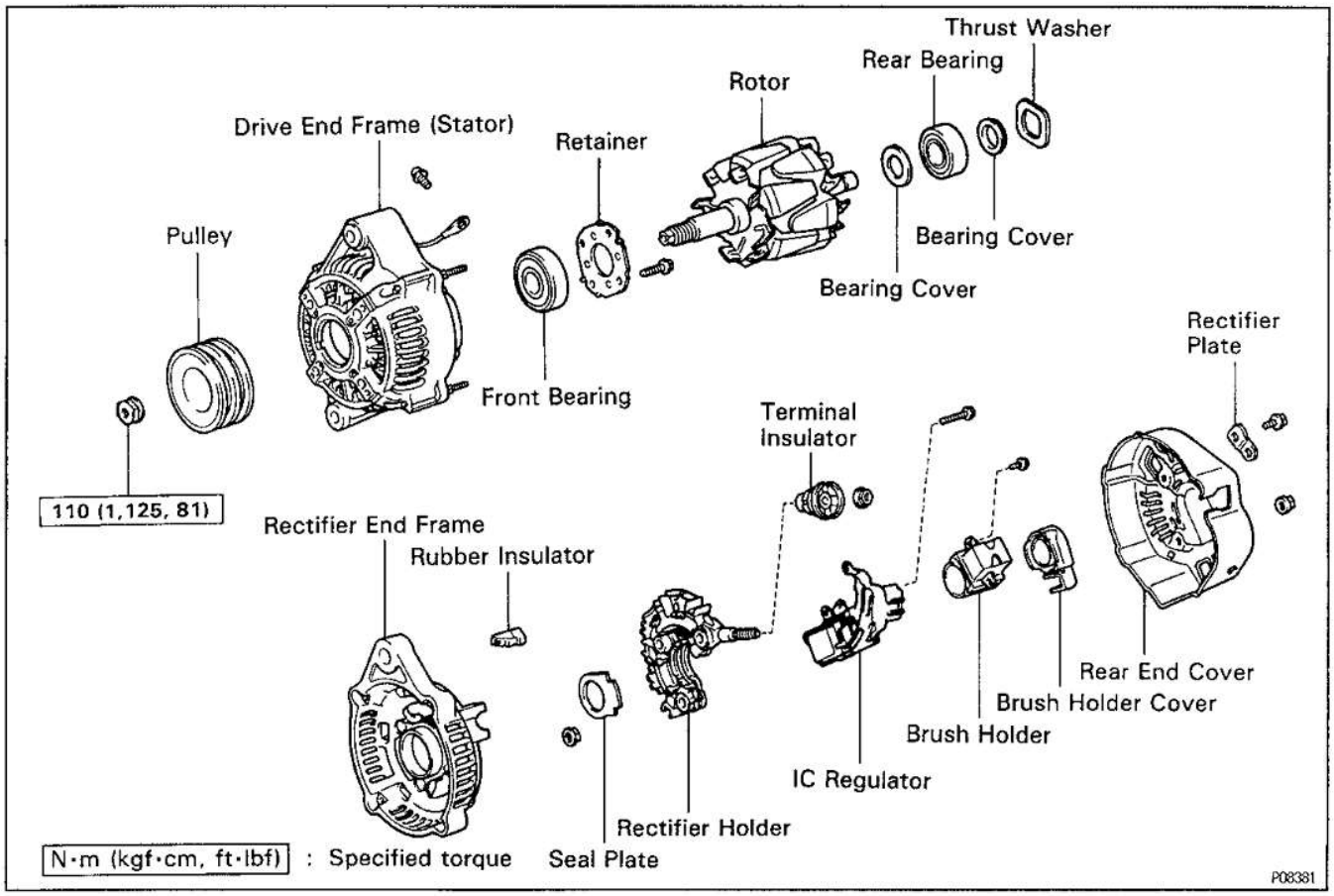

CH03H-02

ALTERNATOR DISASSEMBLY

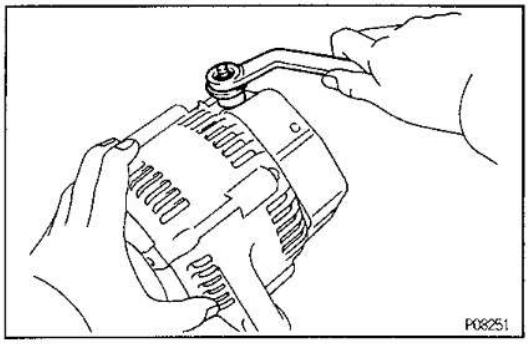

1. REMOVE REAR END COVER

(a) Remove the nut and terminal insulator.

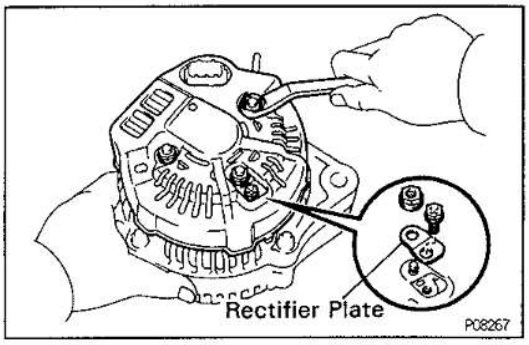

(b) Remove the three nuts, screw, rectifier plate and end cover.

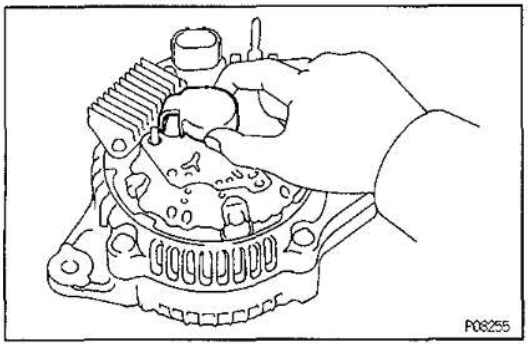

2. REMOVE BRUSH HOLDER

(a) Remove the brush holder cover from the brush holder.

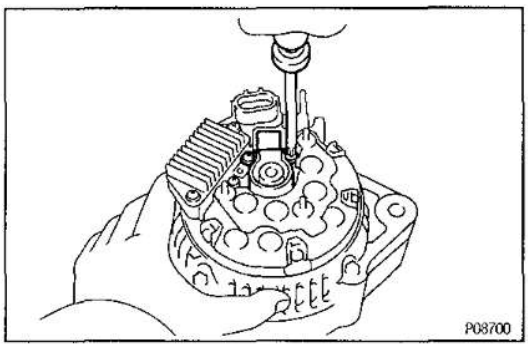

(b) Remove the two screws and brush holder.

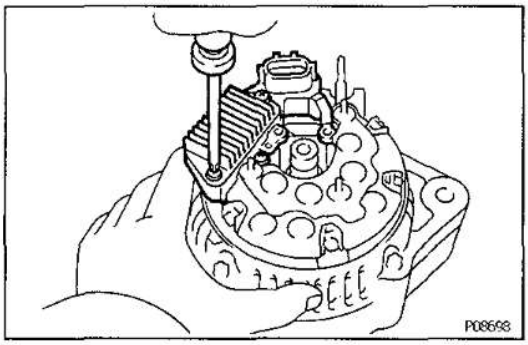

3. REMOVE IC REGULATOR

Remove the three screws and IC regulator.

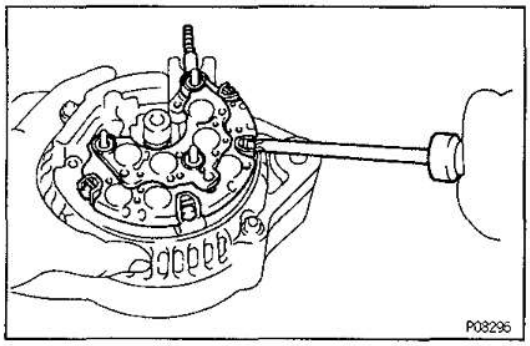

4. REMOVE RECTIFIER HOLDER

(a) Remove the four screws and rectifier holder.

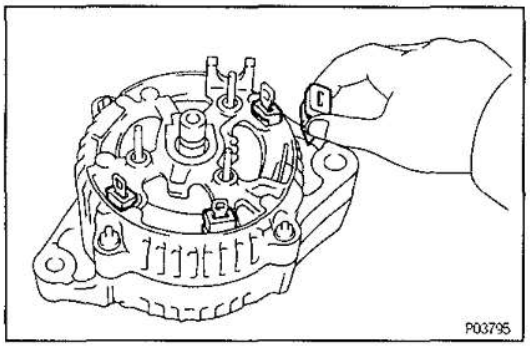

(b) Remove the four rubber insulators.

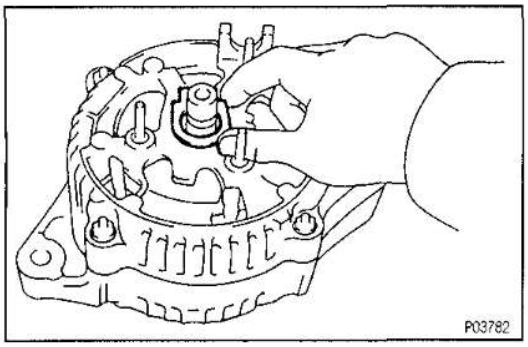

(c) Remove the seal plate.

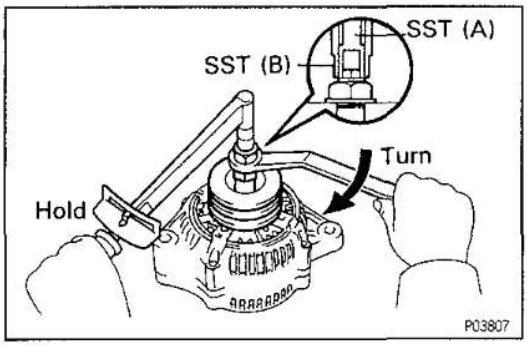

5. REMOVE PULLEY

(a) Hold SST (A) with a torque wrench, and tighten SST (B) clockwise to the specified torque.
SST 09820−63010
Torque: 39 N·m (400 kgf·cm, 29 ft·lbf)

(b) Check that SST (A) is secured to the rotor shaft.

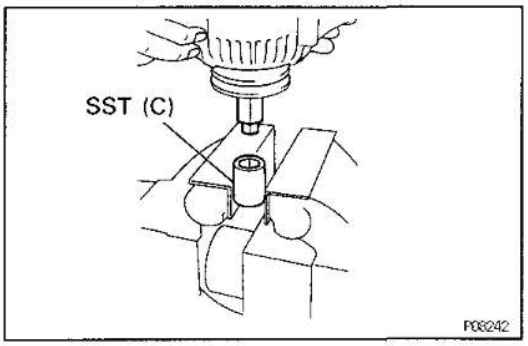

(c) Mount SST (C) in a vise.

(d) Install the generator to SST (C).

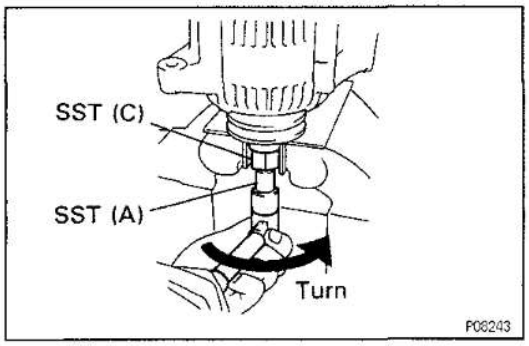

(e) To loosen the pulley nut, turn SST (A) in the direction shown in the illustration.
NOTICE: To prevent damage to the rotor shaft, do not loosen the pulley nut more than one−half of a turn.

(f) Remove the generator from SST (C).

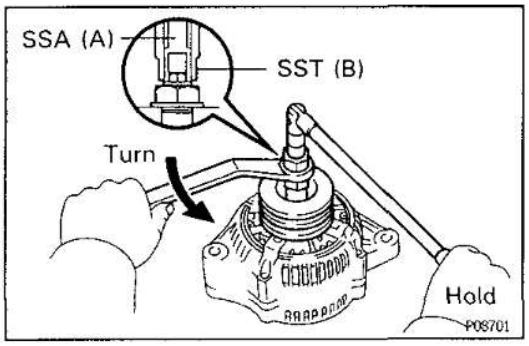

(g) Turn SST (B) and remove SST (A and B).

(h) Remove the pulley nut and pulley.

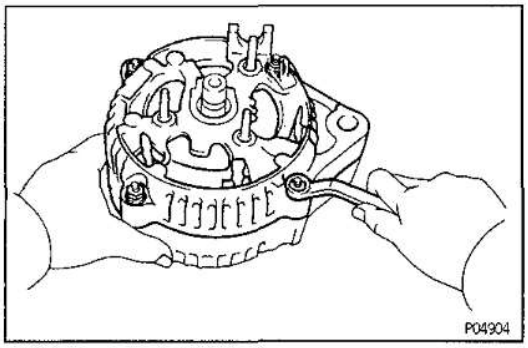

6. REMOVE RECTIFIER END FRAME

(a) Remove the four nuts.

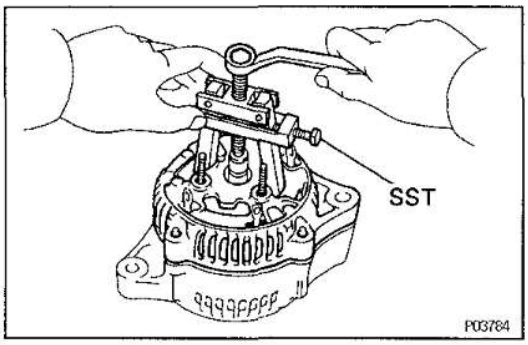

(b) Using SST, remove the rectifier end frame.
SST 09286–46011

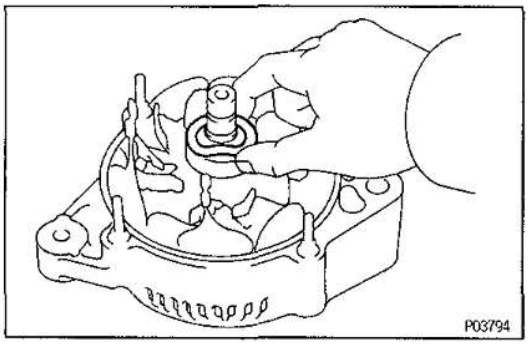

(c) Remove the thrust washer.

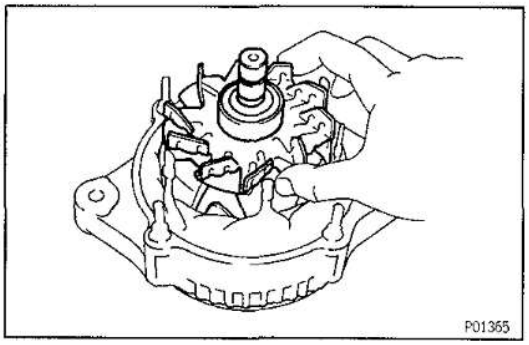

7. REMOVE ROTOR FROM DRIVE END FRAME

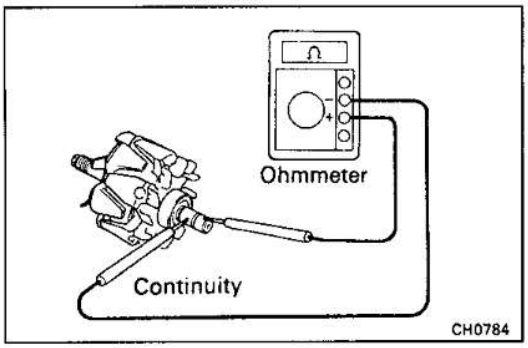

ALTERNATOR INSPECTION AND REPAIR

CH03J-02

Rotor

1. INSPECT ROTOR FOR OPEN CIRCUIT

Using an ohmmeter, check that there is continuity between the slip rings.

Standard resistance (Cold):

2.8 — 3.0 Ω

If there is no continuity, replace the rotor.

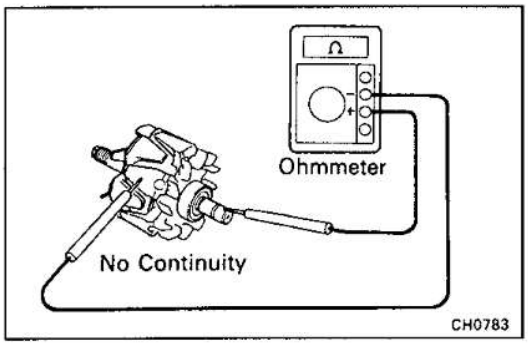

2. INSPECT ROTOR FOR GROUND

Using an ohmmeter, check that there is no continuity between the slip ring and rotor.

If there is continuity, replace the rotor.

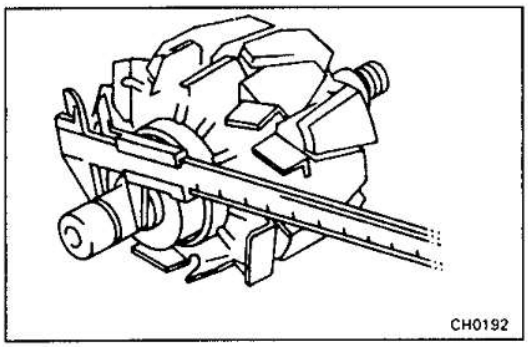

3. INSPECT SLIP RINGS

(a) Check that the slip rings are not rough or scored.
If rough or scored, replace the rotor.

(b) Using a vernier caliper, measure the slip ring diameter.

Standard diameter:

14.2 — 14.4 mm (0.559 — 0.567 in.)

Minimum diameter:

12.8 mm (0.504 in.)

If the diameter is less than minimum, replace the rotor.

Stator (Drive End Frame)

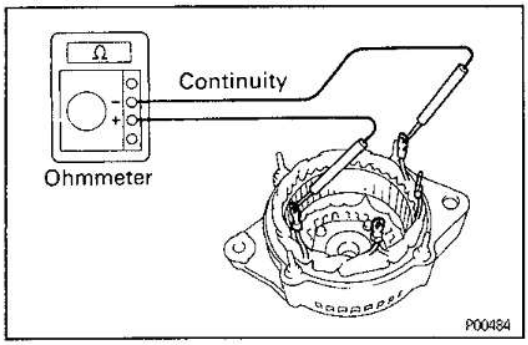

1. INSPECT STATOR FOR OPEN CIRCUIT

Using an ohmmeter, check that there is continuity between the coil leads.

If there is no continuity, replace the drive end frame assembly.

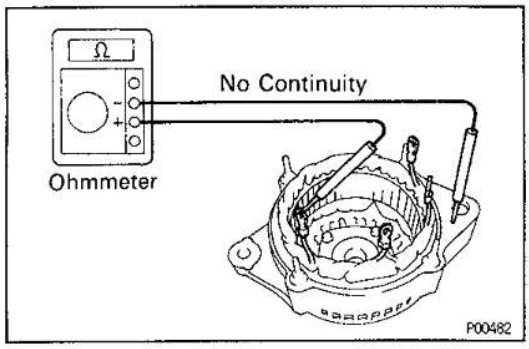

2. INSPECT STATOR FOR GROUND

Using an ohmmeter, check that there is no continuity between the coil lead and drive end frame.

If there is continuity, replace the drive end frame assembly.

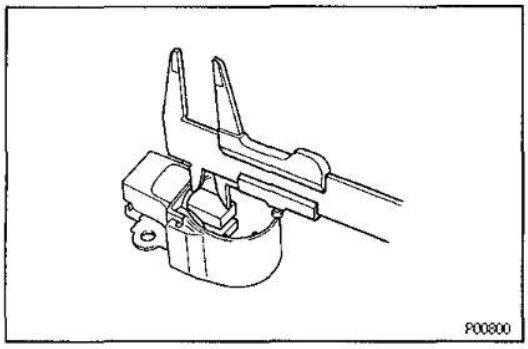

Brushes

INSPECT EXPOSED BRUSH LENGTH

Using a vernier caliper, measure the exposed brush length.

Standard exposed length:

10.5 mm (0.413 in.)

Minimum exposed length:

1.5 mm (0.059 in.)

If the exposed length is less than minimum, replace the brushes and brush holder assembly.

CH

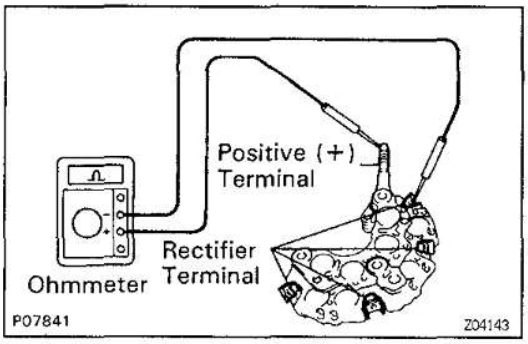

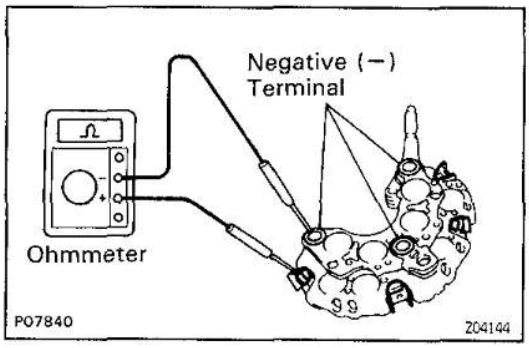

Rectifiers (Rectifier Holder)

1. INSPECT POSITIVE RECTIFIER

(a) Using an ohmmeter, connect one tester probe to the positive (+) terminal and the other to each rectifier terminal.

(b) Reverse the polarity of the tester probes and repeat step (a).

(c) Check that one shows continuity and the other shows no continuity.

If continuity is not as specified, replace the rectifier holder.

2. INSPECT NEGATIVE RECTIFIER

(a) Using an ohmmeter, connect one tester probe to each negative (−) terminal and the other to each rectifier terminal.

(b) Reverse the polarity of the tester probes and repeat step (a).

(c) Check that one shows continuity and the other shows no continuity.

If continuity is not as specified, replace the rectifier holder.

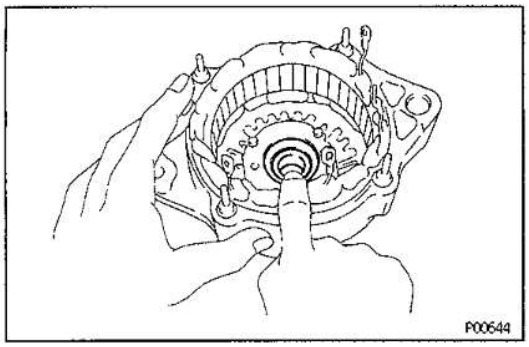

Bearings

1. INSPECT FRONT BEARING

Check that the bearing is not rough or worn.

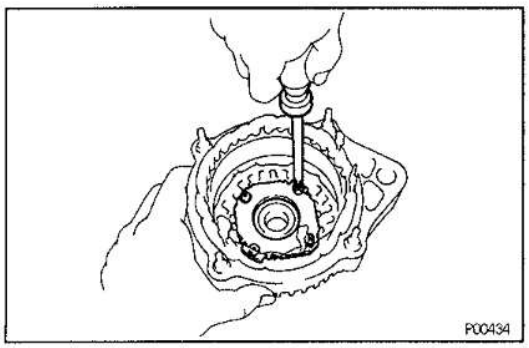

2. IF NECESSARY, REPLACE FRONT BEARING

(a) Remove the four screws, bearing retainer and bearing.

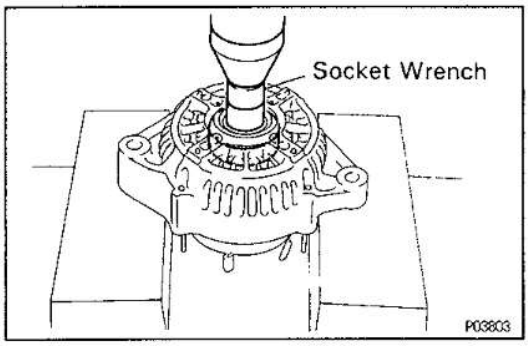

(b) Using a socket wrench and press, press out the bearing.

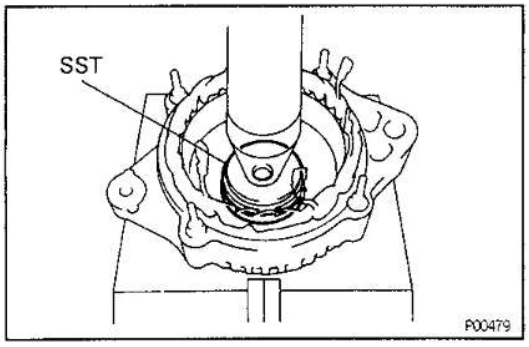

(c) Using SST and a press, press in a new bearing.
SST 09608—20012 (09608—00030)

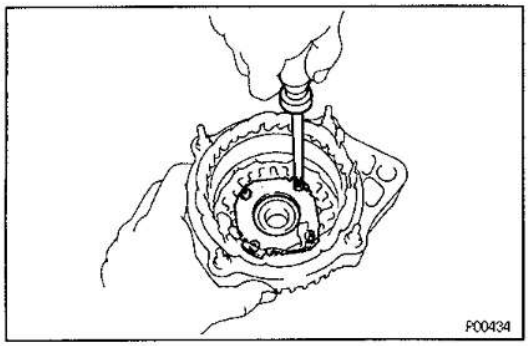

(d) Install the bearing retainer with the four screws.

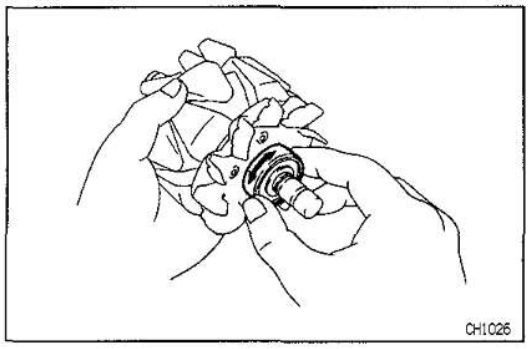

3. INSPECT REAR BEARING

Check that the bearing is not rough or worn.

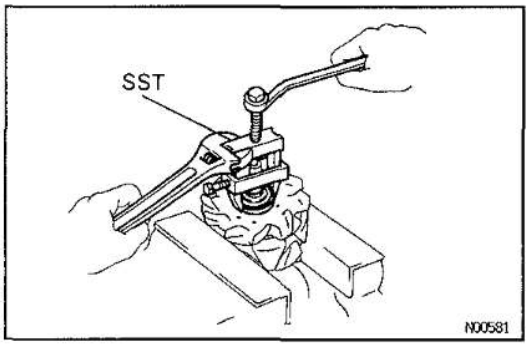

4. IF NECESSARY, REPLACE REAR BEARING

(a) Using SST, remove the bearing covers and bearing.
SST 09820–00021

***NOTICE:* Be careful not to damage the fan.**

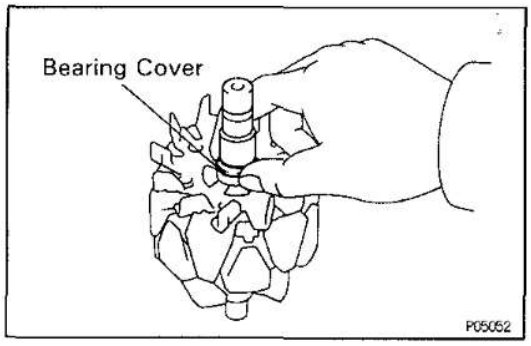

(b) *Place the bearing cover on the rotor.*

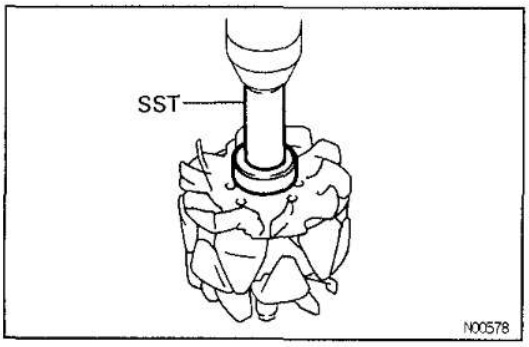

(c) Using SST and a press, press in a new bearing.
SST 09820–00030

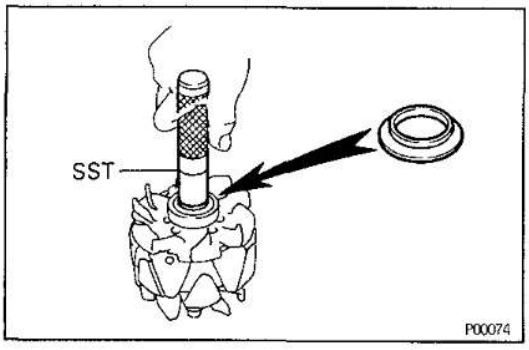

(d) Using SST, push in the bearing cover.
SST 09285–76010

CH03K – 02

ALTERNATOR ASSEMBLY

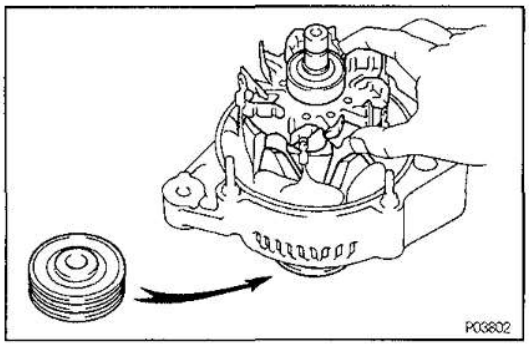

(See Components for Disassembly and Assembly)

1. **PLACE RECTIFIER END FRAME ON PULLEY**
2. **INSTALL ROTOR TO DRIVE END FRAME**

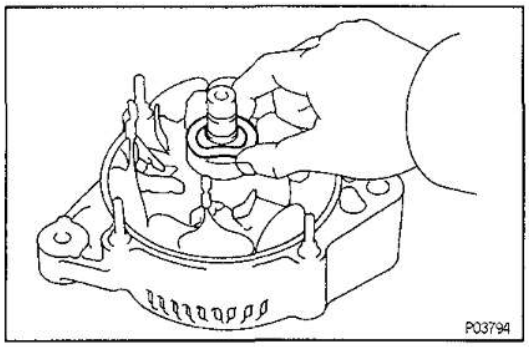

3. **INSTALL RECTIFIER END FRAME**

(a) Place the thrust washer on the rotor.

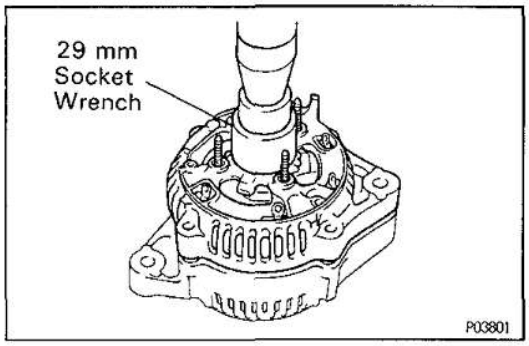

(b) Using a 29 mm socket wrench and press, slowly press in the rectifier end frame.

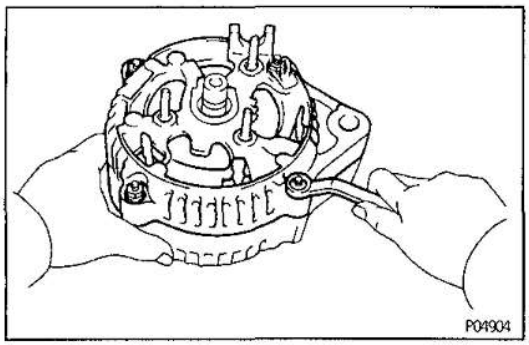

(c) Install the four nuts.
Torque: 4.5 N·m (46 kgf·cm, 40 in.·lbf)

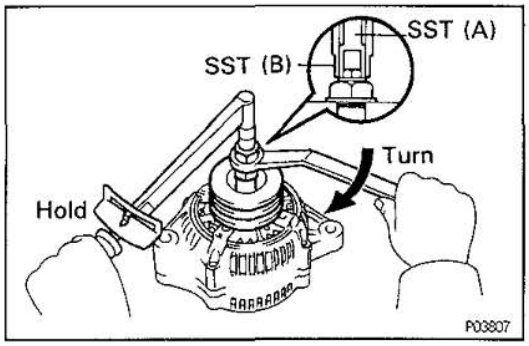

4. **INSTALL PULLEY**

(a) Install the pulley to the rotor shaft by tightening the pulley nut by hand.

(b) Hold SST (A) with a torque wrench, and tighten SST (B) clockwise to the specified torque.
SST 09820–63010
Torque: 39 N·m (400 kgf·cm, 29 ft·lbf)

(c) Check that SST (A) is secured to the pulley shaft.

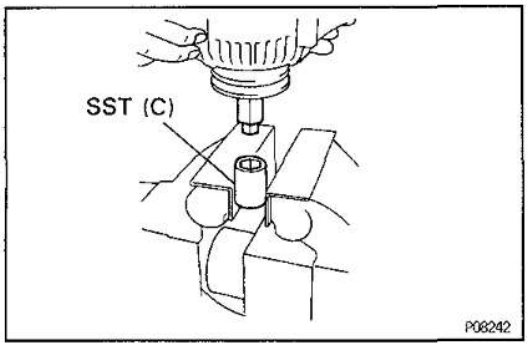

(d) Mount SST (C) in a vise.
(e) Install the generator to SST (C).

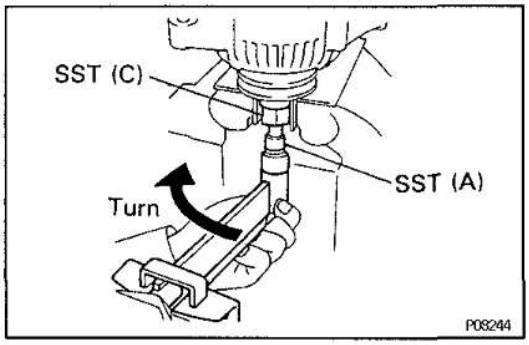

(f) To torque the pulley nut turn SST (A) in the direction shown in the illustration.
Torque: 110 N·m (1,125 kgf·cm, 81 ft·lbf)
(g) Remove the generator from SST (C).

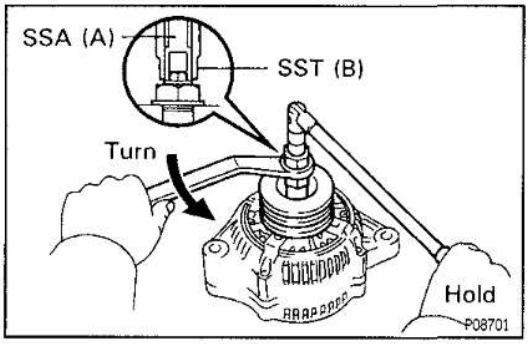

(h) Turn SST (B), and remove SST (A and B).

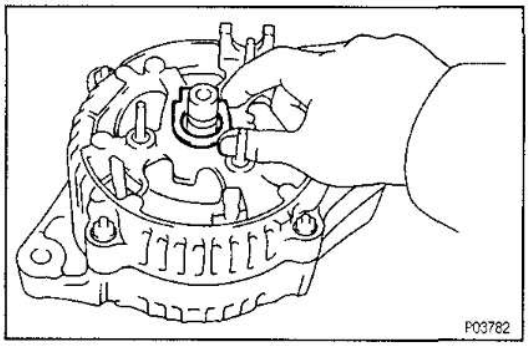

5. INSTALL RECTIFIER HOLDER
(a) Place the seal plate on the rectifier end frame.

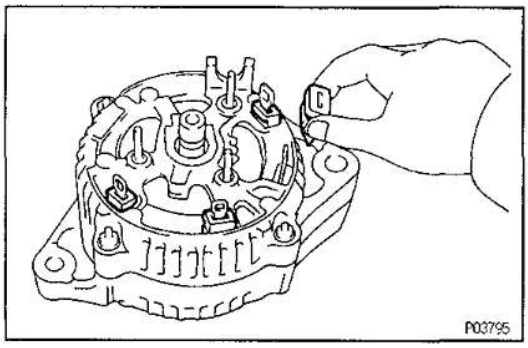

(b) Install the four rubber insulators on the lead wires.

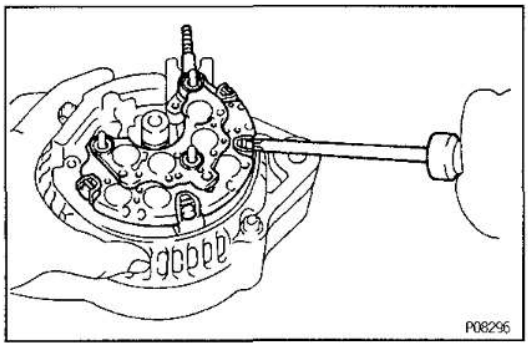

(c) Install the rectifier holder with the four screws.

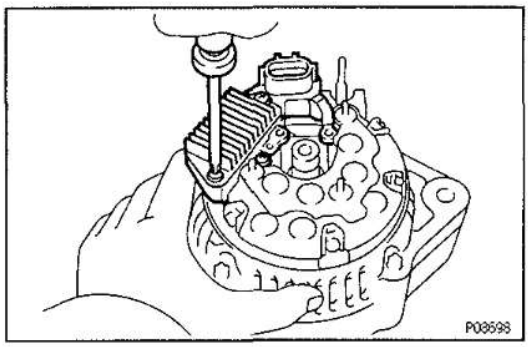

6. INSTALL IC REGULATOR

Install the IC regulator on the rectifier end frame with the three screws.

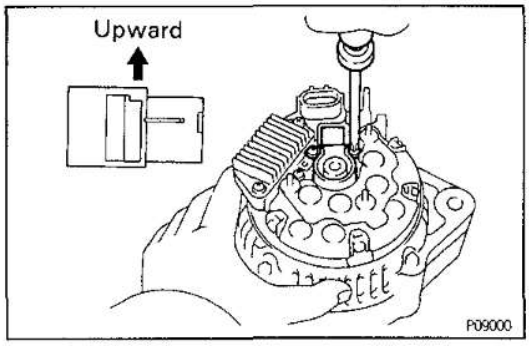

7. INSTALL BRUSH HOLDER

(a) Install the brush holder on the rectifier end frame with the two screws.

NOTICE: Be careful of the holder installation direction.

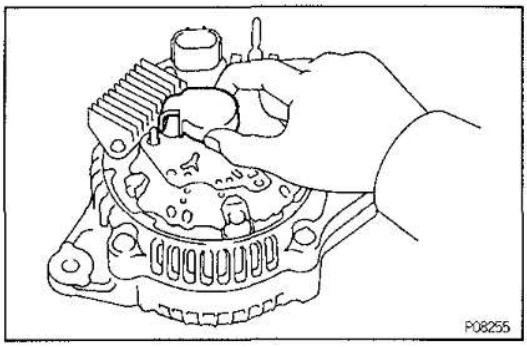

(b) Place the brush holder cover on the brush holder.

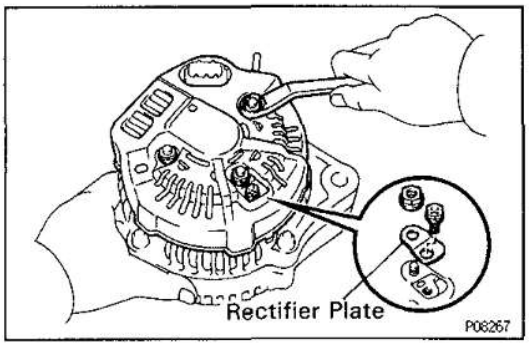

8. INSTALL REAR END COVER

(a) Install the end cover together with the rectifier plate. Hand tighten the screw first for positioning the plate. Tighten the three nuts and retighten the screw.

Torque: 4.5 N·m (46 kgf·cm, 40 in.·lbf)

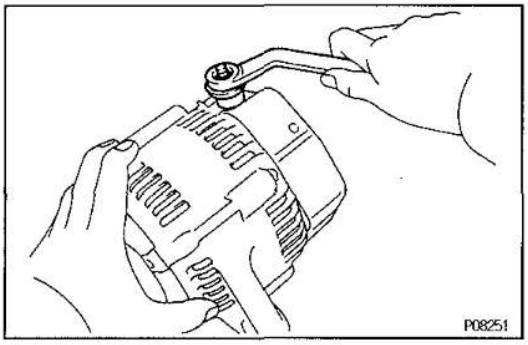

(b) Install the terminal insulator with the nut.
Torque: 4.1 N·m (42 kgf·cm, 36 in.·lbf)

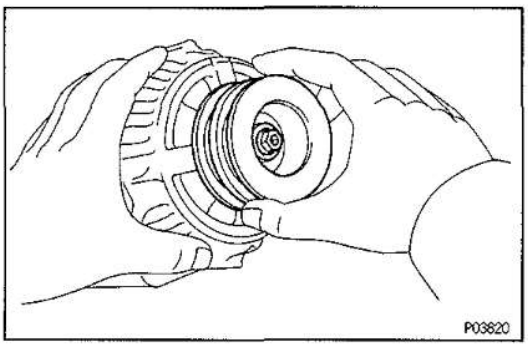

9. CHECK THAT ROTOR ROTATES SMOOTHLY

CH

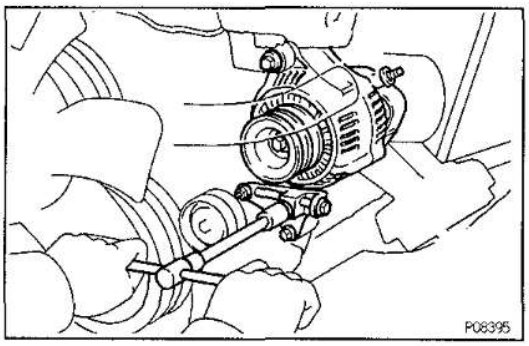

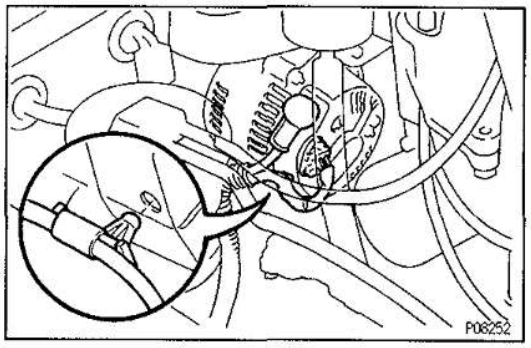

ALTERNATOR INSTALLATION

CH047-01

(See Components for Removal and Installation)

1. INSTALL ALTERNATOR

(a) Mount alternator on the alternator bracket with the pivot bolt. Do not tighten the bolt yet.

(b) Install the drive belt adjusting bar with the bolt and nut.
Torque: 21 N·m (210 kgf·cm, 15 ft·lbf)

(c) Temporarily install the lock bolt.

(d) Connect the alternator connector.

(e) Connect the alternator wire with the nut.

(f) Connect the wire harness to the clip.

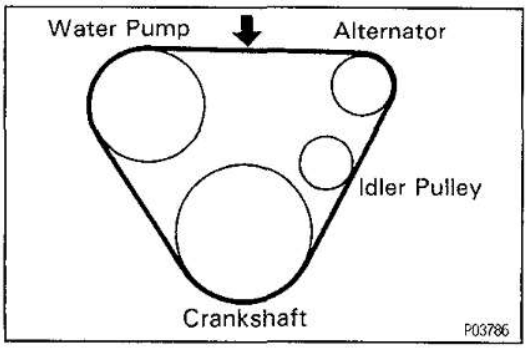

2. INSTALL DRIVE BELTS

(a) Install the drive belts.

(b) Measure the drive belt deflection by pressing on the belt at the points indicated in the illustration with 98 N (10 kgf, 22 lbf) of pressure.
Drive belt deflection:
New belt
11 — 15 mm (0.43 — 0.59 in.)

Used belt

15 — 20 mm (0.59 — 0.79 in.)

(c) Tighten the pivot and adjusting lock bolts.

HINT:

- "New belt" refers to a belt which has been used less than 5 minutes on a running engine.
- "Used belt" refers to a belt which has been used on a running engine for 5 minutes or more.
- After installing a new belt, run the engine for about 5 minutes and recheck the deflection.

Reference]

Using SST, measure the drive belt tension.

SST A 09216—00020

SST B 09216—00030

Drive belt tension:

New belt

33 — 57 kgf

Used belt

15 — 35 kgf

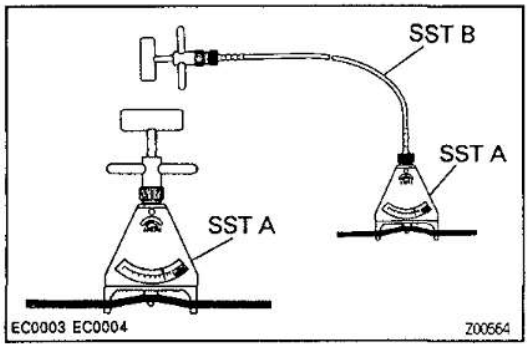

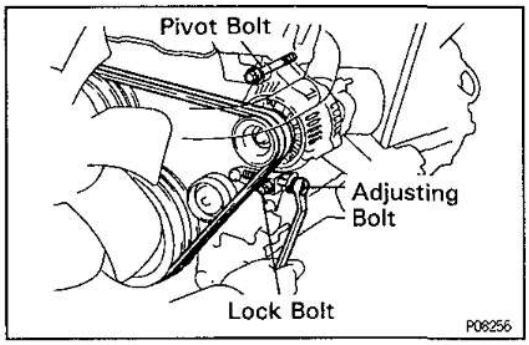

(d) Tighten the pivot and adjusting lock bolts.

Torque: 59 N·m (600 kgf·cm, 43 ft·lbf) for Pivot bolt

Torque: 21 N·m (210 kgf·cm, 15 ft·lbf) for Lock bolt

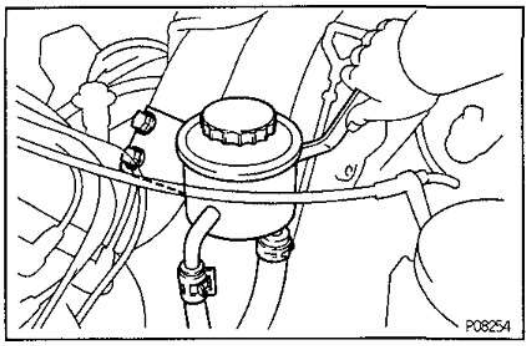

3. CONNECT PS RESERVOIR TANK

Connect the reservoir tank with the three bolts.

4. CONNECT CABLE TO NEGATIVE TERMINAL OF BATTERY

5. PERFORM ON—VEHICLE INSPECTION

(See steps 5 to 7 in on pages CH—7 and 9)

SERVICE SPECIFICATIONS

SERVICE DATA

CH03M-03

Battery	Specific gravity (When full charge at 20°C (68°F))	
	105D31L battery	1.27 – 1.29
	75 Others	1.25 – 1.27
Drive belt	Deflection with 98 N (10 kgf, 22.0 lbf)	
	– New belt	11 – 15 mm (0.43 – 0.59 in.)
	– Used belt	15 – 20 mm (0.59 – 0.79 in.)
	Tension with SST	
	– New belt	33 – 57 kgf
	– Used belt	15 – 35 kgf
Generator	Rated output	12 V – 50 A, 55 A, 80A, 100 A
	Rotor coil resistance	2.8 – 3.0 Ω
	Slip ring diameter (STD)	14.2 mm – 14.4 mm (0.559 – 0.567 in.)
	Slip ring diameter (Minimum)	12.8 mm (0.504 in.)
	Brush exposed length (STD)	10.5 mm (0.413 in.)
	Brush exposed length (Minimum)	1.5 mm (0.059 in.)
Voltage regulator (IC)	Regulating voltage at 25 °C (77°F)	14.0 – 15.0 V
	Regulating voltage at 115°C (239°F)	13.5 – 14.3 V

CH

TORQUE SPECIFICATIONS

CH03N-01

Part tightened	N·m	kgf·cm	ft·lbf
Generator pulley nut	110	1,125	81
Drive belt adjusting bar x Timing chain cover	21	210	15
Pivot bolt (For generator)	59	600	43
Lock bolt (For generator)	21	210	15
Drive end frame x Rectifier end frame	4.5	46	40 in.·lbf
Rear end cover x Rectifier end frame	3.8	39	34 in.·lbf
Rectifier plate mounting screw	3.8	39	34 in.·lbf
Terminal insulator mounting nut	4.1	42	36 in.·lbf

— MEMO —

CH