27 LAND CRUISER (RHD) (Cont. next page)

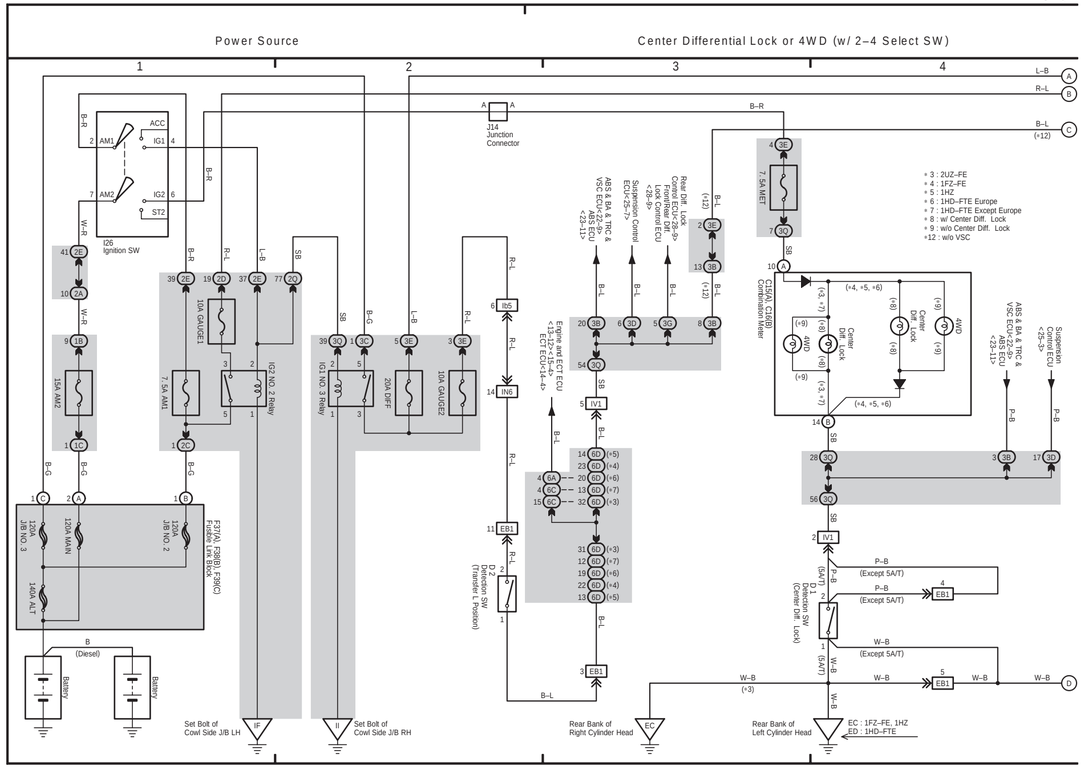

27 LAND CRUISER (RHD) (Cont' d)

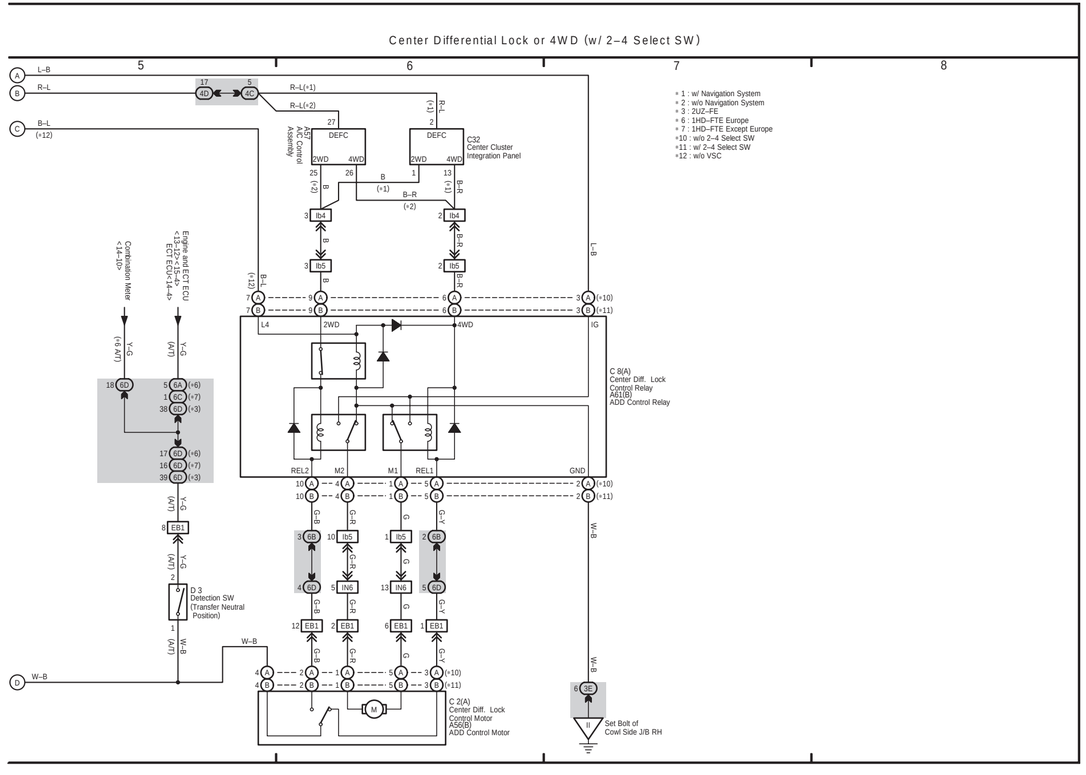

H

26 LAND CRUISER (RHD)

(Cont. next page)

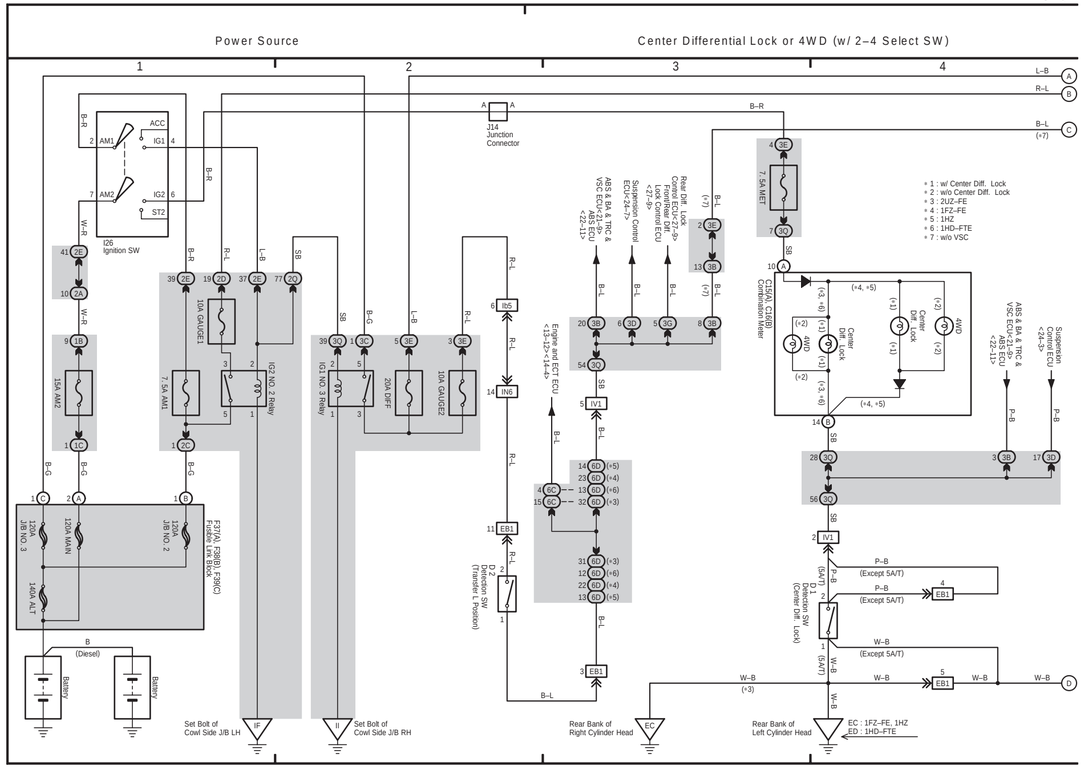

26 LAND CRUISER (RHD) (Cont' d)

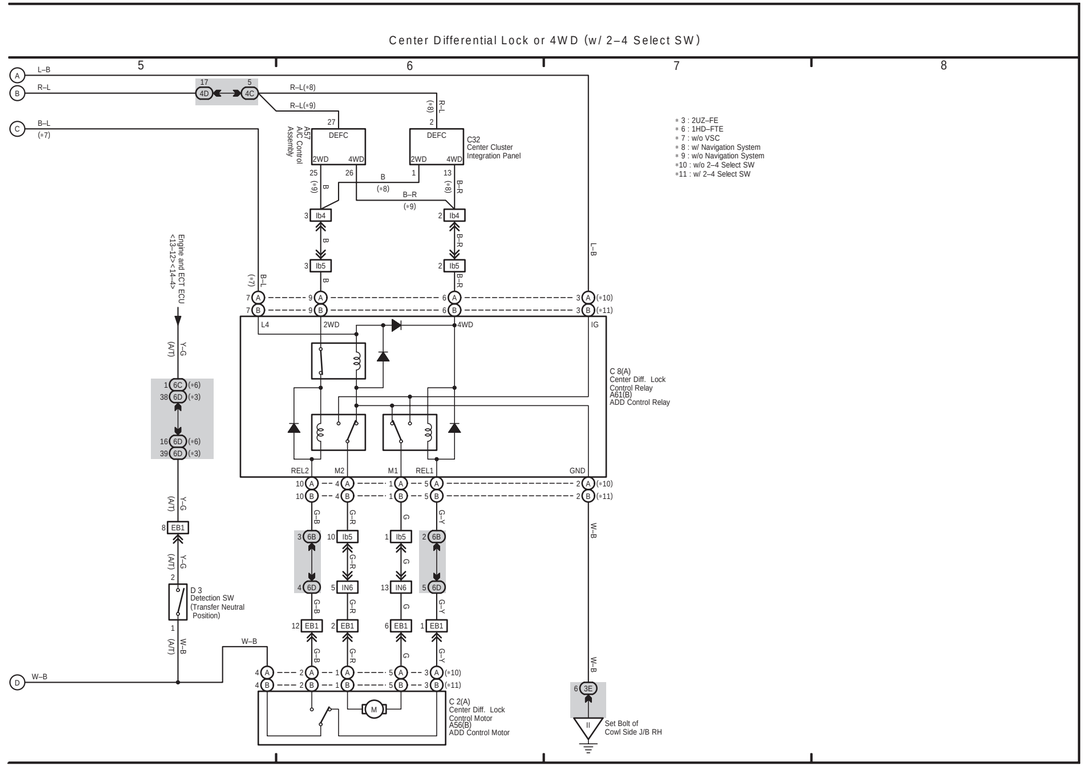

26 LAND CRUISER (RHD) (Cont. next page)

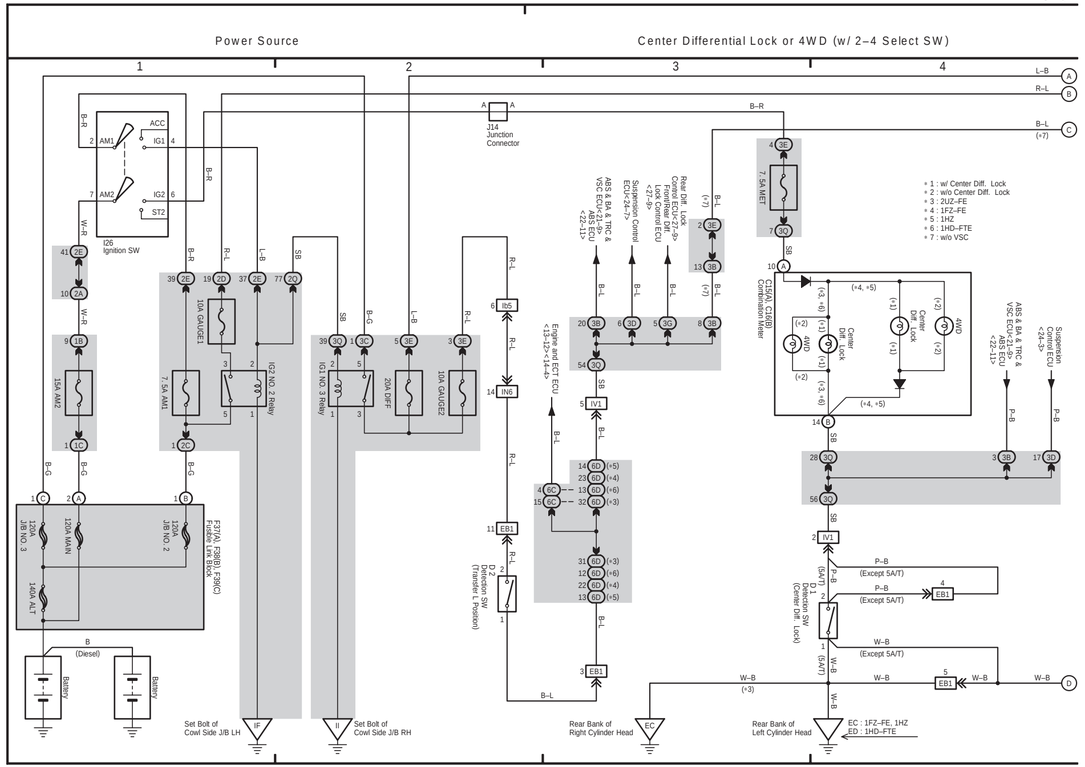

26 LAND CRUISER (RHD) (Cont' d)

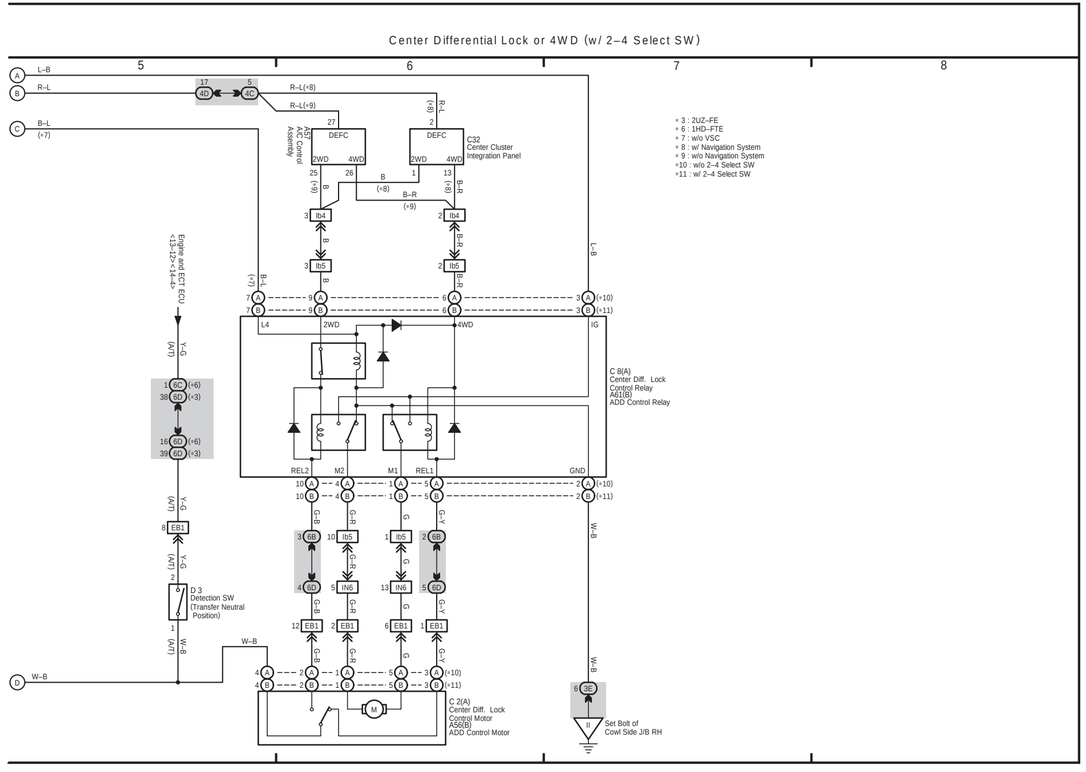

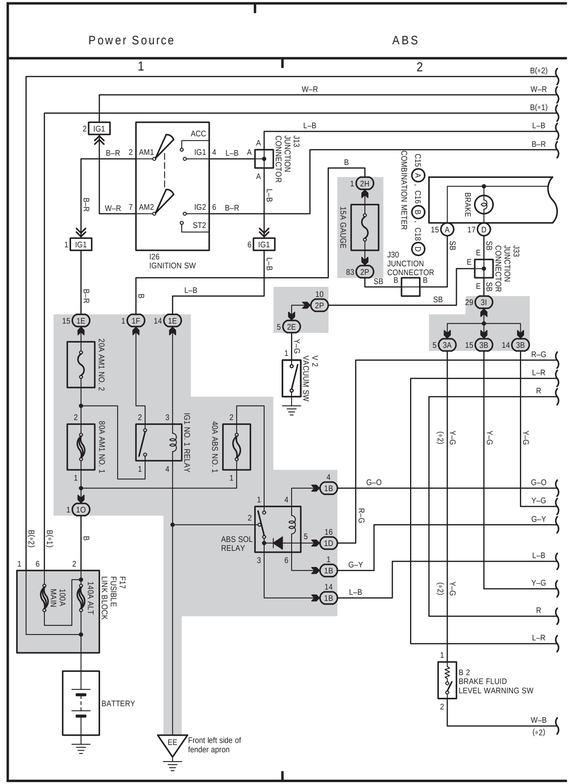

(Cont. next page)

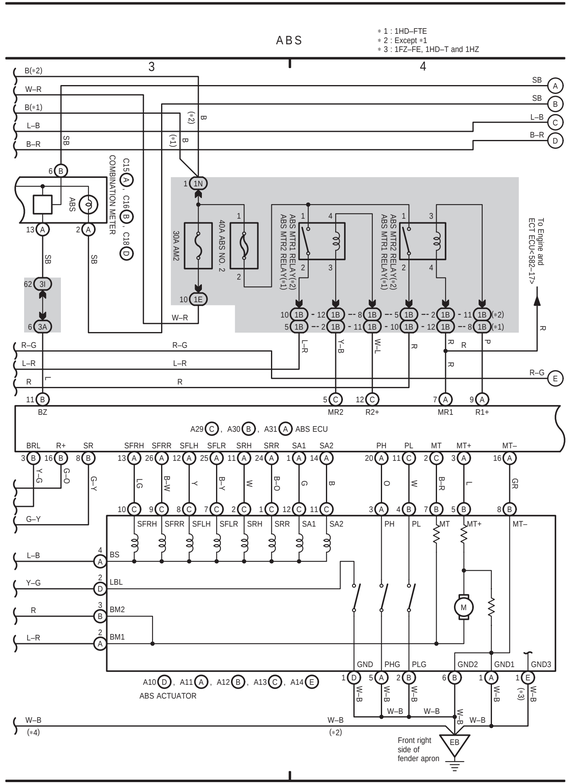

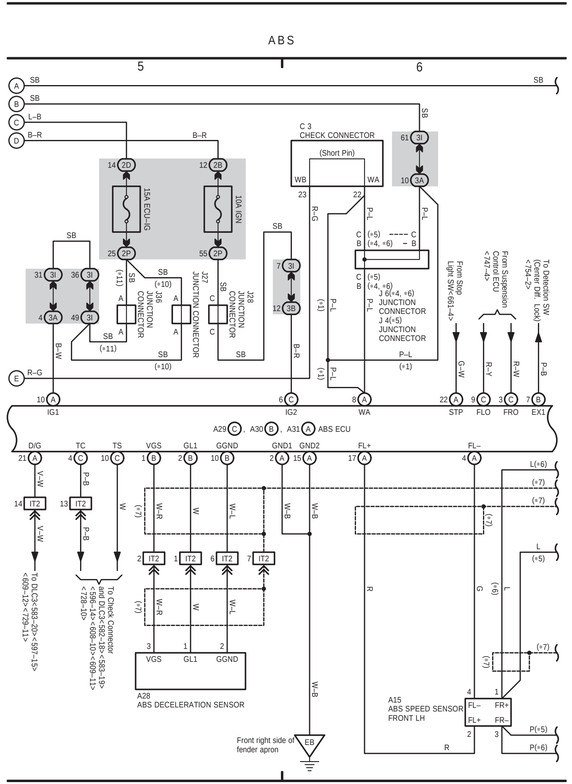

(Cont'd)

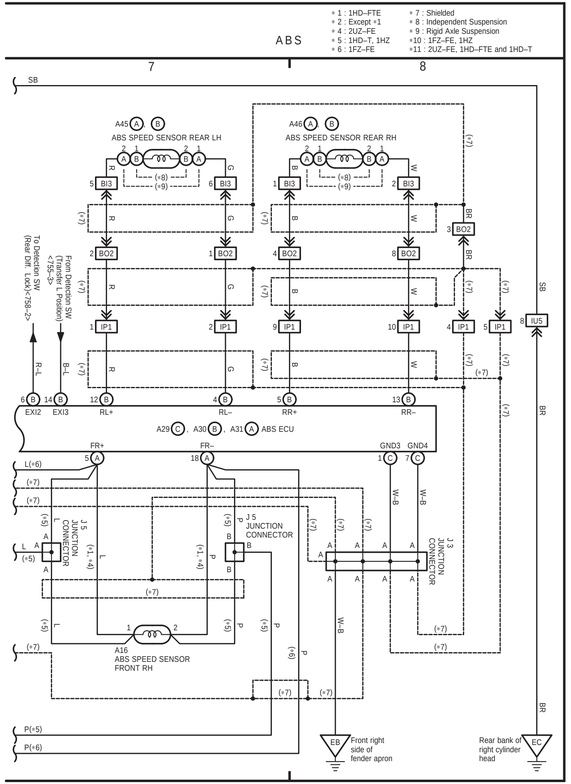

23 LAND CRUISER (RHD) (Cont. next page)

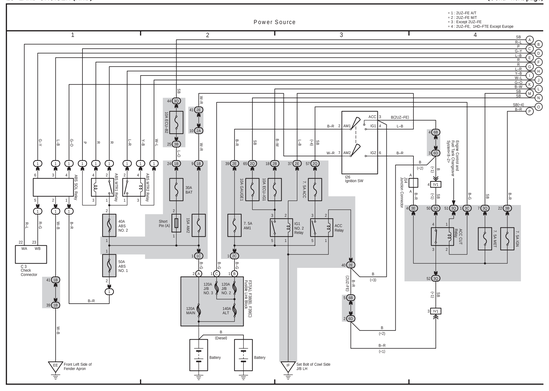

23 LAND CRUISER (RHD) (Cont' d) (Cont. next page)

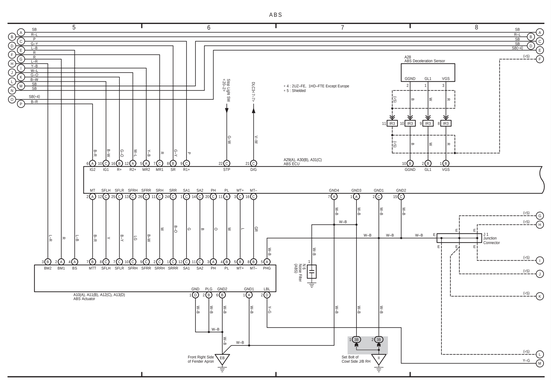

23 LAND CRUISER (RHD) (Cont' d) (Cont. next page)

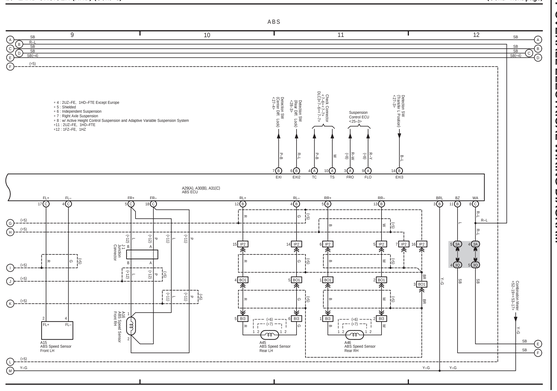

23 LAND CRUISER (RHD) (Cont' d)

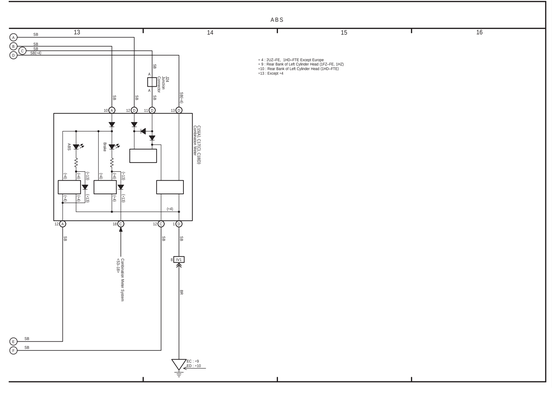

22 LAND CRUISER (RHD) (Cont. next page)

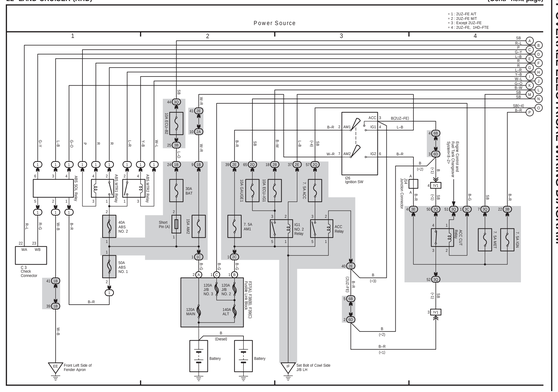

22 LAND CRUISER (RHD) (Cont' d) (Cont. next page)

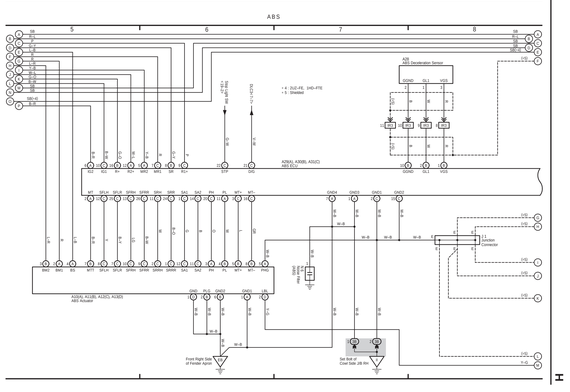

22 LAND CRUISER (RHD) (Cont' d) (Cont. next page)

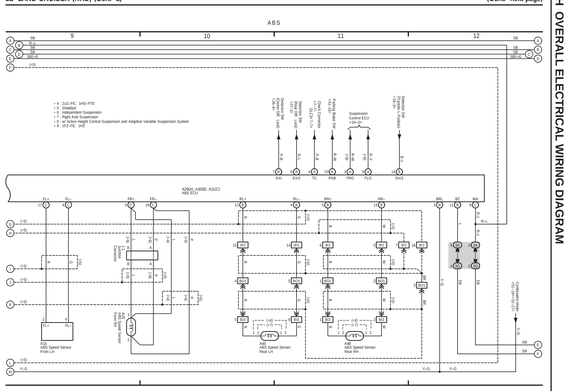

22 LAND CRUISER (RHD) (Cont' d)

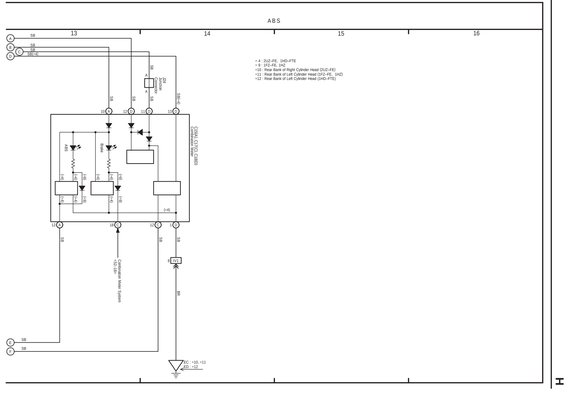

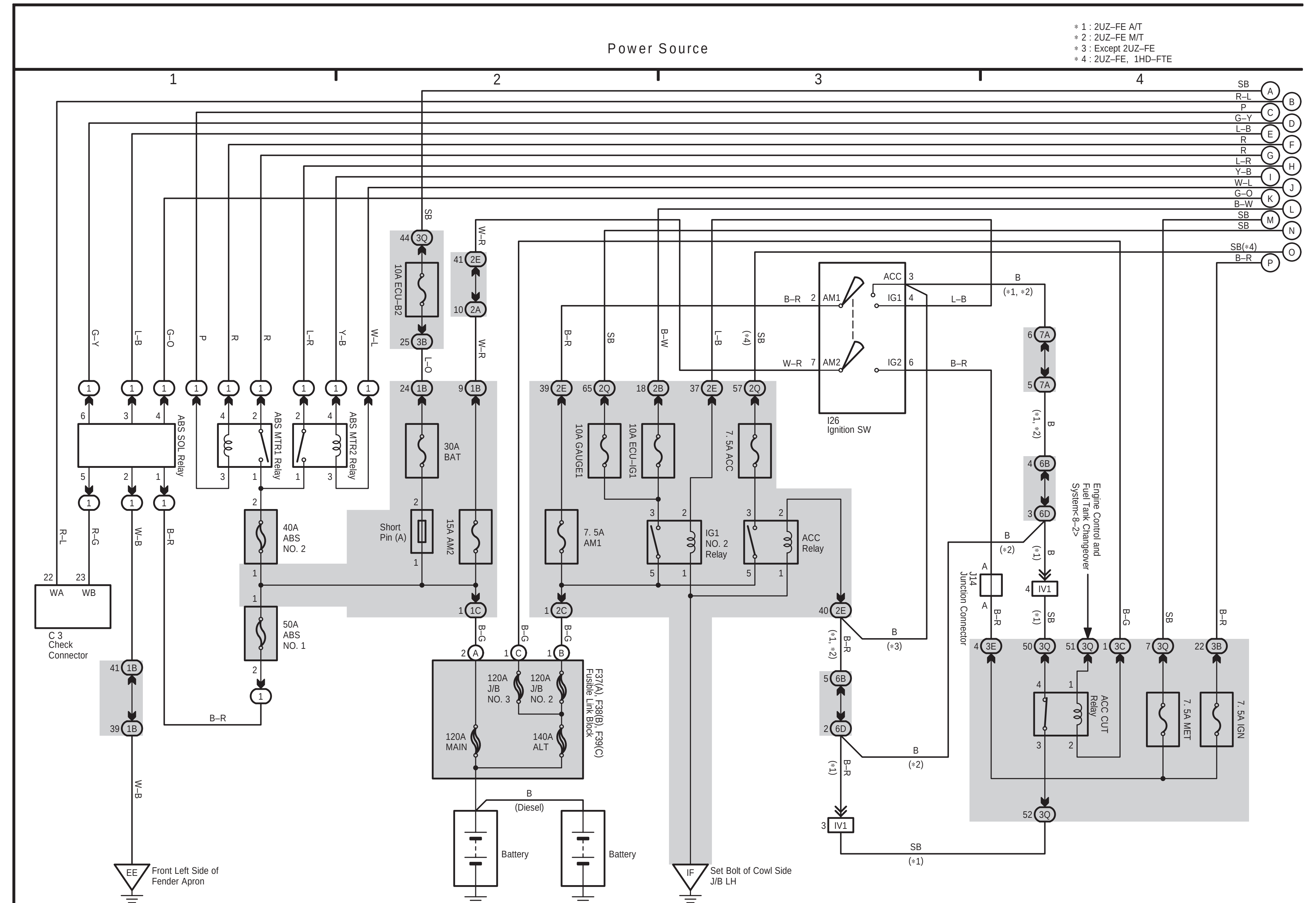
Power Source
＊1 : 2UZ–FE A/T
＊2 : 2UZ–FE M/T
＊3 : Except 2UZ–FE
＊4 : 2UZ–FE, 1HD–FTE
ABS SOL Relay
ABS MTR1 Relay
ABS MTR2 Relay
10A ECU–B2
30A BAT
Short Pin (A)
15A AM2
40A ABS NO. 2
50A ABS NO. 1
10A GAUGE1
10A ECU–IG1
7. 5A AM1
IG1 NO. 2 Relay
7. 5A ACC
ACC Relay
I26 Ignition SW
C 3 Check Connector
F37(A), F38(B), F39(C) Fusible Link Block
120A J/B NO. 3
120A J/B NO. 2
120A MAIN
140A ALT
Battery
(Diesel)
Front Left Side of Fender Apron
Set Bolt of Cowl Side J/B LH
J14 Junction Connector
Engine Control and Fuel Tank Changeover System<8–2>
ACC CUT Relay
7. 5A MET
7. 5A IGN

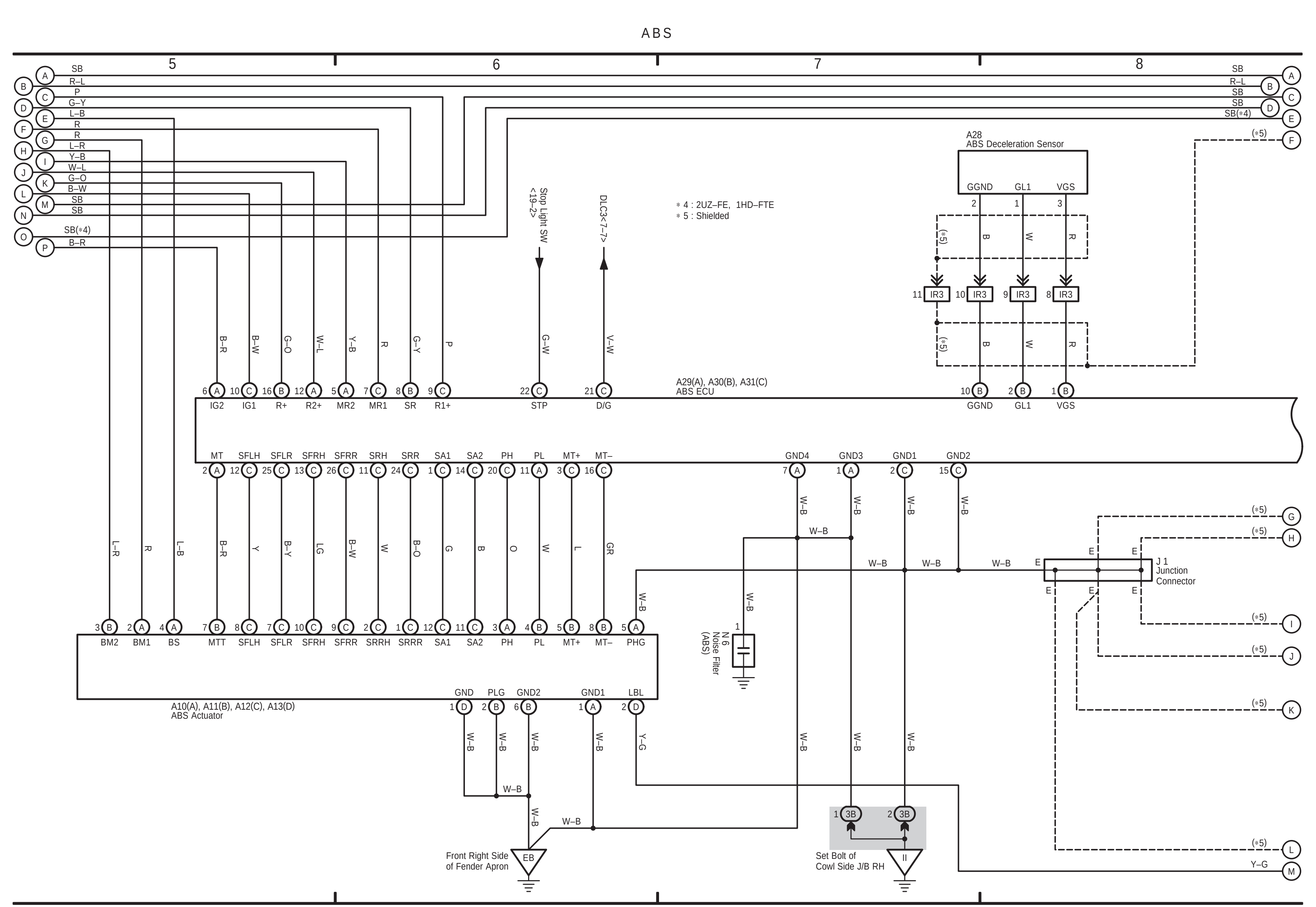
ABS
Stop Light SW <19–2>
DLC3<7–7>
＊4 : 2UZ–FE, 1HD–FTE
＊5 : Shielded
A28 ABS Deceleration Sensor
A29(A), A30(B), A31(C) ABS ECU
A10(A), A11(B), A12(C), A13(D) ABS Actuator
N 6 Noise Filter (ABS)
J 1 Junction Connector
Front Right Side of Fender Apron
Set Bolt of Cowl Side J/B RH

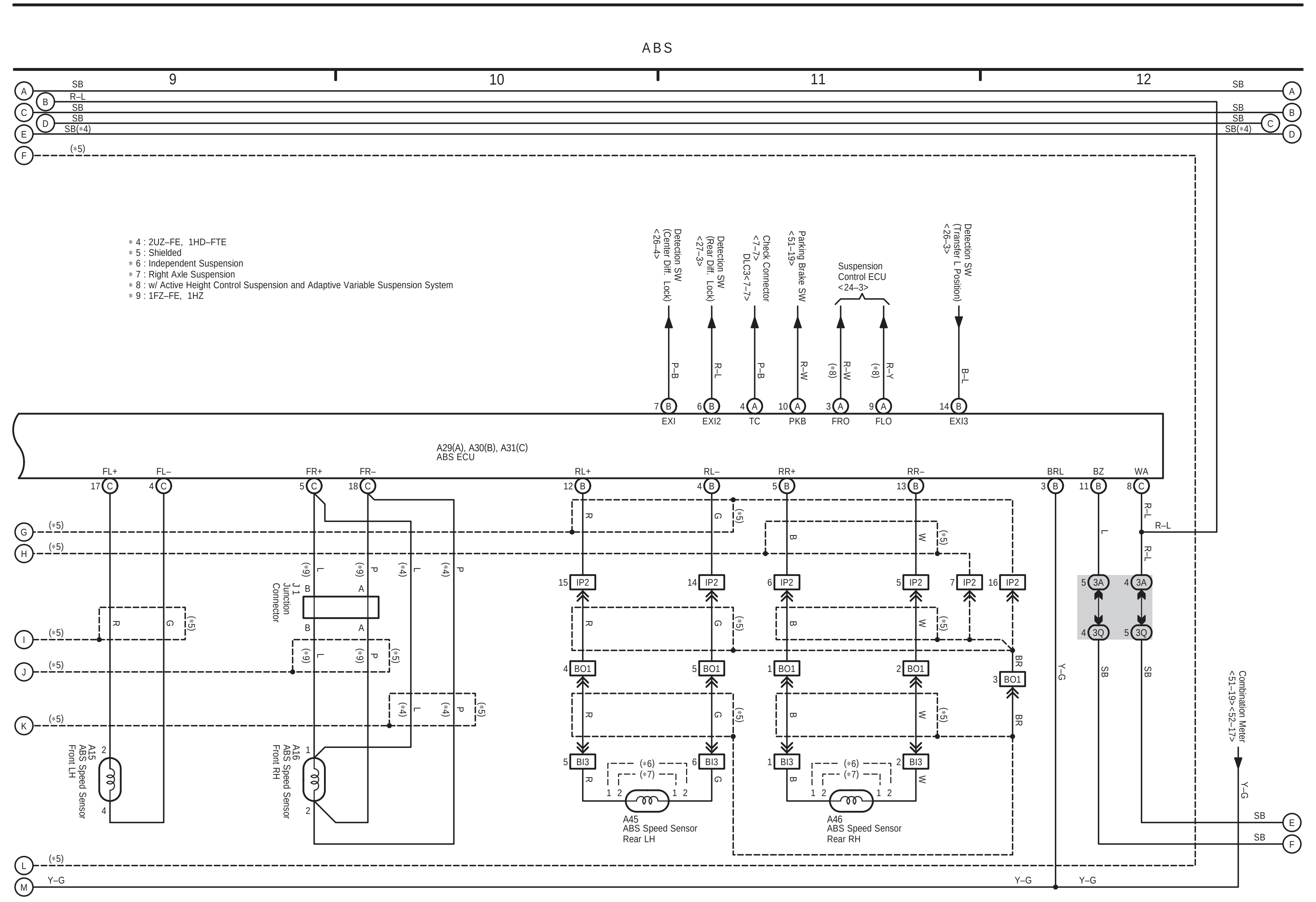
ABS
＊4 : 2UZ–FE, 1HD–FTE
＊5 : Shielded
＊6 : Independent Suspension
＊7 : Right Axle Suspension
＊8 : w/ Active Height Control Suspension and Adaptive Variable Suspension System
＊9 : 1FZ–FE, 1HZ
Detection SW (Center Diff. Lock) <26–4>
Detection SW (Rear Diff. Lock) <27–3>
Check Connector <7–7> DLC3<7–7>
Parking Brake SW <51–19>
Suspension Control ECU <24–3>
Detection SW (Transfer L Position) <26–3>
A29(A), A30(B), A31(C) ABS ECU
J 1 Junction Connector
A15 ABS Speed Sensor Front LH
A16 ABS Speed Sensor Front RH
A45 ABS Speed Sensor Rear LH
A46 ABS Speed Sensor Rear RH
Combination Meter <51–19><52–17>

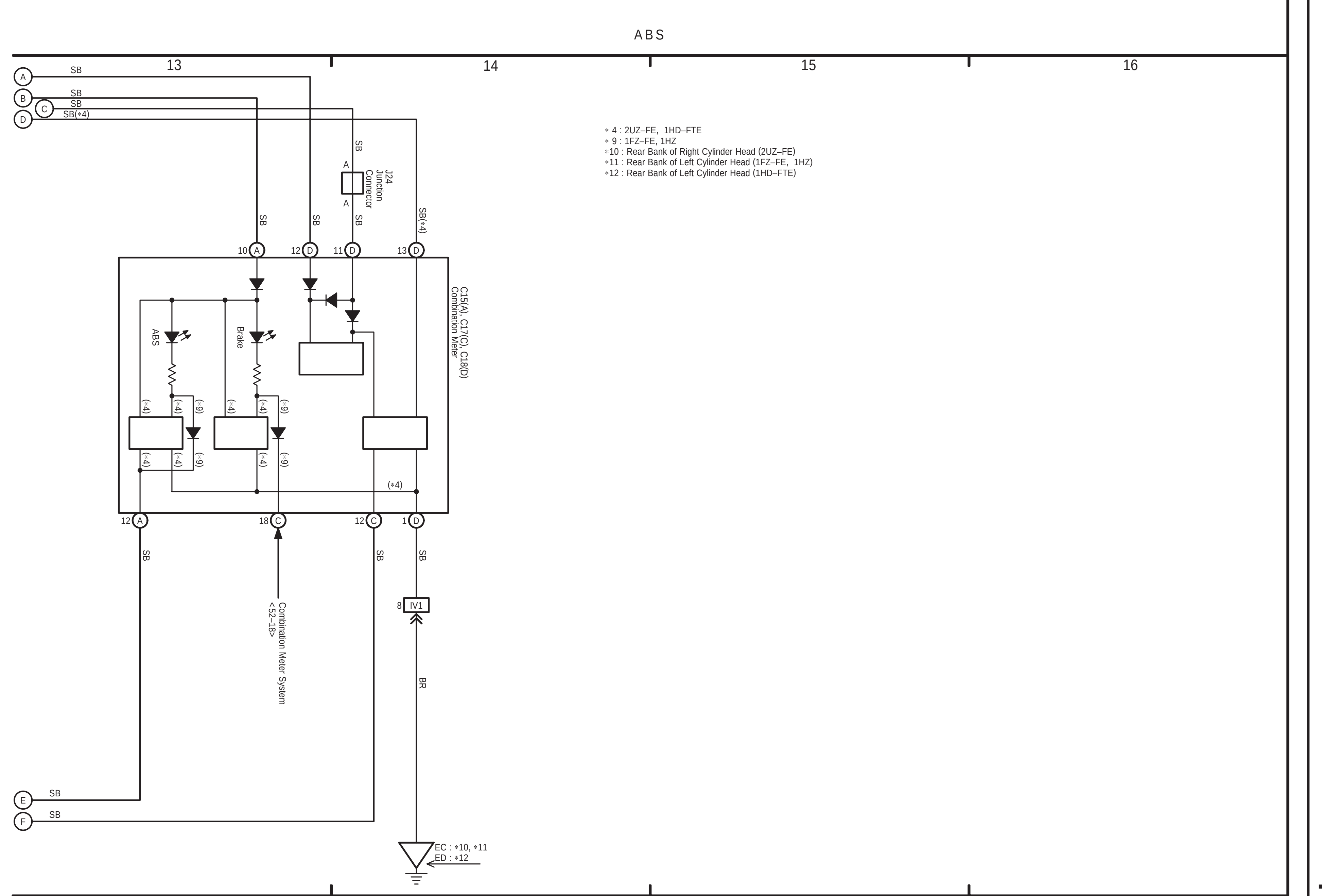
ABS
＊4 : 2UZ–FE, 1HD–FTE
＊9 : 1FZ–FE, 1HZ
＊10 : Rear Bank of Right Cylinder Head (2UZ–FE)
＊11 : Rear Bank of Left Cylinder Head (1FZ–FE, 1HZ)
＊12 : Rear Bank of Left Cylinder Head (1HD–FTE)
J24 Junction Connector
C15(A), C17(C), C18(D) Combination Meter
ABS
Brake
Combination Meter System <52–18>
EC : ＊10, ＊11
ED : ＊12

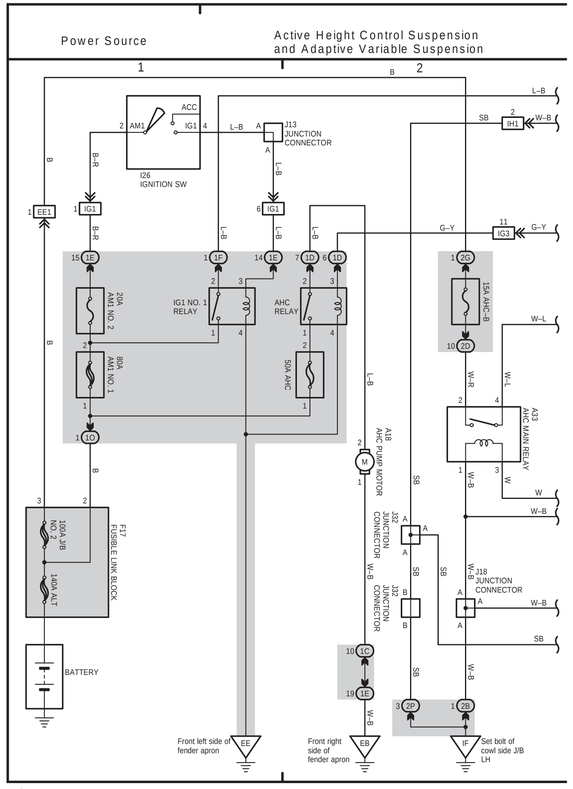

(Cont. next page)

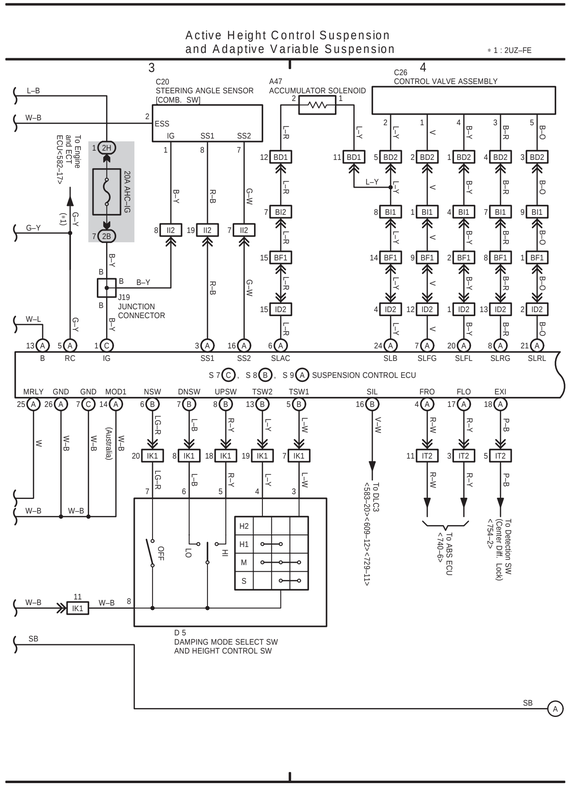

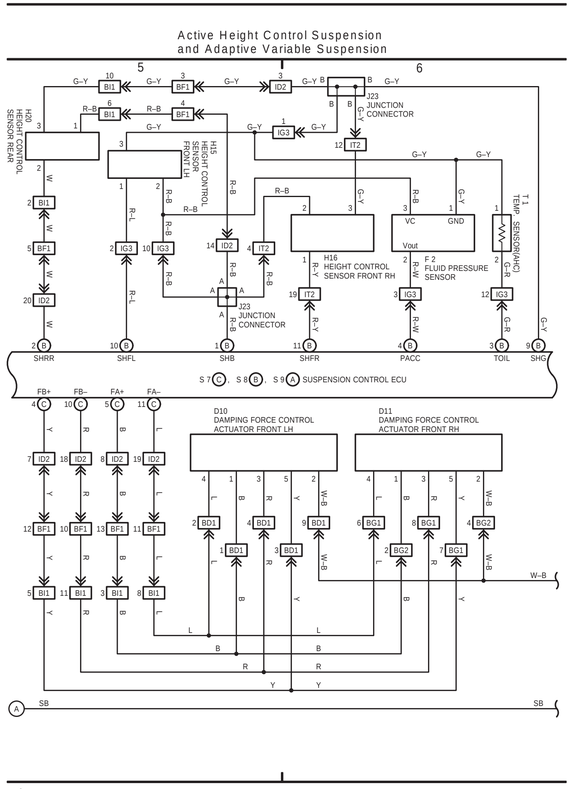

(Cont'd)

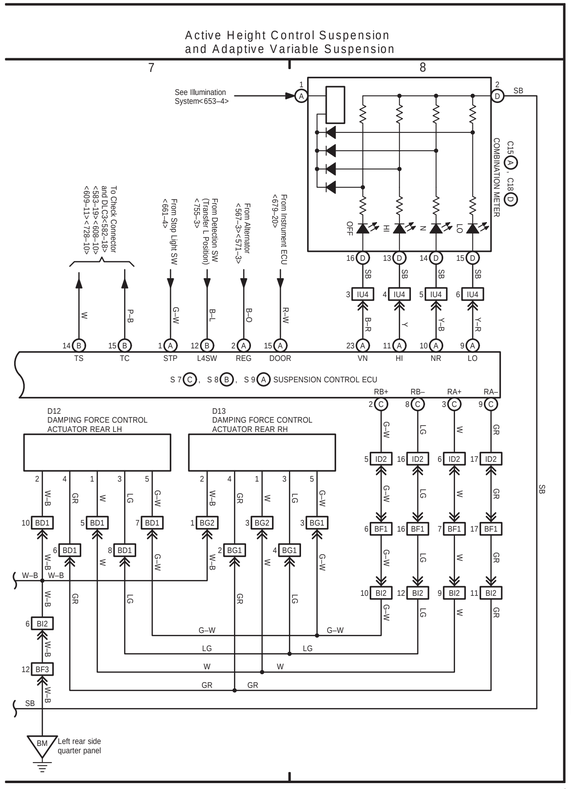

(Cont. next page)

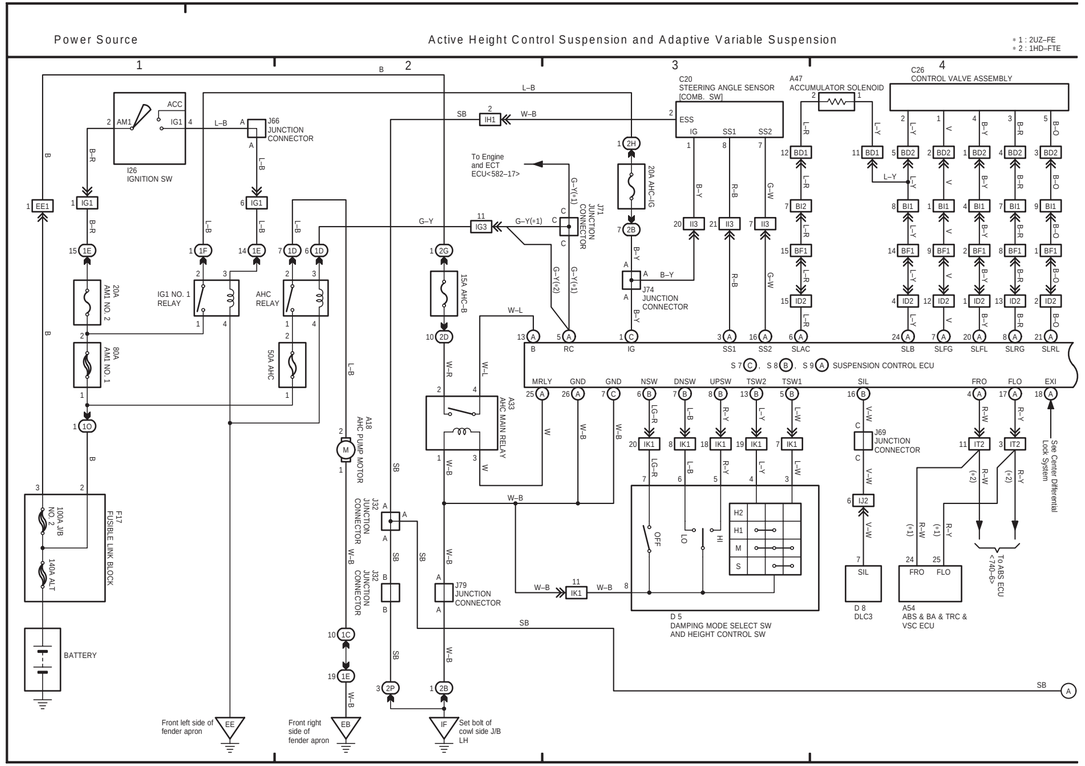

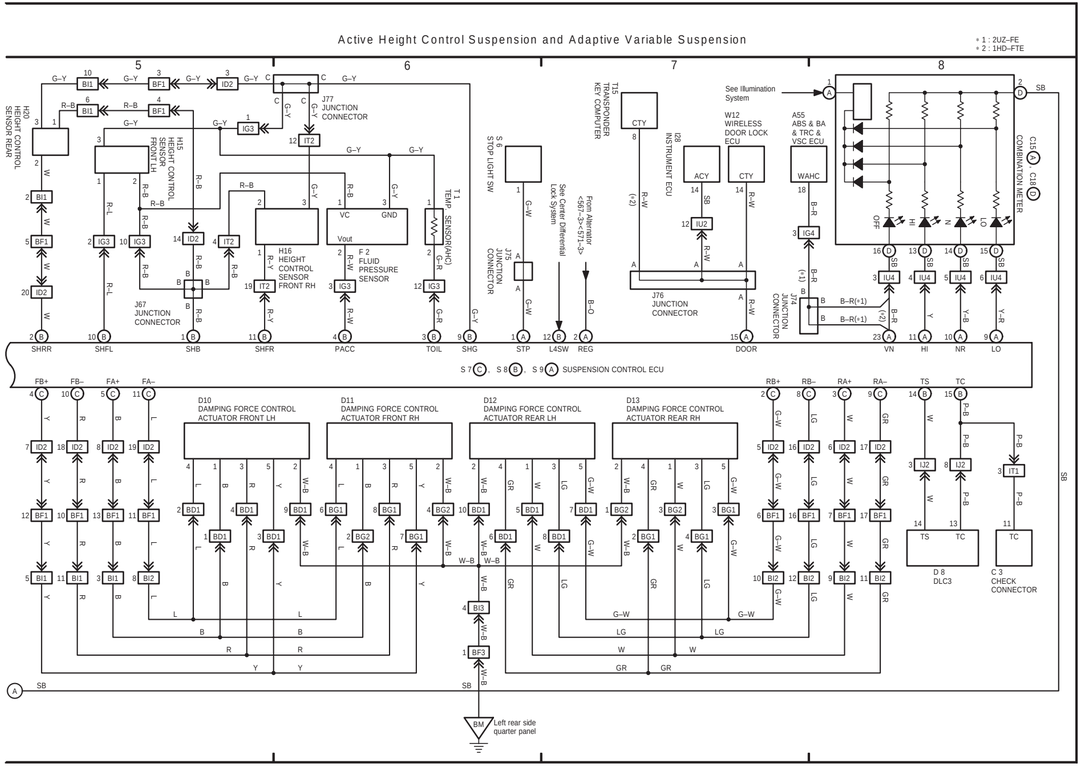

(Cont. next page)

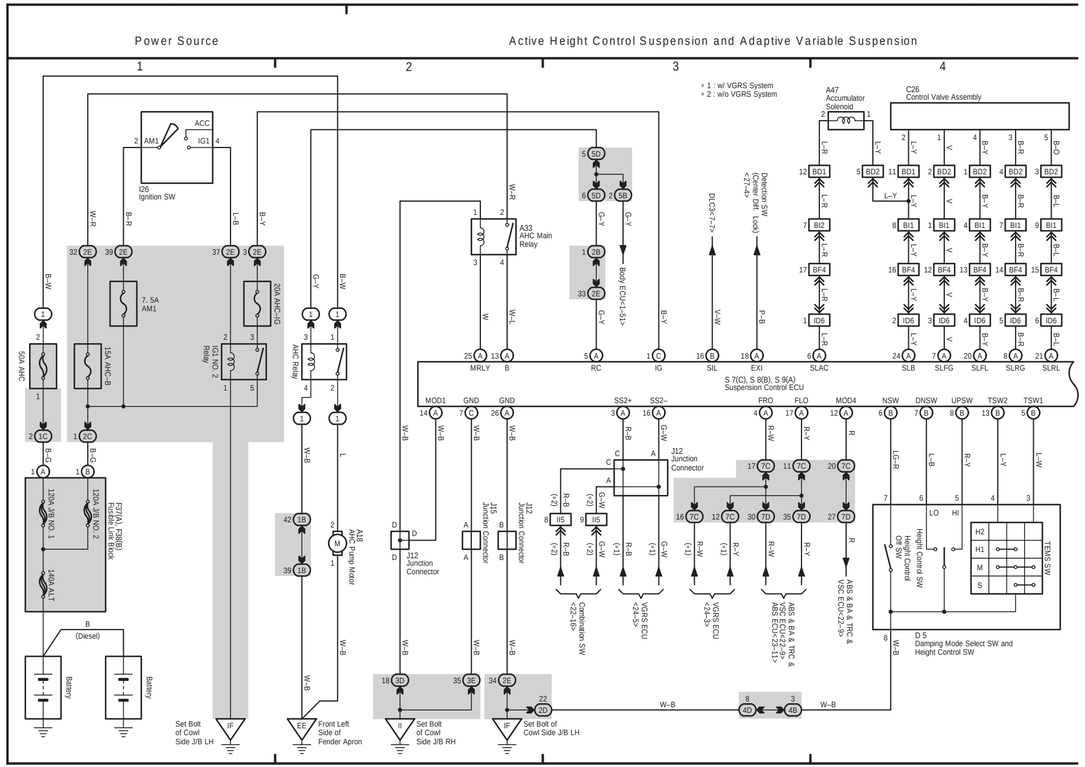

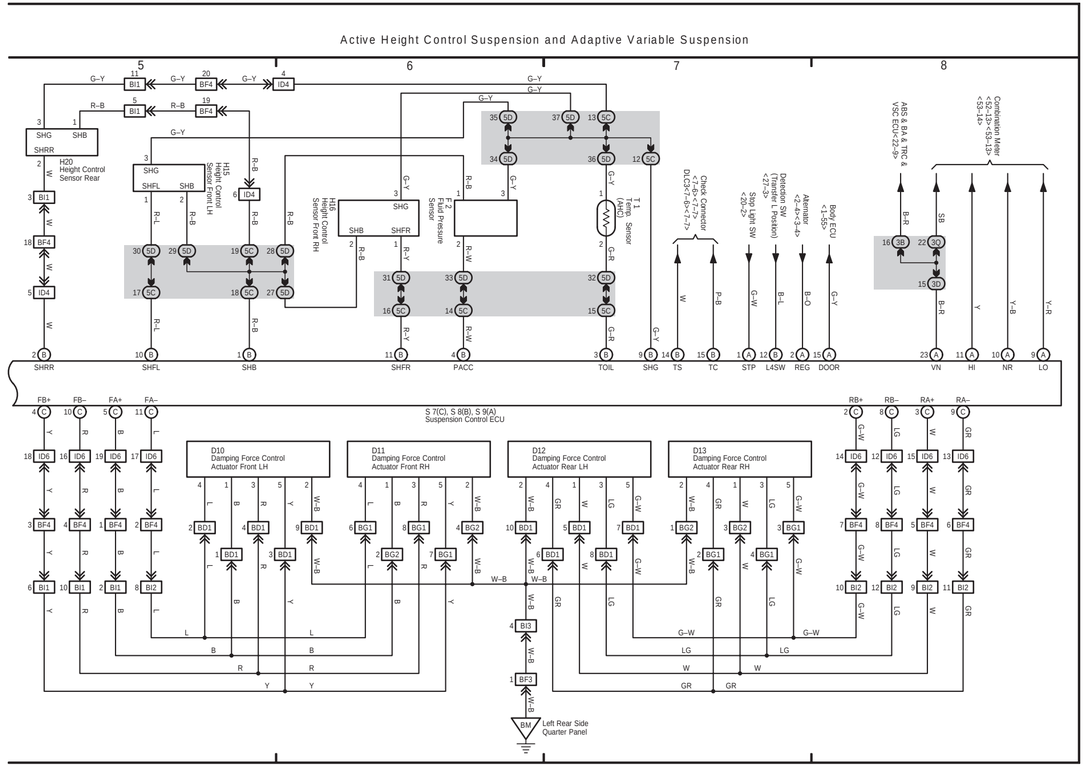

(Cont. next page)

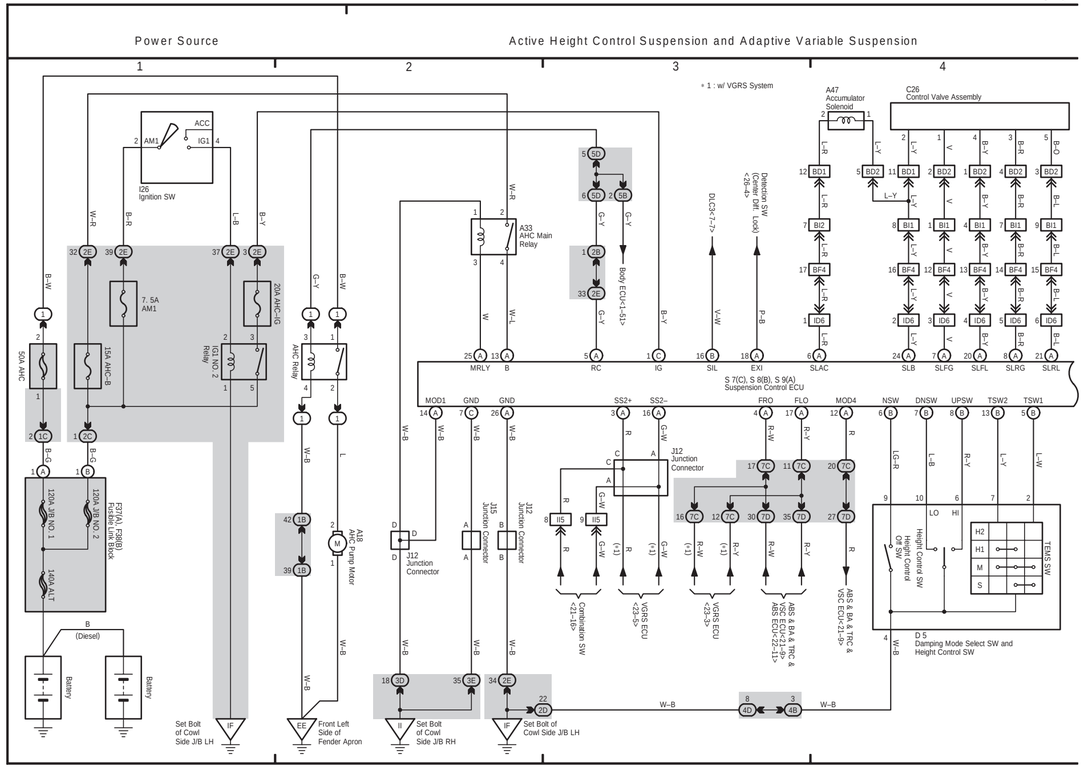

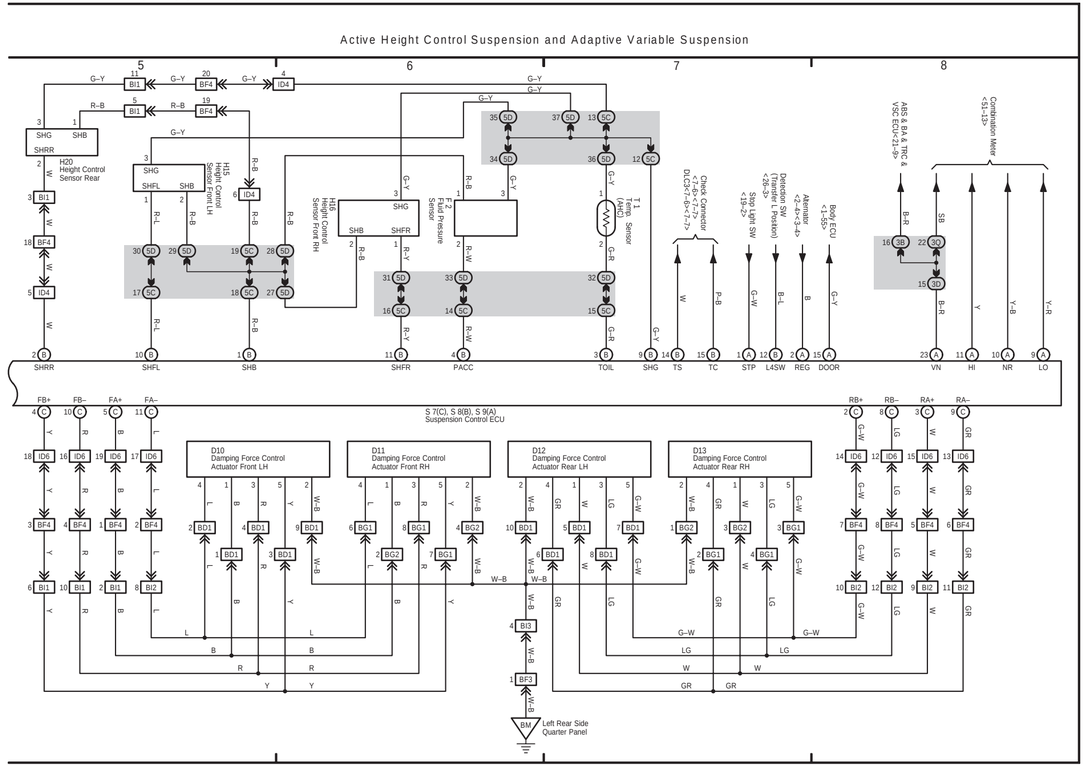

(Cont. next page)

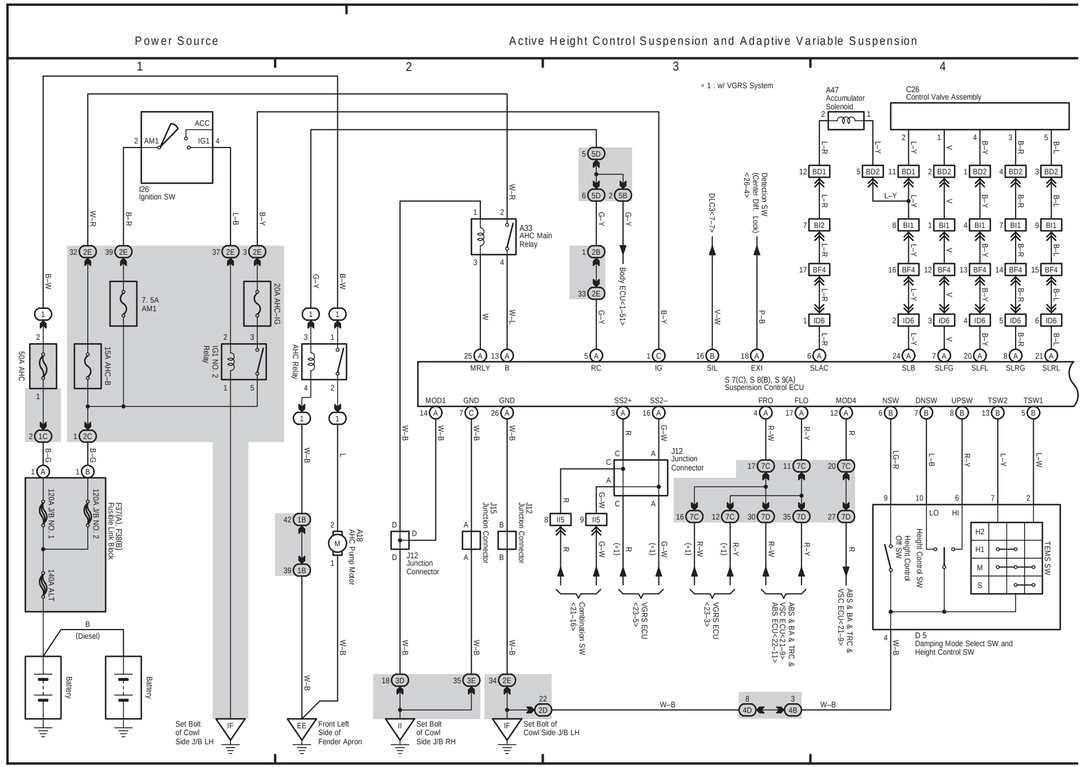

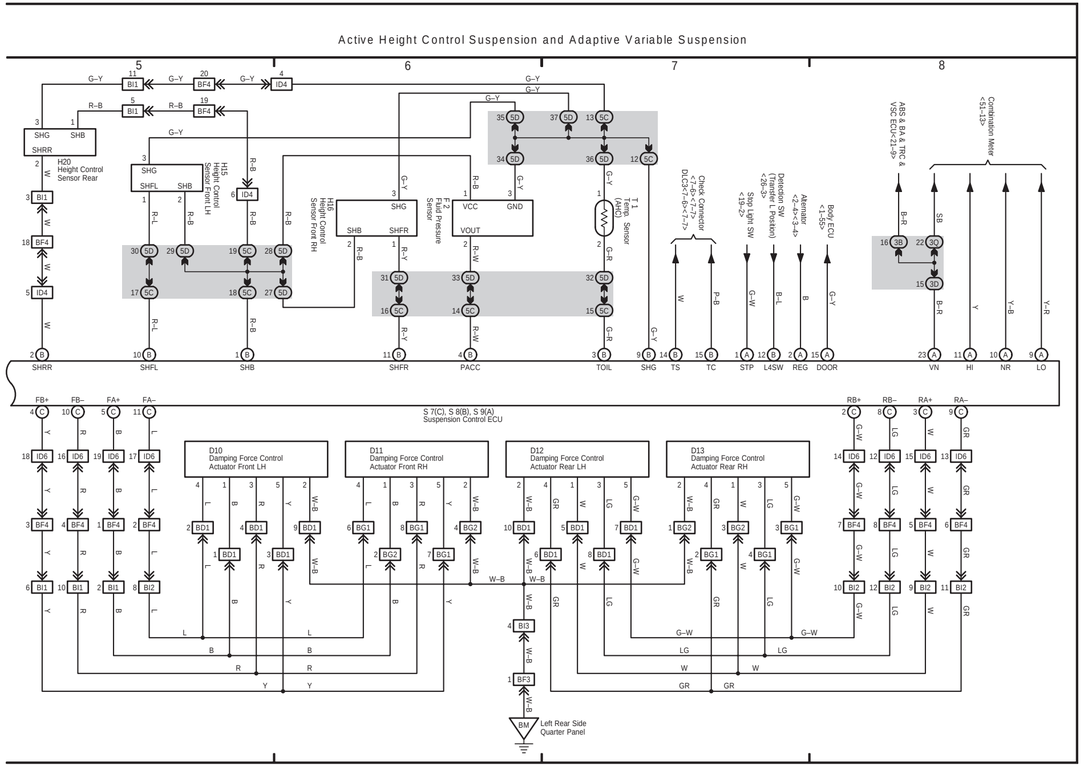

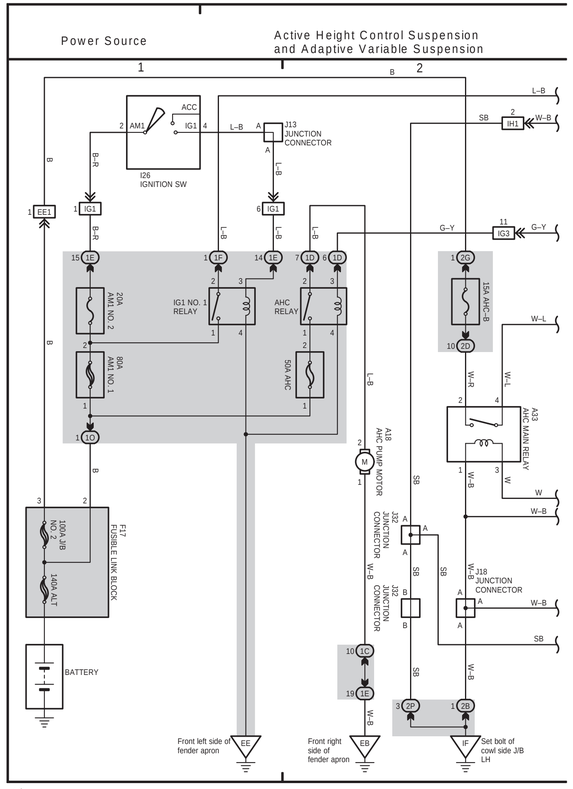

(Cont. next page)

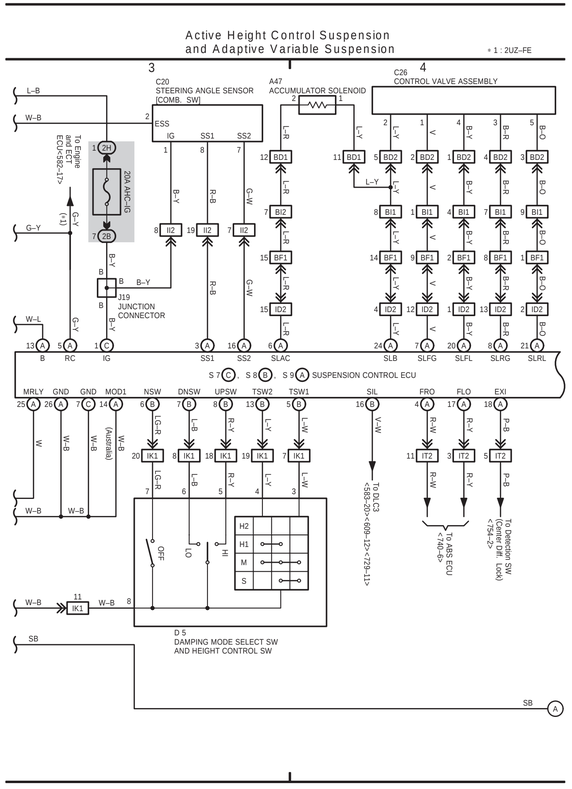

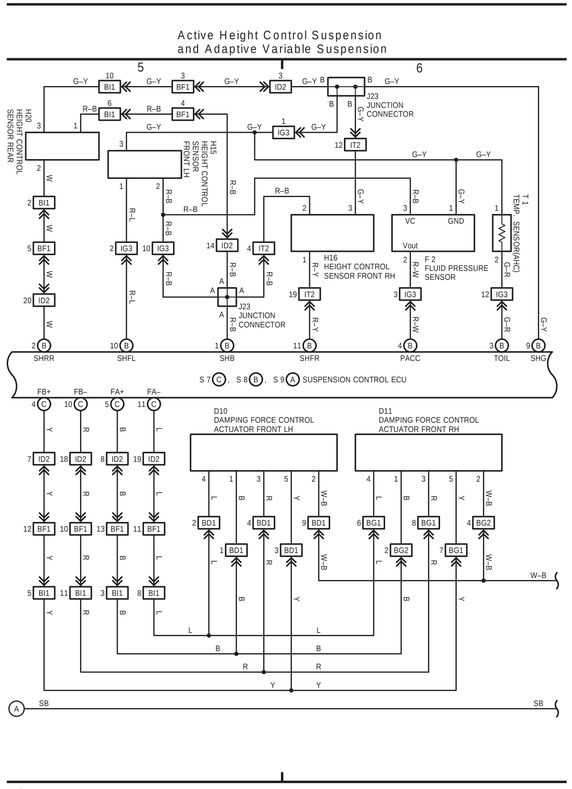

(Cont'd)

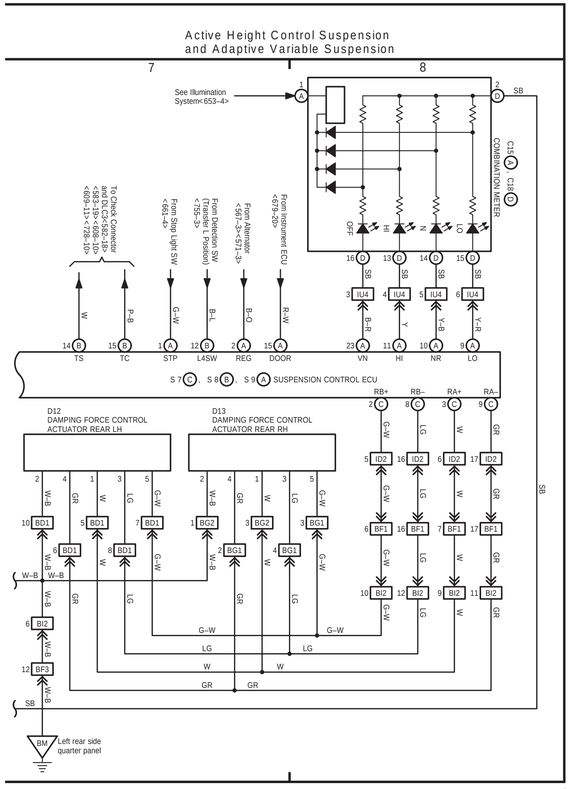

(Cont. next page)

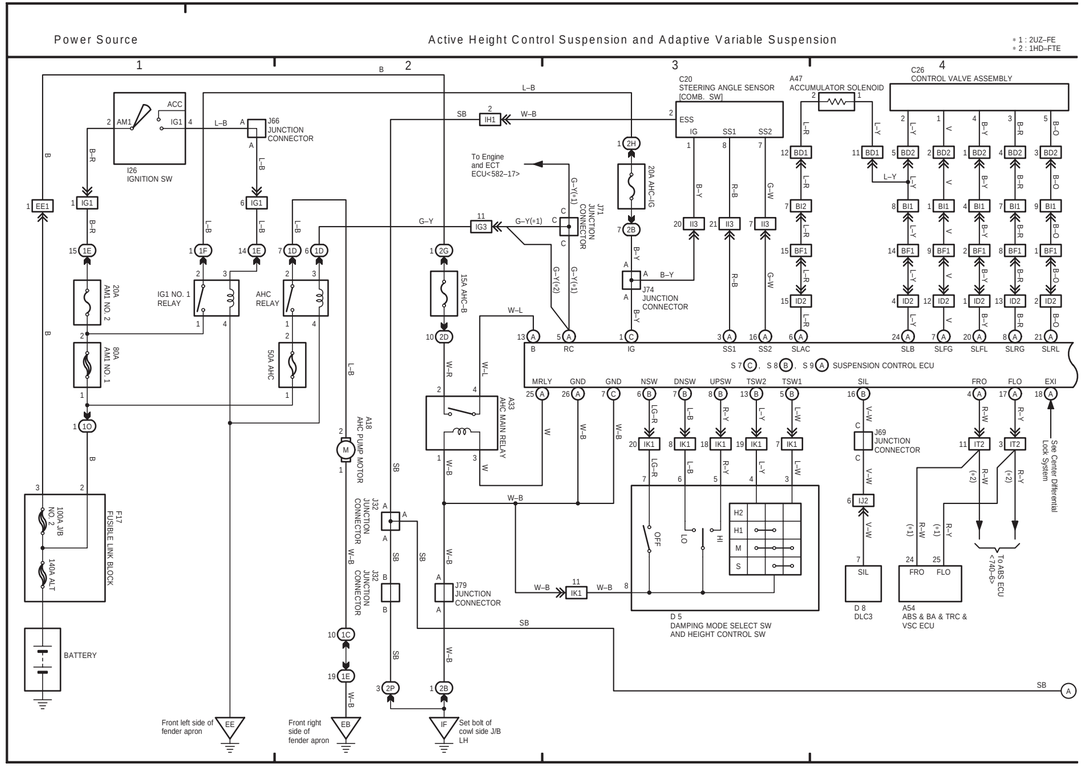

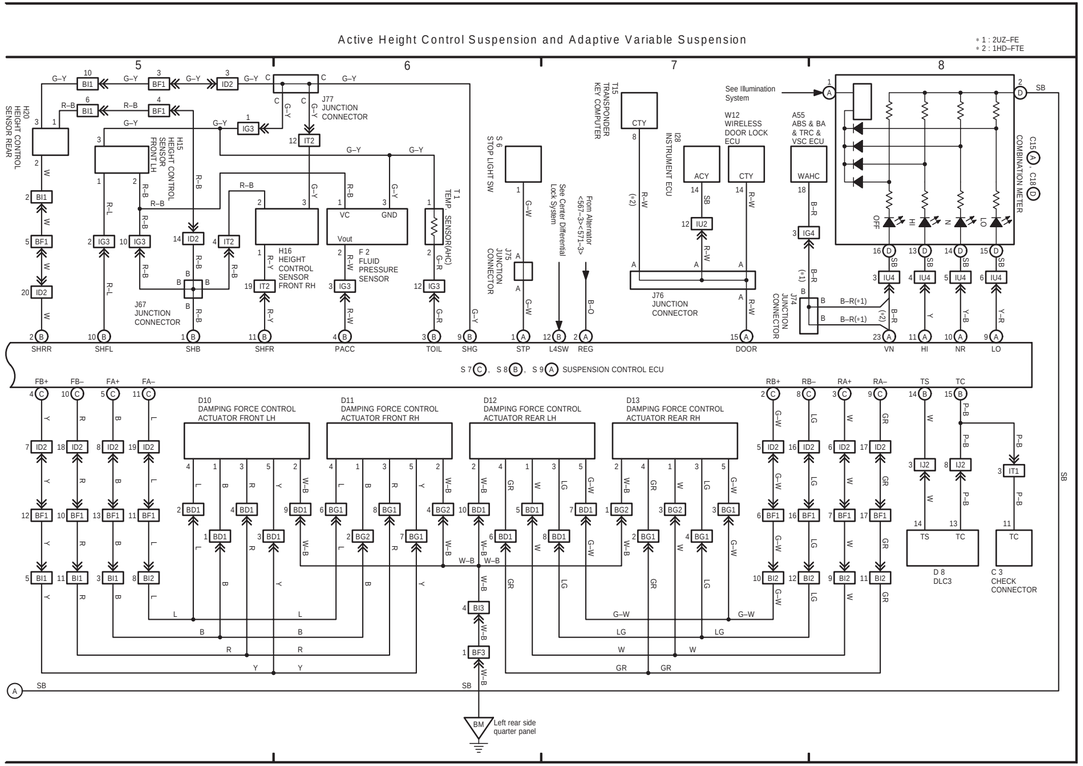

(Cont. next page)

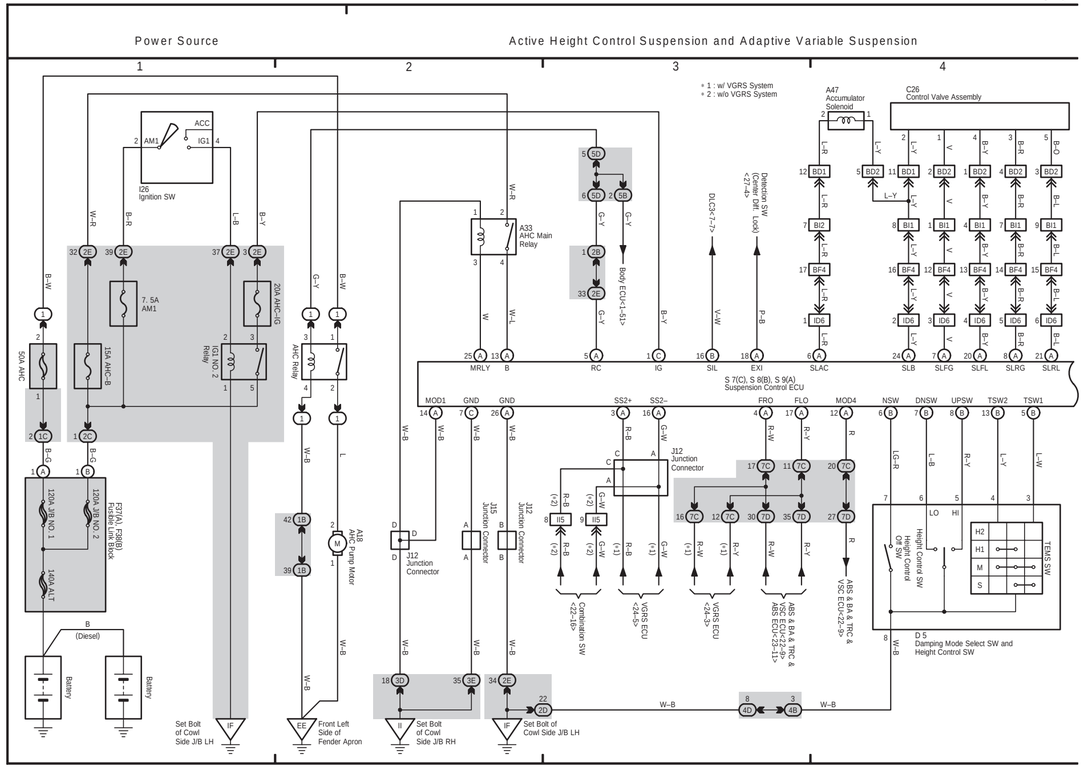

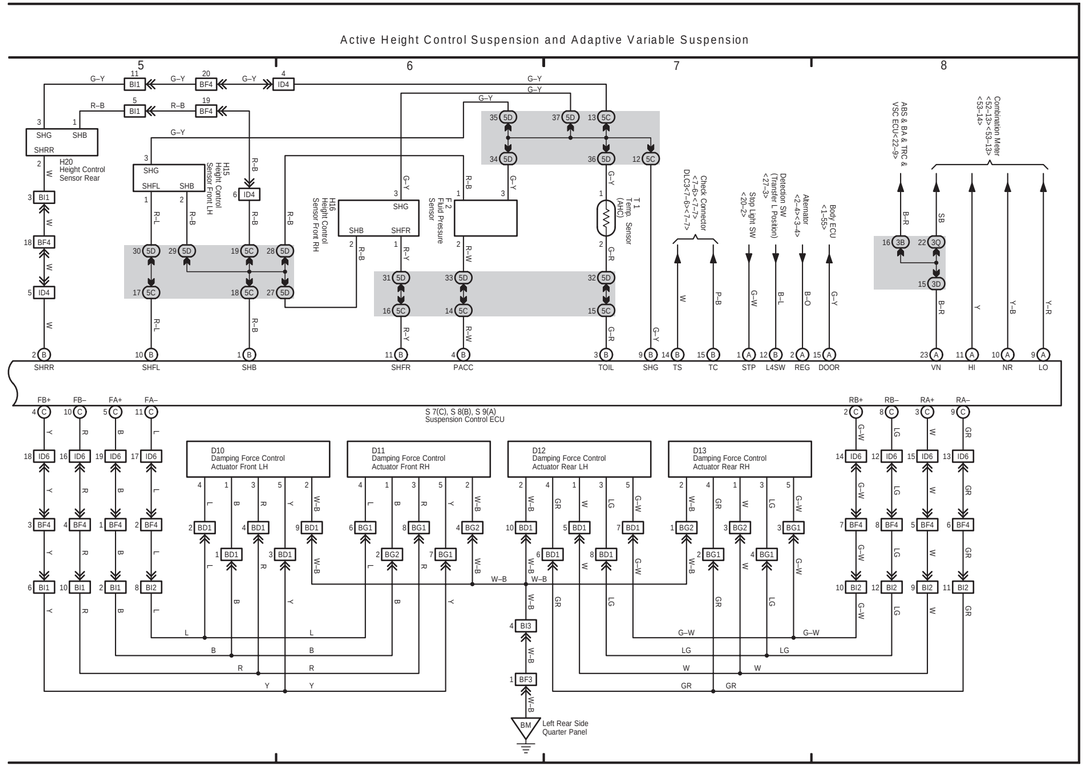

(Cont. next page)

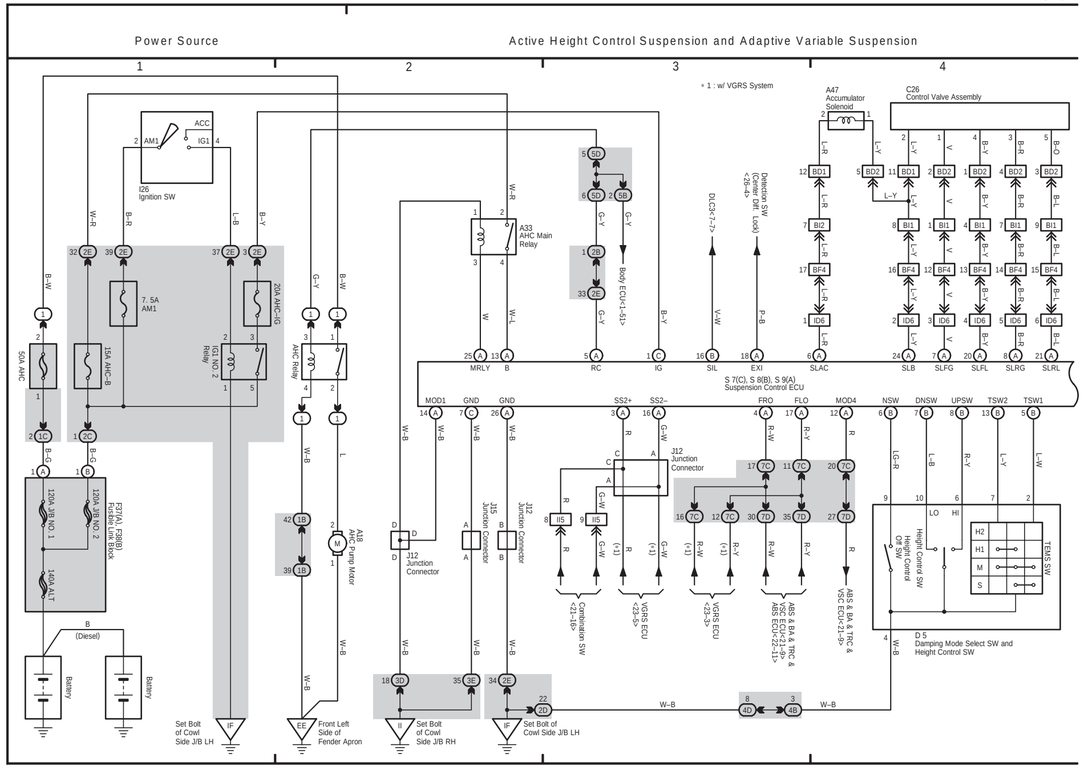

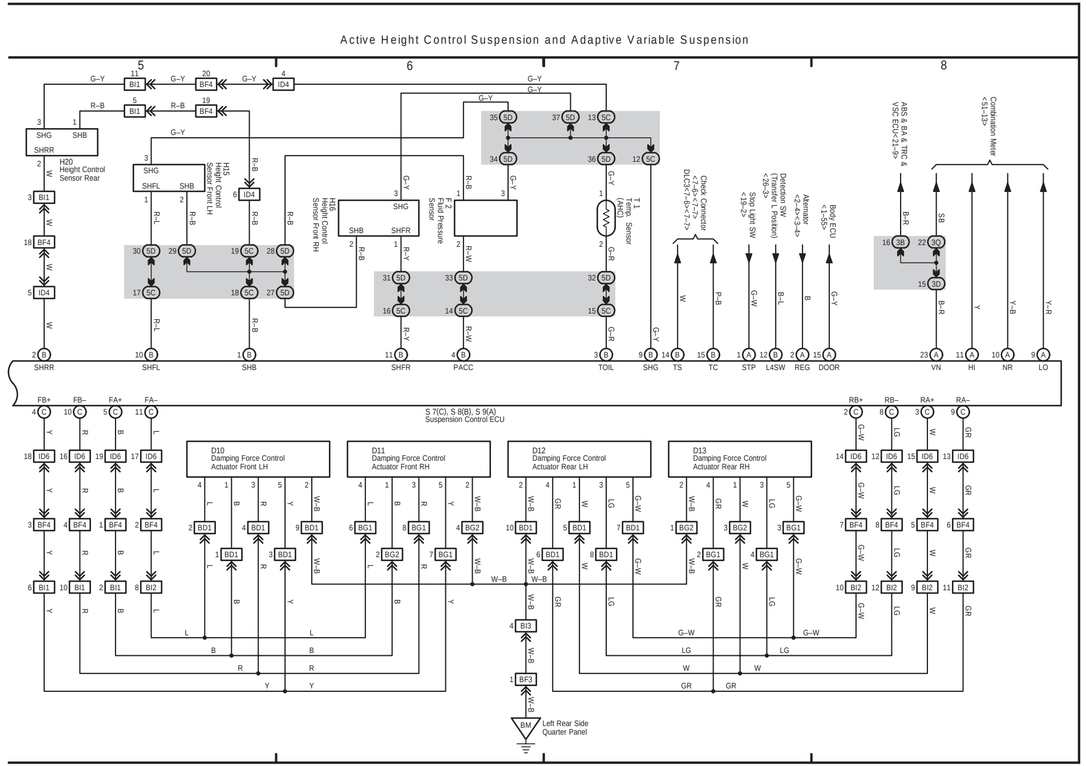

(Cont. next page)

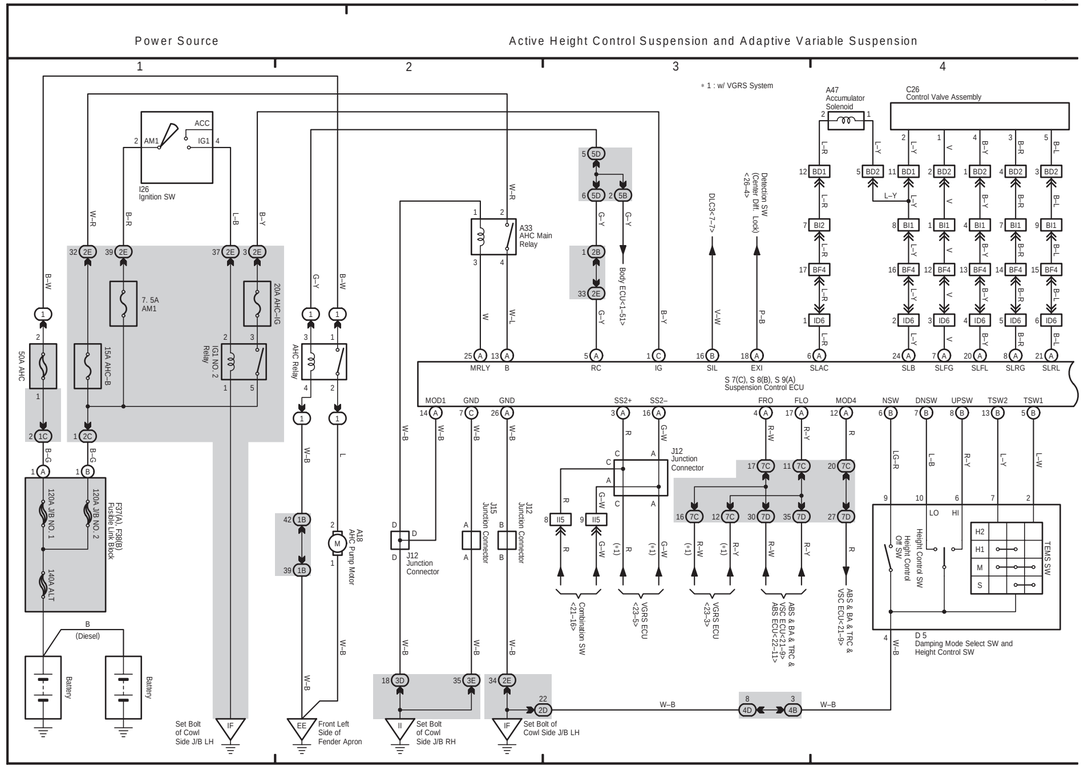

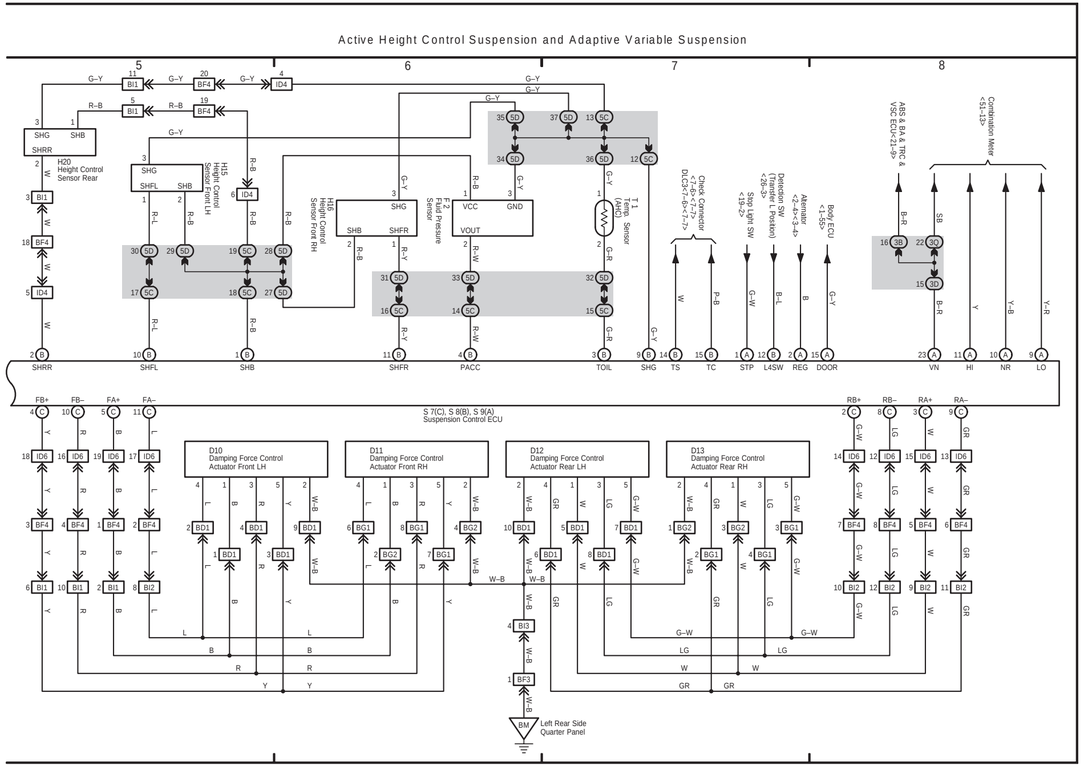

50 LAND CRUISER (RHD)

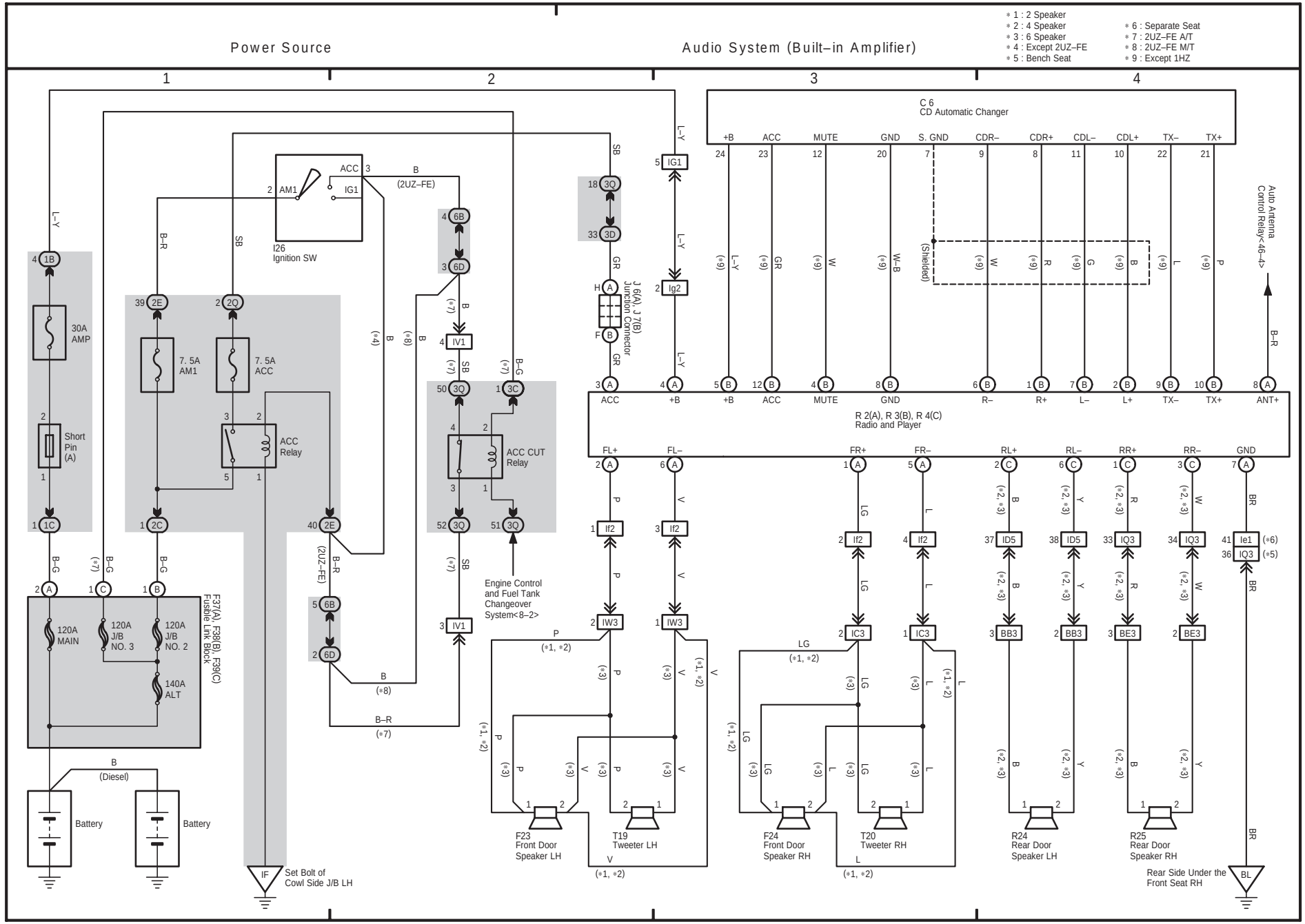

50 LAND CRUISER (RHD)

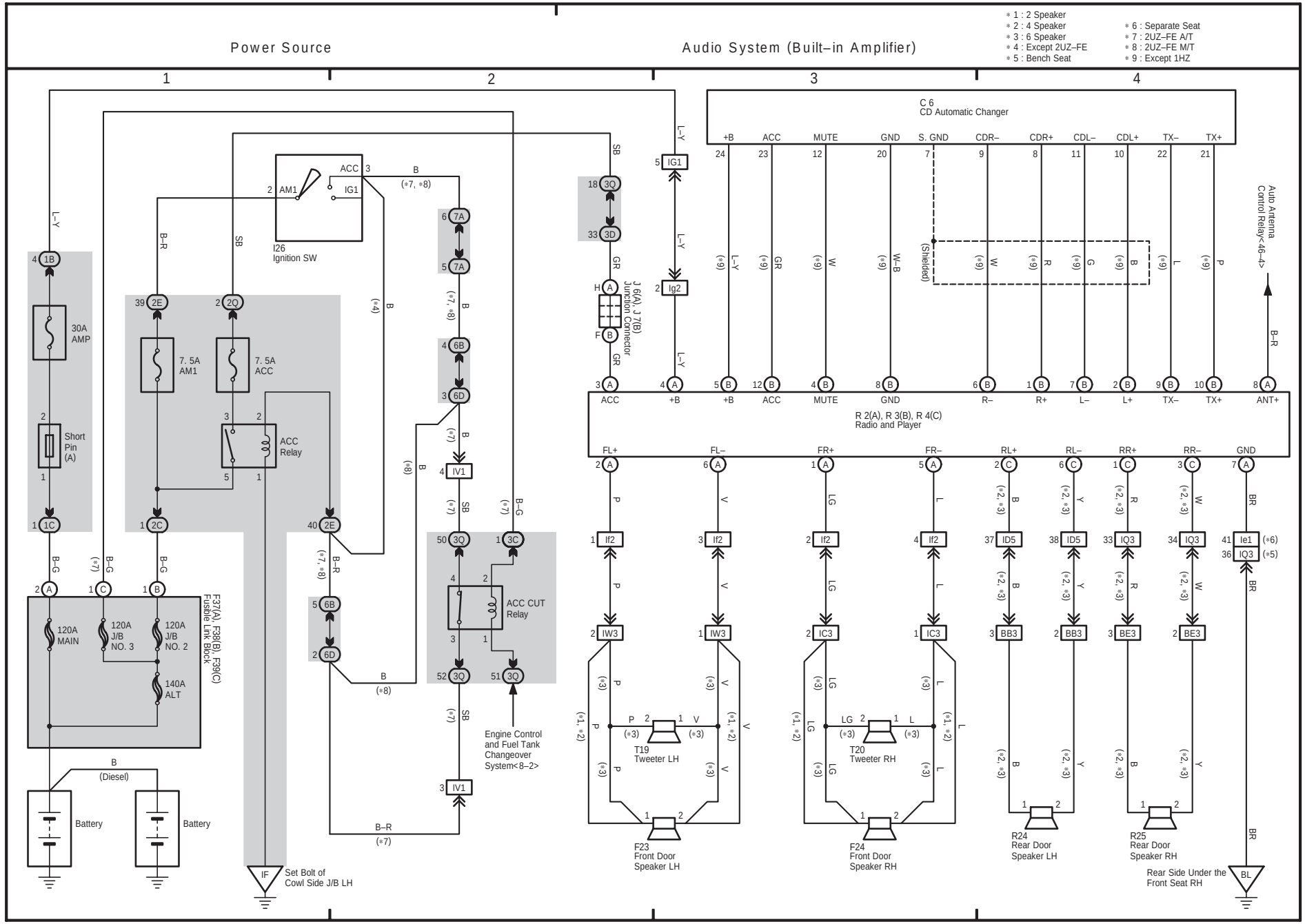

48 LAND CRUISER (RHD) (Cont. next page)

Power Source

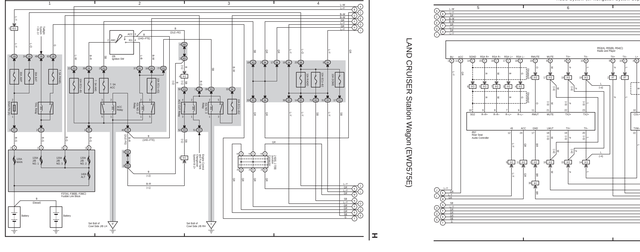

48 LAND CRUISER (RHD) (Cont. d) (Cont. next page)

Audio System (w/ Navigation System Separate Amplifier)

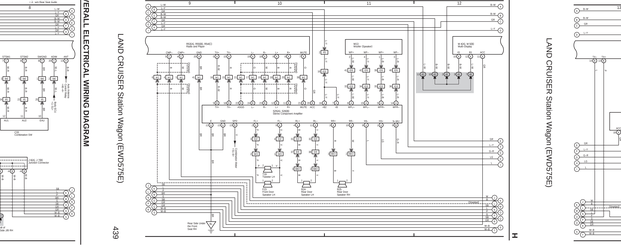

48 LAND CRUISER (RHD) (Cont. d) (Cont. next page)

Audio System (w/ Navigation System Separate Amplifier)

Navigation System, TOYOTA Parking Assist (Rear View Monitor)

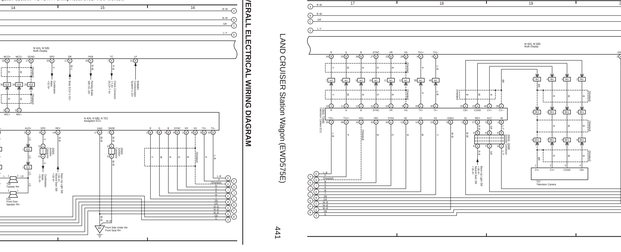

48 LAND CRUISER (RHD) (Cont. d) (Cont. next page)

Navigation System, TOYOTA Parking Assist (Rear View Monitor)

48 LAND CRUISER (RHD) (Cont. d) (Cont. next page)

Navigation System, TOYOTA Parking Assist (Rear View Monitor)

48 LAND CRUISER (RHD) (Cont. d)

Navigation System, TOYOTA Parking Assist (Rear View Monitor)

48 LAND CRUISER (RHD) (Cont. next page)

Power Source

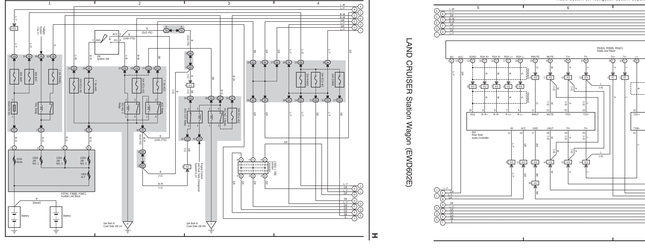

48 LAND CRUISER (RHD) (Cont. d) [Cont. next page]

Audio System (w/ Navigation System Separate Amplifier)

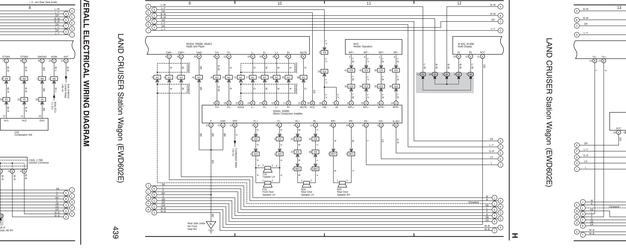

48 LAND CRUISER (RHD) (Cont. d) [Cont. next page]

Audio System (w/ Navigation System Separate Amplifier)

Navigation System, TOYOTA Parking Assist (Rear View Monitor)

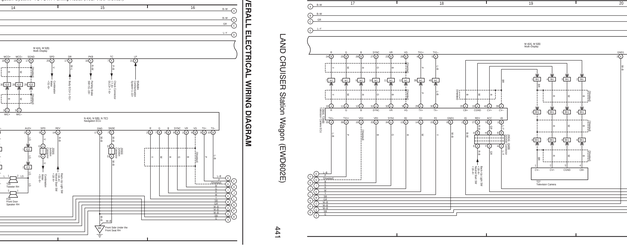

48 LAND CRUISER (RHD) (Cont. d) [Cont. next page]

Navigation System, TOYOTA Parking Assist (Rear View Monitor)

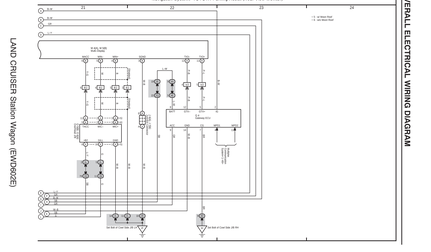

48 LAND CRUISER (RHD) (Cont. d) [Cont. next page]

Navigation System, TOYOTA Parking Assist (Rear View Monitor)

48 LAND CRUISER (RHD) (Cont. d)

Navigation System, TOYOTA Parking Assist (Rear View Monitor)

(Cont. next page)

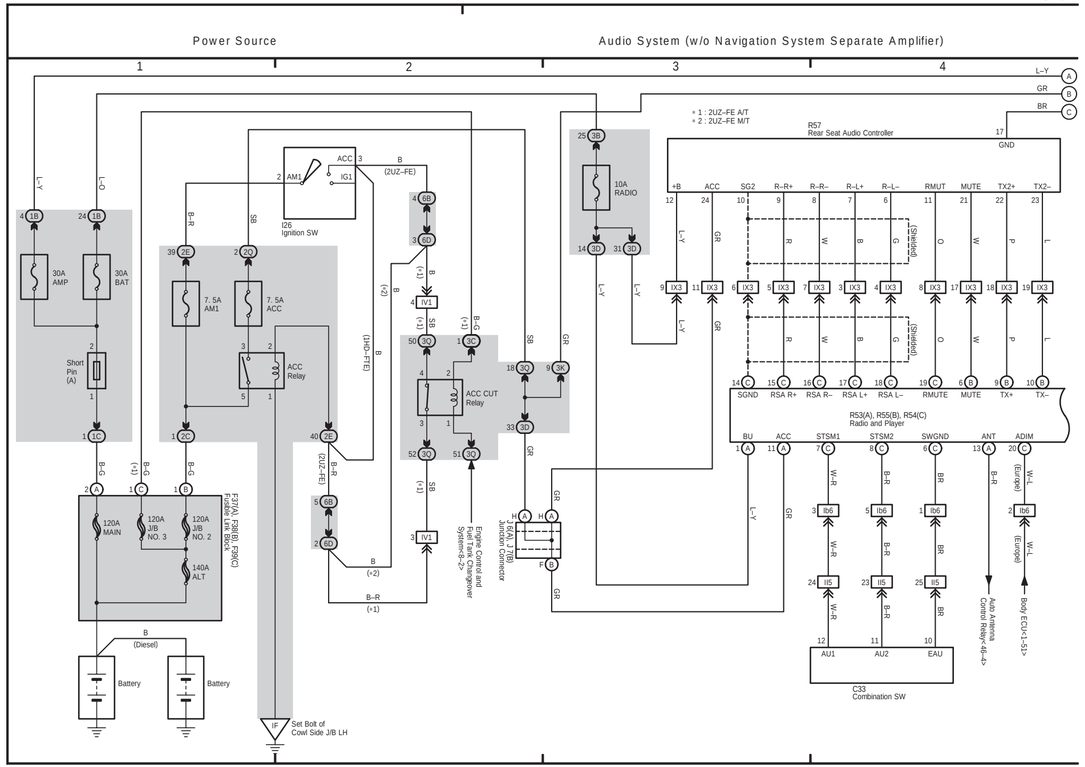

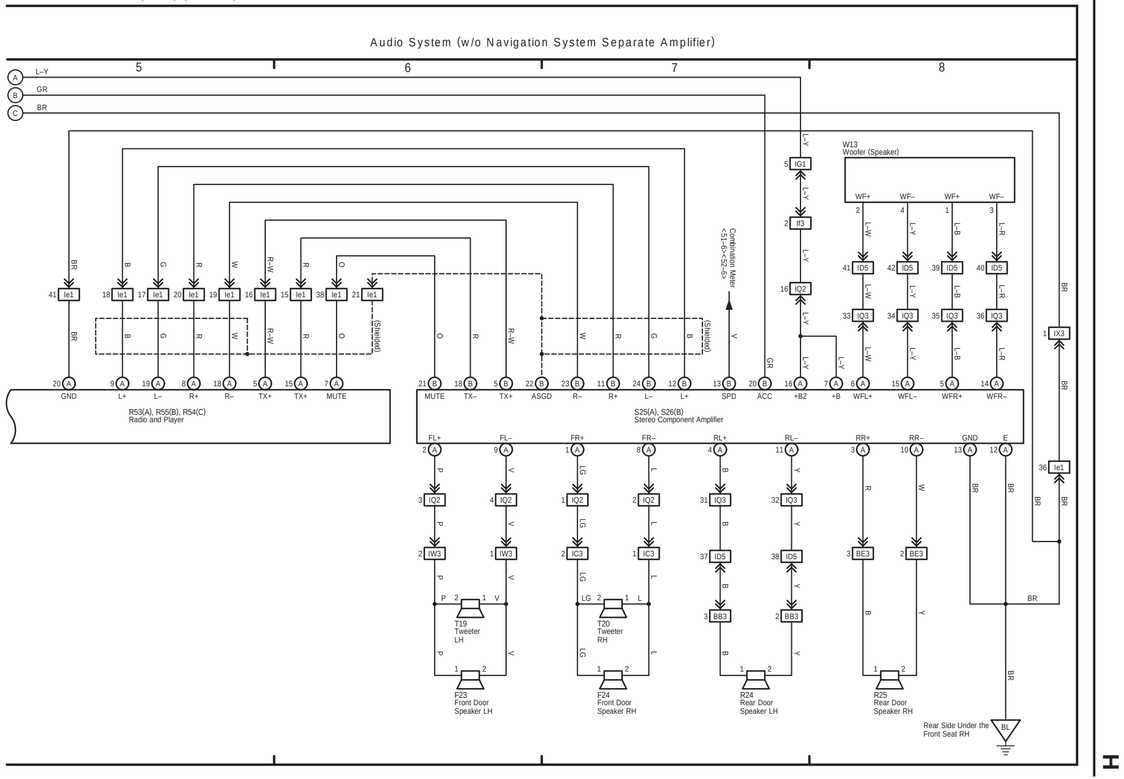

49 LAND CRUISER (RHD)

(Cont. next page)

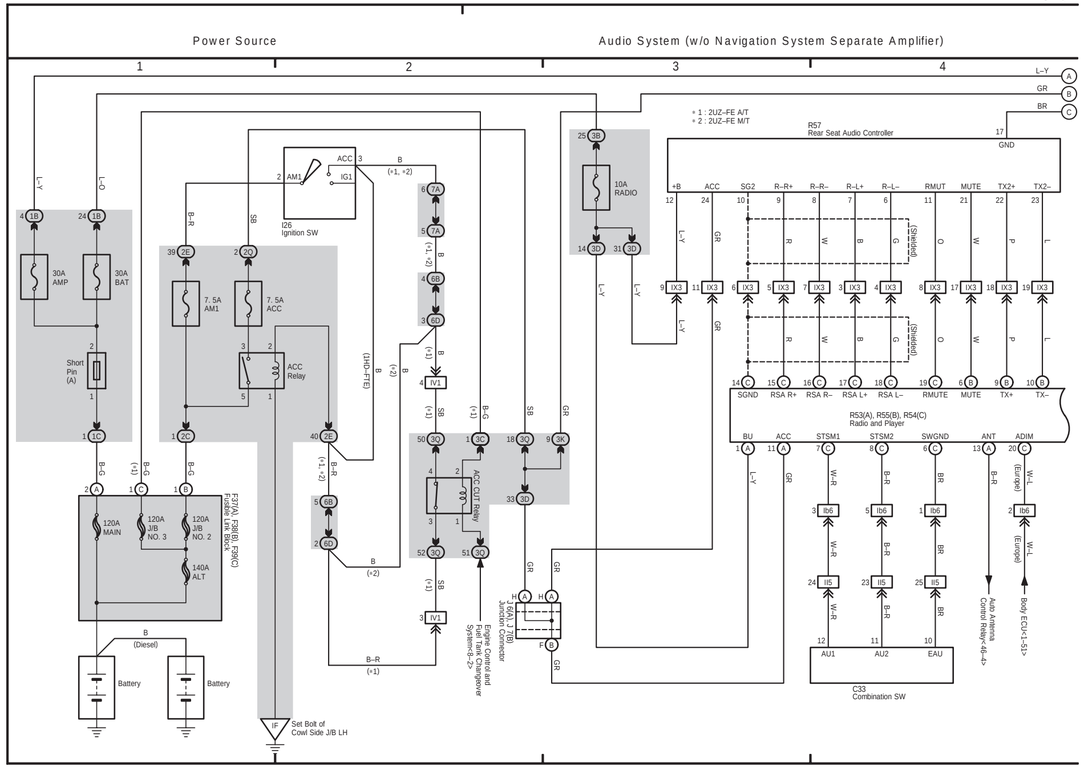

49 LAND CRUISER (RHD) (Cont' d)

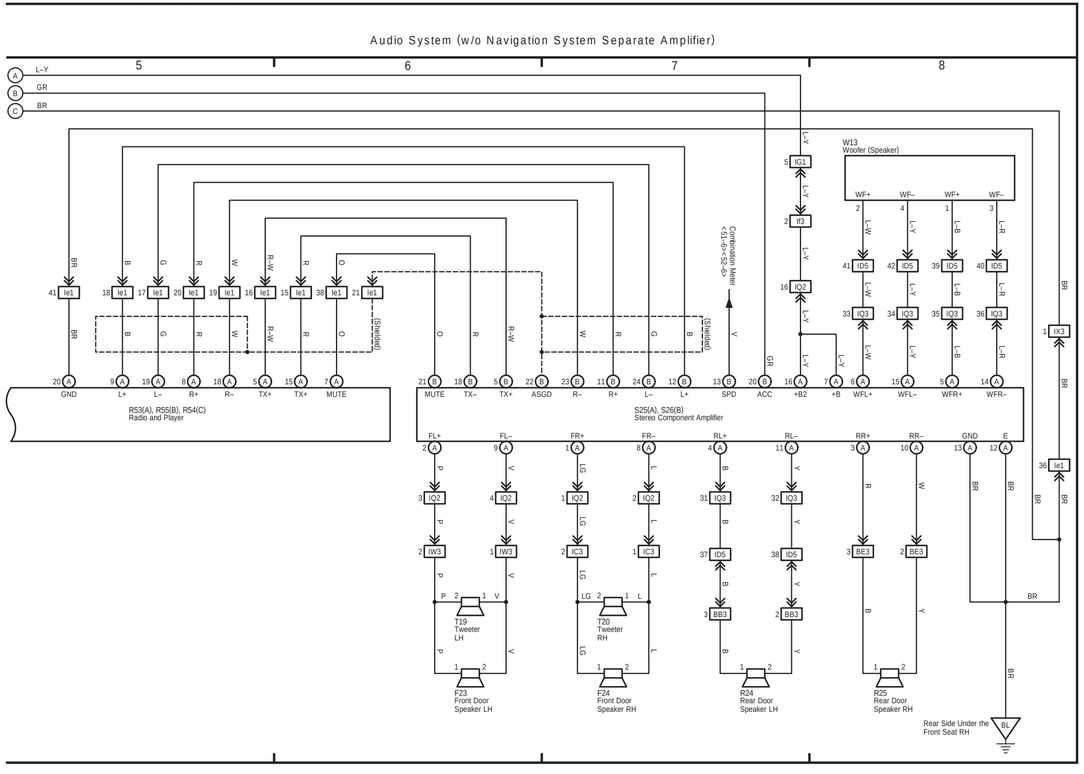

F ELECTRICAL WIRING DIAGRAM (System Circuits)

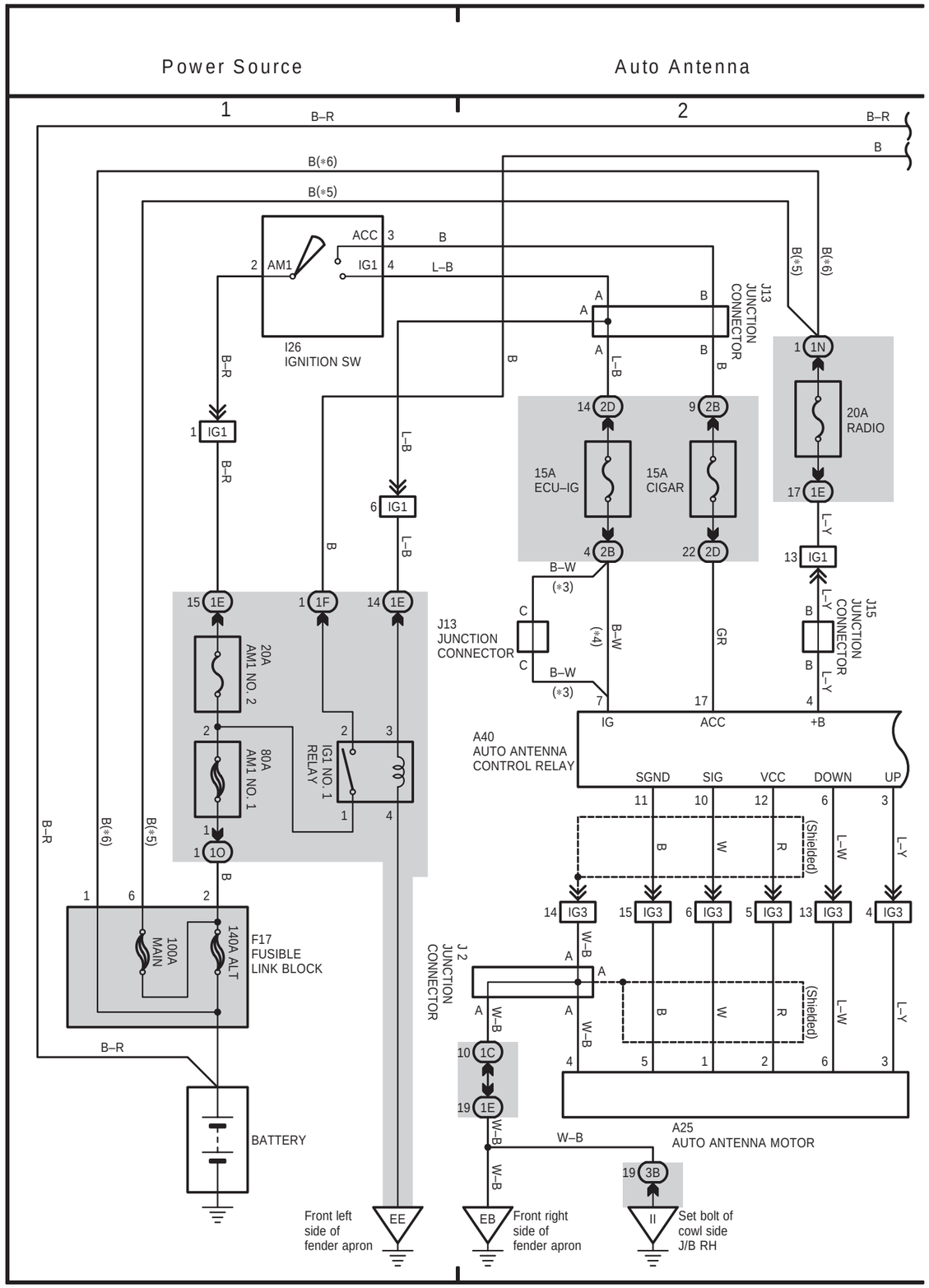

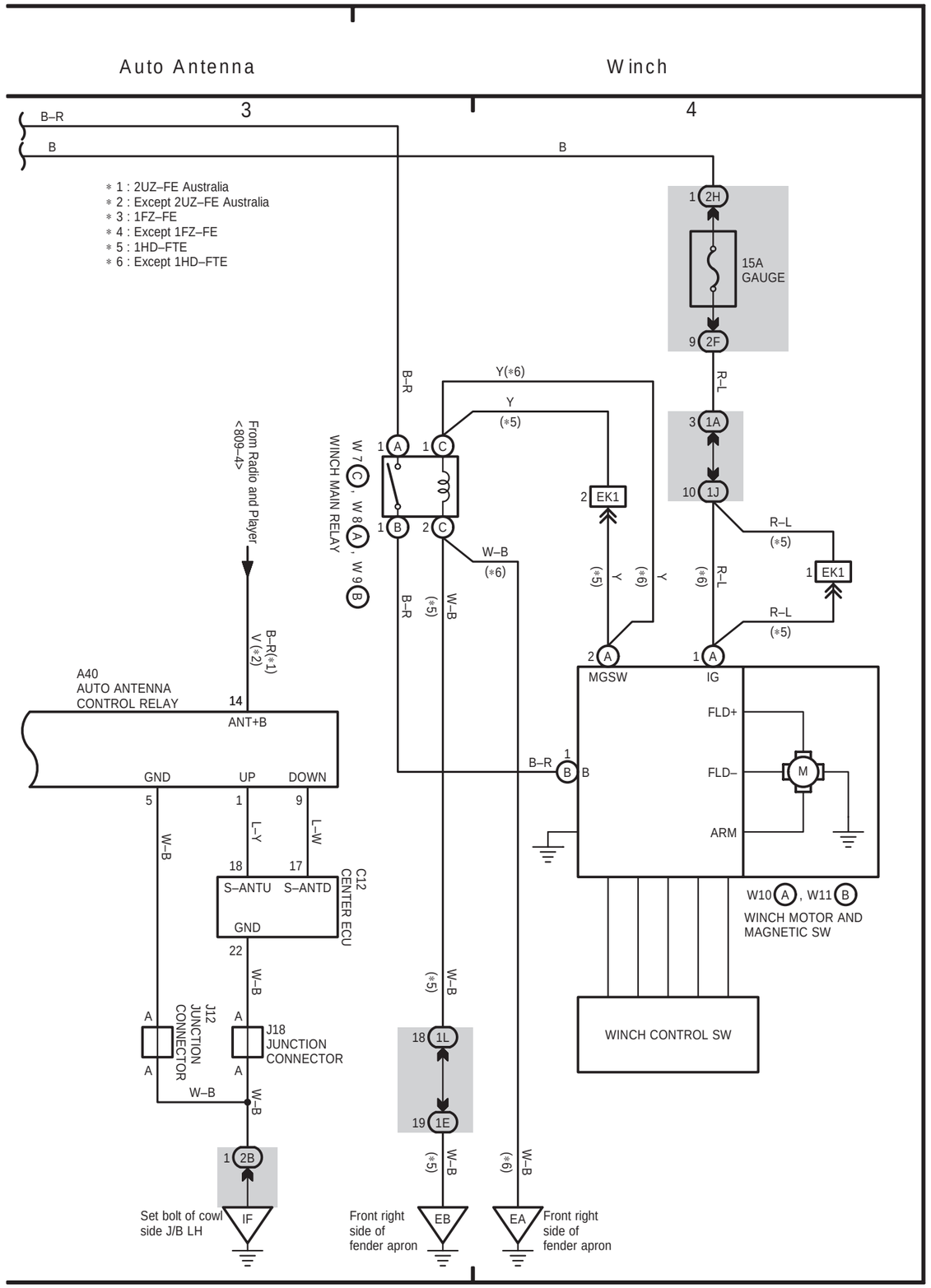

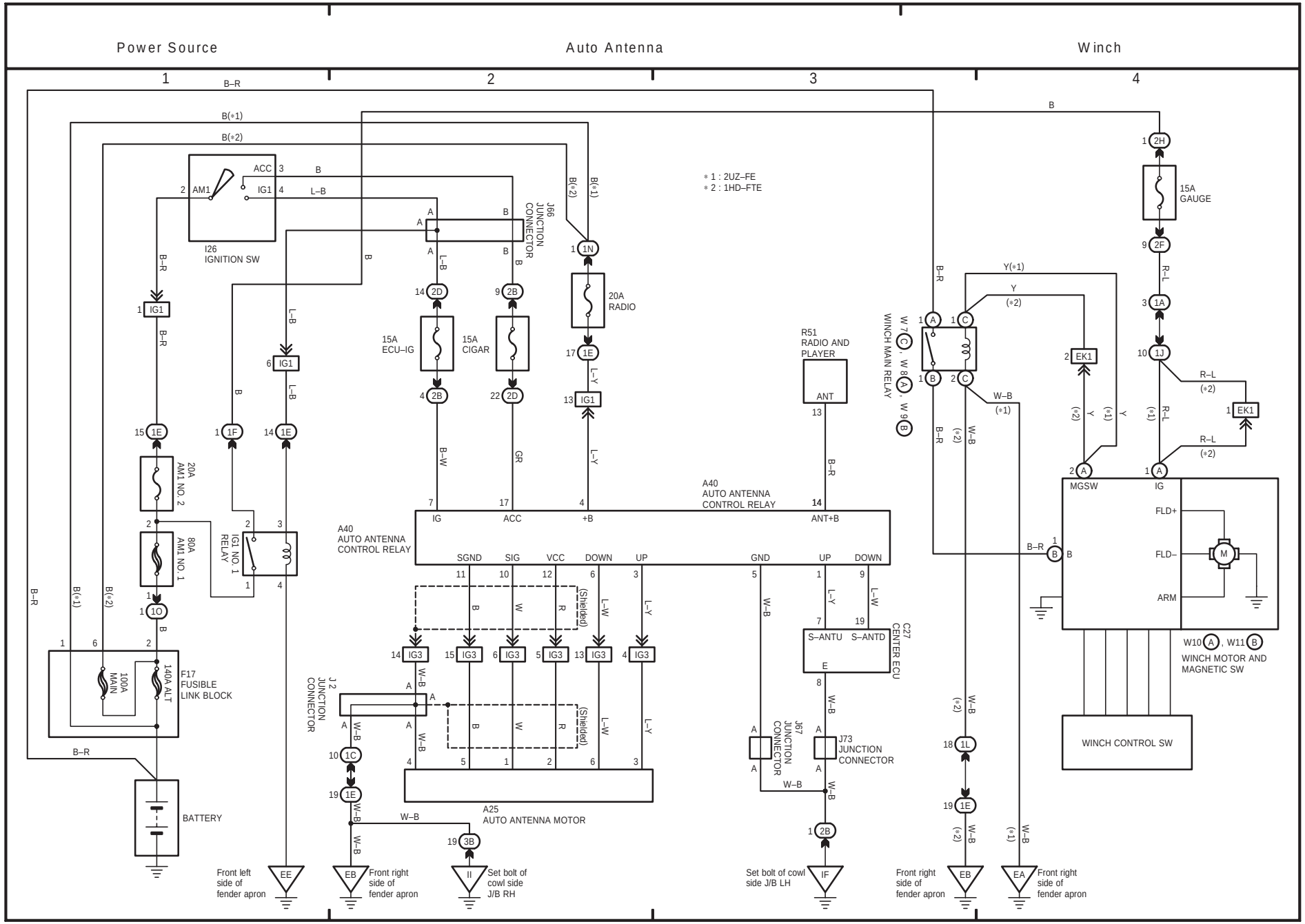
Power Source
Auto Antenna
Winch
1
2
3
4
B–R
B(*1)
B(*2)
B
ACC
IG1
AM1
I26
IGNITION SW
J66
JUNCTION
CONNECTOR
* 1 : 2UZ–FE
* 2 : 1HD–FTE
20A
RADIO
15A
ECU–IG
15A
CIGAR
R51
RADIO AND
PLAYER
ANT
W7 (C) , W8 (A) , W9 (B)
WINCH MAIN RELAY
Y(*1)
Y
(*2)
W–B
(*1)
15A
GAUGE
R–L
(*2)
(*1)
EK1
MGSW
IG
FLD+
FLD–
ARM
M
W10 (A) , W11 (B)
WINCH MOTOR AND
MAGNETIC SW
WINCH CONTROL SW
20A
AM1 NO. 2
80A
AM1 NO. 1
IG1 NO. 1
RELAY
F17
FUSIBLE
LINK BLOCK
100A
MAIN
140A ALT
BATTERY
A40
AUTO ANTENNA
CONTROL RELAY
IG
ACC
+B
ANT+B
B–W
GR
L–Y
L–B
L–W
W–B
R
W
B
(Shielded)
SGND
SIG
VCC
DOWN
UP
GND
IG3
J2
JUNCTION
CONNECTOR
A25
AUTO ANTENNA MOTOR
J67
JUNCTION
CONNECTOR
J73
JUNCTION
CONNECTOR
C27
CENTER ECU
S–ANTU
S–ANTD
E
Front left
side of
fender apron
EE
Front right
side of
fender apron
EB
Set bolt of
cowl side
J/B RH
II
Set bolt of cowl
side J/B LH
IF
Front right
side of
fender apron
EB
Front right
side of
fender apron
EA

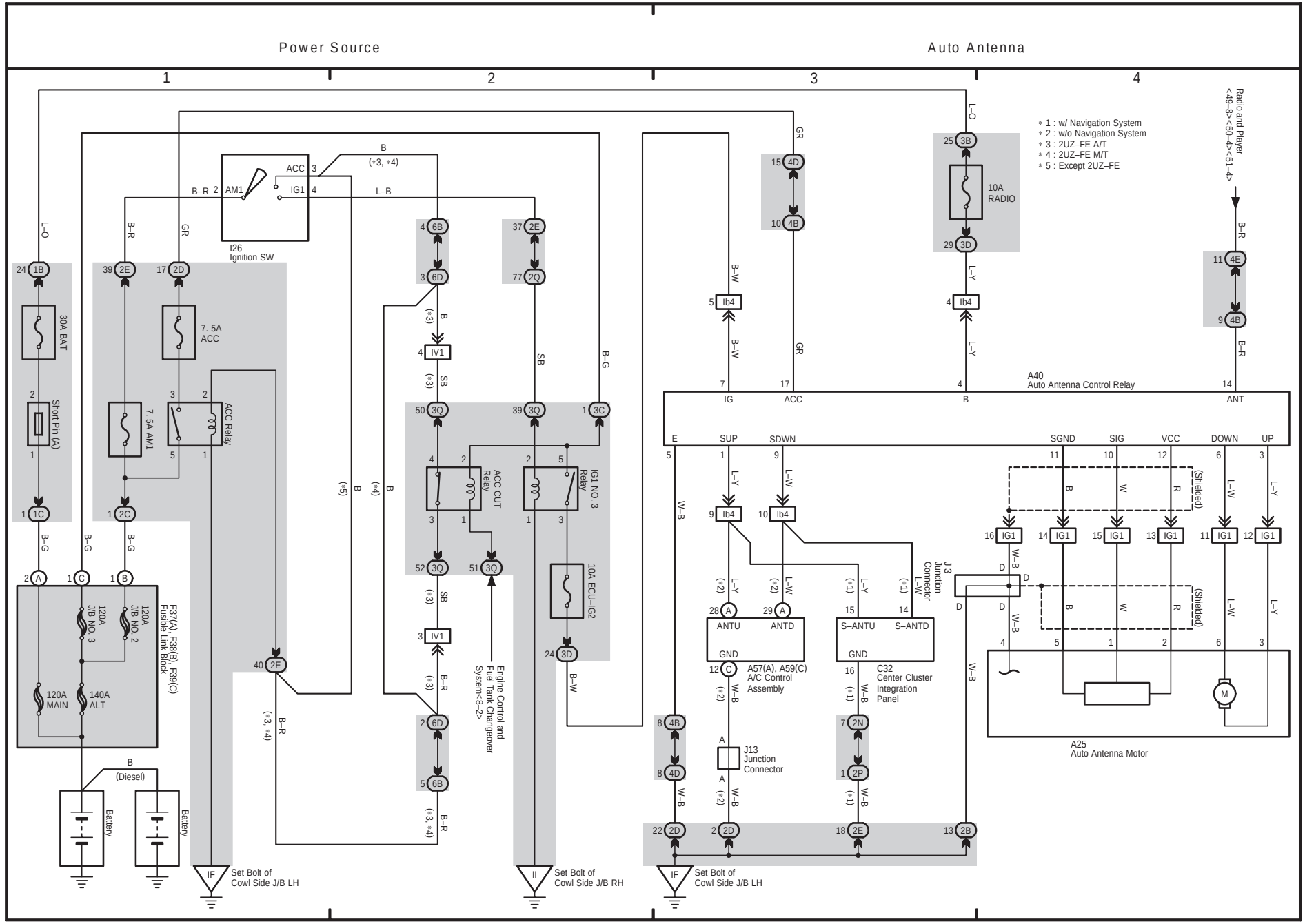
Power Source
Auto Antenna
1
2
3
4
* 1 : w/ Navigation System
* 2 : w/o Navigation System
* 3 : 2UZ–FE A/T
* 4 : 2UZ–FE M/T
* 5 : Except 2UZ–FE
I26
Ignition SW
ACC
IG1
AM1
30A BAT
Short Pin (A)
7. 5A ACC
7. 5A AM1
ACC Relay
F37(A), F38(B), F39(C)
Fusible Link Block
120A J/B NO. 3
120A J/B NO. 2
120A MAIN
140A ALT
Battery
Battery
B (Diesel)
ACC CUT Relay
IG1 NO. 3 Relay
10A ECU–IG2
Engine Control and Fuel Tank Changeover System<8–2>
Set Bolt of Cowl Side J/B LH
Set Bolt of Cowl Side J/B RH
Set Bolt of Cowl Side J/B LH
10A RADIO
A40
Auto Antenna Control Relay
IG
ACC
B
ANT
Radio and Player <49–8><50–4><51–4>
E
SUP
SDWN
SGND
SIG
VCC
DOWN
UP
ANTU
ANTD
GND
A57(A), A59(C)
A/C Control Assembly
S–ANTU
S–ANTD
C32
Center Cluster Integration Panel
J3
Junction Connector
J13
Junction Connector
A25
Auto Antenna Motor
(Shielded)

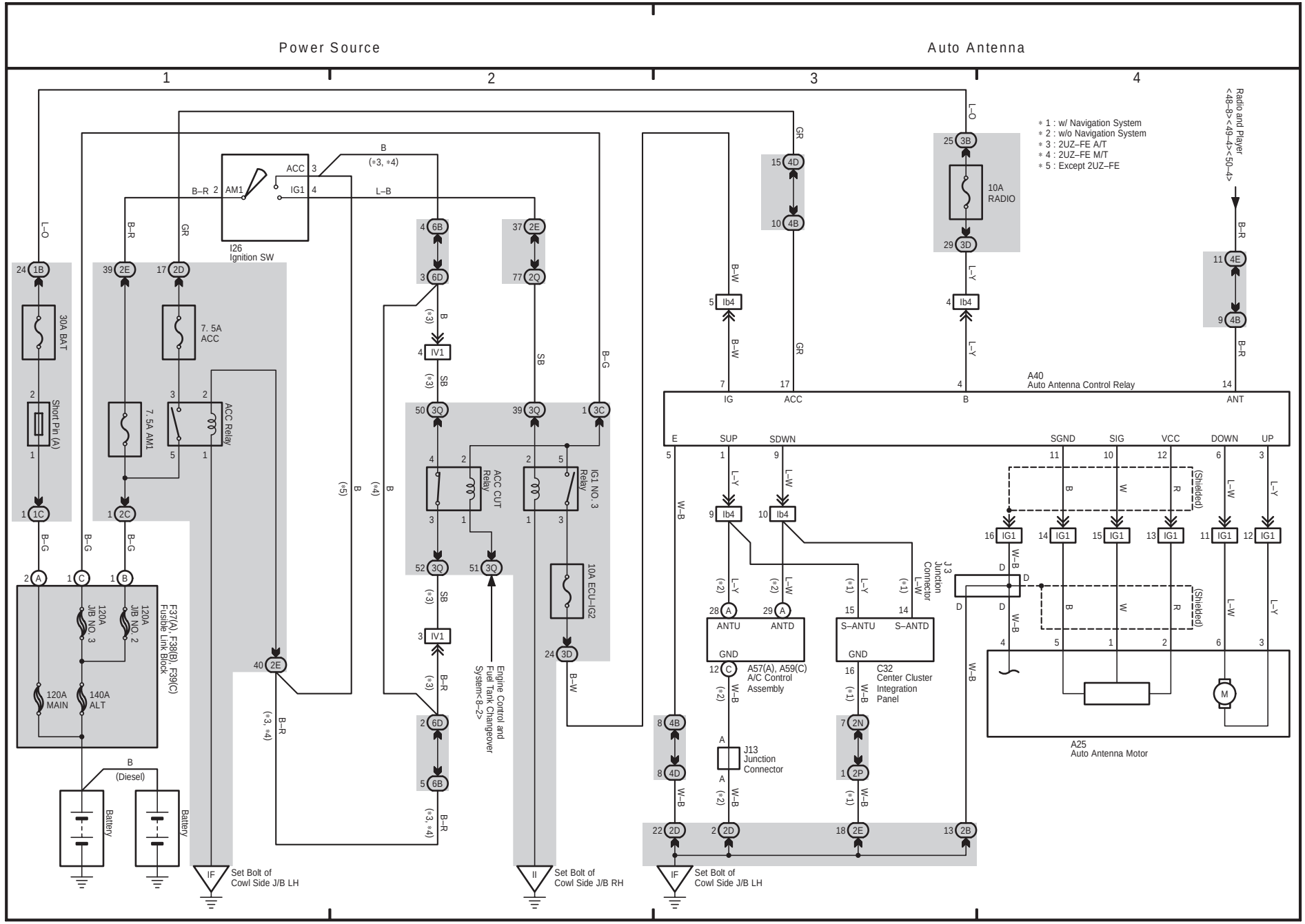
Power Source
Auto Antenna
1
2
3
4
* 1 : w/ Navigation System
* 2 : w/o Navigation System
* 3 : 2UZ–FE A/T
* 4 : 2UZ–FE M/T
* 5 : Except 2UZ–FE
I26
Ignition SW
ACC
IG1
AM1
30A BAT
Short Pin (A)
7. 5A ACC
7. 5A AM1
ACC Relay
ACC CUT Relay
IG1 NO. 3 Relay
10A ECU–IG2
10A RADIO
120A J/B NO. 3
120A J/B NO. 2
120A MAIN
140A ALT
F37(A), F38(B), F39(C)
Fusible Link Block
Battery
Battery
B (Diesel)
Engine Control and Fuel Tank Changeover System<8–2>
Set Bolt of Cowl Side J/B LH
Set Bolt of Cowl Side J/B RH
Set Bolt of Cowl Side J/B LH
A40
Auto Antenna Control Relay
IG
ACC
B
ANT
A25
Auto Antenna Motor
SUP
SDWN
SGND
SIG
VCC
DOWN
UP
ANTU
ANTD
S–ANTU
S–ANTD
GND
A57(A), A59(C)
A/C Control Assembly
C32
Center Cluster Integration Panel
J3
Junction Connector
J13
Junction Connector
Radio and Player
<48–8><49–4><50–4>
(Shielded)

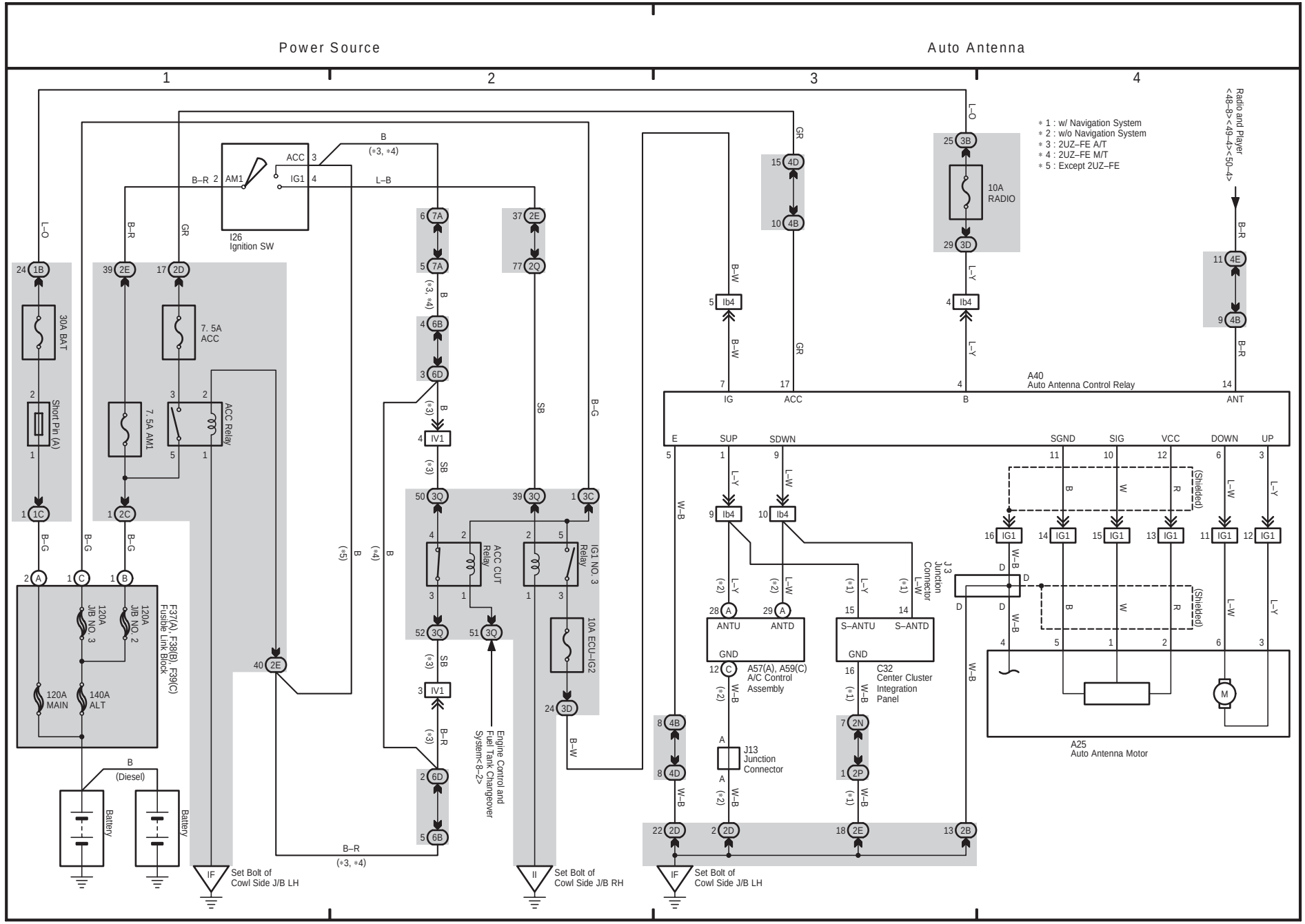
Power Source
Auto Antenna
1
2
3
4
＊1 : w/ Navigation System
＊2 : w/o Navigation System
＊3 : 2UZ–FE A/T
＊4 : 2UZ–FE M/T
＊5 : Except 2UZ–FE
I26
Ignition SW
ACC
IG1
AM1
30A BAT
7. 5A ACC
7. 5A AM1
ACC Relay
Short Pin (A)
F37(A), F38(B), F39(C)
Fusible Link Block
120A MAIN
140A ALT
120A J/B NO. 3
120A J/B NO. 2
ACC CUT Relay
IG1 NO. 3 Relay
10A ECU–IG2
Engine Control and Fuel Tank Changeover System<8–2>
Battery
(Diesel)
Set Bolt of Cowl Side J/B LH
Set Bolt of Cowl Side J/B RH
10A RADIO
A40
Auto Antenna Control Relay
IG
ACC
B
ANT
E
SUP
SDWN
SGND
SIG
VCC
DOWN
UP
ANTU
ANTD
S–ANTU
S–ANTD
GND
A57(A), A59(C)
A/C Control Assembly
C32
Center Cluster Integration Panel
J3
Junction Connector
J13
Junction Connector
A25
Auto Antenna Motor
Radio and Player
<48–8><49–4><50–4>
(Shielded)

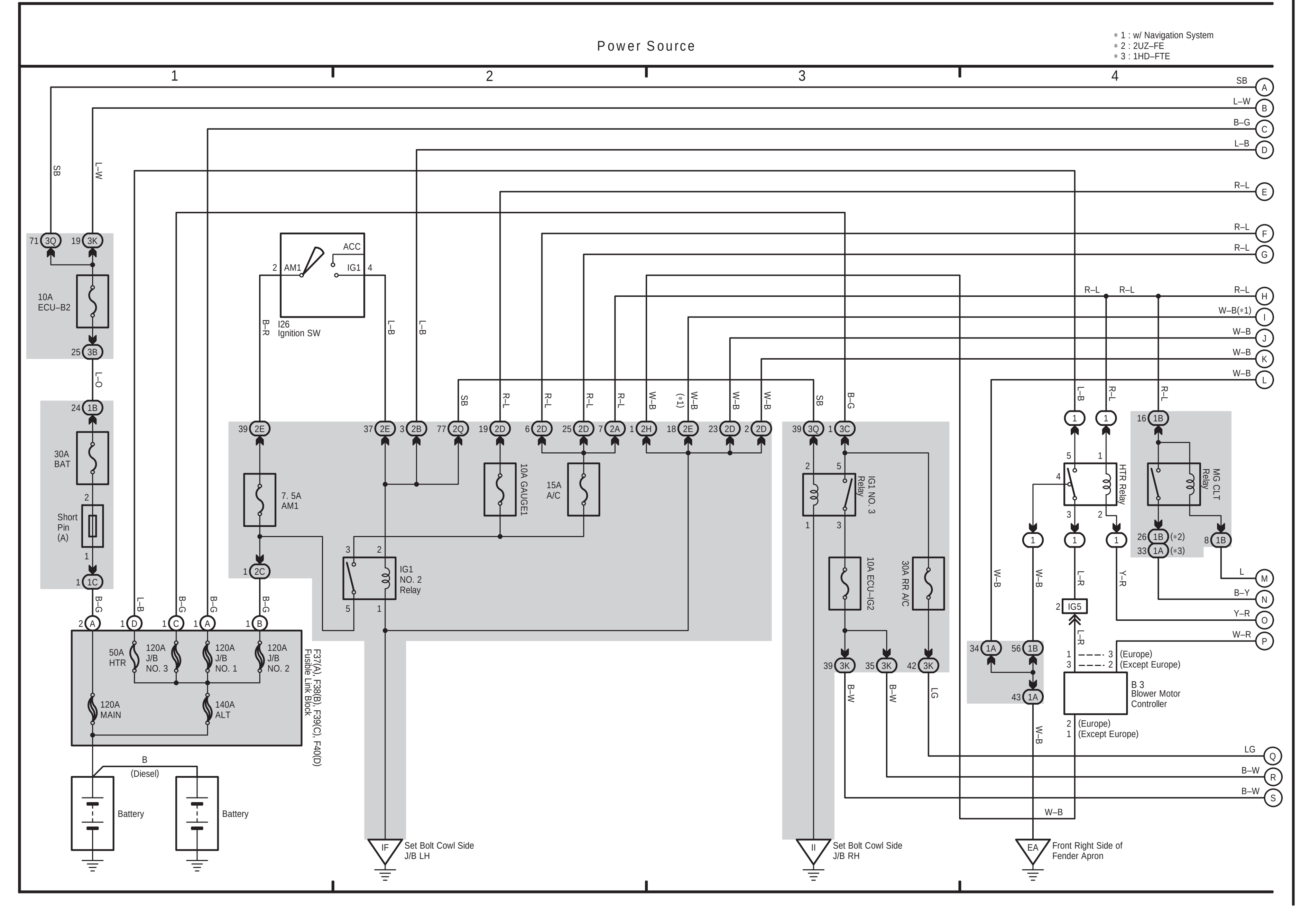
Power Source

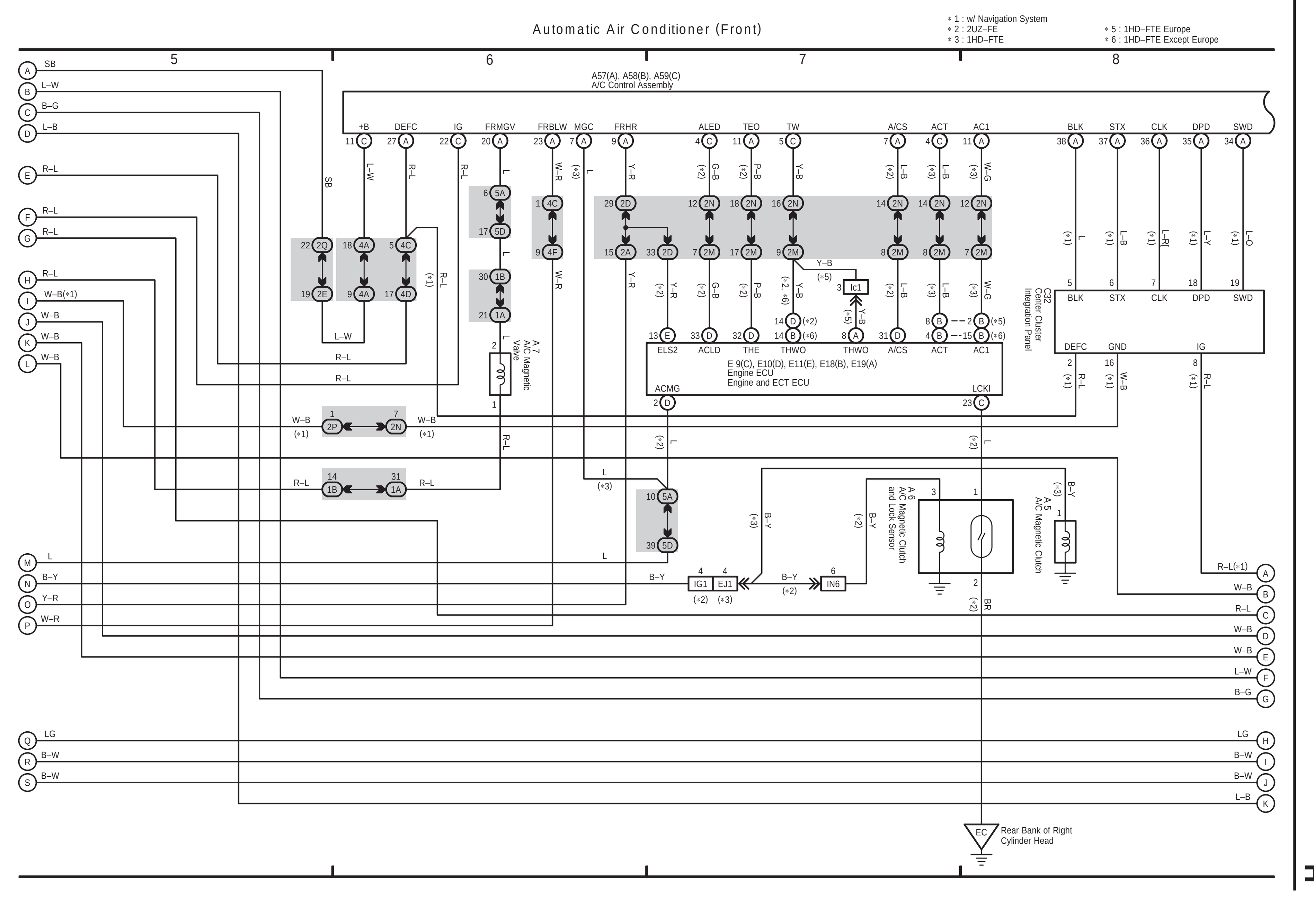
Automatic Air Conditioner (Front)

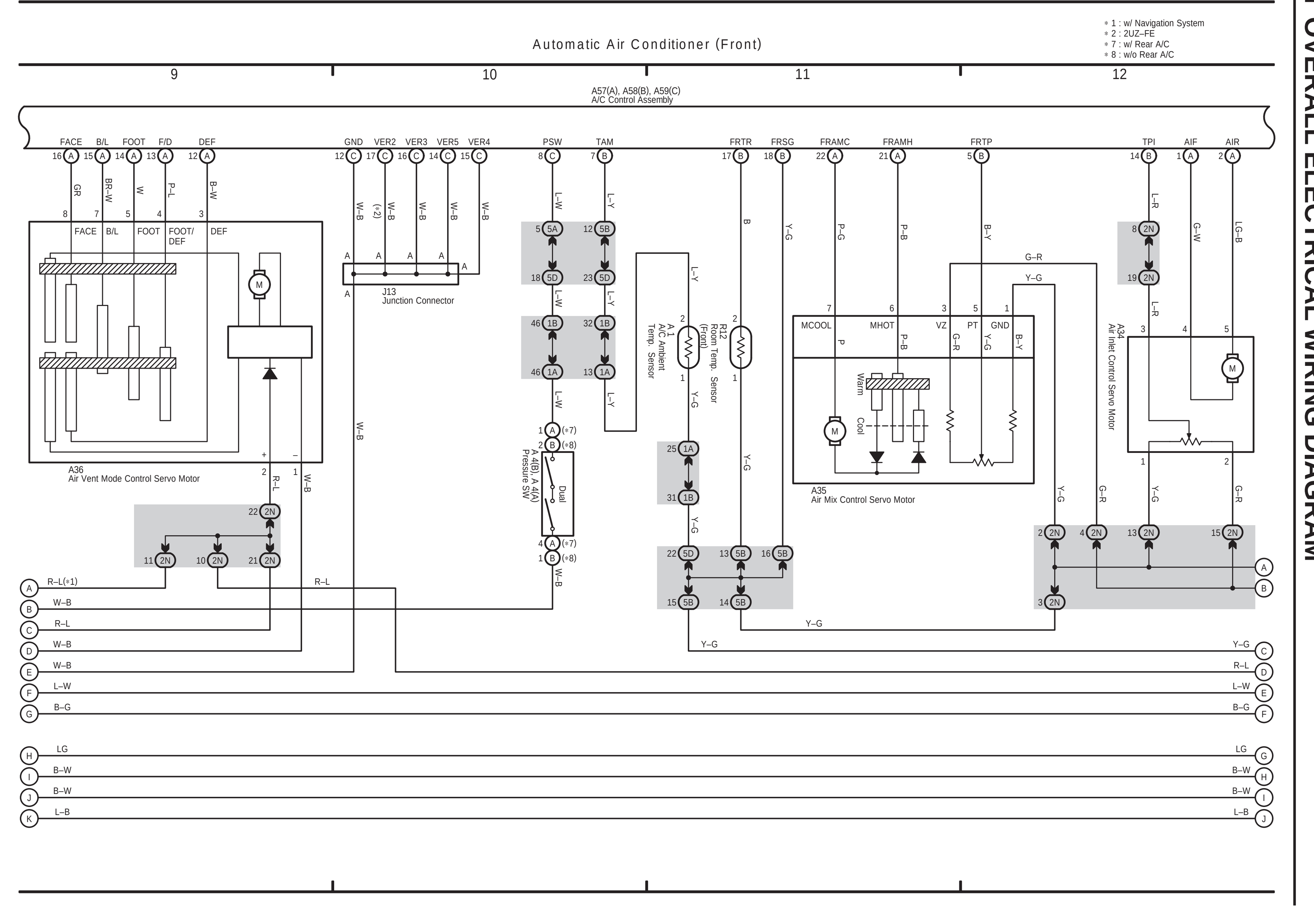
Automatic Air Conditioner (Front)

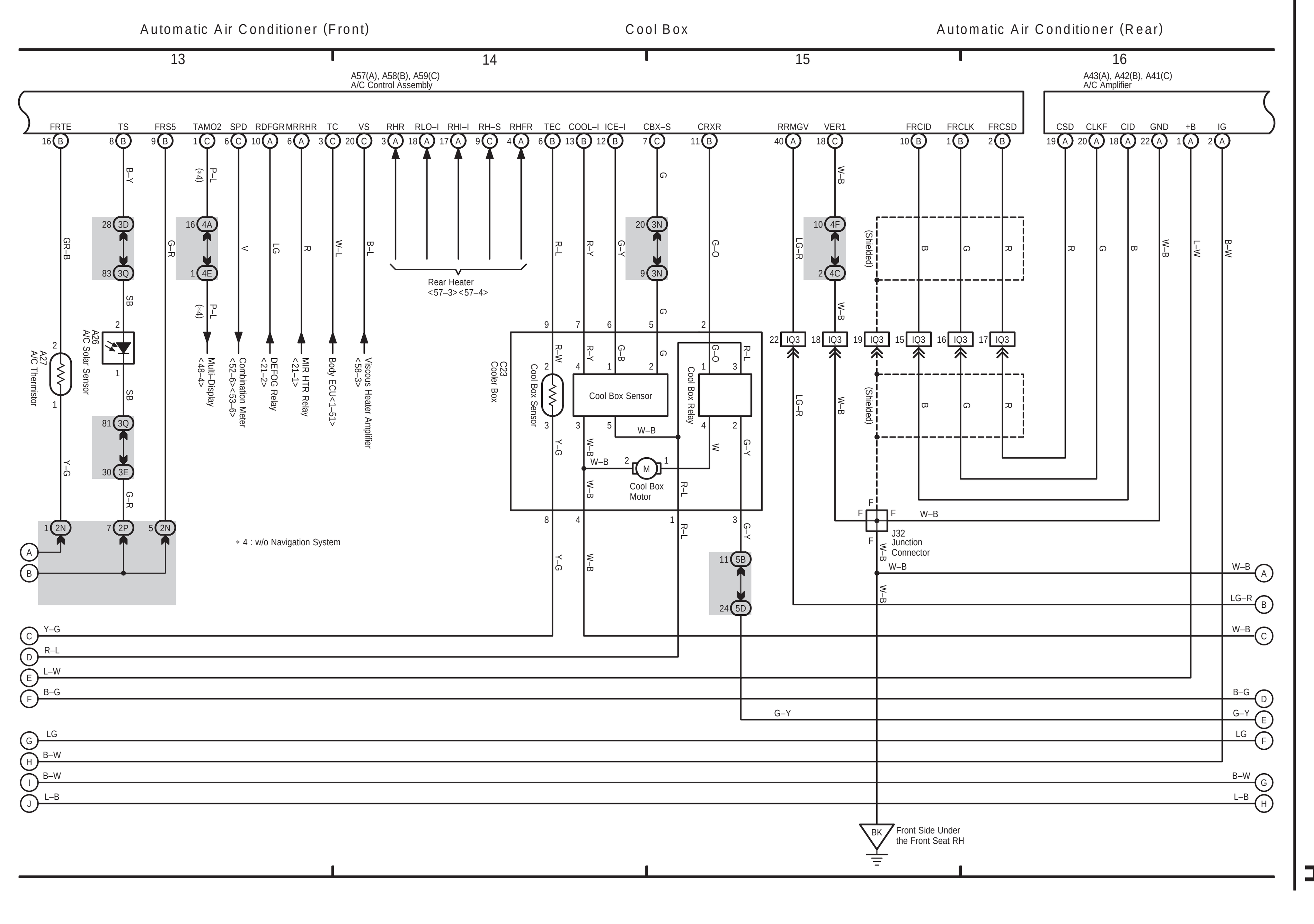
Automatic Air Conditioner (Front)
Cool Box
Automatic Air Conditioner (Rear)

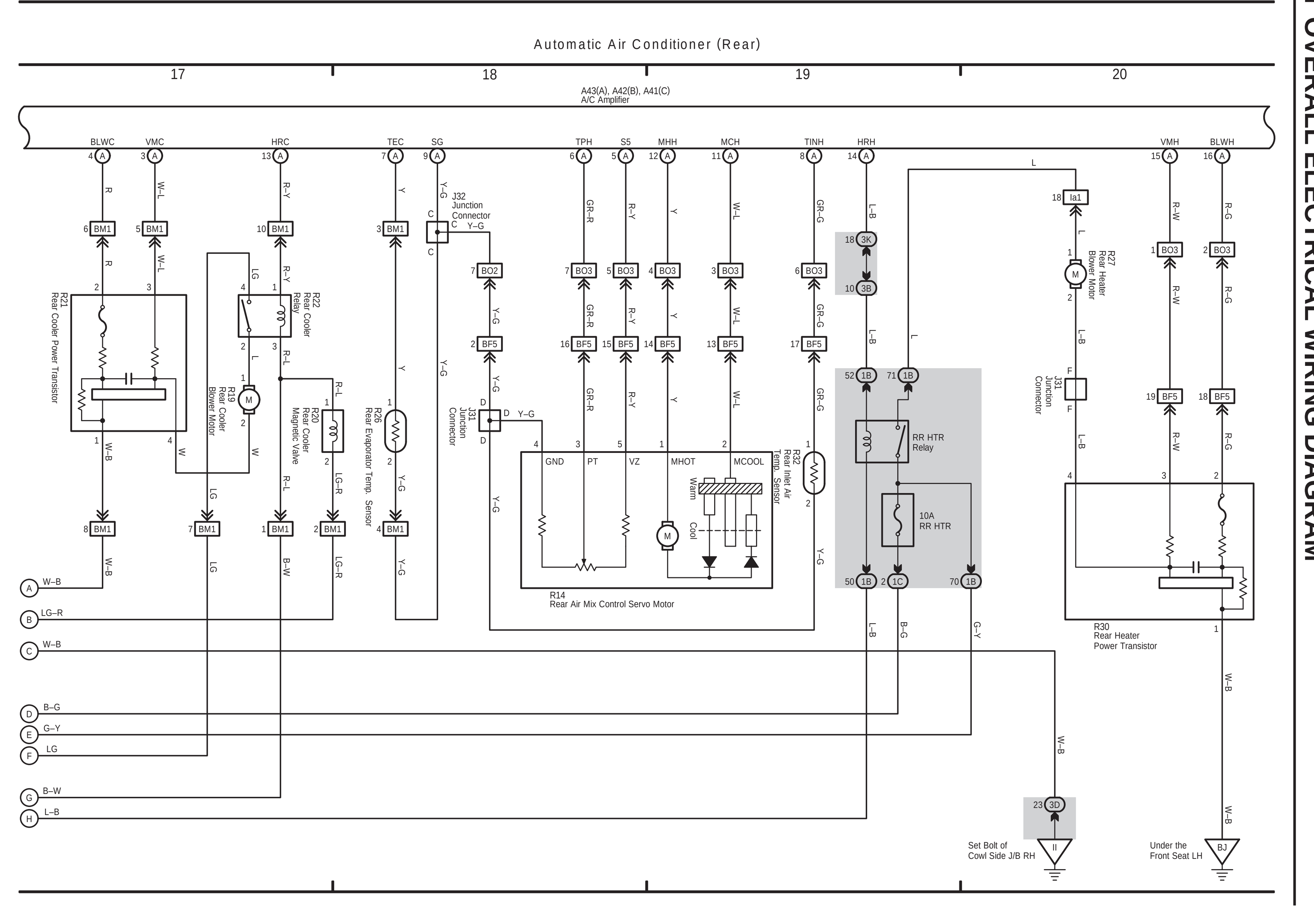
Automatic Air Conditioner (Rear)

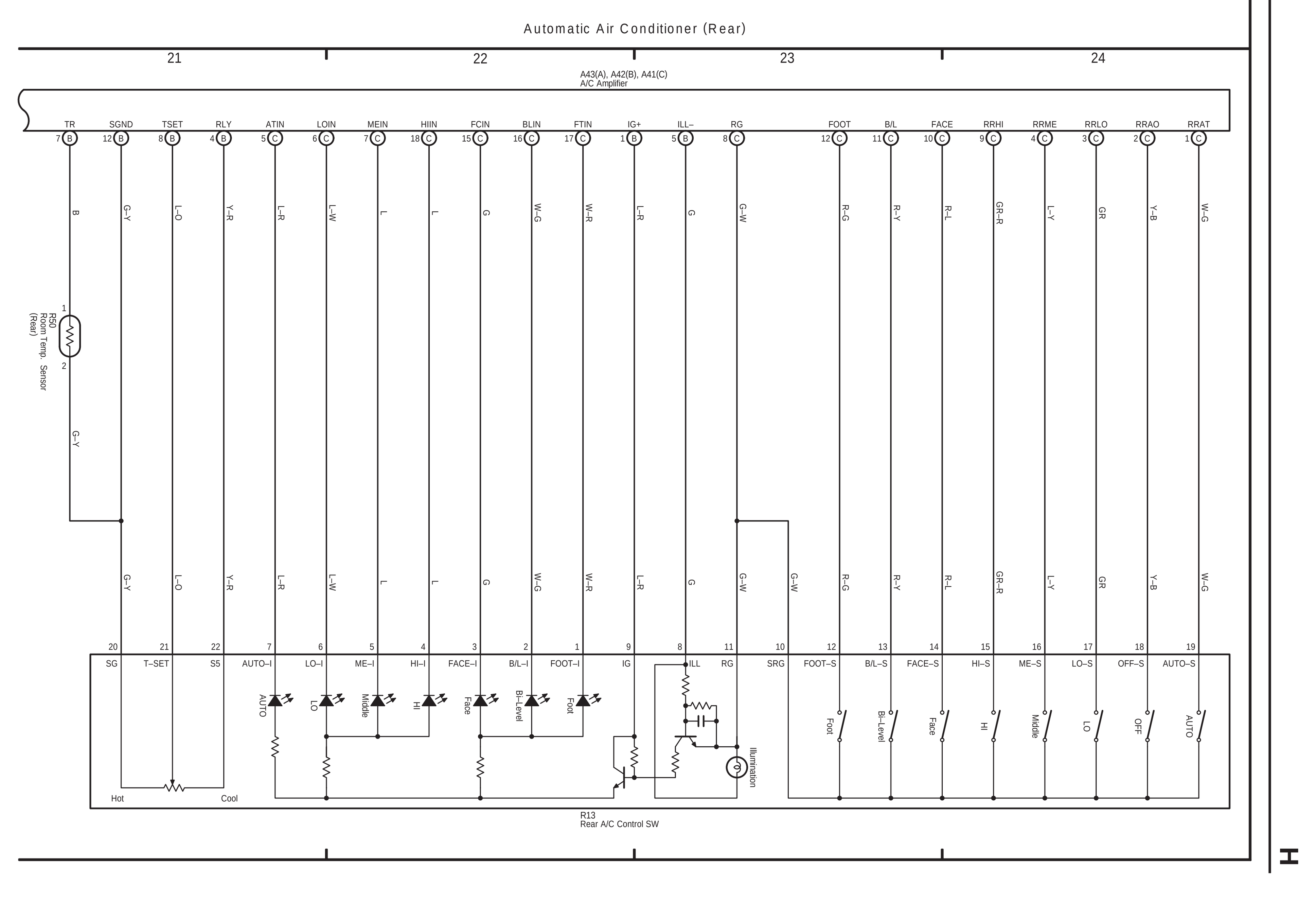
Automatic Air Conditioner (Rear)

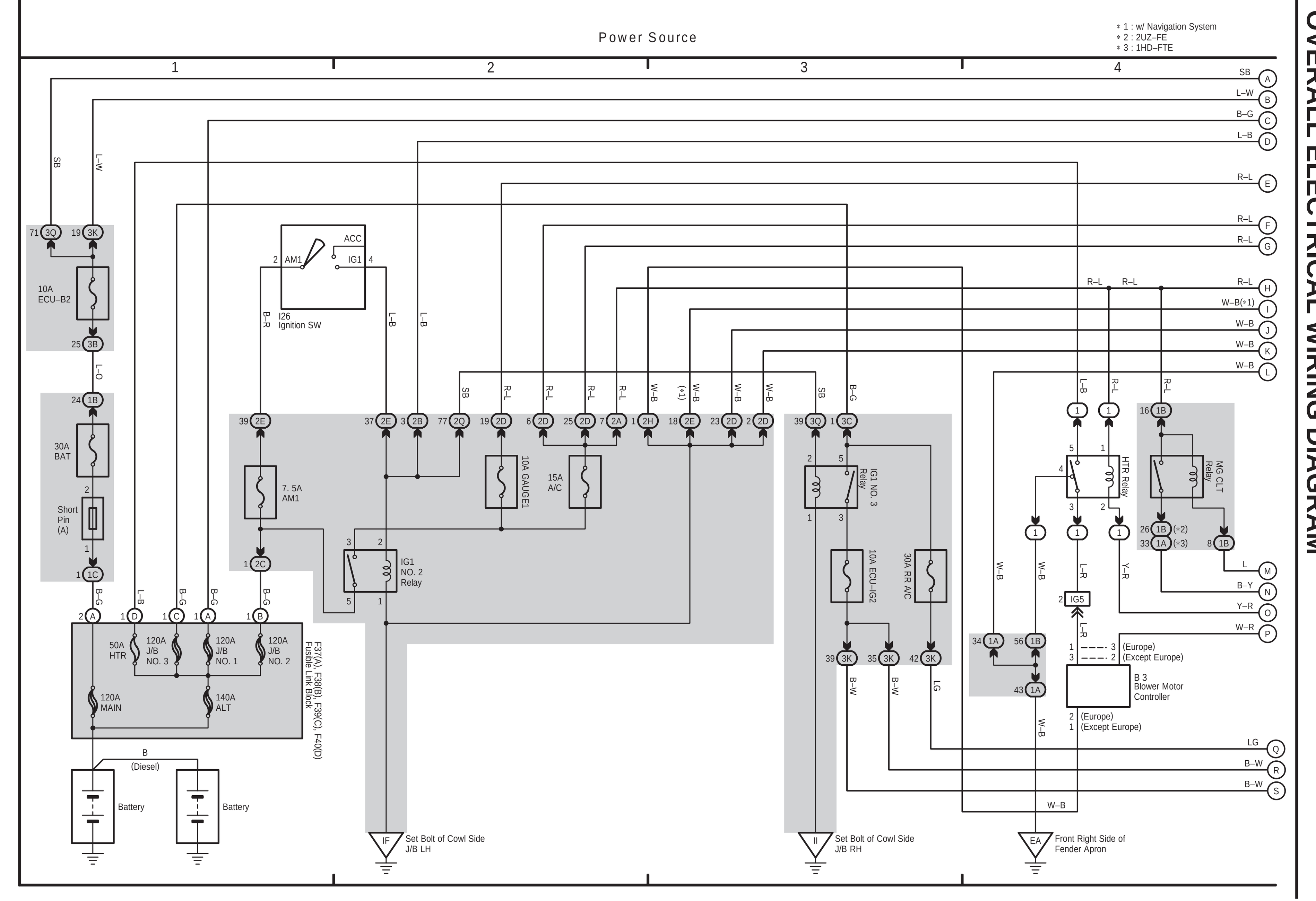

LAND CRUISER Station Wagon (EWD575E)

H OVERALL ELECTRICAL WIRING DIAGRAM

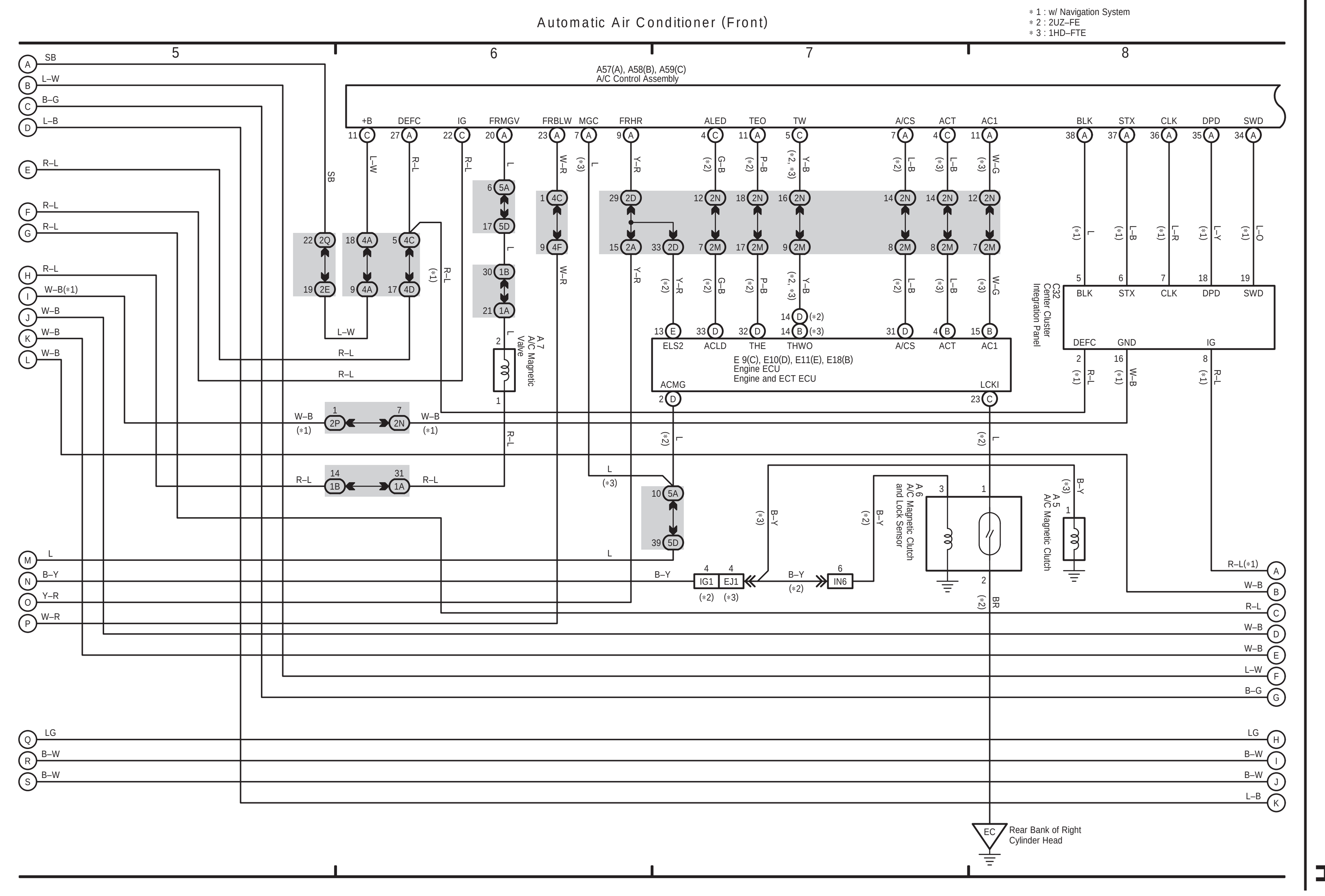

LAND CRUISER Station Wagon (EWD575E)

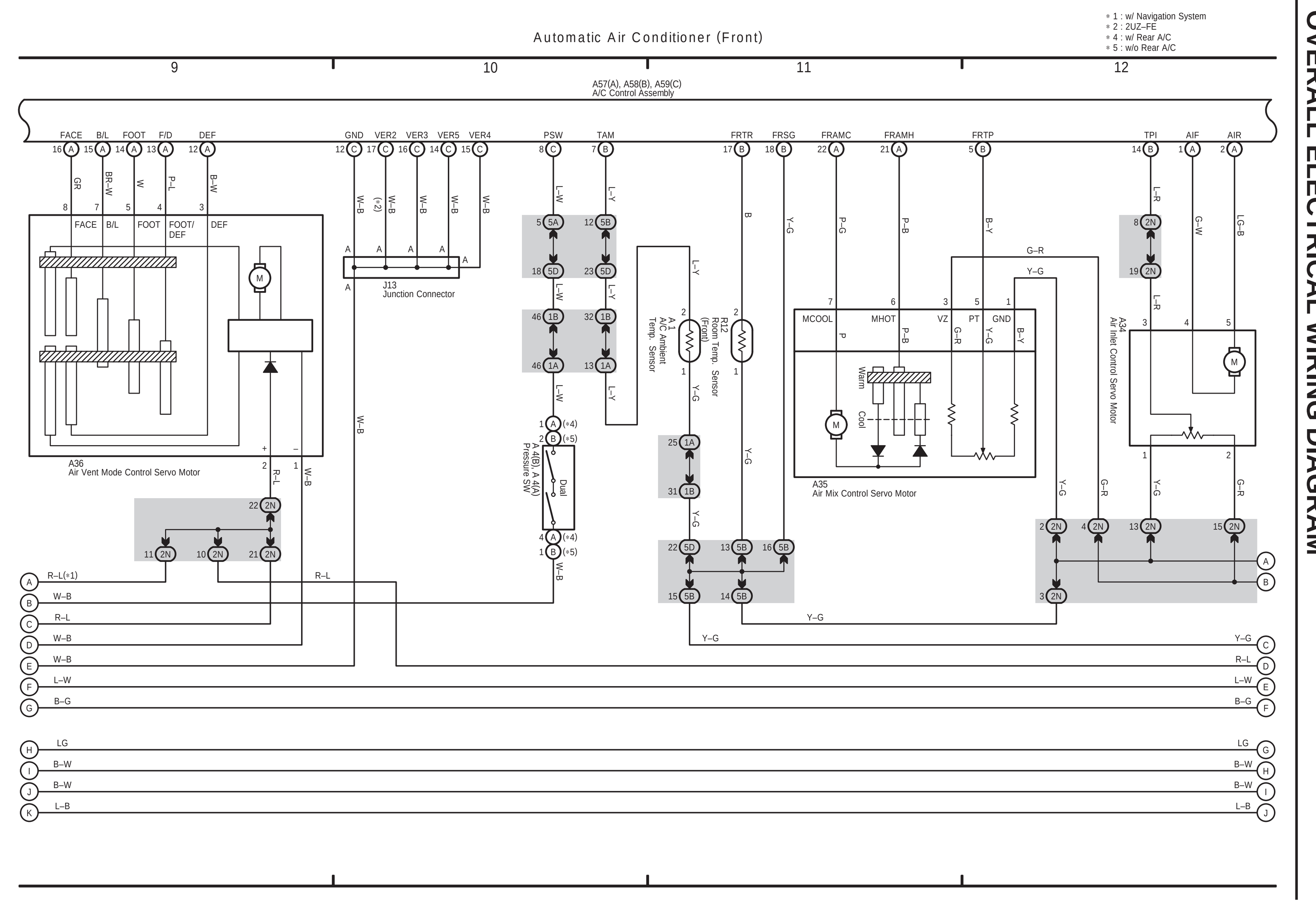

LAND CRUISER Station Wagon (EWD575E)

H OVERALL ELECTRICAL WIRING DIAGRAM

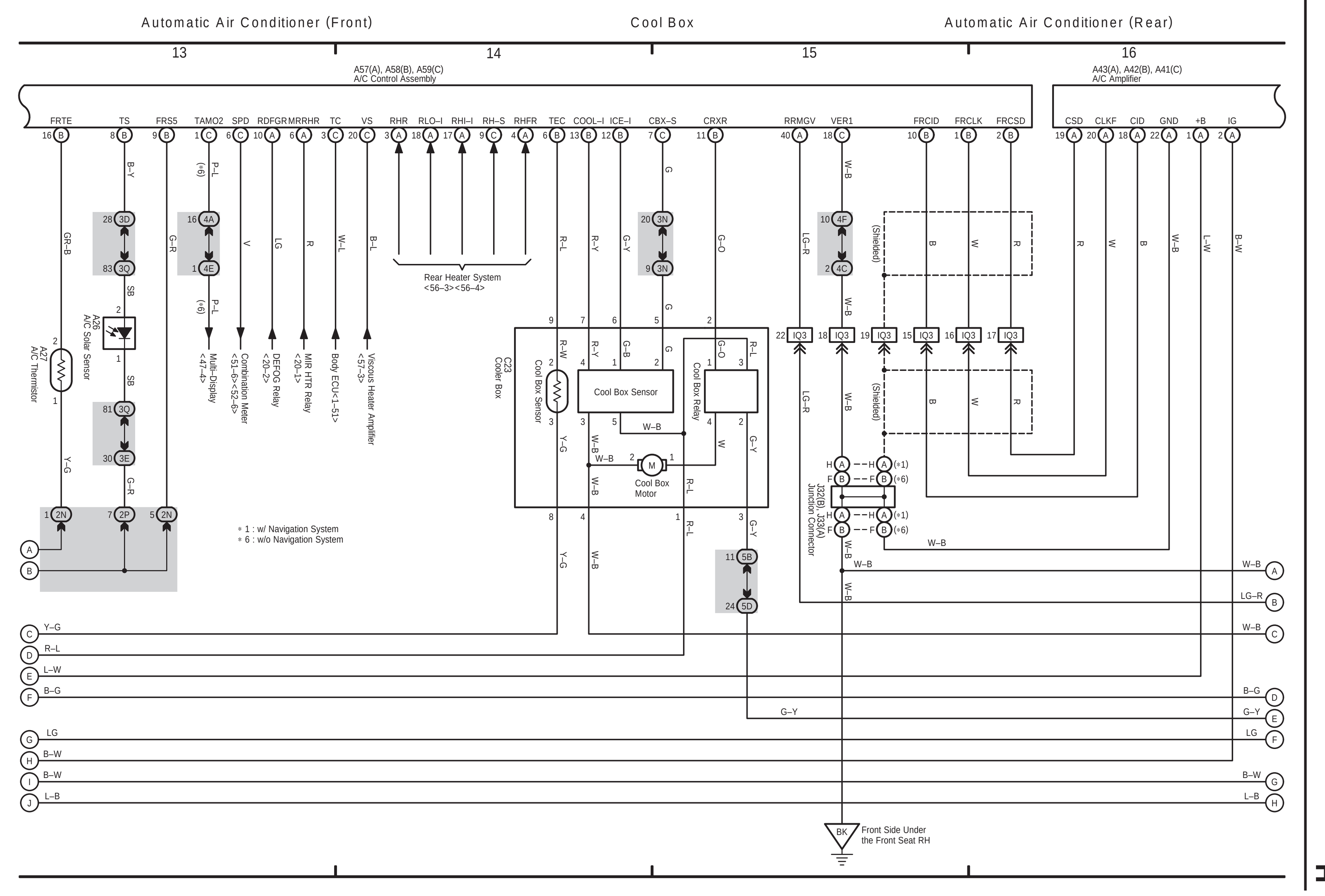

LAND CRUISER Station Wagon (EWD575E)

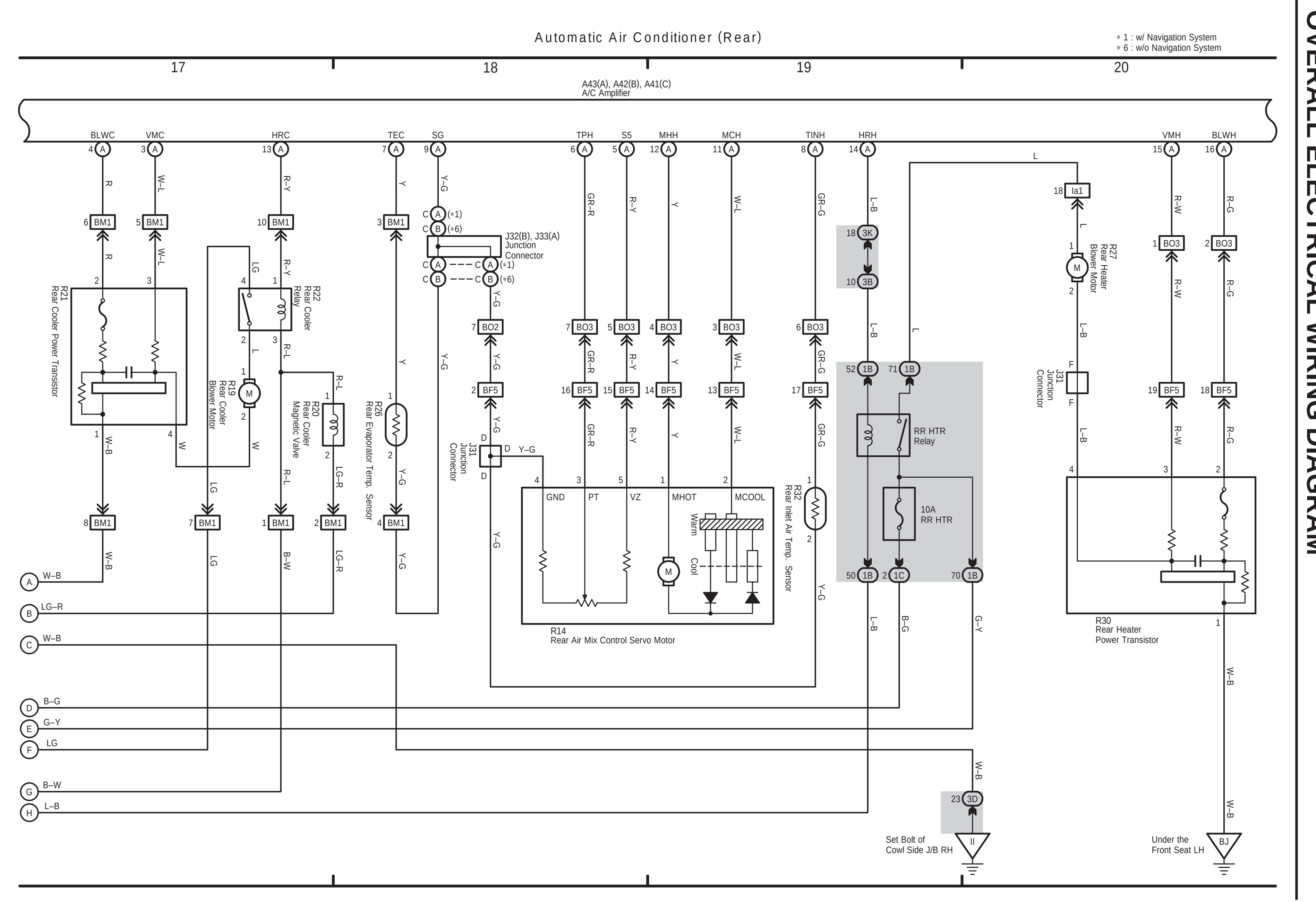

LAND CRUISER Station Wagon (EWD575E)

H OVERALL ELECTRICAL WIRING DIAGRAM

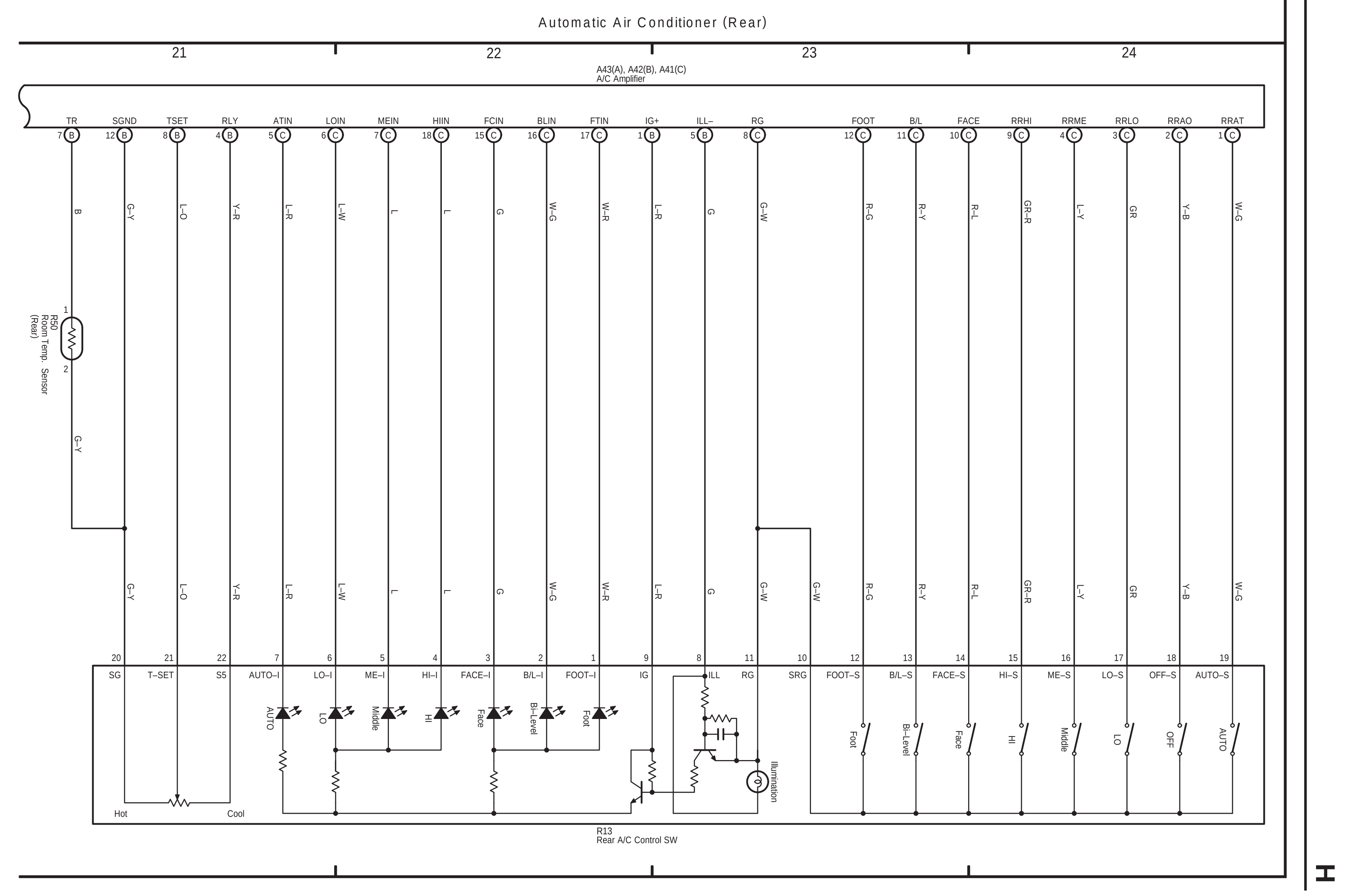

LAND CRUISER Station Wagon (EWD575E)

54 LAND CRUISER (RHD) [Cont. next page]

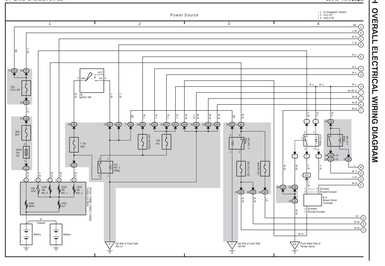

54 LAND CRUISER (RHD) (Cont' d) [Cont. next page]

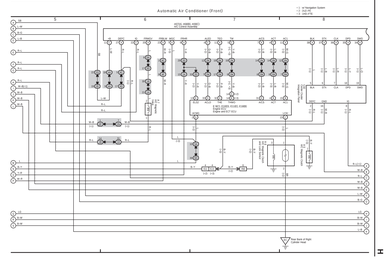

54 LAND CRUISER (RHD) (Cont' d) [Cont. next page]

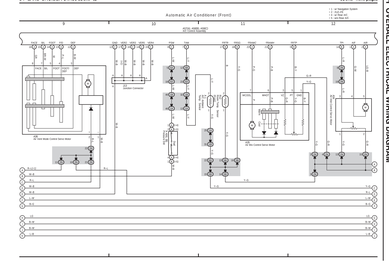

54 LAND CRUISER (RHD) (Cont' d) [Cont. next page]

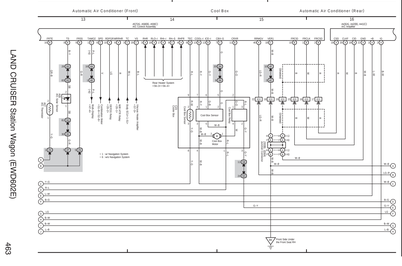

54 LAND CRUISER (RHD) (Cont' d) [Cont. next page]

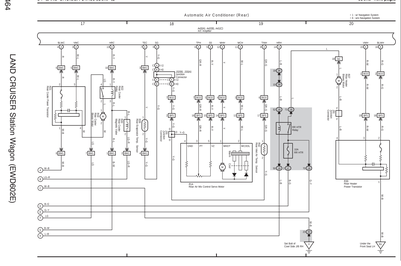

54 LAND CRUISER (RHD) (Cont' d)

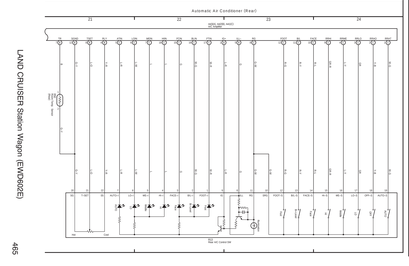

452

55 LAND CRUISER (RHD) (Cont. next page)

Power Source

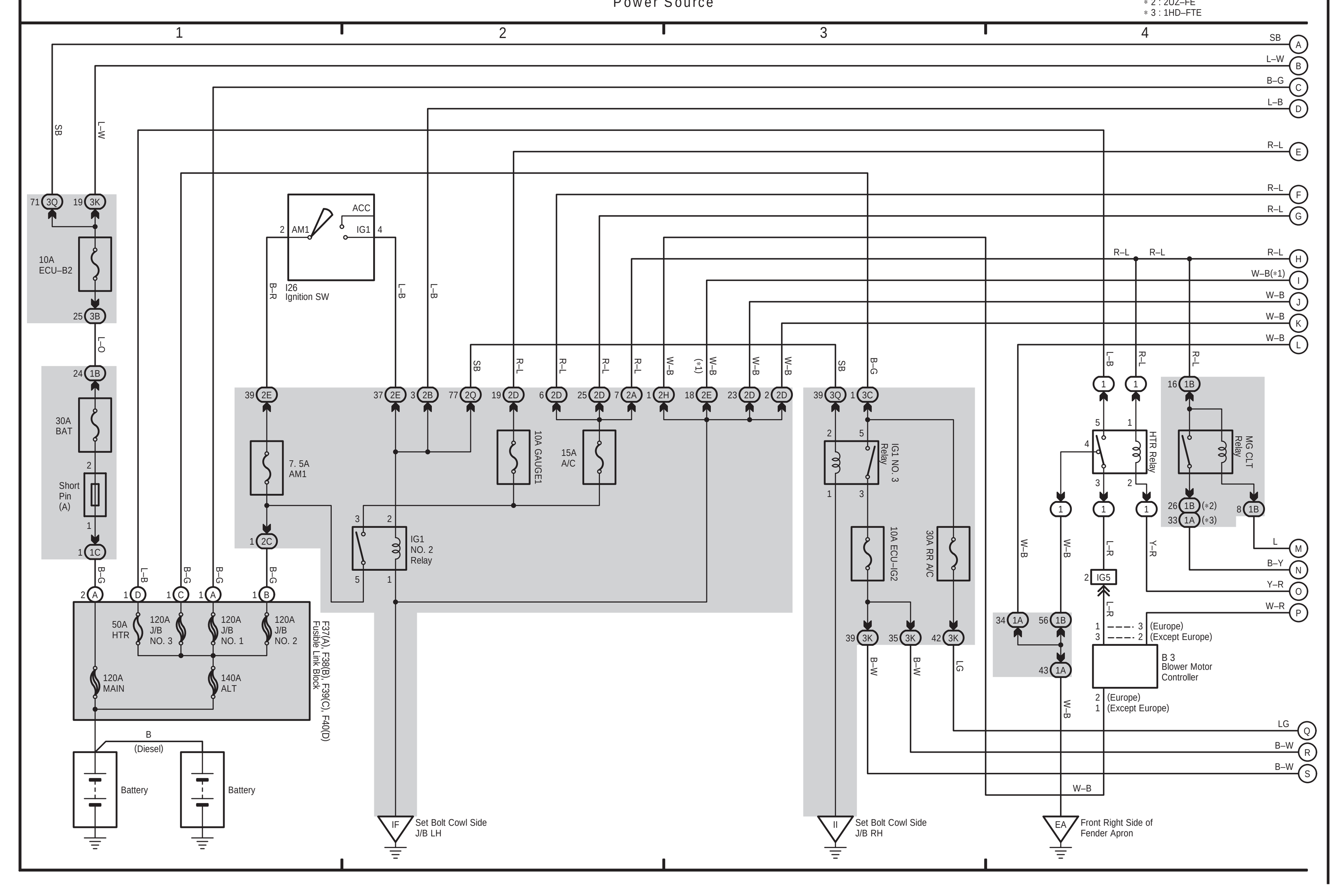

H OVERALL ELECTRICAL WIRING DIAGRAM

LAND CRUISER Station Wagon (EWD512E)

453

55 LAND CRUISER (RHD) (Cont' d) (Cont. next page)

Automatic Air Conditioner (Front)

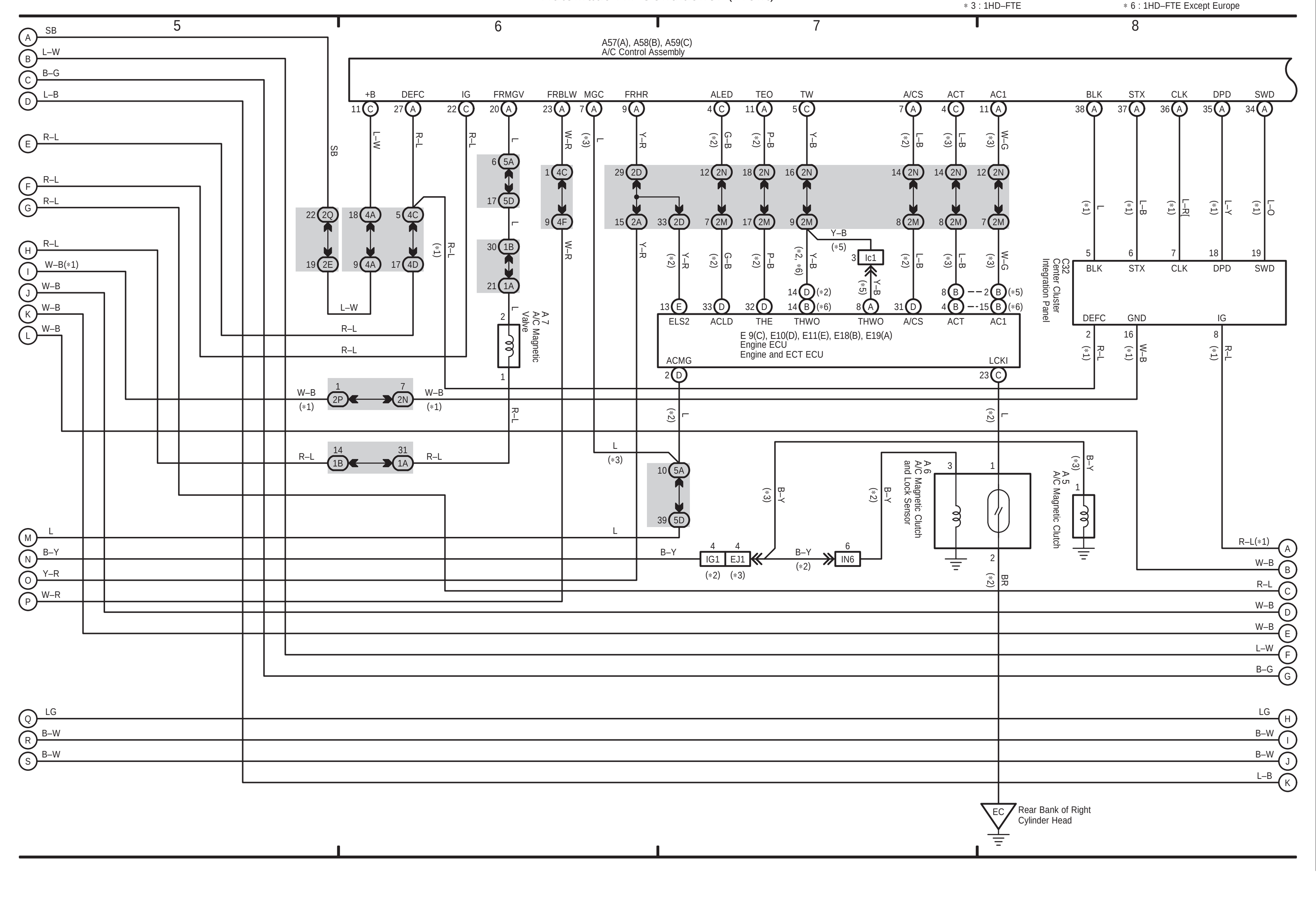

LAND CRUISER Station Wagon (EWD512E)

454

55 LAND CRUISER (RHD) (Cont' d) (Cont. next page)

Automatic Air Conditioner (Front)

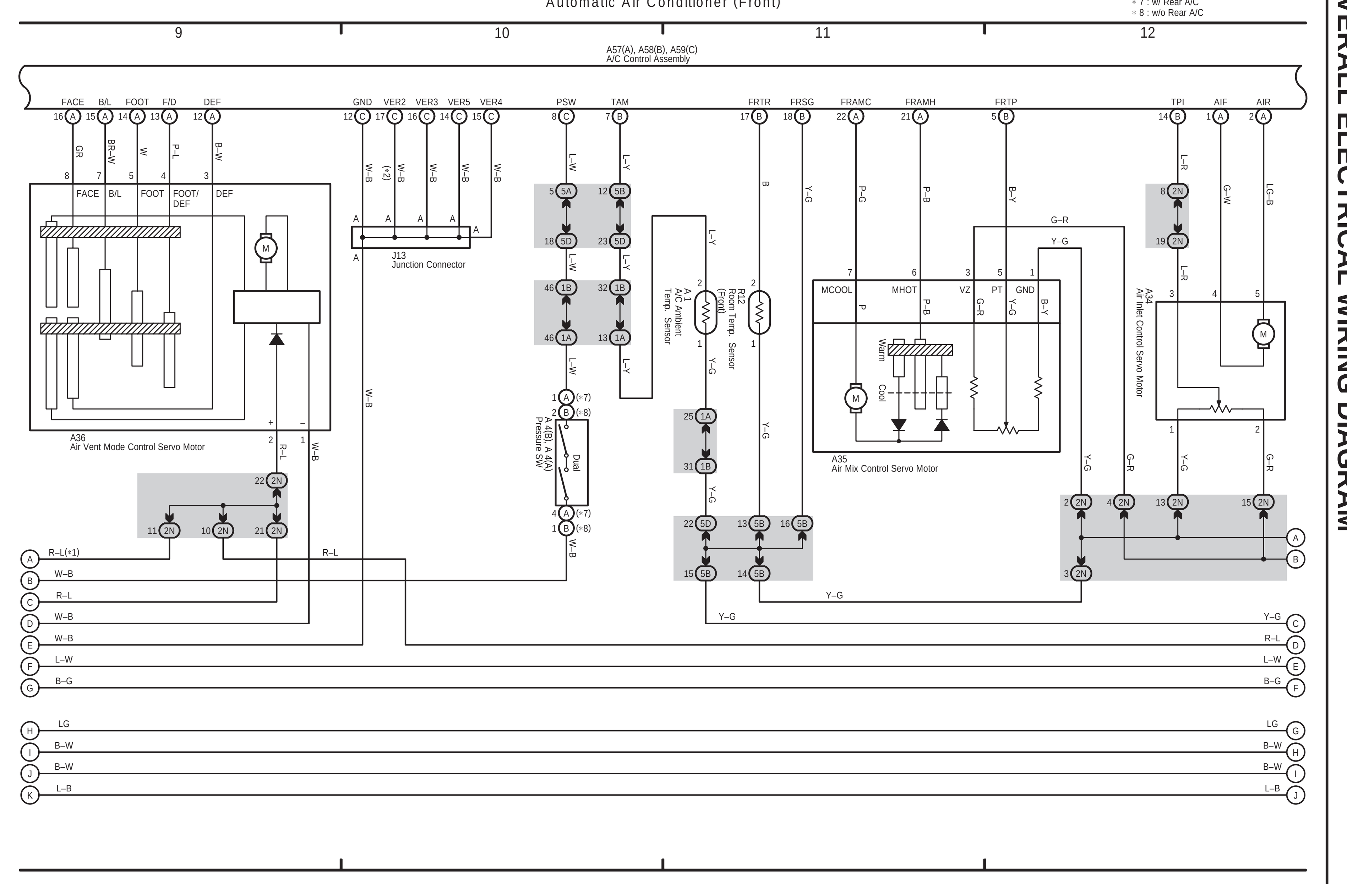

H OVERALL ELECTRICAL WIRING DIAGRAM

LAND CRUISER Station Wagon (EWD512E)

455

55 LAND CRUISER (RHD) (Cont' d) (Cont. next page)

Automatic Air Conditioner (Front) / Cool Box / Automatic Air Conditioner (Rear)

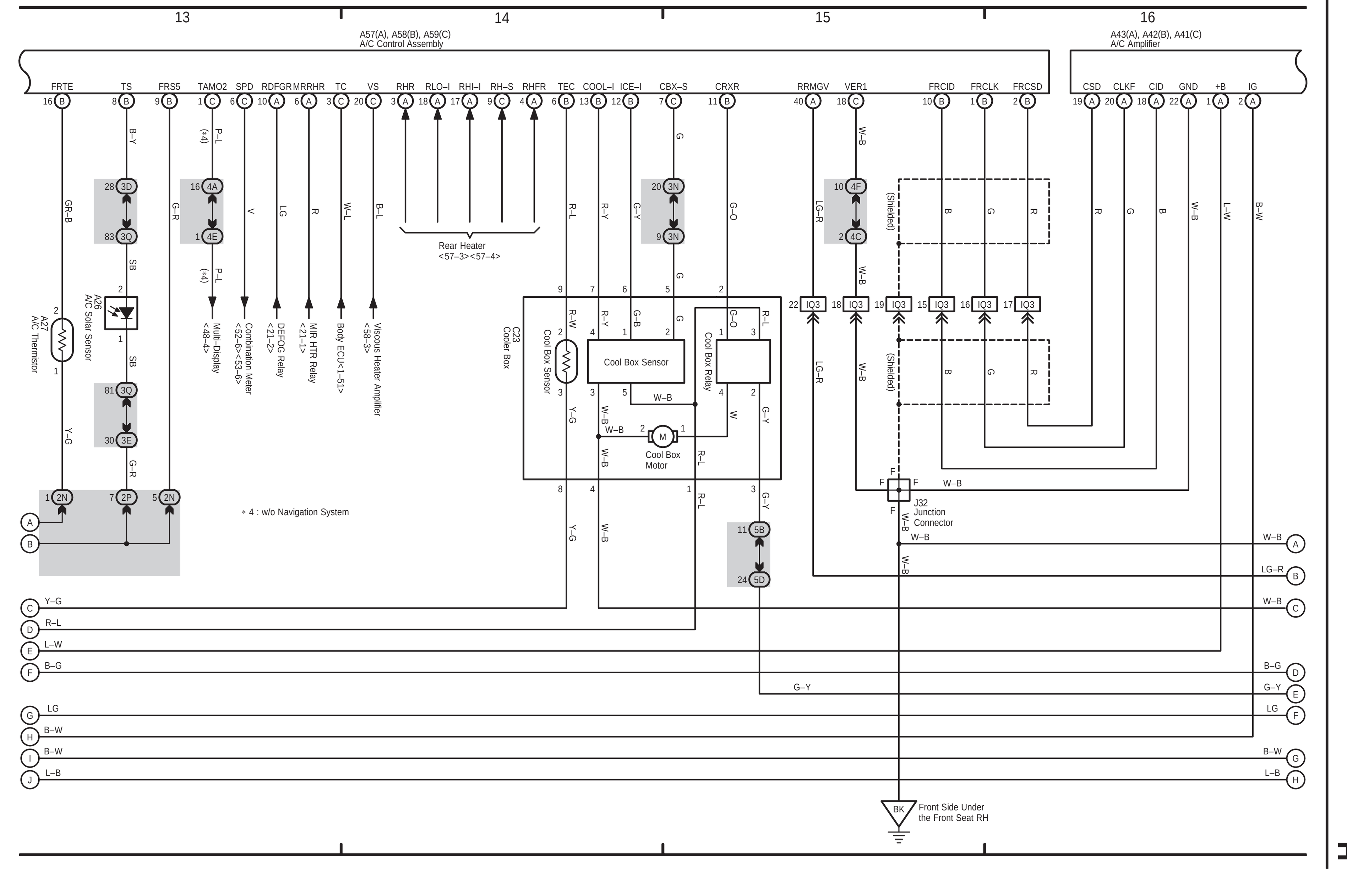

LAND CRUISER Station Wagon (EWD512E)

456

55 LAND CRUISER (RHD) (Cont' d) (Cont. next page)

Automatic Air Conditioner (Rear)

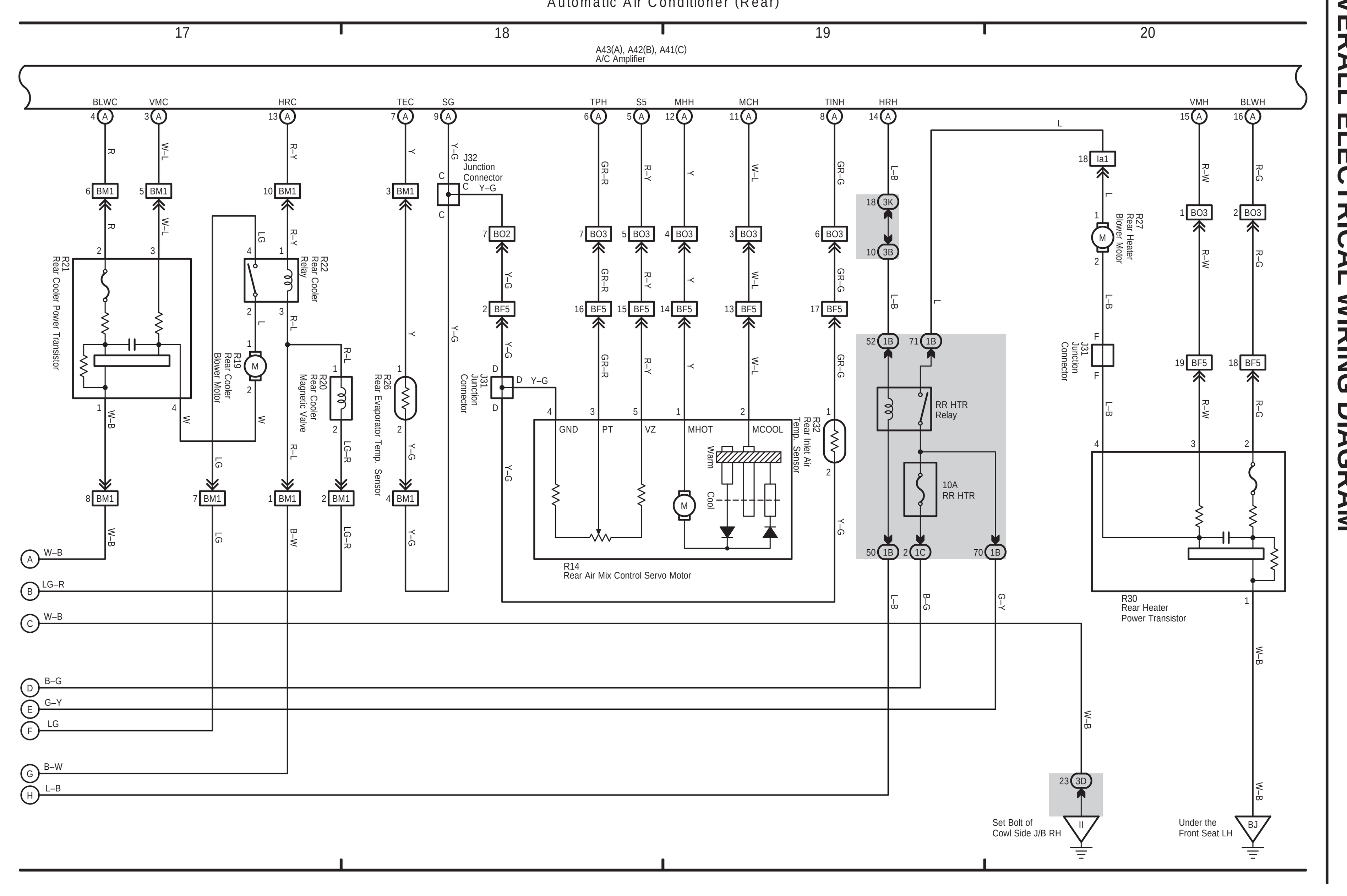

H OVERALL ELECTRICAL WIRING DIAGRAM

LAND CRUISER Station Wagon (EWD512E)

457

55 LAND CRUISER (RHD) (Cont' d)

Automatic Air Conditioner (Rear)

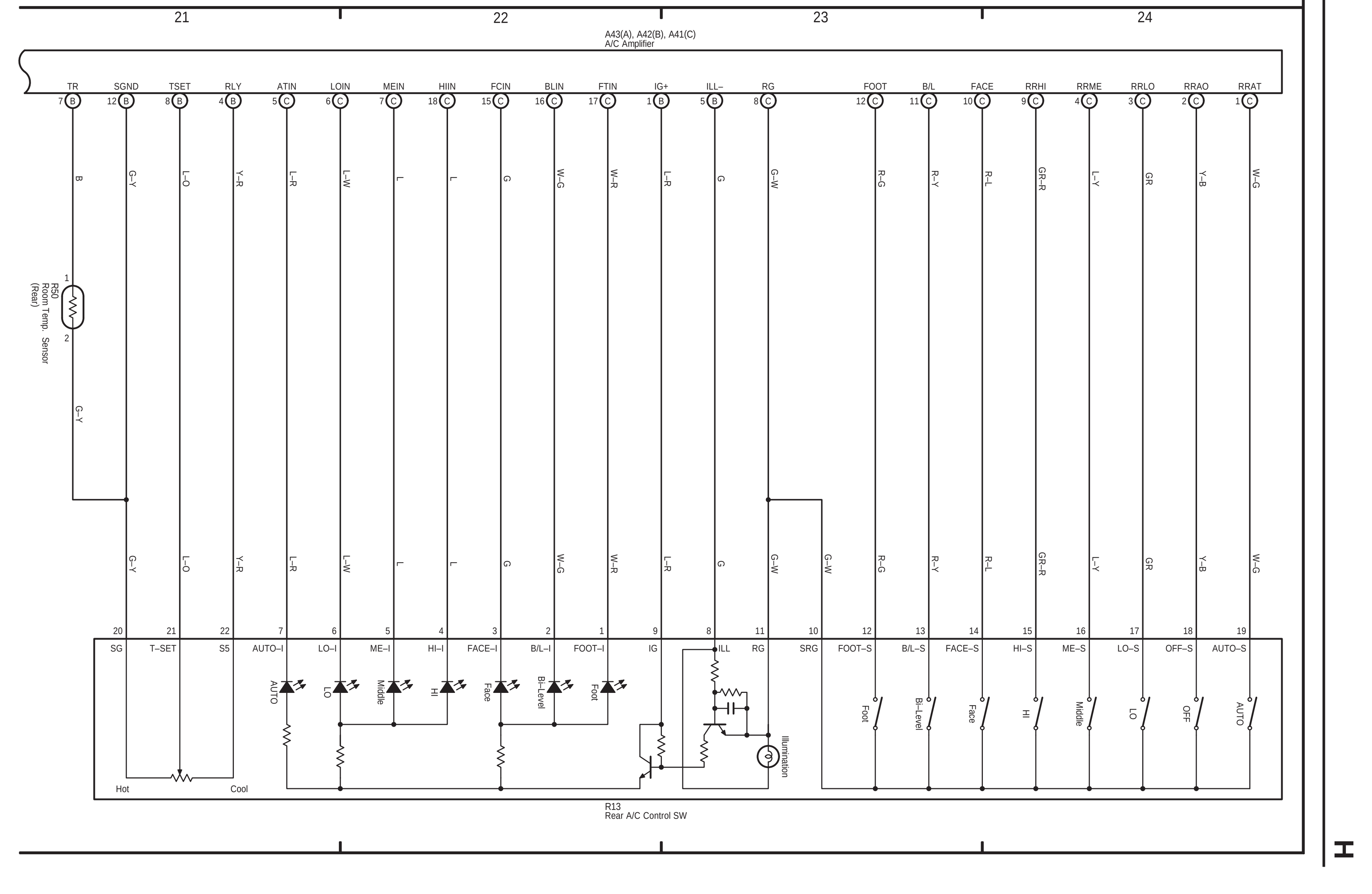

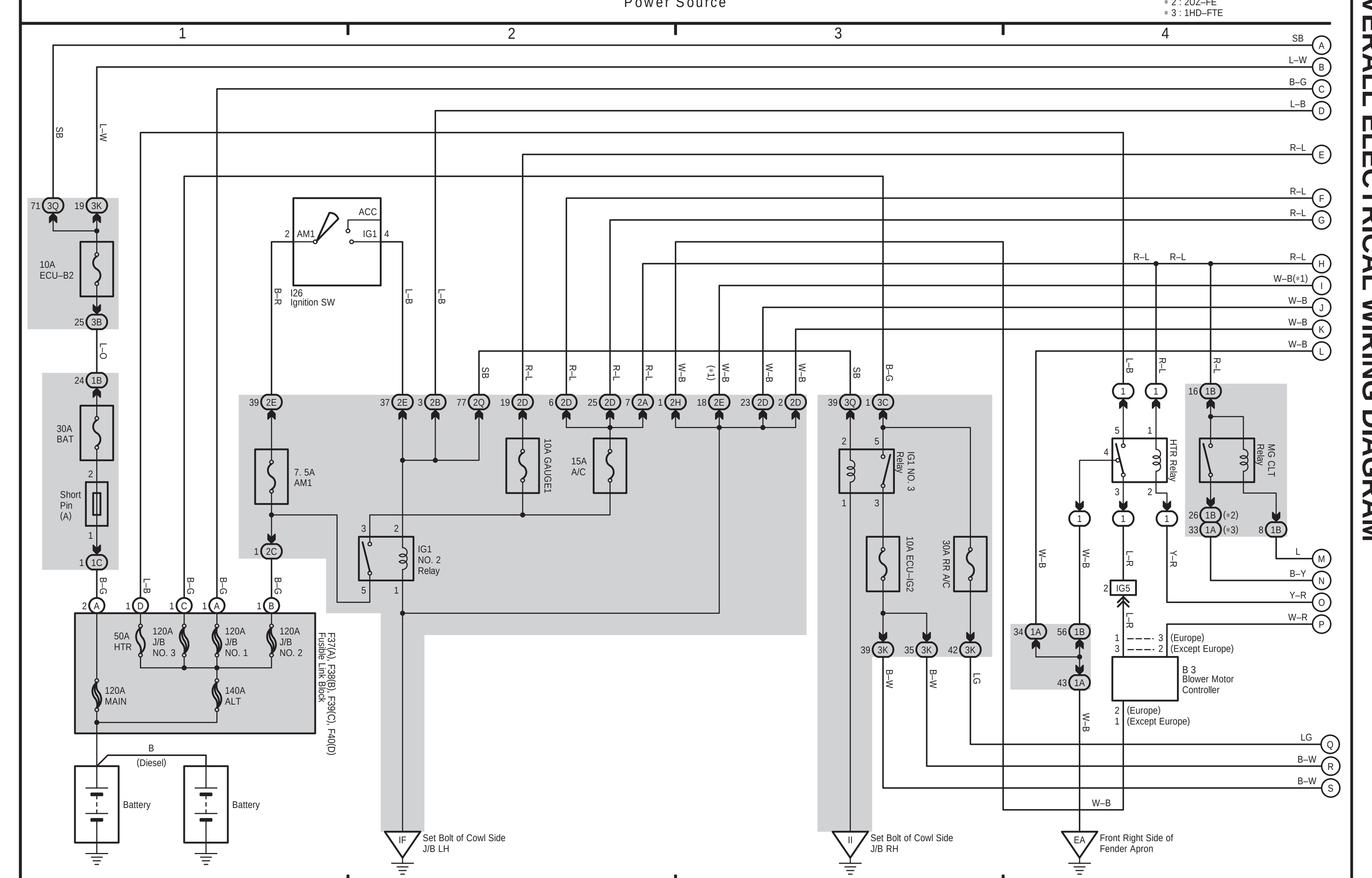

LAND CRUISER Station Wagon (EWD575E)

H OVERALL ELECTRICAL WIRING DIAGRAM

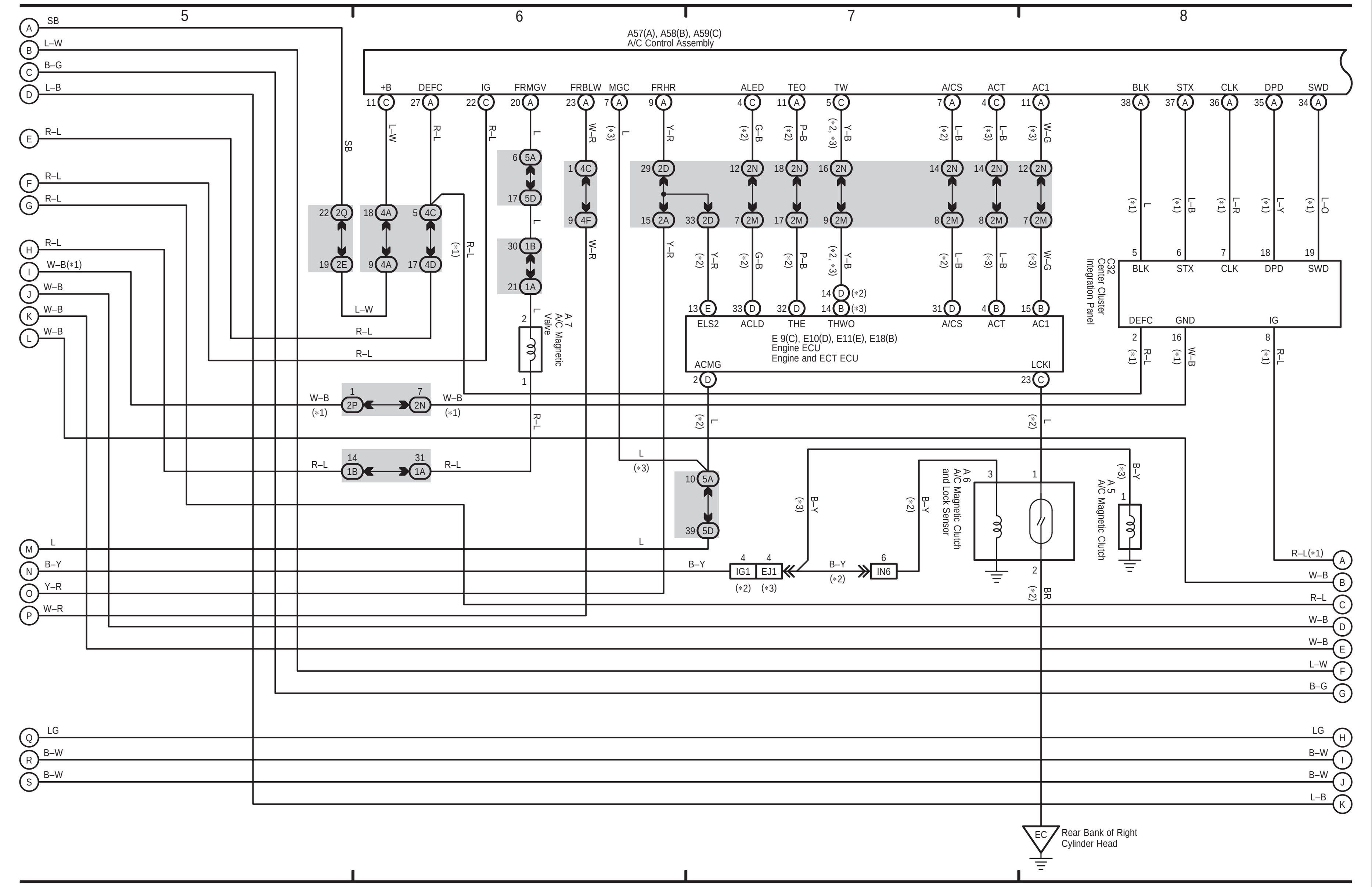

LAND CRUISER Station Wagon (EWD575E)

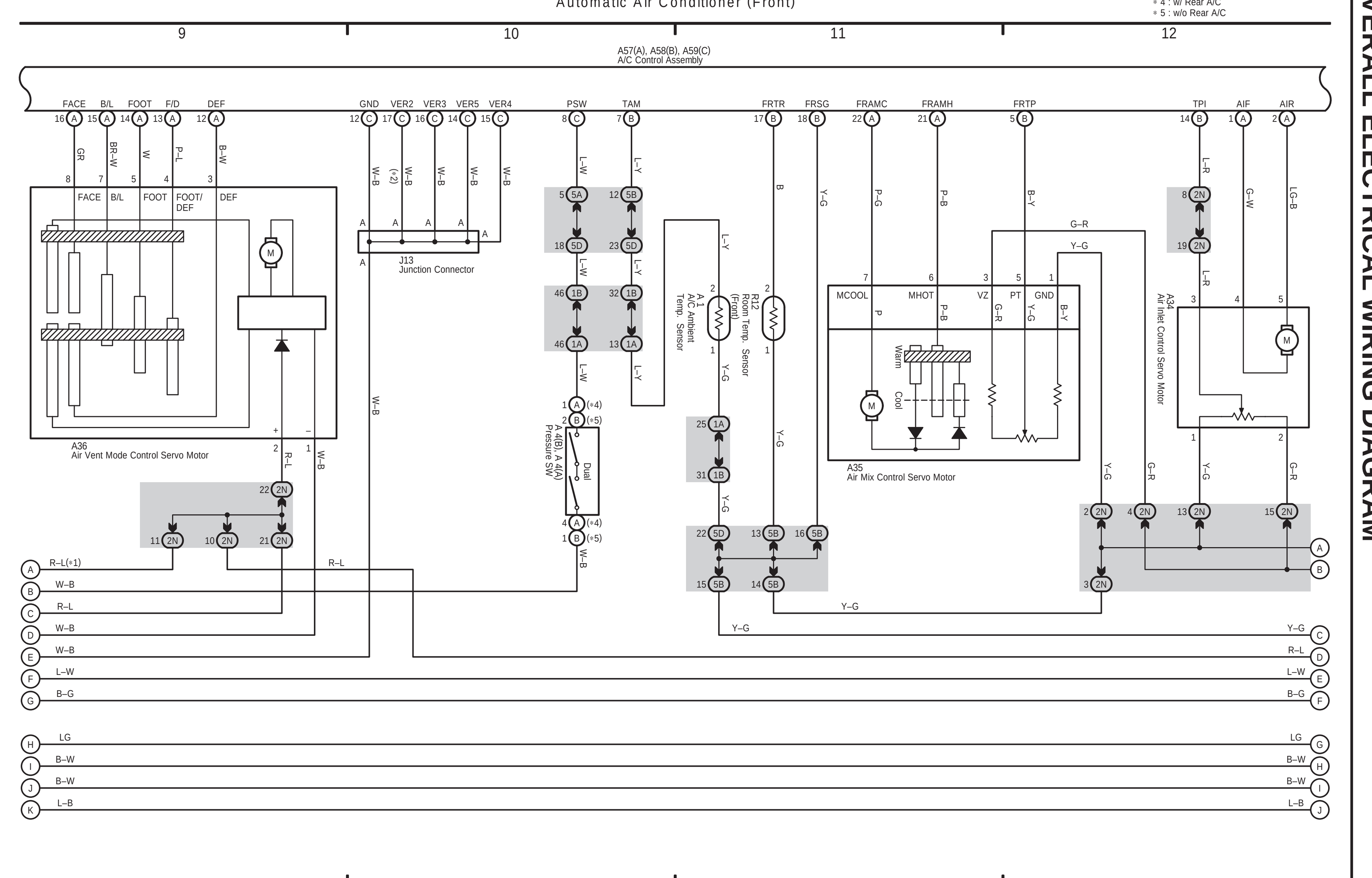

LAND CRUISER Station Wagon (EWD575E)

H OVERALL ELECTRICAL WIRING DIAGRAM

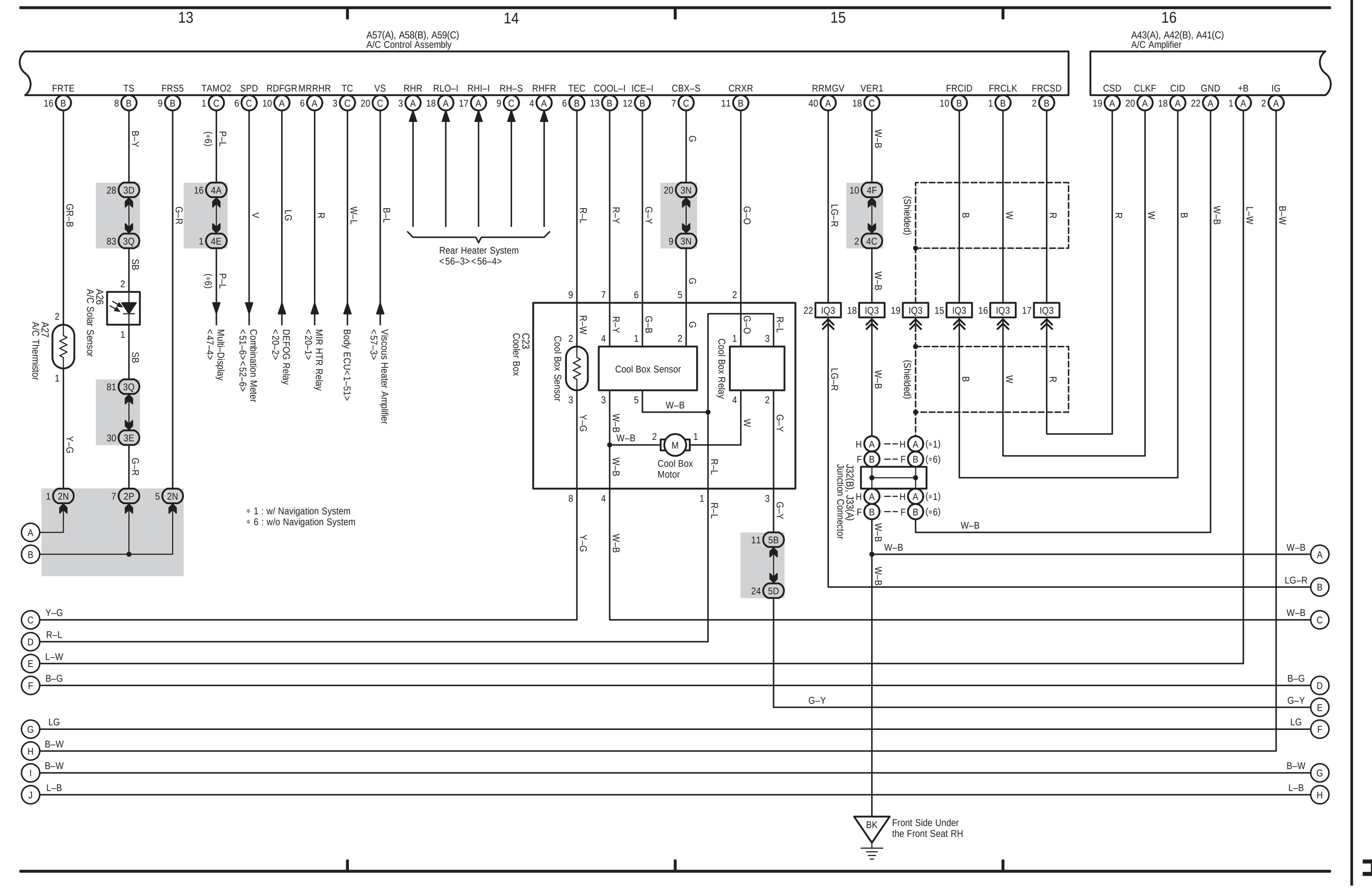

LAND CRUISER Station Wagon (EWD575E)

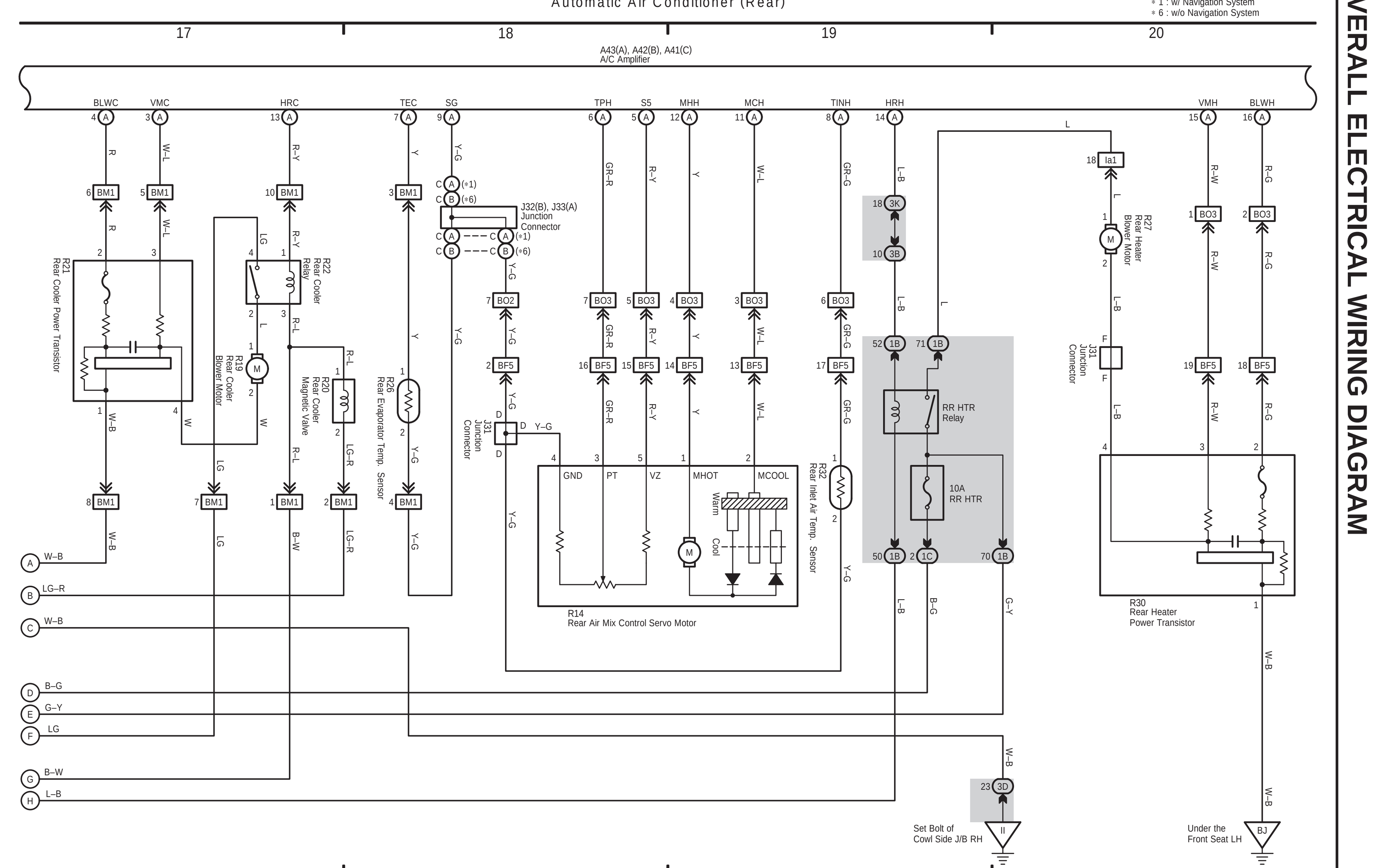

LAND CRUISER Station Wagon (EWD575E)

H OVERALL ELECTRICAL WIRING DIAGRAM

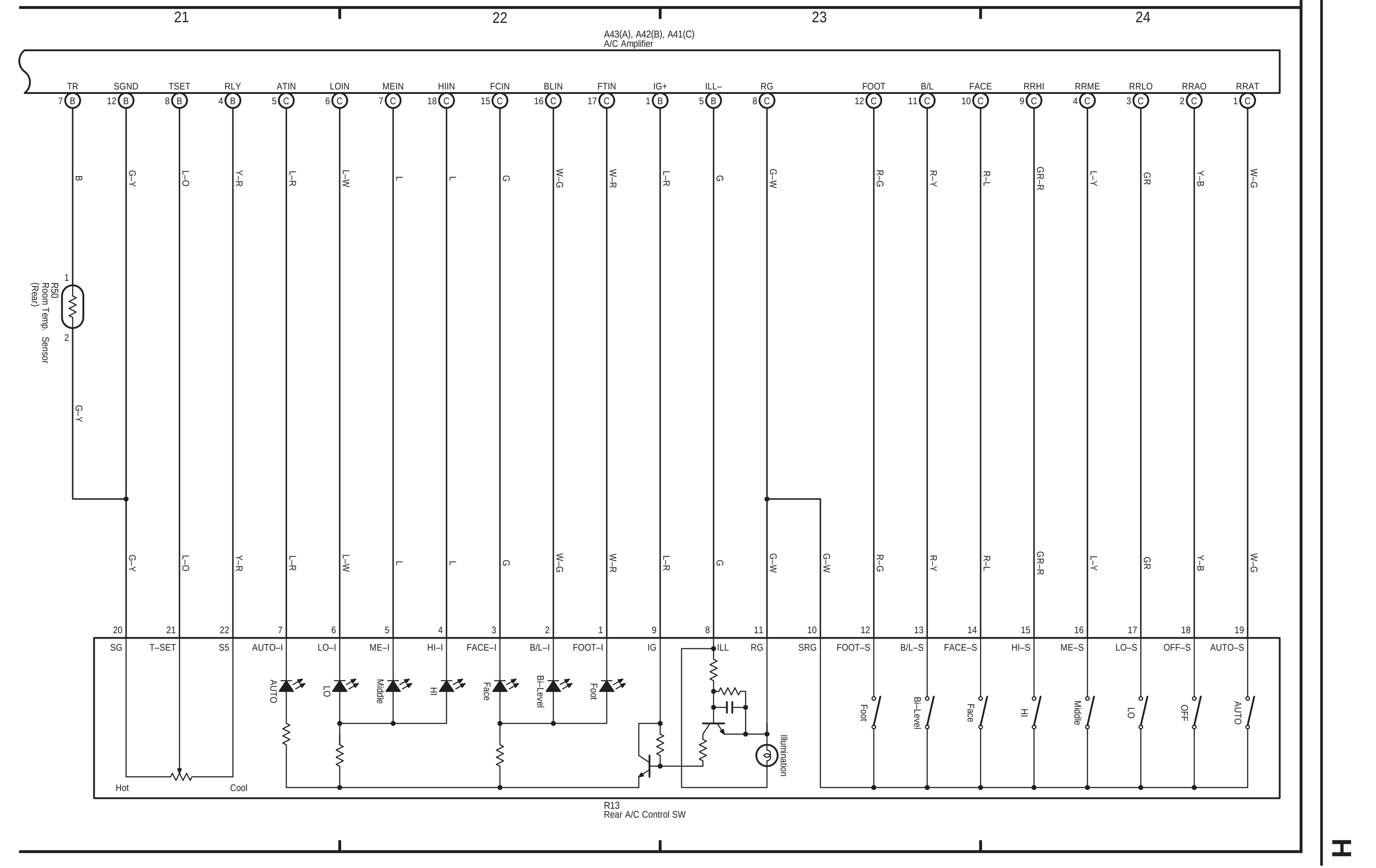

LAND CRUISER Station Wagon (EWD575E)

54 LAND CRUISER (RHD) [Cont. next page]

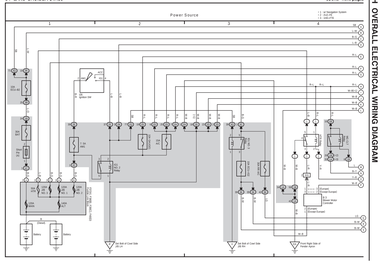

54 LAND CRUISER (RHD) (Cont' d) [Cont. next page]

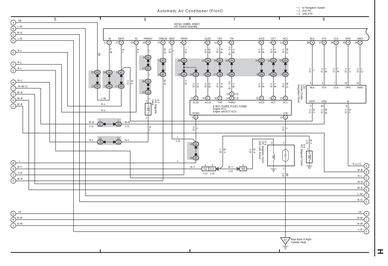

54 LAND CRUISER (RHD) (Cont' d) [Cont. next page]

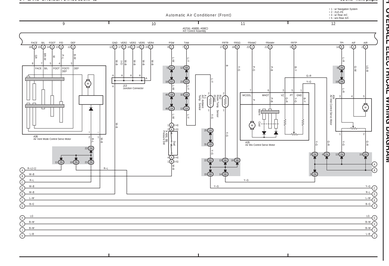

54 LAND CRUISER (RHD) (Cont' d) [Cont. next page]

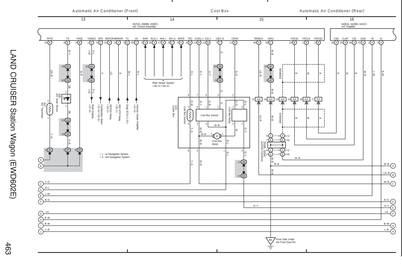

54 LAND CRUISER (RHD) (Cont' d) [Cont. next page]

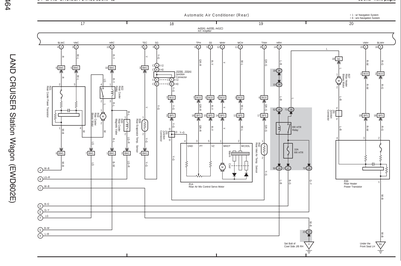

54 LAND CRUISER (RHD) (Cont' d)

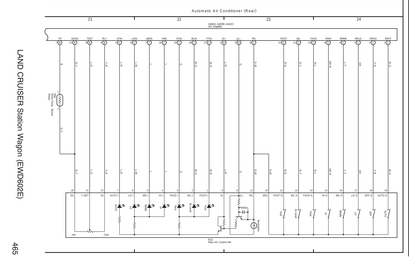

31 LAND CRUISER (RHD)

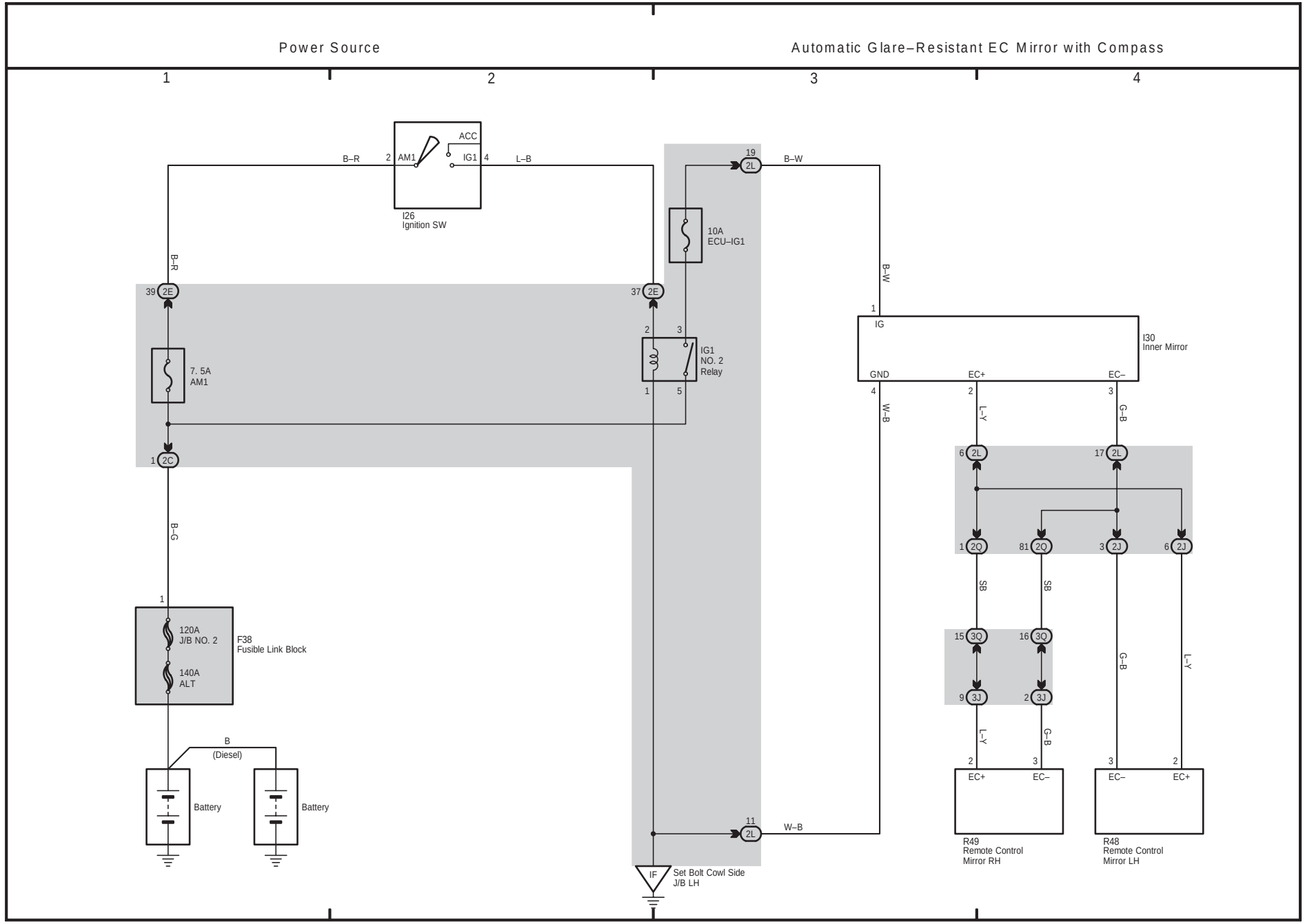

H

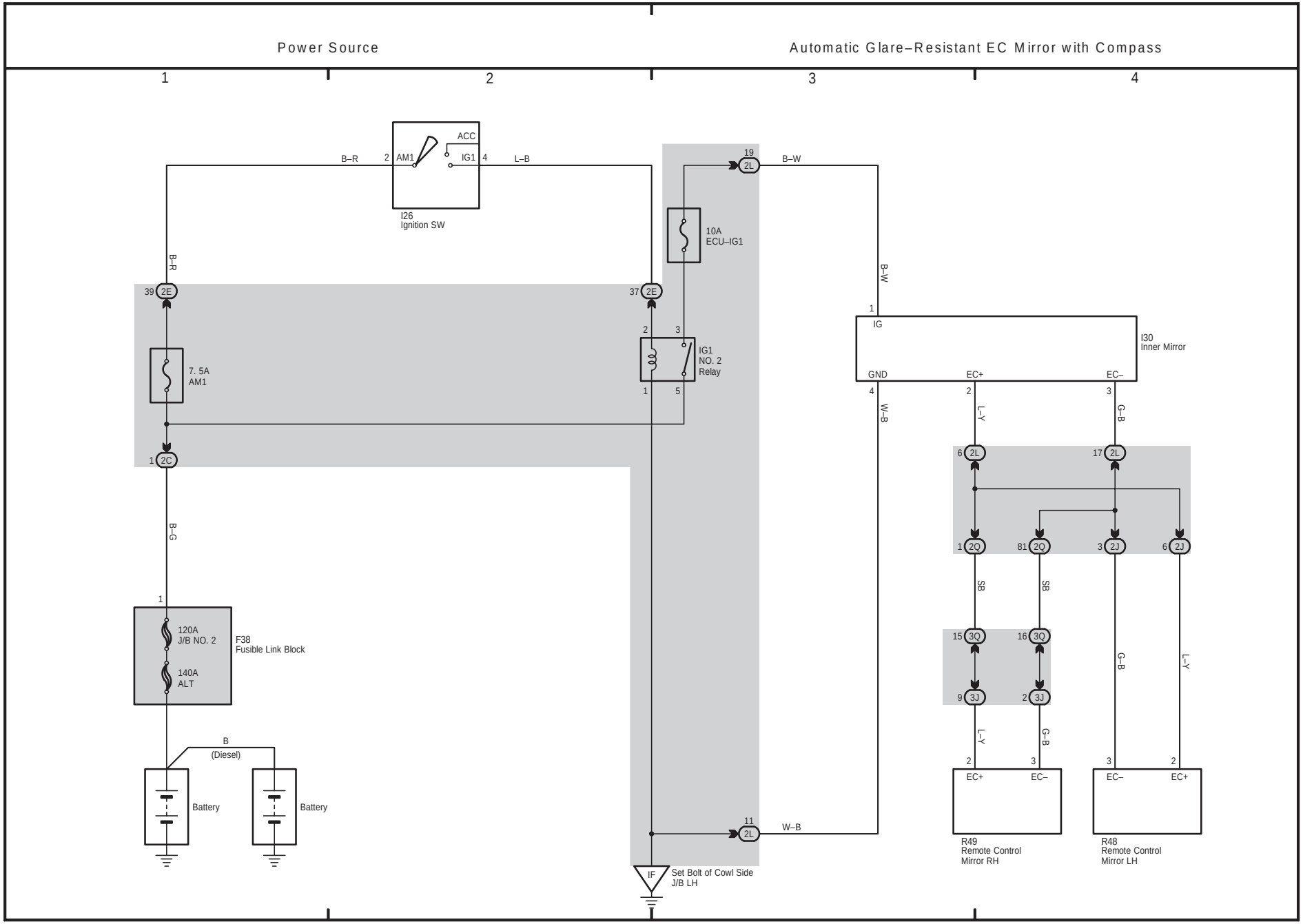
Power Source
Automatic Glare–Resistant EC Mirror with Compass
1
2
3
4
ACC
AM1
IG1
B–R
L–B
I26
Ignition SW
10A
ECU–IG1
B–W
19
2L
39
2E
37
2E
7. 5A
AM1
IG1
NO. 2
Relay
1
2C
B–G
120A
J/B NO. 2
140A
ALT
F38
Fusible Link Block
B
(Diesel)
Battery
Battery
IG
I30
Inner Mirror
GND
EC+
EC–
W–B
L–Y
G–B
6
2L
17
2L
1
2Q
81
2Q
3
2J
6
2J
SB
15
3Q
16
3Q
9
3J
2
3J
R49
Remote Control
Mirror RH
R48
Remote Control
Mirror LH
11
2L
IF
Set Bolt of Cowl Side
J/B LH

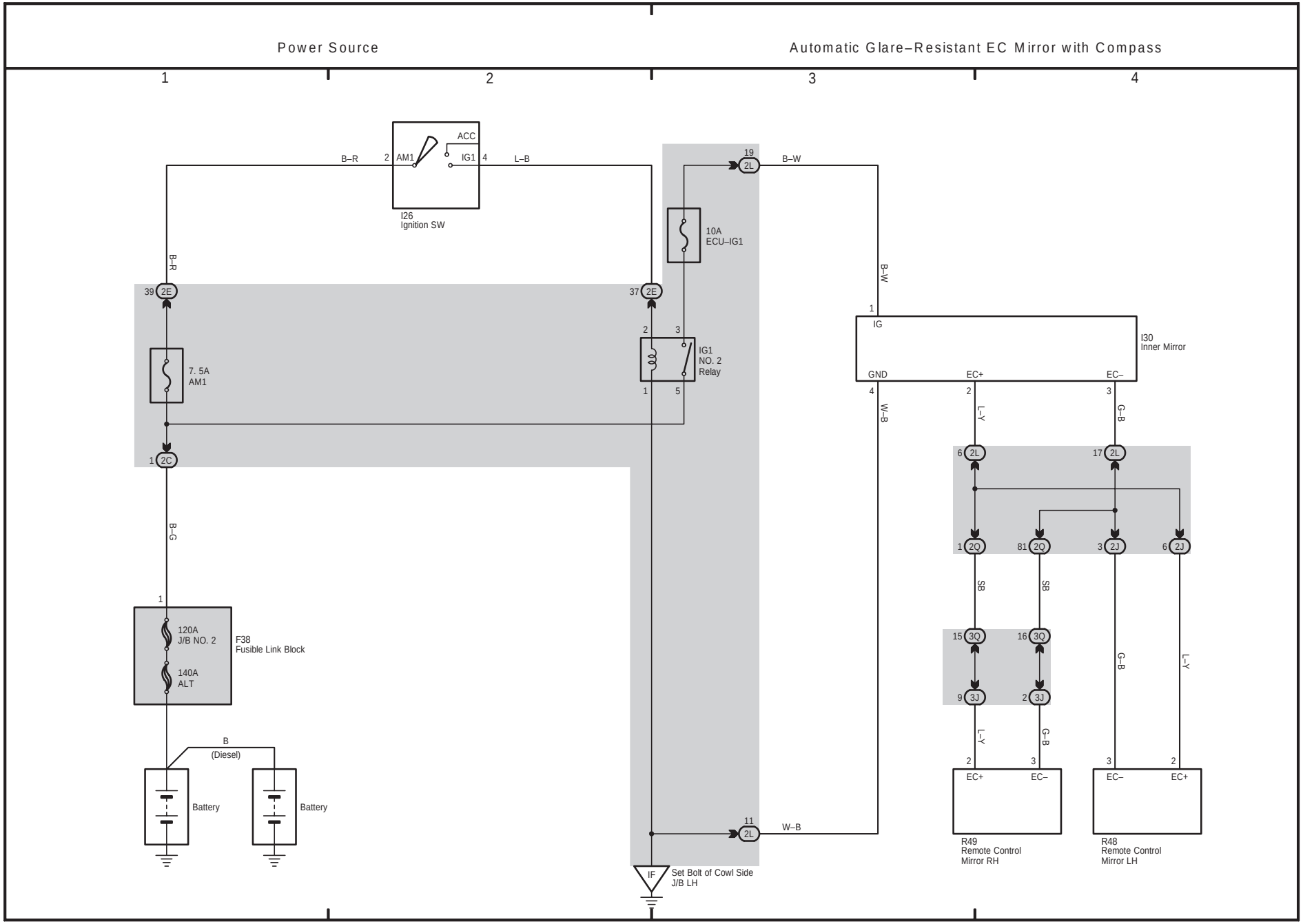
Power Source
Automatic Glare–Resistant EC Mirror with Compass
1
2
3
4
ACC
AM1
IG1
B–R
L–B
I26
Ignition SW
10A
ECU–IG1
B–W
19
2L
39
2E
37
2E
7. 5A
AM1
IG1
NO. 2
Relay
2
3
1
5
1
2C
IG
I30
Inner Mirror
GND
EC+
EC–
4
2
3
W–B
L–Y
G–B
6
2L
17
2L
1
2Q
81
2Q
3
2J
6
2J
SB
SB
15
3Q
16
3Q
9
3J
2
3J
L–Y
G–B
G–B
L–Y
B–G
1
120A
J/B NO. 2
140A
ALT
F38
Fusible Link Block
B
(Diesel)
Battery
Battery
11
2L
W–B
IF
Set Bolt of Cowl Side
J/B LH
R49
Remote Control
Mirror RH
R48
Remote Control
Mirror LH

F ELECTRICAL WIRING DIAGRAM (System Circuits)

Power Source

Back–Up Light

Stop Light

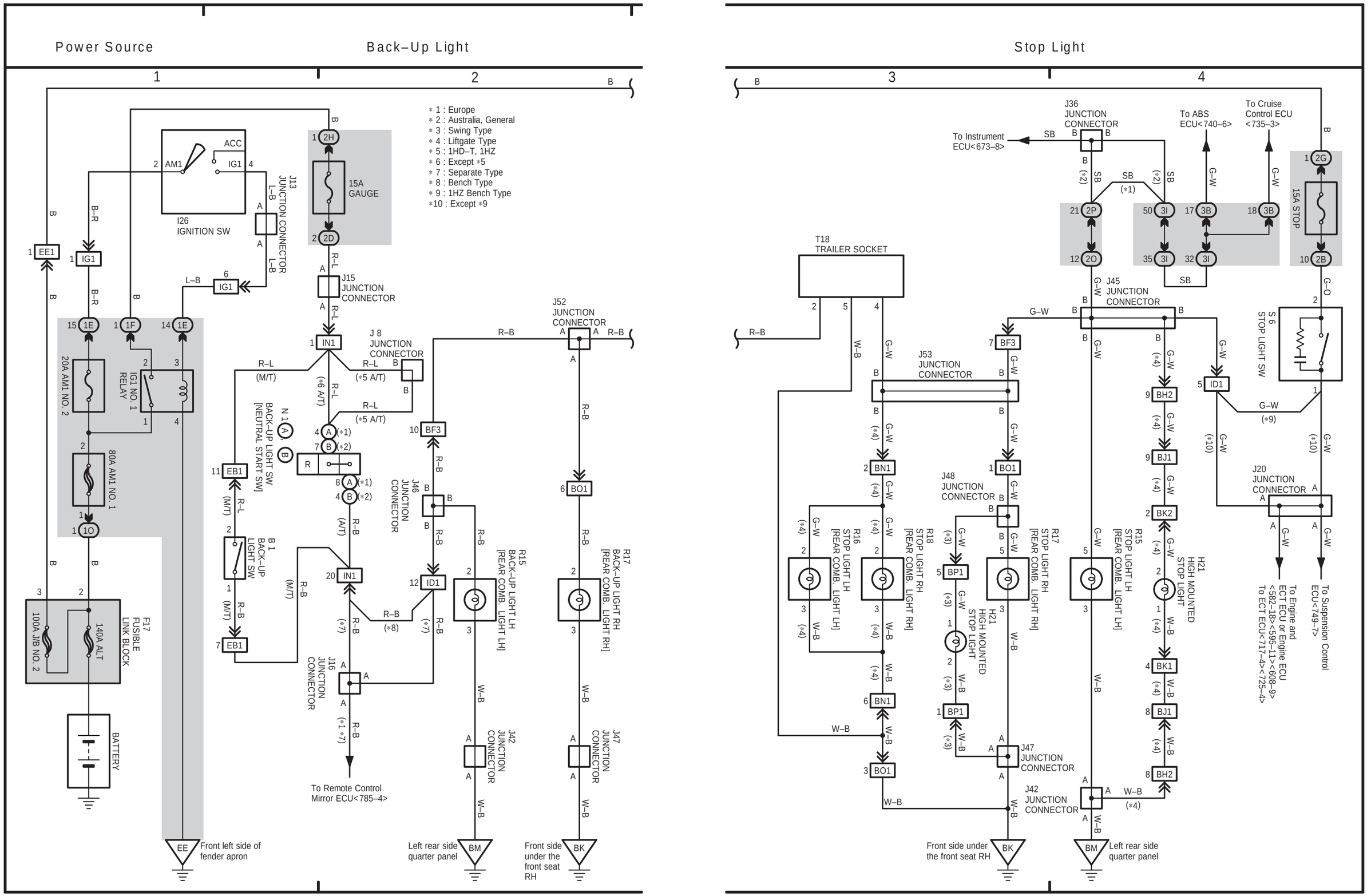

660

661

LAND CRUISER Station Wagon (EWD342F)

LAND CRUISER Station Wagon (EWD342F)

RHD

RHD

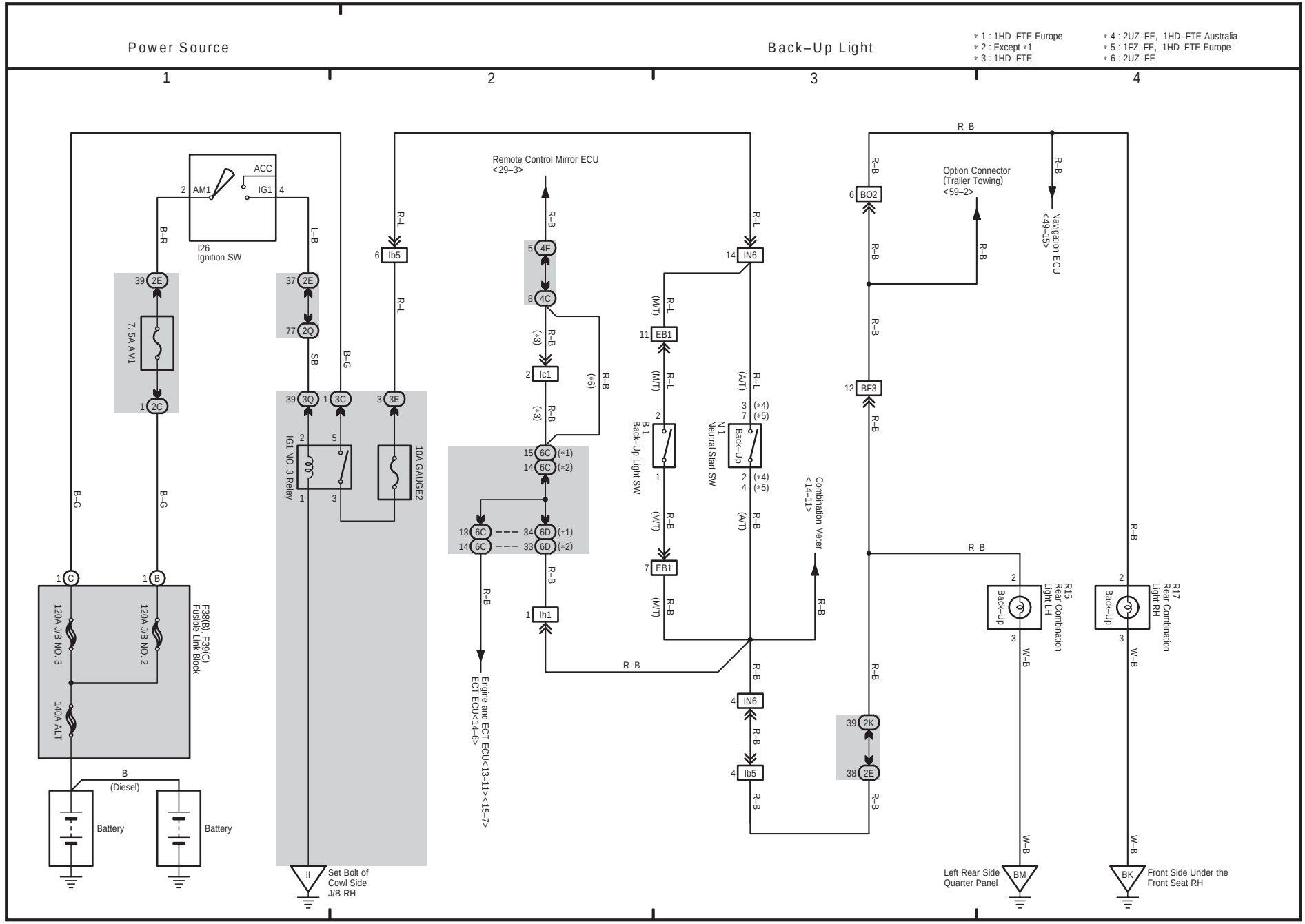
Power Source
Back–Up Light
1
2
3
4
* 1 : 1HD–FTE Europe
* 2 : Except *1
* 3 : 1HD–FTE
* 4 : 2UZ–FE, 1HD–FTE Australia
* 5 : 1FZ–FE, 1HD–FTE Europe
* 6 : 2UZ–FE
ACC
IG1
AM1
I26
Ignition SW
7. 5A AM1
IG1 NO. 3 Relay
10A GAUGE2
F38(B), F39(C)
Fusible Link Block
120A J/B NO. 3
120A J/B NO. 2
140A ALT
B
(Diesel)
Battery
Battery
Set Bolt of
Cowl Side
J/B RH
Remote Control Mirror ECU
<29–3>
Engine and ECT ECU<13–11><15–7>
ECT ECU<14–6>
B 1
Back–Up Light SW
N 1
Neutral Start SW
Back–Up
Combination Meter
<14–11>
Option Connector
(Trailer Towing)
<59–2>
Navigation ECU
<49–15>
R15
Rear Combination
Light LH
R17
Rear Combination
Light RH
Left Rear Side
Quarter Panel
Front Side Under the
Front Seat RH
(M/T)
(A/T)
(*1)
(*2)
(*3)
(*4)
(*5)
(*6)

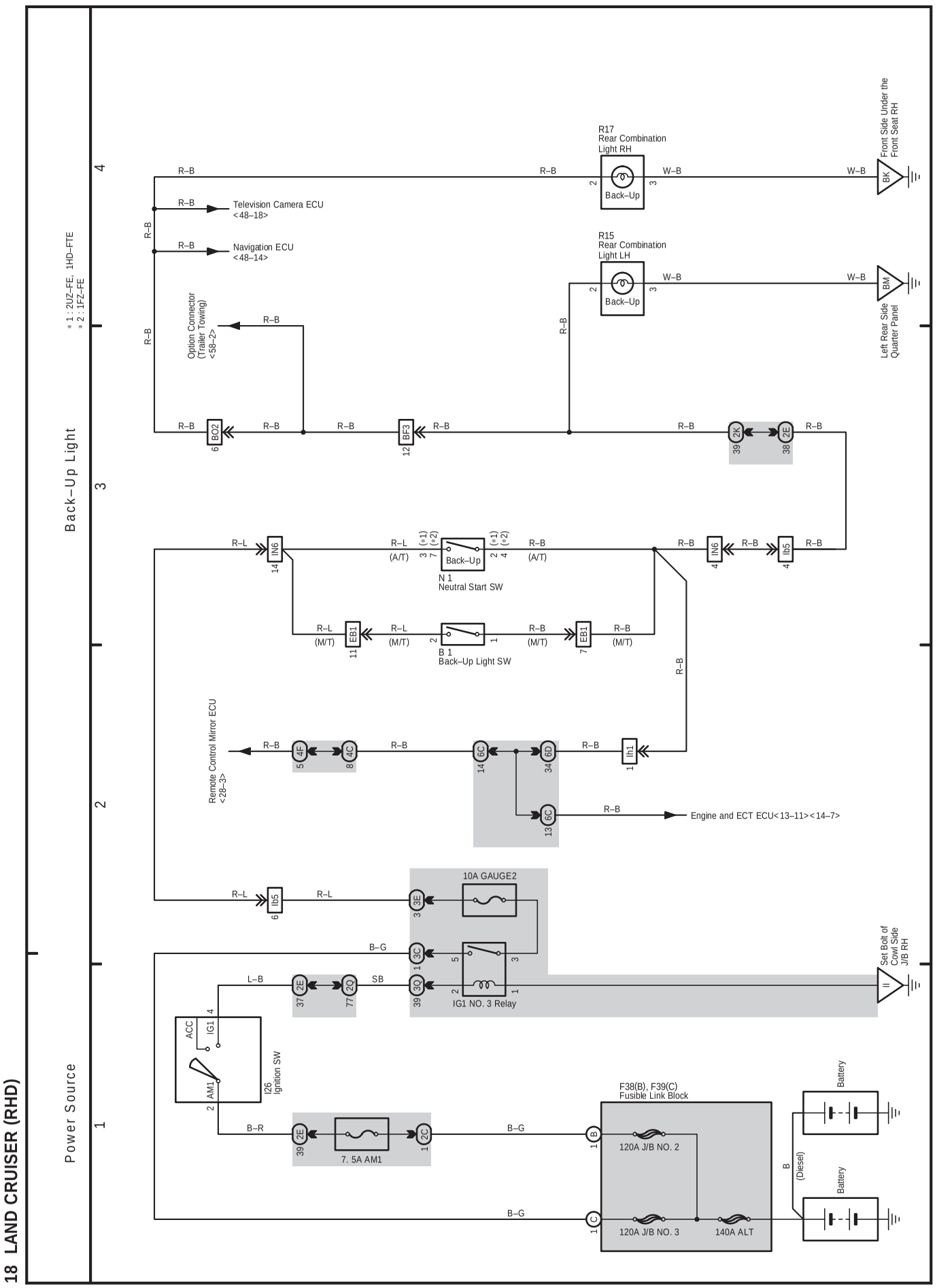
18 LAND CRUISER (RHD)
Power Source
Back–Up Light
*1 : 2UZ–FE, 1HD–FTE
*2 : 1FZ–FE
R17
Rear Combination
Light RH
Back–Up
Front Side Under the
Front Seat RH
R15
Rear Combination
Light LH
Back–Up
Left Rear Side
Quarter Panel
Television Camera ECU
<48–18>
Navigation ECU
<48–14>
Option Connector
(Trailer Towing)
<58–2>
Remote Control Mirror ECU
<28–3>
Engine and ECT ECU<13–11><14–7>
N 1
Neutral Start SW
B 1
Back–Up Light SW
I26
Ignition SW
ACC
IG1
AM1
10A GAUGE2
IG1 NO. 3 Relay
7. 5A AM1
F38(B), F39(C)
Fusible Link Block
120A J/B NO. 2
120A J/B NO. 3
140A ALT
Battery
Battery
B
(Diesel)
Set Bolt of
Cowl Side
J/B RH

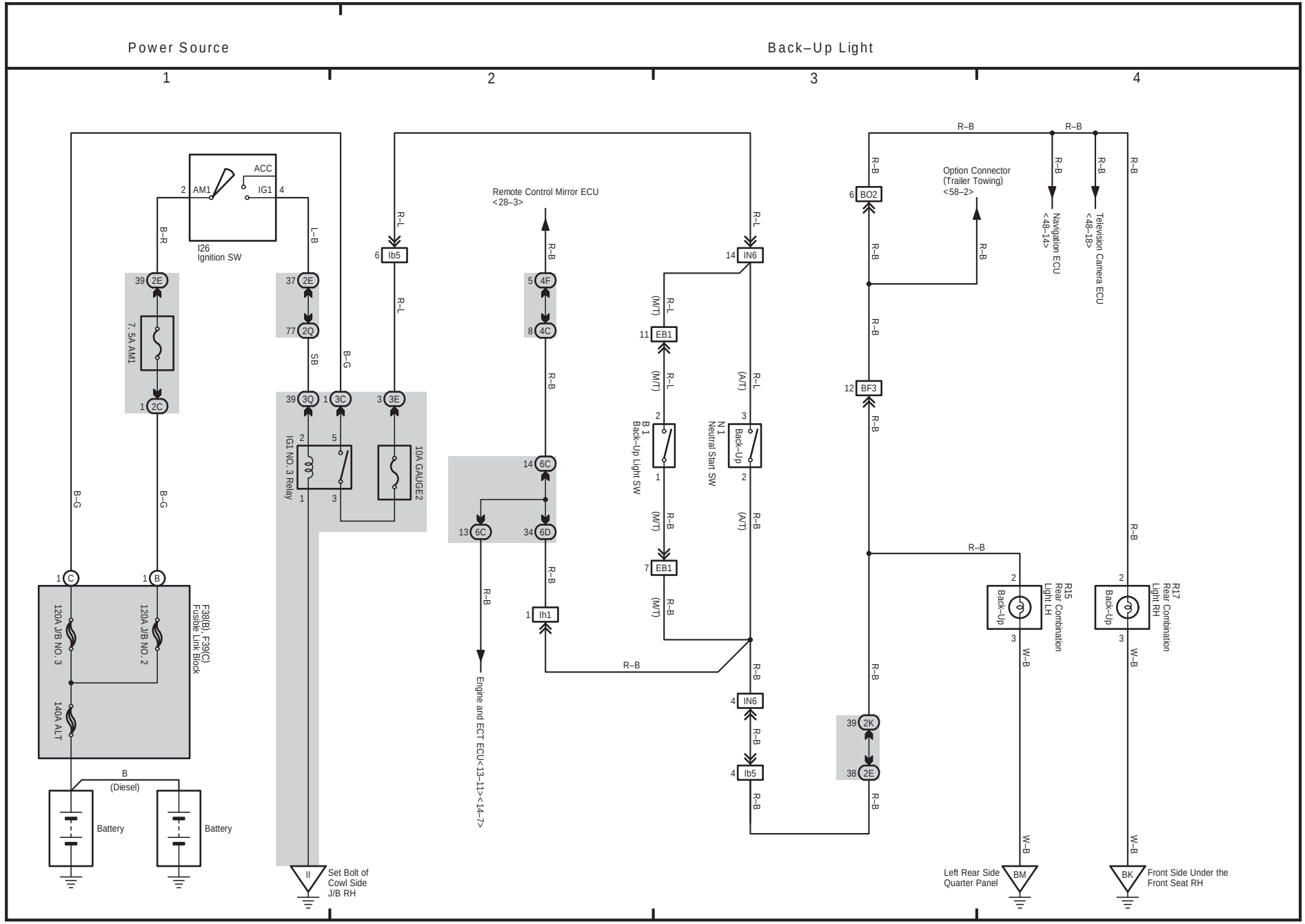
Power Source
Back–Up Light
1
2
3
4
ACC
IG1
AM1
I26
Ignition SW
7. 5A AM1
IG1 NO. 3 Relay
10A GAUGE2
F38(B), F39(C)
Fusible Link Block
120A J/B NO. 3
120A J/B NO. 2
140A ALT
B
(Diesel)
Battery
Battery
Set Bolt of
Cowl Side
J/B RH
Remote Control Mirror ECU
<28–3>
Engine and ECT ECU<13–11><14–7>
Back–Up Light SW
Neutral Start SW
Back–Up
Option Connector
(Trailer Towing)
<58–2>
Navigation ECU
<48–14>
Television Camera ECU
<48–18>
R15
Rear Combination
Light LH
R17
Rear Combination
Light RH
Left Rear Side
Quarter Panel
Front Side Under the
Front Seat RH

F ELECTRICAL WIRING DIAGRAM (System Circuits)

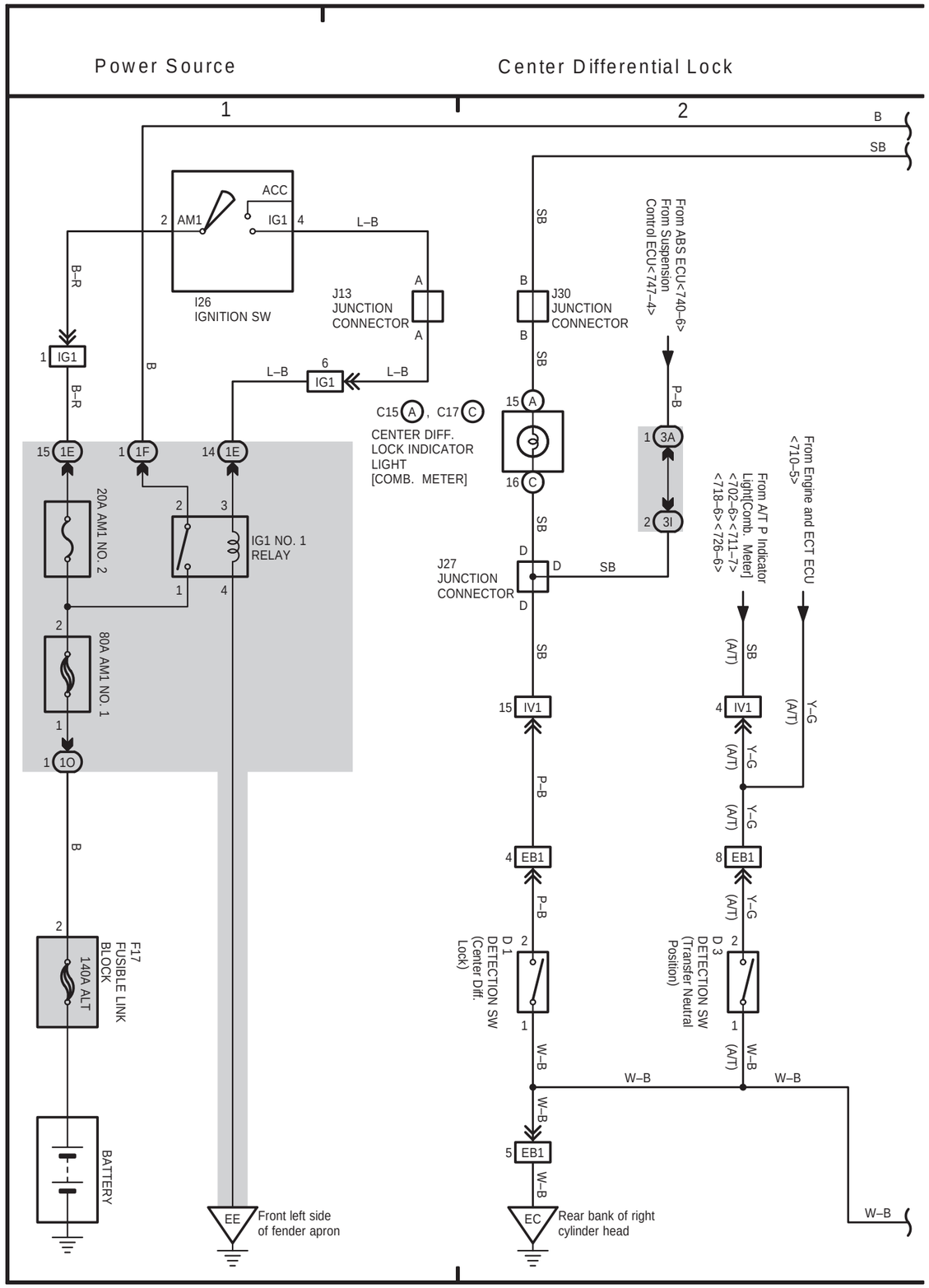

754

RHD

LAND CRUISER Station Wagon (EWD342F)

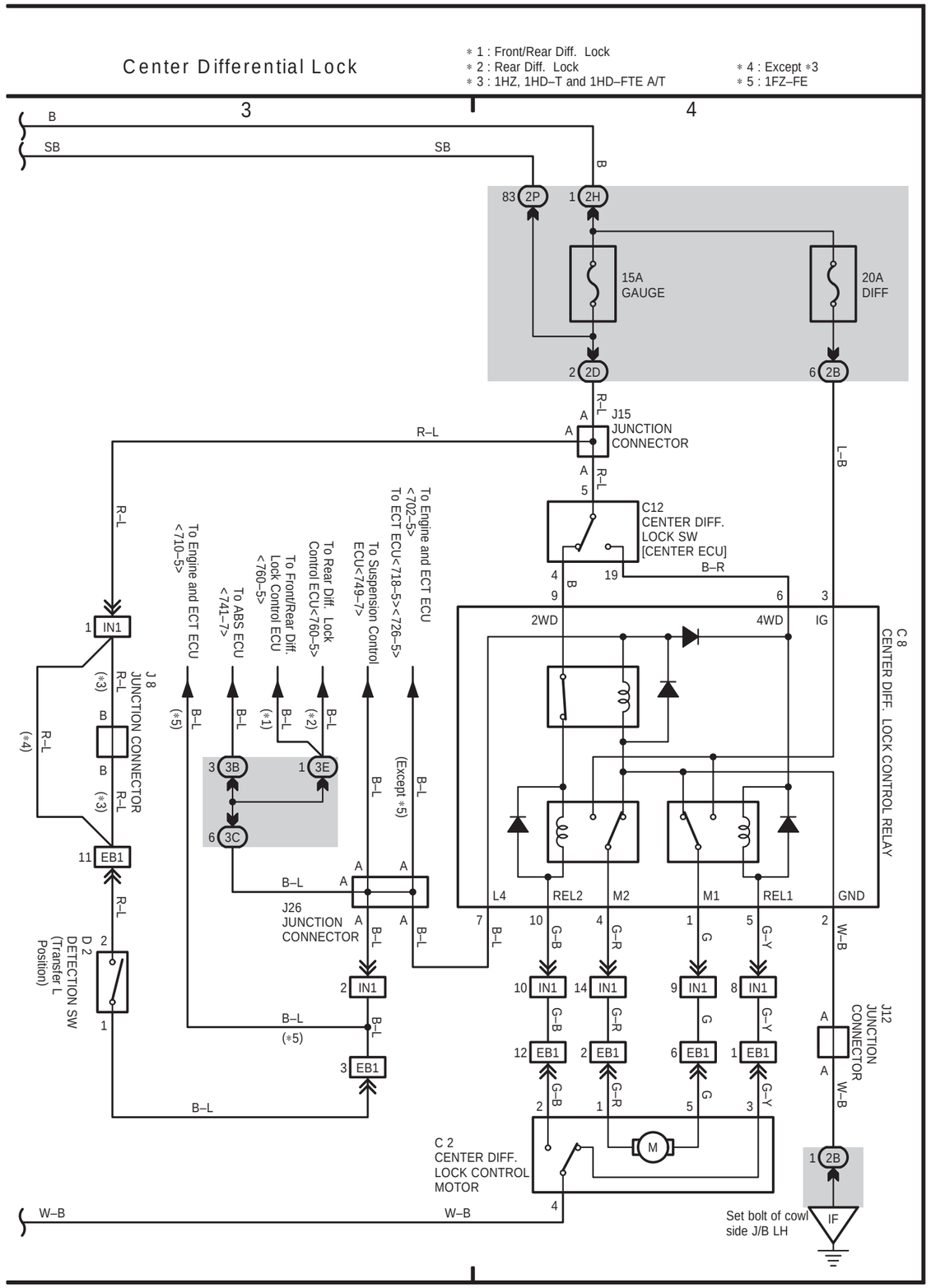

755

RHD

LAND CRUISER Station Wagon (EWD342F)

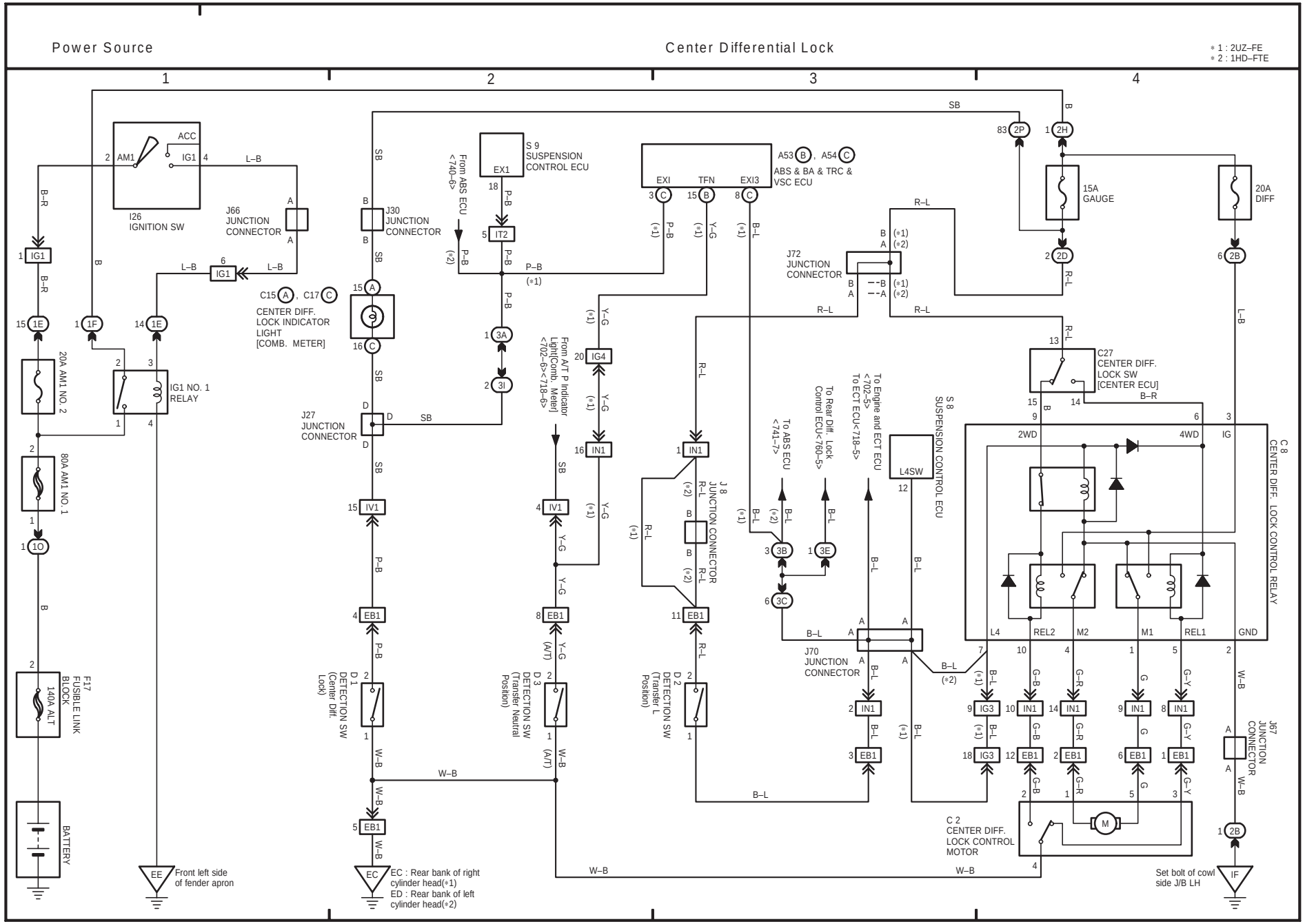
Power Source
Center Differential Lock
* 1 : 2UZ–FE
* 2 : 1HD–FTE
1
2
3
4
ACC
IG1
AM1
I26
IGNITION SW
J66
JUNCTION
CONNECTOR
S 9
SUSPENSION
CONTROL ECU
EX1
From ABS ECU
<740–6>
EXI
TFN
EXI3
A53 B , A54 C
ABS & BA & TRC &
VSC ECU
J72
JUNCTION
CONNECTOR
15A
GAUGE
20A
DIFF
J30
JUNCTION
CONNECTOR
C15 A , C17 C
CENTER DIFF.
LOCK INDICATOR
LIGHT
[COMB. METER]
20A AM1 NO. 2
80A AM1 NO. 1
IG1 NO. 1
RELAY
J27
JUNCTION
CONNECTOR
From A/T P Indicator
Light[Comb. Meter]
<702–6><718–6>
C27
CENTER DIFF.
LOCK SW
[CENTER ECU]
C 8
CENTER DIFF. LOCK CONTROL RELAY
2WD
4WD
IG
L4
REL2
M2
M1
REL1
GND
L4SW
S 8
SUSPENSION CONTROL ECU
To ABS ECU
<741–7>
To Rear Diff. Lock
Control ECU<760–5>
To Engine and ECT ECU
<702–5>
To ECT ECU<718–5>
J 8
JUNCTION CONNECTOR
J70
JUNCTION
CONNECTOR
D 1
DETECTION SW
(Center Diff.
Lock)
D 3
DETECTION SW
(Transfer Neutral
Position)
D 2
DETECTION SW
(Transfer L
Position)
C 2
CENTER DIFF.
LOCK CONTROL
MOTOR
J67
JUNCTION
CONNECTOR
F17
FUSIBLE LINK
BLOCK
140A ALT
BATTERY
EE
Front left side
of fender apron
EC
EC : Rear bank of right
cylinder head(*1)
ED : Rear bank of left
cylinder head(*2)
Set bolt of cowl
side J/B LH
IF

27 LAND CRUISER (RHD) (Cont. next page)

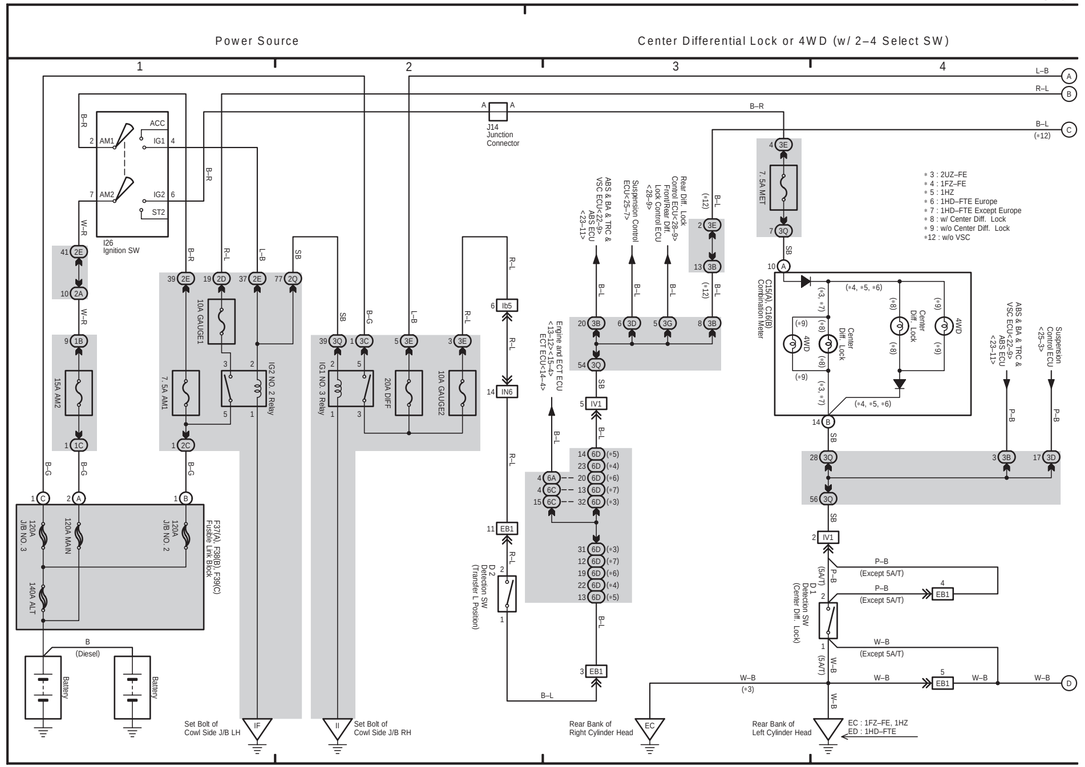

27 LAND CRUISER (RHD) (Cont' d)

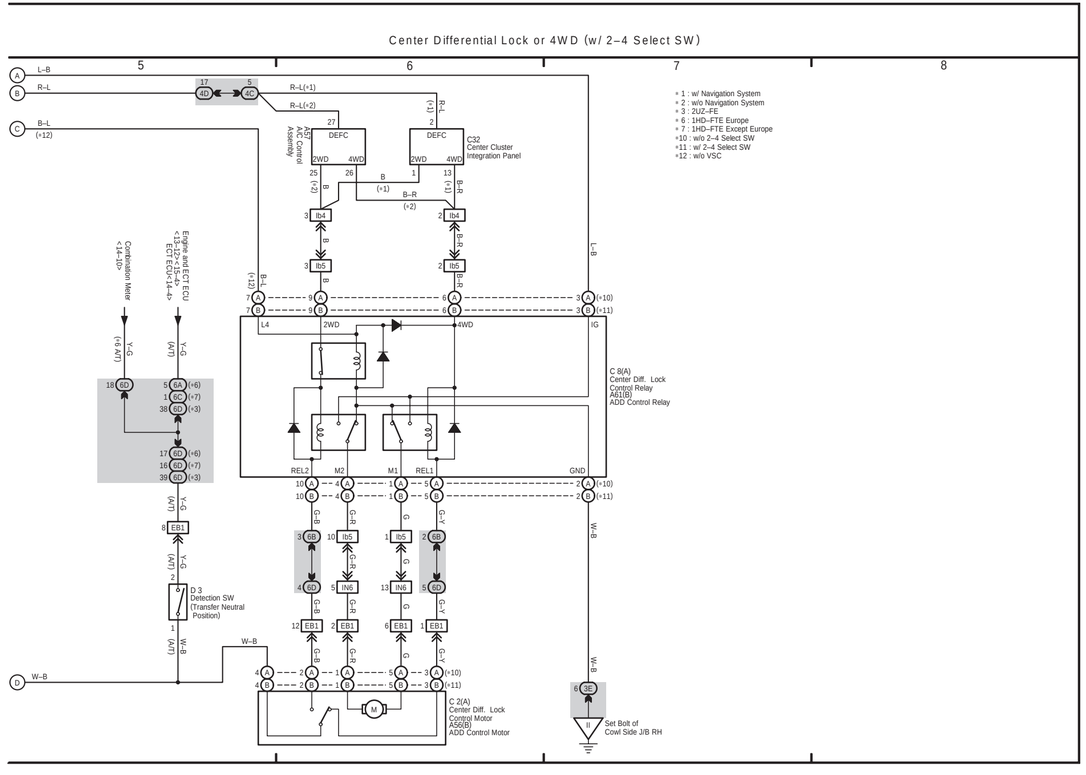

H

26 LAND CRUISER (RHD)

(Cont. next page)

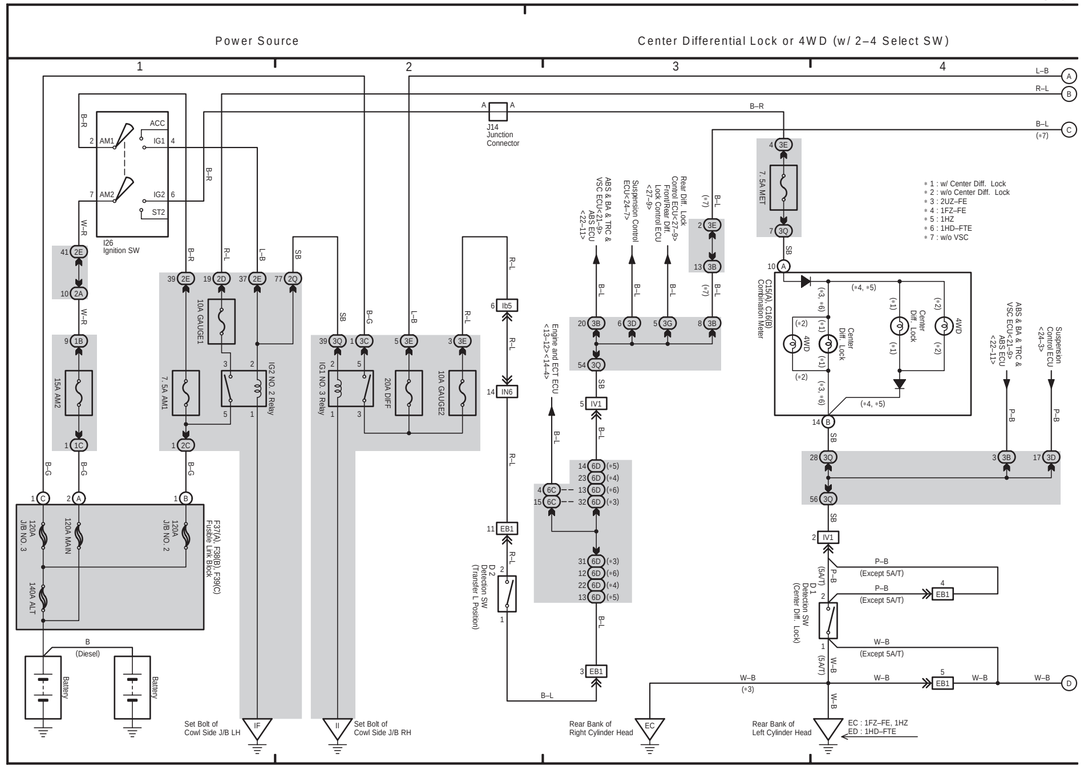

26 LAND CRUISER (RHD) (Cont' d)

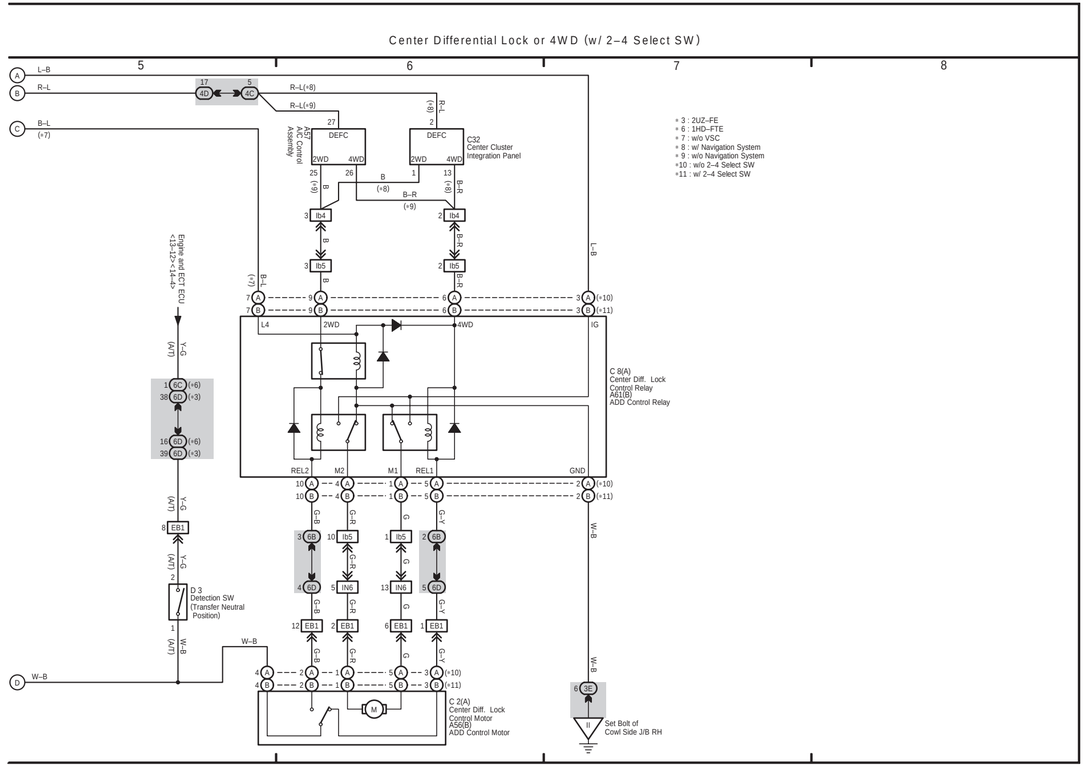

26 LAND CRUISER (RHD) (Cont. next page)

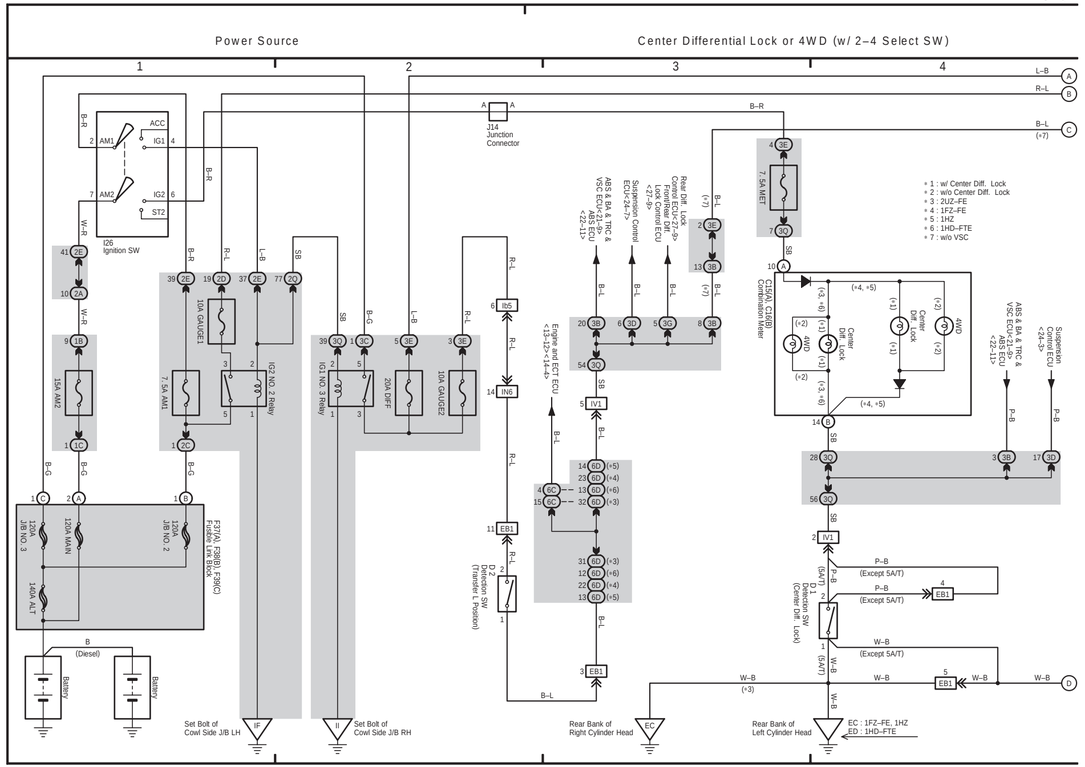

26 LAND CRUISER (RHD) (Cont' d)

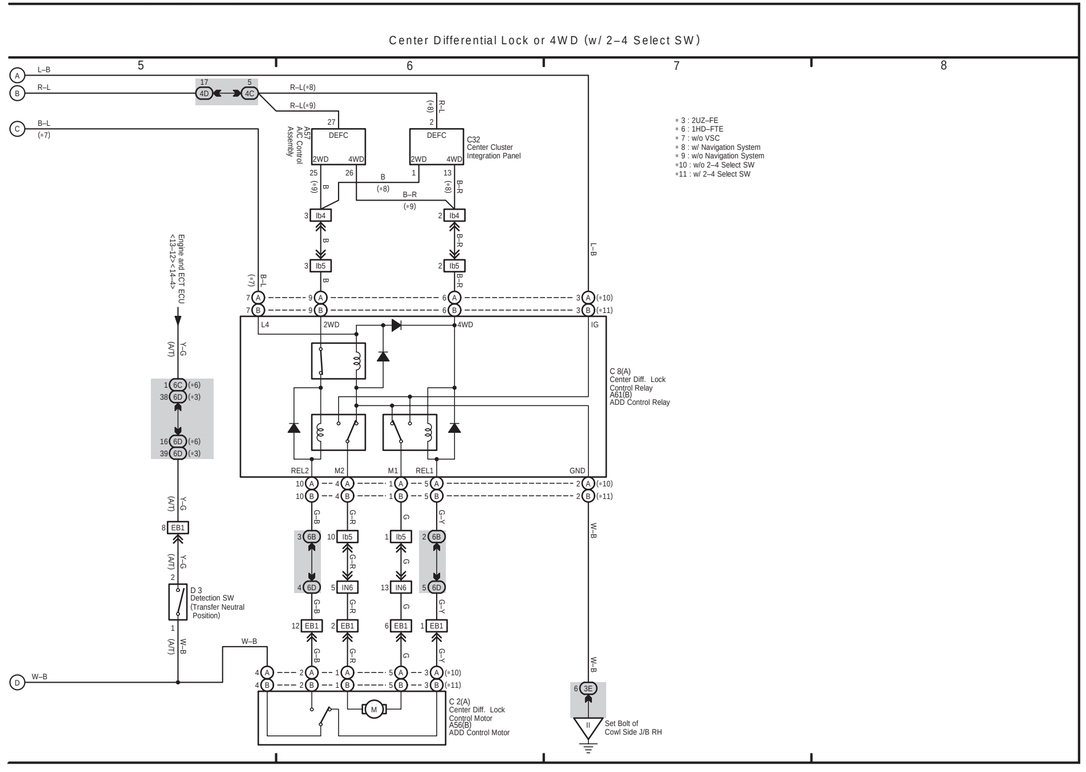

F ELECTRICAL WIRING DIAGRAM (System Circuits)

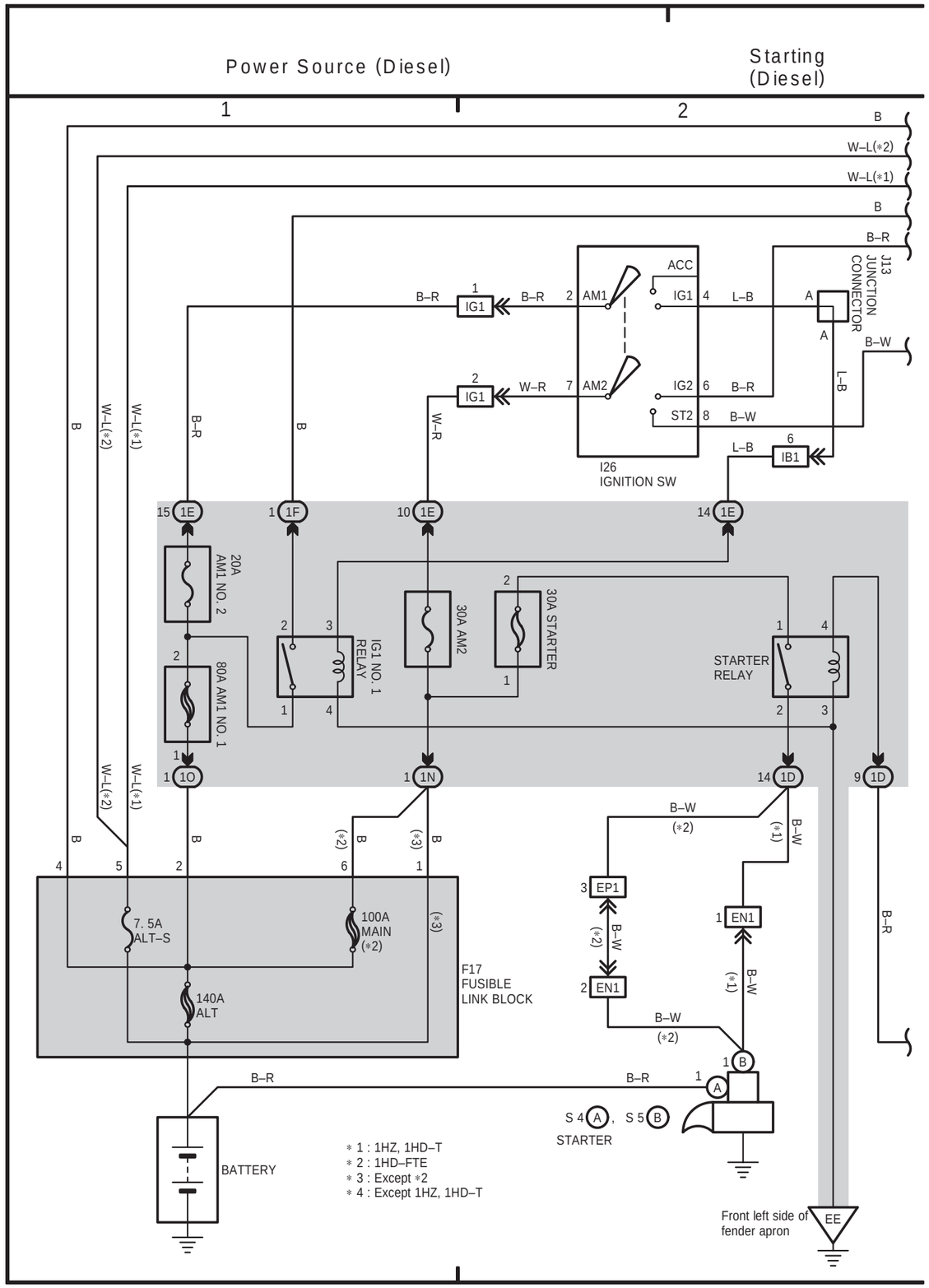

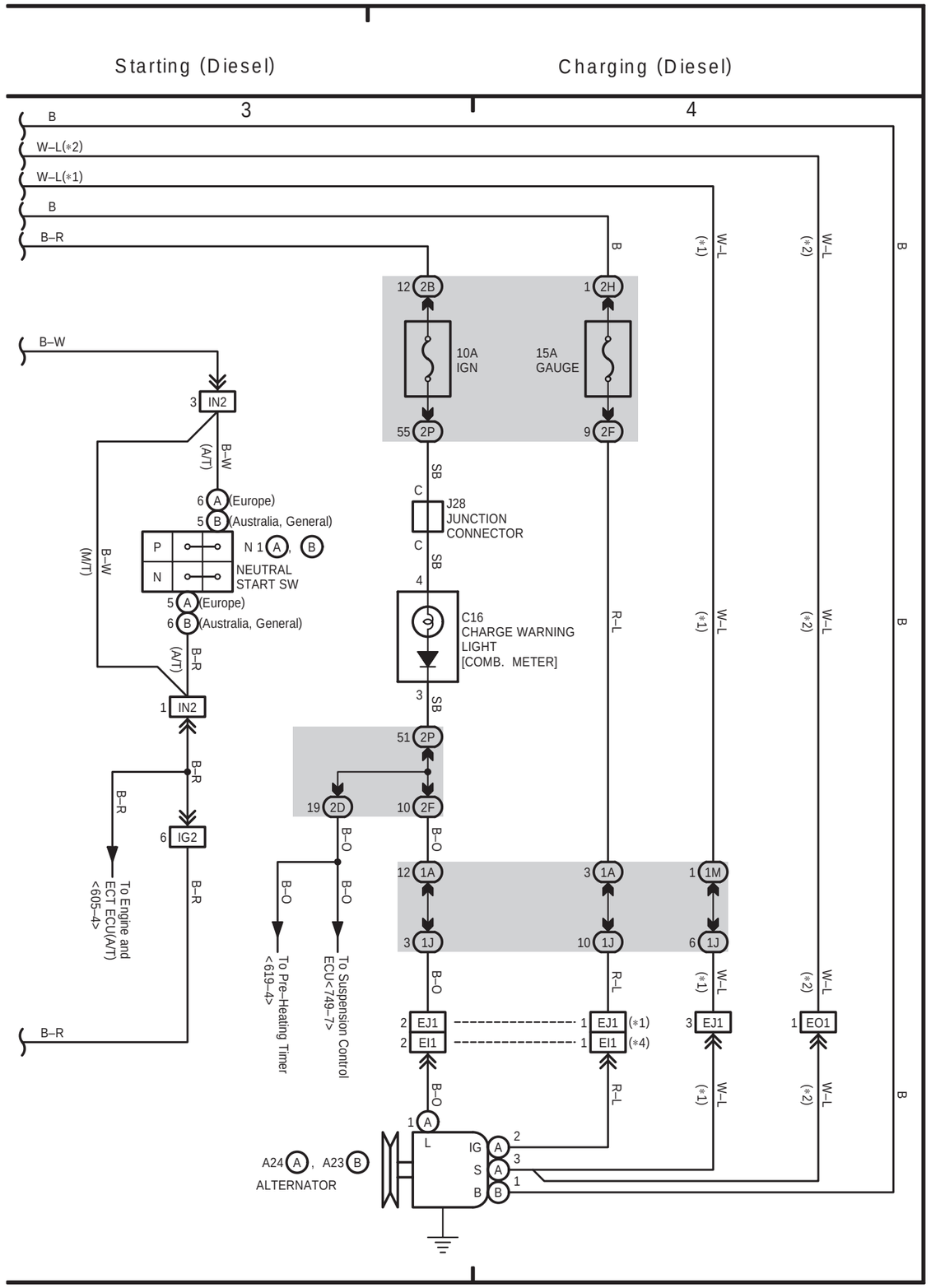

LAND CRUISER Station Wagon (EWD342F)

RHD

RHD

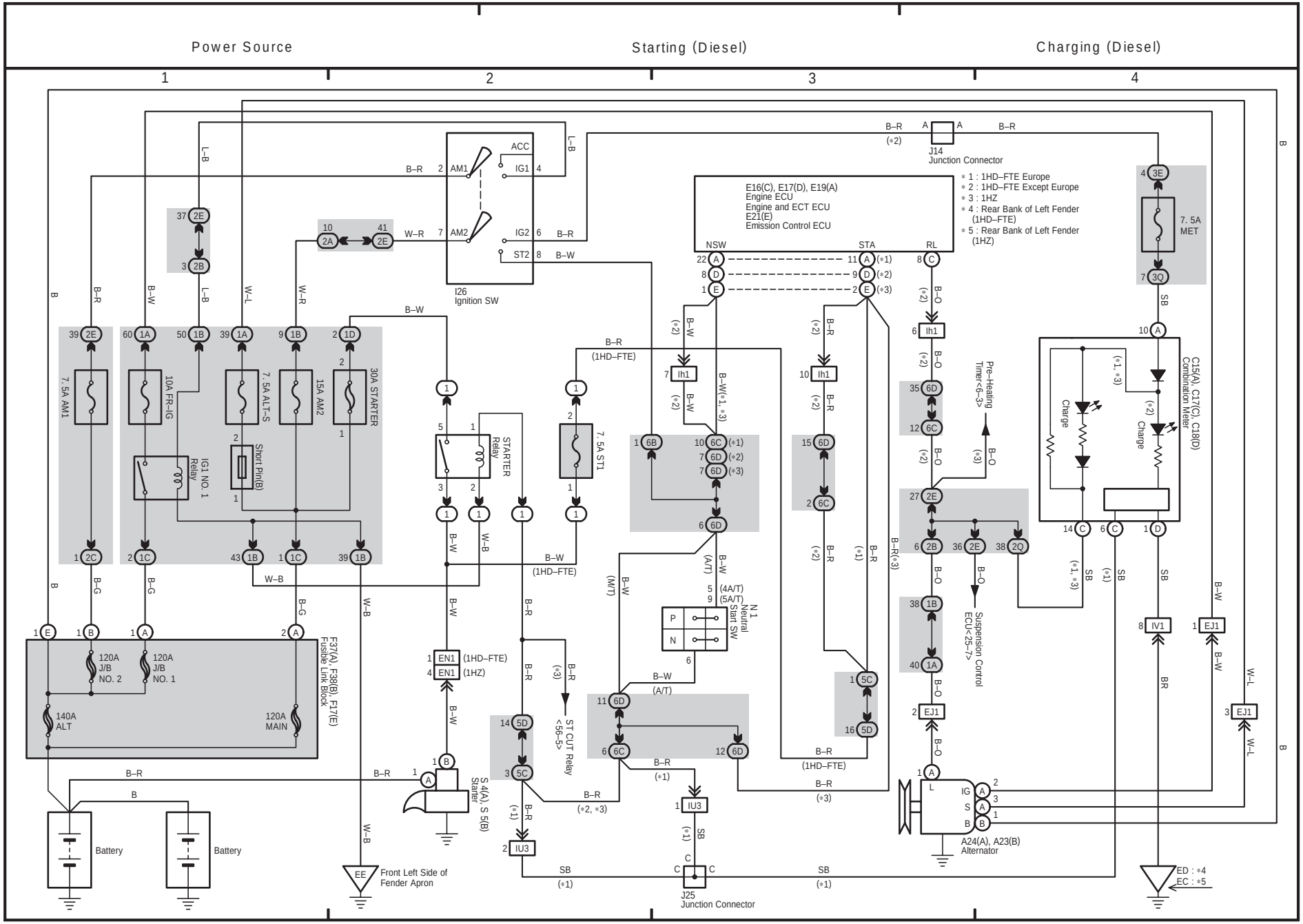
Power Source
Starting (Diesel)
Charging (Diesel)
1
2
3
4
E16(C), E17(D), E19(A)
Engine ECU
Engine and ECT ECU
E21(E)
Emission Control ECU
∗1 : 1HD–FTE Europe
∗2 : 1HD–FTE Except Europe
∗3 : 1HZ
∗4 : Rear Bank of Left Fender (1HD–FTE)
∗5 : Rear Bank of Left Fender (1HZ)
J14
Junction Connector
I26
Ignition SW
ACC
IG1
IG2
ST2
AM1
AM2
NSW
STA
RL
7. 5A MET
C15(A), C17(C), C18(D)
Combination Meter
Charge
Pre–Heating Timer<6–3>
Suspension Control ECU<25–7>
7. 5A AM1
10A FR–IG
7. 5A ALT–S
15A AM2
30A STARTER
IG1 NO. 1 Relay
Short Pin(B)
STARTER Relay
7. 5A ST1
N 1 Neutral Start SW
(4A/T)
(5A/T)
F37(A), F38(B), F17(E)
Fusible Link Block
120A J/B NO. 2
120A J/B NO. 1
140A ALT
120A MAIN
Battery
Battery
S 4(A), S 5(B)
Starter
A24(A), A23(B)
Alternator
ST CUT Relay <56–5>
EE
Front Left Side of Fender Apron
J25
Junction Connector
ED : ∗4
EC : ∗5

3 LAND CRUISER (RHD)

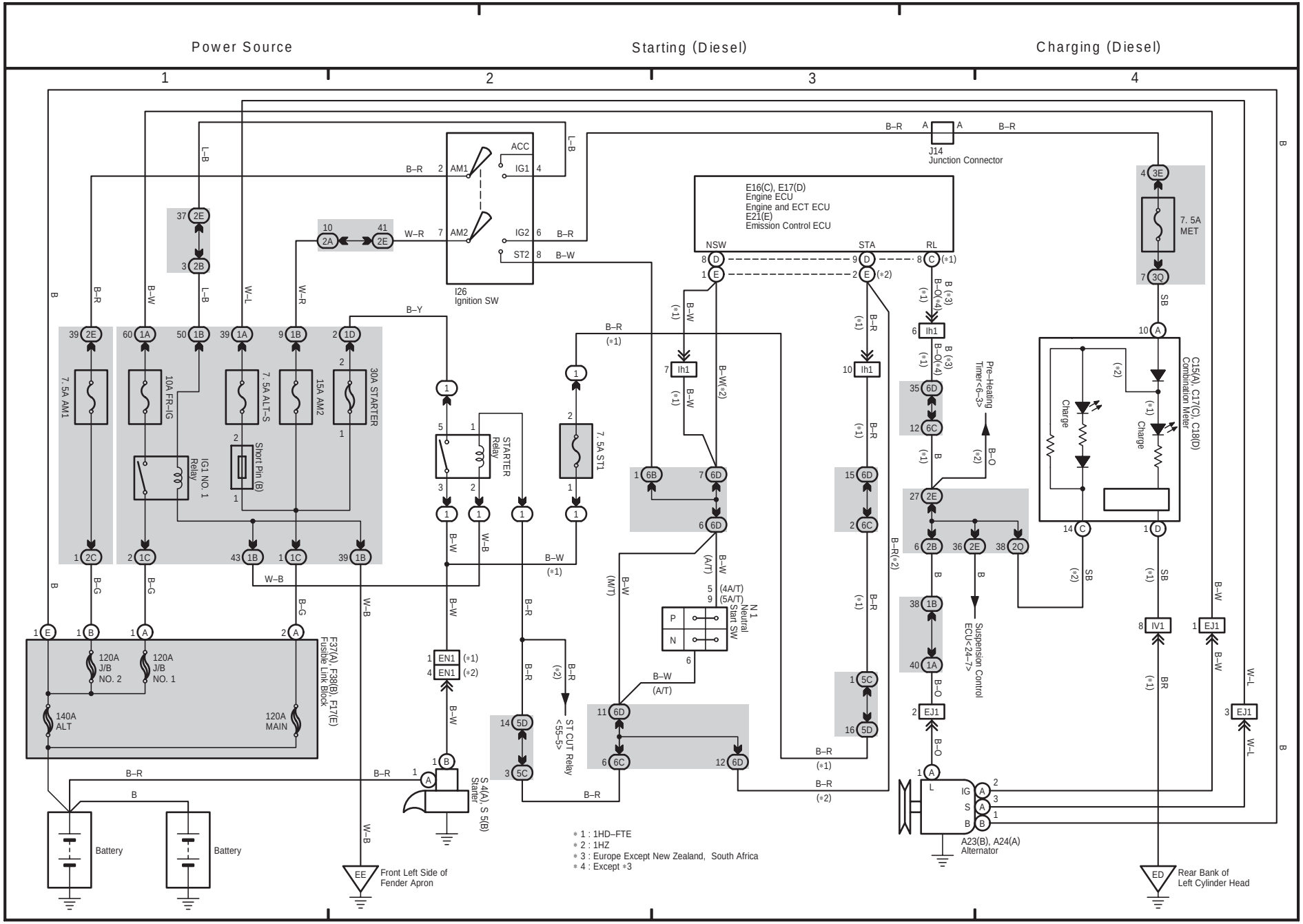

3 LAND CRUISER (RHD)

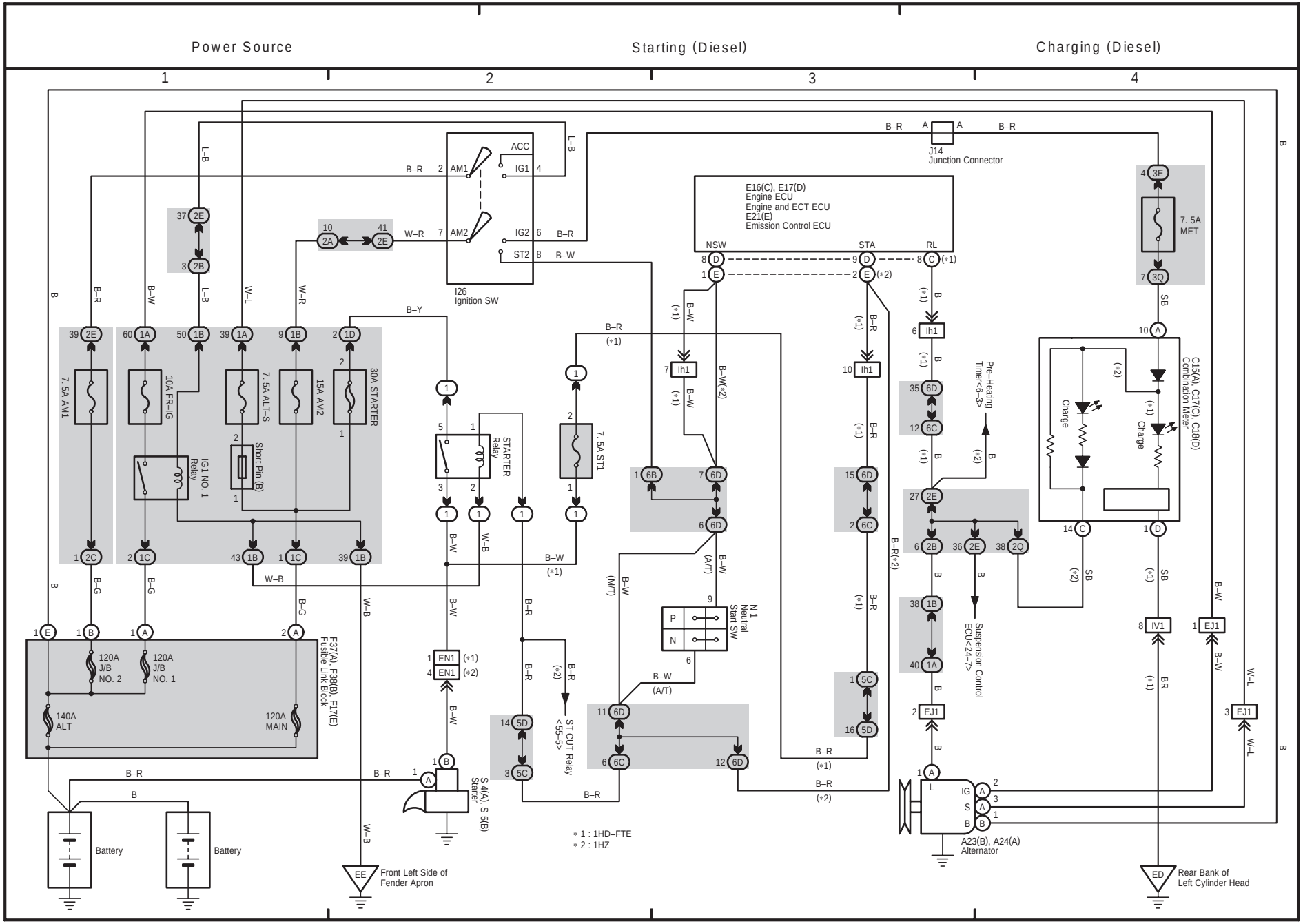

F ELECTRICAL WIRING DIAGRAM (System Circuits)

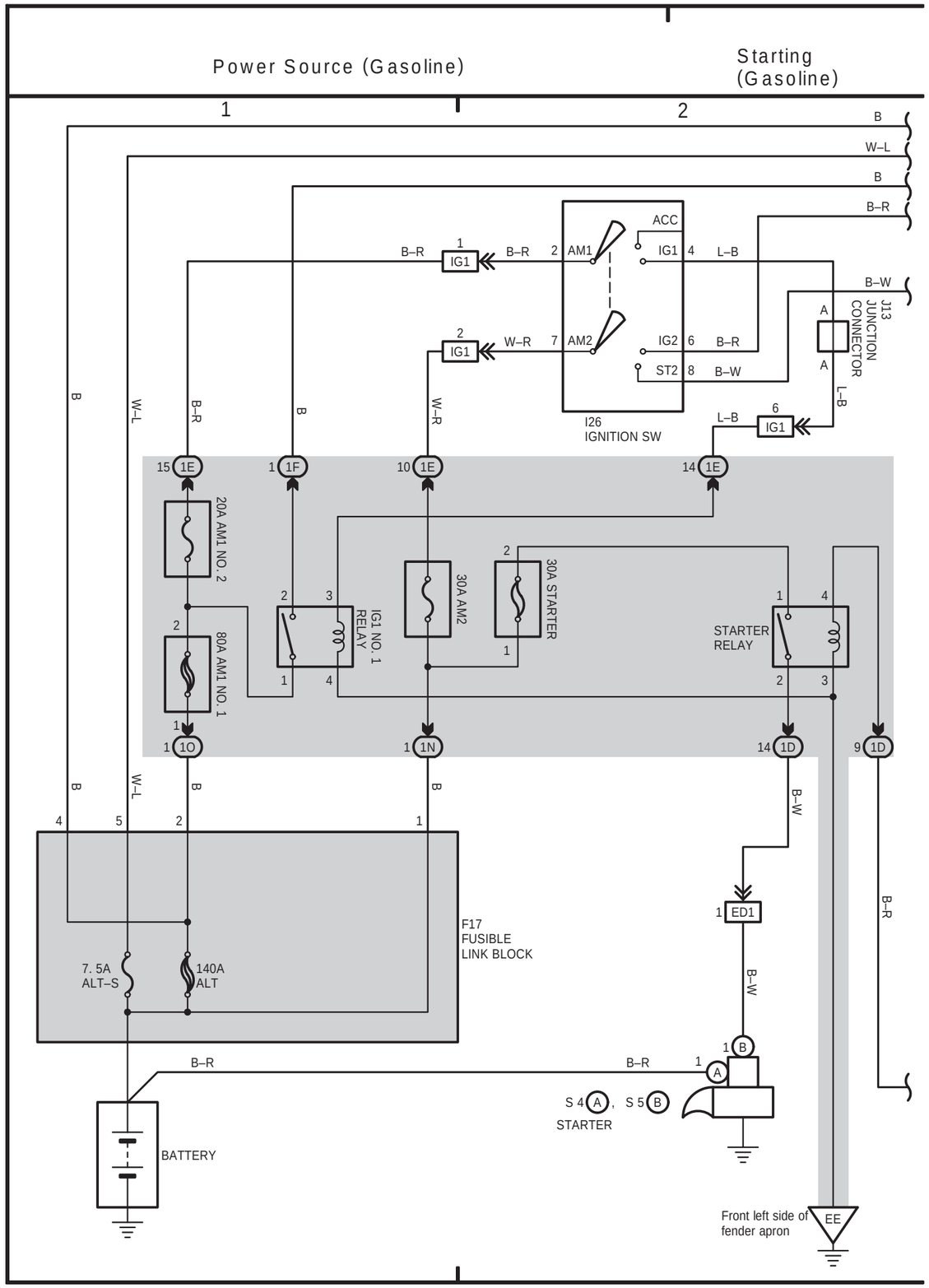

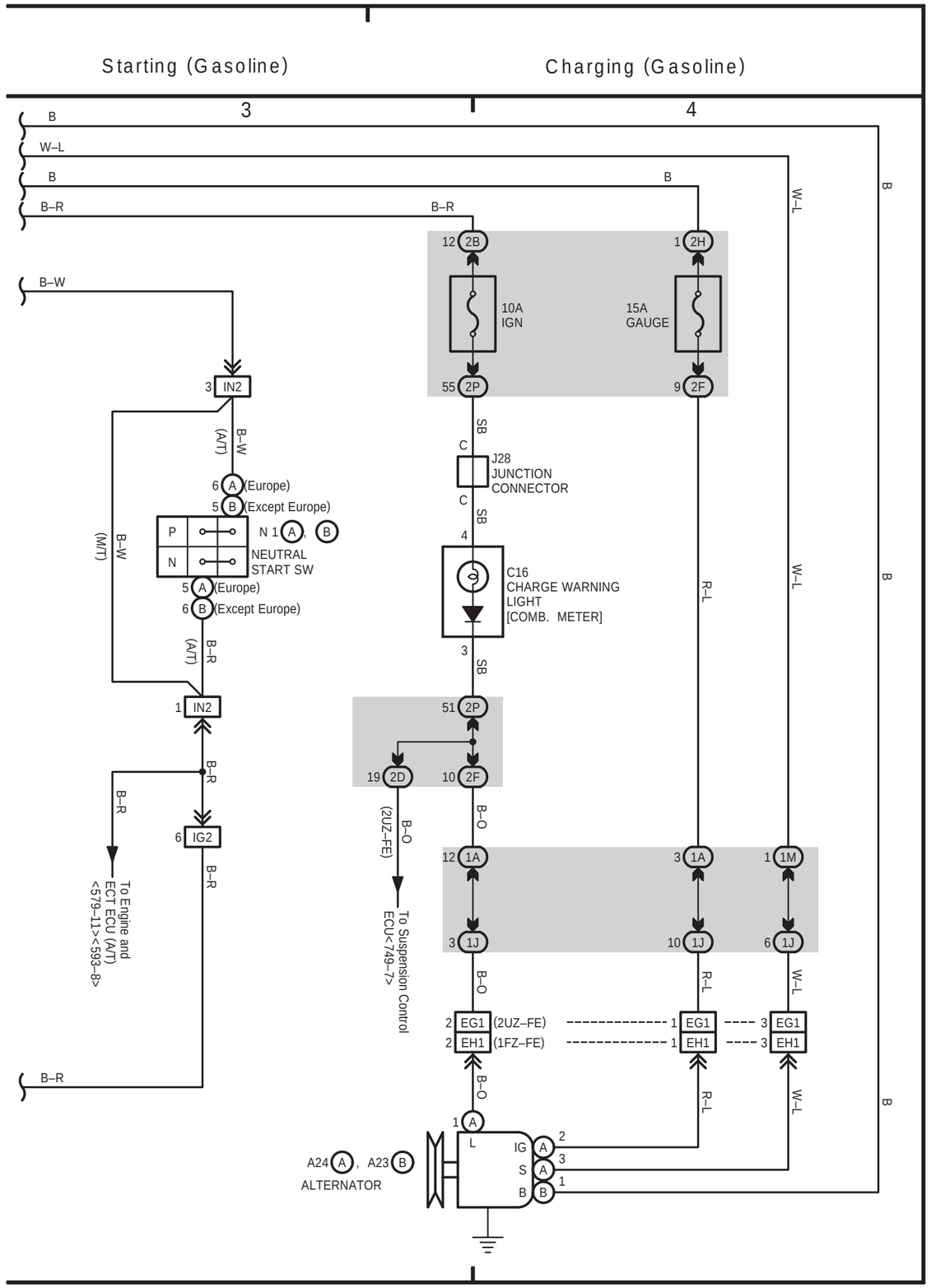

LAND CRUISER Station Wagon (EWD342F)

2 LAND CRUISER (RHD)

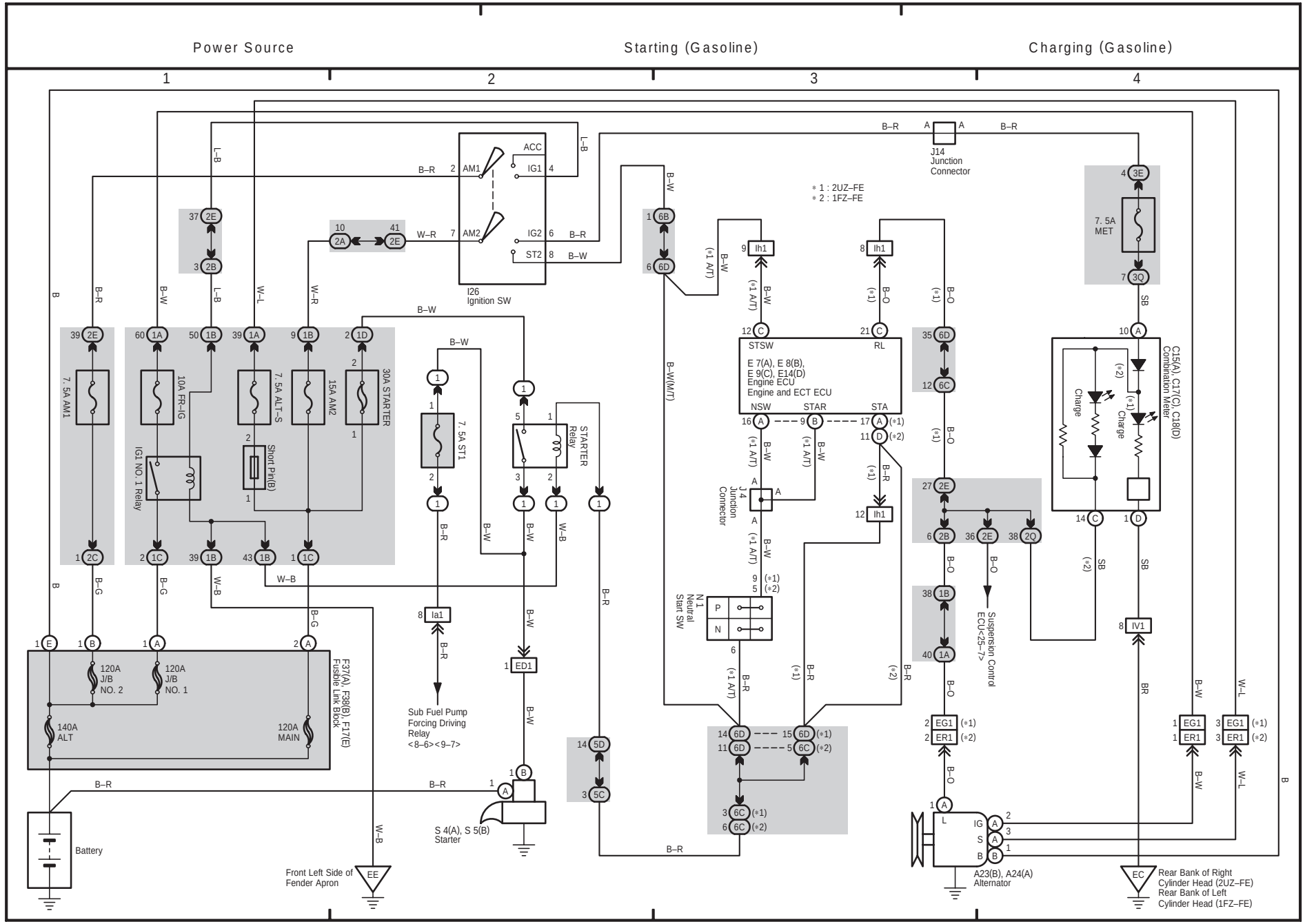

2 LAND CRUISER (RHD)

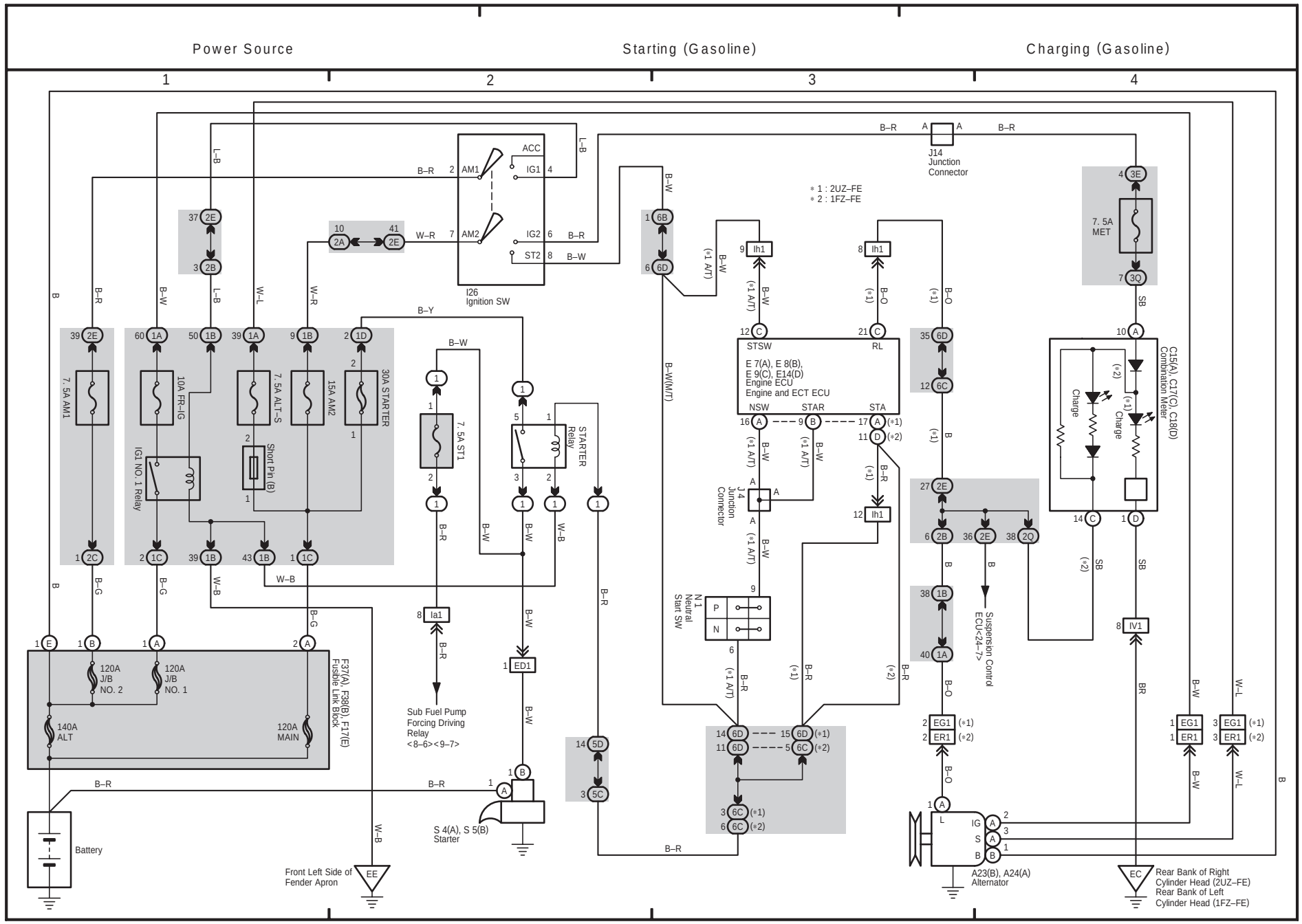

2 LAND CRUISER (RHD)

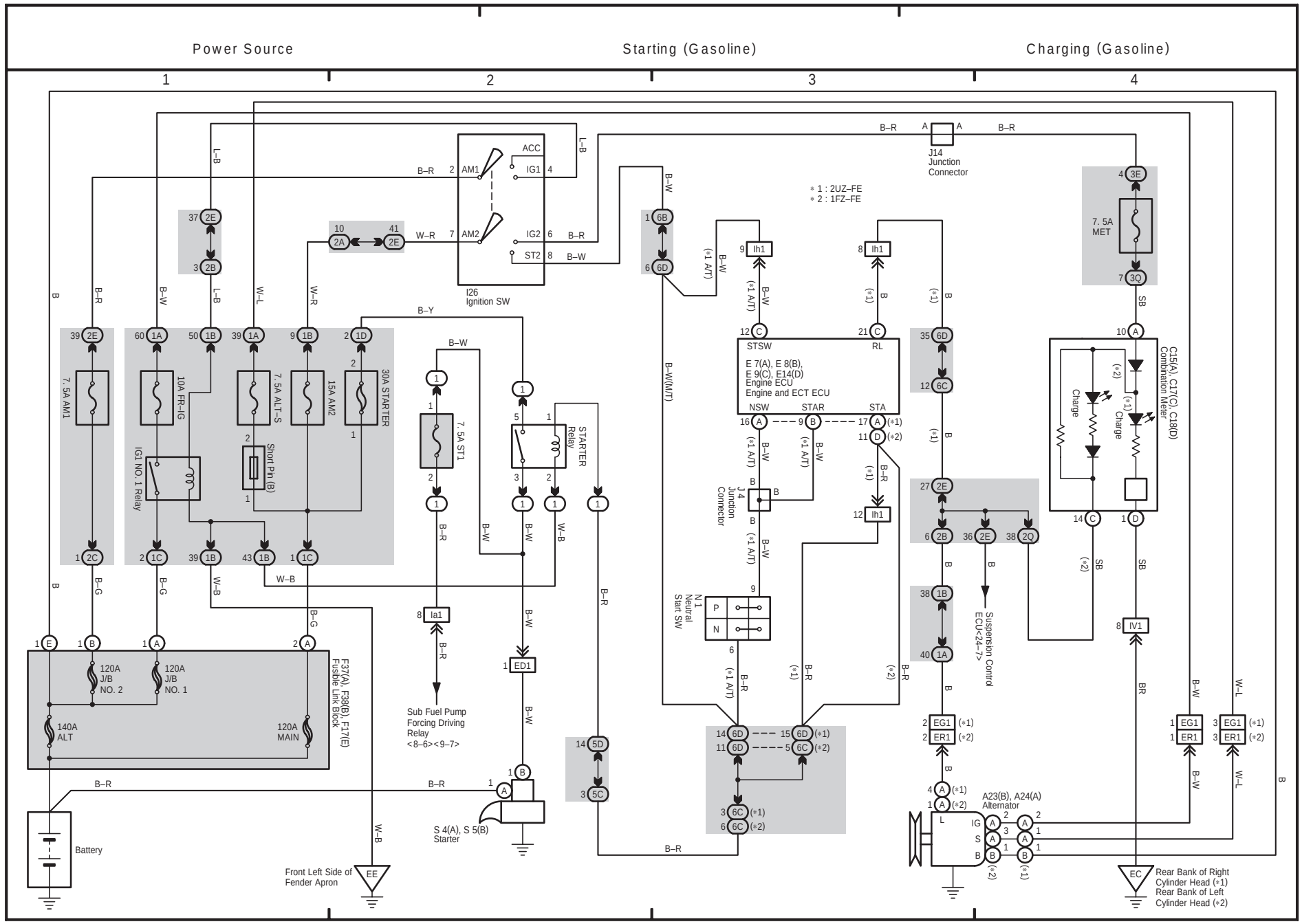

F ELECTRICAL WIRING DIAGRAM (System Circuits)

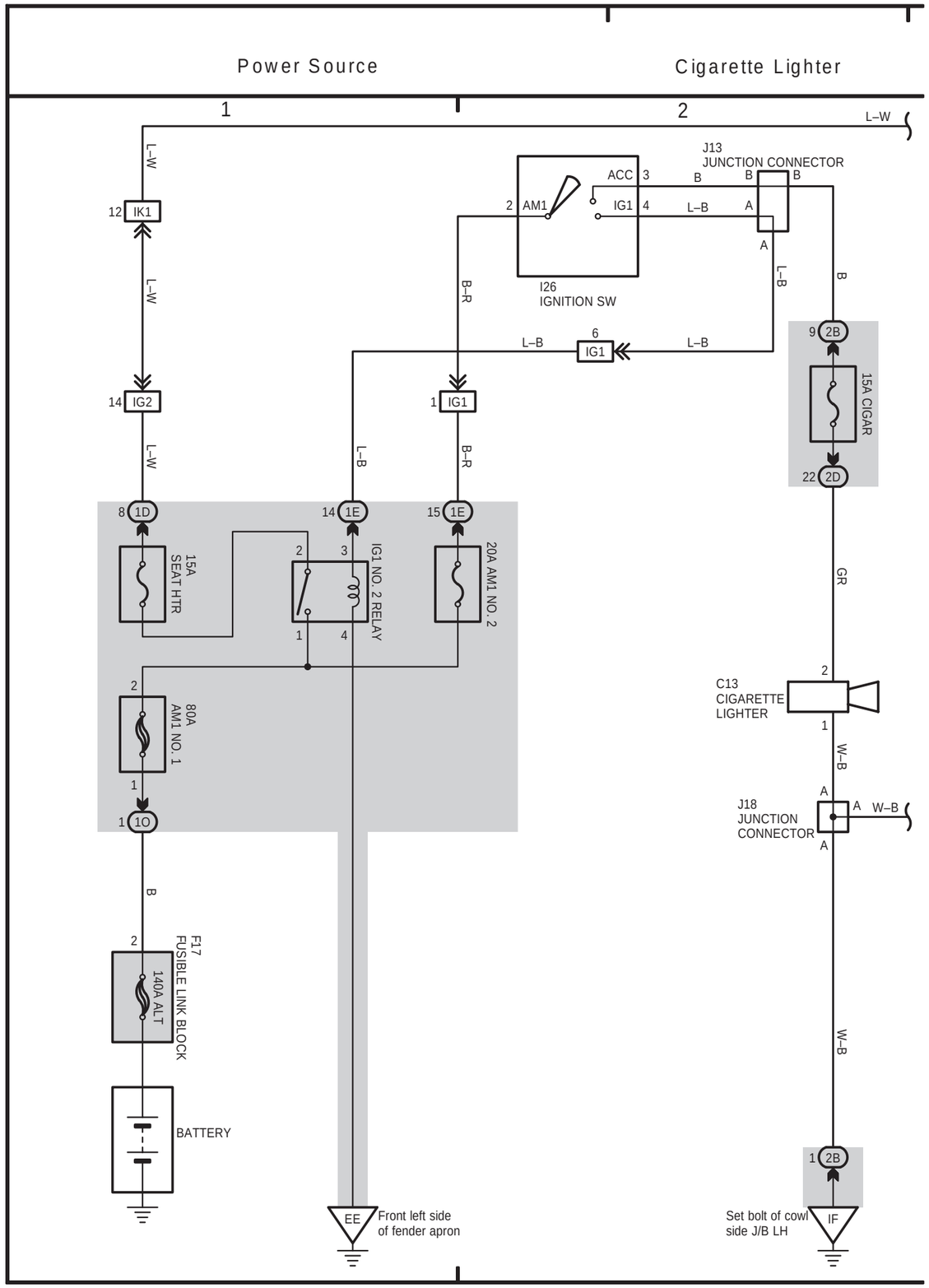

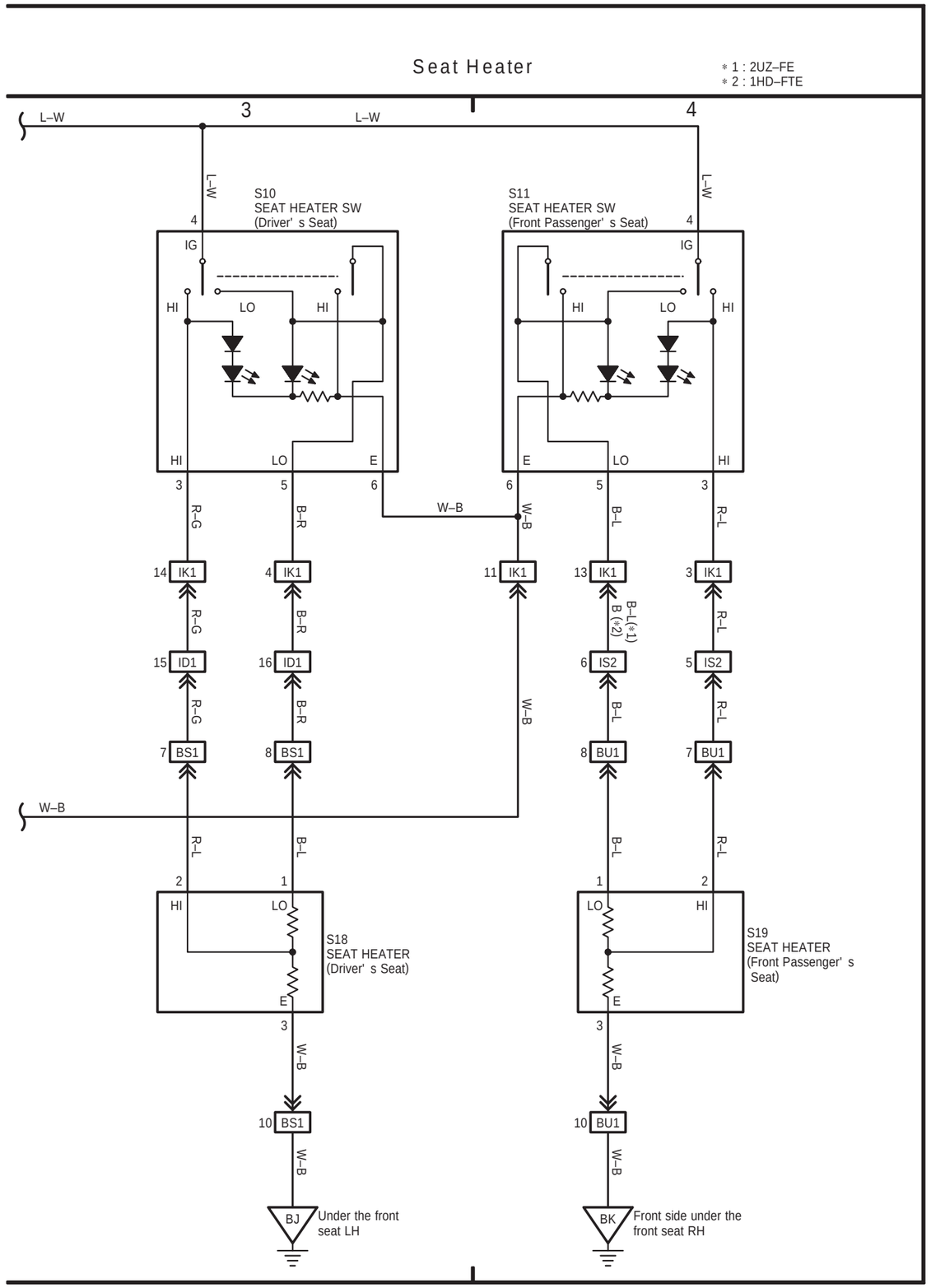

RHD

RHD

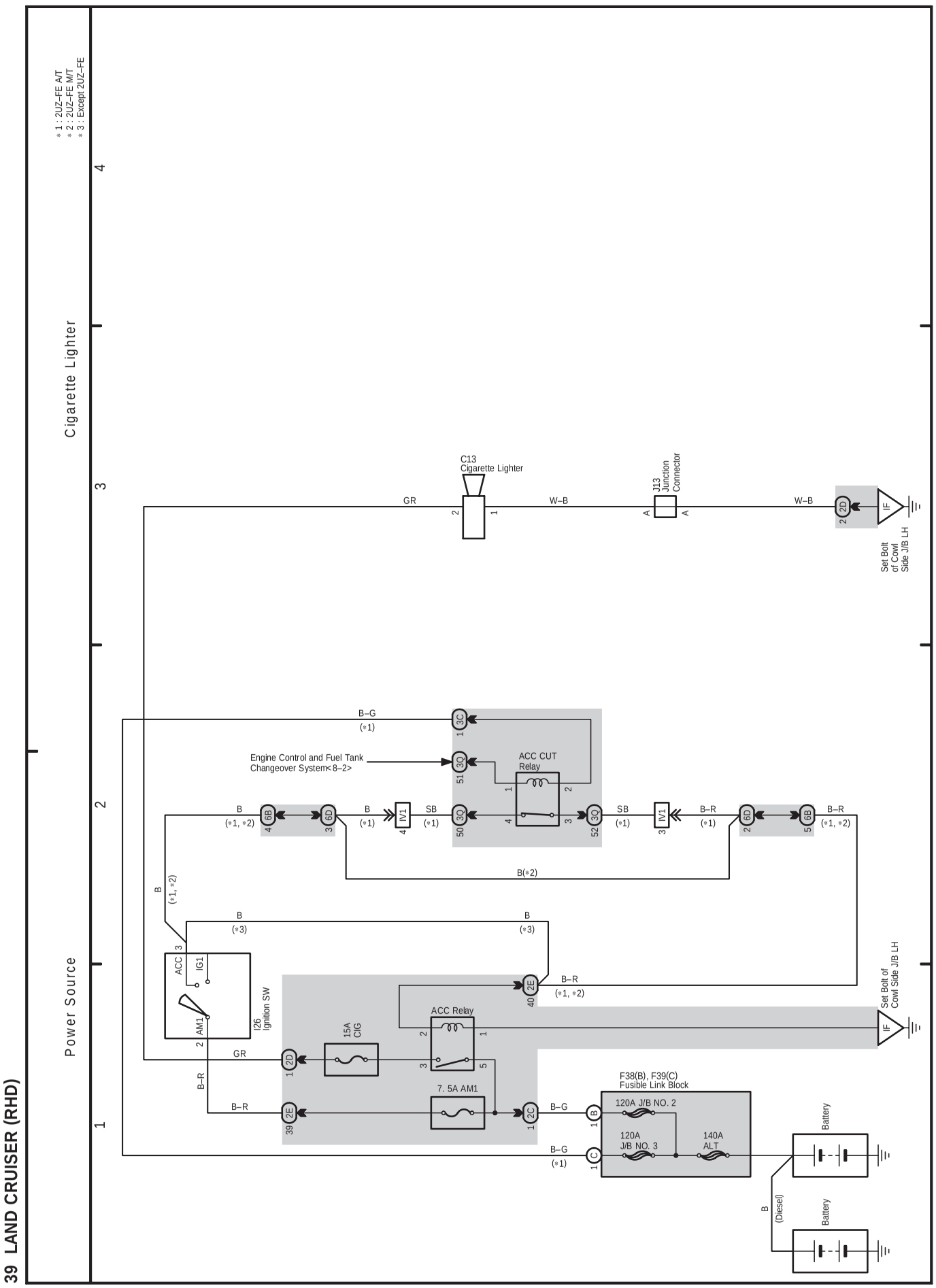
39 LAND CRUISER (RHD)
Power Source
Cigarette Lighter
1
2
3
4
* 1 : 2UZ–FE A/T
* 2 : 2UZ–FE M/T
* 3 : Except 2UZ–FE
C13
Cigarette Lighter
J13
Junction
Connector
GR
W–B
W–B
2D
IF
Set Bolt
of Cowl
Side J/B LH
B–G
(*1)
3C
Engine Control and Fuel Tank
Changeover System<8–2>
3Q
ACC CUT
Relay
B
(*1, *2)
6B
6D
B
(*1)
IV1
SB
(*1)
3Q
SB
(*1)
IV1
B–R
(*1)
6D
6B
B–R
(*1, *2)
B(*2)
B
(*1, *2)
B
(*3)
B
(*3)
ACC
IG1
AM1
I26
Ignition SW
2E
B–R
(*1, *2)
Set Bolt of
Cowl Side J/B LH
ACC Relay
15A
CIG
GR
2D
B–R
B–R
2E
7. 5A AM1
2C
B–G
1B
B–G
(*1)
1C
F38(B), F39(C)
Fusible Link Block
120A J/B NO. 2
120A
J/B NO. 3
140A
ALT
Battery
B
(Diesel)
Battery

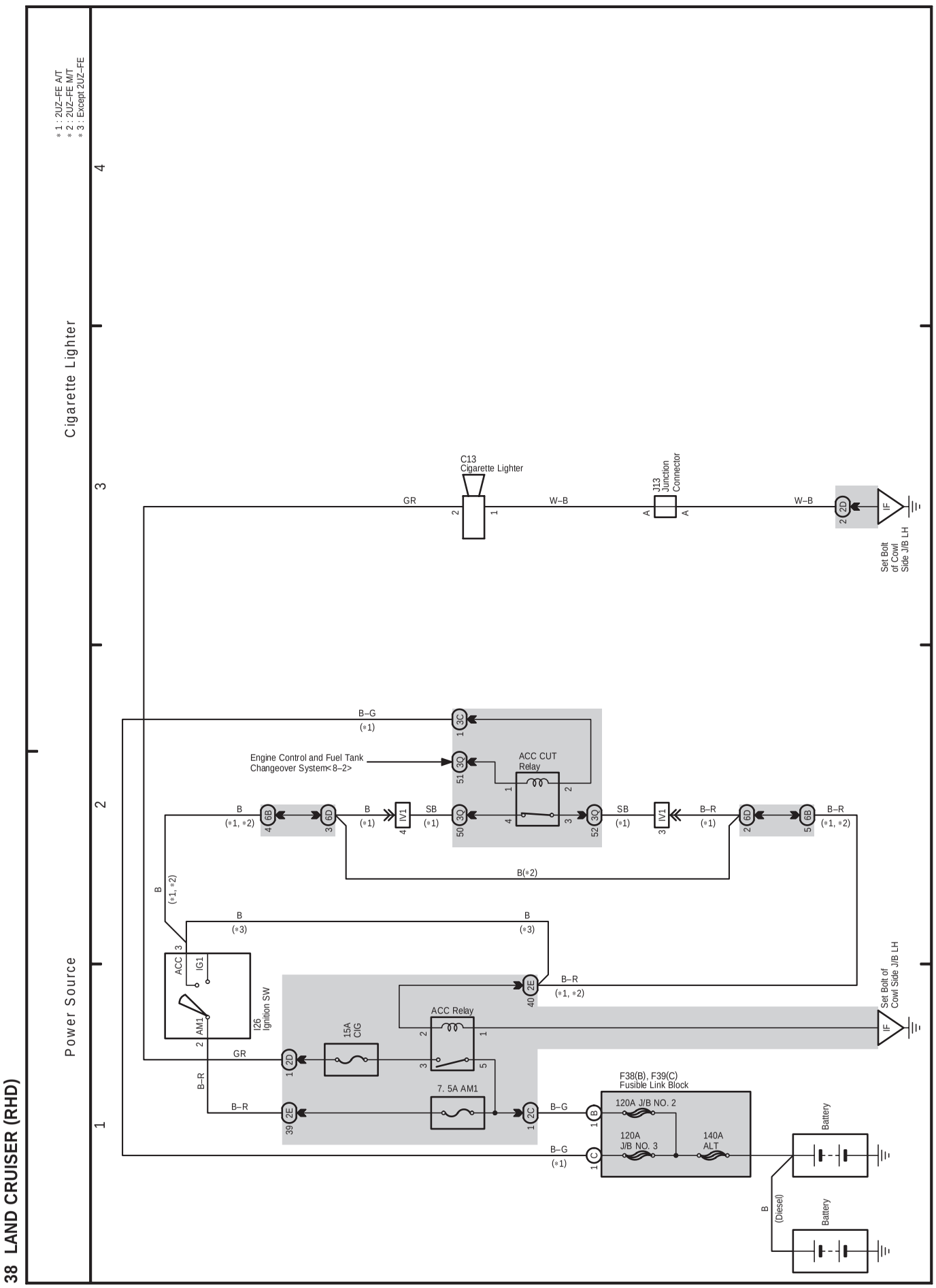
38 LAND CRUISER (RHD)
Power Source
Cigarette Lighter
1
2
3
4
* 1 : 2UZ–FE A/T
* 2 : 2UZ–FE M/T
* 3 : Except 2UZ–FE
C13
Cigarette Lighter
J13
Junction
Connector
GR
W–B
W–B
2D
IF
Set Bolt
of Cowl
Side J/B LH
B–G
(*1)
3C
Engine Control and Fuel Tank
Changeover System<8–2>
3Q
ACC CUT
Relay
B
(*1, *2)
6B
6D
B
(*1)
IV1
SB
(*1)
SB
(*1)
B–R
(*1)
B–R
(*1, *2)
B(*2)
B
(*3)
B
(*3)
ACC
IG1
AM1
I26
Ignition SW
2E
B–R
(*1, *2)
Set Bolt of
Cowl Side J/B LH
ACC Relay
15A
CIG
GR
B–R
B–R
7. 5A AM1
F38(B), F39(C)
Fusible Link Block
120A J/B NO. 2
120A
J/B NO. 3
140A
ALT
B–G
B–G
(*1)
Battery
B
(Diesel)
Battery

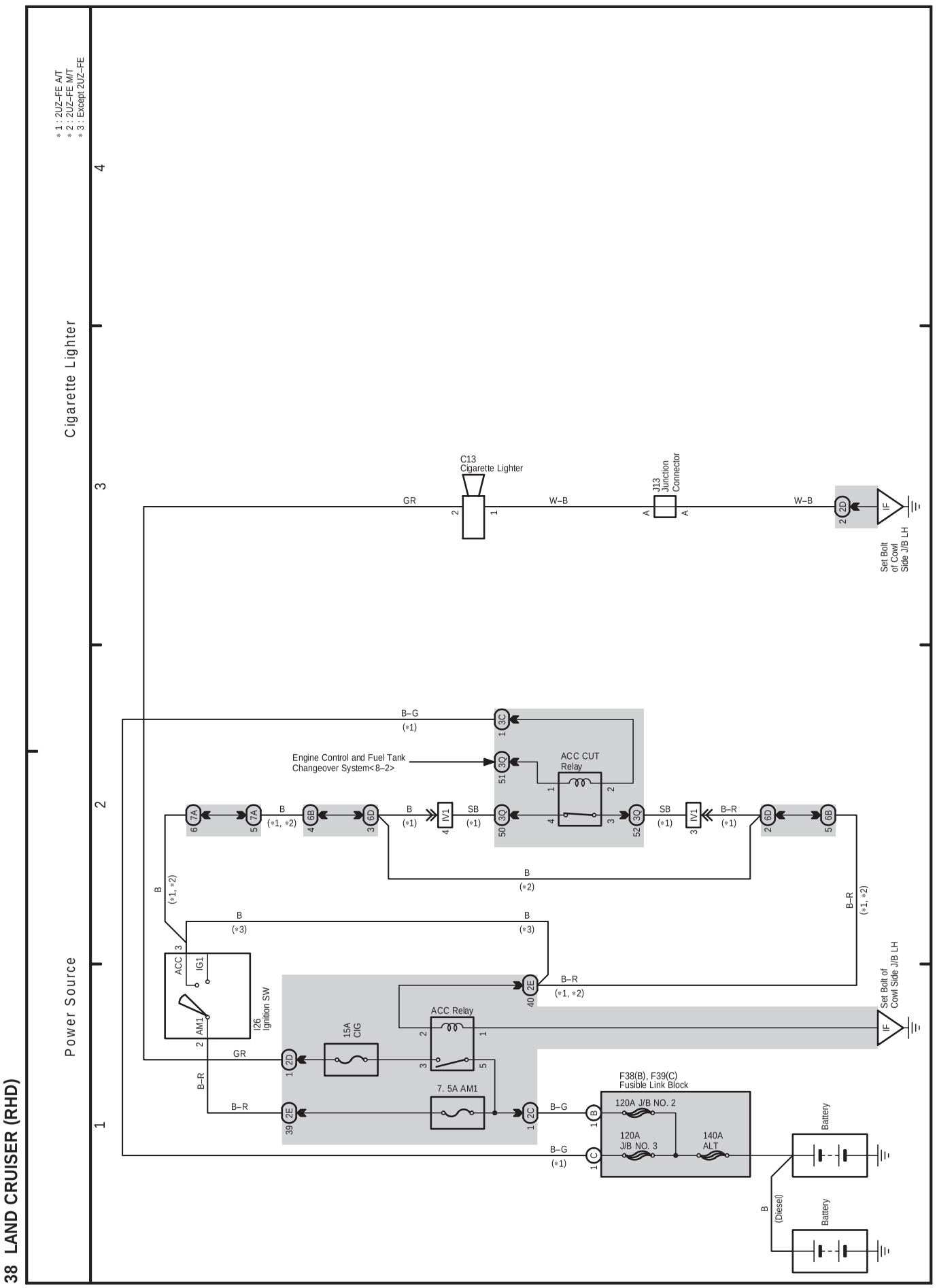
38 LAND CRUISER (RHD)
Power Source
Cigarette Lighter
1
2
3
4
* 1 : 2UZ–FE A/T
* 2 : 2UZ–FE M/T
* 3 : Except 2UZ–FE
C13
Cigarette Lighter
J13
Junction
Connector
GR
W–B
W–B
2D
IF
Set Bolt
of Cowl
Side J/B LH
B–G
(*1)
3C
Engine Control and Fuel Tank
Changeover System<8–2>
3Q
51
ACC CUT
Relay
7A
6B
6D
IV1
3Q
50
52
B
(*1, *2)
SB
(*1)
B–R
(*1)
B
(*2)
B
(*3)
ACC
IG1
AM1
I26
Ignition SW
2E
40
B–R
(*1, *2)
Set Bolt of
Cowl Side J/B LH
ACC Relay
15A
CIG
7. 5A AM1
F38(B), F39(C)
Fusible Link Block
120A J/B NO. 2
120A
J/B NO. 3
140A
ALT
2C
39
B–G
(*1)
Battery
B
(Diesel)
Battery

F ELECTRICAL WIRING DIAGRAM (System Circuits)

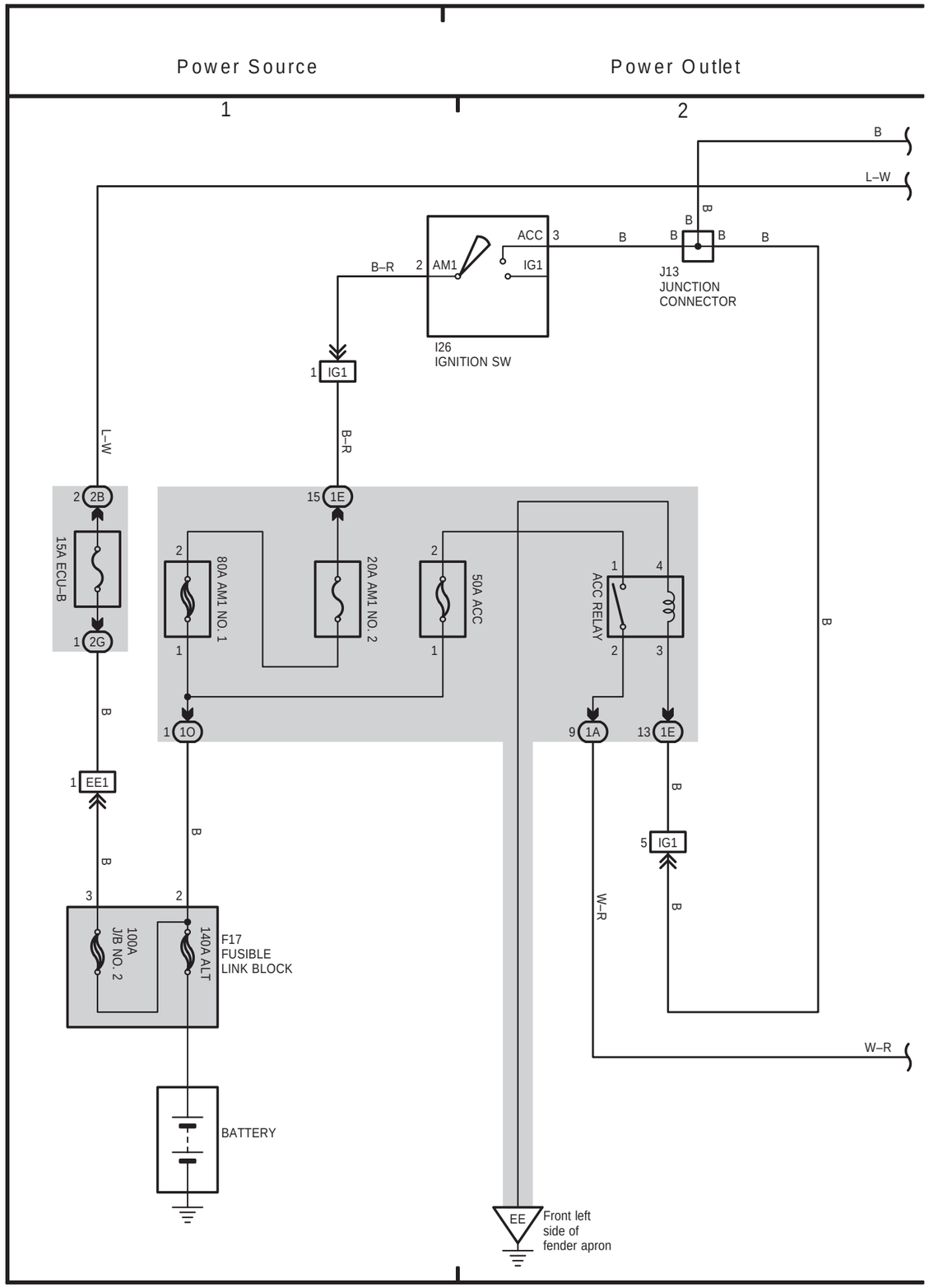

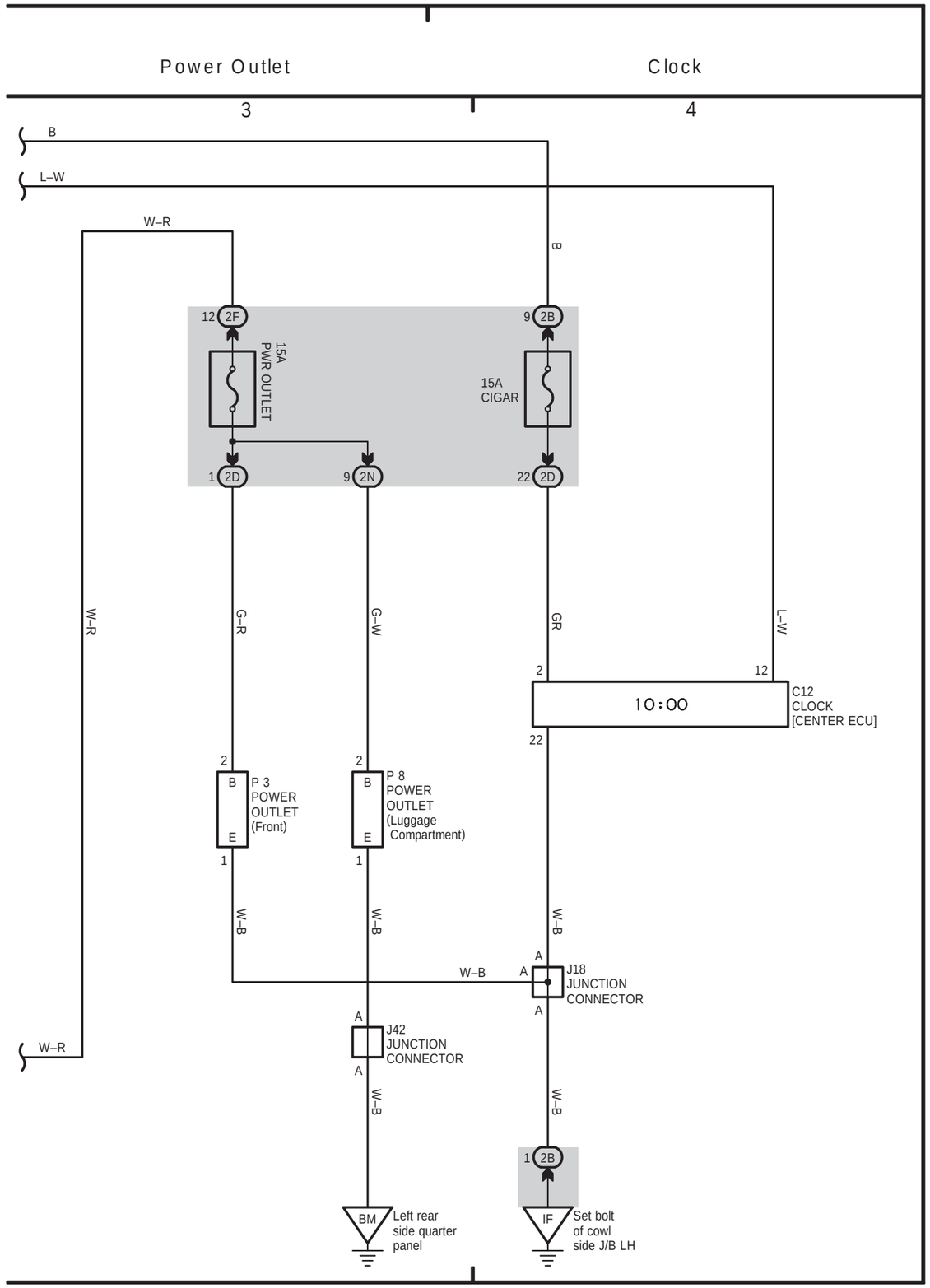

LAND CRUISER (RHD)

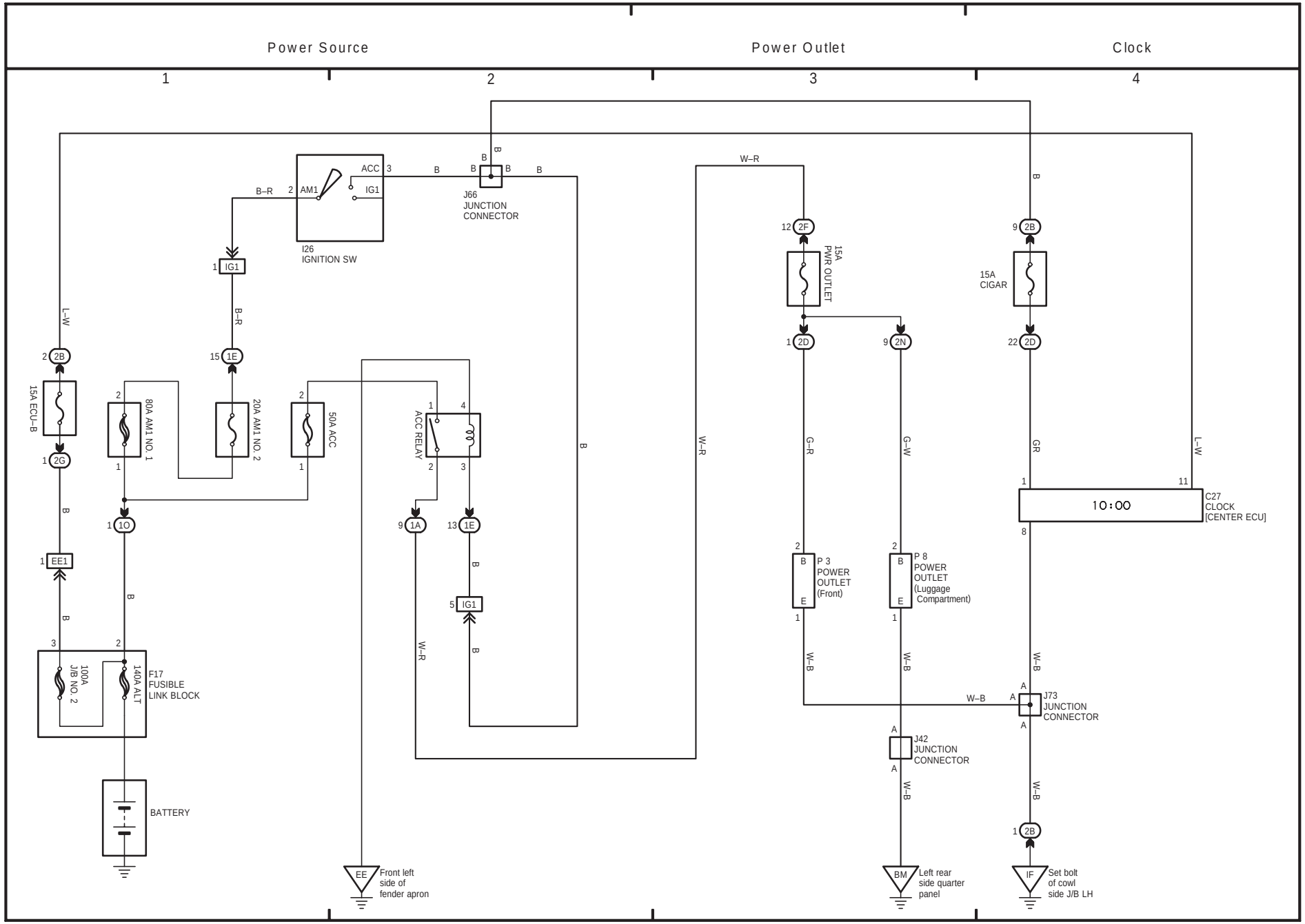

(Cont. next page)

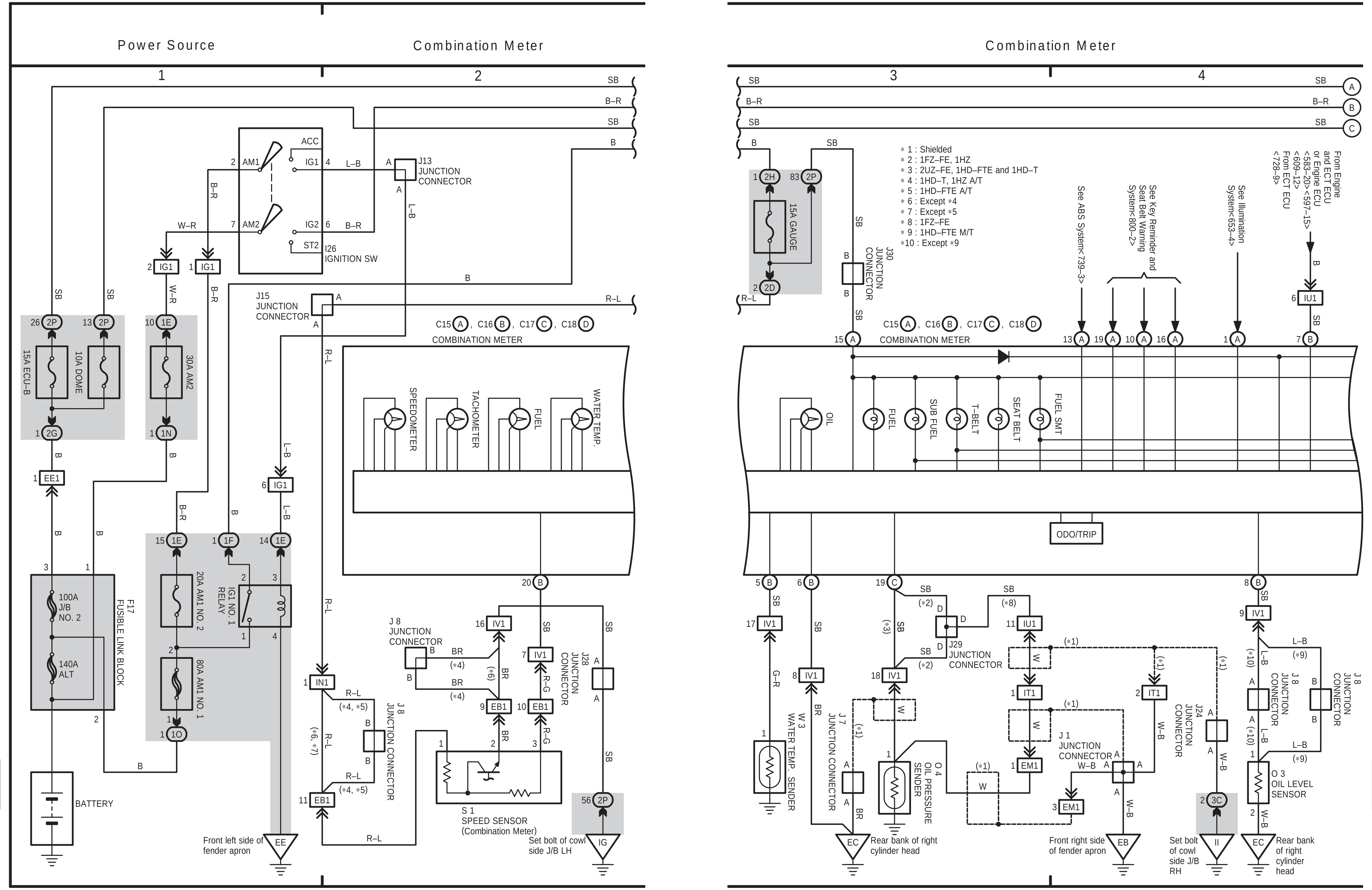

RHD

RHD

(Cont. next page)

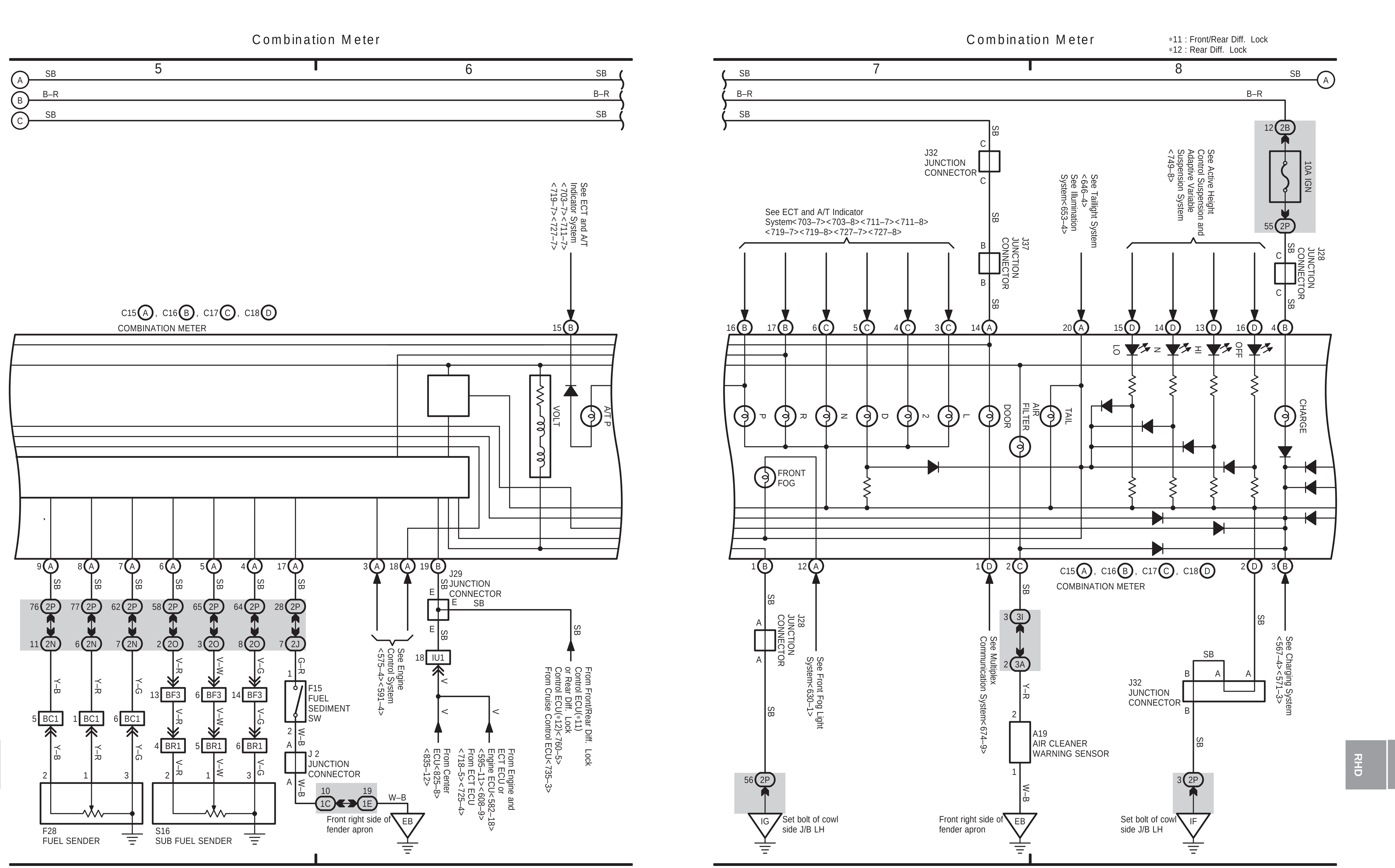

RHD

RHD

(Cont'd)

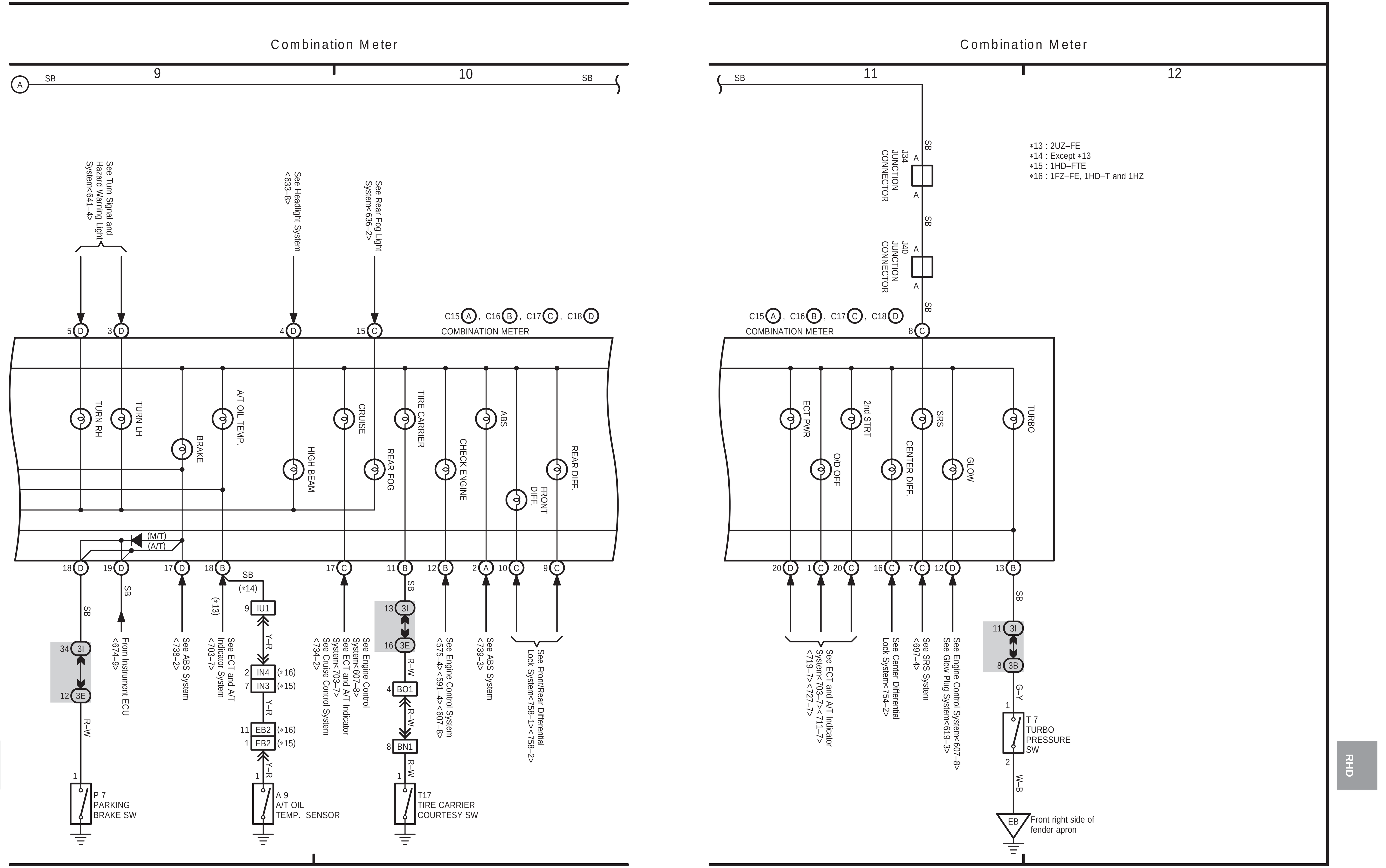

RHD

RHD

Power Source

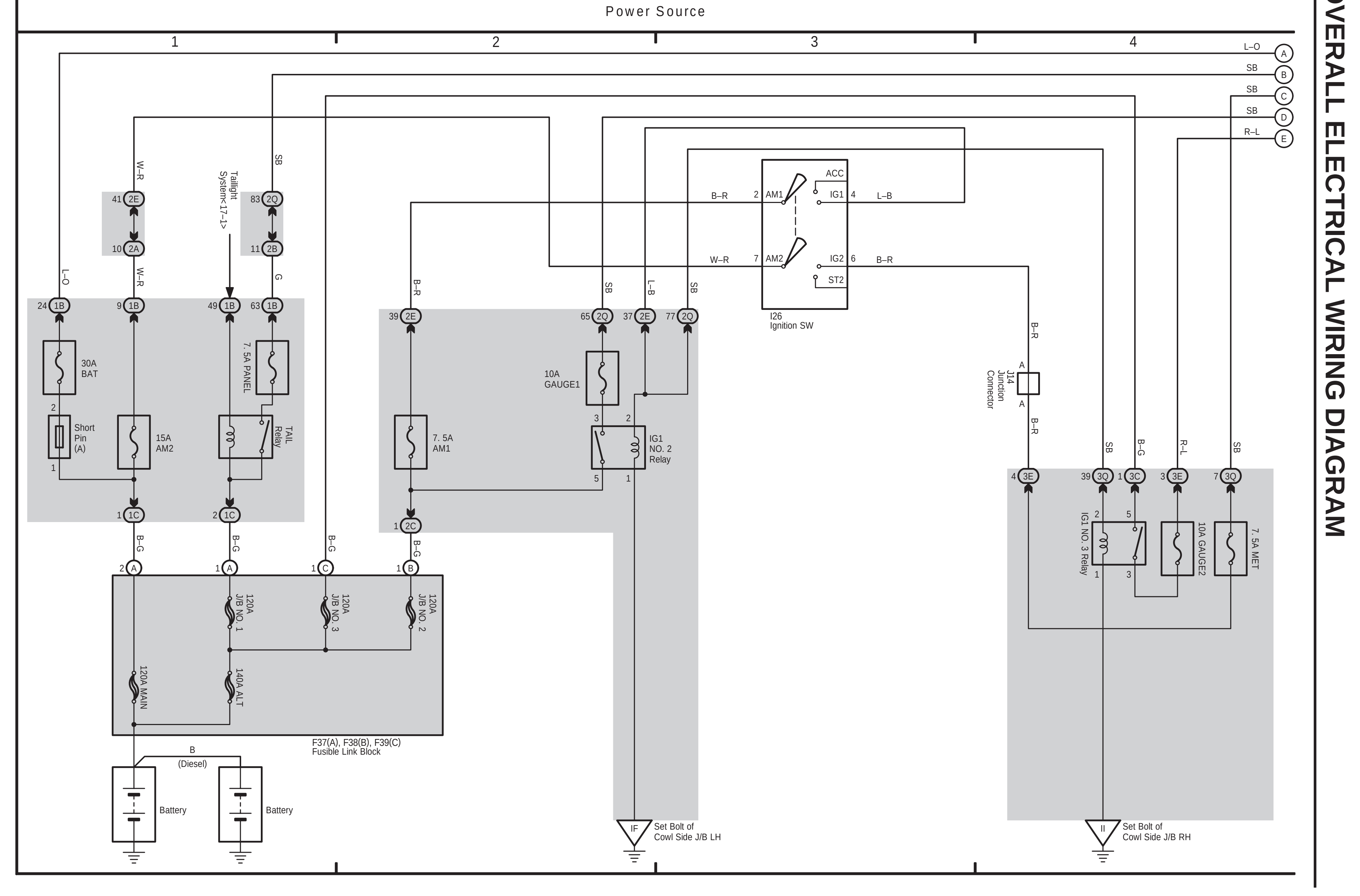

Combination Meter (1FZ–FE, 1HD–FTE Europe, 1HZ)

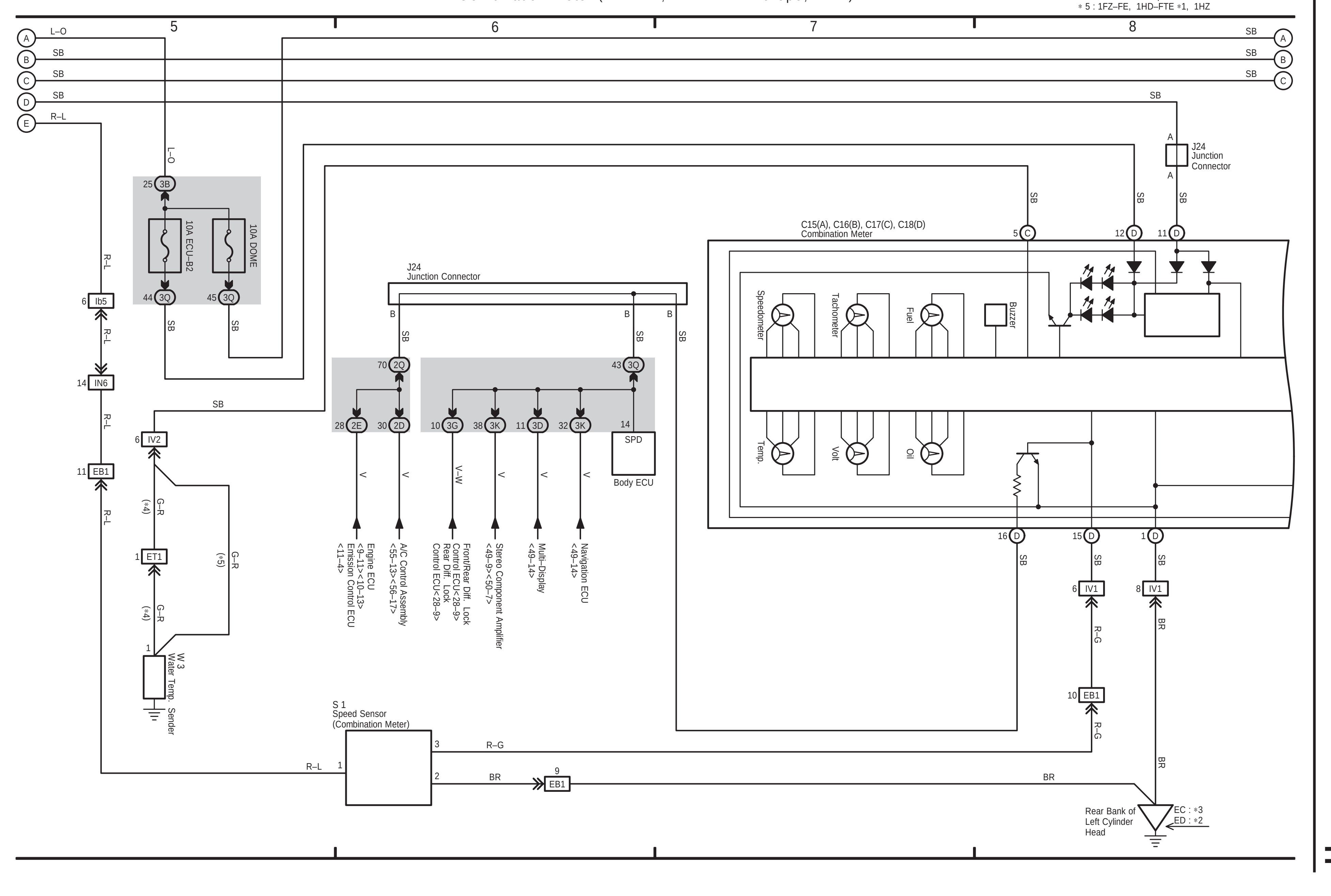

Combination Meter (1FZ–FE, 1HD–FTE Europe, 1HZ)

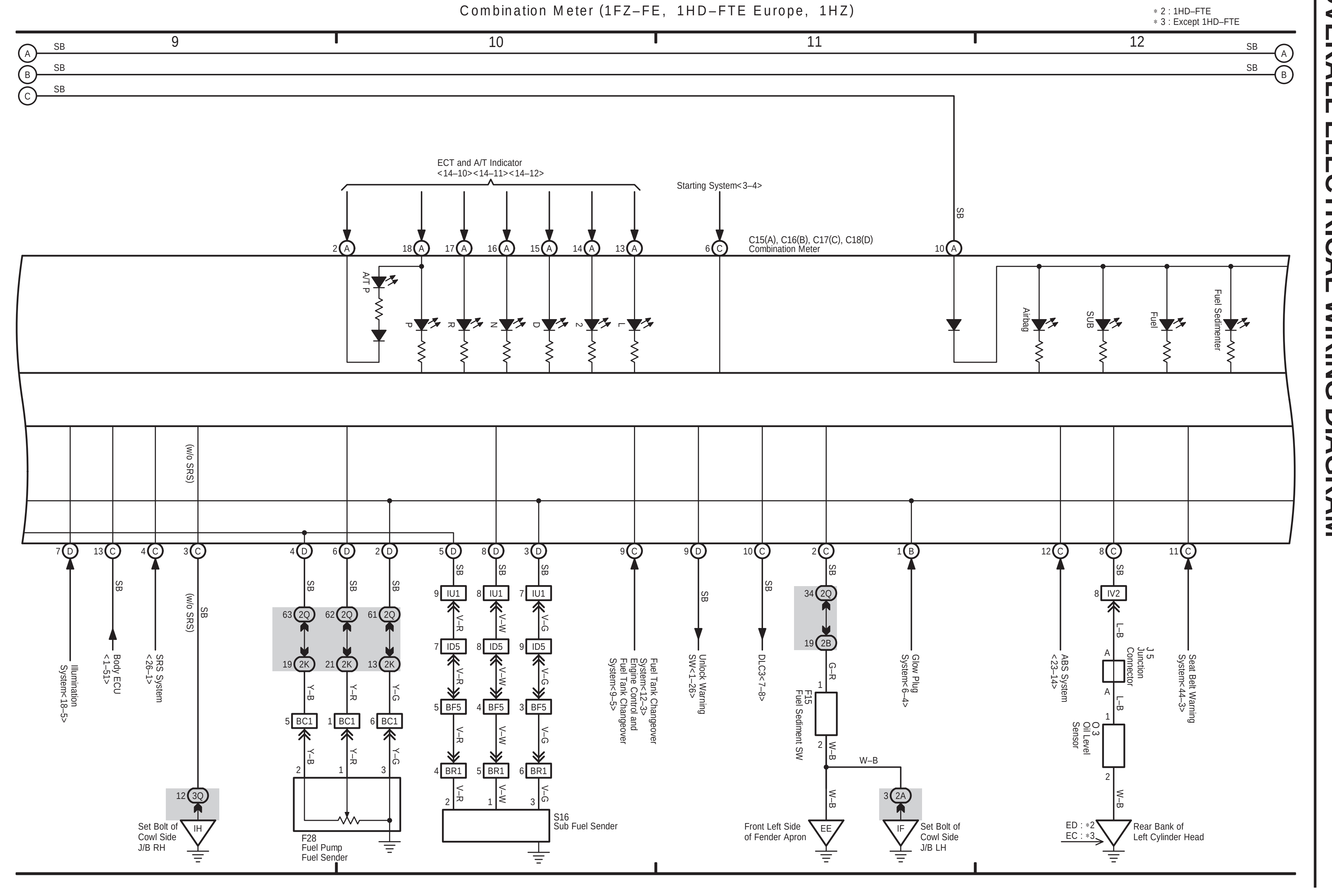

Combination Meter (1FZ–FE, 1HD–FTE Europe, 1HZ)

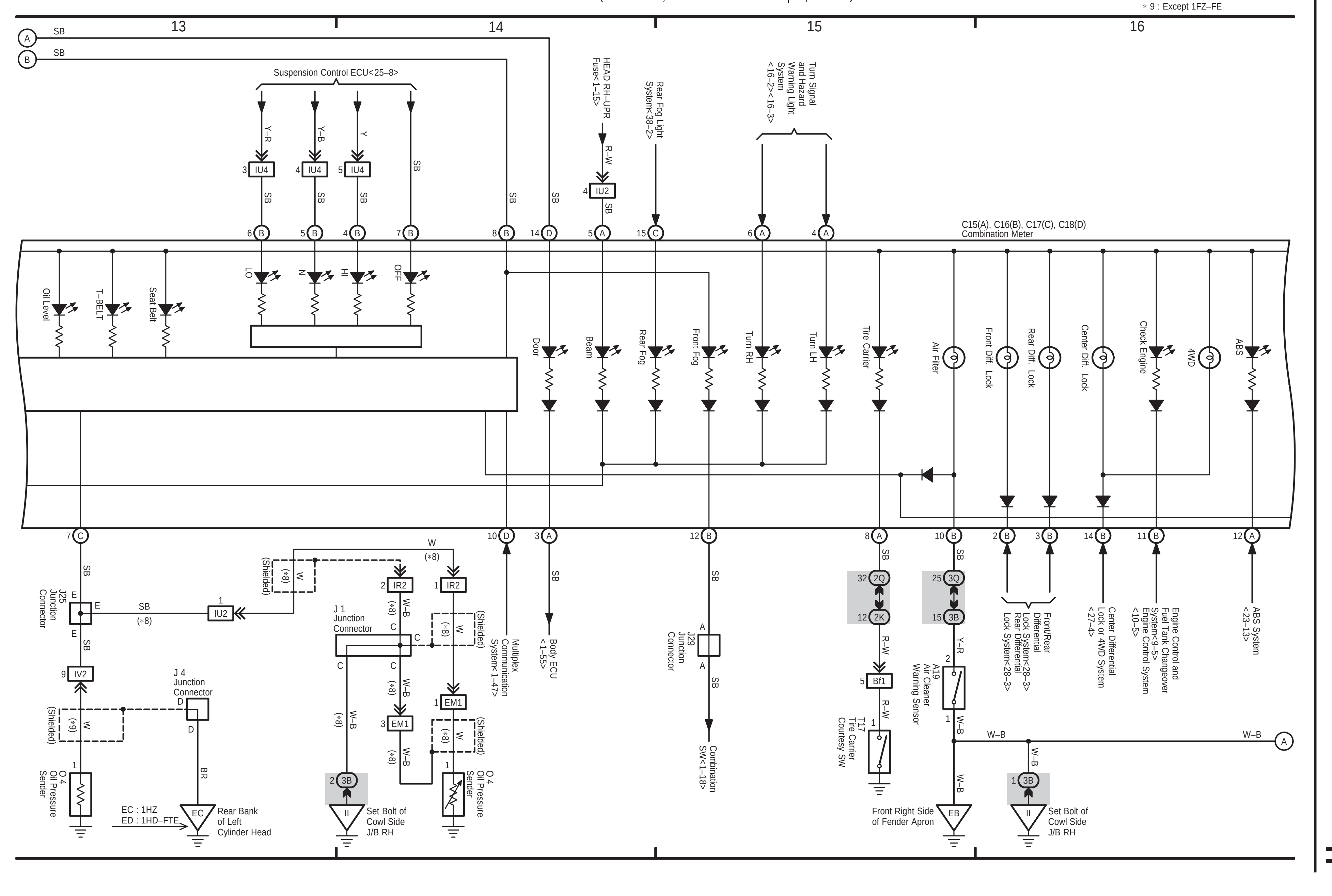

Combination Meter (1FZ–FE, 1HD–FTE Europe, 1HZ)

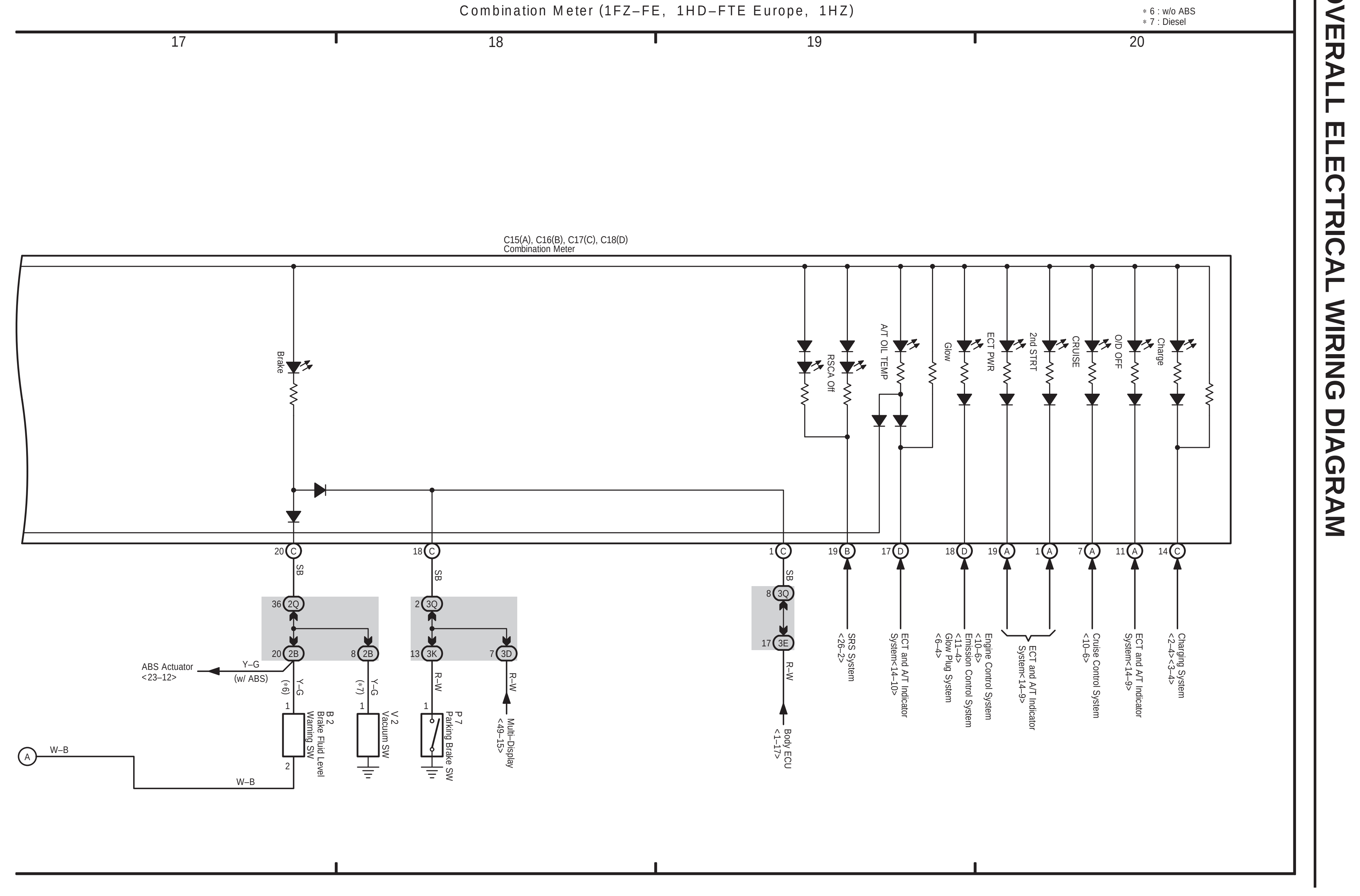

52 LAND CRUISER (RHD) (Cont' d) (Cont. next page)

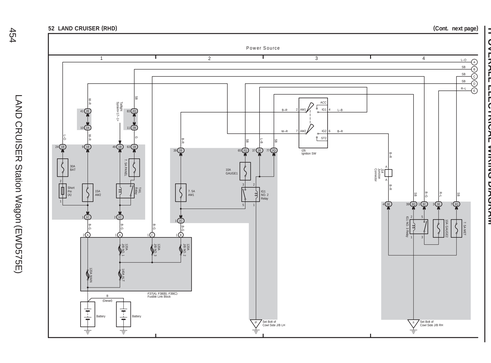

52 LAND CRUISER (RHD) (Cont' d) (Cont. next page)

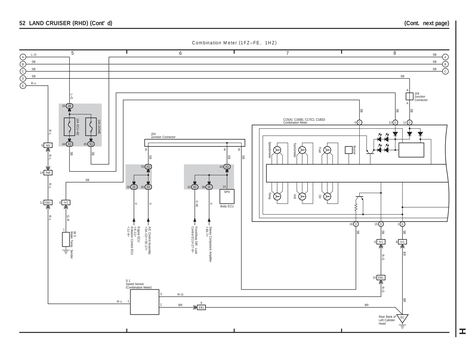

52 LAND CRUISER (RHD) (Cont' d) (Cont. next page)

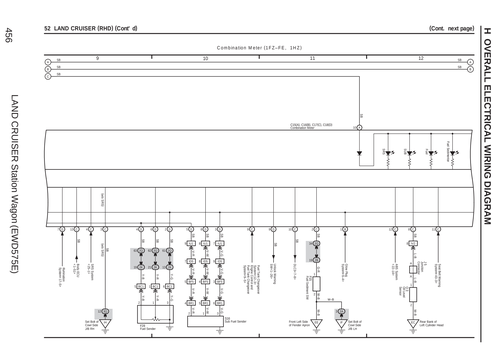

52 LAND CRUISER (RHD) (Cont' d) (Cont. next page)

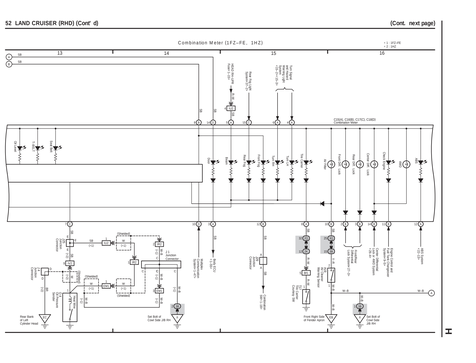

52 LAND CRUISER (RHD) (Cont' d)

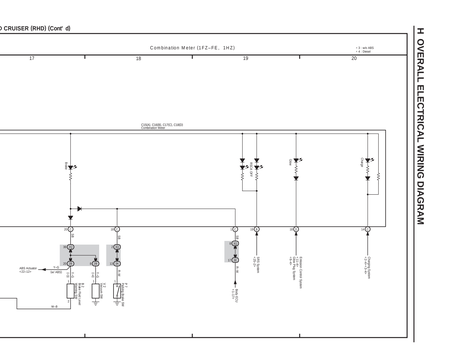

Power Source

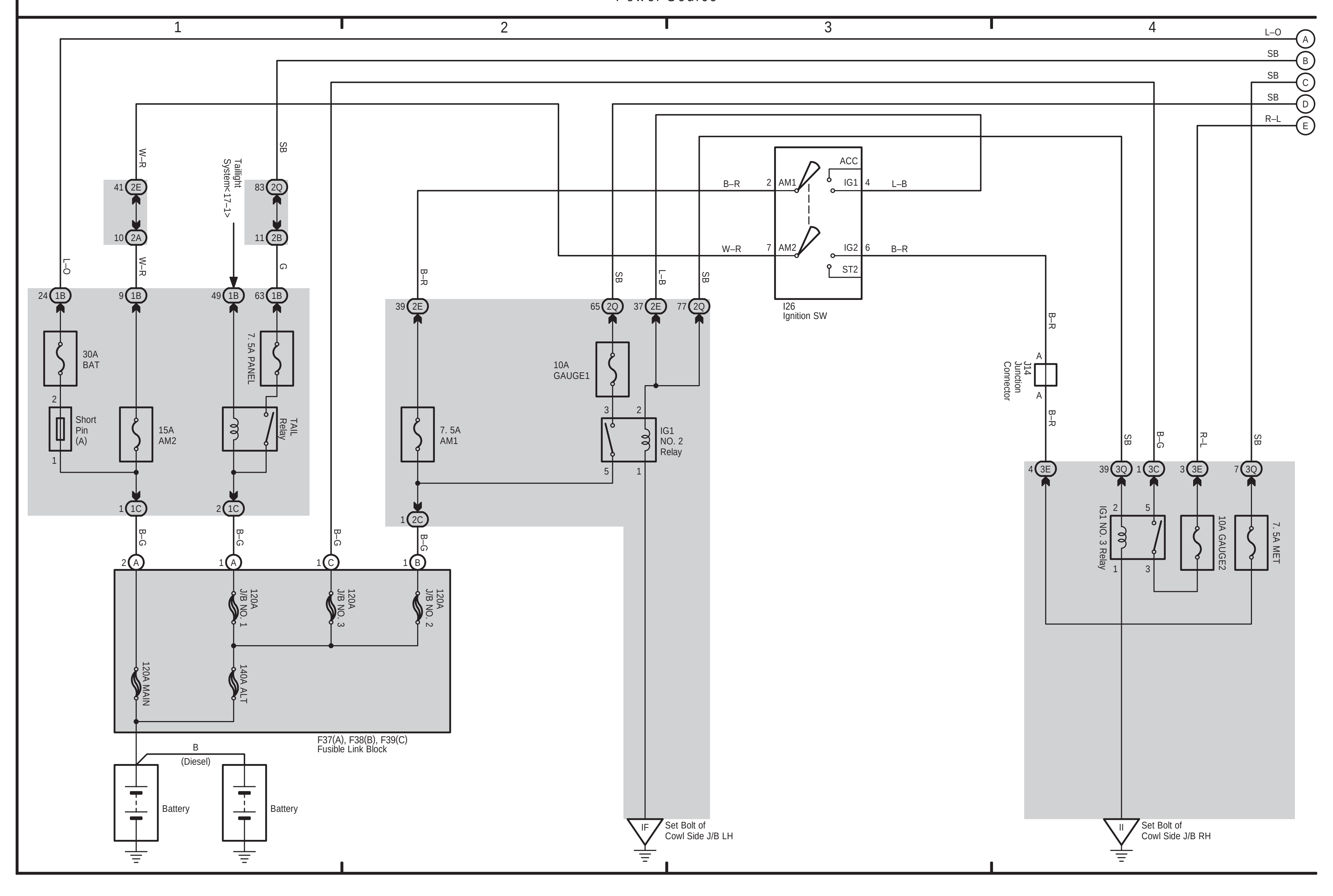

Combination Meter (1FZ–FE, 1HZ)

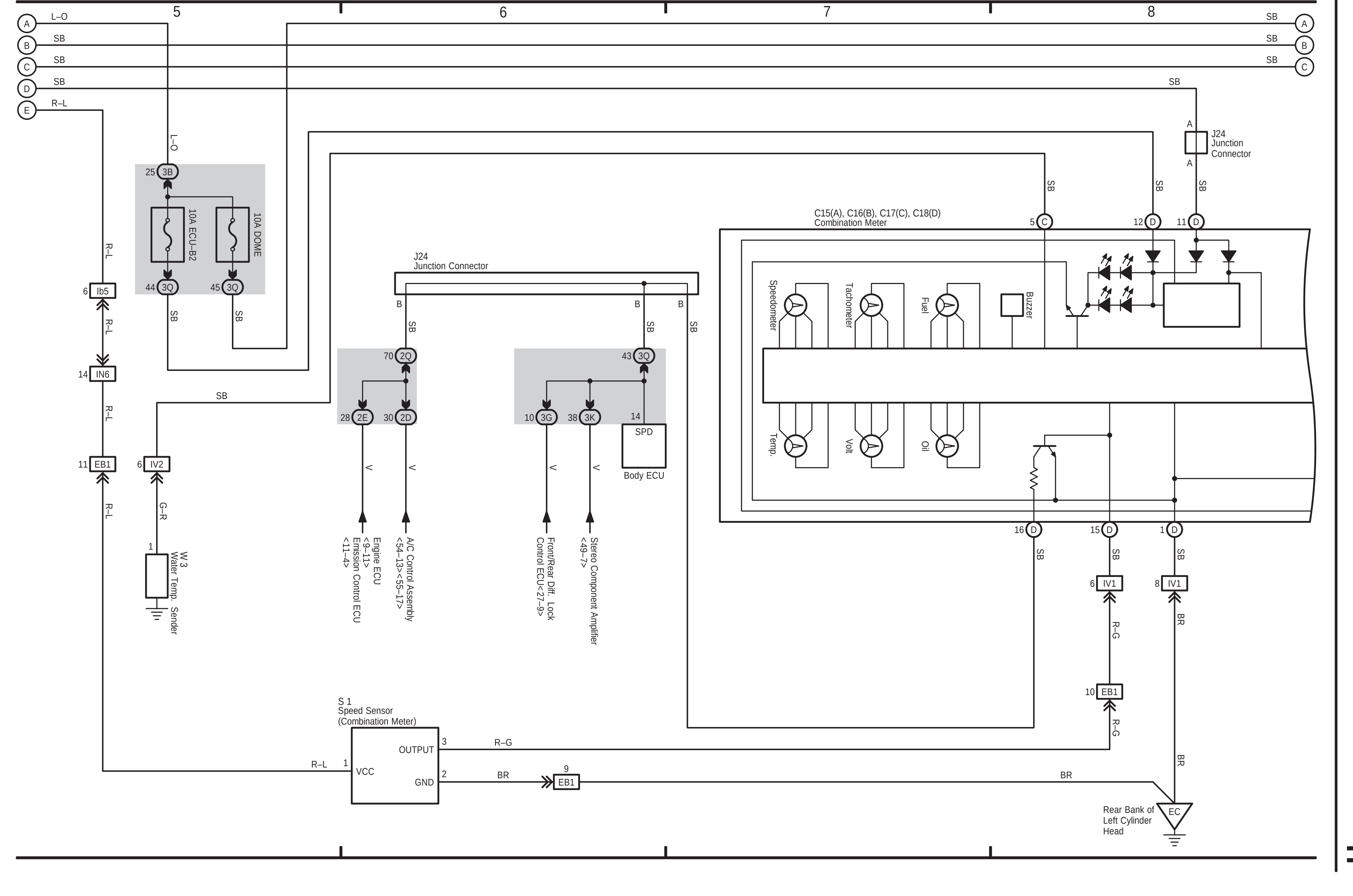

Combination Meter (1FZ–FE, 1HZ)

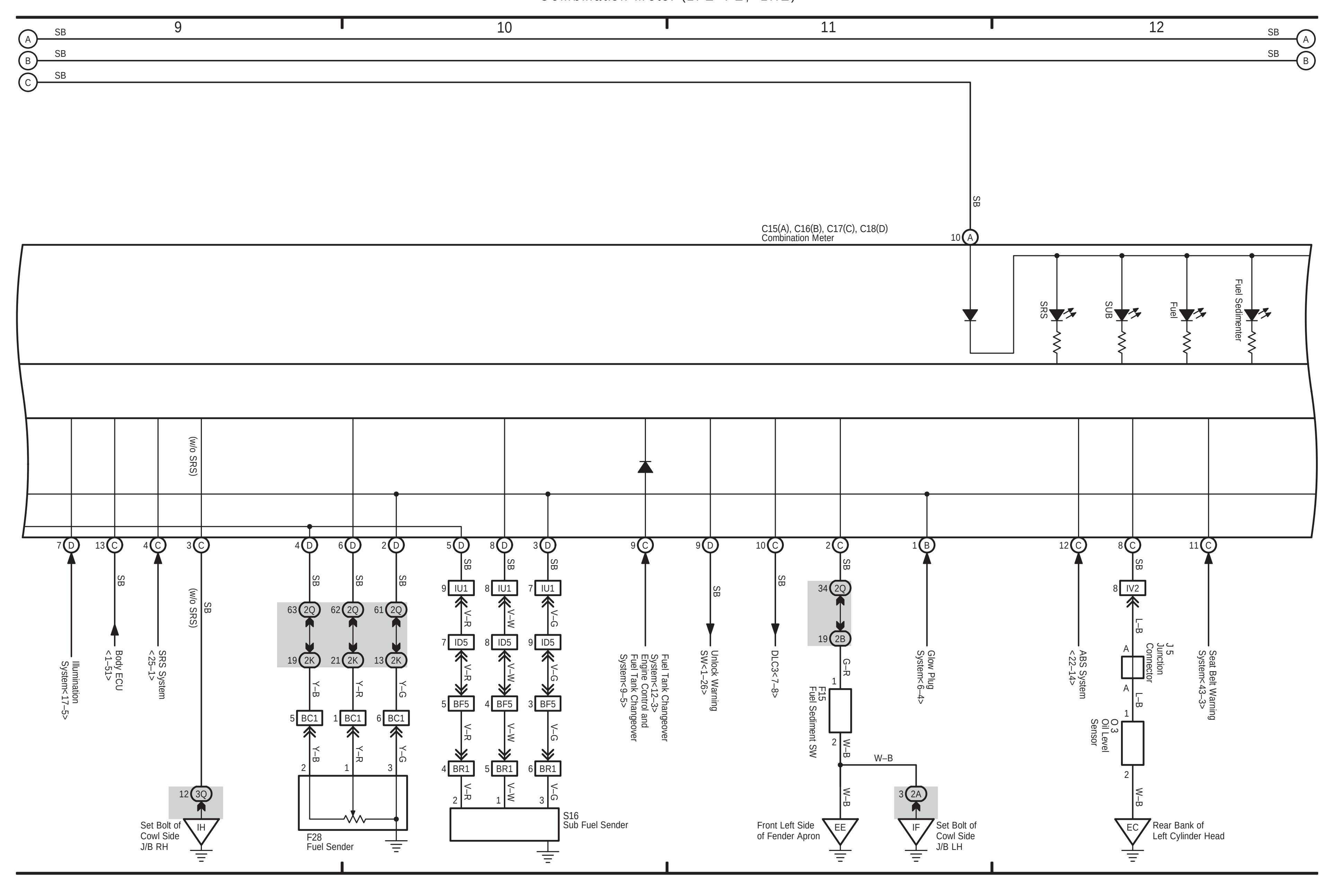

Combination Meter (1FZ–FE, 1HZ)

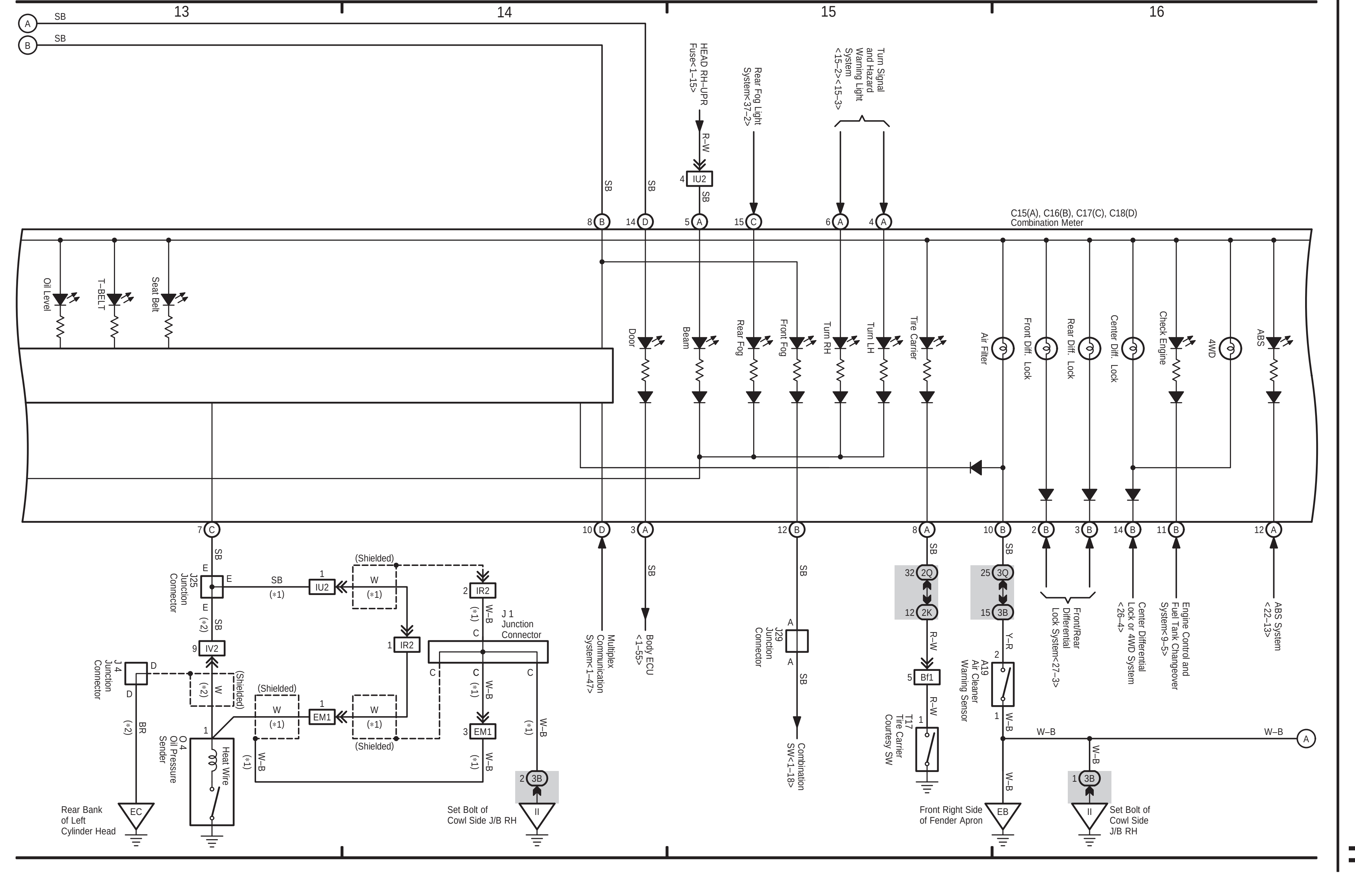

Combination Meter (1FZ–FE, 1HZ)

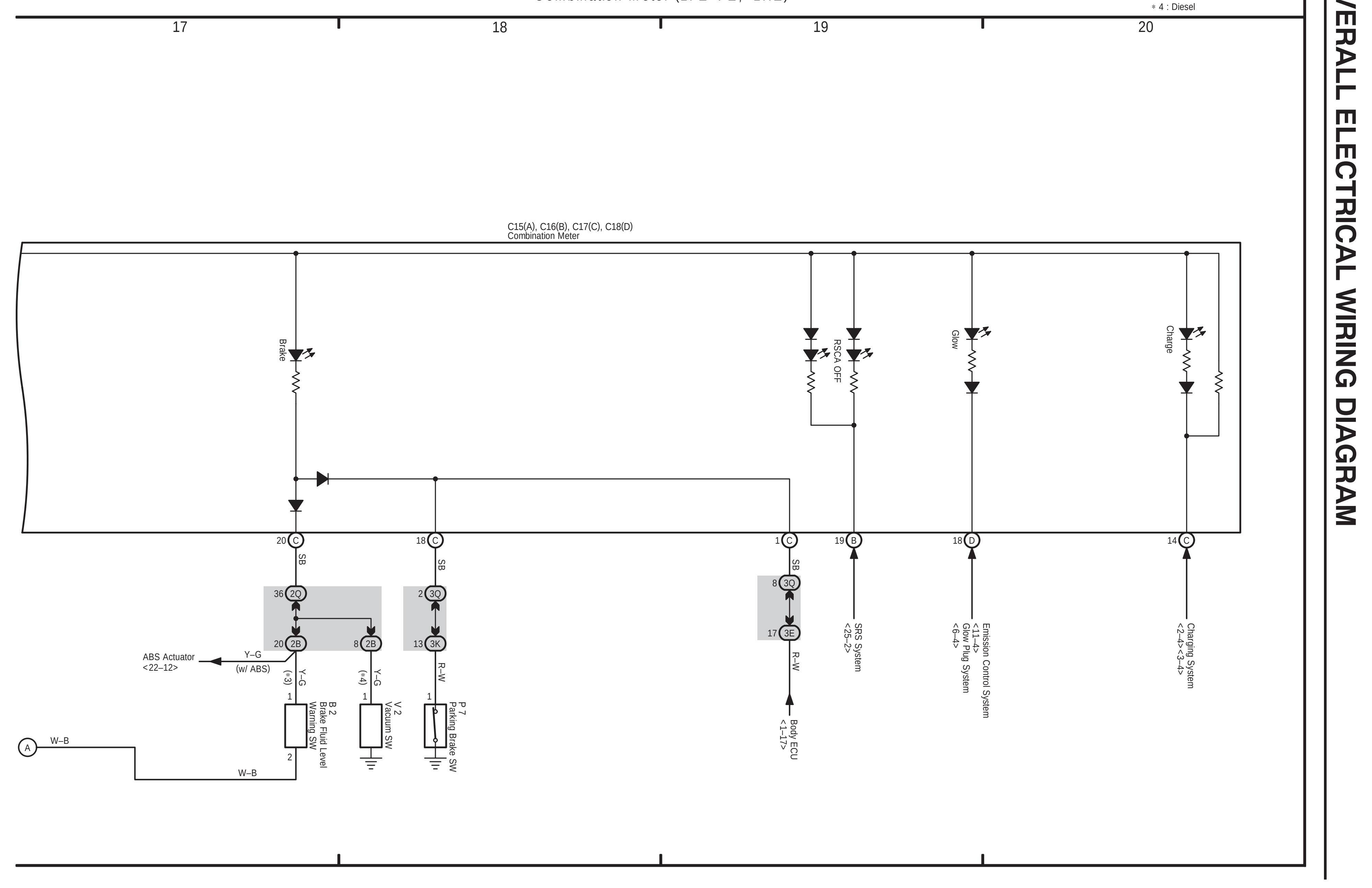

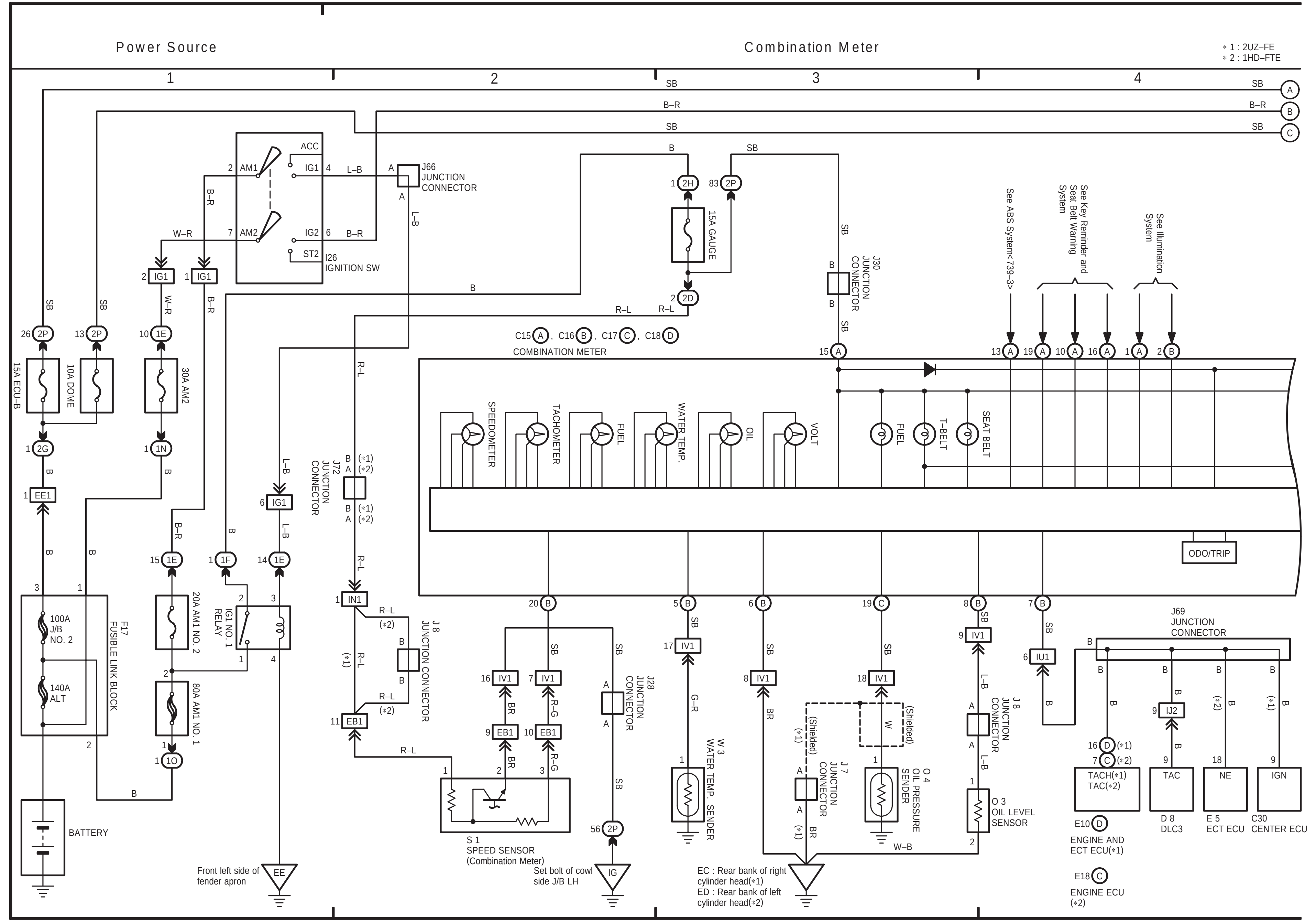
Power Source
Combination Meter
∗1 : 2UZ–FE
∗2 : 1HD–FTE
ACC
AM1
IG1
AM2
IG2
ST2
I26
IGNITION SW
J66
JUNCTION
CONNECTOR
15A GAUGE
J30
JUNCTION
CONNECTOR
See ABS System<739–3>
See Key Reminder and Seat Belt Warning System
See Illumination System
15A ECU–B
10A DOME
30A AM2
C15 A, C16 B, C17 C, C18 D
COMBINATION METER
SPEEDOMETER
TACHOMETER
FUEL
WATER TEMP.
OIL
VOLT
T–BELT
SEAT BELT
ODO/TRIP
J72
JUNCTION
CONNECTOR
100A
J/B
NO. 2
140A
ALT
F17
FUSIBLE LINK BLOCK
20A AM1 NO. 2
80A AM1 NO. 1
IG1 NO. 1
RELAY
J 8
JUNCTION CONNECTOR
J28
JUNCTION
CONNECTOR
BATTERY
Front left side of
fender apron
S 1
SPEED SENSOR
(Combination Meter)
Set bolt of cowl
side J/B LH
W 3
WATER TEMP. SENDER
(Shielded)
J 7
JUNCTION
CONNECTOR
O 4
OIL PRESSURE
SENDER
O 3
OIL LEVEL
SENSOR
EC : Rear bank of right
cylinder head(∗1)
ED : Rear bank of left
cylinder head(∗2)
J69
JUNCTION
CONNECTOR
TACH(∗1)
TAC(∗2)
TAC
NE
IGN
E10 D
ENGINE AND
ECT ECU(∗1)
E18 C
ENGINE ECU
(∗2)
D 8
DLC3
E 5
ECT ECU
C30
CENTER ECU

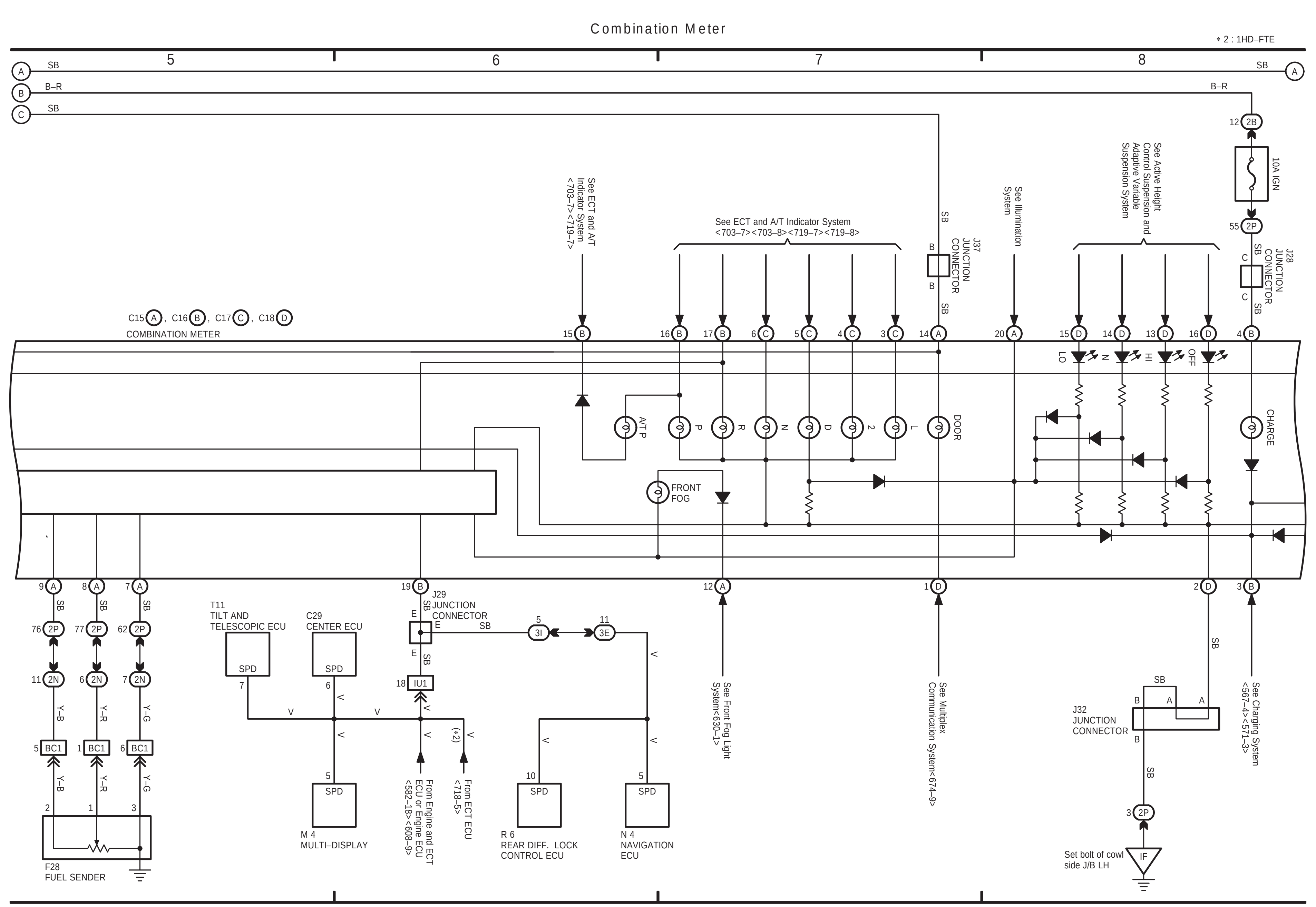
Combination Meter
∗2 : 1HD–FTE
10A IGN
J28
JUNCTION
CONNECTOR
See ECT and A/T Indicator System <703–7><719–7>
See ECT and A/T Indicator System
<703–7><703–8><719–7><719–8>
J37
JUNCTION
CONNECTOR
See Illumination System
See Active Height Control Suspension and Adaptive Variable Suspension System
C15 A, C16 B, C17 C, C18 D
COMBINATION METER
A/T P
P
R
N
D
2
L
DOOR
LO
N
HI
OFF
CHARGE
FRONT
FOG
J29
JUNCTION
CONNECTOR
T11
TILT AND
TELESCOPIC ECU
C29
CENTER ECU
SPD
M 4
MULTI–DISPLAY
From Engine and ECT ECU or Engine ECU <582–18><608–9>
From ECT ECU <718–5>
R 6
REAR DIFF. LOCK
CONTROL ECU
N 4
NAVIGATION
ECU
See Front Fog Light System<630–1>
See Multiplex Communication System<674–9>
J32
JUNCTION
CONNECTOR
Set bolt of cowl
side J/B LH
See Charging System <567–4><571–3>
F28
FUEL SENDER

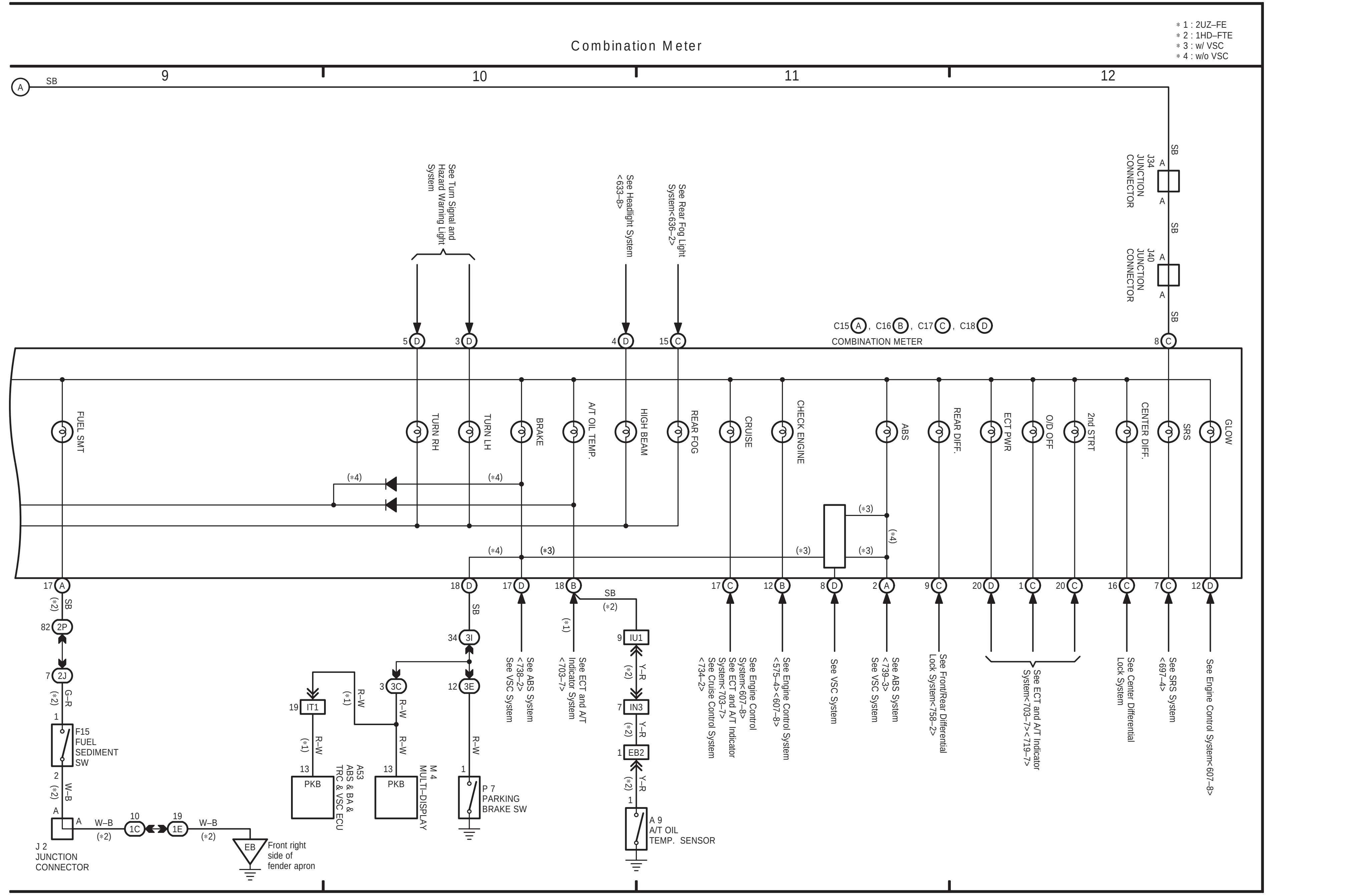
Combination Meter
∗1 : 2UZ–FE
∗2 : 1HD–FTE
∗3 : w/ VSC
∗4 : w/o VSC
See Turn Signal and Hazard Warning Light System
See Headlight System <633–8>
See Rear Fog Light System<636–2>
J34
JUNCTION
CONNECTOR
J40
JUNCTION
CONNECTOR
C15 A, C16 B, C17 C, C18 D
COMBINATION METER
FUEL SMT
TURN RH
TURN LH
BRAKE
A/T OIL TEMP.
HIGH BEAM
REAR FOG
CRUISE
CHECK ENGINE
ABS
REAR DIFF.
ECT PWR
O/D OFF
2nd STRT
CENTER DIFF.
SRS
GLOW
F15
FUEL
SEDIMENT
SW
J 2
JUNCTION
CONNECTOR
Front right
side of
fender apron
PKB
A53
ABS & BA &
TRC & VSC ECU
M 4
MULTI–DISPLAY
P 7
PARKING
BRAKE SW
See ABS System <738–2>
See VSC System
See ECT and A/T Indicator System <703–7>
A 9
A/T OIL
TEMP. SENSOR
See Engine Control System<607–8>
See ECT and A/T Indicator System<703–7>
See Cruise Control System <734–2>
See Engine Control System <575–4><607–8>
See VSC System
See ABS System <739–3>
See VSC System
See Front/Rear Differential Lock System<758–2>
See ECT and A/T Indicator System<703–7><719–7>
See Center Differential Lock System
See SRS System <697–4>
See Engine Control System<607–8>

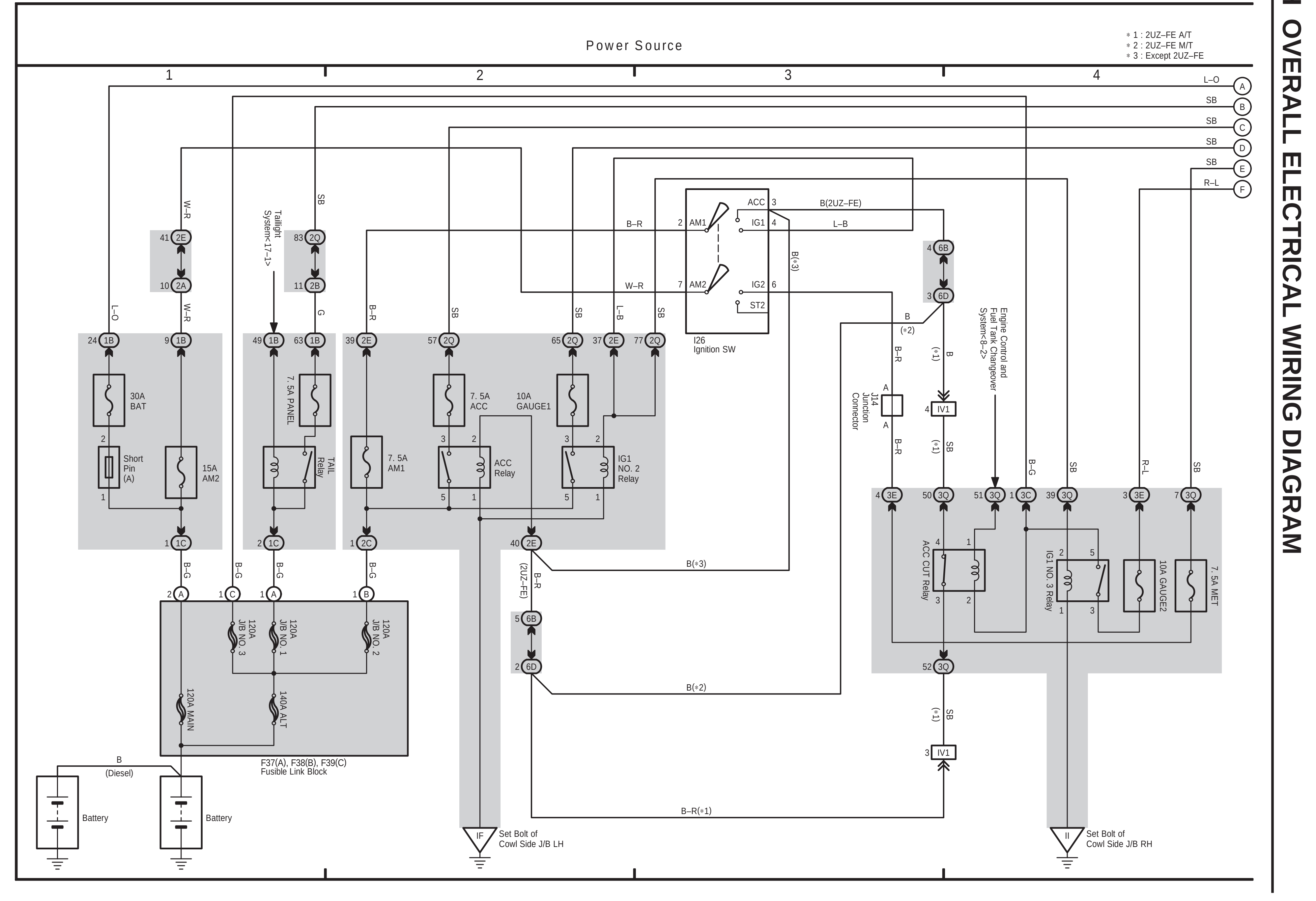
Power Source
＊1 : 2UZ–FE A/T
＊2 : 2UZ–FE M/T
＊3 : Except 2UZ–FE
30A BAT
Short Pin (A)
15A AM2
7. 5A PANEL
TAIL Relay
Taillight System<17–1>
7. 5A AM1
7. 5A ACC
ACC Relay
10A GAUGE1
IG1 NO. 2 Relay
I26 Ignition SW
J14 Junction Connector
Engine Control and Fuel Tank Changeover System<8–2>
ACC CUT Relay
IG1 NO. 3 Relay
10A GAUGE2
7. 5A MET
120A J/B NO. 3
120A J/B NO. 1
120A J/B NO. 2
120A MAIN
140A ALT
F37(A), F38(B), F39(C) Fusible Link Block
Battery
(Diesel)
Set Bolt of Cowl Side J/B LH
Set Bolt of Cowl Side J/B RH

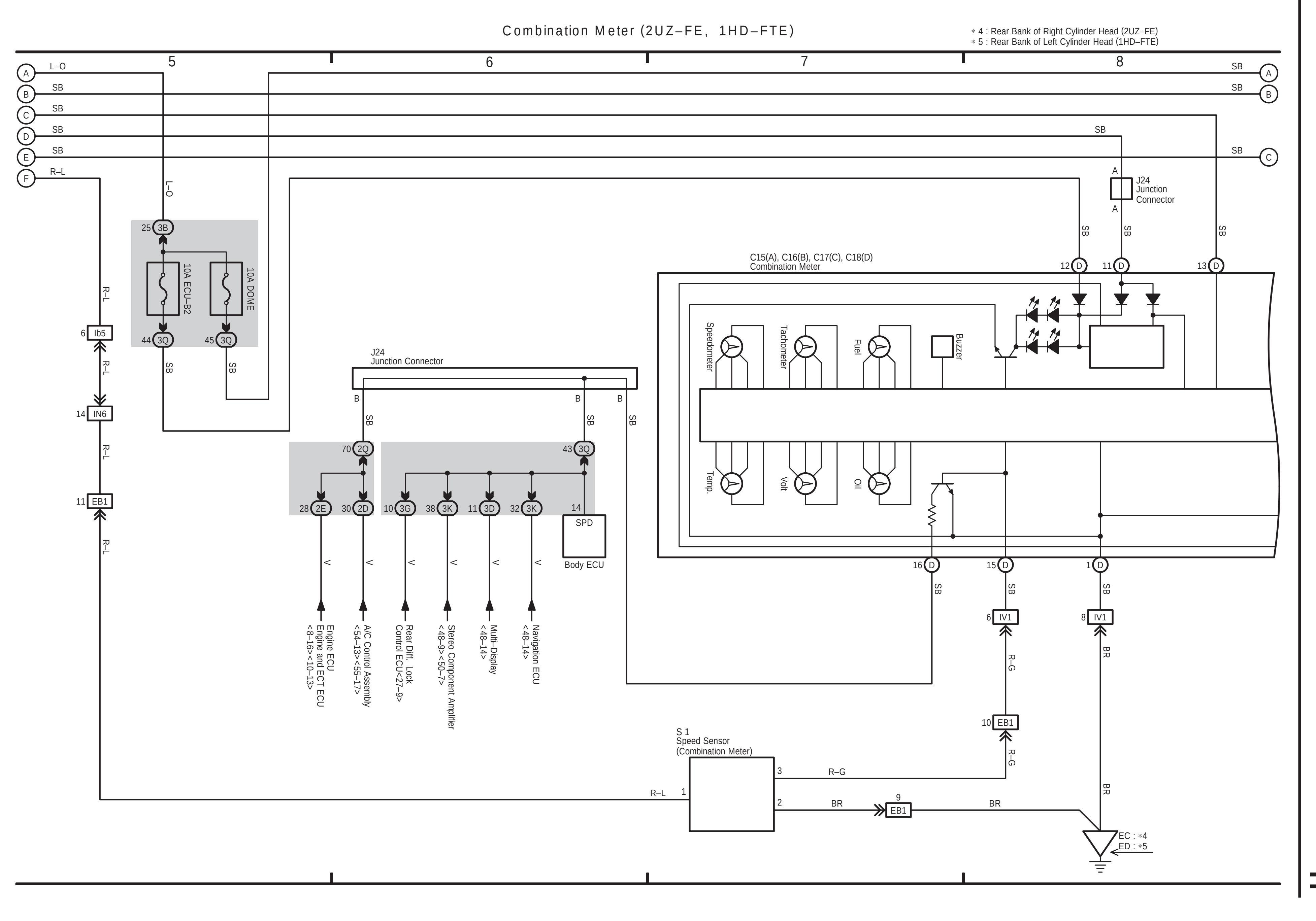
Combination Meter (2UZ–FE, 1HD–FTE)
＊4 : Rear Bank of Right Cylinder Head (2UZ–FE)
＊5 : Rear Bank of Left Cylinder Head (1HD–FTE)
10A ECU–B2
10A DOME
J24 Junction Connector
C15(A), C16(B), C17(C), C18(D) Combination Meter
Speedometer
Tachometer
Fuel
Buzzer
Temp.
Volt
Oil
SPD
Body ECU
Engine ECU Engine and ECT ECU <8–16><10–13>
A/C Control Assembly <54–13><55–17>
Rear Diff. Lock Control ECU<27–9>
Stereo Component Amplifier <48–9><50–7>
Multi–Display <48–14>
Navigation ECU <48–14>
S 1 Speed Sensor (Combination Meter)
EC : ＊4
ED : ＊5

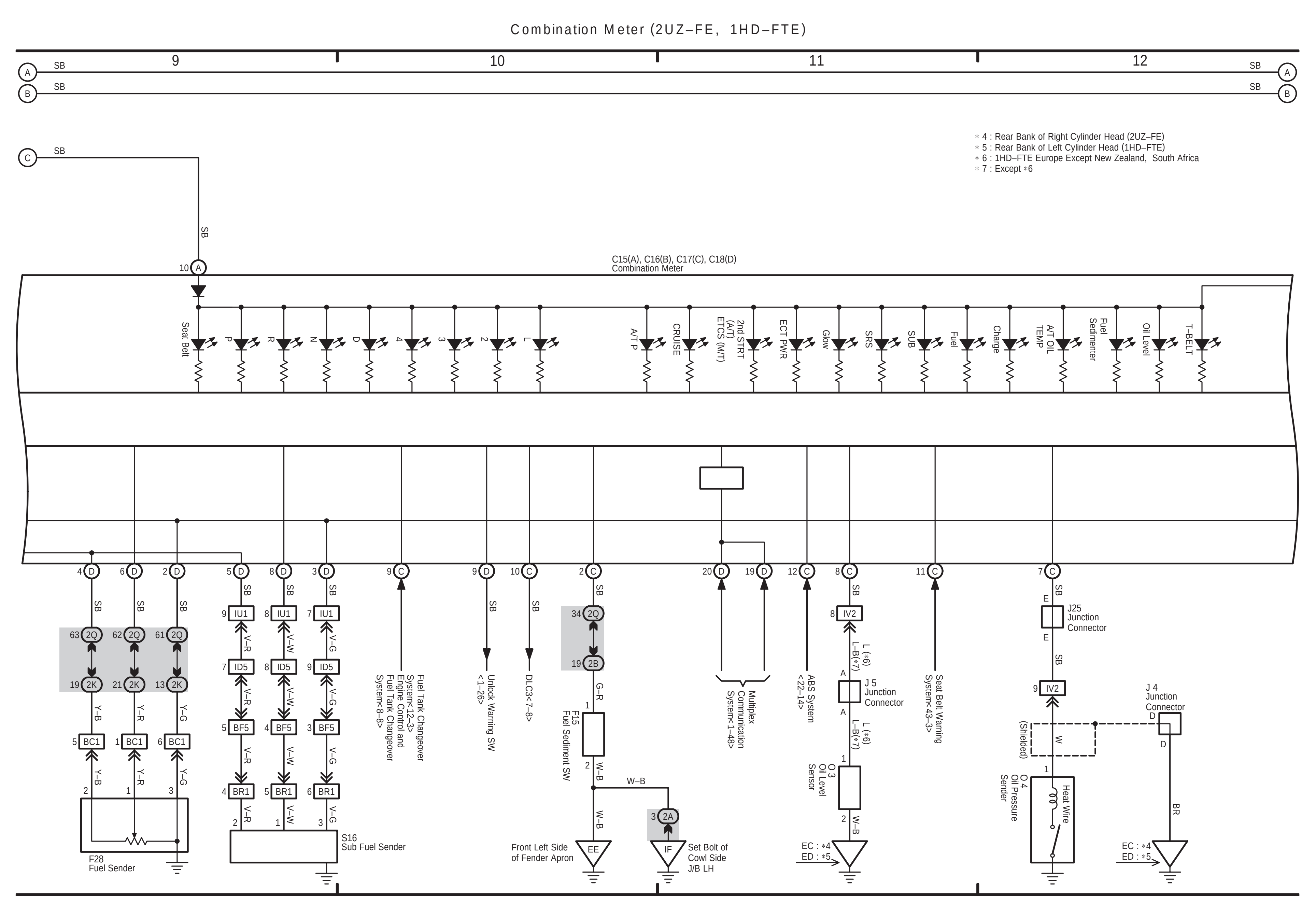
Combination Meter (2UZ–FE, 1HD–FTE)
＊4 : Rear Bank of Right Cylinder Head (2UZ–FE)
＊5 : Rear Bank of Left Cylinder Head (1HD–FTE)
＊6 : 1HD–FTE Europe Except New Zealand, South Africa
＊7 : Except ＊6
C15(A), C16(B), C17(C), C18(D) Combination Meter
Seat Belt
A/T P
CRUISE
2nd STRT (A/T) ETCS (M/T)
ECT PWR
Glow
SRS
SUB
Fuel
Charge
A/T OIL TEMP
Fuel Sedimenter
Oil Level
T–BELT
Fuel Tank Changeover System<12–3> Engine Control and Fuel Tank Changeover System<8–8>
Unlock Warning SW <1–26>
DLC3<7–8>
Multiplex Communication System<1–48>
ABS System <22–14>
Seat Belt Warning System<43–3>
F15 Fuel Sediment SW
J 5 Junction Connector
O 3 Oil Level Sensor
J25 Junction Connector
O 4 Oil Pressure Sender
Heat Wire
J 4 Junction Connector
(Shielded)
F28 Fuel Sender
S16 Sub Fuel Sender
Front Left Side of Fender Apron
Set Bolt of Cowl Side J/B LH
EC : ＊4
ED : ＊5

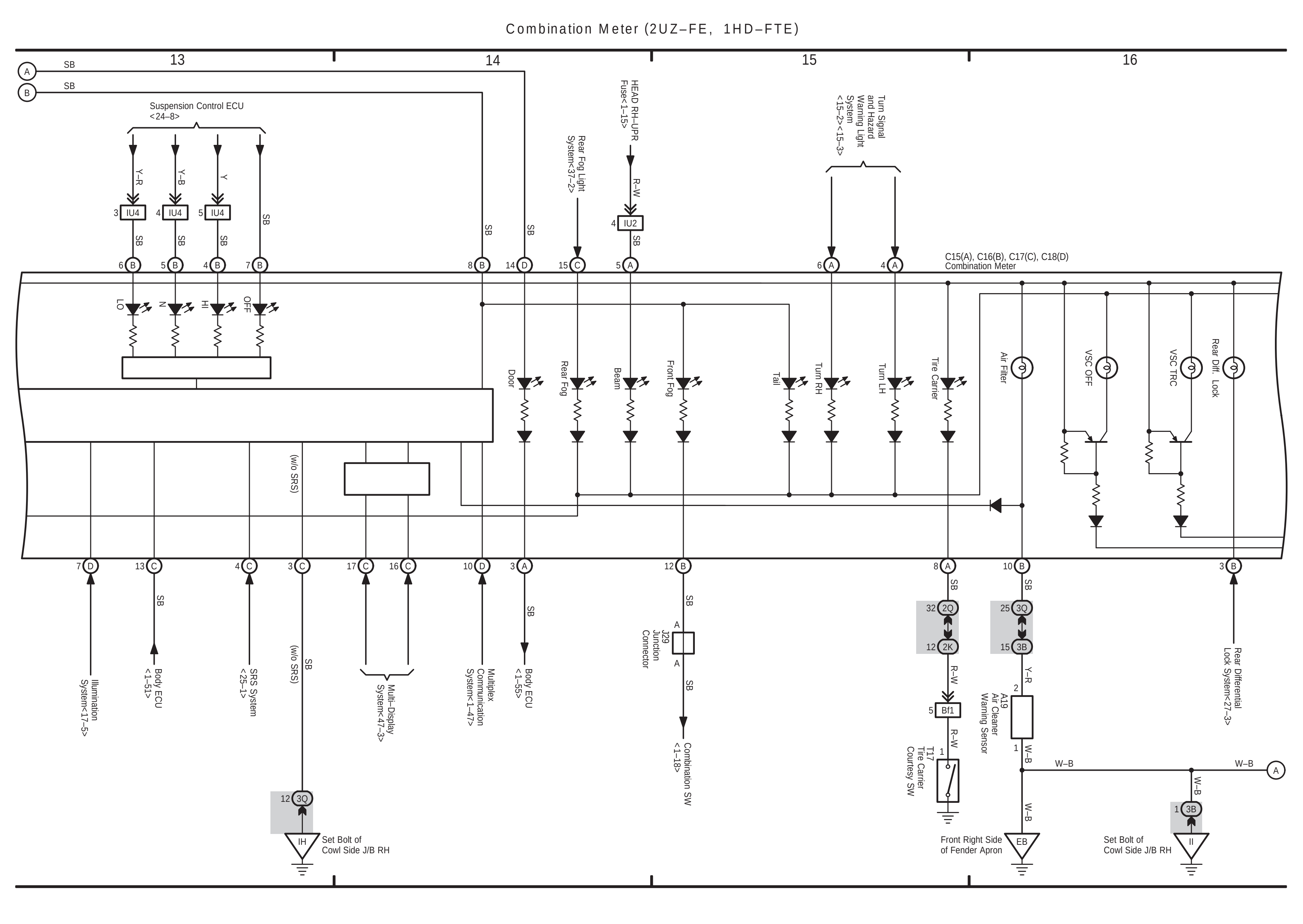
Combination Meter (2UZ–FE, 1HD–FTE)
Suspension Control ECU <24–8>
LO
N
HI
OFF
Rear Fog Light System<37–2>
HEAD RH–UPR Fuse<1–15>
Turn Signal and Hazard Warning Light System <15–2><15–3>
C15(A), C16(B), C17(C), C18(D) Combination Meter
Door
Rear Fog
Beam
Front Fog
Tail
Turn RH
Turn LH
Tire Carrier
Air Filter
VSC OFF
VSC TRC
Rear Diff. Lock
Illumination System<17–5>
Body ECU <1–51>
SRS System <25–1>
(w/o SRS)
Multi–Display System<47–3>
Multiplex Communication System<1–47>
Body ECU <1–55>
J29 Junction Connector
Combination SW <1–18>
T17 Tire Carrier Courtesy SW
A19 Air Cleaner Warning Sensor
Rear Differential Lock System<27–3>
Set Bolt of Cowl Side J/B RH
Front Right Side of Fender Apron

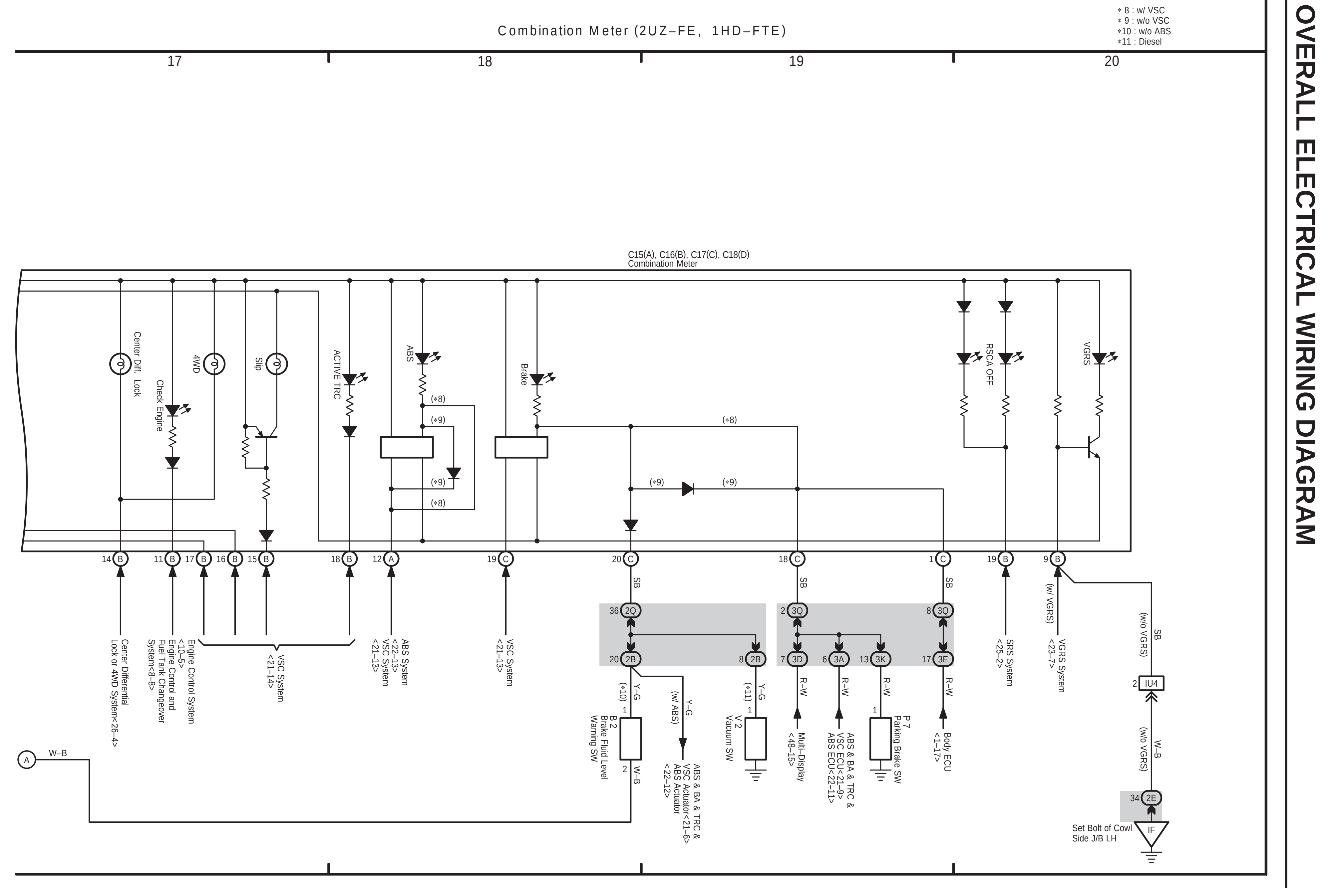
Combination Meter (2UZ–FE, 1HD–FTE)
＊8 : w/ VSC
＊9 : w/o VSC
＊10 : w/o ABS
＊11 : Diesel
C15(A), C16(B), C17(C), C18(D) Combination Meter
Center Diff. Lock
Check Engine
4WD
Slip
ACTIVE TRC
ABS
Brake
RSCA OFF
VGRS
Center Differential Lock or 4WD System<26–4>
Engine Control System <10–5> Engine Control and Fuel Tank Changeover System<8–8>
VSC System <21–14>
ABS System <22–13> VSC System <21–13>
VSC System <21–13>
B 2 Brake Fluid Level Warning SW
ABS & BA & TRC & VSC Actuator<21–6> ABS Actuator <22–12>
V 2 Vacuum SW
Multi–Display <48–15>
ABS & BA & TRC & VSC ECU<21–9> ABS ECU<22–11>
P 7 Parking Brake SW
Body ECU <1–17>
SRS System <25–2>
VGRS System <23–7>
(w/ VGRS)
(w/o VGRS)
Set Bolt of Cowl Side J/B LH

Power Source

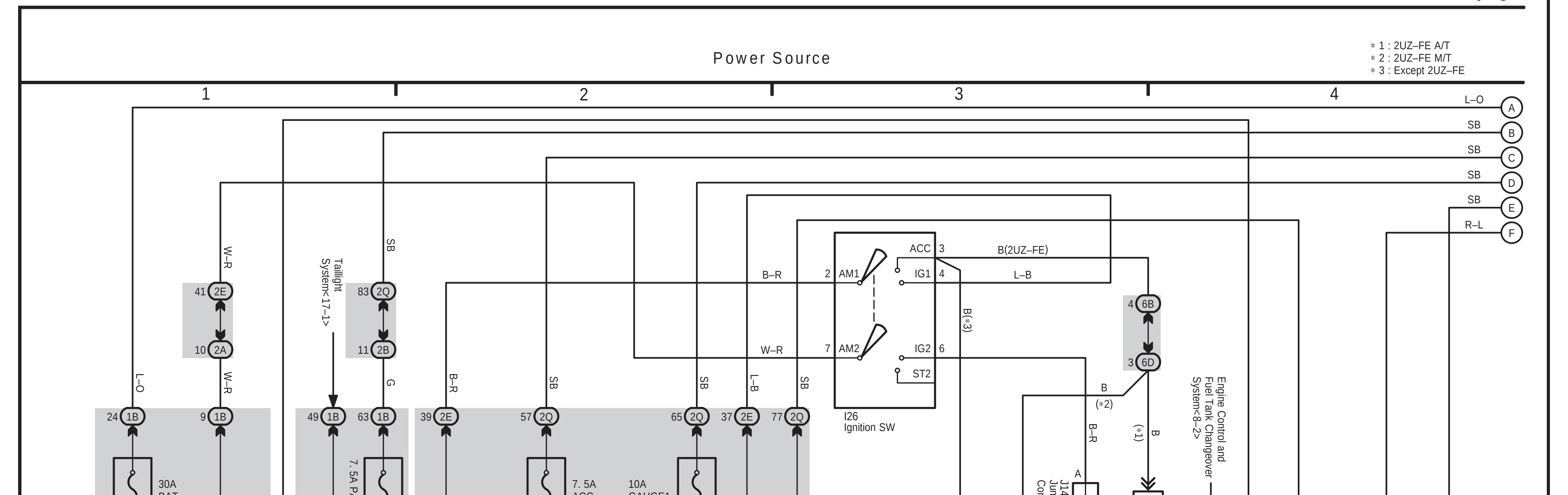

Combination Meter (2UZ–FE, 1HD–FTE Except Europe)

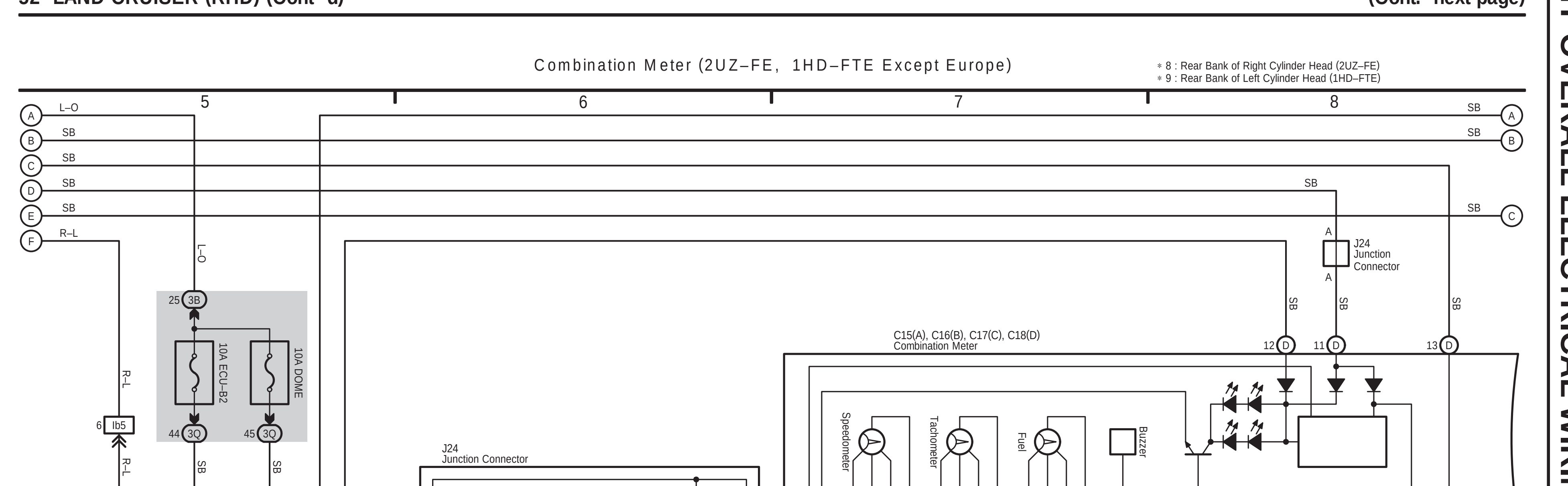

Combination Meter (2UZ–FE, 1HD–FTE Except Europe)

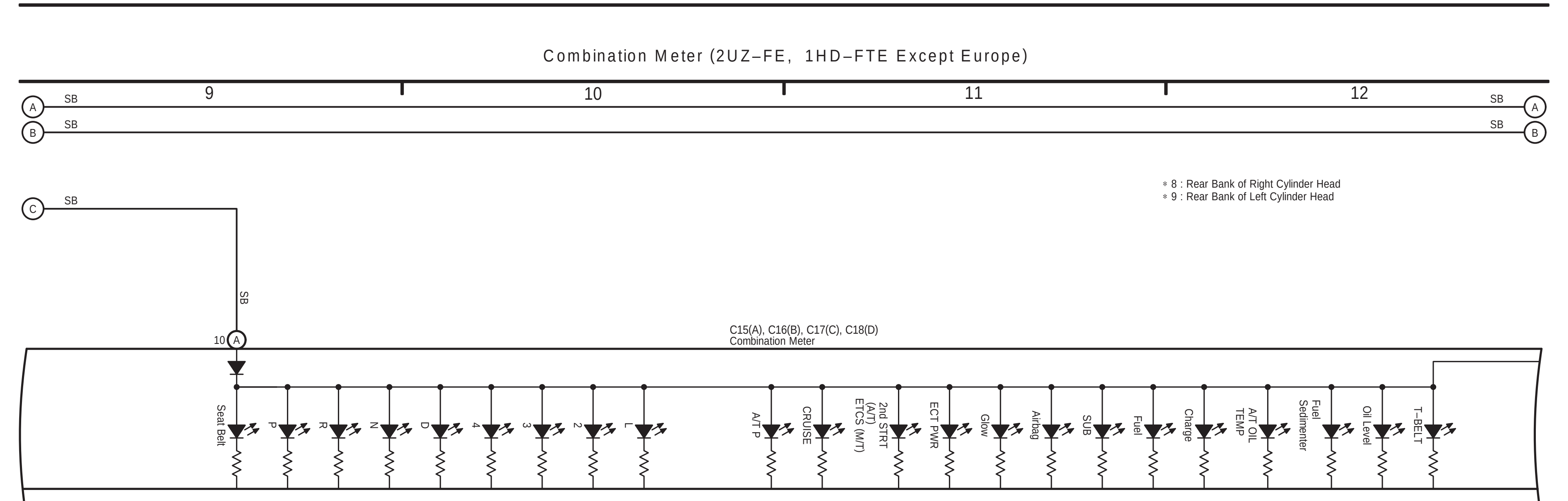

Combination Meter (2UZ–FE, 1HD–FTE Except Europe)

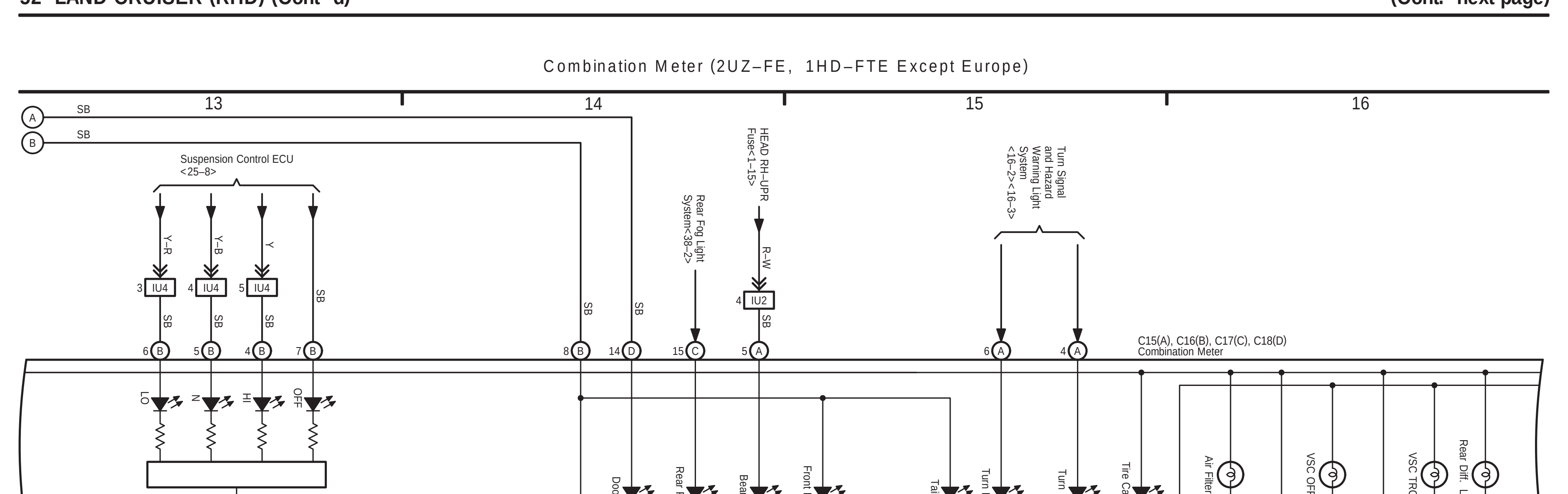

Combination Meter (2UZ–FE, 1HD–FTE Except Europe)

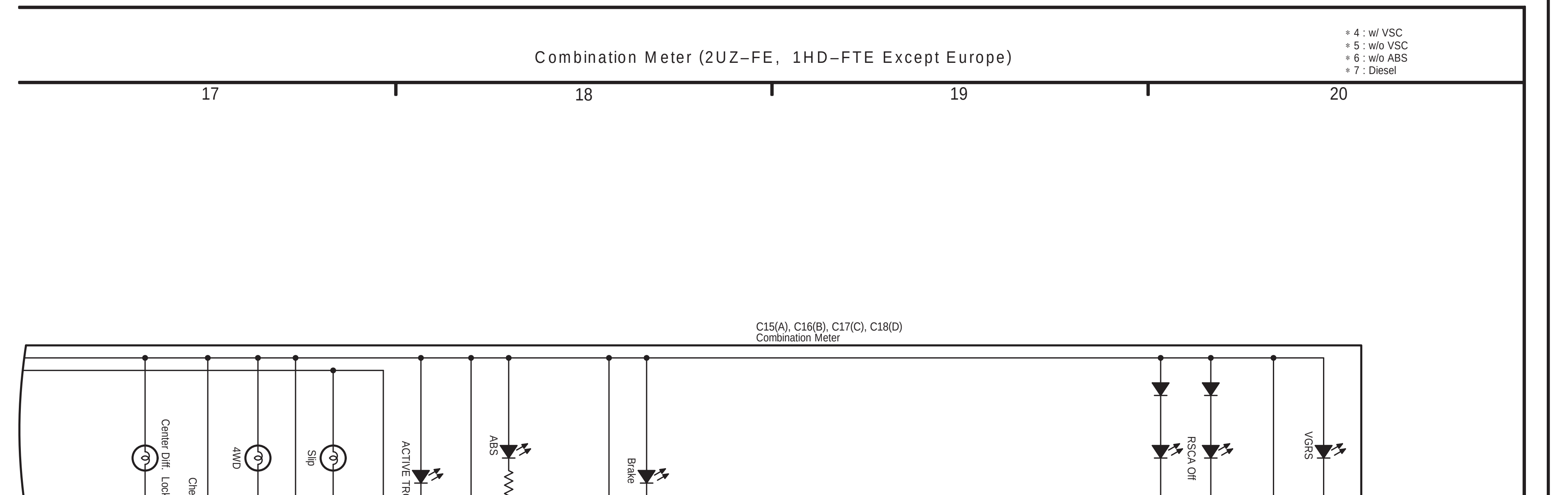

51 LAND CRUISER (RHD) (Cont. next page)

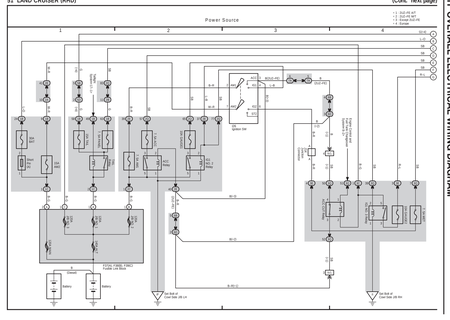

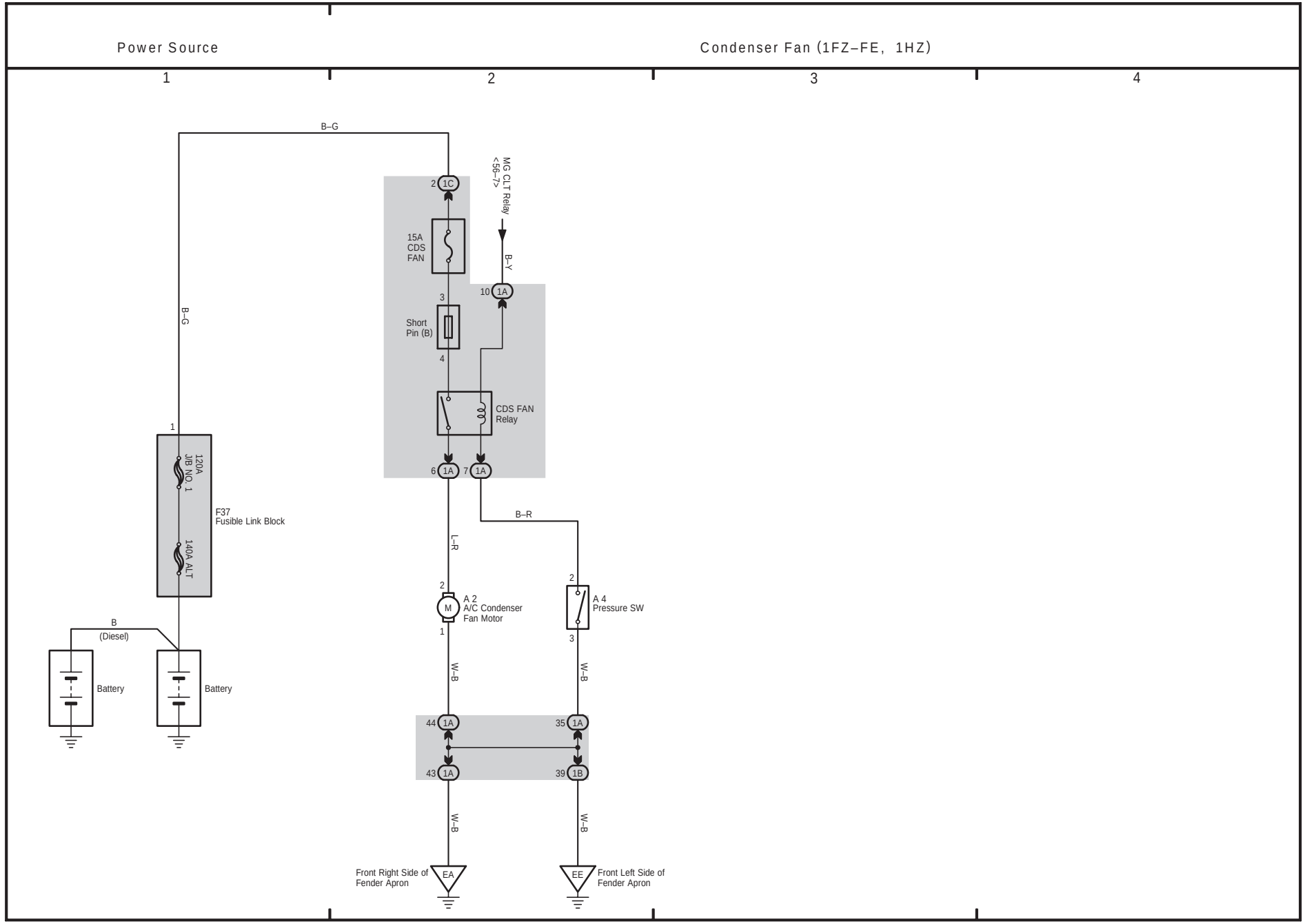
Power Source
Condenser Fan (1FZ–FE, 1HZ)
1
2
3
4
B–G
MG CLT Relay
<56–7>
2 1C
15A
CDS
FAN
B–Y
10 1A
3
Short
Pin (B)
4
CDS FAN
Relay
6 1A
7 1A
B–G
1
120A
JB NO. 1
140A ALT
F37
Fusible Link Block
B–R
L–R
2
M
A 2
A/C Condenser
Fan Motor
1
2
A 4
Pressure SW
3
B
(Diesel)
Battery
Battery
W–B
W–B
44 1A
35 1A
43 1A
39 1B
W–B
W–B
Front Right Side of
Fender Apron
EA
EE
Front Left Side of
Fender Apron

53 LAND CRUISER (RHD)

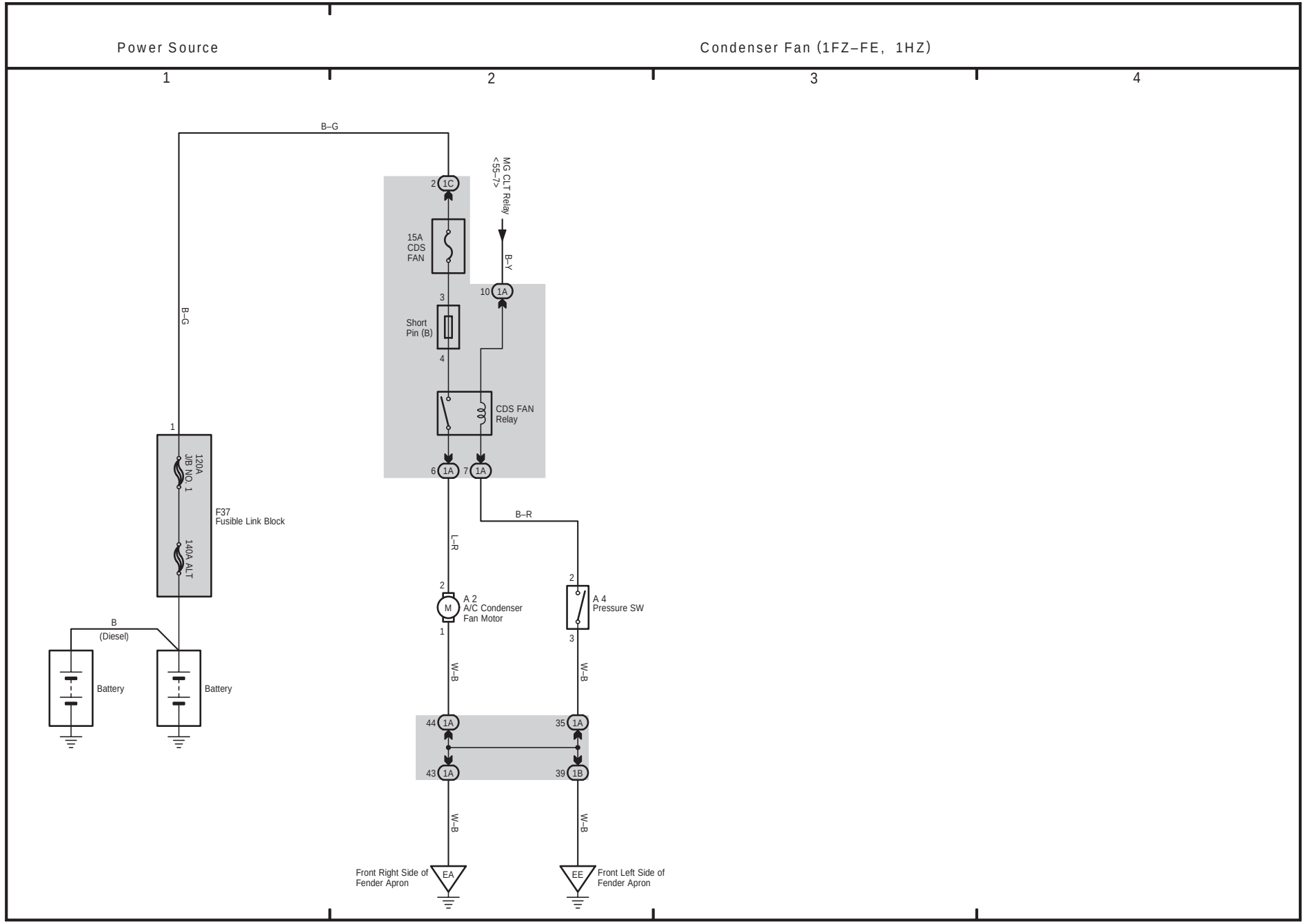

H

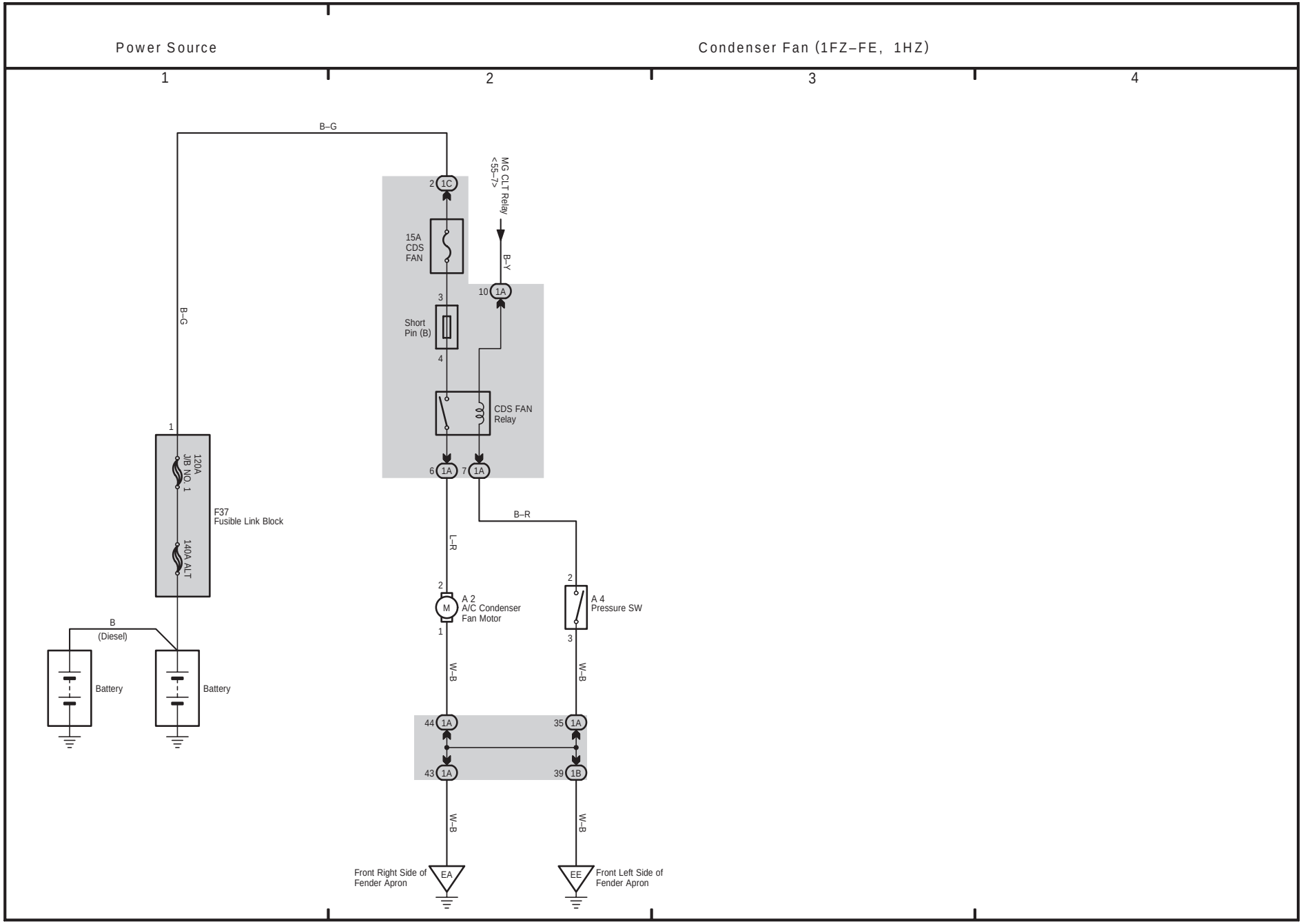
Power Source
Condenser Fan (1FZ–FE, 1HZ)
1
2
3
4
B–G
MG CLT Relay
<55–7>
2 1C
15A
CDS
FAN
B–Y
10 1A
3
Short
Pin (B)
4
CDS FAN
Relay
6 1A
7 1A
B–R
1
120A
JB NO. 1
140A ALT
F37
Fusible Link Block
L–R
2
M
A 2
A/C Condenser
Fan Motor
1
2
A 4
Pressure SW
3
B
(Diesel)
Battery
Battery
W–B
W–B
44 1A
35 1A
43 1A
39 1B
W–B
W–B
Front Right Side of
Fender Apron
EA
EE
Front Left Side of
Fender Apron

(Cont. next page)

Power Source

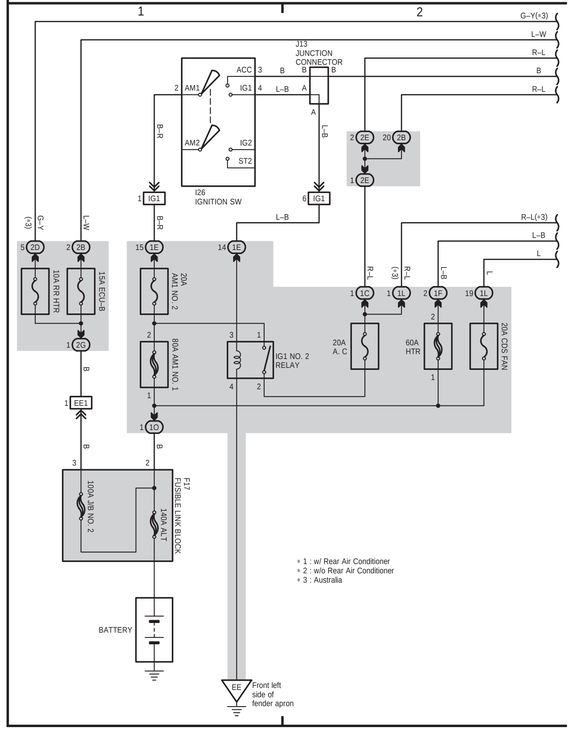

Condenser Fan and Front Air Conditioner (Automatic)

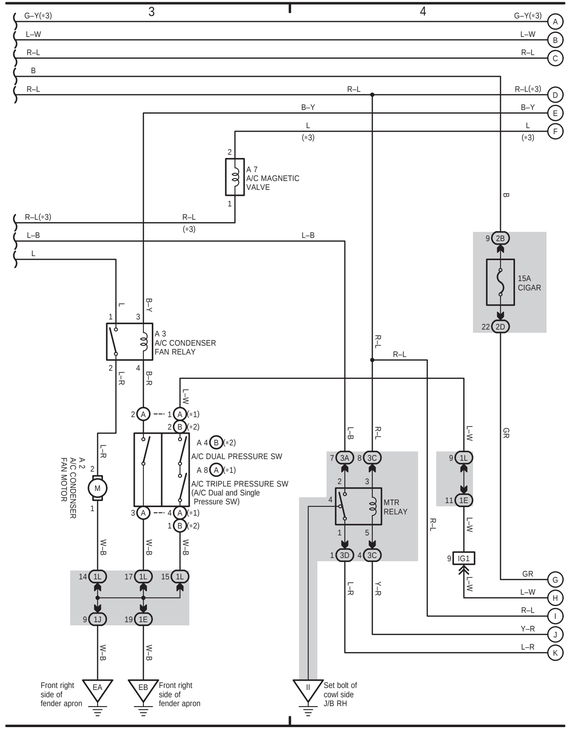

Condenser Fan and Front Air Conditioner (Automatic)

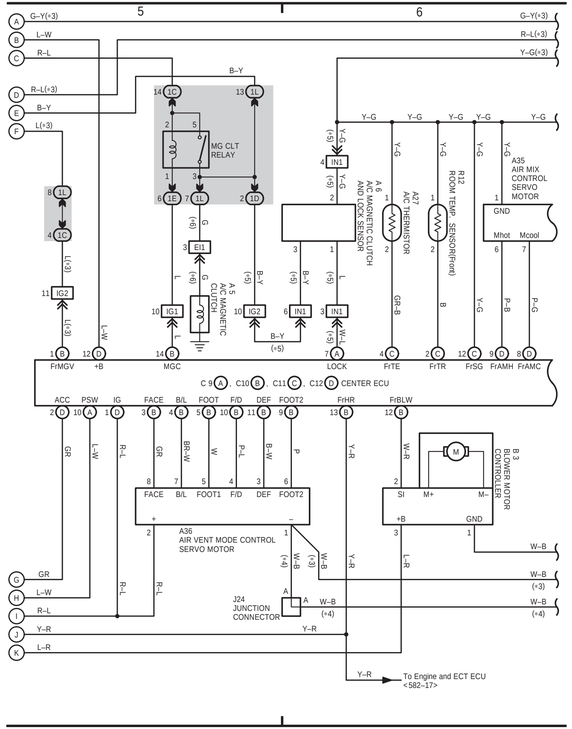

Condenser Fan and Front Air Conditioner (Automatic)

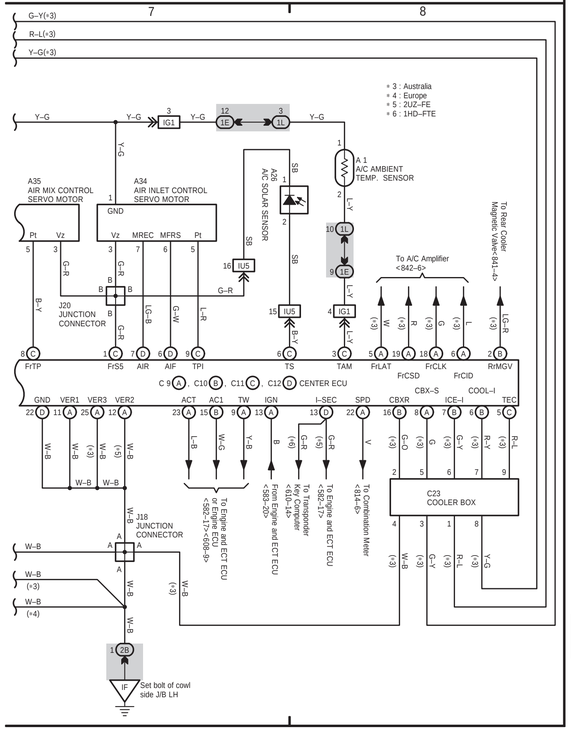

(Cont. next page)

Power Source

Condenser Fan and Front Air Conditioner (Manual)

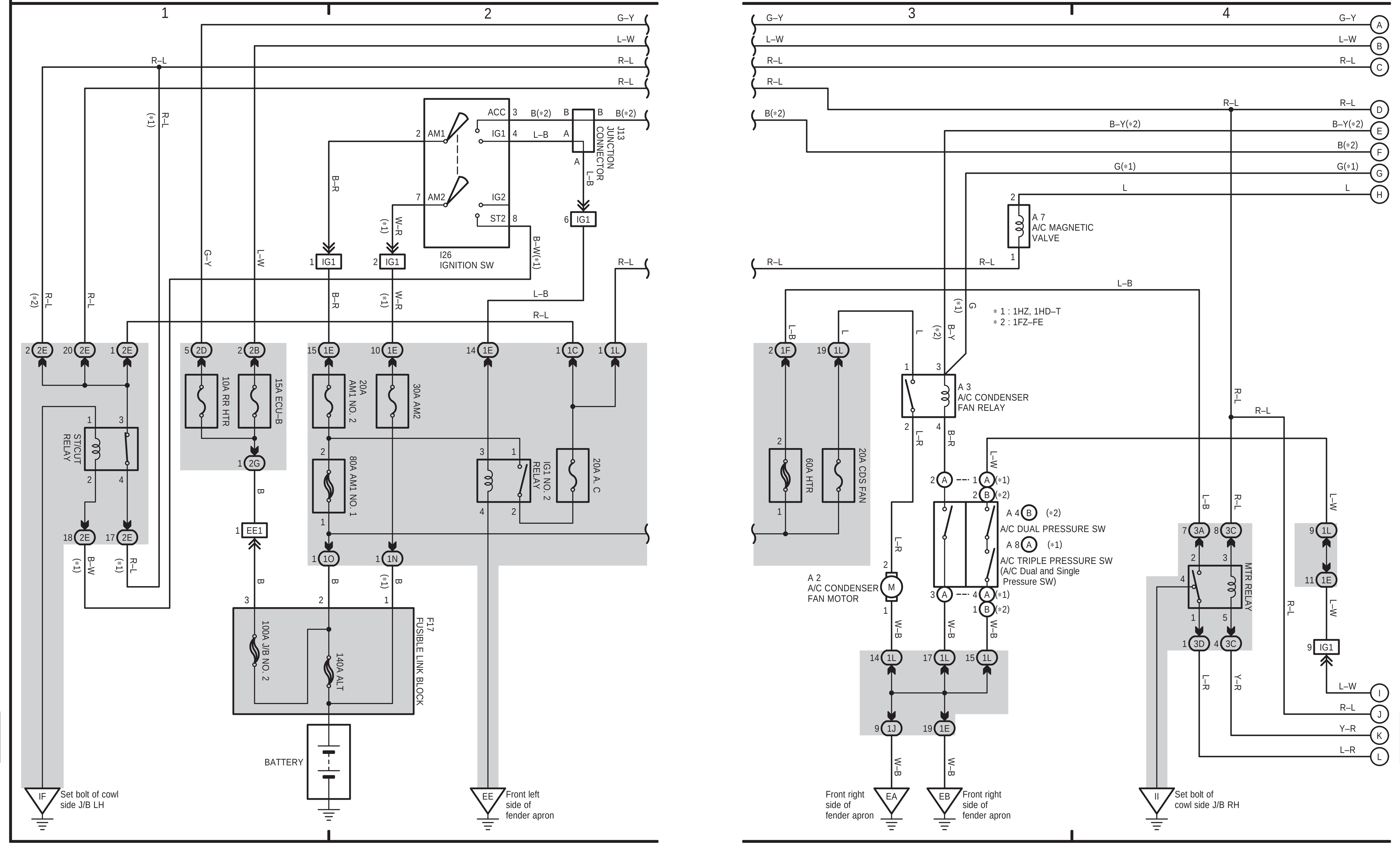

(Cont. next page)

Condenser Fan and Front Air Conditioner (Manual)

∗ 1 : 1HZ, 1HD–T
∗ 2 : 1FZ–FE
∗ 3 : Separate Type
∗ 4 : Bench Type

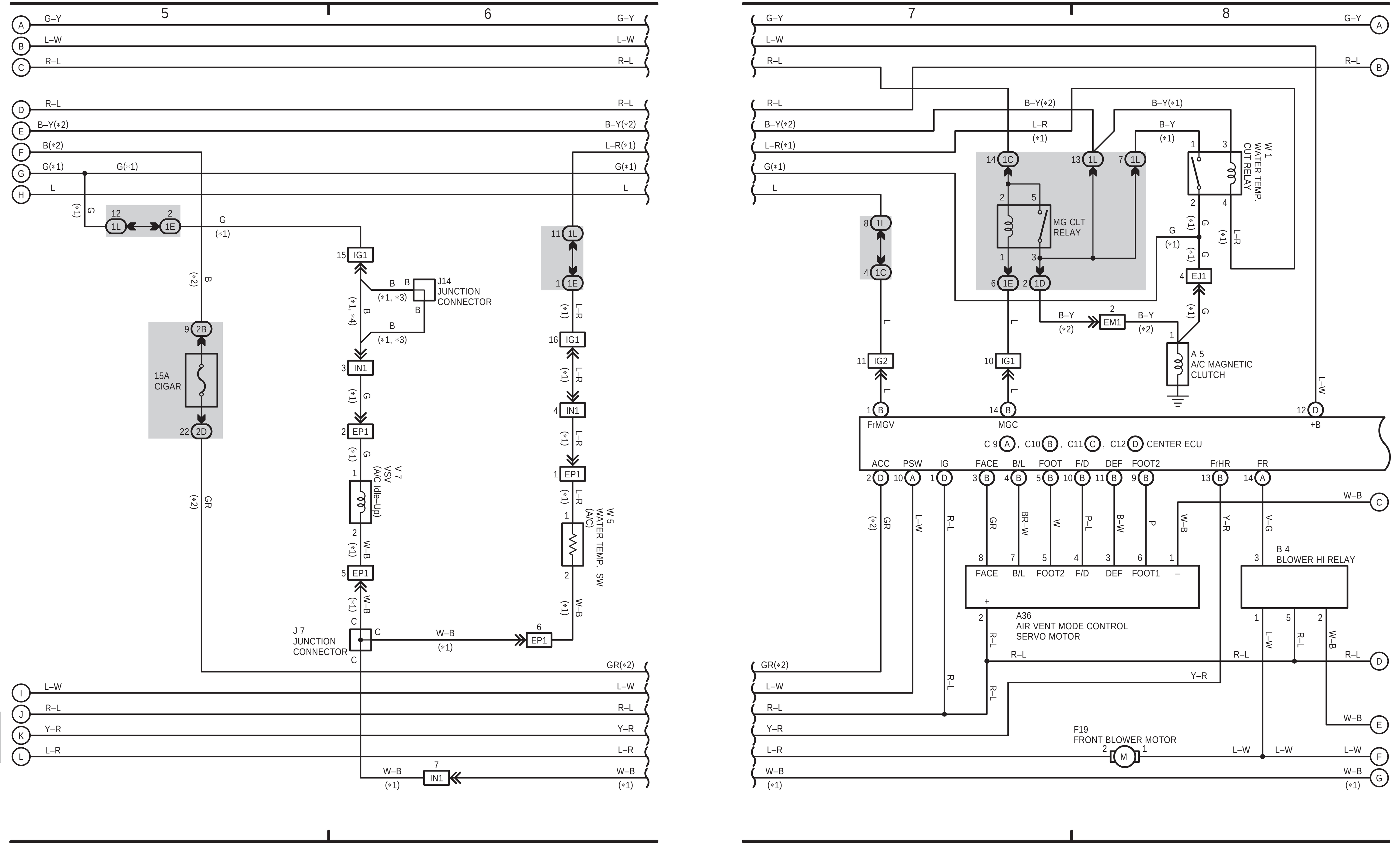

(Cont'd)

Condenser Fan and Front Air Conditioner (Manual)

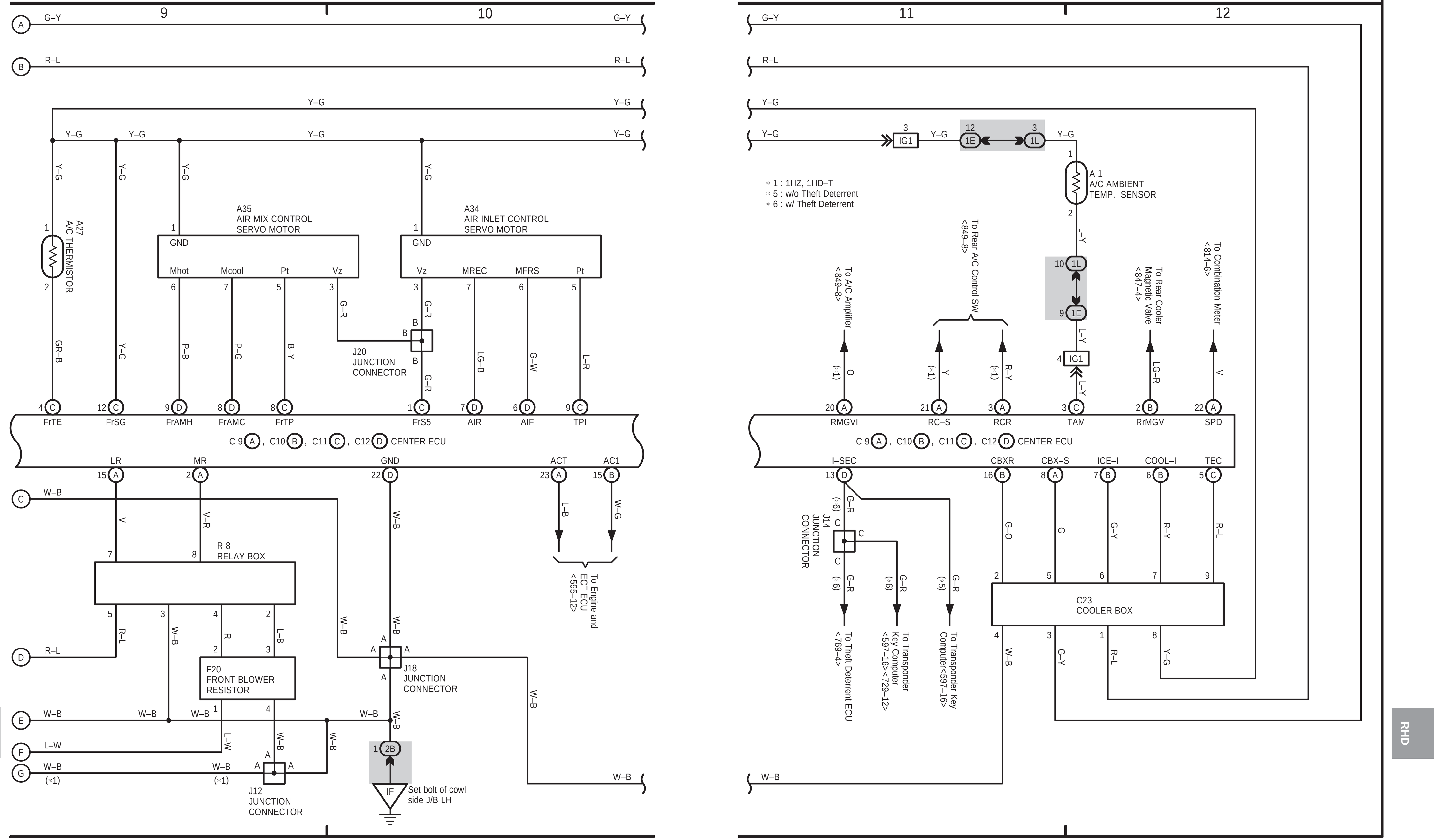

55 LAND CRUISER (RHD) (Cont. next page)

Power Source

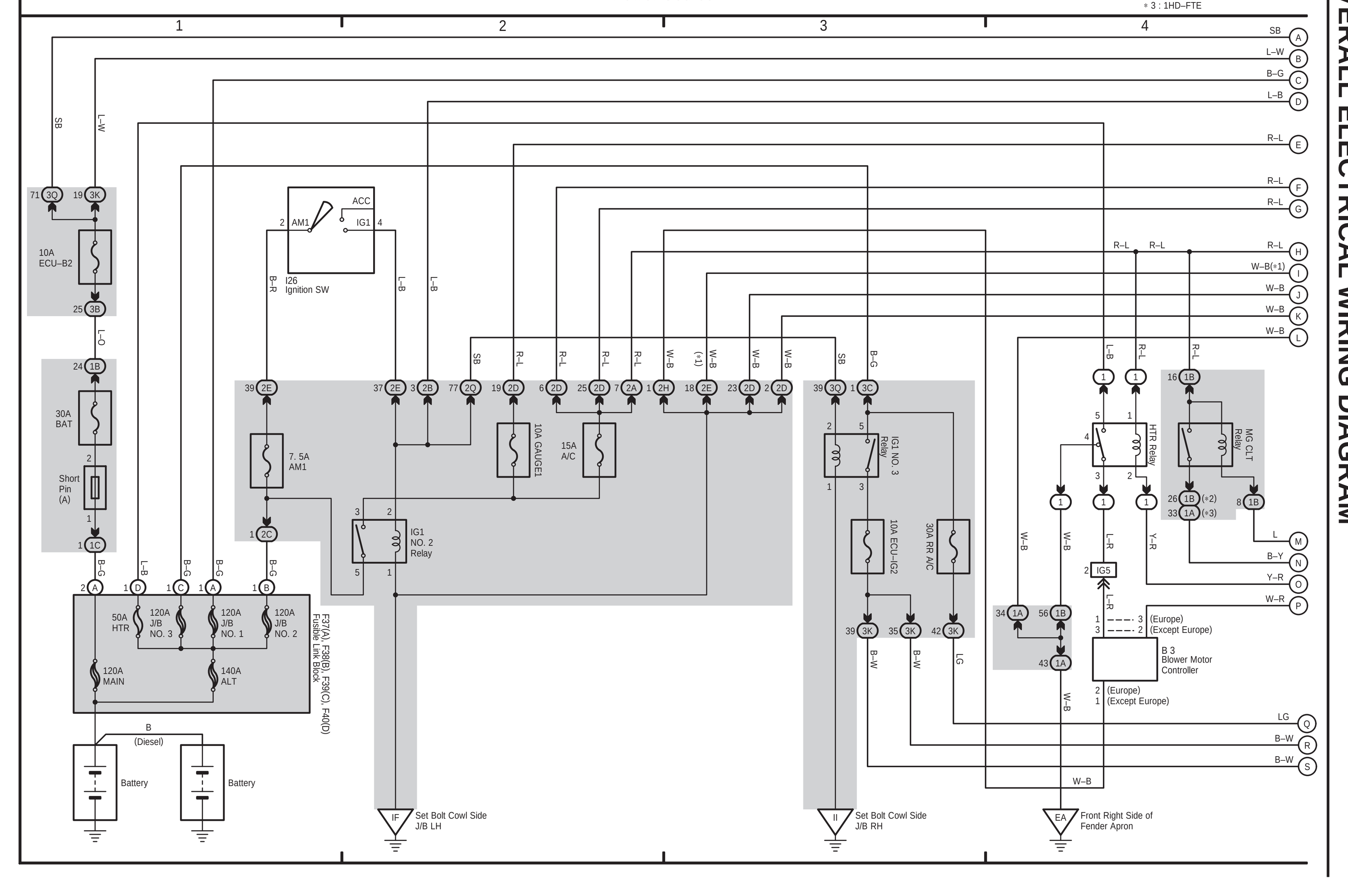

55 LAND CRUISER (RHD) (Cont' d) (Cont. next page)

Automatic Air Conditioner (Front)

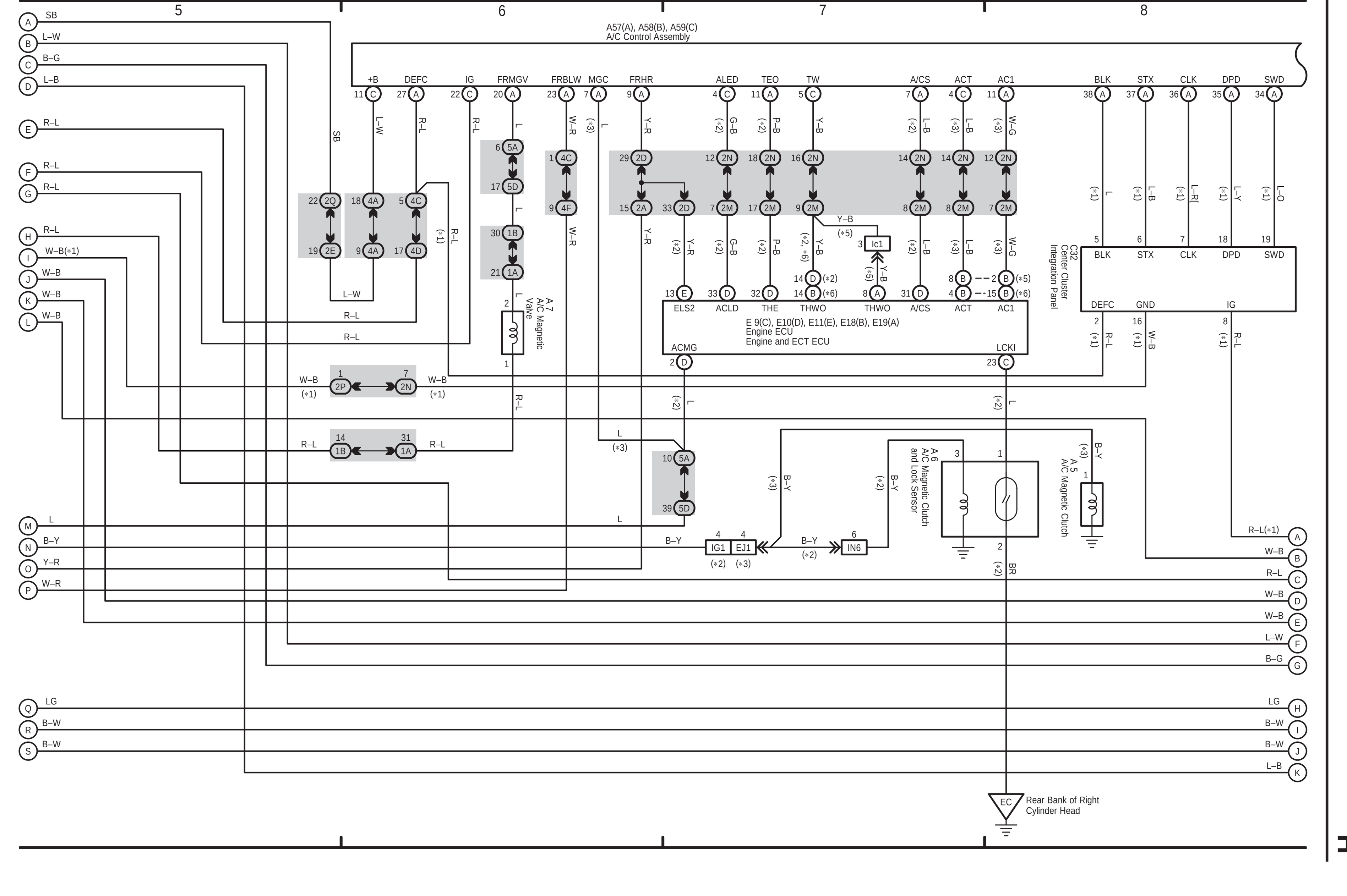

55 LAND CRUISER (RHD) (Cont' d) (Cont. next page)

Automatic Air Conditioner (Front)

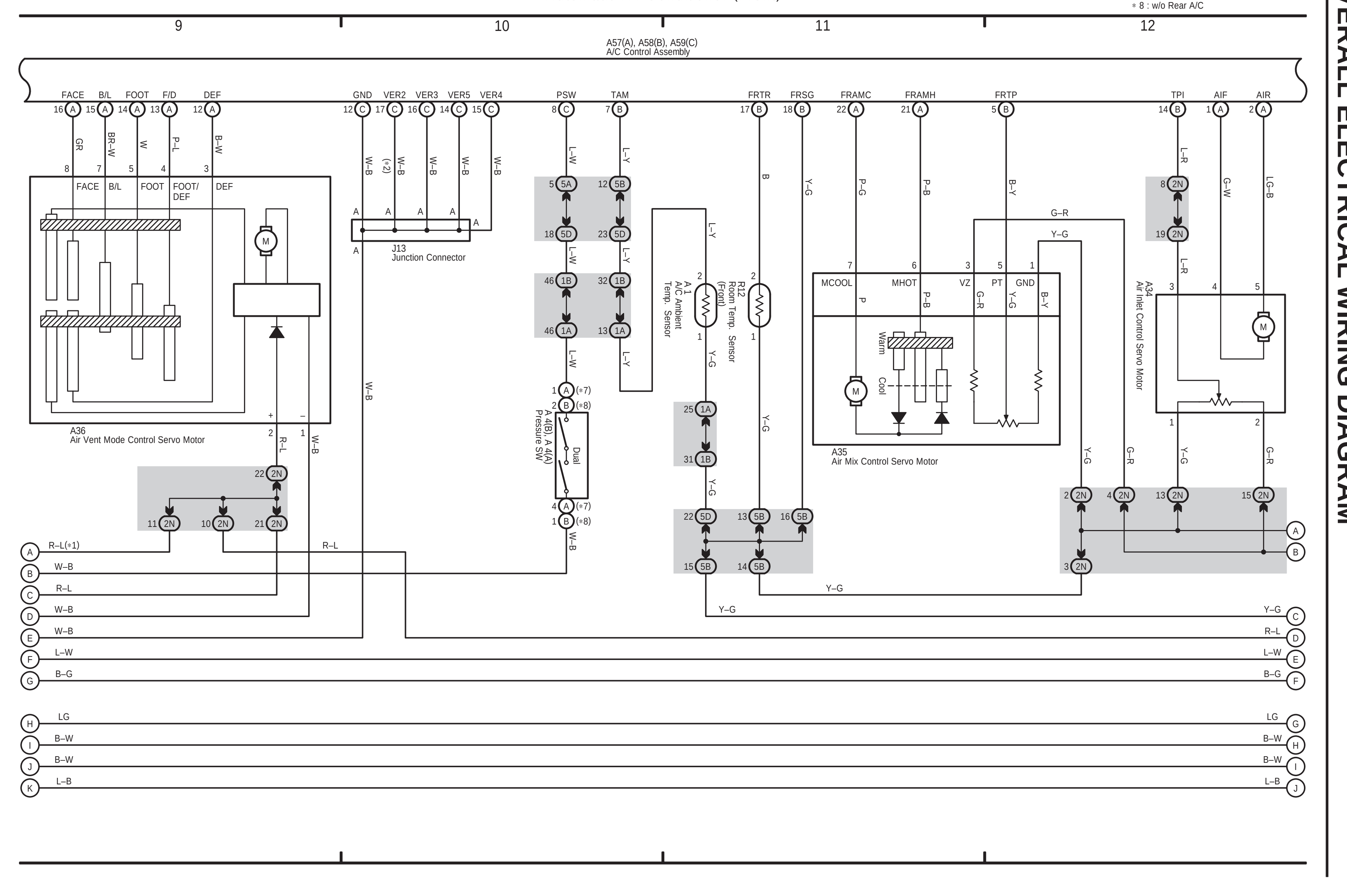

55 LAND CRUISER (RHD) (Cont' d) (Cont. next page)

Automatic Air Conditioner (Front) Cool Box Automatic Air Conditioner (Rear)

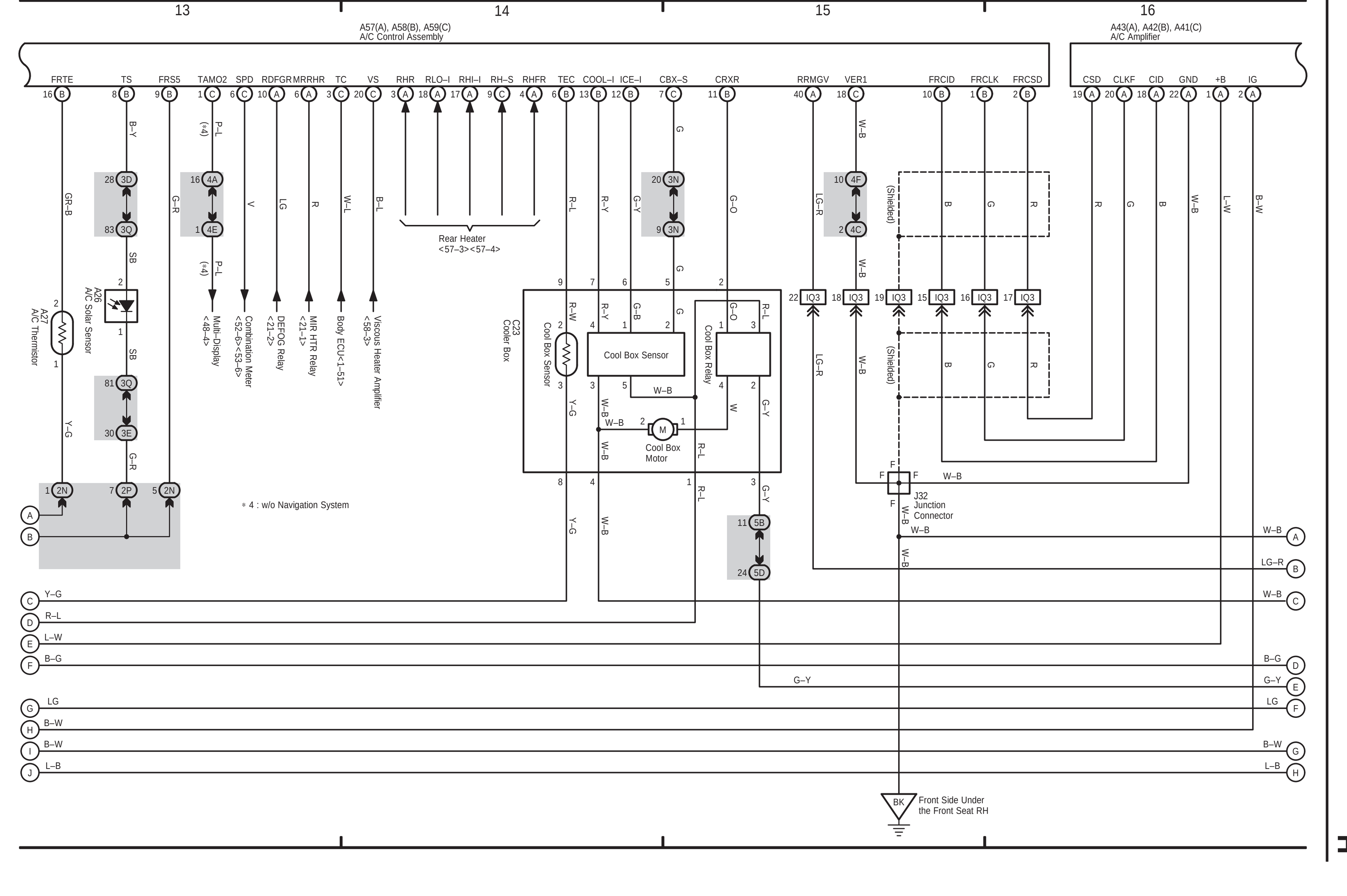

55 LAND CRUISER (RHD) (Cont' d) (Cont. next page)

Automatic Air Conditioner (Rear)

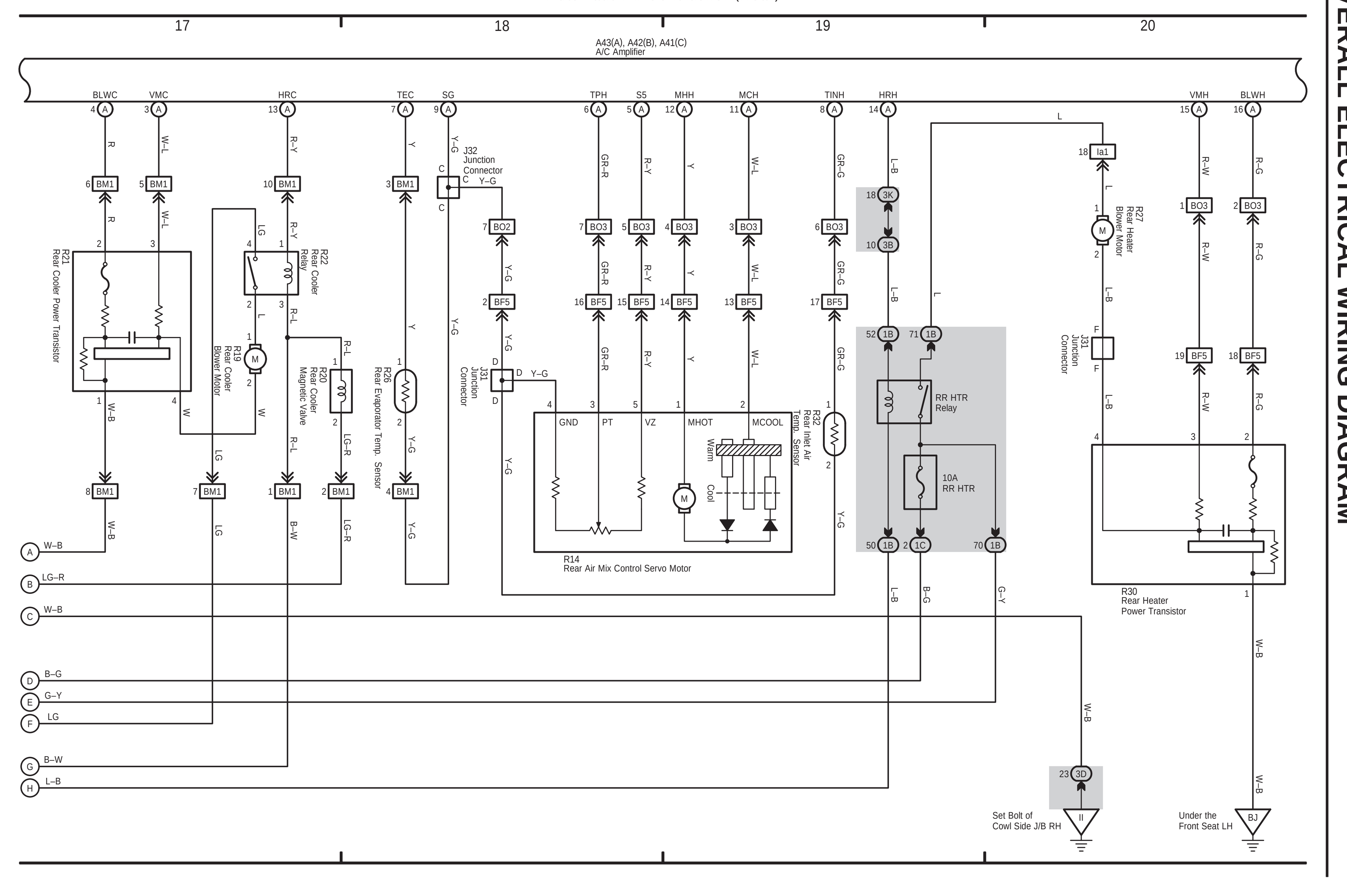

55 LAND CRUISER (RHD) (Cont' d)

Automatic Air Conditioner (Rear)

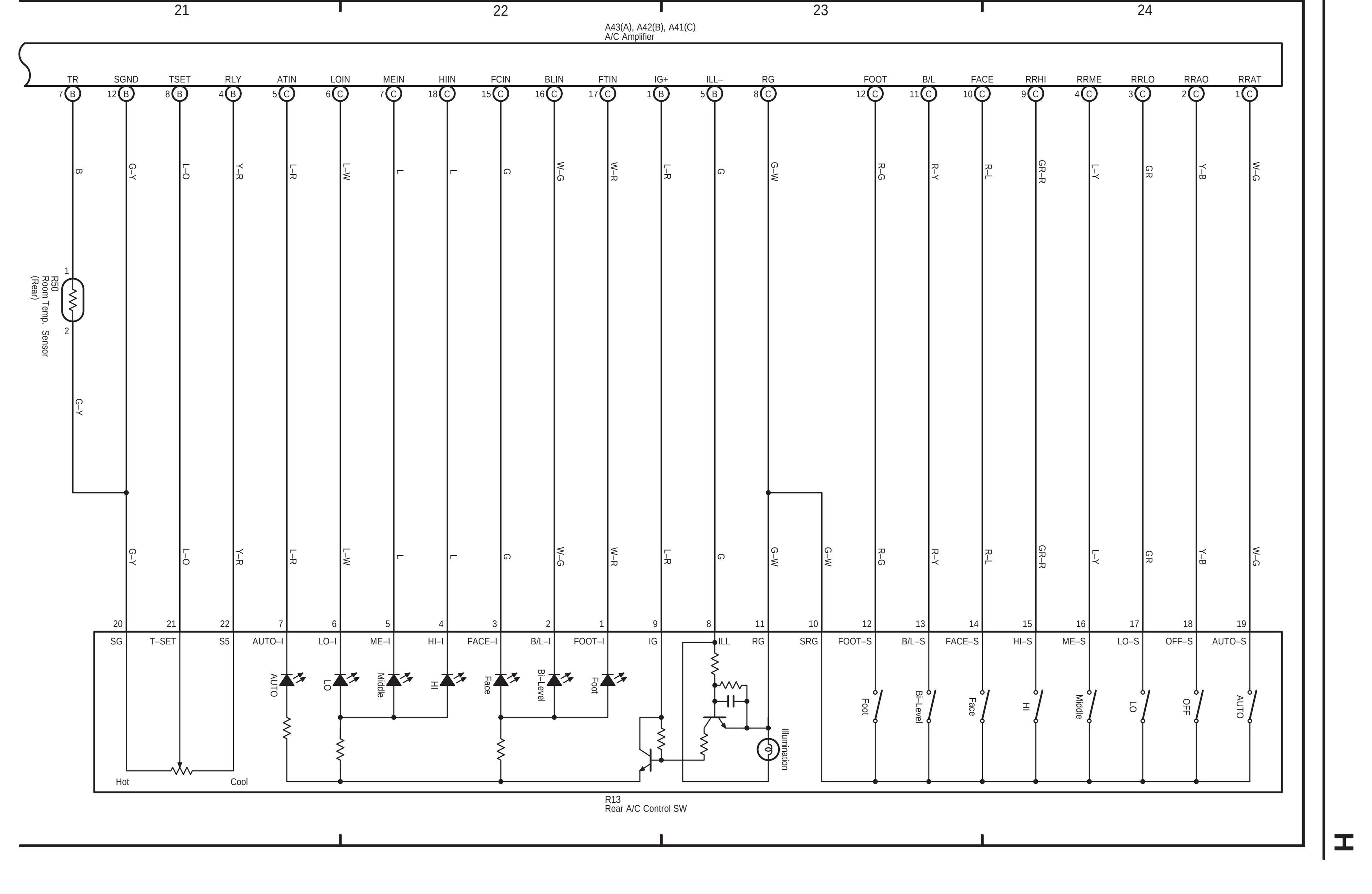

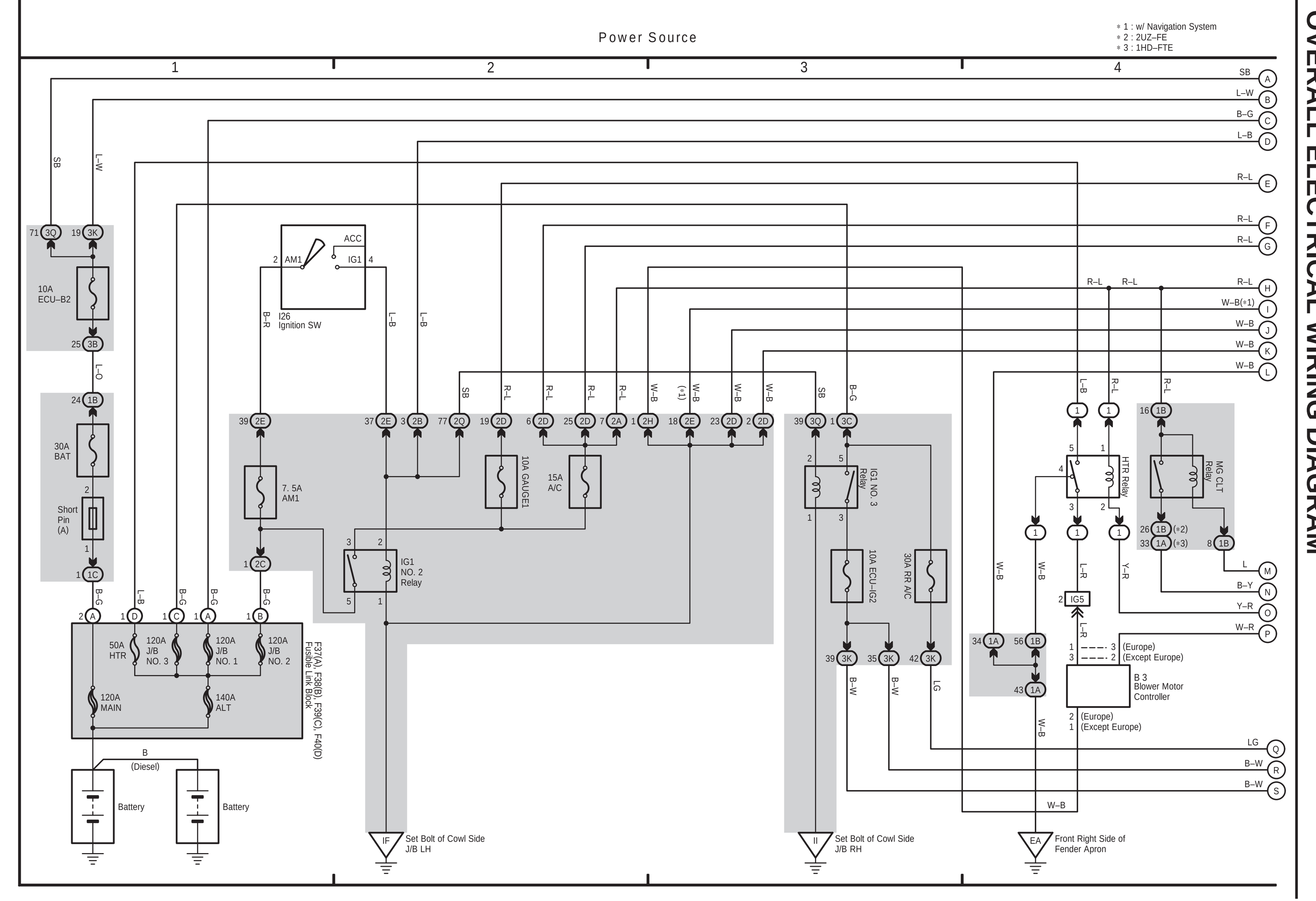
Power Source
＊1 : w/ Navigation System
＊2 : 2UZ–FE
＊3 : 1HD–FTE
I26 Ignition SW
10A ECU–B2
30A BAT
Short Pin (A)
7. 5A AM1
10A GAUGE1
15A A/C
IG1 NO. 2 Relay
IG1 NO. 3 Relay
10A ECU–IG2
30A RR A/C
HTR Relay
MG CLT Relay
B 3 Blower Motor Controller
50A HTR
120A J/B NO. 3
120A J/B NO. 1
120A J/B NO. 2
120A MAIN
140A ALT
F37(A), F38(B), F39(C), F40(D) Fusible Link Block
Battery
Set Bolt of Cowl Side J/B LH
Set Bolt of Cowl Side J/B RH
Front Right Side of Fender Apron

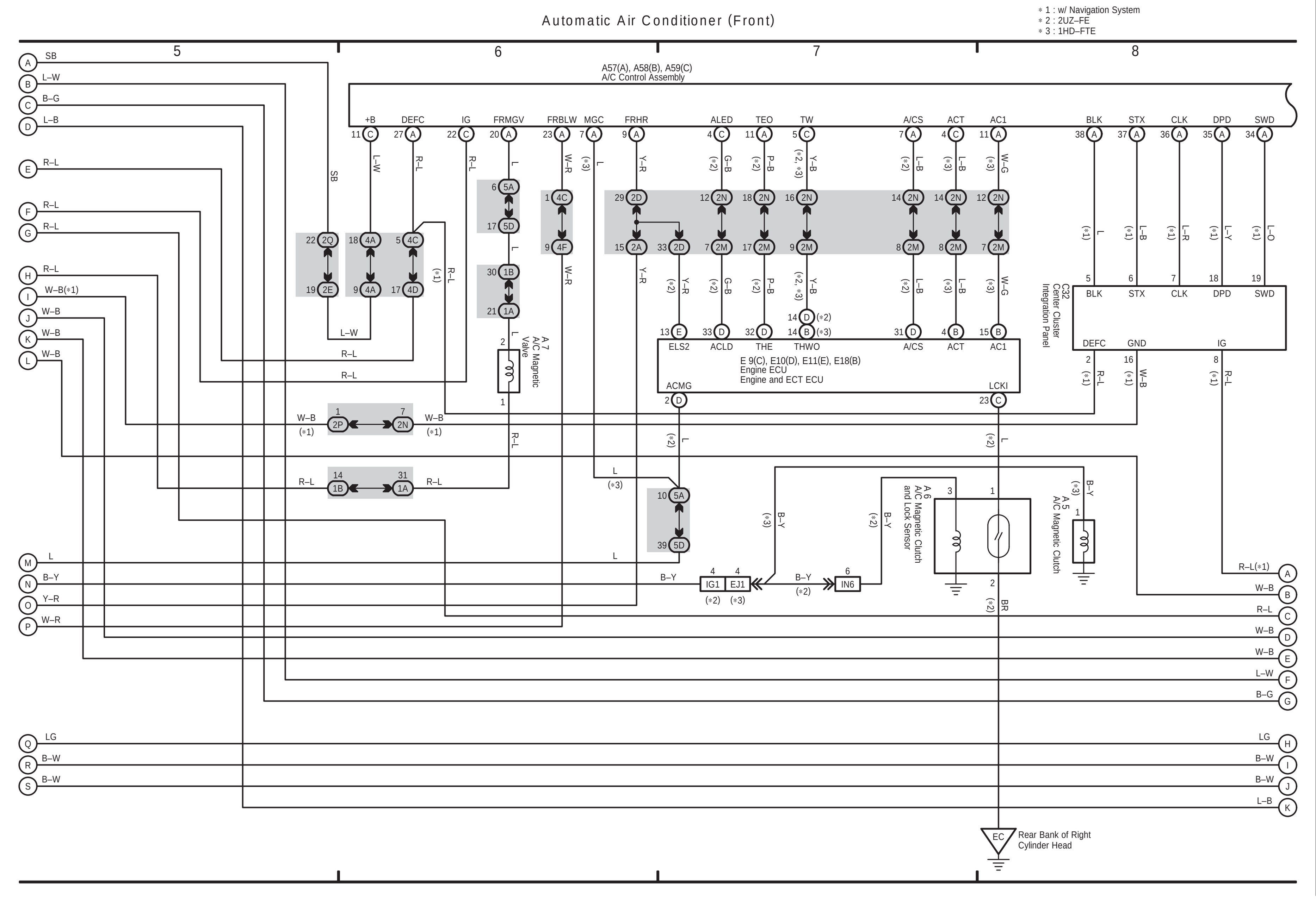
Automatic Air Conditioner (Front)
＊1 : w/ Navigation System
＊2 : 2UZ–FE
＊3 : 1HD–FTE
A57(A), A58(B), A59(C) A/C Control Assembly
C32 Center Cluster Integration Panel
E 9(C), E10(D), E11(E), E18(B) Engine ECU Engine and ECT ECU
A 7 A/C Magnetic Valve
A 6 A/C Magnetic Clutch and Lock Sensor
A 5 A/C Magnetic Clutch
Rear Bank of Right Cylinder Head

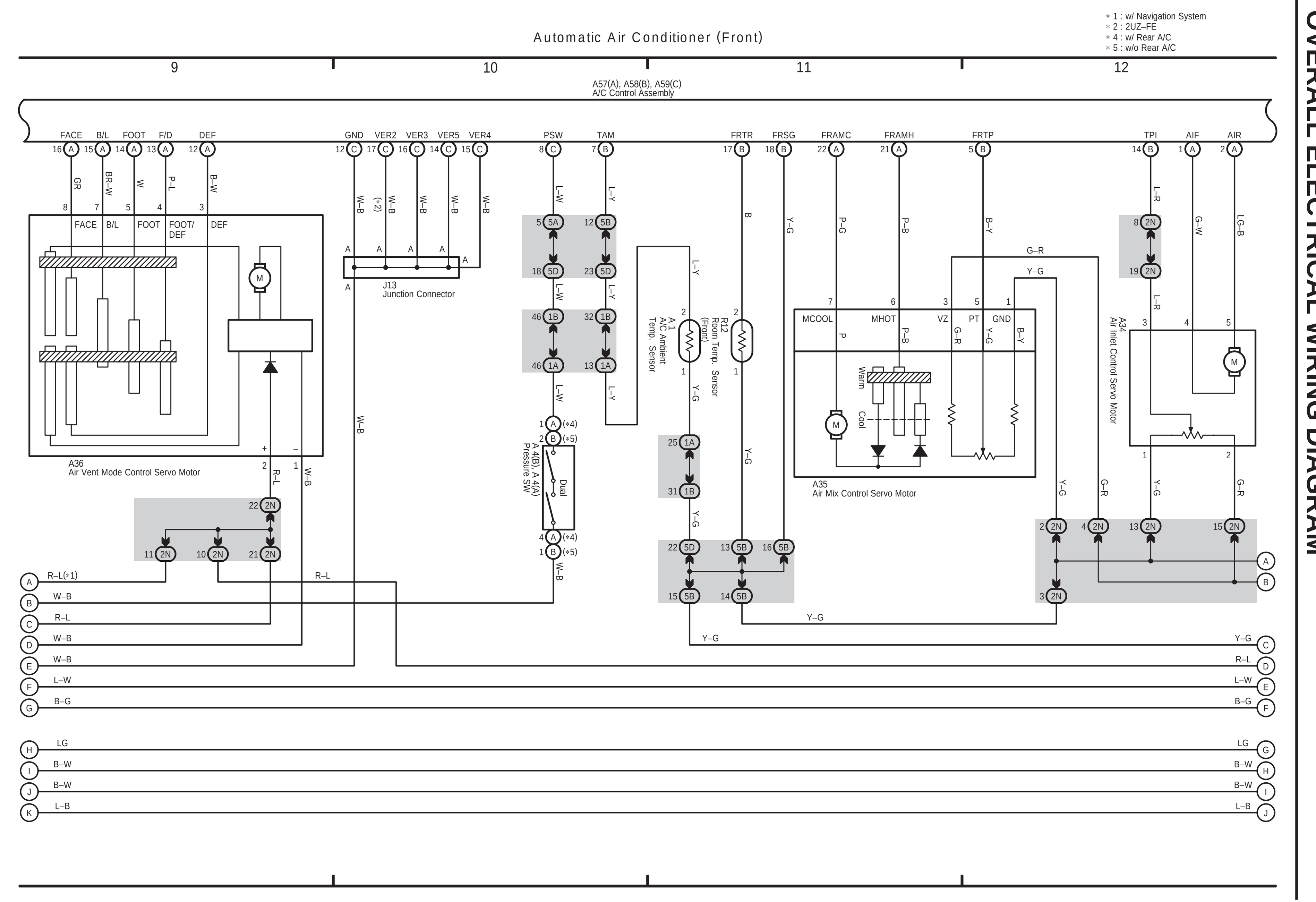
Automatic Air Conditioner (Front)
＊1 : w/ Navigation System
＊2 : 2UZ–FE
＊4 : w/ Rear A/C
＊5 : w/o Rear A/C
A57(A), A58(B), A59(C) A/C Control Assembly
A36 Air Vent Mode Control Servo Motor
J13 Junction Connector
A 48(B), A 4(A) Pressure SW
A 1 A/C Ambient Temp. Sensor
R12 Room Temp. Sensor
A35 Air Mix Control Servo Motor
A34 Air Inlet Control Servo Motor

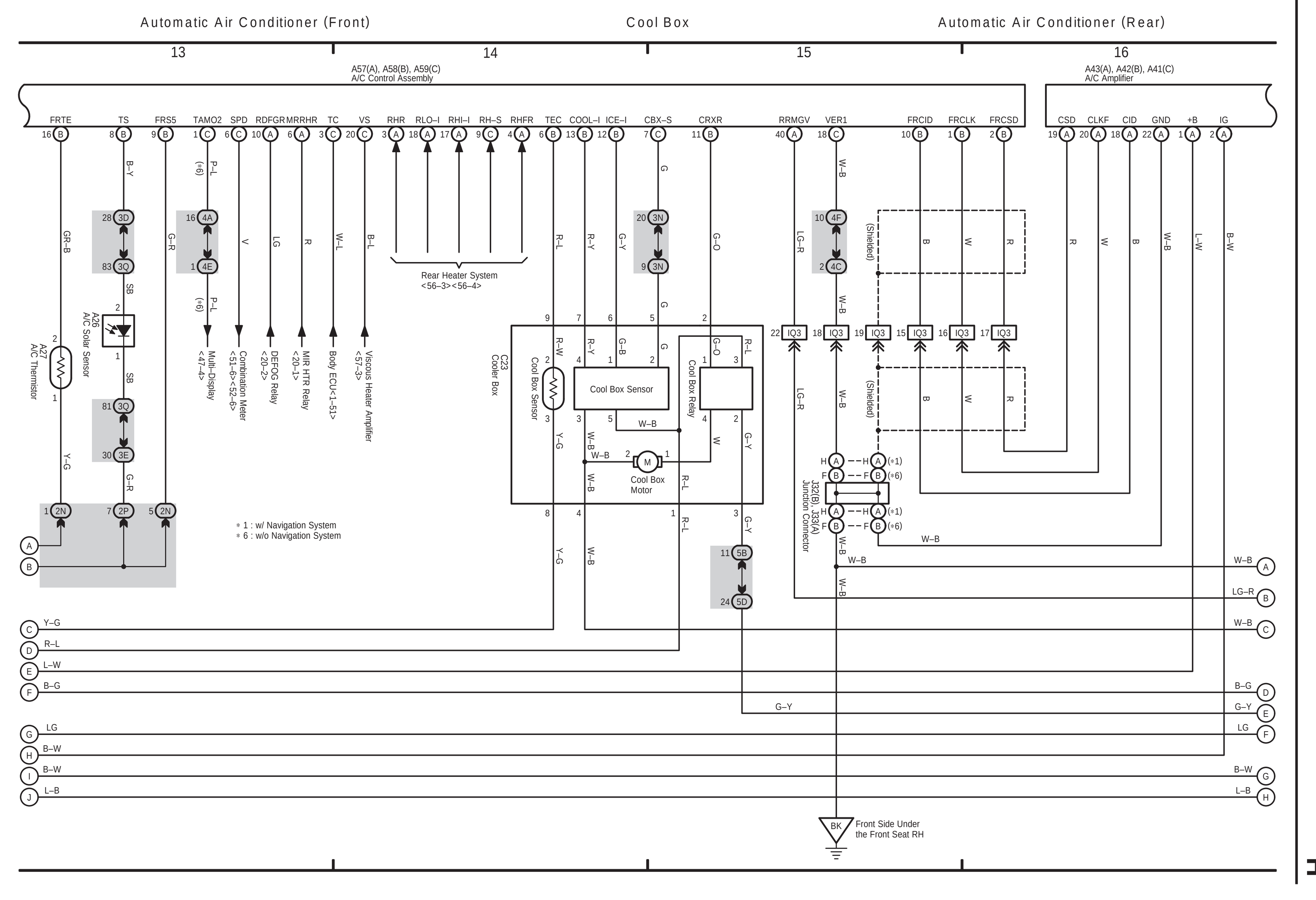
Automatic Air Conditioner (Front)
Cool Box
Automatic Air Conditioner (Rear)
A57(A), A58(B), A59(C) A/C Control Assembly
A43(A), A42(B), A41(C) A/C Amplifier
A 27 A/C Thermistor
A 26 A/C Solar Sensor
Rear Heater System
Cool Box Sensor
Cool Box Relay
Cool Box Motor
J32(B), J33(A) Junction Connector
＊1 : w/ Navigation System
＊6 : w/o Navigation System
Front Side Under the Front Seat RH

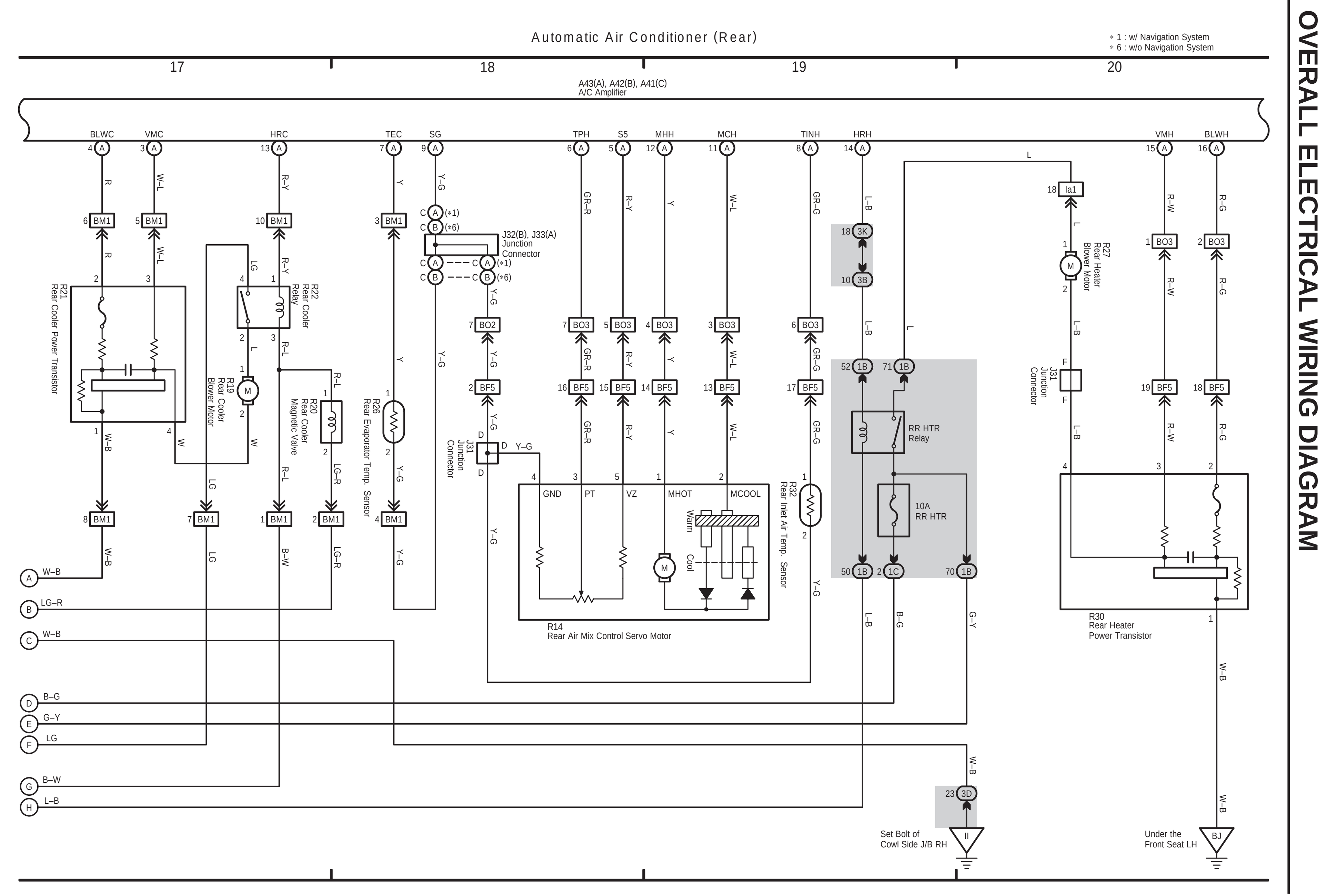
Automatic Air Conditioner (Rear)
＊1 : w/ Navigation System
＊6 : w/o Navigation System
A43(A), A42(B), A41(C) A/C Amplifier
R21 Rear Cooler Power Transistor
R22 Rear Cooler Relay
R19 Rear Cooler Blower Motor
R20 Rear Cooler Magnetic Valve
R26 Rear Evaporator Temp. Sensor
J32(B), J33(A) Junction Connector
J31 Junction Connector
R14 Rear Air Mix Control Servo Motor
R12 Rear Inlet Air Temp. Sensor
RR HTR Relay
10A RR HTR
R27 Rear Heater Blower Motor
R30 Rear Heater Power Transistor
Set Bolt of Cowl Side J/B RH
Under the Front Seat LH

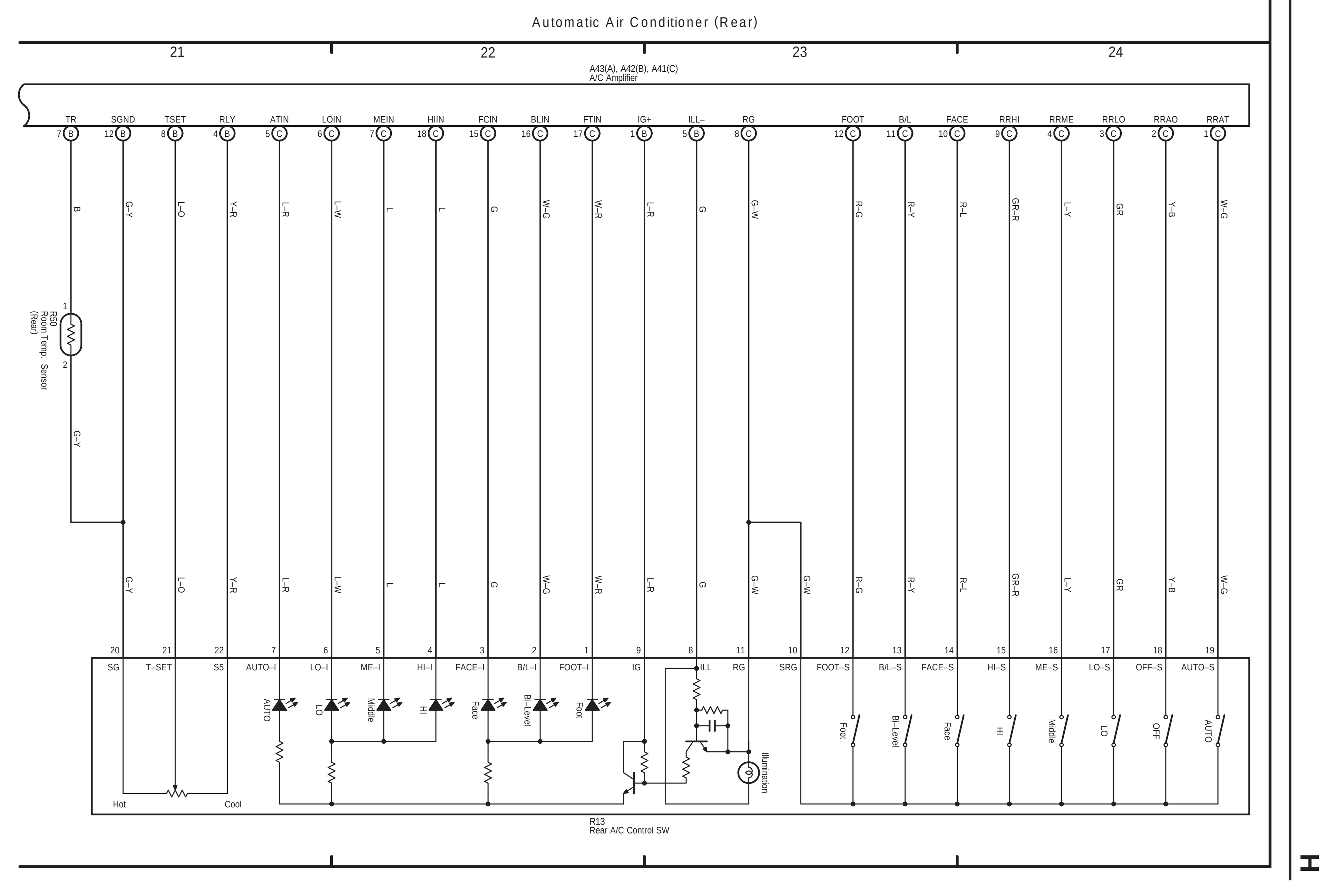
Automatic Air Conditioner (Rear)
A43(A), A42(B), A41(C) A/C Amplifier
R50 Room Temp. Sensor (Rear)
R13 Rear A/C Control SW

54 LAND CRUISER (RHD) [Cont. next page]

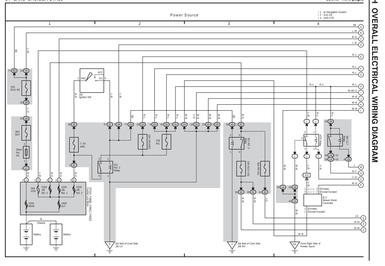

54 LAND CRUISER (RHD) (Cont' d) [Cont. next page]

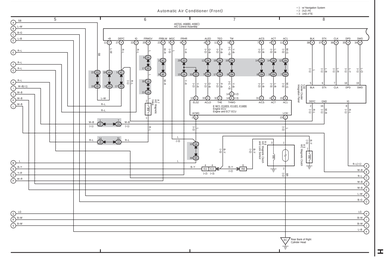

54 LAND CRUISER (RHD) (Cont' d) [Cont. next page]

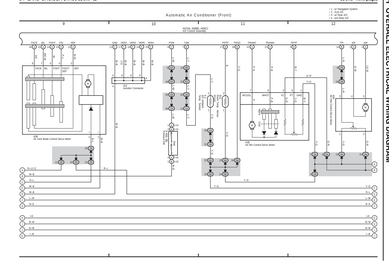

54 LAND CRUISER (RHD) (Cont' d) [Cont. next page]

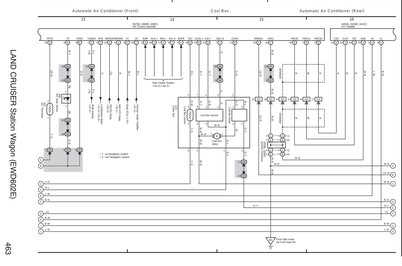

54 LAND CRUISER (RHD) (Cont' d) [Cont. next page]

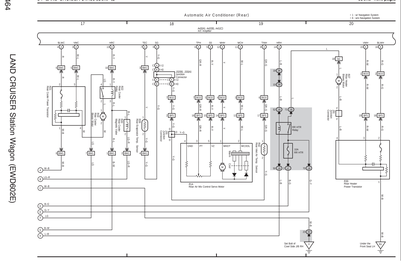

54 LAND CRUISER (RHD) (Cont' d)

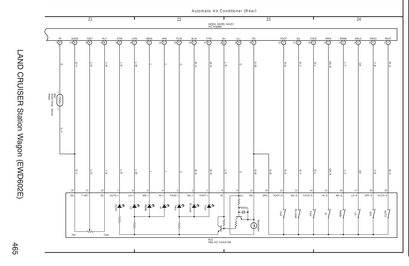

F ELECTRICAL WIRING DIAGRAM (System Circuits)

Power Source

Cruise Control (1FZ–FE, 1HD–T)

Cruise Control (1FZ–FE, 1HD–T)

* 1 : 1FZ–FE
* 2 : 1HD–T

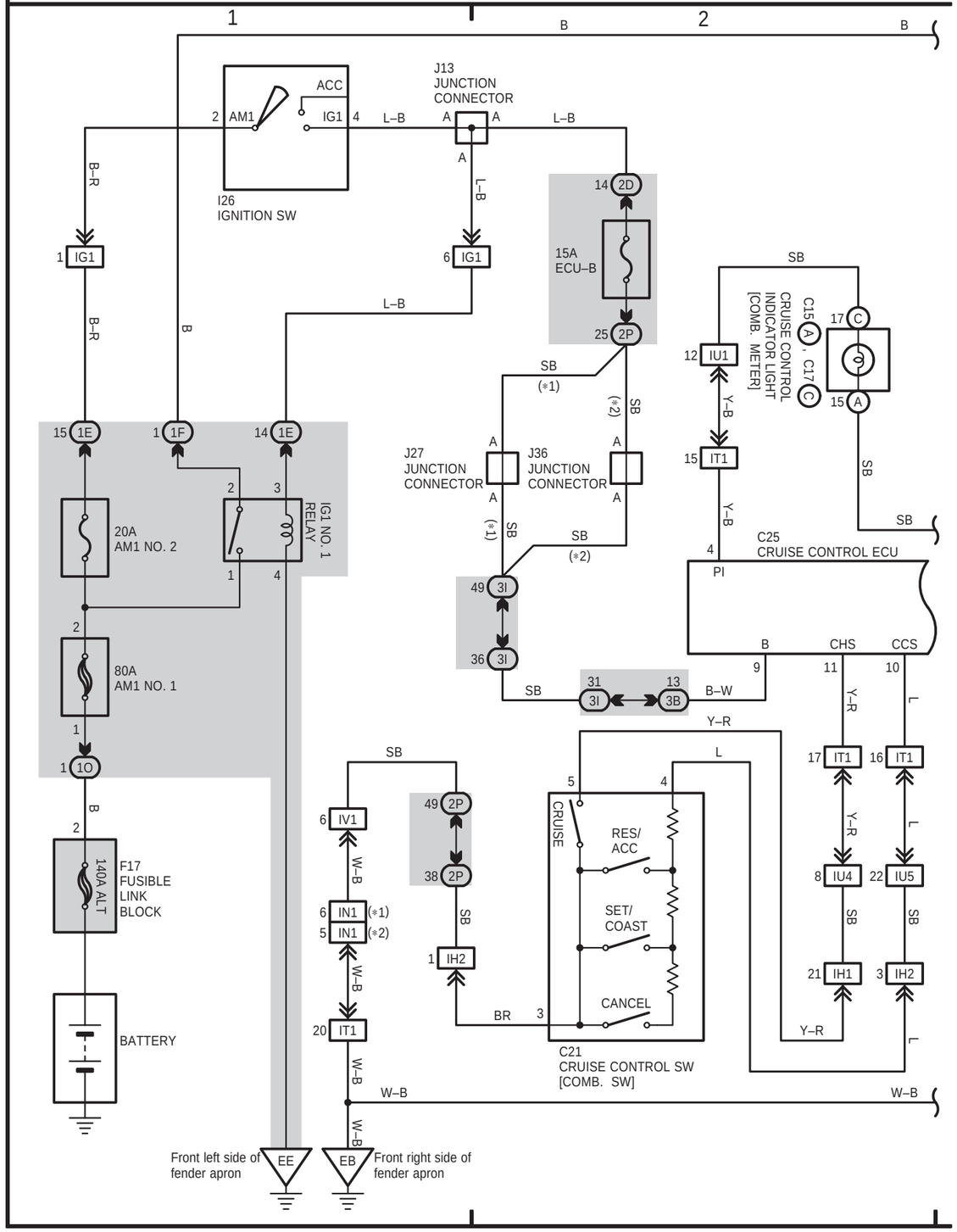

RHD

LAND CRUISER Station Wagon (EWD342F)

Power Source

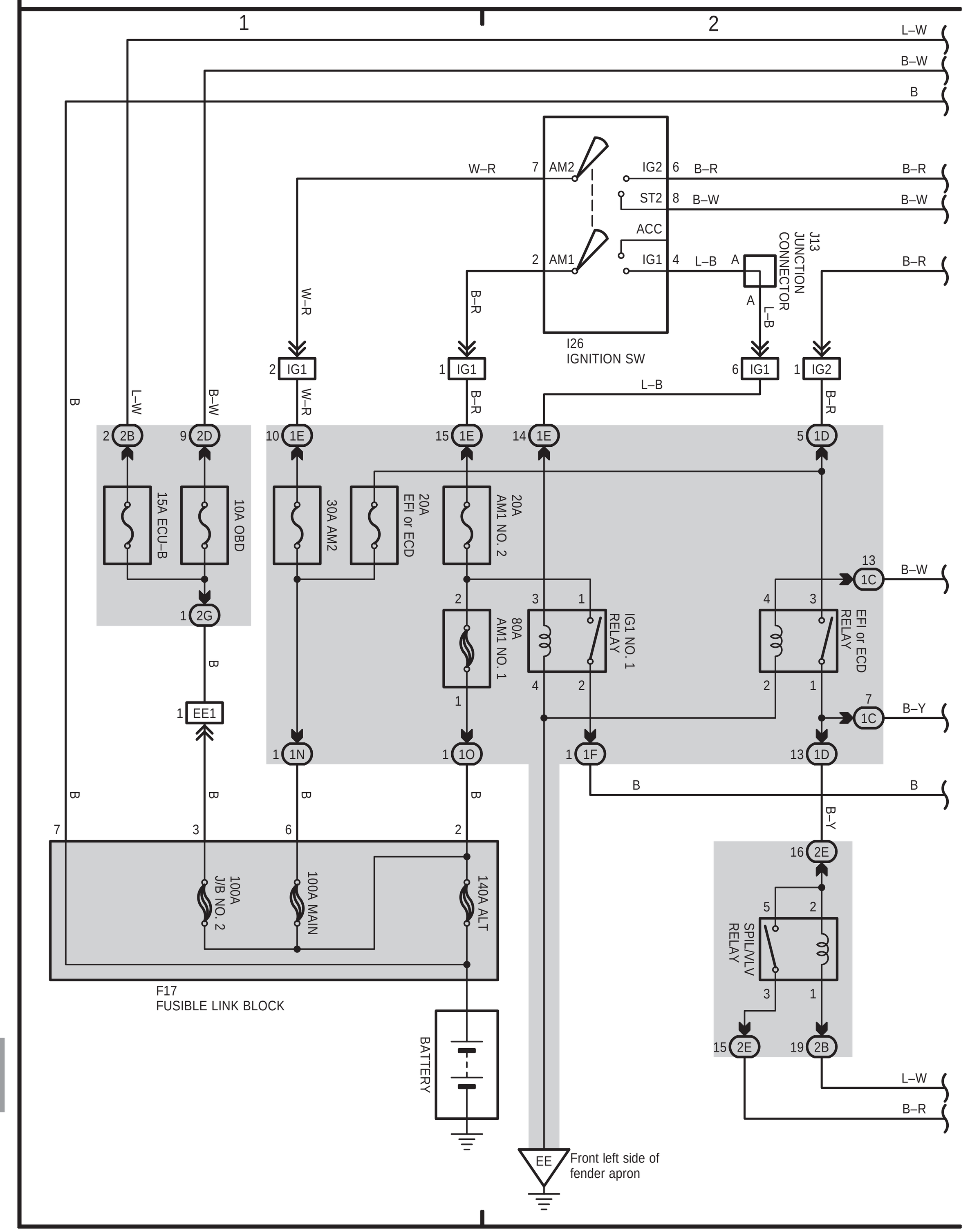

Engine Control (1HD–FTE)

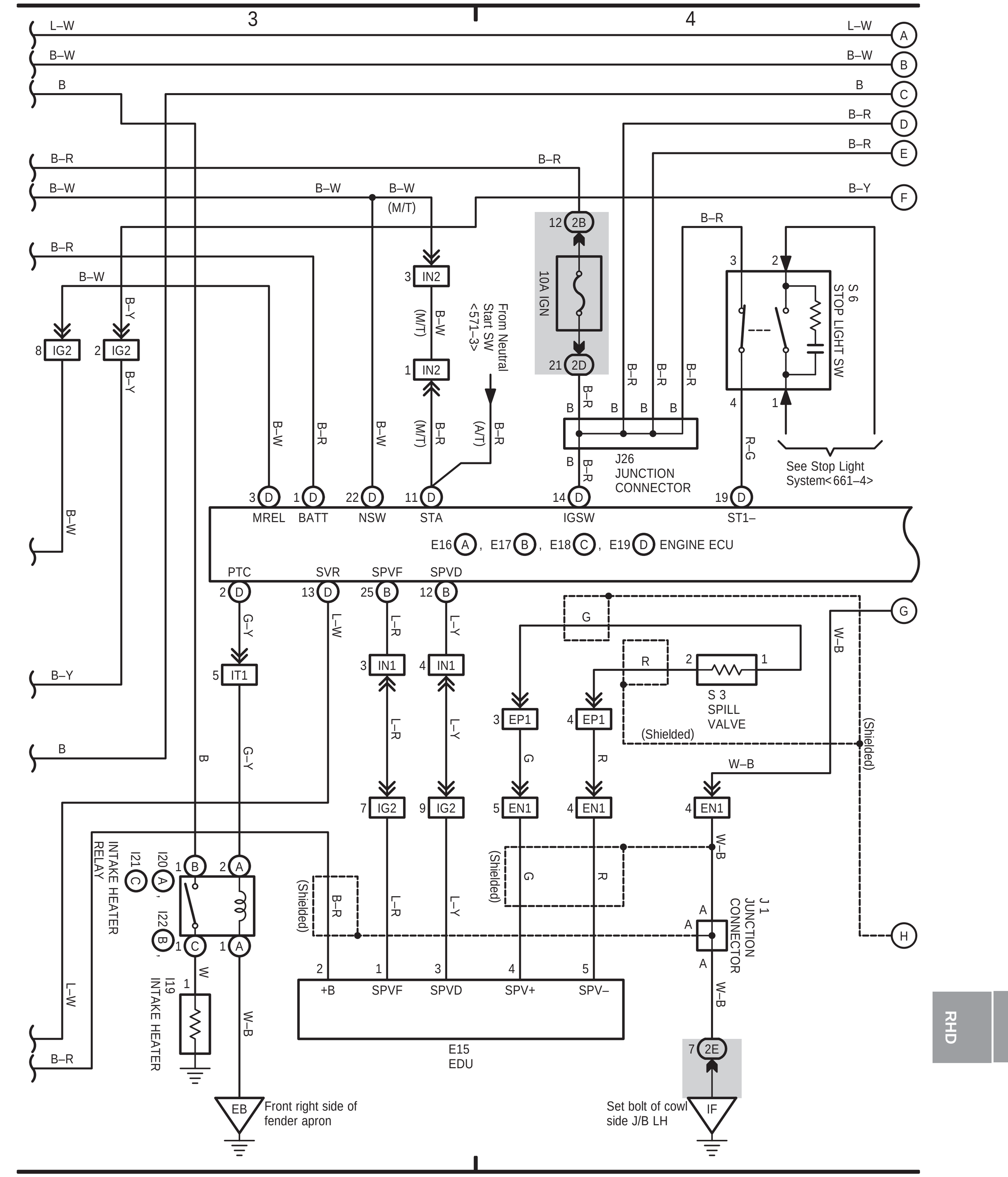

Engine Control (1HD–FTE)

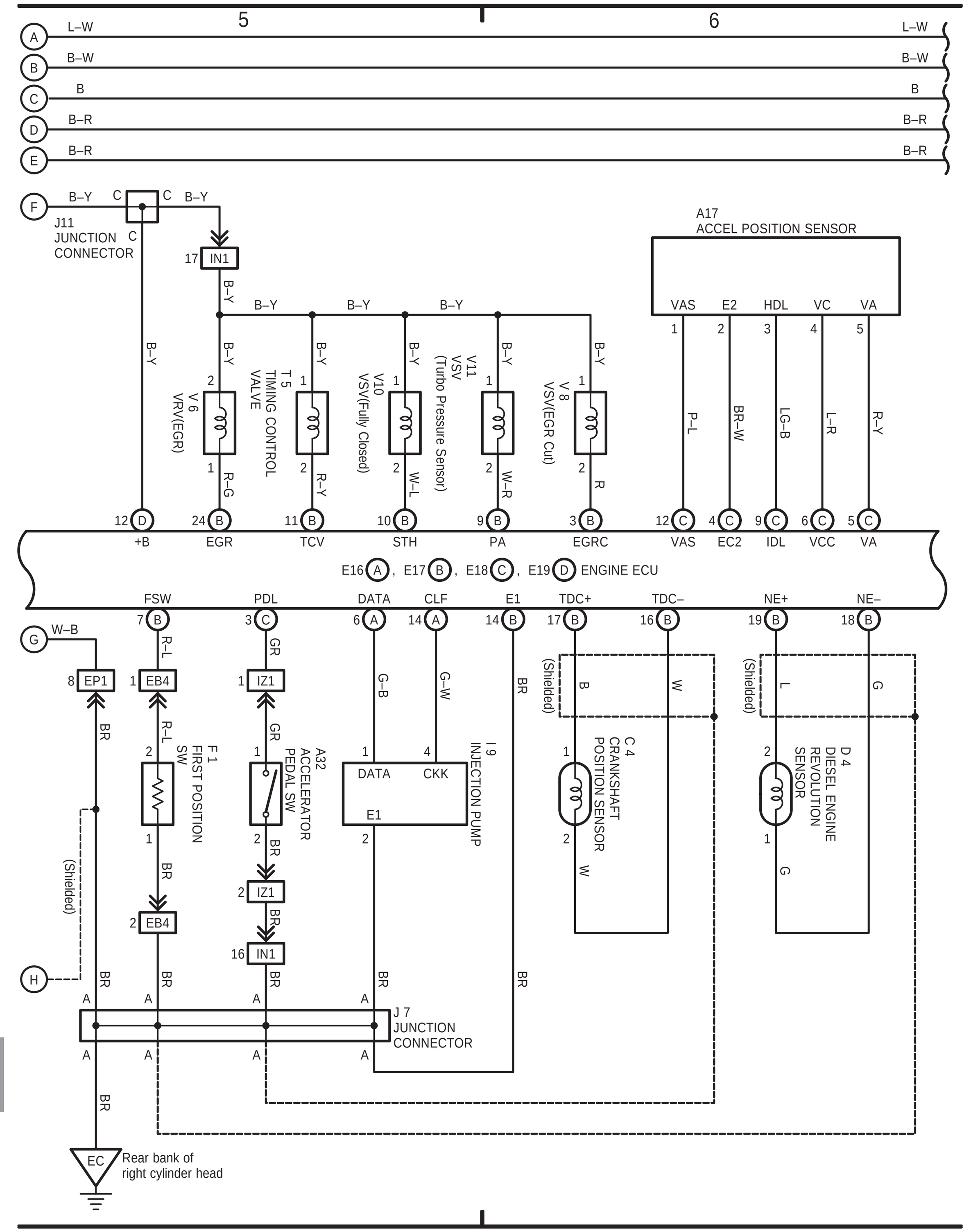

Engine Control (1HD–FTE)

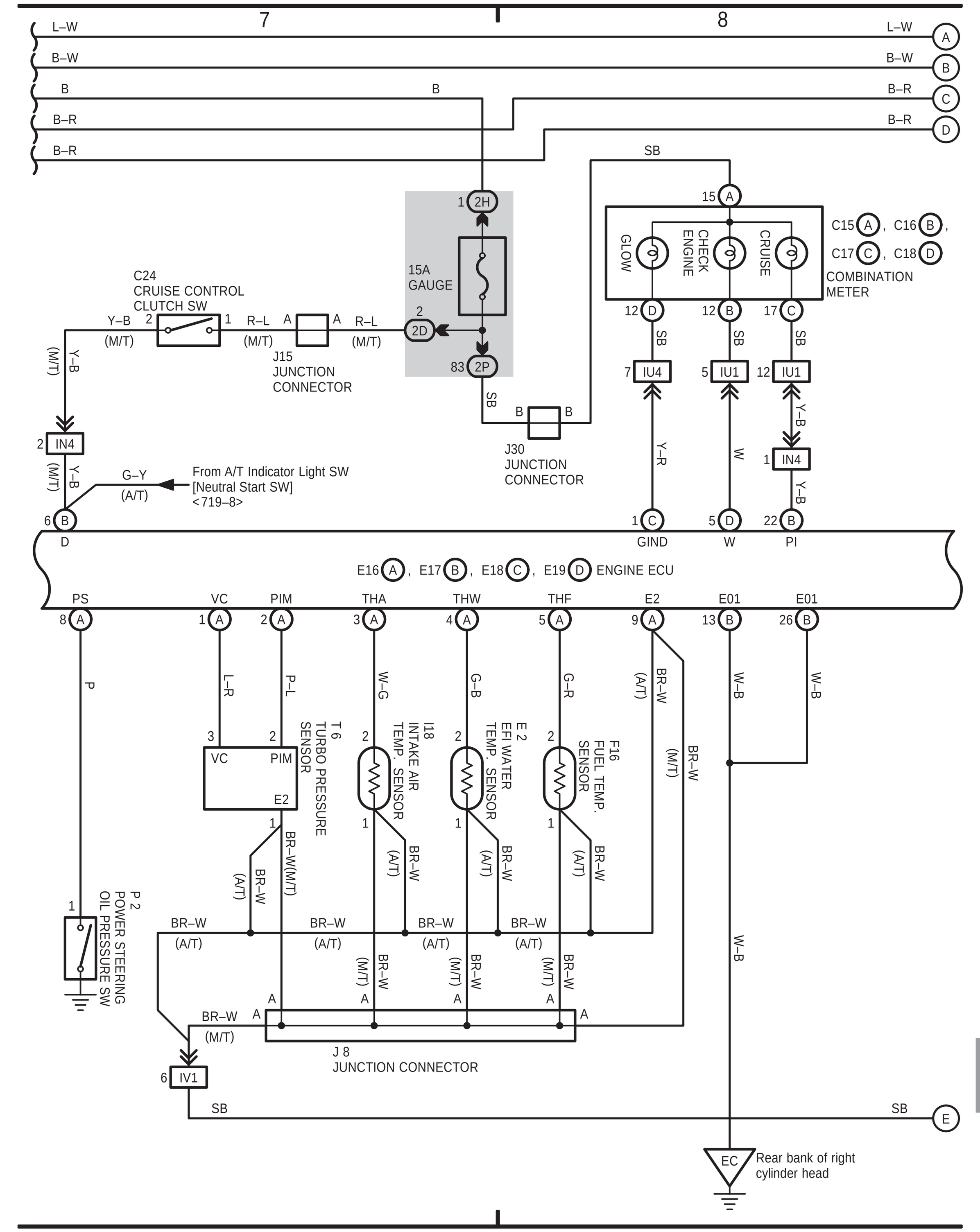

Engine Control (1HD–FTE)

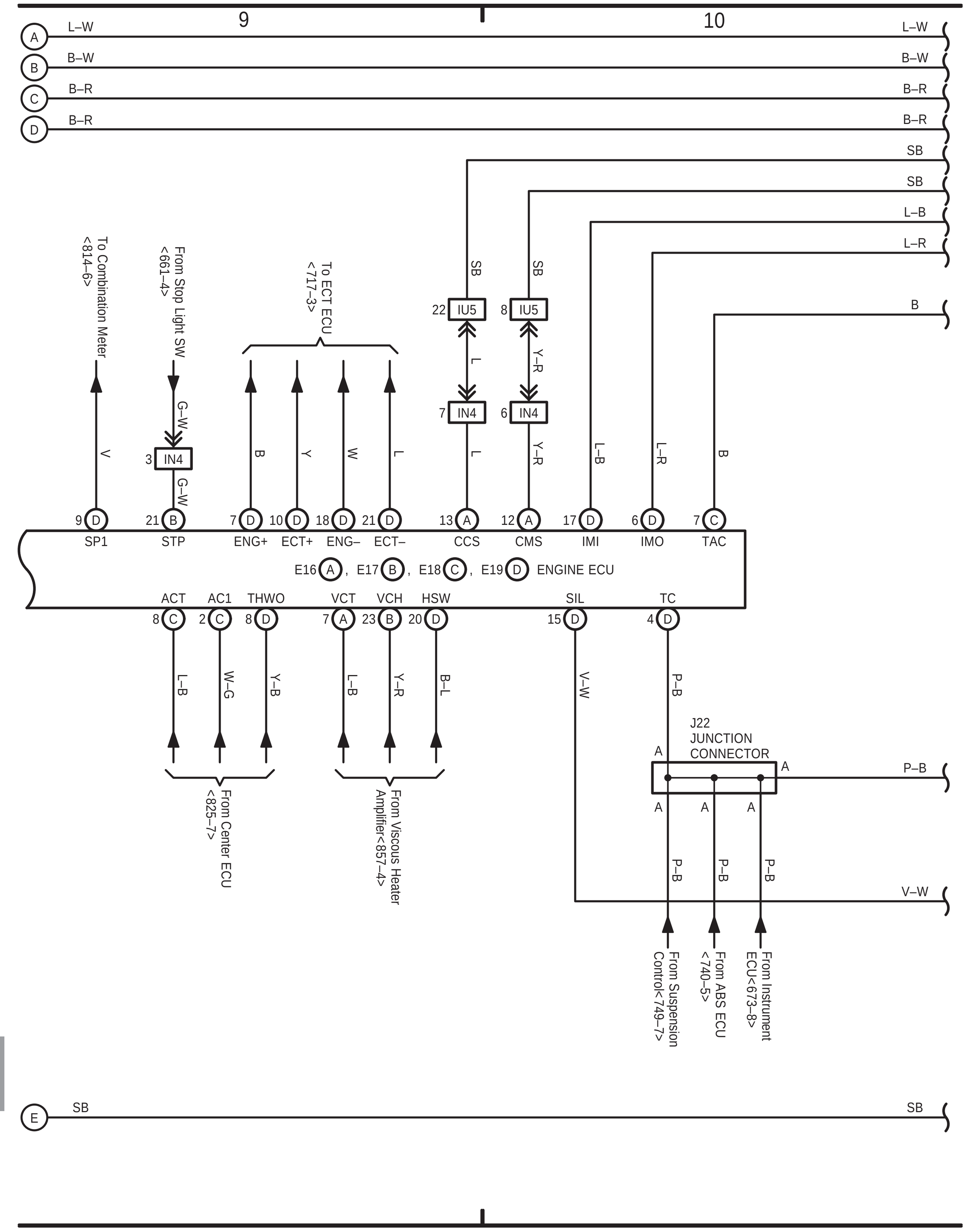

Engine Control (1HD–FTE)

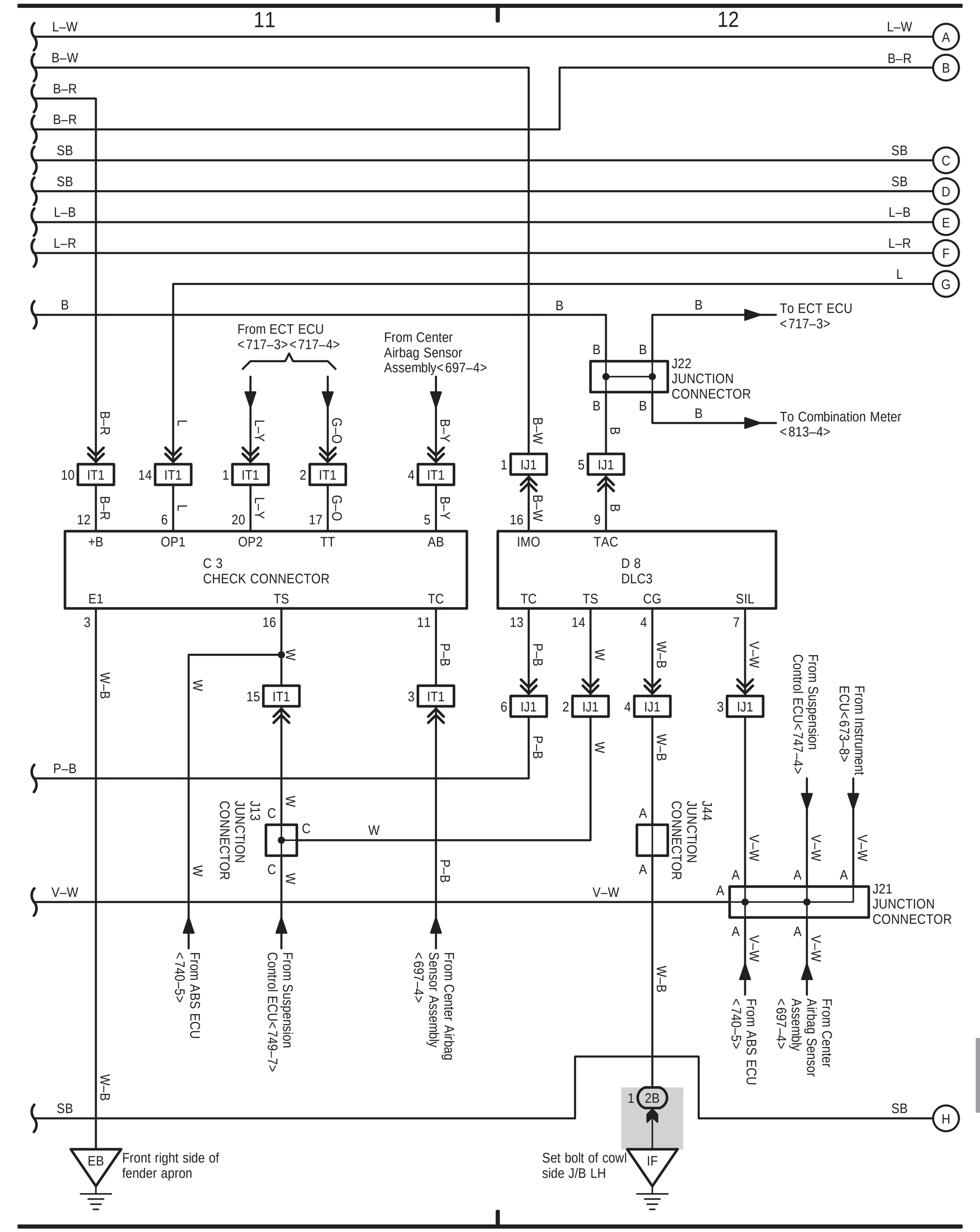

Engine Immobiliser System (1HD–FTE)

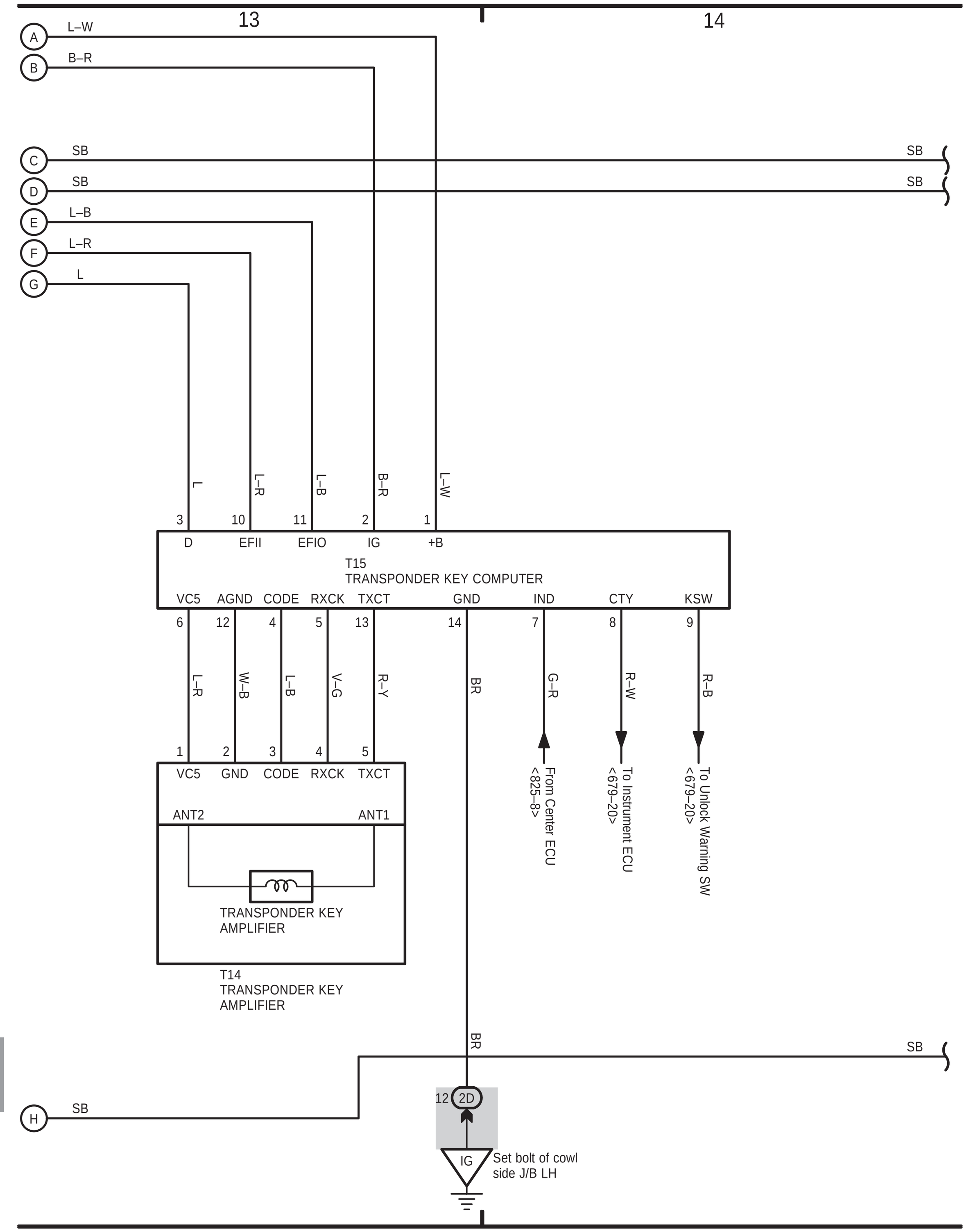

Cruise Control (1HD–FTE)

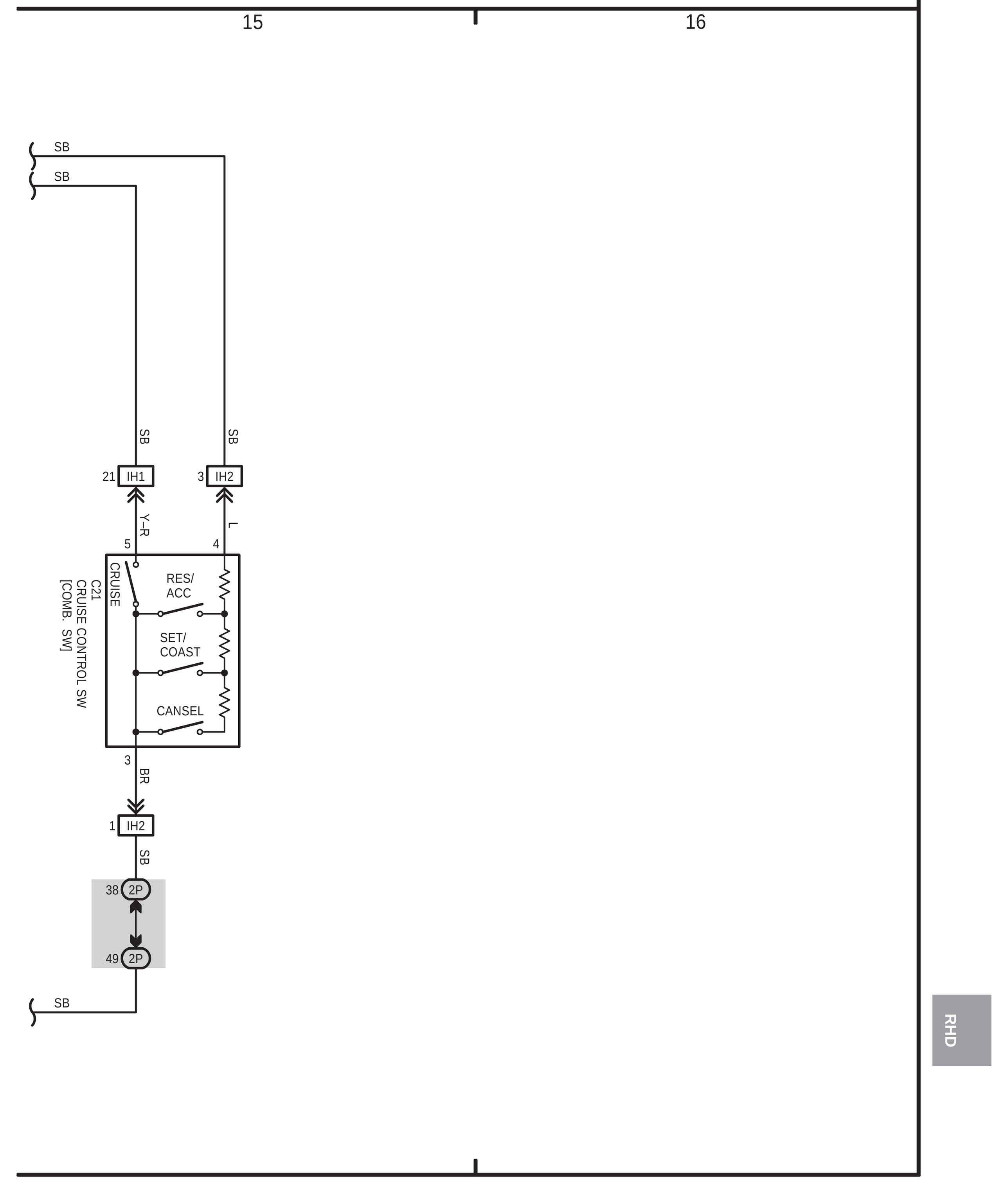

10 LAND CRUISER (RHD) (Cont. next page)

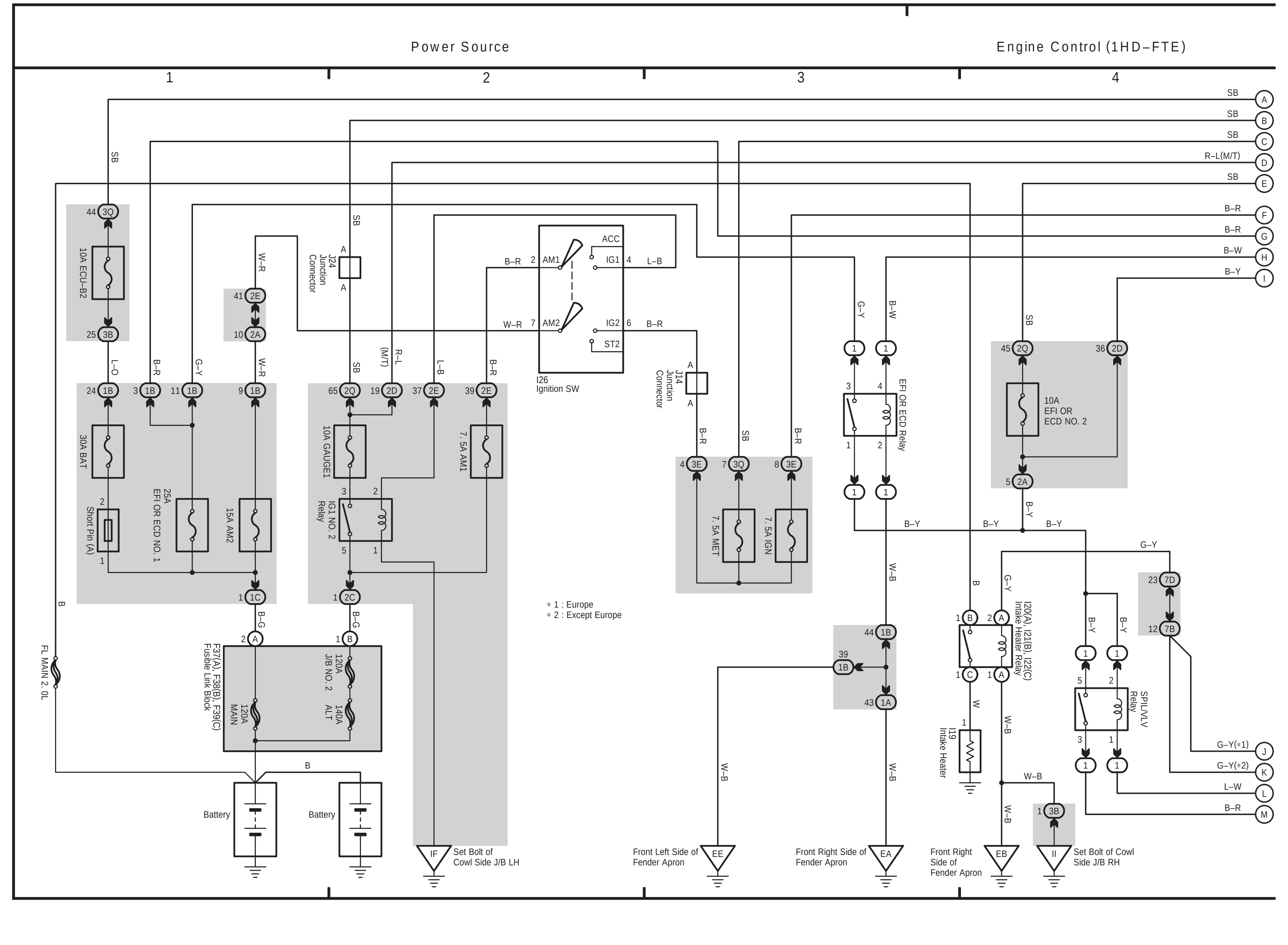

10 LAND CRUISER (RHD) (Cont' d) (Cont. next page)

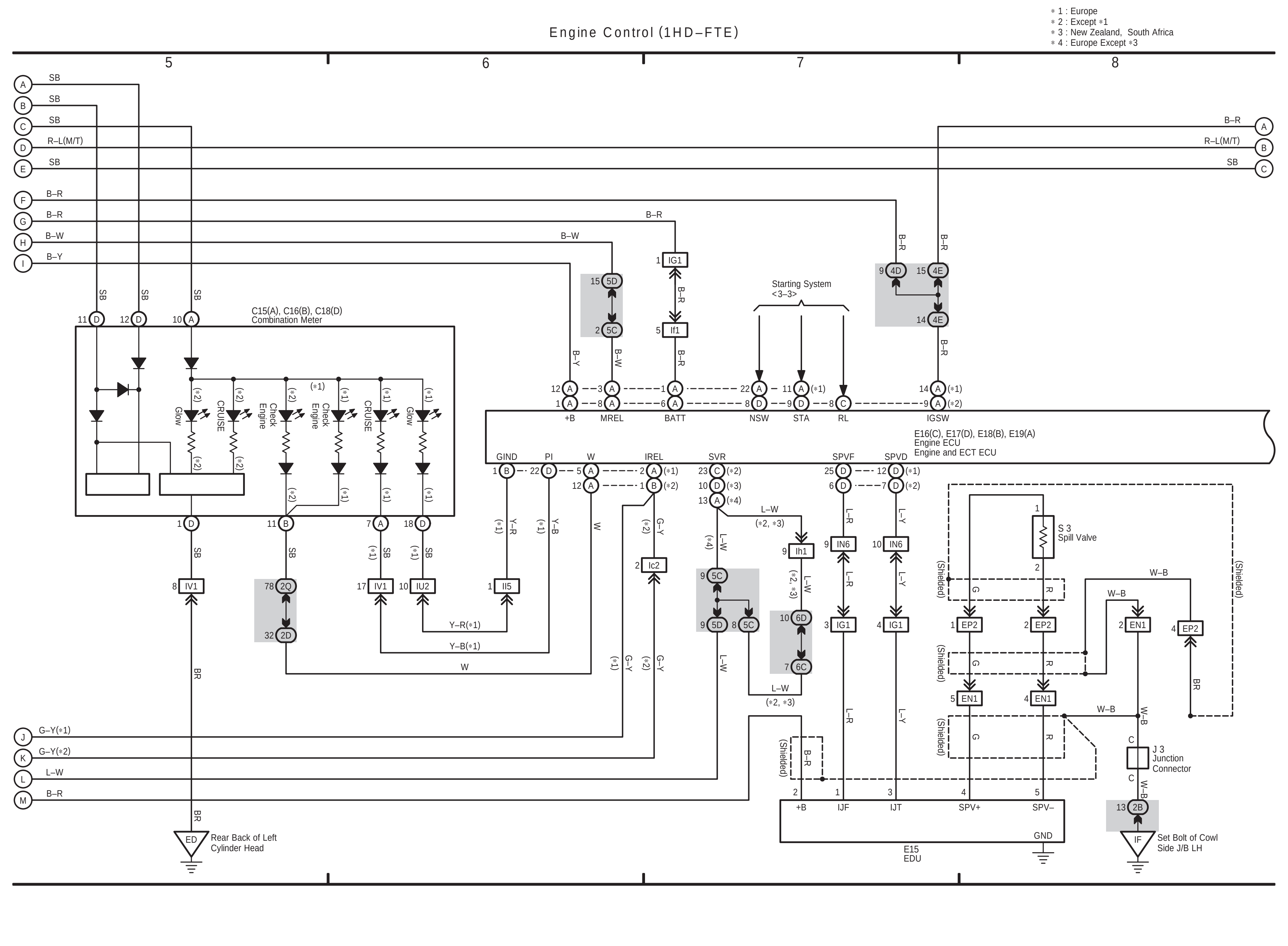

10 LAND CRUISER (RHD) (Cont' d) (Cont. next page)

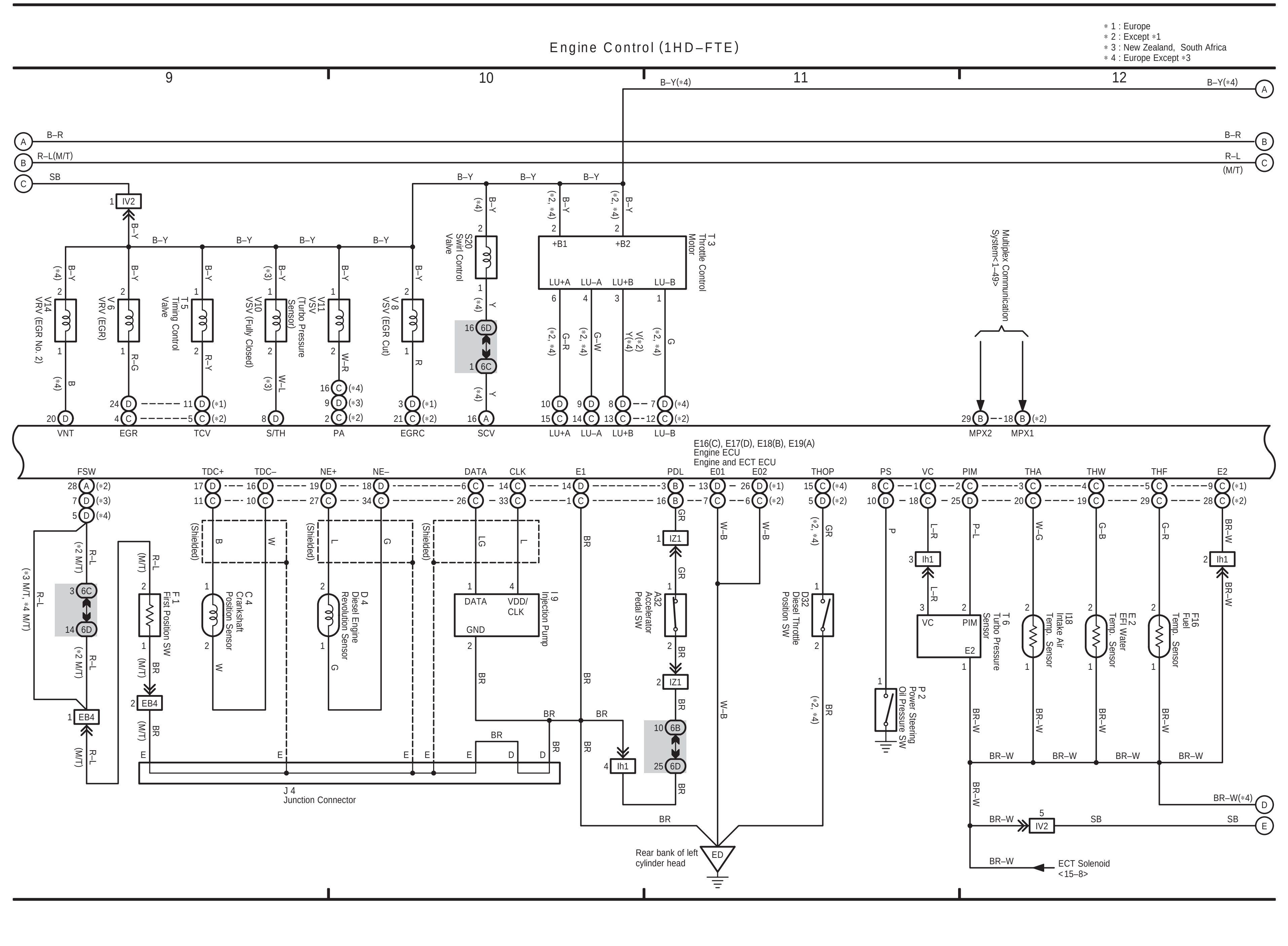

10 LAND CRUISER (RHD) (Cont' d)

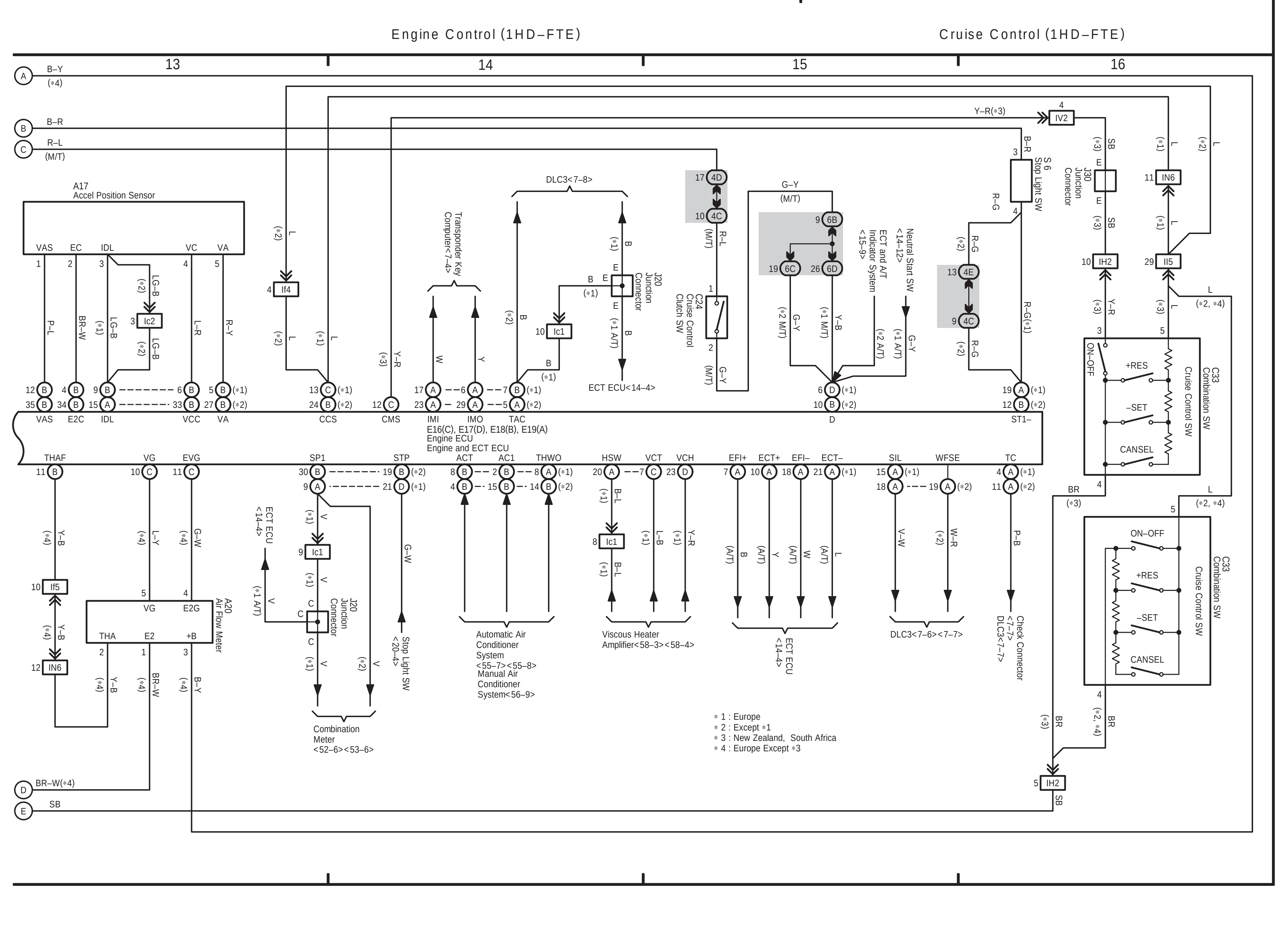

10 LAND CRUISER (RHD) (Cont. next page)

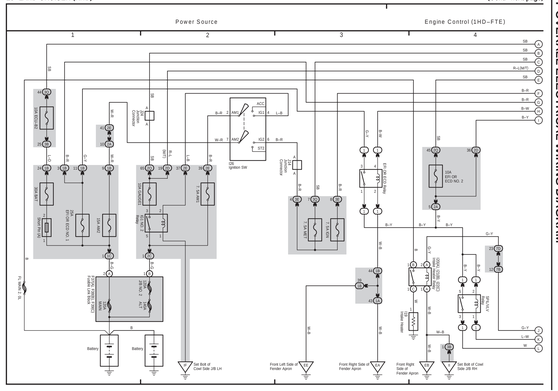

10 LAND CRUISER (RHD) (Cont' d) (Cont. next page)

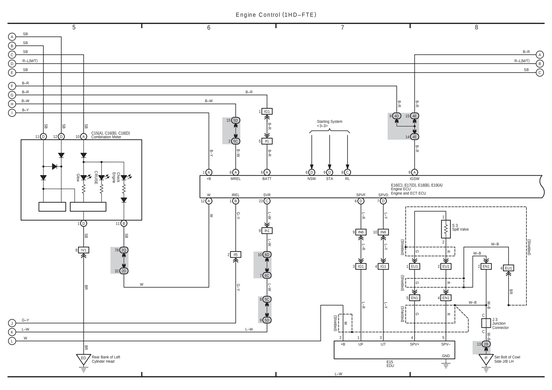

10 LAND CRUISER (RHD) (Cont' d) (Cont. next page)

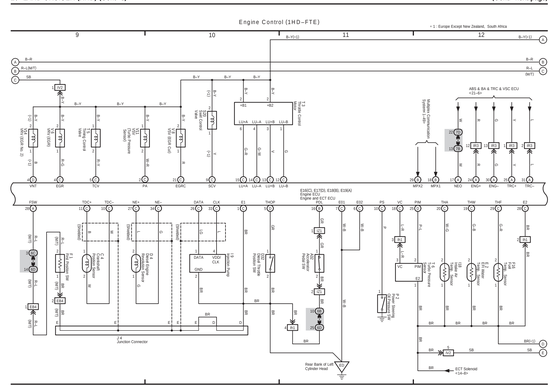

10 LAND CRUISER (RHD) (Cont' d)

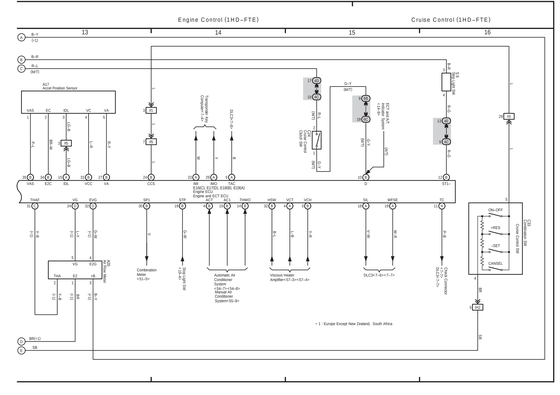

(Cont. next page)

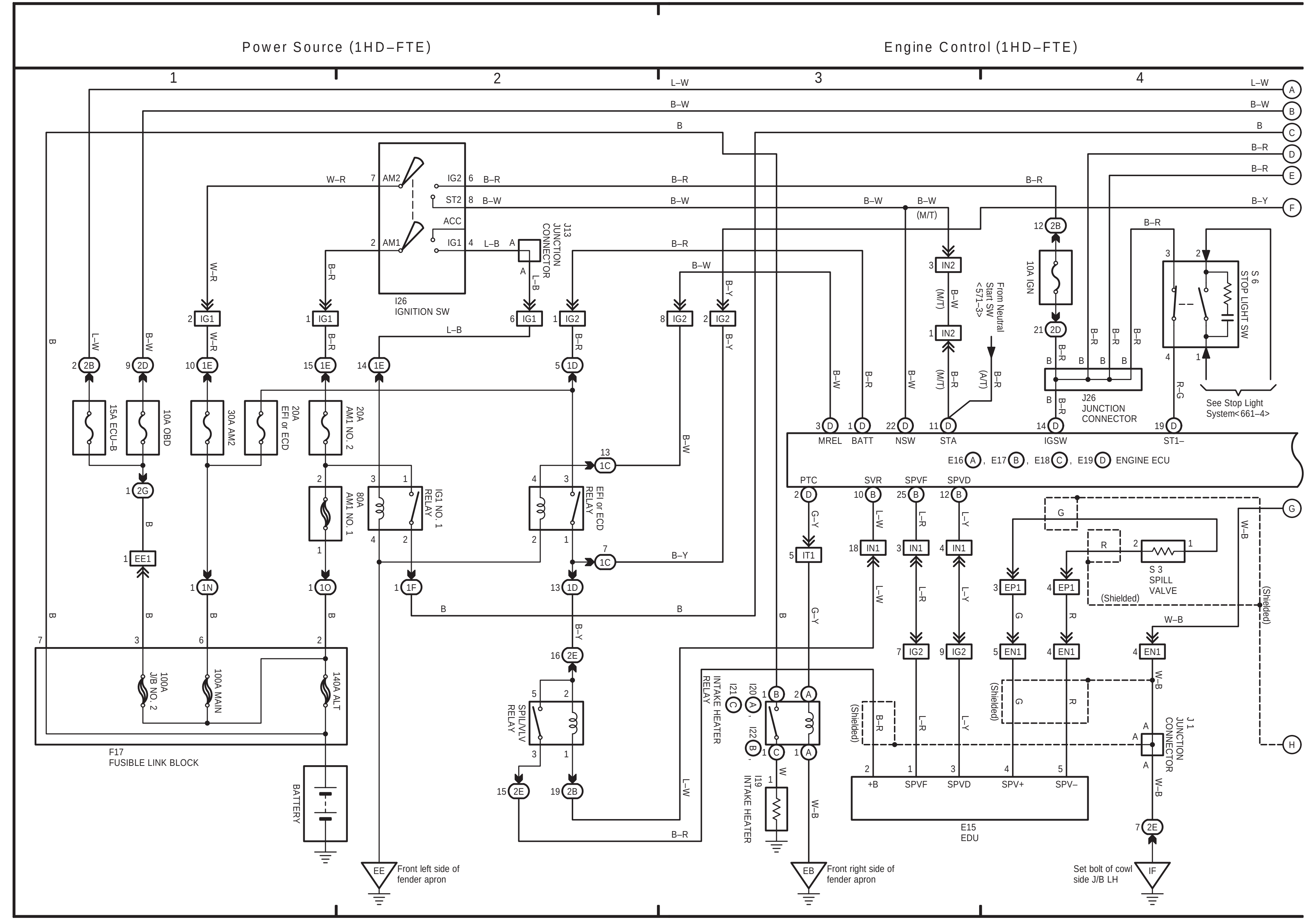

(Cont. next page)

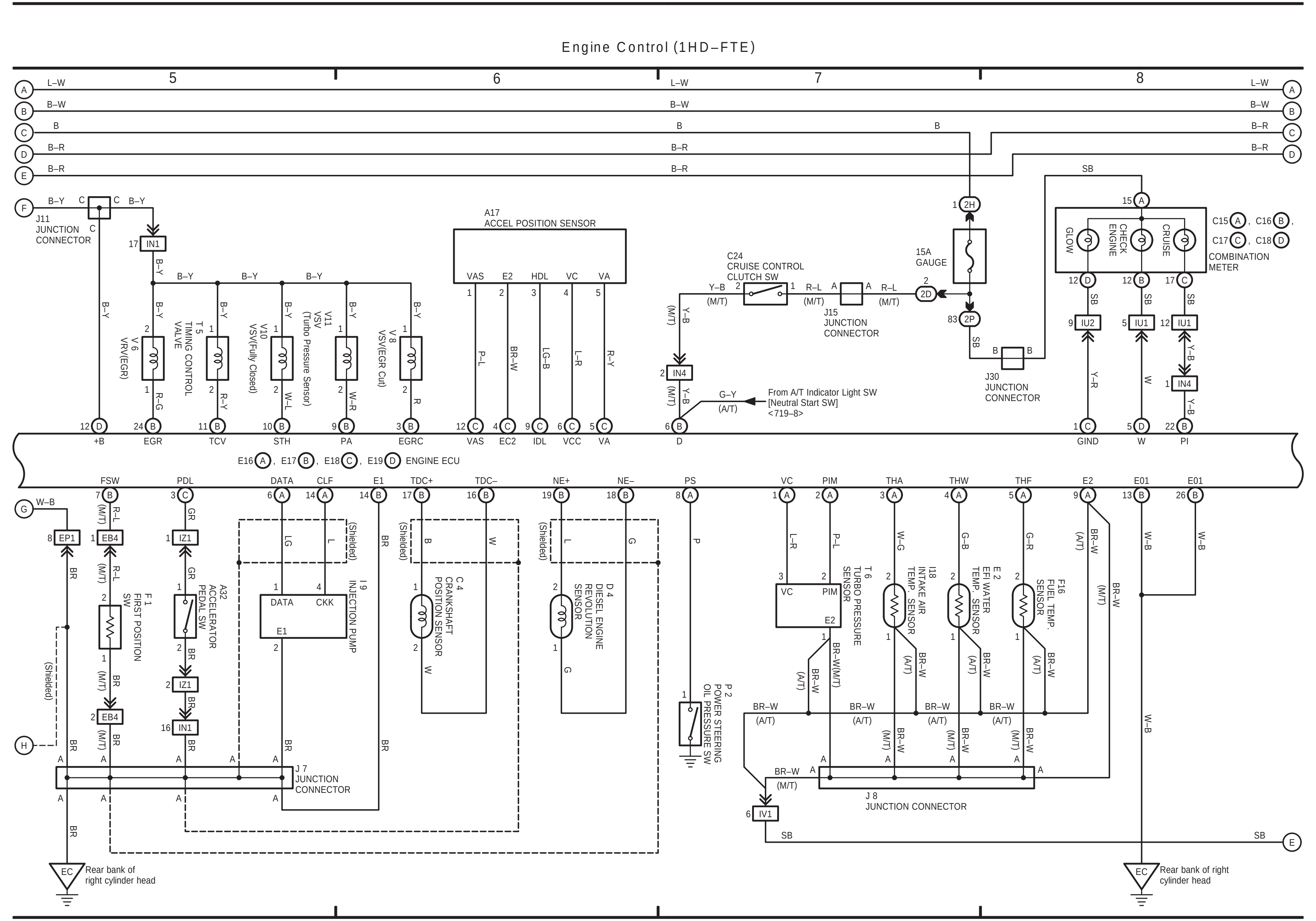

(Cont. next page)

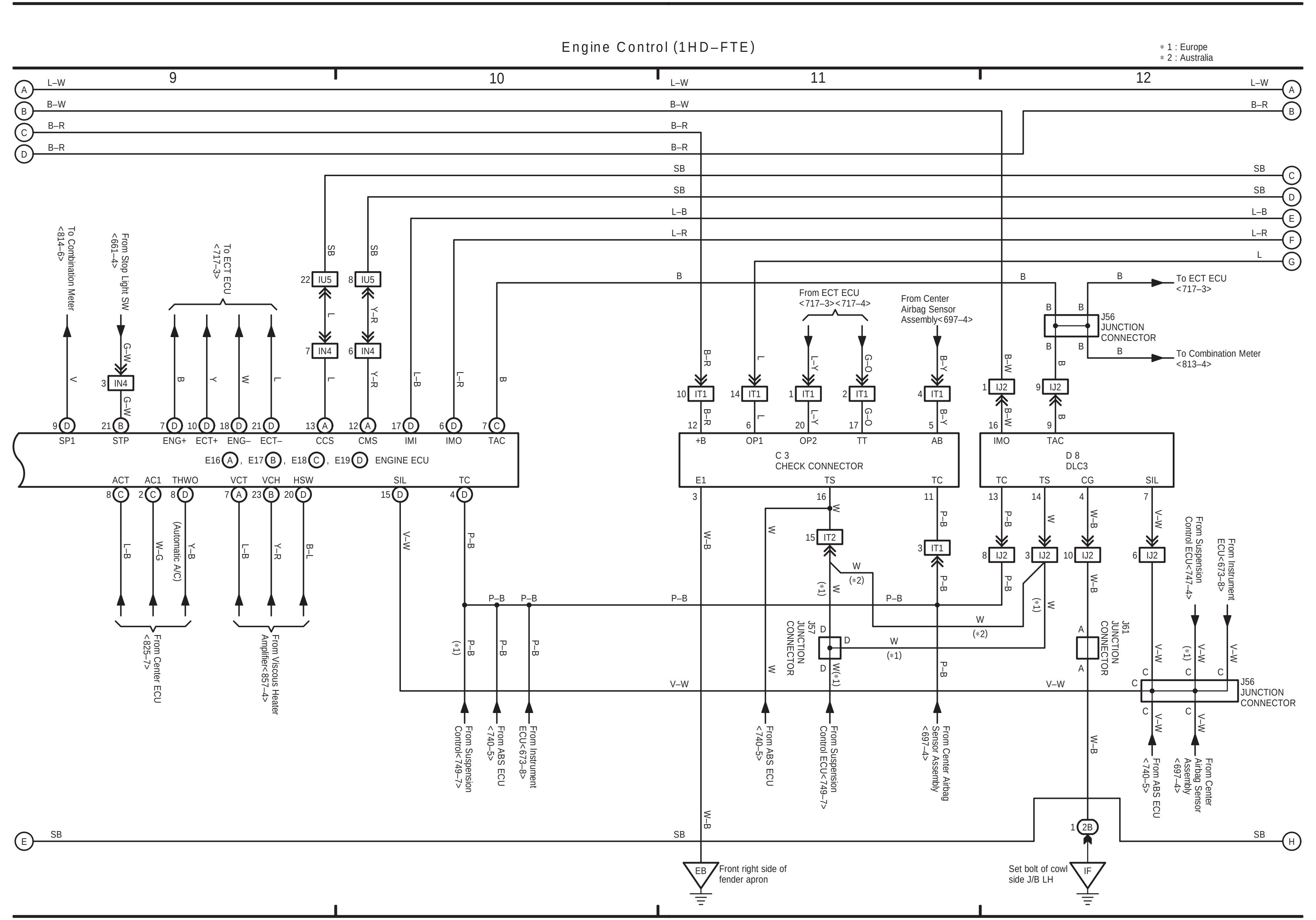

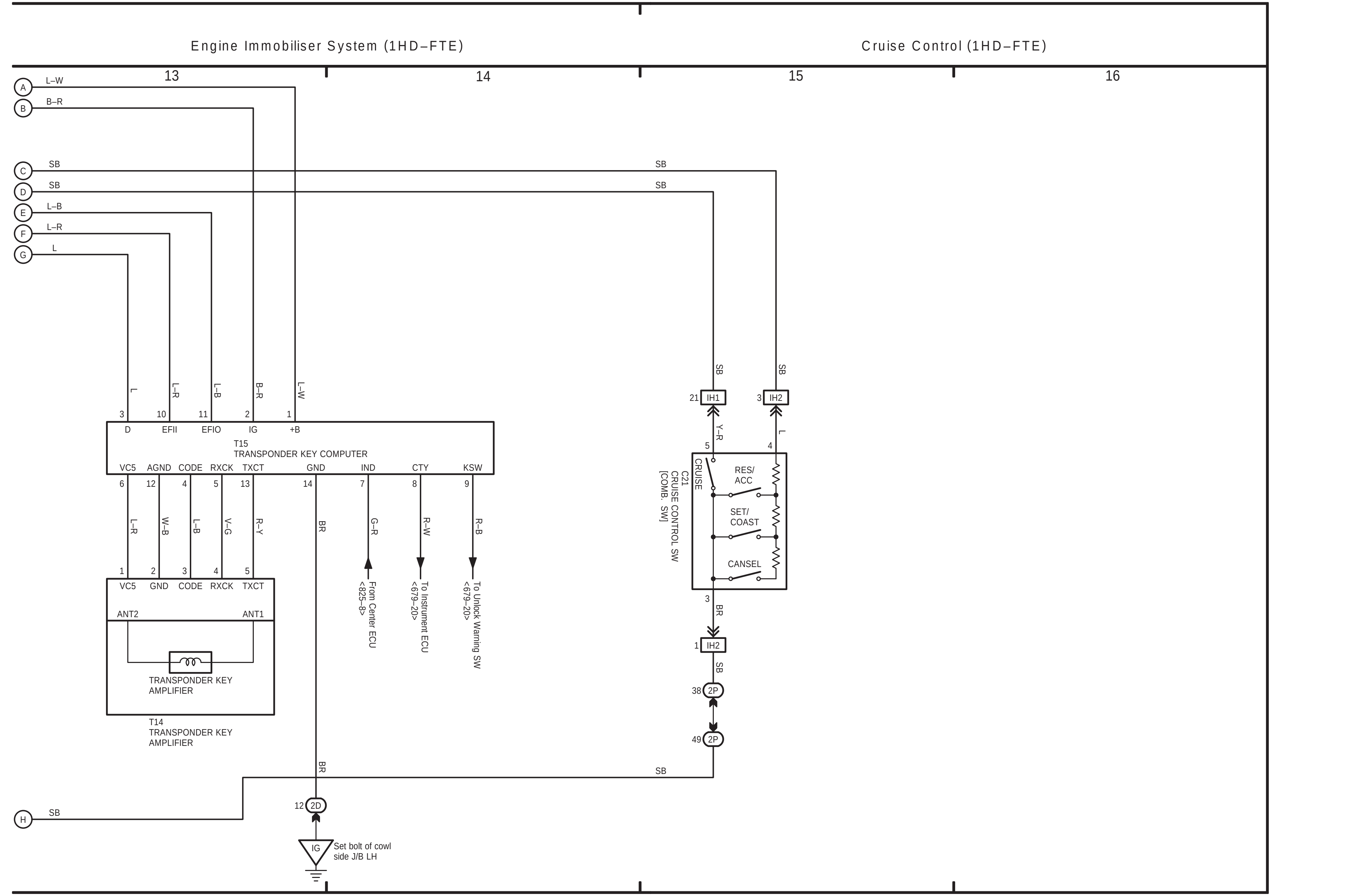

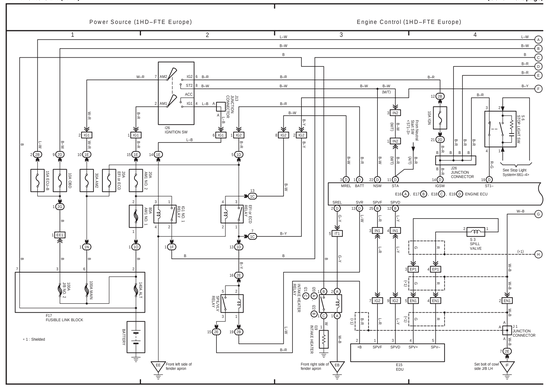
Power Source (1HD–FTE Europe)
Engine Control (1HD–FTE Europe)
1
2
3
4
IG1 FUSIBLE LINK BLOCK
BATTERY
IGNITION SW
ACC
IG1
ST1
STARTER RELAY
ALTERNATOR
ECU–IG FUSE
ECU–B FUSE
ENGINE ROOM R/B
ENGINE ROOM J/B
J/B JUNCTION CONNECTOR
See Stop Light System–BEC–AI
ENGINE ECU
ECU
VALVE
INJECTOR
ENGINE WIRE
Front left side of fender apron
Front right side of fender apron
Set bolt of cowl side, DR LH
* 1: Shielded

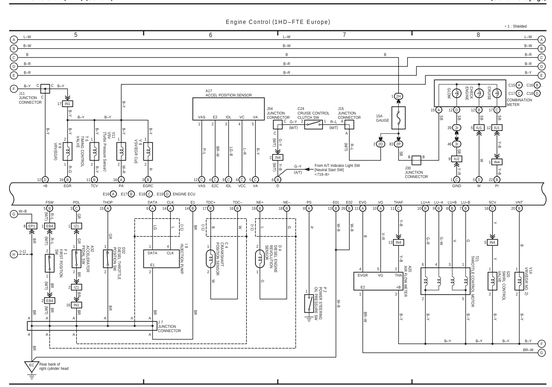
Engine Control (1HD–FTE Europe)
5
6
7
8
* 1: Shielded
J/C JUNCTION CONNECTOR
J/B JUNCTION CONNECTOR
ACCEL POSITION SENSOR
CRUISE CONTROL CLUTCH SW
STOP LIGHT SW
CRUISE CONTROL MASTER
GAUGE
ENGINE ECU
From A/T Indicator Light SW
Diesel Start SW2
ECU–IG FUSE
ECU–B FUSE
ENGINE WIRE
Fuse box
Front bank of left cylinder head

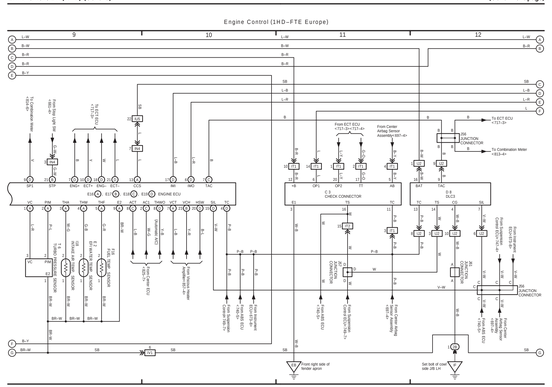
Engine Control (1HD–FTE Europe)
9
10
11
12
Front ECT ECU +TC1 for +TC2 A/T
Front Center Airbag Sensor Assembly
To ECT ECU +TC1–3+
To Combination Meter +TC2–4+
J/C JUNCTION CONNECTOR
J/B JUNCTION CONNECTOR
J/B CHECK CONNECTOR
DLC3
ENGINE ECU
Front right side of fender apron
Set bolt of cowl side, DR LH

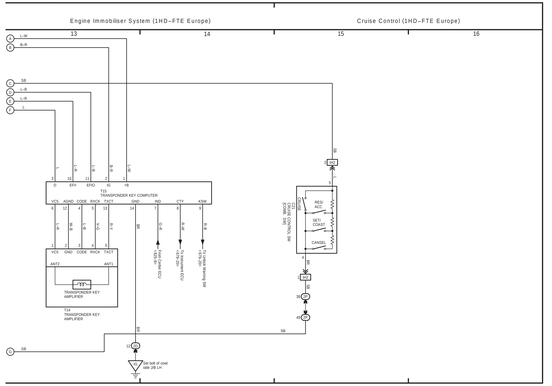
Engine Immobiliser System (1HD–FTE Europe)
Cruise Control (1HD–FTE Europe)
13
14
15
16
TRANSPONDER KEY COMPUTER
TRANSPONDER KEY AMPLIFIER
J/C JUNCTION CONNECTOR
J/B JUNCTION CONNECTOR
MAIN SWITCH
SET/COAST
CANCEL
CRUISE CONTROL MASTER
Set bolt of cowl side, DR LH

10 LAND CRUISER (RHD) (Cont. next page)

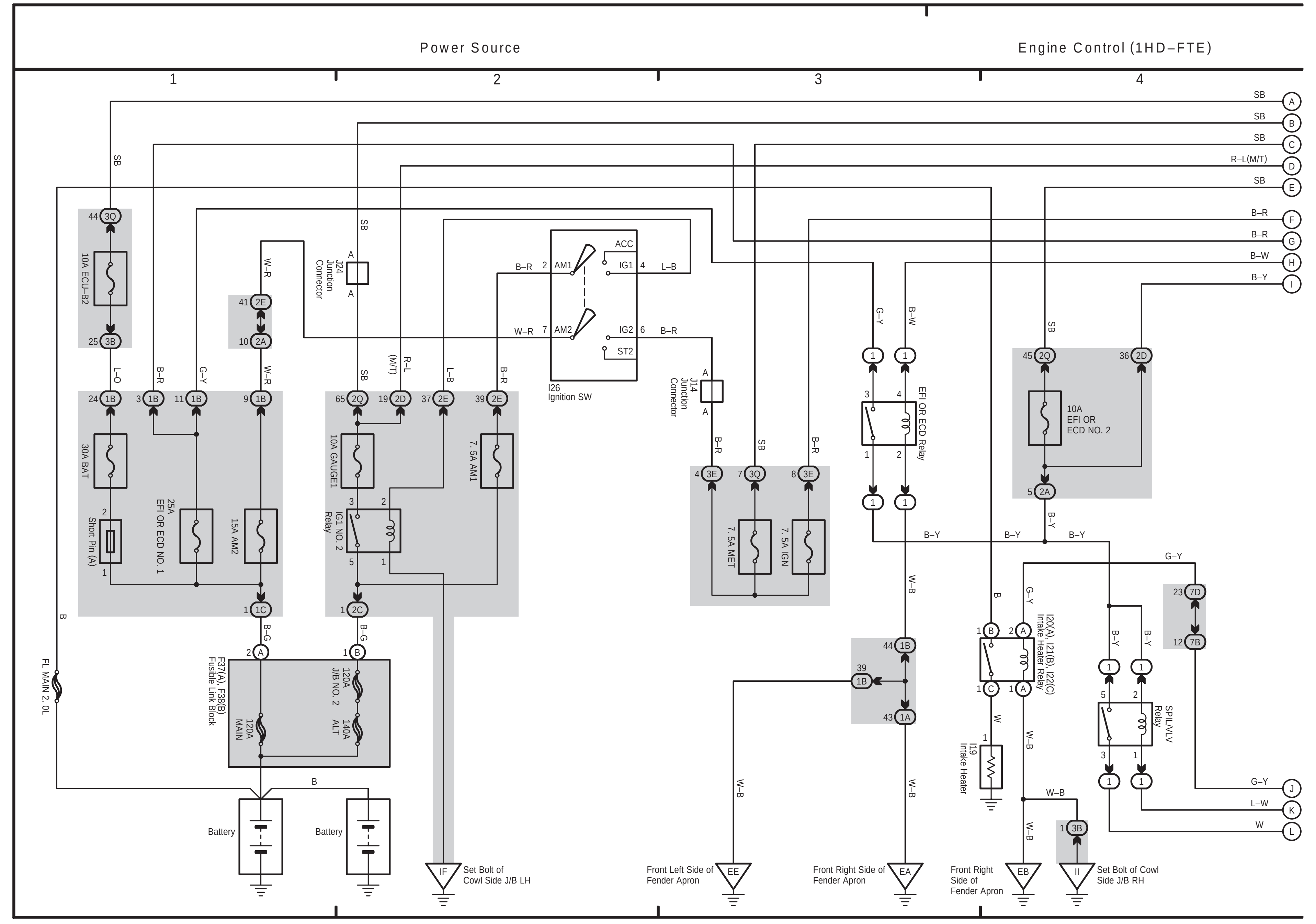

10 LAND CRUISER (RHD) (Cont' d) (Cont. next page)

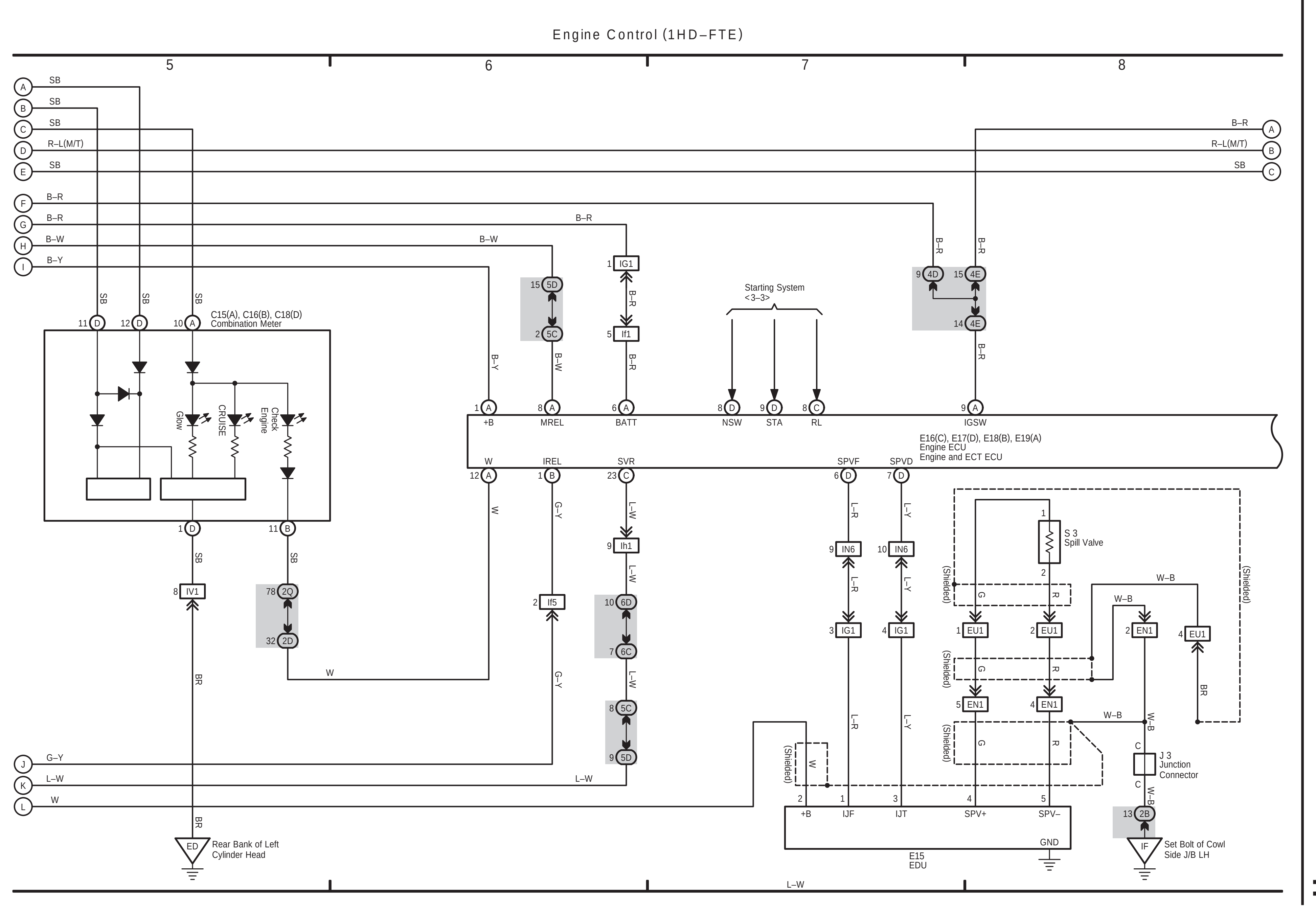

10 LAND CRUISER (RHD) (Cont' d) (Cont. next page)

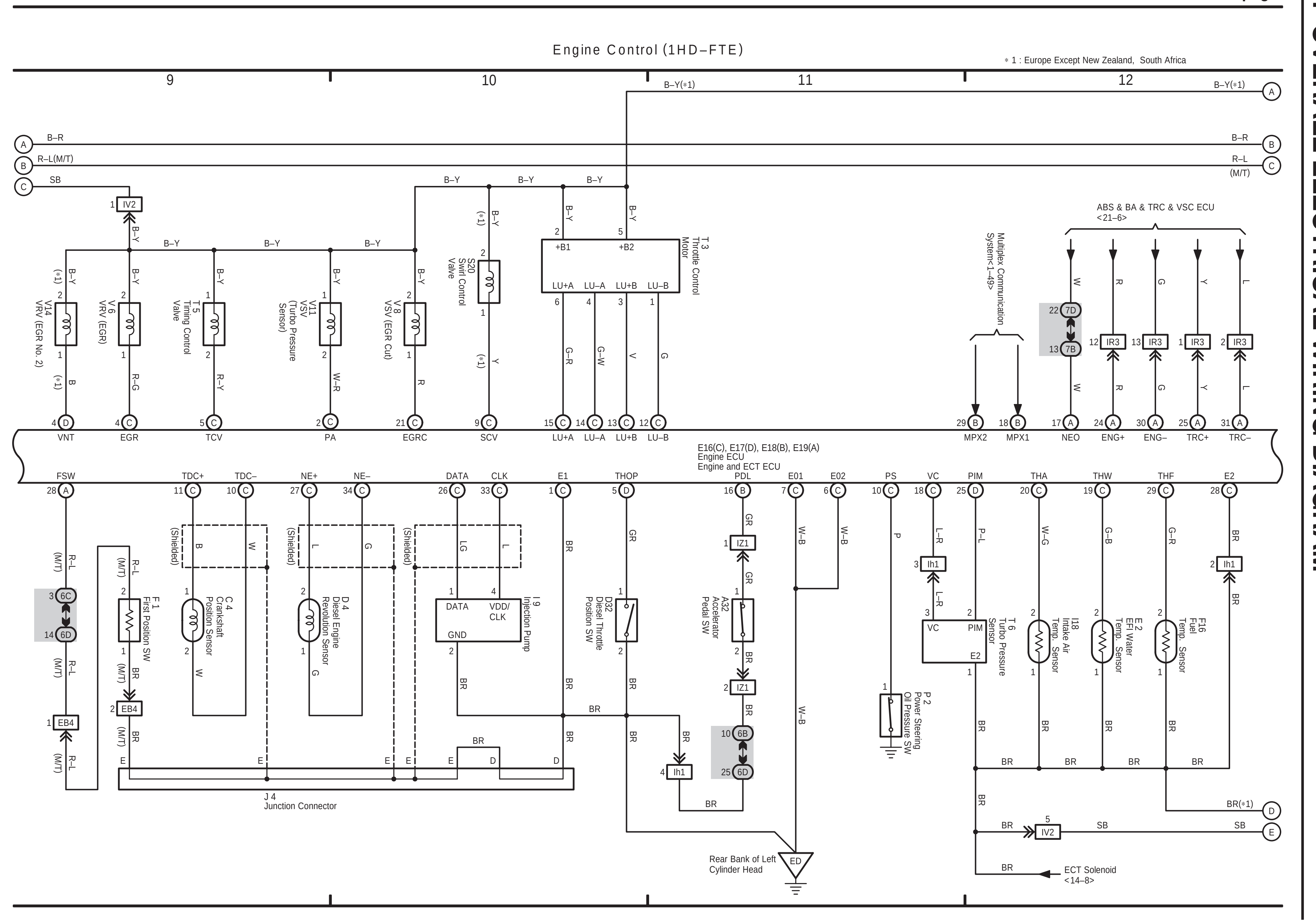

10 LAND CRUISER (RHD) (Cont' d)

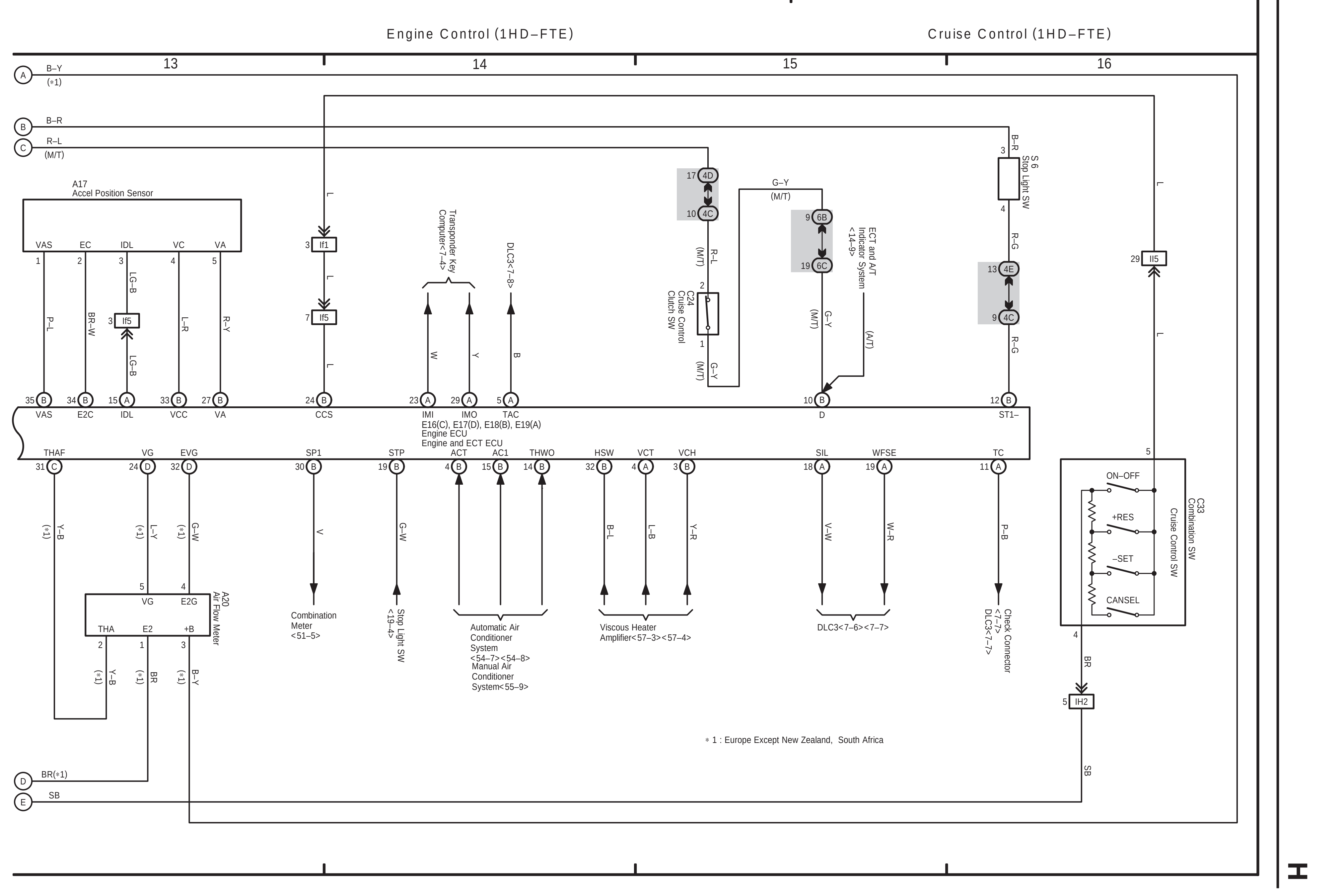

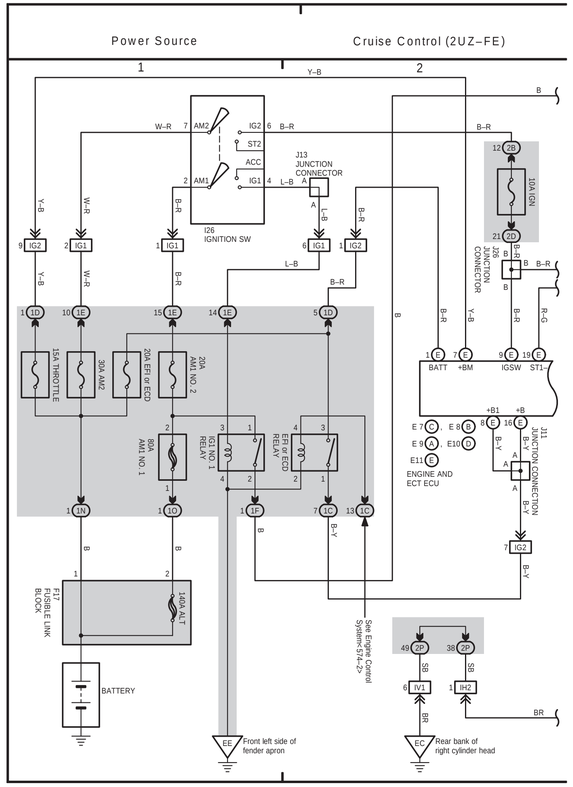

(Cont. next page)

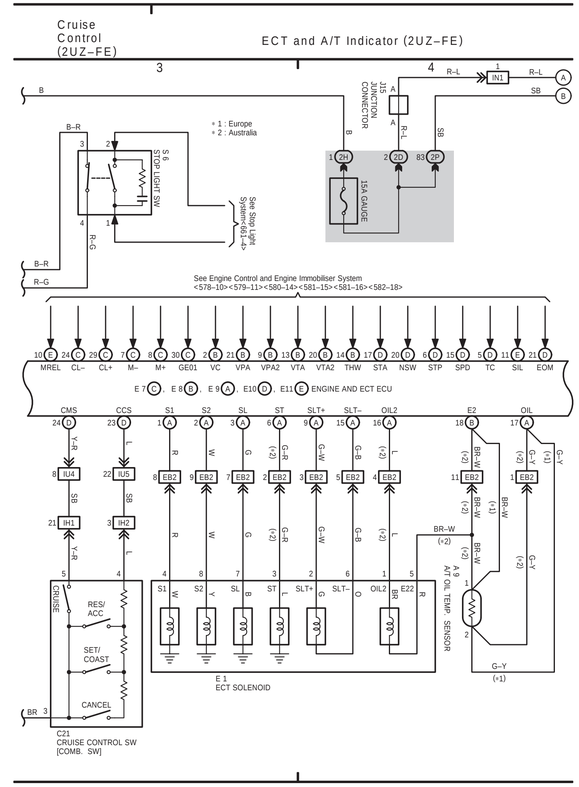

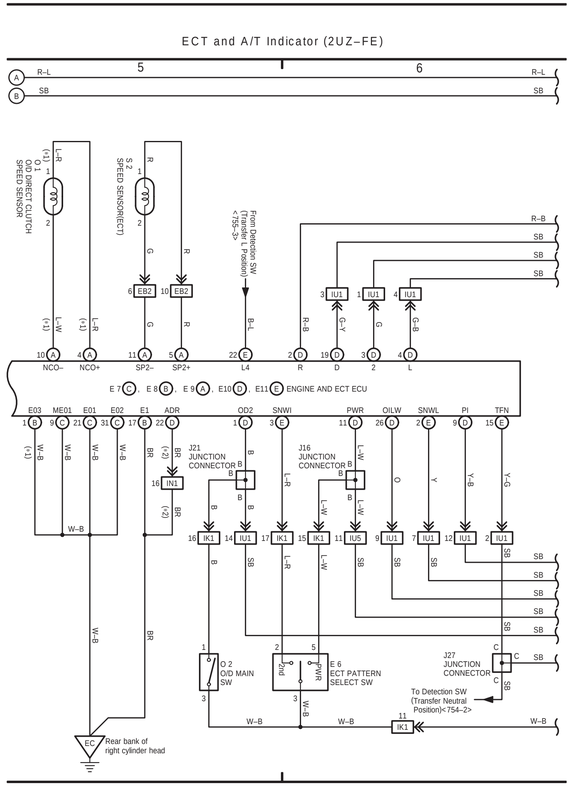

(Cont'd)

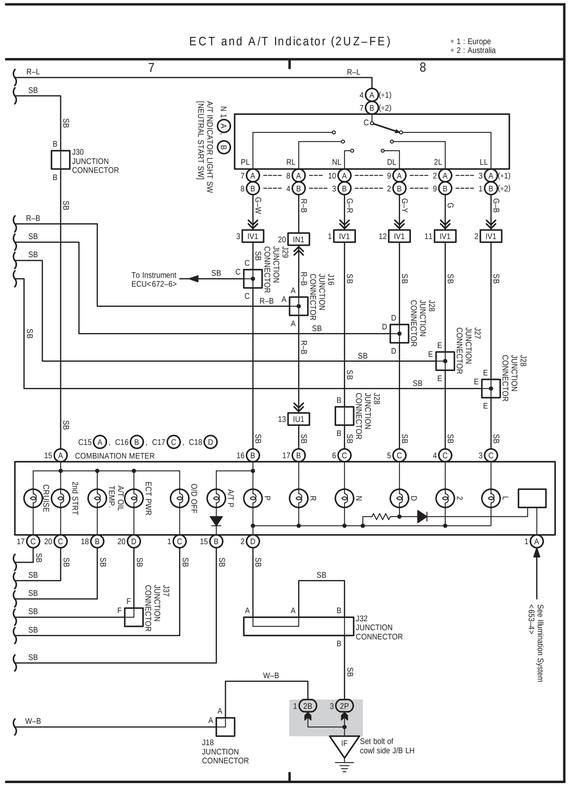

8 LAND CRUISER (RHD) (Cont' d)

(Cont. next page)

Power Source

Engine Control and Fuel Tank Changeover (2UZ-FE)

8 LAND CRUISER (RHD) (Cont' d)

(Cont. next page)

Engine Control and Fuel Tank Changeover (2UZ-FE)

8 LAND CRUISER (RHD) (Cont' d)

(Cont. next page)

Engine Control and Fuel Tank Changeover (2UZ-FE)

8 LAND CRUISER (RHD) (Cont' d)

(Cont. next page)

Engine Control and Fuel Tank Changeover (2UZ-FE)

8 LAND CRUISER (RHD) (Cont' d)

Engine Control and Fuel Tank Changeover (2UZ-FE)

Cruise Control (2UZ-FE)

8 LAND CRUISER (RHD) (Cont. next page)

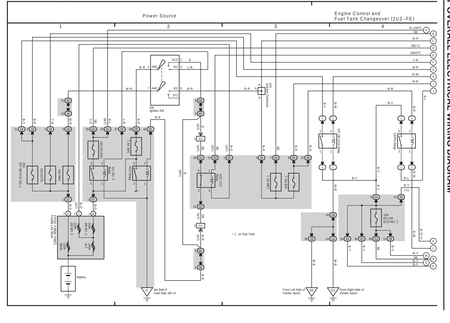

8 LAND CRUISER (RHD) (Cont' d) (Cont. next page)

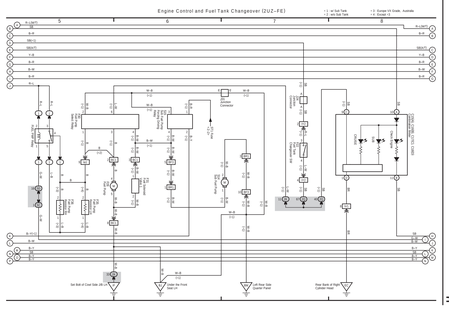

8 LAND CRUISER (RHD) (Cont' d) (Cont. next page)

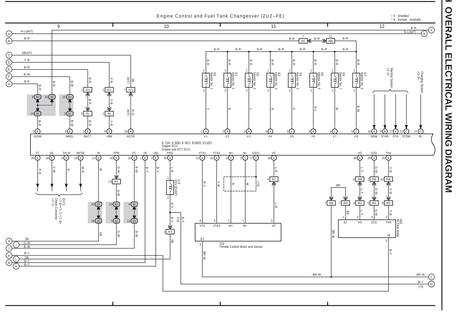

8 LAND CRUISER (RHD) (Cont' d) (Cont. next page)

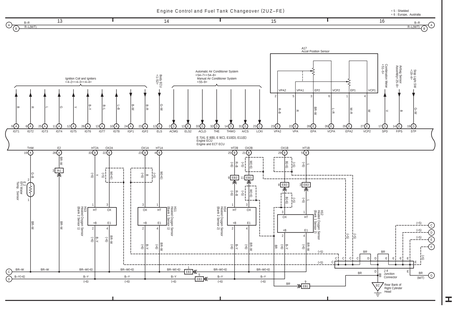

8 LAND CRUISER (RHD) (Cont' d)

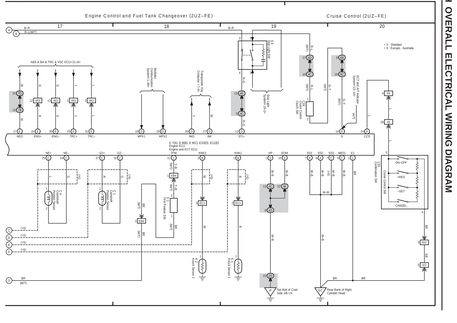

(Cont. next page)

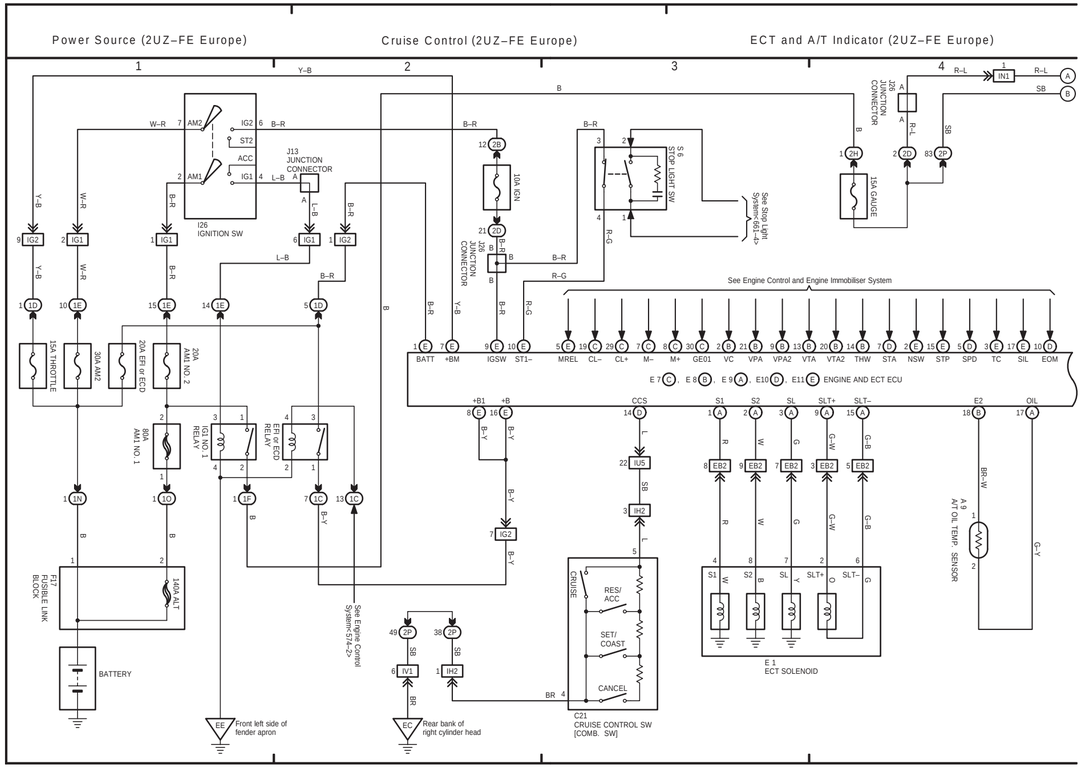

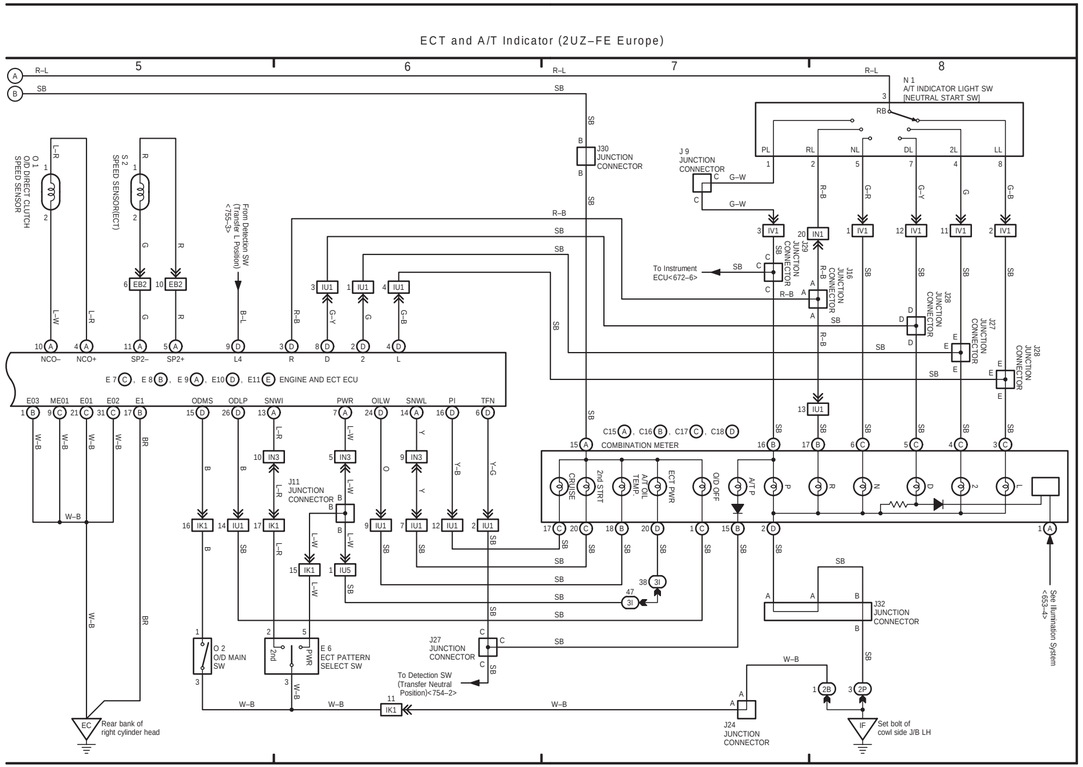

8 LAND CRUISER (RHD) (Cont' d)

(Cont. next page)

Power Source

Engine Control and Fuel Tank Changeover (2UZ-FE)

8 LAND CRUISER (RHD) (Cont' d)

(Cont. next page)

Engine Control and Fuel Tank Changeover (2UZ-FE)

8 LAND CRUISER (RHD) (Cont' d)

(Cont. next page)

Engine Control and Fuel Tank Changeover (2UZ-FE)

8 LAND CRUISER (RHD) (Cont' d)

(Cont. next page)

Engine Control and Fuel Tank Changeover (2UZ-FE)

8 LAND CRUISER (RHD) (Cont' d)

Engine Control and Fuel Tank Changeover (2UZ-FE)

Cruise Control (2UZ-FE)

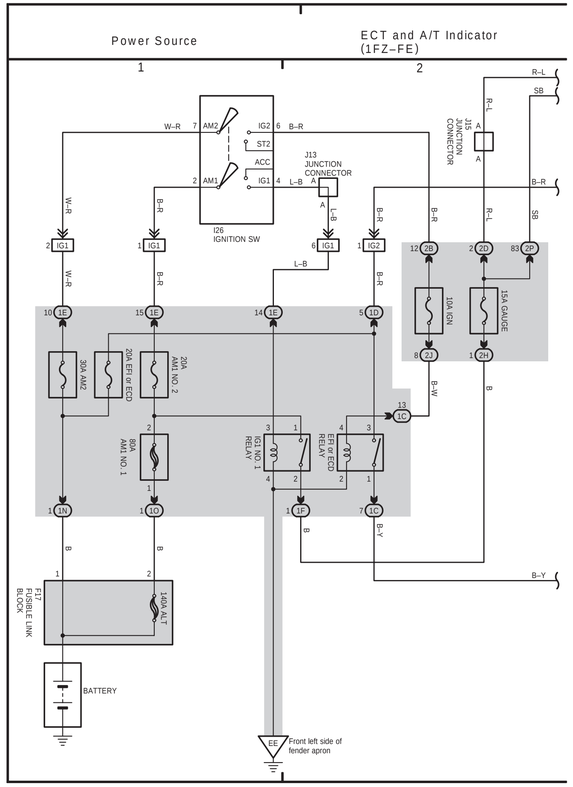

(Cont. next page)

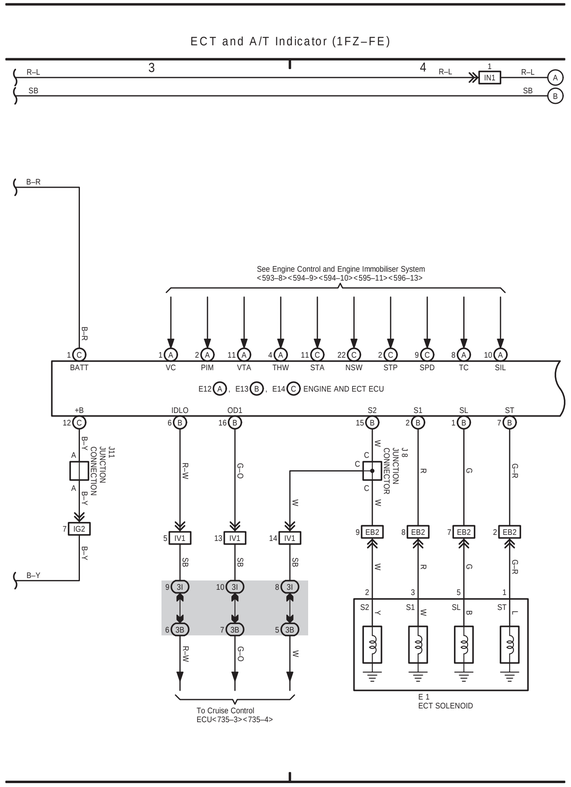

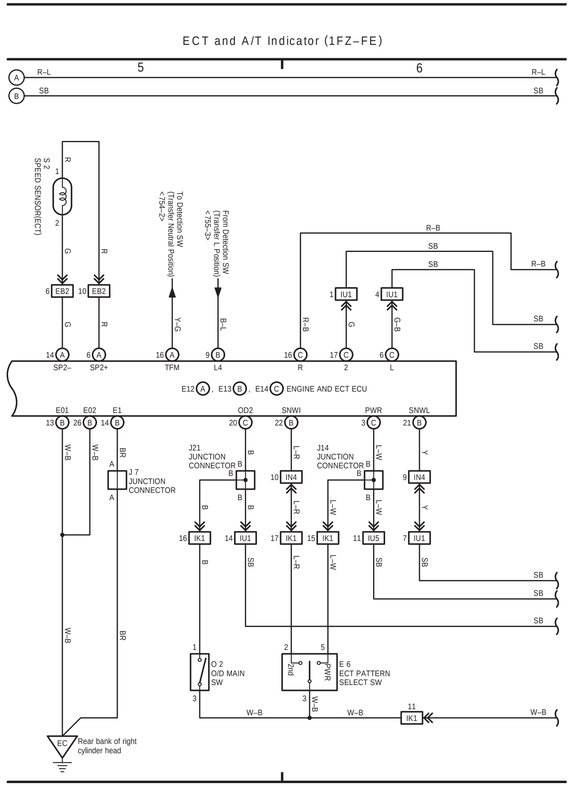

(Cont'd)

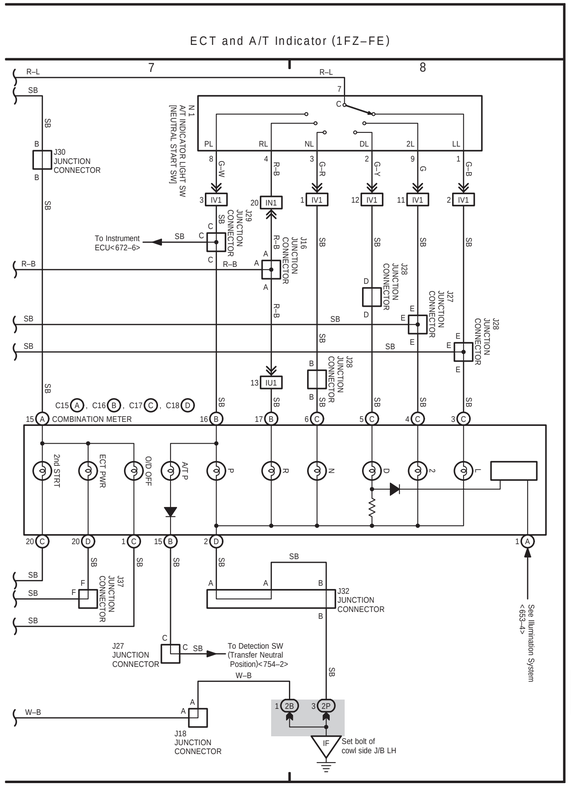

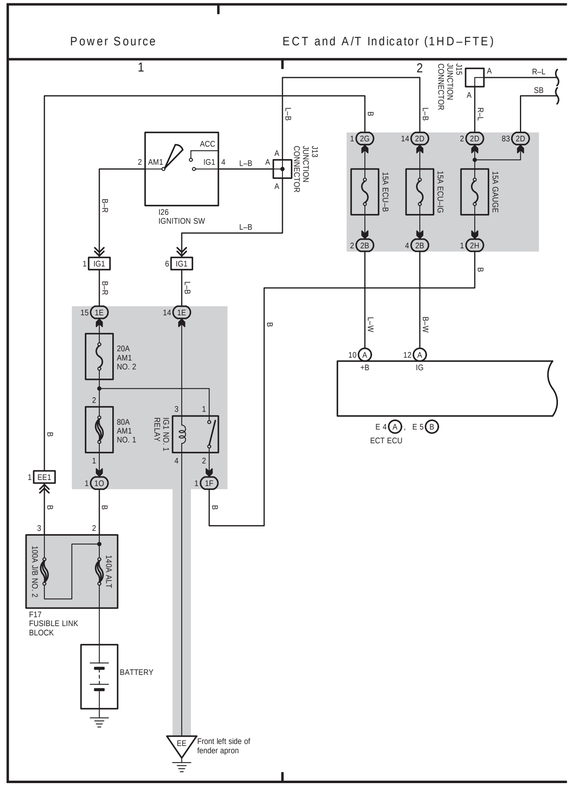
Power Source
ECT and A/T Indicator (1HD–FTE)
1
2
J13 JUNCTION CONNECTOR
J15 JUNCTION CONNECTOR
ACC
IG1
AM1
I26 IGNITION SW
15A ECU–B
15A ECU–IG
15A GAUGE
20A AM1 NO. 2
80A AM1 NO. 1
IG1 NO. 1 RELAY
100A IEB NO. 2
140A ALT
F17 FUSIBLE LINK BLOCK
BATTERY
EE
Front left side of fender apron
+B
IG
E 4 , E 5
ECT ECU

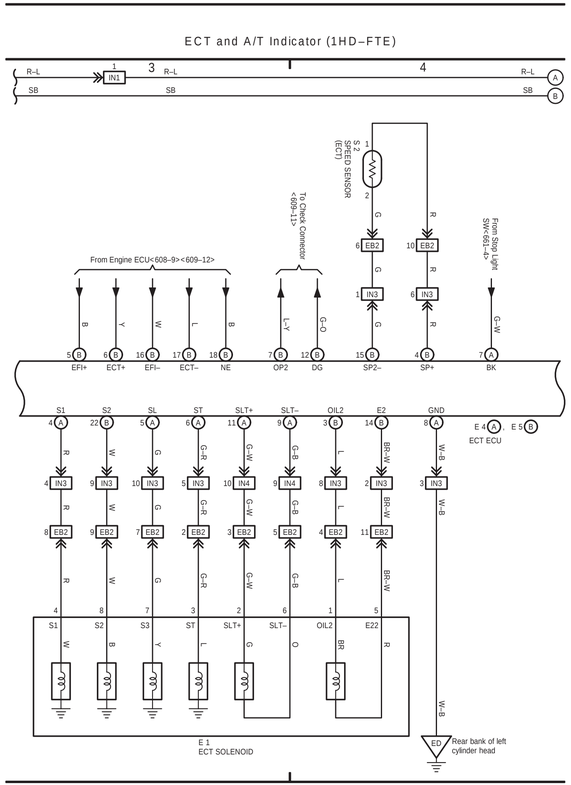
ECT and A/T Indicator (1HD–FTE)
3
4
From Engine ECU<608–9>609–12>
To Check Connector <609–11>
S2 SPEED SENSOR (ECT)
From Stop Light SW<651–4>
EFI+
ECT+
EFI–
ECT–
NE
OP2
DG
SP2–
SP+
BK
S1
S2
SL
ST
SLT+
SLT–
OIL2
E2
GND
E 1 ECT SOLENOID
EG
Rear bank of left cylinder head

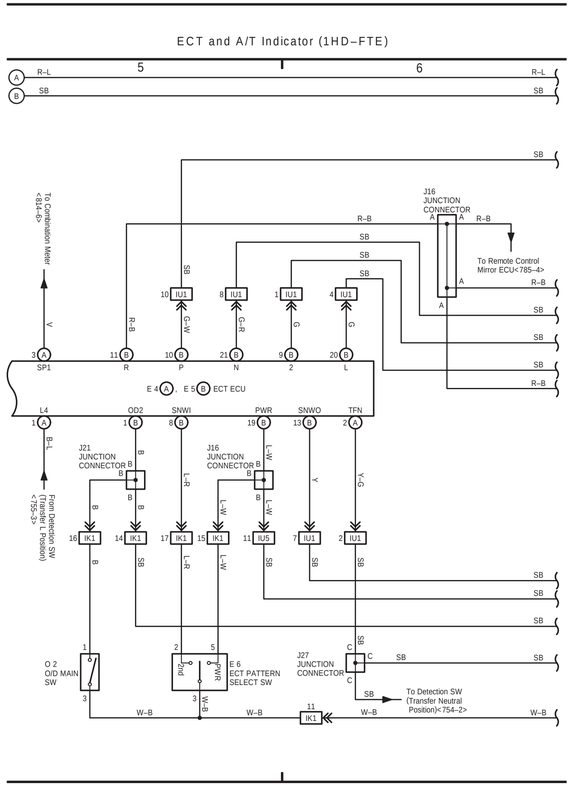
ECT and A/T Indicator (1HD–FTE)
5
6
To Combination Meter <163–4>
J16 JUNCTION CONNECTOR
To Remote Control Mirror ECU<785–4>
SP1
R
P
N
2
L
E 4 , E 5 ECT ECU
L4
OD2
SNWI
PWR
SNWD
TFN
J21 JUNCTION CONNECTOR
From Detection SW (Transfer L Position) <755–3>
O 2 O/D MAIN SW
E 6 ECT PATTERN SELECT SW
J27 JUNCTION CONNECTOR
To Detection SW (Transfer Neutral Position)<754–2>
IK1

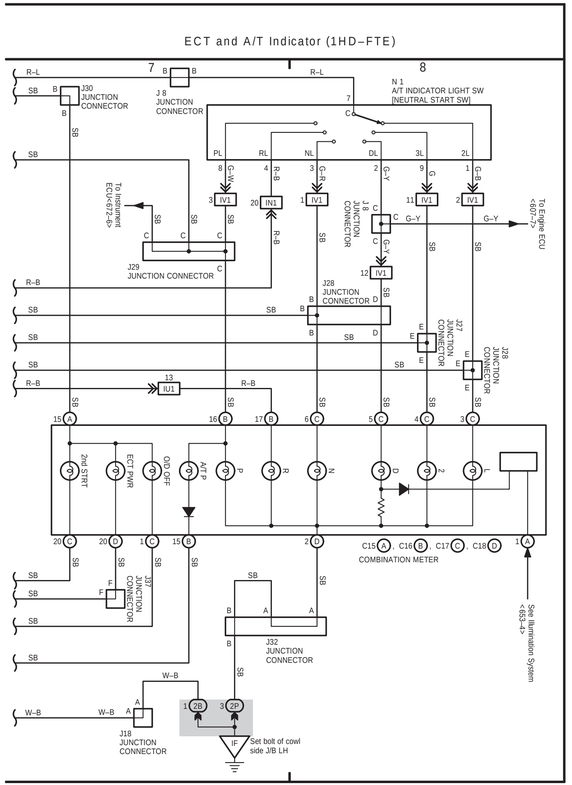
ECT and A/T Indicator (1HD–FTE)
7
8
J30 JUNCTION CONNECTOR
J 8 JUNCTION CONNECTOR
N 1 A/T INDICATOR LIGHT SW [NEUTRAL START SW]
To Instrument ECU<672–6>
J29 JUNCTION CONNECTOR
J28 JUNCTION CONNECTOR
J 1 JUNCTION CONNECTOR
To Engine ECU <607–72>
J27 JUNCTION CONNECTOR
J26 JUNCTION CONNECTOR
2nd START
ECT PWR
O/D OFF
A/T P
R
N
D
2
L
C15 , C16 , C17 , C18
COMBINATION METER
See Illumination System <483–4>
337 JUNCTION CONNECTOR
J32 JUNCTION CONNECTOR
J18 JUNCTION CONNECTOR
Set bolt of cowl side J/B LH

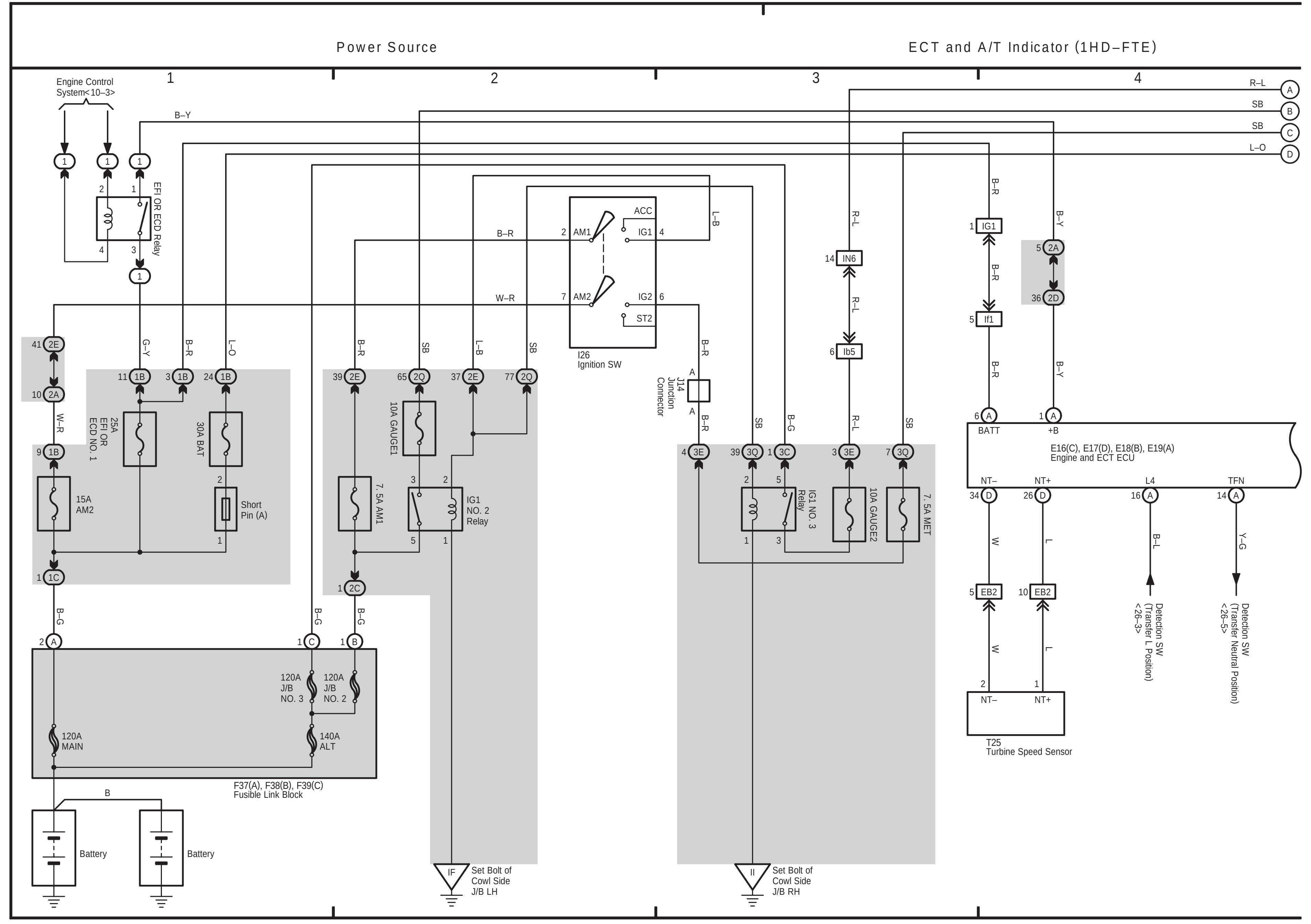
Power Source
ECT and A/T Indicator (1HD–FTE)
Engine Control System<10–3>
EFI OR ECD Relay
I26 Ignition SW
J14 Junction Connector
25A EFI OR ECD NO. 1
30A BAT
15A AM2
Short Pin (A)
10A GAUGE1
7. 5A AM1
IG1 NO. 2 Relay
IG1 NO. 3 Relay
10A GAUGE2
7. 5A MET
120A J/B NO. 3
120A J/B NO. 2
120A MAIN
140A ALT
F37(A), F38(B), F39(C) Fusible Link Block
Battery
Battery
Set Bolt of Cowl Side J/B LH
Set Bolt of Cowl Side J/B RH
E16(C), E17(D), E18(B), E19(A) Engine and ECT ECU
BATT
+B
NT–
NT+
L4
TFN
Detection SW (Transfer L Position) <26–3>
Detection SW (Transfer Neutral Position) <26–5>
T25 Turbine Speed Sensor

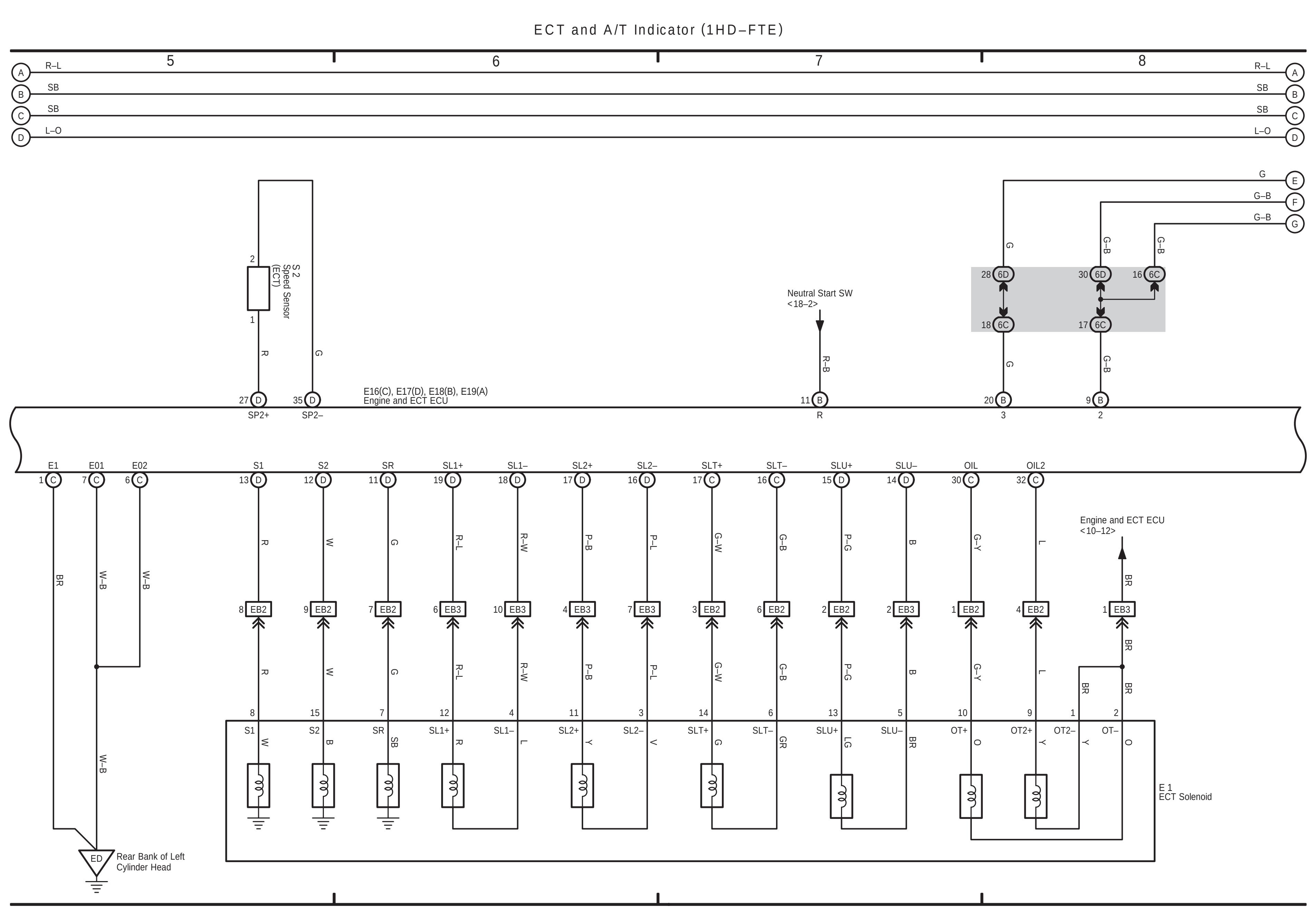
ECT and A/T Indicator (1HD–FTE)
S 2 Speed Sensor (ECT)
Neutral Start SW <18–2>
E16(C), E17(D), E18(B), E19(A) Engine and ECT ECU
SP2+
SP2–
E1
E01
E02
S1
S2
SR
SL1+
SL1–
SL2+
SL2–
SLT+
SLT–
SLU+
SLU–
OIL
OIL2
Engine and ECT ECU <10–12>
OT+
OT2+
OT2–
OT–
E 1 ECT Solenoid
Rear Bank of Left Cylinder Head

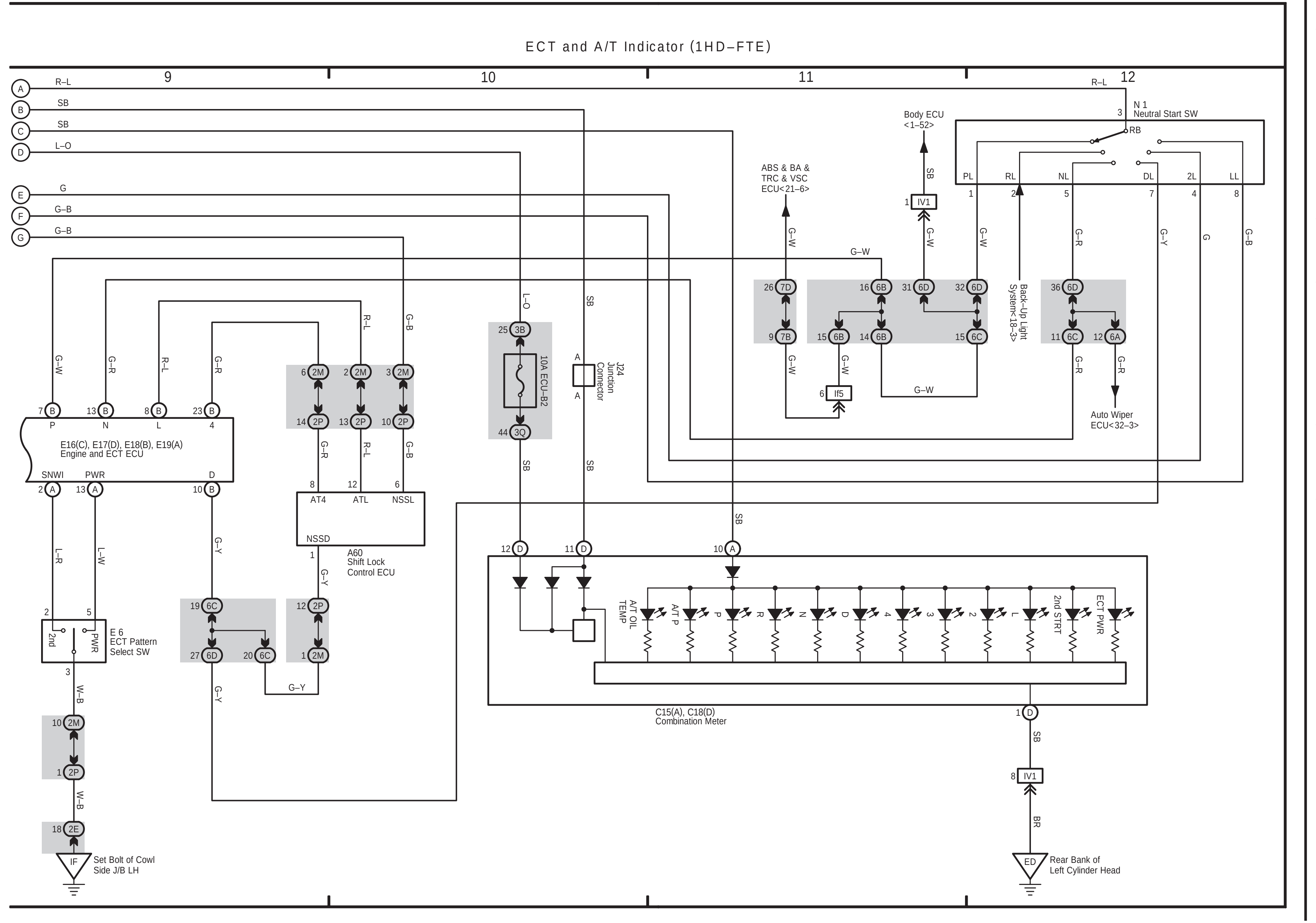
ECT and A/T Indicator (1HD–FTE)
N 1 Neutral Start SW
Body ECU <1–52>
ABS & BA & TRC & VSC ECU<21–6>
Back–Up Light System<18–3>
Auto Wiper ECU<32–3>
10A ECU–B2
J24 Junction Connector
E16(C), E17(D), E18(B), E19(A) Engine and ECT ECU
SNWI
PWR
AT4
ATL
NSSL
NSSD
A60 Shift Lock Control ECU
E 6 ECT Pattern Select SW
2nd
A/T OIL TEMP
A/T P
2nd STRT
ECT PWR
C15(A), C18(D) Combination Meter
Set Bolt of Cowl Side J/B LH
Rear Bank of Left Cylinder Head

(Cont. next page)

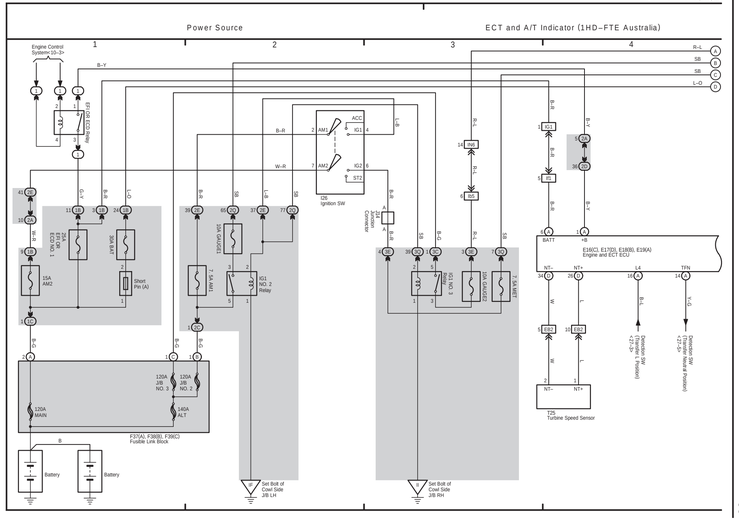

(Cont. next page)

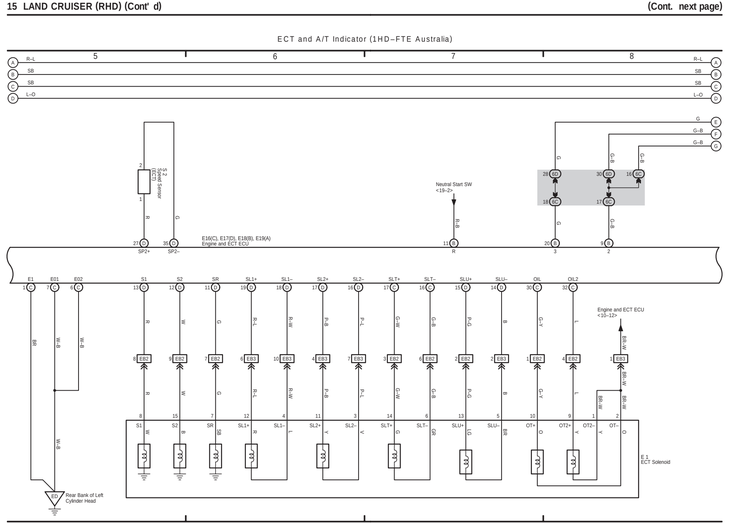

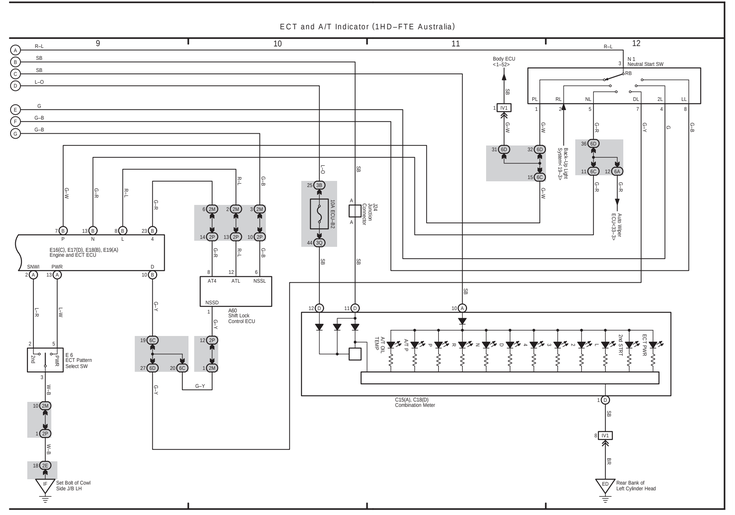

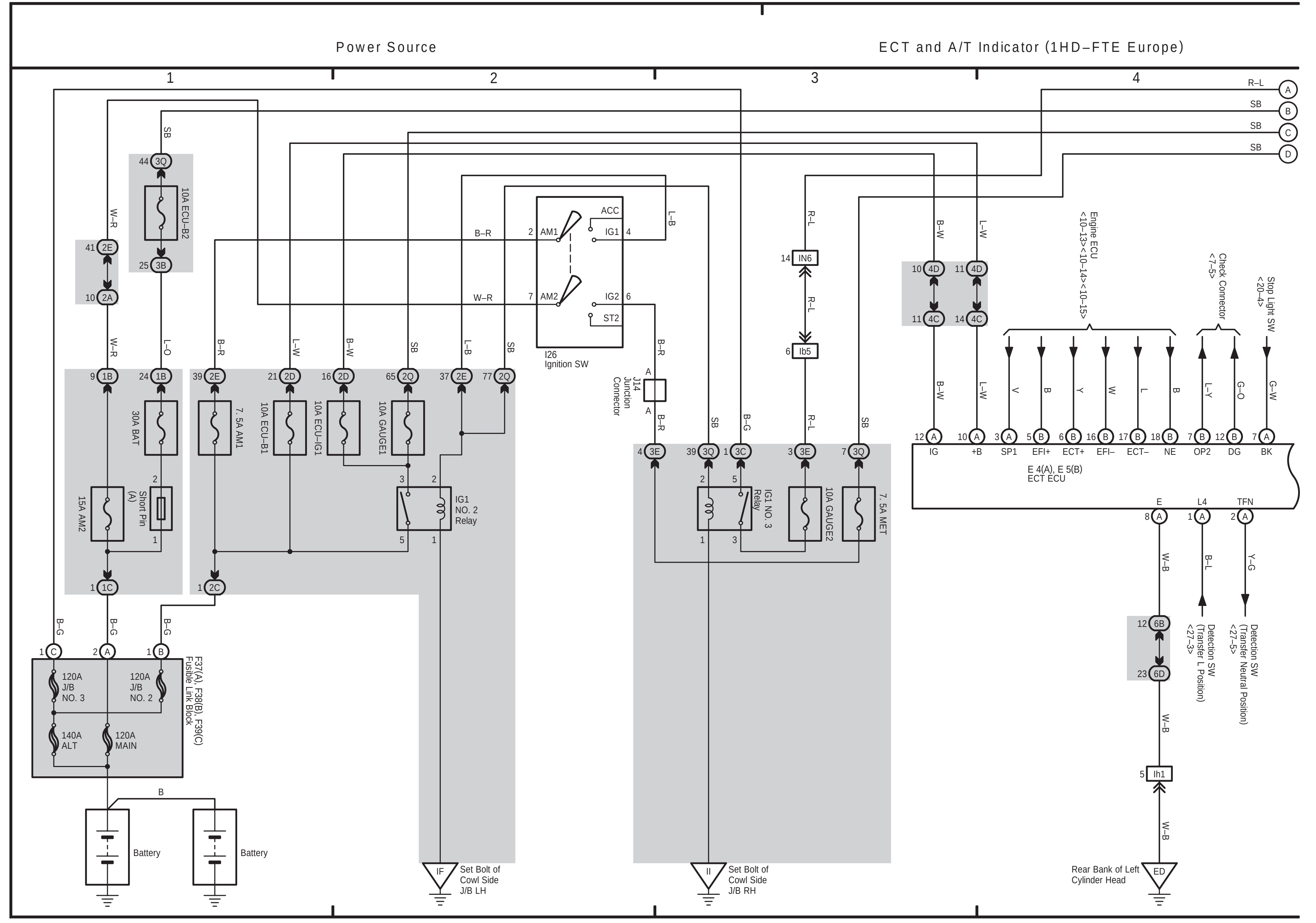
Power Source
ECT and A/T Indicator (1HD–FTE Europe)
Battery
Battery
E 4(A), E 5(B)
ECT ECU
I26
Ignition SW
IG1
NO. 2
Relay
Set Bolt of Cowl Side J/B LH
Set Bolt of Cowl Side J/B RH
Rear Bank of Left Cylinder Head

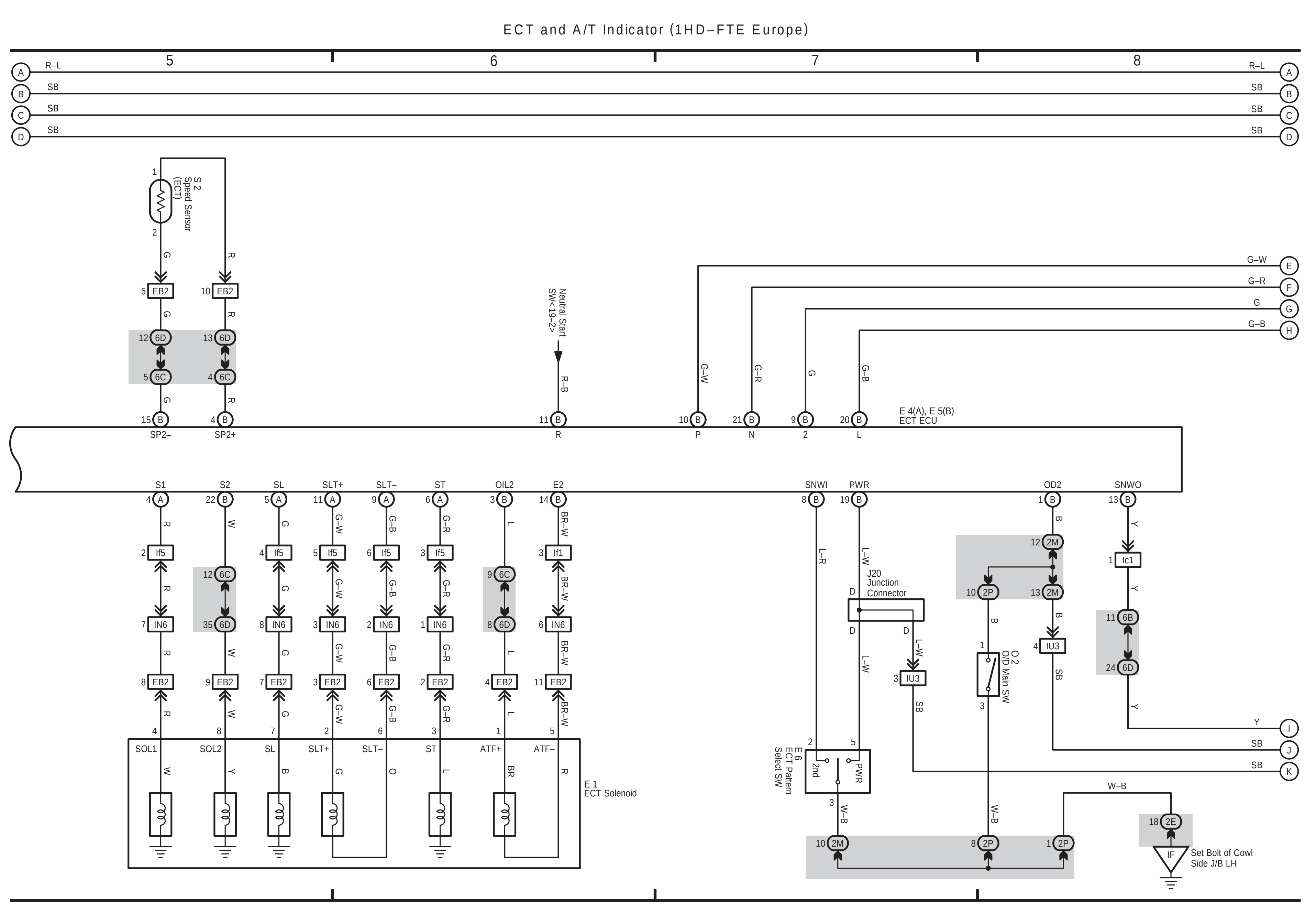
ECT and A/T Indicator (1HD–FTE Europe)
E 4(A), E 5(B)
ECT ECU
E 1
ECT Solenoid
J20
Junction Connector
Set Bolt of Cowl Side J/B LH

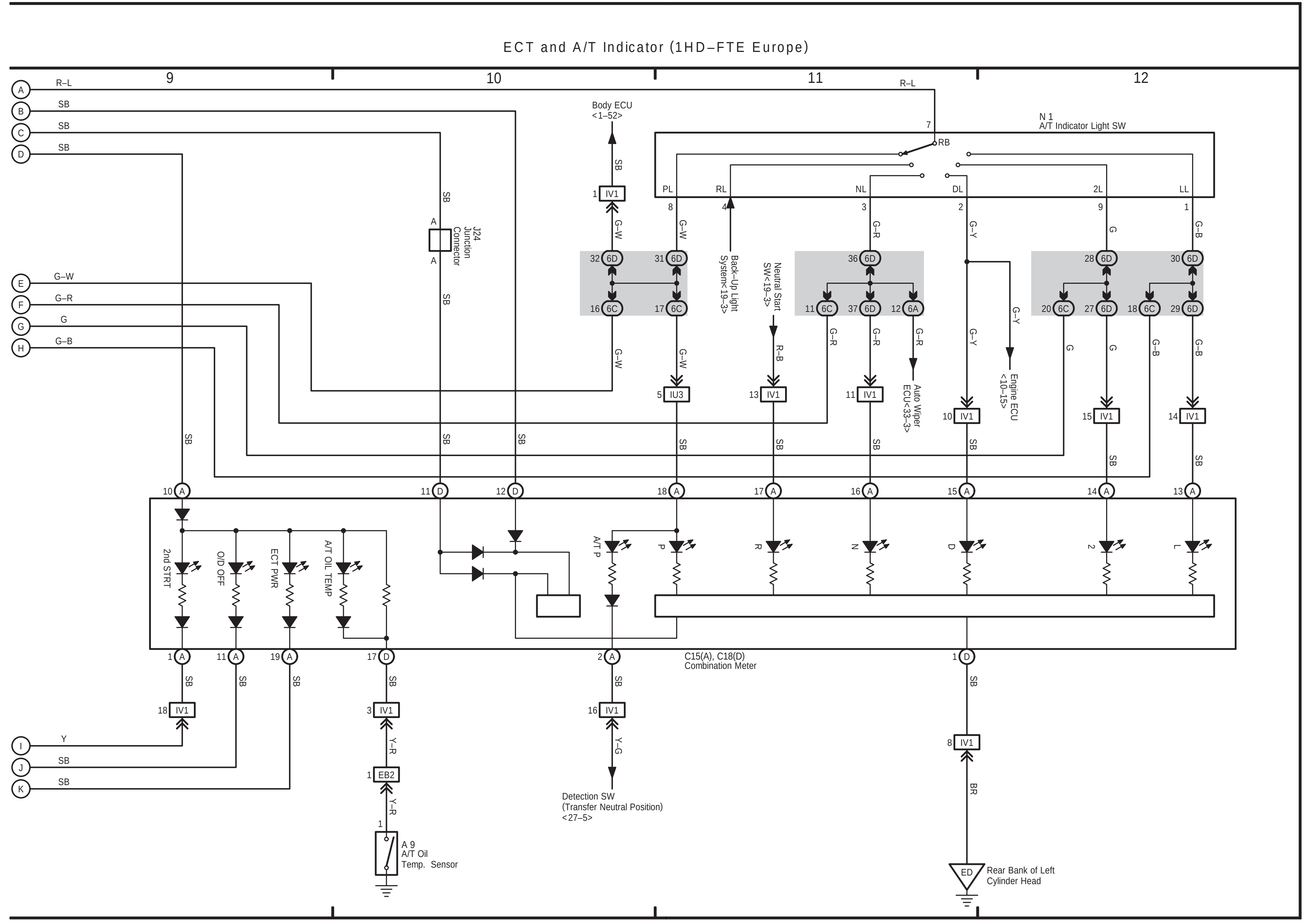
ECT and A/T Indicator (1HD–FTE Europe)
N 1
A/T Indicator Light SW
C15(A), C16(D)
Combination Meter
A 9
A/T Oil Temp. Sensor
Rear Bank of Left Cylinder Head

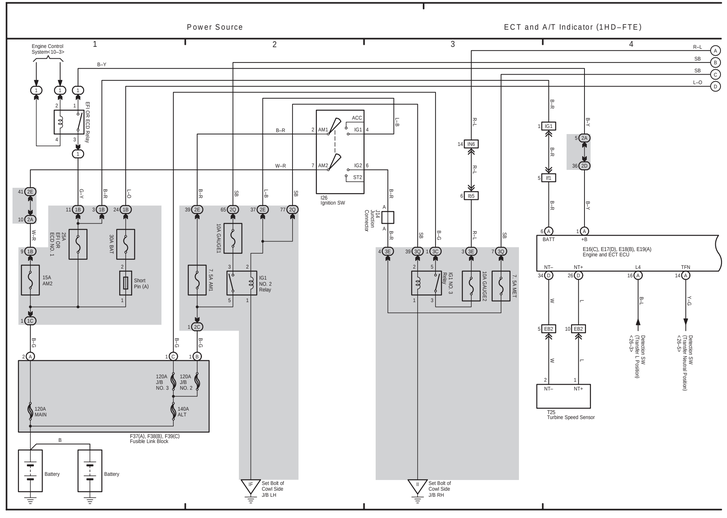
Power Source
ECT and A/T Indicator (1HD–FTE)
Engine Control System<1G–3>
Engine Room R/B No.1
EFI Relay
ACC
IG1
IG2
ST2
Ignition Switch
IG1 NO. 2 Relay
Main Fuse
Short Pin (A)
15A AM2
30A ALT
50A MAIN
120A JB NO. 1
120A JB NO. 2
140A ALT
120A MAIN
F37(A), F38(B), F39(C)
Fusible Link Block
Battery
Battery
Set Bolt of Cowl Side JB LH
Set Bolt of Cowl Side JB RH
E160(C), E170(D), E180(B), E190(A)
Engine and ECT ECU
BATT
NT–
NT+
TP
TPN
T25
Turbine Speed Sensor
Transmission Wire Harness <A>
Transmission Wire Harness <B>

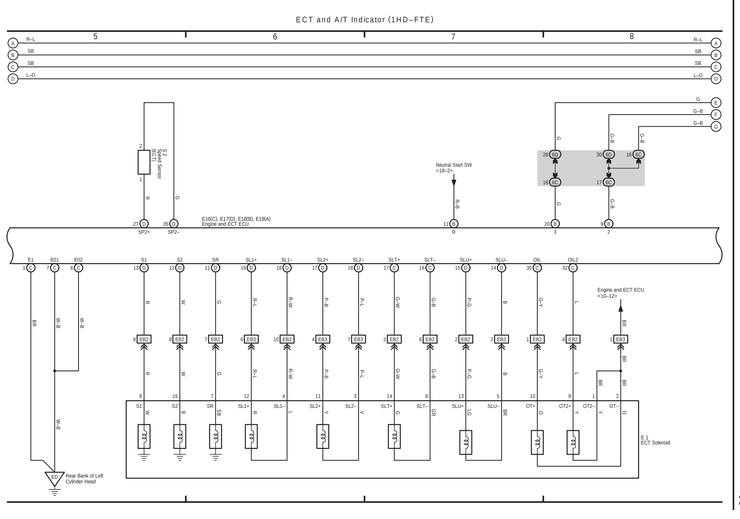
ECT and A/T Indicator (1HD–FTE)
5V Power Source (ECT)
E160(C), E170(D), E180(B), E190(A)
Engine and ECT ECU
Neutral Start SW <1B–2>
Engine and ECT ECU <1D–12>
E1
ECT Solenoid
Rear Bank of Left Cylinder Head

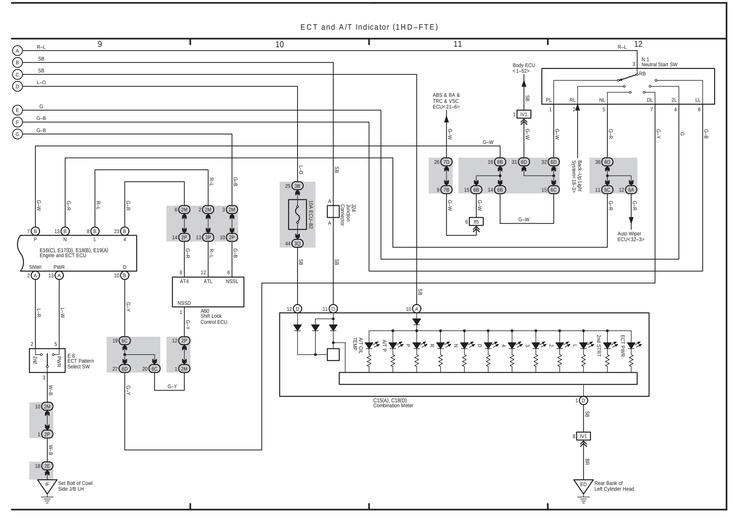
ECT and A/T Indicator (1HD–FTE)
Body ECU <1–32>
N L
Neutral Start SW
ABS & BA & TRC & VSC ECU<1J–8>
Stop Light Switch
Auto Wiper ECU<1–31>
E160(C), E170(D), E180(B), E190(A)
Engine and ECT ECU
A/T4
A/TL
NSS2
NSS3
A/D Shift Lock Control ECU
E6
ECT Pattern Select SW
C150(A), C180(D)
Combination Meter
Set Bolt of Cowl Side JB LH
Rear Bank of Left Cylinder Head

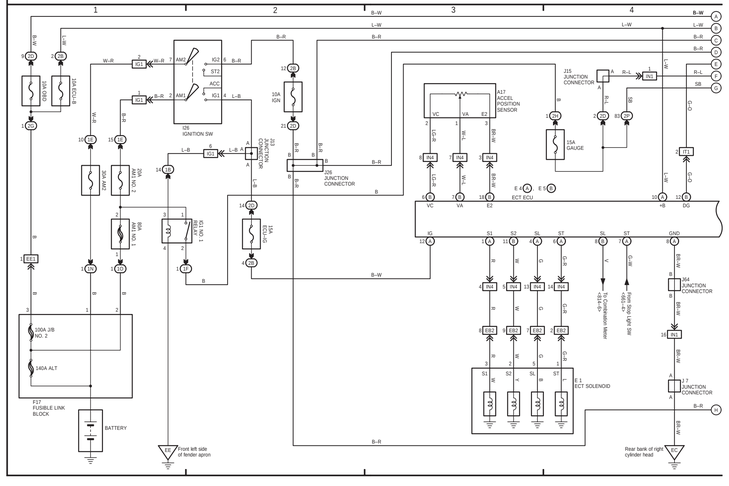
Power Source (1HZ, 1HD–T)
ECT and A/T Indicator (1HZ)
IGNITION SW
ACCEL POSITION SENSOR
ECT ECU
ECT SOLENOID
BATTERY
FUSIBLE LINK BLOCK
Front left side of fender apron
Rear bank of right cylinder head

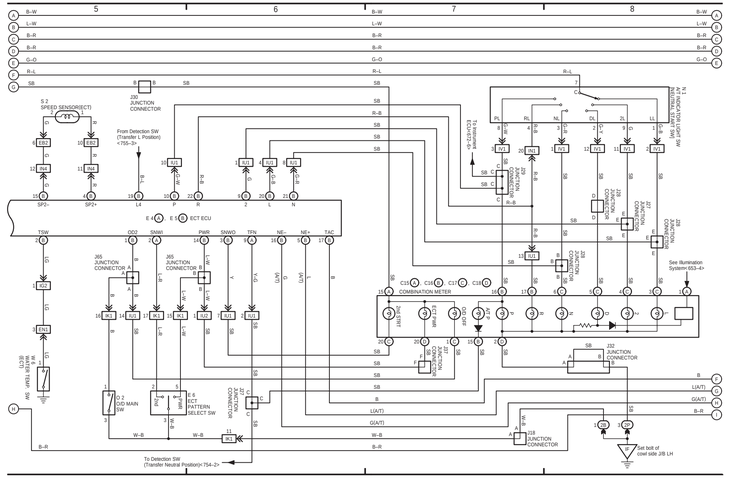
ECT and A/T Indicator (1HZ)
SPEED SENSOR(ECT)
ECT ECU
COMBINATION METER
To Detection SW (Transfer Neutral Position)<754–2>
To Detection SW (Transfer L Position)<754–3>
See Illumination System<653–4>
Set bolt of cowl side J/B LH

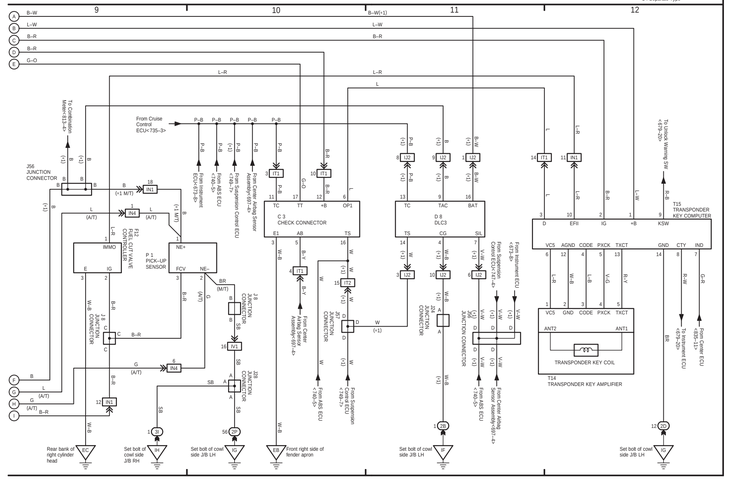
Engine Immobiliser System (1HZ, 1HD–T)
* 1: Separate Type
From Cruise Control ECU<735–3>
To Combination Meter<653–4>
To Windshield Wiper Motor<756–2>
To Transmission ECM<755–3>
To Detection SW (Transfer L Position)<754–3>
To Detection SW (Transfer Neutral Position)<754–2>
From Steering Pad Switch<735–2>
From Stop Light SW<735–2>
From Skid Control ECU<735–4>
From Center Airbag Sensor Assembly<SRS–4>
From Instrument ECU<653–4>
To Transmission ECU<755–2>
From Center Airbag Sensor Assembly<SRS–4>
To Engine Control System<140–3>
To Transmission ECU<755–2>
From Center Airbag Sensor Assembly<SRS–4>
Rear bank of right cylinder head
Set bolt of cowl side J/B RH
Set bolt of cowl side J/B LH
Front right side of fender apron
Set bolt of cowl side J/B LH
Set bolt of cowl side J/B LH

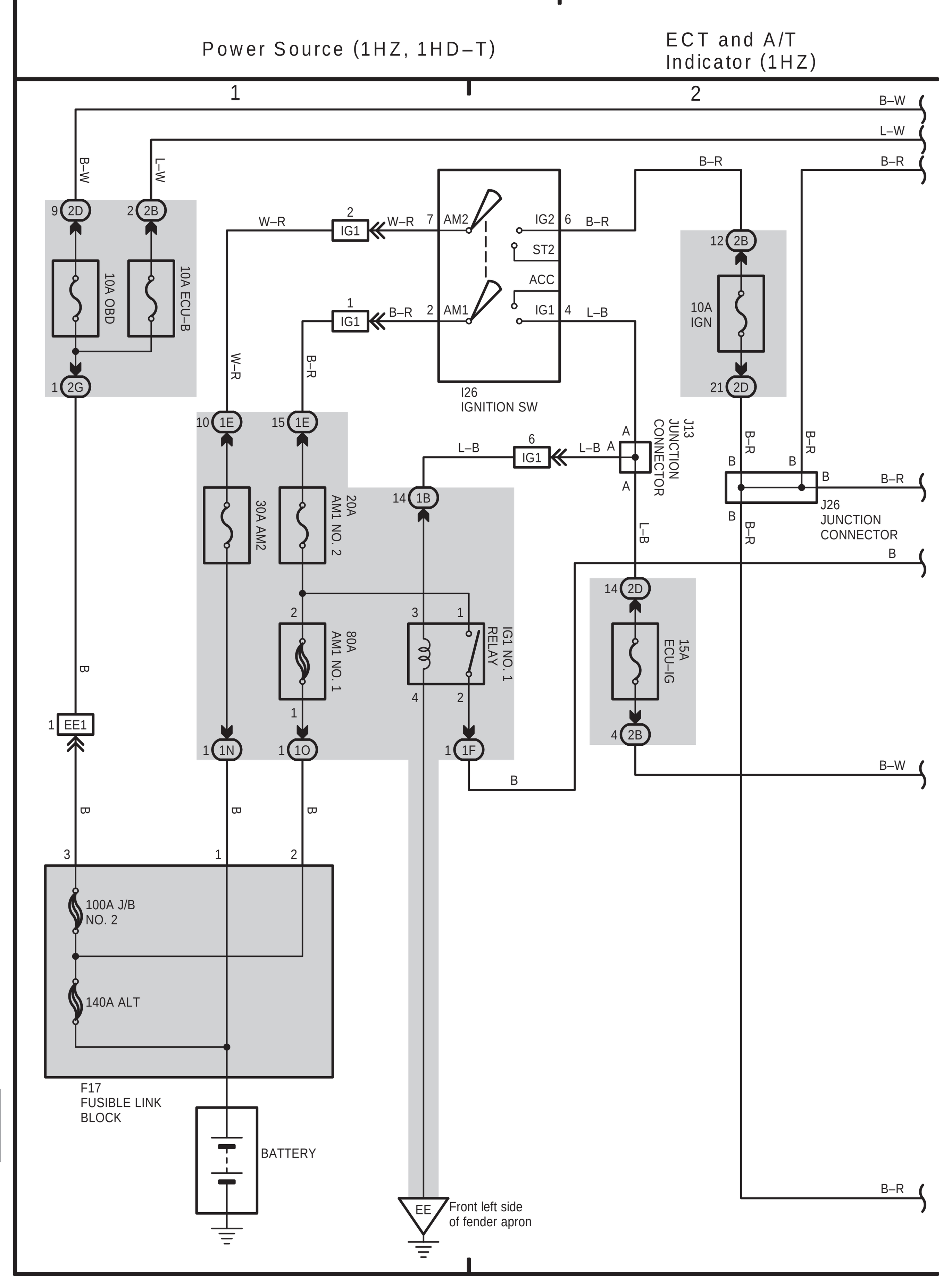
Power Source (1HZ, 1HD−T)
ECT and A/T Indicator (1HZ)
F17 FUSIBLE LINK BLOCK
BATTERY

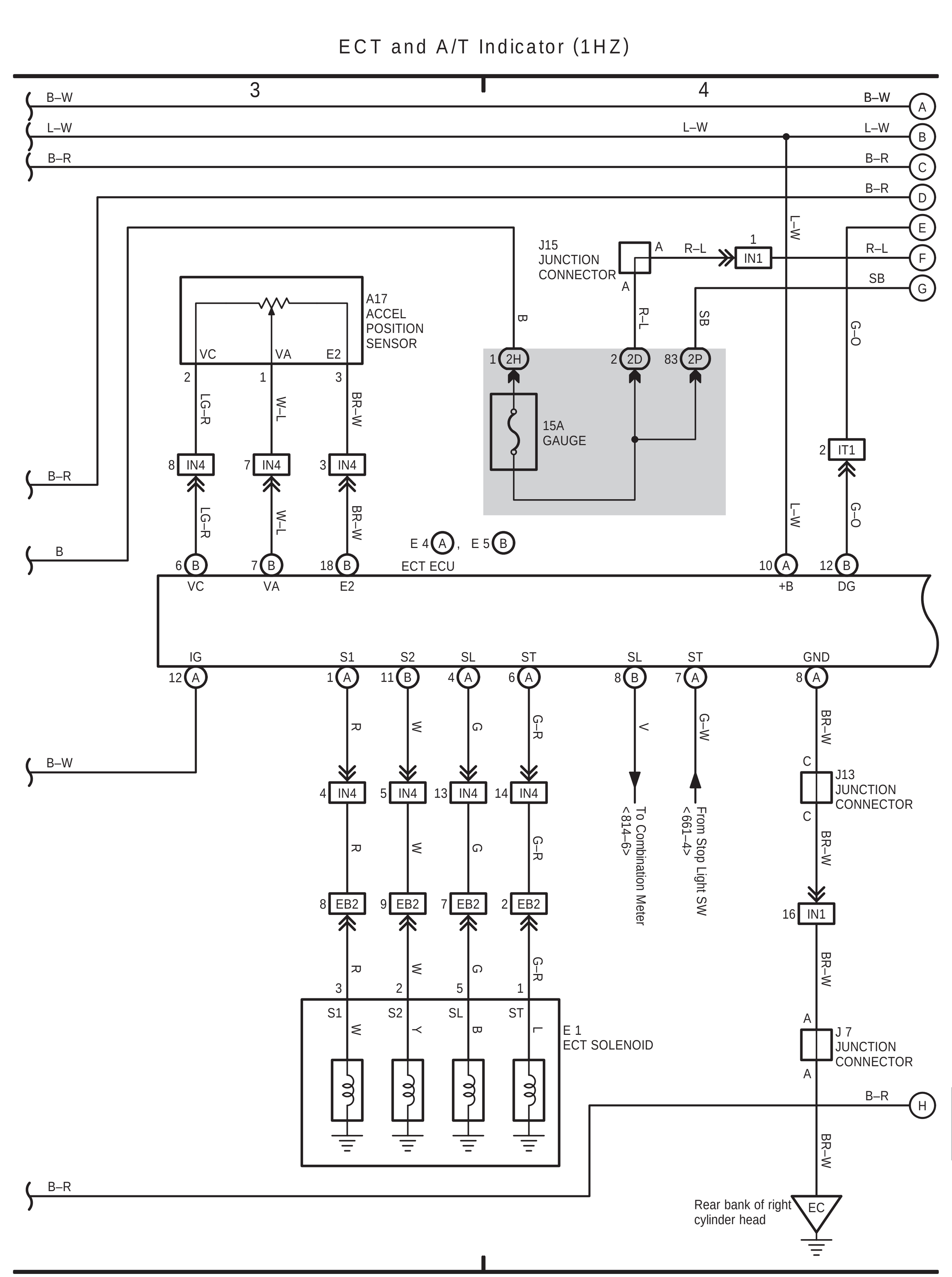
ECT and A/T Indicator (1HZ)
E 1 ECT SOLENOID

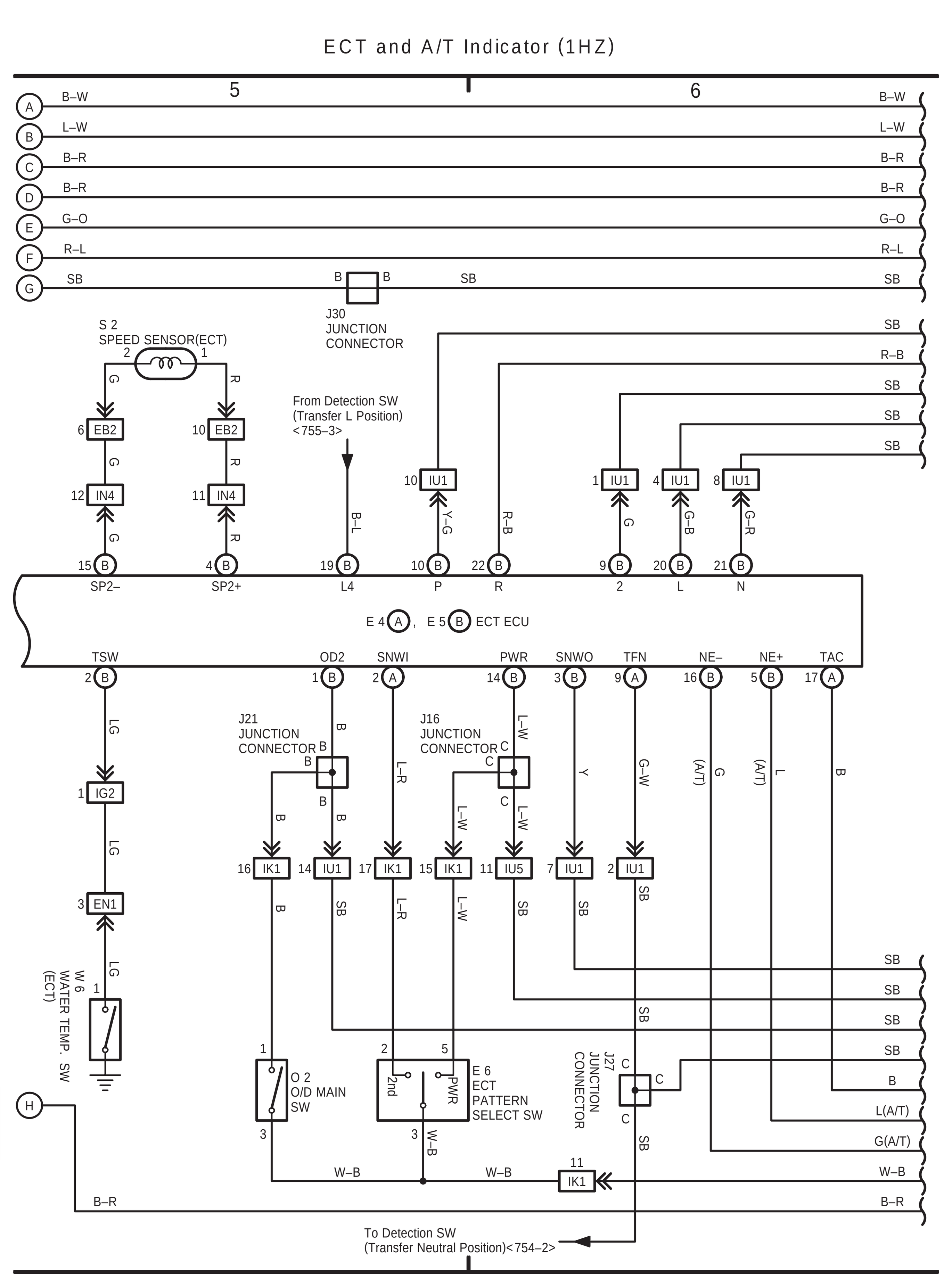
ECT and A/T Indicator (1HZ)

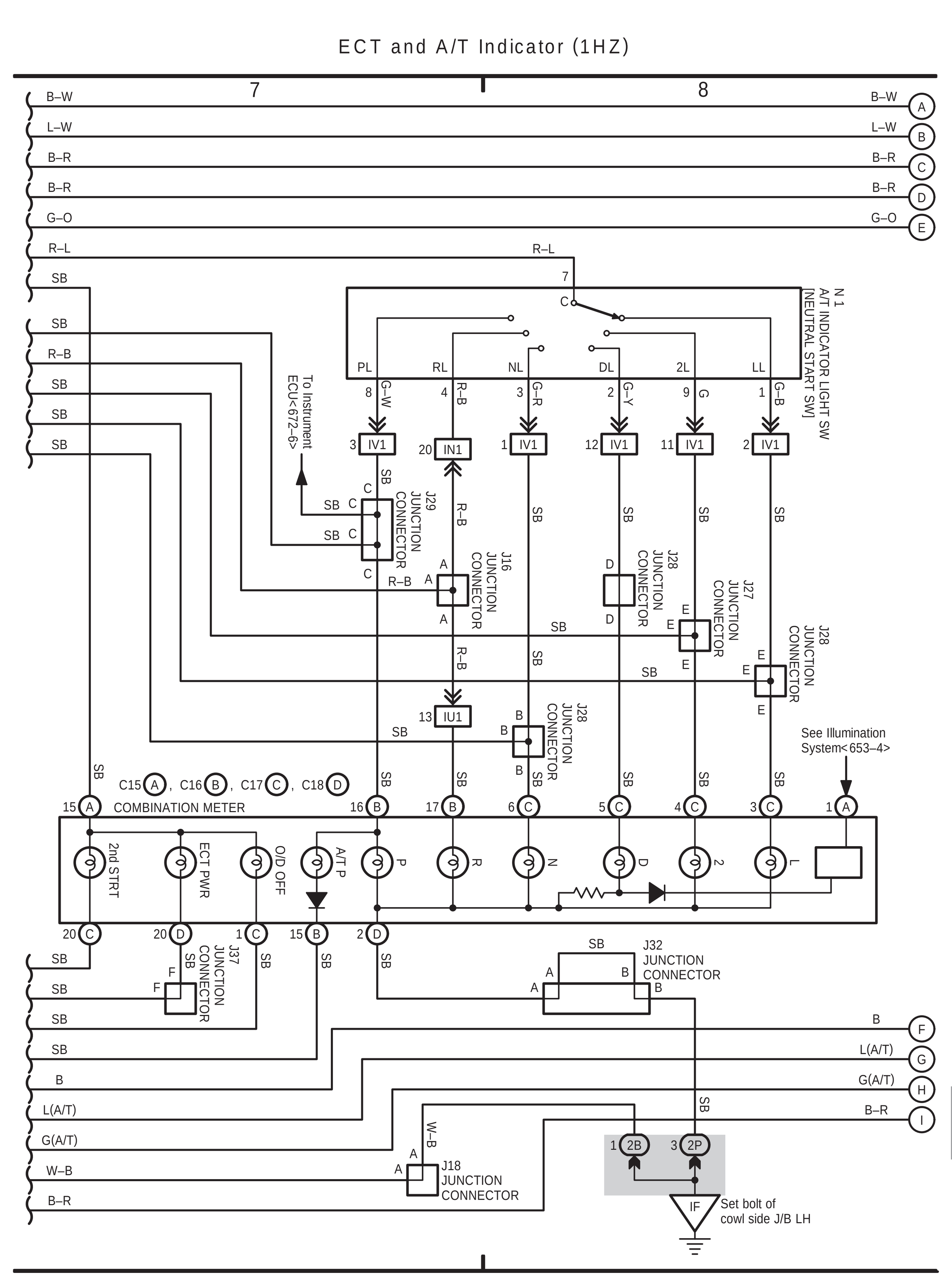
ECT and A/T Indicator (1HZ)
COMBINATION METER

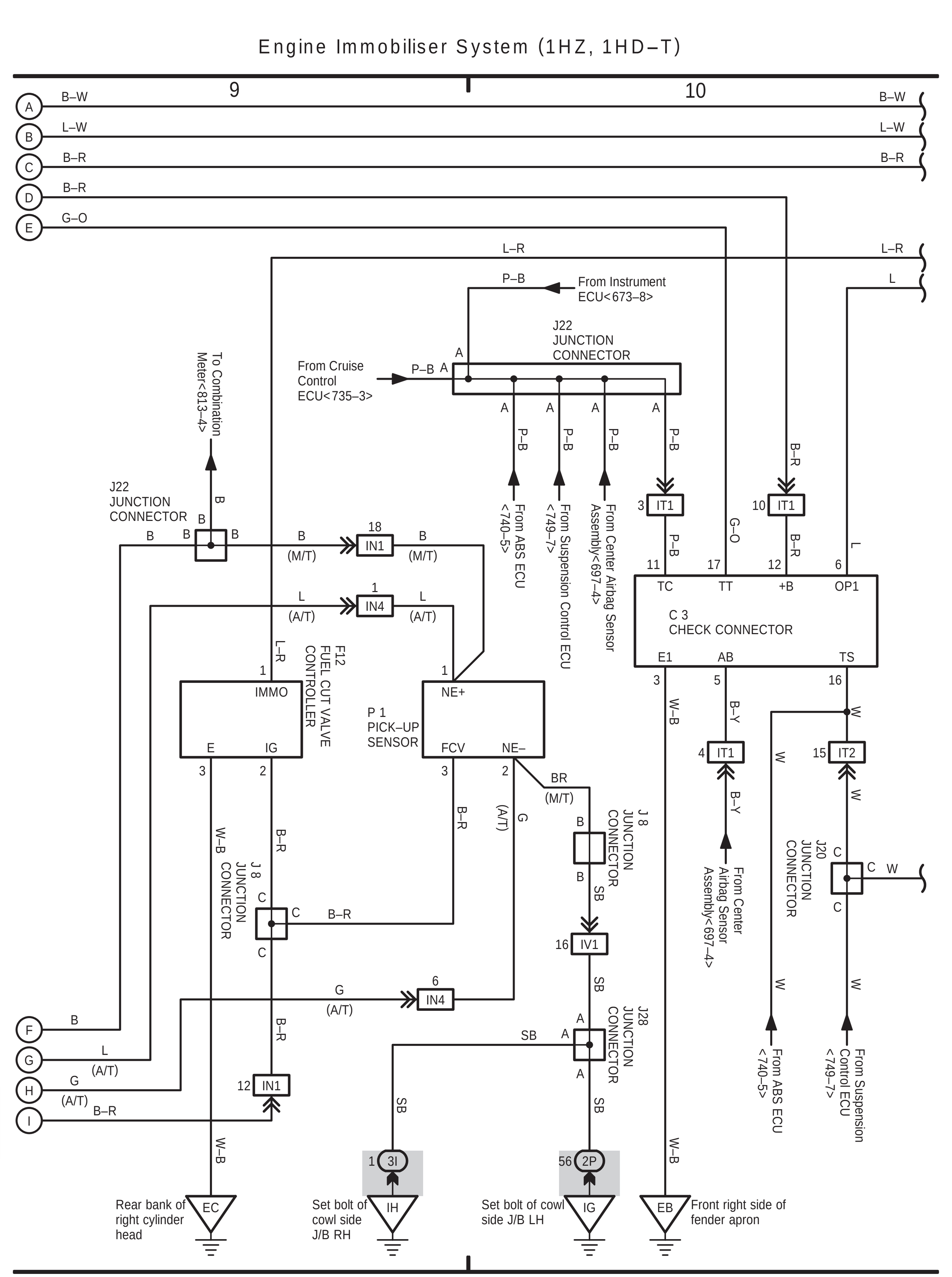
Engine Immobiliser System (1HZ, 1HD−T)
C 3 CHECK CONNECTOR

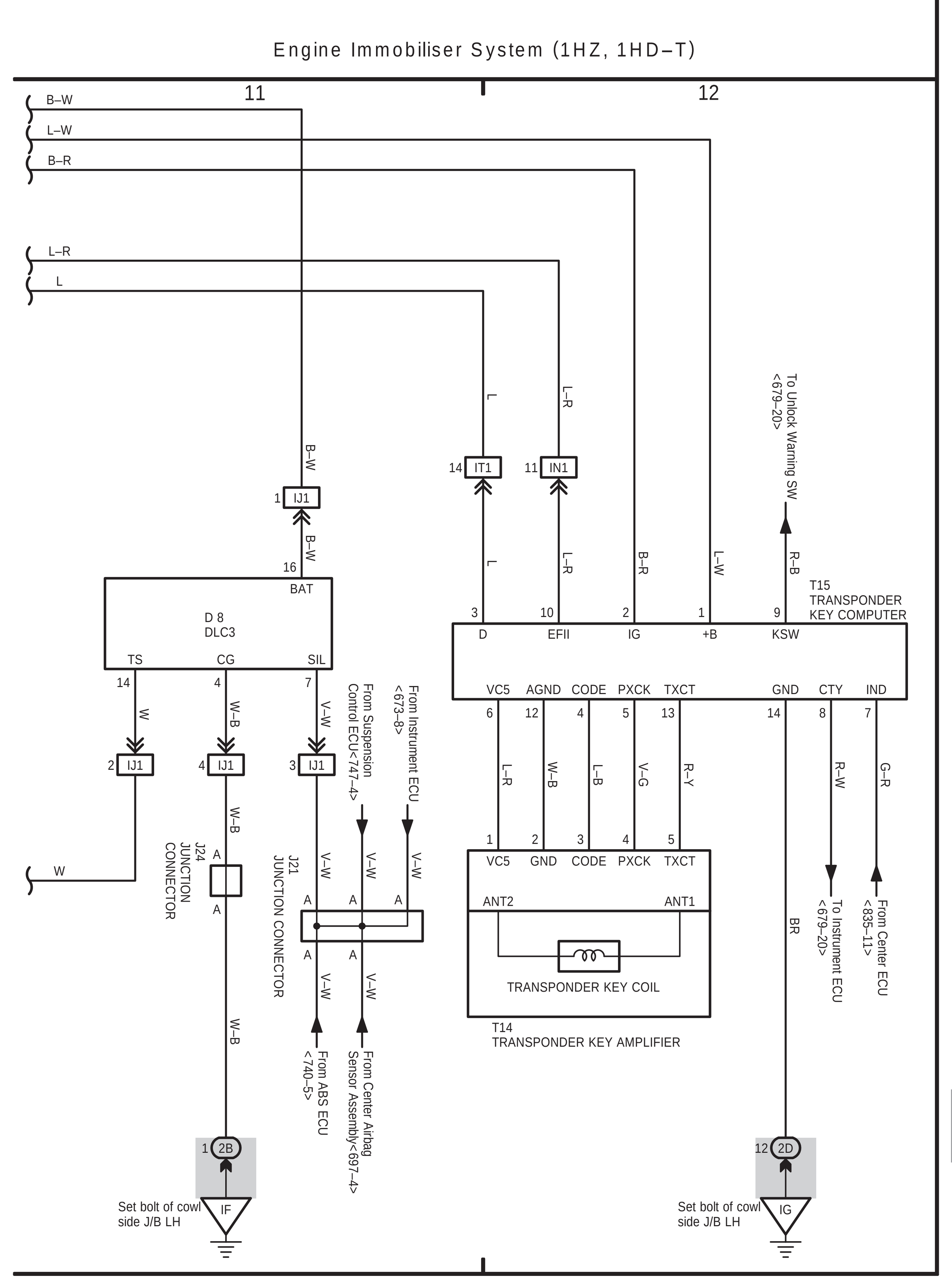
Engine Immobiliser System (1HZ, 1HD−T)
T14 TRANSPONDER KEY AMPLIFIER
TRANSPONDER KEY COIL

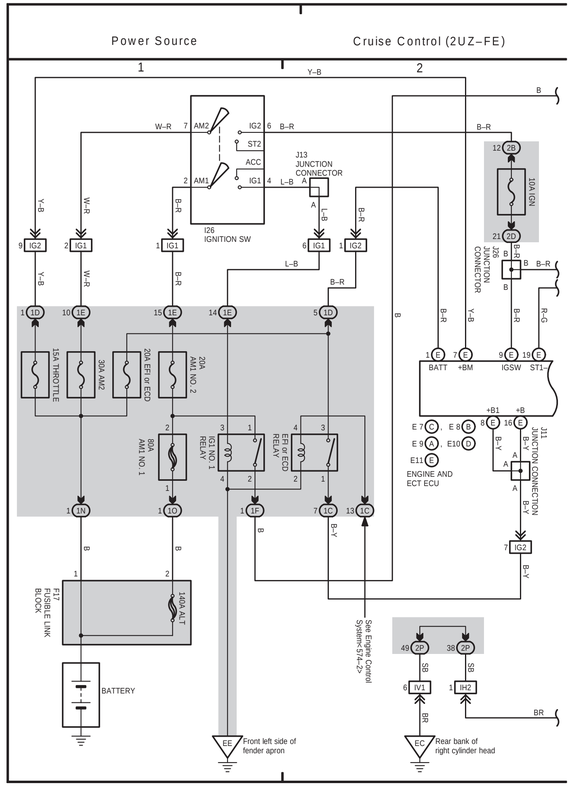

(Cont. next page)

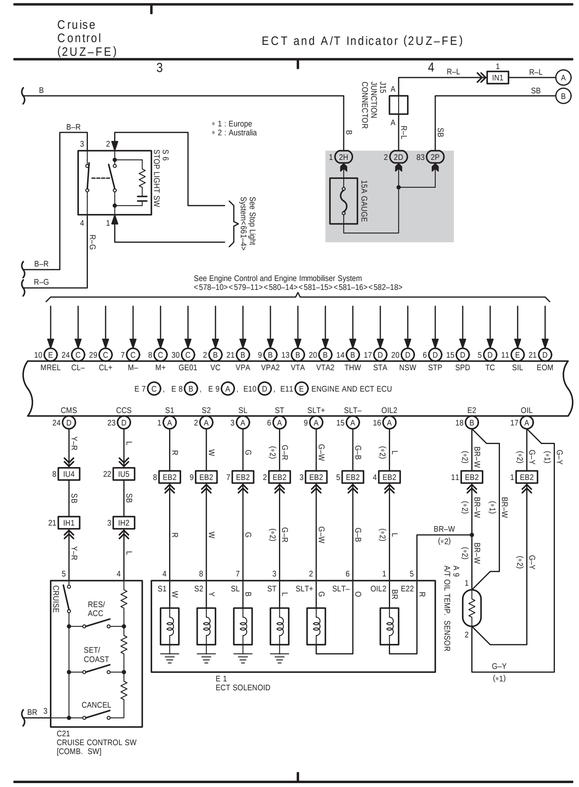

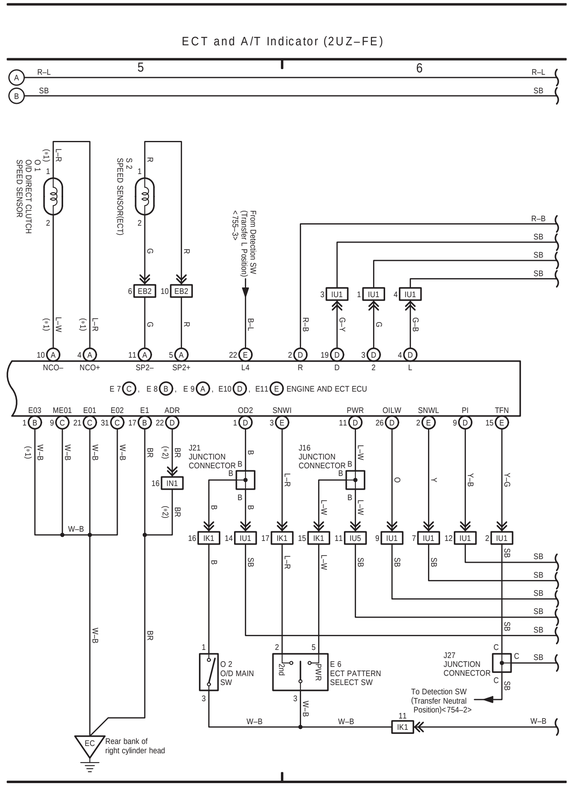

(Cont'd)

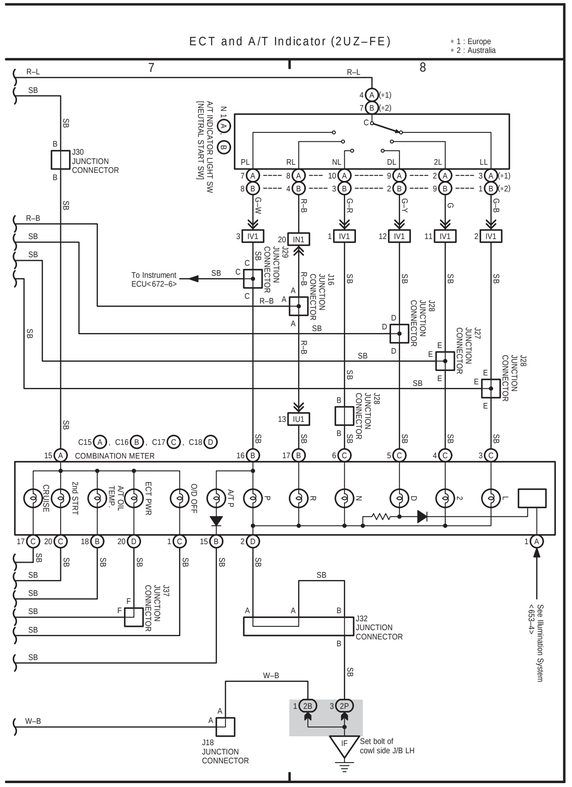

13 LAND CRUISER (RHD) (Cont. next page)

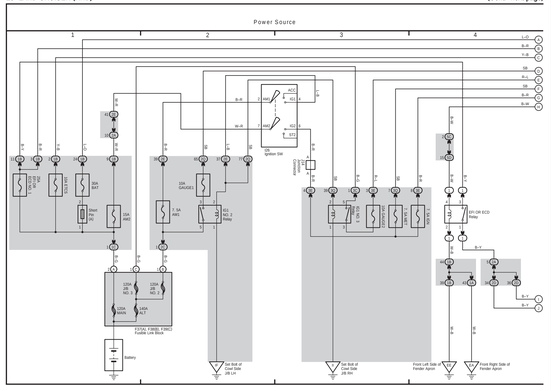

13 LAND CRUISER (RHD) (Cont' d) (Cont. next page)

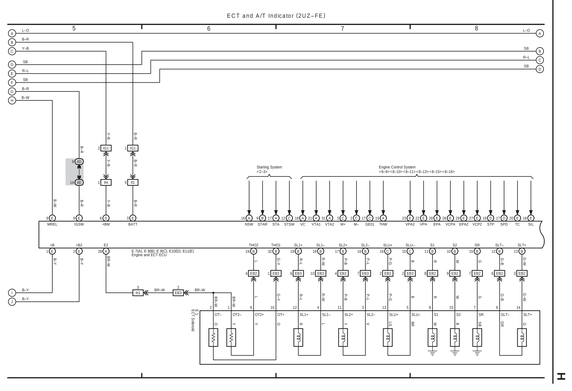

13 LAND CRUISER (RHD) (Cont' d) (Cont. next page)

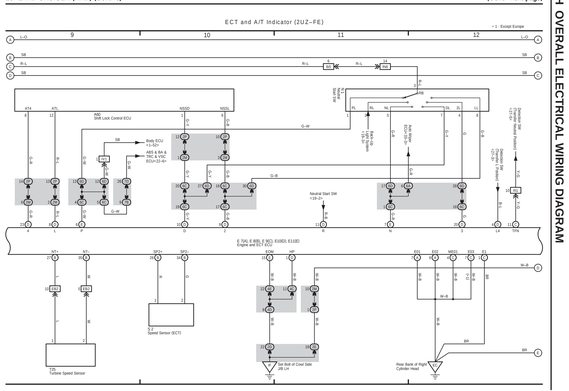

13 LAND CRUISER (RHD) (Cont' d)

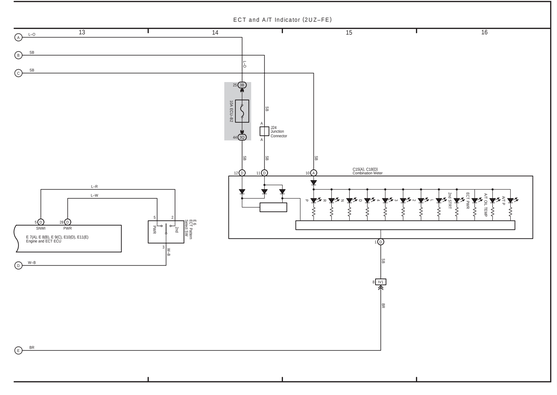

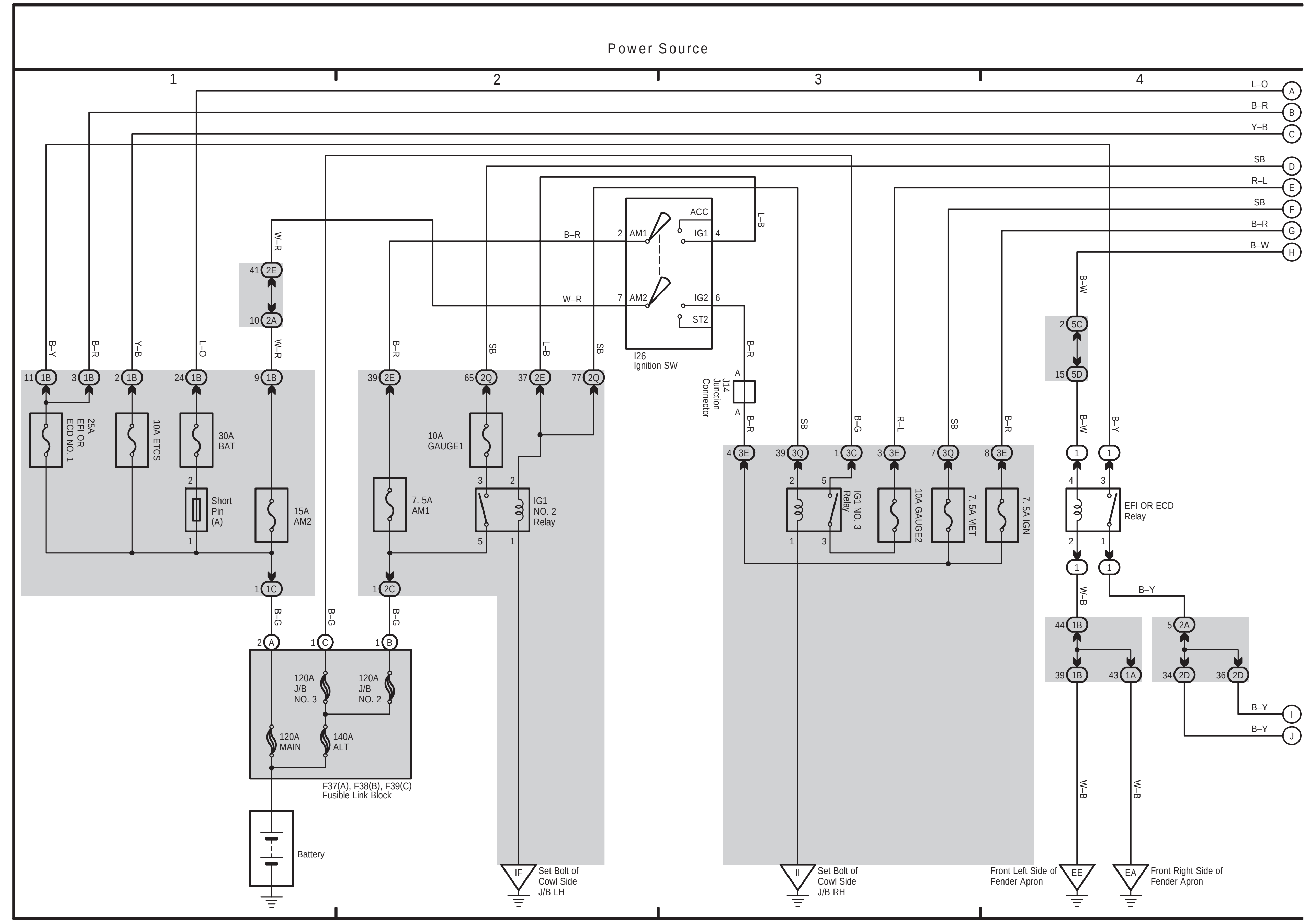
Power Source
Ignition SW
Battery
Fusible Link Block
Set Bolt of Cowl Side J/B LH
Set Bolt of Cowl Side J/B RH
Front Left Side of Fender Apron
Front Right Side of Fender Apron
EFI OR ECD Relay

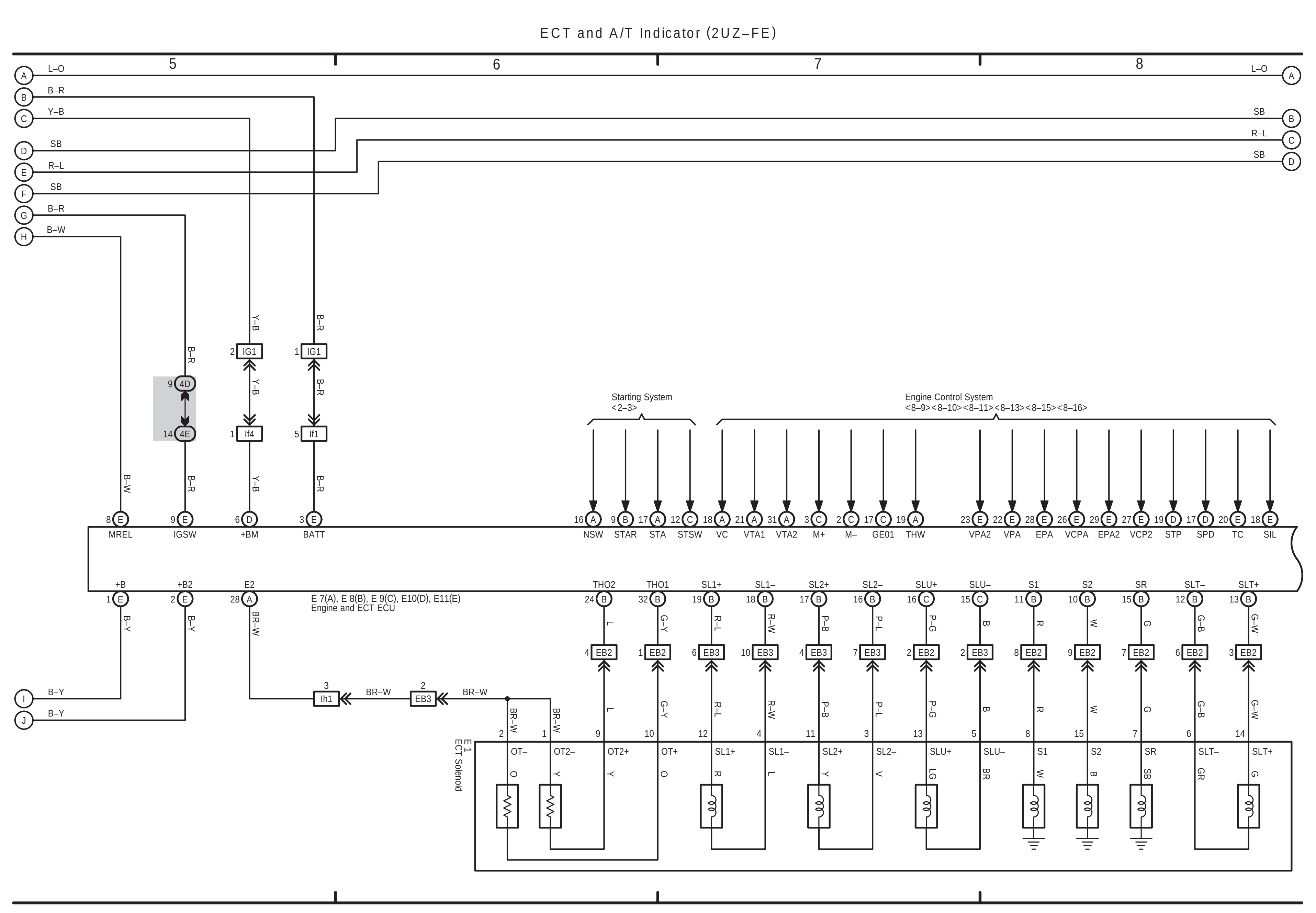
ECT and A/T Indicator (2UZ–FE)
Starting System
Engine Control System
E 7(A), E 8(B), E 9(C), E10(D), E11(E)
Engine and ECT ECU
Solenoid
H

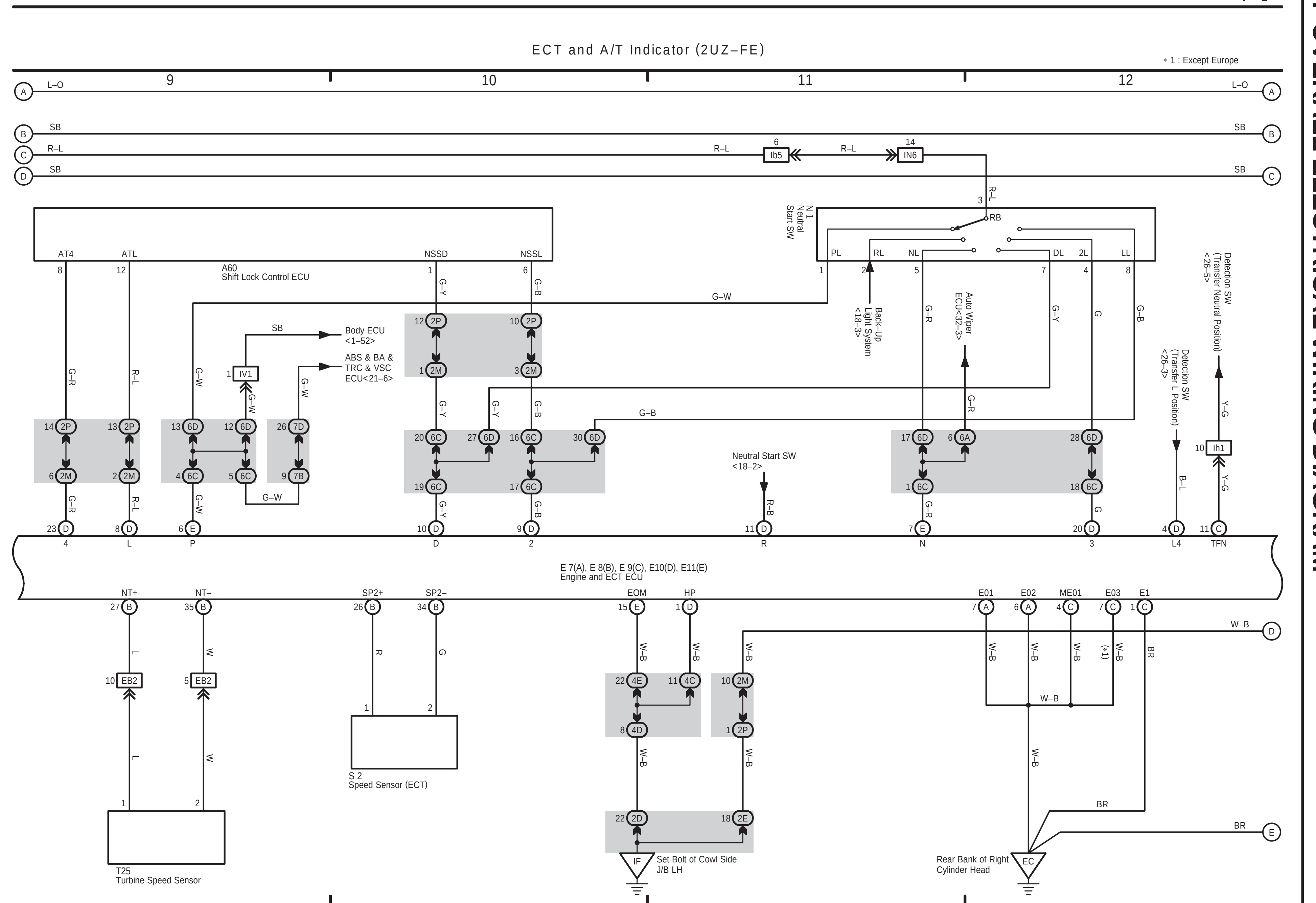
ECT and A/T Indicator (2UZ–FE)
Shift Lock Control ECU
Neutral Start SW
E 7(A), E 8(B), E 9(C), E10(D), E11(E)
Engine and ECT ECU
T25 Turbine Speed Sensor
Speed Sensor (ECT)
Set Bolt of J/B LH
Rear Bank of Right Cylinder Head

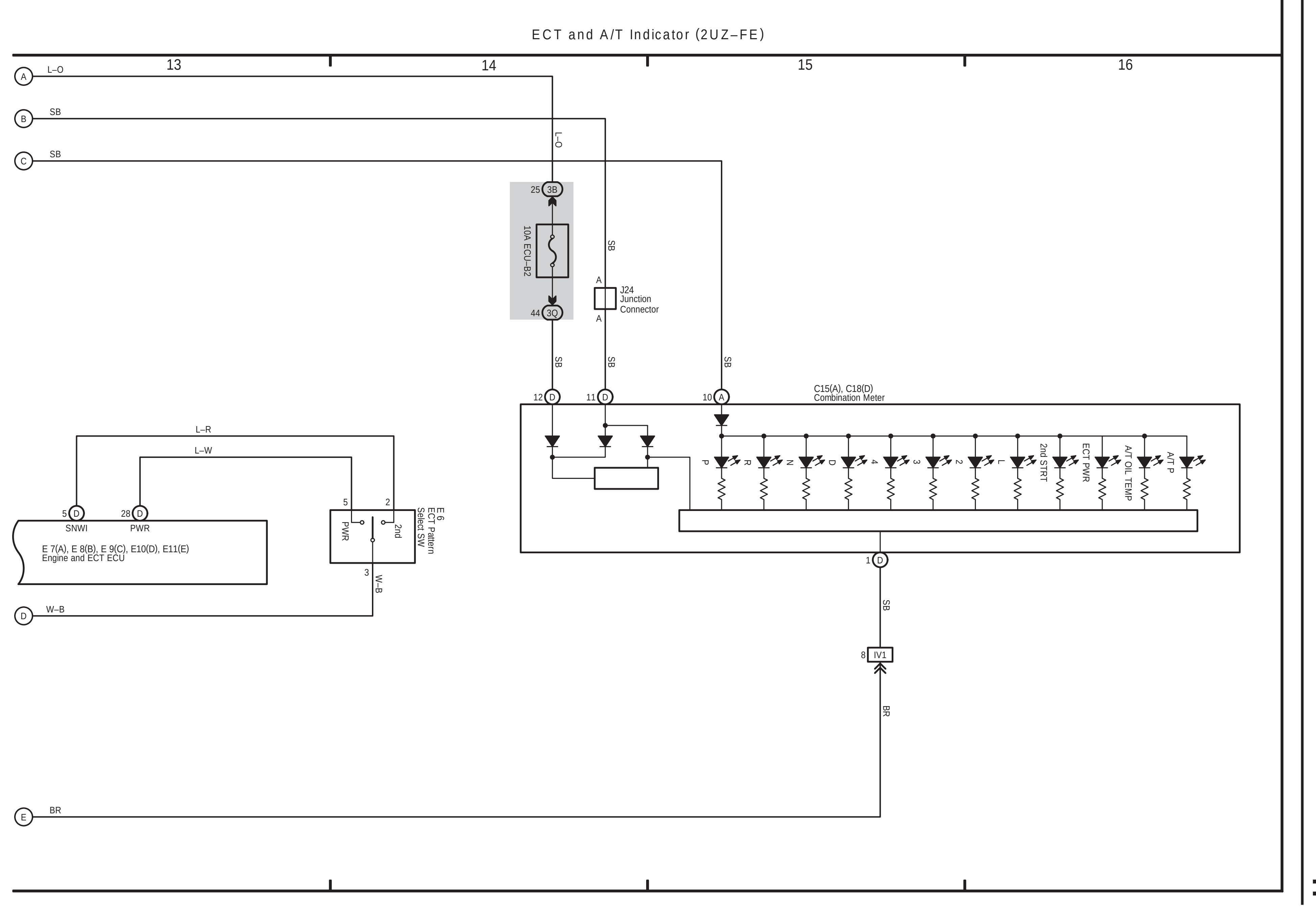
ECT and A/T Indicator (2UZ–FE)
Junction Connector
Combination Meter
E 7(A), E 8(B), E 9(C), E10(D), E11(E)
Engine and ECT ECU
H

(Cont. next page)

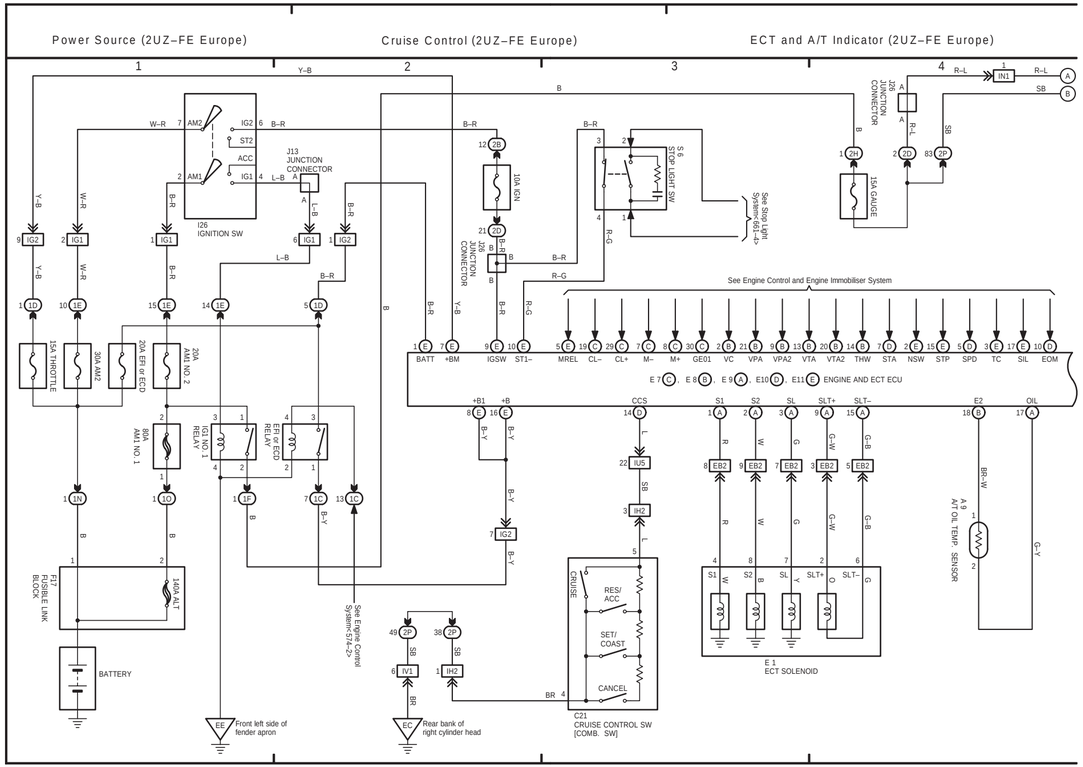

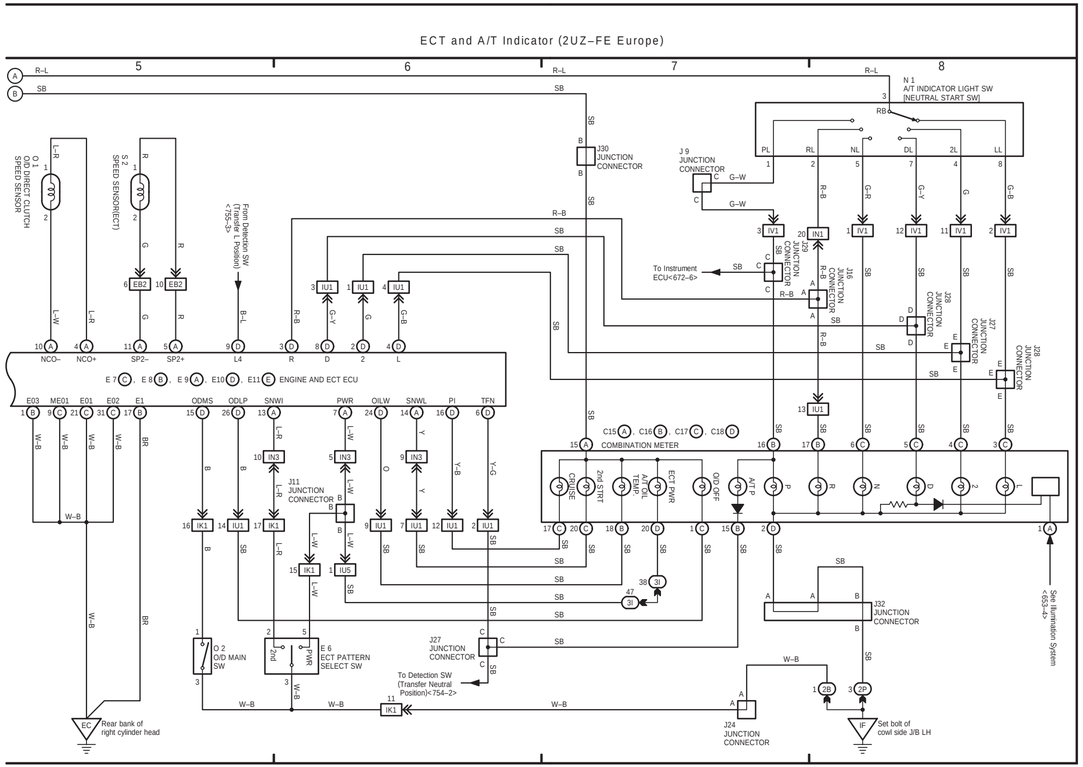

13 LAND CRUISER (RHD) (Cont. next page)

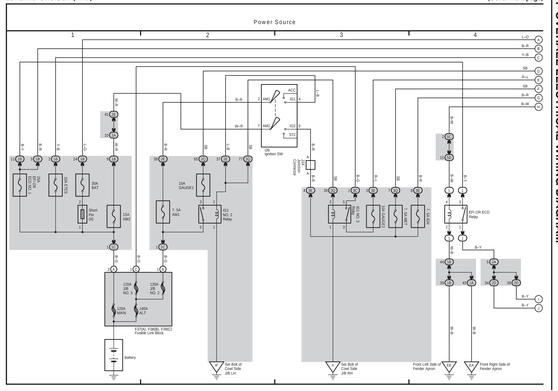

13 LAND CRUISER (RHD) (Cont' d) (Cont. next page)

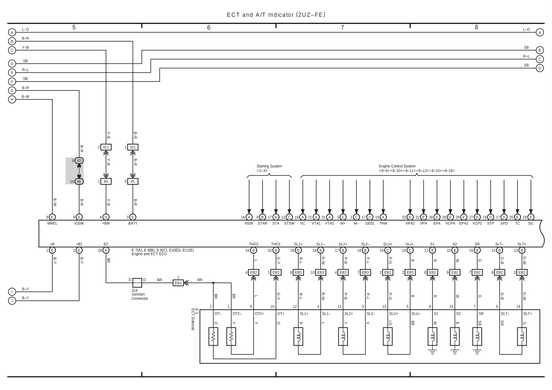

13 LAND CRUISER (RHD) (Cont' d) (Cont. next page)

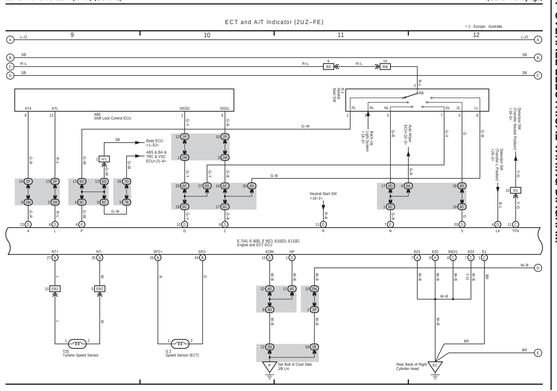

13 LAND CRUISER (RHD) (Cont' d)

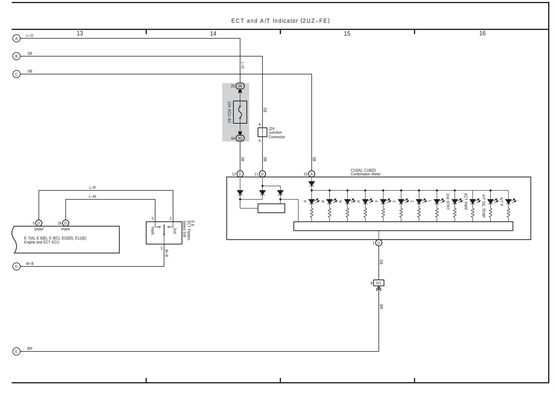

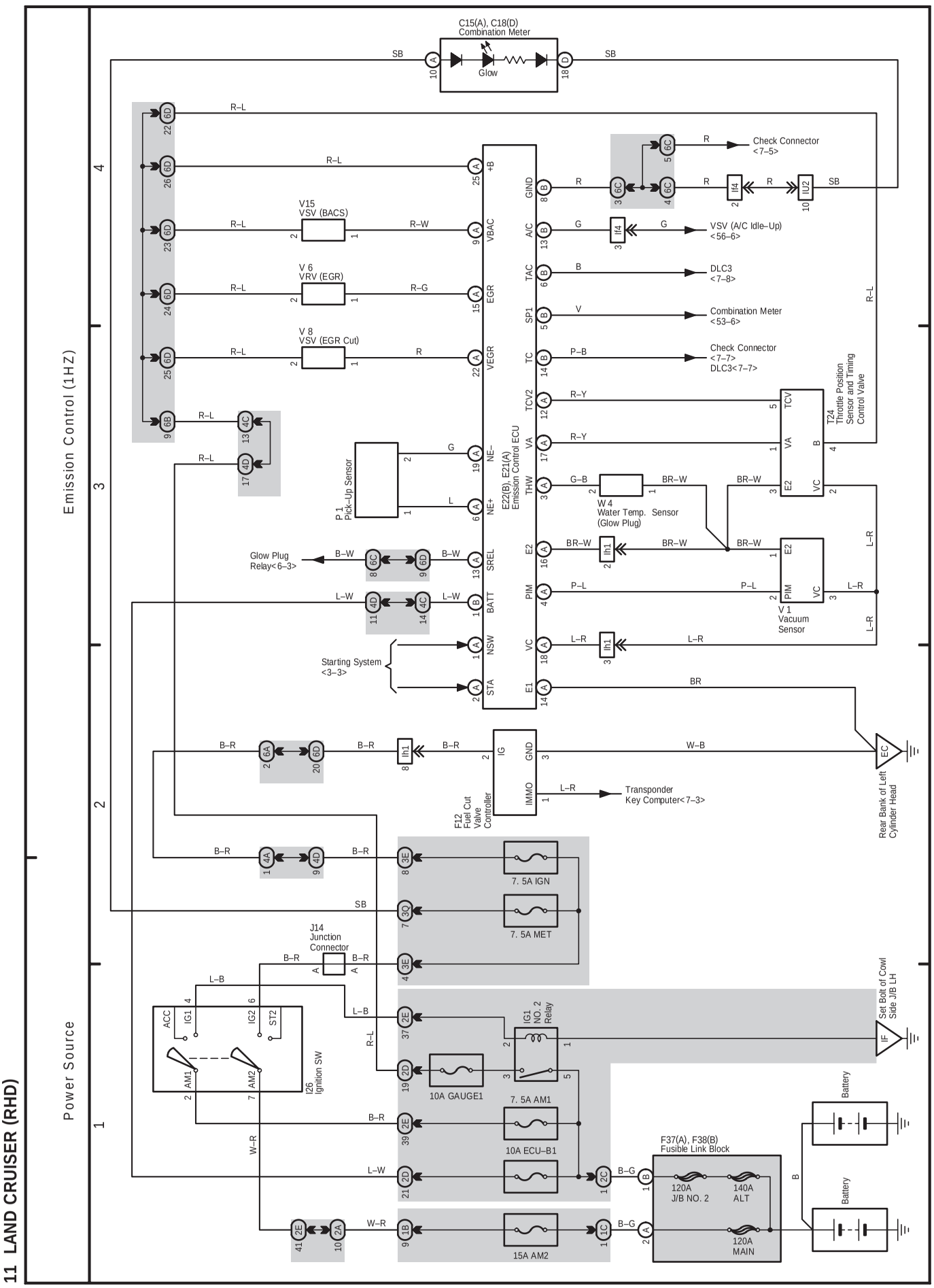
11 LAND CRUISER (RHD)
Power Source
Emission Control (1HZ)
C15(A), C18(D)
Combination Meter
Glow
Check Connector
<7–5>
VSV (A/C Idle–Up)
<56–6>
DLC3
<7–8>
Combination Meter
<53–6>
Check Connector
<7–7>
DLC3<7–7>
V15
VSV (BACS)
V 6
VRV (EGR)
V 8
VSV (EGR Cut)
P 1
Pick–Up Sensor
E22(B), E21(A)
Emission Control ECU
W 4
Water Temp. Sensor
(Glow Plug)
T24
Throttle Position
Sensor and Timing
Control Valve
Glow Plug
Relay<6–3>
V 1
Vacuum
Sensor
Starting System
<3–3>
F12
Fuel Cut
Valve
Controller
Transponder
Key Computer<7–3>
Rear Bank of Left
Cylinder Head
J14
Junction
Connector
I26
Ignition SW
IG1
NO. 2
Relay
7. 5A IGN
7. 5A MET
10A GAUGE1
7. 5A AM1
10A ECU–B1
15A AM2
F37(A), F38(B)
Fusible Link Block
120A
J/B NO. 2
140A
ALT
120A
MAIN
Battery
Set Bolt of Cowl
Side J/B LH

11 LAND CRUISER (RHD)

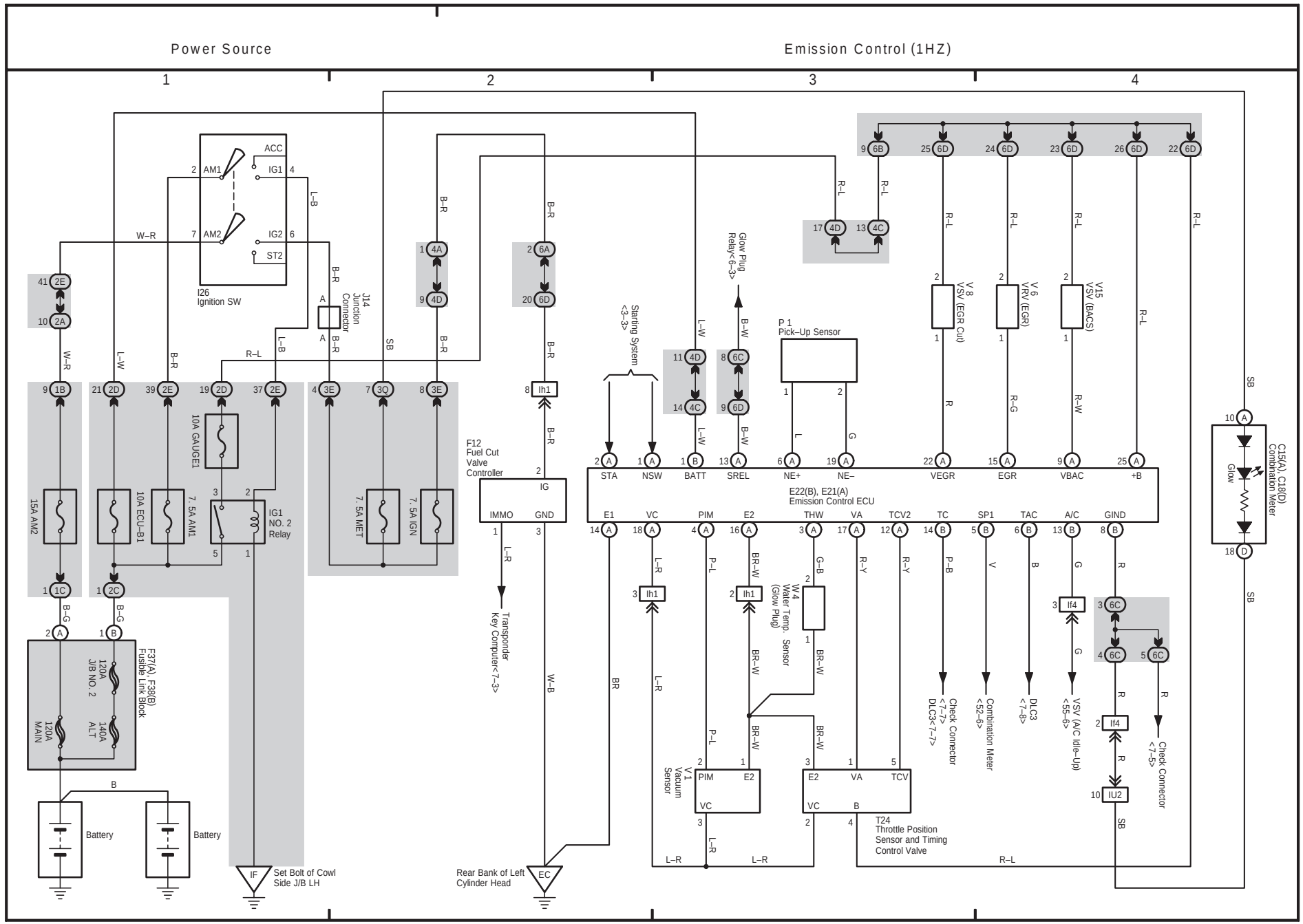

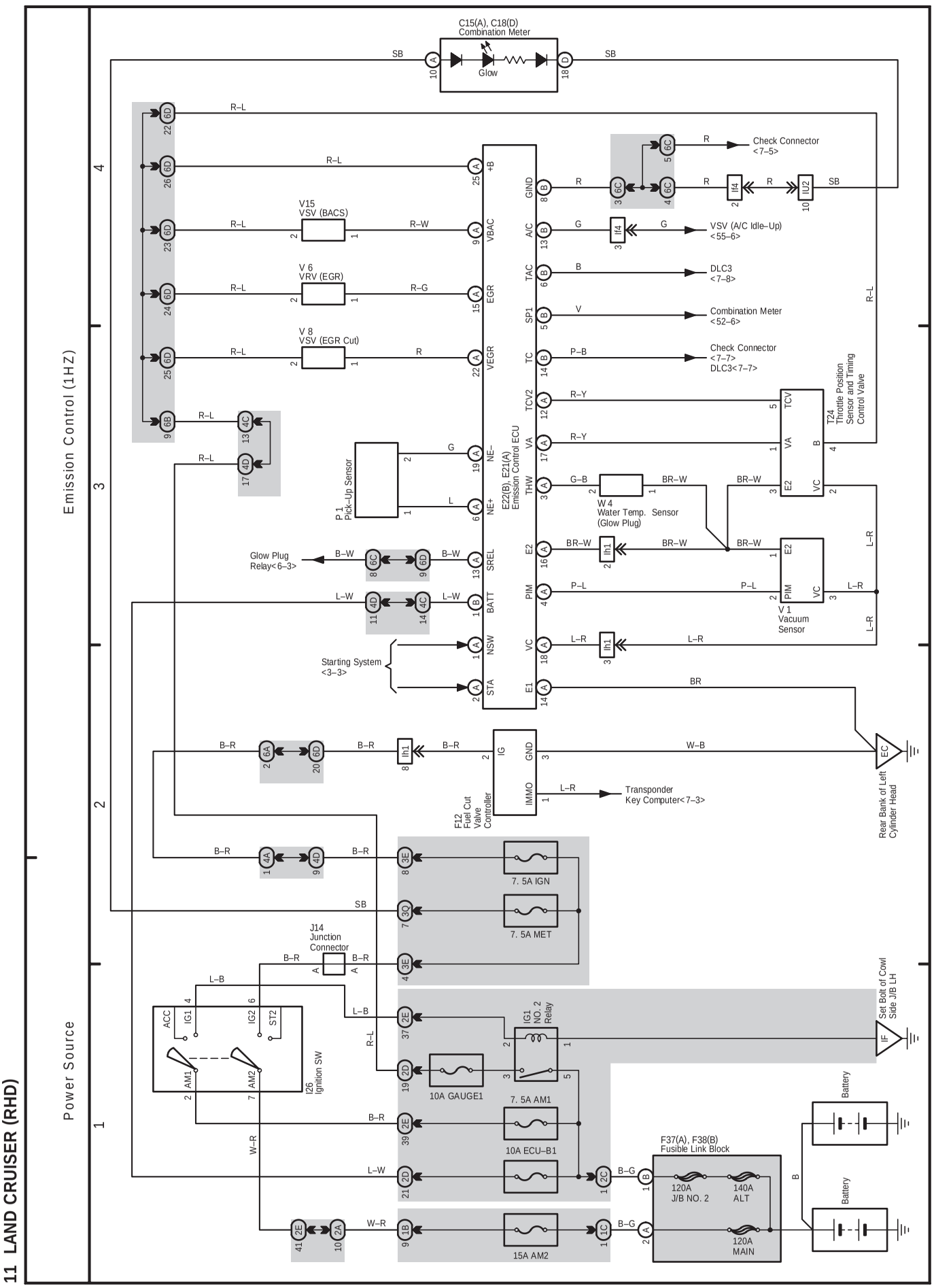
11 LAND CRUISER (RHD)
Power Source
Emission Control (1HZ)
C15(A), C18(D)
Combination Meter
Glow
Check Connector
<7–5>
VSV (A/C Idle–Up)
<55–6>
DLC3
<7–8>
Combination Meter
<52–6>
Check Connector
<7–7>
DLC3<7–7>
V15
VSV (BACS)
V 6
VRV (EGR)
V 8
VSV (EGR Cut)
P 1
Pick–Up Sensor
W 4
Water Temp. Sensor
(Glow Plug)
T24
Throttle Position
Sensor and Timing
Control Valve
V 1
Vacuum
Sensor
Glow Plug
Relay<6–3>
Starting System
<3–3>
E22(B), E21(A)
Emission Control ECU
F12
Fuel Cut
Valve
Controller
Transponder
Key Computer<7–3>
Rear Bank of Left
Cylinder Head
J14
Junction
Connector
I26
Ignition SW
7. 5A IGN
7. 5A MET
10A GAUGE1
7. 5A AM1
10A ECU–B1
15A AM2
IG1
NO. 2
Relay
F37(A), F38(B)
Fusible Link Block
120A
J/B NO. 2
140A
ALT
120A
MAIN
Battery
Battery
Set Bolt of Cowl
Side J/B LH

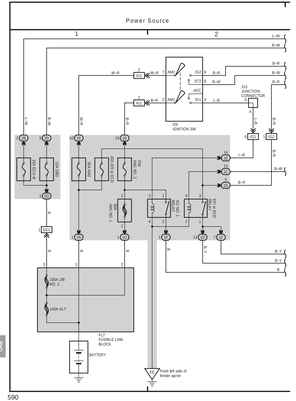
Power Source
1
2
IG2 NO.1
ACC
IGN
ST1
ST2
ACC
IG1
IG2
ST1
ST2
IGN
IGN IGNITION SW
J21 JUNCTION CONNECTOR
J22 JUNCTION CONNECTOR
J23 JUNCTION CONNECTOR
J24 JUNCTION CONNECTOR
J25 JUNCTION CONNECTOR
J26 JUNCTION CONNECTOR
J27 JUNCTION CONNECTOR
J28 JUNCTION CONNECTOR
J29 JUNCTION CONNECTOR
J30 JUNCTION CONNECTOR
J31 JUNCTION CONNECTOR
J32 JUNCTION CONNECTOR
J33 JUNCTION CONNECTOR

(Cont. next page)

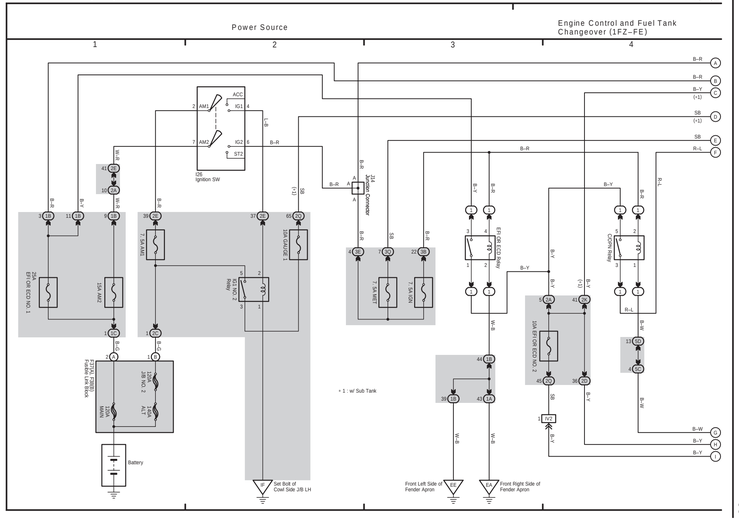

(Cont. next page)

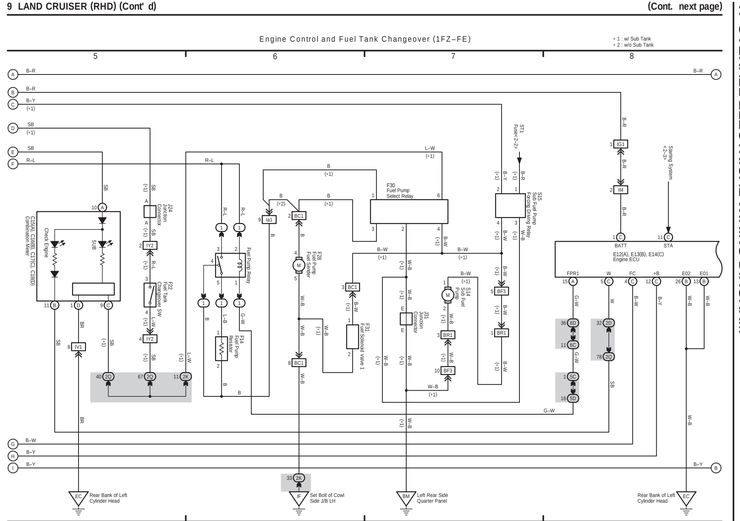

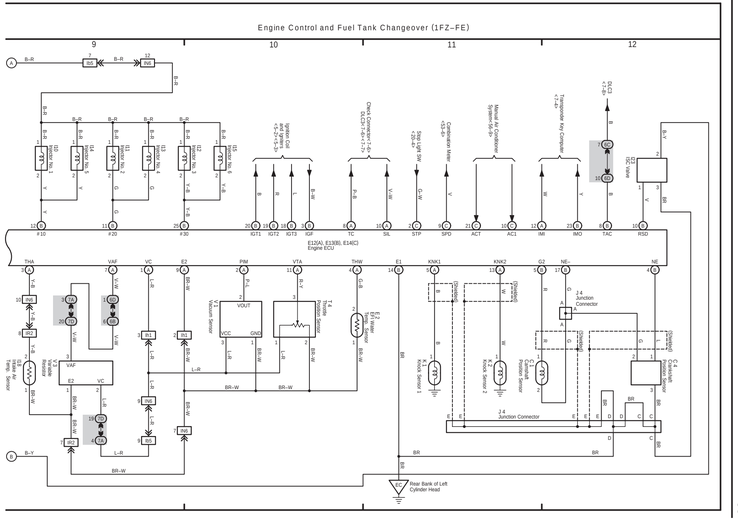

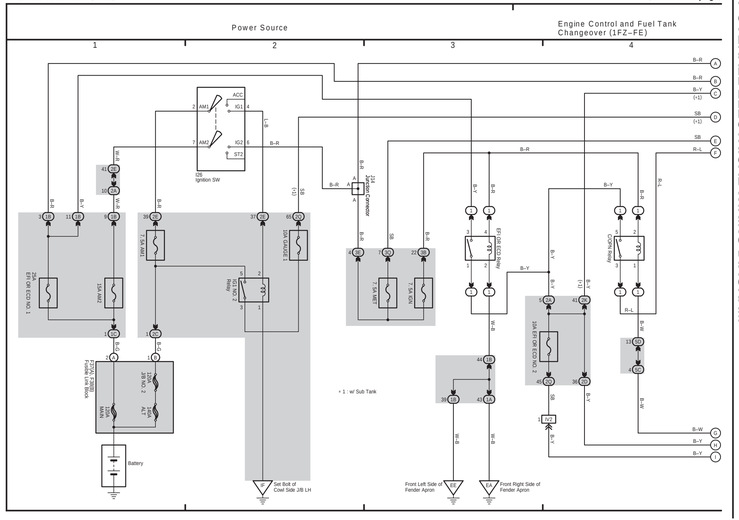
Power Source
Engine Control and Fuel Tank Changeover (1FZ–FE)
1
2
3
4
ACC
IG1
AM1
AM2
IG2
ST2
IG ignition SW
J/C Connector
Battery
Set Bolt of Cowl Side J/B LH
Front Left Side of Fender Apron
Front Right Side of Fender Apron
* 1 : w/ Sub Tank

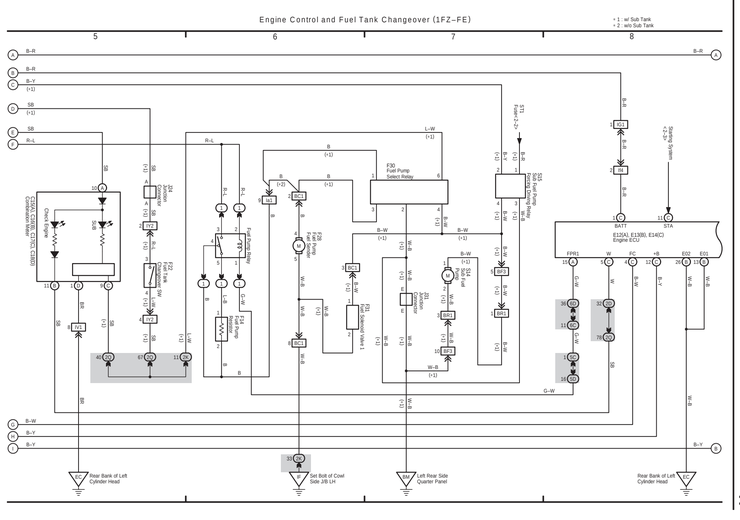
Engine Control and Fuel Tank Changeover (1FZ–FE)
5
6
7
8
* 1 : w/ Sub Tank
* 2 : w/o Sub Tank
F30 Fuel Pump Select Relay
Rear Bank of Left Cylinder Head
Set Bolt of Cowl Side J/B LH
Left Rear Side Quarter Panel

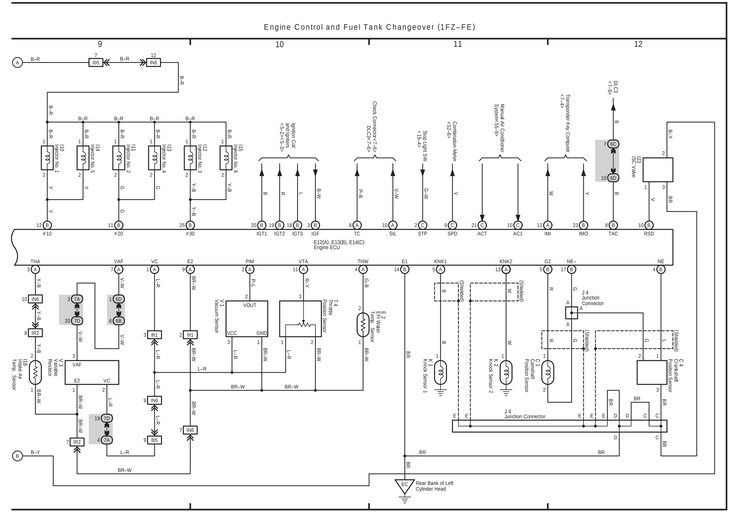
Engine Control and Fuel Tank Changeover (1FZ–FE)
9
10
11
12
E120(A), E130(B), E140(C) Engine ECU
J4 Junction Connector
Rear Bank of Left Cylinder Head

LAND CRUISER (RHD)

(Cont. next page)

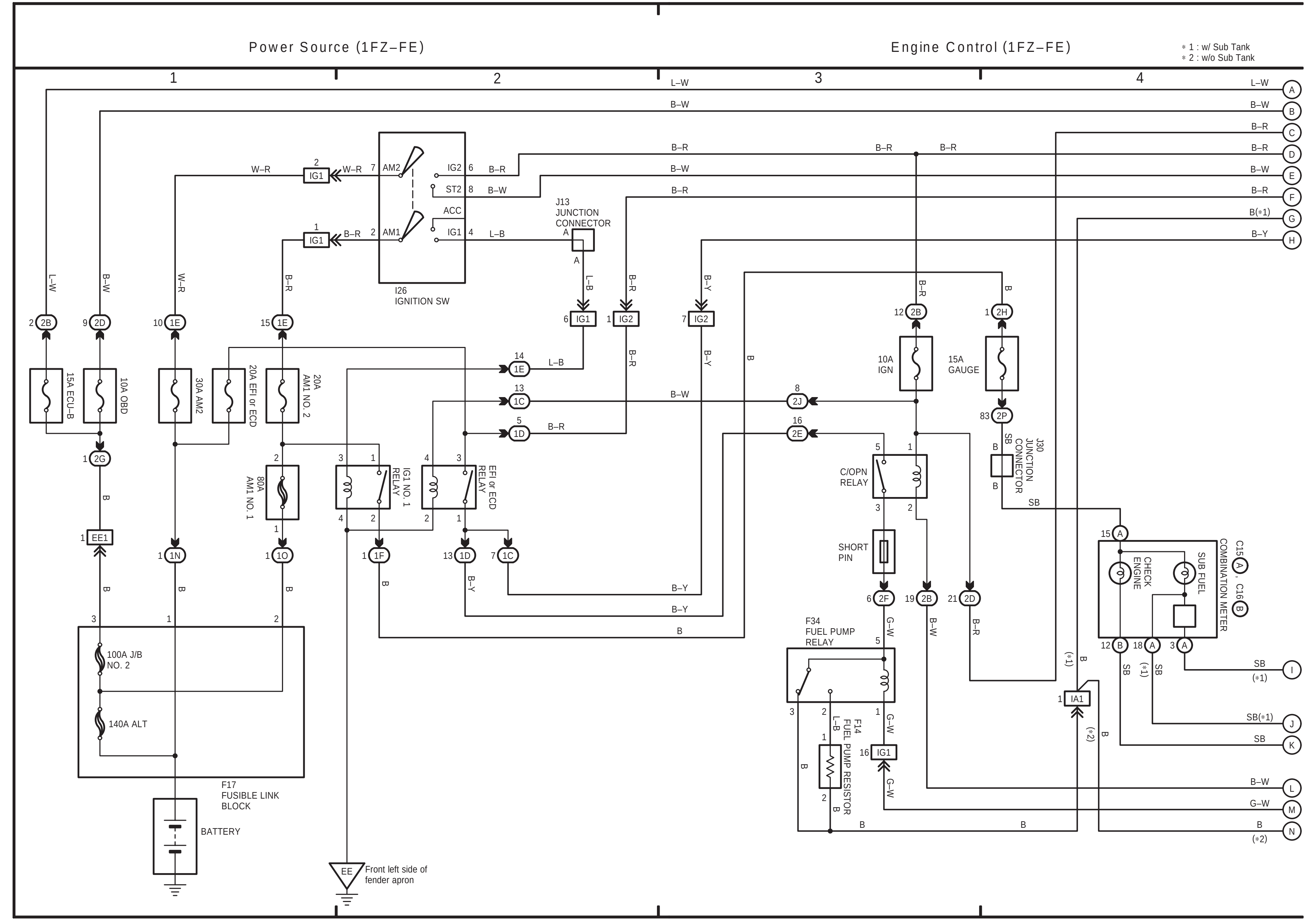

LAND CRUISER (RHD) (Cont' d)

(Cont. next page)

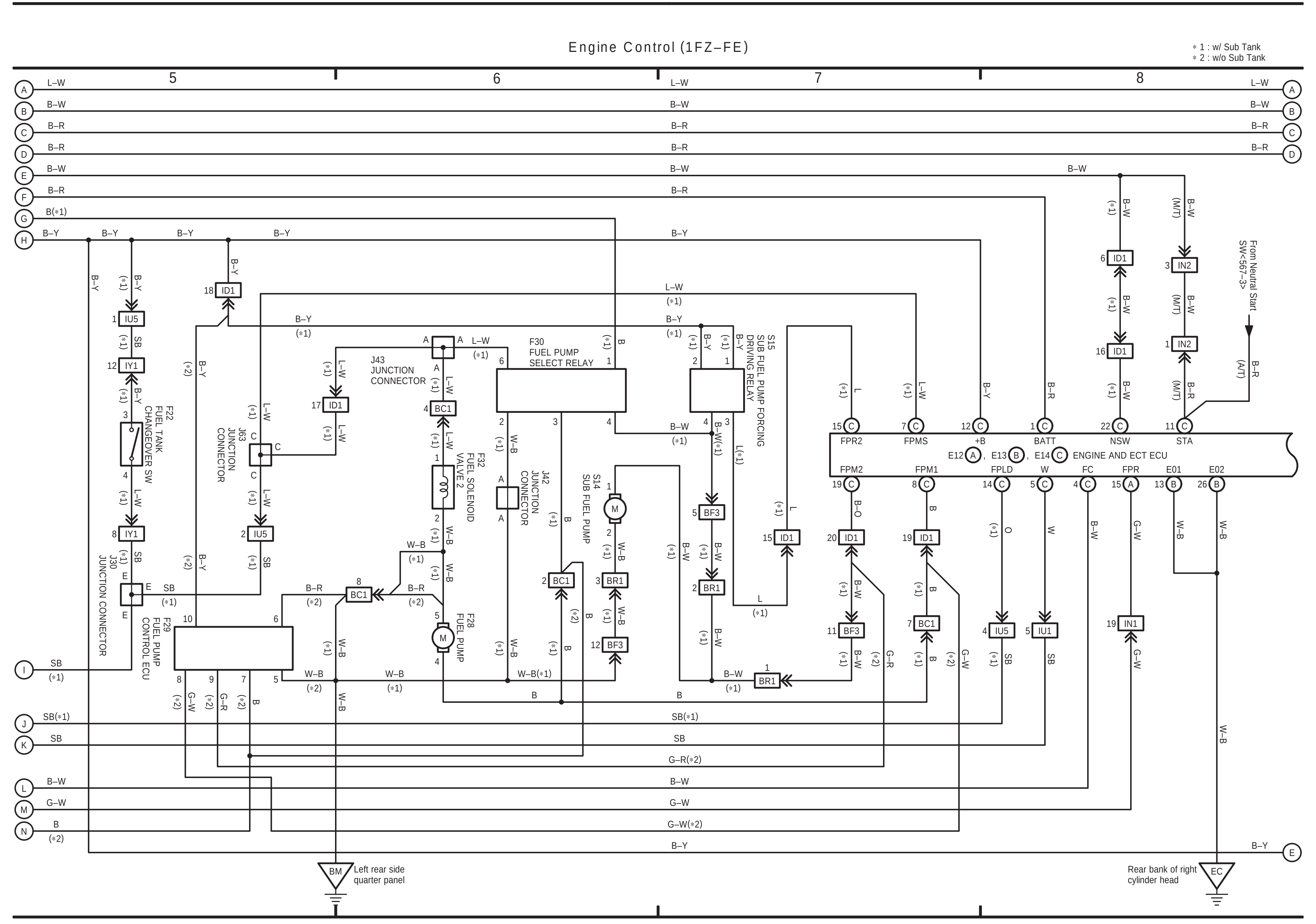

LAND CRUISER (RHD) (Cont' d)

(Cont. next page)

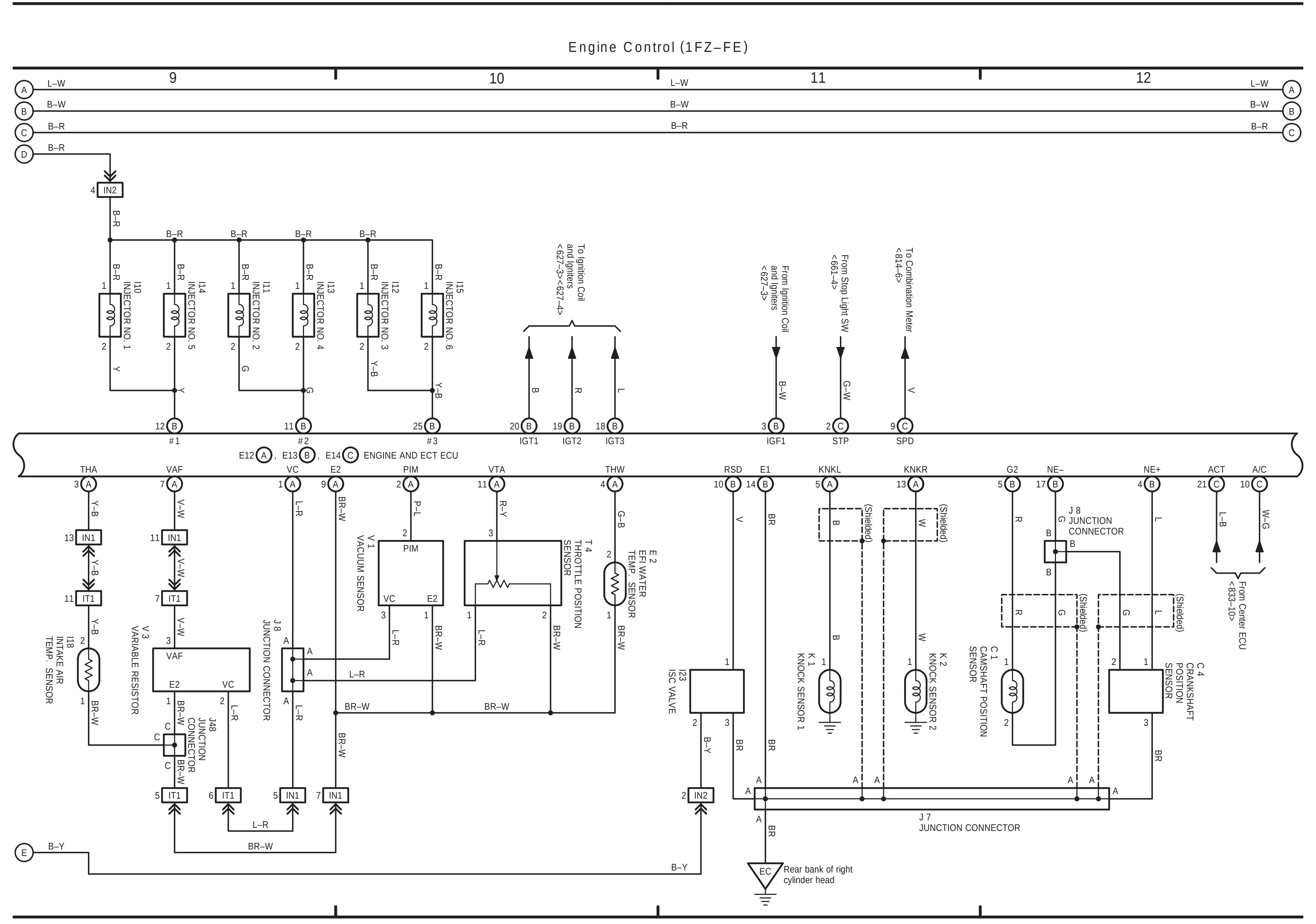

LAND CRUISER (RHD) (Cont' d)

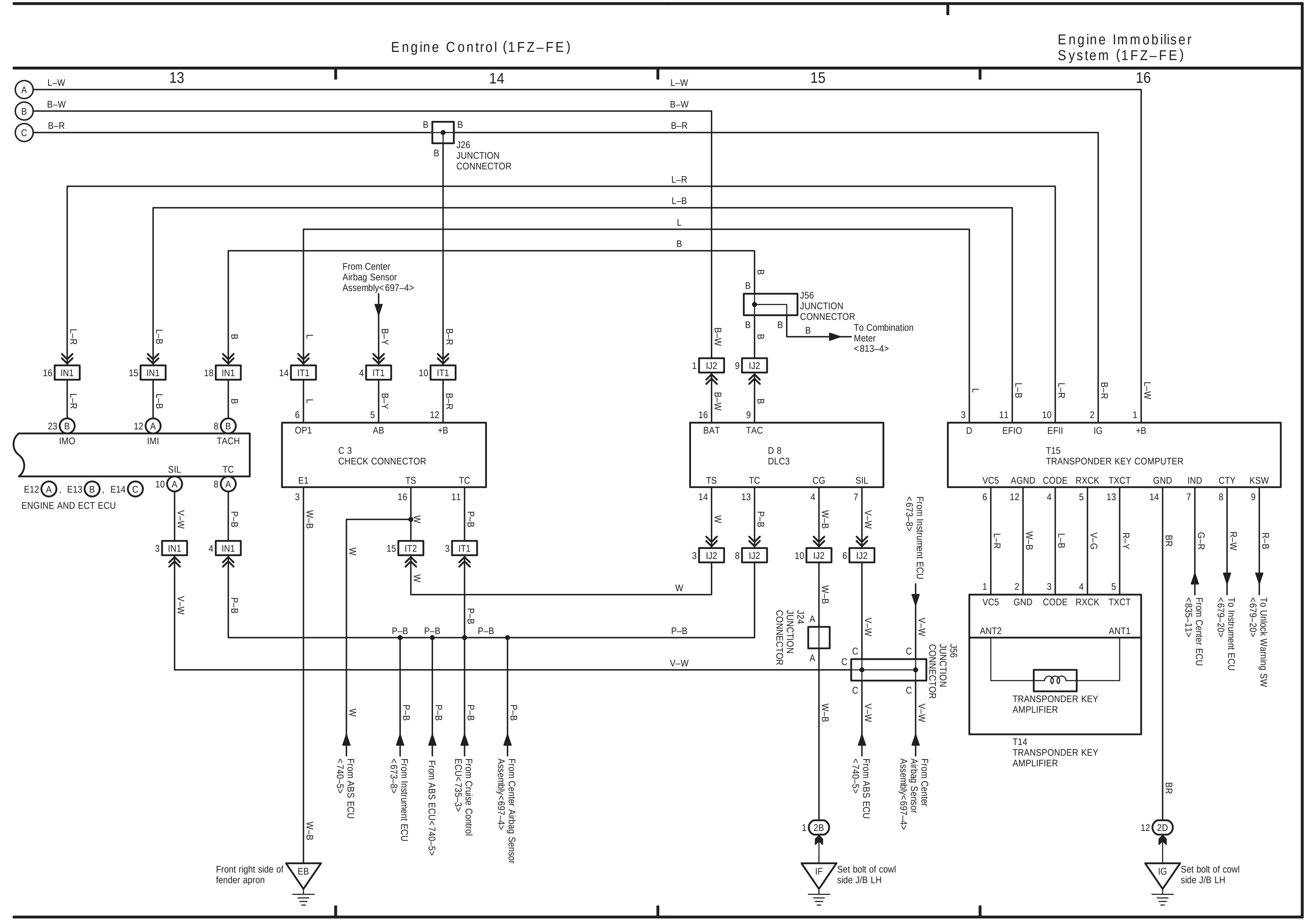

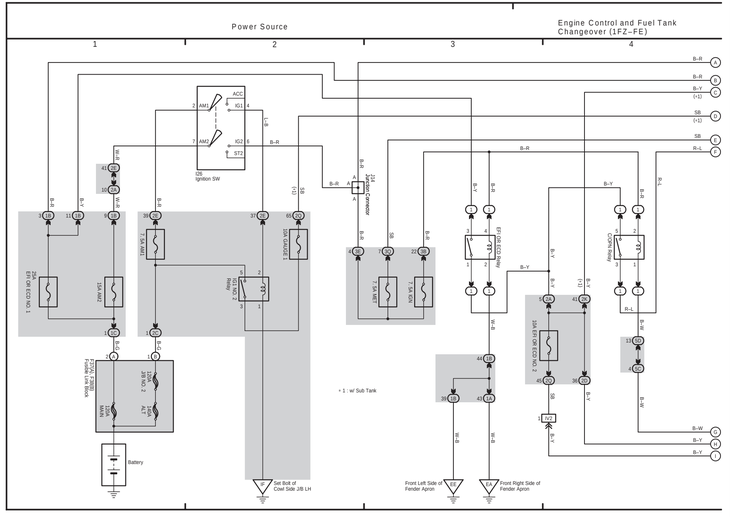
Power Source
Engine Control and Fuel Tank Changeover (1FZ–FE)
1
2
3
4
ACC
IG1
IG2
ST2
AM1
AM2
IG ignition SW
ST1 ST Connector
B–R
B–Y
B–W
R–L
SB
(–1)
(+1)
Battery
Set Bolt of Cowl Side J/B LH
Front Left Side of Fender Apron
Front Right Side of Fender Apron
+ 1 : w/ Sub Tank

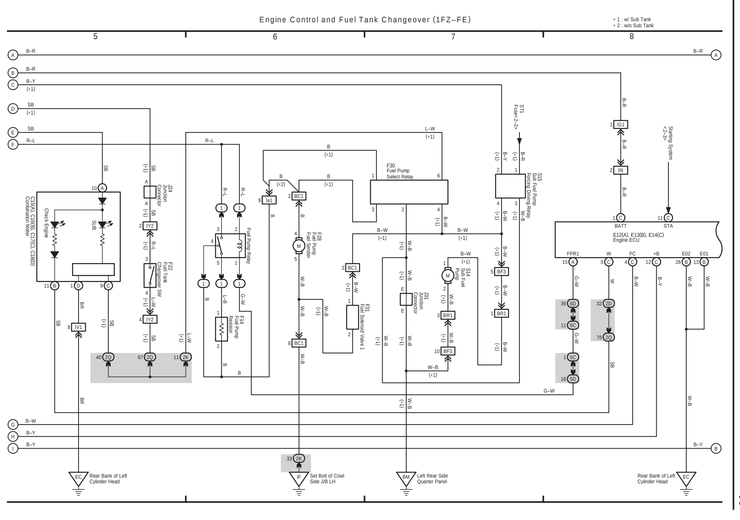
Engine Control and Fuel Tank Changeover (1FZ–FE)
5
6
7
8
+ 1 : w/ Sub Tank
+ 2 : w/o Sub Tank
B–R
B–Y
B–W
R–L
SB
(–1)
(+1)
Rear Bank of Left Cylinder Head
Set Bolt of Cowl Side J/B LH
Left Rear Side Quarter Panel

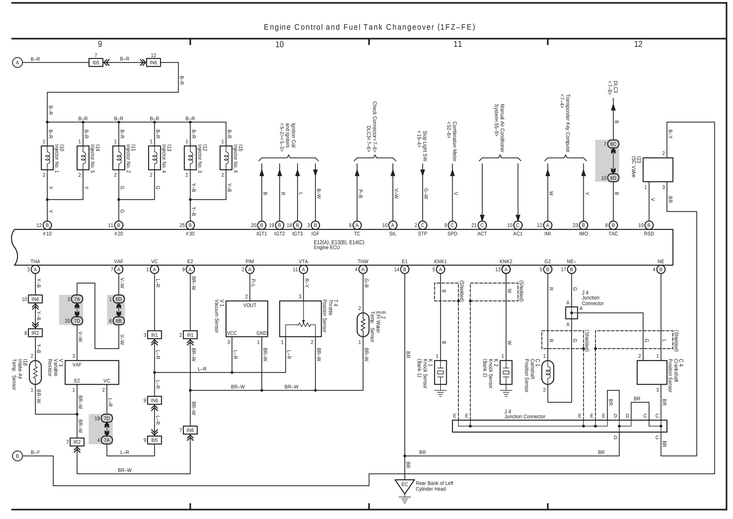
Engine Control and Fuel Tank Changeover (1FZ–FE)
9
10
11
12
B–R
B–Y
B–W
R–L
Rear Bank of Left Cylinder Head-Jab

Power Source

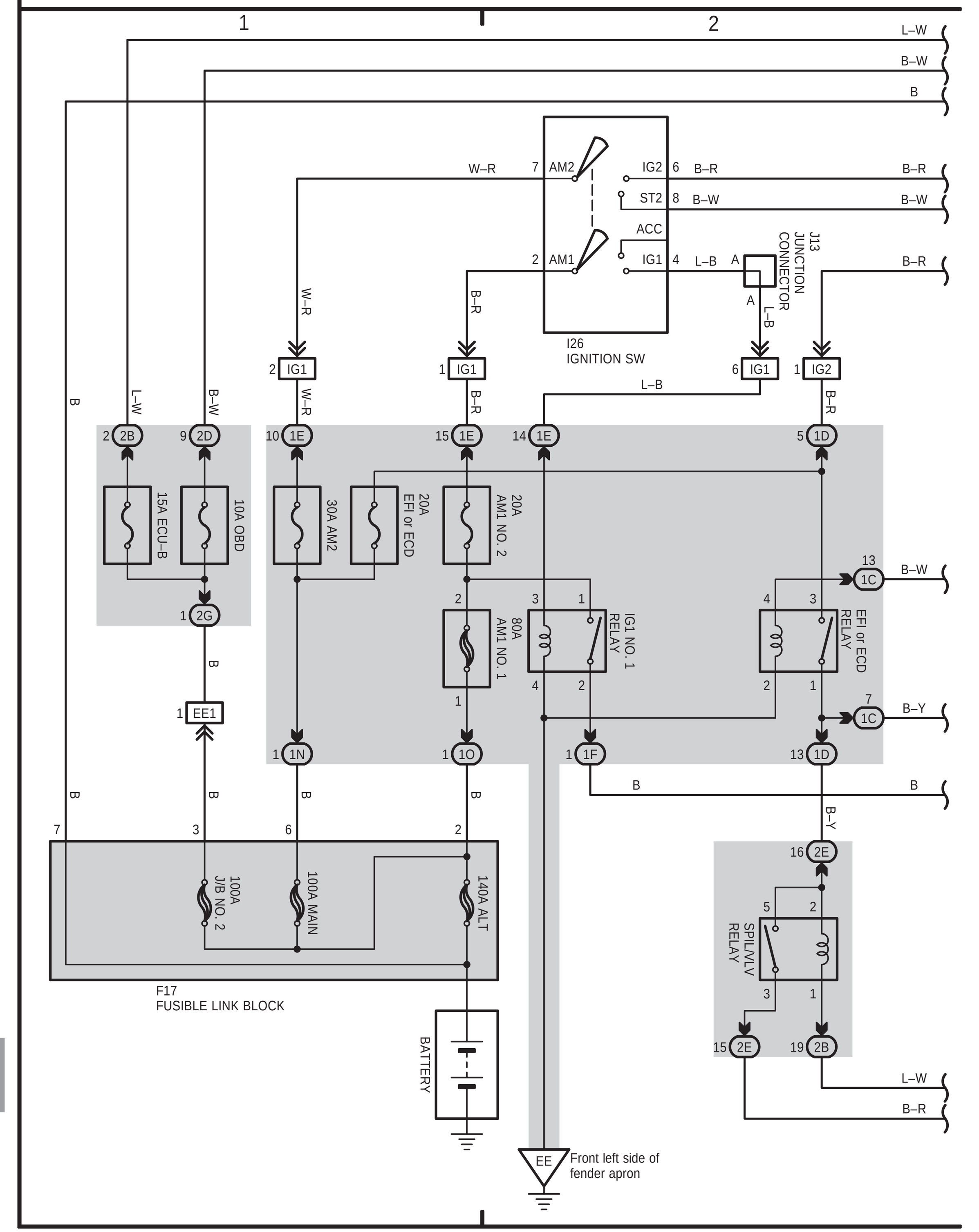

(Cont. next page)

Engine Control (1HD–FTE)

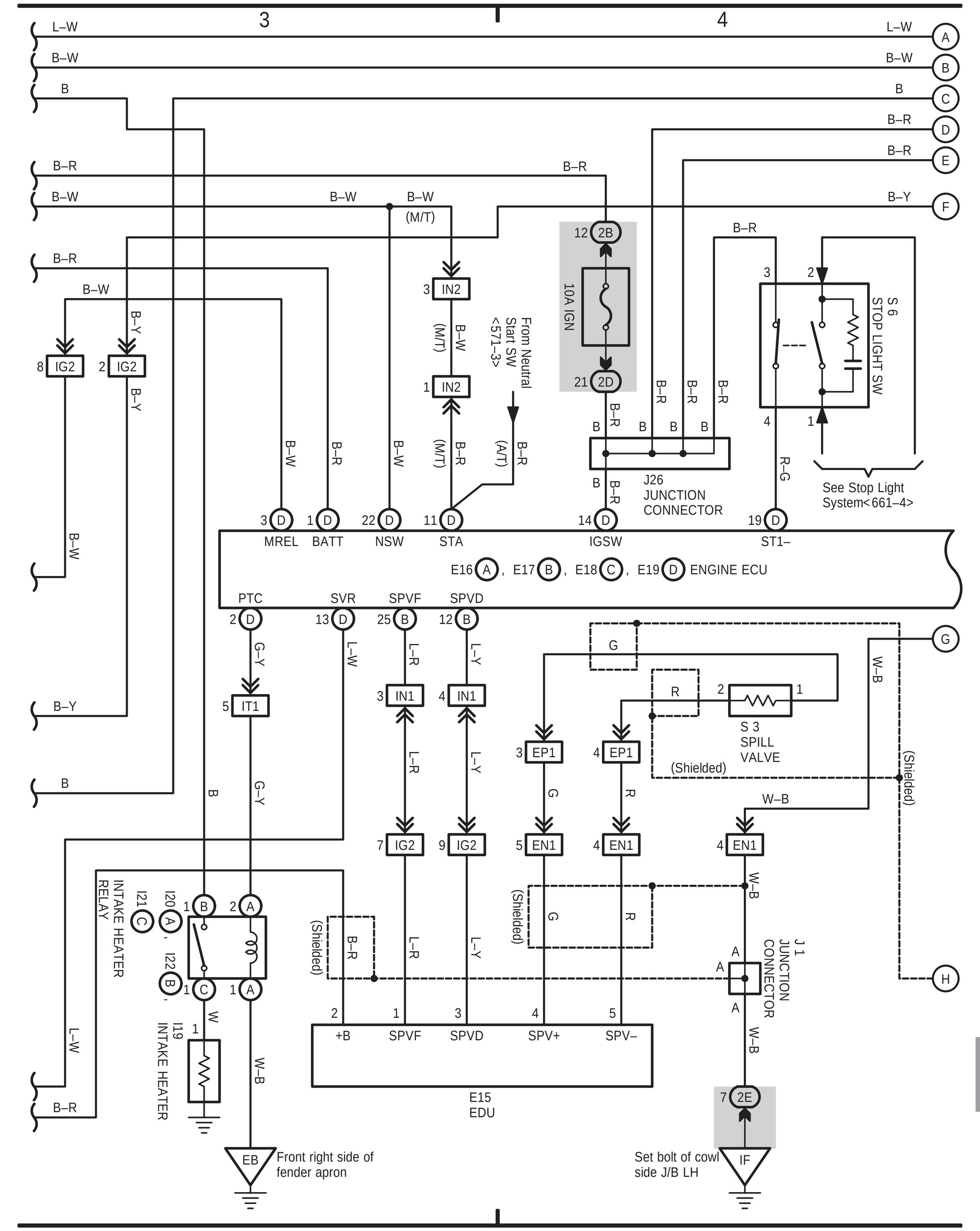

Engine Control (1HD–FTE)

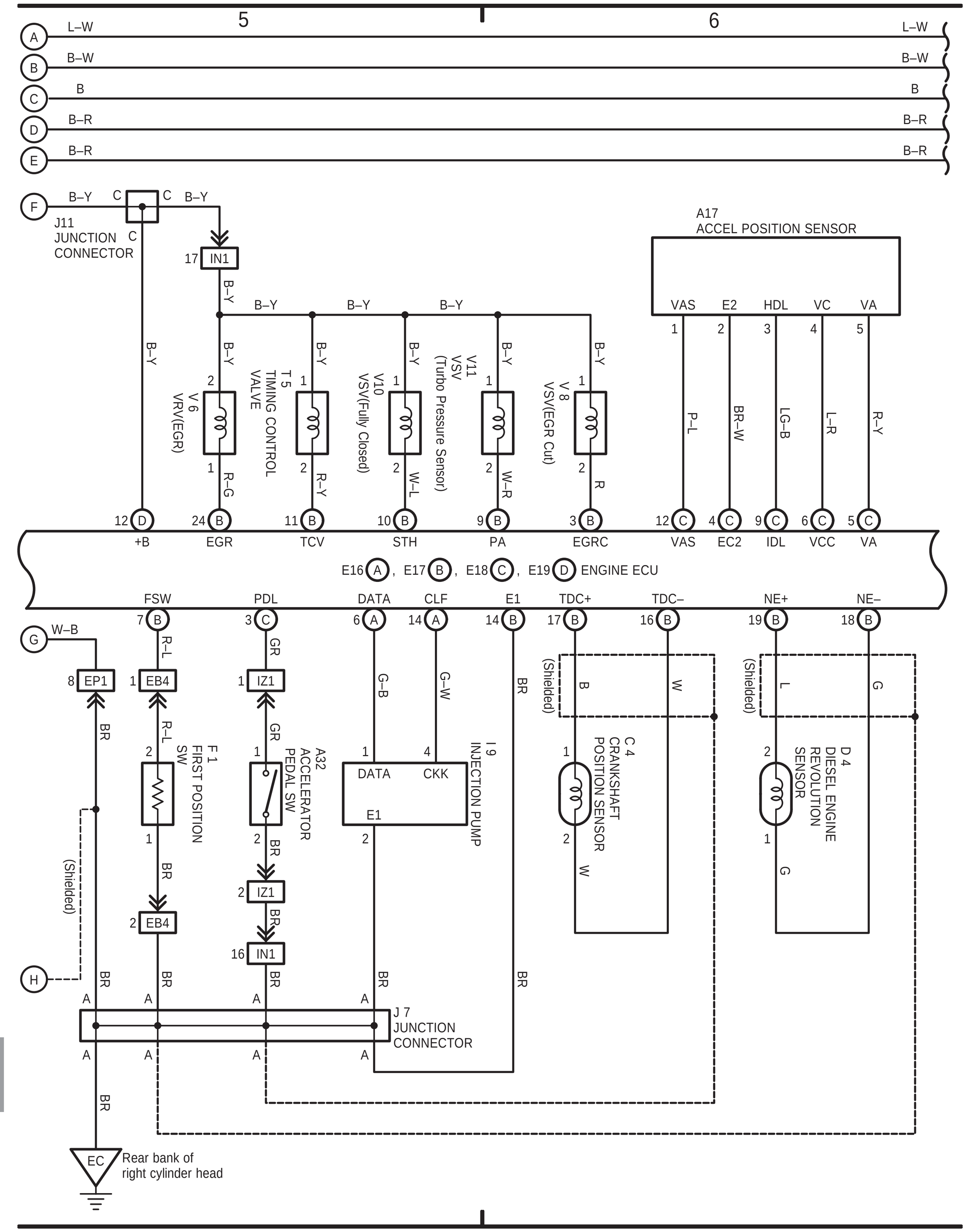

(Cont. next page)

Engine Control (1HD–FTE)

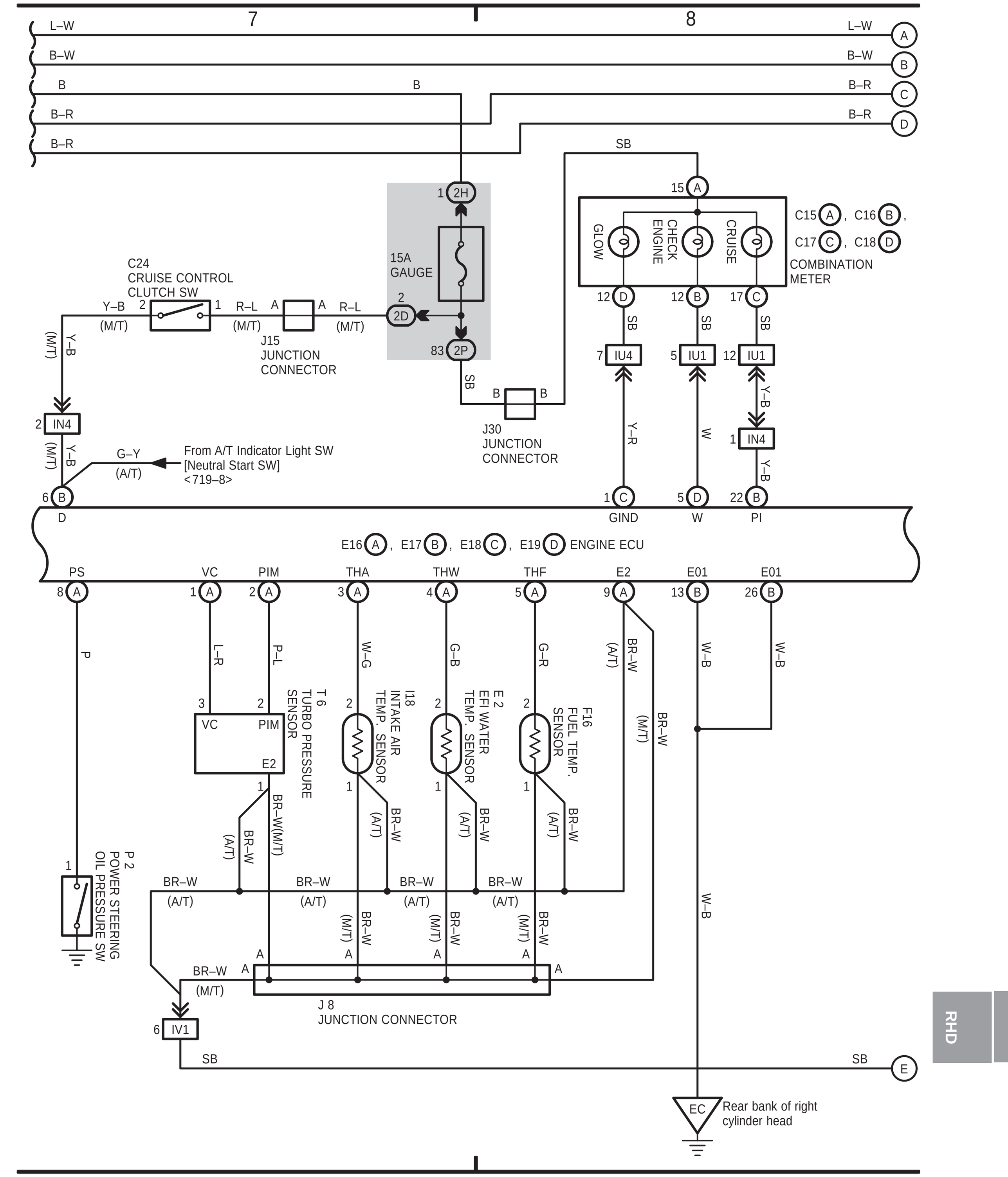

Engine Control (1HD–FTE)

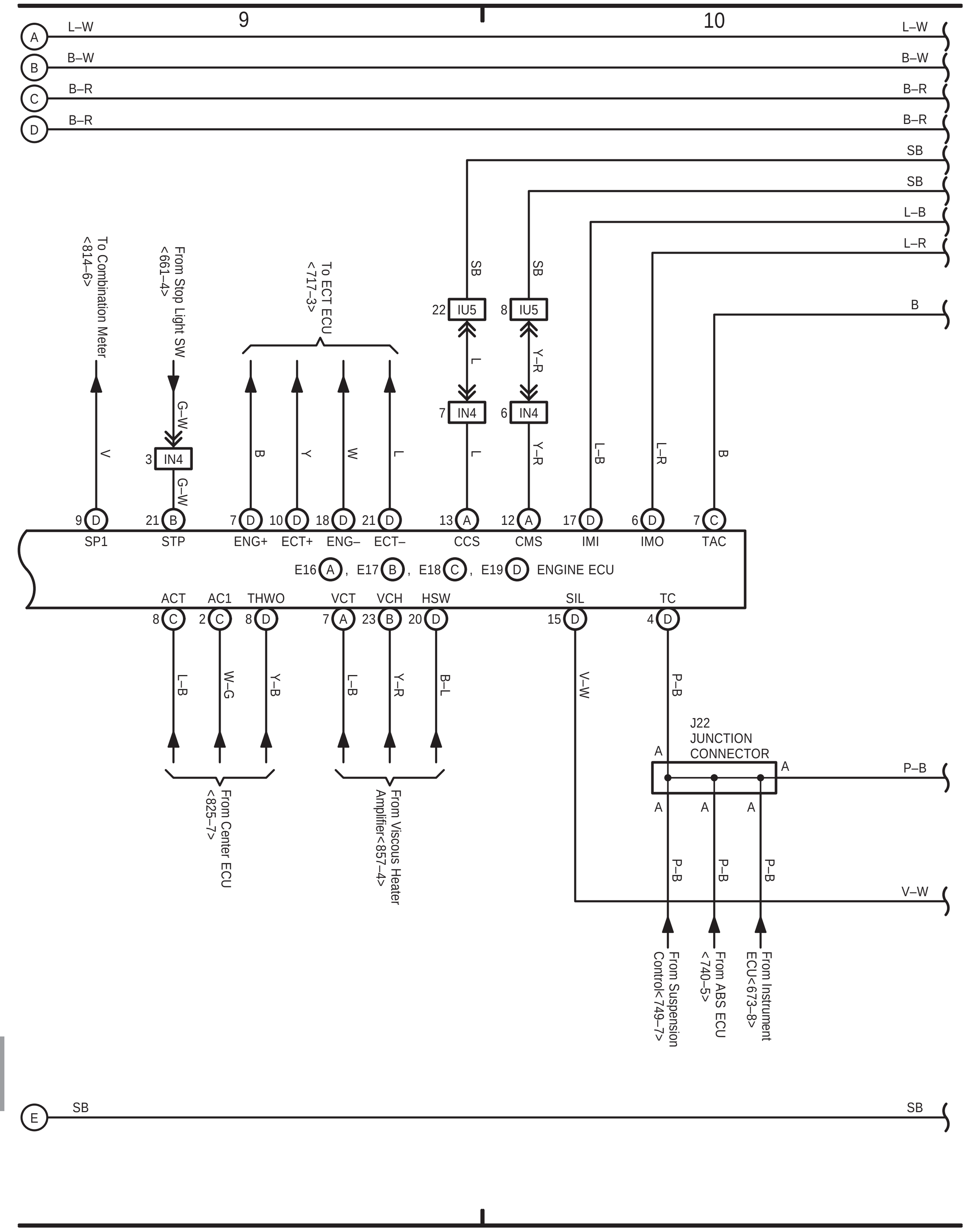

(Cont. next page)

Engine Control (1HD–FTE)

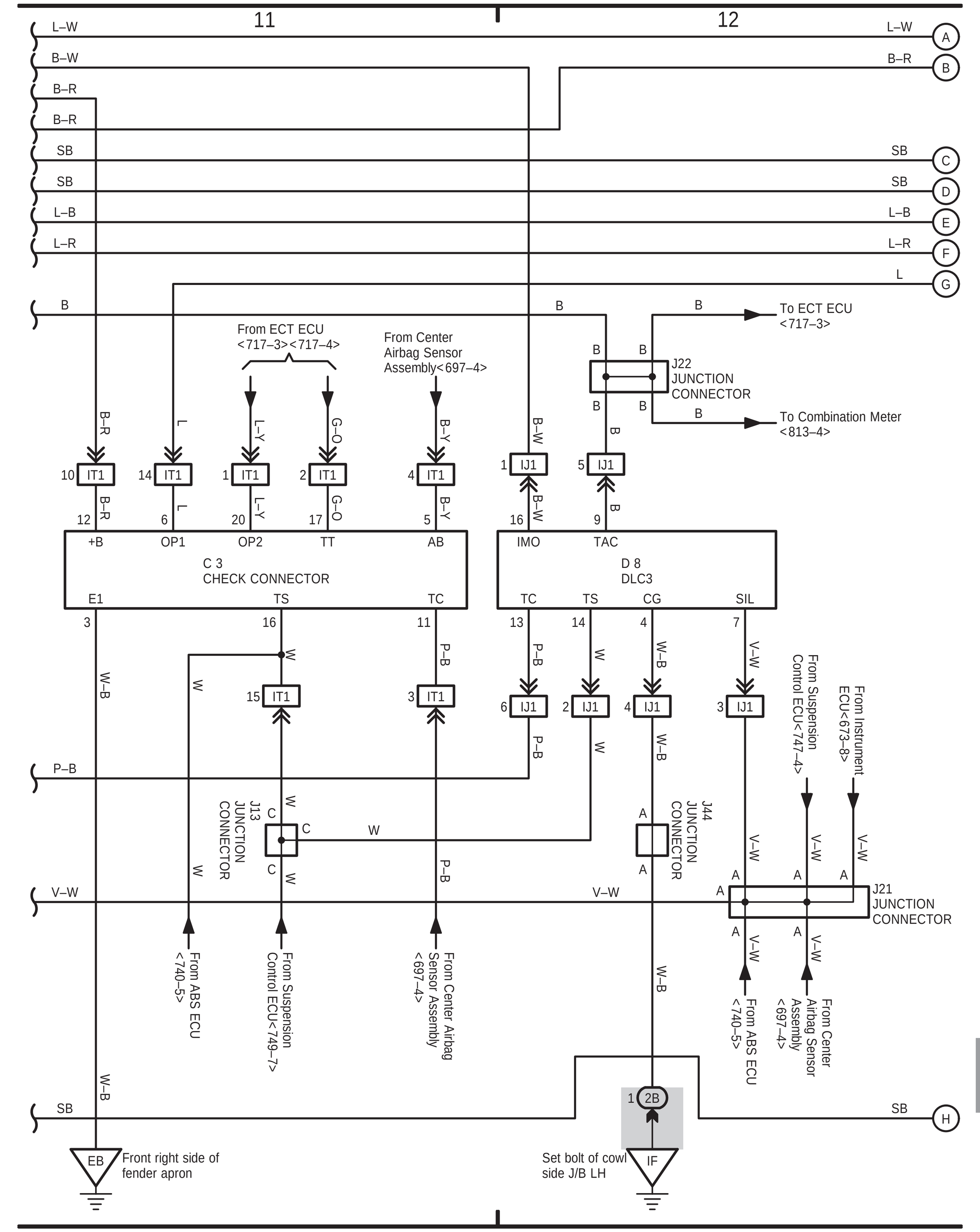

Engine Immobiliser System (1HD–FTE)

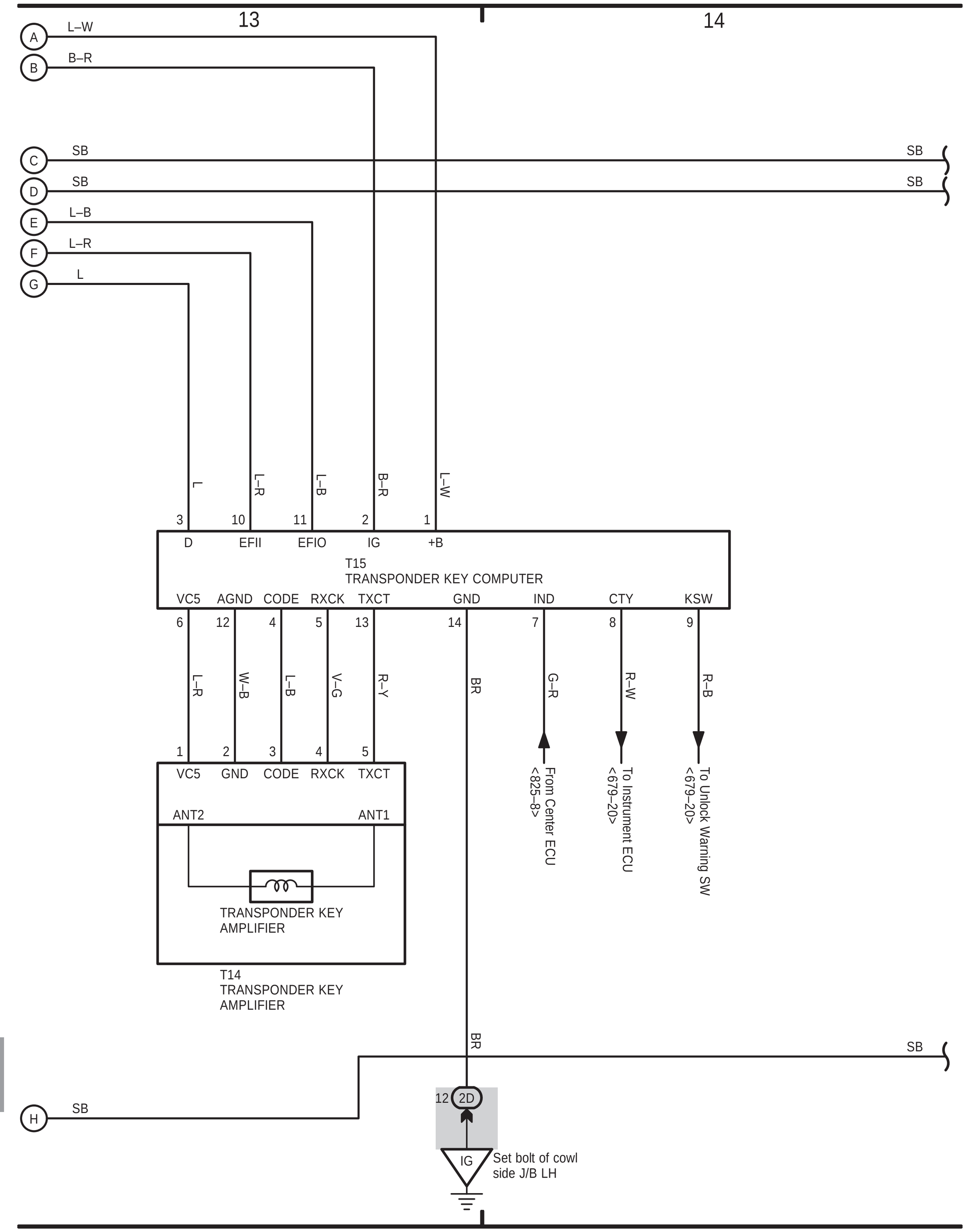

(Cont'd)

Cruise Control (1HD–FTE)

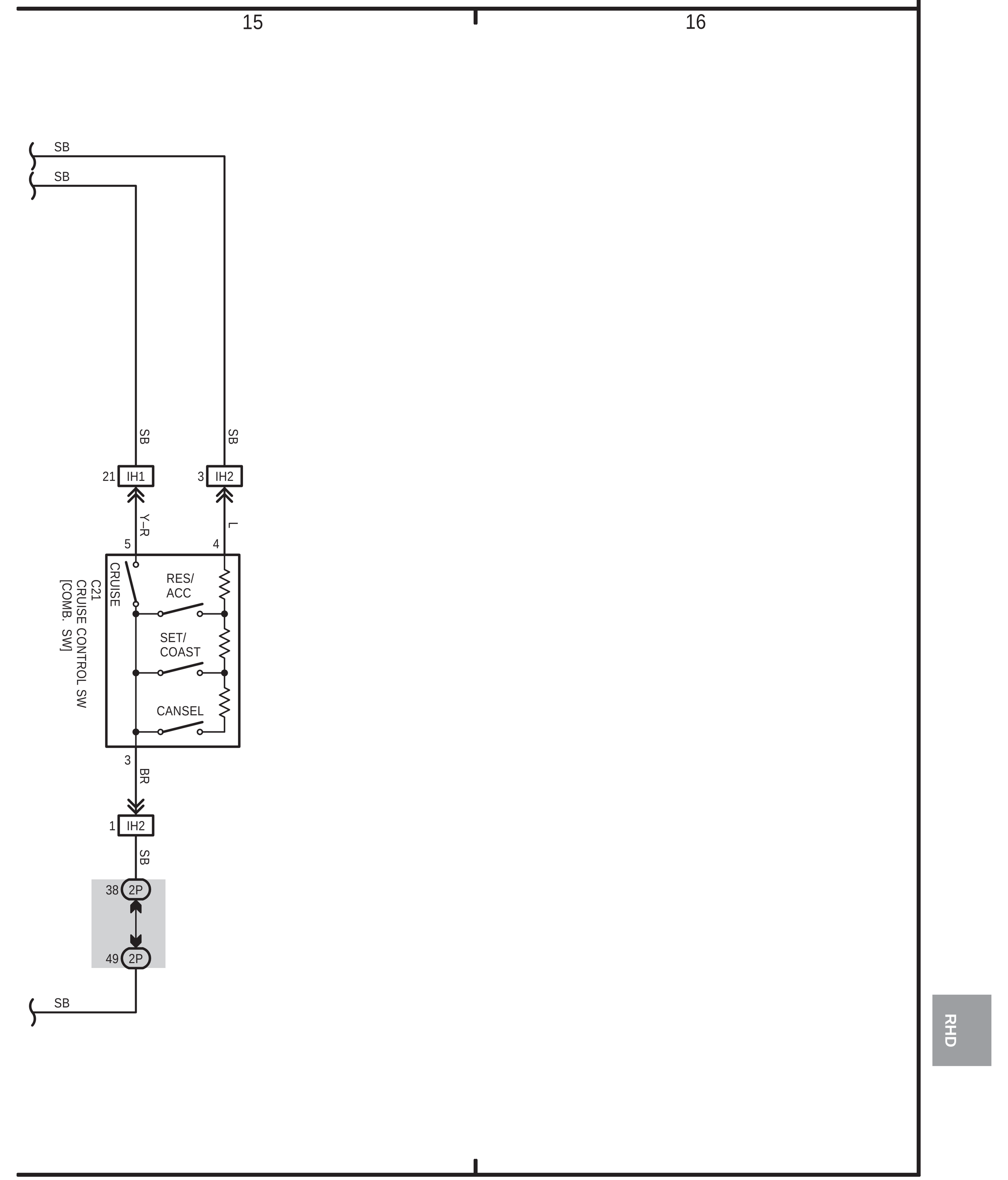

10 LAND CRUISER (RHD) (Cont. next page)

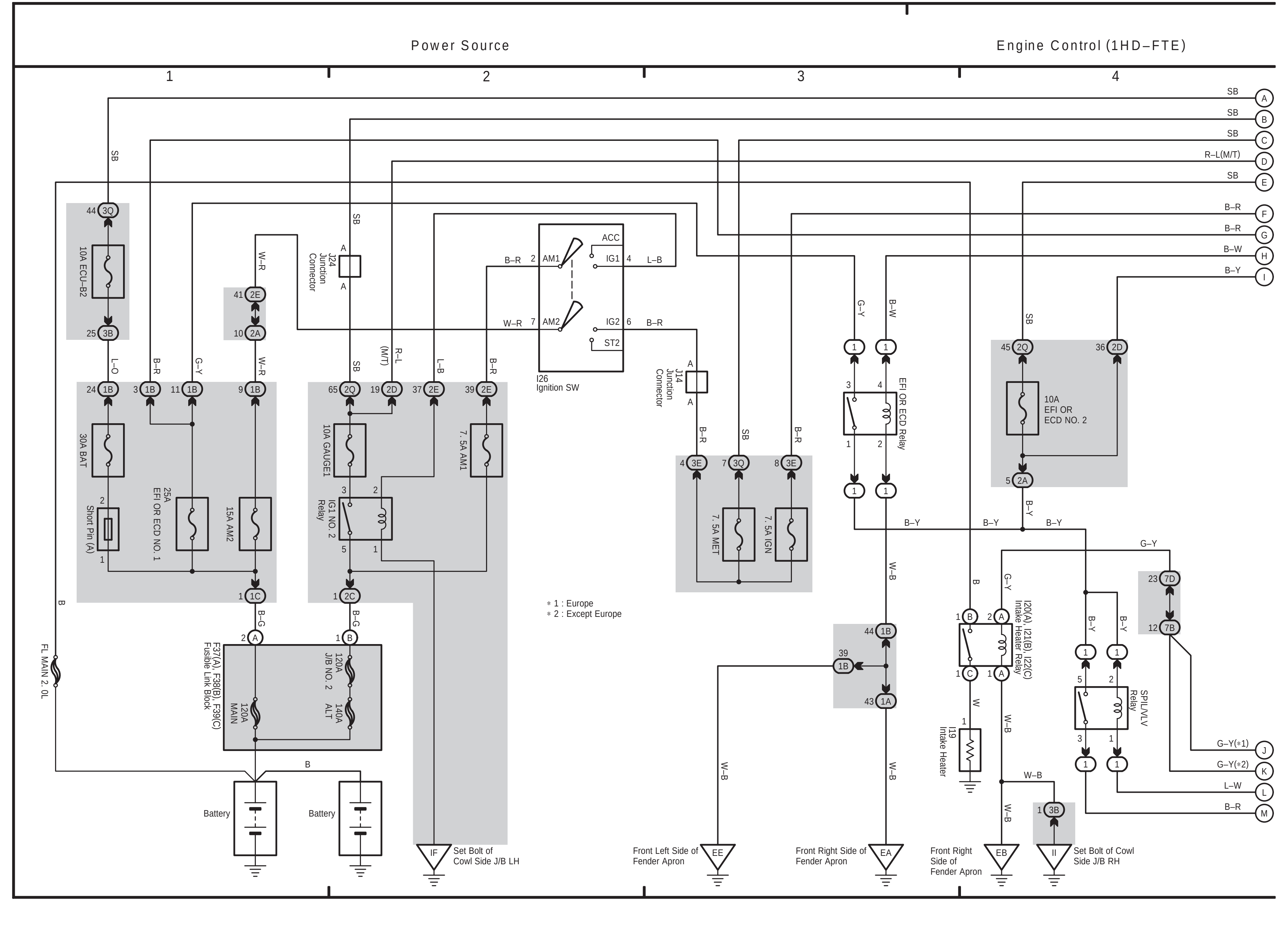

10 LAND CRUISER (RHD) (Cont' d) (Cont. next page)

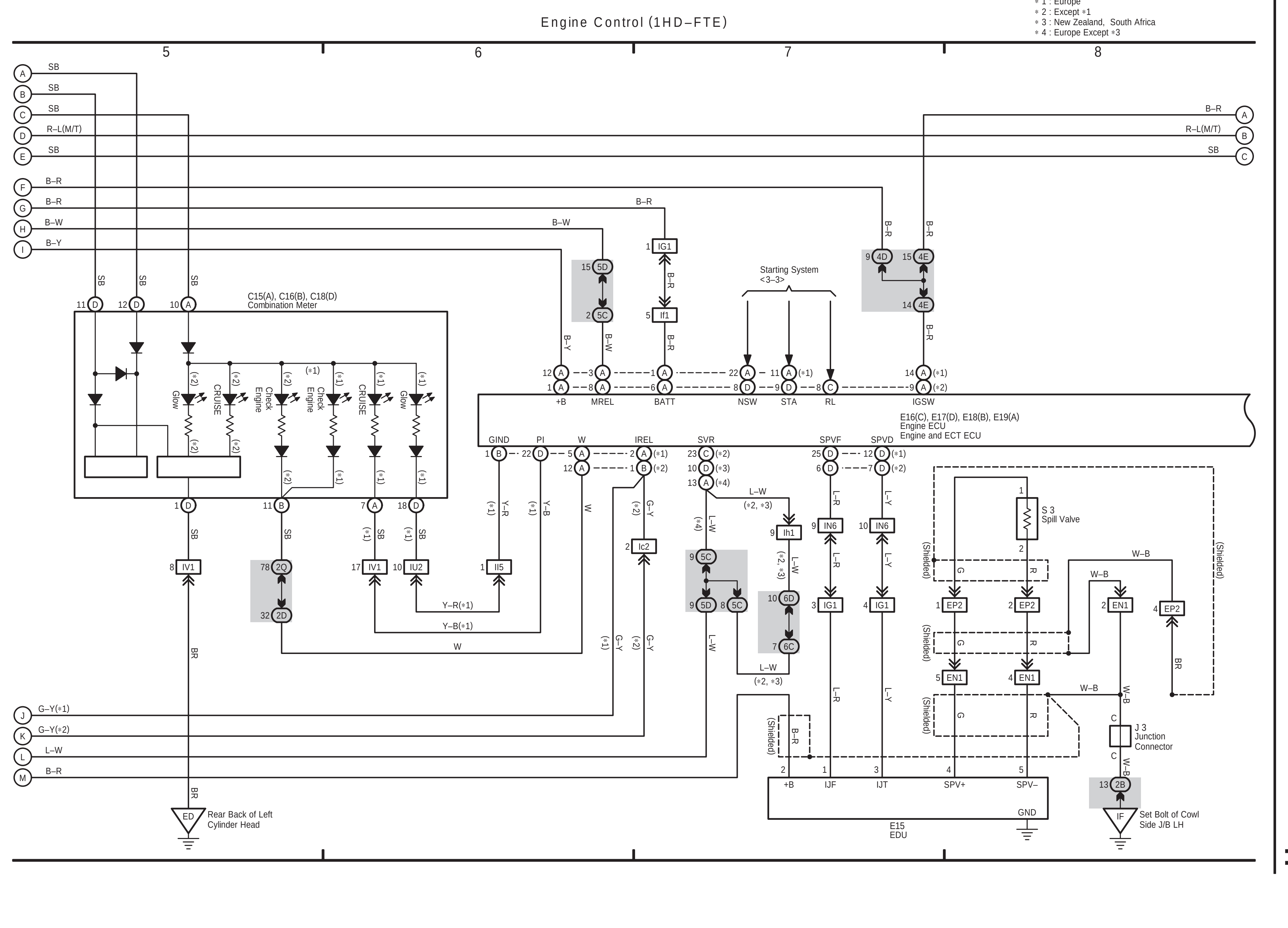

10 LAND CRUISER (RHD) (Cont' d) (Cont. next page)

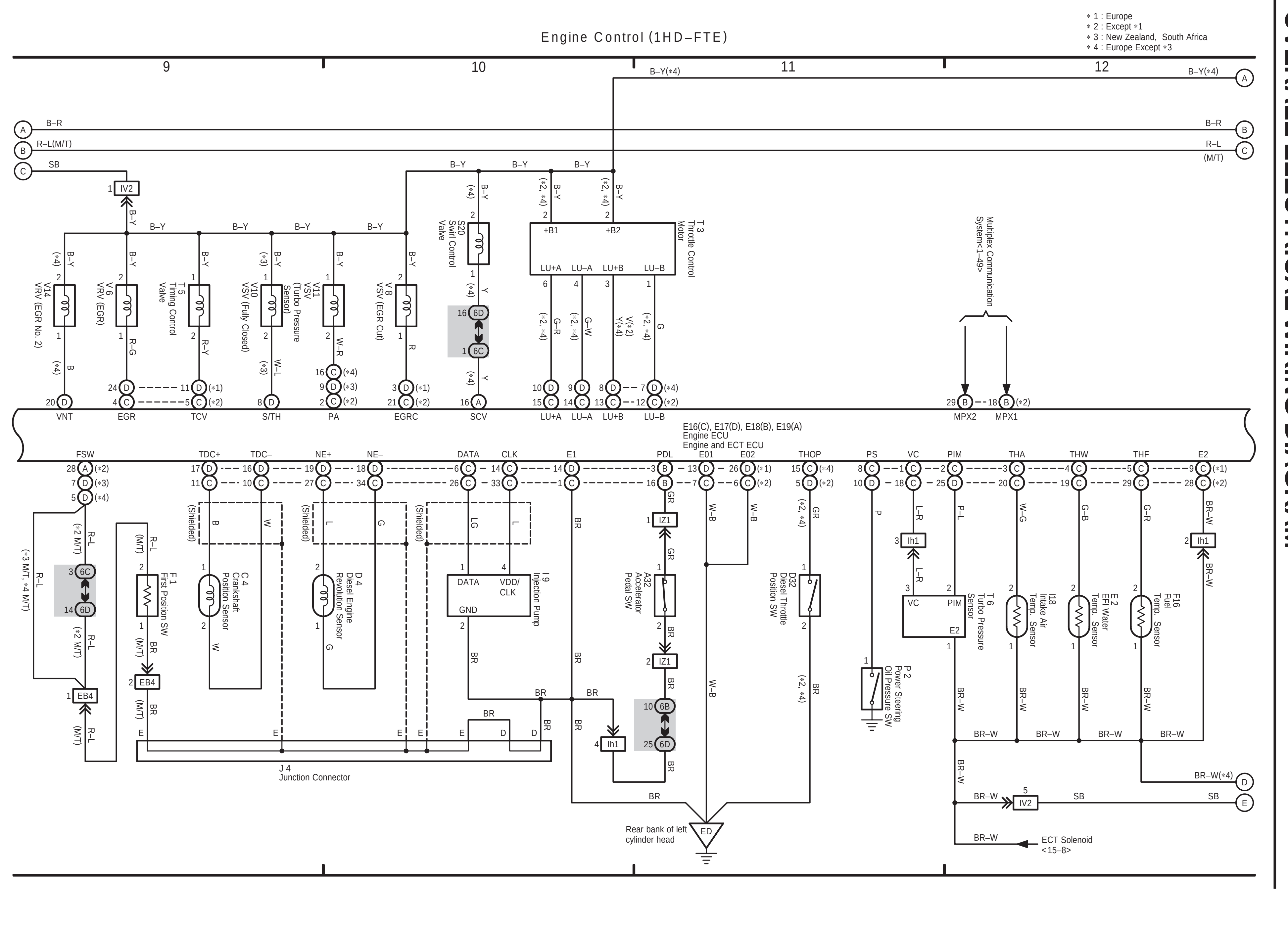

10 LAND CRUISER (RHD) (Cont' d)

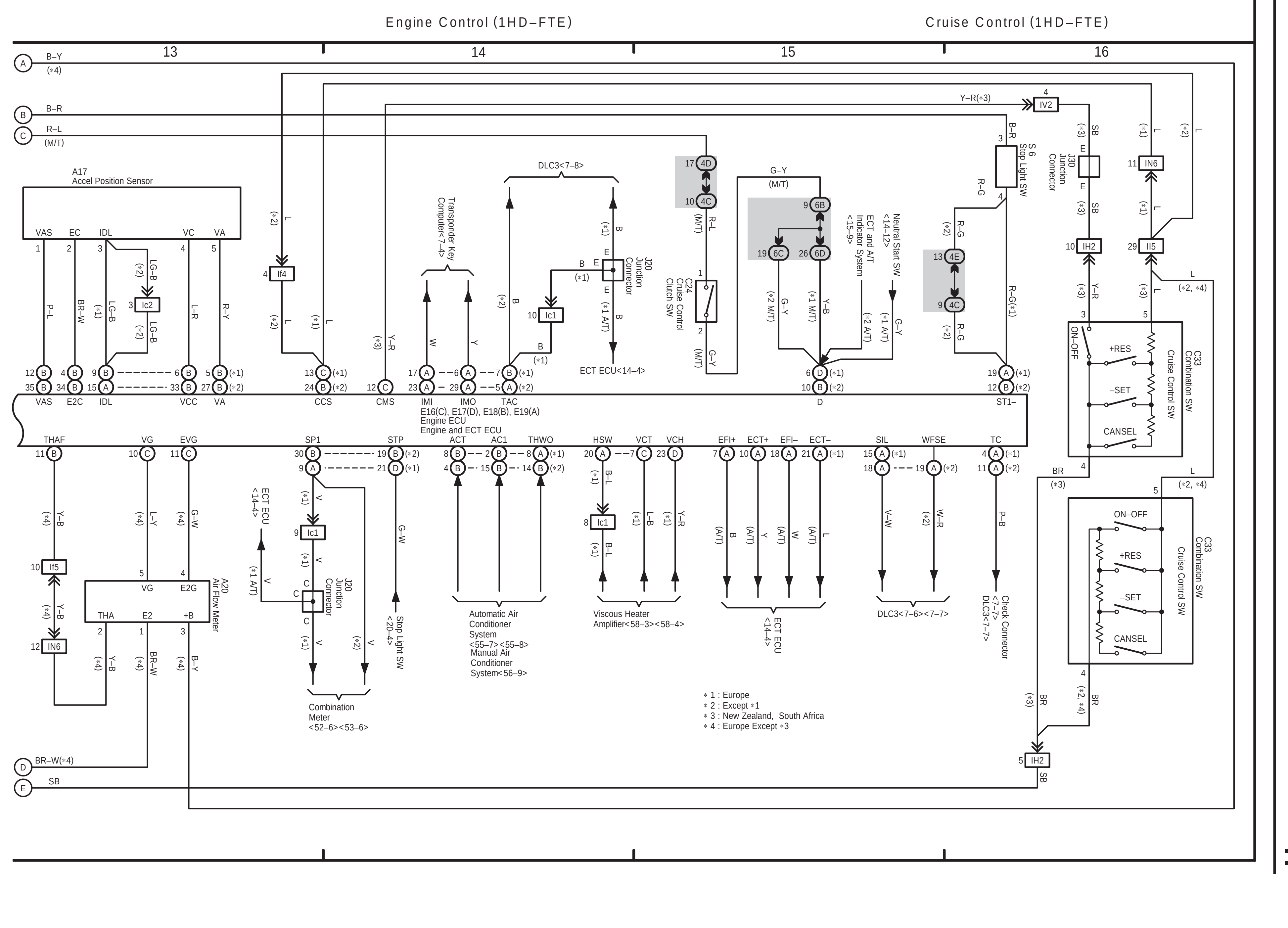

10 LAND CRUISER (RHD) (Cont. next page)

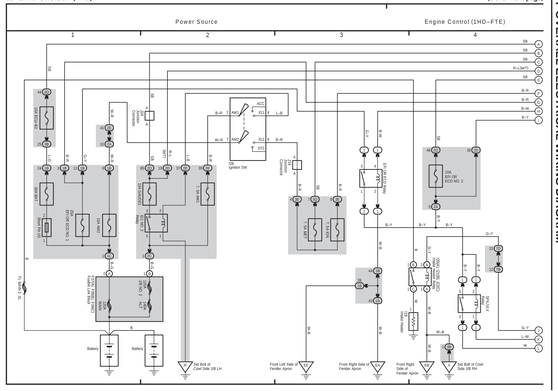

10 LAND CRUISER (RHD) (Cont' d) (Cont. next page)

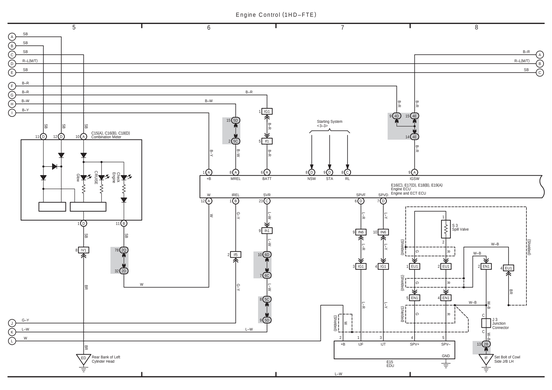

10 LAND CRUISER (RHD) (Cont' d) (Cont. next page)

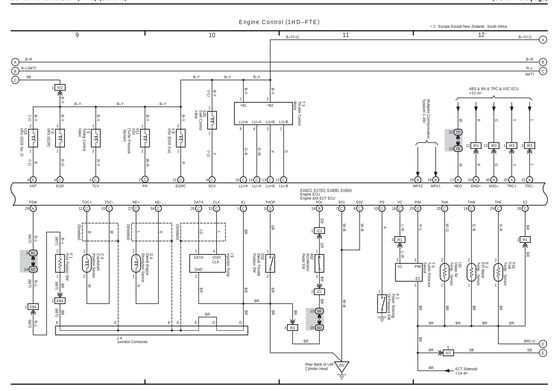

10 LAND CRUISER (RHD) (Cont' d)

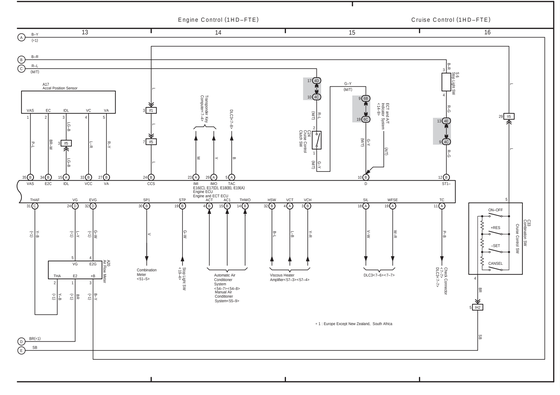

(Cont. next page)

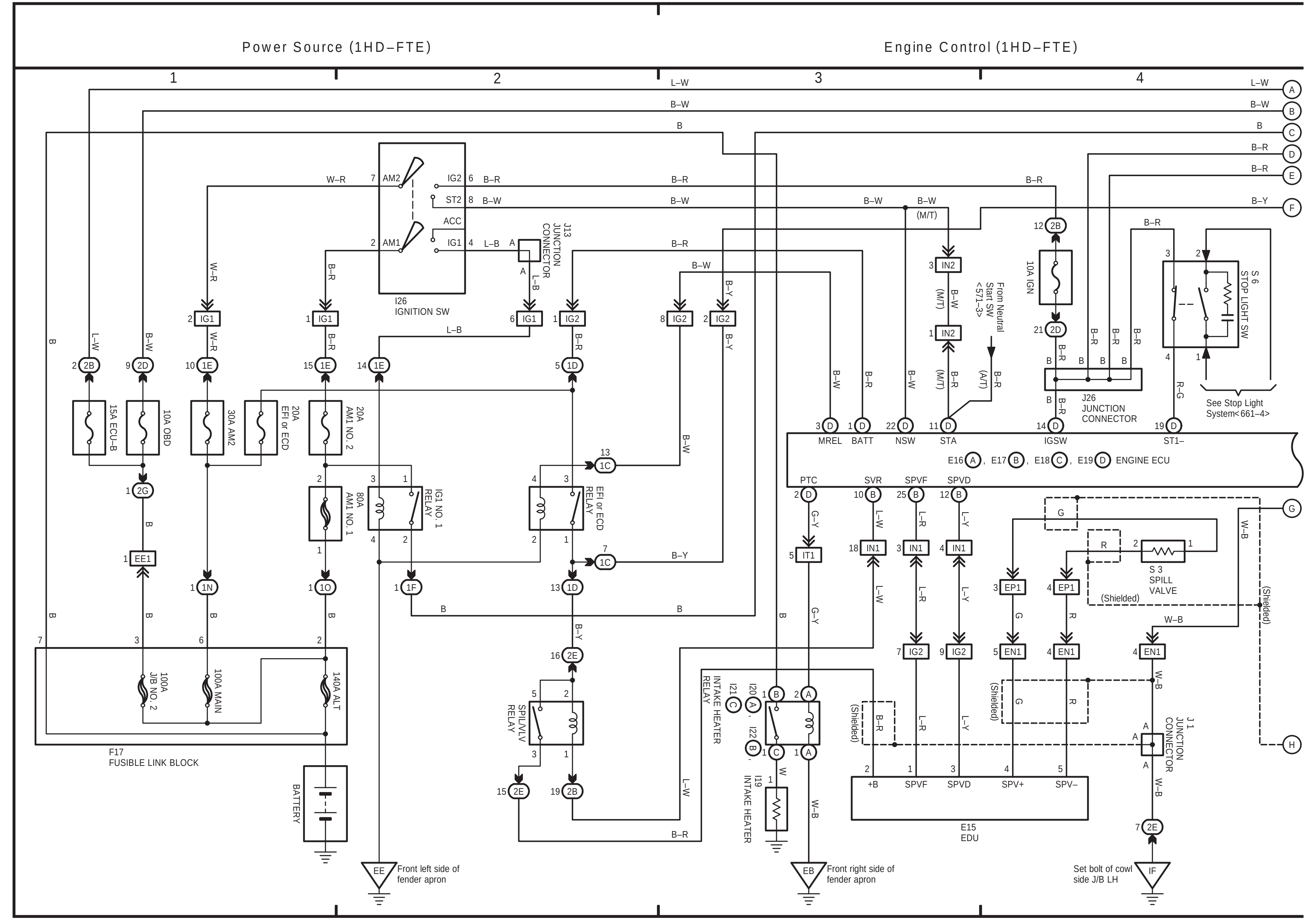

(Cont. next page)

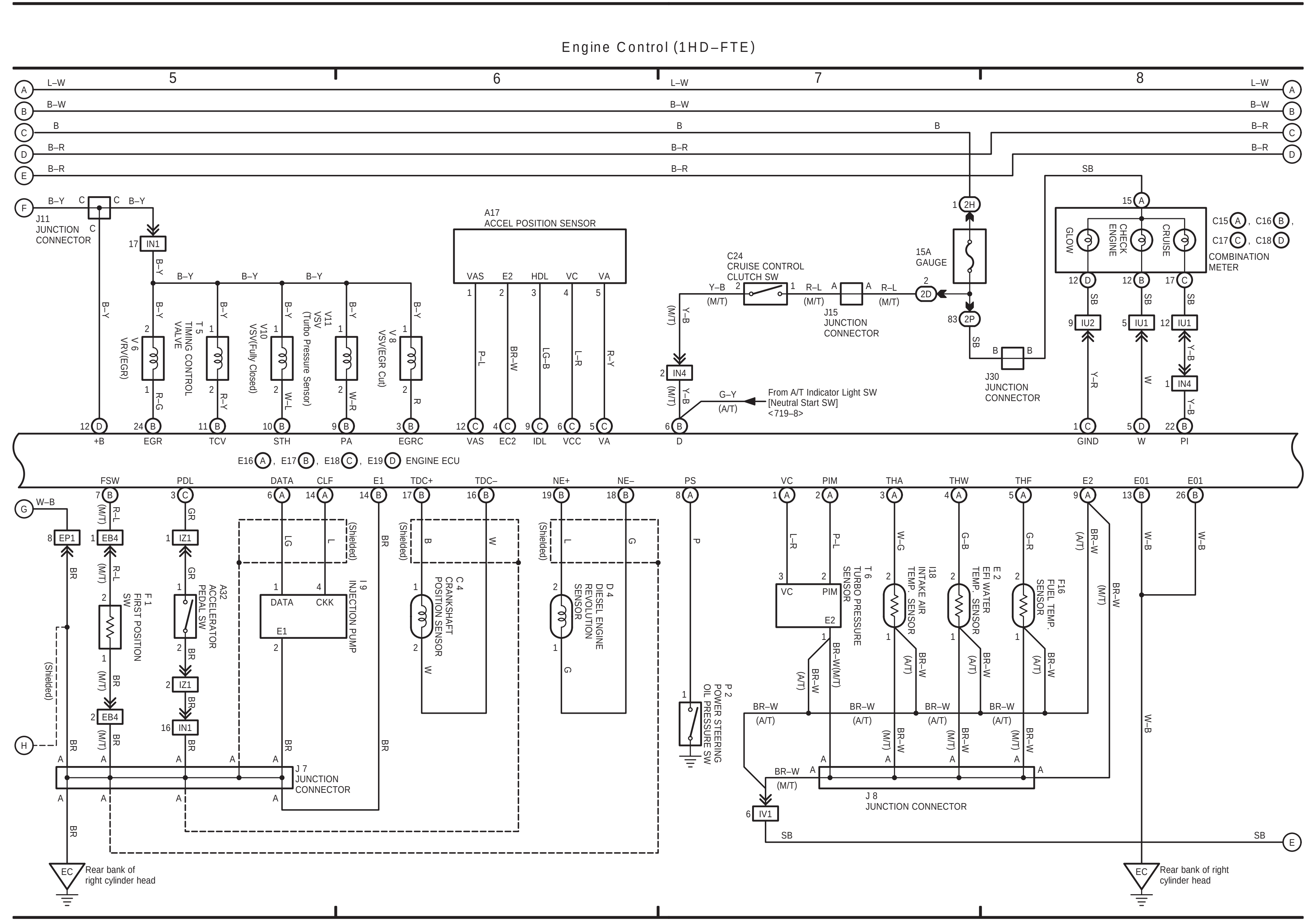

(Cont. next page)

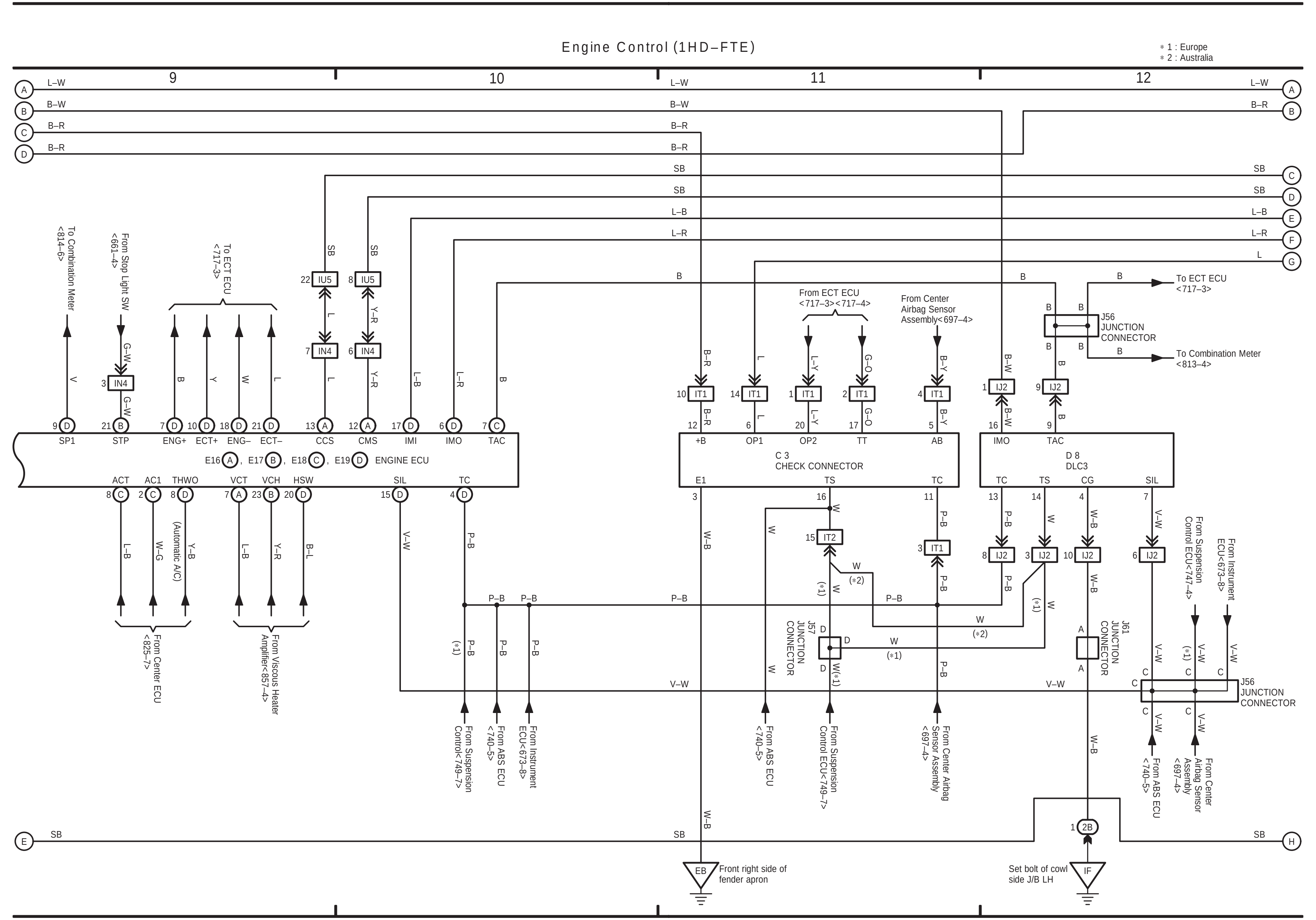

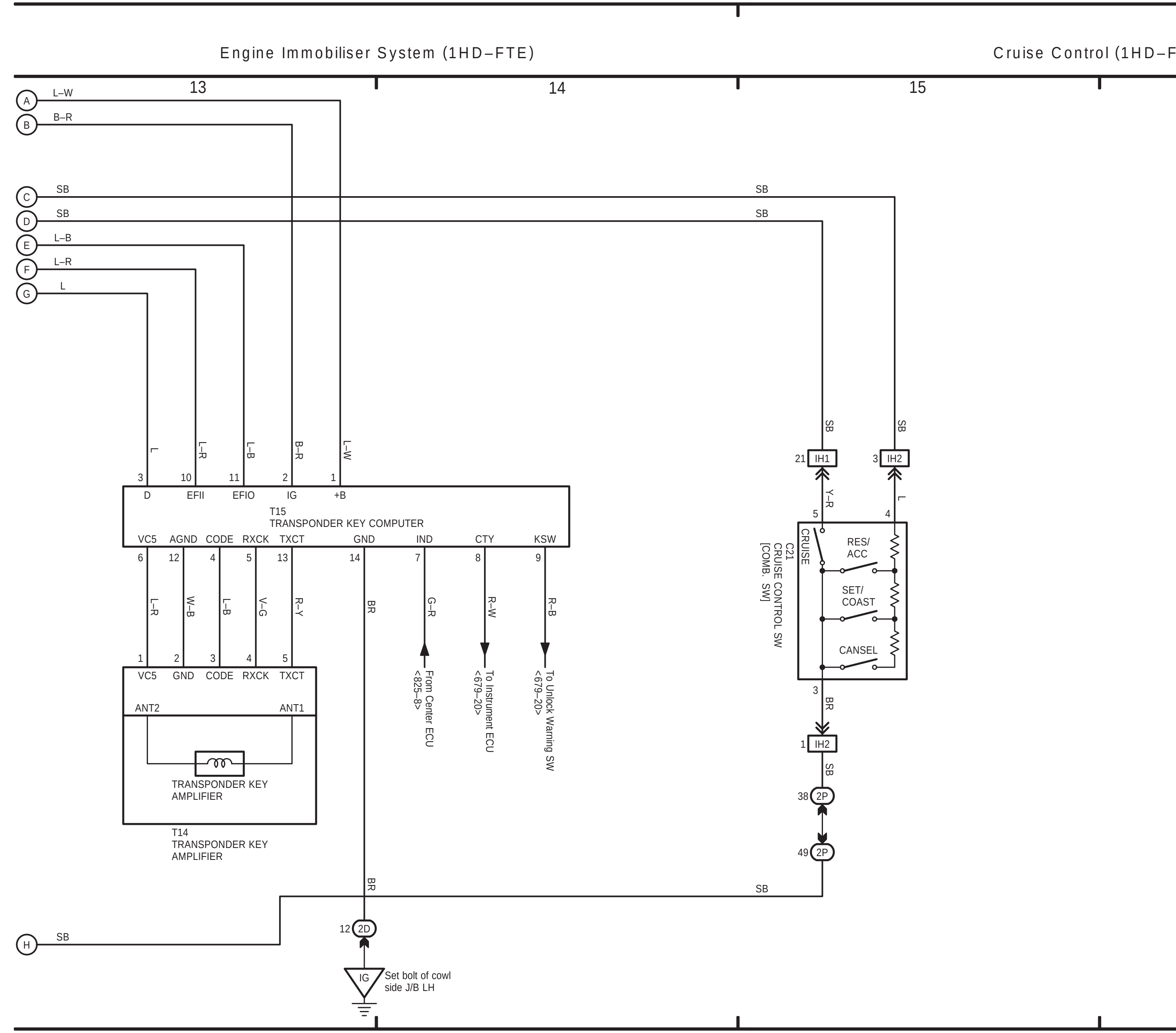

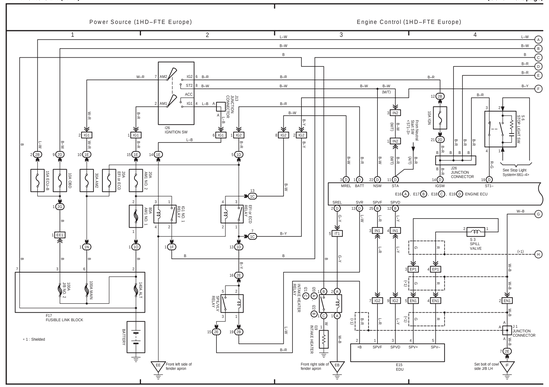
Power Source (1HD–FTE Europe)
Engine Control (1HD–FTE Europe)
1
2
3
4
IG1 FUSIBLE LINK BLOCK
BATTERY
IGNITION SW
ACC
IG1
ST1
STARTER RELAY
ALTERNATOR
ECU–IG FUSE
ECU–B FUSE
ENGINE ROOM R/B
ENGINE ROOM J/B
J/B JUNCTION CONNECTOR
See Stop Light System–BEC–AI
ENGINE ECU
ECU
VALVE
INJECTOR
ENGINE WIRE
Front left side of fender apron
Front right side of fender apron
Set bolt of cowl side, DR LH
* 1: Shielded

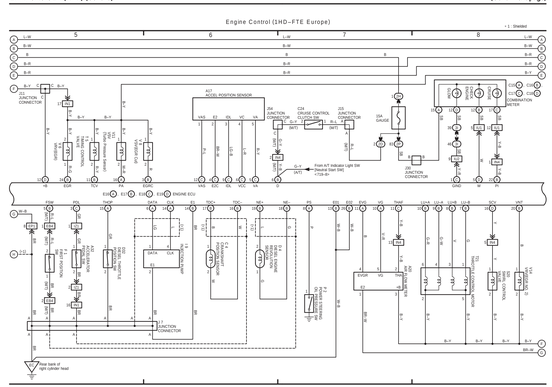
Engine Control (1HD–FTE Europe)
5
6
7
8
* 1: Shielded
J/C JUNCTION CONNECTOR
J/B JUNCTION CONNECTOR
ACCEL POSITION SENSOR
CRUISE CONTROL CLUTCH SW
STOP LIGHT SW
CRUISE CONTROL MASTER
GAUGE
ENGINE ECU
From A/T Indicator Light SW
Diesel Start SW2
ECU–IG FUSE
ECU–B FUSE
ENGINE WIRE
Fuse box
Front bank of left cylinder head

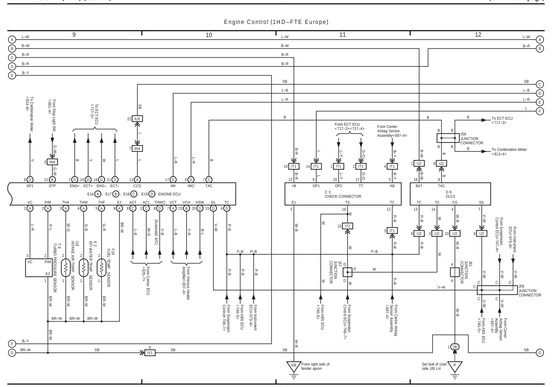
Engine Control (1HD–FTE Europe)
9
10
11
12
Front ECT ECU +TC1 for +TC2 A/T
Front Center Airbag Sensor Assembly
To ECT ECU +TC1–3+
To Combination Meter +TC2–4+
J/C JUNCTION CONNECTOR
J/B JUNCTION CONNECTOR
J/B CHECK CONNECTOR
DLC3
ENGINE ECU
Front right side of fender apron
Set bolt of cowl side, DR LH

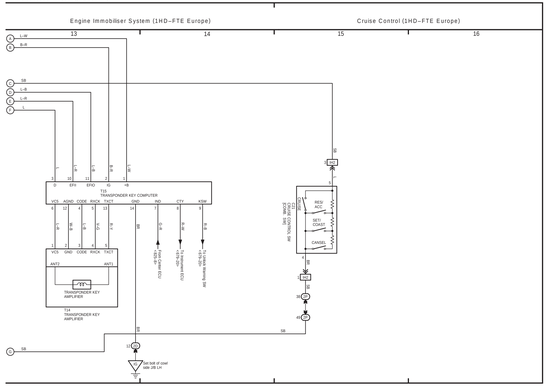
Engine Immobiliser System (1HD–FTE Europe)
Cruise Control (1HD–FTE Europe)
13
14
15
16
TRANSPONDER KEY COMPUTER
TRANSPONDER KEY AMPLIFIER
J/C JUNCTION CONNECTOR
J/B JUNCTION CONNECTOR
MAIN SWITCH
SET/COAST
CANCEL
CRUISE CONTROL MASTER
Set bolt of cowl side, DR LH

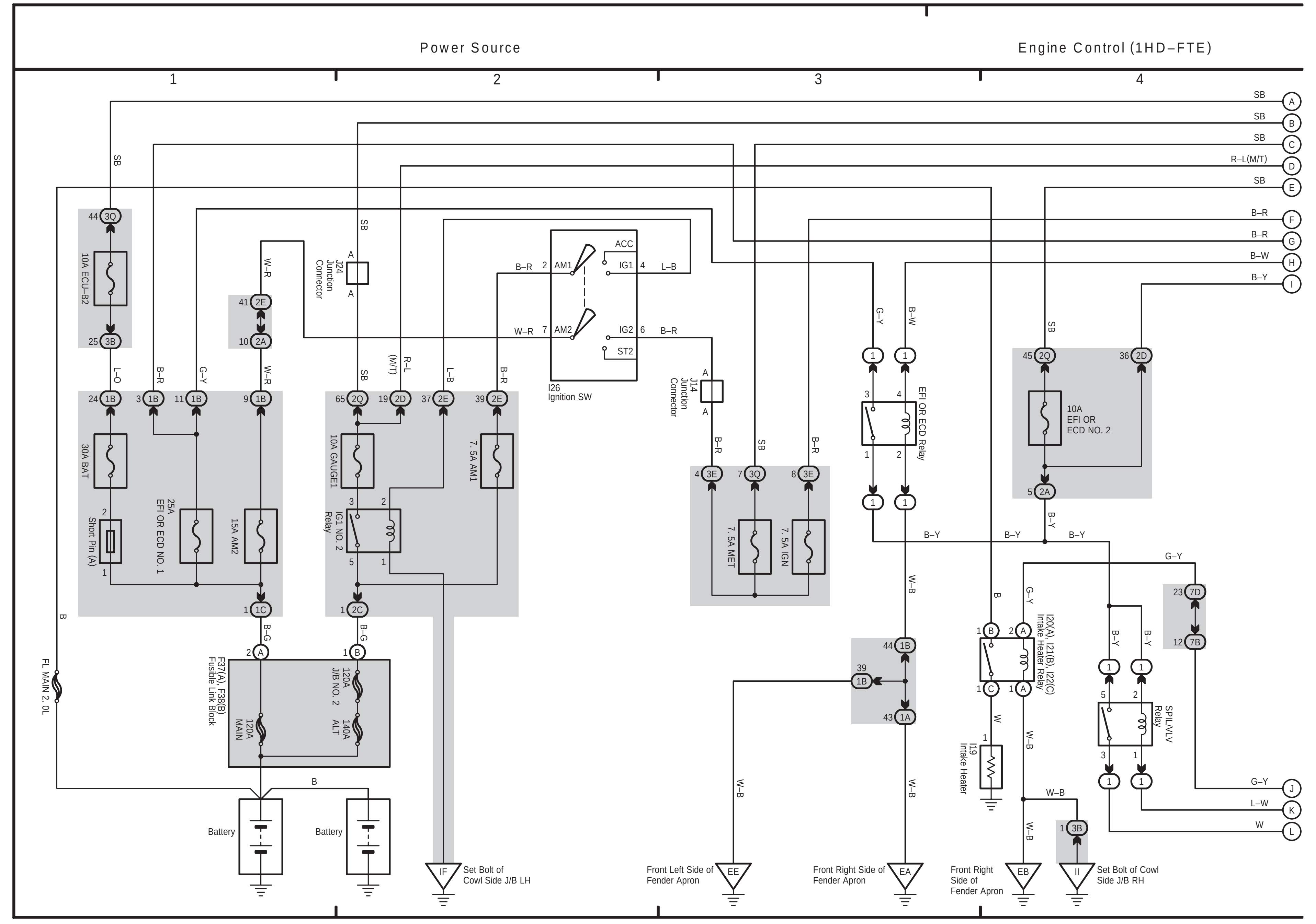
Power Source
Engine Control (1HD–FTE)

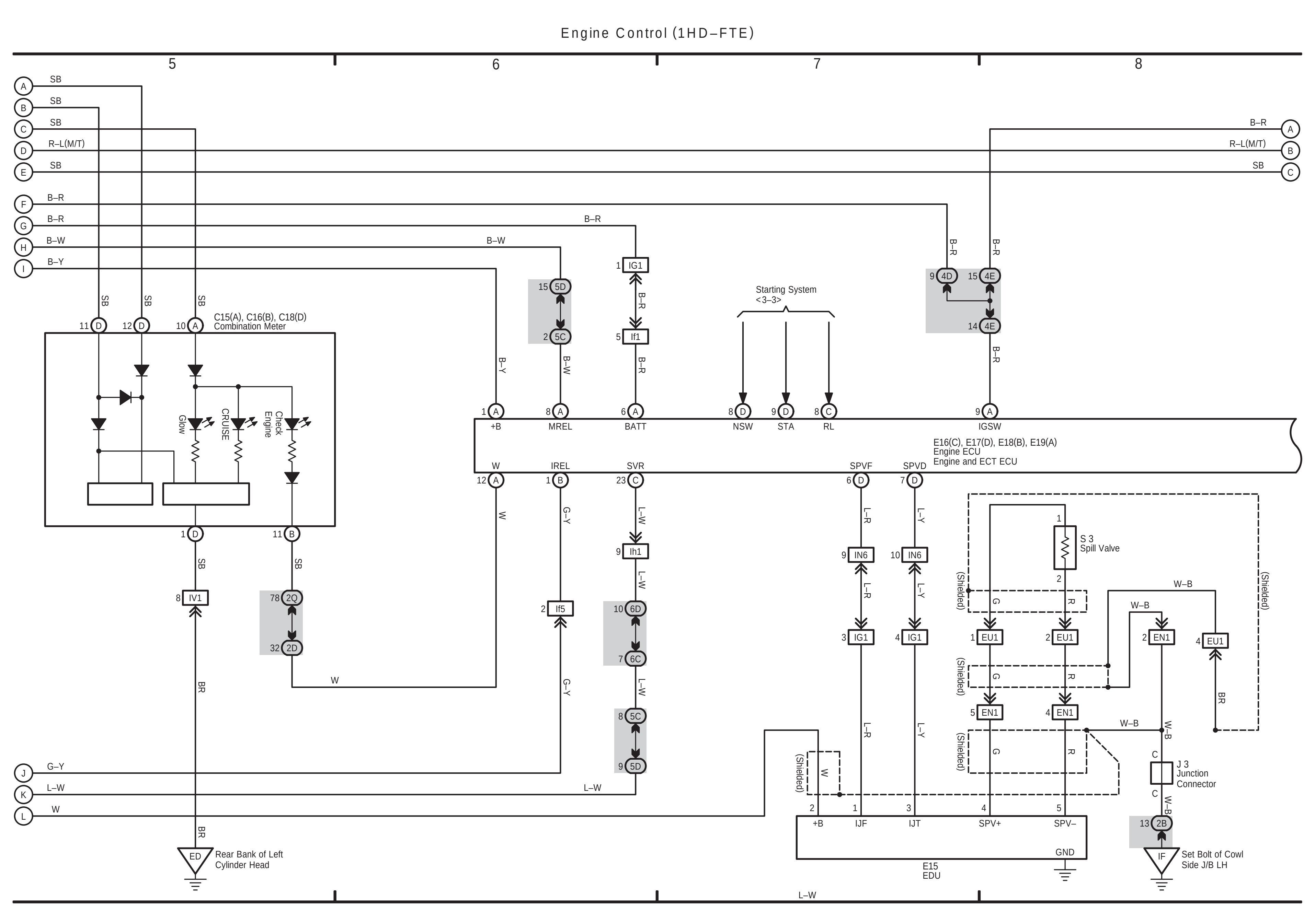
Engine Control (1HD–FTE)

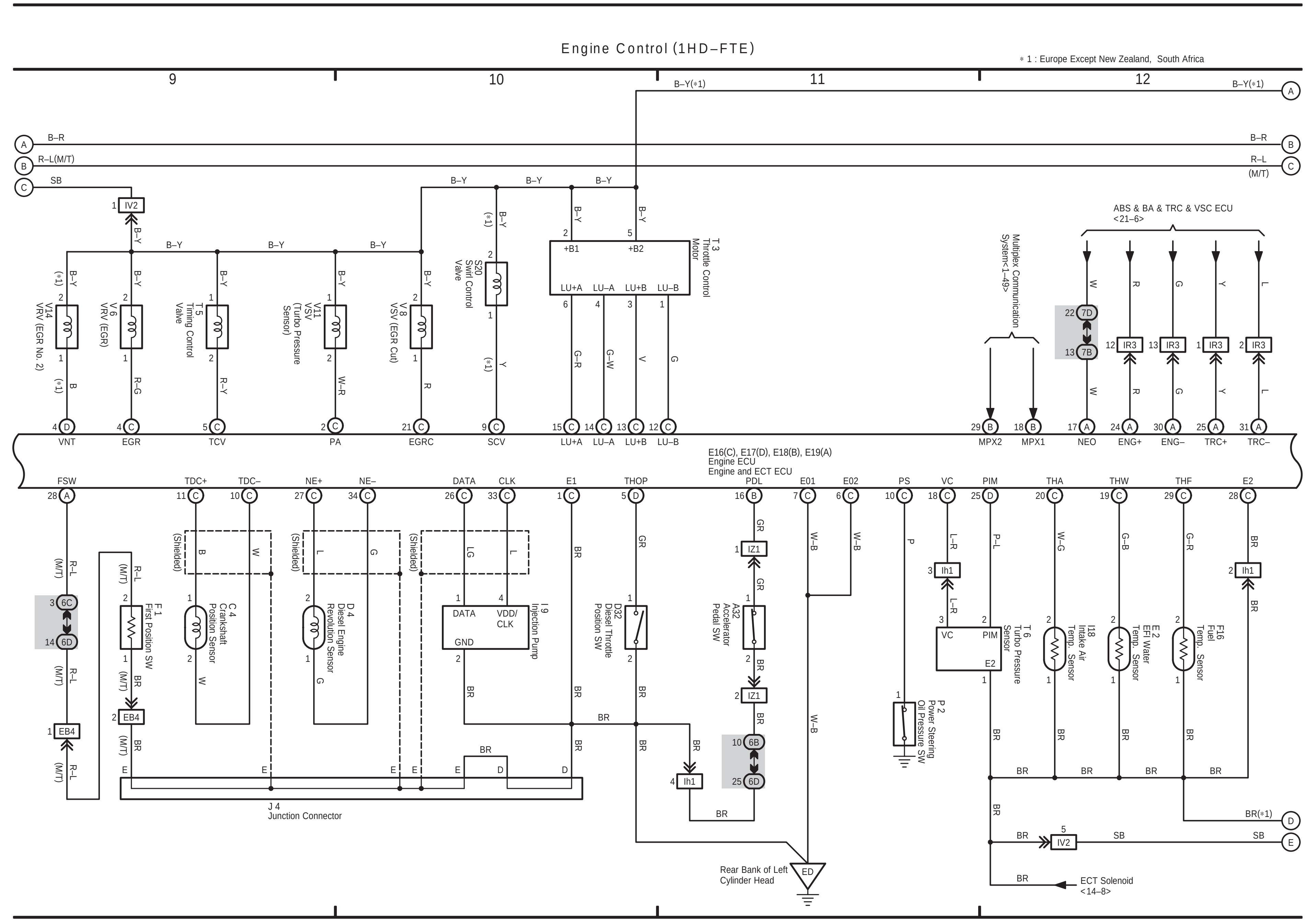
Engine Control (1HD–FTE)

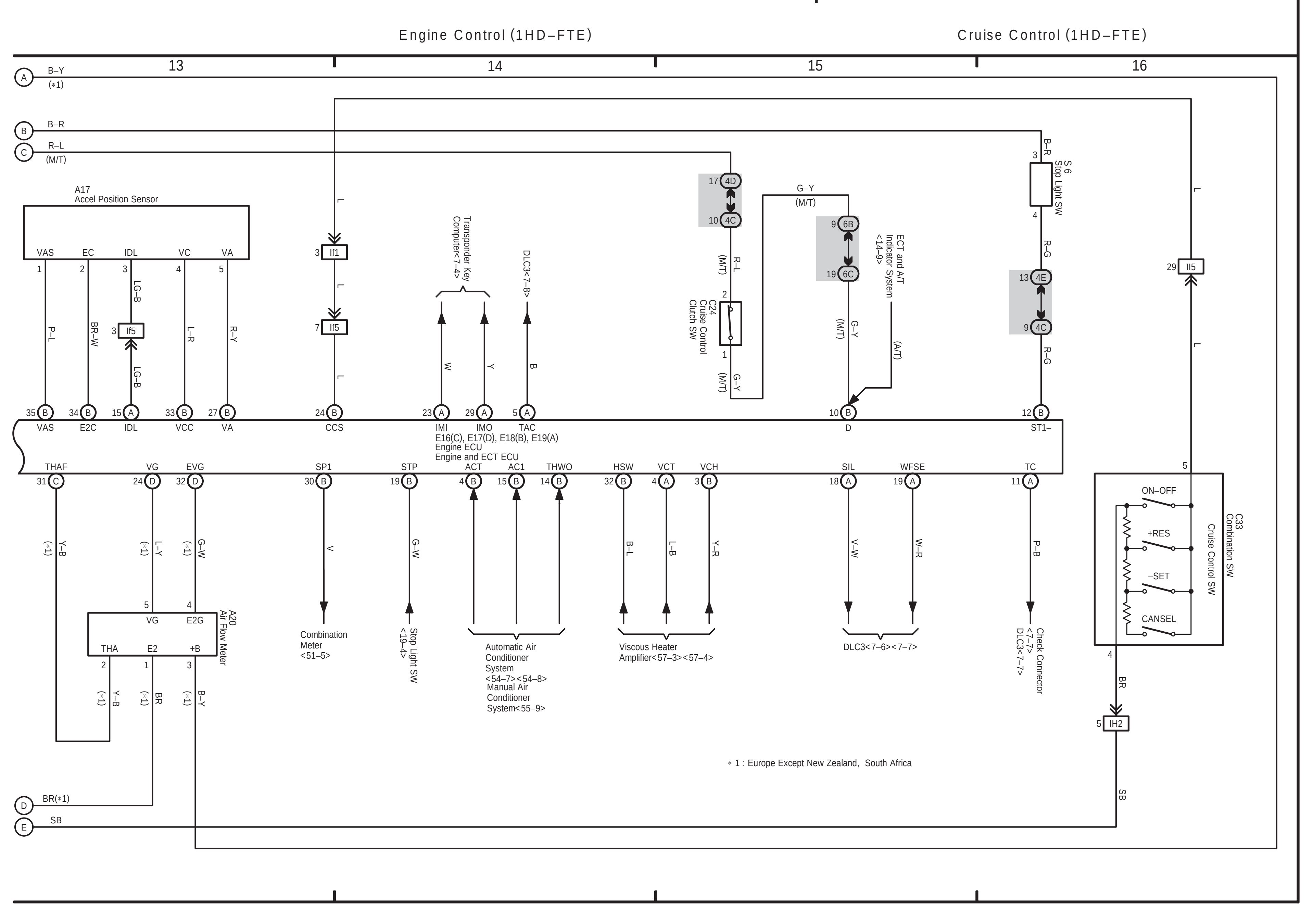
Engine Control (1HD–FTE)
Cruise Control (1HD–FTE)

Power Source

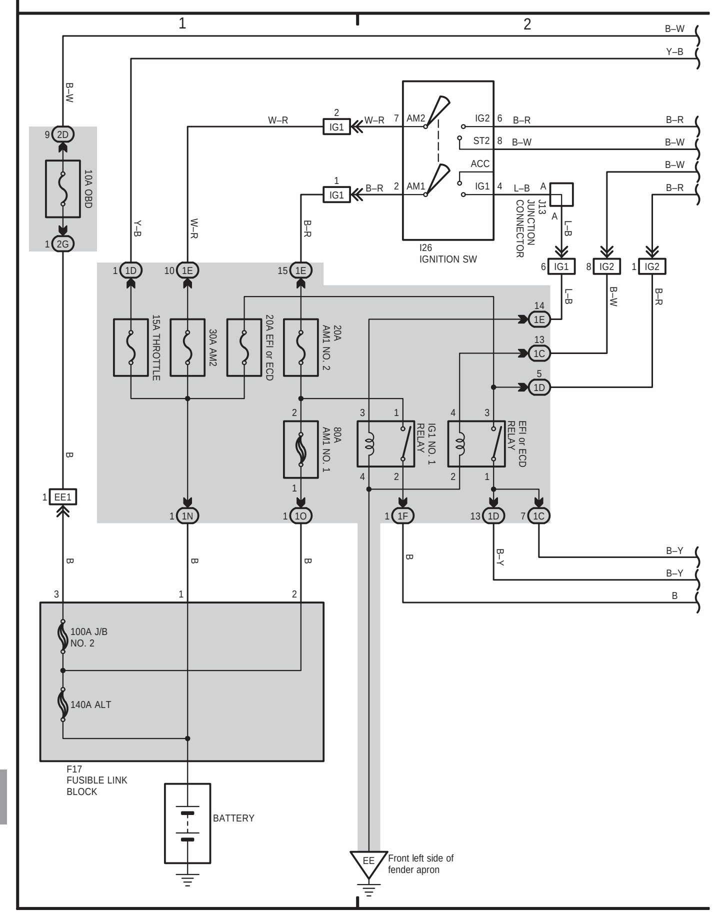

(Cont. next page)

Engine Control, Engine Immobiliser System and Fuel Tank Changeover (2UZ–FE)

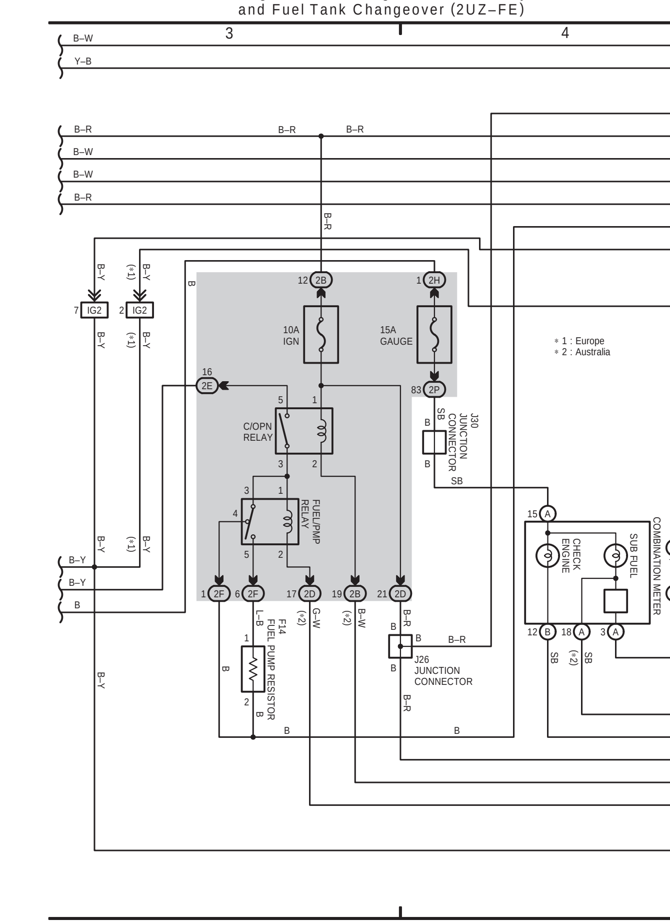

Engine Control, Engine Immobiliser System and Fuel Tank Changeover (2UZ–FE)

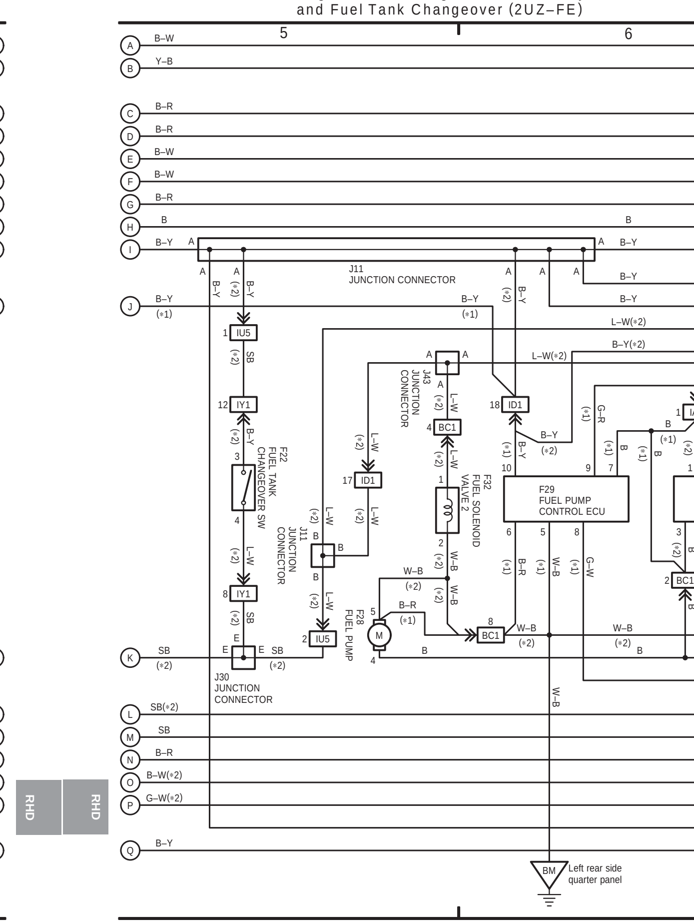

(Cont. next page)

Engine Control, Engine Immobiliser System and Fuel Tank Changeover (2UZ–FE)

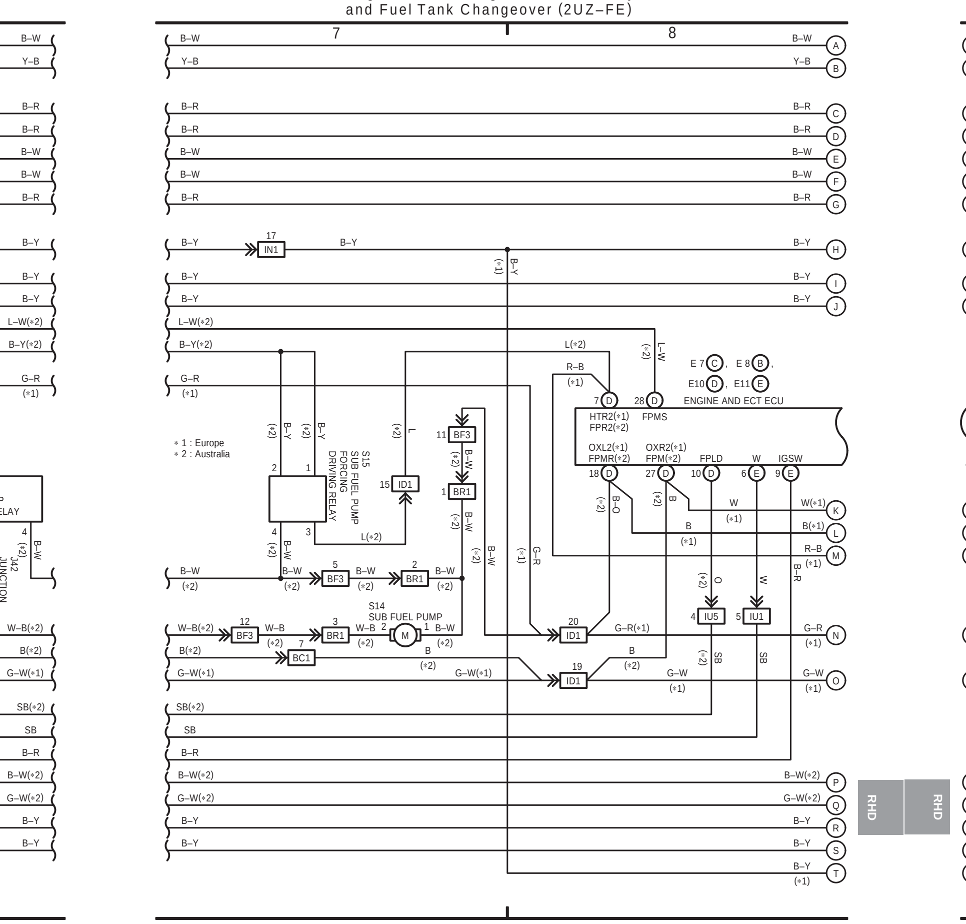

Engine Control, Engine Immobiliser System and Fuel Tank Changeover (2UZ–FE)

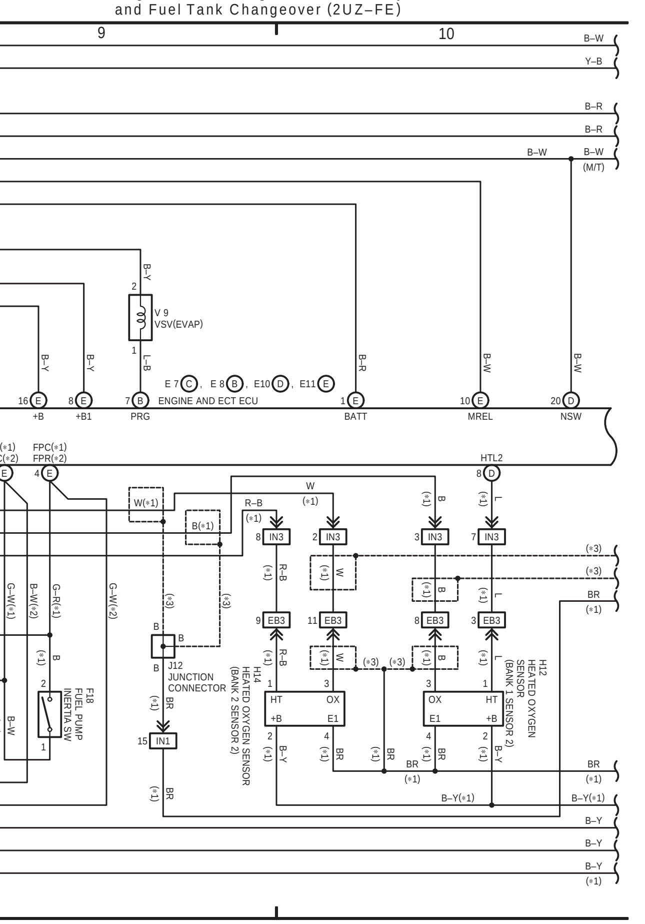

(Cont. next page)

Engine Control, Engine Immobiliser System and Fuel Tank Changeover (2UZ–FE)

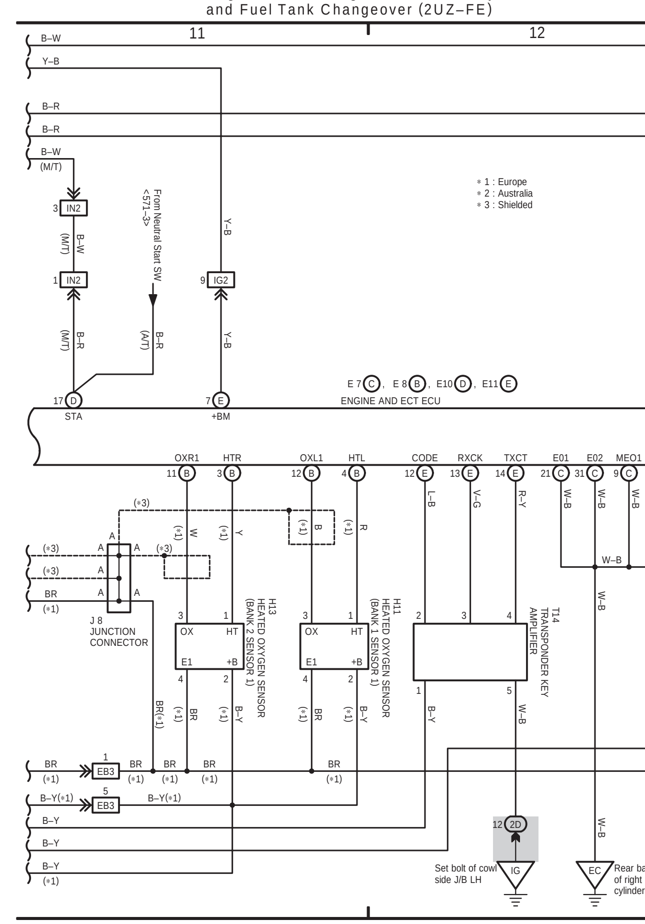

Engine Control, Engine Immobiliser System and Fuel Tank Changeover (2UZ–FE)

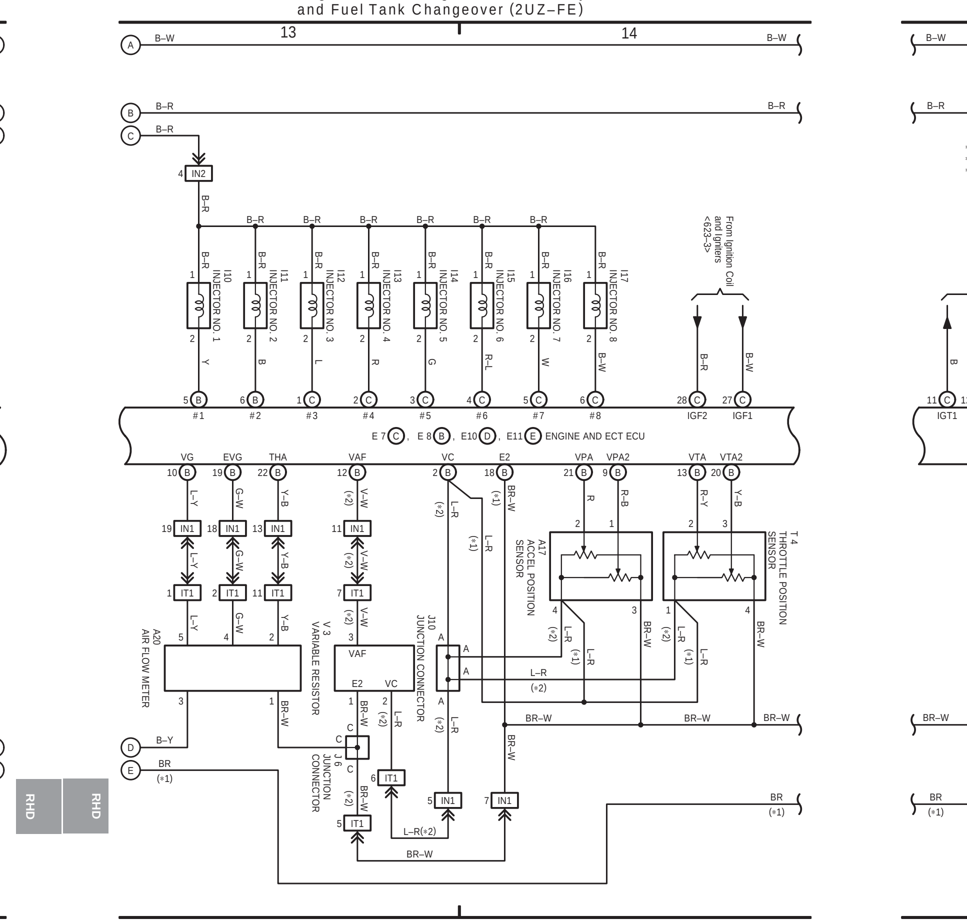

(Cont. next page)

Engine Control, Engine Immobiliser System and Fuel Tank Changeover (2UZ–FE)

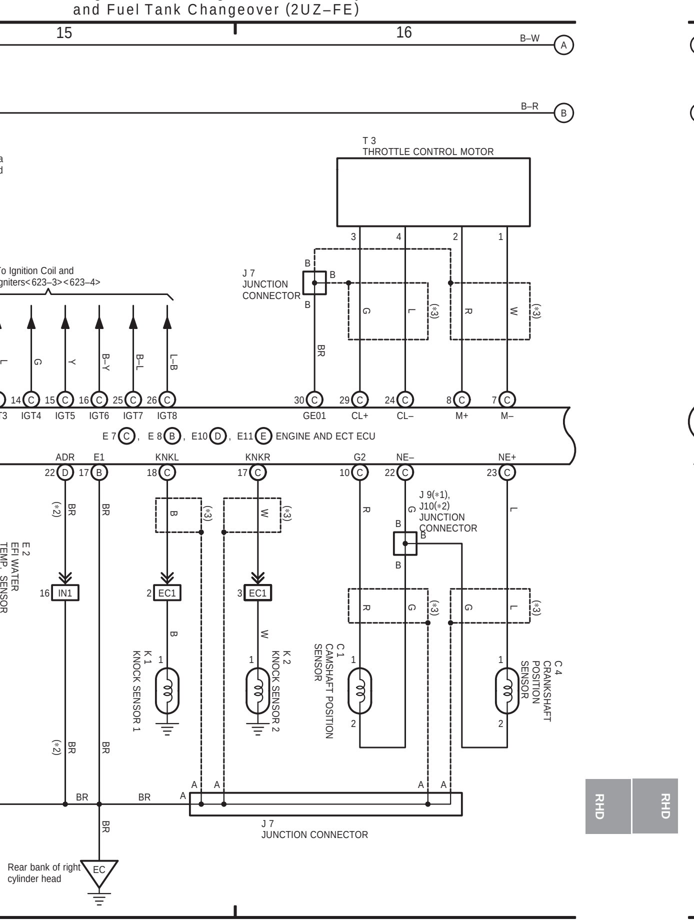

Engine Control, Engine Immobiliser System and Fuel Tank Changeover (2UZ–FE)

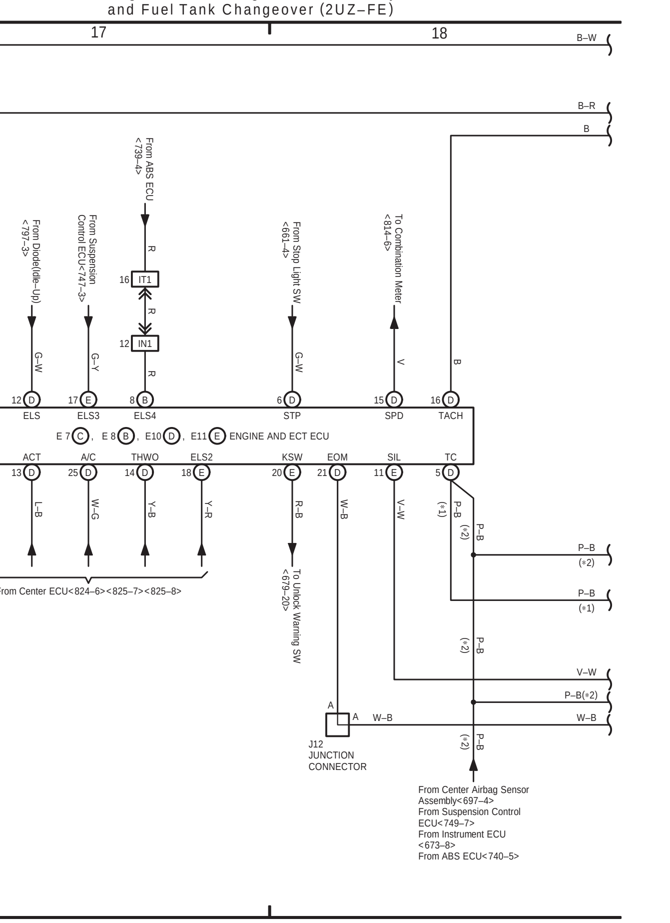

Engine Control, Engine Immobiliser System and Fuel Tank Changeover (2UZ–FE)

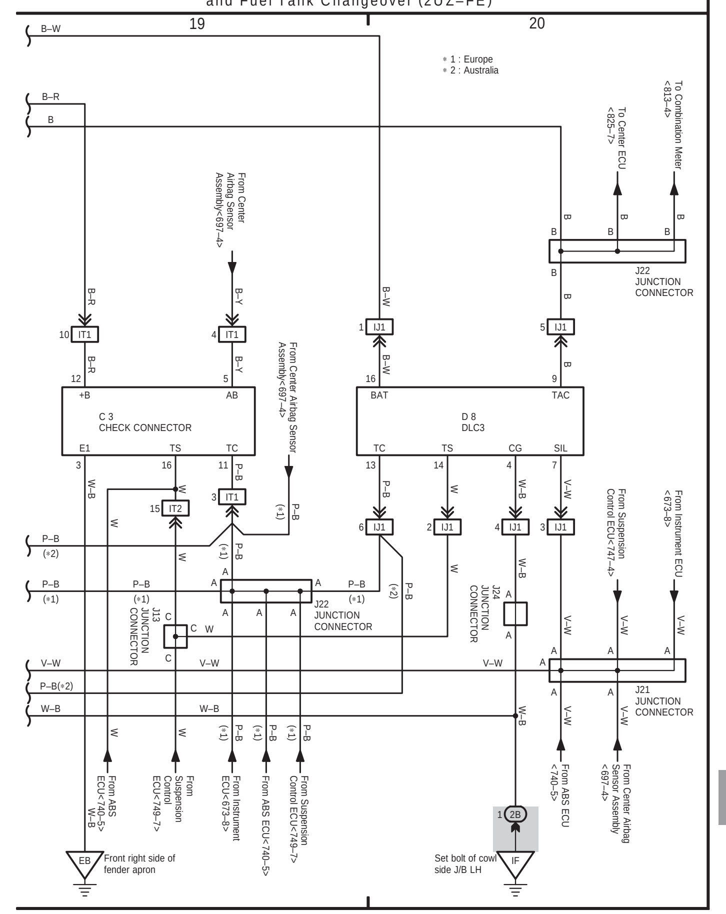

8 LAND CRUISER (RHD) (Cont' d)

(Cont. next page)

Power Source

Engine Control and Fuel Tank Changeover (2UZ-FE)

8 LAND CRUISER (RHD) (Cont' d)

(Cont. next page)

Engine Control and Fuel Tank Changeover (2UZ-FE)

8 LAND CRUISER (RHD) (Cont' d)

(Cont. next page)

Engine Control and Fuel Tank Changeover (2UZ-FE)

8 LAND CRUISER (RHD) (Cont' d)

(Cont. next page)

Engine Control and Fuel Tank Changeover (2UZ-FE)

8 LAND CRUISER (RHD) (Cont' d)

Engine Control and Fuel Tank Changeover (2UZ-FE)

Cruise Control (2UZ-FE)

8 LAND CRUISER (RHD) (Cont. next page)

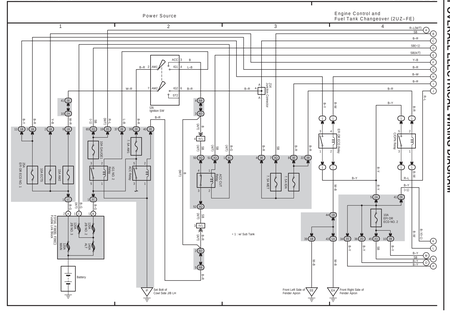

8 LAND CRUISER (RHD) (Cont' d) (Cont. next page)

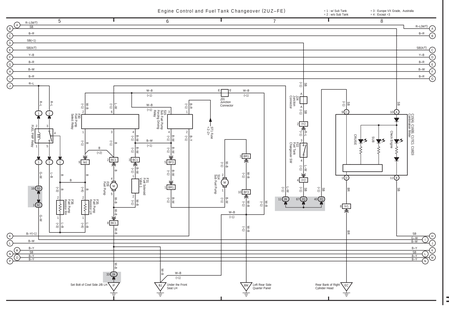

8 LAND CRUISER (RHD) (Cont' d) (Cont. next page)

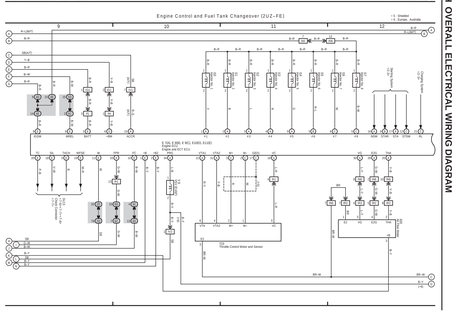

8 LAND CRUISER (RHD) (Cont' d) (Cont. next page)

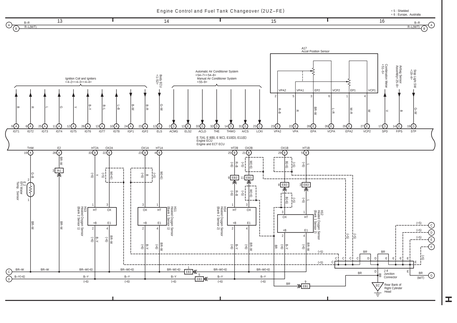

8 LAND CRUISER (RHD) (Cont' d)

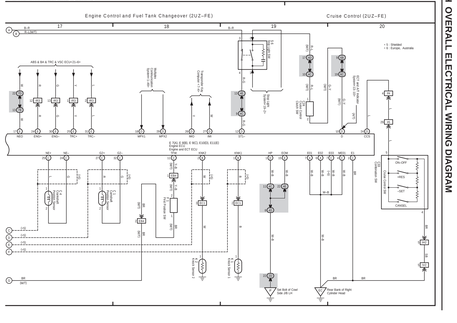

Power Source (2UZ–FE) / Engine Control and Engine Immobiliser System (2UZ–FE)

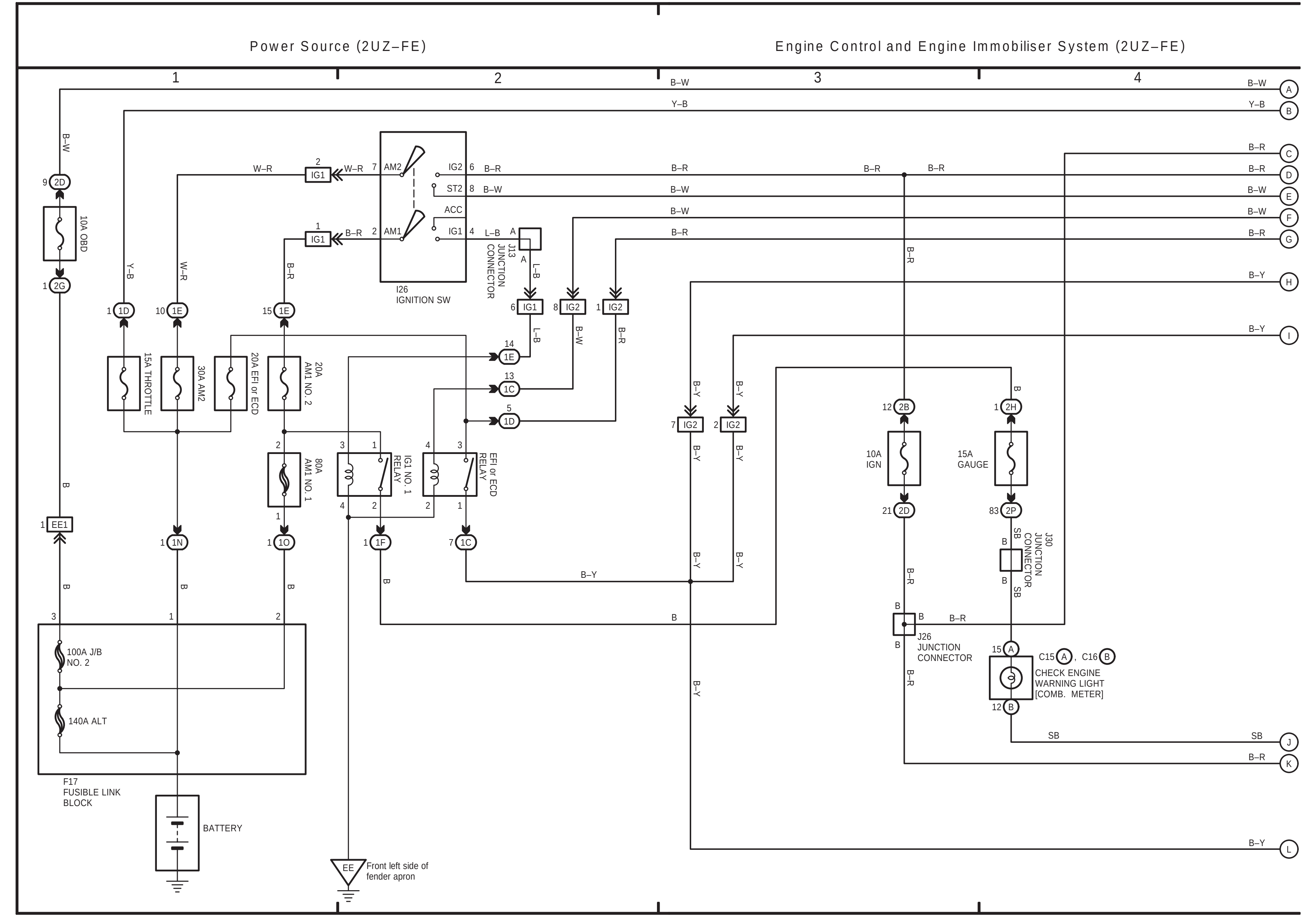

Engine Control and Engine Immobiliser System (2UZ–FE)

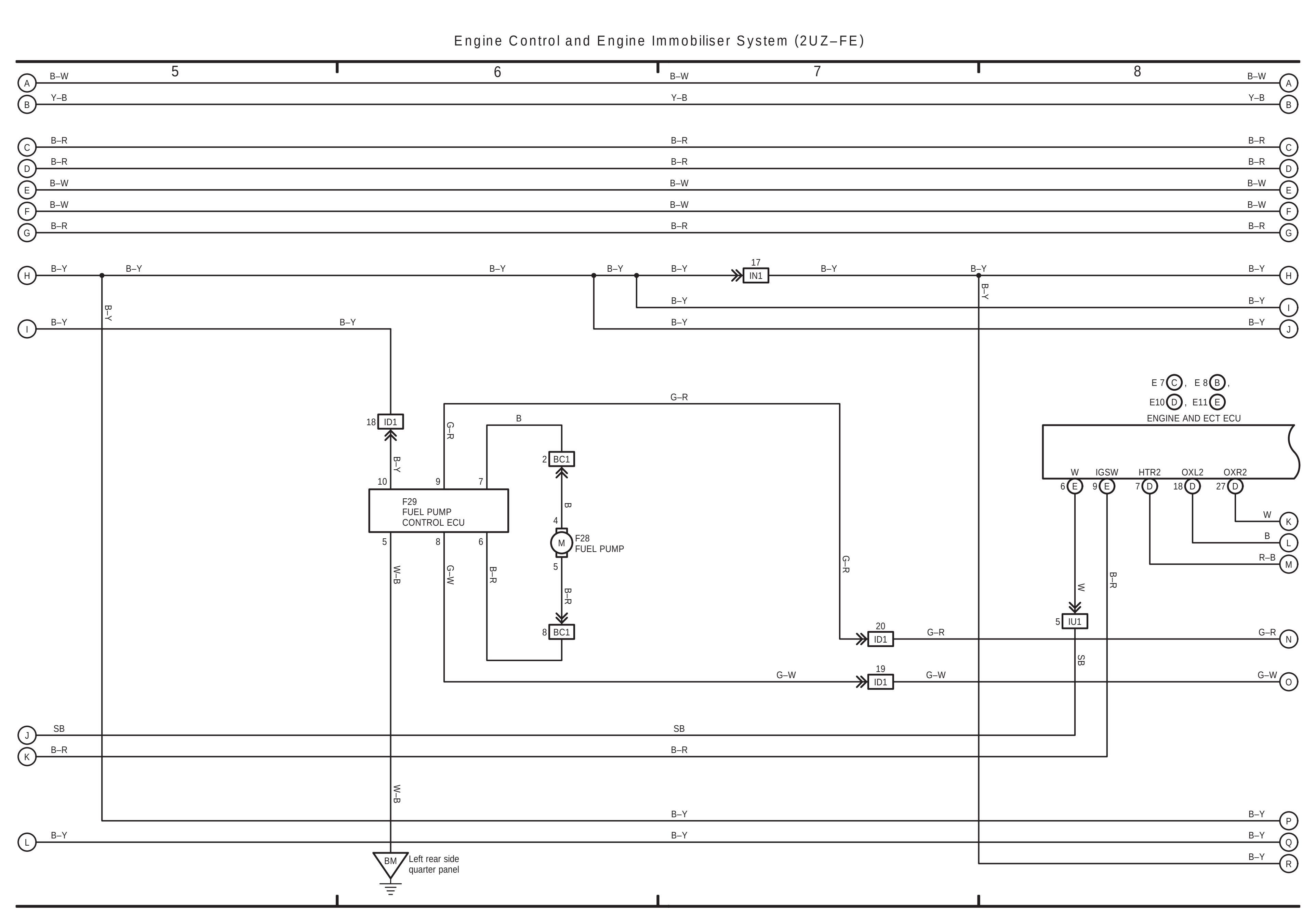

Engine Control and Engine Immobiliser System (2UZ–FE)

∗1 : Shielded

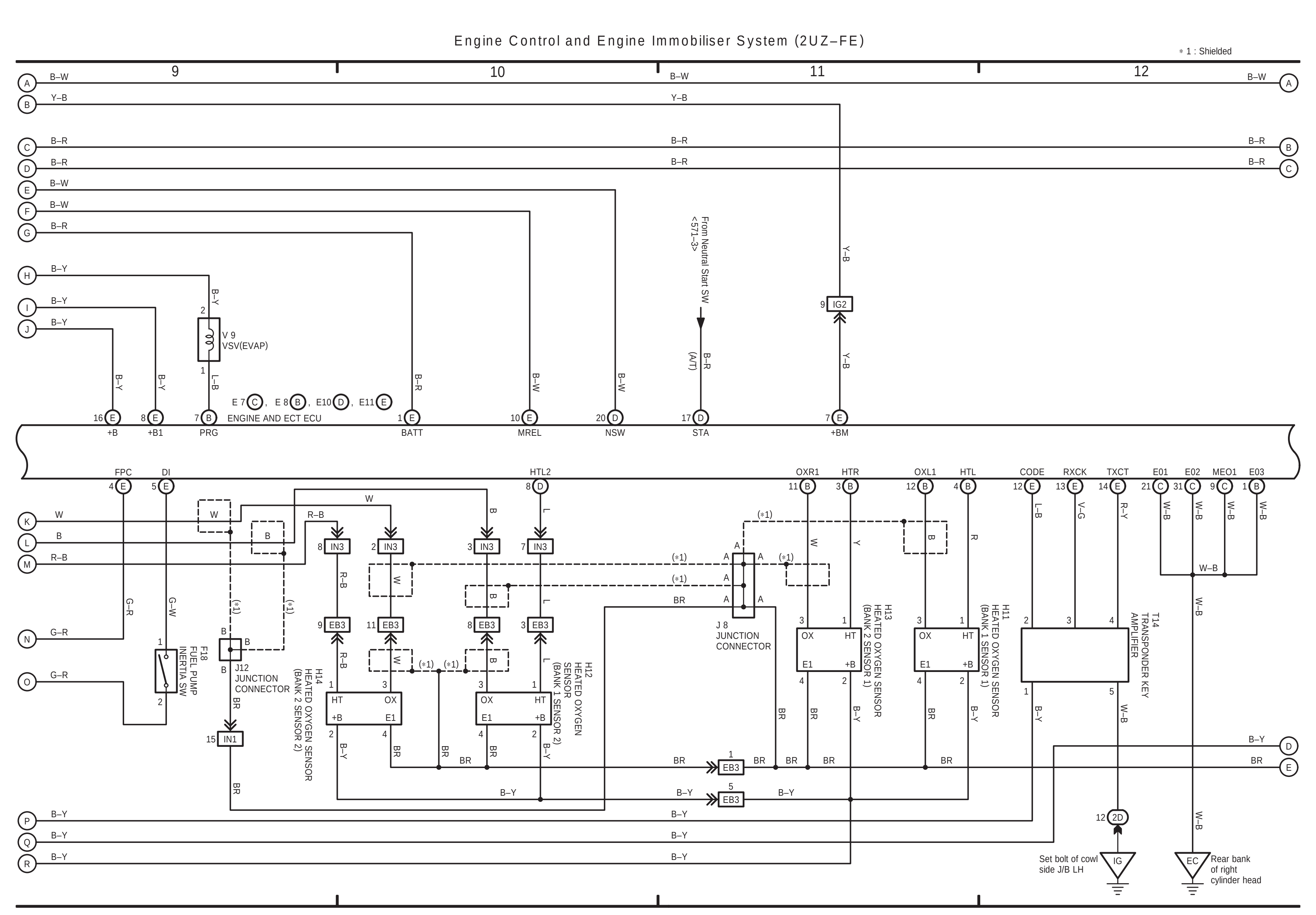

Engine Control and Engine Immobiliser System (2UZ–FE)

∗1 : Shielded

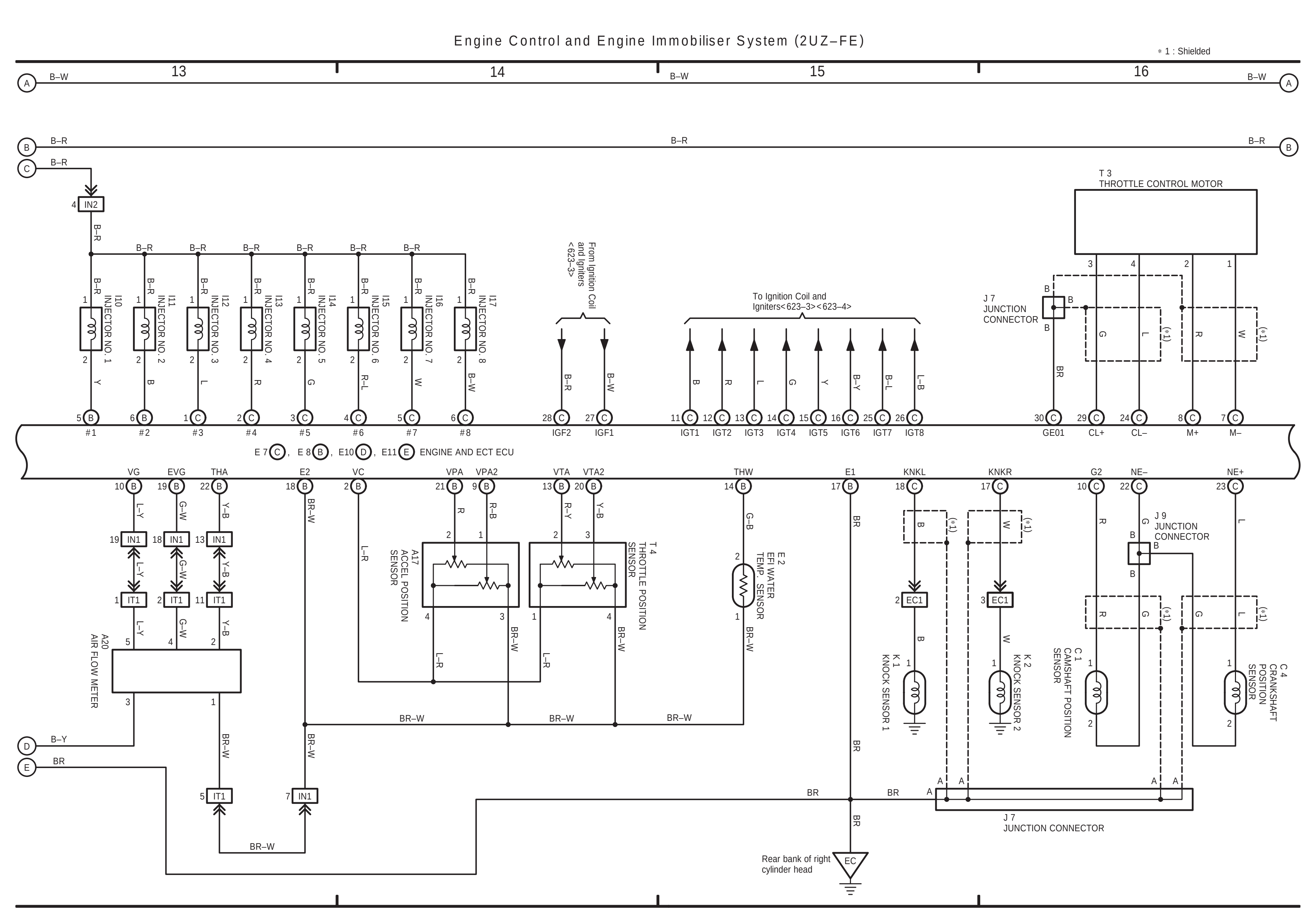

Engine Control and Engine Immobiliser System (2UZ–FE)

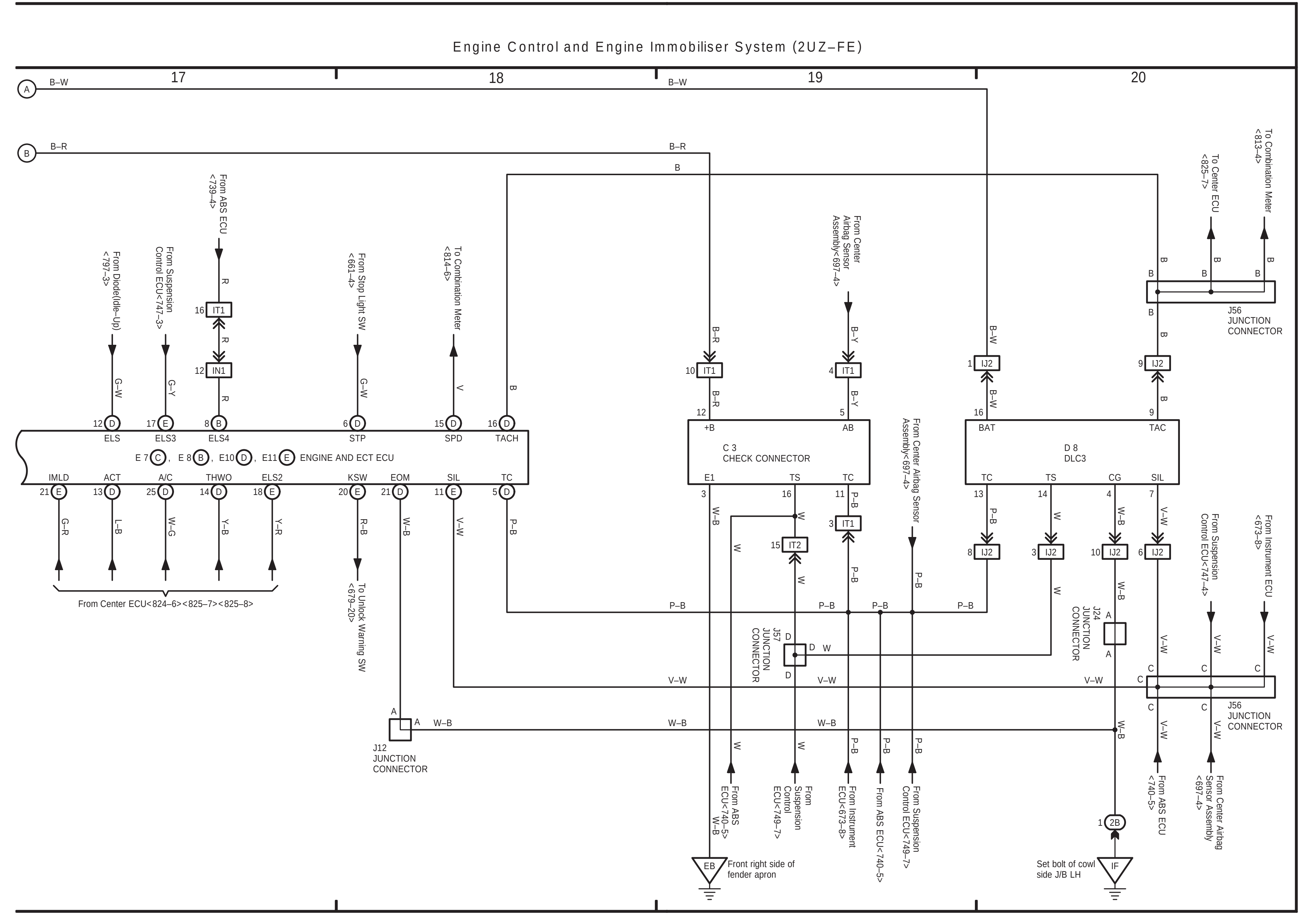

Power Source (2UZ–FE Europe)

Engine Control and Engine Immobiliser System (2UZ–FE Europe)

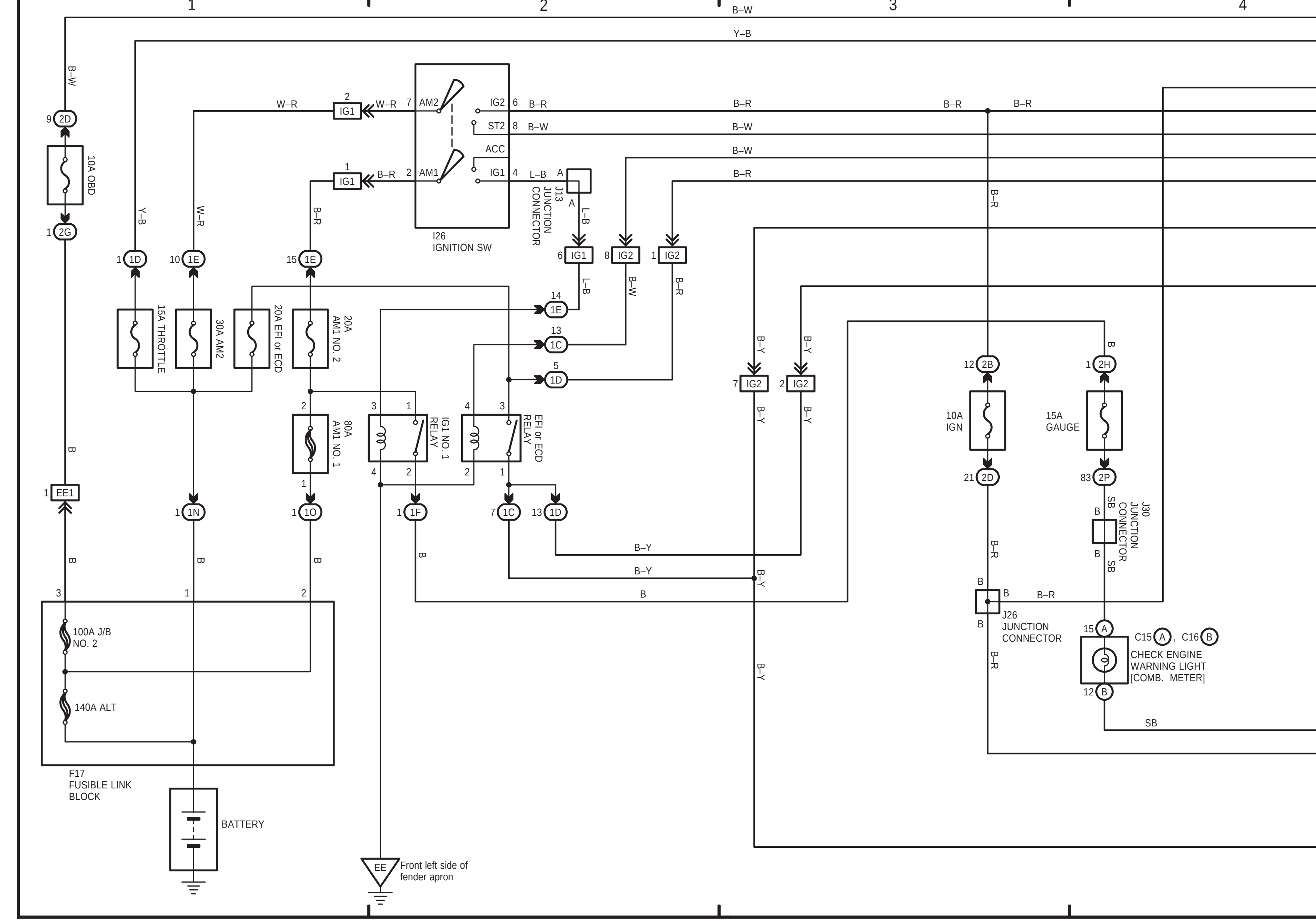

Engine Control and Engine Immobiliser System (2UZ–FE Europe)

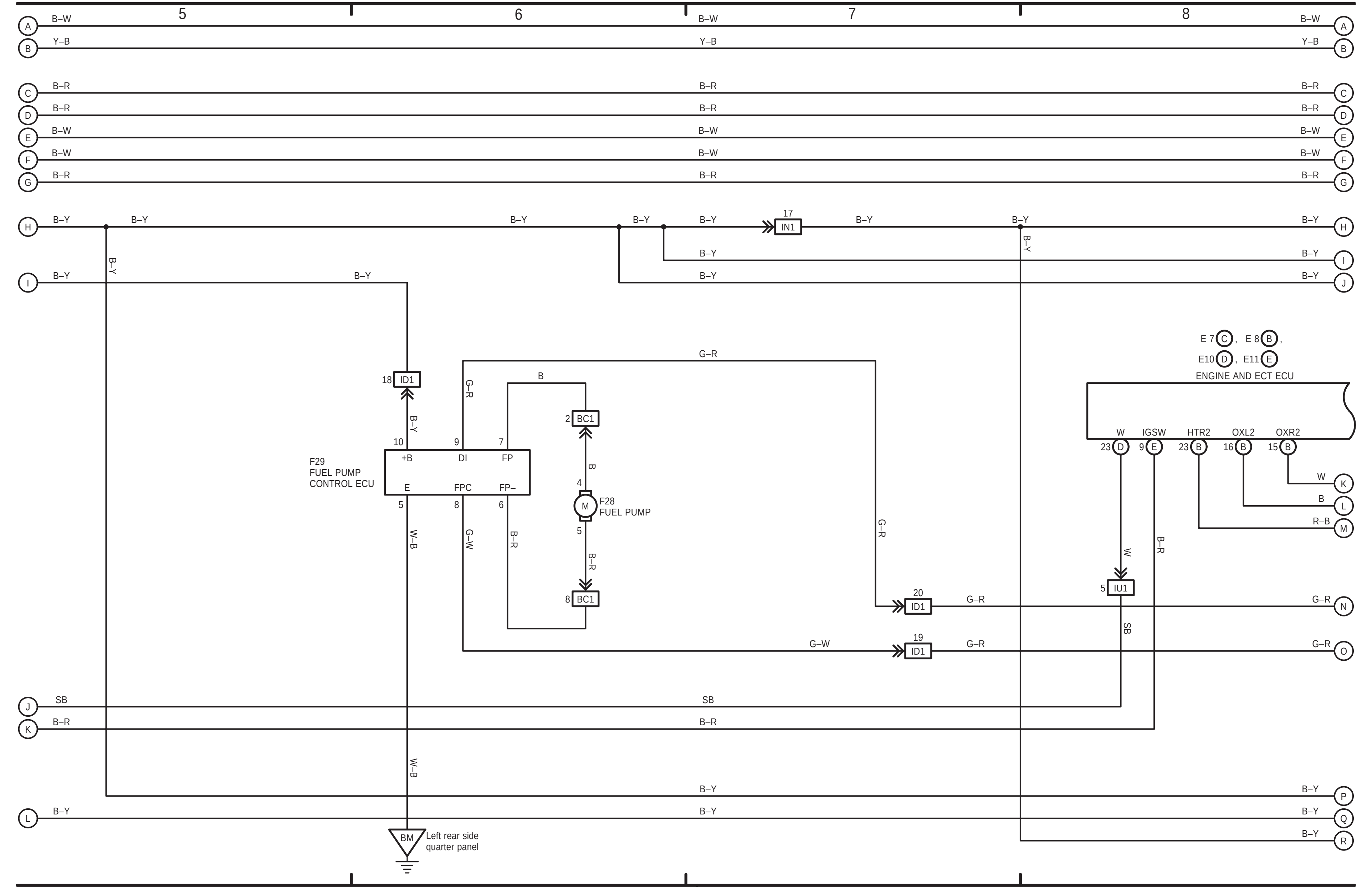

Engine Control and Engine Immobiliser System (2UZ–FE Europe)

＊1 : Shielded

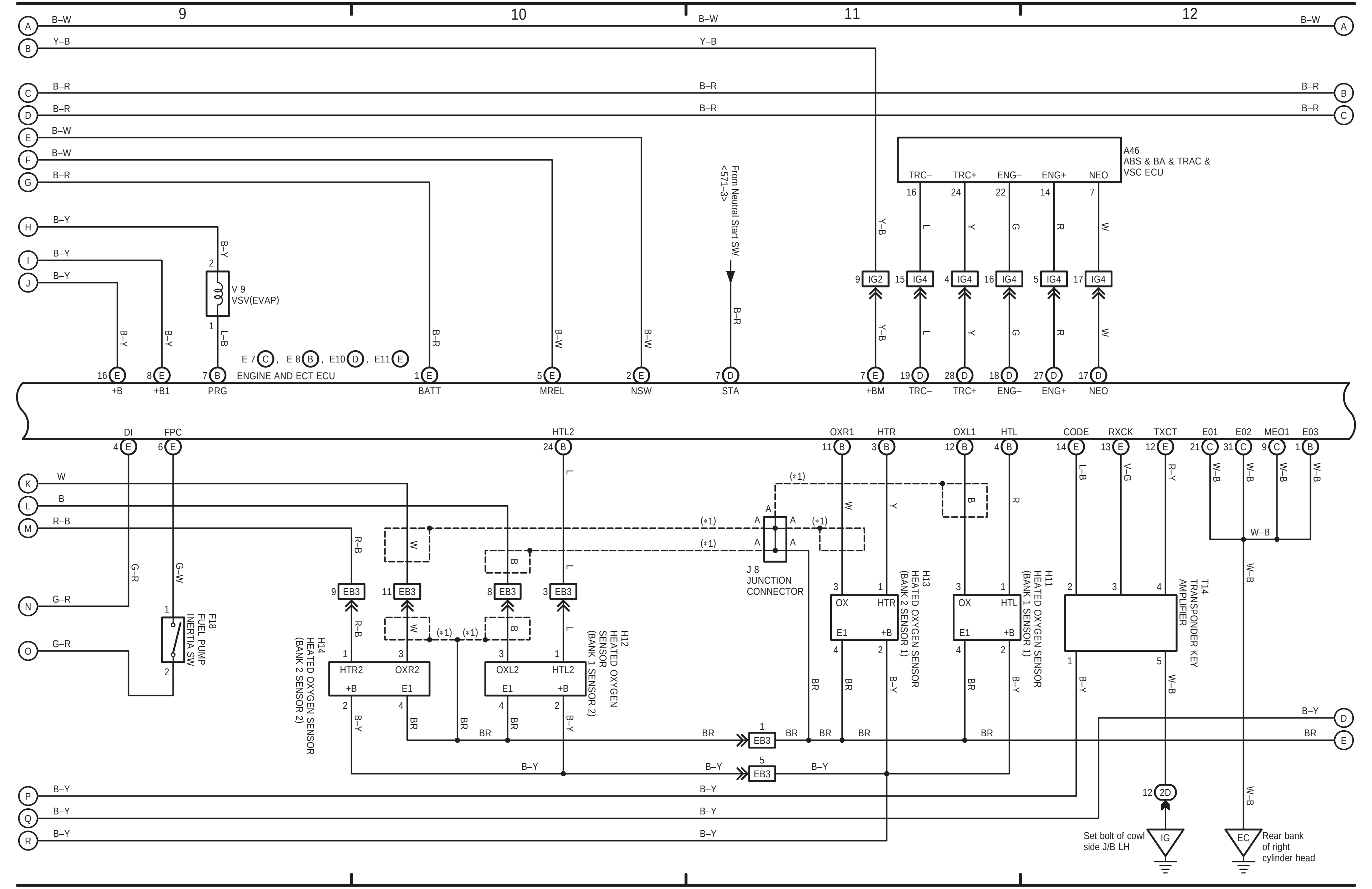

Engine Control and Engine Immobiliser System (2UZ–FE Europe)

＊1 : Shielded

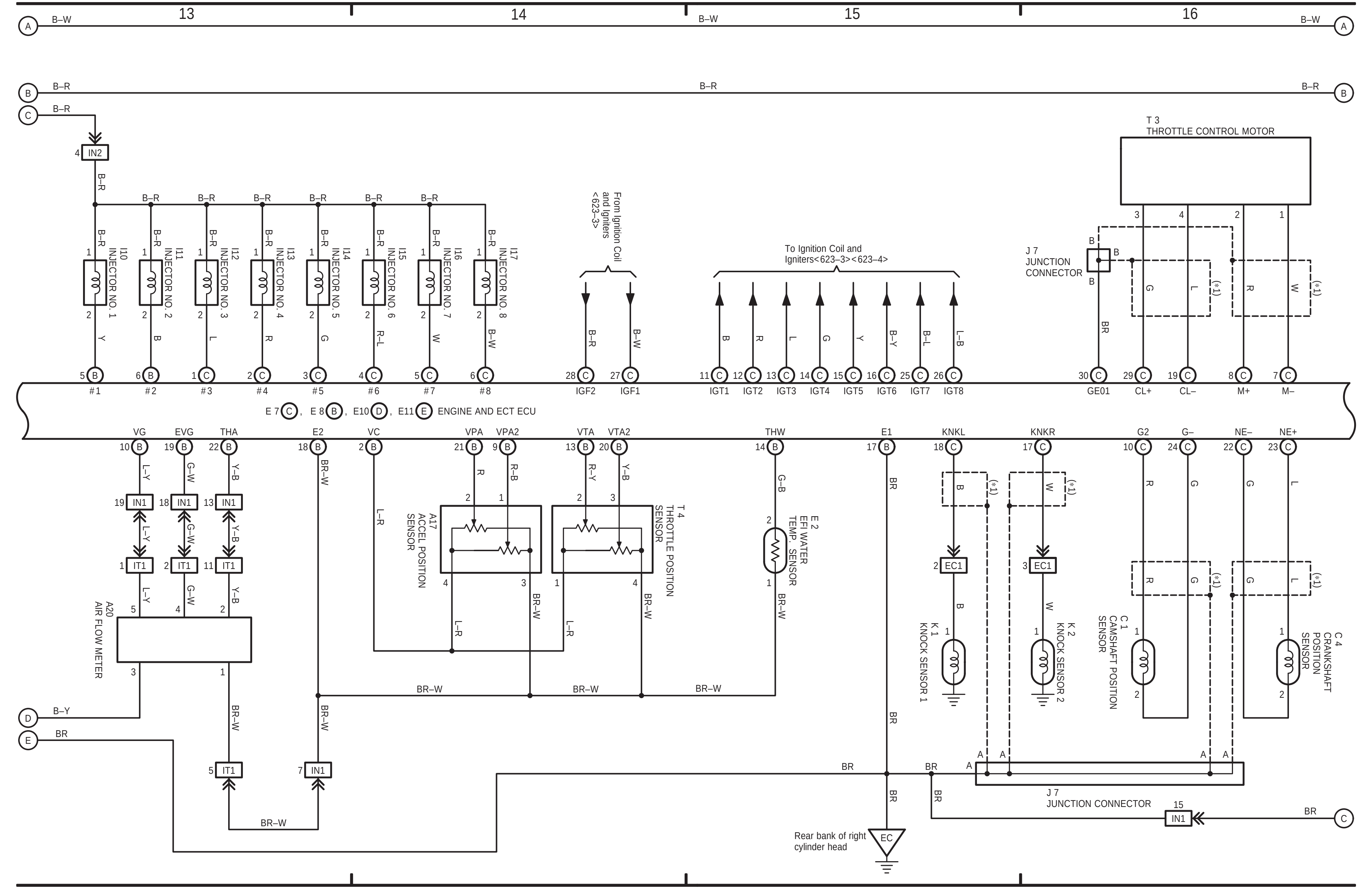

Engine Control and Engine Immobiliser System (2UZ–FE Europe)

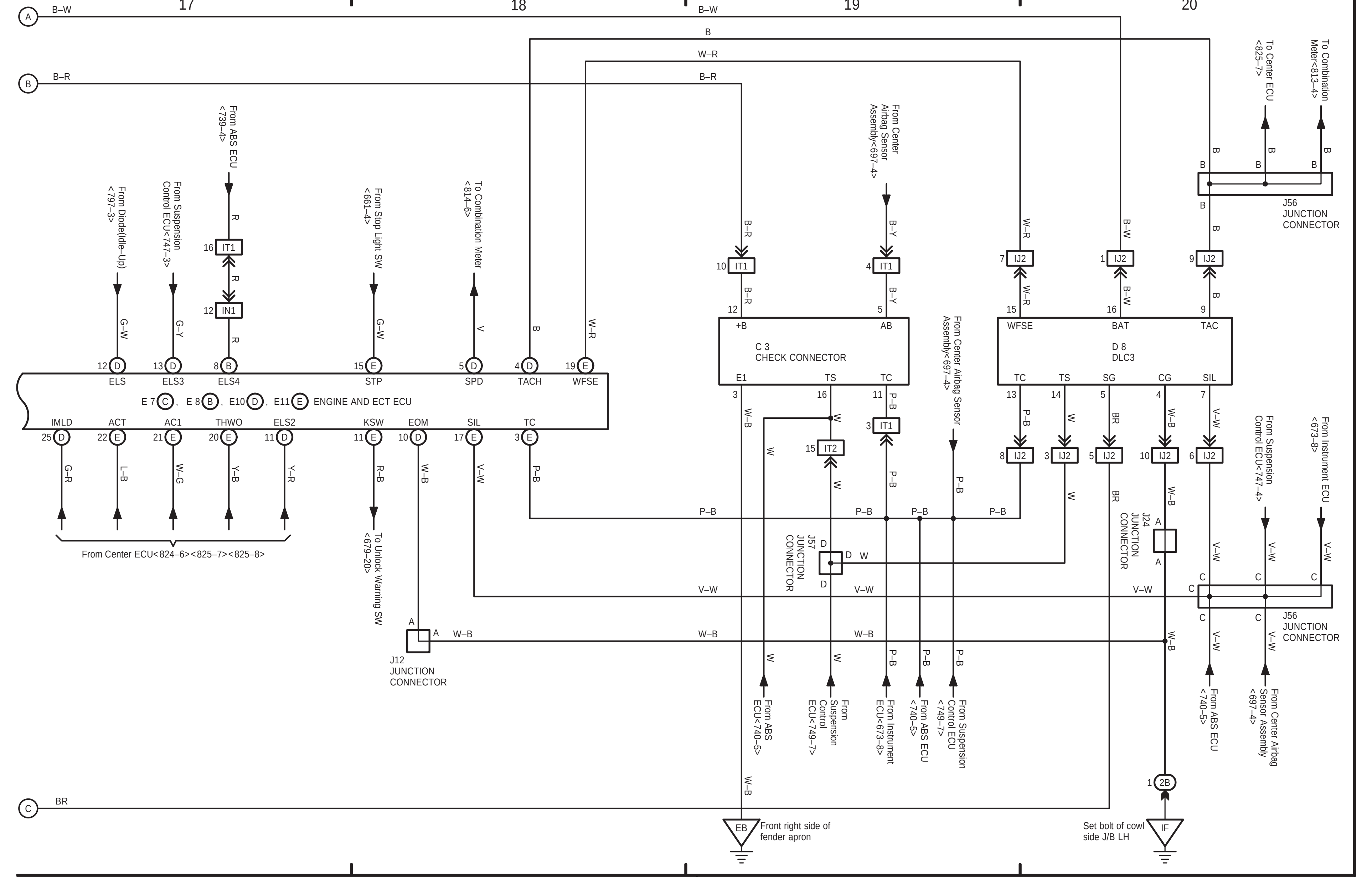

8 LAND CRUISER (RHD) (Cont' d)

(Cont. next page)

Power Source

Engine Control and Fuel Tank Changeover (2UZ-FE)

8 LAND CRUISER (RHD) (Cont' d)

(Cont. next page)

Engine Control and Fuel Tank Changeover (2UZ-FE)

8 LAND CRUISER (RHD) (Cont' d)

(Cont. next page)

Engine Control and Fuel Tank Changeover (2UZ-FE)

8 LAND CRUISER (RHD) (Cont' d)

(Cont. next page)

Engine Control and Fuel Tank Changeover (2UZ-FE)

8 LAND CRUISER (RHD) (Cont' d)

Engine Control and Fuel Tank Changeover (2UZ-FE)

Cruise Control (2UZ-FE)

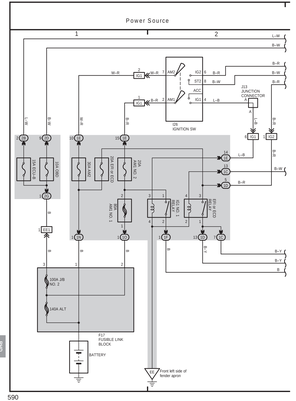
Power Source
1
2
IG2 NO.1
ACC
IGN
ST1
ST2
ACC
IG1
IG2
ST1
ST2
IGN
IGN IGNITION SW
J21 JUNCTION CONNECTOR
J22 JUNCTION CONNECTOR
J23 JUNCTION CONNECTOR
J24 JUNCTION CONNECTOR
J25 JUNCTION CONNECTOR
J26 JUNCTION CONNECTOR
J27 JUNCTION CONNECTOR
J28 JUNCTION CONNECTOR
J29 JUNCTION CONNECTOR
J30 JUNCTION CONNECTOR
J31 JUNCTION CONNECTOR
J32 JUNCTION CONNECTOR
J33 JUNCTION CONNECTOR

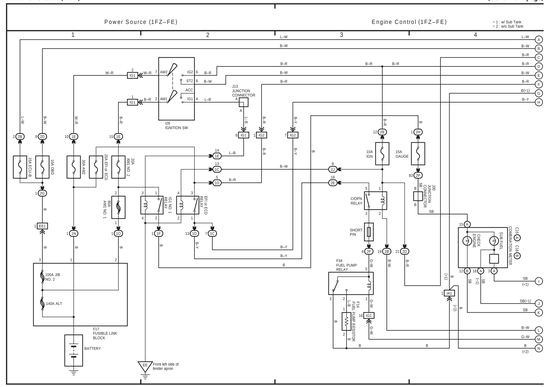
Power Source (1FZ-FE)
Engine Control (1FZ-FE)
* 1 : w/ Sub Tank
* 2 : w/o Sub Tank
1
2
3
4
IGNITION SW
ACC
IG1
ST1
J/C (JUNCTION CONNECTOR)
J/B (JUNCTION BLOCK)
ECU-IG NO.1
ECU-B NO.2
ECU-B NO.1
ENGINE ROOM R/B
ENGINE ROOM J/B
ENGINE ROOM J/B NO.2
ENGINE ROOM J/B NO.3
ENGINE ROOM J/B NO.4
ENGINE ROOM J/B NO.5
ENGINE ROOM J/B NO.6
ENGINE ROOM J/B NO.7
ENGINE ROOM J/B NO.8
ENGINE ROOM J/B NO.9
ENGINE ROOM J/B NO.10
ENGINE ROOM J/B NO.11
ENGINE ROOM J/B

Power Source

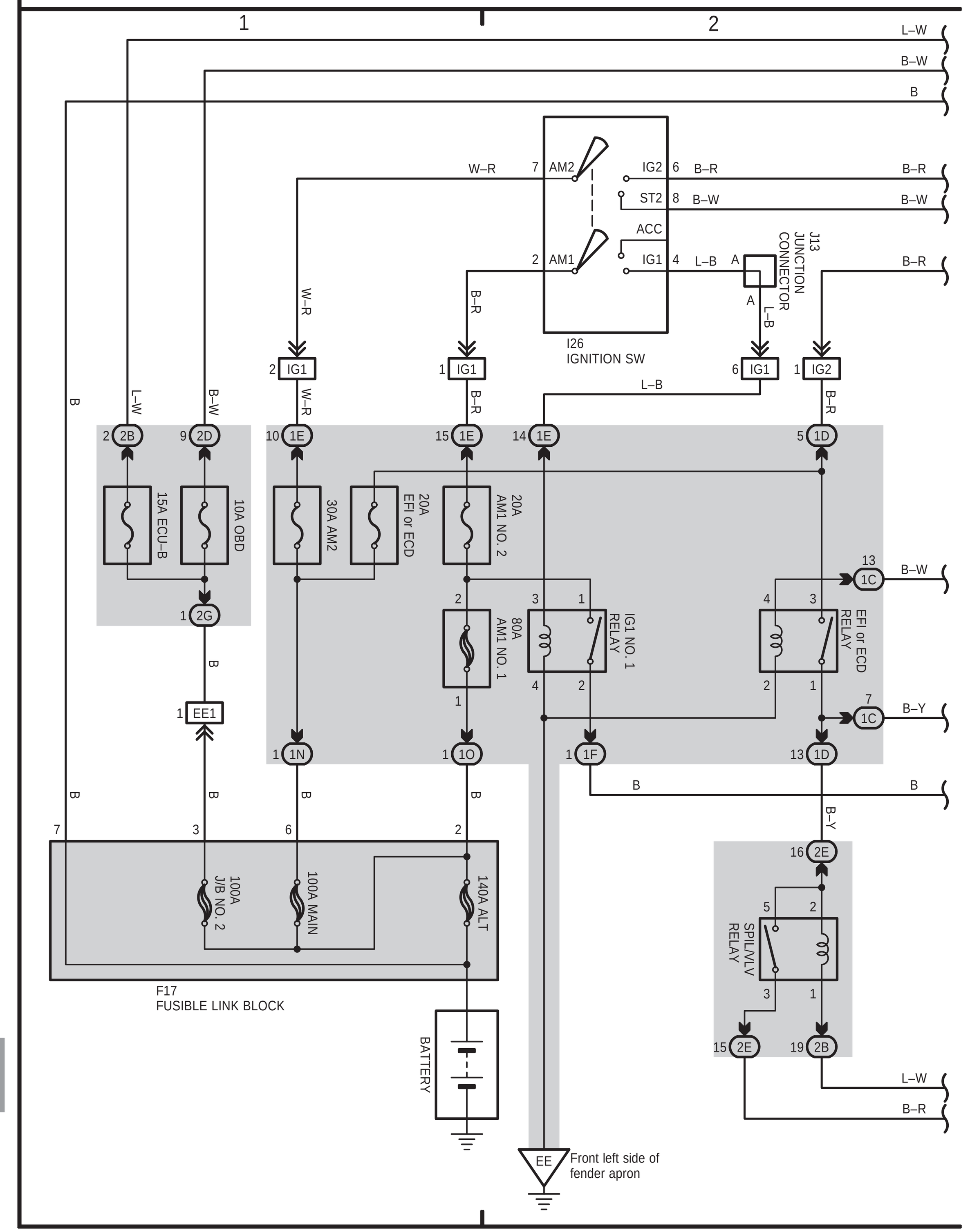

Engine Control (1HD–FTE)

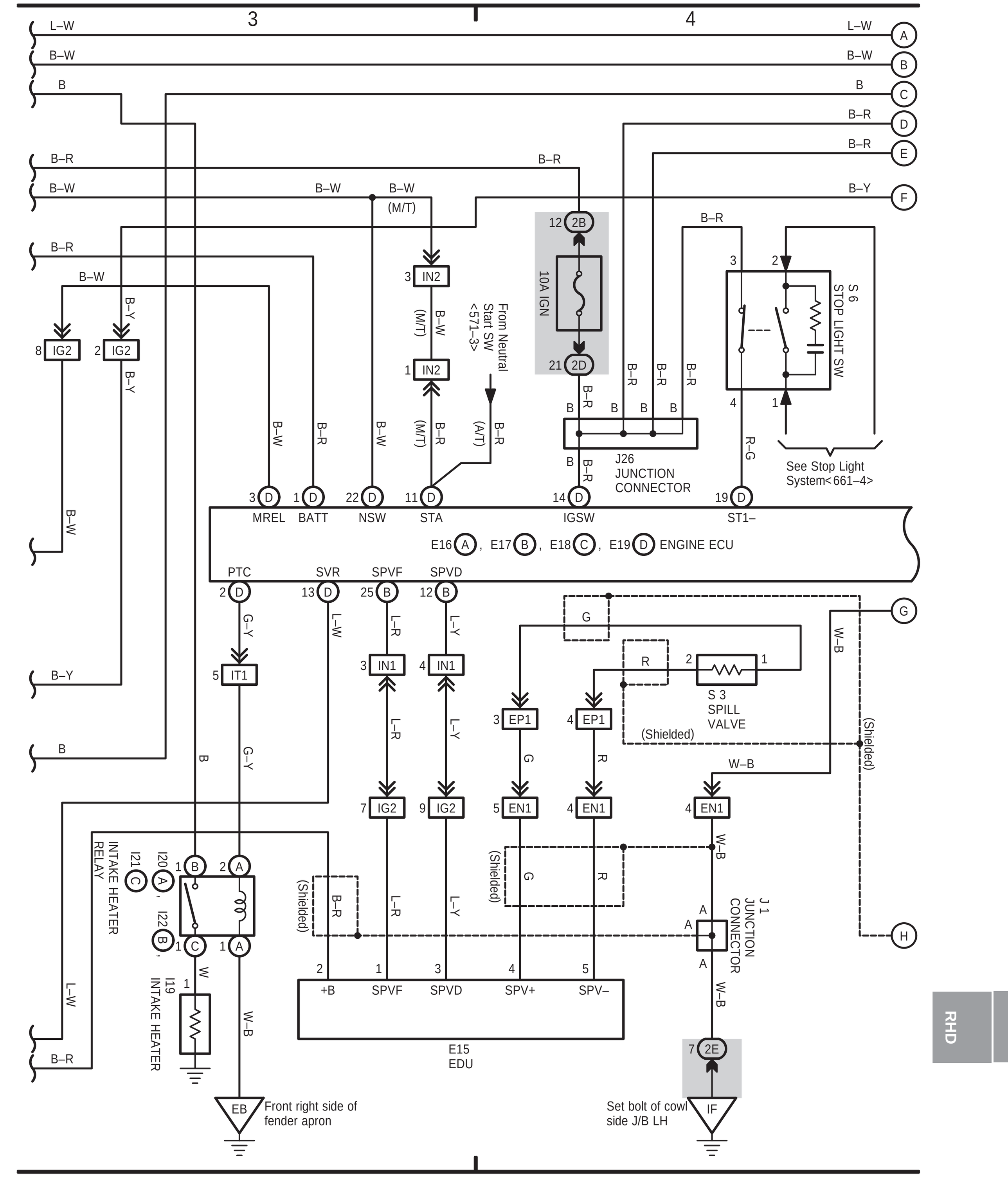

Engine Control (1HD–FTE)

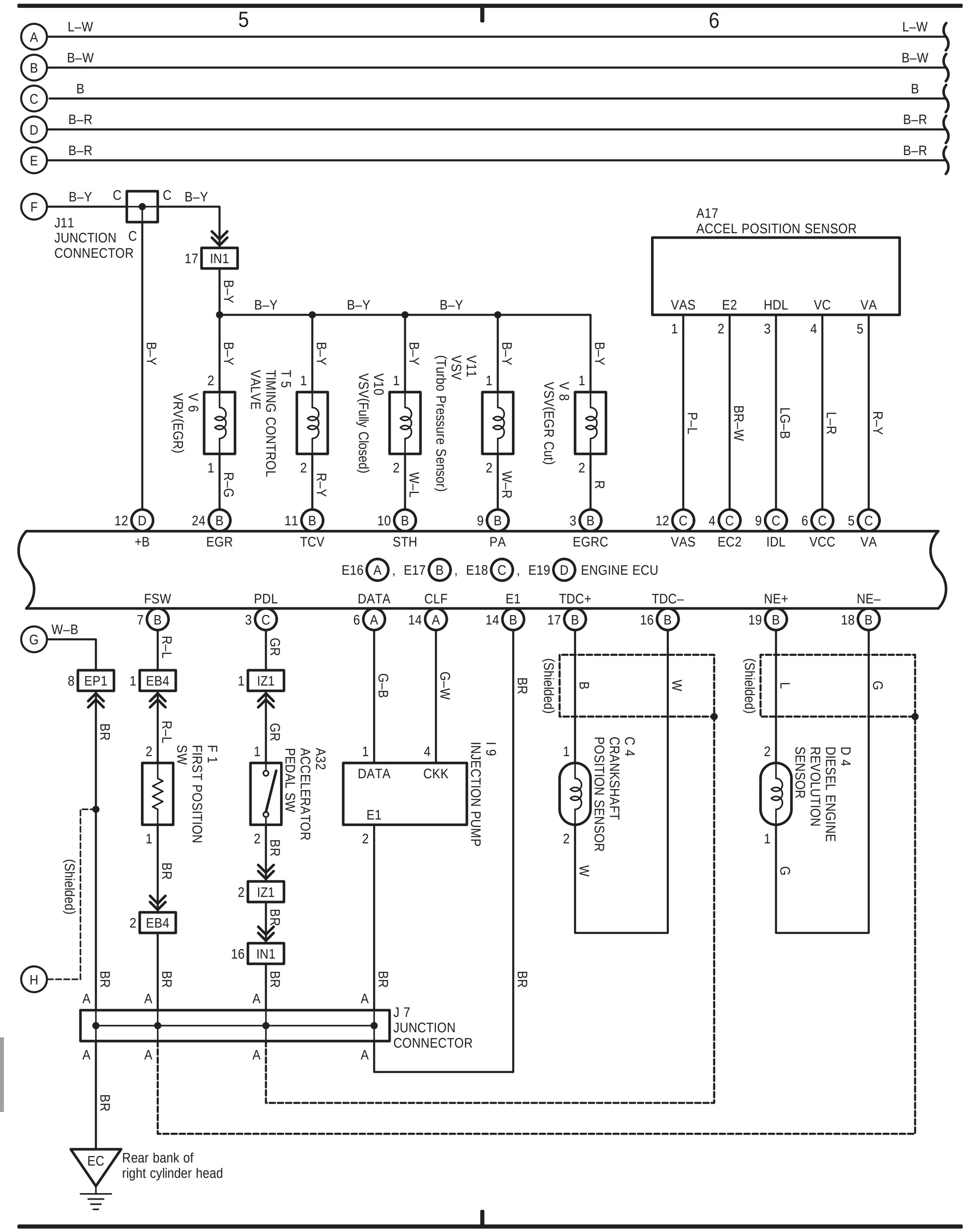

Engine Control (1HD–FTE)

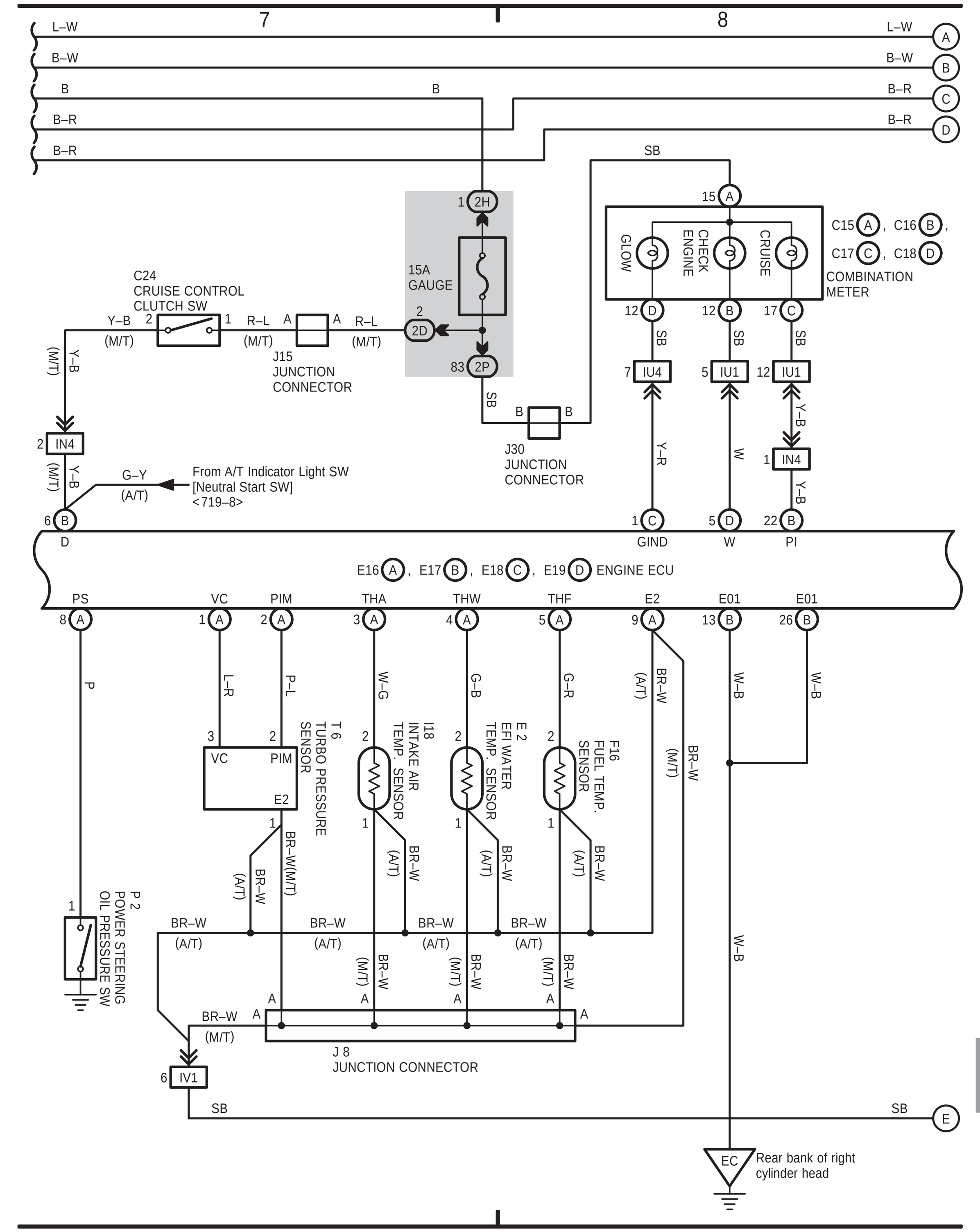

Engine Control (1HD–FTE)

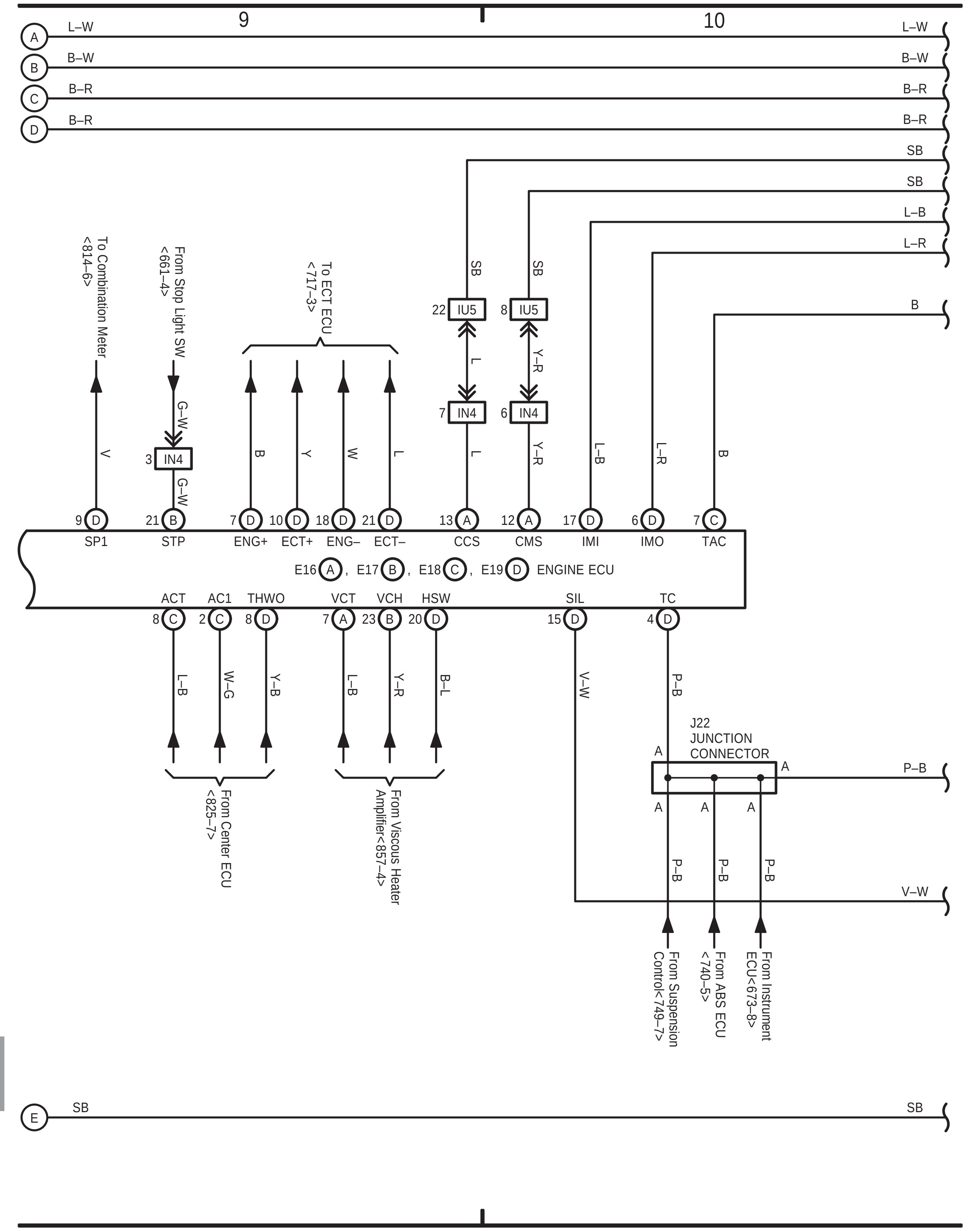

Engine Control (1HD–FTE)

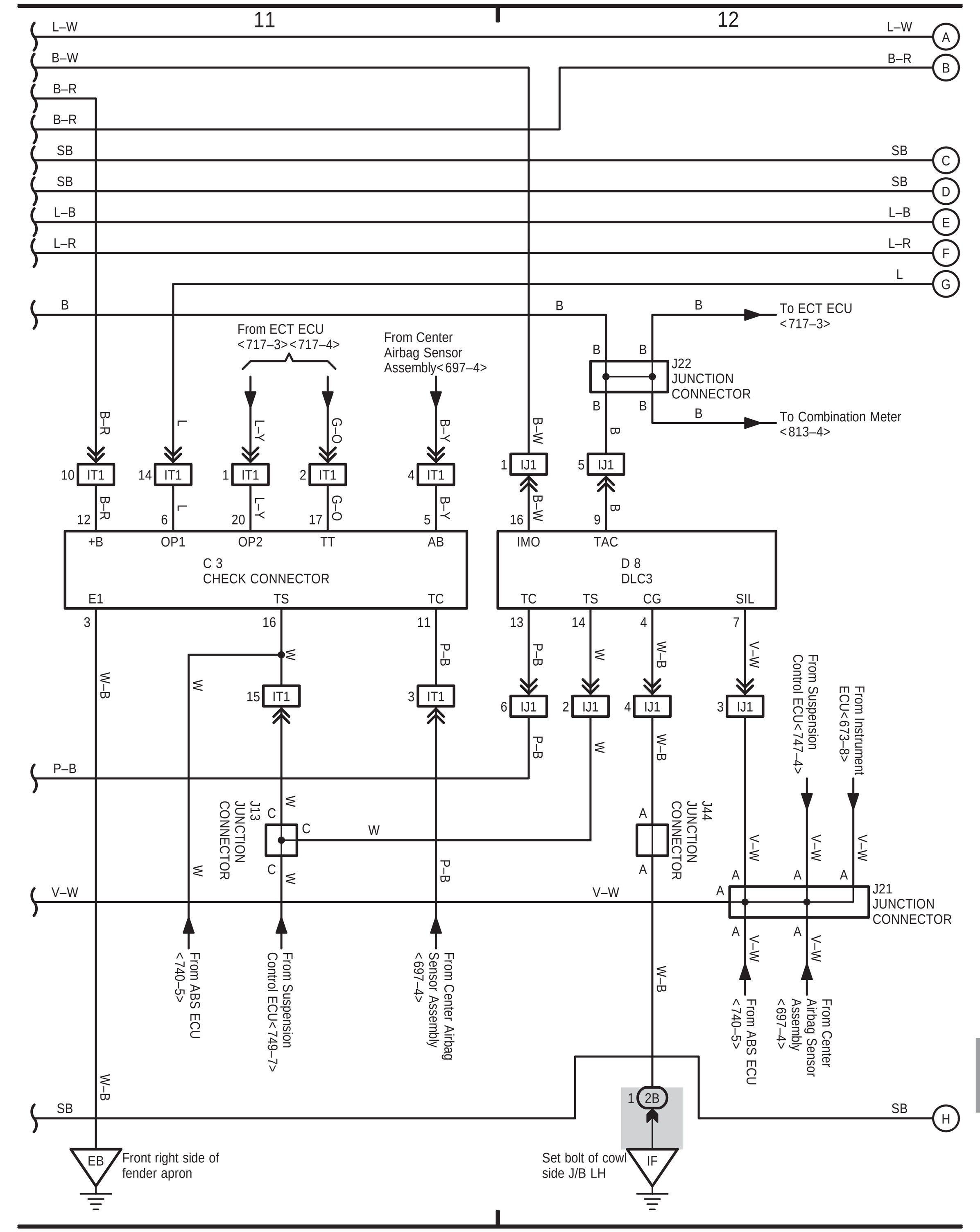

Engine Immobiliser System (1HD–FTE)

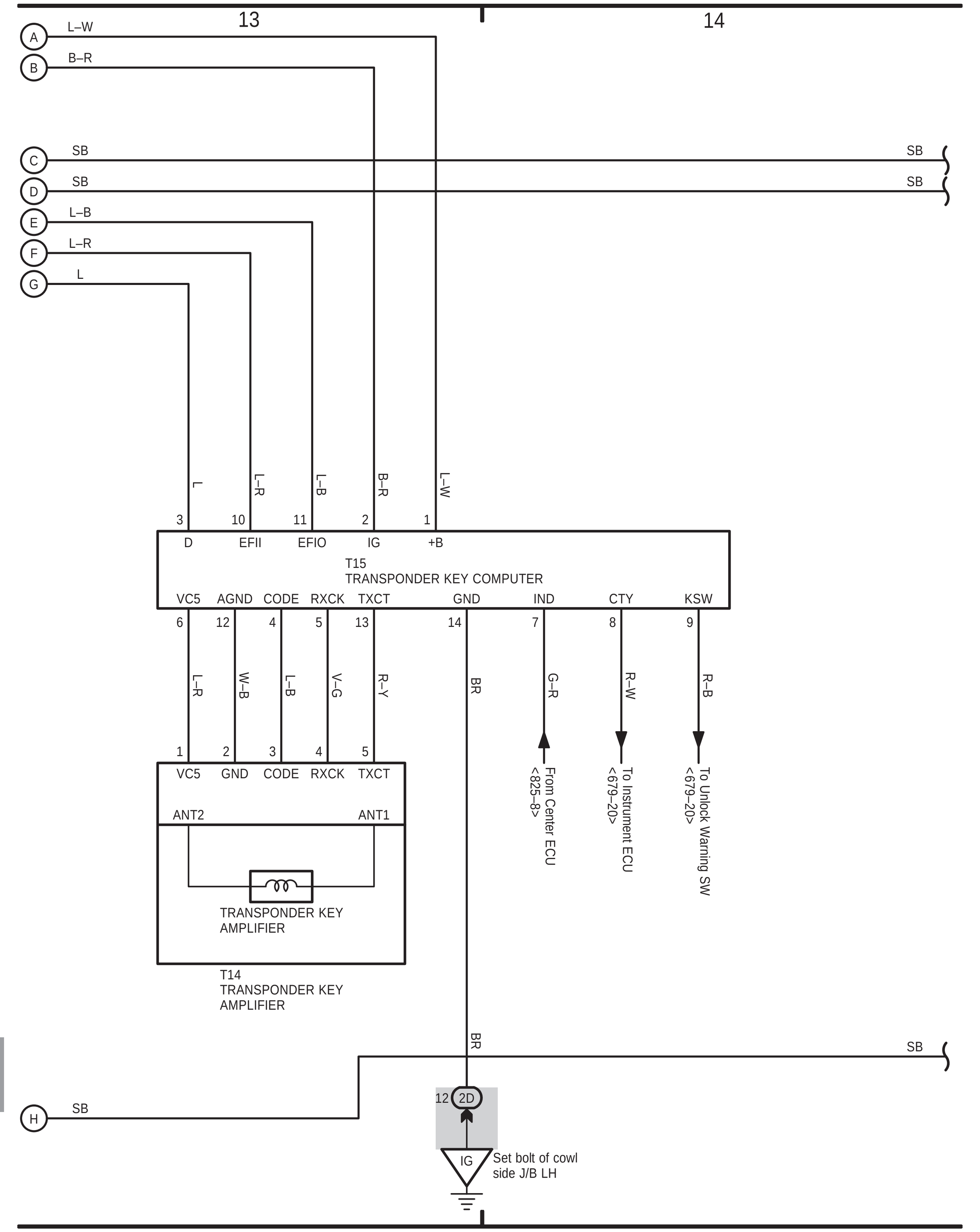

Cruise Control (1HD–FTE)

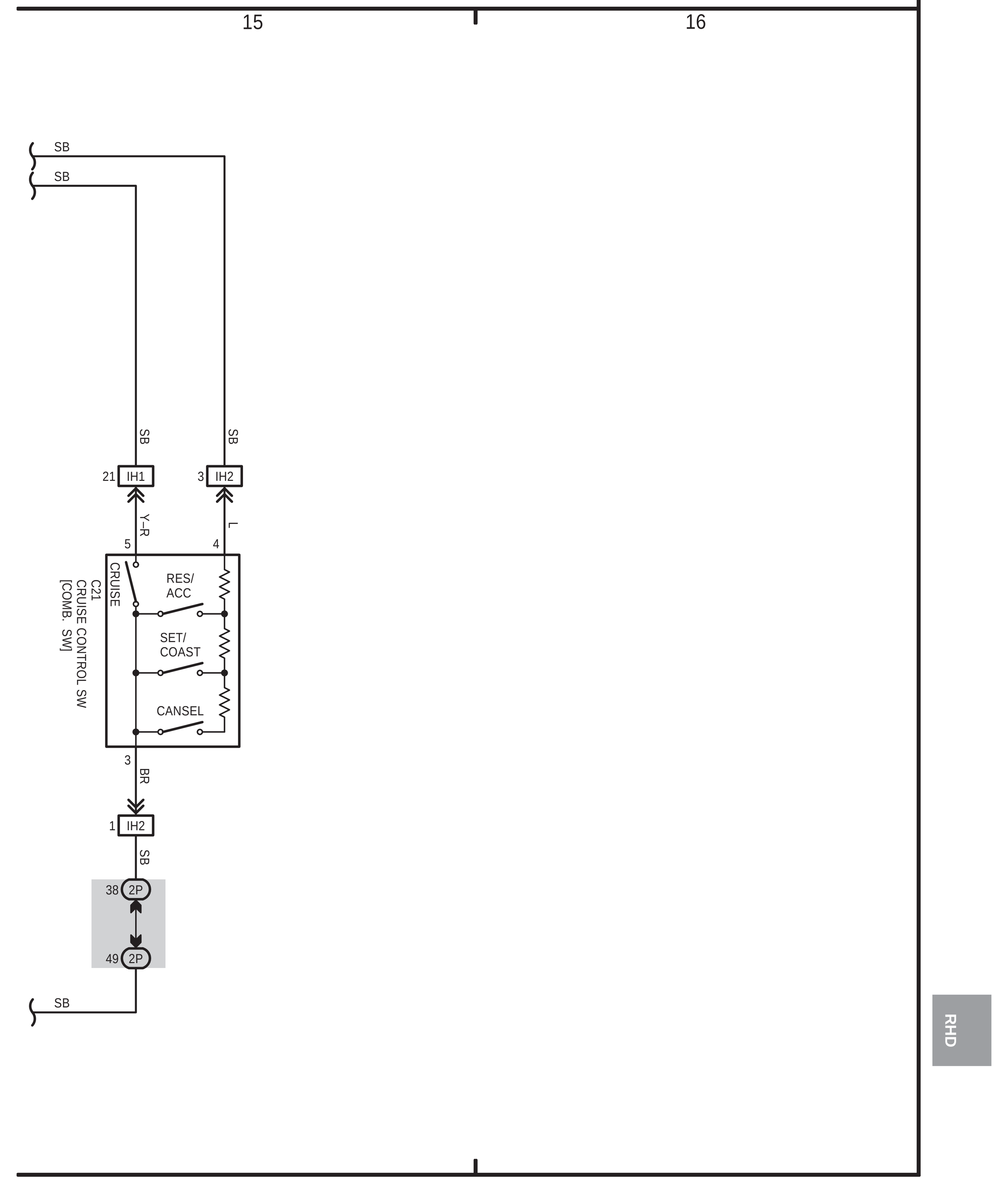

– 29 –

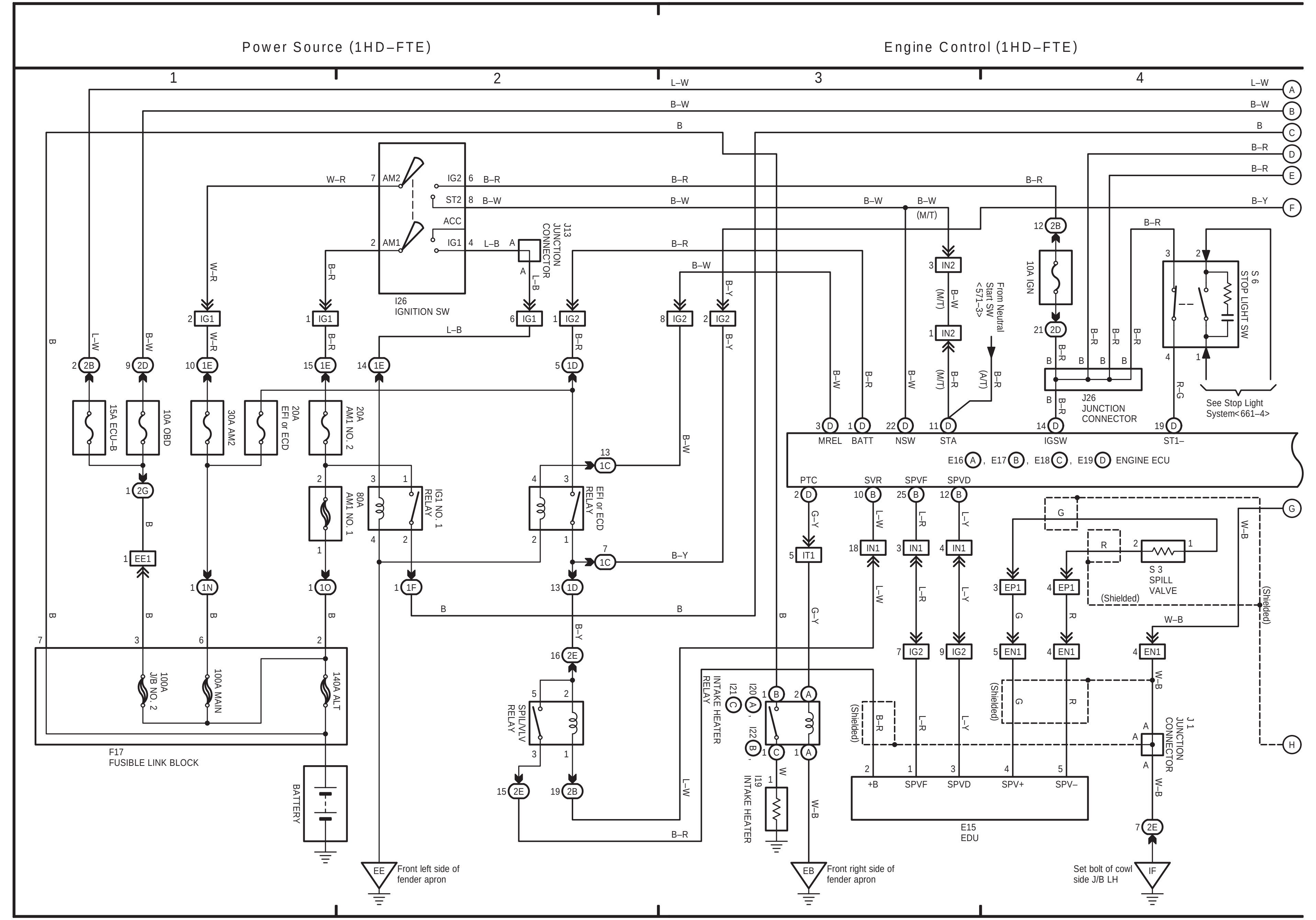
Power Source (1HD–FTE)
Engine Control (1HD–FTE)
I26
IGNITION SW
J13
JUNCTION
CONNECTOR
15A ECU–B
10A OBD
30A AM2
20A
EFI or ECD
20A
AM1 NO. 2
80A
AM1 NO. 1
IG1 NO. 1
RELAY
EFI or ECD
RELAY
SPILL/VLV
RELAY
F17
FUSIBLE LINK BLOCK
100A
J/B NO. 2
100A MAIN
140A ALT
BATTERY
10A IGN
From Neutral
Start SW
<571–3>
J26
JUNCTION
CONNECTOR
S 6
STOP LIGHT SW
See Stop Light
System<661–4>
MREL
BATT
NSW
STA
IGSW
ST1–
E16 (A), E17 (B), E18 (C), E19 (D) ENGINE ECU
PTC
SVR
SPVF
SPVD
S 3
SPILL
VALVE
(Shielded)
INTAKE HEATER
RELAY
I19
INTAKE HEATER
E15
EDU
J 1
JUNCTION
CONNECTOR
Front left side of
fender apron
Front right side of
fender apron
Set bolt of cowl
side J/B LH

– 30 –

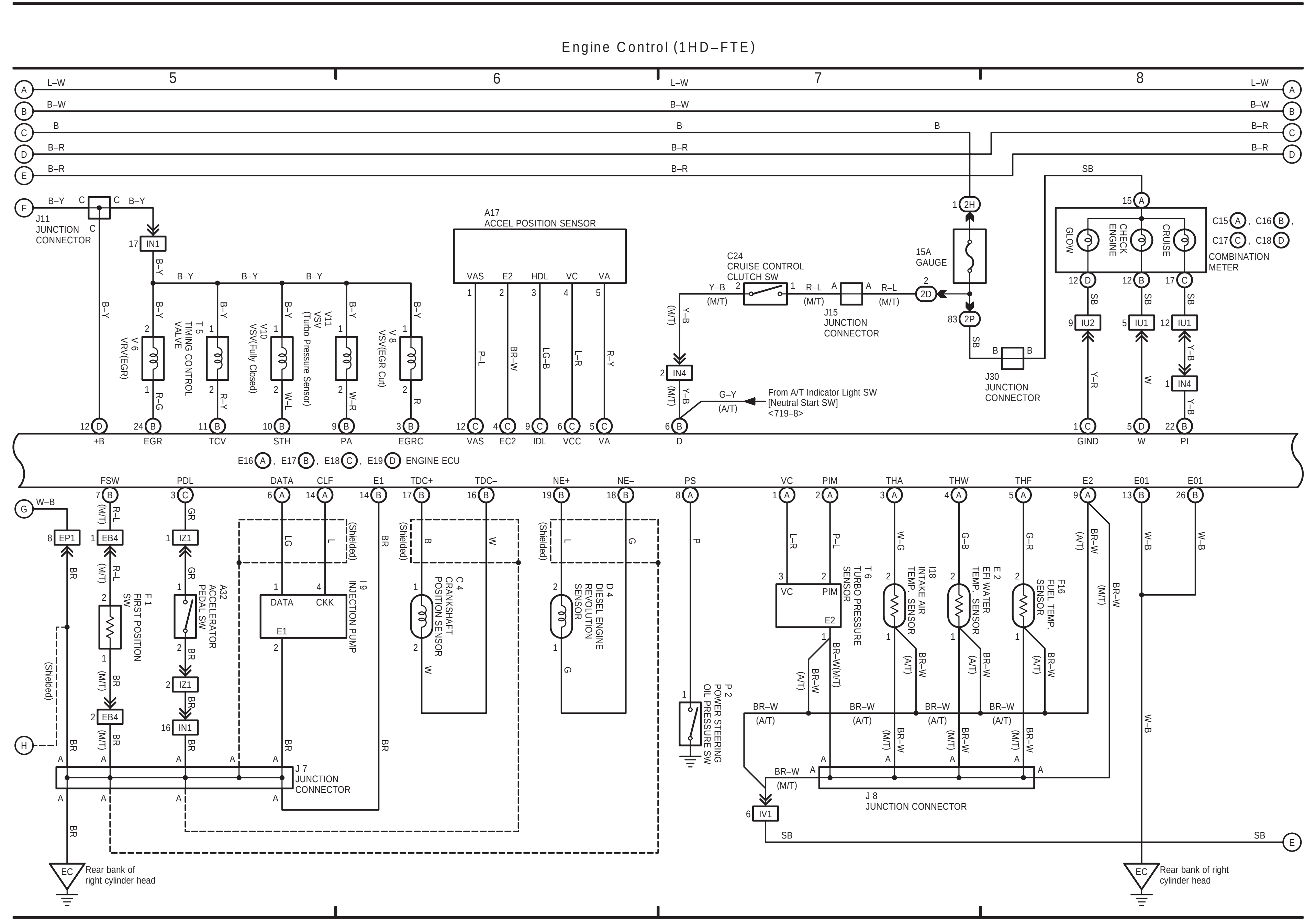
Engine Control (1HD–FTE)
J11
JUNCTION
CONNECTOR
V 6
VRV(EGR)
T 5
TIMING CONTROL
VALVE
V10
VSV(Fully Closed)
V11
VSV
(Turbo Pressure Sensor)
V 8
VSV(EGR Cut)
A17
ACCEL POSITION SENSOR
C24
CRUISE CONTROL
CLUTCH SW
J15
JUNCTION
CONNECTOR
From A/T Indicator Light SW
[Neutral Start SW]
<719–8>
15A
GAUGE
J30
JUNCTION
CONNECTOR
GLOW
CHECK ENGINE
CRUISE
C15 (A), C16 (B), C17 (C), C18 (D)
COMBINATION
METER
E16 (A), E17 (B), E18 (C), E19 (D) ENGINE ECU
F 1
FIRST POSITION
SW
A32
ACCELERATOR
PEDAL SW
I 9
INJECTION PUMP
C 4
CRANKSHAFT
POSITION SENSOR
D 4
DIESEL ENGINE
REVOLUTION
SENSOR
P 2
POWER STEERING
OIL PRESSURE SW
T 6
TURBO PRESSURE
SENSOR
I18
INTAKE AIR
TEMP. SENSOR
E 2
EFI WATER
TEMP. SENSOR
F16
FUEL TEMP.
SENSOR
J 7
JUNCTION
CONNECTOR
J 8
JUNCTION CONNECTOR
Rear bank of
right cylinder head
Rear bank of right
cylinder head

– 31 –

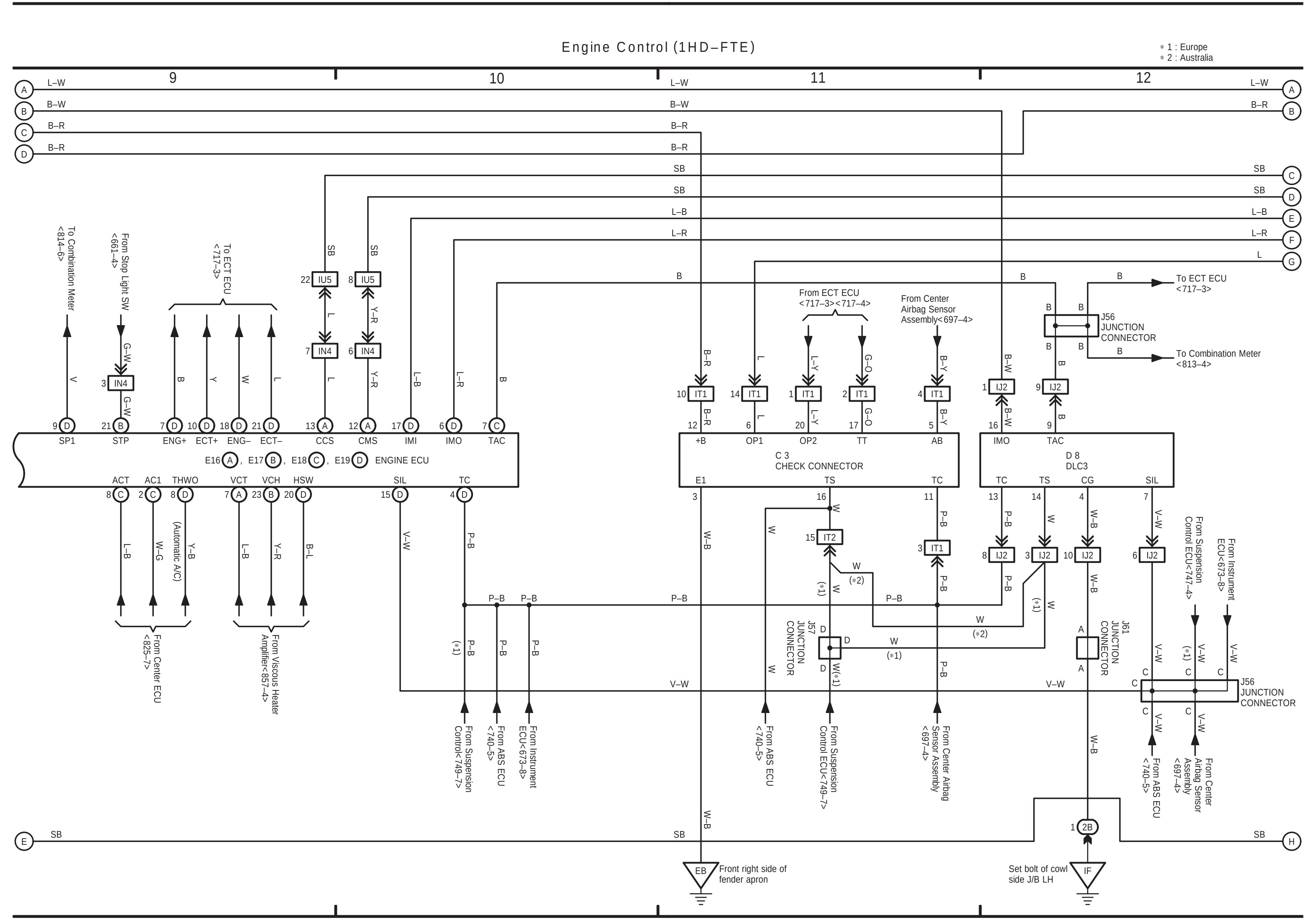
Engine Control (1HD–FTE)
∗1 : Europe
∗2 : Australia
To Combination Meter
<814–6>
From Stop Light SW
<661–4>
To ECT ECU
<717–3>
From ECT ECU
<717–3><717–4>
From Center
Airbag Sensor
Assembly<697–4>
To ECT ECU
<717–3>
J56
JUNCTION
CONNECTOR
To Combination Meter
<813–4>
E16 (A), E17 (B), E18 (C), E19 (D) ENGINE ECU
C 3
CHECK CONNECTOR
D 8
DLC3
From Center ECU
<825–7>
(Automatic A/C)
From Viscous Heater
Amplifier<857–4>
From Suspension
Control<749–7>
From ABS ECU
<740–5>
From Instrument
ECU<673–8>
J57
JUNCTION
CONNECTOR
From Suspension
Control ECU<749–7>
From Center Airbag
Sensor Assembly
<697–4>
J61
JUNCTION
CONNECTOR
From Suspension
Control ECU<747–4>
From Instrument
ECU<673–8>
From ABS ECU
<740–5>
From Center
Airbag Sensor
Assembly
<697–4>
Front right side of
fender apron
Set bolt of cowl
side J/B LH

– 32 –

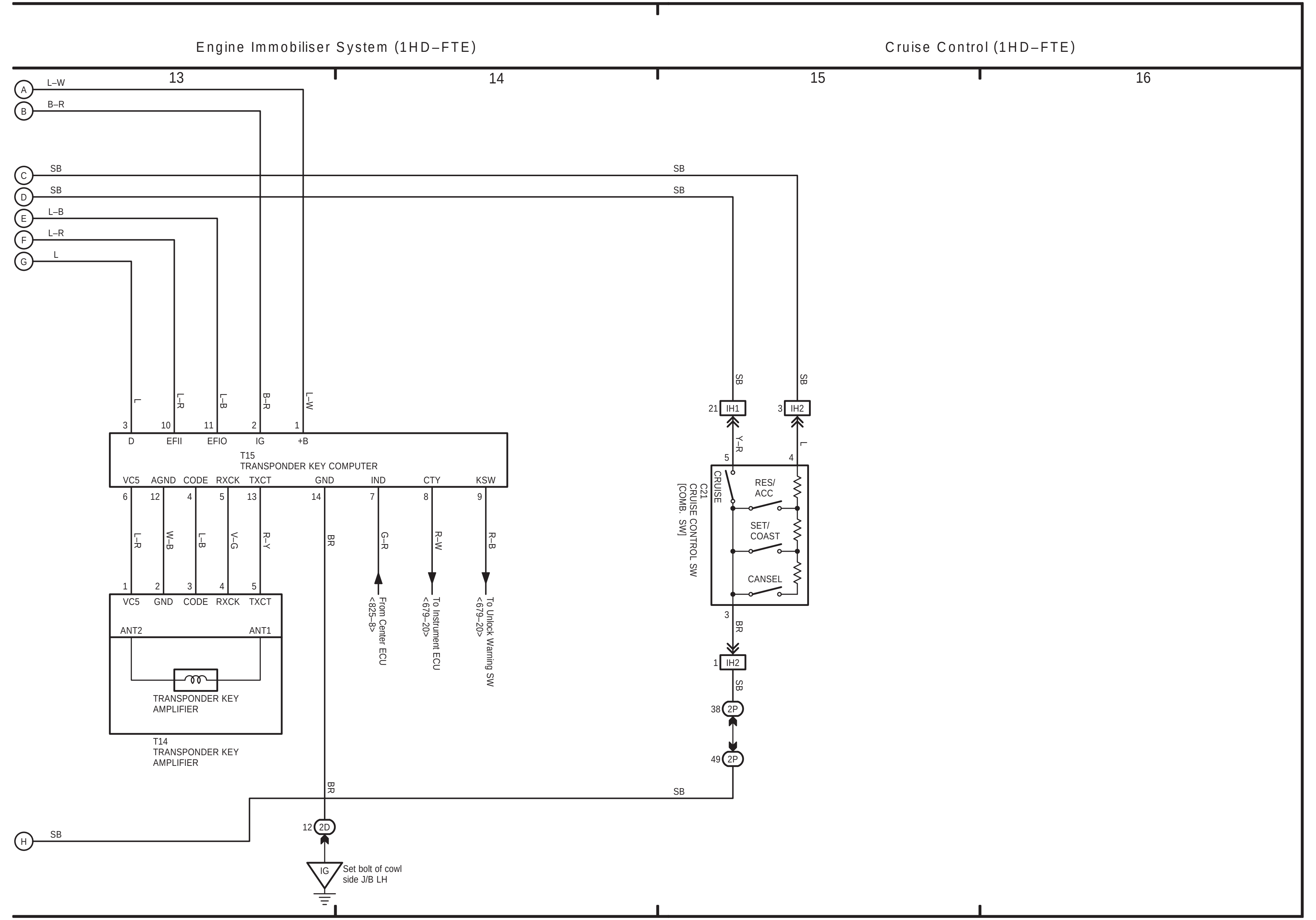
Engine Immobiliser System (1HD–FTE)
Cruise Control (1HD–FTE)
T15
TRANSPONDER KEY COMPUTER
TRANSPONDER KEY
AMPLIFIER
T14
TRANSPONDER KEY
AMPLIFIER
From Center ECU
<825–8>
To Instrument ECU
<679–20>
To Unlock Warning SW
<679–20>
C21
CRUISE CONTROL SW
[COMB. SW]
CRUISE
RES/
ACC
SET/
COAST
CANSEL
Set bolt of cowl
side J/B LH

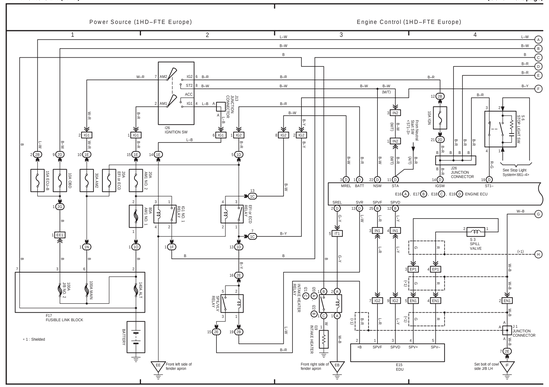
Power Source (1HD–FTE Europe)
Engine Control (1HD–FTE Europe)
1
2
3
4
IG1 FUSIBLE LINK BLOCK
BATTERY
IGNITION SW
ACC
IG1
ST1
STARTER RELAY
ALTERNATOR
ECU–IG FUSE
ECU–B FUSE
ENGINE ROOM R/B
ENGINE ROOM J/B
J/B JUNCTION CONNECTOR
See Stop Light System–BEC–AI
ENGINE ECU
ECU
VALVE
INJECTOR
ENGINE WIRE
Front left side of fender apron
Front right side of fender apron
Set bolt of cowl side, DR LH
* 1: Shielded

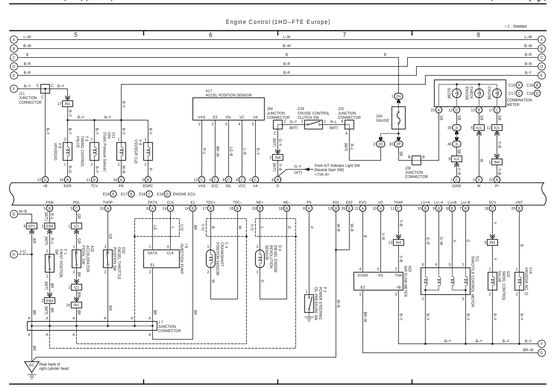
Engine Control (1HD–FTE Europe)
5
6
7
8
* 1: Shielded
J/C JUNCTION CONNECTOR
J/B JUNCTION CONNECTOR
ACCEL POSITION SENSOR
CRUISE CONTROL CLUTCH SW
STOP LIGHT SW
CRUISE CONTROL MASTER
GAUGE
ENGINE ECU
From A/T Indicator Light SW
Diesel Start SW2
ECU–IG FUSE
ECU–B FUSE
ENGINE WIRE
Fuse box
Front bank of left cylinder head

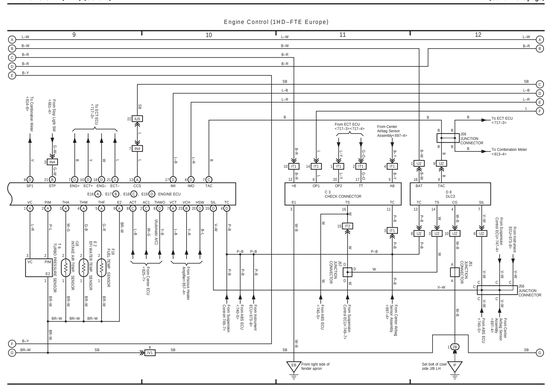
Engine Control (1HD–FTE Europe)
9
10
11
12
Front ECT ECU +TC1 for +TC2 A/T
Front Center Airbag Sensor Assembly
To ECT ECU +TC1–3+
To Combination Meter +TC2–4+
J/C JUNCTION CONNECTOR
J/B JUNCTION CONNECTOR
J/B CHECK CONNECTOR
DLC3
ENGINE ECU
Front right side of fender apron
Set bolt of cowl side, DR LH

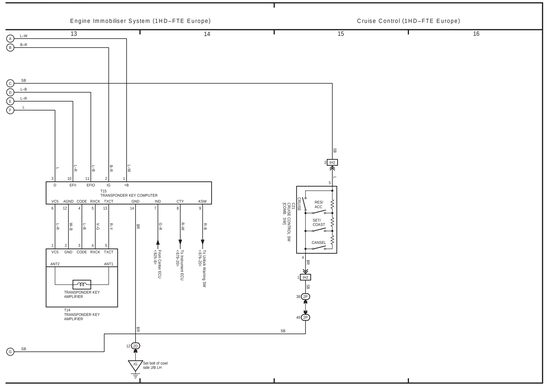
Engine Immobiliser System (1HD–FTE Europe)
Cruise Control (1HD–FTE Europe)
13
14
15
16
TRANSPONDER KEY COMPUTER
TRANSPONDER KEY AMPLIFIER
J/C JUNCTION CONNECTOR
J/B JUNCTION CONNECTOR
MAIN SWITCH
SET/COAST
CANCEL
CRUISE CONTROL MASTER
Set bolt of cowl side, DR LH

Power Source (1HZ, 1HD–T) | ECT and A/T Indicator (1HZ)

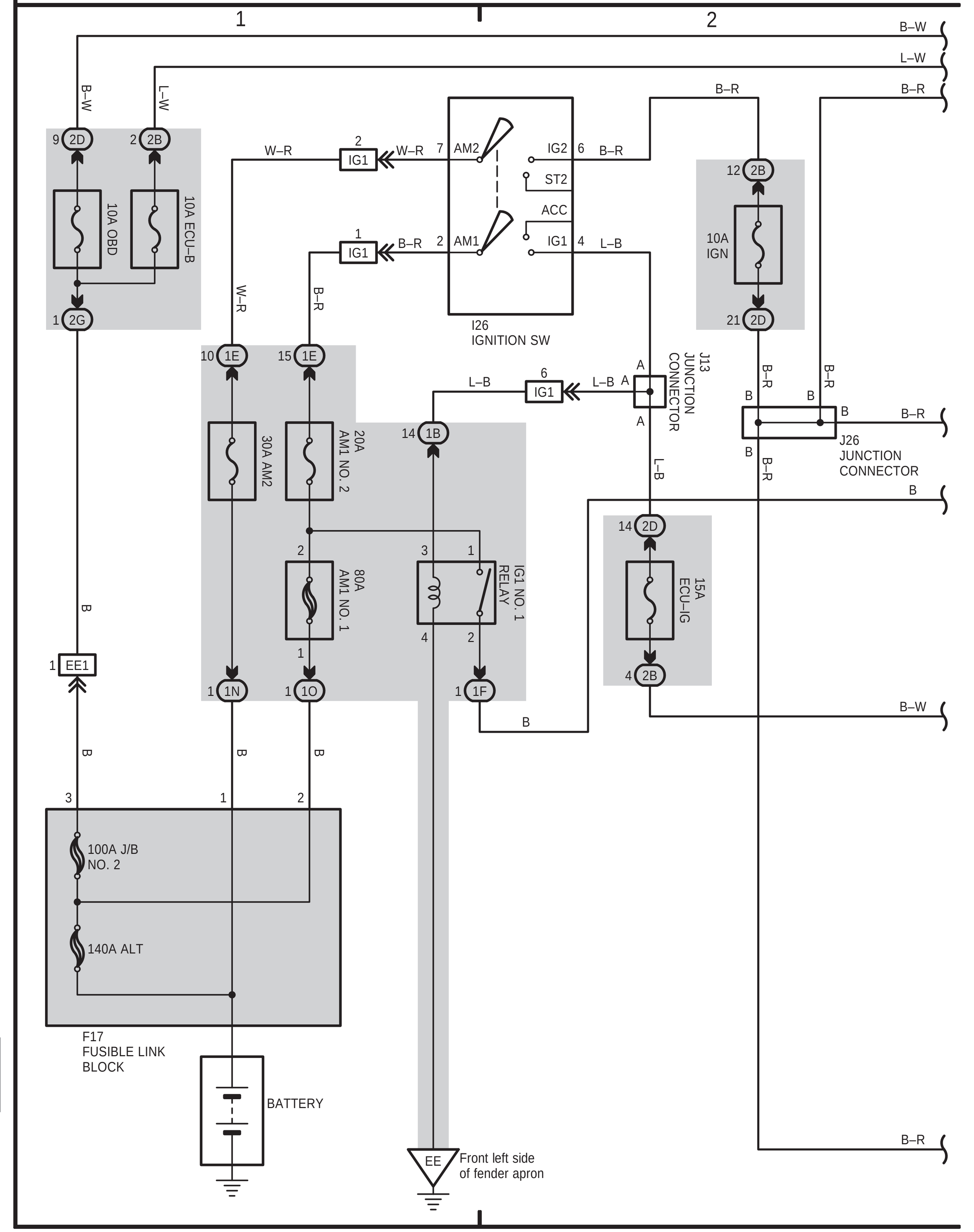

(Cont. next page)

ECT and A/T Indicator (1HZ)

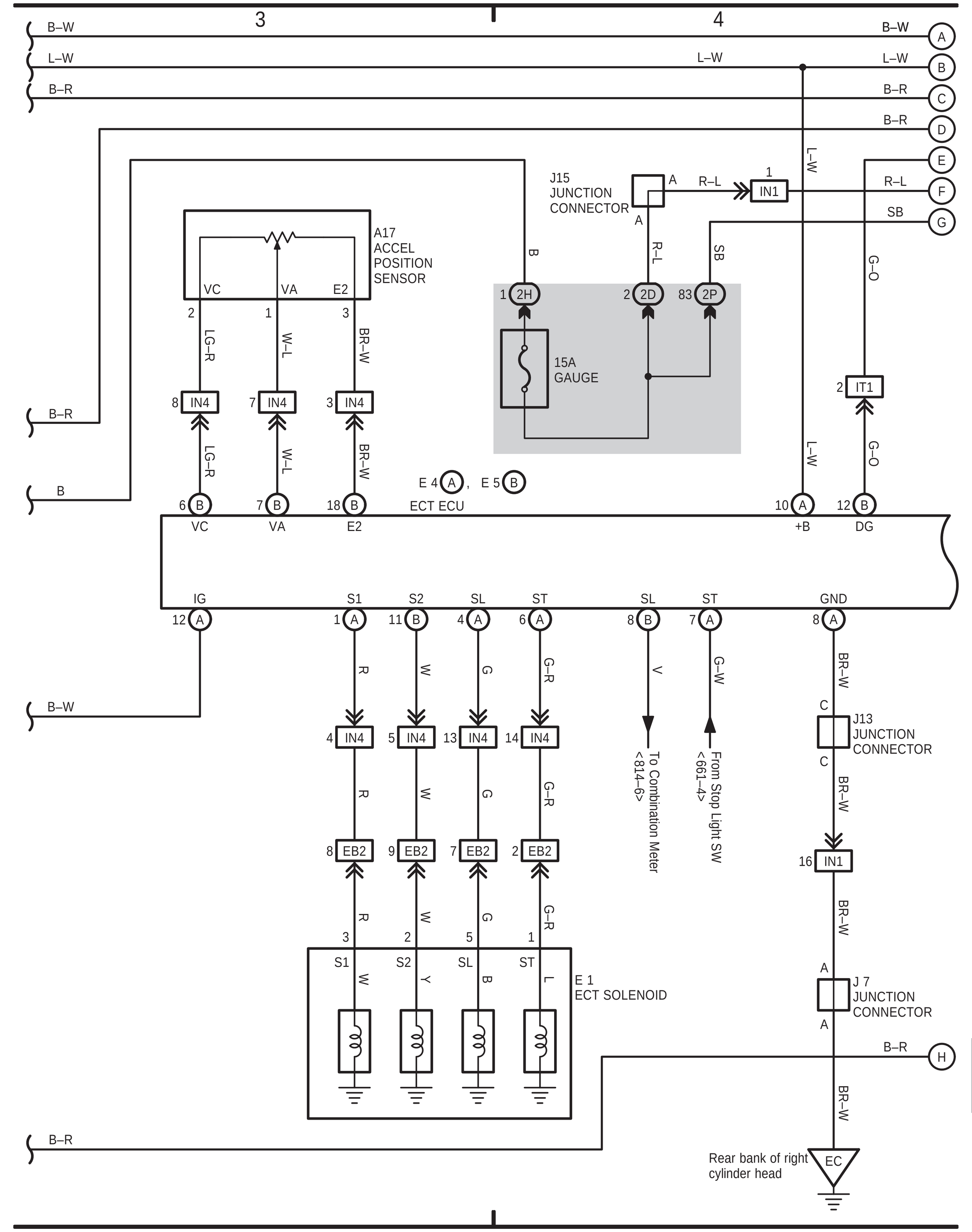

ECT and A/T Indicator (1HZ)

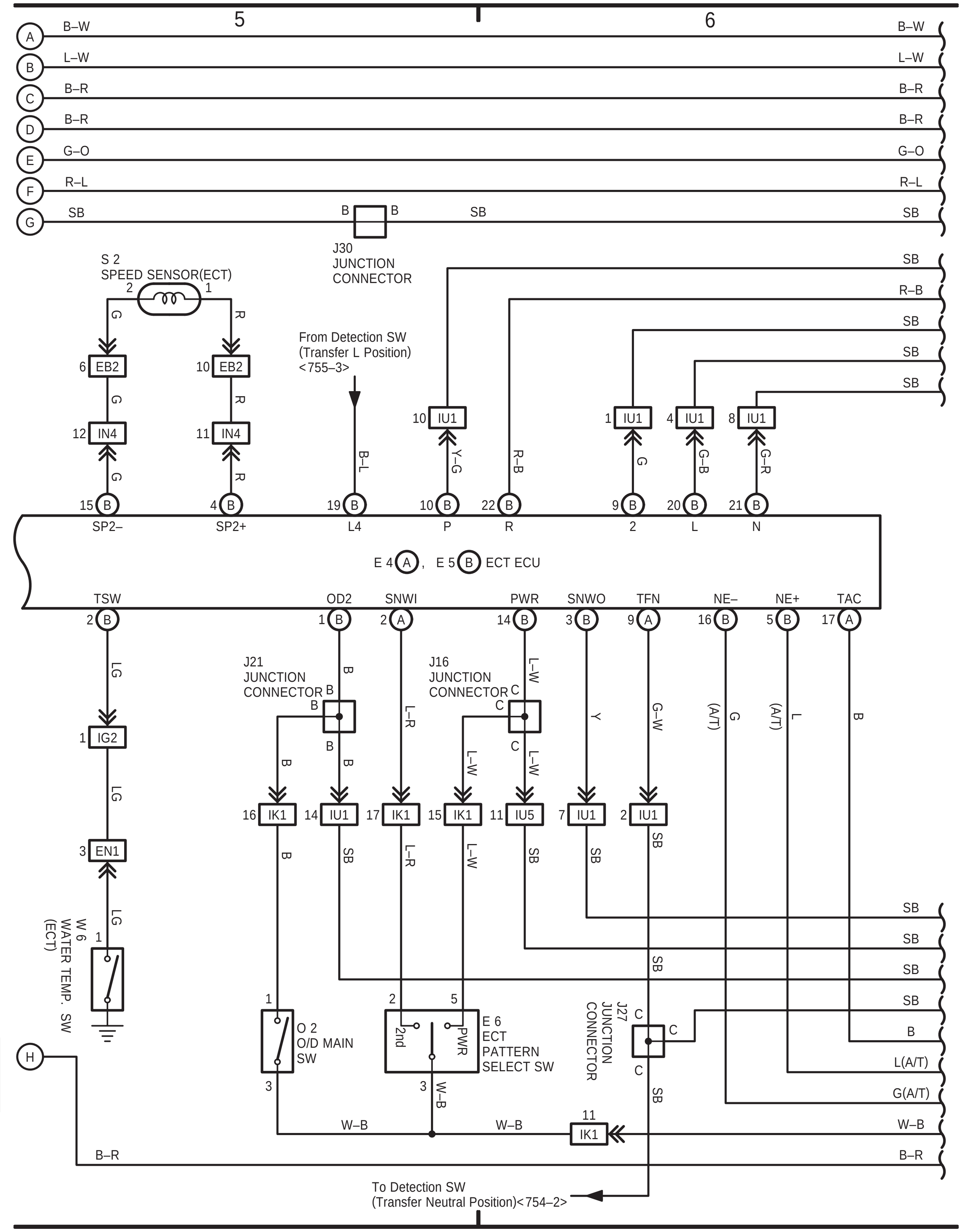

(Cont. next page)

ECT and A/T Indicator (1HZ)

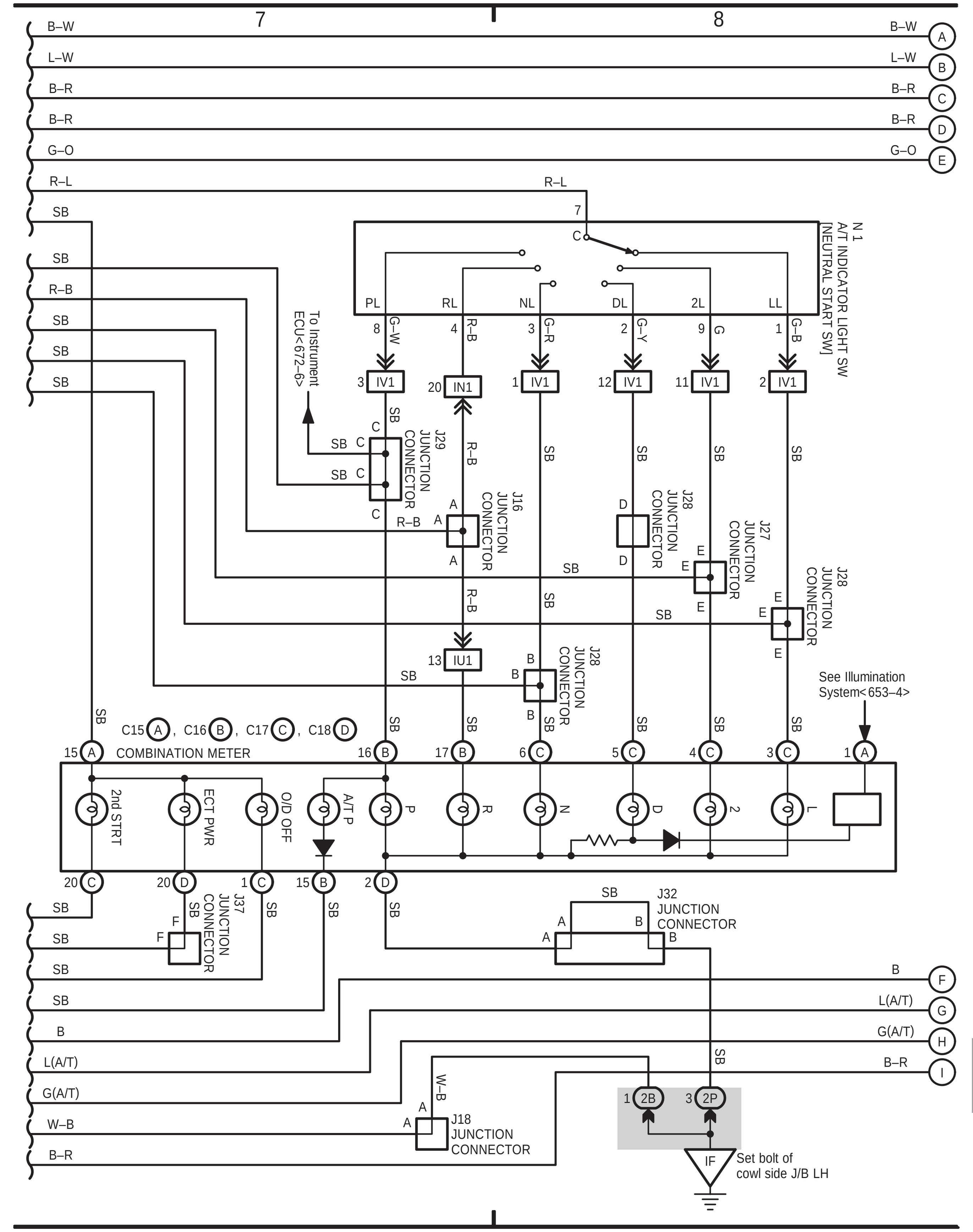

Engine Immobiliser System (1HZ, 1HD–T)

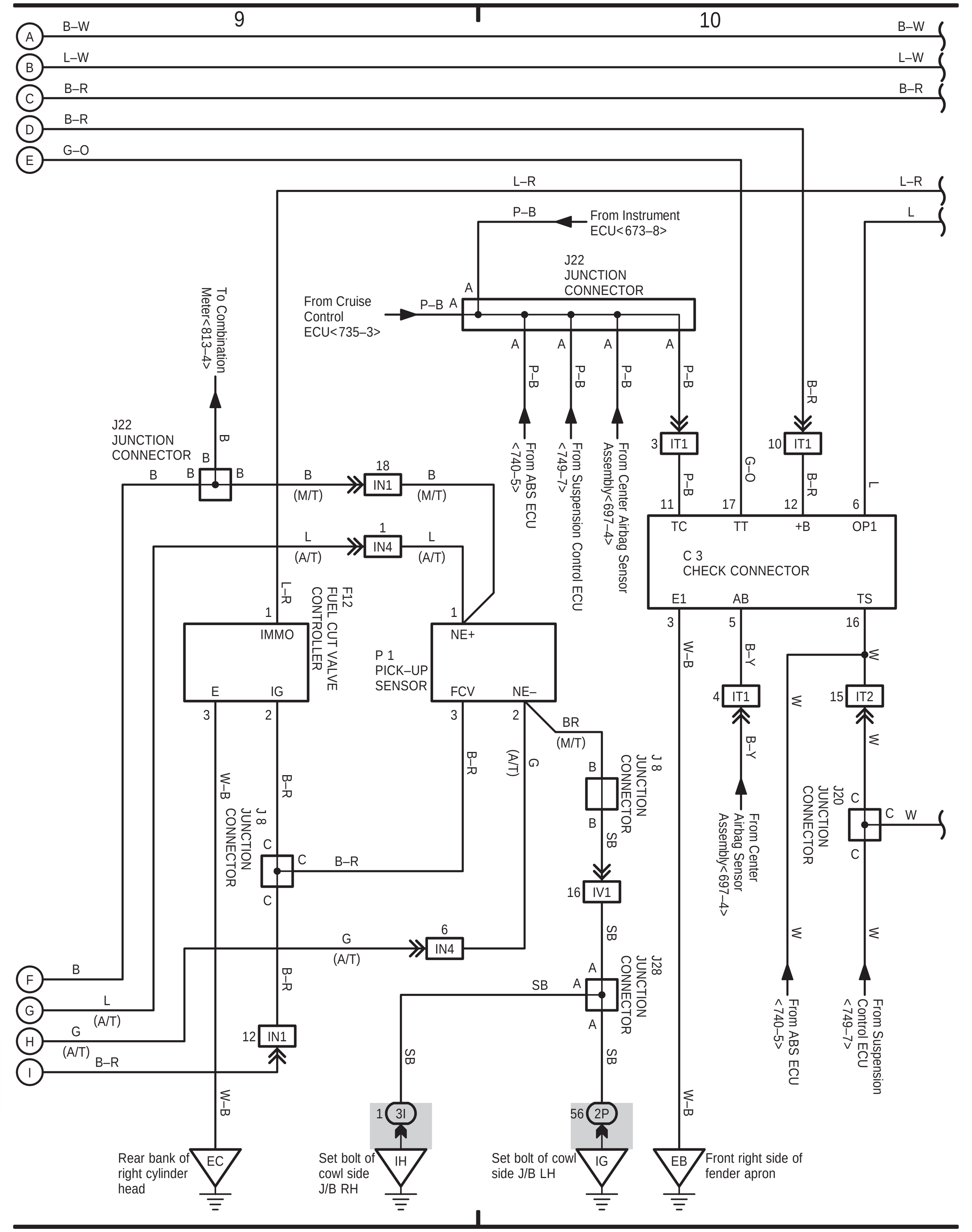

(Cont'd)

Engine Immobiliser System (1HZ, 1HD–T)

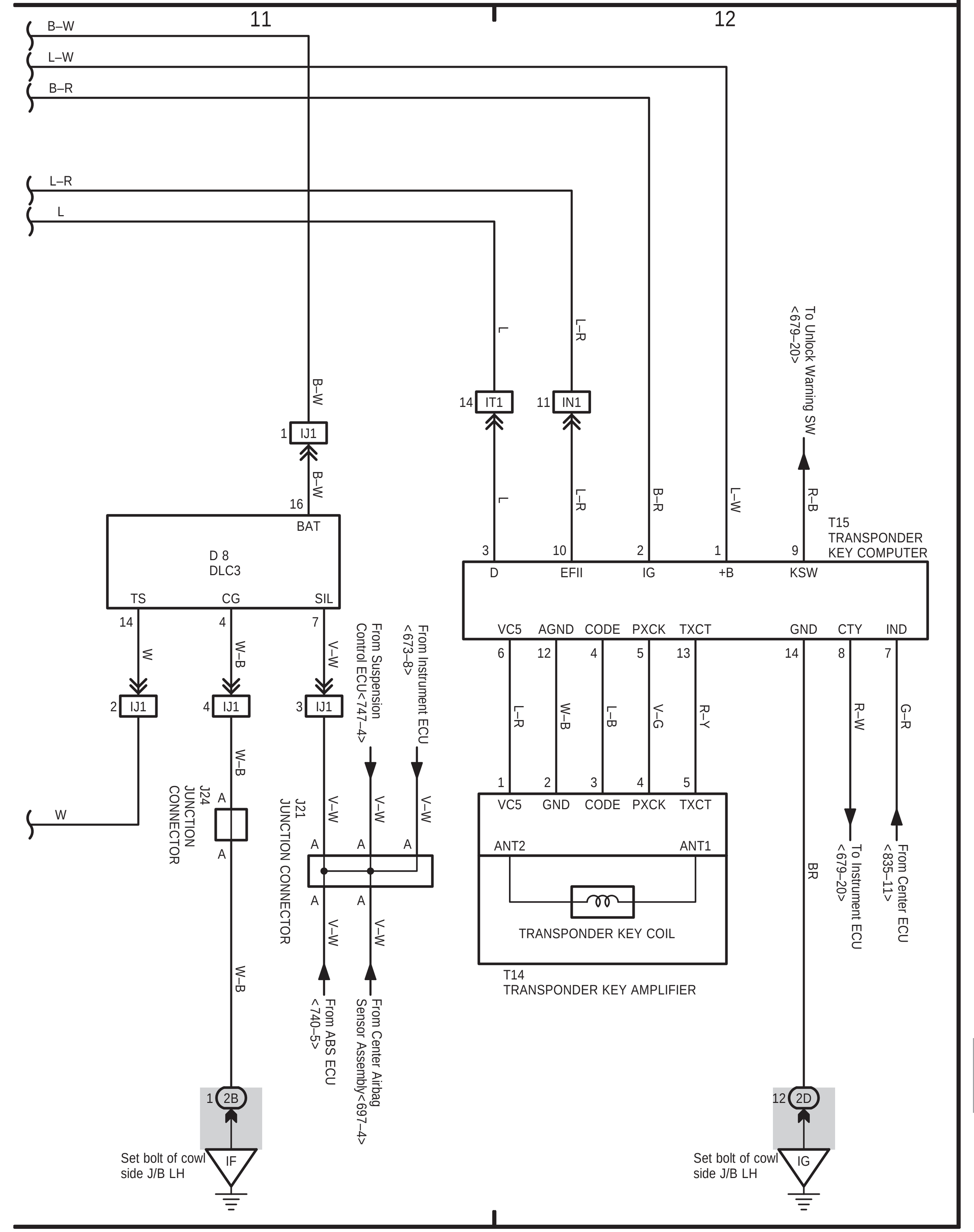

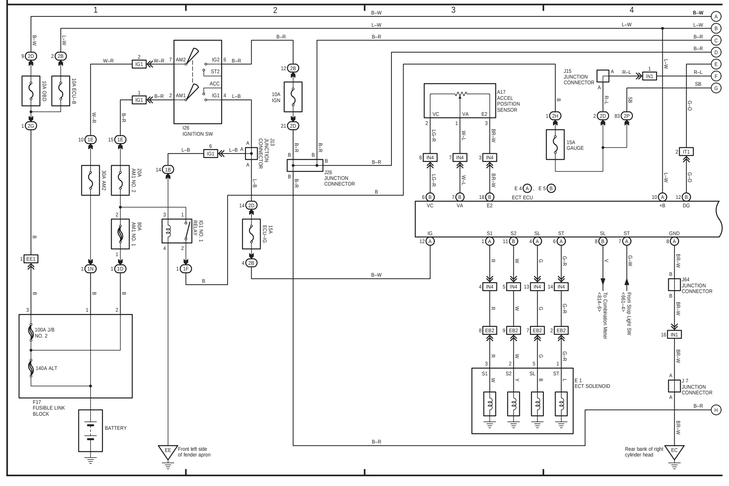
Power Source (1HZ, 1HD–T)
ECT and A/T Indicator (1HZ)
IGNITION SW
ACCEL POSITION SENSOR
ECT ECU
ECT SOLENOID
BATTERY
FUSIBLE LINK BLOCK
Front left side of fender apron
Rear bank of right cylinder head

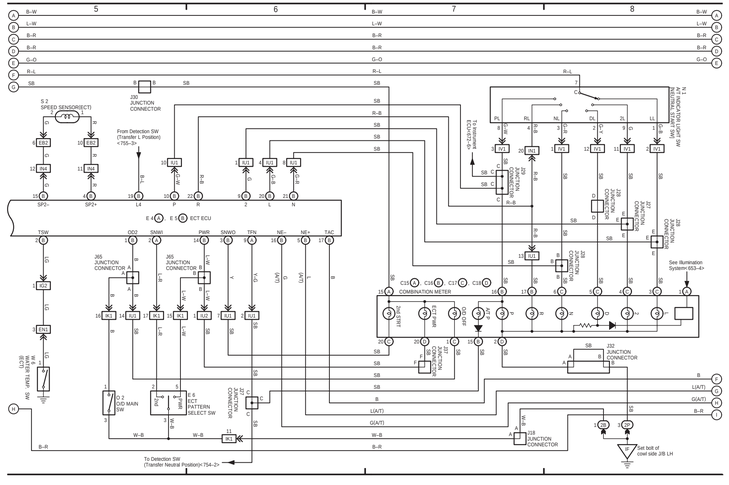
ECT and A/T Indicator (1HZ)
SPEED SENSOR(ECT)
ECT ECU
COMBINATION METER
To Detection SW (Transfer Neutral Position)<754–2>
To Detection SW (Transfer L Position)<754–3>
See Illumination System<653–4>
Set bolt of cowl side J/B LH

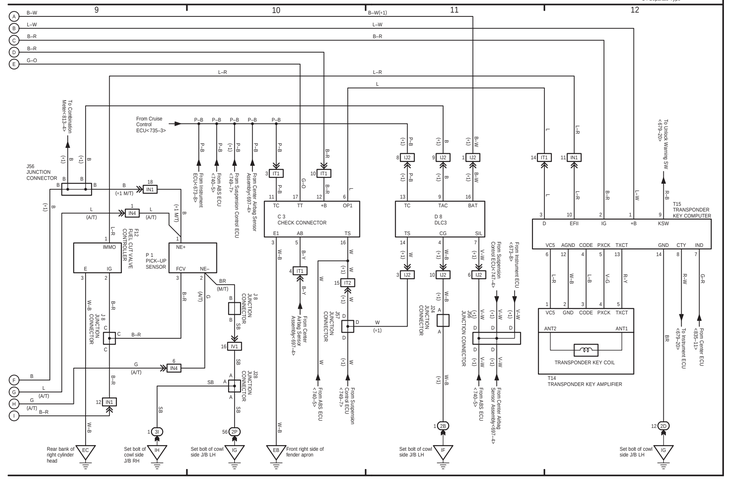
Engine Immobiliser System (1HZ, 1HD–T)
* 1: Separate Type
From Cruise Control ECU<735–3>
To Combination Meter<653–4>
To Windshield Wiper Motor<756–2>
To Transmission ECM<755–3>
To Detection SW (Transfer L Position)<754–3>
To Detection SW (Transfer Neutral Position)<754–2>
From Steering Pad Switch<735–2>
From Stop Light SW<735–2>
From Skid Control ECU<735–4>
From Center Airbag Sensor Assembly<SRS–4>
From Instrument ECU<653–4>
To Transmission ECU<755–2>
From Center Airbag Sensor Assembly<SRS–4>
To Engine Control System<140–3>
To Transmission ECU<755–2>
From Center Airbag Sensor Assembly<SRS–4>
Rear bank of right cylinder head
Set bolt of cowl side J/B RH
Set bolt of cowl side J/B LH
Front right side of fender apron
Set bolt of cowl side J/B LH
Set bolt of cowl side J/B LH

(Cont. next page)

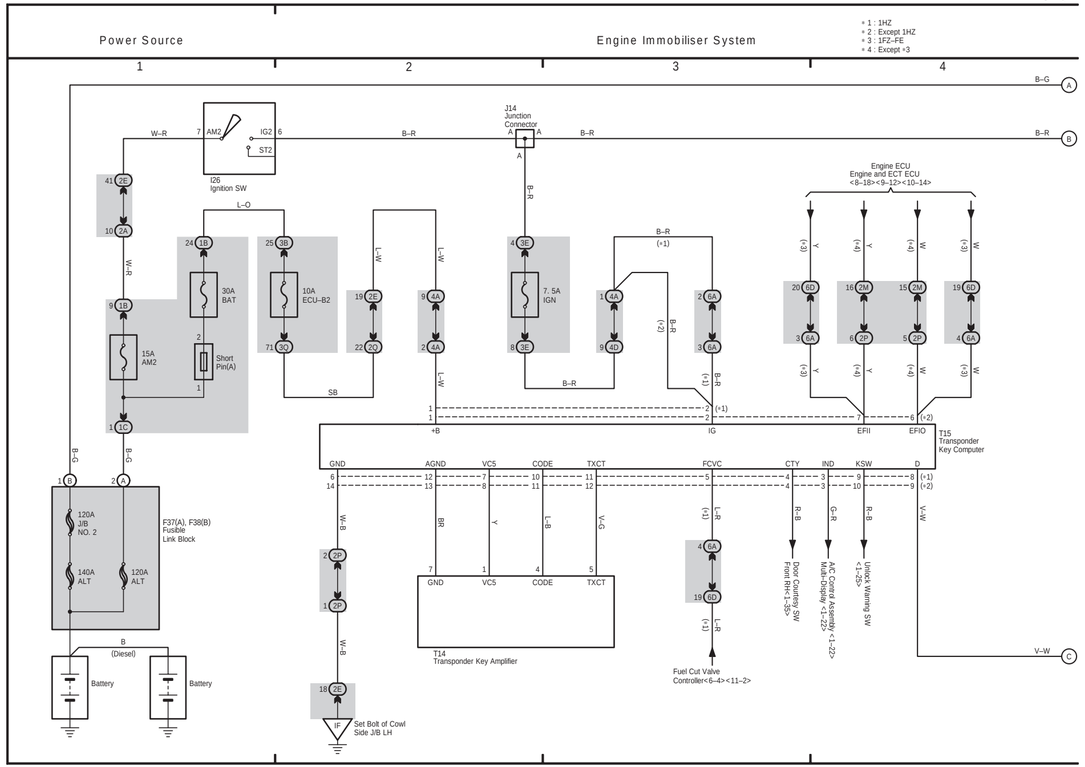

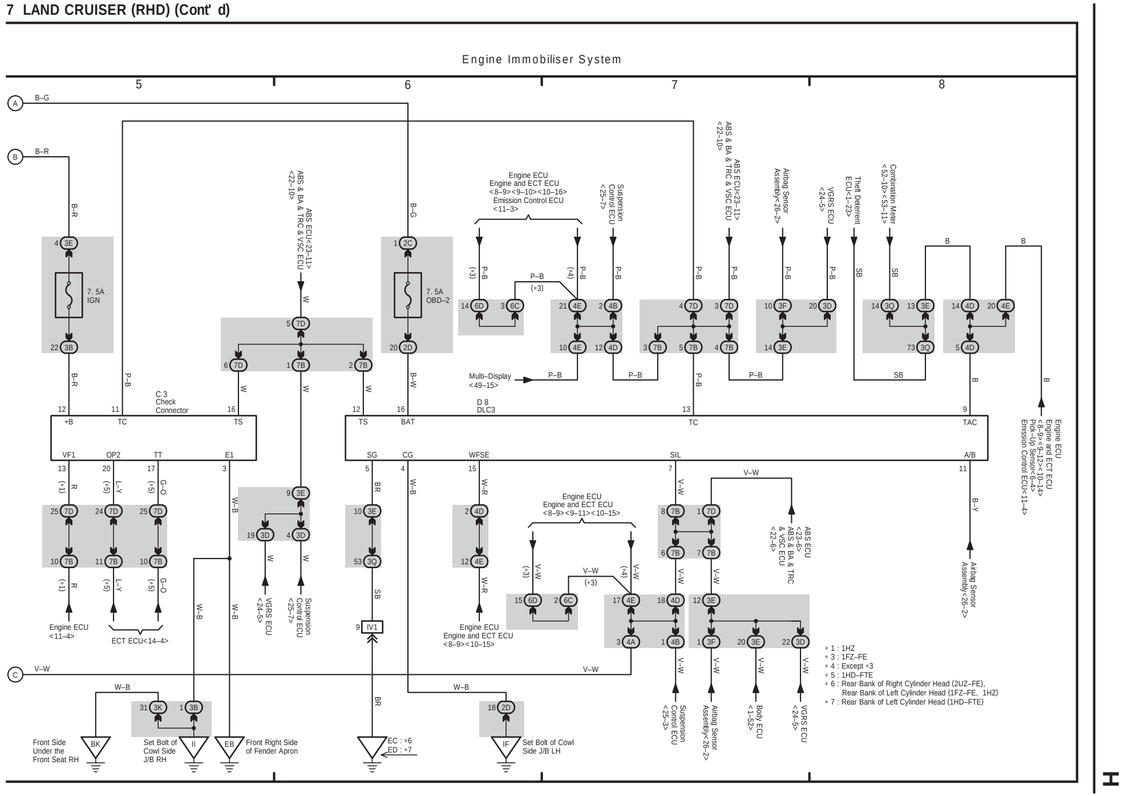

(Cont. next page)

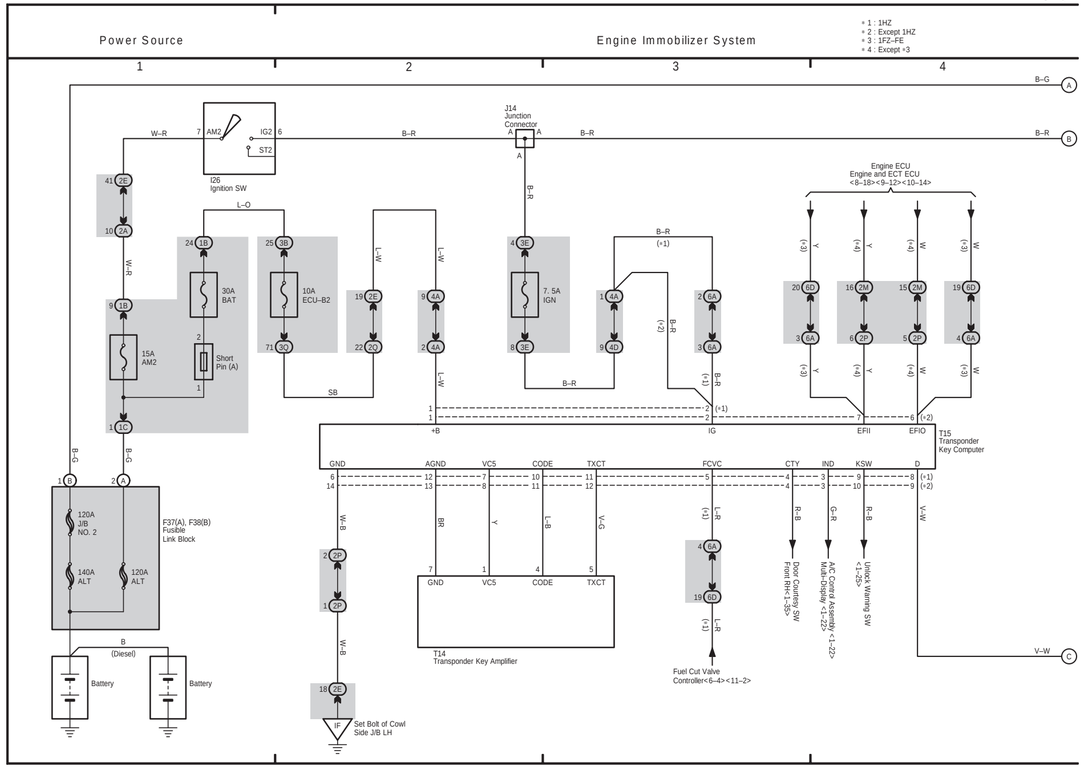

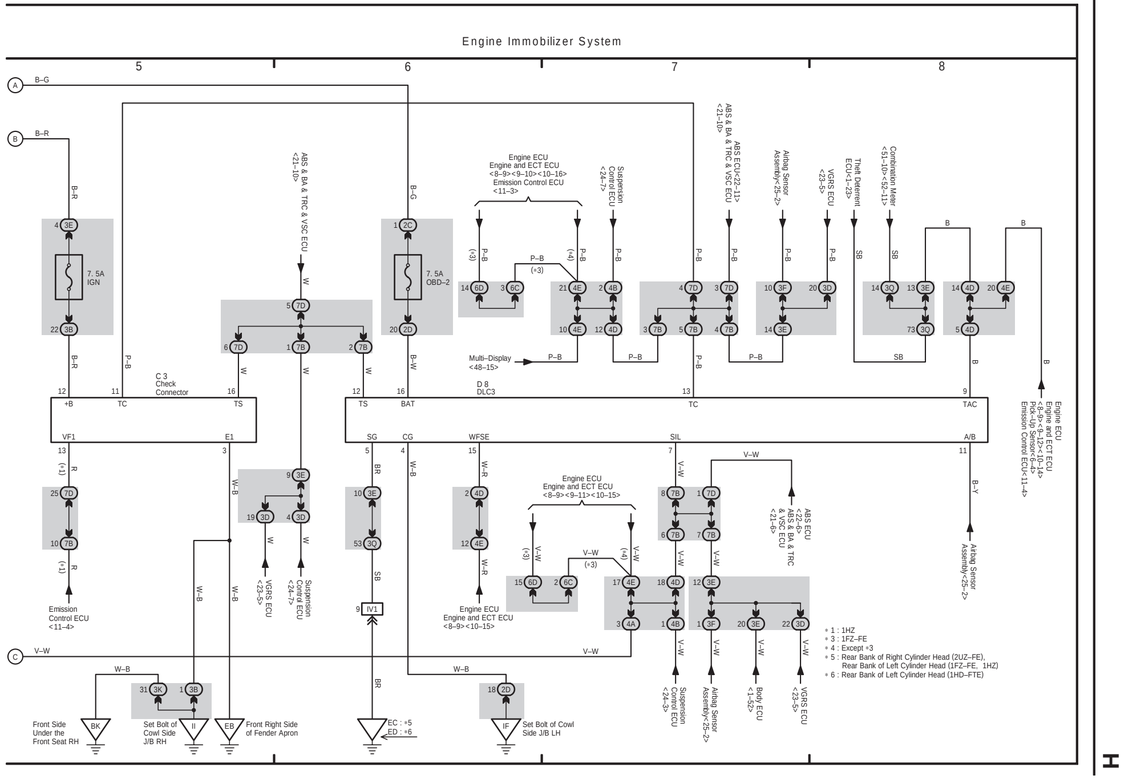

7 LAND CRUISER (RHD)

(Cont. next page)

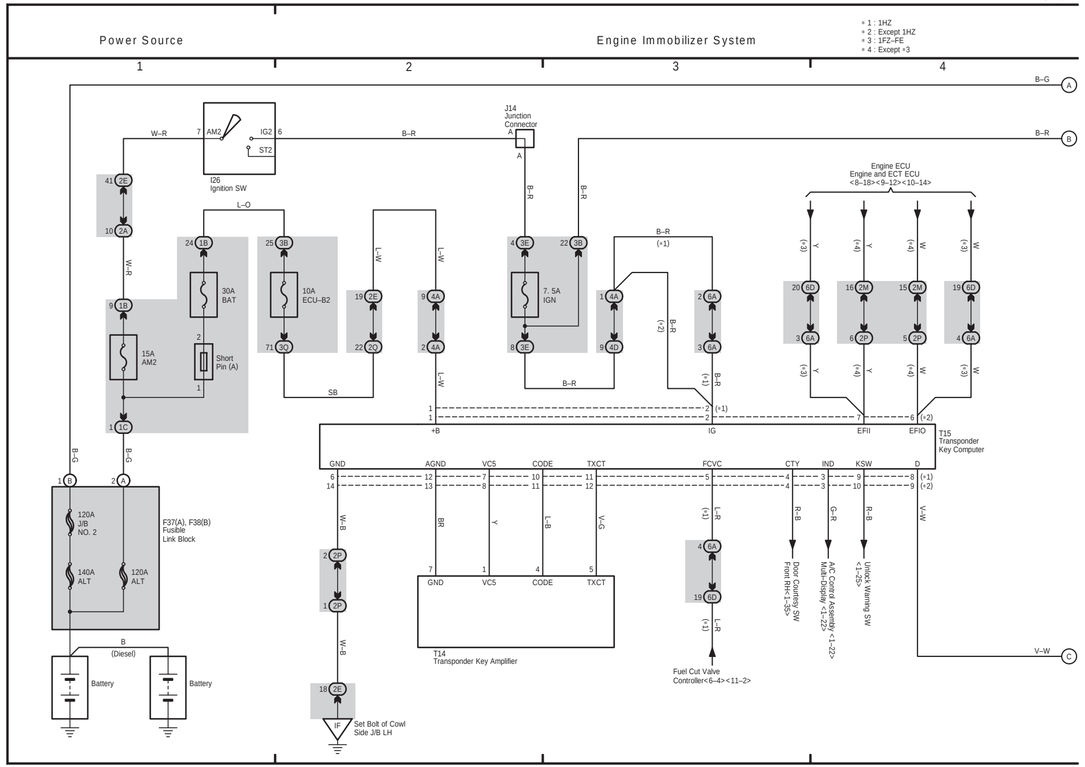

H OVERALL ELECTRICAL WIRING DIAGRAM

7 LAND CRUISER (RHD) (Cont' d)

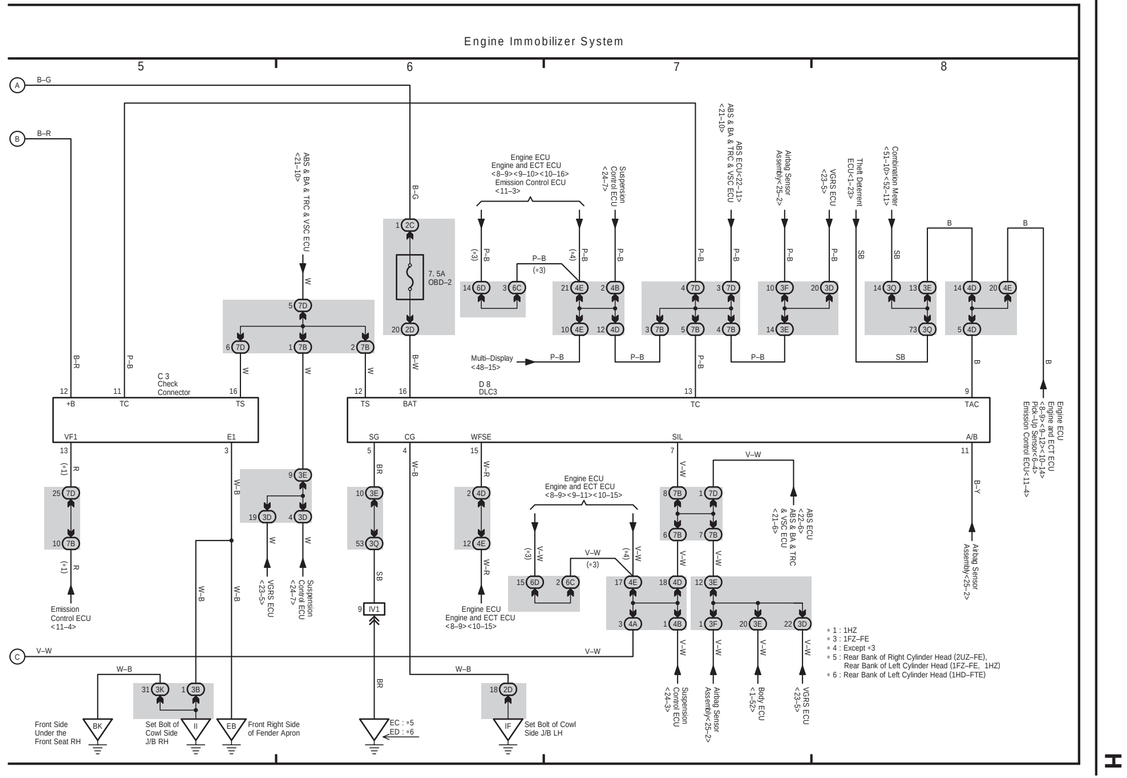

H

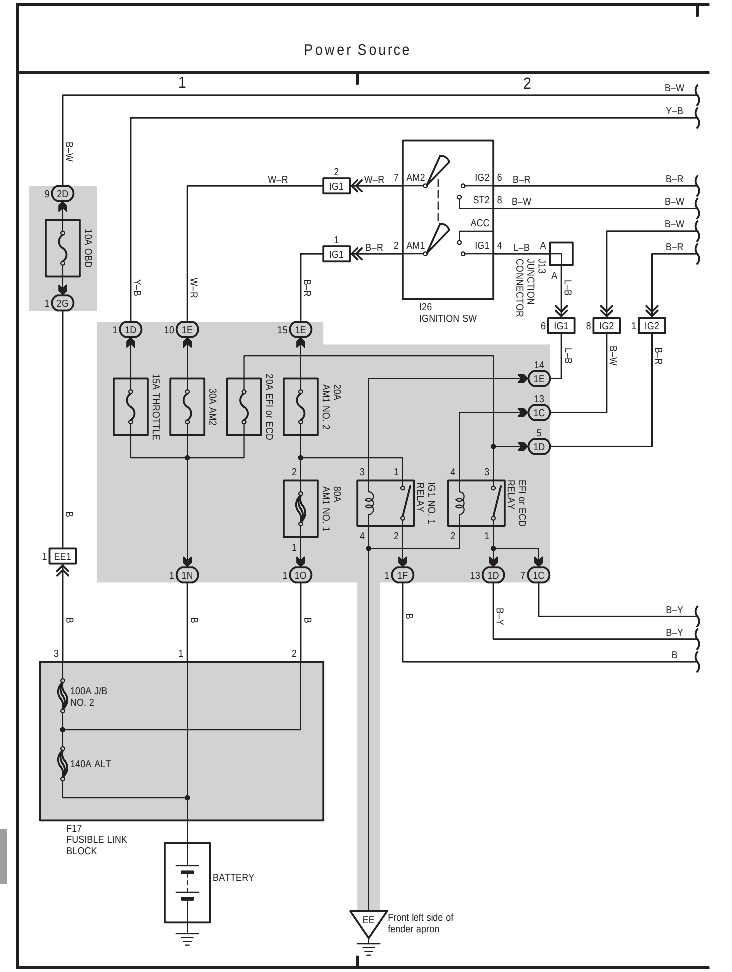
Power Source
10A OBD
15A THROTTLE
30A AM2
20A EFI or ECD
20A AM1 NO. 2
80A AM1 NO. 1
IG1 NO. 1 RELAY
EFI or ECD RELAY
I26 IGNITION SW
J13 JUNCTION CONNECTOR
100A J/B NO. 2
140A ALT
F17 FUSIBLE LINK BLOCK
BATTERY
Front left side of fender apron

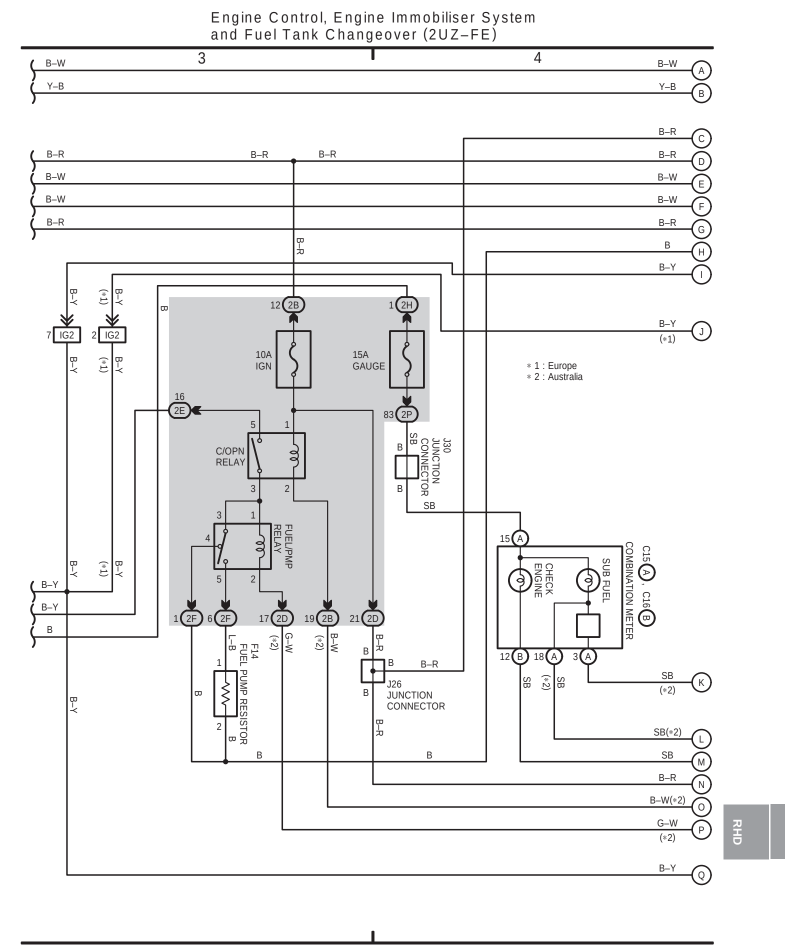
Engine Control, Engine Immobiliser System and Fuel Tank Changeover (2UZ–FE)
10A IGN
15A GAUGE
C/OPN RELAY
FUEL/PMP RELAY
J30 JUNCTION CONNECTOR
F14 FUEL PUMP RESISTOR
J26 JUNCTION CONNECTOR
C15, C16 COMBINATION METER
CHECK ENGINE
SUB FUEL
∗1 : Europe
∗2 : Australia

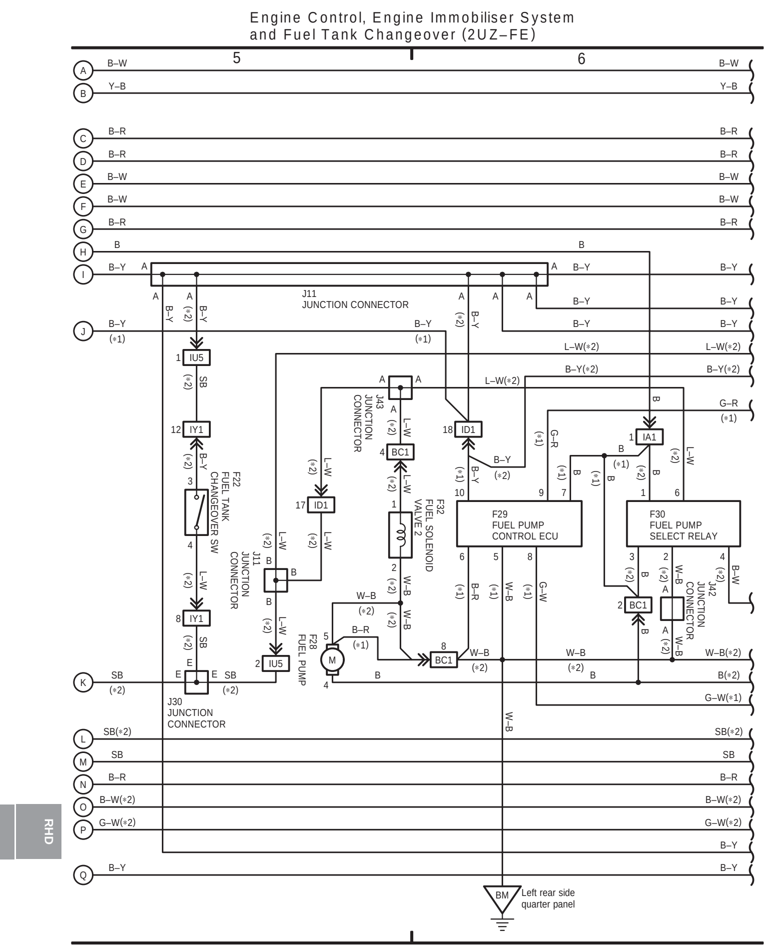
Engine Control, Engine Immobiliser System and Fuel Tank Changeover (2UZ–FE)
J11 JUNCTION CONNECTOR
F22 FUEL TANK CHANGEOVER SW
J43 JUNCTION CONNECTOR
F32 FUEL SOLENOID VALVE 2
F29 FUEL PUMP CONTROL ECU
F30 FUEL PUMP SELECT RELAY
J42 JUNCTION CONNECTOR
J11 JUNCTION CONNECTOR
F28 FUEL PUMP
J30 JUNCTION CONNECTOR
Left rear side quarter panel

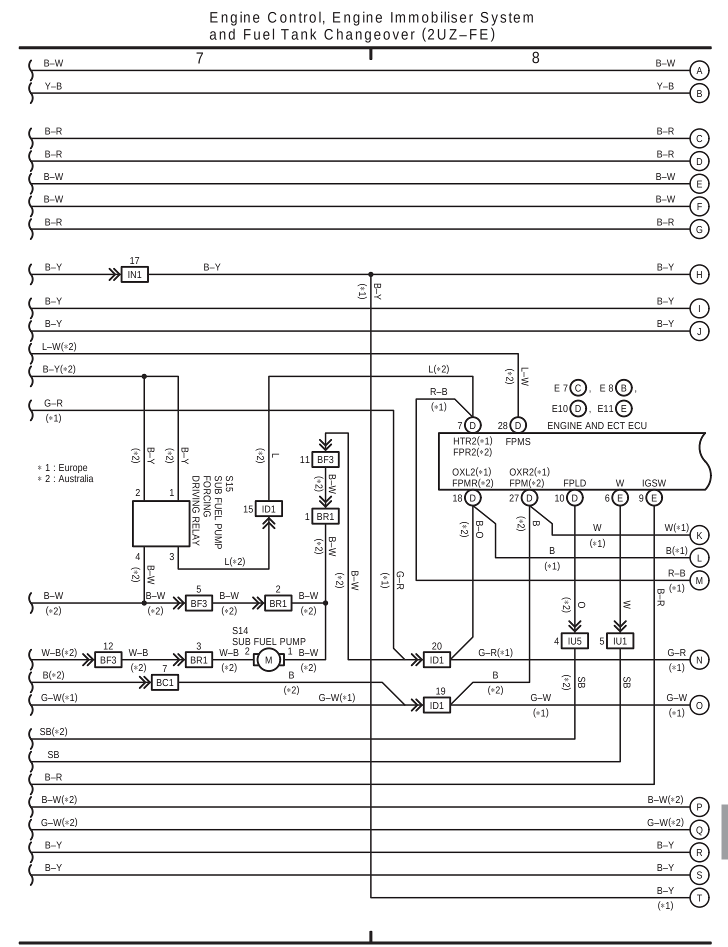
Engine Control, Engine Immobiliser System and Fuel Tank Changeover (2UZ–FE)
∗1 : Europe
∗2 : Australia
S15 SUB FUEL PUMP FORCING DRIVING RELAY
S14 SUB FUEL PUMP
E7, E8, E10, E11 ENGINE AND ECT ECU

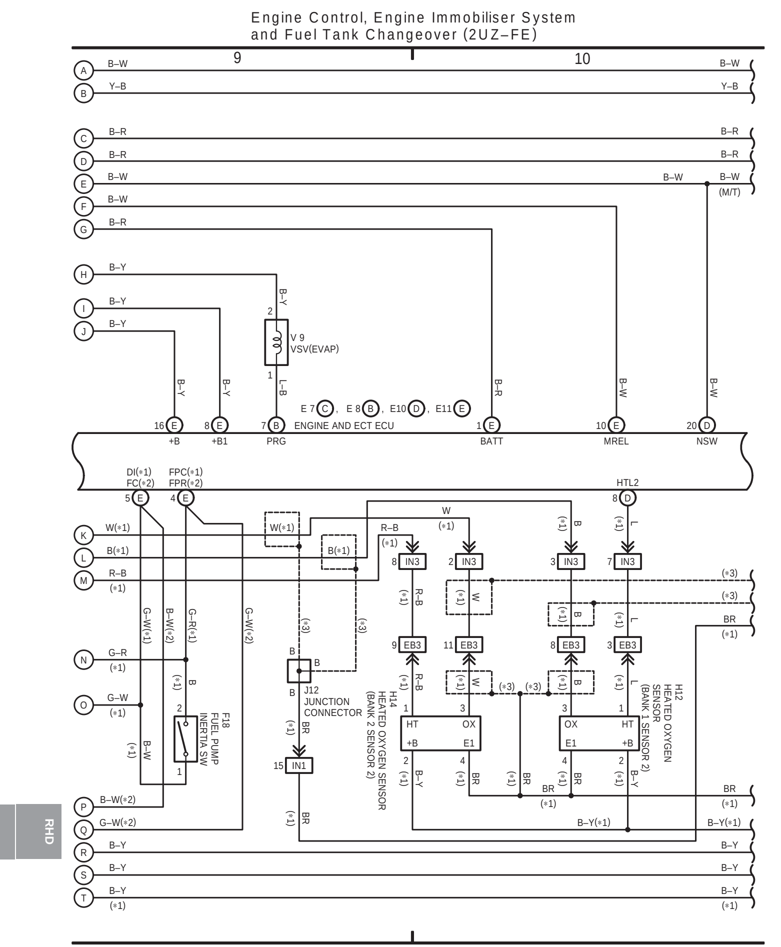
Engine Control, Engine Immobiliser System and Fuel Tank Changeover (2UZ–FE)
V 9 VSV(EVAP)
E7, E8, E10, E11 ENGINE AND ECT ECU
F18 FUEL PUMP INERTIA SW
J12 JUNCTION CONNECTOR
H14 HEATED OXYGEN SENSOR (BANK 2 SENSOR 2)
H12 HEATED OXYGEN SENSOR (BANK 1 SENSOR 2)

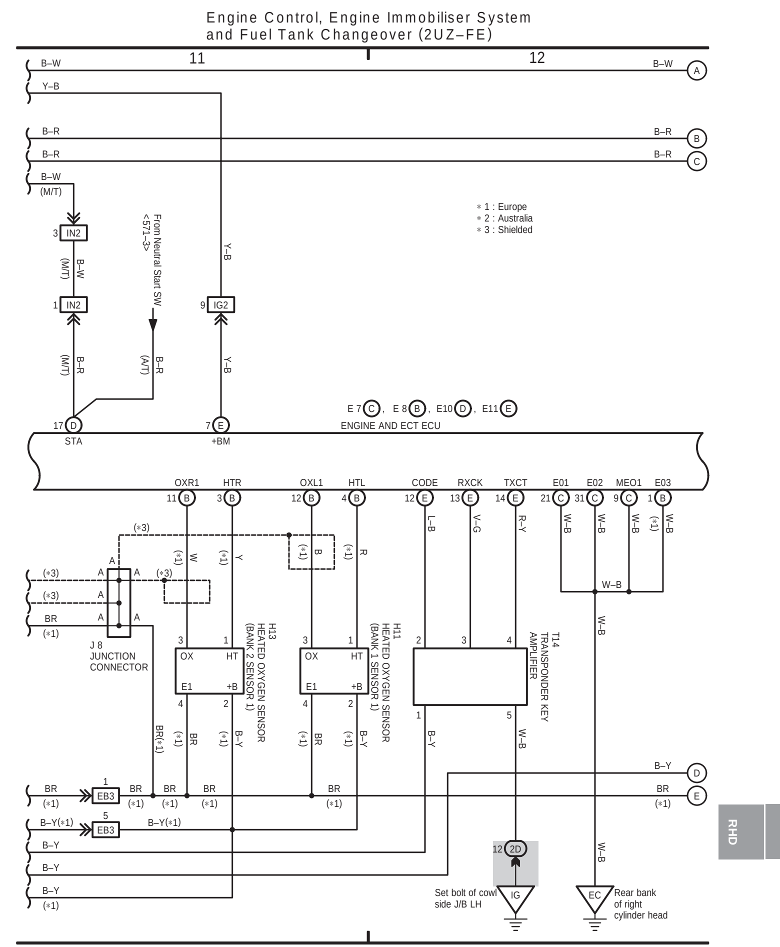
Engine Control, Engine Immobiliser System and Fuel Tank Changeover (2UZ–FE)
∗1 : Europe
∗2 : Australia
∗3 : Shielded
From Neutral Start SW <571–3>
E7, E8, E10, E11 ENGINE AND ECT ECU
J 8 JUNCTION CONNECTOR
H13 HEATED OXYGEN SENSOR (BANK 2 SENSOR 1)
H11 HEATED OXYGEN SENSOR (BANK 1 SENSOR 1)
T14 TRANSPONDER KEY AMPLIFIER
Set bolt of cowl side J/B LH
Rear bank of right cylinder head

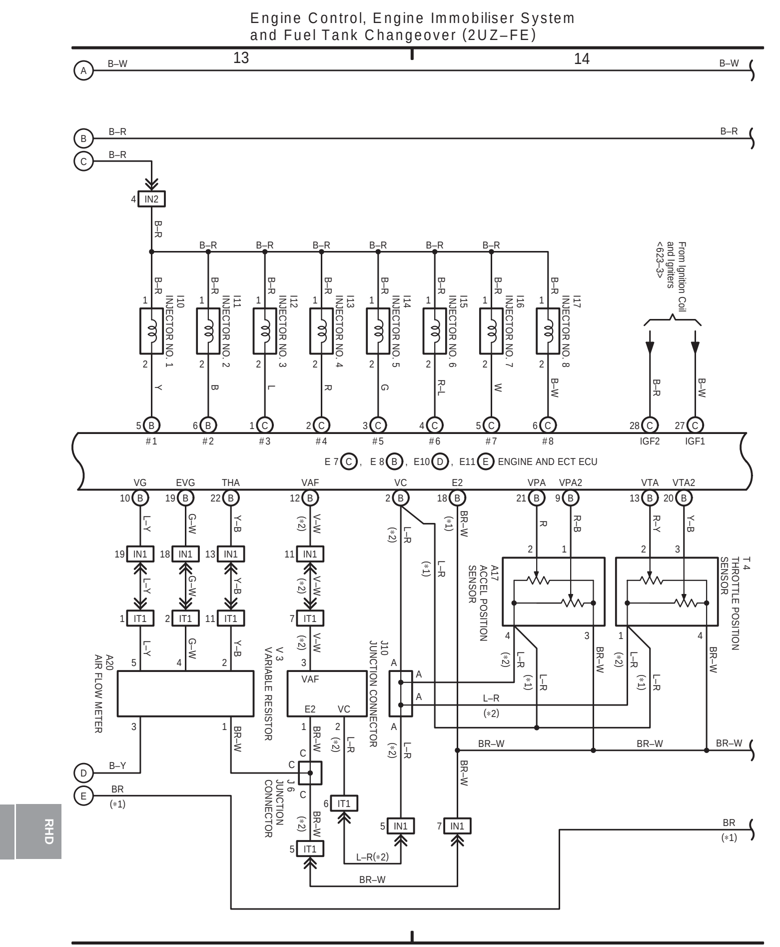
Engine Control, Engine Immobiliser System and Fuel Tank Changeover (2UZ–FE)
I10 INJECTOR NO. 1
I11 INJECTOR NO. 2
I12 INJECTOR NO. 3
I13 INJECTOR NO. 4
I14 INJECTOR NO. 5
I15 INJECTOR NO. 6
I16 INJECTOR NO. 7
I17 INJECTOR NO. 8
From Ignition Coil and Igniters <623–3>
E7, E8, E10, E11 ENGINE AND ECT ECU
A20 AIR FLOW METER
V 3 VARIABLE RESISTOR
J10 JUNCTION CONNECTOR
J 6 JUNCTION CONNECTOR
A17 ACCEL POSITION SENSOR
T 4 THROTTLE POSITION SENSOR

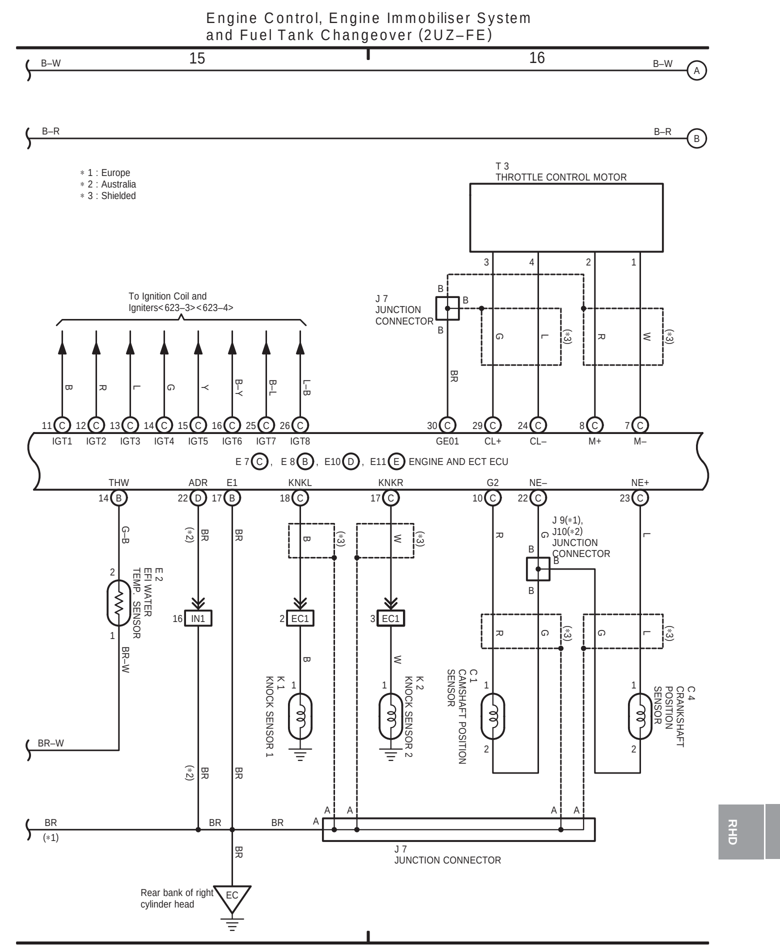
Engine Control, Engine Immobiliser System and Fuel Tank Changeover (2UZ–FE)
∗1 : Europe
∗2 : Australia
∗3 : Shielded
T 3 THROTTLE CONTROL MOTOR
J 7 JUNCTION CONNECTOR
To Ignition Coil and Igniters<623–3><623–4>
E7, E8, E10, E11 ENGINE AND ECT ECU
E 2 EFI WATER TEMP. SENSOR
K 1 KNOCK SENSOR 1
K 2 KNOCK SENSOR 2
C 1 CAMSHAFT POSITION SENSOR
J 9(∗1), J10(∗2) JUNCTION CONNECTOR
C 4 CRANKSHAFT POSITION SENSOR
Rear bank of right cylinder head

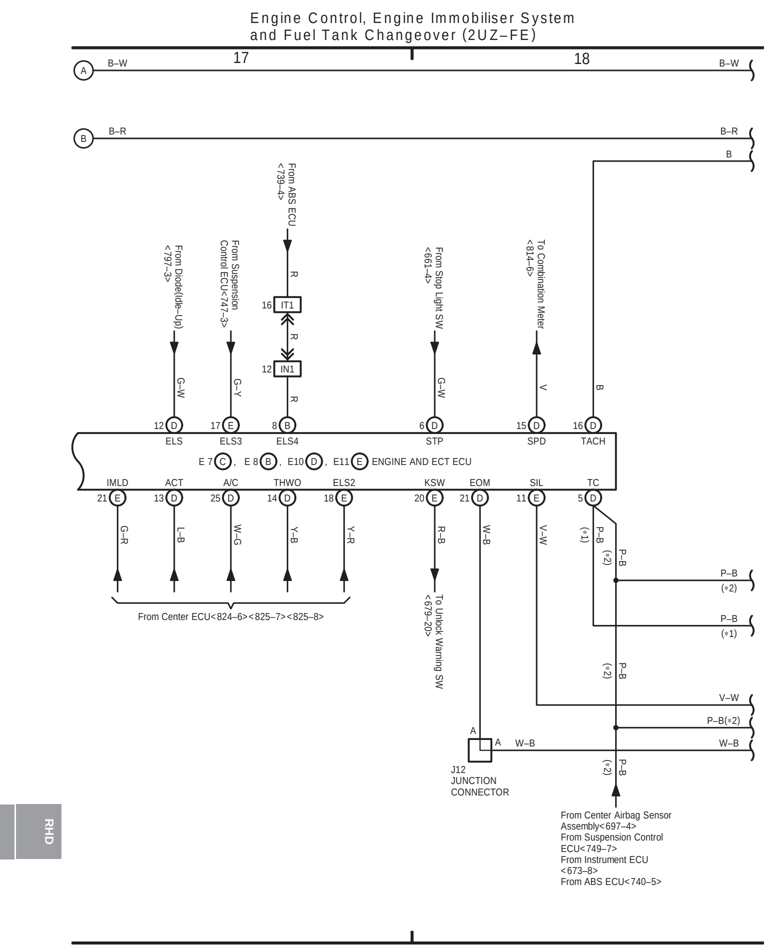
Engine Control, Engine Immobiliser System and Fuel Tank Changeover (2UZ–FE)
From Diode(Idle–Up) <787–3>
From Suspension Control ECU<747–3>
From ABS ECU <739–4>
From Stop Light SW <661–4>
To Combination Meter <814–6>
E7, E8, E10, E11 ENGINE AND ECT ECU
From Center ECU<824–6><825–7><825–8>
To Unlock Warning SW <679–20>
J12 JUNCTION CONNECTOR
From Center Airbag Sensor Assembly<697–4>
From Suspension Control ECU<749–7>
From Instrument ECU <673–8>
From ABS ECU<740–5>

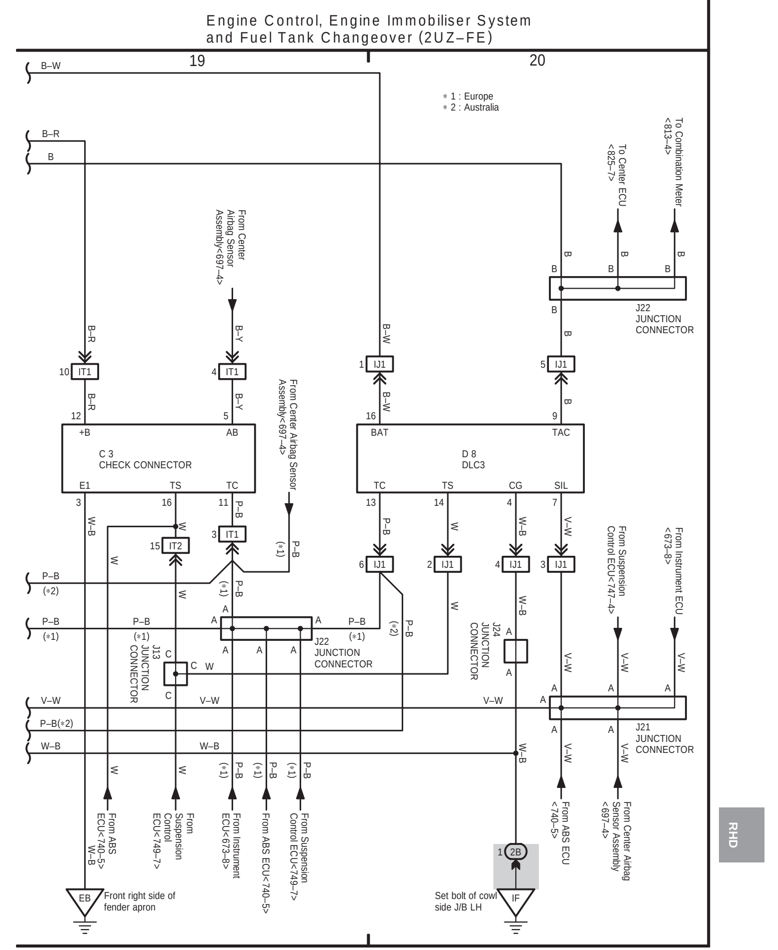
Engine Control, Engine Immobiliser System and Fuel Tank Changeover (2UZ–FE)
∗1 : Europe
∗2 : Australia
To Center ECU <825–7>
To Combination Meter <813–4>
J22 JUNCTION CONNECTOR
C 3 CHECK CONNECTOR
D 8 DLC3
J13 JUNCTION CONNECTOR
J24 JUNCTION CONNECTOR
J21 JUNCTION CONNECTOR
Front right side of fender apron
Set bolt of cowl side J/B LH

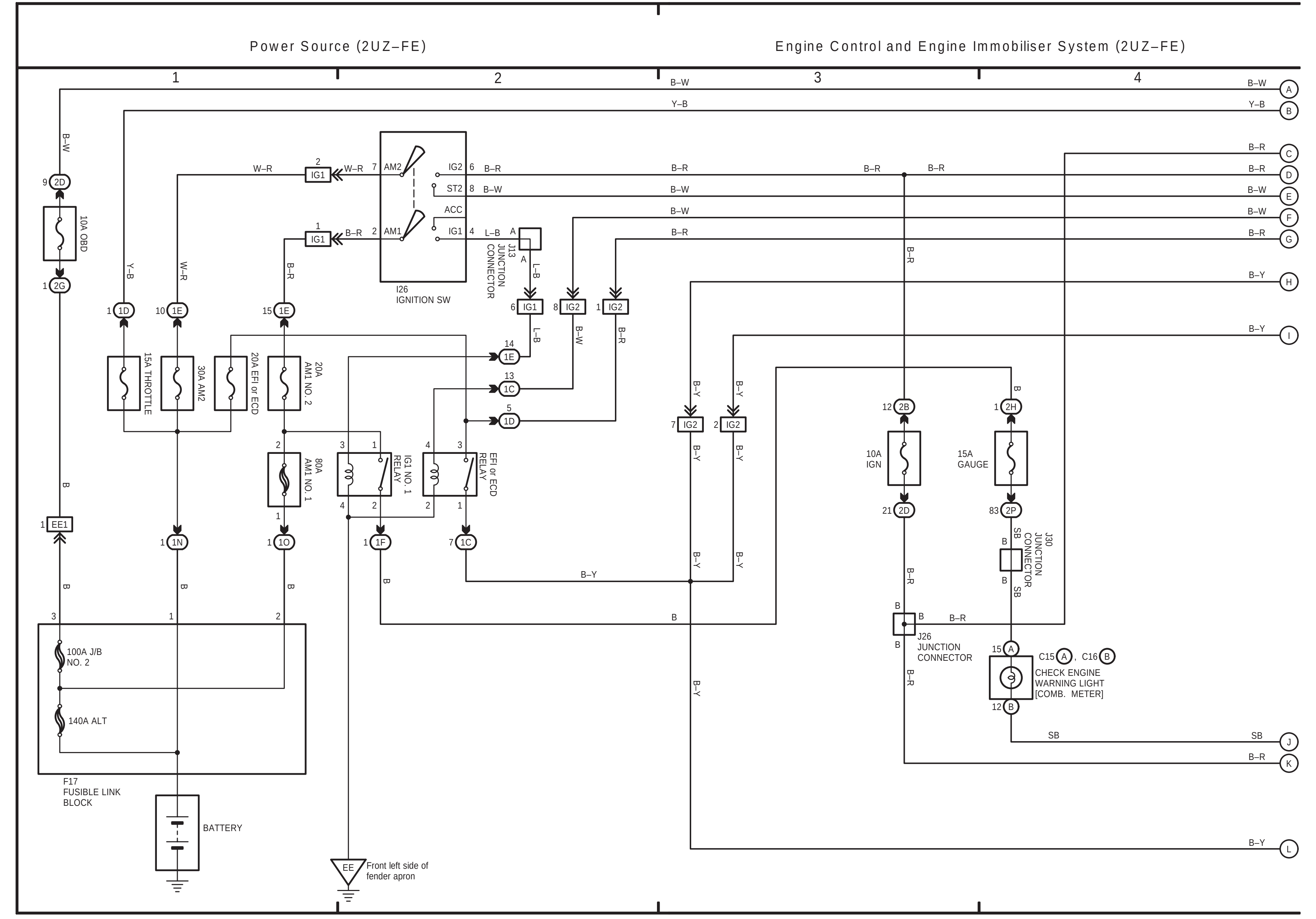
Power Source (2UZ–FE)
Engine Control and Engine Immobiliser System (2UZ–FE)
10A OBD
15A THROTTLE
30A AM2
20A EFI or ECD
20A AM1 NO. 2
80A AM1 NO. 1
IG1 NO. 1 RELAY
EFI or ECD RELAY
I26 IGNITION SW
J13 JUNCTION CONNECTOR
10A IGN
15A GAUGE
J30 JUNCTION CONNECTOR
J26 JUNCTION CONNECTOR
C15, C16 CHECK ENGINE WARNING LIGHT [COMB. METER]
100A J/B NO. 2
140A ALT
F17 FUSIBLE LINK BLOCK
BATTERY
Front left side of fender apron

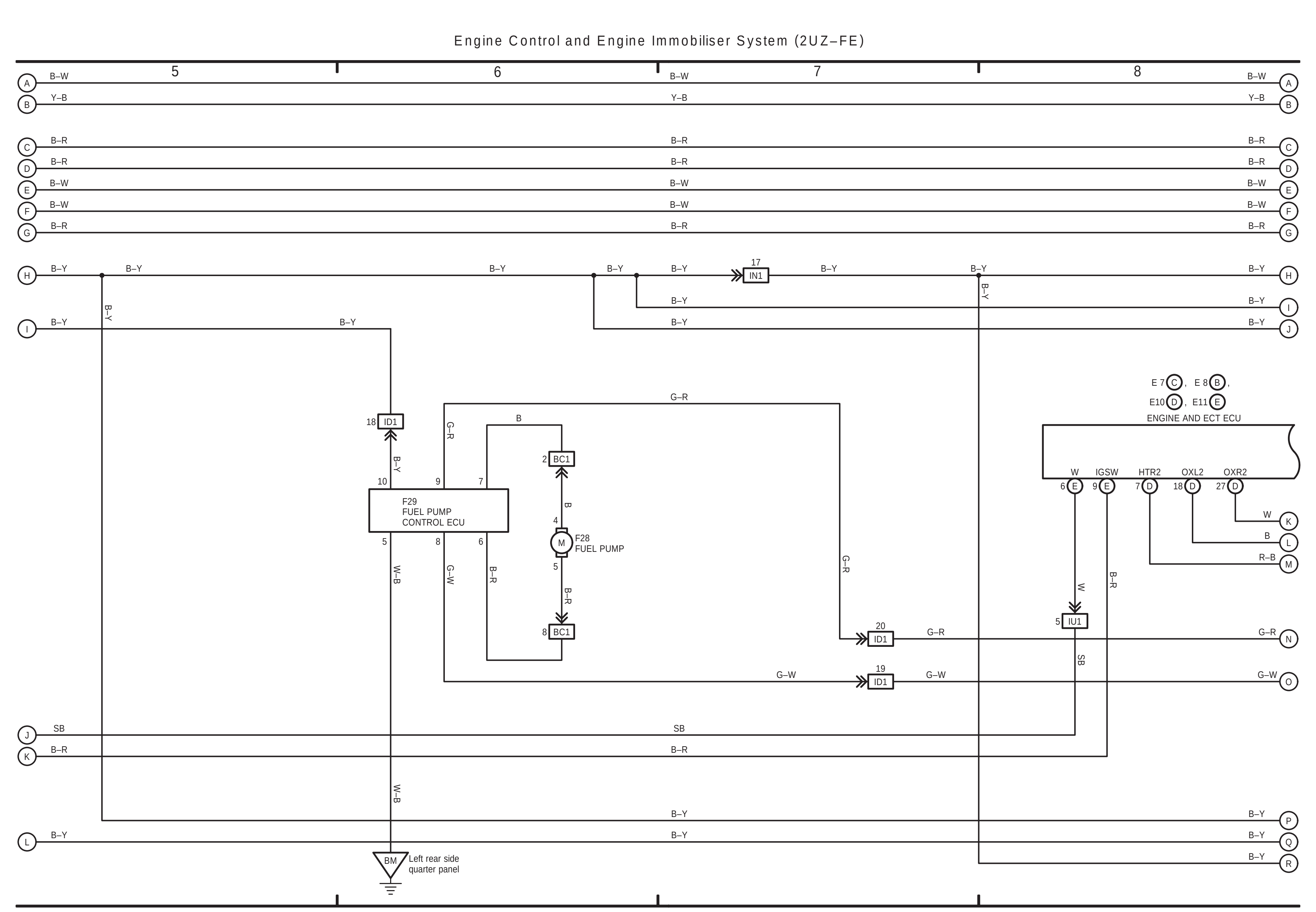
Engine Control and Engine Immobiliser System (2UZ–FE)
F29 FUEL PUMP CONTROL ECU
F28 FUEL PUMP
E7, E8, E10, E11 ENGINE AND ECT ECU
Left rear side quarter panel

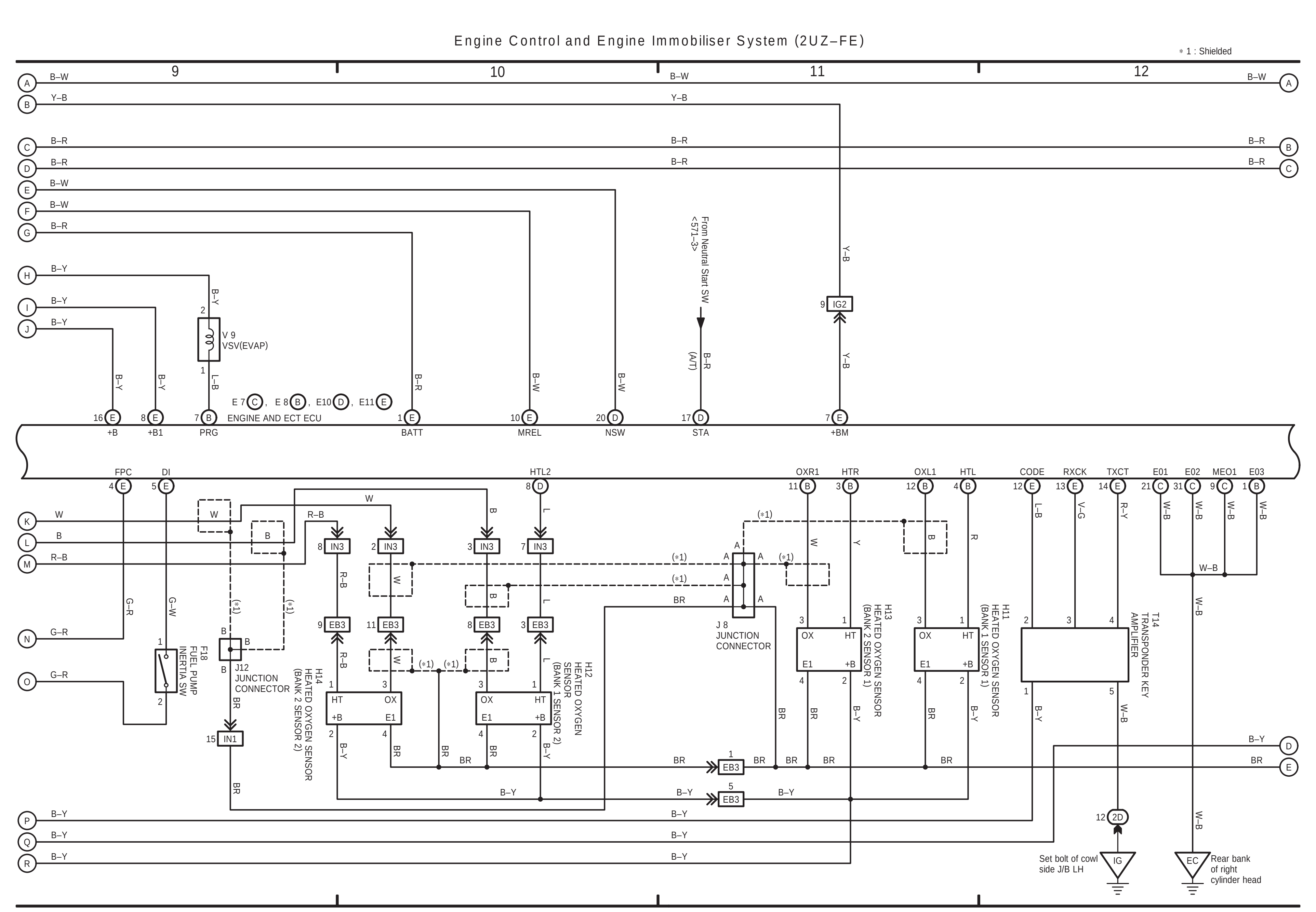
Engine Control and Engine Immobiliser System (2UZ–FE)
＊1 : Shielded
V 9 VSV(EVAP)
E 7, E 8, E10, E11 ENGINE AND ECT ECU
From Neutral Start SW <571–3>
F18 FUEL PUMP INERTIA SW
J12 JUNCTION CONNECTOR
H14 HEATED OXYGEN SENSOR (BANK 2 SENSOR 2)
H12 HEATED OXYGEN SENSOR (BANK 1 SENSOR 2)
J 8 JUNCTION CONNECTOR
H13 HEATED OXYGEN SENSOR (BANK 2 SENSOR 1)
H11 HEATED OXYGEN SENSOR (BANK 1 SENSOR 1)
T14 TRANSPONDER KEY AMPLIFIER
Set bolt of cowl side J/B LH
Rear bank of right cylinder head

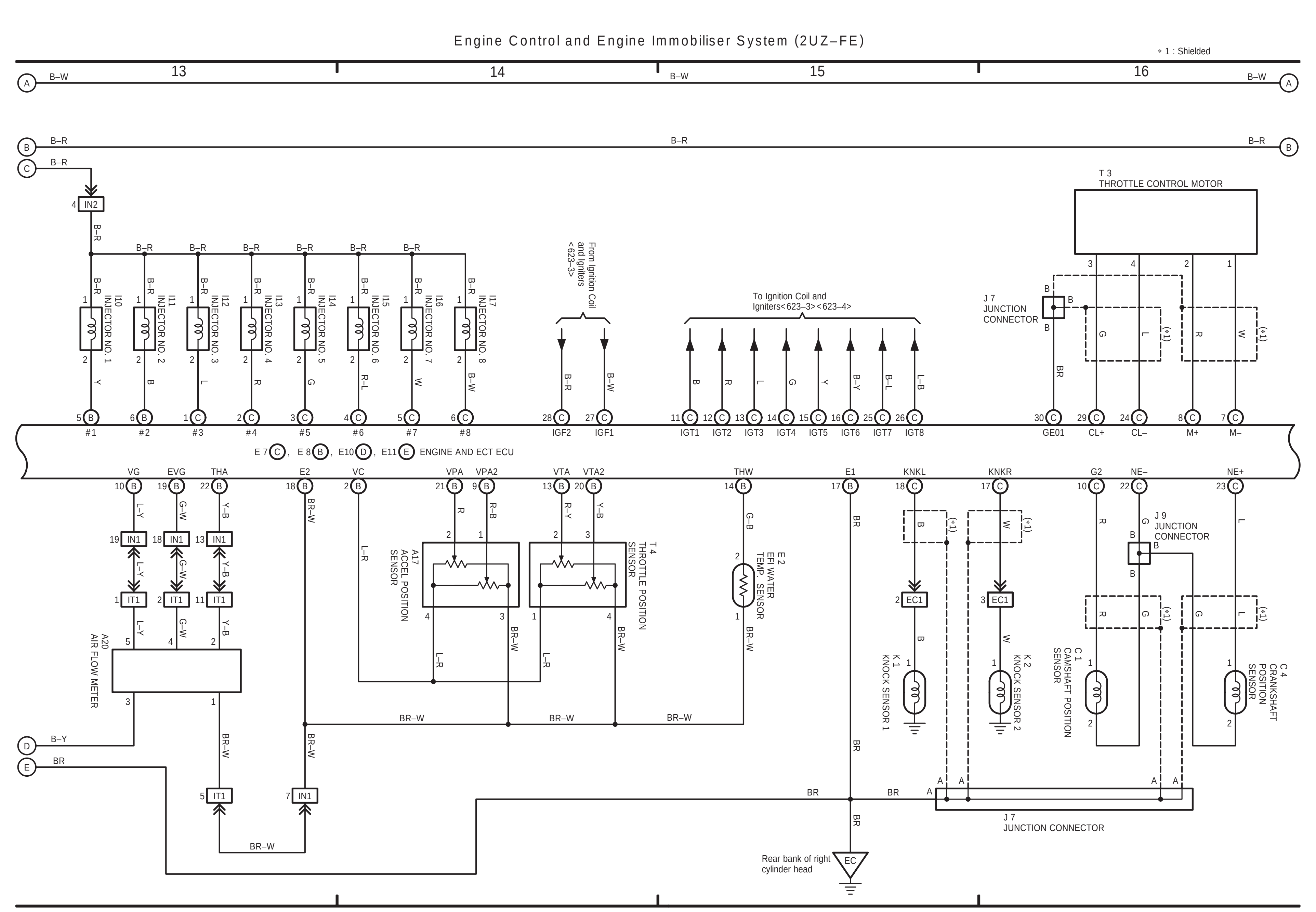
Engine Control and Engine Immobiliser System (2UZ–FE)
＊1 : Shielded
I10 INJECTOR NO. 1
I11 INJECTOR NO. 2
I12 INJECTOR NO. 3
I13 INJECTOR NO. 4
I14 INJECTOR NO. 5
I15 INJECTOR NO. 6
I16 INJECTOR NO. 7
I17 INJECTOR NO. 8
From Ignition Coil and Igniters <623–3>
To Ignition Coil and Igniters<623–3><623–4>
T 3 THROTTLE CONTROL MOTOR
J 7 JUNCTION CONNECTOR
E 7, E 8, E10, E11 ENGINE AND ECT ECU
A20 AIR FLOW METER
A17 ACCEL POSITION SENSOR
T 4 THROTTLE POSITION SENSOR
E 2 EFI WATER TEMP. SENSOR
K 1 KNOCK SENSOR 1
K 2 KNOCK SENSOR 2
J 9 JUNCTION CONNECTOR
C 1 CAMSHAFT POSITION SENSOR
C 4 CRANKSHAFT POSITION SENSOR
Rear bank of right cylinder head
J 7 JUNCTION CONNECTOR

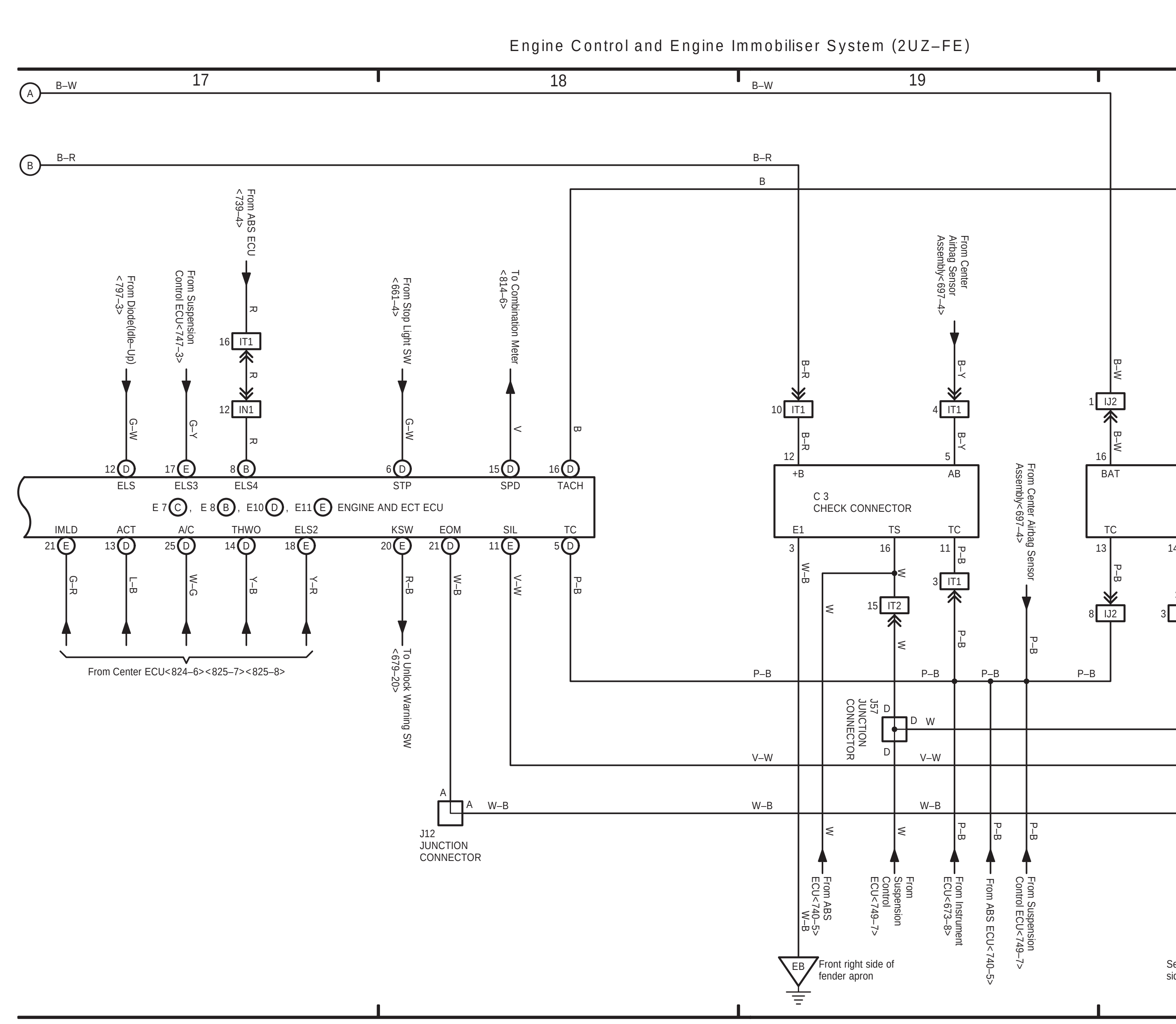
Engine Control and Engine Immobiliser System (2UZ–FE)
From Diode(Idle–Up) <797–3>
From Suspension Control ECU<747–3>
From ABS ECU <739–4>
From Stop Light SW <661–4>
To Combination Meter <814–6>
E 7, E 8, E10, E11 ENGINE AND ECT ECU
From Center ECU<824–6><825–7><825–8>
To Unlock Warning SW <679–20>
J12 JUNCTION CONNECTOR
C 3 CHECK CONNECTOR
J57 JUNCTION CONNECTOR
From Center Airbag Sensor Assembly<697–4>
D 8 DLC3
J24 JUNCTION CONNECTOR
J56 JUNCTION CONNECTOR
To Center ECU <825–7>
To Combination Meter <813–4>
From Suspension Control ECU<747–4>
From Instrument ECU <673–8>
From ABS ECU<740–5>
From Suspension Control ECU<749–7>
From Instrument ECU<673–8>
From ABS ECU<740–5>
From Suspension Control ECU<749–7>
From ABS ECU <740–5>
From Center Airbag Sensor Assembly <697–4>
Front right side of fender apron
Set bolt of cowl side J/B LH

Power Source (2UZ–FE Europe)

Engine Control and Engine Immobiliser System (2UZ–FE Europe)

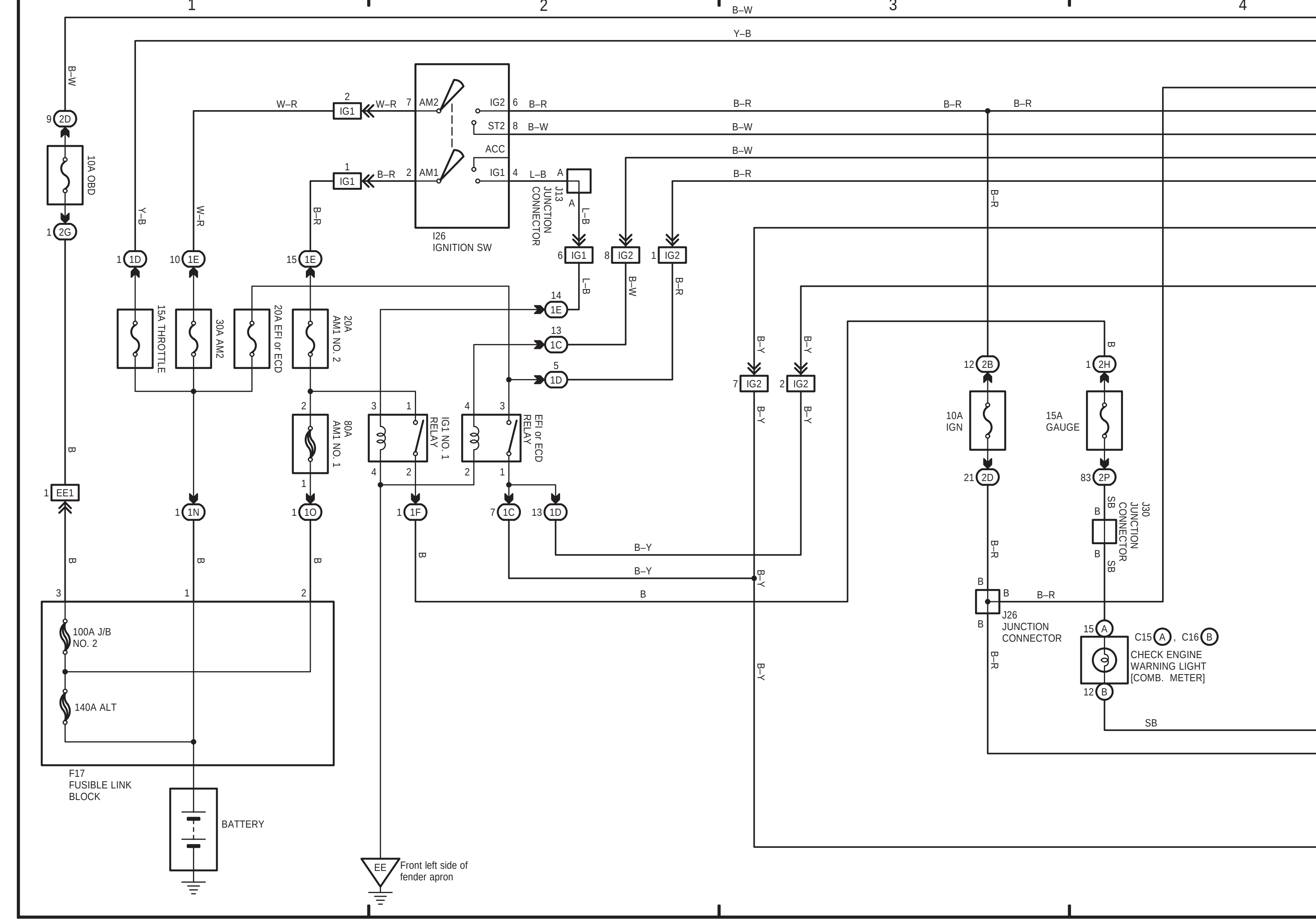

Engine Control and Engine Immobiliser System (2UZ–FE Europe)

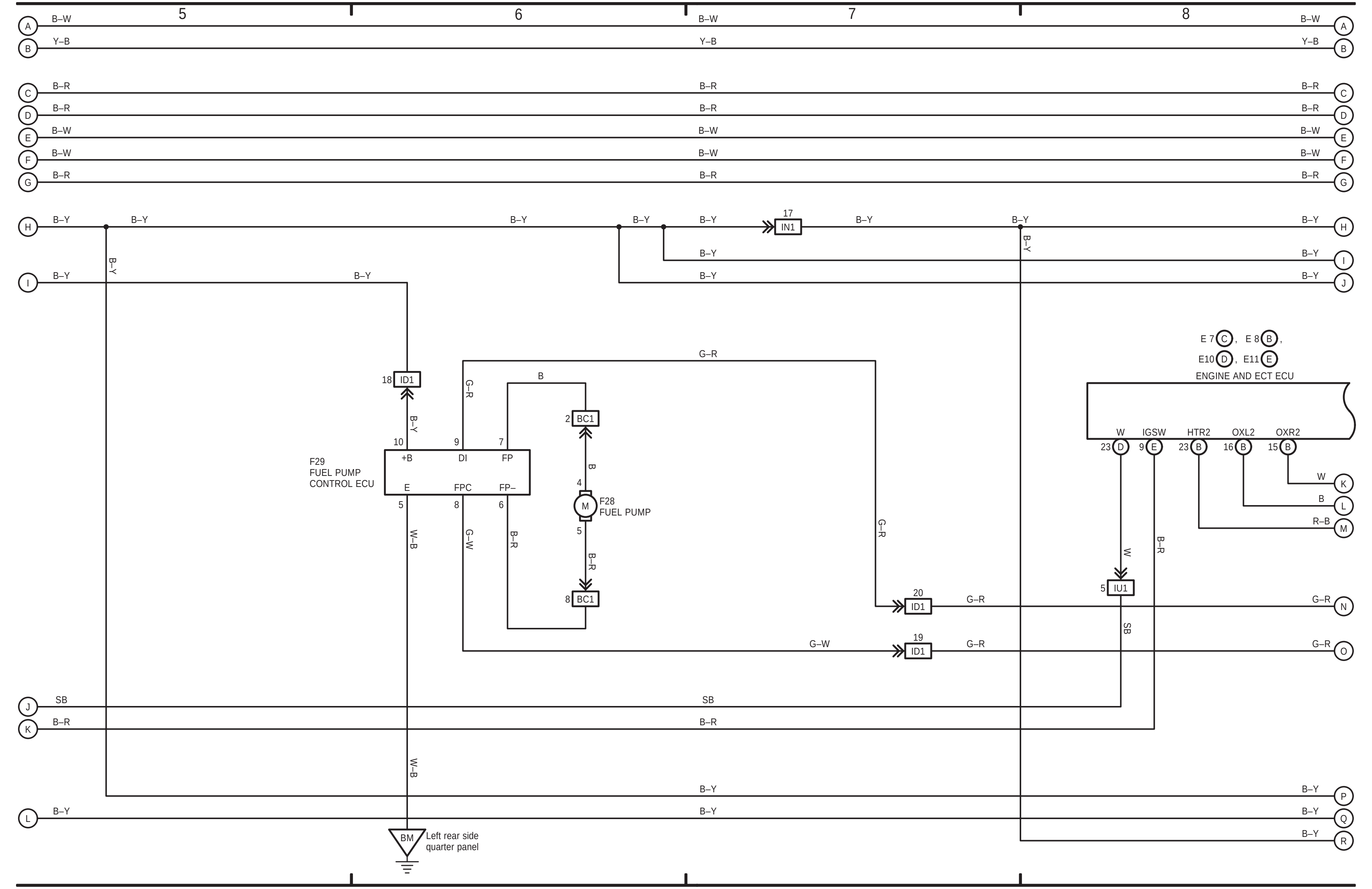

Engine Control and Engine Immobiliser System (2UZ–FE Europe)

＊1 : Shielded

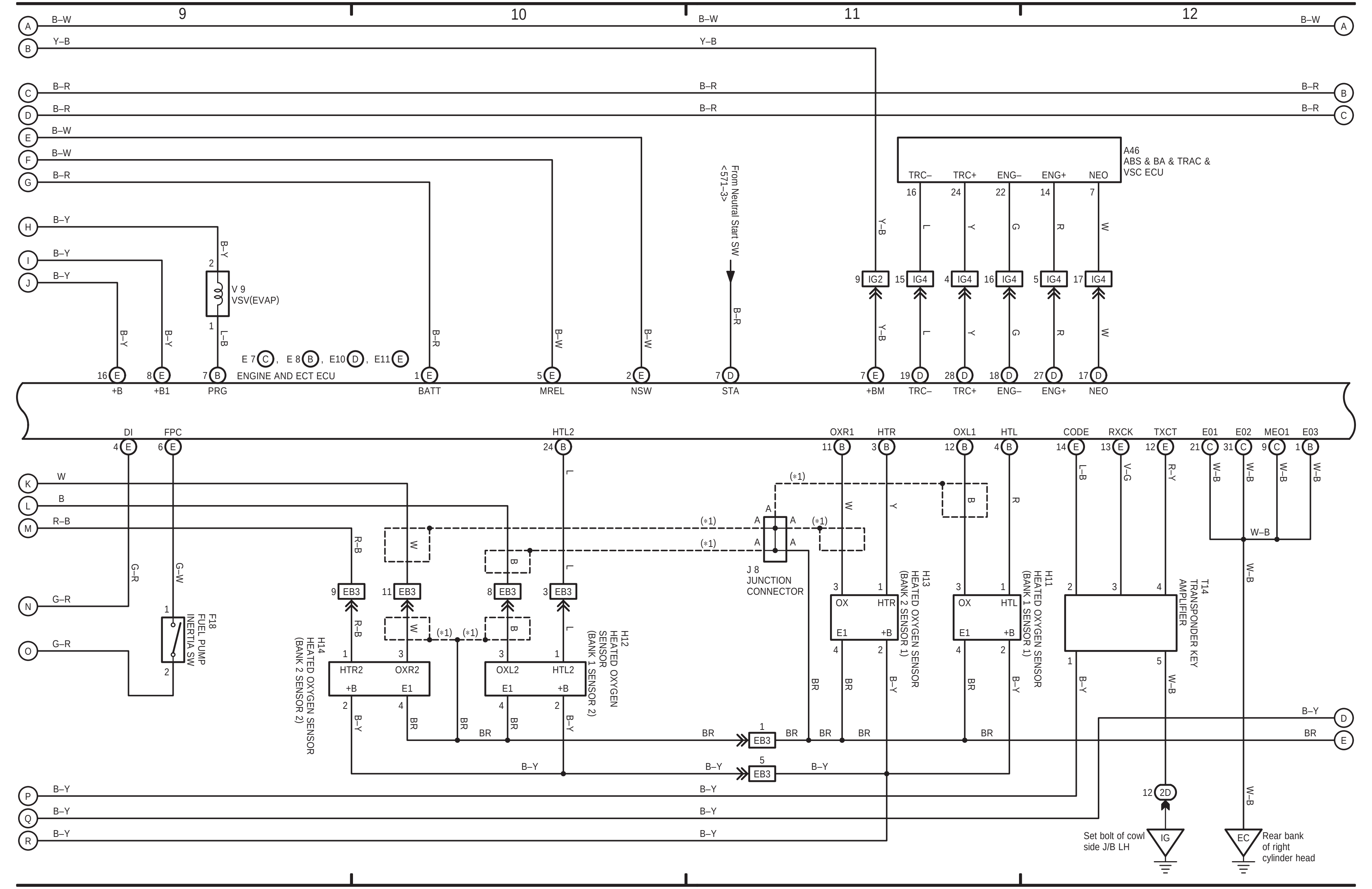

Engine Control and Engine Immobiliser System (2UZ–FE Europe)

＊1 : Shielded

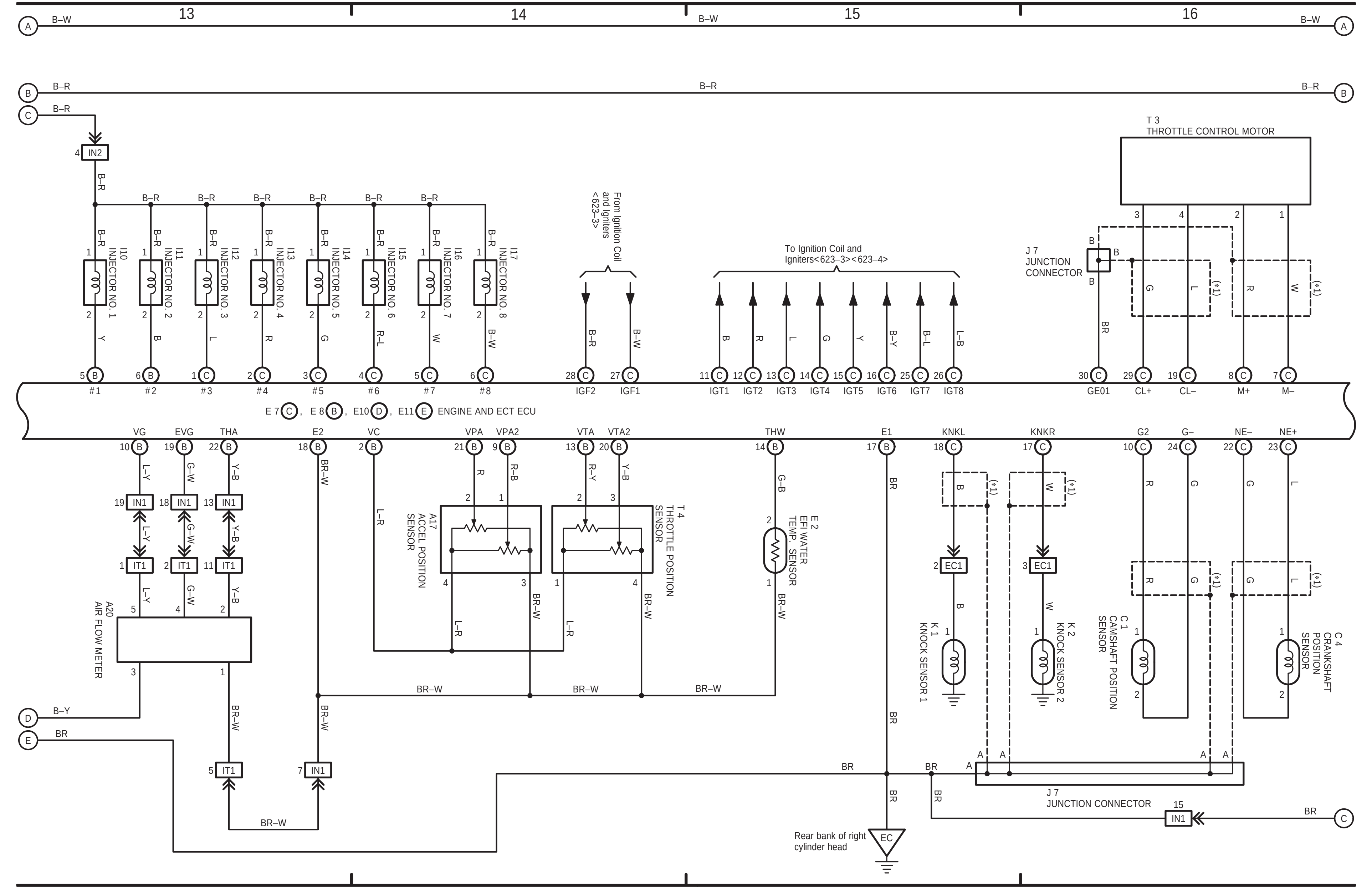

Engine Control and Engine Immobiliser System (2UZ–FE Europe)

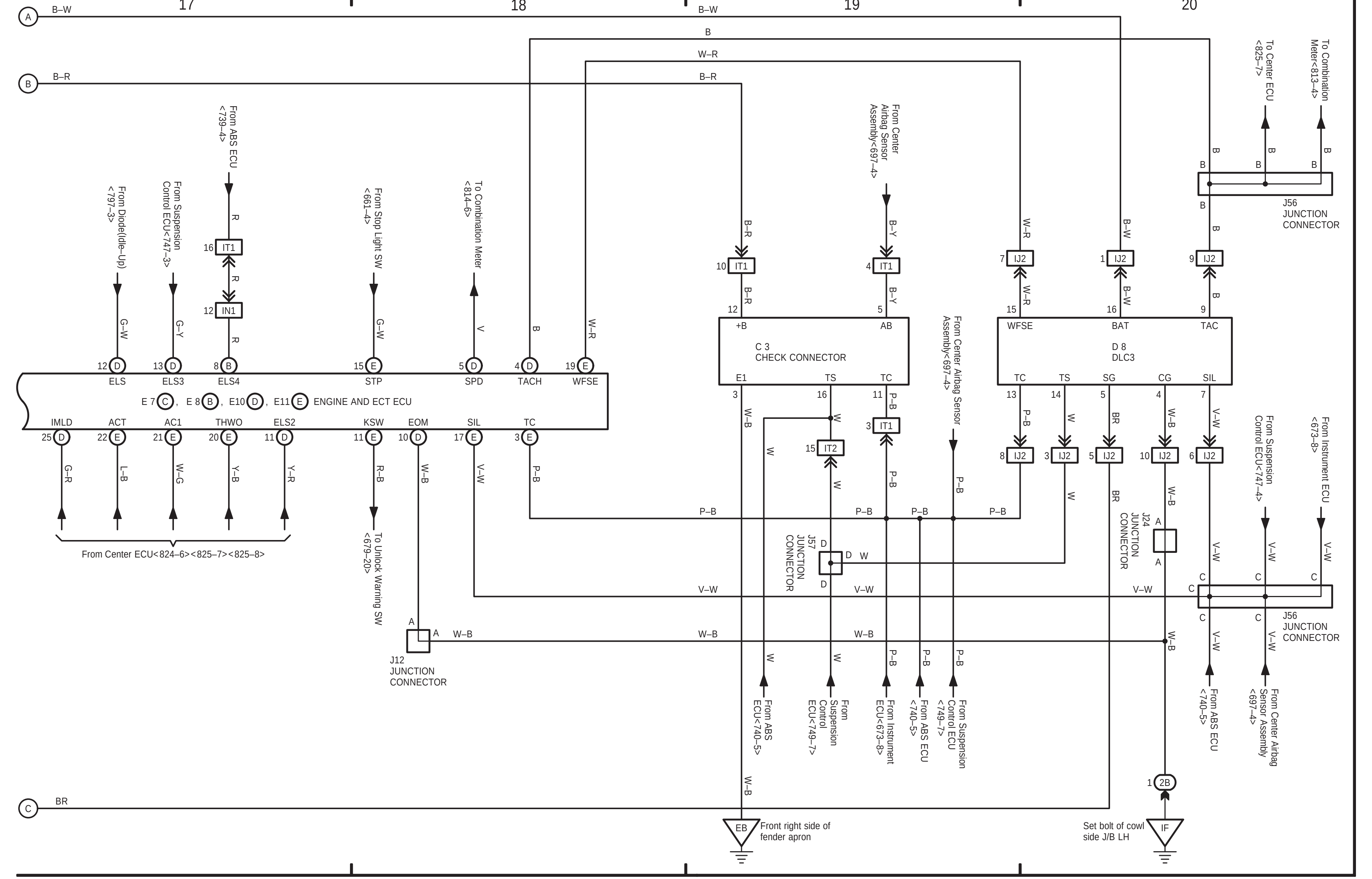

(Cont. next page)

Power Source

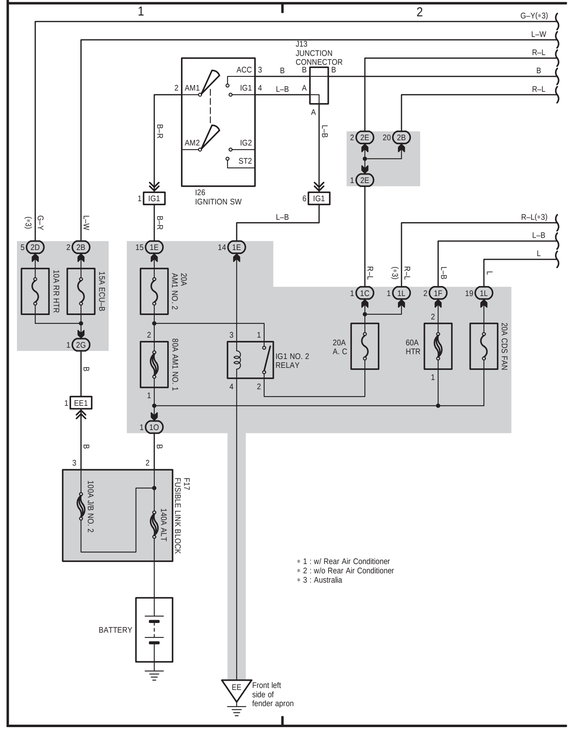

Condenser Fan and Front Air Conditioner (Automatic)

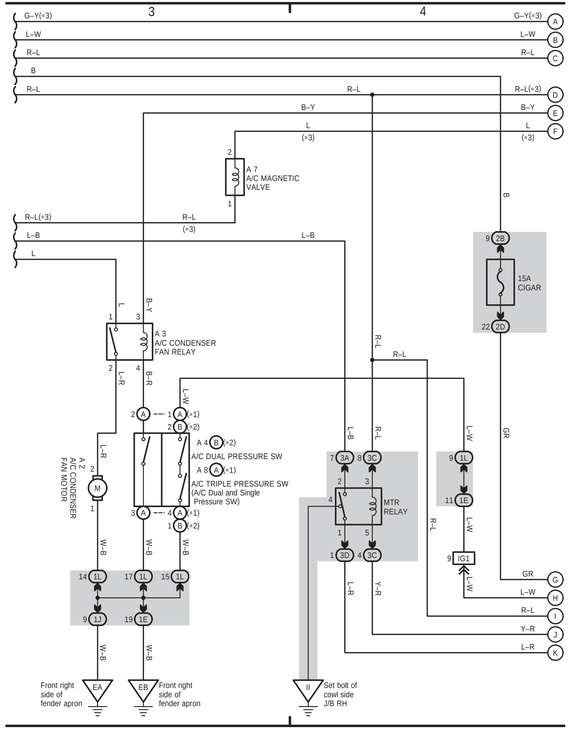

Condenser Fan and Front Air Conditioner (Automatic)

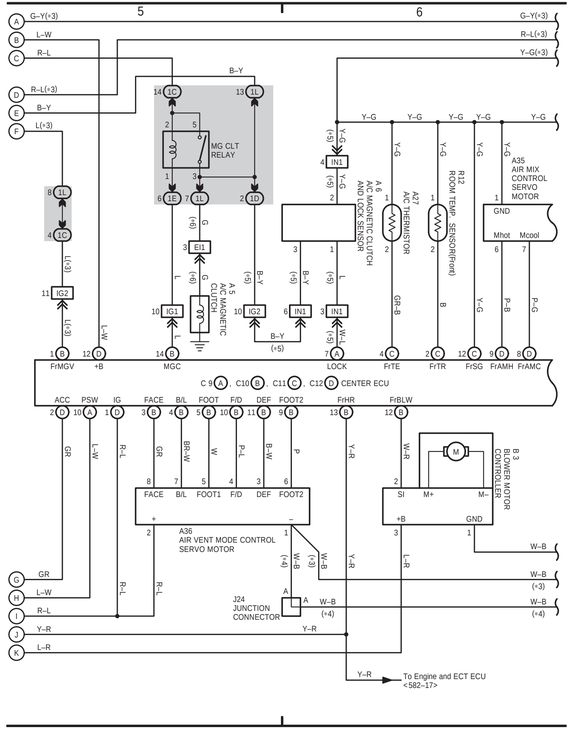

Condenser Fan and Front Air Conditioner (Automatic)

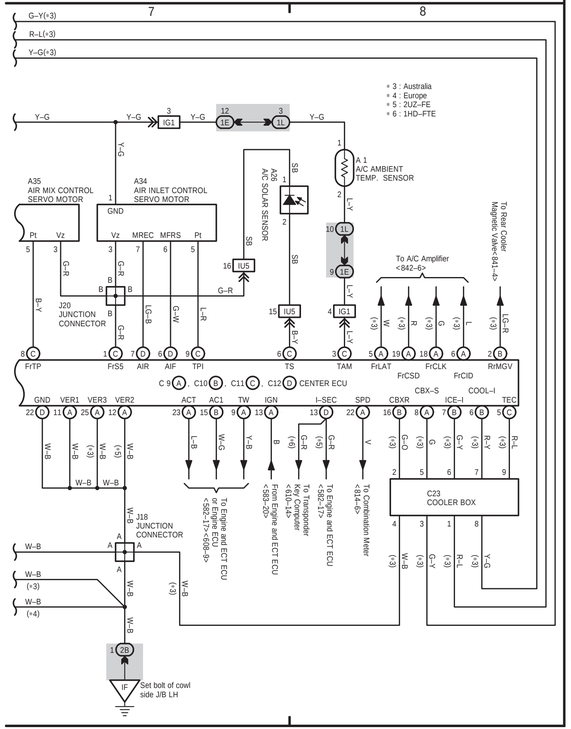

(Cont. next page)

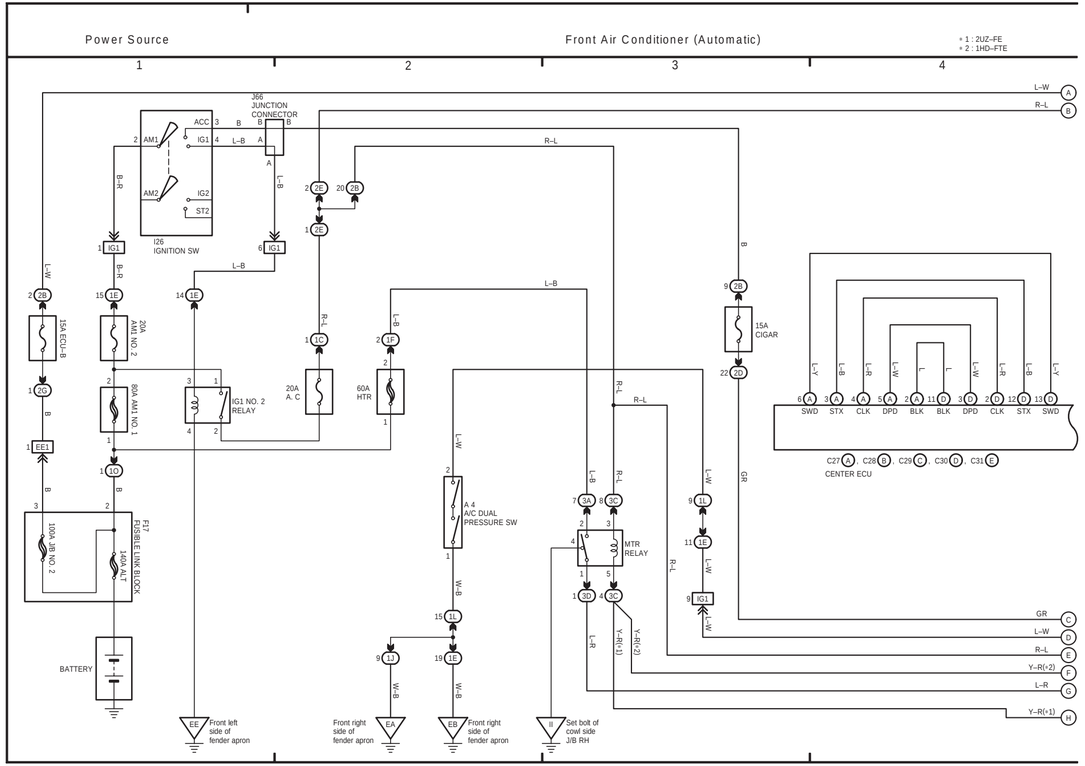

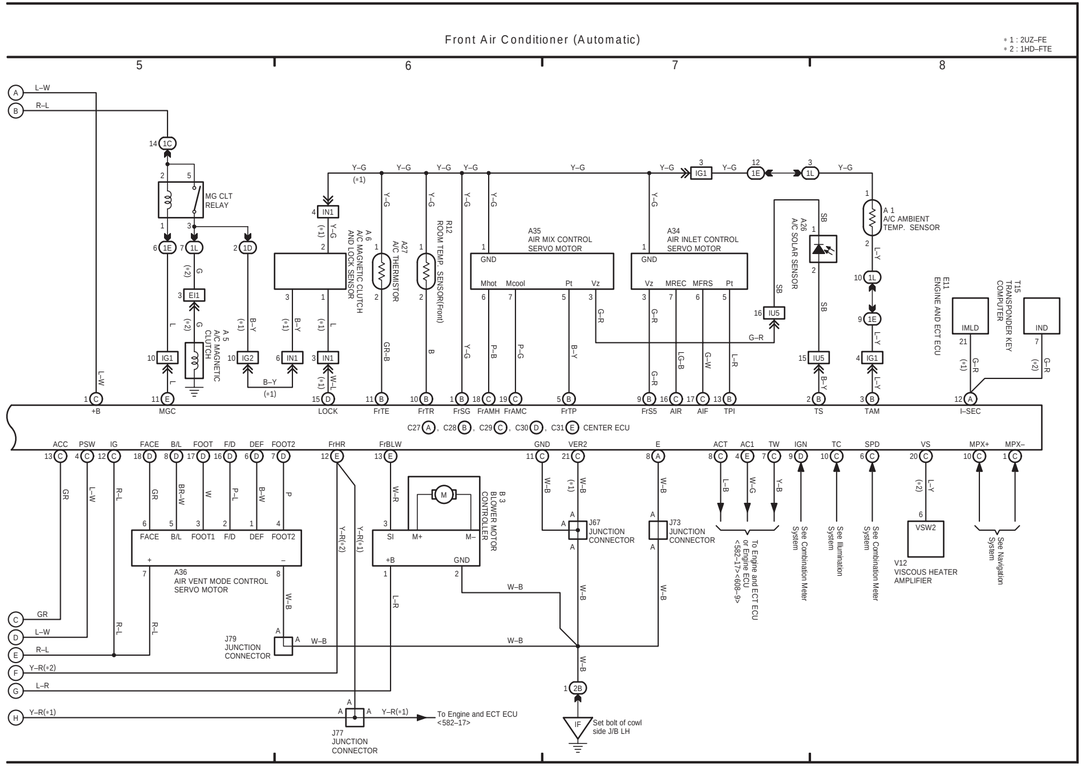

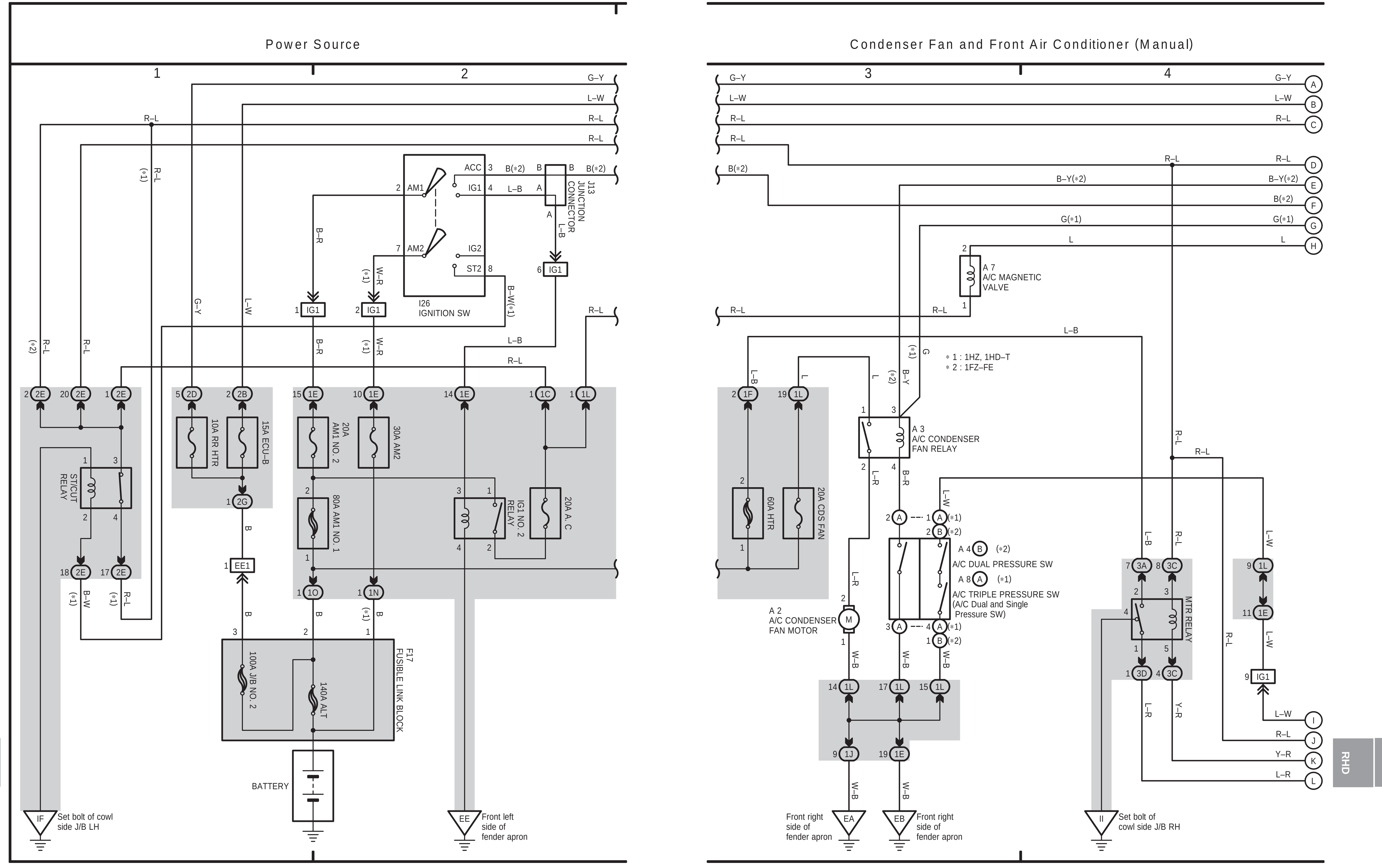
Power Source
Condenser Fan and Front Air Conditioner (Manual)
I26
IGNITION SW
J13
JUNCTION
CONNECTOR
ST/CUT
RELAY
10A RR HTR
15A ECU–B
20A
AM1 NO. 2
30A AM2
80A AM1 NO. 1
IG1 NO. 2
RELAY
20A A. C
F17
FUSIBLE LINK BLOCK
100A J/B NO. 2
140A ALT
BATTERY
Set bolt of cowl
side J/B LH
Front left
side of
fender apron
∗ 1 : 1HZ, 1HD–T
∗ 2 : 1FZ–FE
A 7
A/C MAGNETIC
VALVE
A 3
A/C CONDENSER
FAN RELAY
60A HTR
20A CDS FAN
A 4 (∗2)
A/C DUAL PRESSURE SW
A 8 (∗1)
A/C TRIPLE PRESSURE SW
(A/C Dual and Single
Pressure SW)
A 2
A/C CONDENSER
FAN MOTOR
MTR RELAY
Front right
side of
fender apron
Set bolt of
cowl side J/B RH
RHD

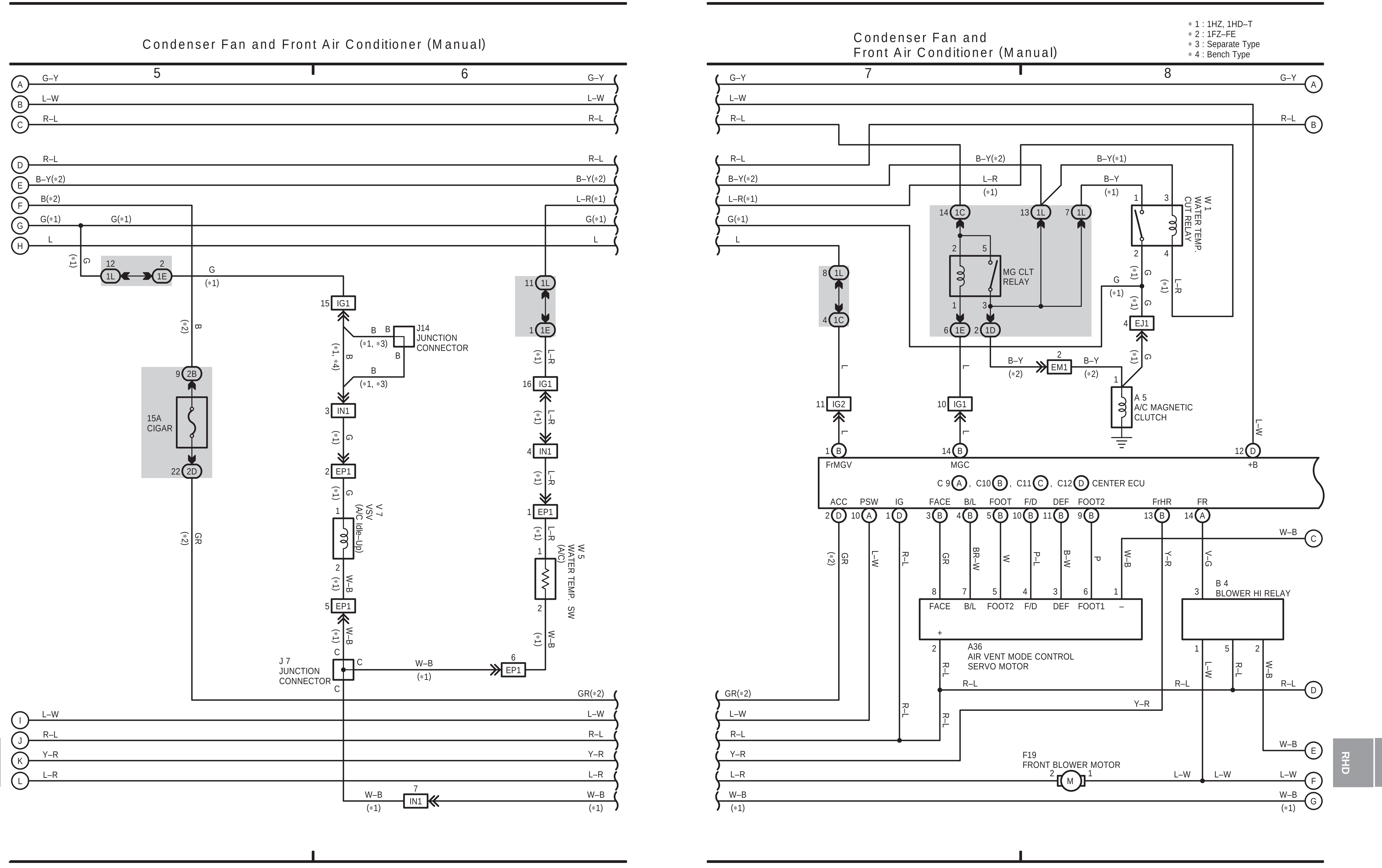
Condenser Fan and Front Air Conditioner (Manual)
15A
CIGAR
J14
JUNCTION
CONNECTOR
V 7
VSV
(A/C Idle–Up)
W 5
WATER TEMP. SW
(A/C)
J 7
JUNCTION
CONNECTOR
RHD
Condenser Fan and
Front Air Conditioner (Manual)
∗ 1 : 1HZ, 1HD–T
∗ 2 : 1FZ–FE
∗ 3 : Separate Type
∗ 4 : Bench Type
MG CLT
RELAY
W 1
WATER TEMP.
CUT RELAY
A 5
A/C MAGNETIC
CLUTCH
C 9 (A), C10 (B), C11 (C), C12 (D) CENTER ECU
A36
AIR VENT MODE CONTROL
SERVO MOTOR
B 4
BLOWER HI RELAY
F19
FRONT BLOWER MOTOR

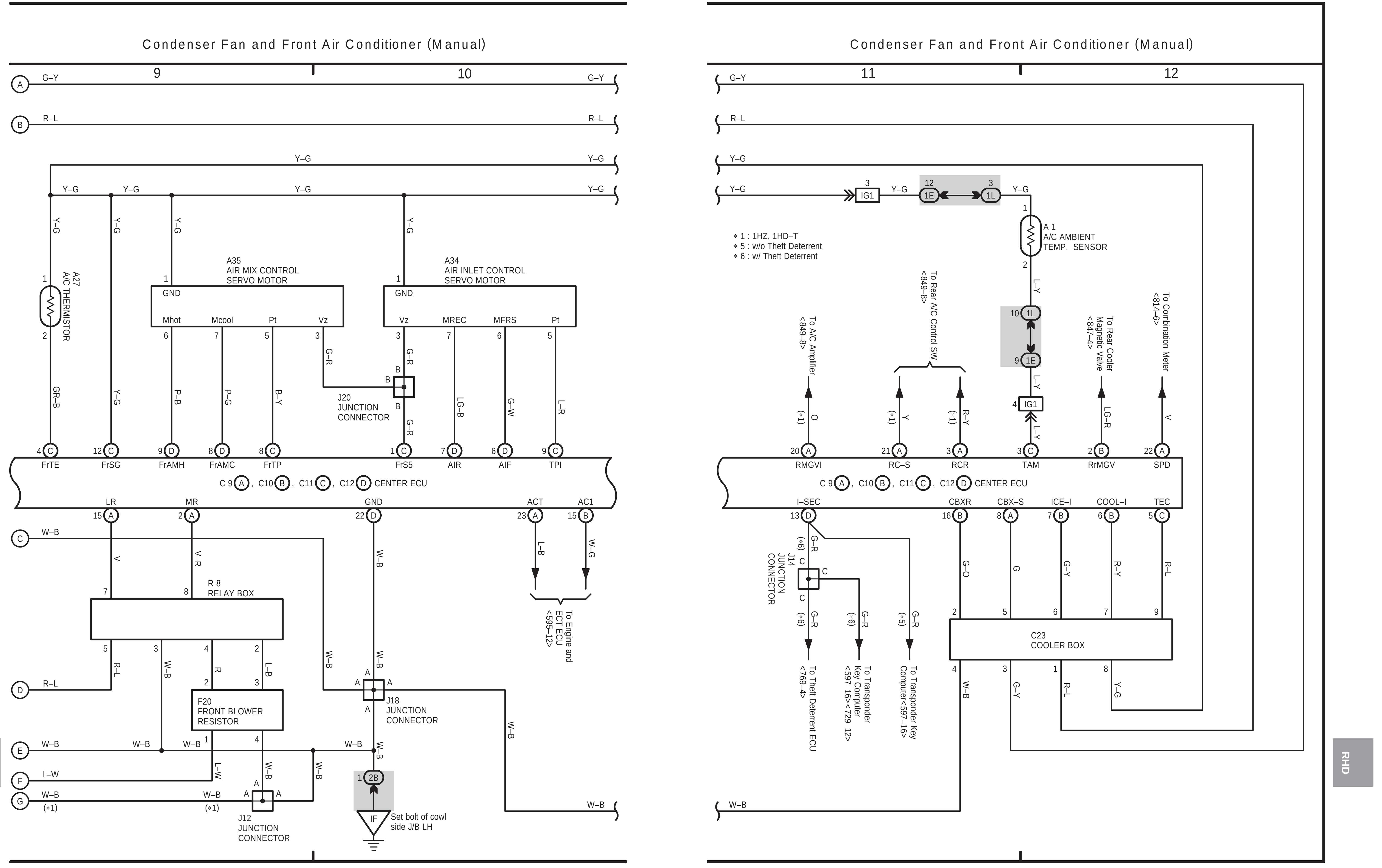
Condenser Fan and Front Air Conditioner (Manual)
A27
A/C THERMISTOR
A35
AIR MIX CONTROL
SERVO MOTOR
A34
AIR INLET CONTROL
SERVO MOTOR
J20
JUNCTION
CONNECTOR
C 9 (A), C10 (B), C11 (C), C12 (D) CENTER ECU
R 8
RELAY BOX
F20
FRONT BLOWER
RESISTOR
J18
JUNCTION
CONNECTOR
J12
JUNCTION
CONNECTOR
Set bolt of cowl
side J/B LH
To Engine and
ECT ECU
<595–12>
RHD
∗ 1 : 1HZ, 1HD–T
∗ 5 : w/o Theft Deterrent
∗ 6 : w/ Theft Deterrent
A 1
A/C AMBIENT
TEMP. SENSOR
To A/C Amplifier
<849–8>
To Rear A/C Control SW
<849–8>
To Rear Cooler
Magnetic Valve
<847–4>
To Combination Meter
<814–6>
J14
JUNCTION
CONNECTOR
To Theft Deterrent ECU
<769–4>
To Transponder
Key Computer
<597–16><729–12>
To Transponder Key
Computer<597–16>
C23
COOLER BOX

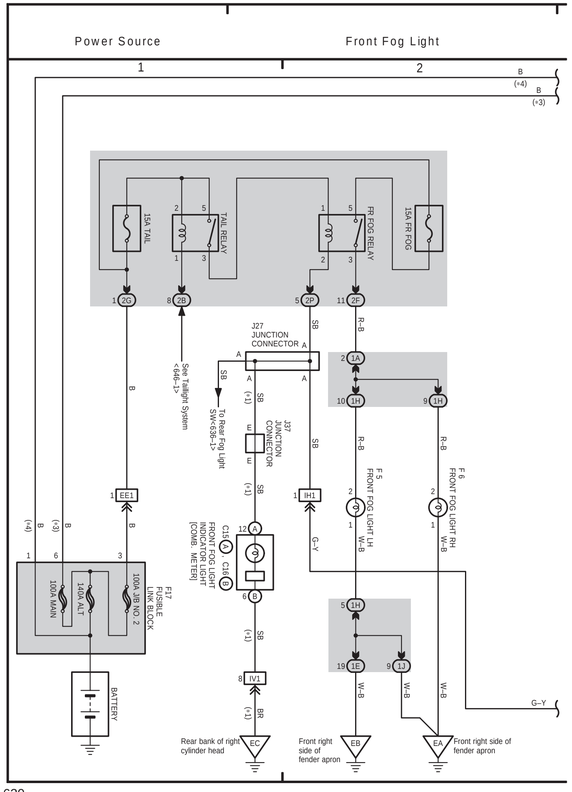

(Cont. next page)

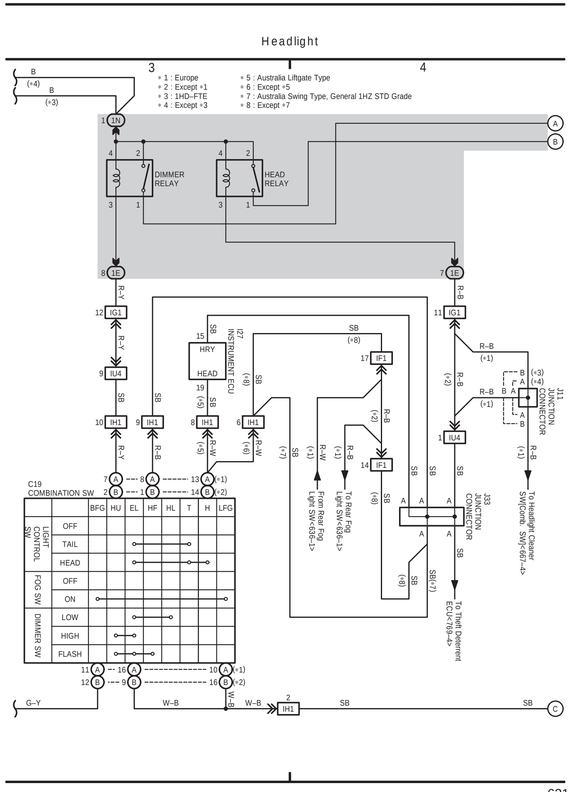

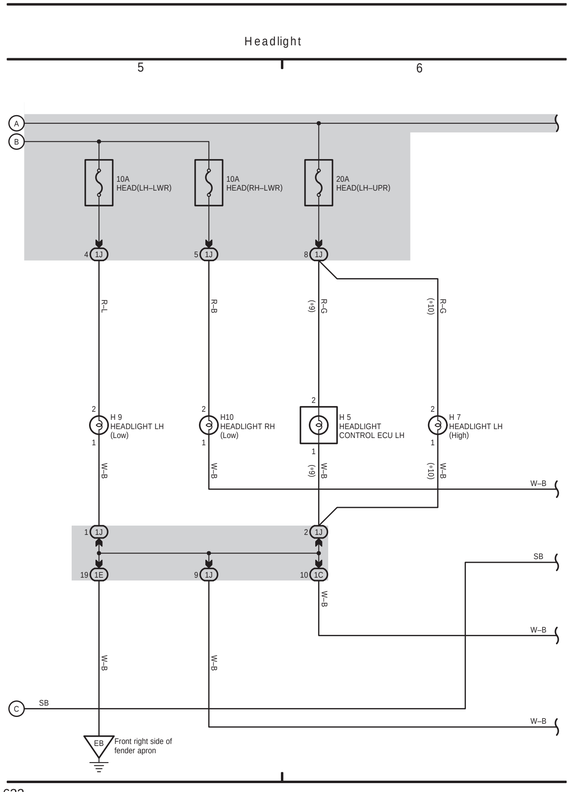

(Cont'd)

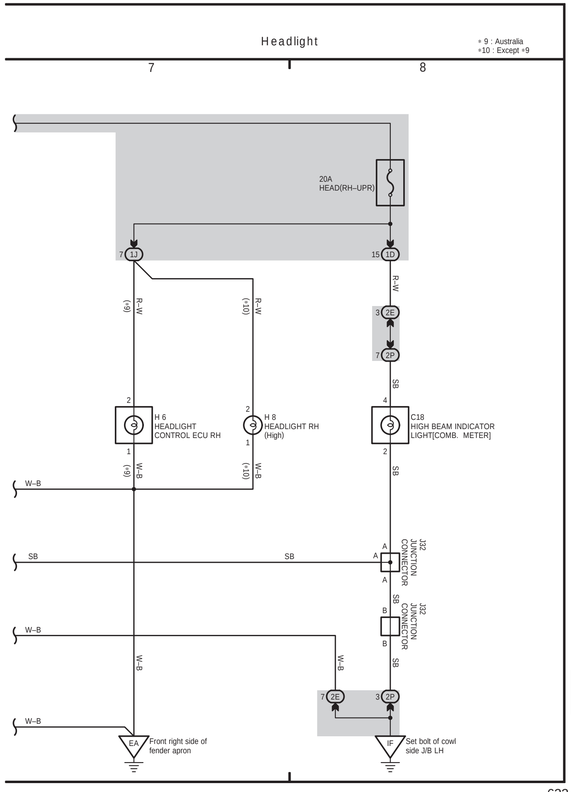

F ELECTRICAL WIRING DIAGRAM (System Circuits)

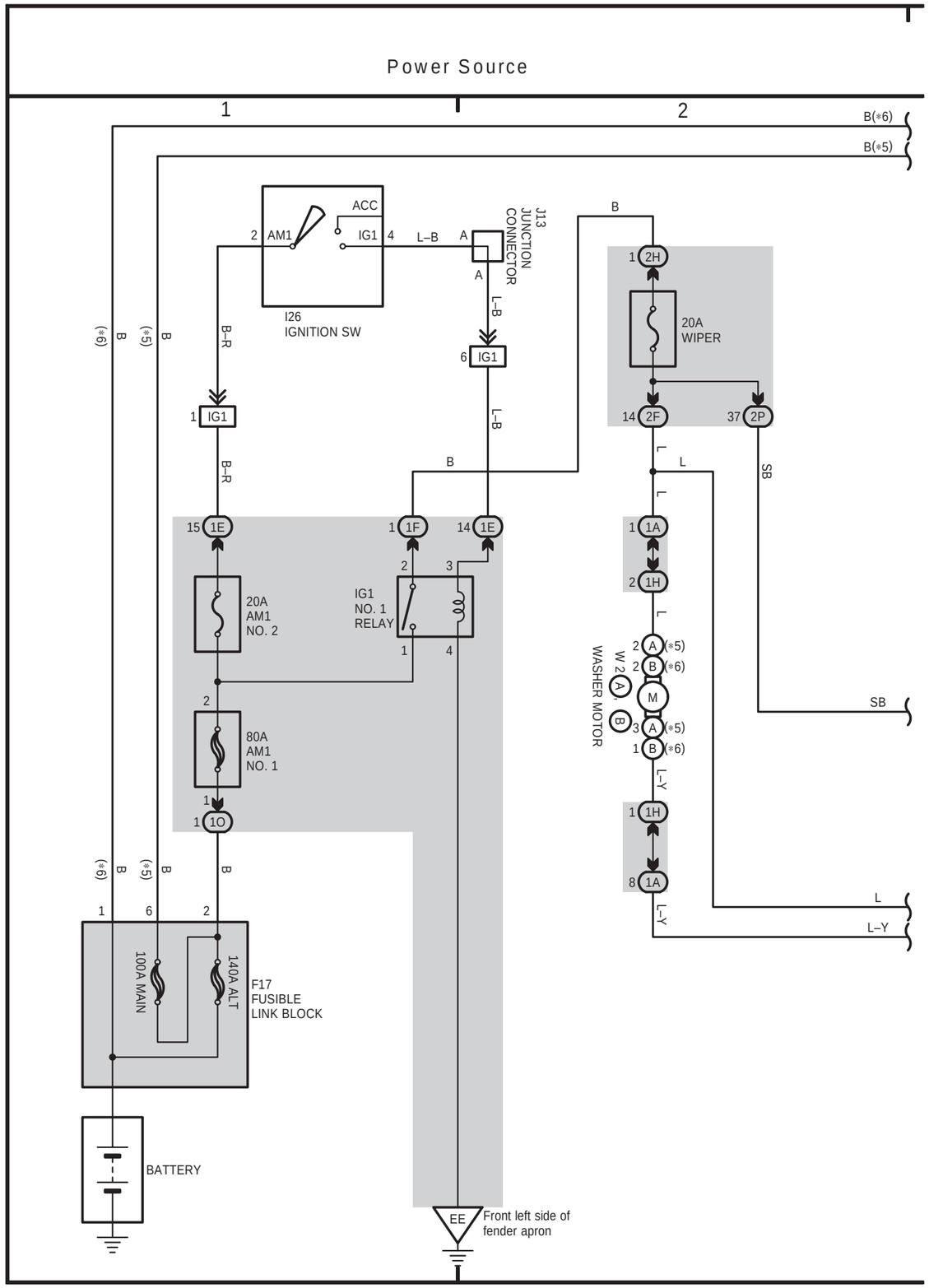

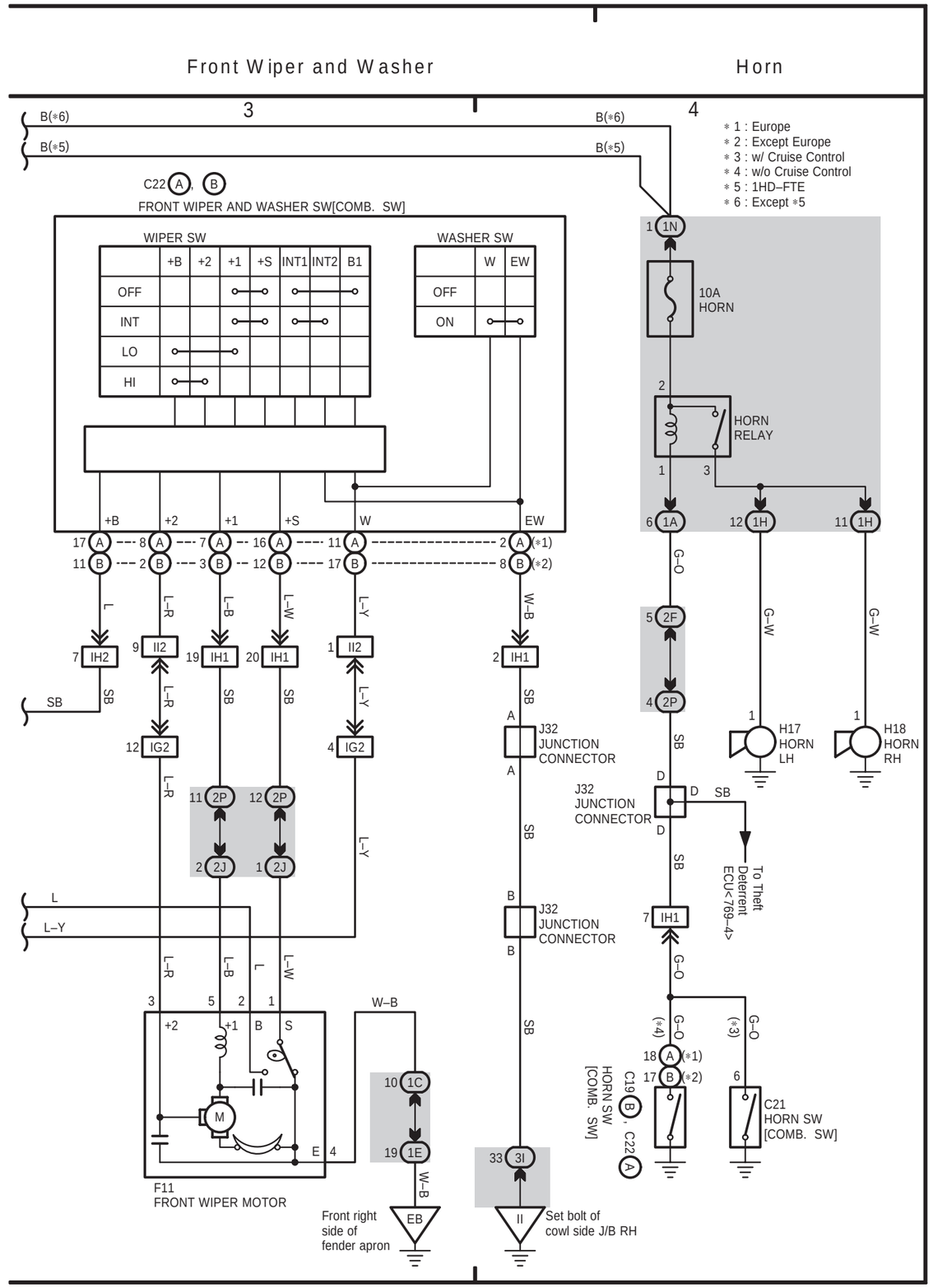

RHD

RHD

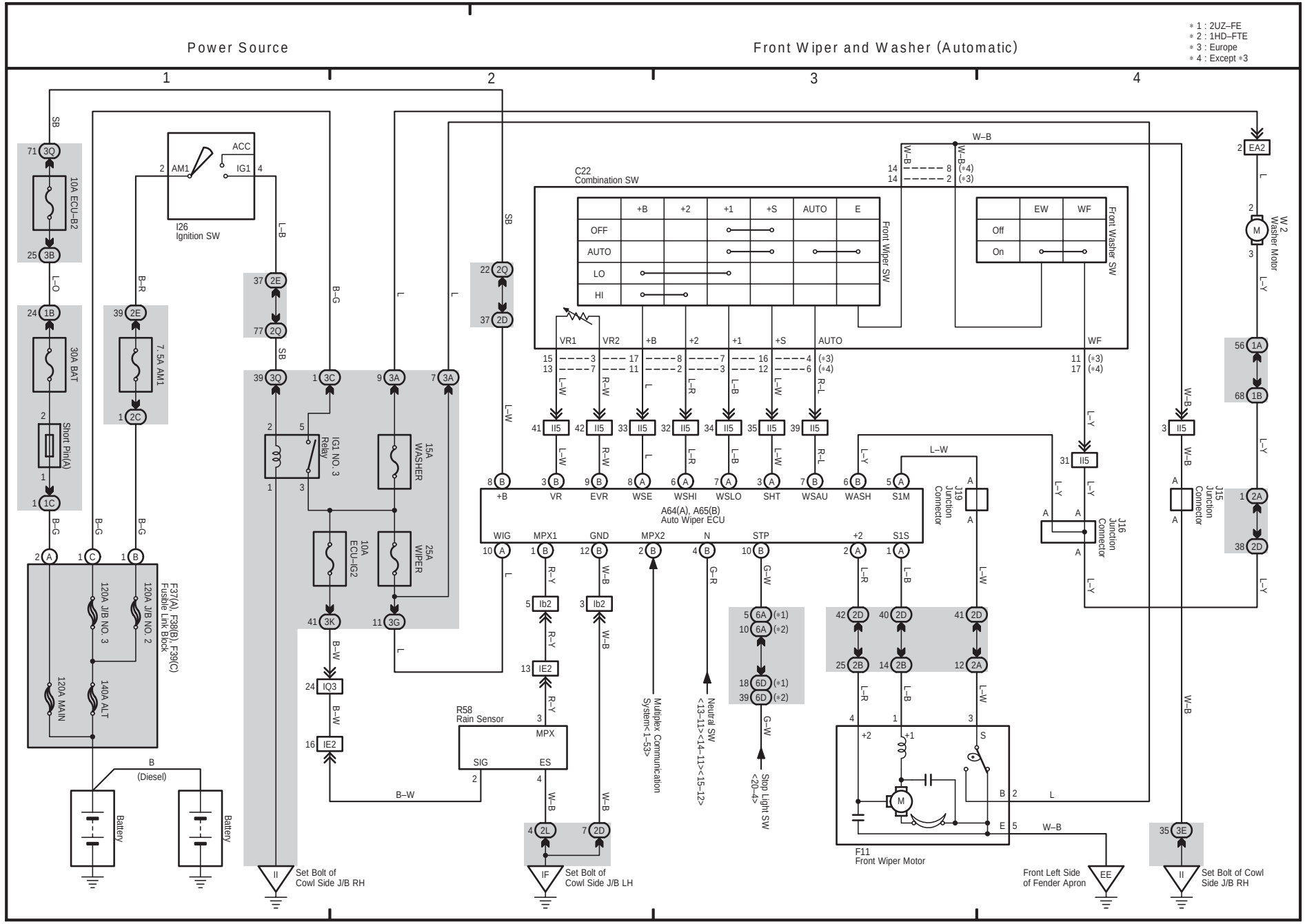
Power Source
Front Wiper and Washer (Automatic)
1
2
3
4
* 1 : 2UZ–FE
* 2 : 1HD–FTE
* 3 : Europe
* 4 : Except *3
I26
Ignition SW
ACC
AM1
IG1
C22
Combination SW
Front Wiper SW
Front Washer SW
OFF
AUTO
LO
HI
Off
On
A64(A), A65(B)
Auto Wiper ECU
+B
VR
EVR
WSE
WSHI
WSLO
SHT
WSAU
WASH
S1M
WIG
MPX1
GND
MPX2
N
STP
+2
S1S
J19
Junction
Connector
J16
Junction
Connector
J15
Junction
Connector
W-2
Washer Motor
10A ECU–B2
30A BAT
7.5A AM1
Short Pin(A)
IG1 NO. 3
Relay
15A
WASHER
10A
ECU–IG2
25A
WIPER
F37(A), F38(B), F39(C)
Fusible Link Block
120A J/B NO. 3
120A J/B NO. 2
120A MAIN
140A ALT
B
(Diesel)
Battery
Battery
R58
Rain Sensor
MPX
SIG
ES
Multiplex Communication
System<1–53>
Neutral SW
<13–11><14–11><15–12>
Stop Light SW
<20–4>
F11
Front Wiper Motor
Front Left Side
of Fender Apron
Set Bolt of
Cowl Side J/B RH
Set Bolt of
Cowl Side J/B LH
Set Bolt of Cowl
Side J/B RH

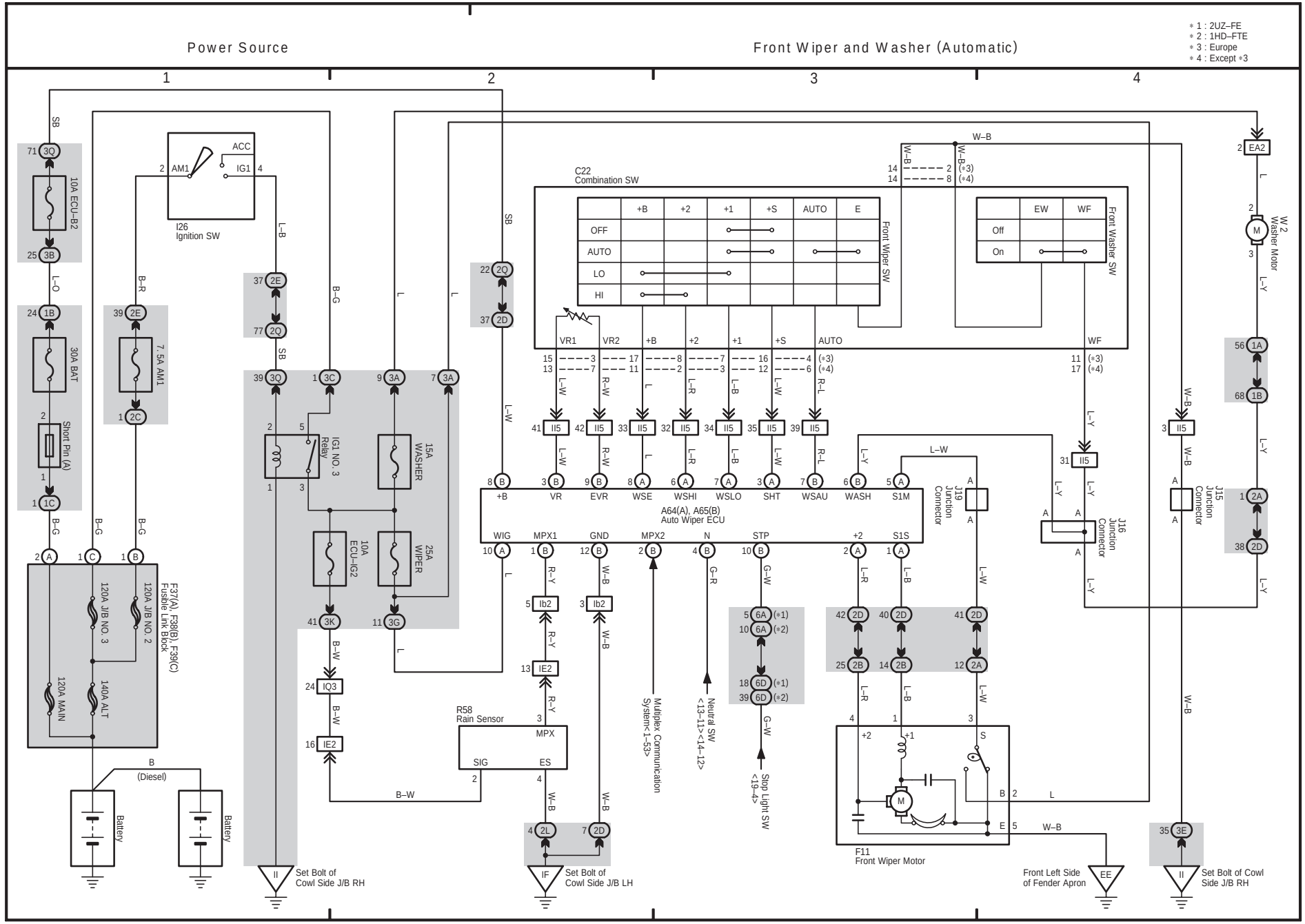
Power Source
Front Wiper and Washer (Automatic)
1
2
3
4
∗1 : 2UZ–FE
∗2 : 1HD–FTE
∗3 : Europe
∗4 : Except ∗3
I26
Ignition SW
ACC
AM1
IG1
10A ECU–B2
30A BAT
Short Pin (A)
7.5A AM1
IG1 NO. 3 Relay
15A WASHER
10A ECU–IG2
25A WIPER
F37(A), F38(B), F39(C)
Fusible Link Block
120A J/B NO. 3
120A J/B NO. 2
120A MAIN
140A ALT
B
(Diesel)
Battery
Battery
C22
Combination SW
Front Wiper SW
Front Washer SW
OFF
AUTO
LO
HI
Off
On
EW
WF
VR1
VR2
+B
+2
+1
+S
AUTO
WF
A64(A), A65(B)
Auto Wiper ECU
+B
VR
EVR
WSE
WSHI
WSLO
SHT
WSAU
WASH
S1M
WIG
MPX1
GND
MPX2
N
STP
+2
S1S
J19 Junction Connector
J16 Junction Connector
J15 Junction Connector
W, 2 Washer Motor
R58
Rain Sensor
MPX
SIG
ES
Multiplex Communication System<1–53>
Neutral SW
<13–11><14–12>
Stop Light SW
<19–4>
F11
Front Wiper Motor
Front Left Side of Fender Apron
Set Bolt of Cowl Side J/B RH
Set Bolt of Cowl Side J/B LH
Set Bolt of Cowl Side J/B RH

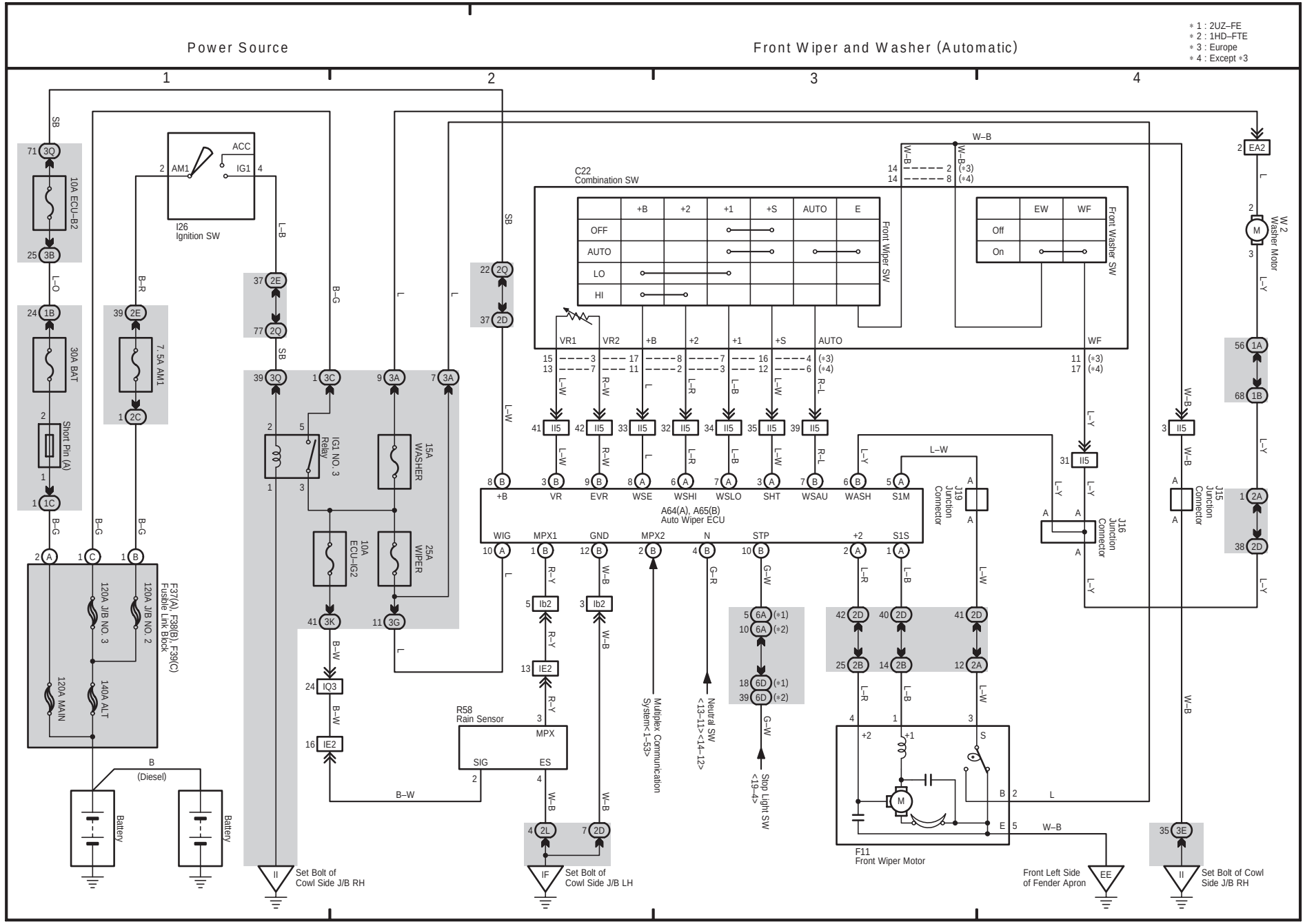
Power Source
Front Wiper and Washer (Automatic)
1
2
3
4
∗1 : 2UZ–FE
∗2 : 1HD–FTE
∗3 : Europe
∗4 : Except ∗3
10A ECU–B2
30A BAT
Short Pin (A)
7.5A AM1
F37(A), F38(B), F39(C) Fusible Link Block
120A J/B NO. 3
120A J/B NO. 2
120A MAIN
140A ALT
Battery
B (Diesel)
I26 Ignition SW
ACC
AM1
IG1
IG1 NO. 3 Relay
15A WASHER
10A ECU–IG2
25A WIPER
C22 Combination SW
Front Wiper SW
Front Washer SW
OFF
AUTO
LO
HI
Off
On
A64(A), A65(B) Auto Wiper ECU
+B
VR
EVR
WSE
WSHI
WSLO
SHT
WSAU
WASH
S1M
WIG
MPX1
GND
MPX2
N
STP
+2
S1S
R58 Rain Sensor
MPX
SIG
ES
Multiplex Communication System<1–53>
Neutral SW <13–11><14–12>
Stop Light SW <19–4>
F11 Front Wiper Motor
W Washer Motor
J19 Junction Connector
J16 Junction Connector
J15 Junction Connector
Set Bolt of Cowl Side J/B RH
Set Bolt of Cowl Side J/B LH
Front Left Side of Fender Apron
Set Bolt of Cowl Side J/B RH

34 LAND CRUISER (RHD)

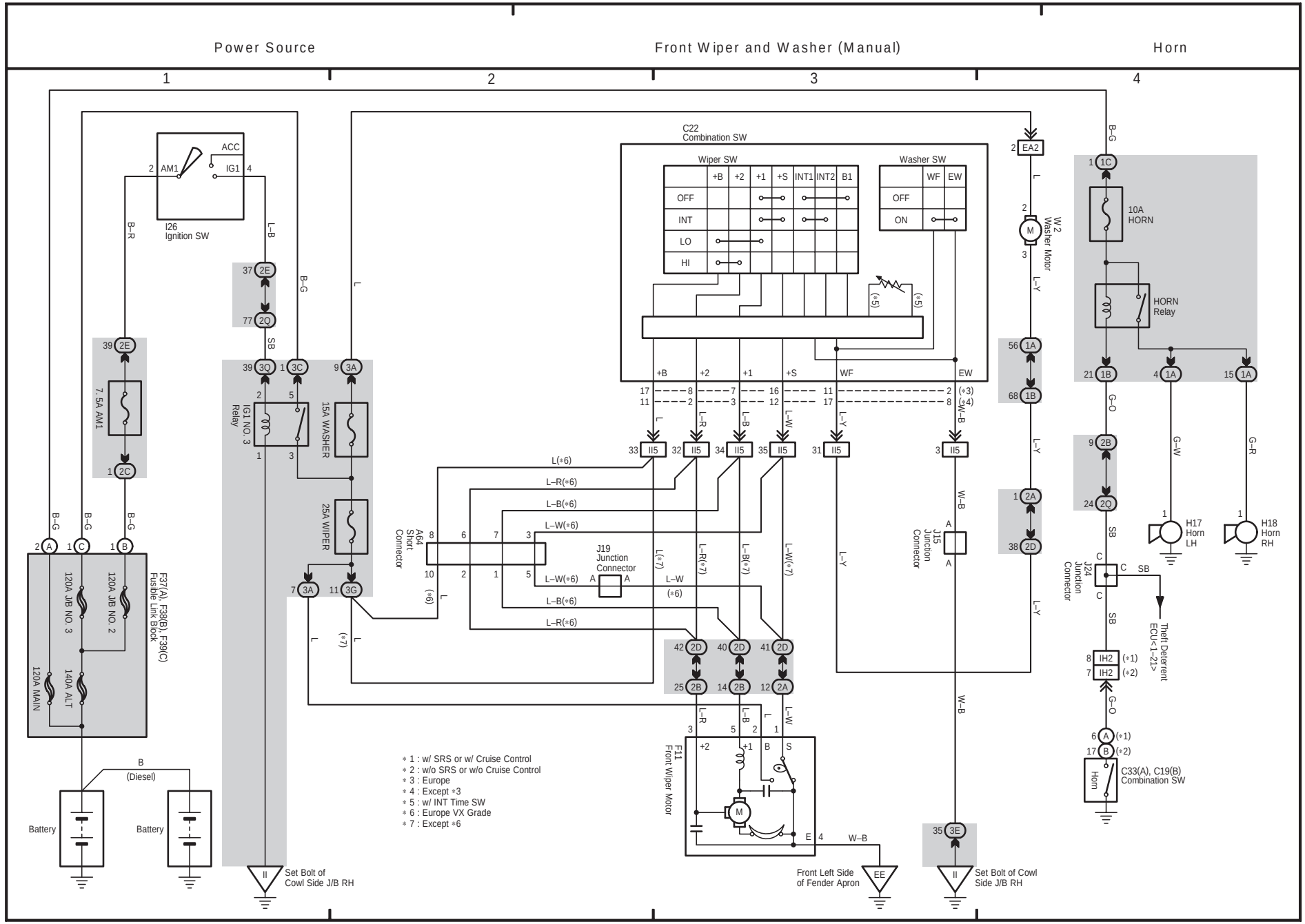

33 LAND CRUISER (RHD)

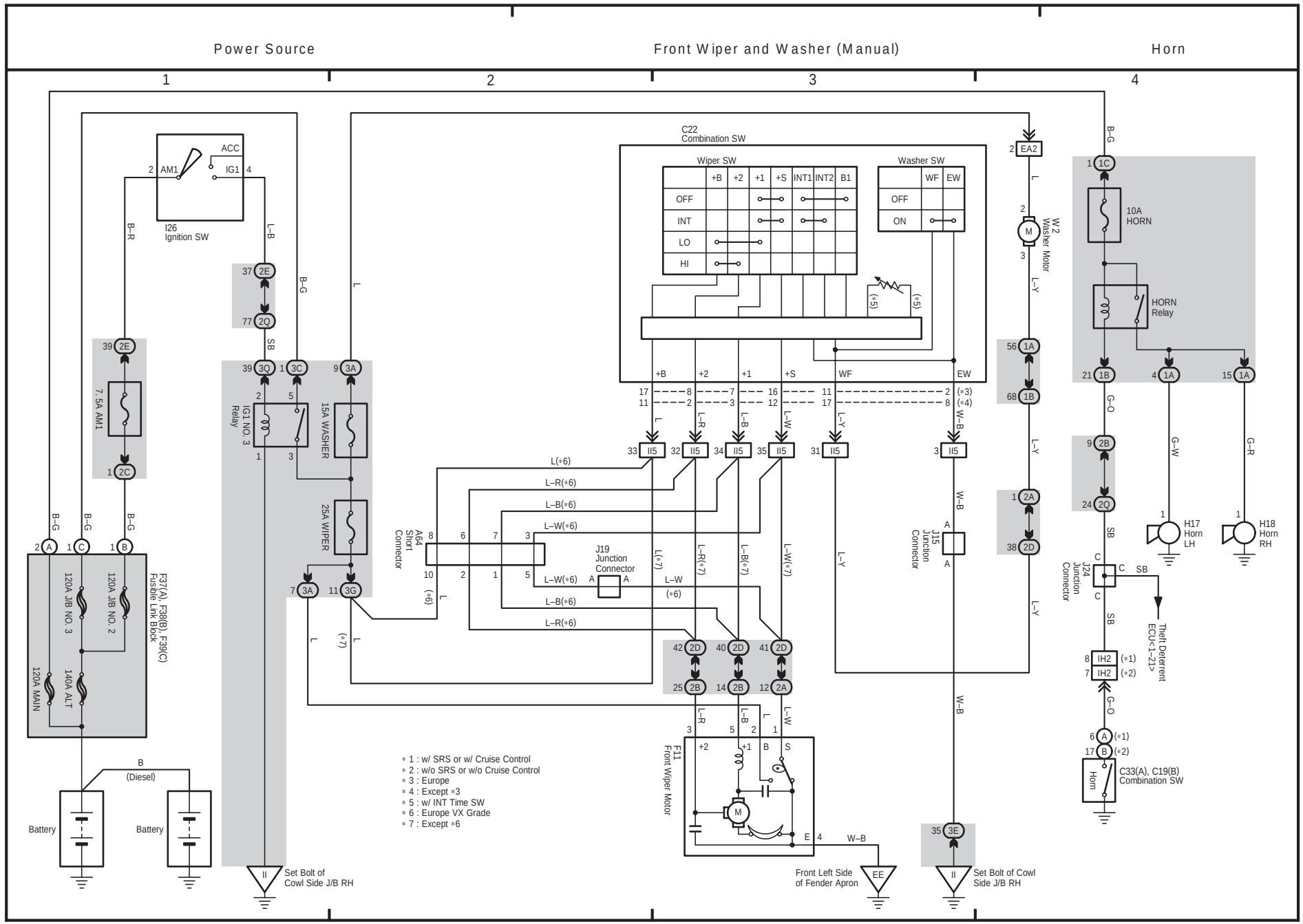

33 LAND CRUISER (RHD)

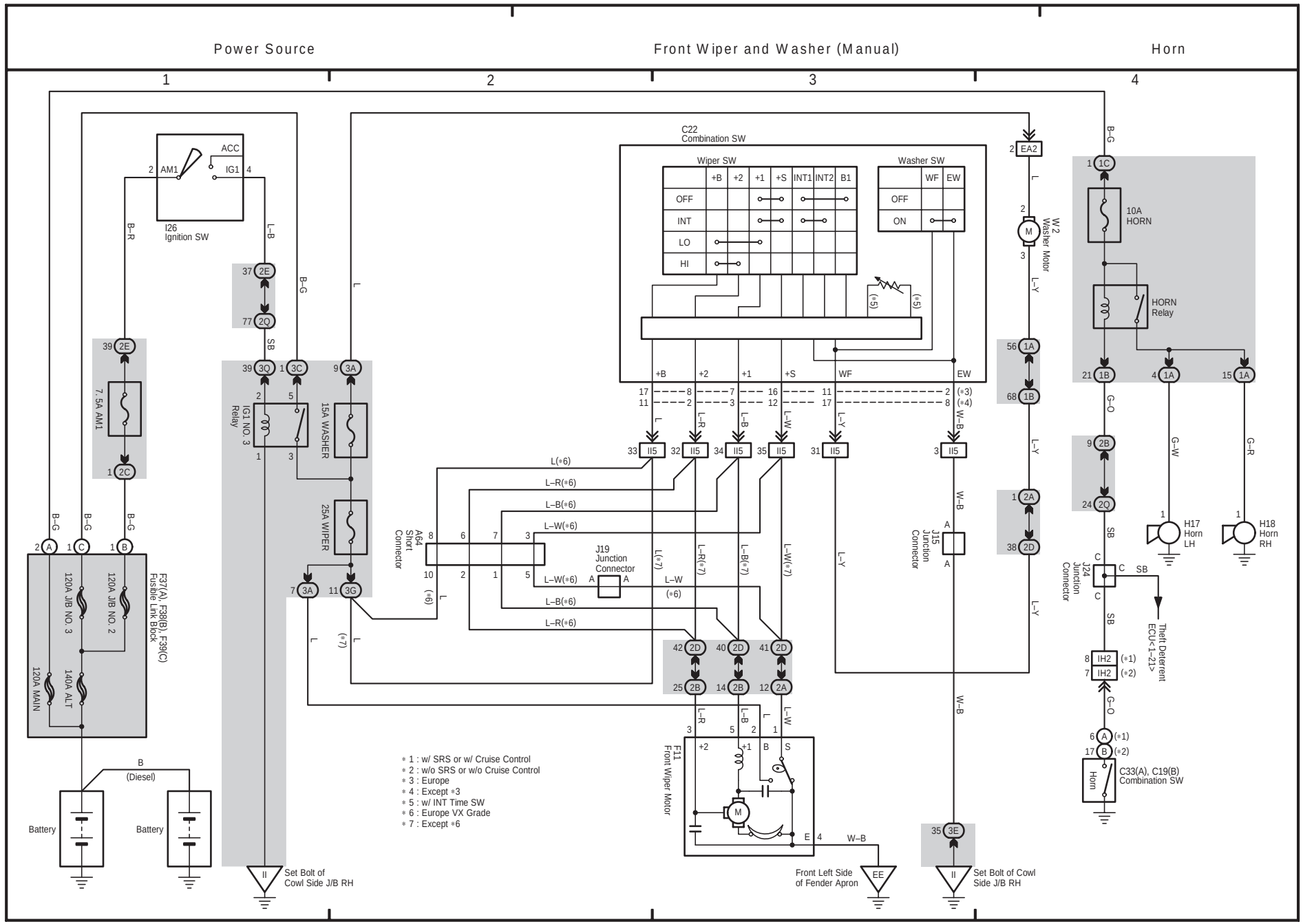

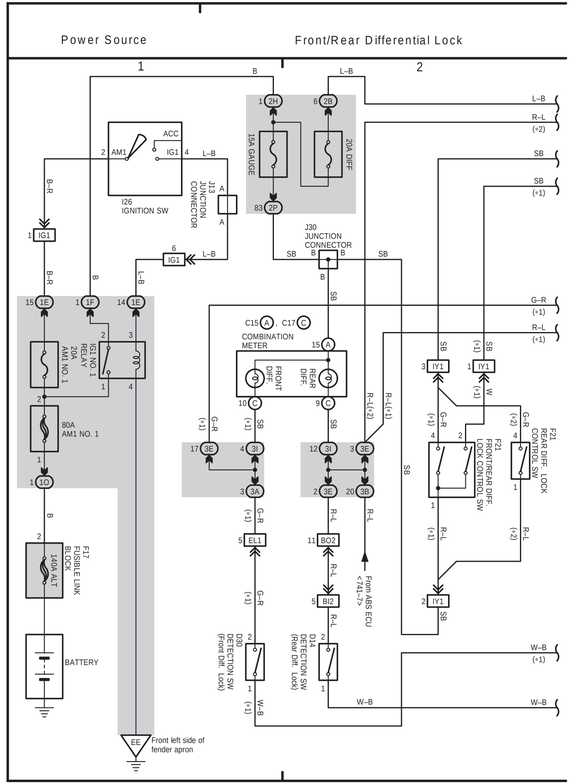

(Cont. next page)

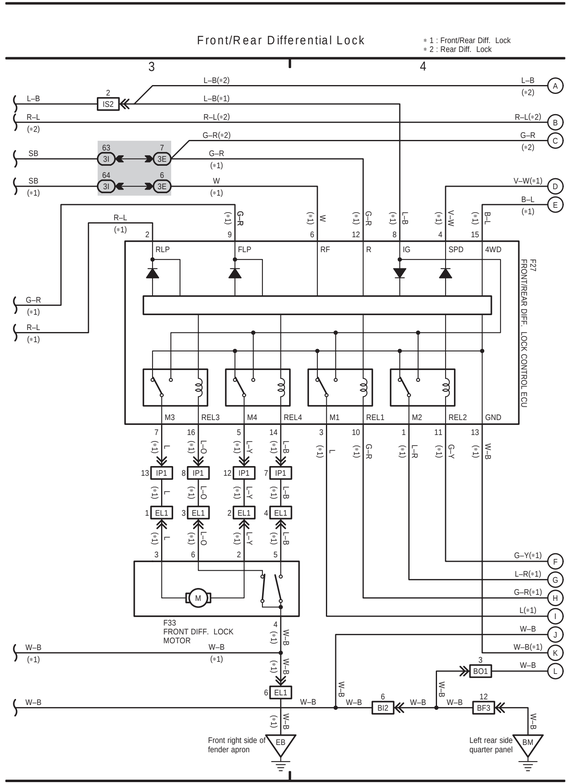

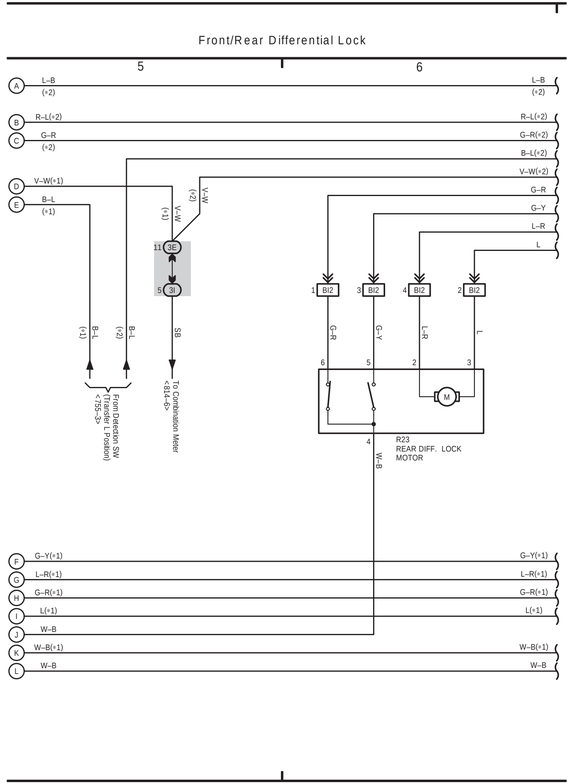

(Cont'd)

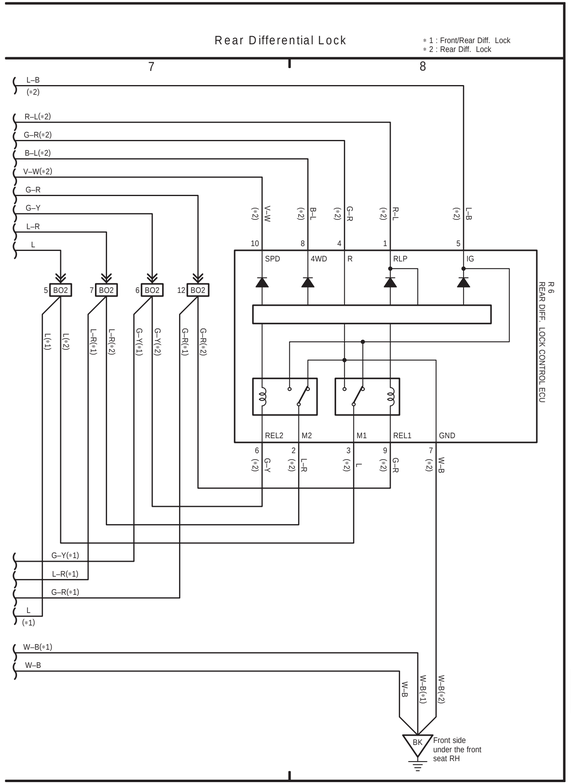

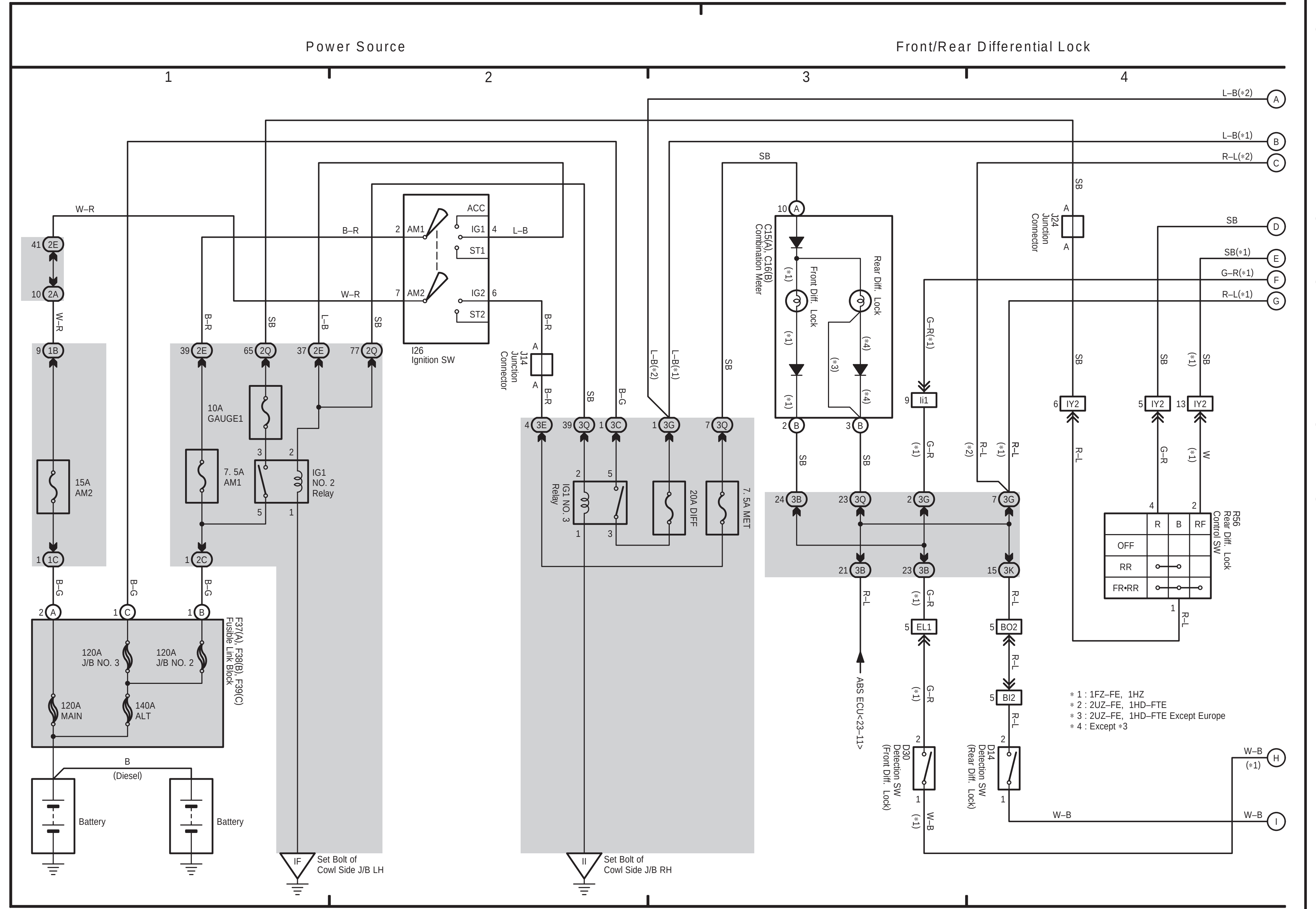
Power Source
Front/Rear Differential Lock

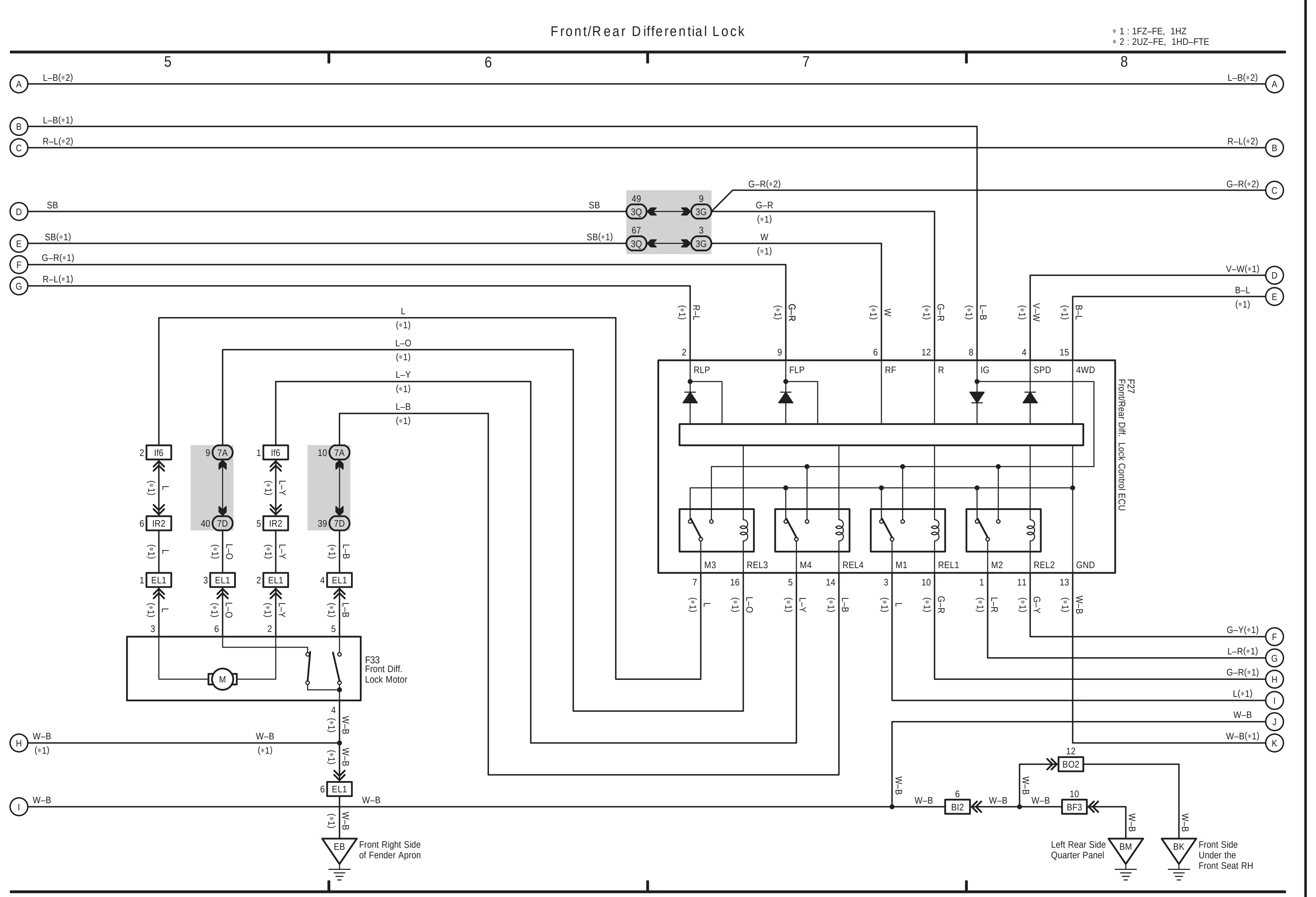
Front/Rear Differential Lock

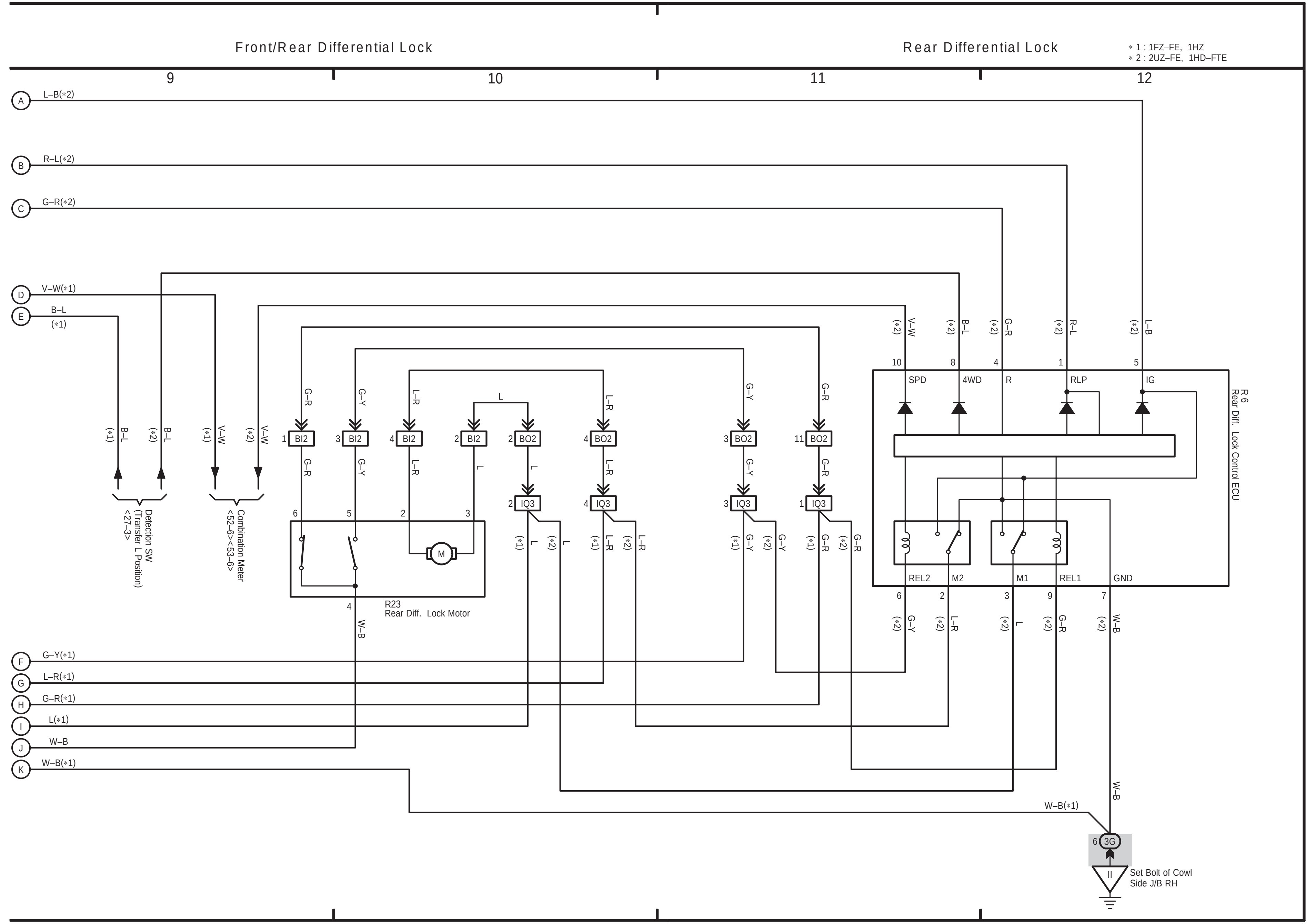
Front/Rear Differential Lock
Rear Differential Lock

(Cont. next page)

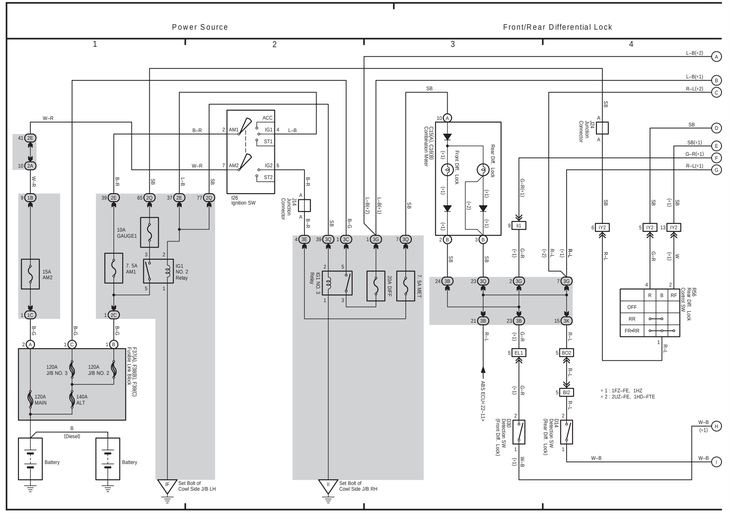

(Cont. next page)

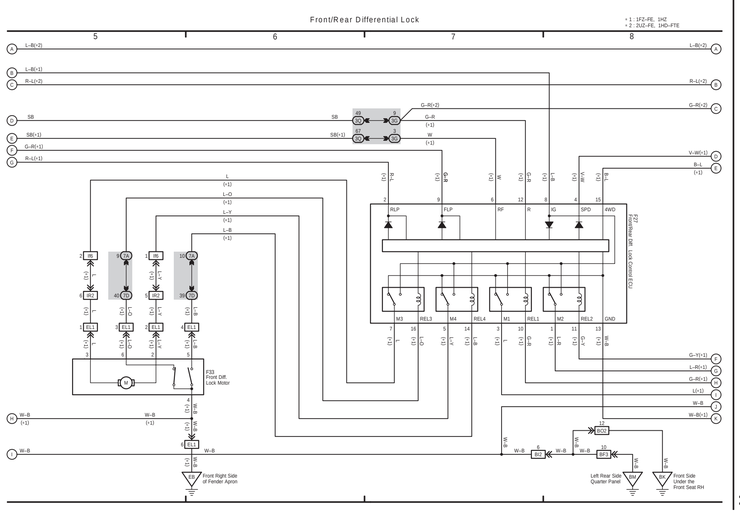

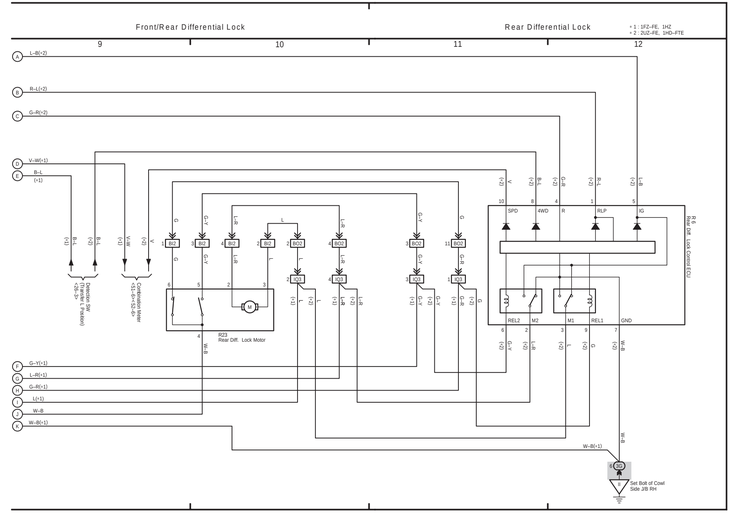

(Cont. next page)

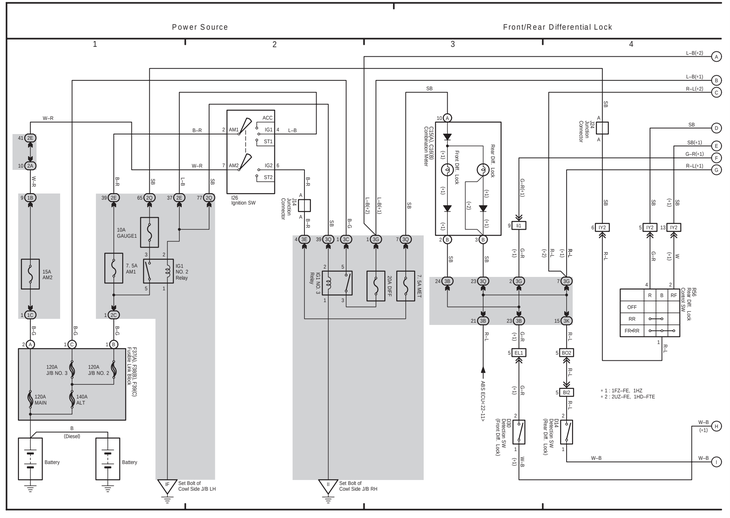

(Cont. next page)

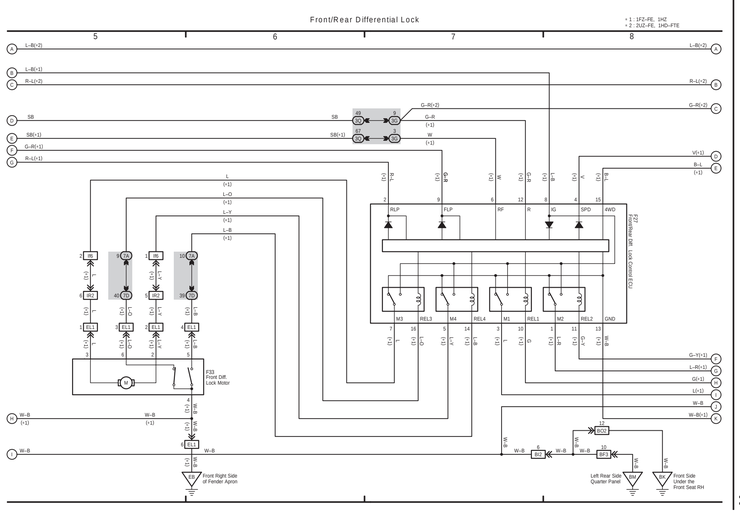

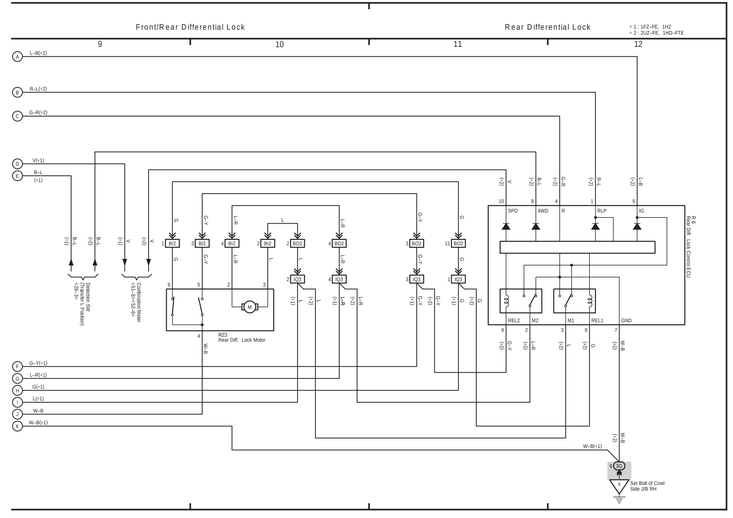

F ELECTRICAL WIRING DIAGRAM (System Circuits)

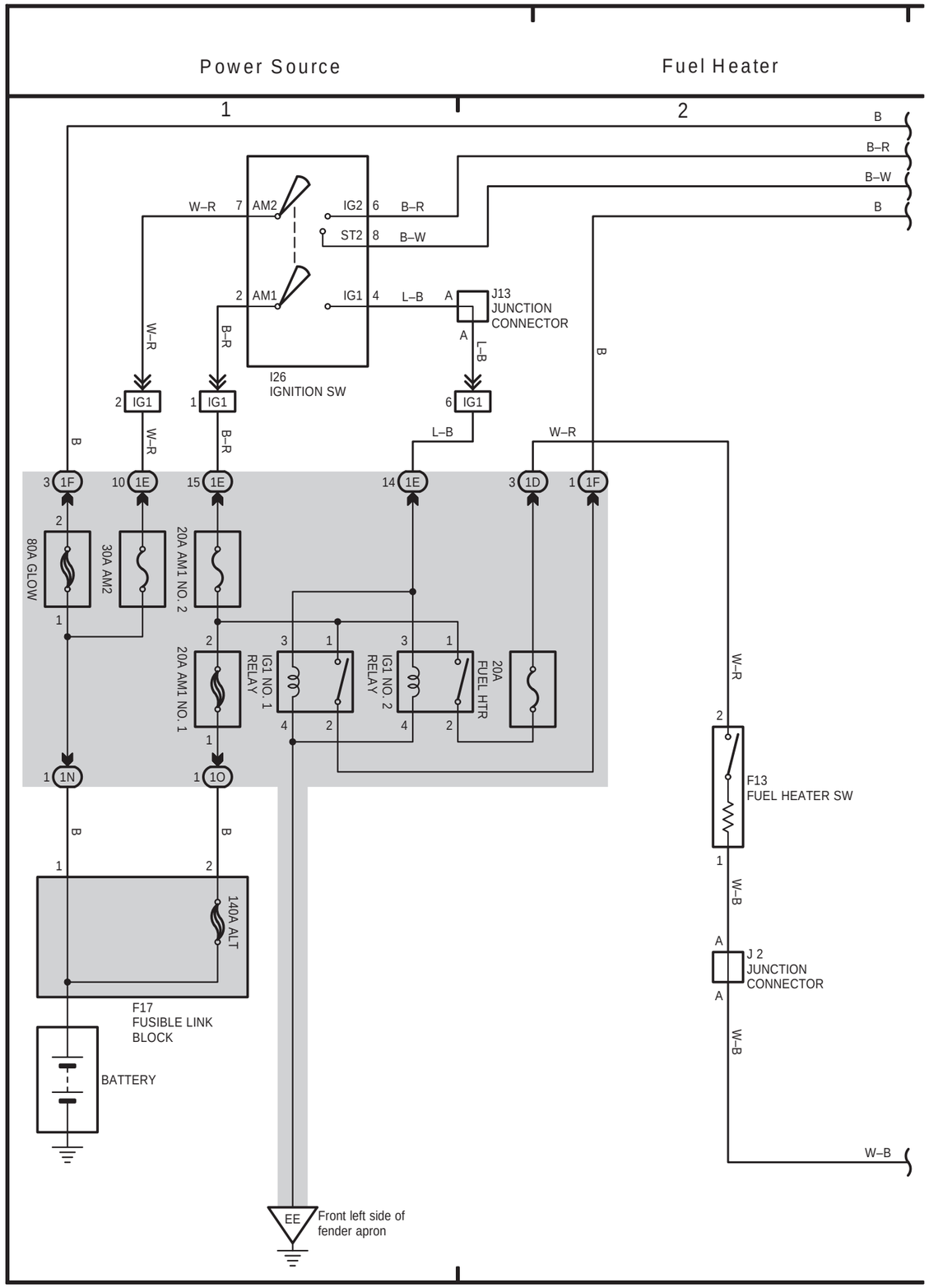

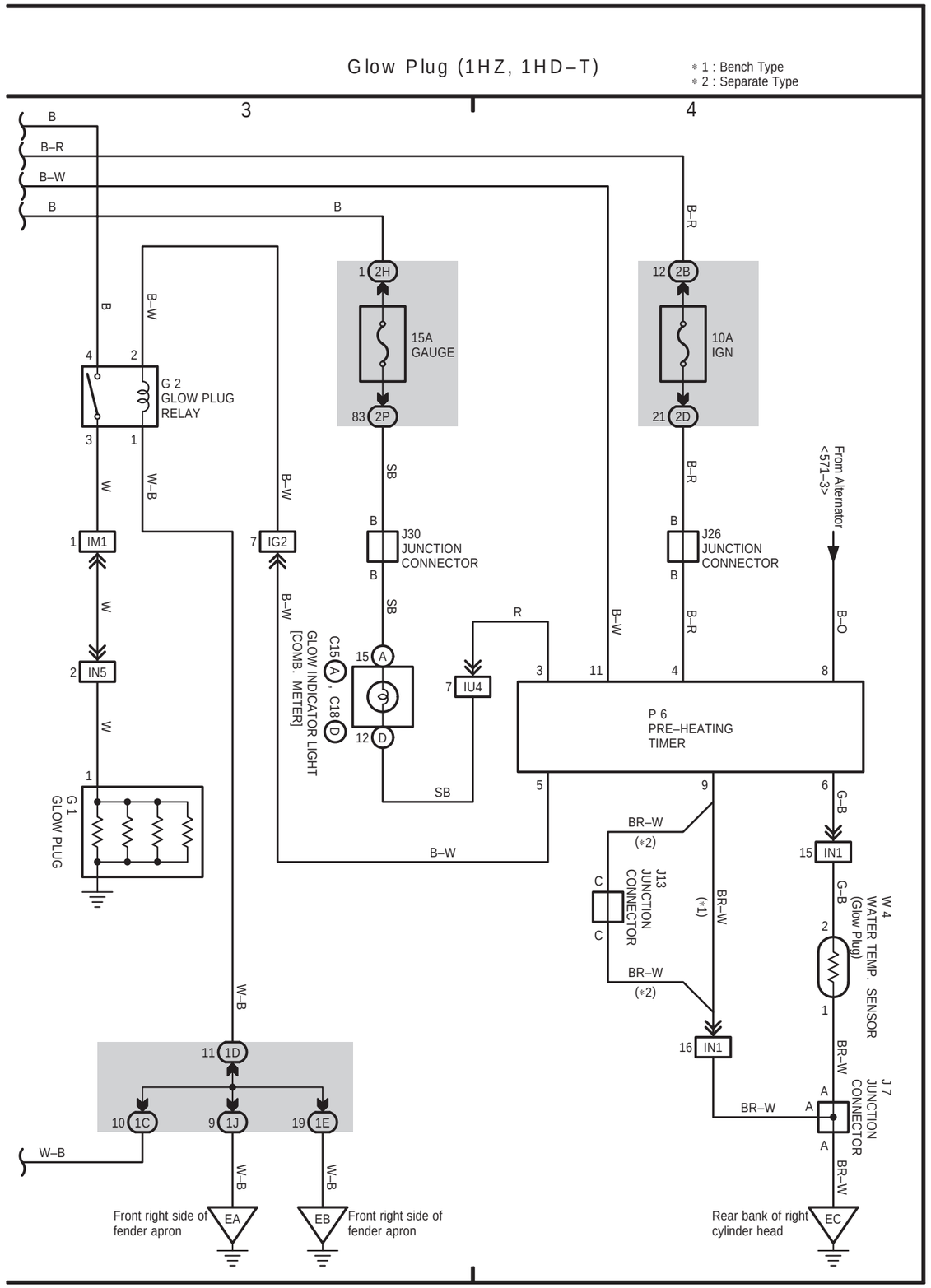

RHD

RHD

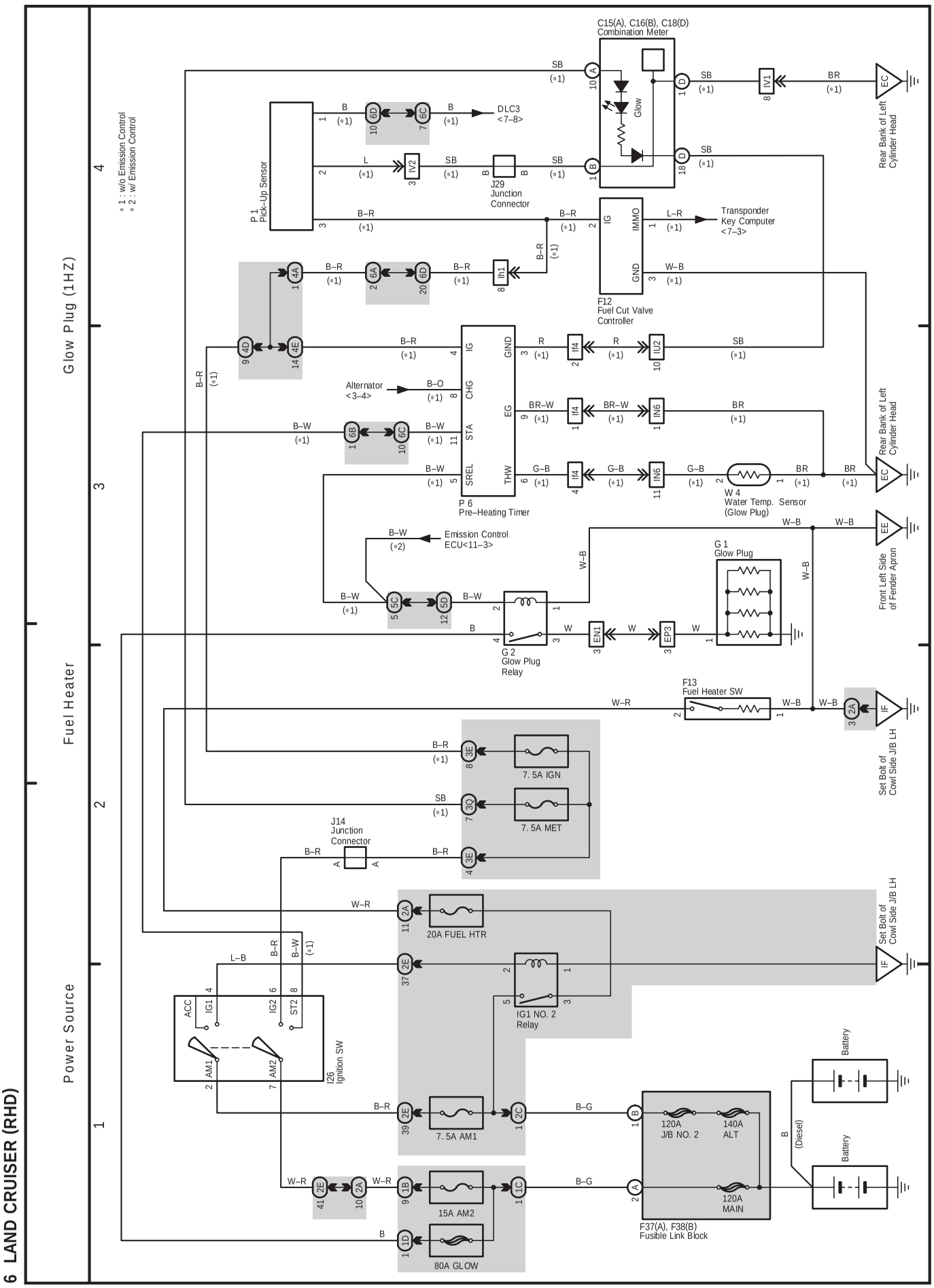
6 LAND CRUISER (RHD)
Power Source
Fuel Heater
Glow Plug (1HZ)
1
2
3
4
* 1 : w/o Emission Control
* 2 : w/ Emission Control
C15(A), C16(B), C18(D)
Combination Meter
Glow
Rear Bank of Left Cylinder Head
DLC3
<7–8>
J29
Junction Connector
P 1
Pick–Up Sensor
Transponder Key Computer
<7–3>
F12
Fuel Cut Valve Controller
Alternator
<3–4>
P 6
Pre–Heating Timer
W 4
Water Temp. Sensor (Glow Plug)
Emission Control
ECU<11–3>
G 1
Glow Plug
Front Left Side of Fender Apron
G 2
Glow Plug Relay
F13
Fuel Heater SW
Set Bolt of Cowl Side J/B LH
7. 5A IGN
7. 5A MET
J14
Junction Connector
20A FUEL HTR
ACC
IG1
IG2
ST2
AM1
AM2
I26
Ignition SW
IG1 NO. 2 Relay
7. 5A AM1
15A AM2
80A GLOW
120A J/B NO. 2
140A ALT
120A MAIN
F37(A), F38(B)
Fusible Link Block
Battery
(Diesel)

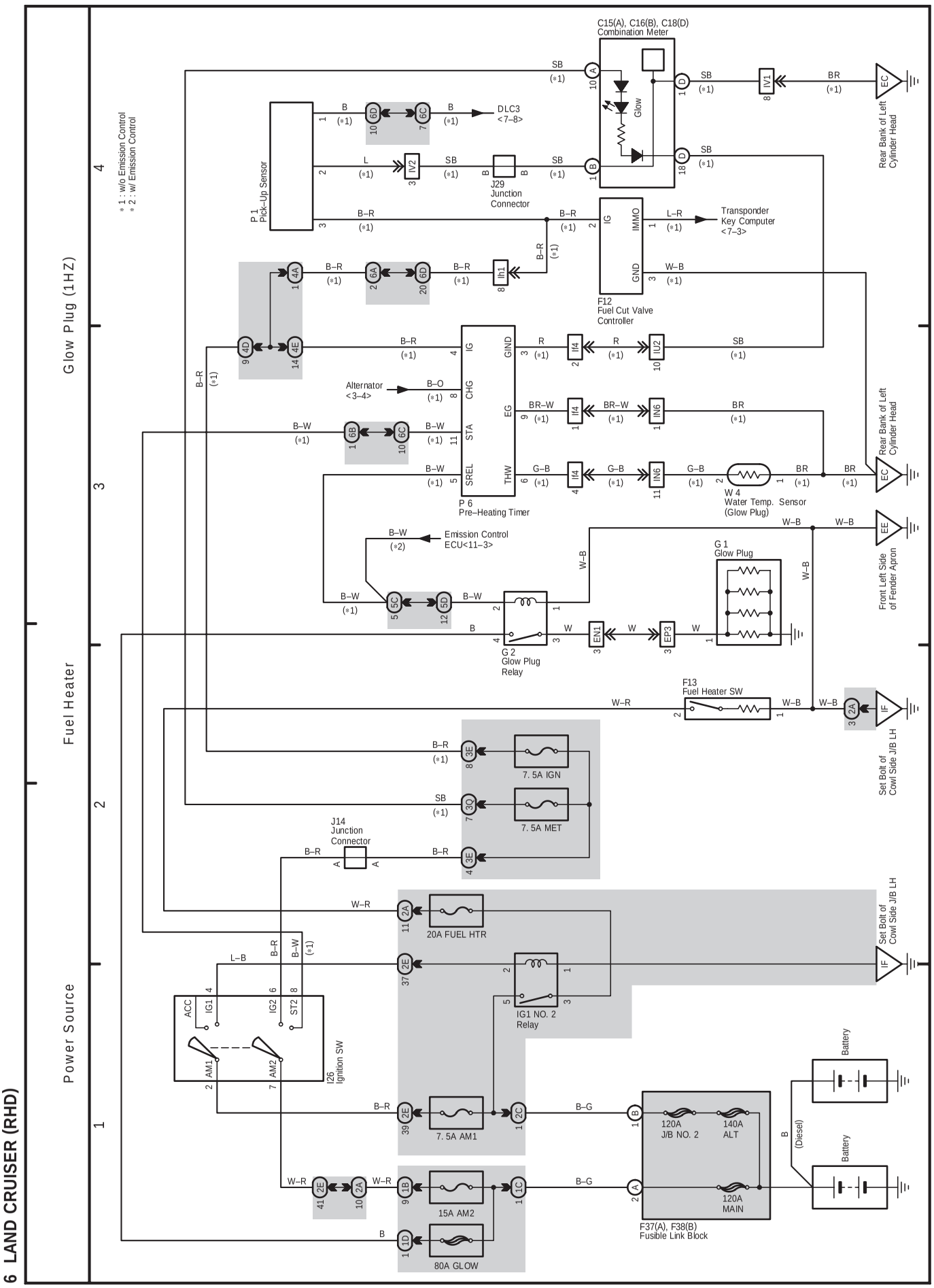
6 LAND CRUISER (RHD)
Power Source
Fuel Heater
Glow Plug (1HZ)
1
2
3
4
* 1 : w/o Emission Control
* 2 : w/ Emission Control
C15(A), C16(B), C18(D)
Combination Meter
Glow
Rear Bank of Left Cylinder Head
DLC3
<7–8>
J29
Junction Connector
P 1
Pick–Up Sensor
Transponder Key Computer
<7–3>
F12
Fuel Cut Valve Controller
Alternator
<3–4>
P 6
Pre–Heating Timer
W 4
Water Temp. Sensor (Glow Plug)
Emission Control
ECU<11–3>
G 1
Glow Plug
Front Left Side of Fender Apron
G 2
Glow Plug Relay
F13
Fuel Heater SW
Set Bolt of Cowl Side J/B LH
7. 5A IGN
7. 5A MET
J14
Junction Connector
20A FUEL HTR
ACC
IG1
IG2
ST2
AM1
AM2
I26
Ignition SW
IG1 NO. 2 Relay
7. 5A AM1
15A AM2
80A GLOW
120A J/B NO. 2
140A ALT
120A MAIN
F37(A), F38(B)
Fusible Link Block
Battery
(Diesel)

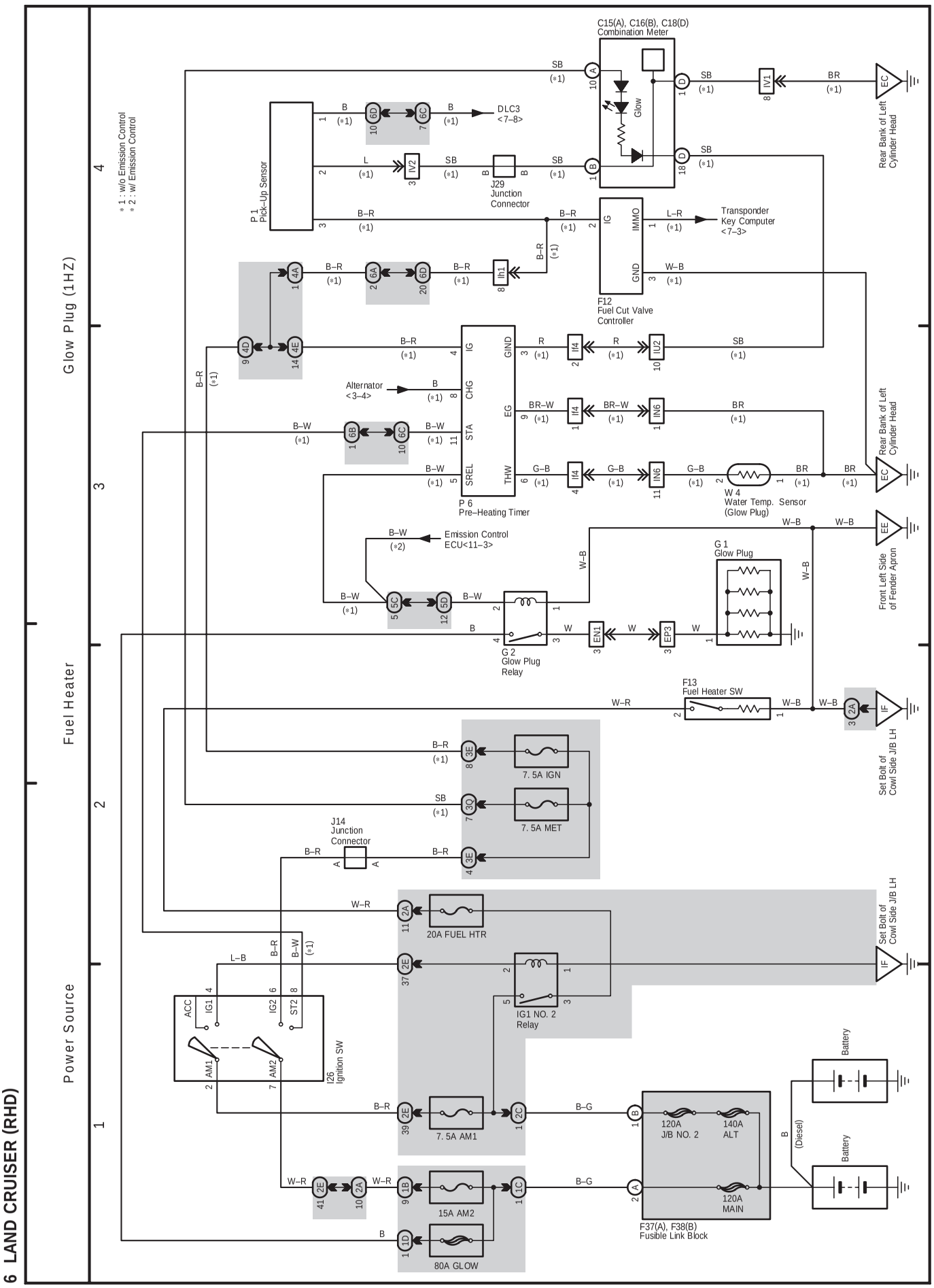
6 LAND CRUISER (RHD)
Power Source
Fuel Heater
Glow Plug (1HZ)
1
2
3
4
* 1 : w/o Emission Control
* 2 : w/ Emission Control
C15(A), C16(B), C18(D)
Combination Meter
Glow
Rear Bank of Left Cylinder Head
DLC3
<7–8>
P 1
Pick–Up Sensor
J29
Junction Connector
Transponder Key Computer
<7–3>
F12
Fuel Cut Valve Controller
Alternator
<3–4>
P 6
Pre–Heating Timer
W 4
Water Temp. Sensor (Glow Plug)
Emission Control
ECU<11–3>
G 1
Glow Plug
Front Left Side of Fender Apron
G 2
Glow Plug Relay
F13
Fuel Heater SW
Set Bolt of Cowl Side J/B LH
7. 5A IGN
7. 5A MET
J14
Junction Connector
20A FUEL HTR
IG1 NO. 2 Relay
I26
Ignition SW
ACC
IG1
IG2
ST2
AM1
AM2
7. 5A AM1
15A AM2
80A GLOW
120A J/B NO. 2
140A ALT
120A MAIN
F37(A), F38(B)
Fusible Link Block
Battery
B (Diesel)

(Cont. next page)

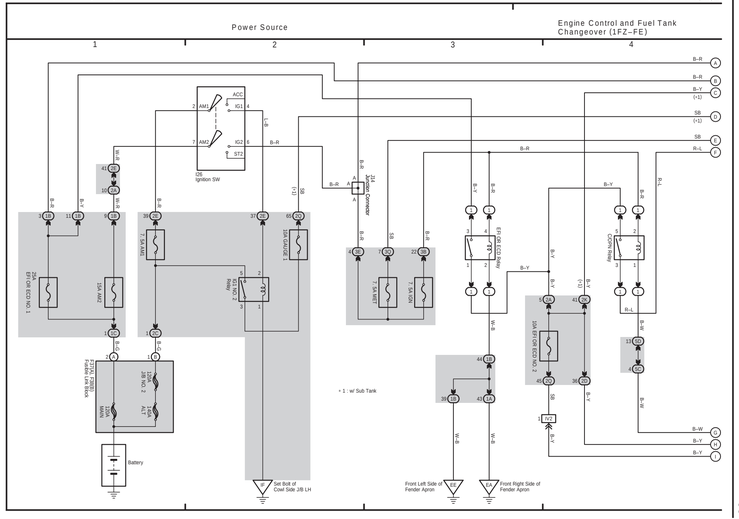

(Cont. next page)

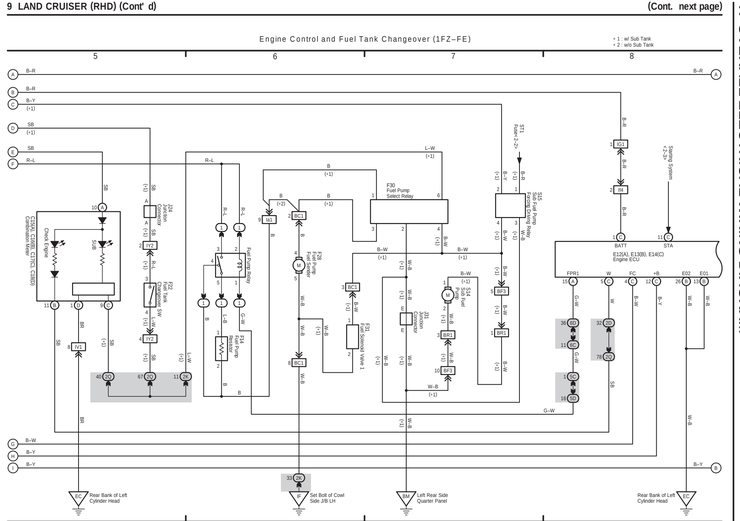

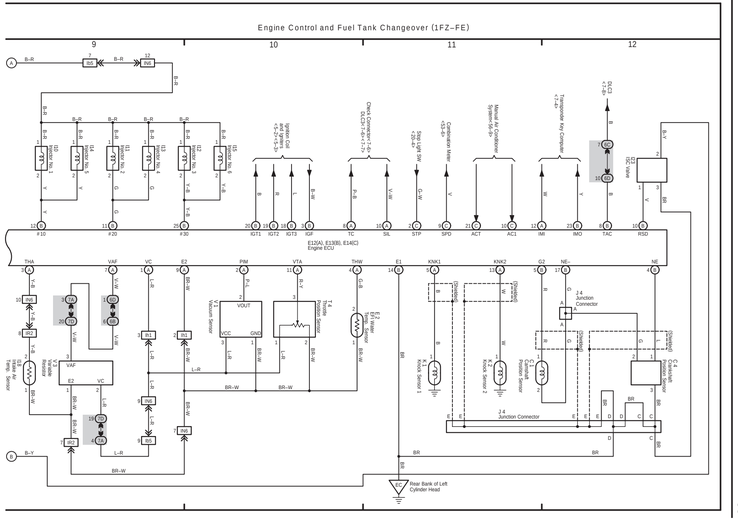

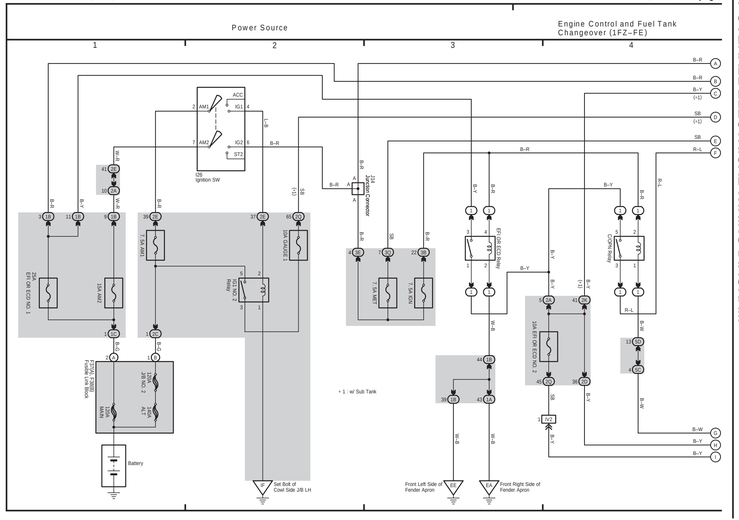
Power Source
Engine Control and Fuel Tank Changeover (1FZ–FE)
1
2
3
4
ACC
IG1
AM1
AM2
IG2
ST2
IG ignition SW
J/C Connector
Battery
Set Bolt of Cowl Side J/B LH
Front Left Side of Fender Apron
Front Right Side of Fender Apron
* 1 : w/ Sub Tank

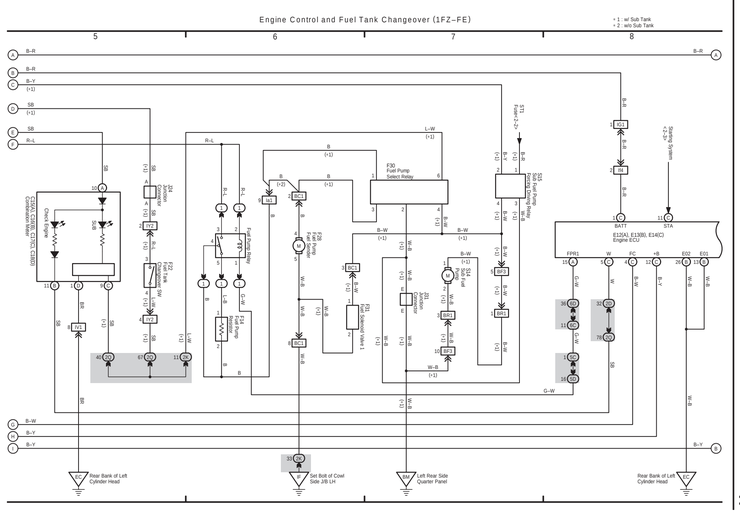
Engine Control and Fuel Tank Changeover (1FZ–FE)
5
6
7
8
* 1 : w/ Sub Tank
* 2 : w/o Sub Tank
F30 Fuel Pump Select Relay
Rear Bank of Left Cylinder Head
Set Bolt of Cowl Side J/B LH
Left Rear Side Quarter Panel

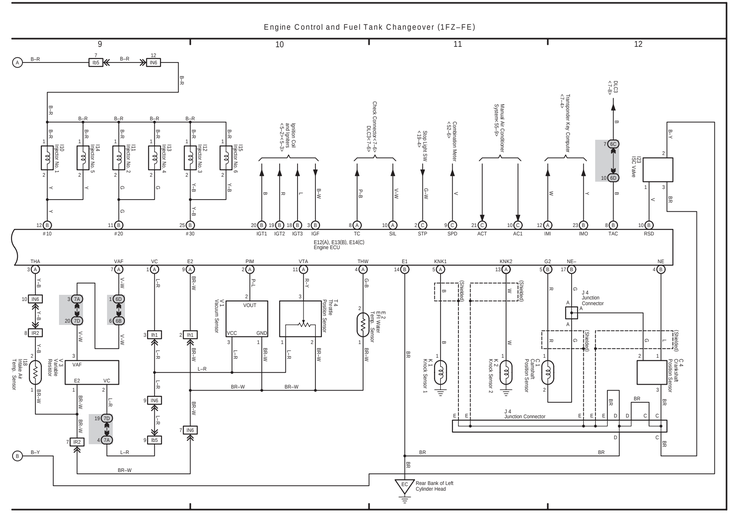
Engine Control and Fuel Tank Changeover (1FZ–FE)
9
10
11
12
E120(A), E130(B), E140(C) Engine ECU
J4 Junction Connector
Rear Bank of Left Cylinder Head

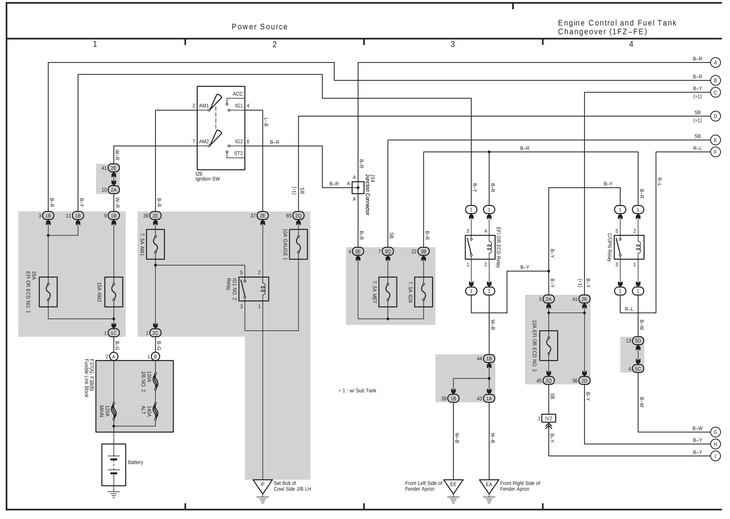
Power Source
Engine Control and Fuel Tank Changeover (1FZ–FE)
1
2
3
4
ACC
IG1
IG2
ST2
AM1
AM2
IG ignition SW
ST1 ST Connector
B–R
B–Y
B–W
R–L
SB
(–1)
(+1)
Battery
Set Bolt of Cowl Side J/B LH
Front Left Side of Fender Apron
Front Right Side of Fender Apron
+ 1 : w/ Sub Tank

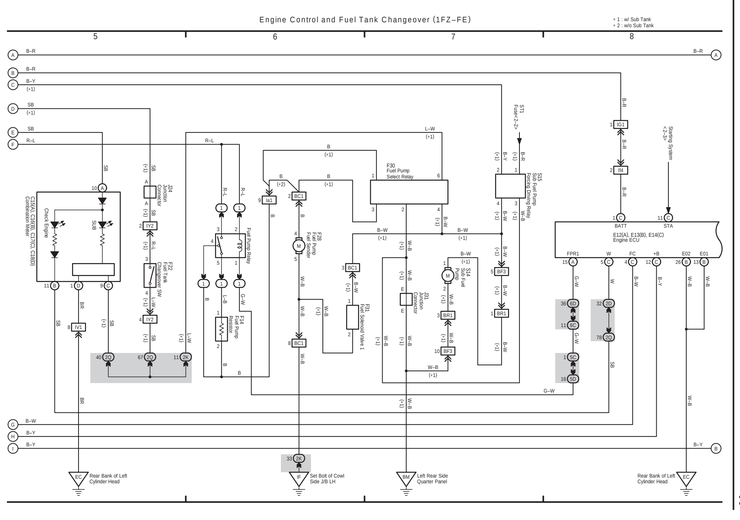
Engine Control and Fuel Tank Changeover (1FZ–FE)
5
6
7
8
+ 1 : w/ Sub Tank
+ 2 : w/o Sub Tank
B–R
B–Y
B–W
R–L
SB
(–1)
(+1)
Rear Bank of Left Cylinder Head
Set Bolt of Cowl Side J/B LH
Left Rear Side Quarter Panel

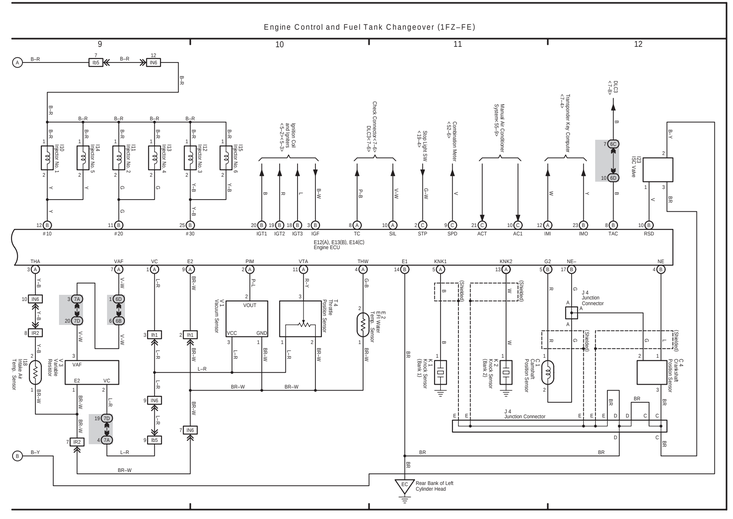
Engine Control and Fuel Tank Changeover (1FZ–FE)
9
10
11
12
B–R
B–Y
B–W
R–L
Rear Bank of Left Cylinder Head-Jab

8 LAND CRUISER (RHD) (Cont' d)

(Cont. next page)

Power Source

Engine Control and Fuel Tank Changeover (2UZ-FE)

8 LAND CRUISER (RHD) (Cont' d)

(Cont. next page)

Engine Control and Fuel Tank Changeover (2UZ-FE)

8 LAND CRUISER (RHD) (Cont' d)

(Cont. next page)

Engine Control and Fuel Tank Changeover (2UZ-FE)

8 LAND CRUISER (RHD) (Cont' d)

(Cont. next page)

Engine Control and Fuel Tank Changeover (2UZ-FE)

8 LAND CRUISER (RHD) (Cont' d)

Engine Control and Fuel Tank Changeover (2UZ-FE)

Cruise Control (2UZ-FE)

8 LAND CRUISER (RHD) (Cont. next page)

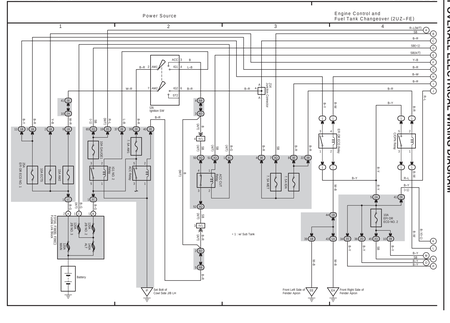

8 LAND CRUISER (RHD) (Cont' d) (Cont. next page)

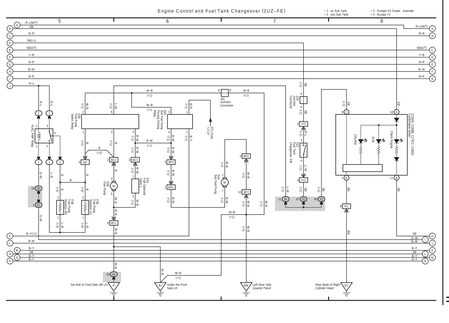

8 LAND CRUISER (RHD) (Cont' d) (Cont. next page)

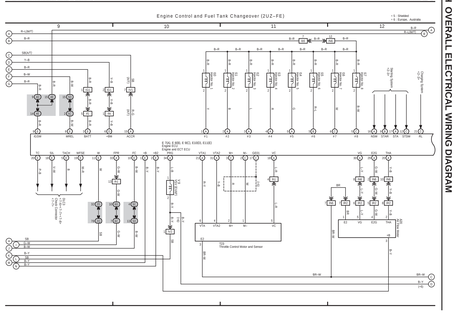

8 LAND CRUISER (RHD) (Cont' d) (Cont. next page)

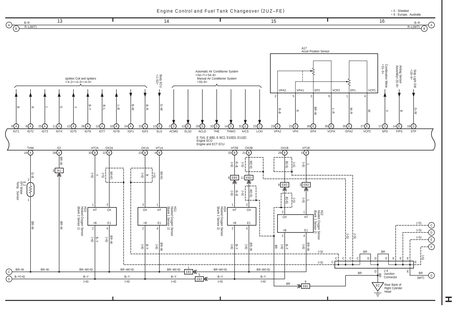

8 LAND CRUISER (RHD) (Cont' d)

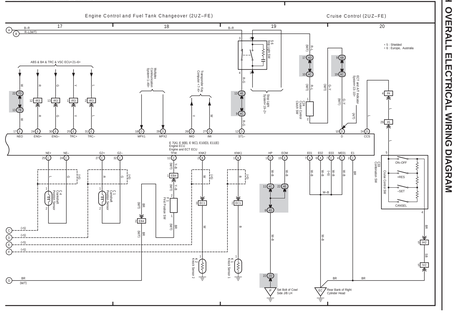

8 LAND CRUISER (RHD) (Cont' d)

(Cont. next page)

Power Source

Engine Control and Fuel Tank Changeover (2UZ-FE)

8 LAND CRUISER (RHD) (Cont' d)

(Cont. next page)

Engine Control and Fuel Tank Changeover (2UZ-FE)

8 LAND CRUISER (RHD) (Cont' d)

(Cont. next page)

Engine Control and Fuel Tank Changeover (2UZ-FE)

8 LAND CRUISER (RHD) (Cont' d)

(Cont. next page)

Engine Control and Fuel Tank Changeover (2UZ-FE)

8 LAND CRUISER (RHD) (Cont' d)

Engine Control and Fuel Tank Changeover (2UZ-FE)

Cruise Control (2UZ-FE)

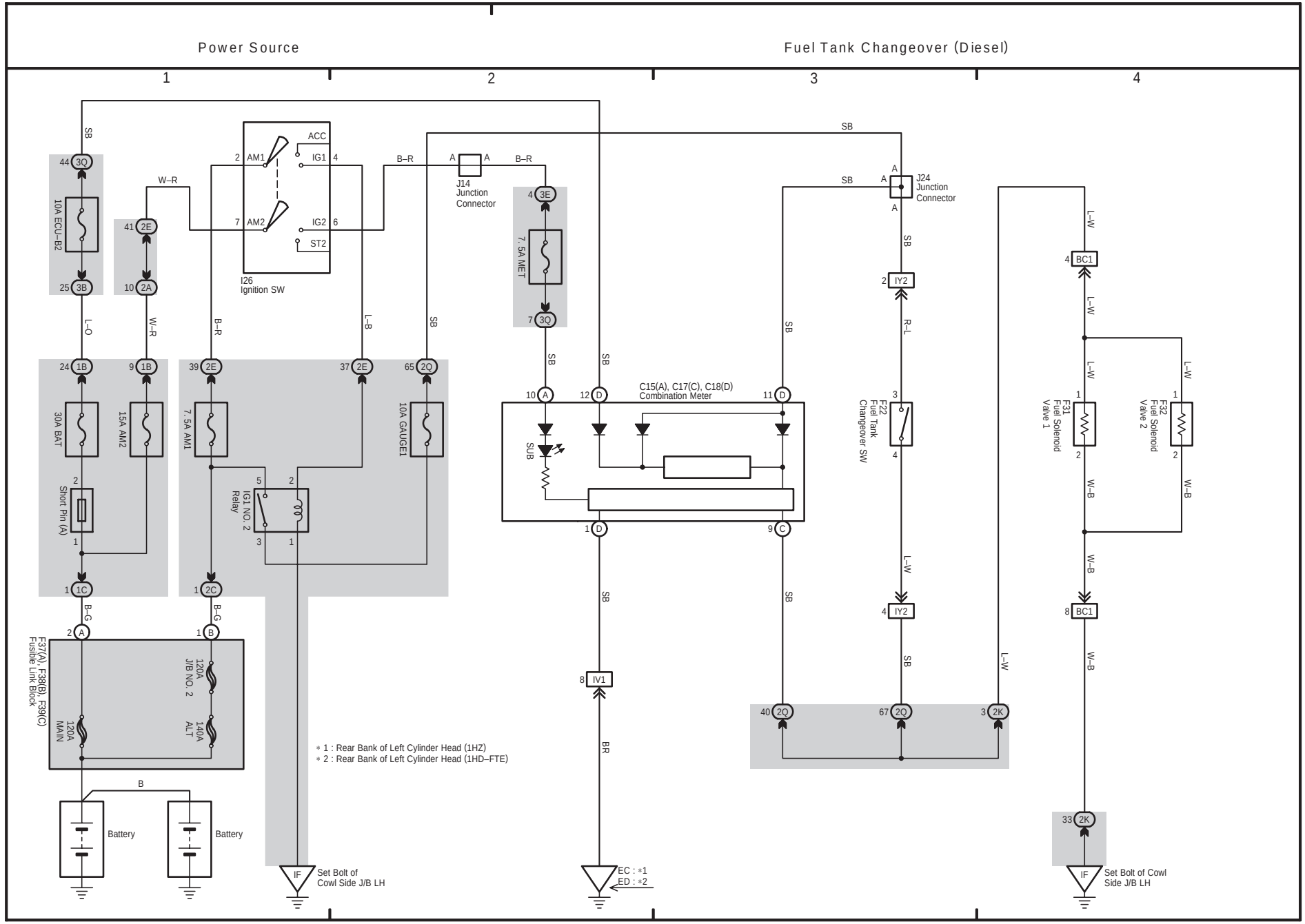
Power Source
Fuel Tank Changeover (Diesel)
1
2
3
4
SB
44 3Q
10A ECU–B2
25 3B
L–O
W–R
41 2E
10 2A
W–R
ACC
2 AM1
IG1 4
7 AM2
IG2 6
ST2
I26
Ignition SW
B–R
L–B
SB
B–R
A A
J14
Junction
Connector
4 3E
7. 5A MET
7 3Q
SB
SB
10 A
12 D
11 D
C15(A), C17(C), C18(D)
Combination Meter
SUB
1 D
9 C
SB
8 IV1
BR
SB
A A
J24
Junction
Connector
A
SB
2 IY2
R–L
SB
3
F22
Fuel Tank
Changeover SW
4
L–W
4 IY2
SB
L–W
40 2Q
67 2Q
3 2K
L–W
4 BC1
L–W
L–W
L–W
1
F31
Fuel Solenoid
Valve 1
2
W–B
1
F32
Fuel Solenoid
Valve 2
2
W–B
W–B
8 BC1
W–B
33 2K
IF
Set Bolt of Cowl
Side J/B LH
EC : *1
ED : *2
24 1B
30A BAT
2
Short Pin (A)
1
1 1C
B–G
2 A
9 1B
15A AM2
39 2E
7. 5A AM1
5
2
IG1 NO. 2
Relay
3
1
37 2E
65 2Q
10A GAUGE1
1 2C
B–G
1 B
F37(A), F38(B), F39(C)
Fusible Link Block
120A
MAIN
120A
J/B NO. 2
140A
ALT
B
Battery
Battery
IF
Set Bolt of
Cowl Side J/B LH
* 1 : Rear Bank of Left Cylinder Head (1HZ)
* 2 : Rear Bank of Left Cylinder Head (1HD–FTE)

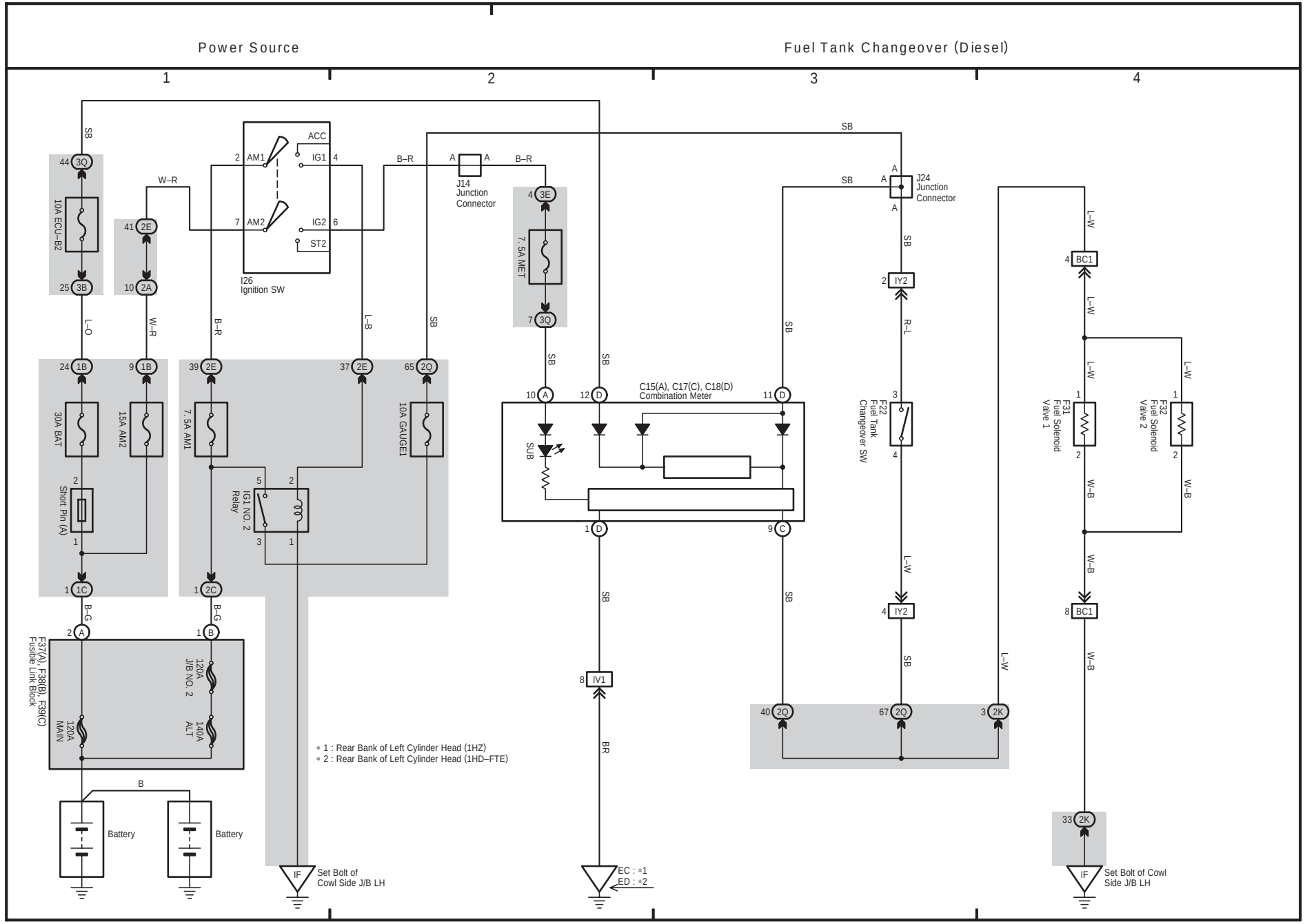
Power Source
Fuel Tank Changeover (Diesel)
1
2
3
4
SB
44 3Q
10A ECU–B2
25 3B
L–O
W–R
41 2E
10 2A
W–R
ACC
2 AM1
IG1 4
7 AM2
IG2 6
ST2
I26
Ignition SW
B–R
L–B
SB
B–R
A A
J14
Junction
Connector
4 3E
7. 5A MET
7 3Q
SB
SB
SB
SB
A A
J24
Junction
Connector
A
SB
2 IY2
R–L
3
4
F22
Fuel Tank
Changeover SW
L–W
4 IY2
SB
L–W
4 BC1
L–W
L–W
L–W
1
2
F31
Fuel Solenoid
Valve 1
1
2
F32
Fuel Solenoid
Valve 2
W–B
W–B
W–B
8 BC1
W–B
24 1B
30A BAT
2
Short Pin (A)
1
1 1C
B–G
9 1B
15A AM2
39 2E
7. 5A AM1
5
2
IG1 NO. 2
Relay
3
1
1 2C
B–G
37 2E
65 2Q
10A GAUGE1
10 A
12 D
C15(A), C17(C), C18(D)
Combination Meter
11 D
SUB
1 D
9 C
SB
SB
8 IV1
BR
40 2Q
67 2Q
3 2K
L–W
33 2K
2 A
1 B
F37(A), F38(B), F39(C)
Fusible Link Block
120A
MAIN
120A
J/B NO. 2
140A
ALT
B
Battery
Battery
IF
Set Bolt of
Cowl Side J/B LH
EC : *1
ED : *2
IF
Set Bolt of Cowl
Side J/B LH
* 1 : Rear Bank of Left Cylinder Head (1HZ)
* 2 : Rear Bank of Left Cylinder Head (1HD–FTE)

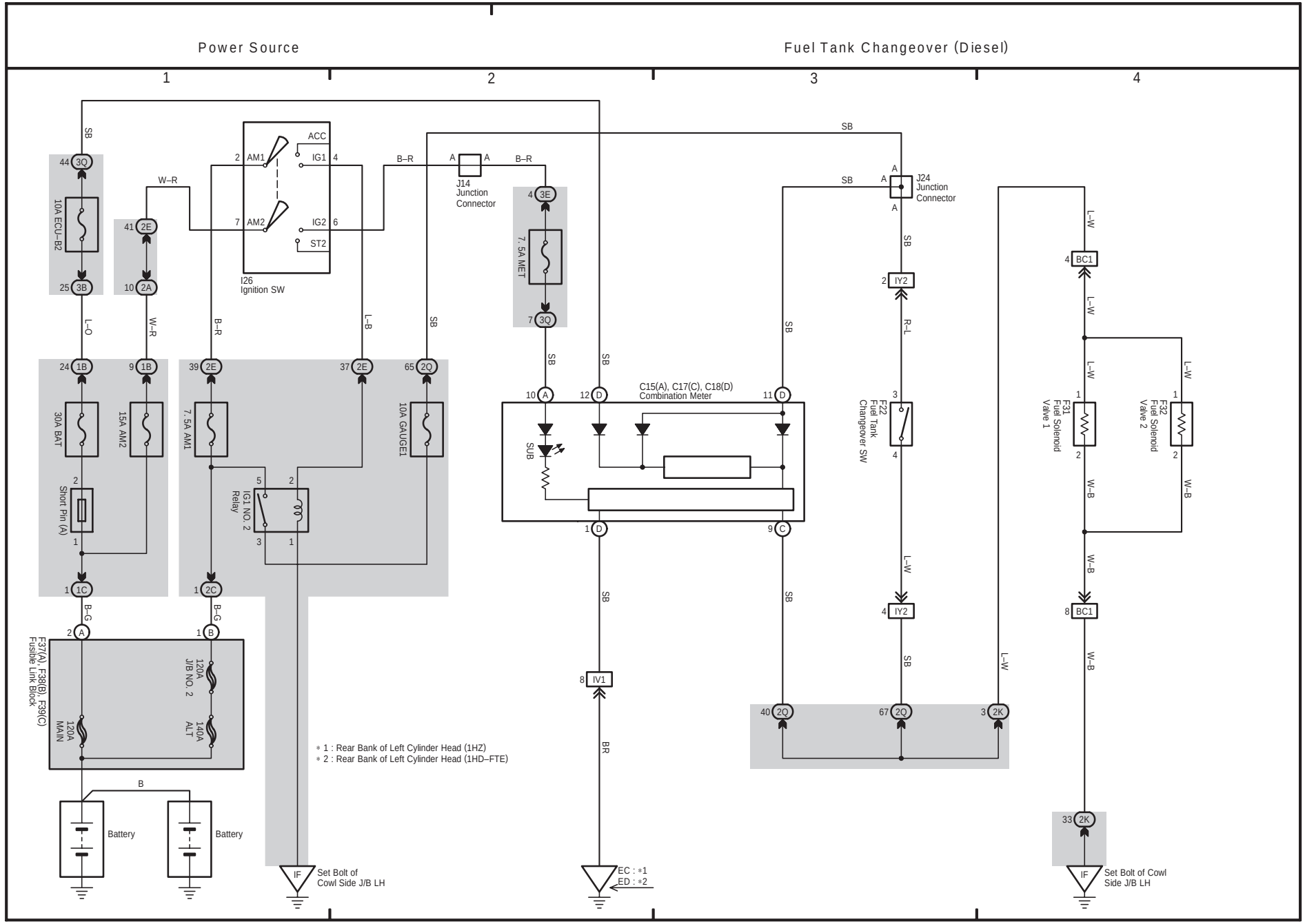
Power Source
Fuel Tank Changeover (Diesel)
1
2
3
4
SB
44 3Q
10A ECU-B2
25 3B
L–O
24 1B
30A BAT
2
Short Pin (A)
1
1C
B–G
2 A
F37(A), F38(B), F39(C)
Fusible Link Block
120A MAIN
120A J/B NO. 2
140A ALT
B
Battery
Battery
W–R
41 2E
10 2A
W–R
B–R
2 AM1
7 AM2
ACC
IG1 4
IG2 6
ST2
I26
Ignition SW
15A AM2
B–R
39 2E
7. 5A AM1
5
2
IG1 NO. 2
Relay
3
1
1C
B–G
1 B
L–B
37 2E
SB
65 2Q
10A GAUGE1
B–R
A
A
J14
Junction
Connector
B–R
4 3E
7. 5A MET
7 3Q
SB
10 A
SUB
12 D
C15(A), C17(C), C18(D)
Combination Meter
1 D
9 C
11 D
SB
8 IV1
BR
SB
A
A
J24
Junction
Connector
A
SB
2 IY2
R–L
3
F22
Fuel Tank
Changeover SW
4
L–W
4 IY2
SB
L–W
40 2Q
67 2Q
3 2K
4 BC1
L–W
L–W
1
F31
Fuel Solenoid
Valve 1
2
W–B
L–W
1
F32
Fuel Solenoid
Valve 2
2
W–B
W–B
8 BC1
W–B
33 2K
IF
Set Bolt of Cowl
Side J/B LH
IF
Set Bolt of
Cowl Side J/B LH
EC : *1
ED : *2
* 1 : Rear Bank of Left Cylinder Head (1HZ)
* 2 : Rear Bank of Left Cylinder Head (1HD–FTE)

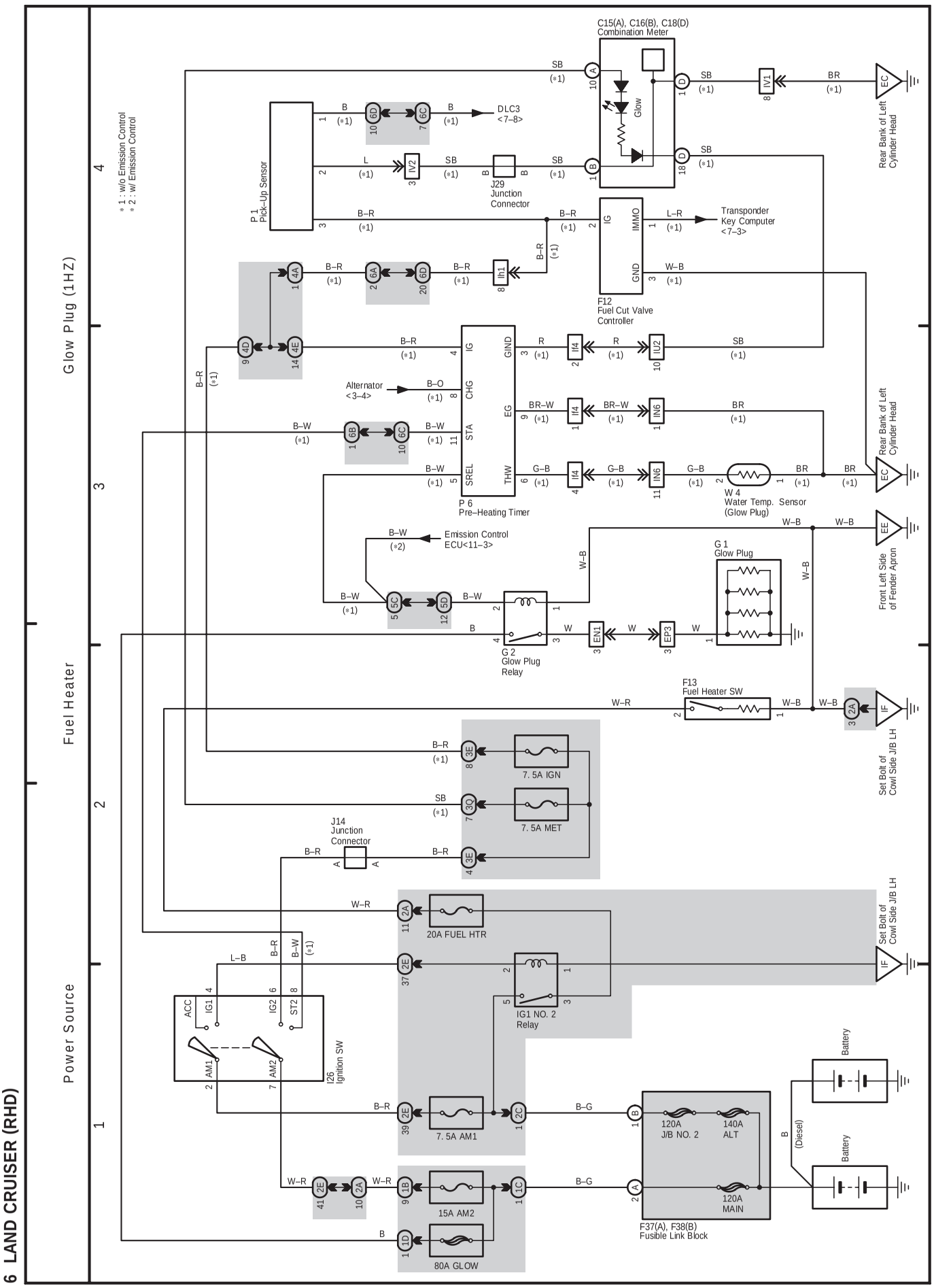
6 LAND CRUISER (RHD)
Power Source
Fuel Heater
Glow Plug (1HZ)
1
2
3
4
* 1 : w/o Emission Control
* 2 : w/ Emission Control
C15(A), C16(B), C18(D)
Combination Meter
Glow
Rear Bank of Left Cylinder Head
DLC3
<7–8>
J29
Junction Connector
P 1
Pick–Up Sensor
Transponder Key Computer
<7–3>
F12
Fuel Cut Valve Controller
Alternator
<3–4>
P 6
Pre–Heating Timer
W 4
Water Temp. Sensor (Glow Plug)
Emission Control
ECU<11–3>
G 1
Glow Plug
Front Left Side of Fender Apron
G 2
Glow Plug Relay
F13
Fuel Heater SW
Set Bolt of Cowl Side J/B LH
7. 5A IGN
7. 5A MET
J14
Junction Connector
20A FUEL HTR
ACC
IG1
IG2
ST2
AM1
AM2
I26
Ignition SW
IG1 NO. 2 Relay
7. 5A AM1
15A AM2
80A GLOW
120A J/B NO. 2
140A ALT
120A MAIN
F37(A), F38(B)
Fusible Link Block
Battery
(Diesel)

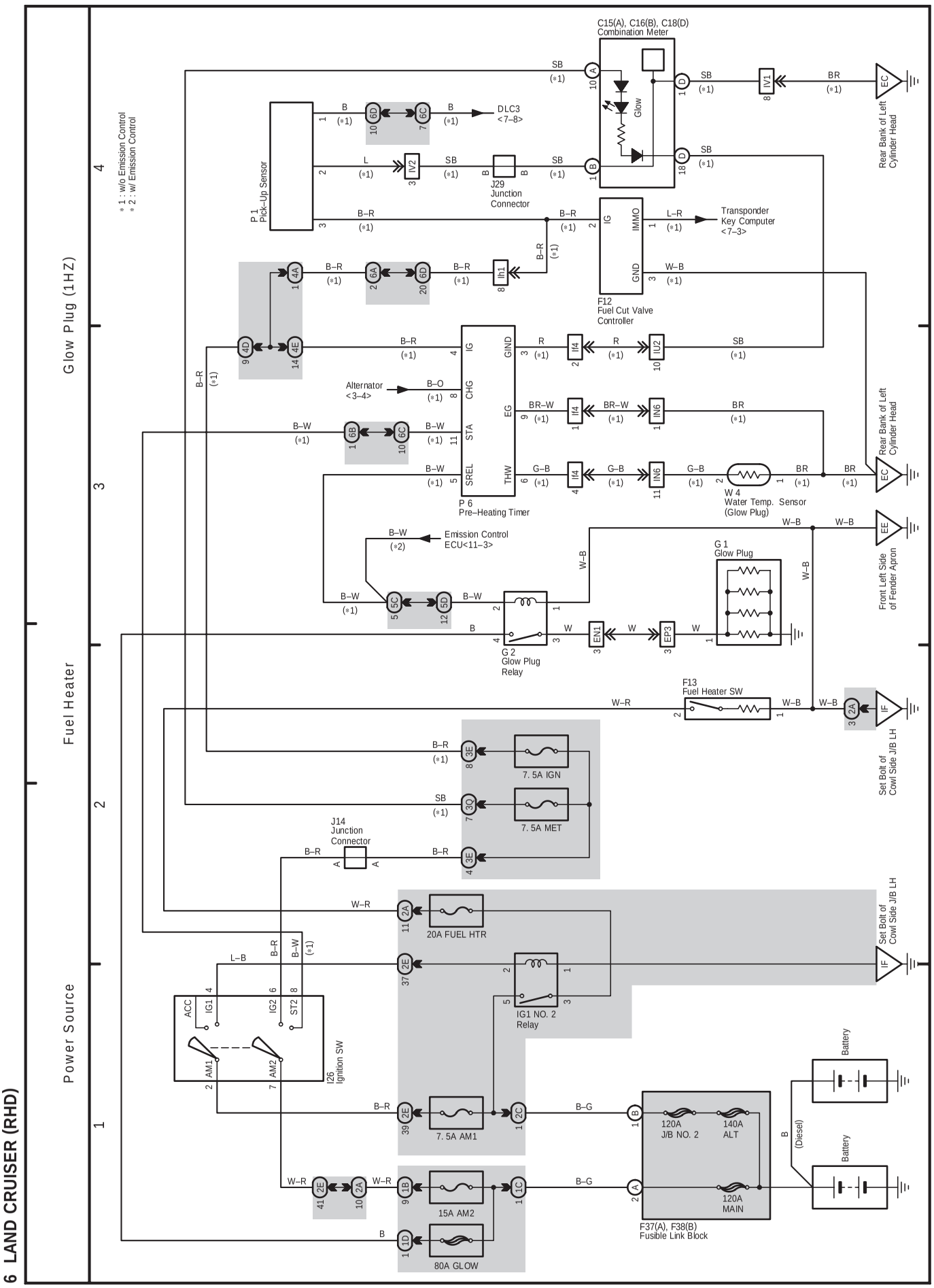
6 LAND CRUISER (RHD)
Power Source
Fuel Heater
Glow Plug (1HZ)
1
2
3
4
* 1 : w/o Emission Control
* 2 : w/ Emission Control
C15(A), C16(B), C18(D)
Combination Meter
Glow
Rear Bank of Left Cylinder Head
DLC3
<7–8>
J29
Junction Connector
P 1
Pick–Up Sensor
Transponder Key Computer
<7–3>
F12
Fuel Cut Valve Controller
Alternator
<3–4>
P 6
Pre–Heating Timer
W 4
Water Temp. Sensor (Glow Plug)
Emission Control
ECU<11–3>
G 1
Glow Plug
Front Left Side of Fender Apron
G 2
Glow Plug Relay
F13
Fuel Heater SW
Set Bolt of Cowl Side J/B LH
7. 5A IGN
7. 5A MET
J14
Junction Connector
20A FUEL HTR
ACC
IG1
IG2
ST2
AM1
AM2
I26
Ignition SW
IG1 NO. 2 Relay
7. 5A AM1
15A AM2
80A GLOW
120A J/B NO. 2
140A ALT
120A MAIN
F37(A), F38(B)
Fusible Link Block
Battery
(Diesel)

F ELECTRICAL WIRING DIAGRAM (System Circuits)

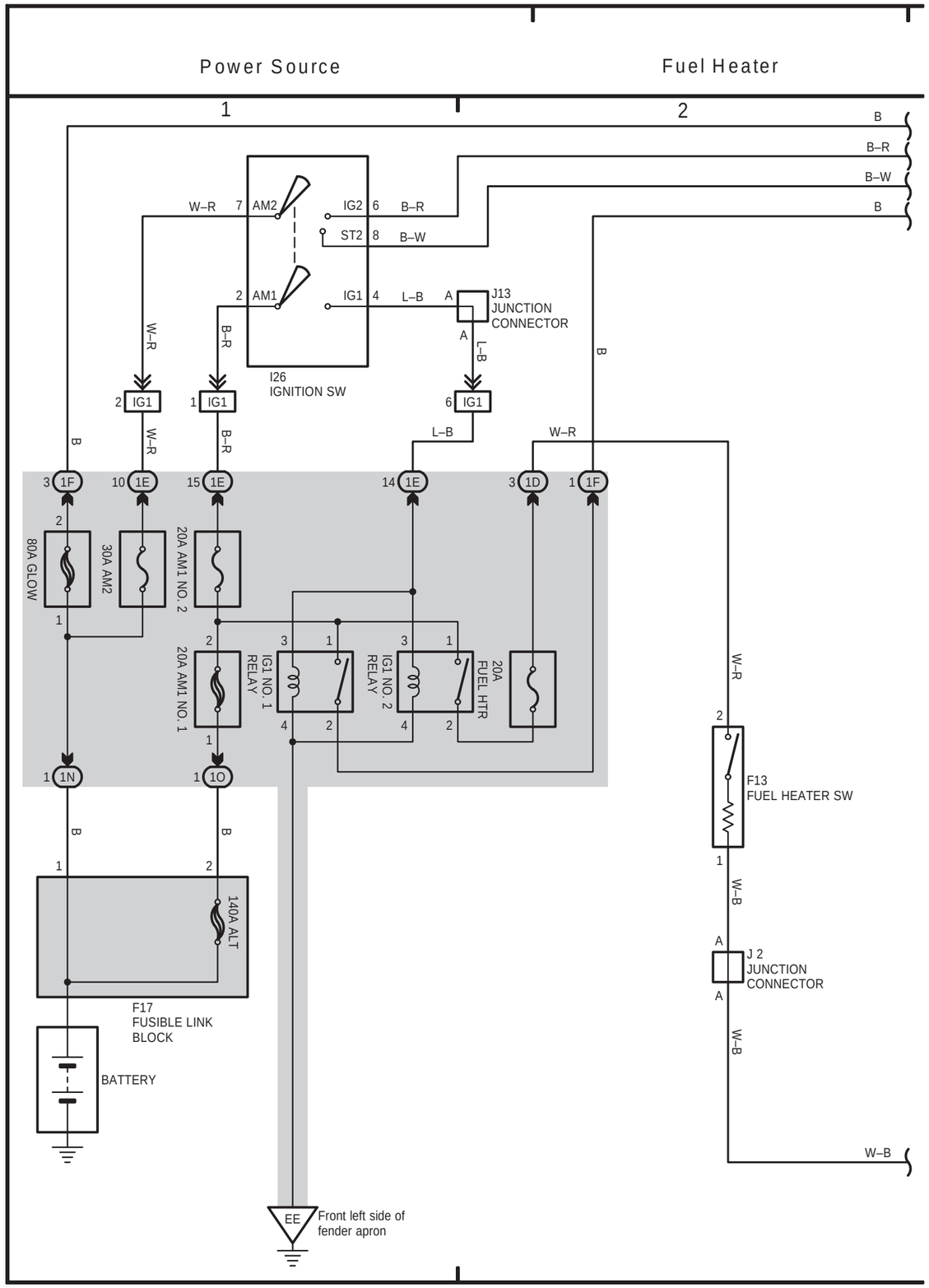

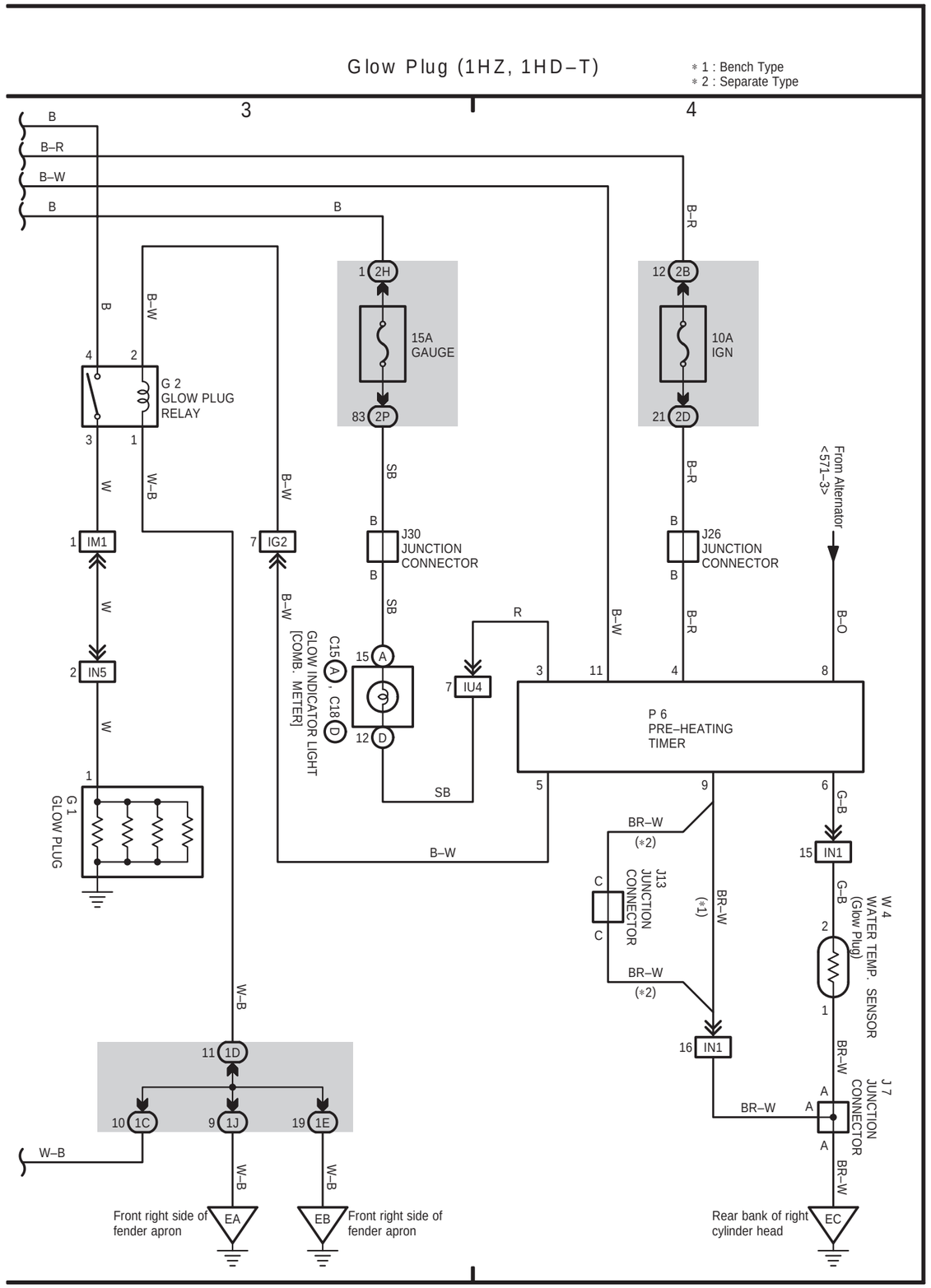

RHD

RHD

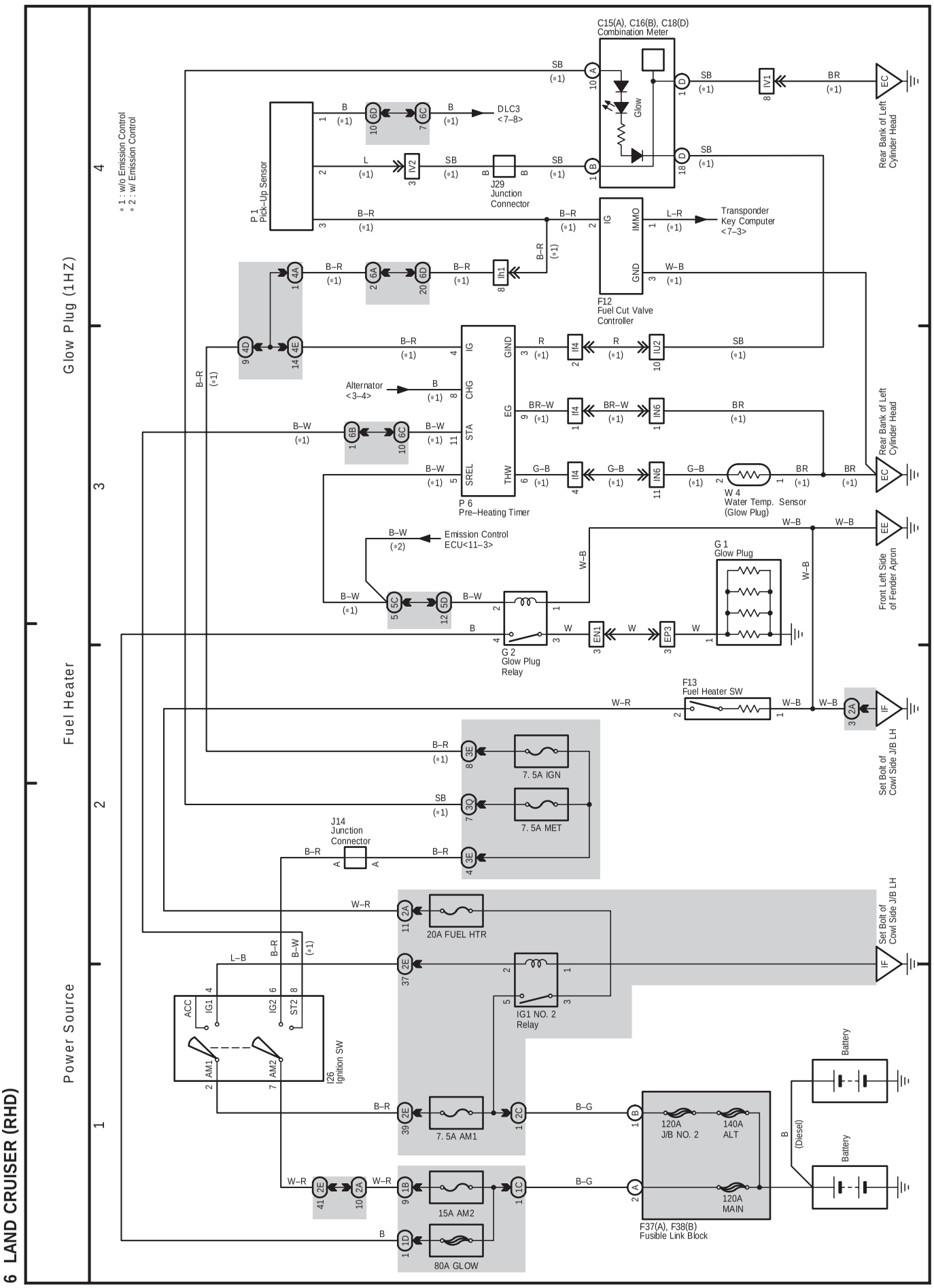
6 LAND CRUISER (RHD)
Power Source
Fuel Heater
Glow Plug (1HZ)
1
2
3
4
* 1 : w/o Emission Control
* 2 : w/ Emission Control
C15(A), C16(B), C18(D)
Combination Meter
Glow
Rear Bank of Left Cylinder Head
DLC3
<7–8>
P 1
Pick–Up Sensor
J29
Junction Connector
Transponder Key Computer
<7–3>
F12
Fuel Cut Valve Controller
Alternator
<3–4>
P 6
Pre–Heating Timer
W 4
Water Temp. Sensor (Glow Plug)
Emission Control
ECU<11–3>
G 1
Glow Plug
Front Left Side of Fender Apron
G 2
Glow Plug Relay
F13
Fuel Heater SW
Set Bolt of Cowl Side J/B LH
7. 5A IGN
7. 5A MET
J14
Junction Connector
20A FUEL HTR
IG1 NO. 2 Relay
I26
Ignition SW
ACC
IG1
IG2
ST2
AM1
AM2
7. 5A AM1
15A AM2
80A GLOW
120A J/B NO. 2
140A ALT
120A MAIN
F37(A), F38(B)
Fusible Link Block
Battery
B (Diesel)

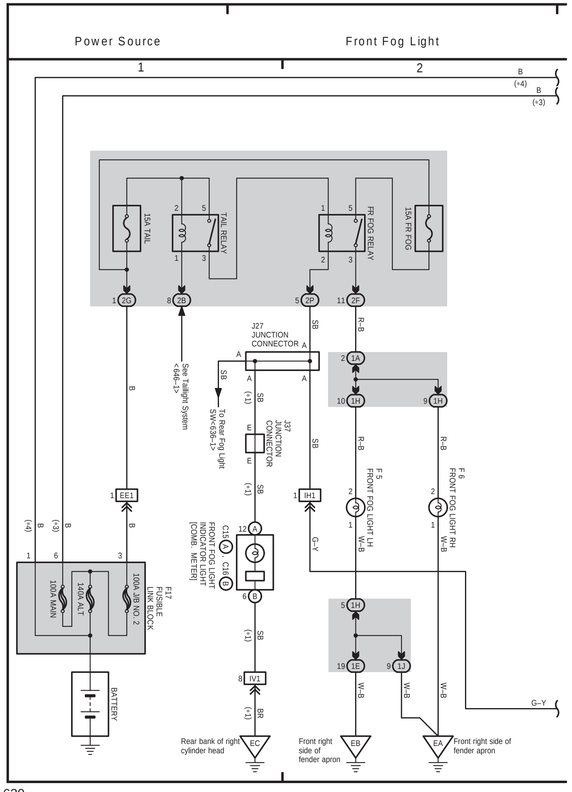

(Cont. next page)

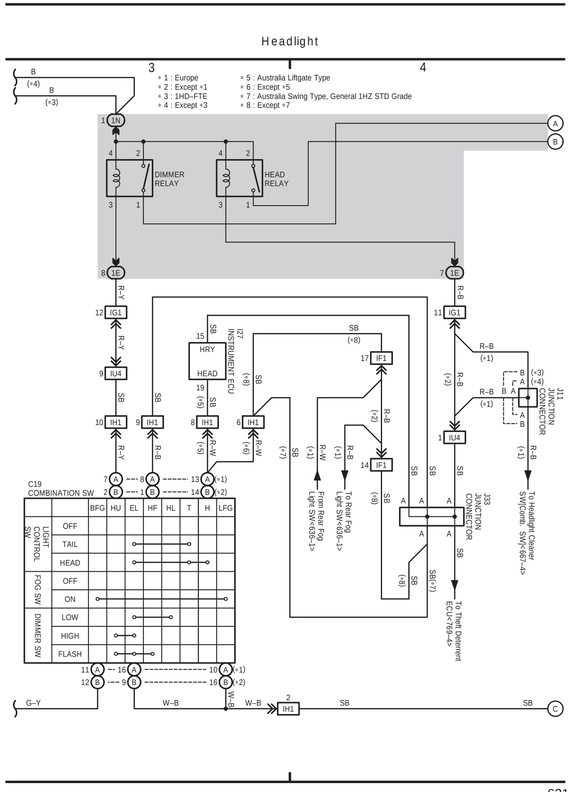

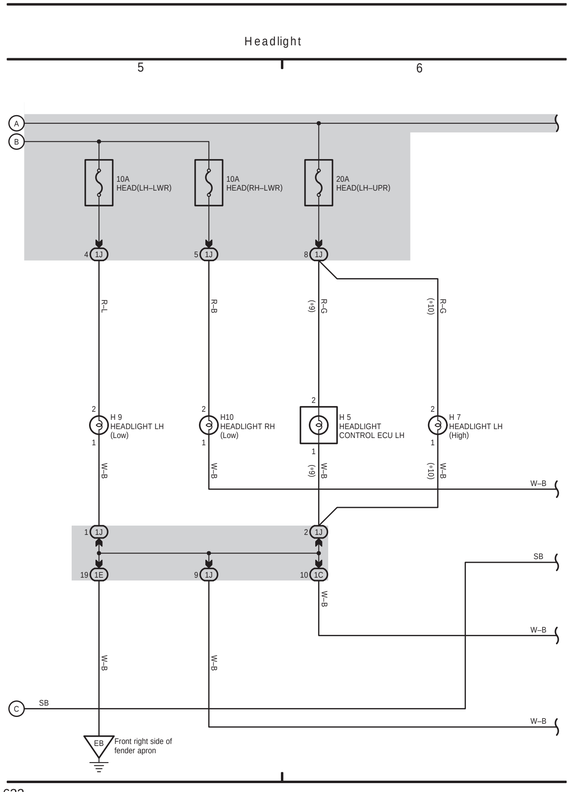

(Cont'd)

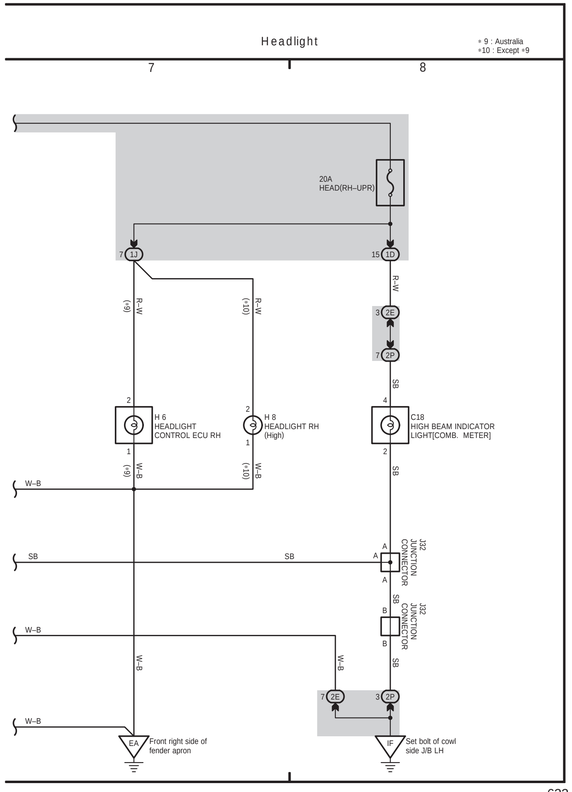

F ELECTRICAL WIRING DIAGRAM (System Circuits)

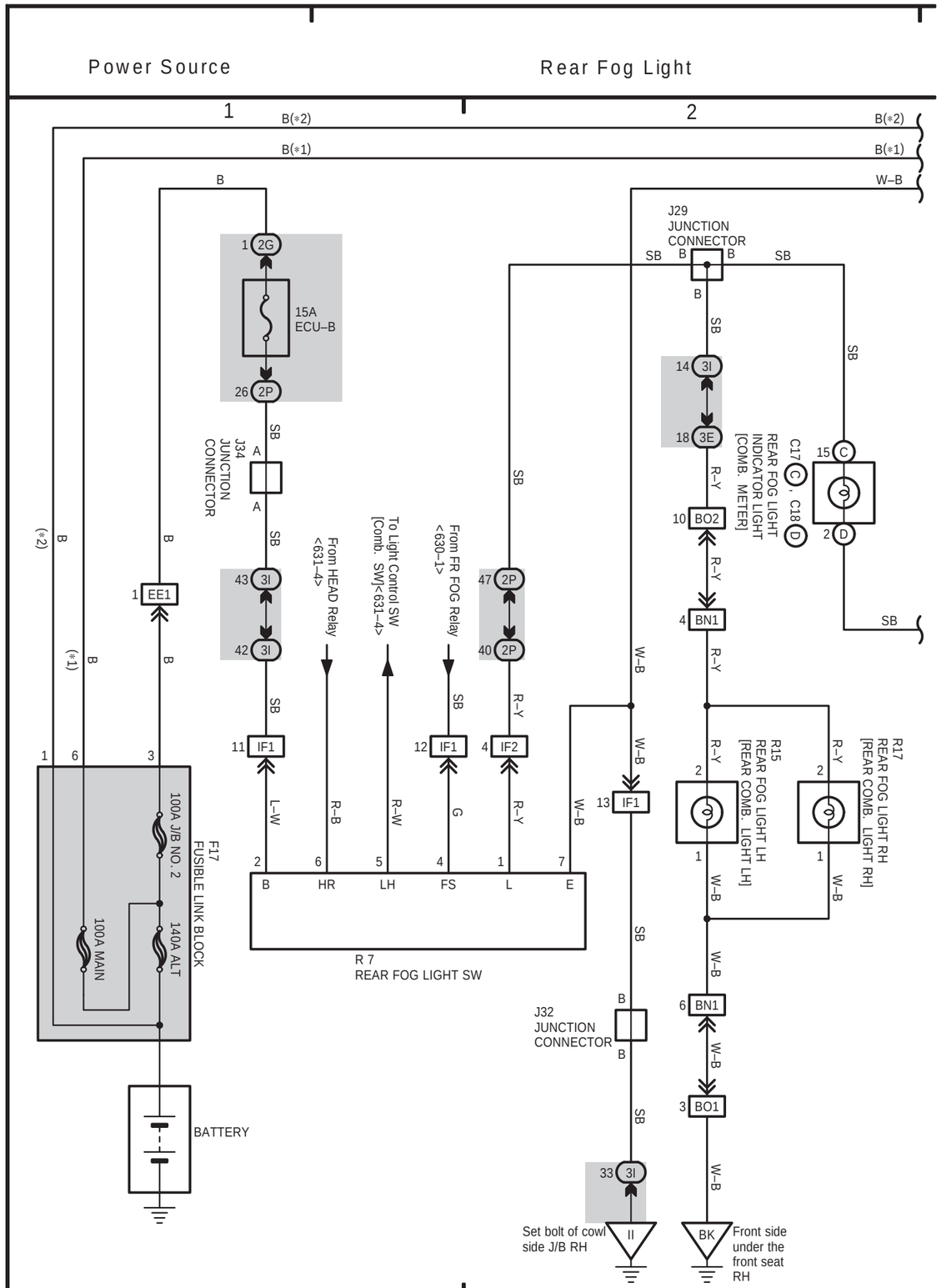

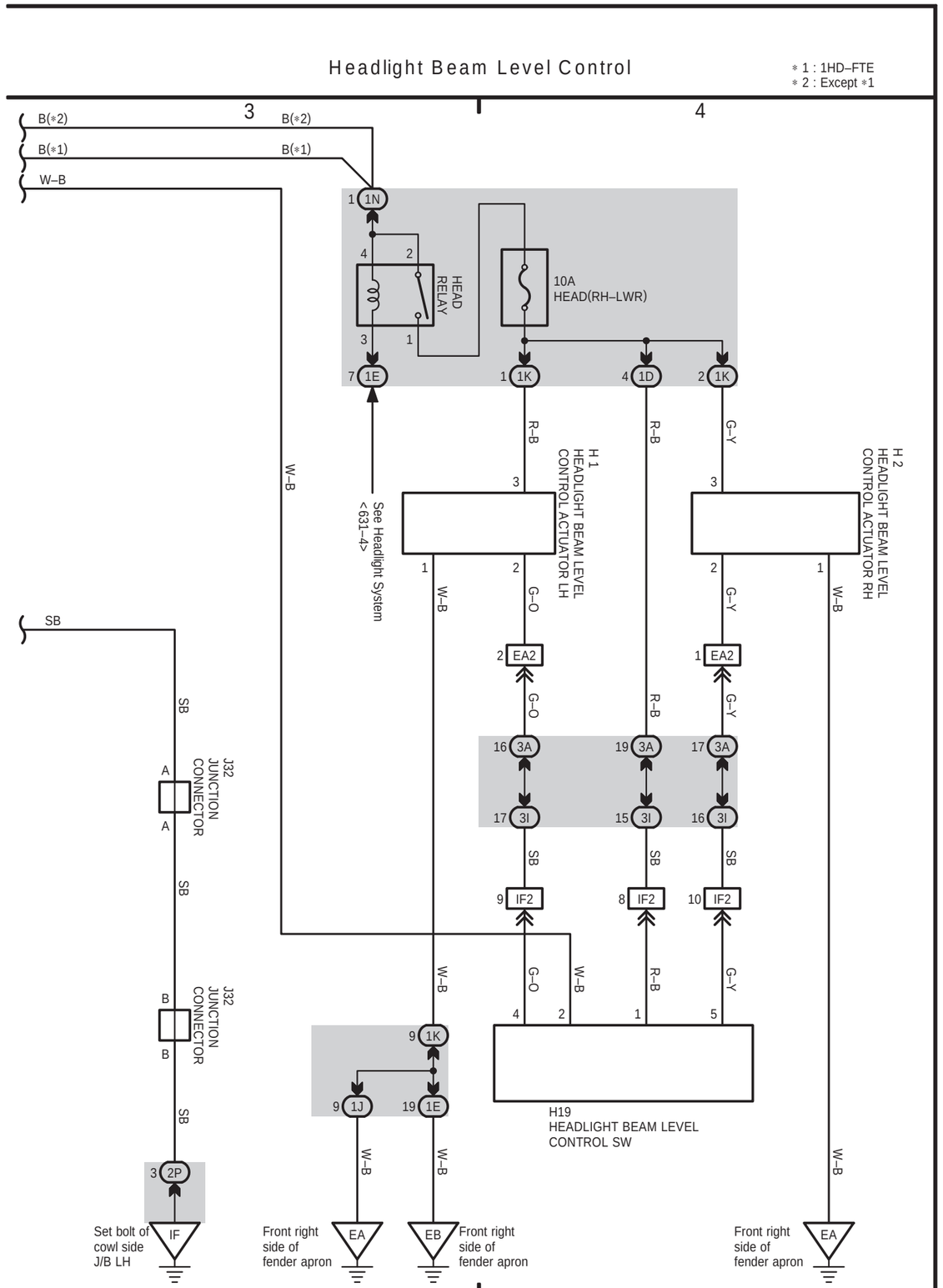

RHD

RHD

36 LAND CRUISER (RHD)

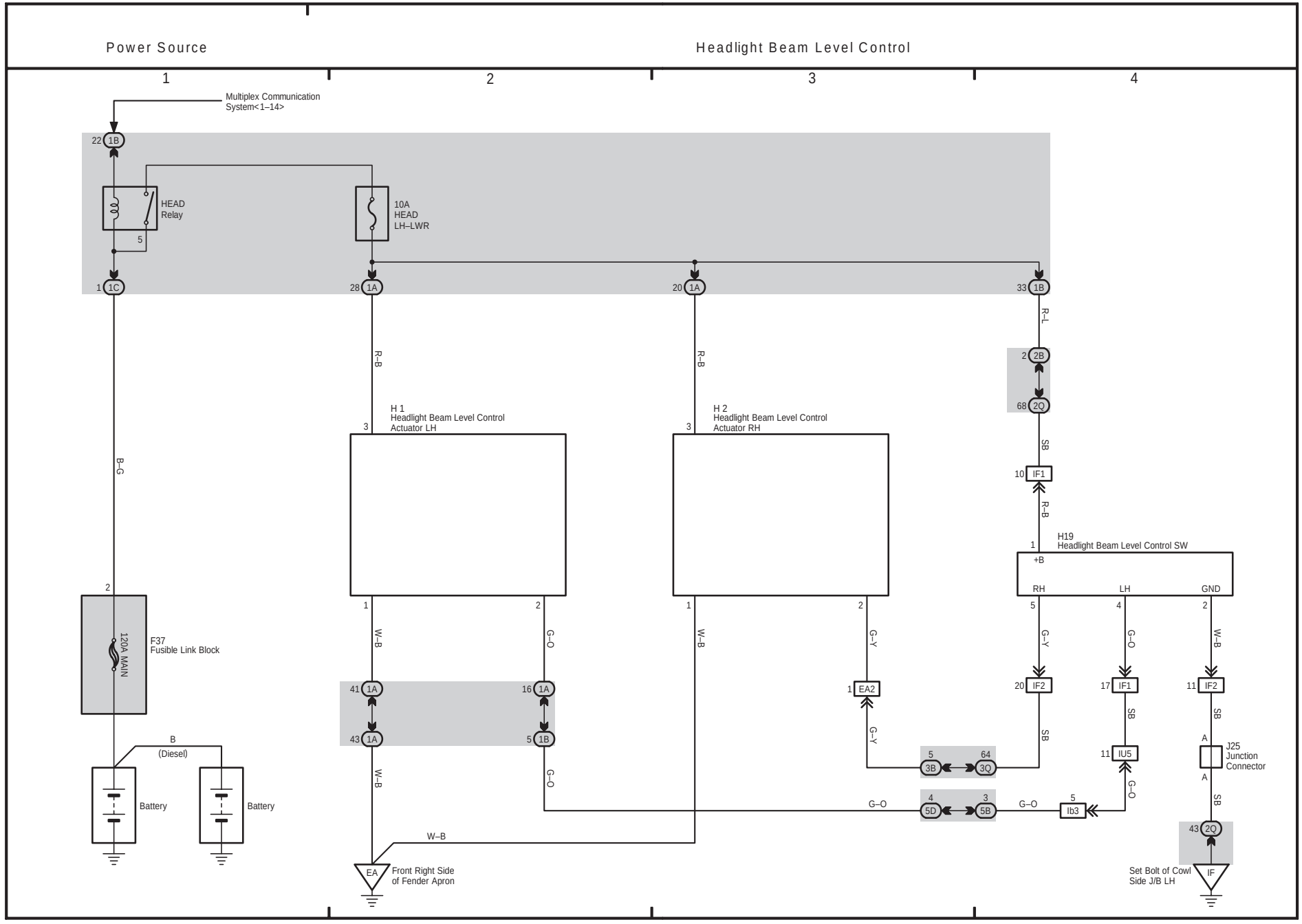

35 LAND CRUISER (RHD)

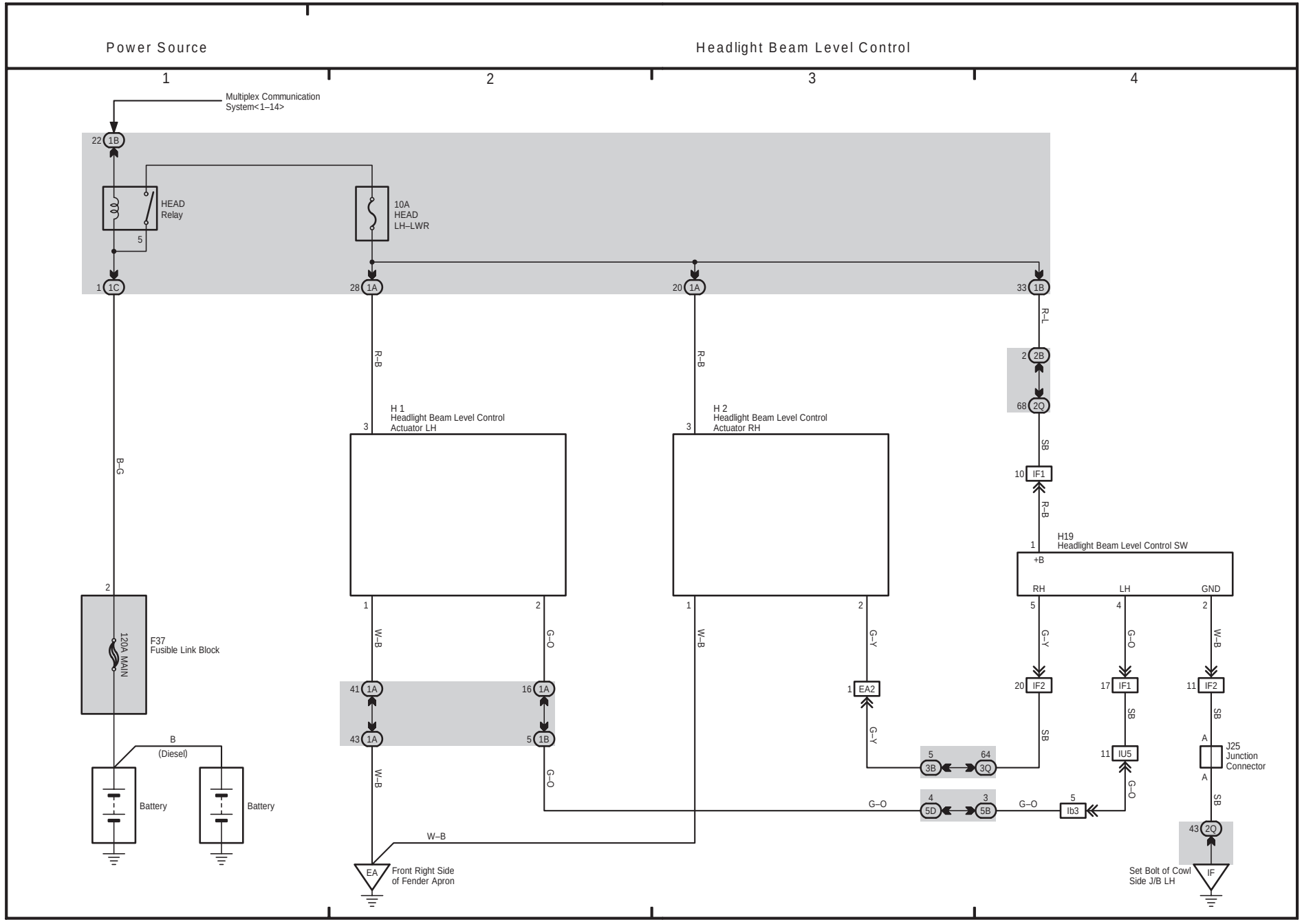

35 LAND CRUISER (RHD)

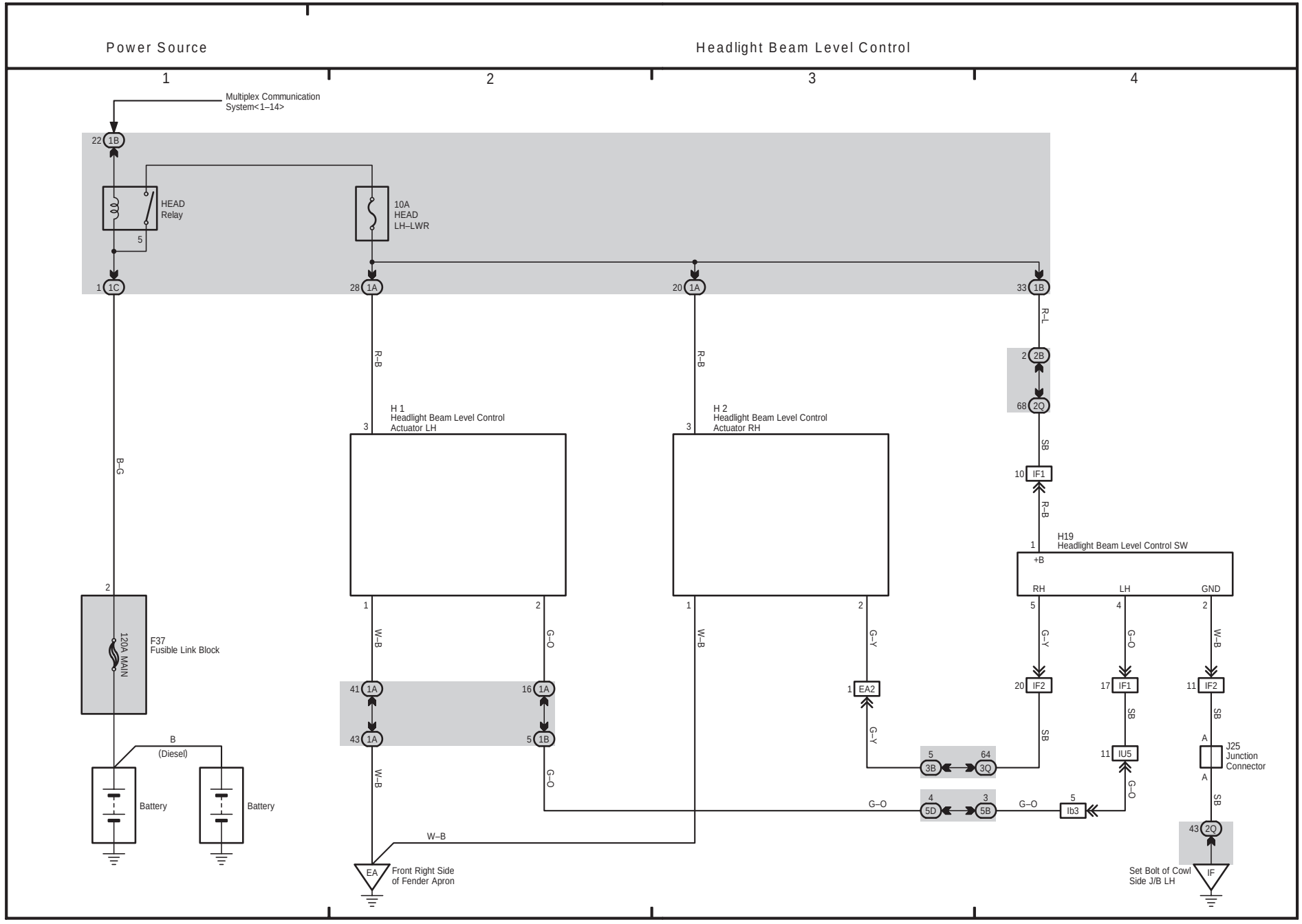

F ELECTRICAL WIRING DIAGRAM (System Circuits)

Power Source

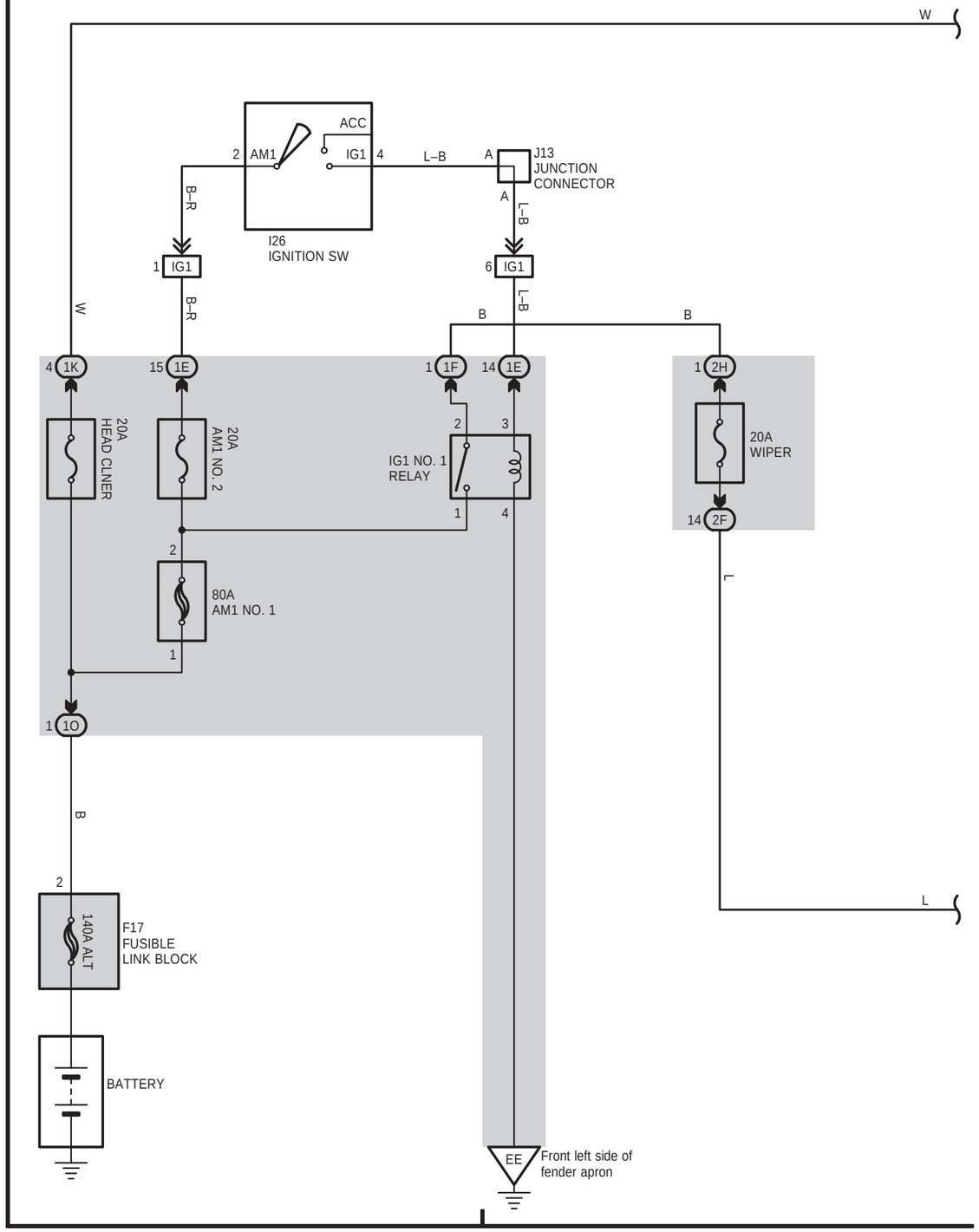

Headlight Cleaner

＊1 : 1HD–FTE
＊2 : Except 1HD–FTE

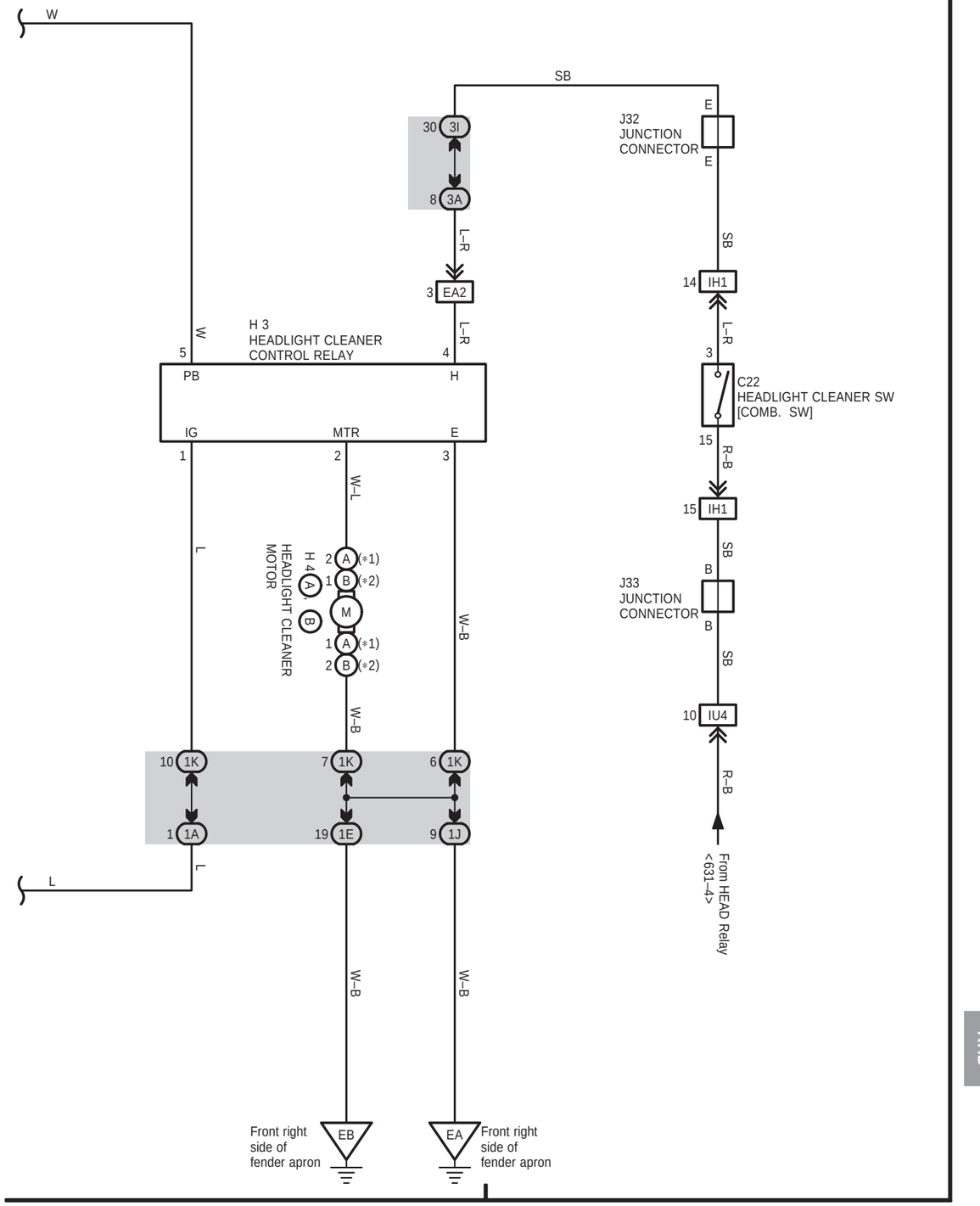

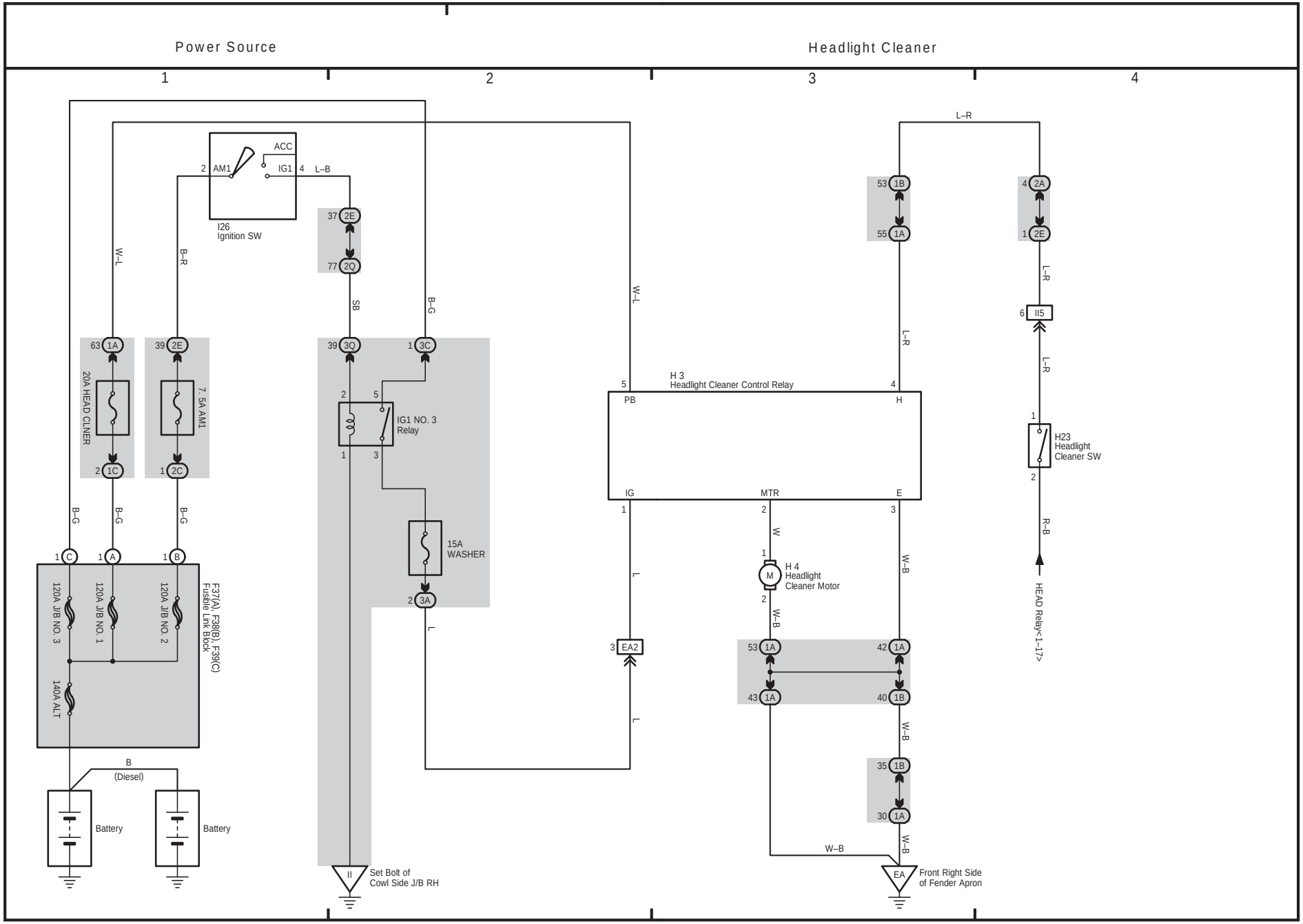
Power Source
Headlight Cleaner
1
2
3
4
ACC
AM1
IG1
L–B
I26
Ignition SW
W–L
B–R
B–G
SB
L–R
20A HEAD CLNER
7. 5A AM1
IG1 NO. 3
Relay
15A
WASHER
H 3
Headlight Cleaner Control Relay
PB
H
IG
MTR
E
H 4
Headlight
Cleaner Motor
H23
Headlight
Cleaner SW
HEAD Relay<1–17>
R–B
W–B
L
W
F37(A), F38(B), F39(C)
Fusible Link Block
120A J/B NO. 3
120A J/B NO. 1
120A J/B NO. 2
140A ALT
B
(Diesel)
Battery
Battery
Set Bolt of
Cowl Side J/B RH
Front Right Side
of Fender Apron

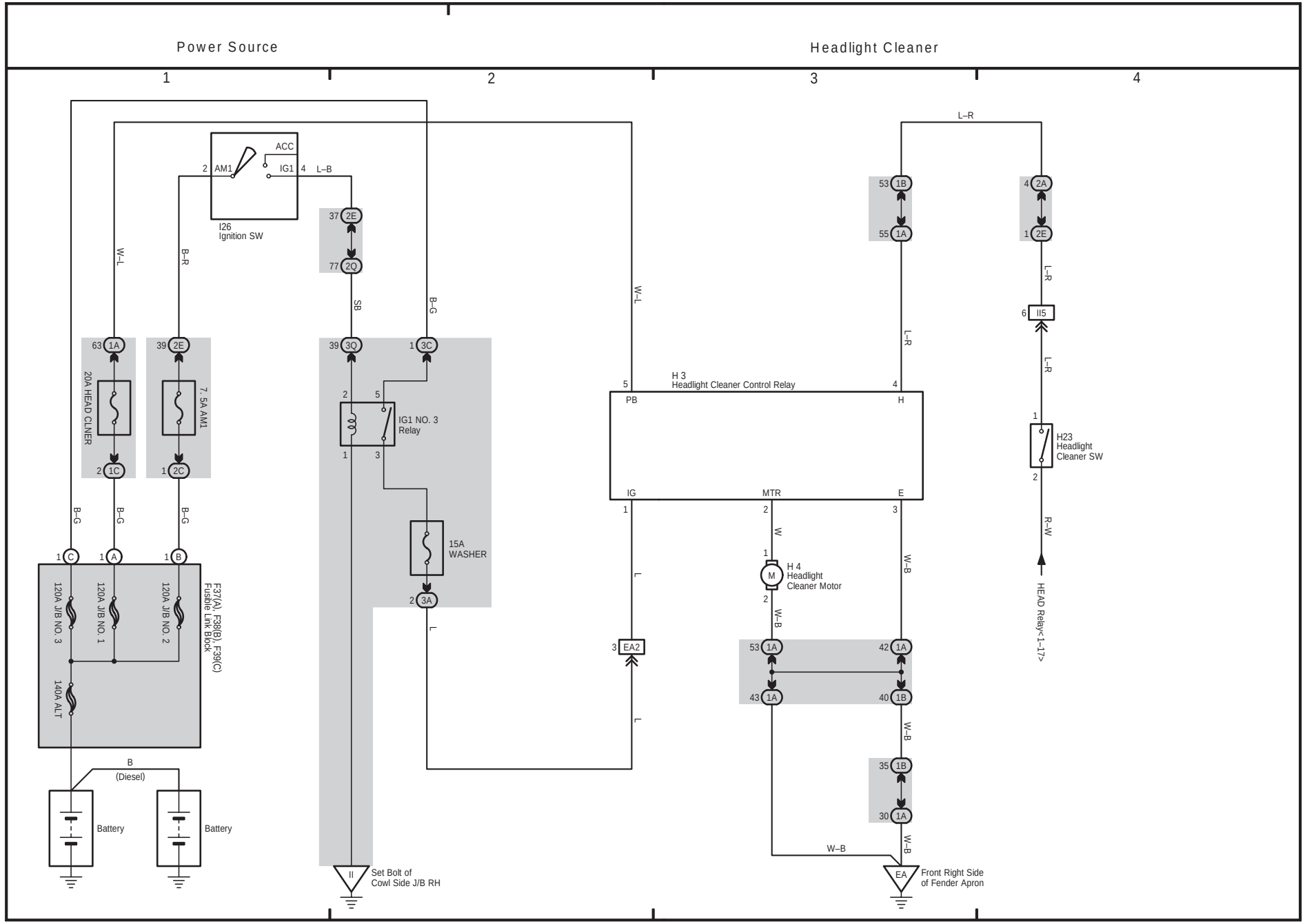
Power Source
Headlight Cleaner
1
2
3
4
ACC
AM1
IG1
L–B
I26
Ignition SW
W–L
B–R
B–G
SB
20A HEAD CLNER
7. 5A AM1
IG1 NO. 3
Relay
15A
WASHER
H 3
Headlight Cleaner Control Relay
PB
H
IG
MTR
E
H 4
Headlight
Cleaner Motor
H23
Headlight
Cleaner SW
R–W
HEAD Relay<1–17>
L–R
W–B
W
L
EA2
120A J/B NO. 3
120A J/B NO. 1
120A J/B NO. 2
140A ALT
F37(A), F38(B), F39(C)
Fusible Link Block
B
(Diesel)
Battery
Battery
Set Bolt of
Cowl Side J/B RH
Front Right Side
of Fender Apron

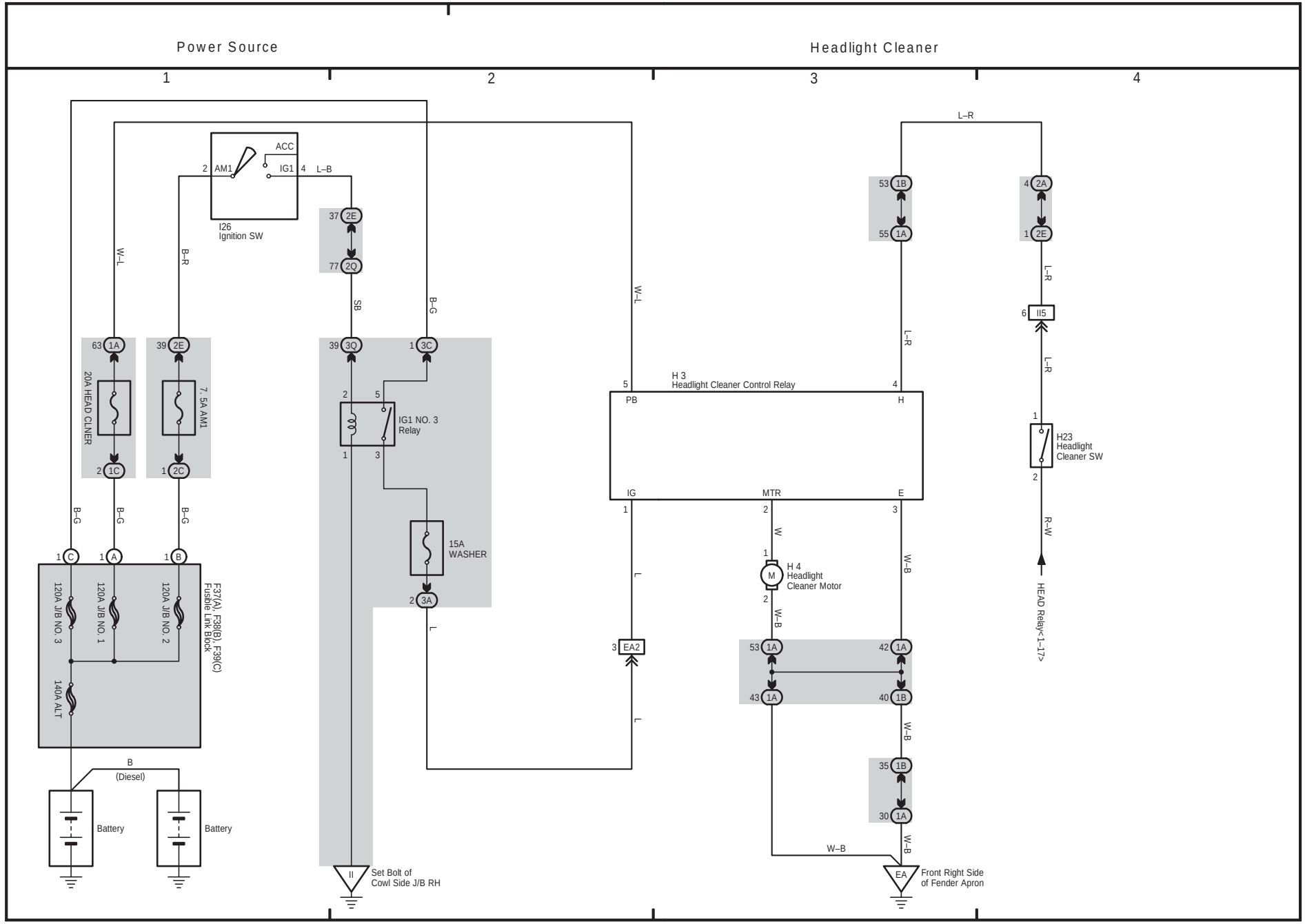
Power Source
Headlight Cleaner
1
2
3
4
ACC
AM1
IG1
L–B
I26
Ignition SW
W–L
B–R
B–G
SB
20A HEAD CLNER
7. 5A AM1
IG1 NO. 3
Relay
15A
WASHER
H 3
Headlight Cleaner Control Relay
PB
H
IG
MTR
E
H 4
Headlight
Cleaner Motor
H23
Headlight
Cleaner SW
R–W
HEAD Relay<1–17>
L–R
W–B
W
L
F37(A), F38(B), F39(C)
Fusible Link Block
120A J/B NO. 3
120A J/B NO. 1
120A J/B NO. 2
140A ALT
B
(Diesel)
Battery
Battery
EA2
II
Set Bolt of
Cowl Side J/B RH
EA
Front Right Side
of Fender Apron

F ELECTRICAL WIRING DIAGRAM (System Circuits)

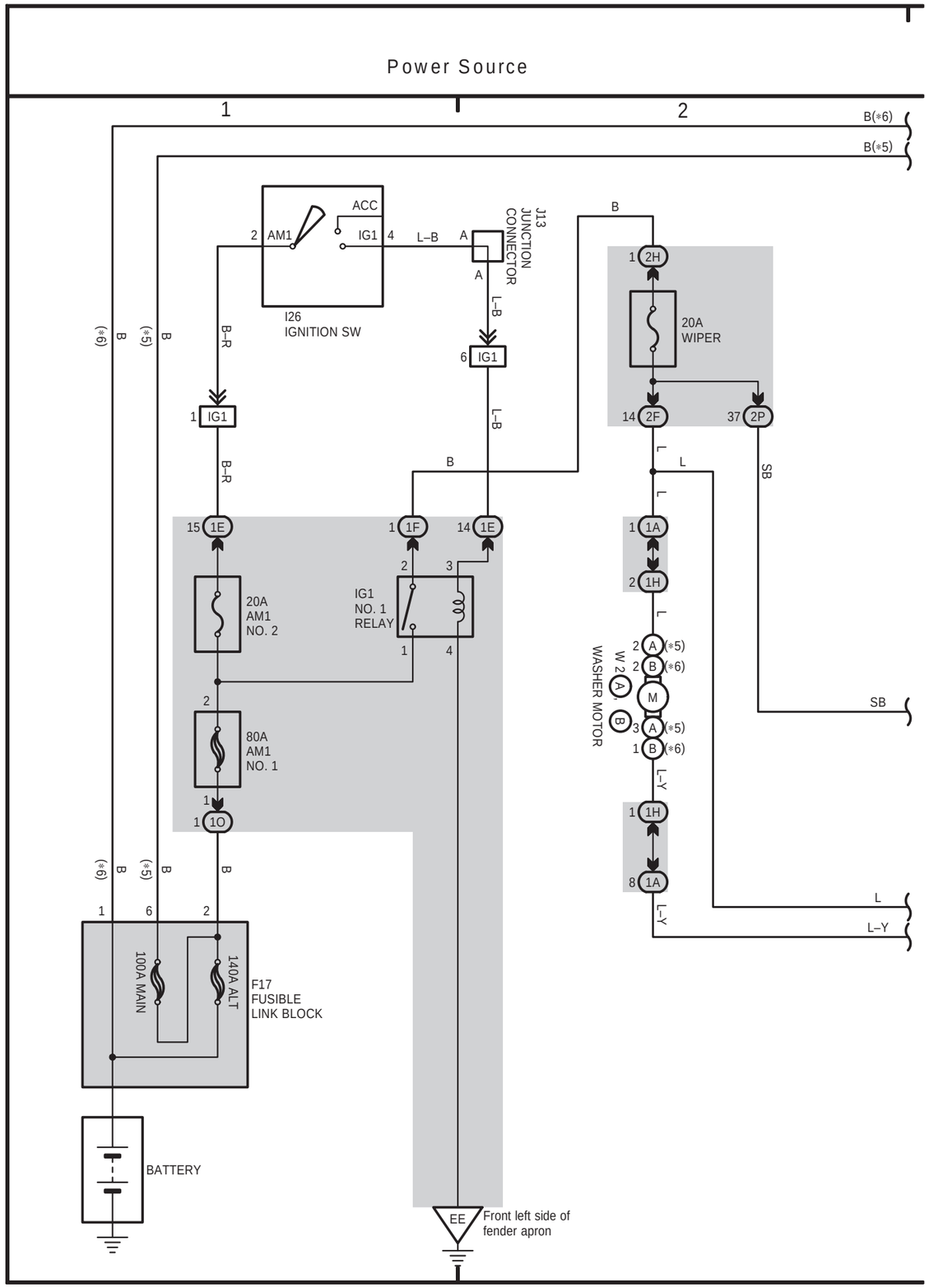

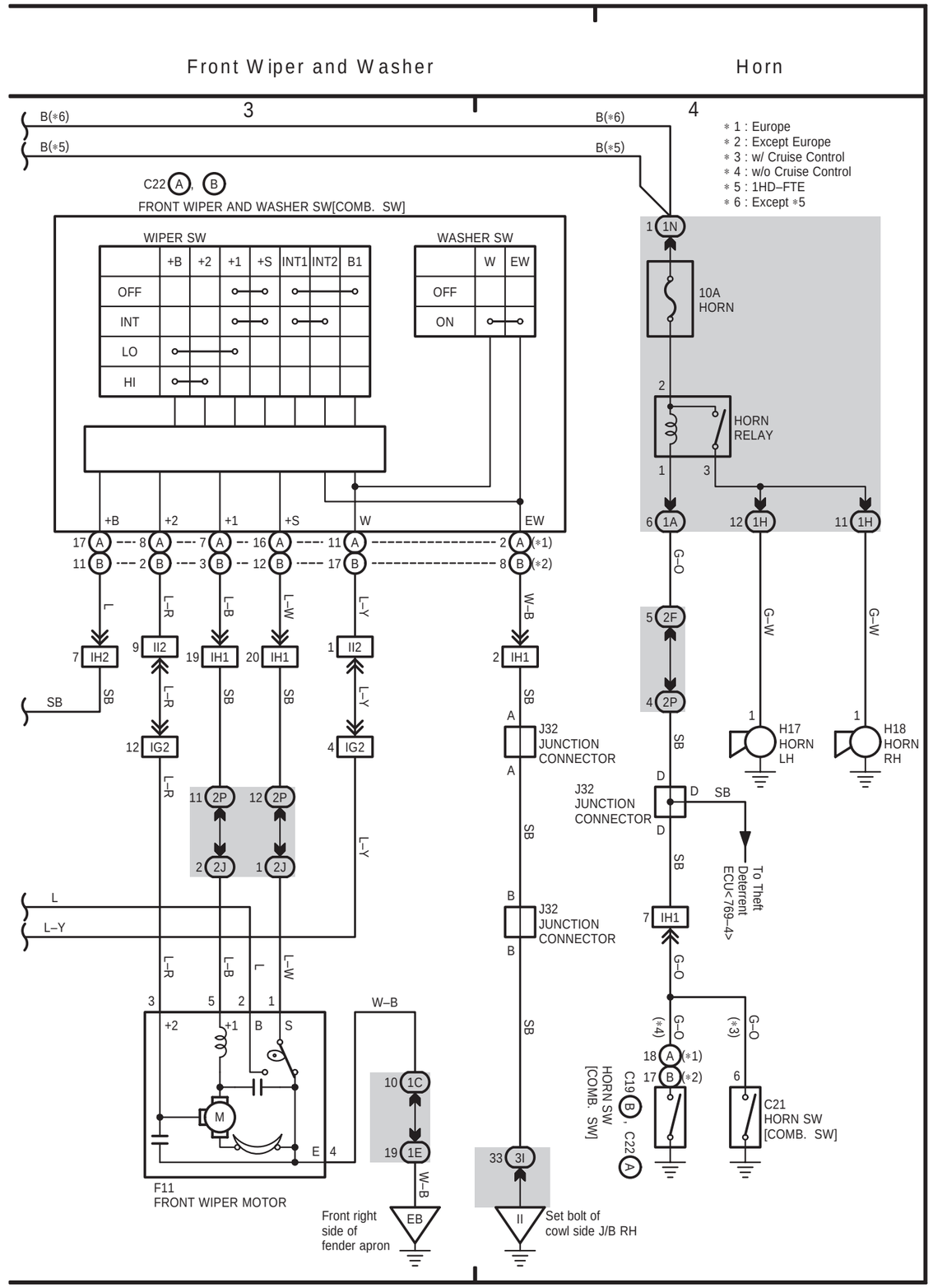

RHD

RHD

34 LAND CRUISER (RHD)

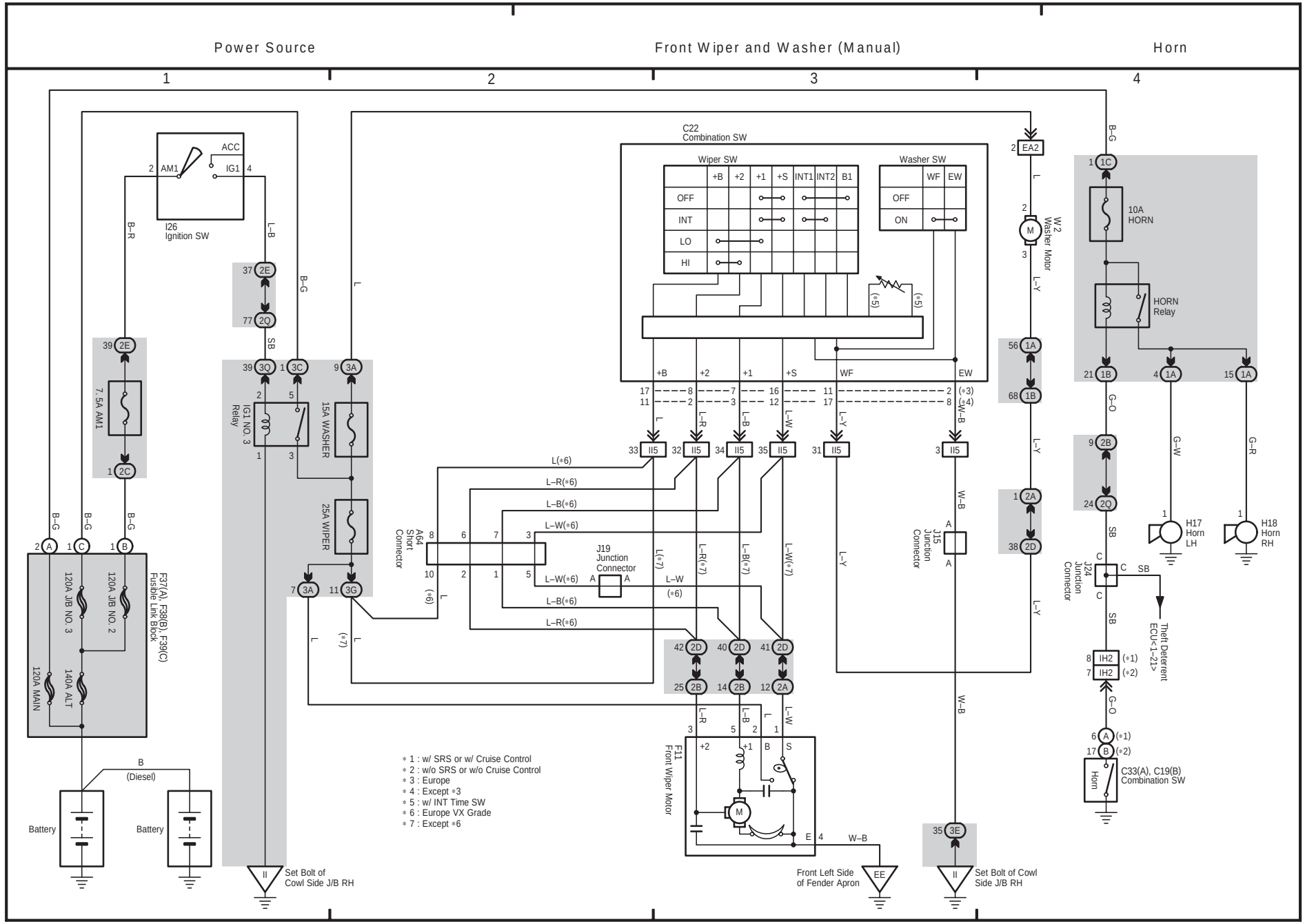

33 LAND CRUISER (RHD)

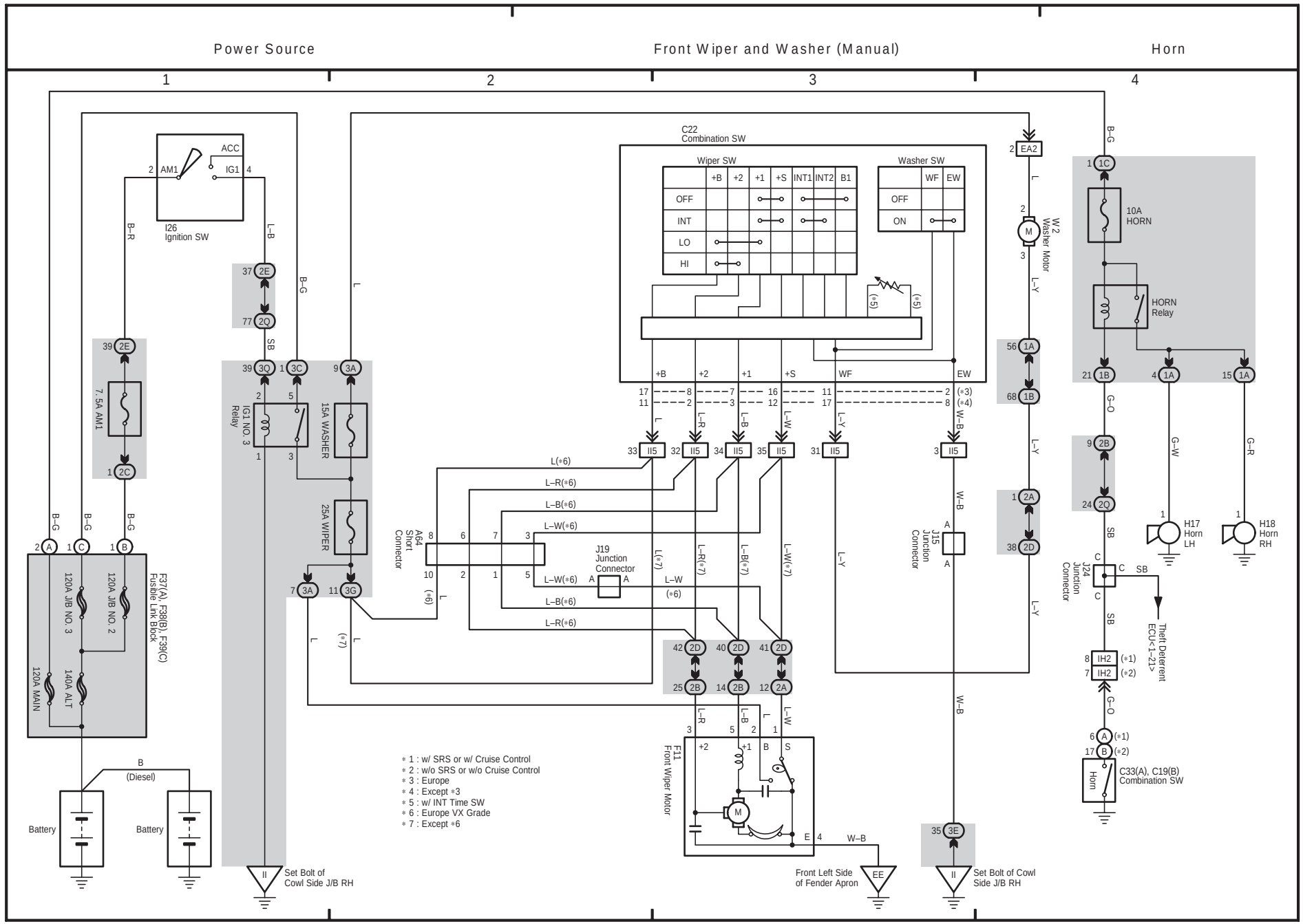

33 LAND CRUISER (RHD)

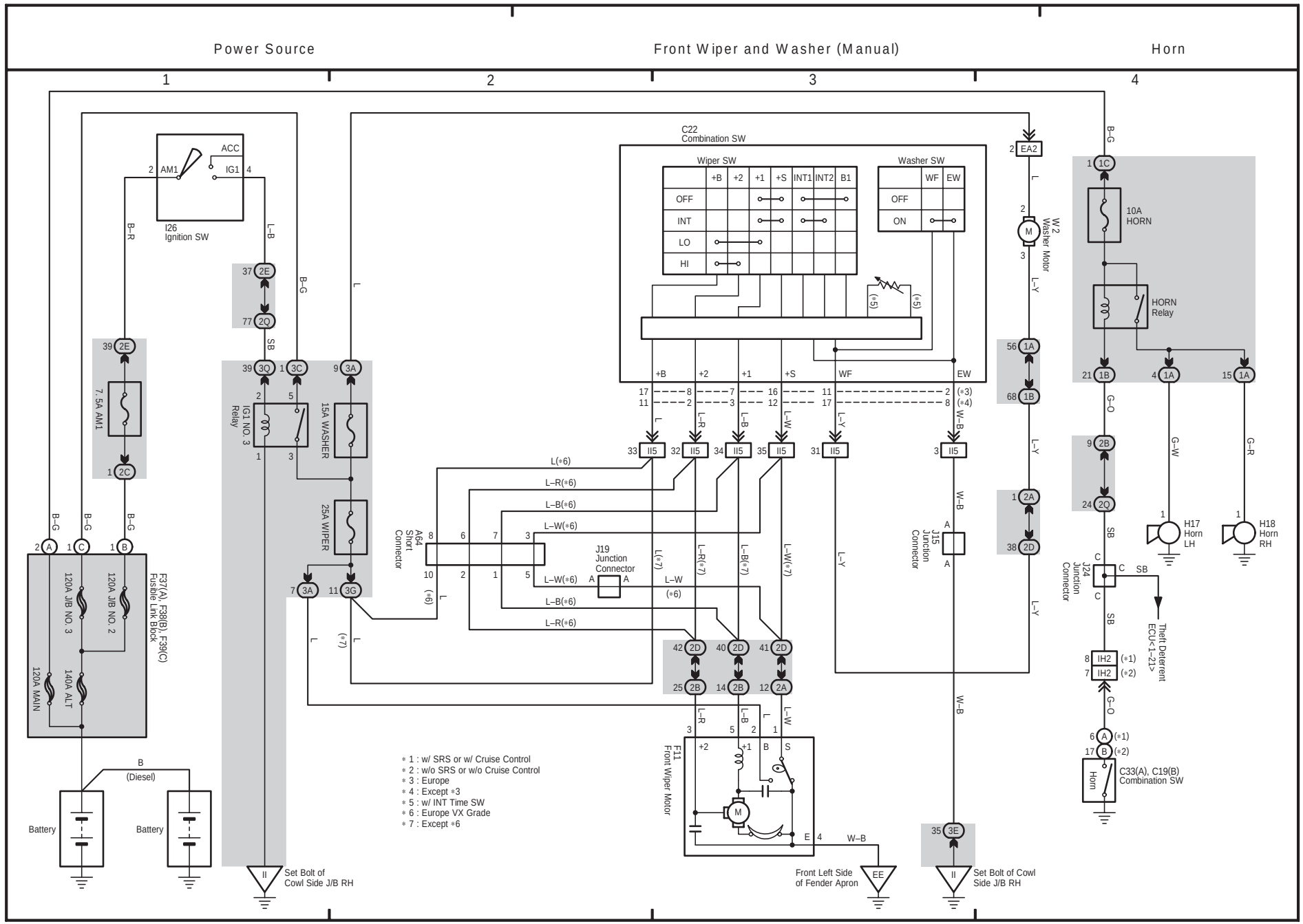

F ELECTRICAL WIRING DIAGRAM (System Circuits)

Power Source (1FZ–FE) | Ignition (1FZ–FE) | Ignition (1FZ–FE)

1 | 2 | 3 | 4

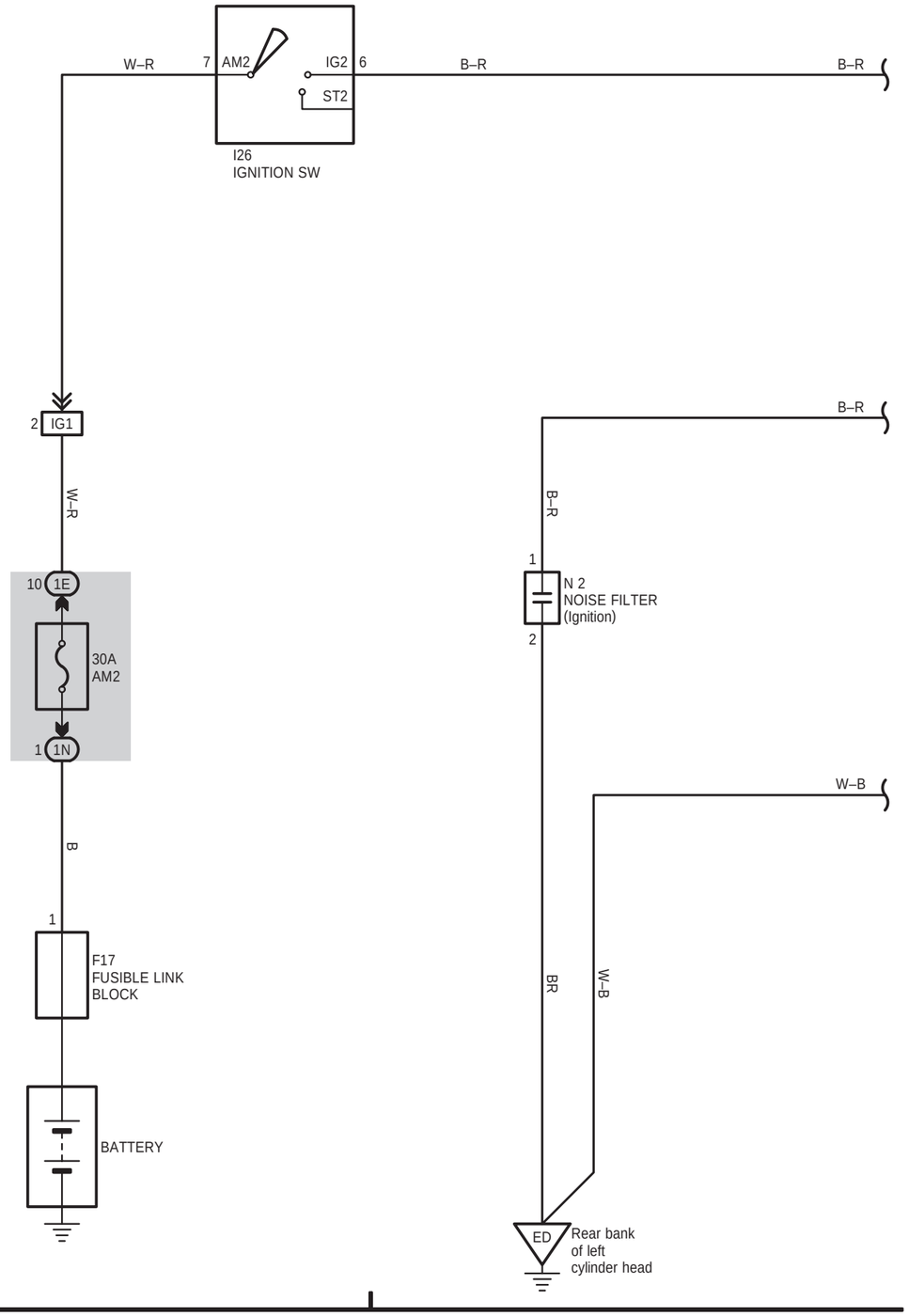

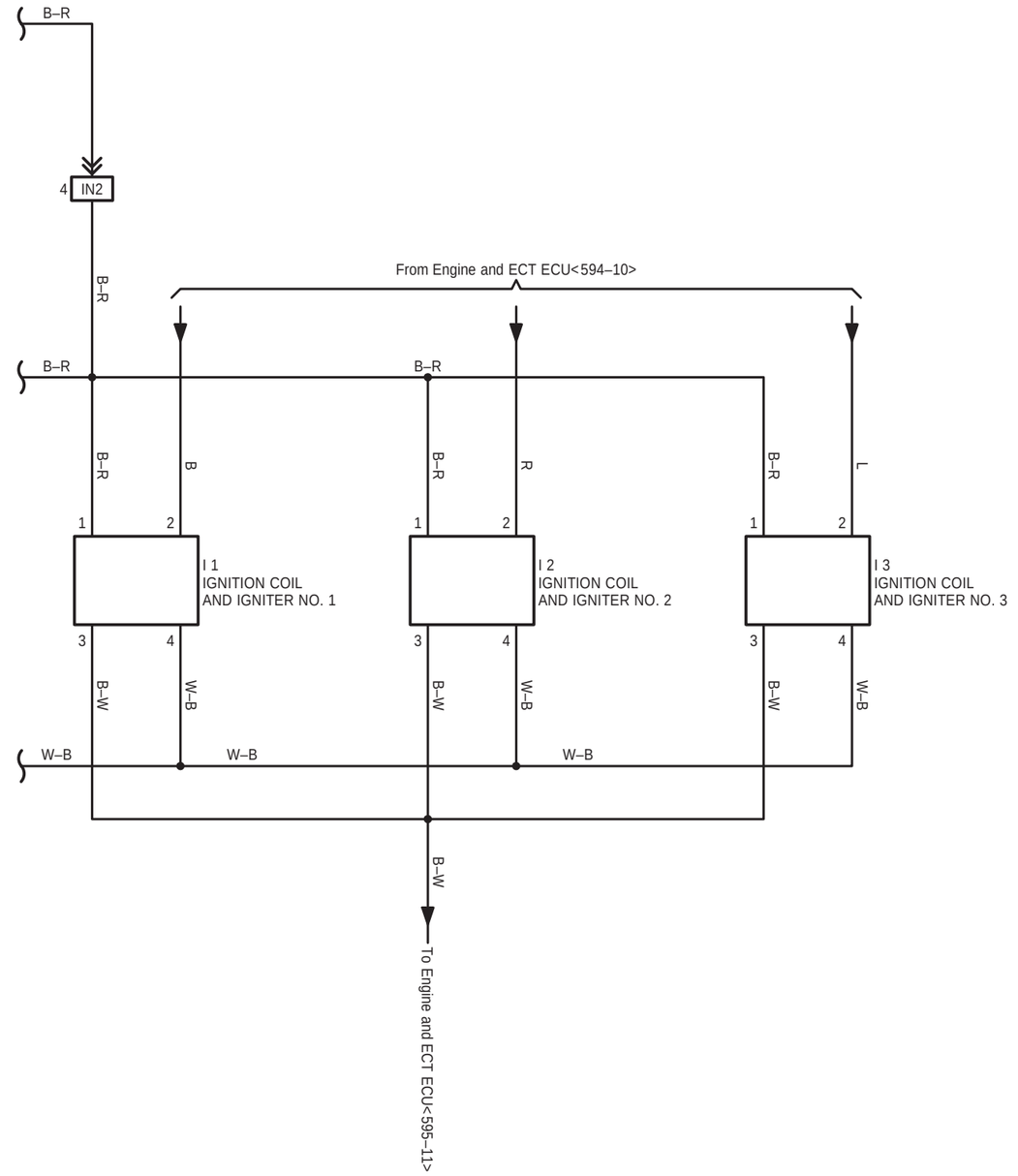

RHD

RHD

626

627

LAND CRUISER Station Wagon (EWD342F)

LAND CRUISER Station Wagon (EWD342F)

5 LAND CRUISER (RHD)

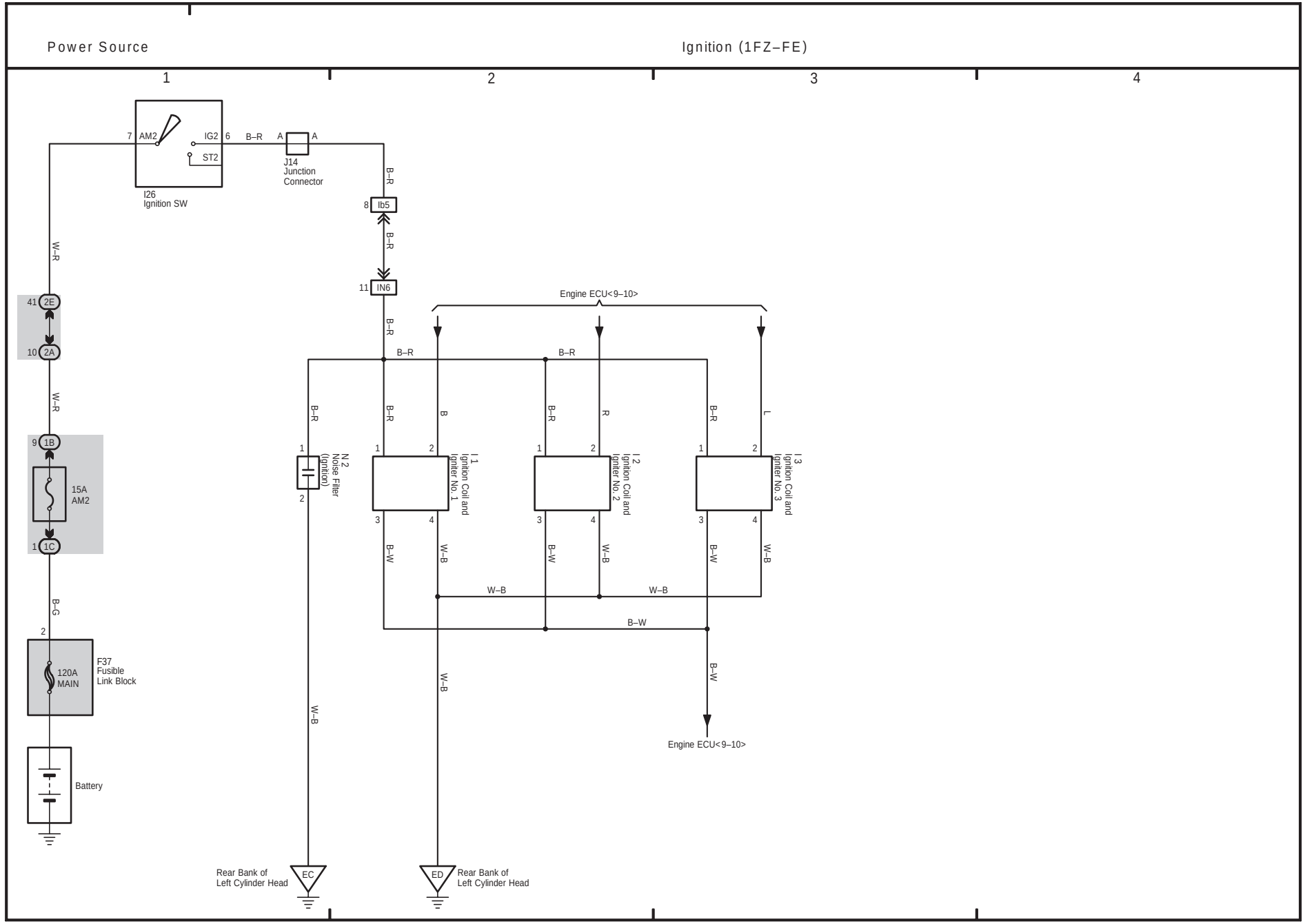

5 LAND CRUISER (RHD)

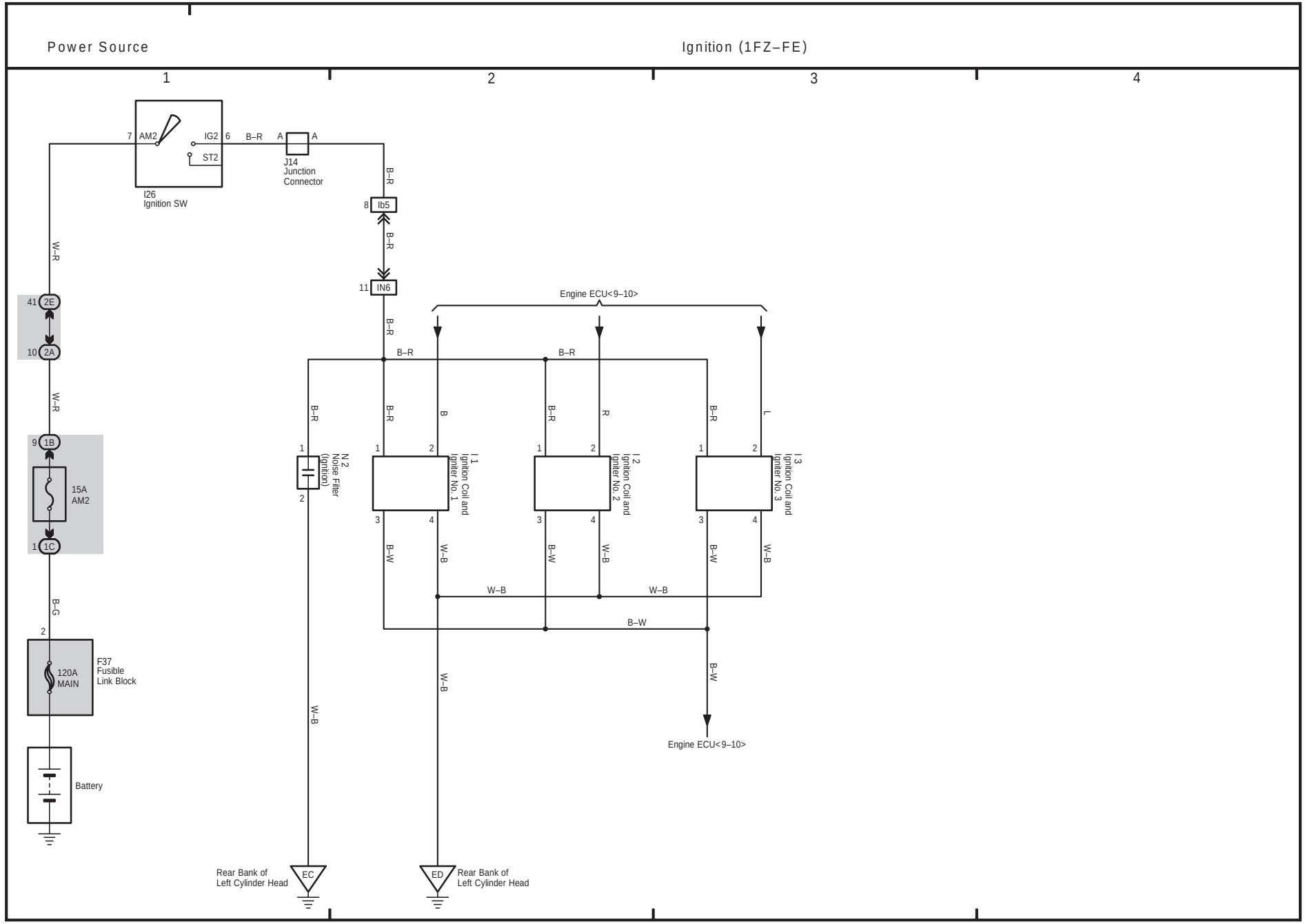

H

5 LAND CRUISER (RHD)

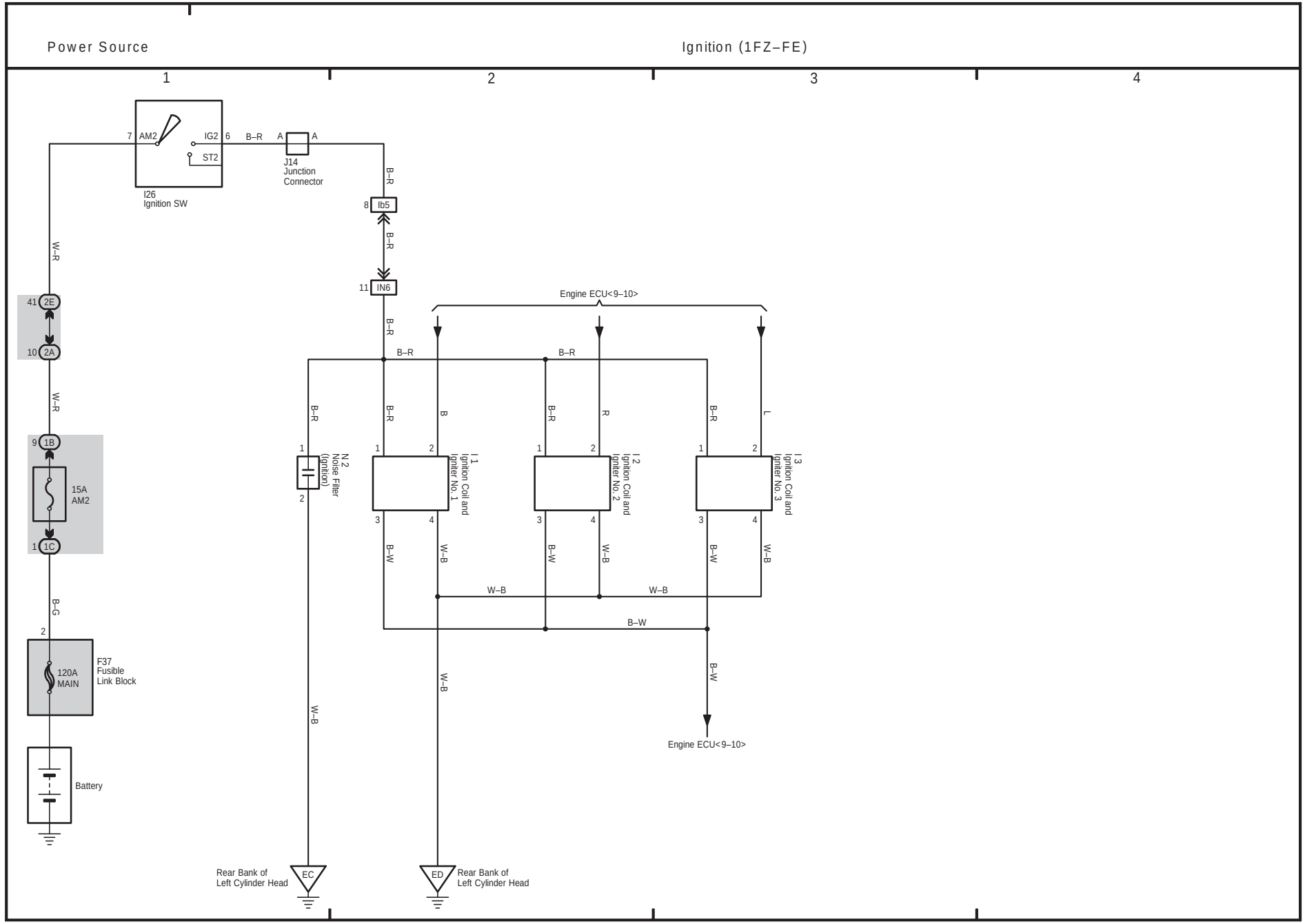

H

Power Source (2UZ–FE)

Ignition (2UZ–FE)

1 2

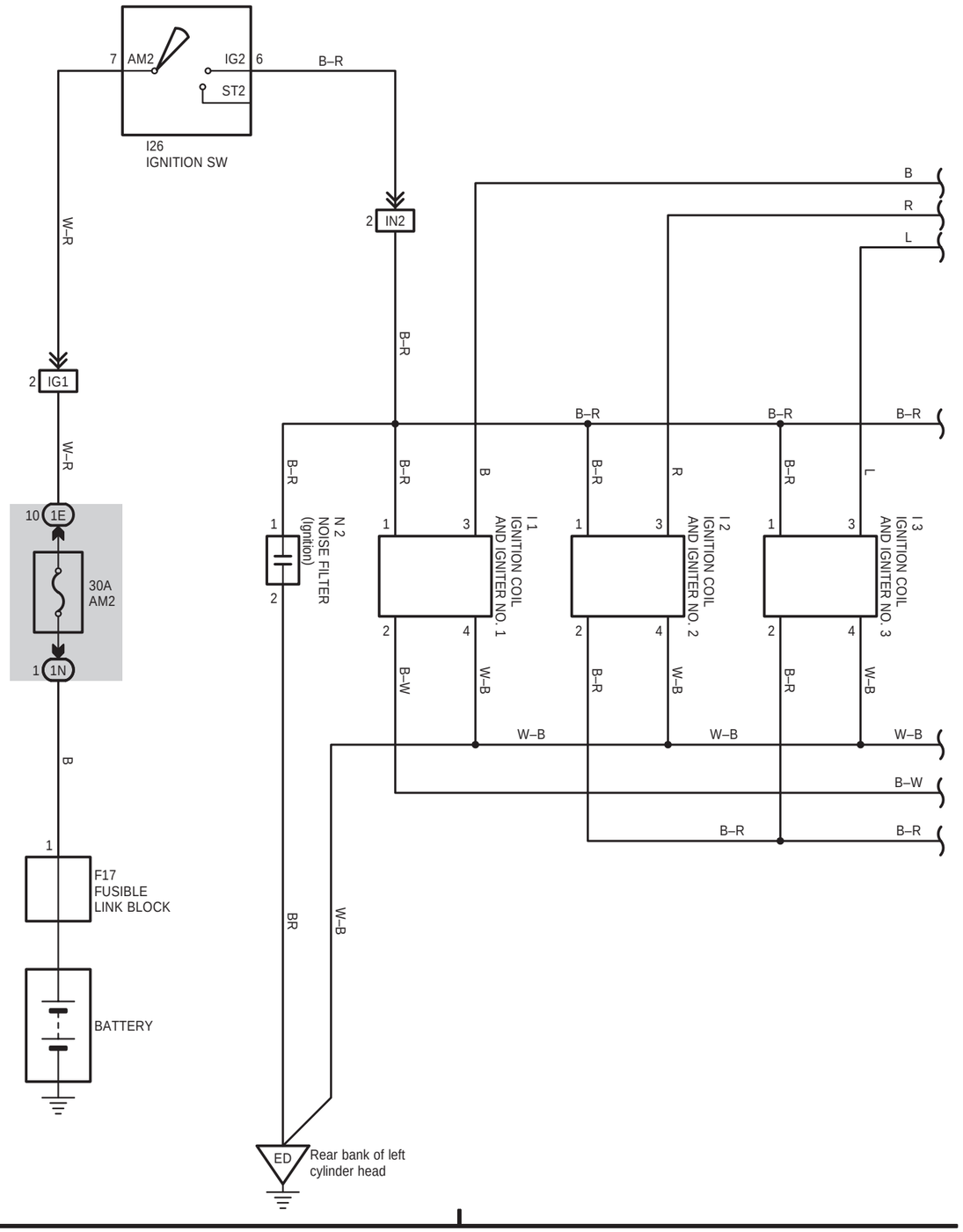

RHD

622

LAND CRUISER Station Wagon (EWD342F)

Ignition (2UZ–FE)

3 4

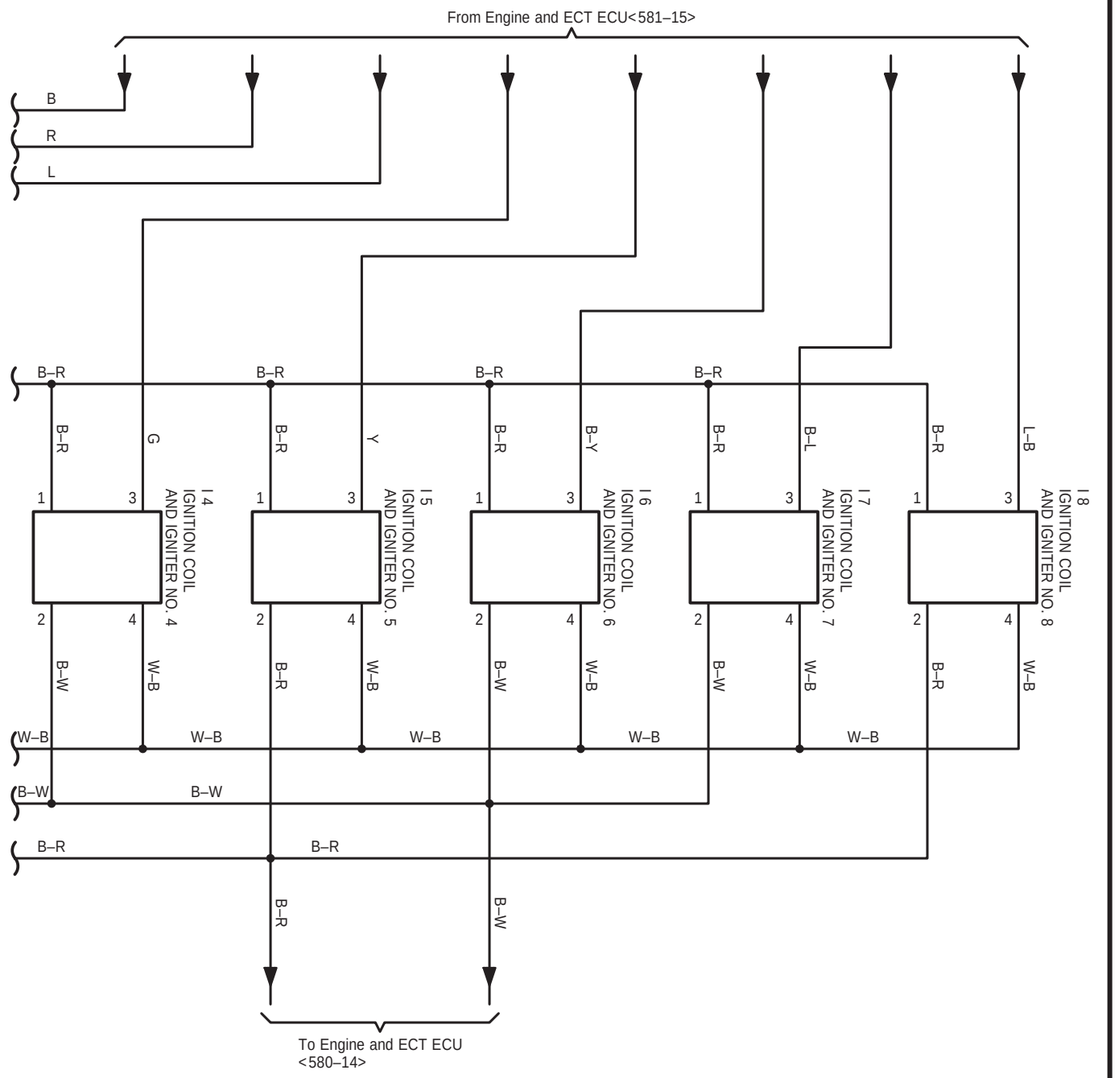

RHD

623

LAND CRUISER Station Wagon (EWD342F)

4 LAND CRUISER (RHD)

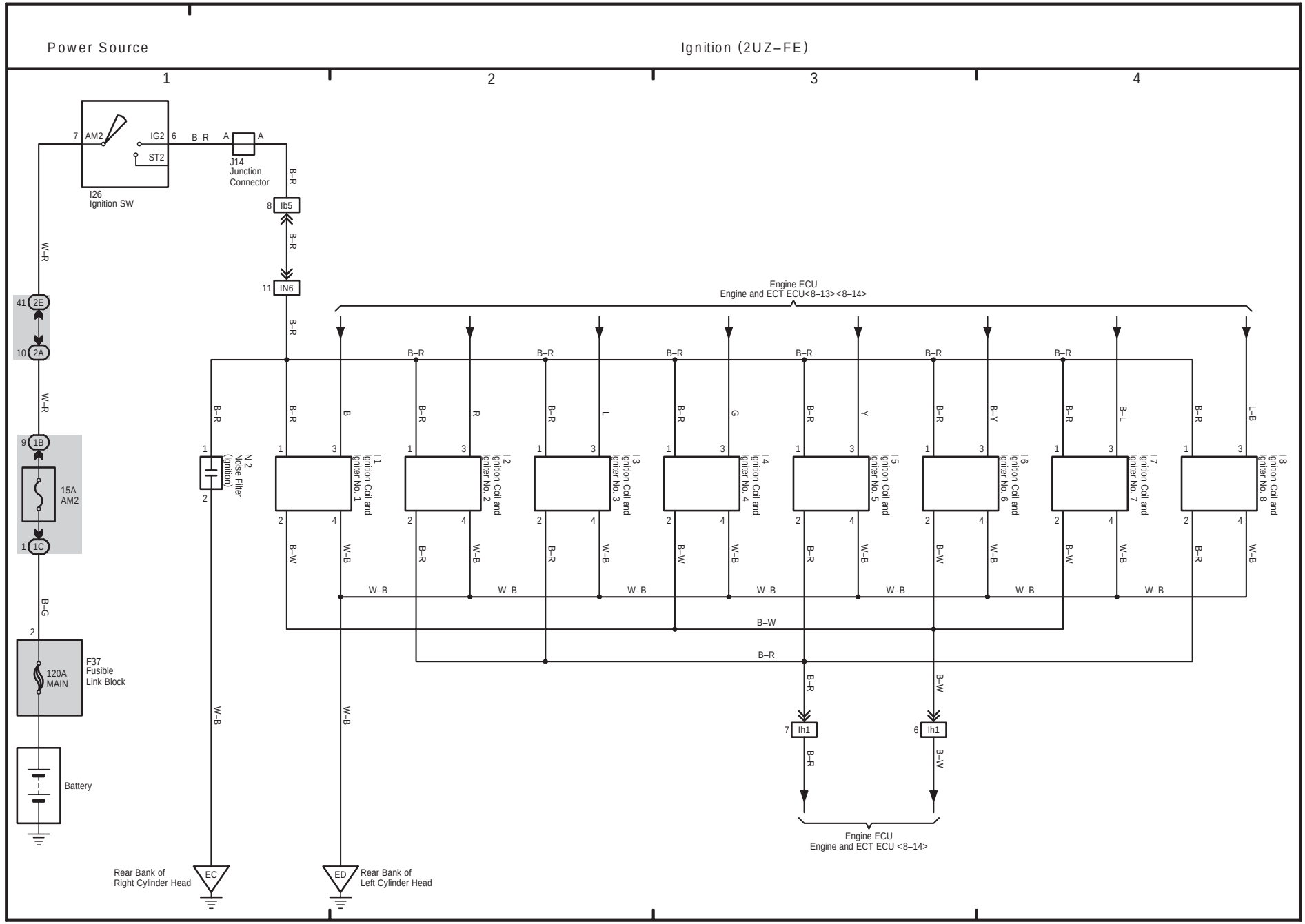

4 LAND CRUISER (RHD)

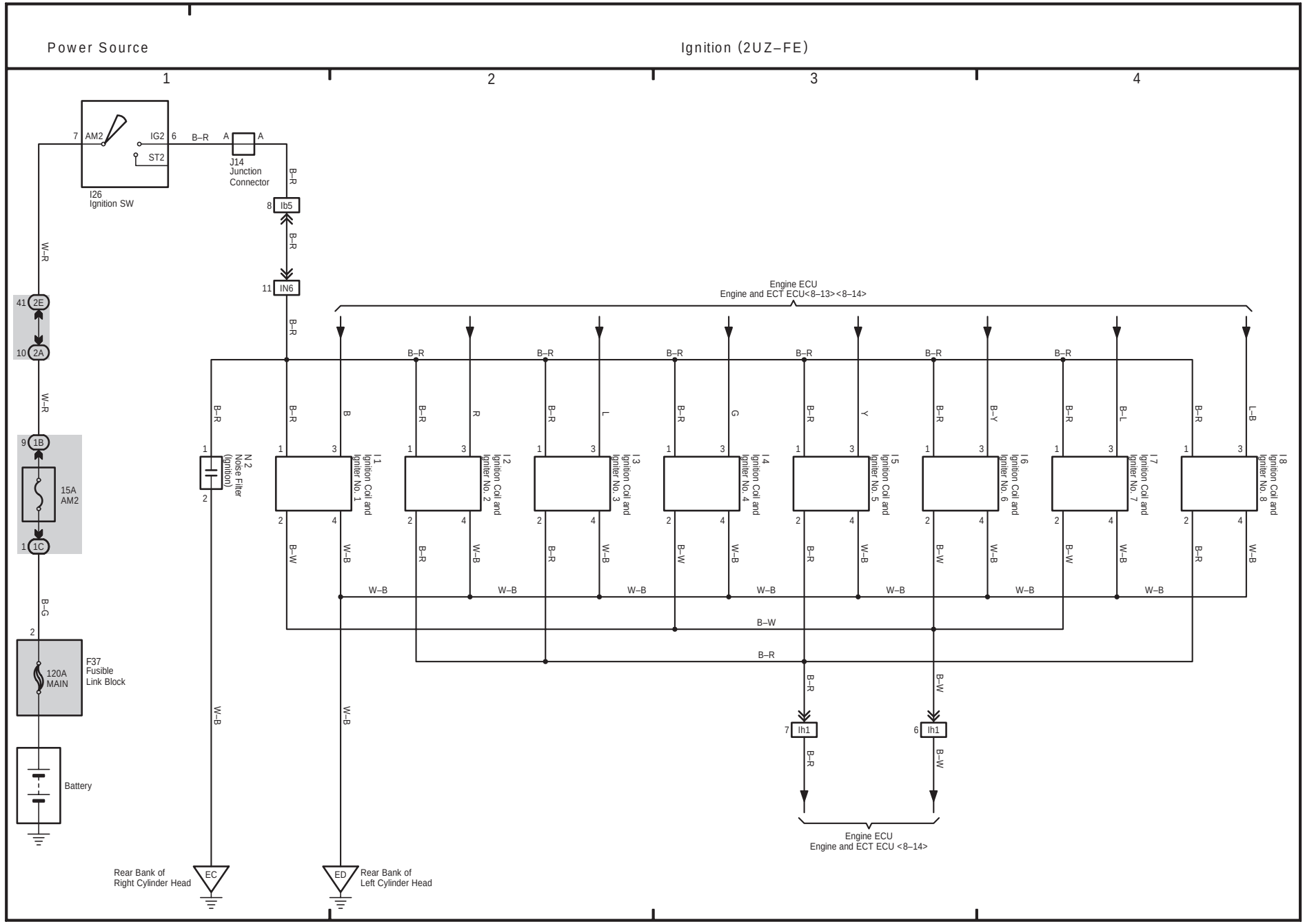

4 LAND CRUISER (RHD)

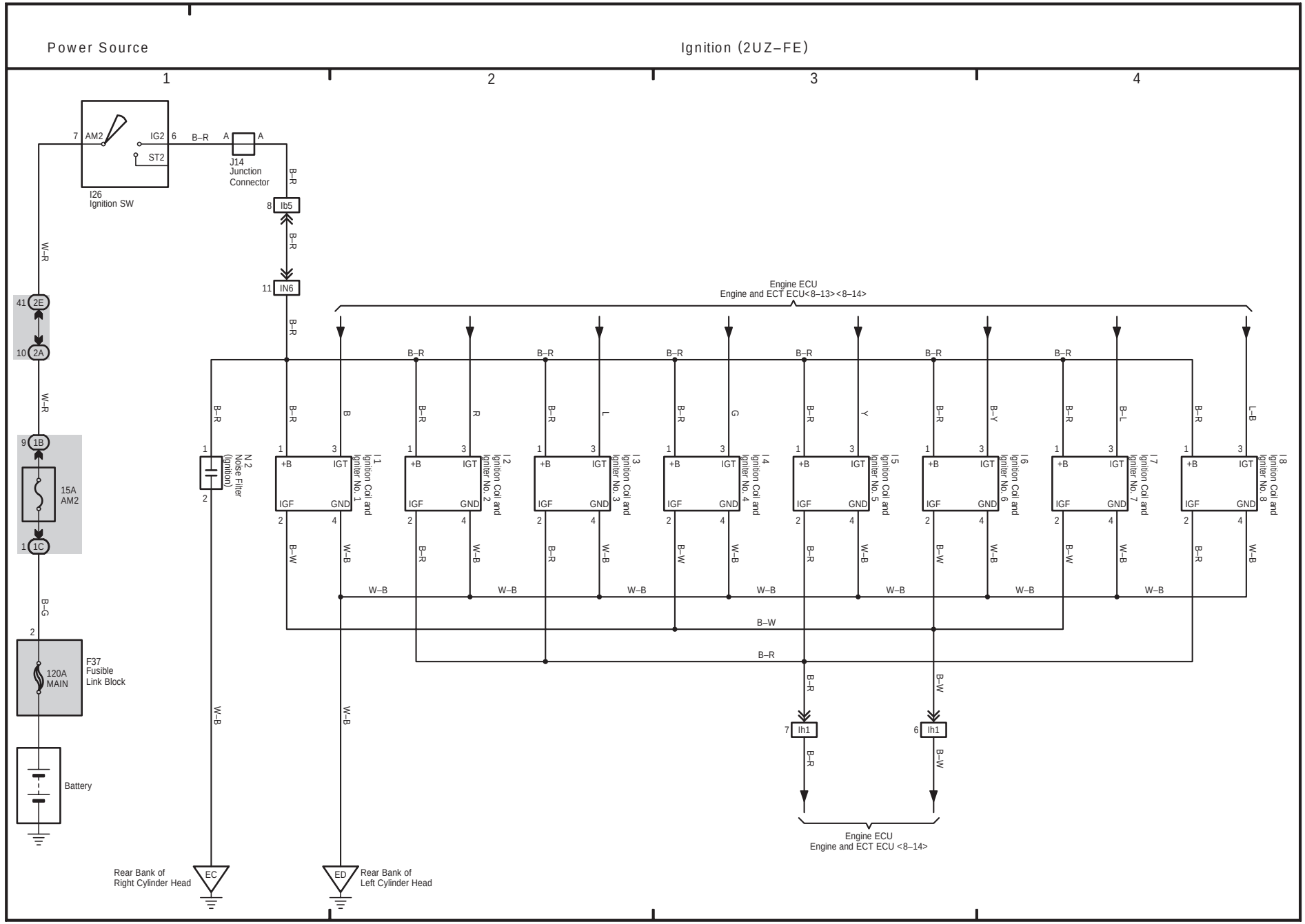

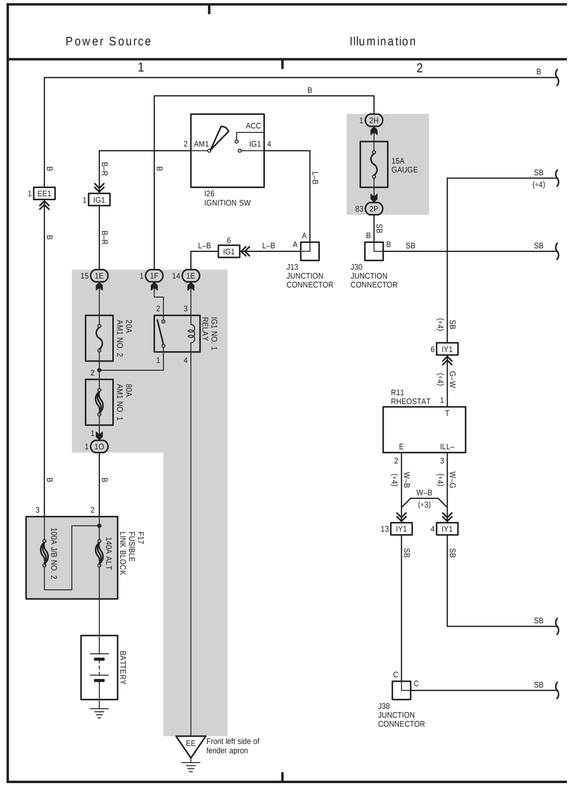

(Cont. next page)

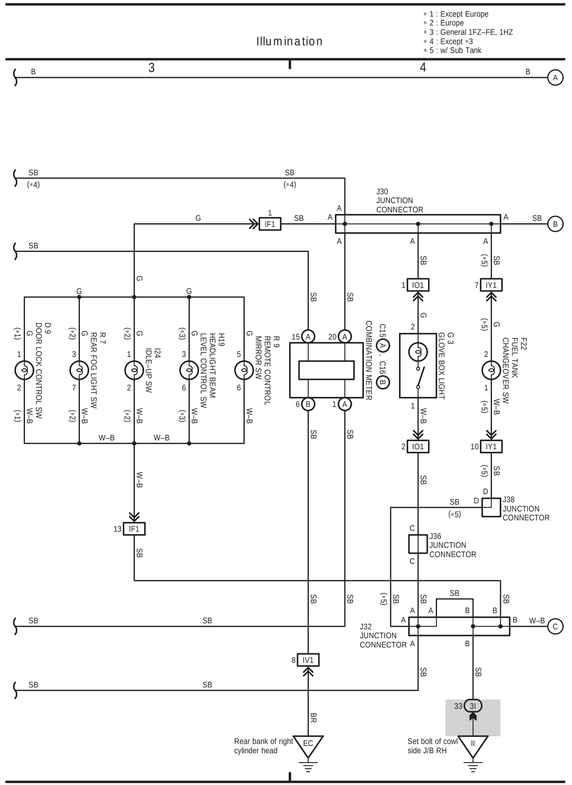

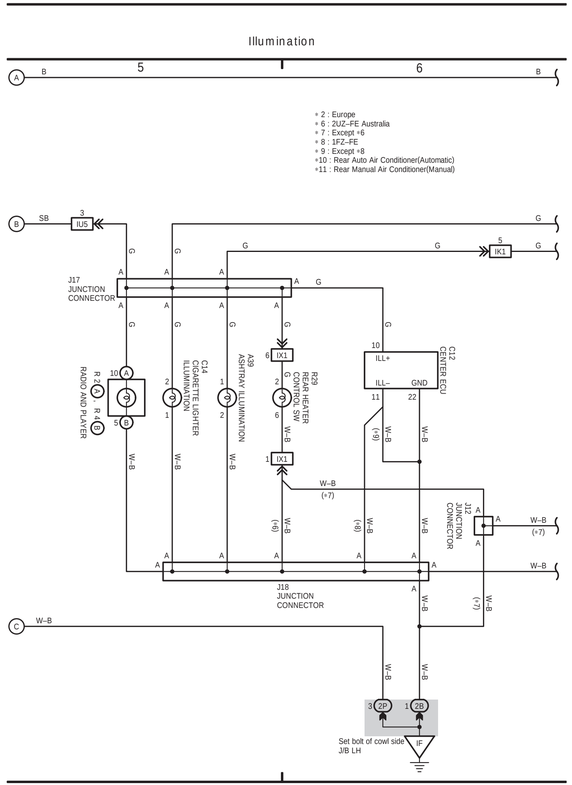

(Cont'd)

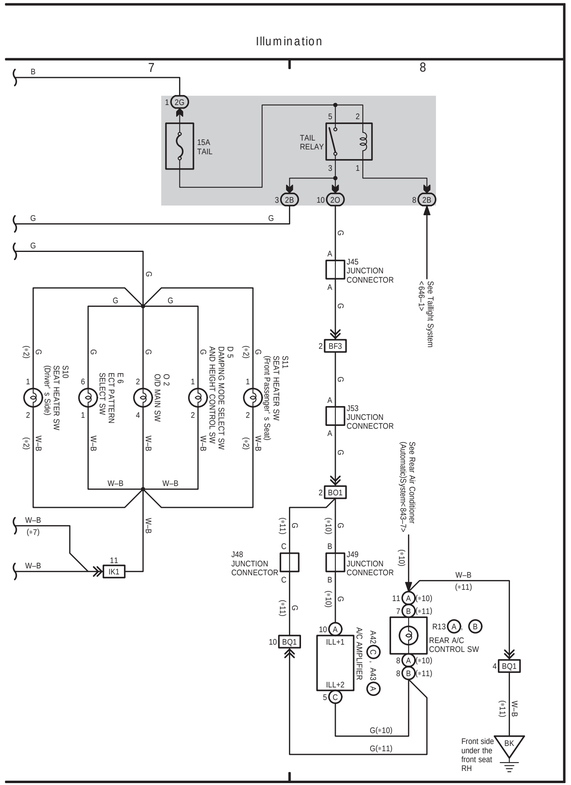

(Cont. next page)

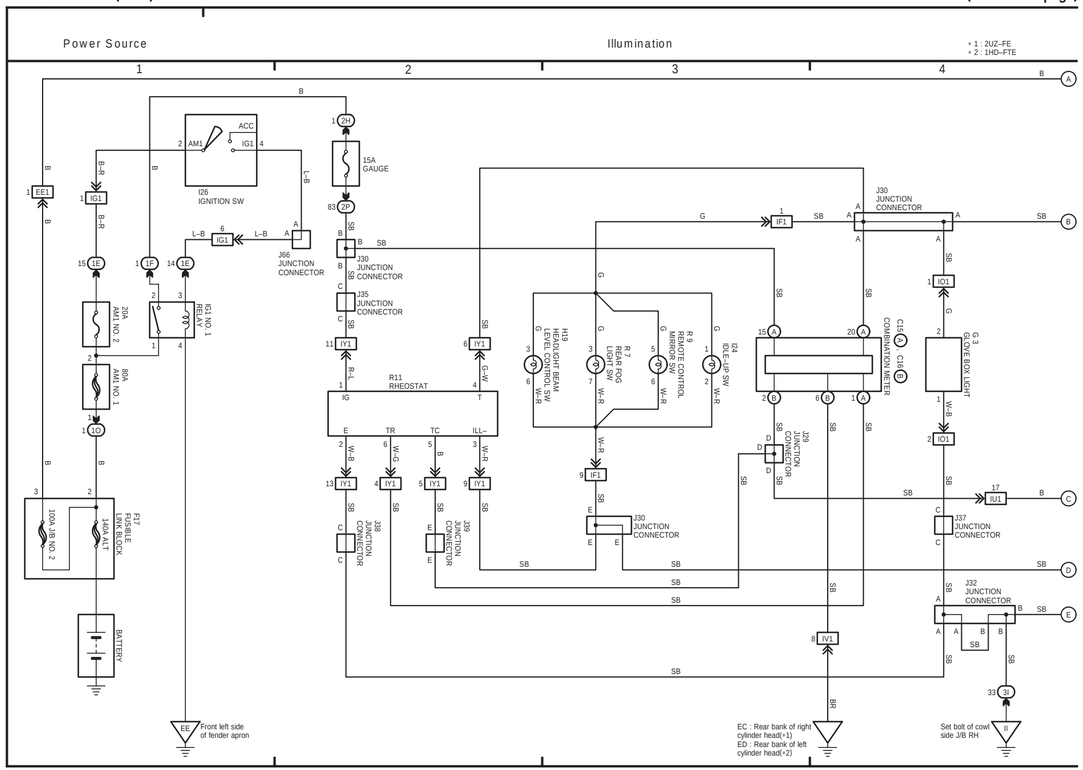

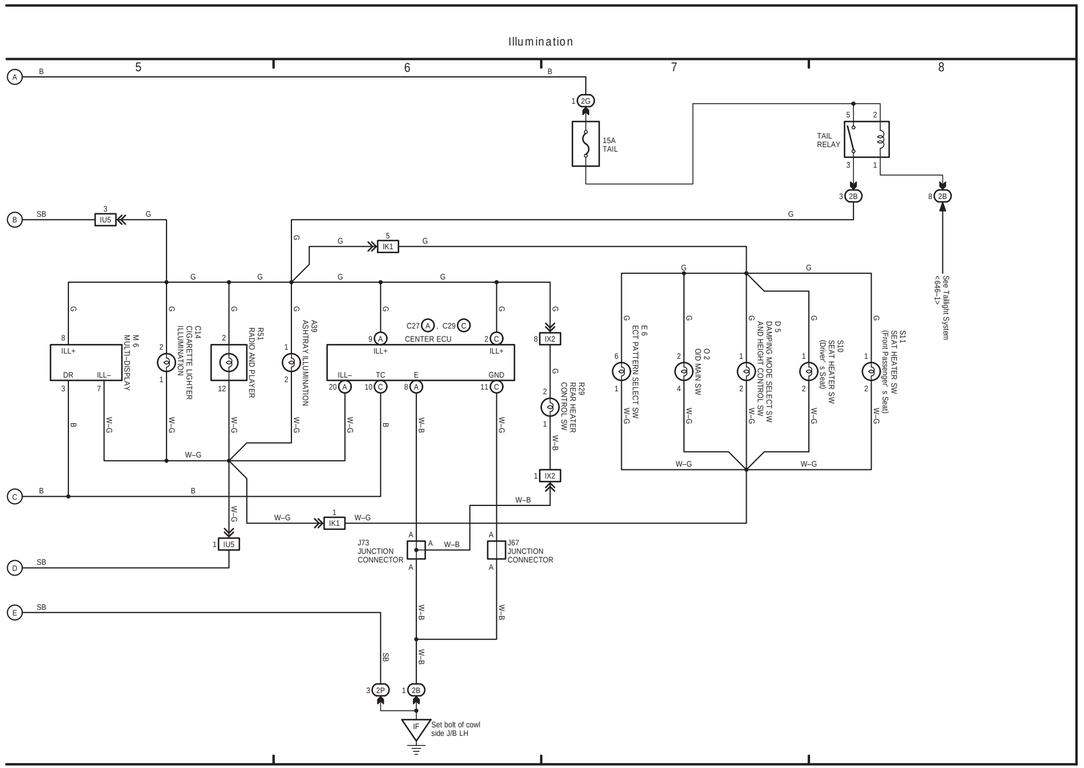

18 LAND CRUISER (RHD) (Cont. next page)

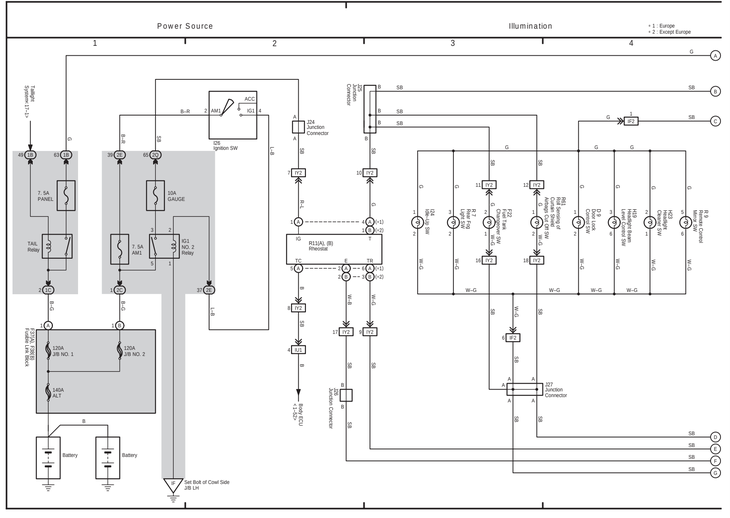

18 LAND CRUISER (RHD) (Cont' d)

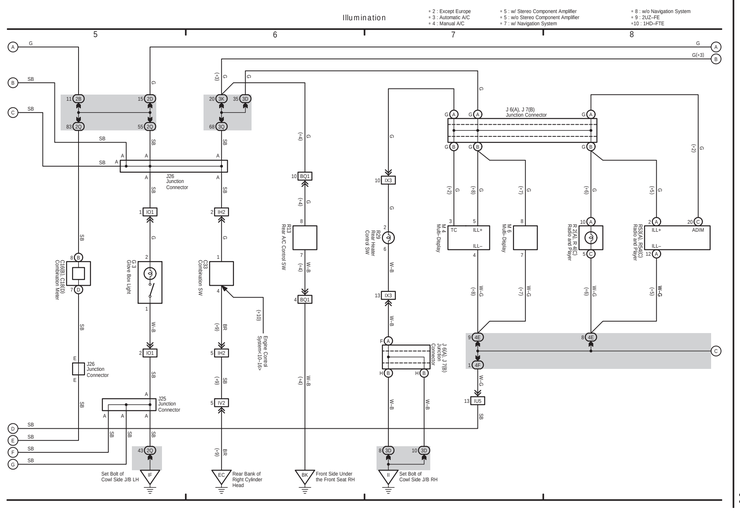

18 LAND CRUISER (RHD) (Cont' d)

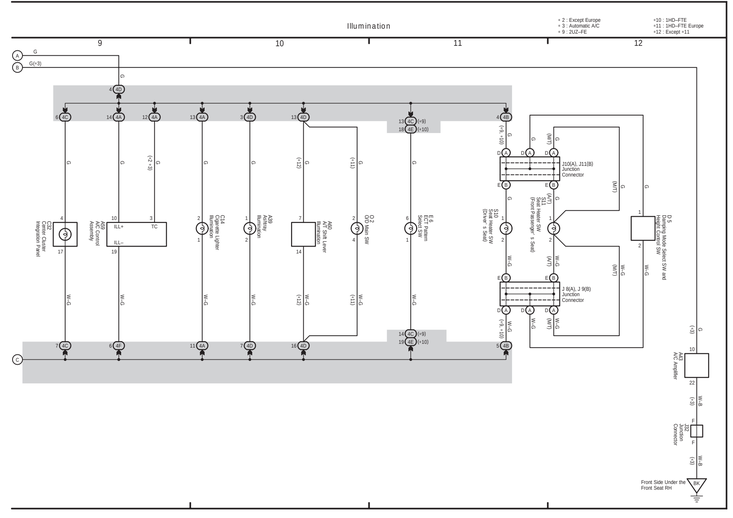

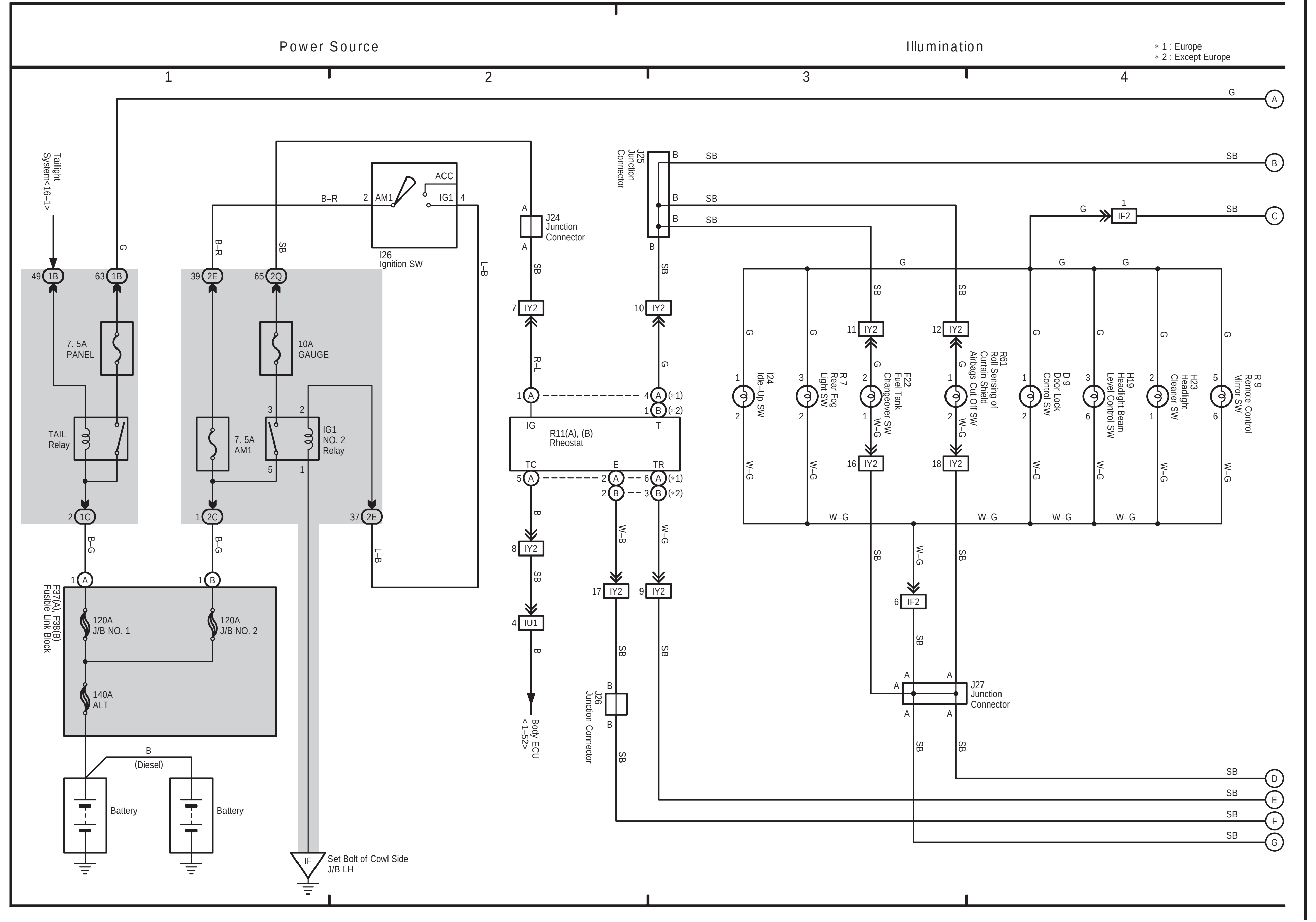
Power Source
Illumination
*1 : Europe
*2 : Except Europe

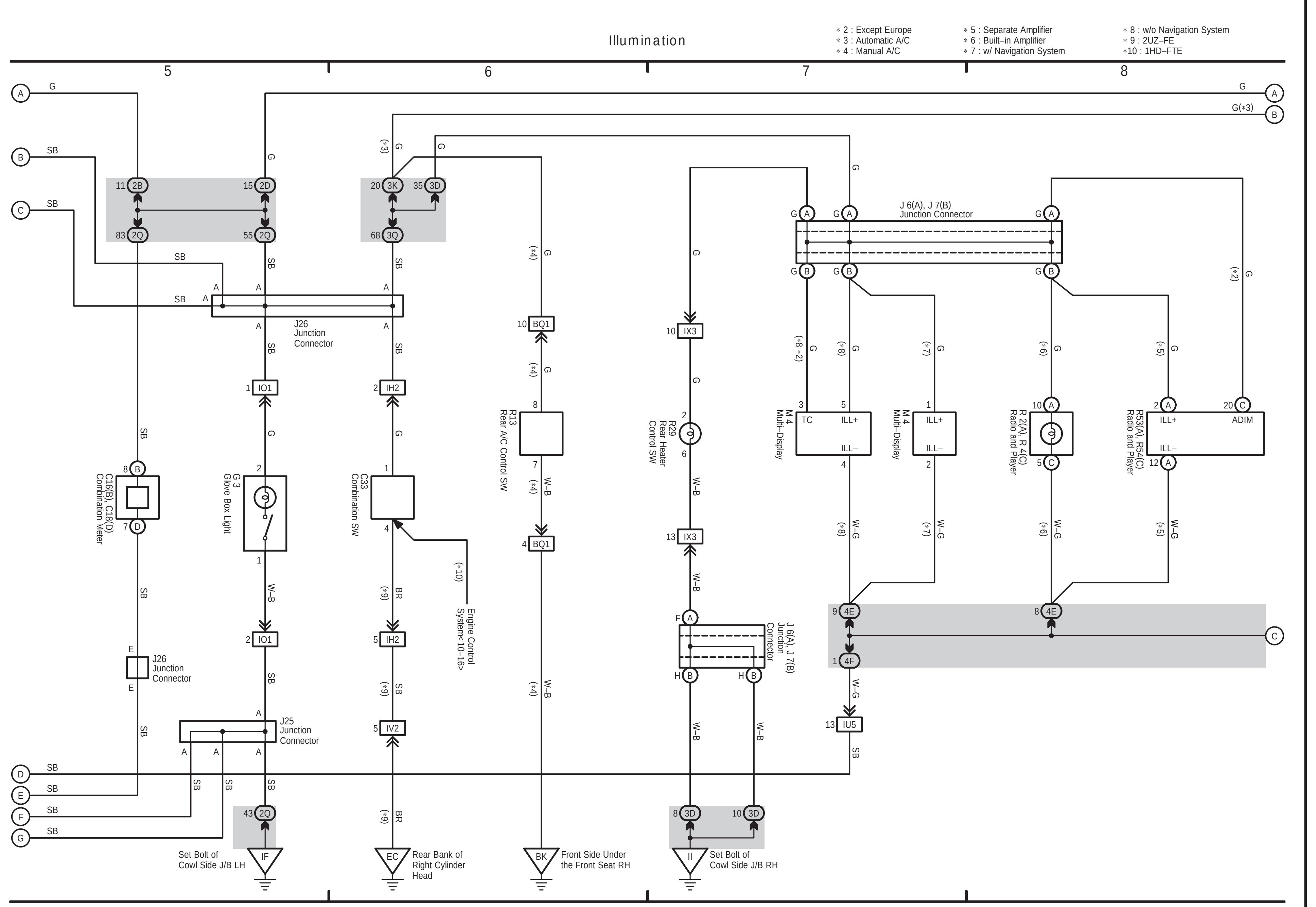
Illumination
*2 : Except Europe
*3 : Automatic A/C
*4 : Manual A/C
*5 : Separate Amplifier
*6 : Built-in Amplifier
*7 : w/ Navigation System
*8 : w/o Navigation System
*9 : 2UZ-FE
*10 : 1HD-FTE

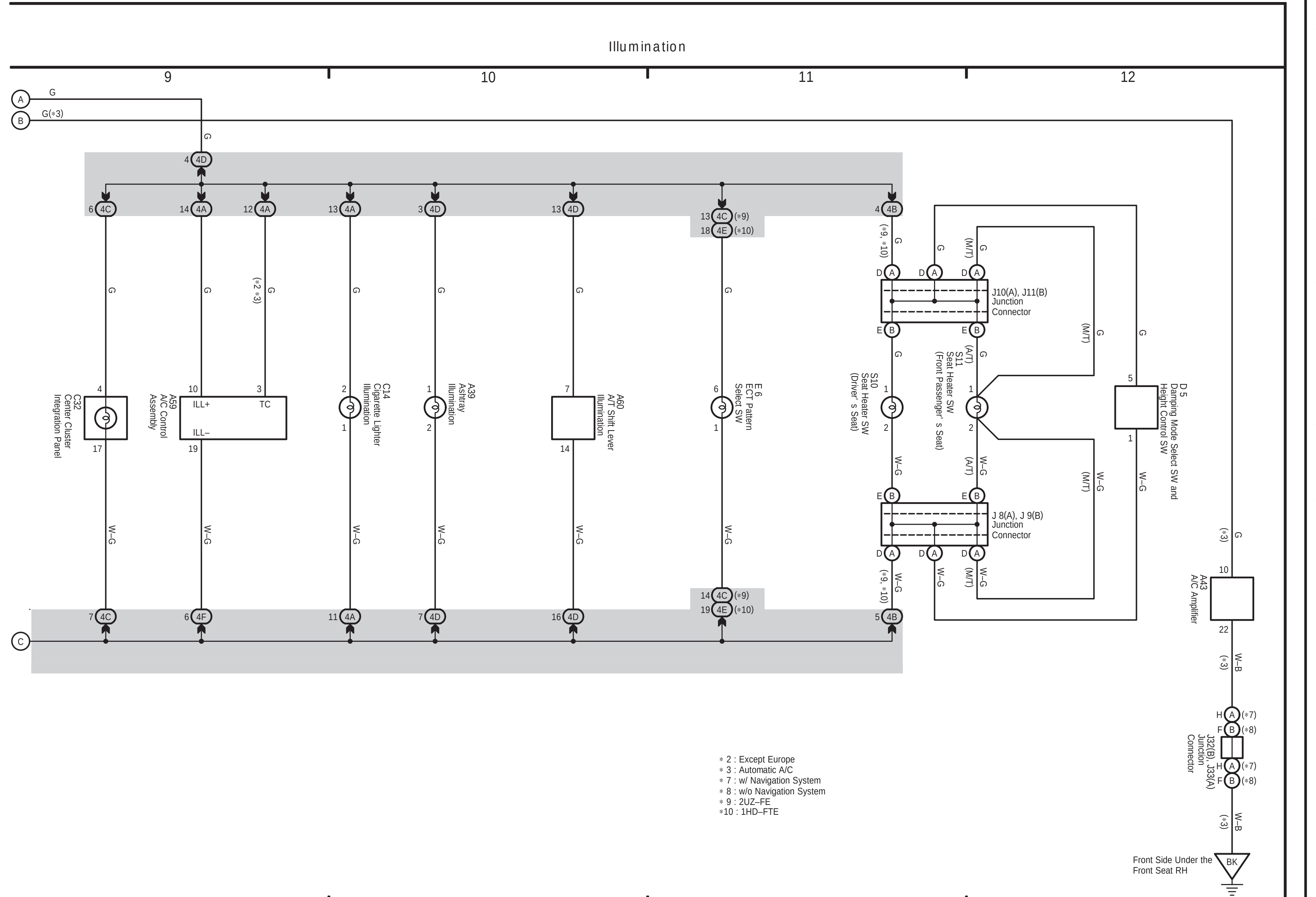
Illumination
*2 : Except Europe
*3 : Automatic A/C
*7 : w/ Navigation System
*8 : w/o Navigation System
*9 : 2UZ-FE
*10 : 1HD-FTE

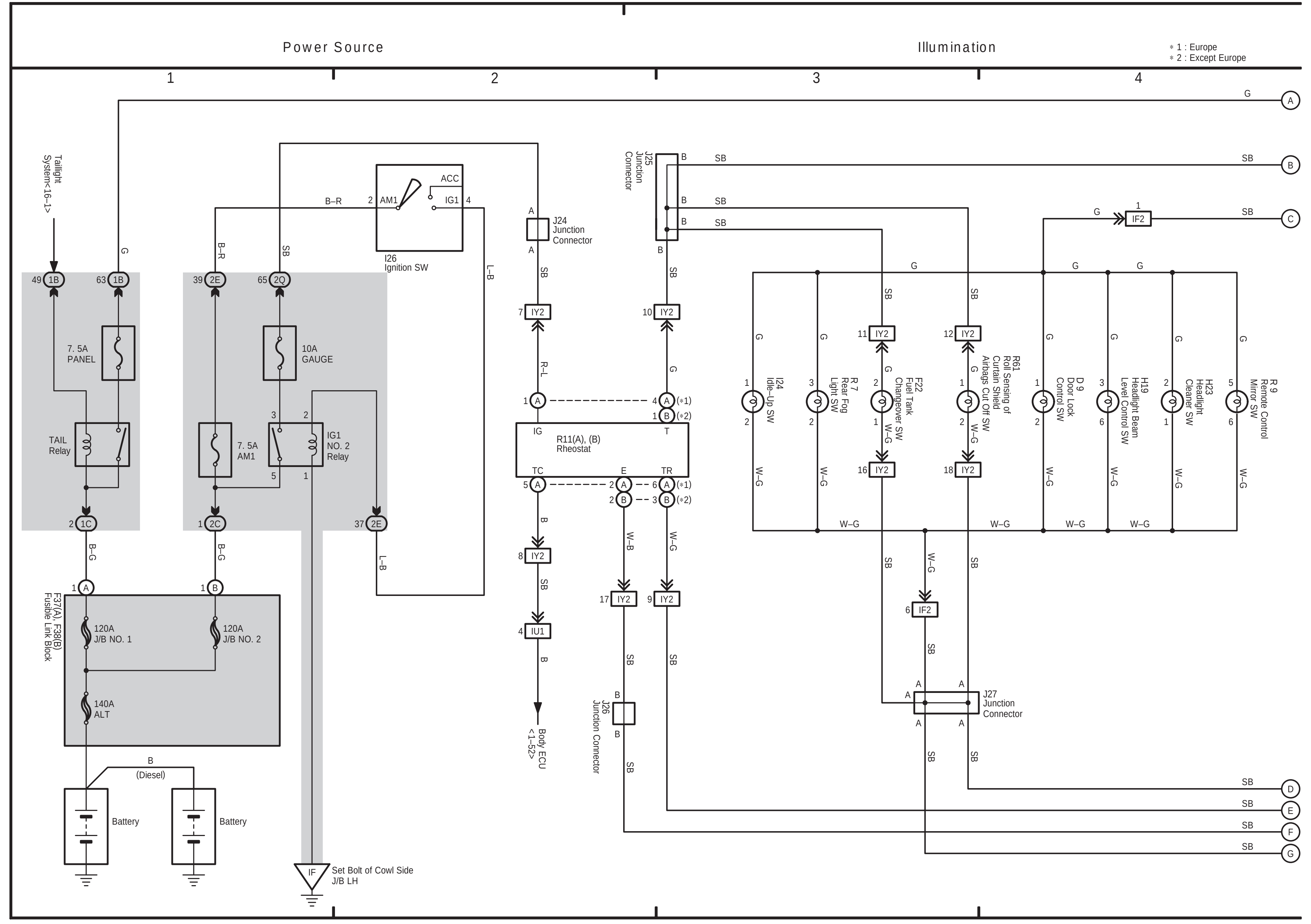
Power Source
Illumination
* 1 : Europe
* 2 : Except Europe

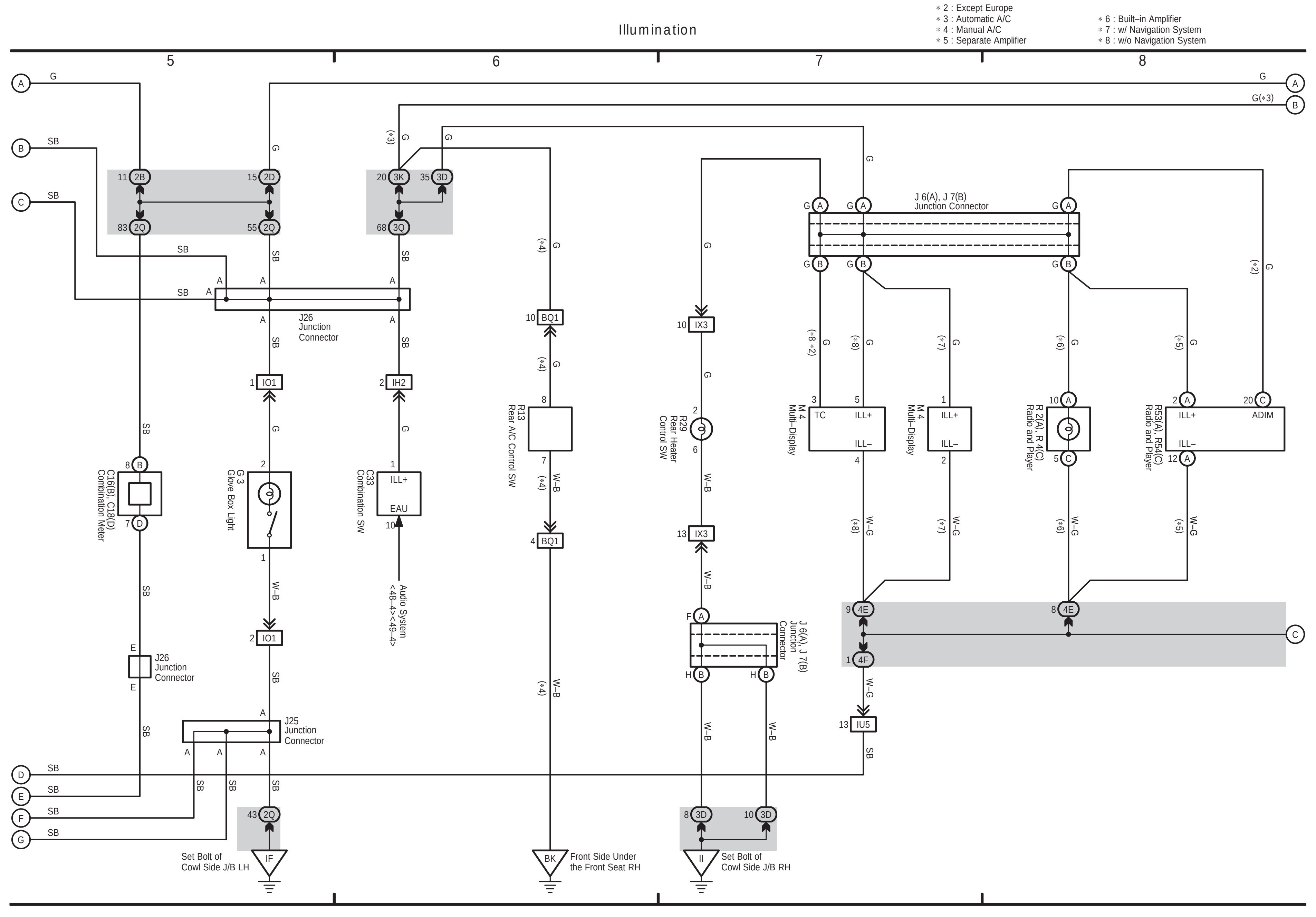
Illumination
* 2 : Except Europe
* 3 : Automatic A/C
* 4 : Manual A/C
* 5 : Separate Amplifier
* 6 : Built-in Amplifier
* 7 : w/ Navigation System
* 8 : w/o Navigation System

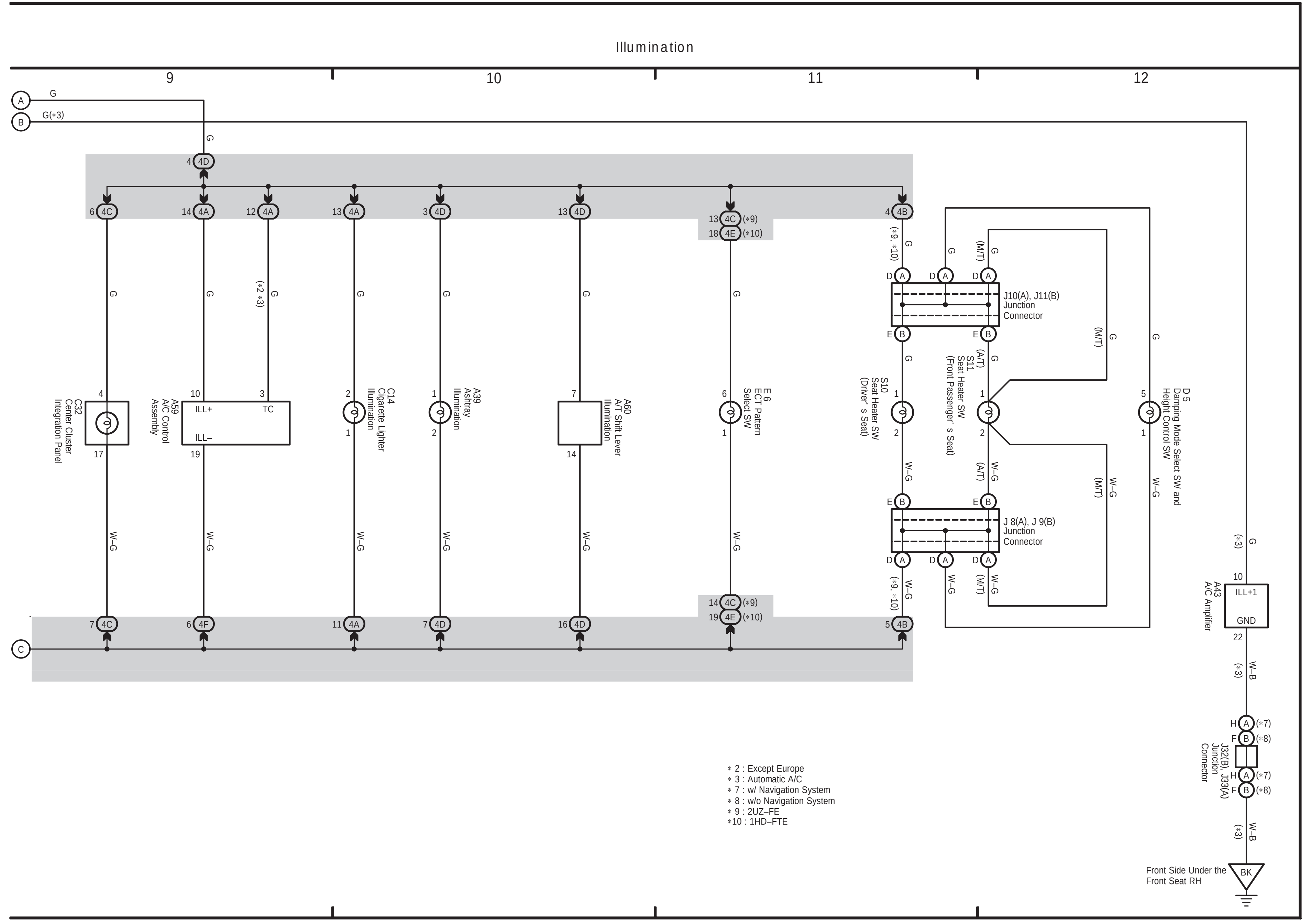
Illumination
* 2 : Except Europe
* 3 : Automatic A/C
* 7 : w/ Navigation System
* 8 : w/o Navigation System
* 9 : 2UZ–FE
*10 : 1HD–FTE

F ELECTRICAL WIRING DIAGRAM (System Circuits)

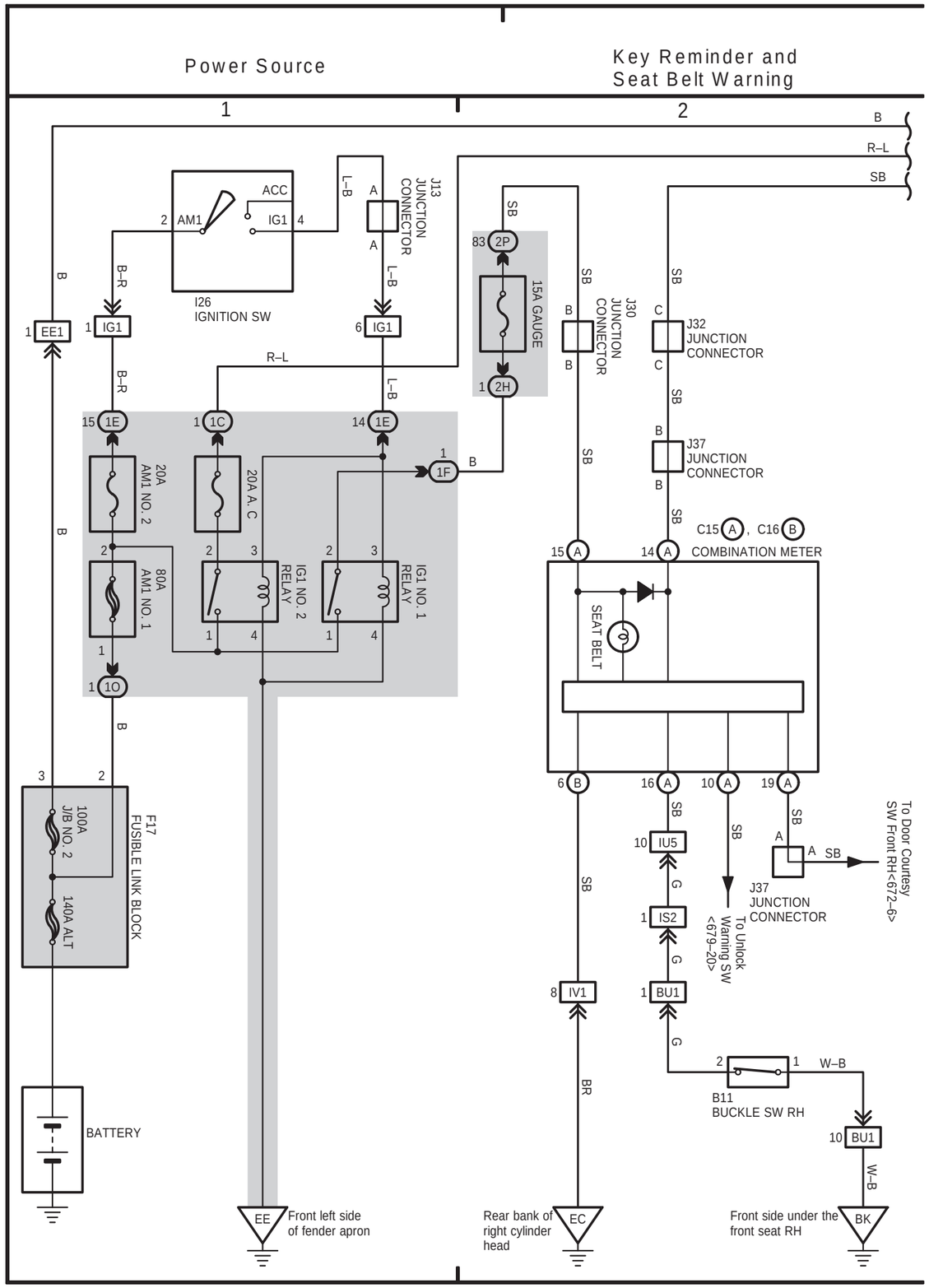

800

LAND CRUISER Station Wagon (EWD342F)

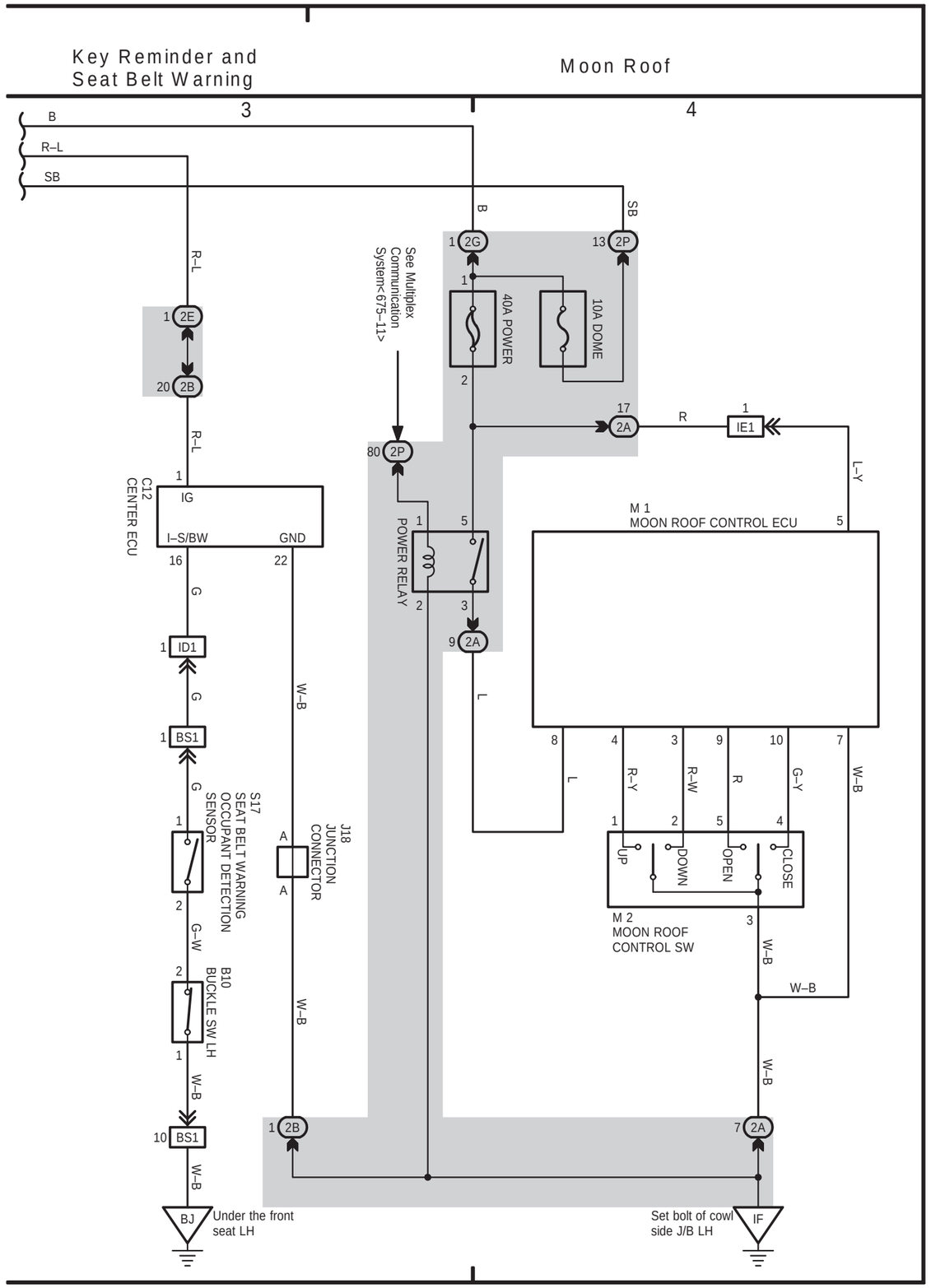

801

LAND CRUISER Station Wagon (EWD342F)

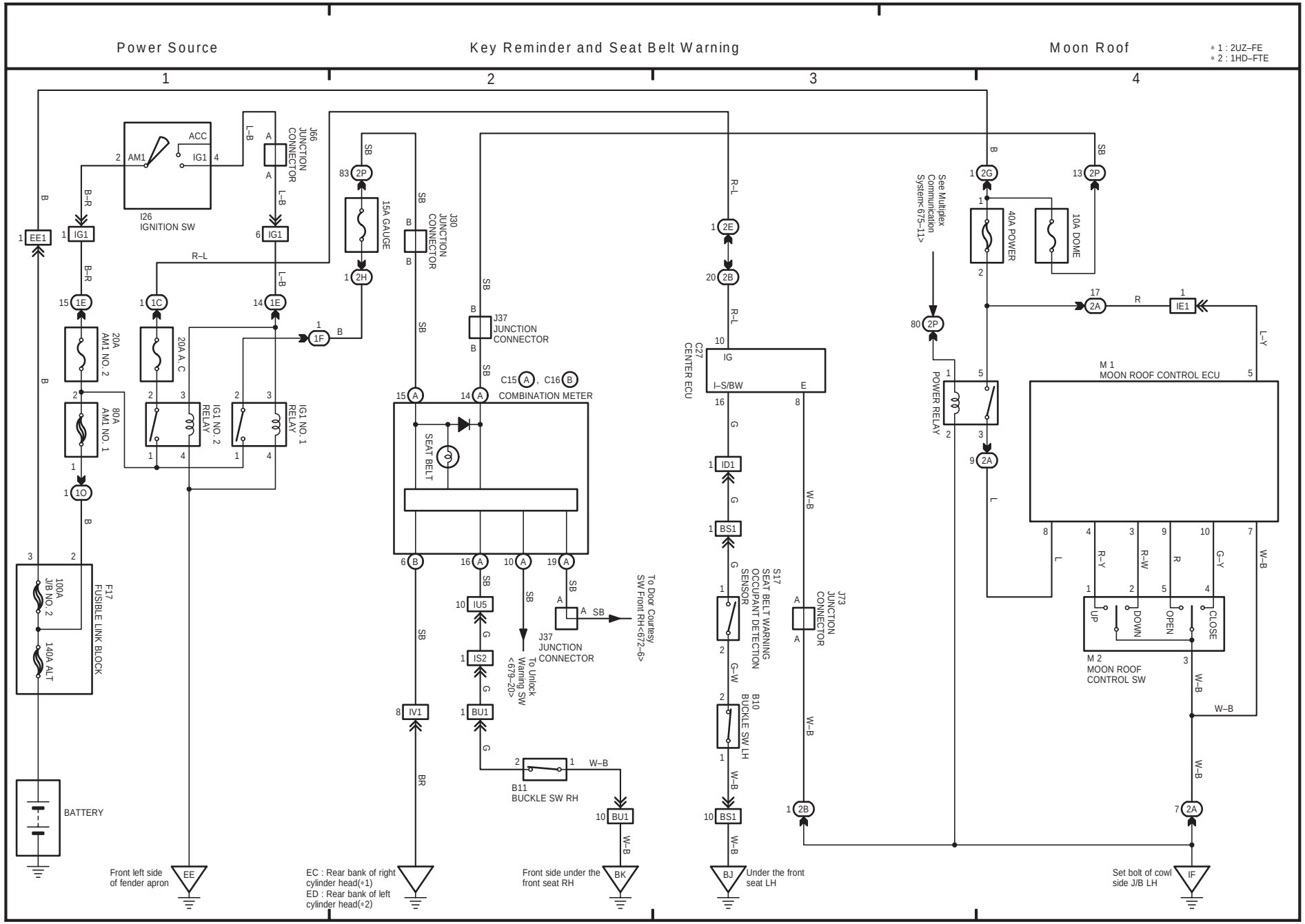
Power Source
Key Reminder and Seat Belt Warning
Moon Roof
* 1 : 2UZ–FE
* 2 : 1HD–FTE
1
2
3
4
I26
IGNITION SW
ACC
IG1
AM1
J66
JUNCTION
CONNECTOR
15A GAUGE
J30
JUNCTION
CONNECTOR
J37
JUNCTION
CONNECTOR
20A
AM1 NO. 2
80A
AM1 NO. 1
20A A. C
IG1 NO. 2
RELAY
IG1 NO. 1
RELAY
C15 A , C16 B
COMBINATION METER
SEAT BELT
C27
CENTER ECU
IG
I–S/BW
E
S17
SEAT BELT WARNING
OCCUPANT DETECTION
SENSOR
B10
BUCKLE SW LH
B11
BUCKLE SW RH
J73
JUNCTION
CONNECTOR
To Door Courtesy
SW Front RH<672–6>
To Unlock
Warning SW
<679–20>
J37
JUNCTION
CONNECTOR
See Multiplex
Communication
System<675–11>
40A POWER
10A DOME
POWER RELAY
M 1
MOON ROOF CONTROL ECU
M 2
MOON ROOF
CONTROL SW
UP
DOWN
OPEN
CLOSE
F17
FUSIBLE LINK BLOCK
100A
J/B NO. 2
140A ALT
BATTERY
Front left side
of fender apron
EC : Rear bank of right
cylinder head(*1)
ED : Rear bank of left
cylinder head(*2)
Front side under the
front seat RH
Under the front
seat LH
Set bolt of cowl
side J/B LH

Power Source

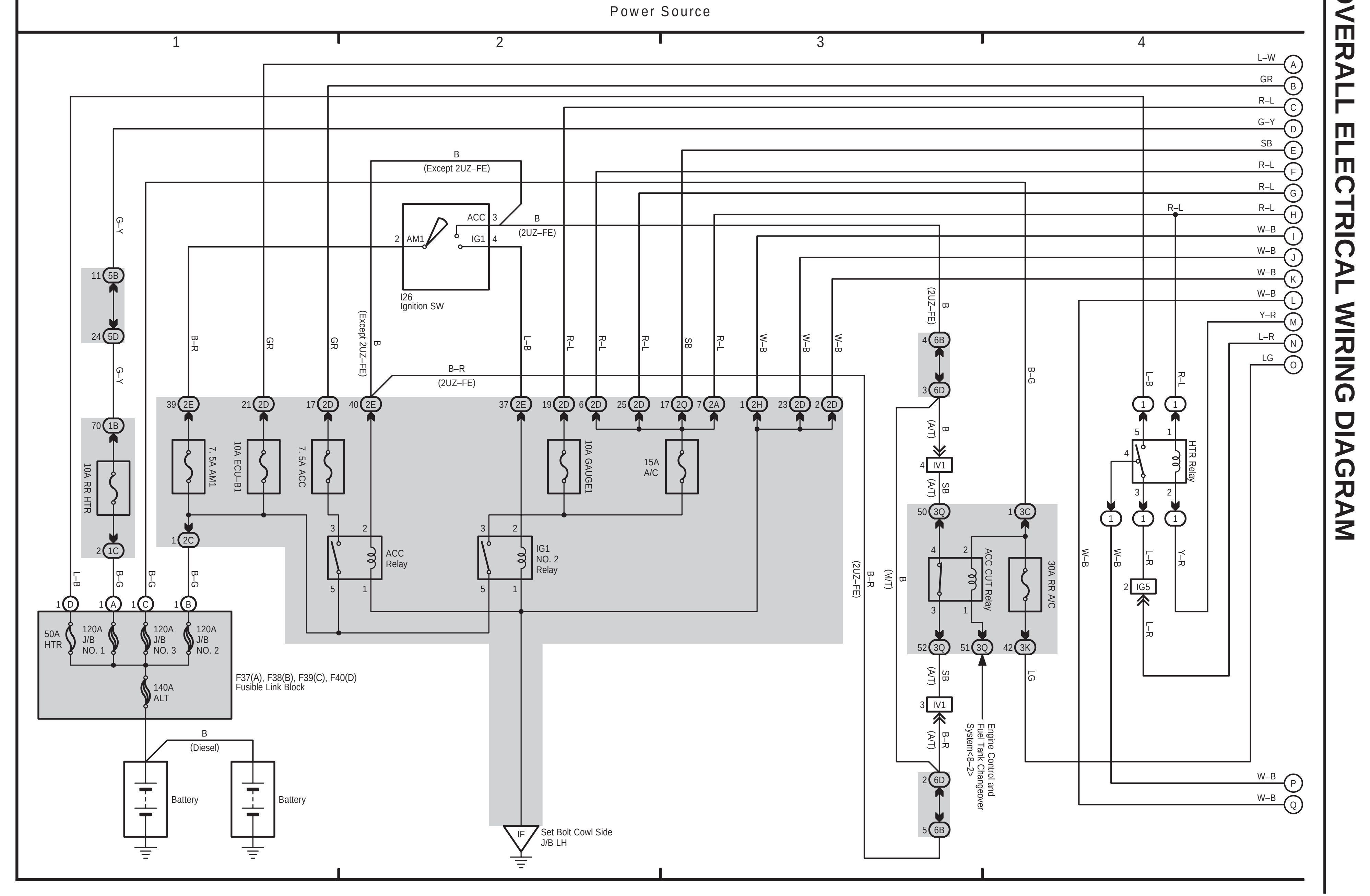

Manual Air Conditioner (Front)

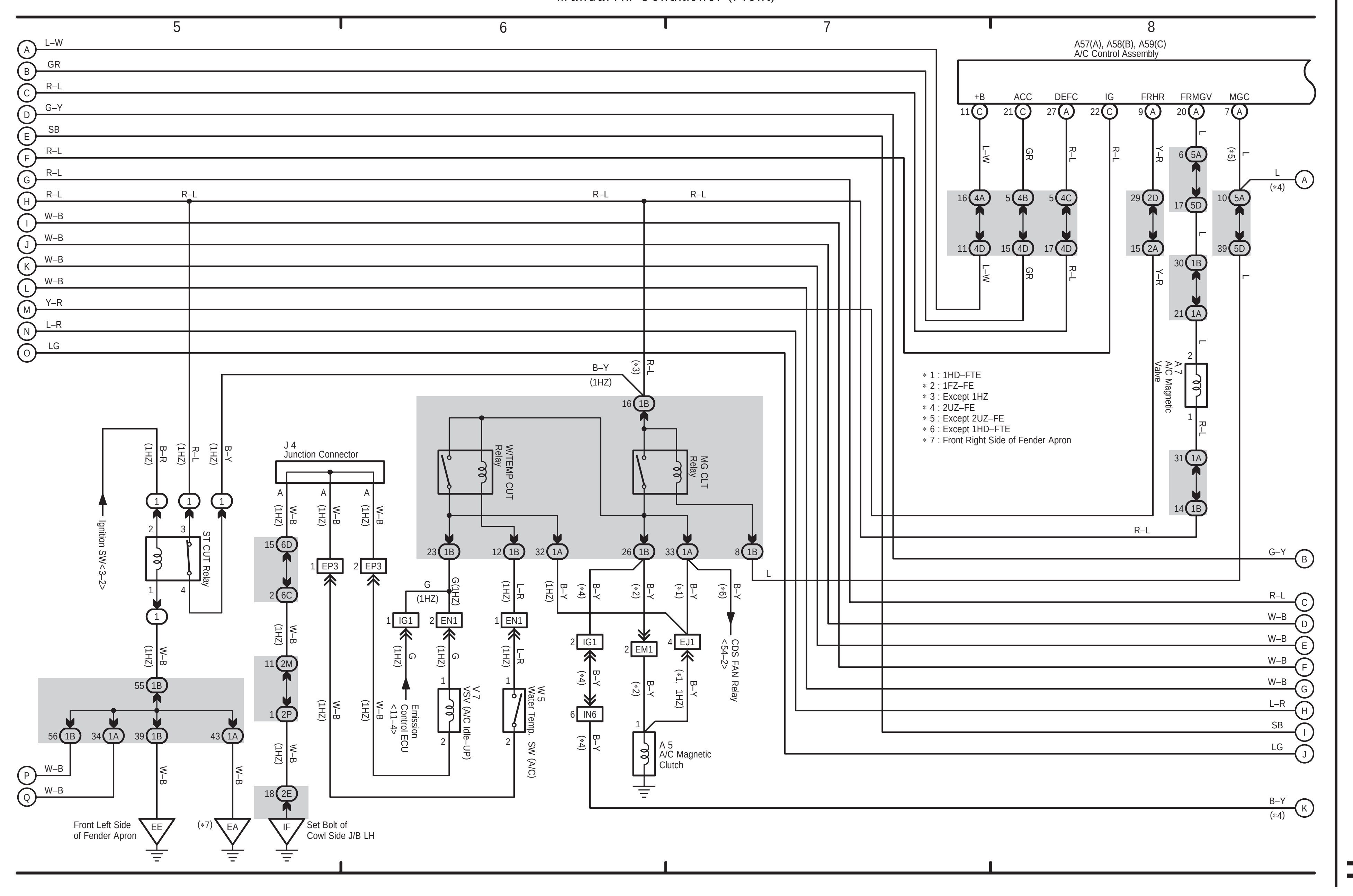

Manual Air Conditioner (Front)

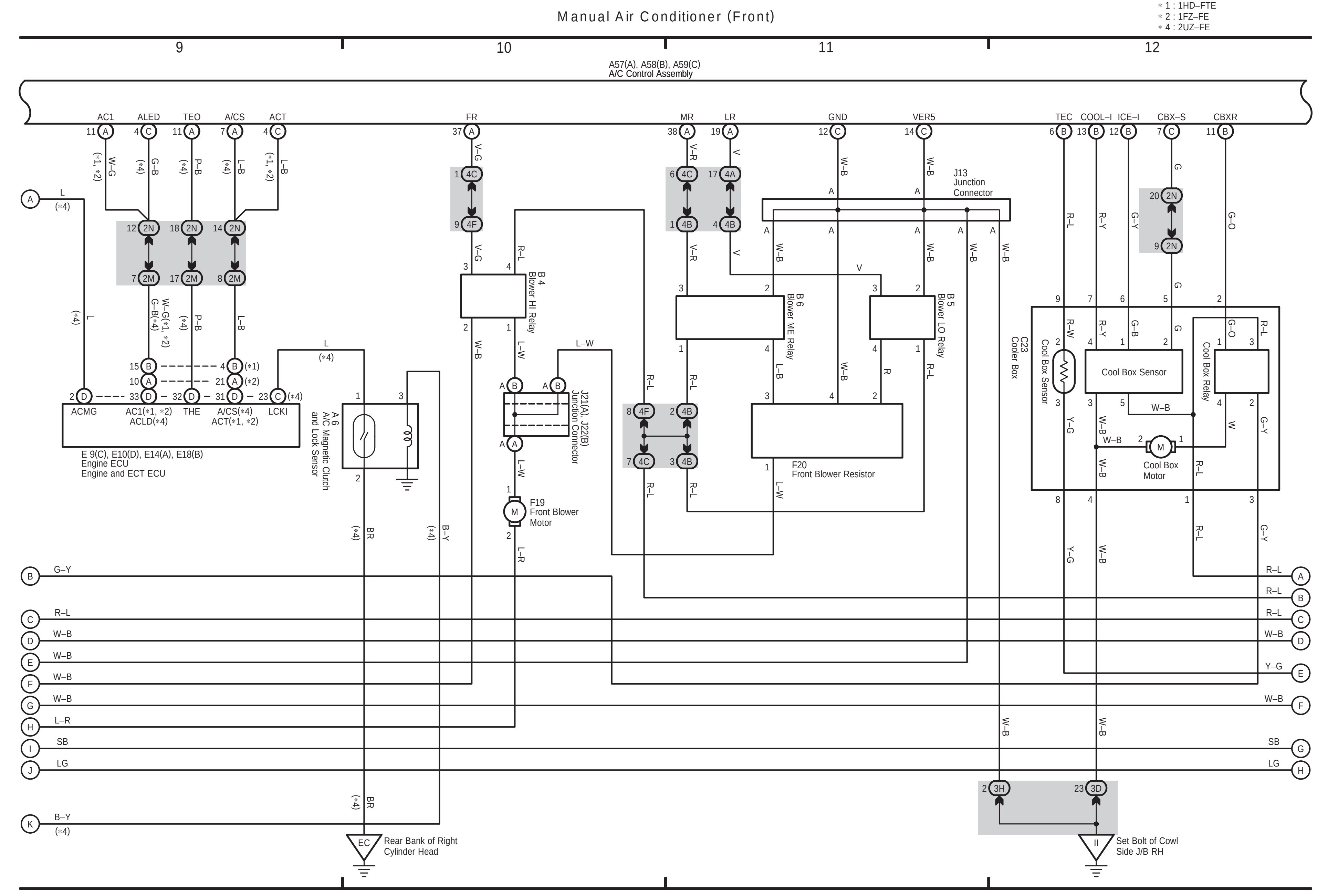

Manual Air Conditioner (Front)

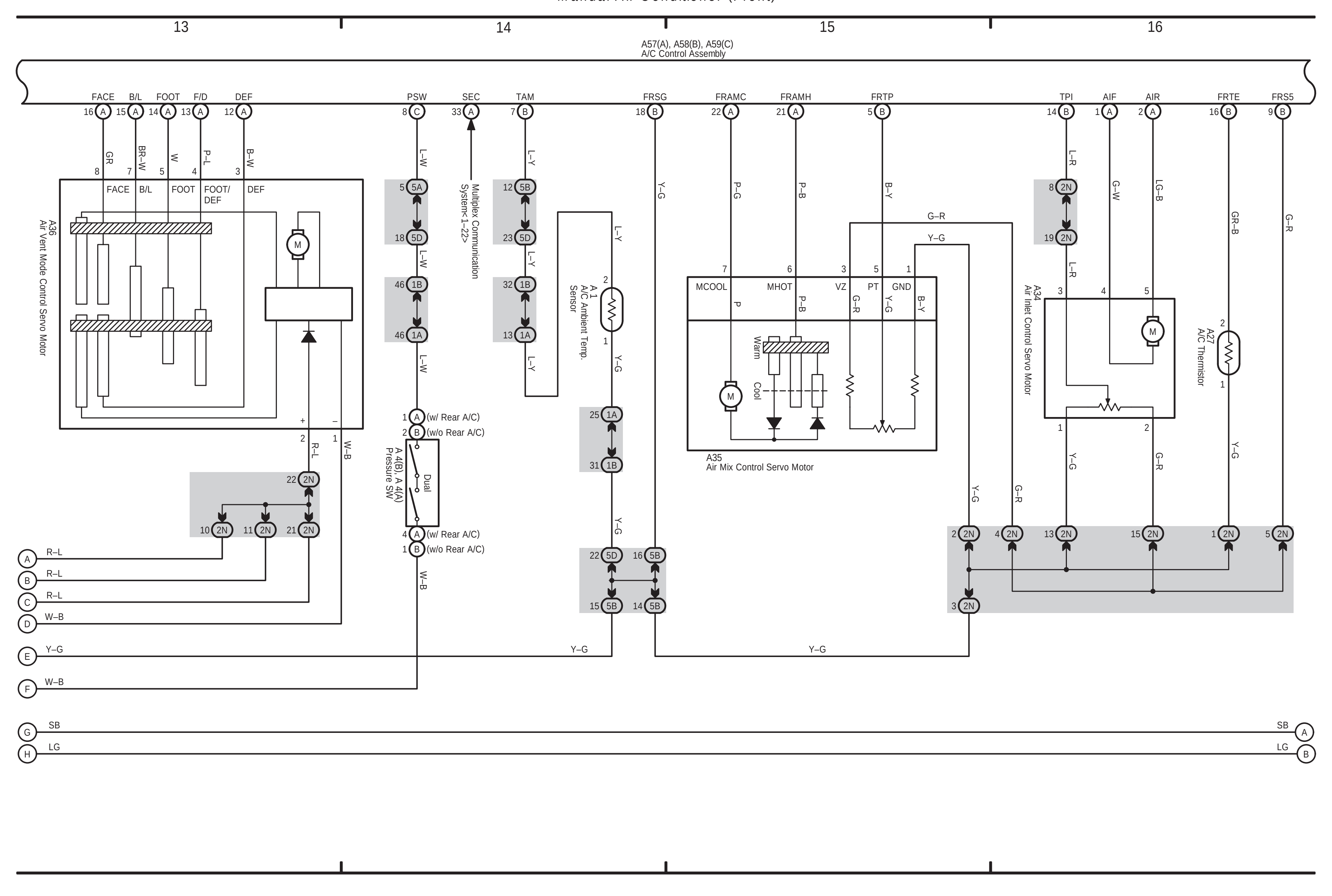

Manual Air Conditioner (Front)

Manual Air Conditioner (Rear)

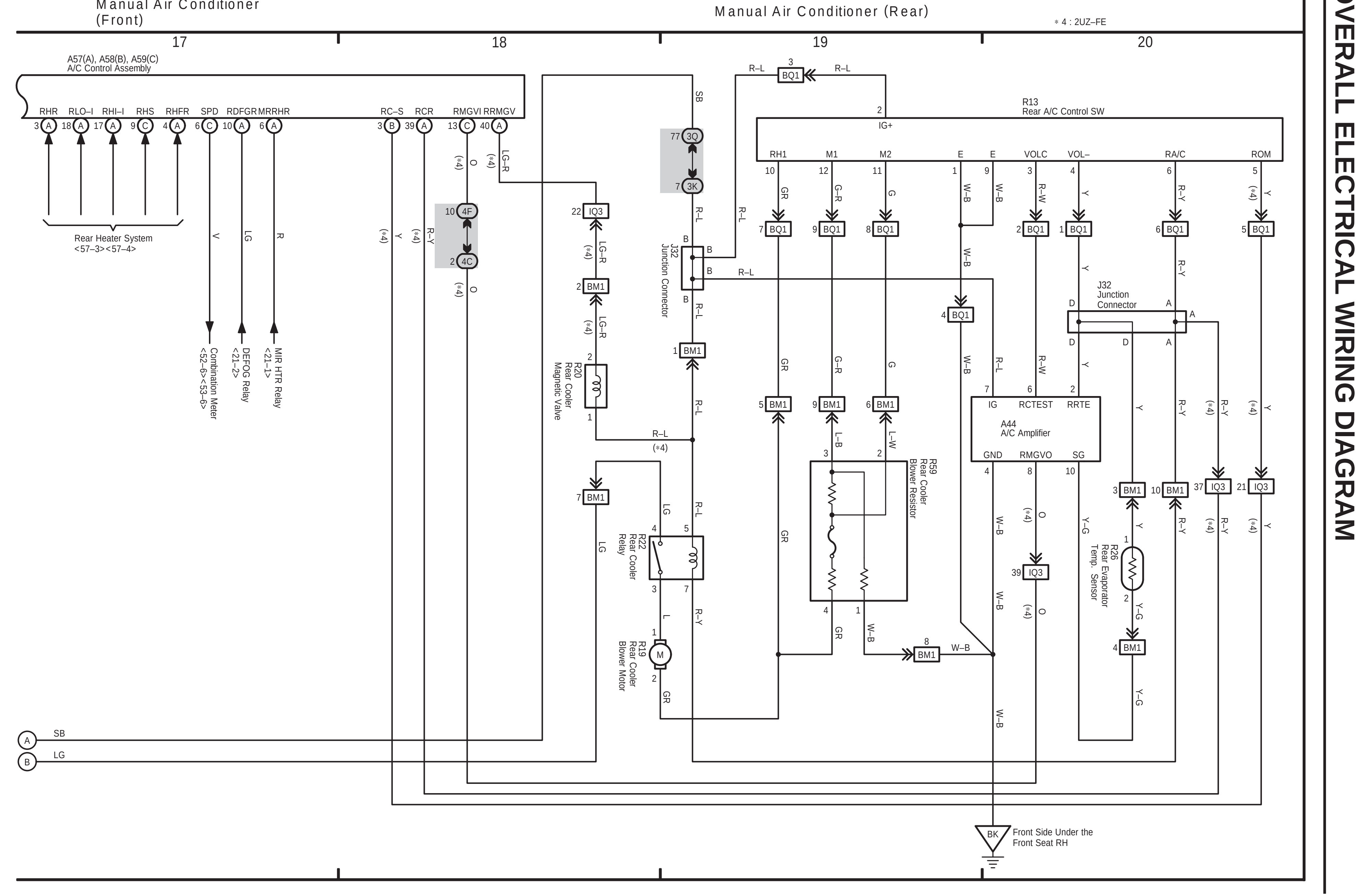

Power Source
∗1 : 2UZ–FE A/T
∗2 : 2UZ–FE M/T
∗3 : Except 2UZ–FE
1
2
3
4
I26
Ignition SW
F37(A), F38(B), F39(C), F40(D)
Fusible Link Block
Battery
Set Bolt of Cowl Side J/B LH
Manual Air Conditioner (Front)
5
6
7
8
A57(A), A58(B), A59(C)
A/C Control Assembly
∗3 : Except 2UZ–FE
∗4 : 2UZ–FE
∗5 : 1FZ–FE
∗6 : 1HD–FTE
∗7 : Except 1HD–FTE
∗8 : Except 1HZ
∗9 : Front Right Side of Fender Apron
J 4
Junction Connector
A 5
A/C Magnetic Clutch
Front Left Side of Fender Apron
Set Bolt of Cowl Side J/B LH
9
10
11
12
E 9(C), E10(D), E14(A), E18(B)
Engine ECU
Engine and ECT ECU
F19
Front Blower Motor
F20
Front Blower Resistor
Rear Bank of Right Cylinder Head
Set Bolt of Cowl Side J/B RH
13
14
15
16
A36
Air Vent Mode Control Servo Motor
A35
Air Mix Control Servo Motor
A34
Air Inlet Control Servo Motor
A27
A/C Thermistor
Manual Air Conditioner (Front)
Manual Air Conditioner (Rear)
17
18
19
20
R13
Rear A/C Control SW
A44
A/C Amplifier
Rear Heater System <56–3><56–4>
Front Side Under the Front Seat RH
H

Power Source

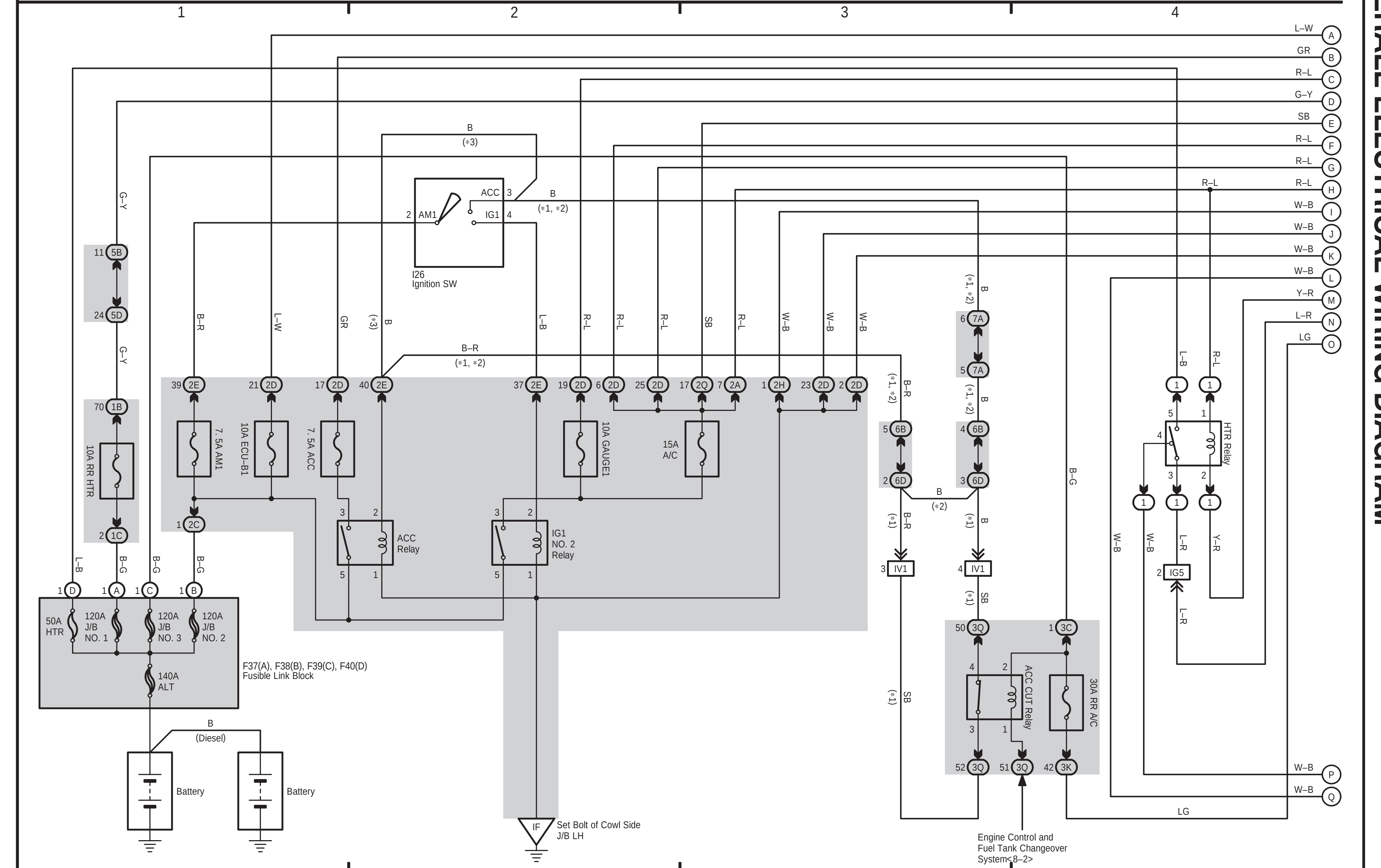

Manual Air Conditioner (Front)

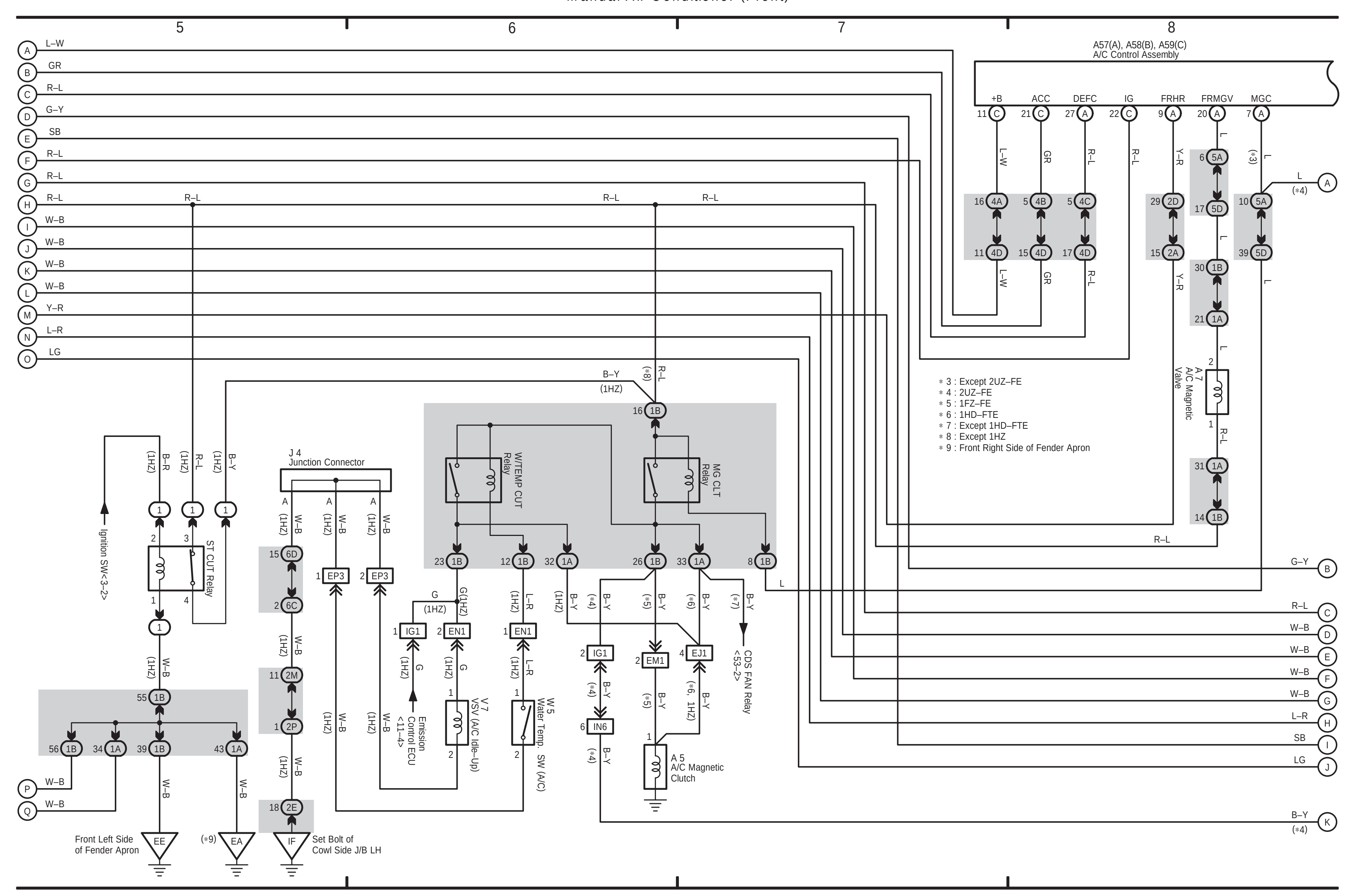

Manual Air Conditioner (Front)

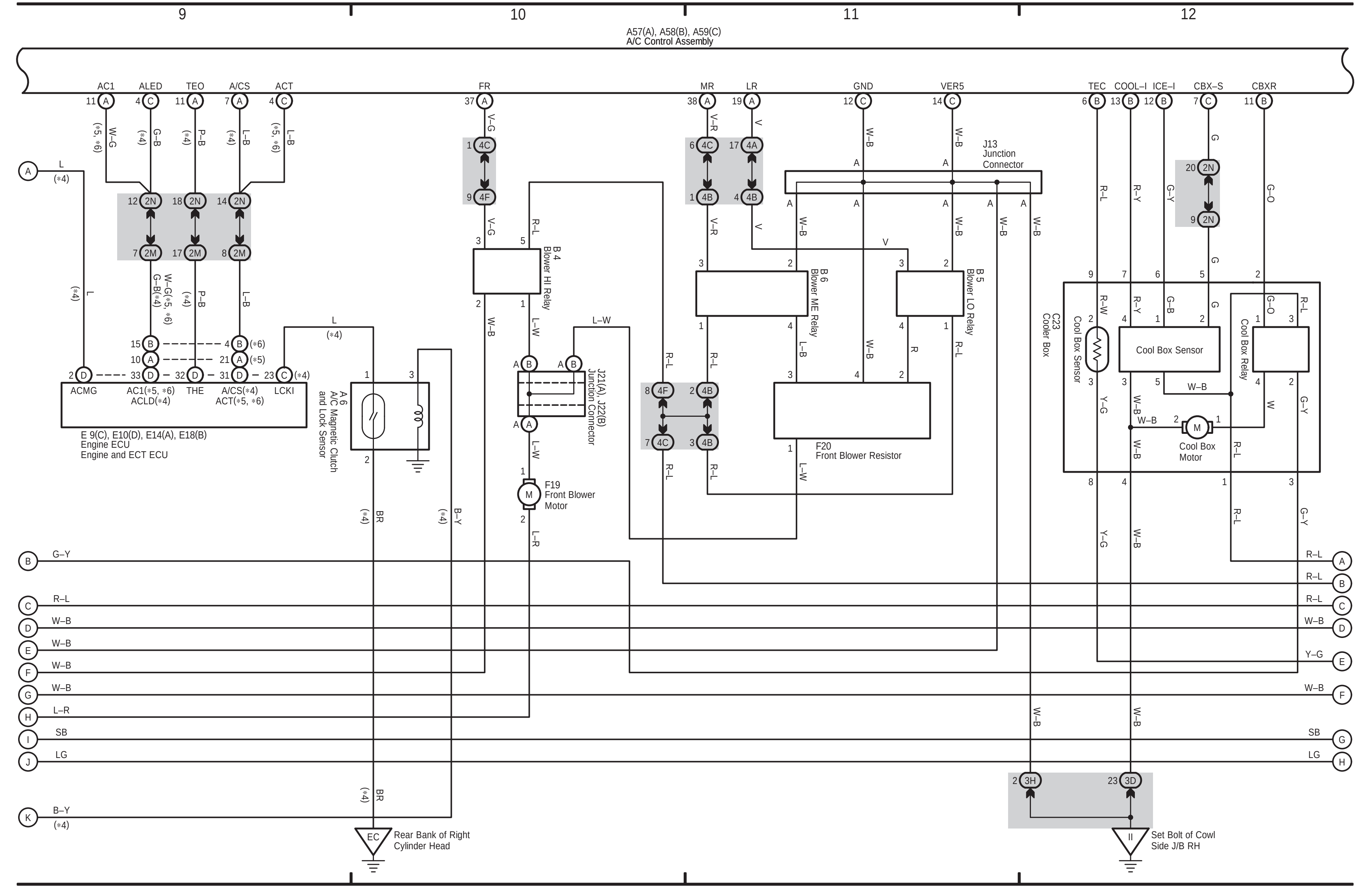

Manual Air Conditioner (Front)

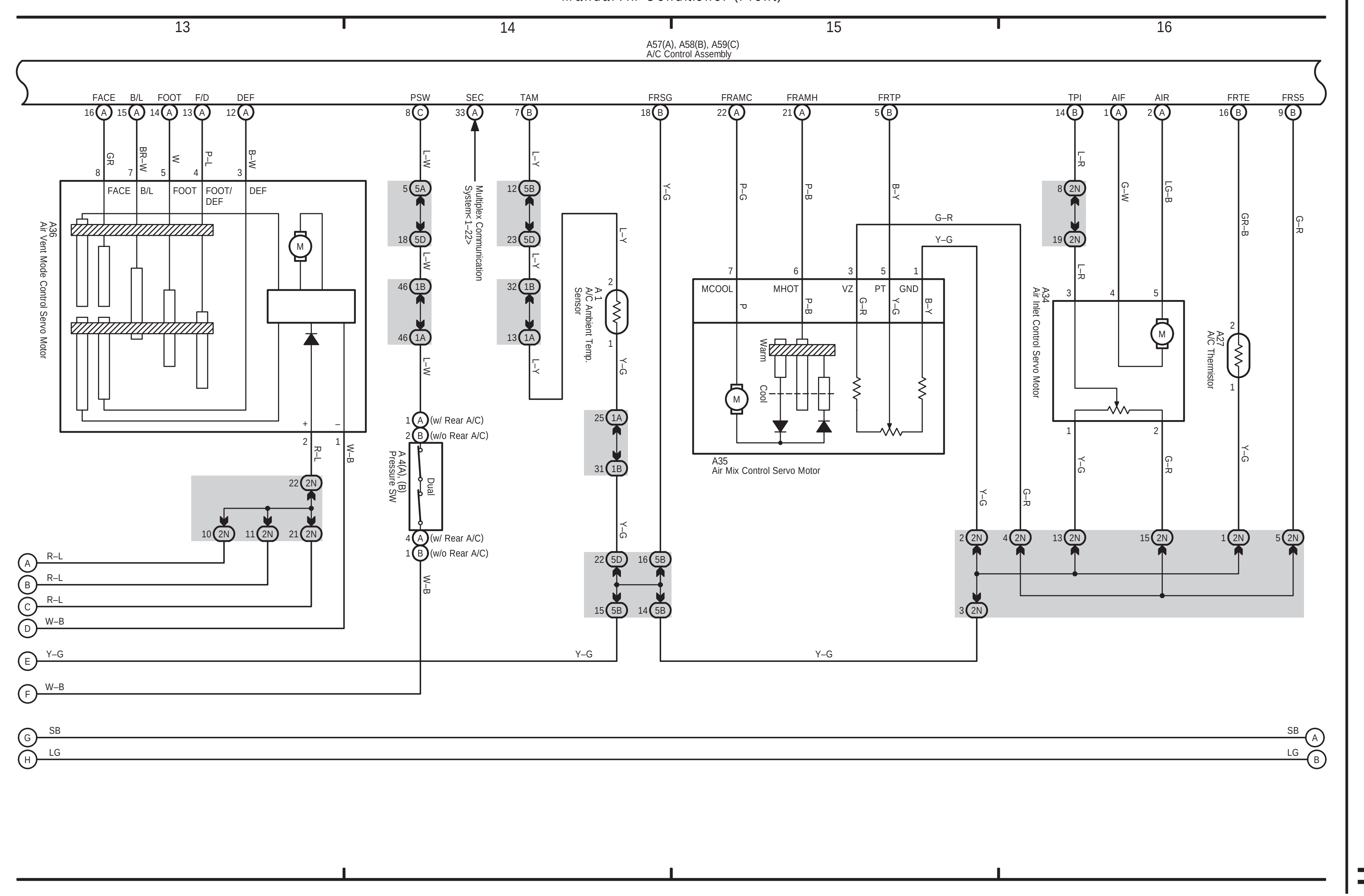

Manual Air Conditioner (Front)

Manual Air Conditioner (Rear)

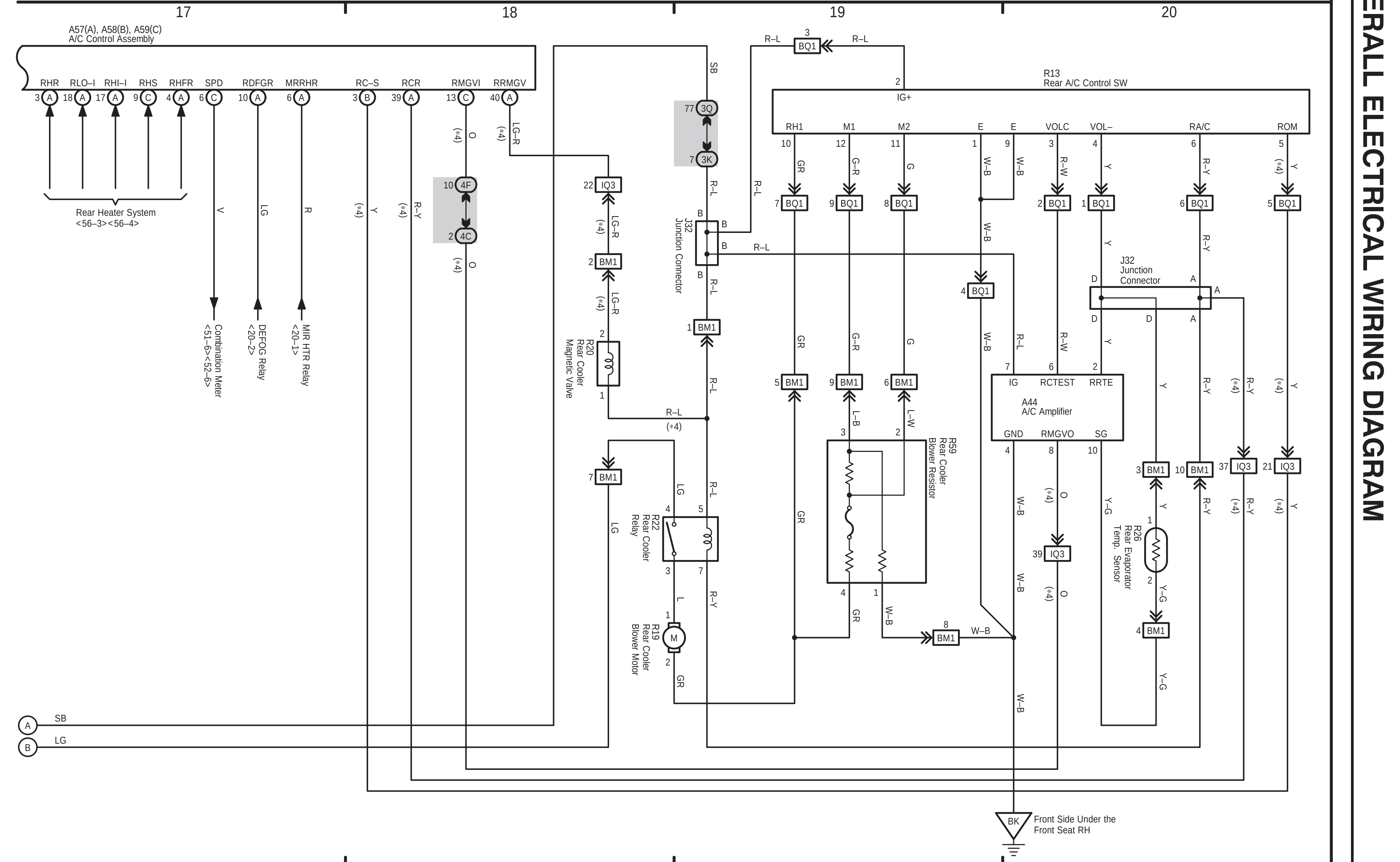

Power Source

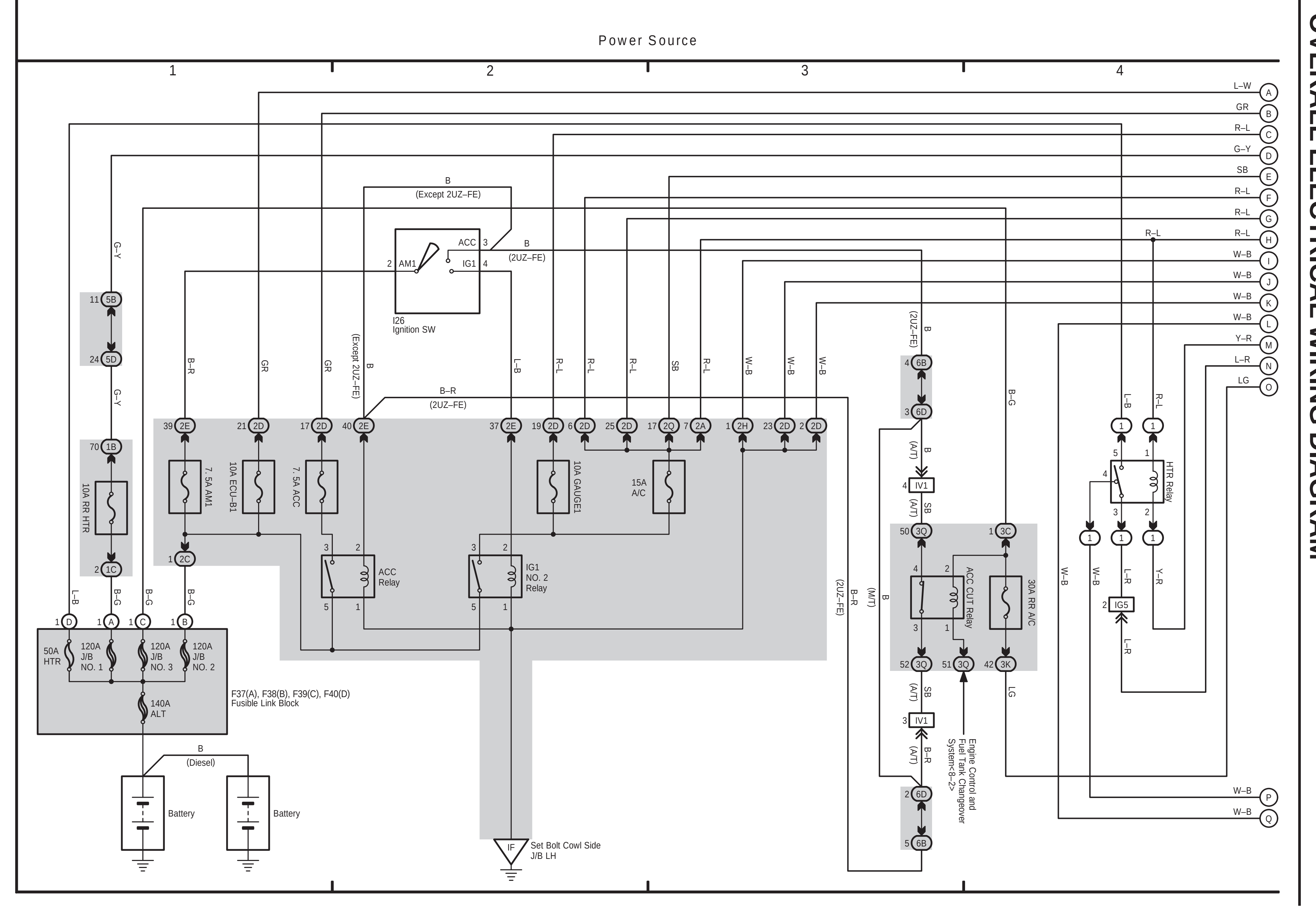

LAND CRUISER Station Wagon (EWD512E)

Manual Air Conditioner (Front)

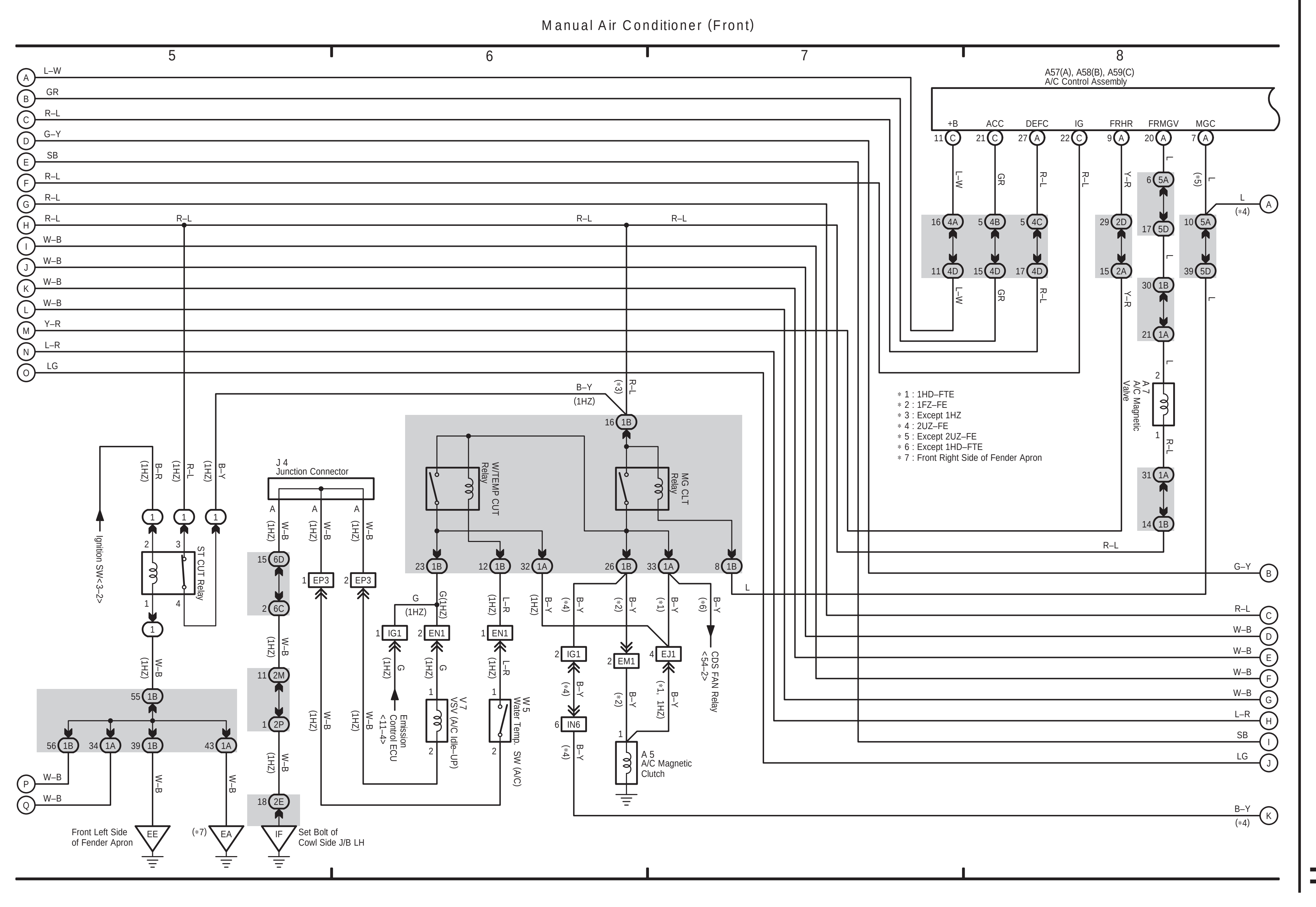

LAND CRUISER Station Wagon (EWD512E)

Manual Air Conditioner (Front)

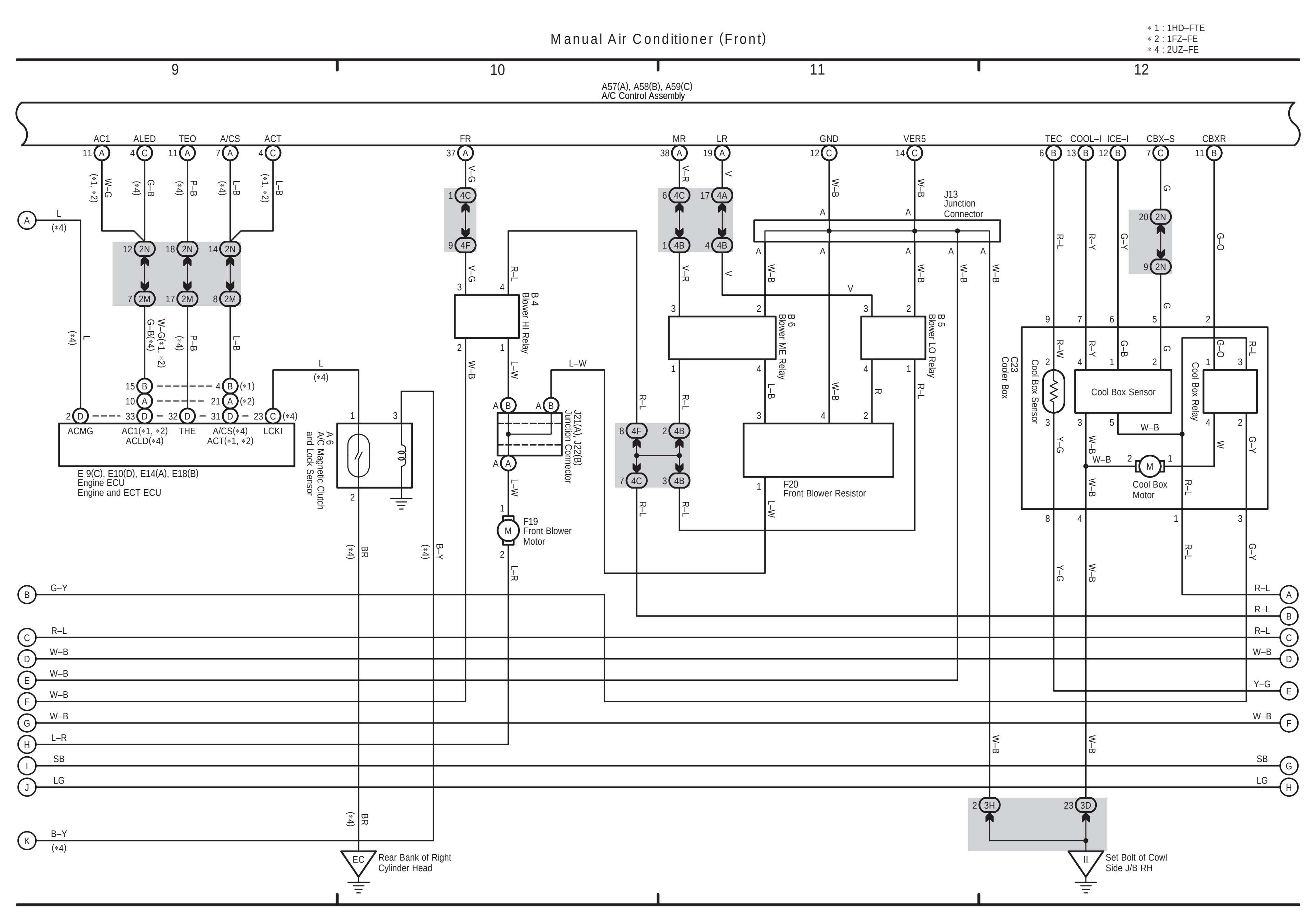

LAND CRUISER Station Wagon (EWD512E)

Manual Air Conditioner (Front)

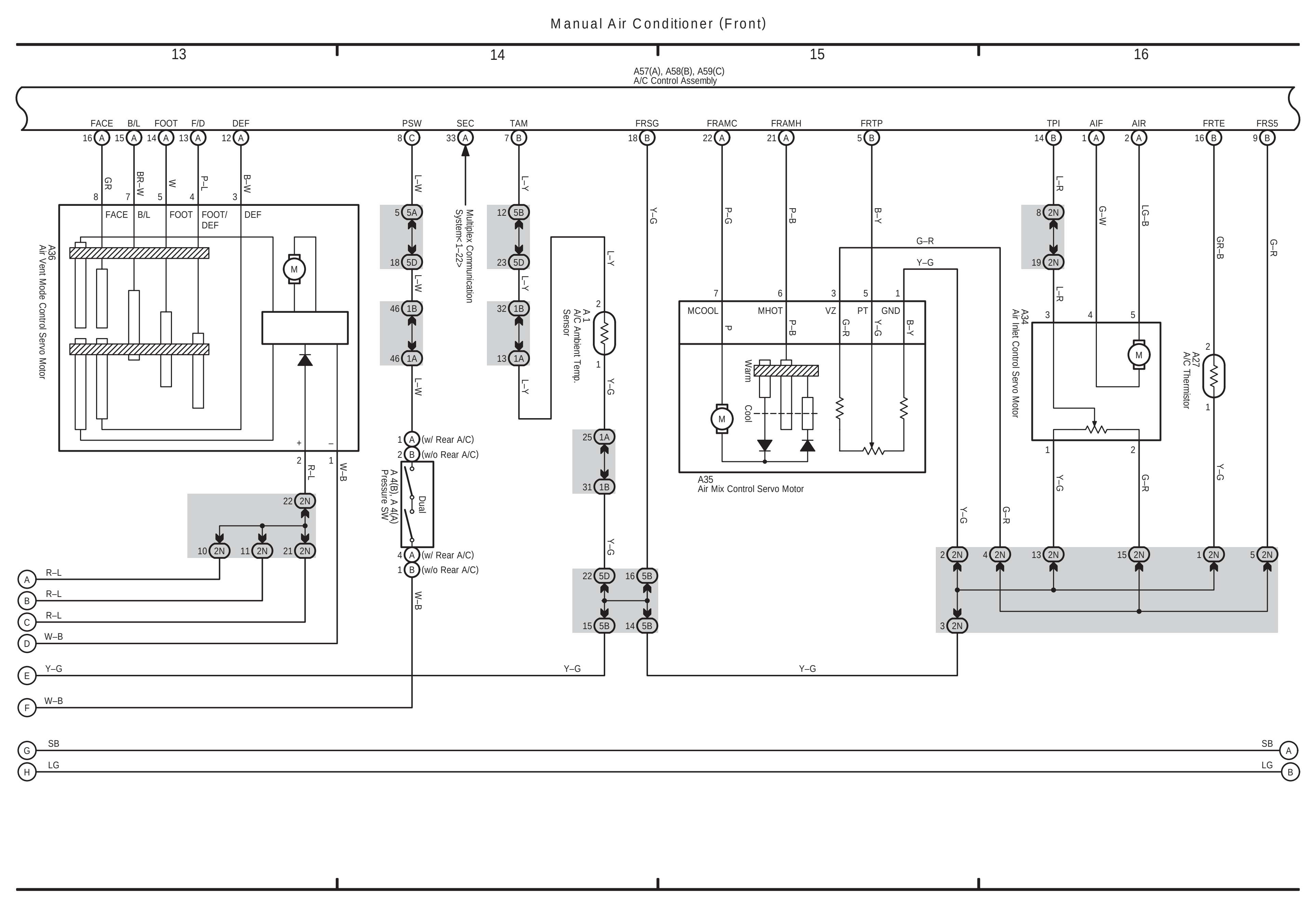

LAND CRUISER Station Wagon (EWD512E)

Manual Air Conditioner (Front)

Manual Air Conditioner (Rear)

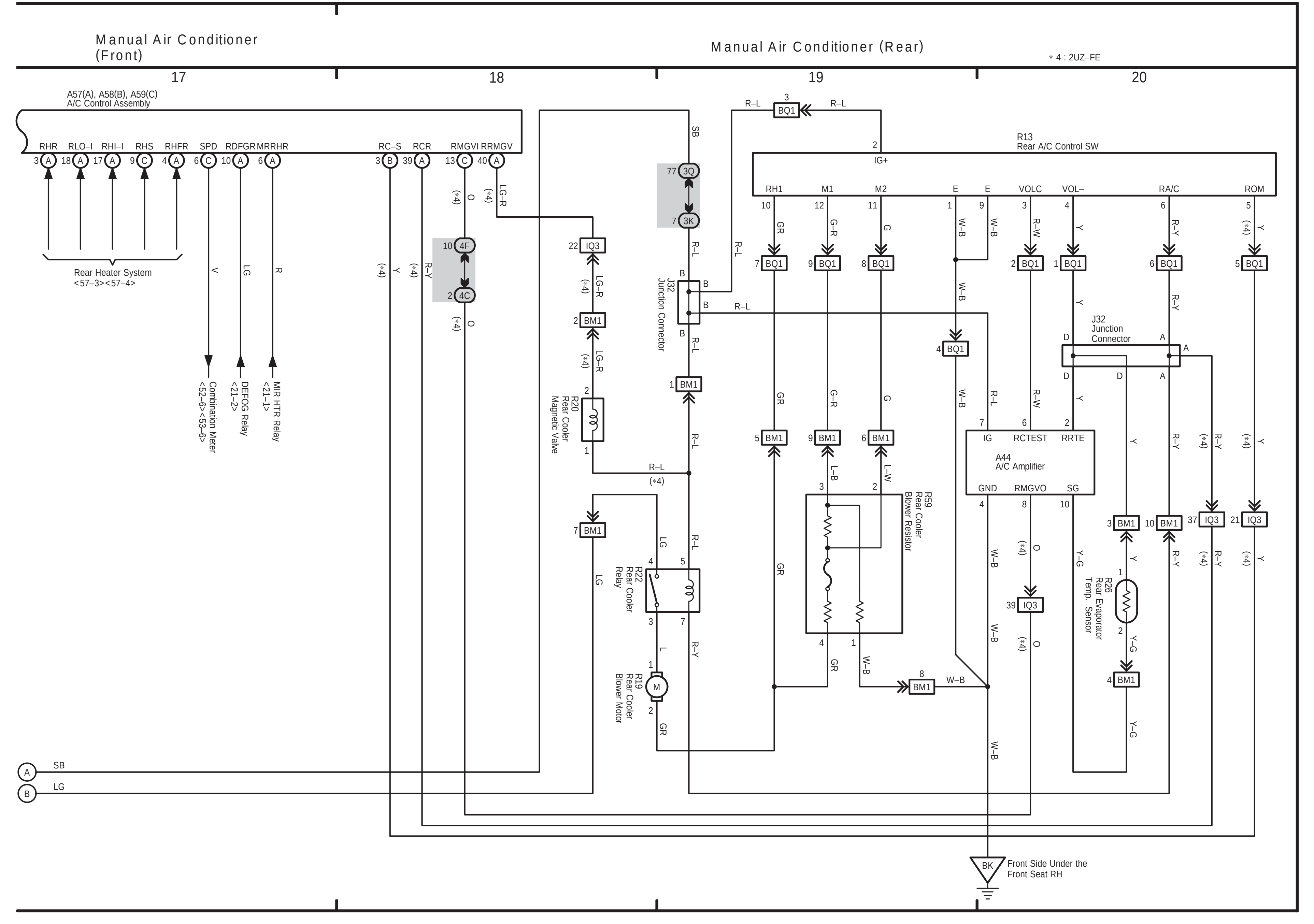

LAND CRUISER Station Wagon (EWD512E)

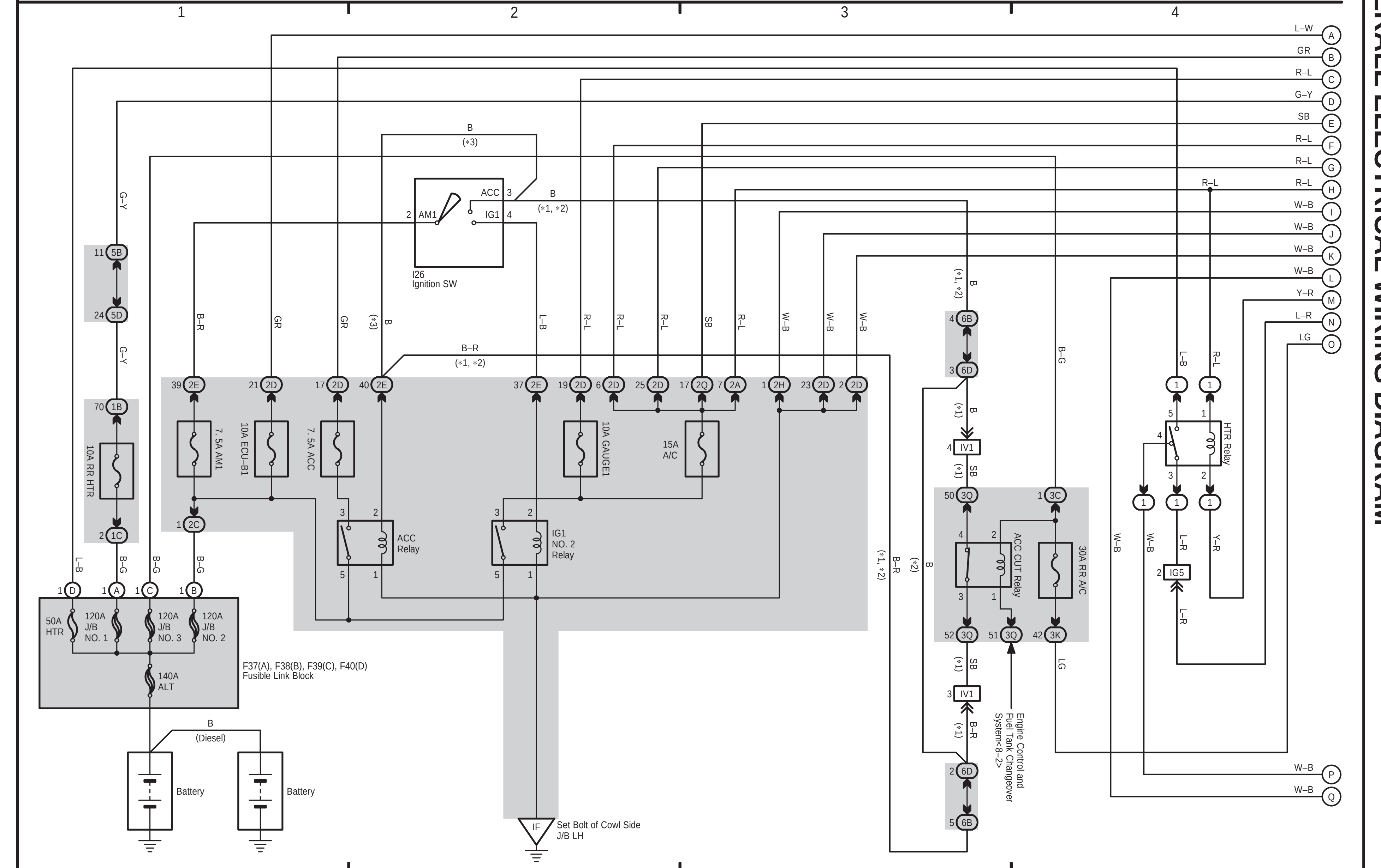
Power Source
∗1 : 2UZ–FE A/T
∗2 : 2UZ–FE M/T
∗3 : Except 2UZ–FE
1
2
3
4
I26
Ignition SW
7.5A AM1
10A ECU–B1
7.5A ACC
10A GAUGE1
15A A/C
10A RR HTR
ACC Relay
IG1 NO. 2 Relay
ACC CUT Relay
30A RR A/C
HTR Relay
F37(A), F38(B), F39(C), F40(D)
Fusible Link Block
50A HTR
120A J/B NO. 1
120A J/B NO. 3
120A J/B NO. 2
140A ALT
Battery
Battery
(Diesel)
Set Bolt of Cowl Side J/B LH
Engine Control and Fuel Tank Changeover System<6–2>

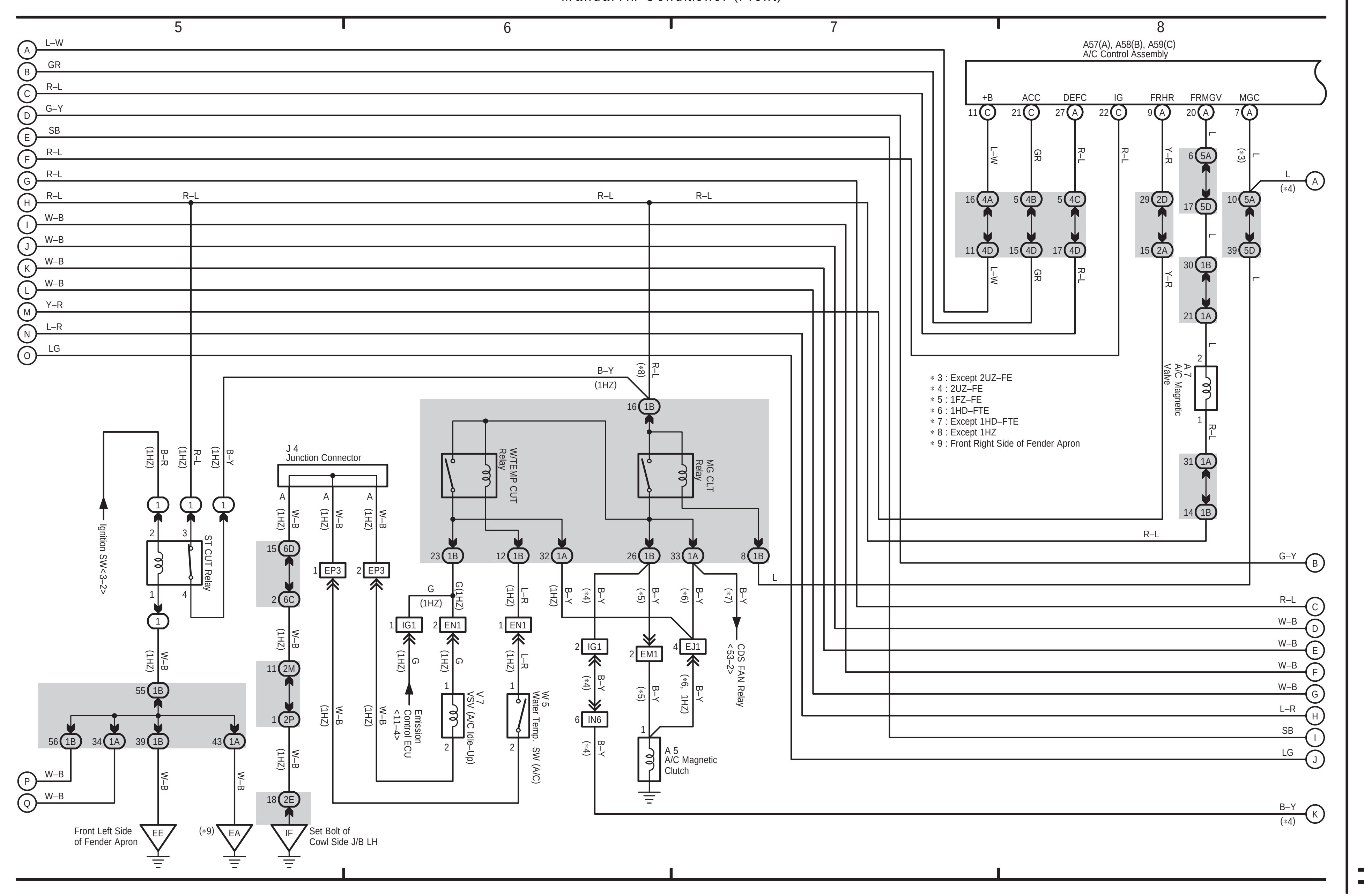
Manual Air Conditioner (Front)
5
6
7
8
A57(A), A58(B), A59(C)
A/C Control Assembly
J 4
Junction Connector
W/TEMP CUT Relay
MG CLT Relay
ST CUT Relay
Ignition SW<3–2>
Emission Control ECU <11–4>
V 7
VSV (A/C Idle–Up)
W 5
Water Temp. SW (A/C)
A 5
A/C Magnetic Clutch
A 7
A/C Magnetic Valve
CDS FAN Relay <53–2>
∗3 : Except 2UZ–FE
∗4 : 2UZ–FE
∗5 : 1FZ–FE
∗6 : 1HD–FTE
∗7 : Except 1HD–FTE
∗8 : Except 1HZ
∗9 : Front Right Side of Fender Apron
Front Left Side of Fender Apron
Set Bolt of Cowl Side J/B LH

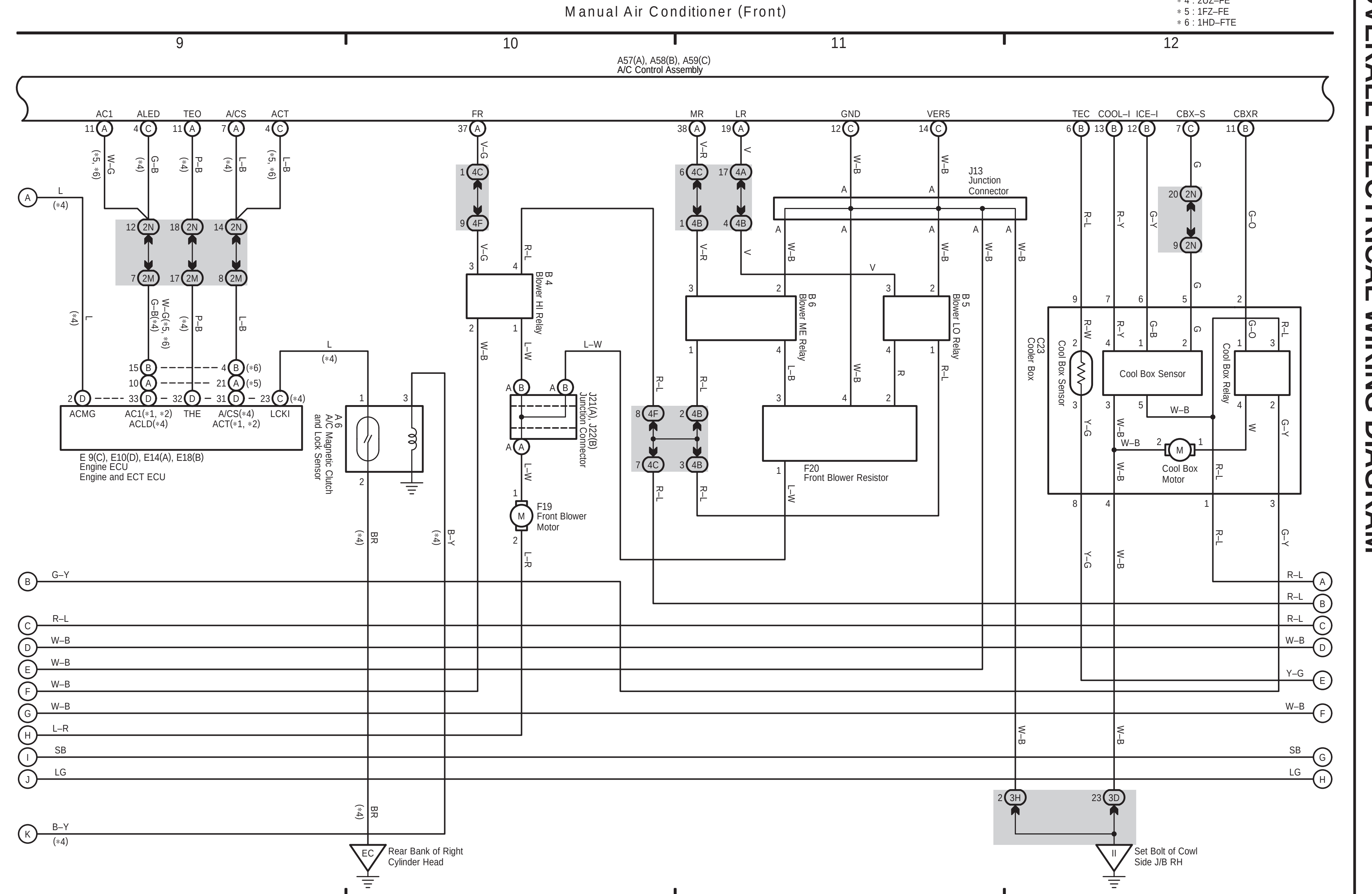
Manual Air Conditioner (Front)
∗4 : 2UZ–FE
∗5 : 1FZ–FE
∗6 : 1HD–FTE
9
10
11
12
A57(A), A58(B), A59(C)
A/C Control Assembly
E 9(C), E10(D), E14(A), E18(B)
Engine ECU
Engine and ECT ECU
A 6
A/C Magnetic Clutch and Lock Sensor
B 4
Blower HI Relay
J21(A), J22(B)
Junction Connector
F19
Front Blower Motor
B 6
Blower ME Relay
J13
Junction Connector
F20
Front Blower Resistor
B 5
Blower LO Relay
C23
Cooler Box
Cool Box Sensor
Cool Box Relay
Cool Box Motor
Rear Bank of Right Cylinder Head
Set Bolt of Cowl Side J/B RH

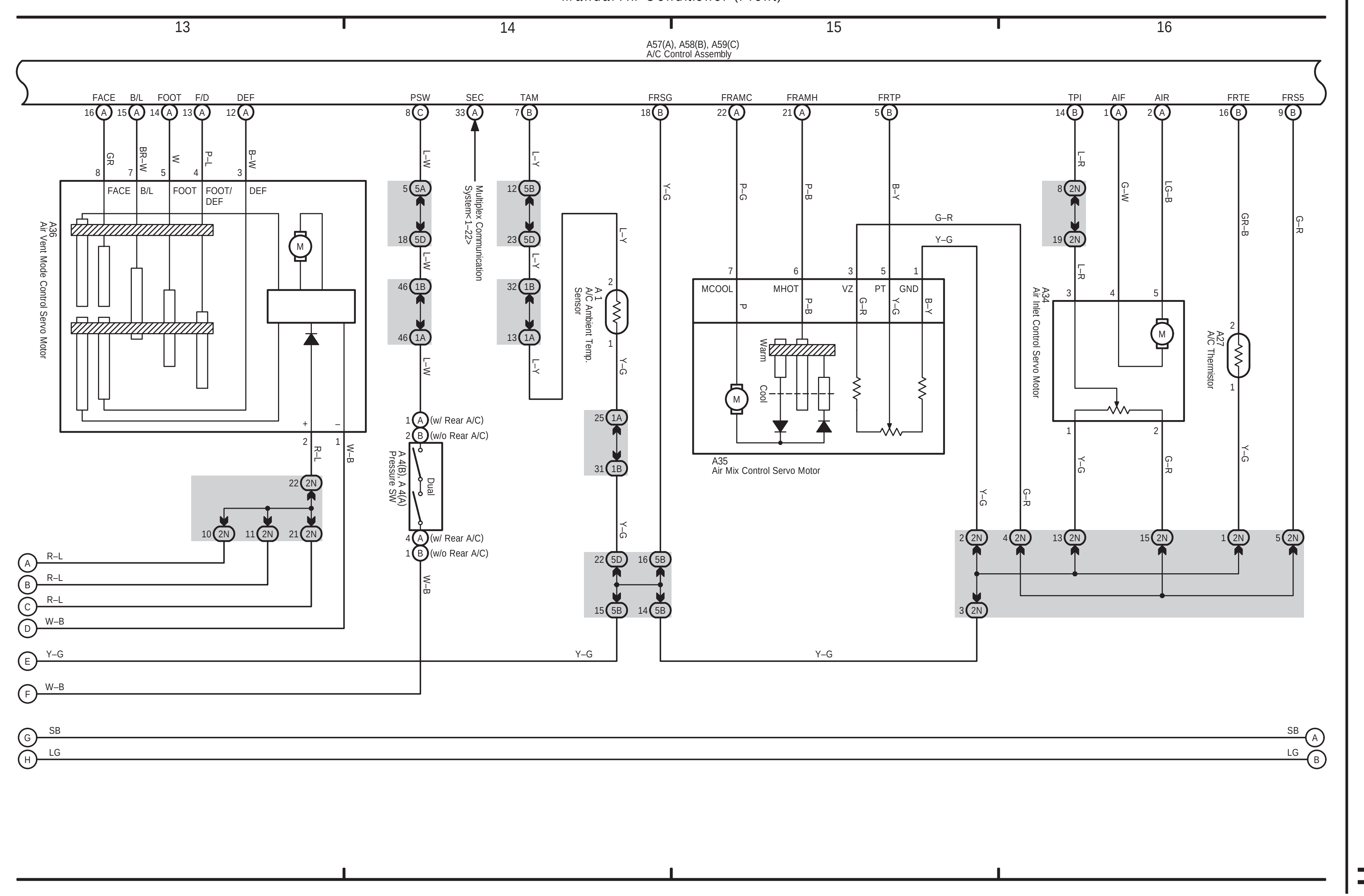
Manual Air Conditioner (Front)
13
14
15
16
A57(A), A58(B), A59(C)
A/C Control Assembly
A36
Air Vent Mode Control Servo Motor
Multiplex Communication System<1–2>
A 1
A/C Ambient Temp. Sensor
A 4(B), A 4(A)
Pressure SW
A35
Air Mix Control Servo Motor
A34
Air Inlet Control Servo Motor
A27
A/C Thermistor

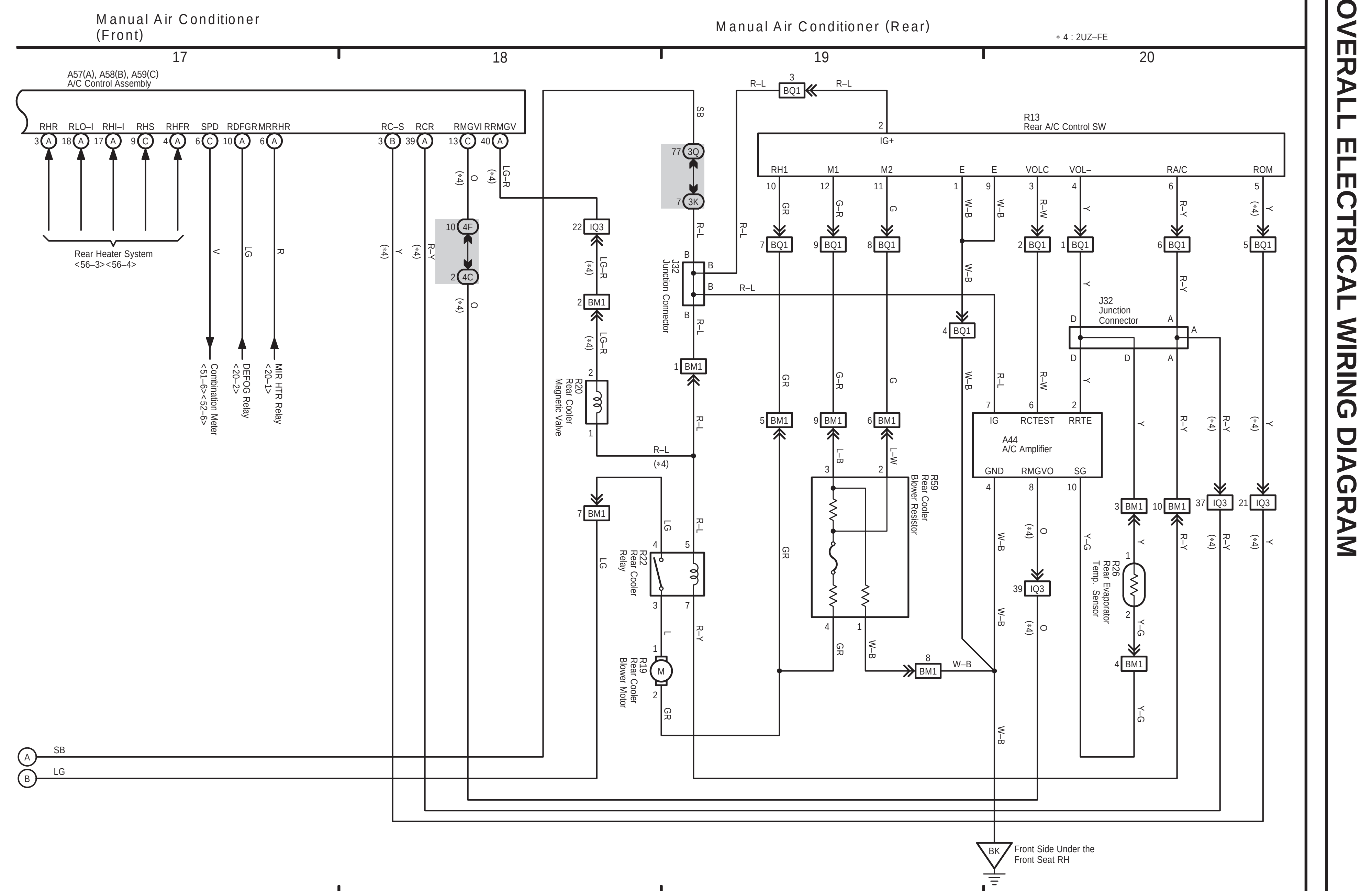
Manual Air Conditioner (Front)
Manual Air Conditioner (Rear)
∗4 : 2UZ–FE
17
18
19
20
A57(A), A58(B), A59(C)
A/C Control Assembly
Rear Heater System <56–3><56–4>
Combination Meter <51–6><52–6>
DEFOG Relay <20–2>
MIR HTR Relay <20–1>
R13
Rear A/C Control SW
R20
Rear Cooler Magnetic Valve
J32
Junction Connector
R22
Rear Cooler Relay
R19
Rear Cooler Blower Motor
R59
Rear Cooler Blower Resistor
A44
A/C Amplifier
R26
Rear Evaporator Temp. Sensor
Front Side Under the Front Seat RH

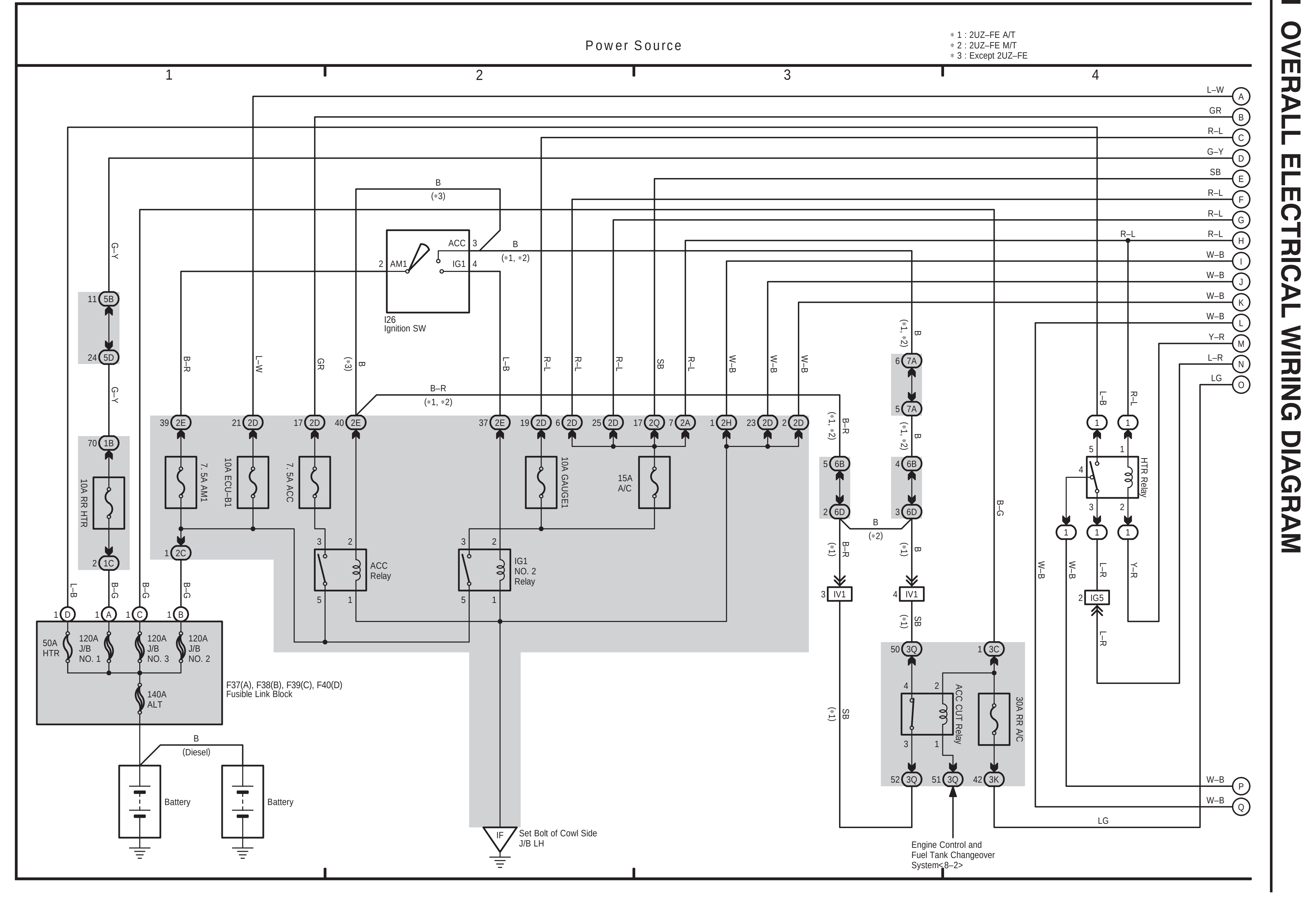
Power Source
＊1 : 2UZ–FE A/T
＊2 : 2UZ–FE M/T
＊3 : Except 2UZ–FE
I26 Ignition SW
10A RR HTR
7. 5A AM1
10A ECU–B1
7. 5A ACC
10A GAUGE1
15A A/C
ACC Relay
IG1 NO. 2 Relay
HTR Relay
ACC CUT Relay
30A RR A/C
F37(A), F38(B), F39(C), F40(D) Fusible Link Block
50A HTR
120A J/B NO. 1
120A J/B NO. 3
120A J/B NO. 2
140A ALT
Battery
Battery
(Diesel)
Set Bolt of Cowl Side J/B LH
Engine Control and Fuel Tank Changeover System<8–2>

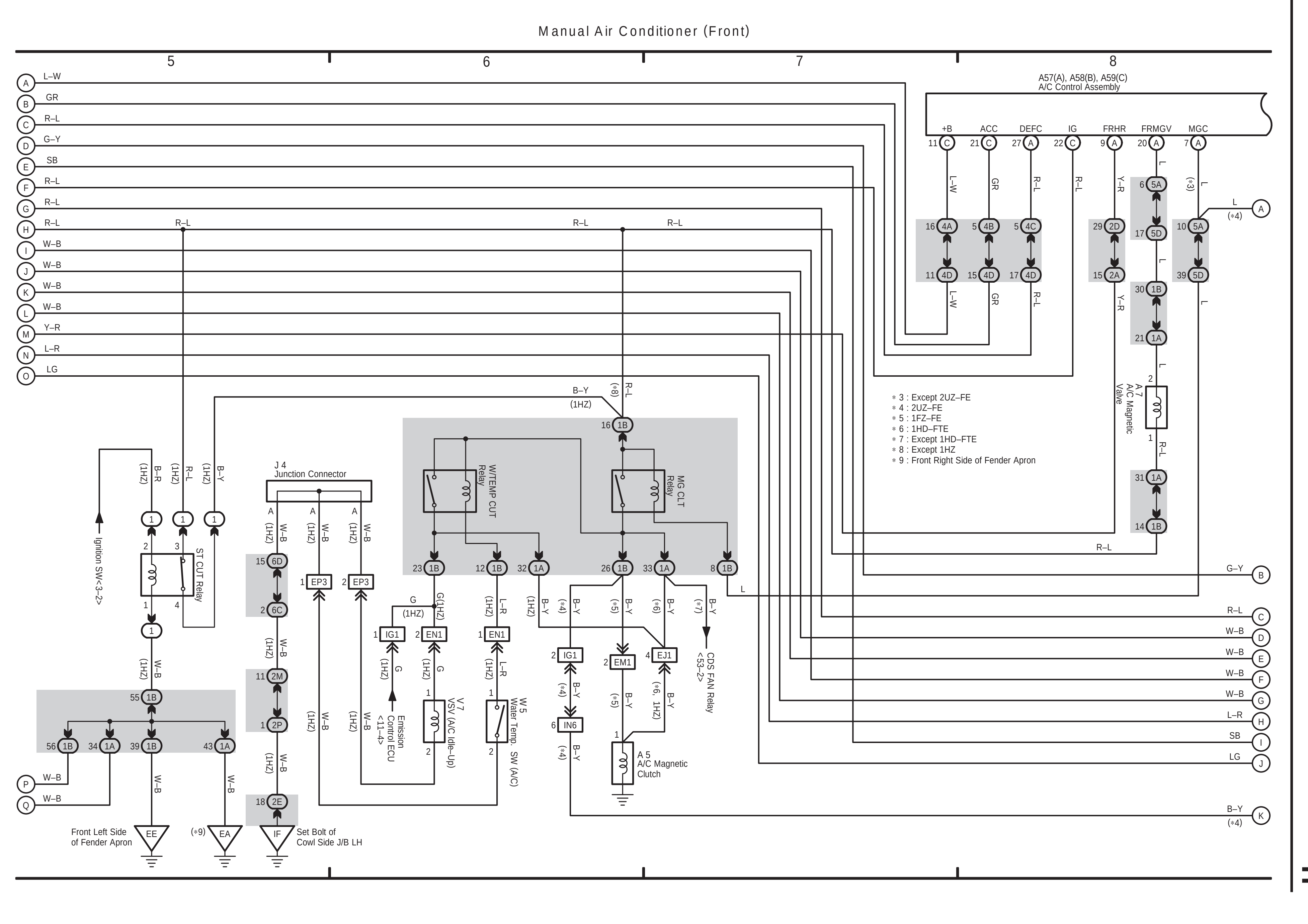
Manual Air Conditioner (Front)
A57(A), A58(B), A59(C) A/C Control Assembly
J 4 Junction Connector
ST CUT Relay
W/TEMP CUT Relay
MG CLT Relay
Ignition SW<3–2>
Emission Control ECU <11–4>
V 7 VSV (A/C Idle–Up)
W 5 Water Temp. SW (A/C)
A 5 A/C Magnetic Clutch
CDS FAN Relay <53–2>
A 7 A/C Magnetic Valve
＊3 : Except 2UZ–FE
＊4 : 2UZ–FE
＊5 : 1FZ–FE
＊6 : 1HD–FTE
＊7 : Except 1HD–FTE
＊8 : Except 1HZ
＊9 : Front Right Side of Fender Apron
Front Left Side of Fender Apron
Set Bolt of Cowl Side J/B LH

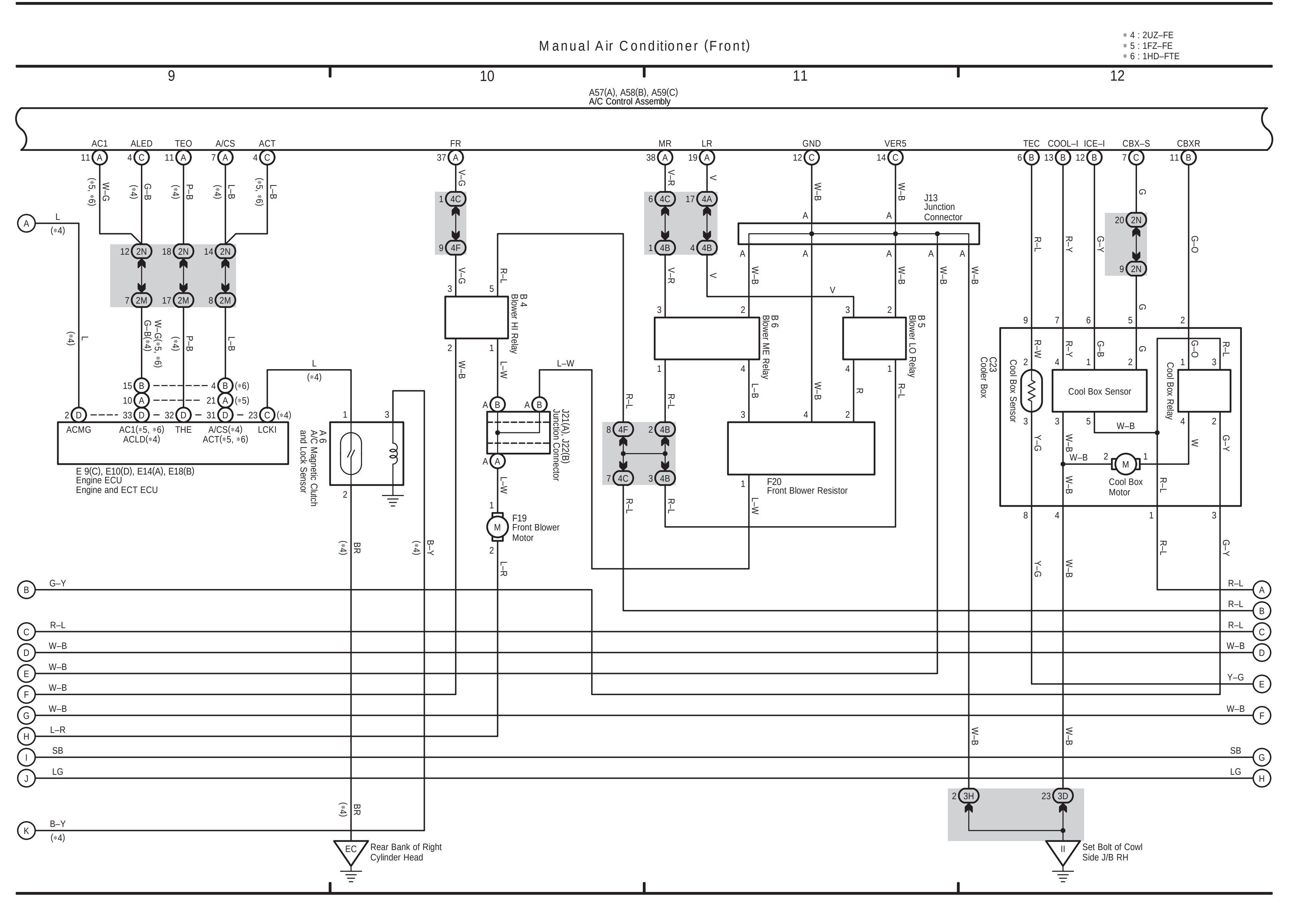
Manual Air Conditioner (Front)
＊4 : 2UZ–FE
＊5 : 1FZ–FE
＊6 : 1HD–FTE
A57(A), A58(B), A59(C) A/C Control Assembly
E 9(C), E10(D), E14(A), E18(B) Engine ECU Engine and ECT ECU
A 6 A/C Magnetic Clutch and Lock Sensor
B 4 Blower HI Relay
J21(A), J22(B) Junction Connector
F19 Front Blower Motor
B 6 Blower ME Relay
J13 Junction Connector
F20 Front Blower Resistor
B 5 Blower LO Relay
C23 Cooler Box
Cool Box Sensor
Cool Box Relay
Cool Box Motor
Rear Bank of Right Cylinder Head
Set Bolt of Cowl Side J/B RH

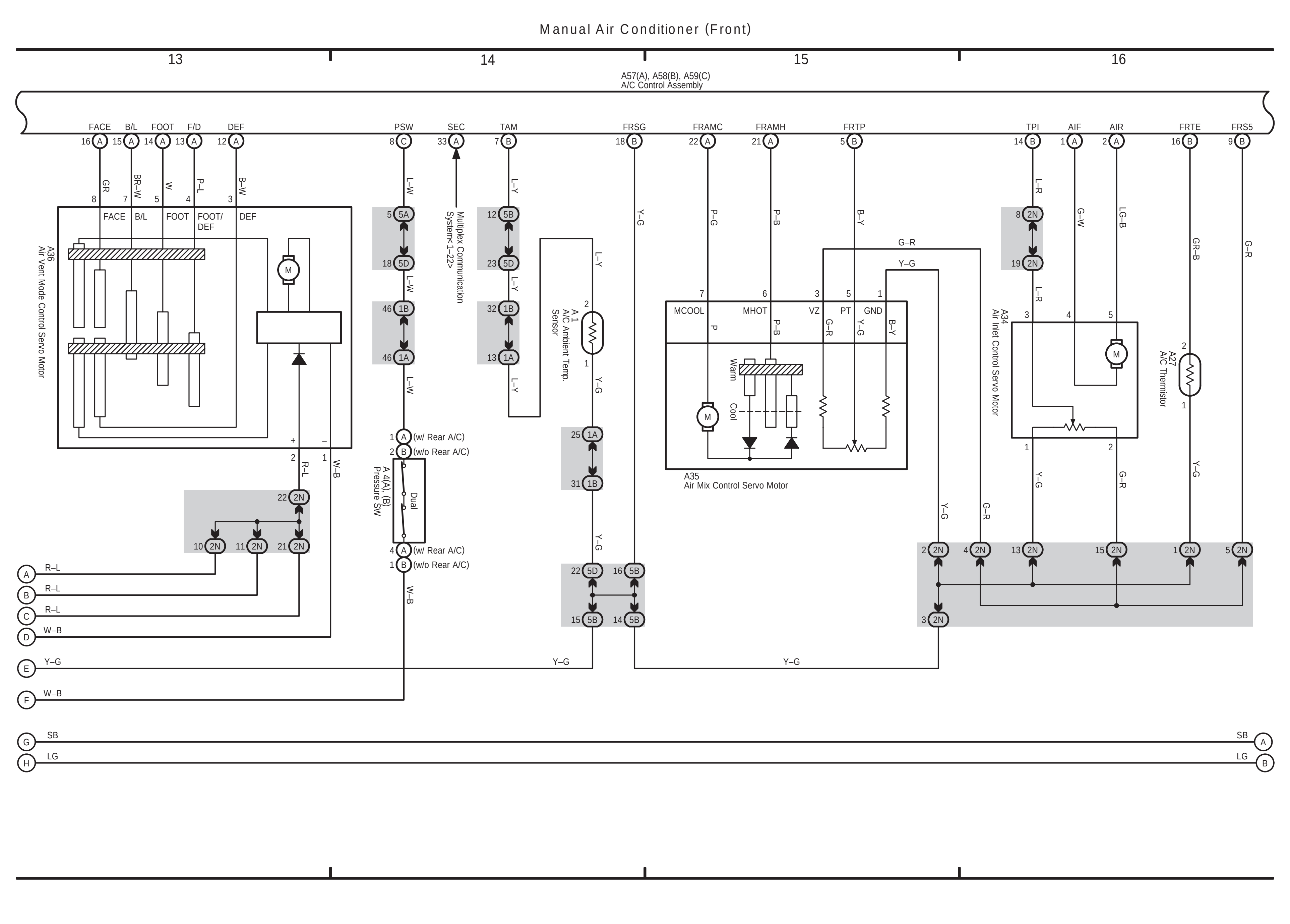
Manual Air Conditioner (Front)
A57(A), A58(B), A59(C) A/C Control Assembly
A36 Air Vent Mode Control Servo Motor
Multiplex Communication System<1–22>
A 1 A/C Ambient Temp. Sensor
A 4(A), (B) Pressure SW
A35 Air Mix Control Servo Motor
A34 Air Inlet Control Servo Motor
A27 A/C Thermistor

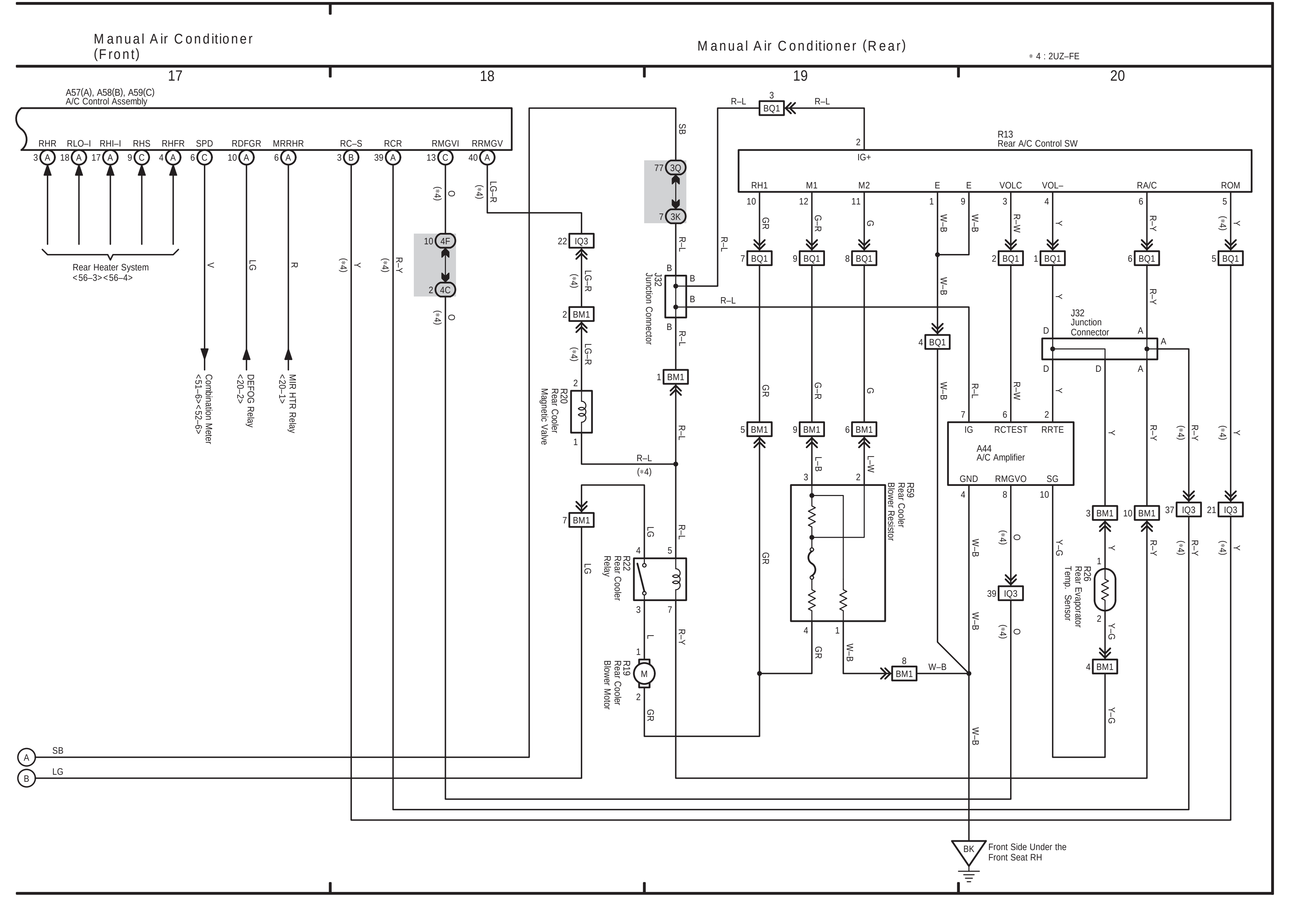
Manual Air Conditioner (Front)
Manual Air Conditioner (Rear)
＊4 : 2UZ–FE
A57(A), A58(B), A59(C) A/C Control Assembly
Rear Heater System <56–3><56–4>
Combination Meter <51–6><52–6>
DEFOG Relay <20–2>
MIR HTR Relay <20–1>
R13 Rear A/C Control SW
J32 Junction Connector
R20 Rear Cooler Magnetic Valve
R22 Rear Cooler Relay
R19 Rear Cooler Blower Motor
R59 Rear Cooler Blower Resistor
A44 A/C Amplifier
R26 Rear Evaporator Temp. Sensor
Front Side Under the Front Seat RH

F ELECTRICAL WIRING DIAGRAM (System Circuits)

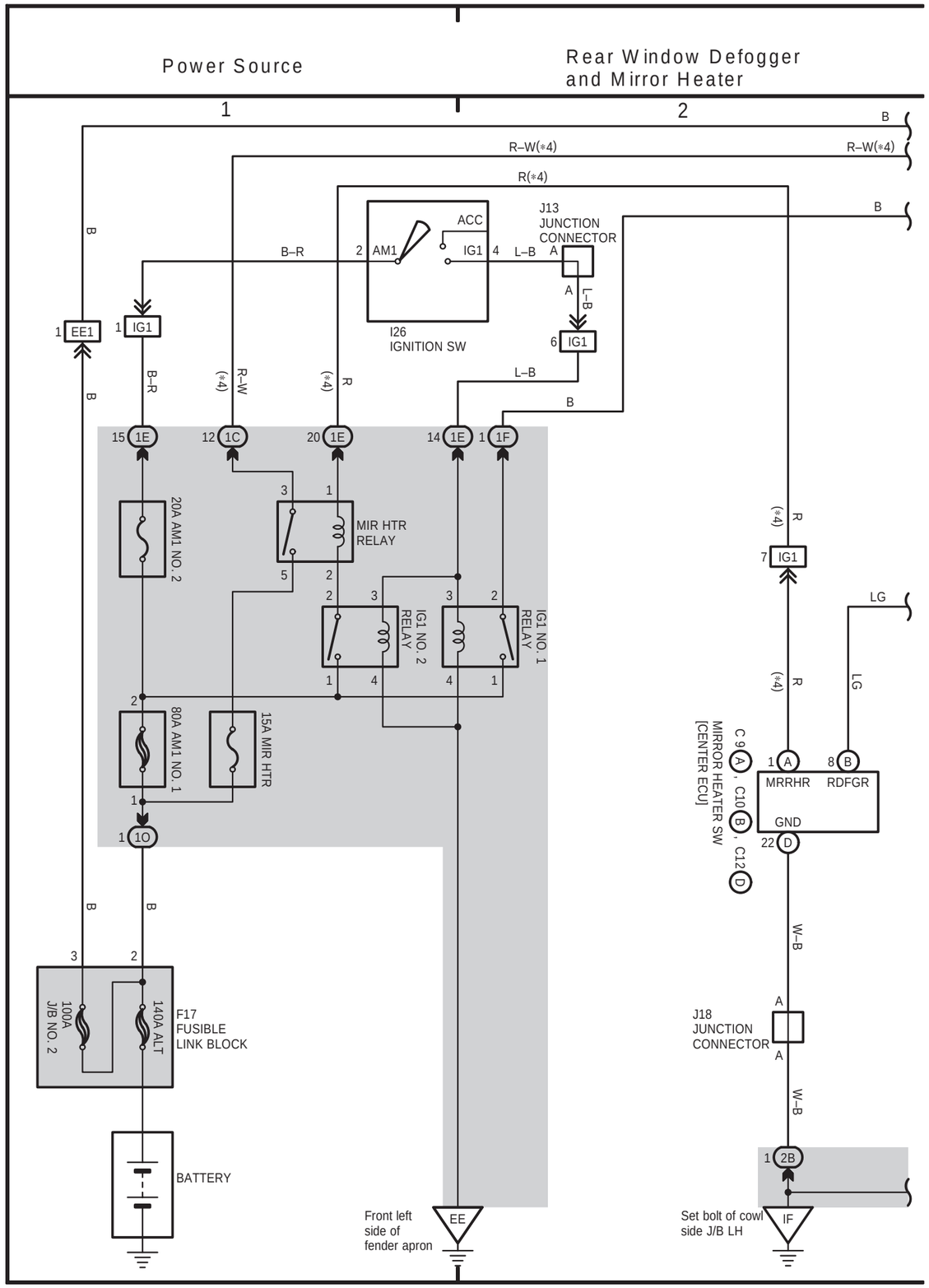

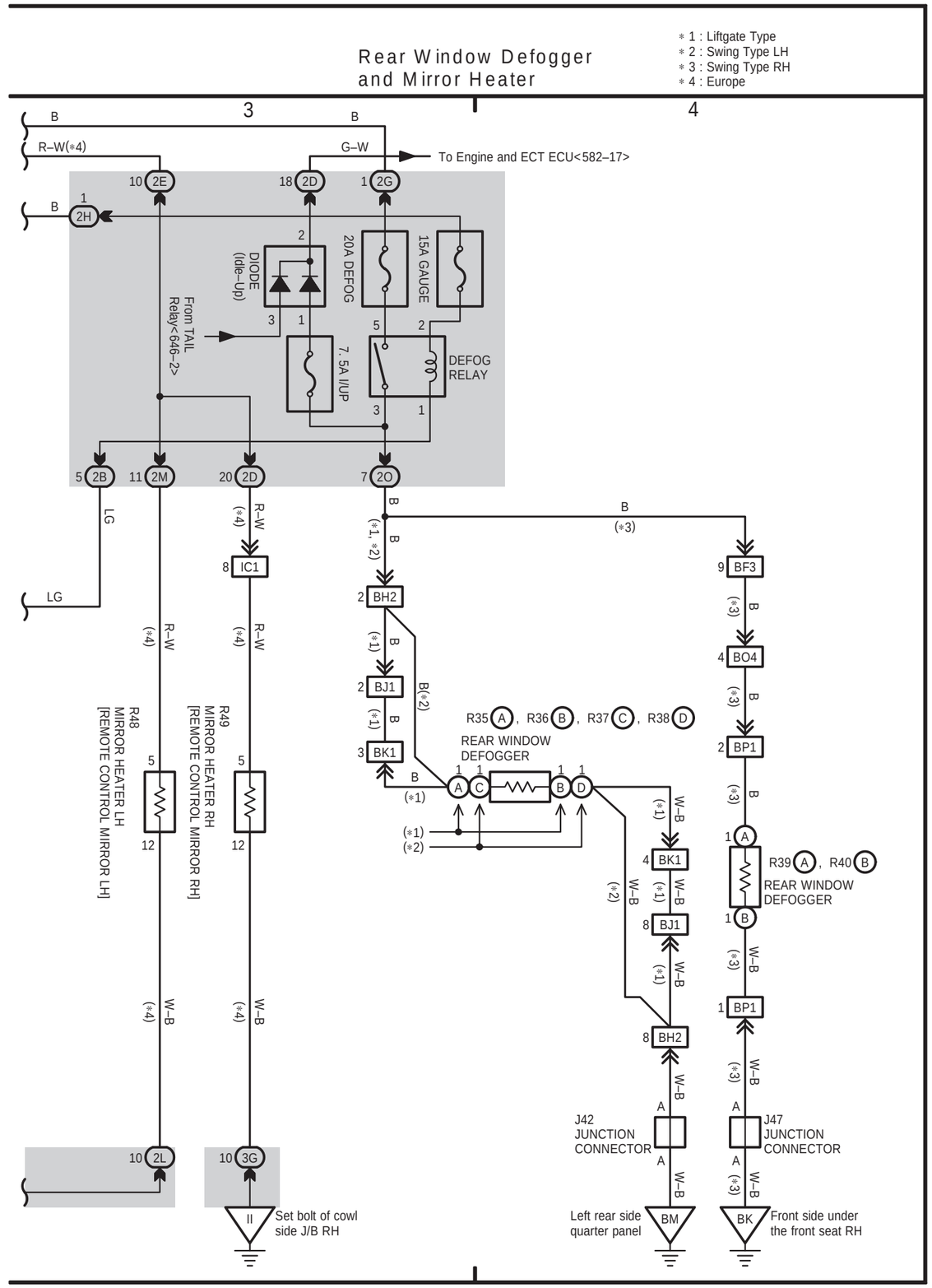

LAND CRUISER Station Wagon (EWD342F)

RHD

RHD

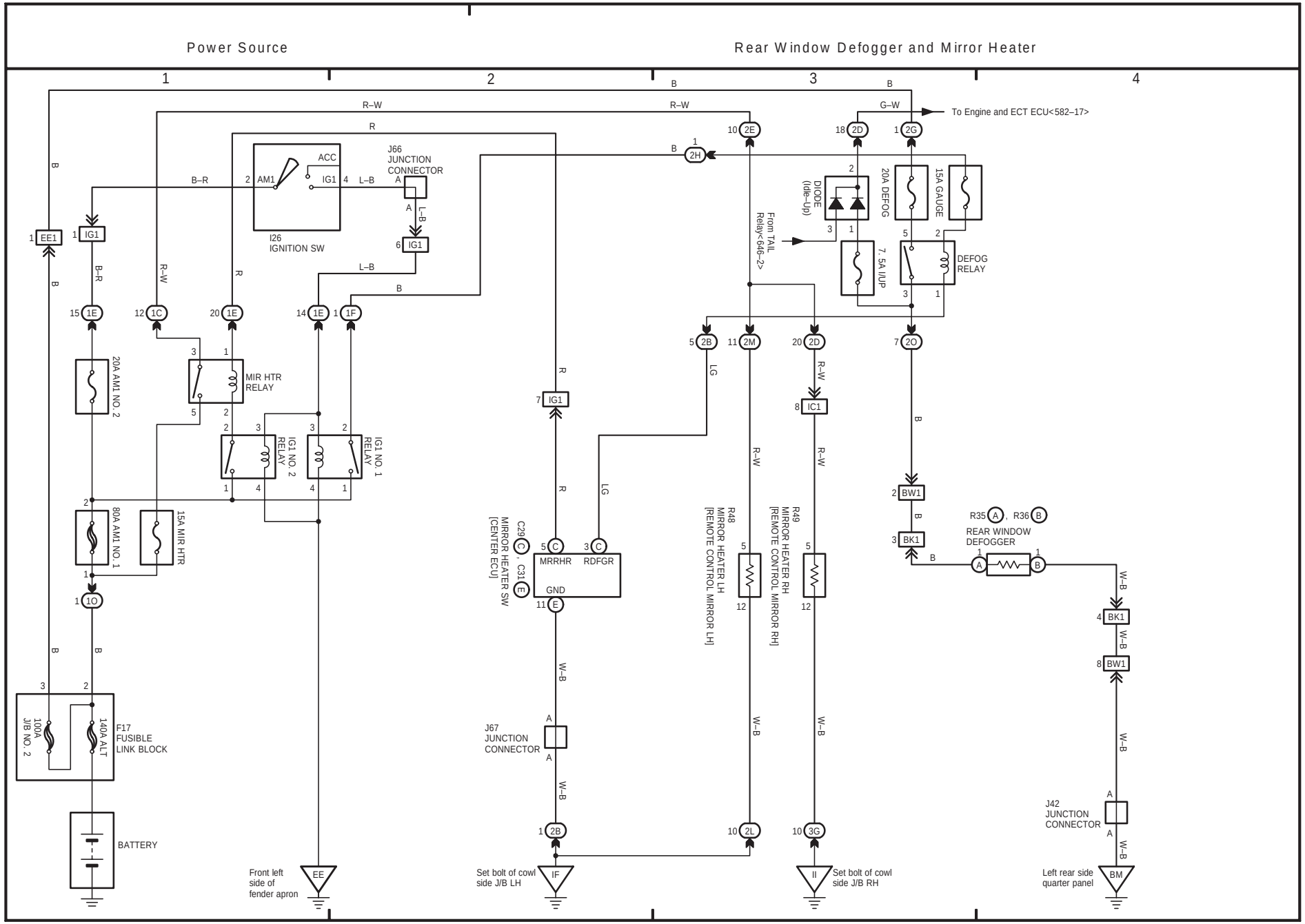
Power Source
Rear Window Defogger and Mirror Heater
1
2
3
4
To Engine and ECT ECU<582–17>
J66 JUNCTION CONNECTOR
I26 IGNITION SW
ACC
AM1
IG1
20A AM1 NO. 2
MIR HTR RELAY
IG1 NO. 2 RELAY
IG1 NO. 1 RELAY
80A AM1 NO. 1
15A MIR HTR
100A J/B NO. 2
140A ALT
F17 FUSIBLE LINK BLOCK
BATTERY
Front left side of fender apron
DIODE (Idle–Up)
20A DEFOG
15A GAUGE
7. 5A I/UP
DEFOG RELAY
From TAIL Relay<646–2>
C29, C31 MIRROR HEATER SW [CENTER ECU]
MRRHR
RDFGR
GND
R48 MIRROR HEATER LH [REMOTE CONTROL MIRROR LH]
R49 MIRROR HEATER RH [REMOTE CONTROL MIRROR RH]
R35, R36 REAR WINDOW DEFOGGER
J67 JUNCTION CONNECTOR
J42 JUNCTION CONNECTOR
Set bolt of cowl side J/B LH
Set bolt of cowl side J/B RH
Left rear side quarter panel

21 LAND CRUISER (RHD)

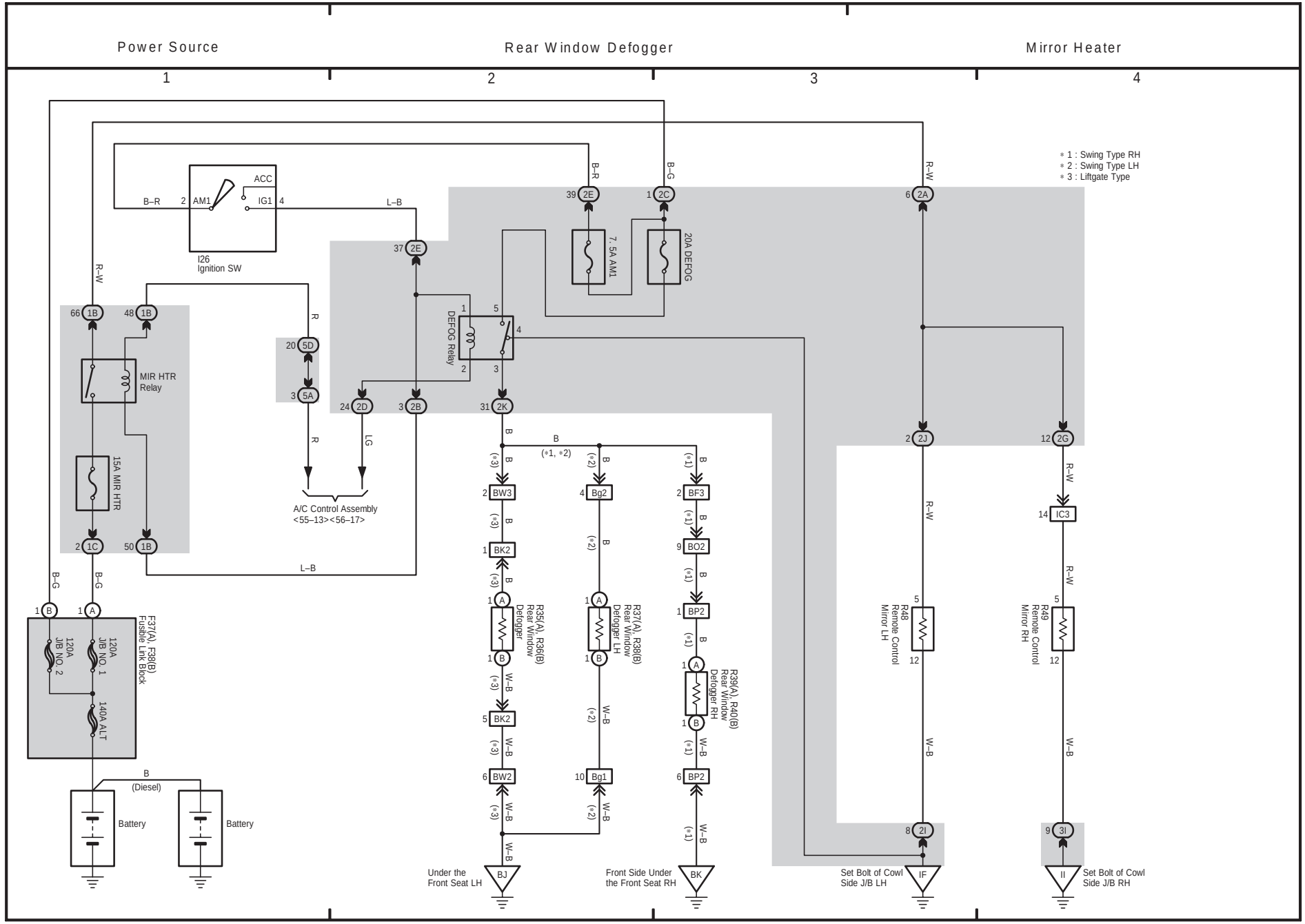

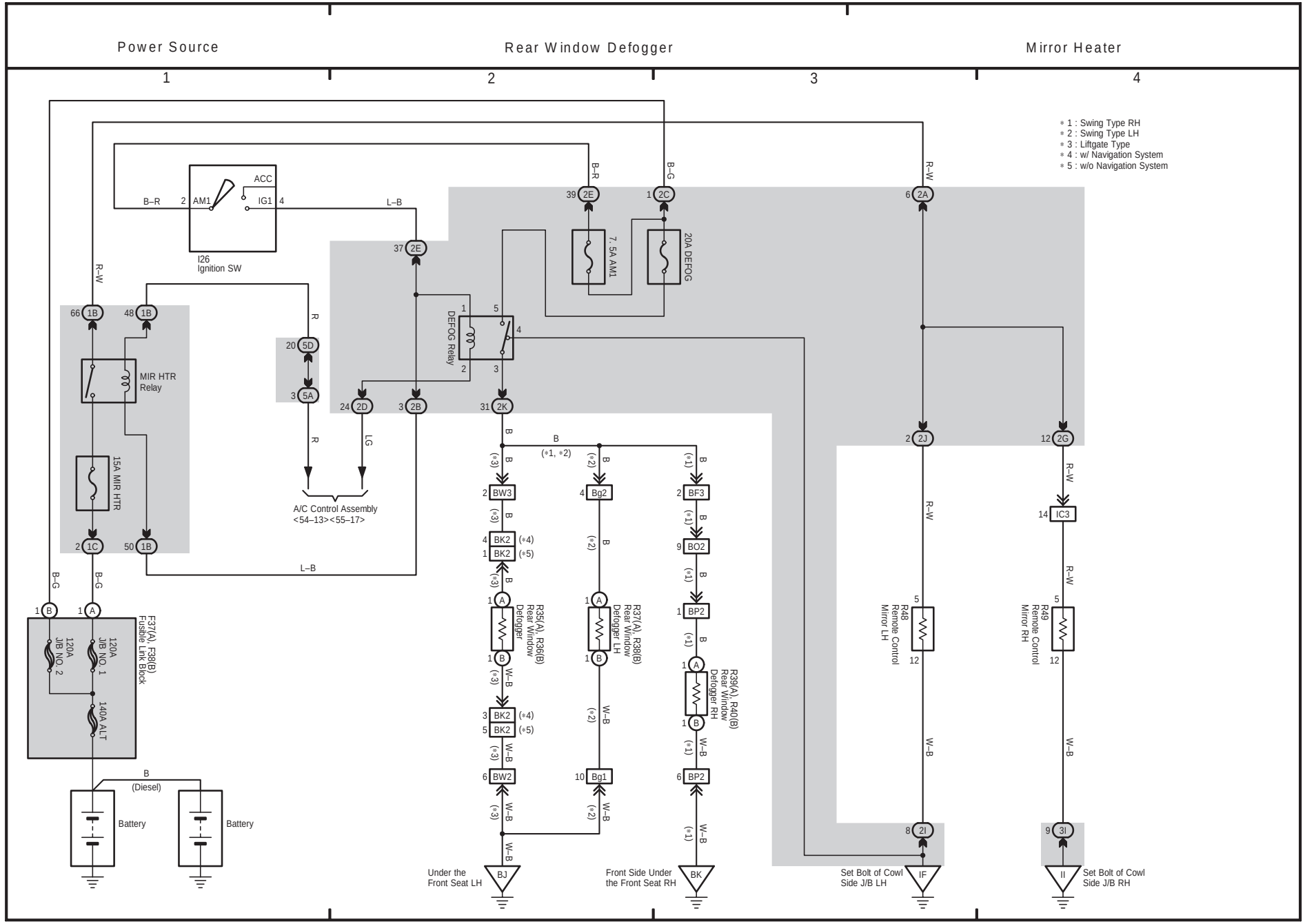
Power Source
Rear Window Defogger
Mirror Heater
1
2
3
4
* 1 : Swing Type RH
* 2 : Swing Type LH
* 3 : Liftgate Type
* 4 : w/ Navigation System
* 5 : w/o Navigation System
ACC
IG1
AM1
I26
Ignition SW
7.5A AM1
20A DEFOG
DEFOG Relay
MIR HTR Relay
15A MIR HTR
A/C Control Assembly
<54–13><55–17>
F37(A), F38(B)
Fusible Link Block
120A J/B NO. 2
120A J/B NO. 1
140A ALT
Battery
Battery
(Diesel)
R35(A), R36(B)
Rear Window Defogger
R37(A), R38(B)
Rear Window Defogger LH
R39(A), R40(B)
Rear Window Defogger RH
R48
Remote Control Mirror LH
R49
Remote Control Mirror RH
Under the Front Seat LH
Front Side Under the Front Seat RH
Set Bolt of Cowl Side J/B LH
Set Bolt of Cowl Side J/B RH

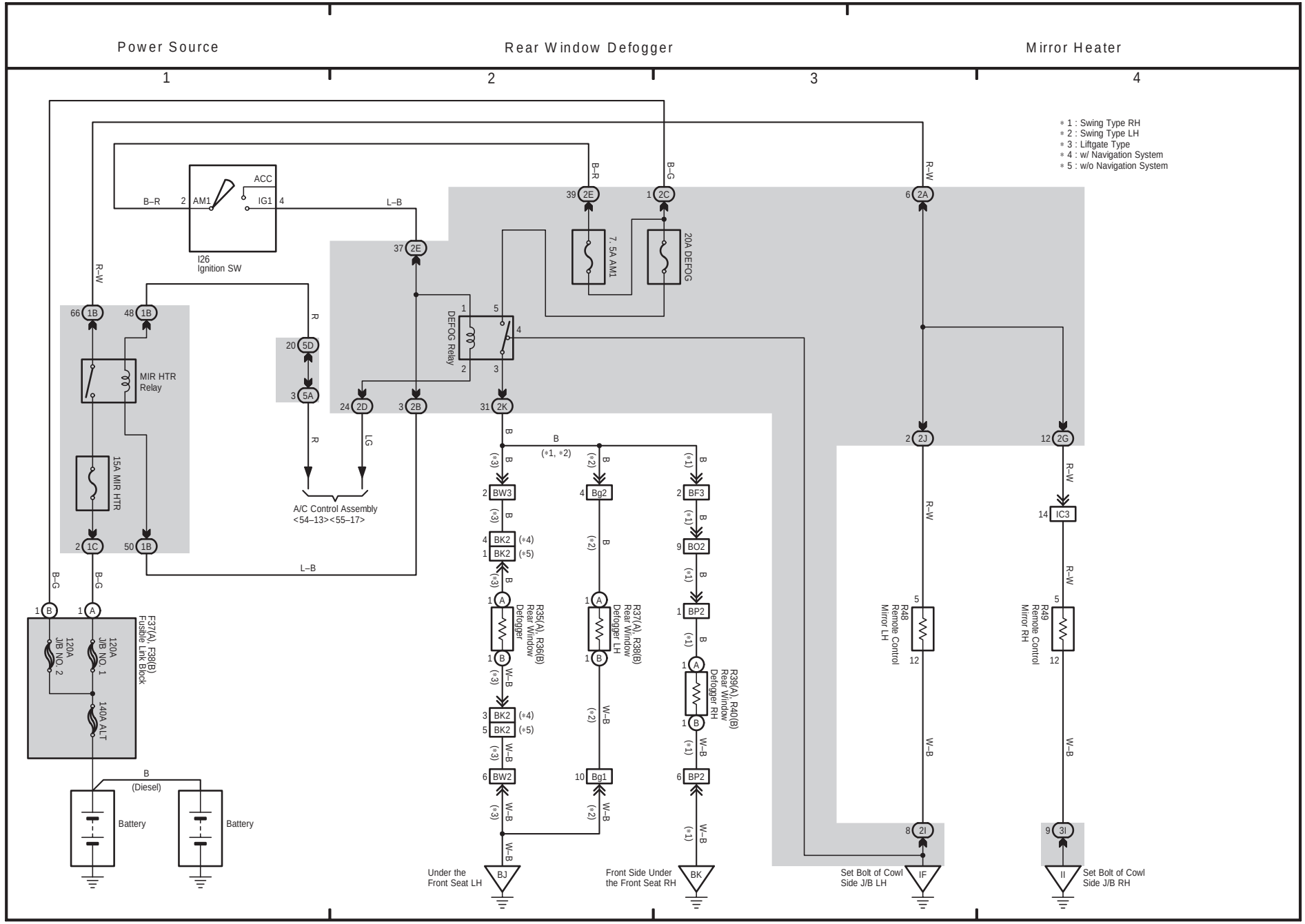
Power Source
Rear Window Defogger
Mirror Heater
1
2
3
4
* 1 : Swing Type RH
* 2 : Swing Type LH
* 3 : Liftgate Type
* 4 : w/ Navigation System
* 5 : w/o Navigation System
ACC
IG1
AM1
I26
Ignition SW
7.5A AM1
20A DEFOG
DEFOG Relay
MIR HTR
Relay
15A MIR HTR
A/C Control Assembly
<54–13><55–17>
F37(A), F38(B)
Fusible Link Block
120A
J/B NO. 2
120A
J/B NO. 1
140A ALT
Battery
Battery
(Diesel)
R35(A), R36(B)
Rear Window
Defogger
R37(A), R38(B)
Rear Window
Defogger LH
R39(A), R40(B)
Rear Window
Defogger RH
R48
Remote Control
Mirror LH
R49
Remote Control
Mirror RH
Under the
Front Seat LH
Front Side Under
the Front Seat RH
Set Bolt of Cowl
Side J/B LH
Set Bolt of Cowl
Side J/B RH

F ELECTRICAL WIRING DIAGRAM (System Circuits)

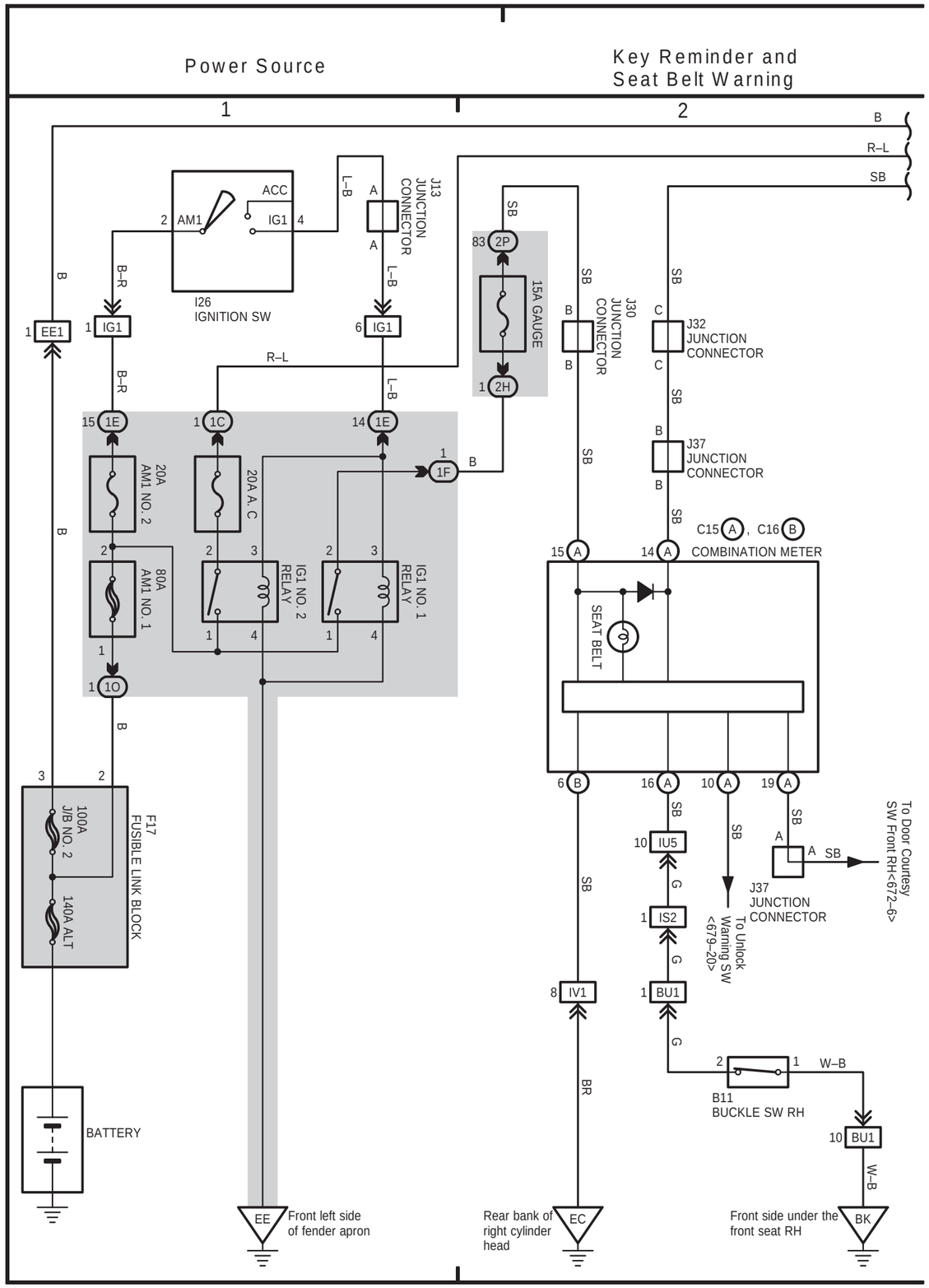

800

LAND CRUISER Station Wagon (EWD342F)

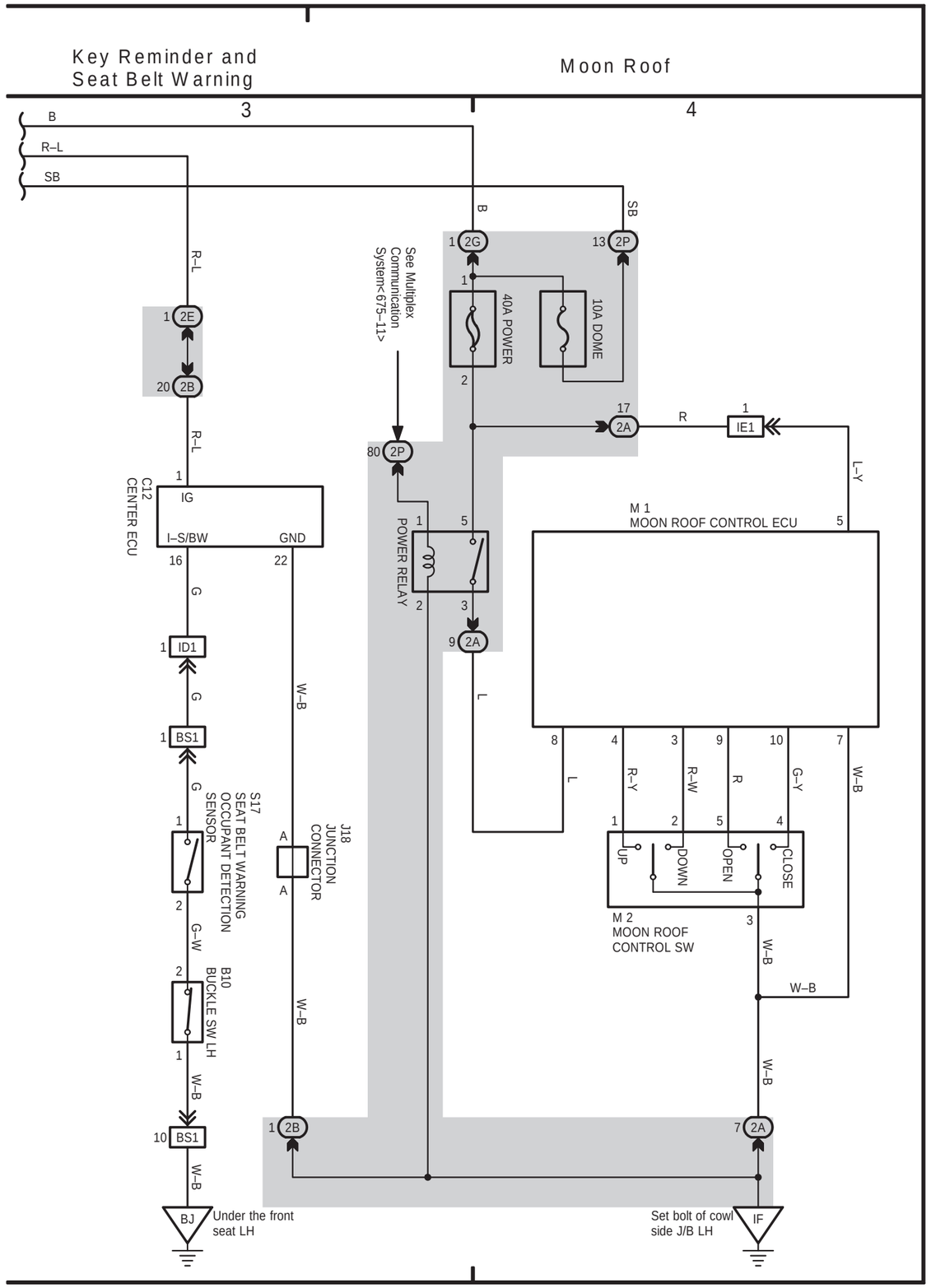

801

LAND CRUISER Station Wagon (EWD342F)

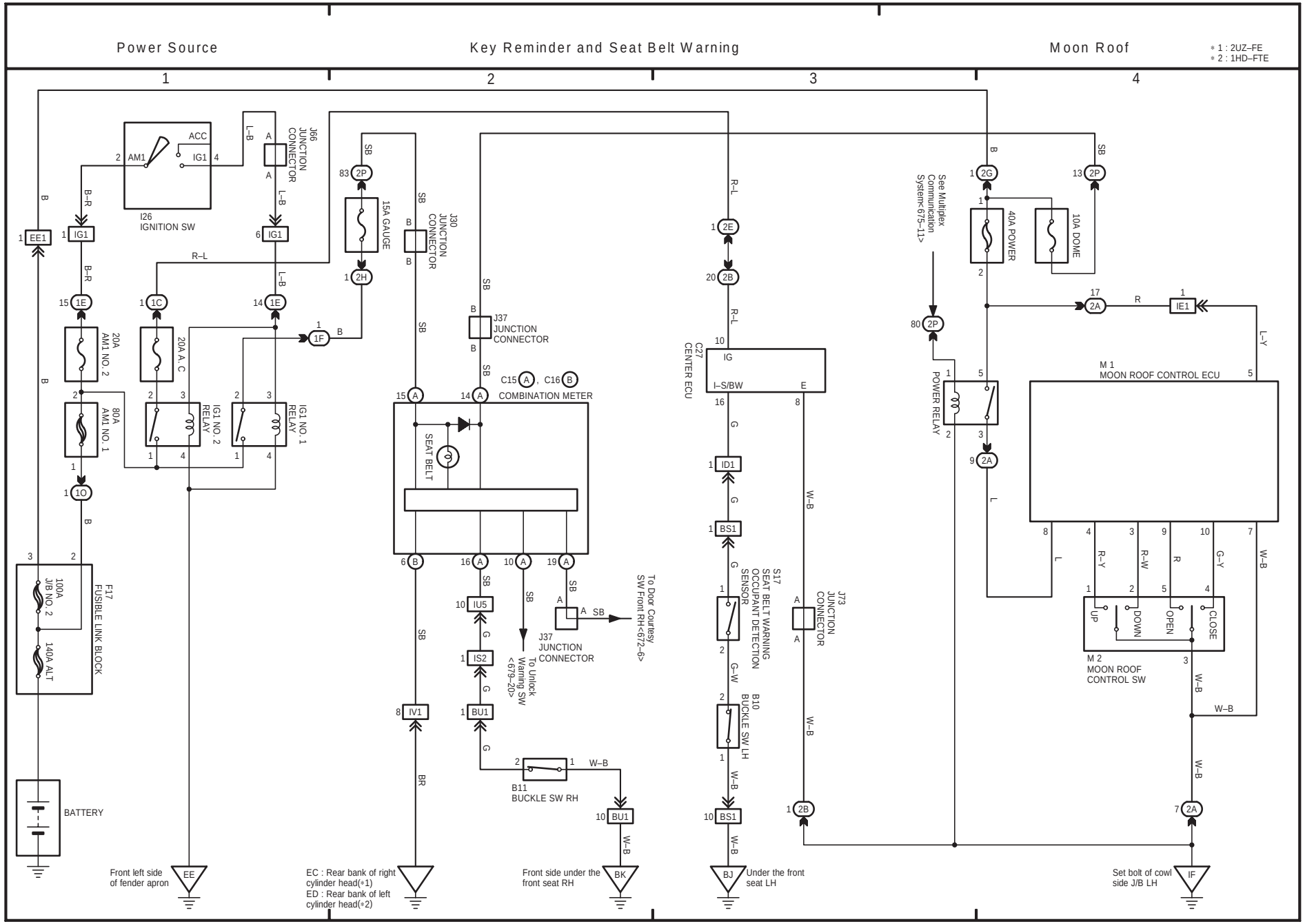
Power Source
Key Reminder and Seat Belt Warning
Moon Roof
* 1 : 2UZ–FE
* 2 : 1HD–FTE
1
2
3
4
I26
IGNITION SW
ACC
IG1
AM1
J66
JUNCTION
CONNECTOR
15A GAUGE
J30
JUNCTION
CONNECTOR
J37
JUNCTION
CONNECTOR
20A
AM1 NO. 2
80A
AM1 NO. 1
20A A. C
IG1 NO. 2
RELAY
IG1 NO. 1
RELAY
C15 A , C16 B
COMBINATION METER
SEAT BELT
C27
CENTER ECU
IG
I–S/BW
E
S17
SEAT BELT WARNING
OCCUPANT DETECTION
SENSOR
B10
BUCKLE SW LH
B11
BUCKLE SW RH
J73
JUNCTION
CONNECTOR
To Door Courtesy
SW Front RH<672–6>
To Unlock
Warning SW
<679–20>
J37
JUNCTION
CONNECTOR
See Multiplex
Communication
System<675–11>
40A POWER
10A DOME
POWER RELAY
M 1
MOON ROOF CONTROL ECU
M 2
MOON ROOF
CONTROL SW
UP
DOWN
OPEN
CLOSE
F17
FUSIBLE LINK BLOCK
100A
J/B NO. 2
140A ALT
BATTERY
Front left side
of fender apron
EC : Rear bank of right
cylinder head(*1)
ED : Rear bank of left
cylinder head(*2)
Front side under the
front seat RH
Under the front
seat LH
Set bolt of cowl
side J/B LH

32 LAND CRUISER (RHD)

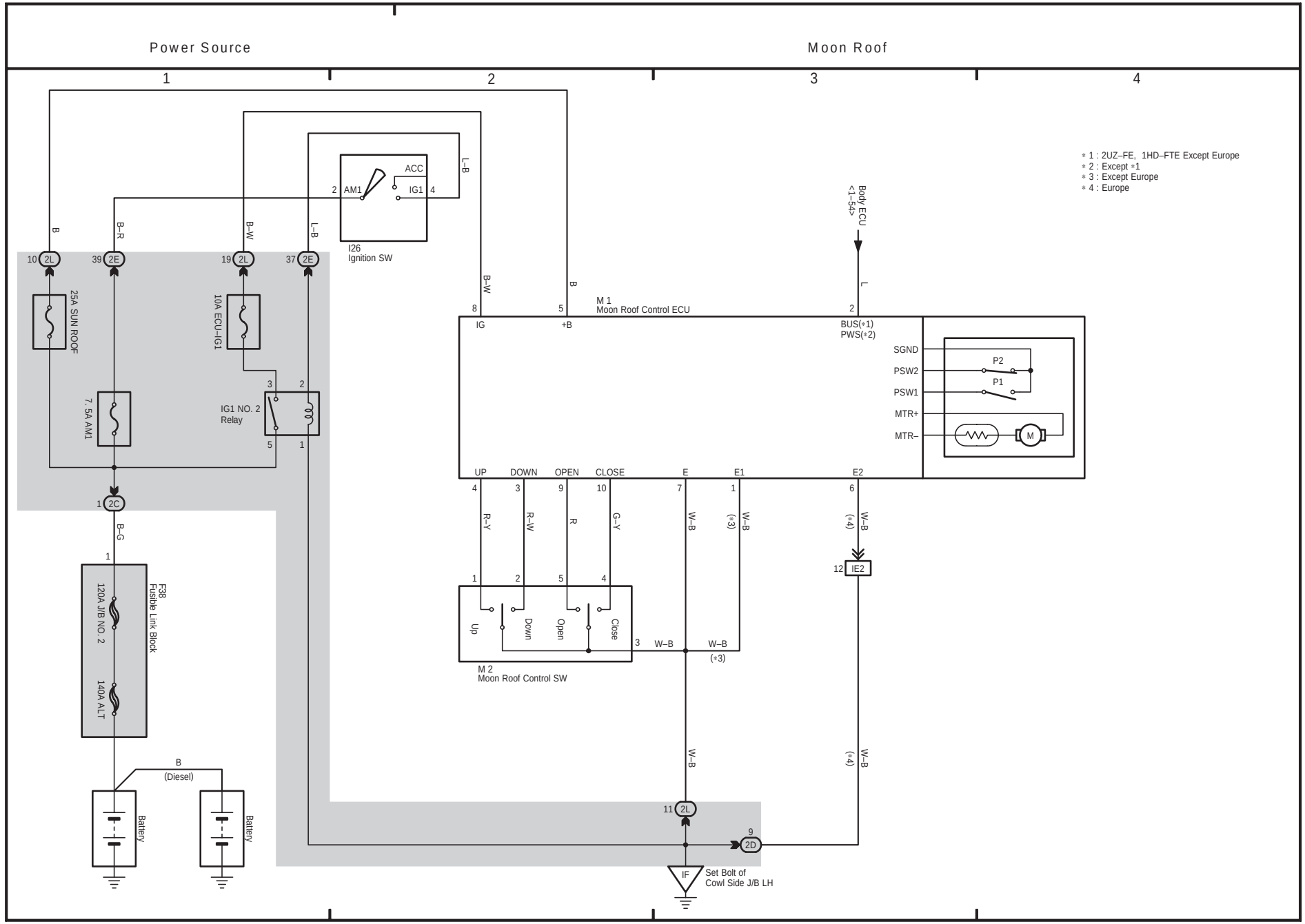

31 LAND CRUISER (RHD)

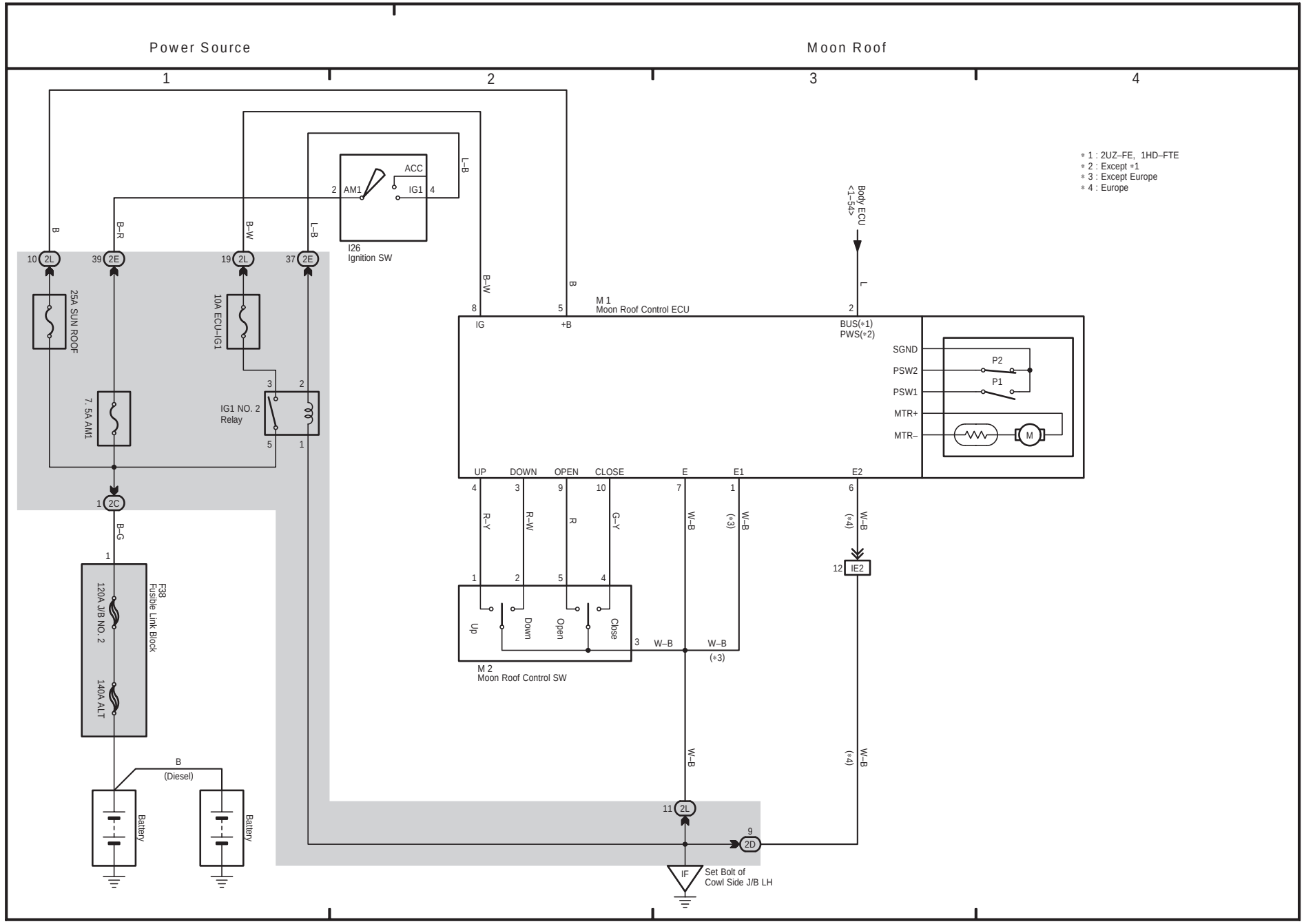

31 LAND CRUISER (RHD)

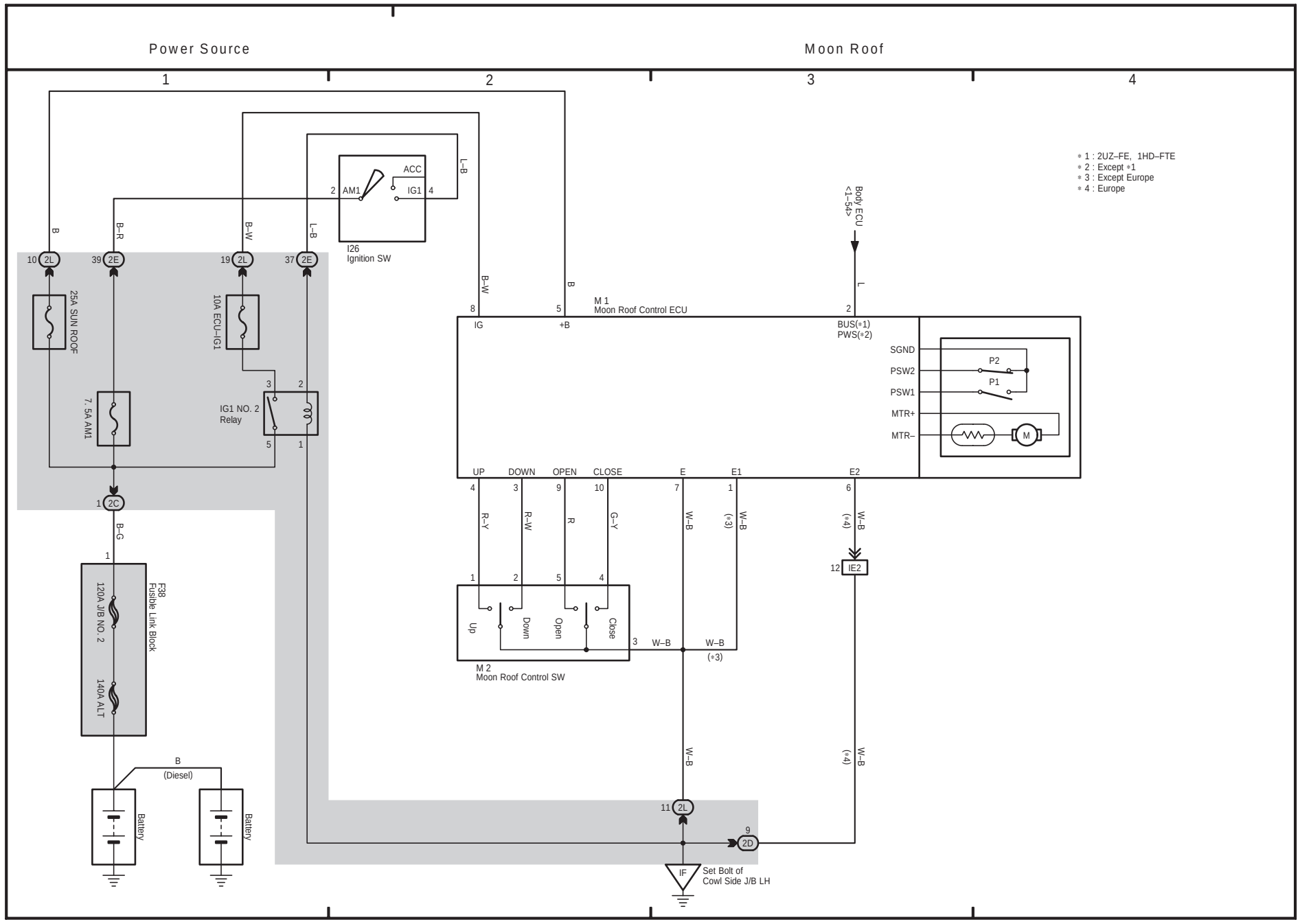

48 LAND CRUISER (RHD)

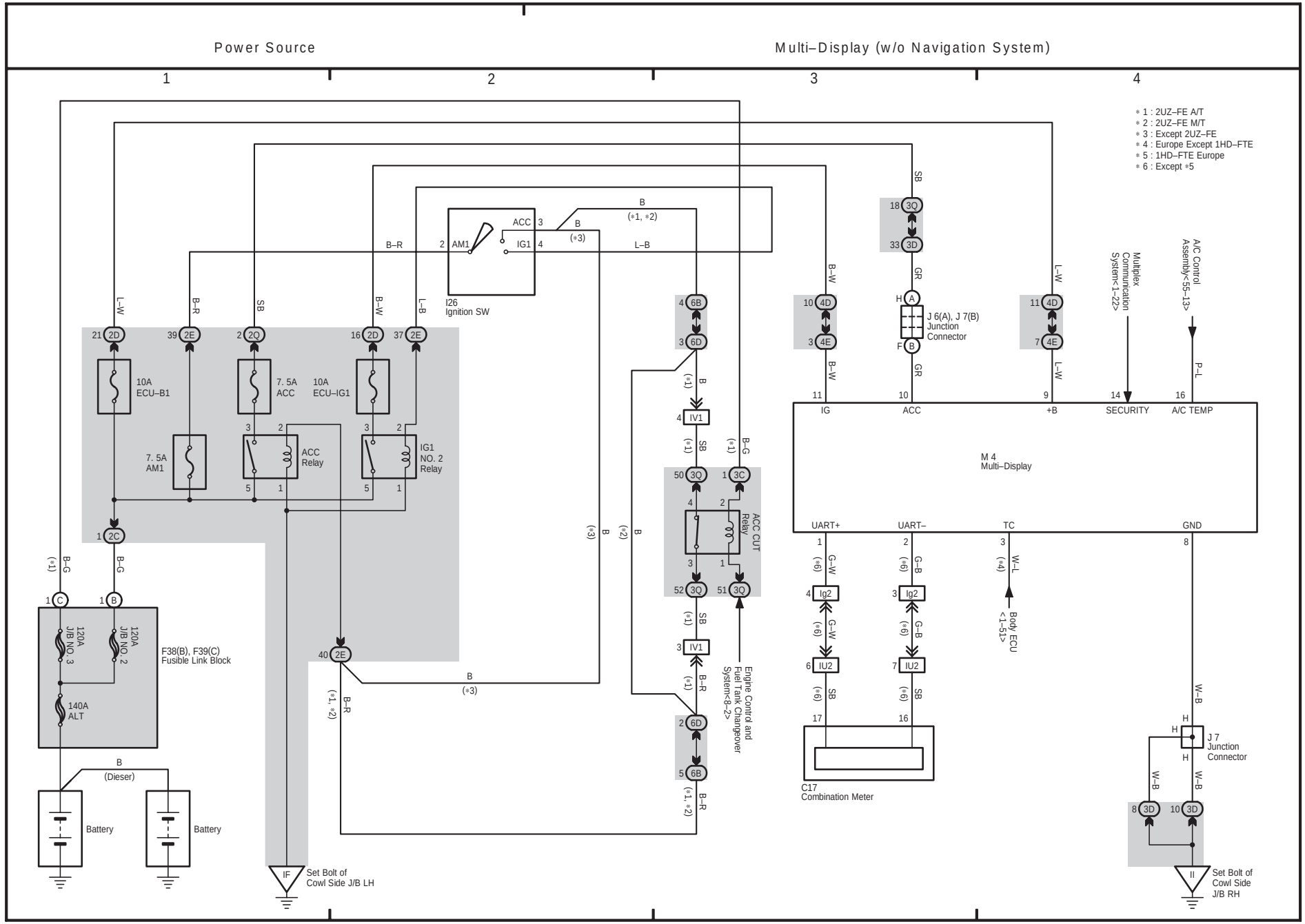

47 LAND CRUISER (RHD)

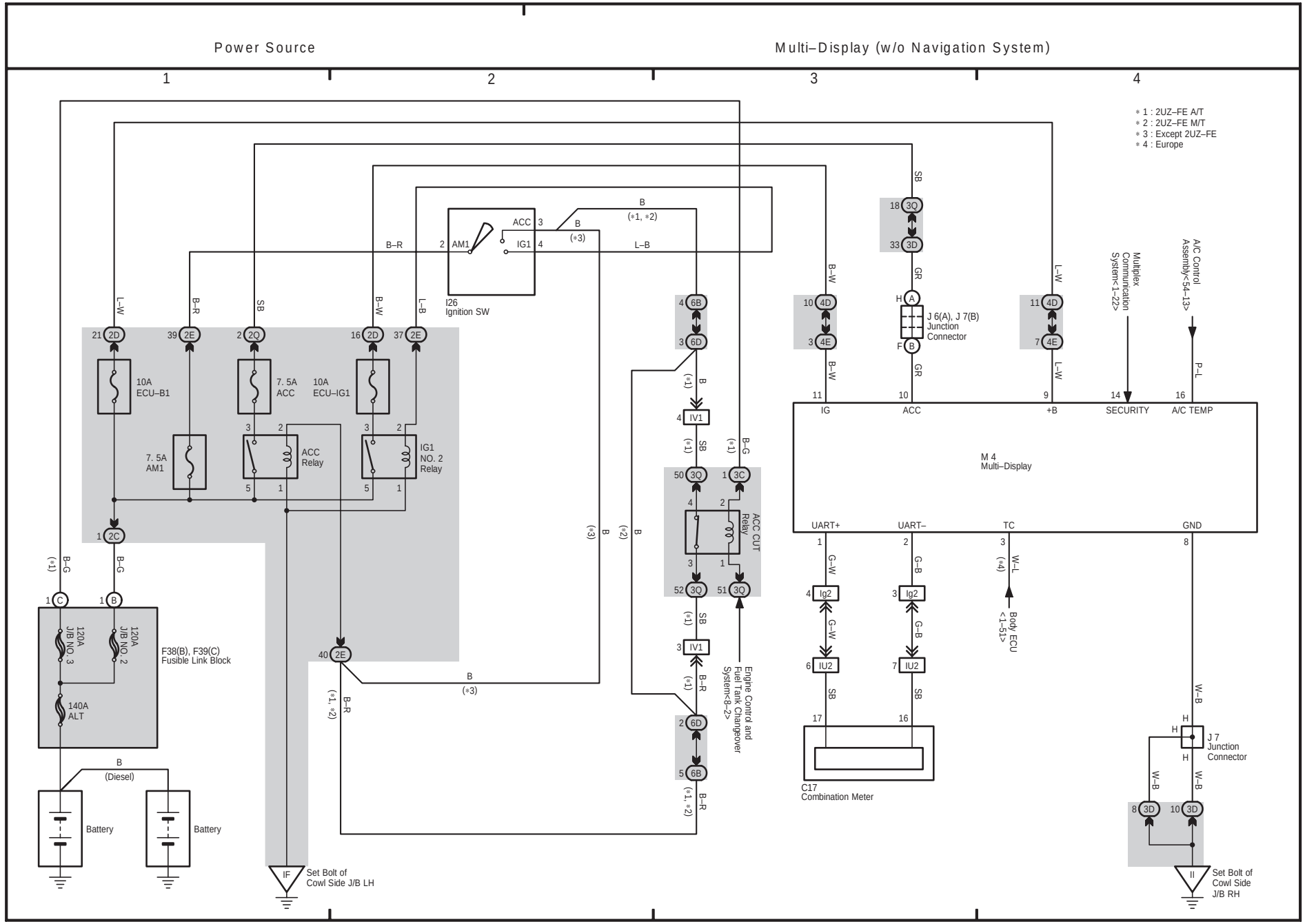

47 LAND CRUISER (RHD)

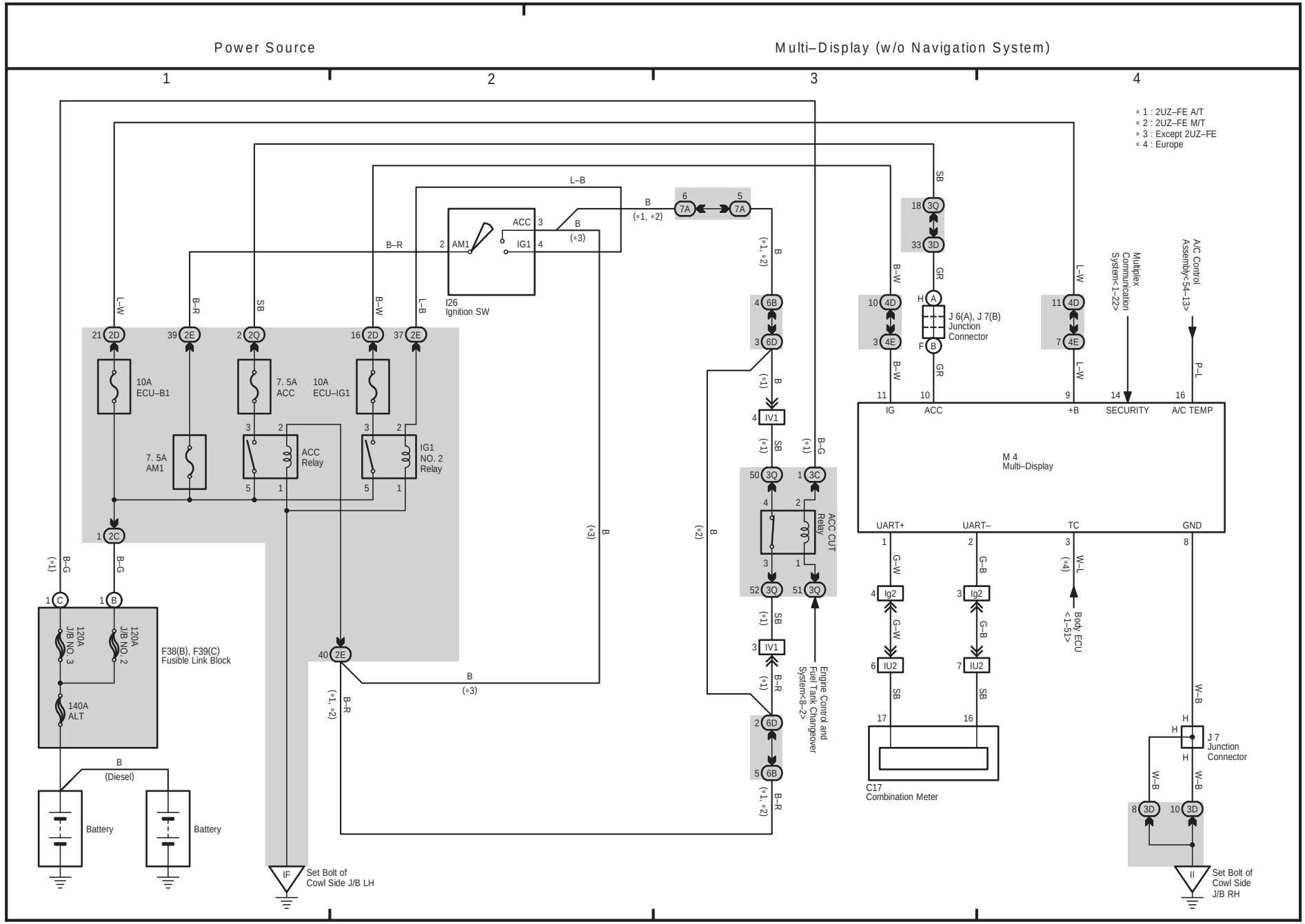

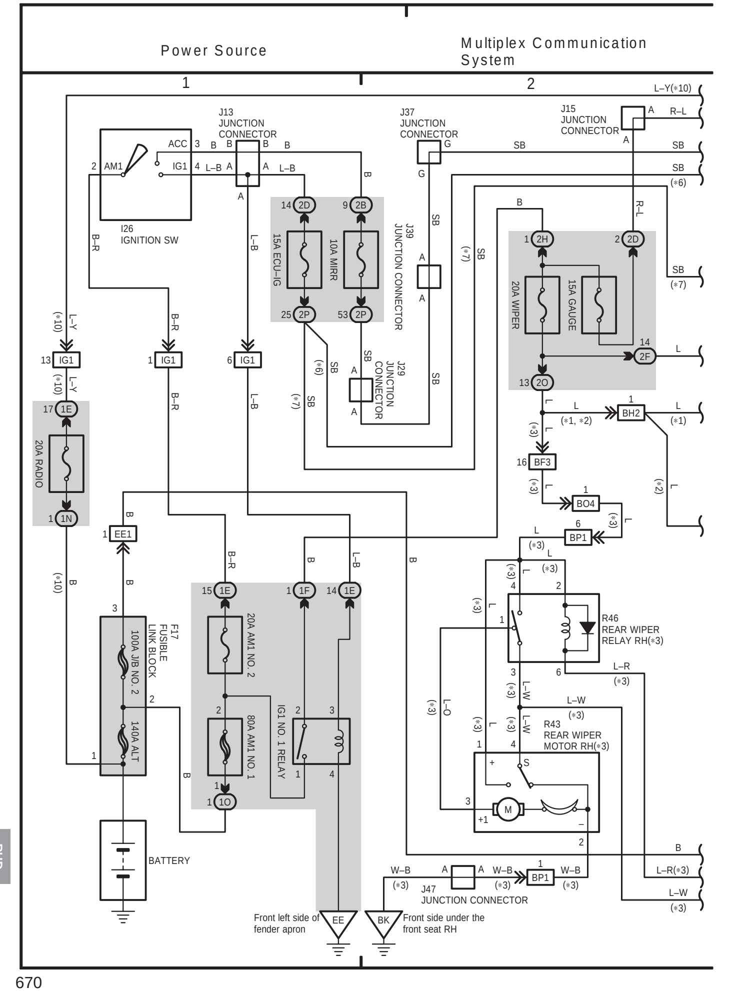
Power Source
Multiplex Communication System

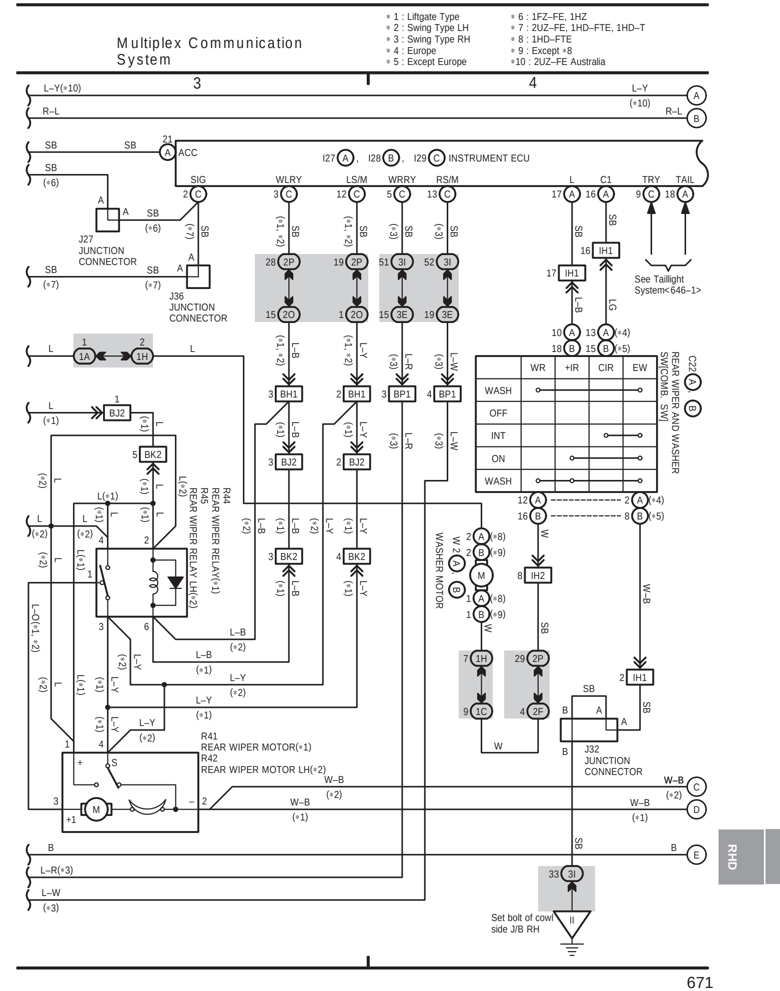
Multiplex Communication System

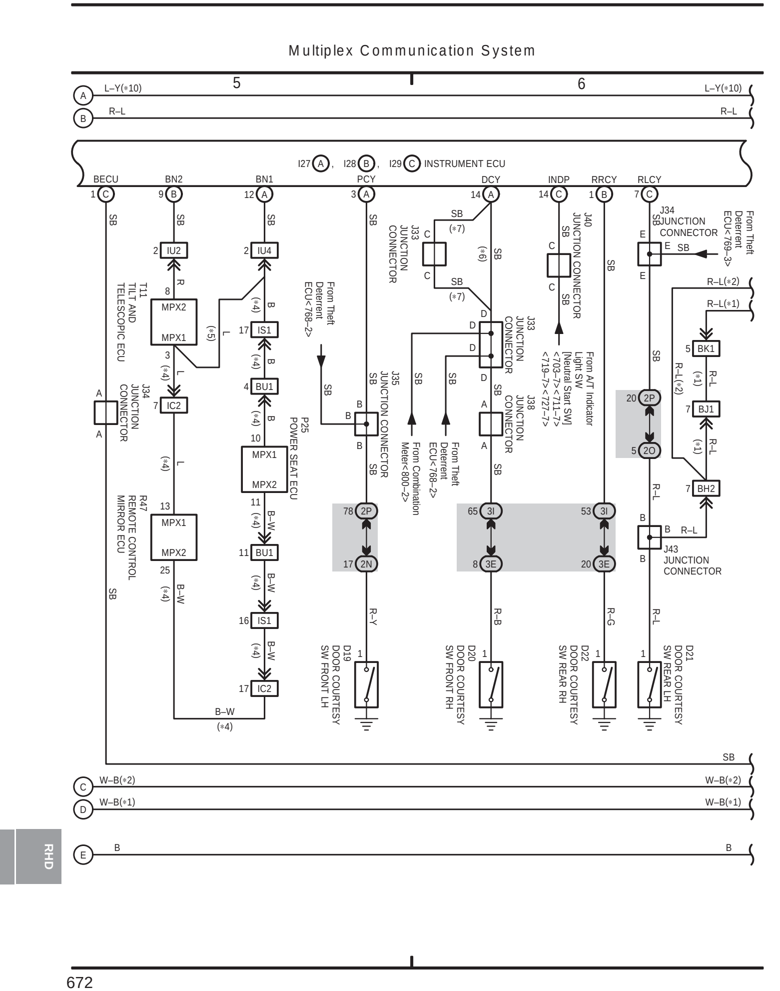
Multiplex Communication System

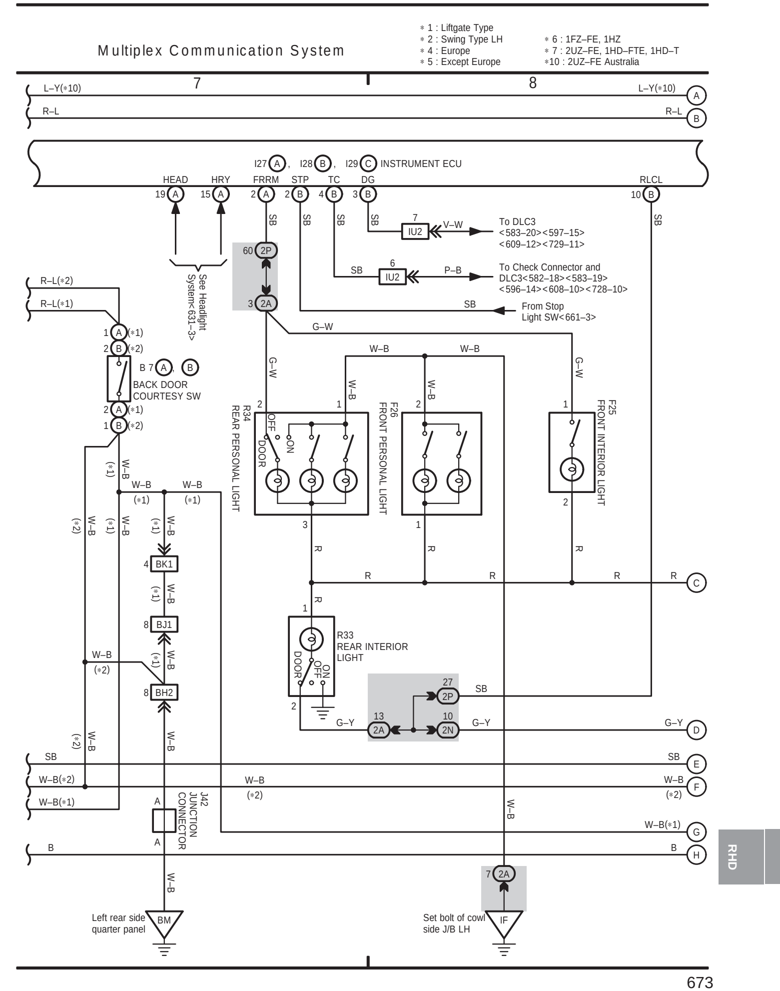
Multiplex Communication System

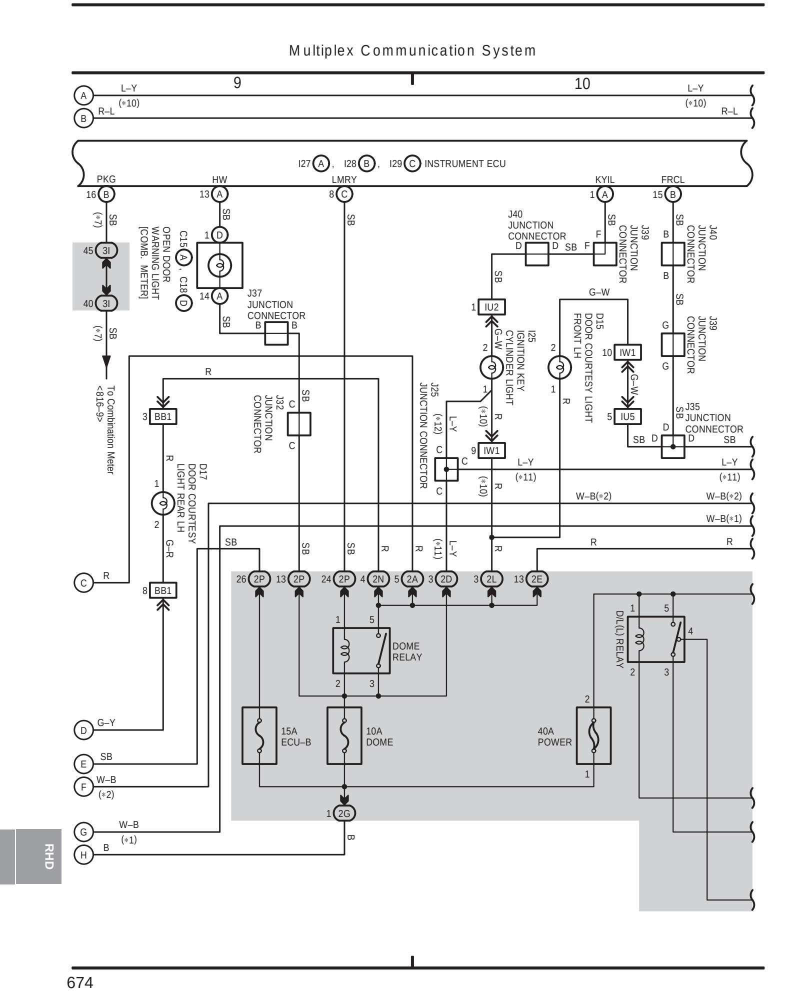
Multiplex Communication System

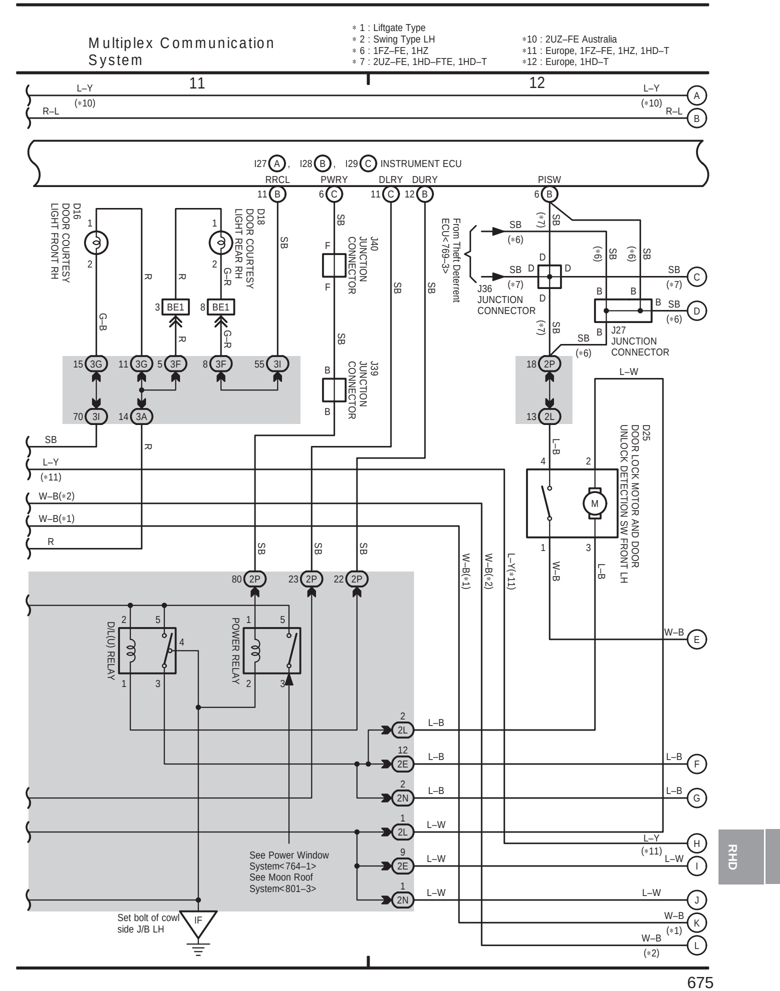
Multiplex Communication System

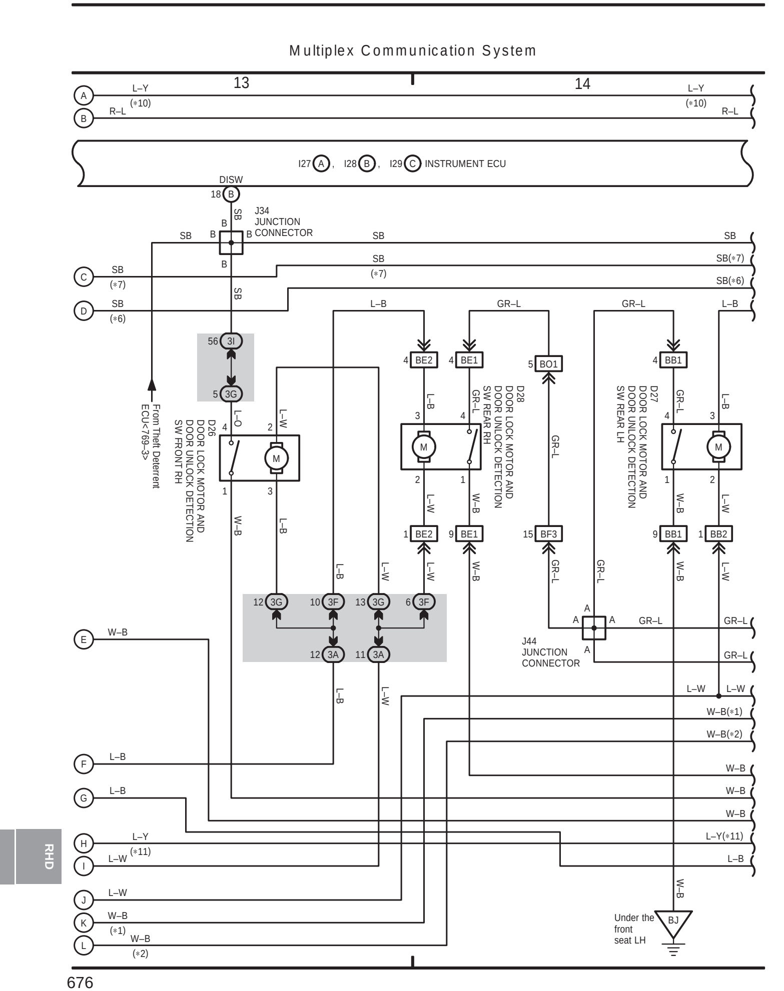
Multiplex Communication System

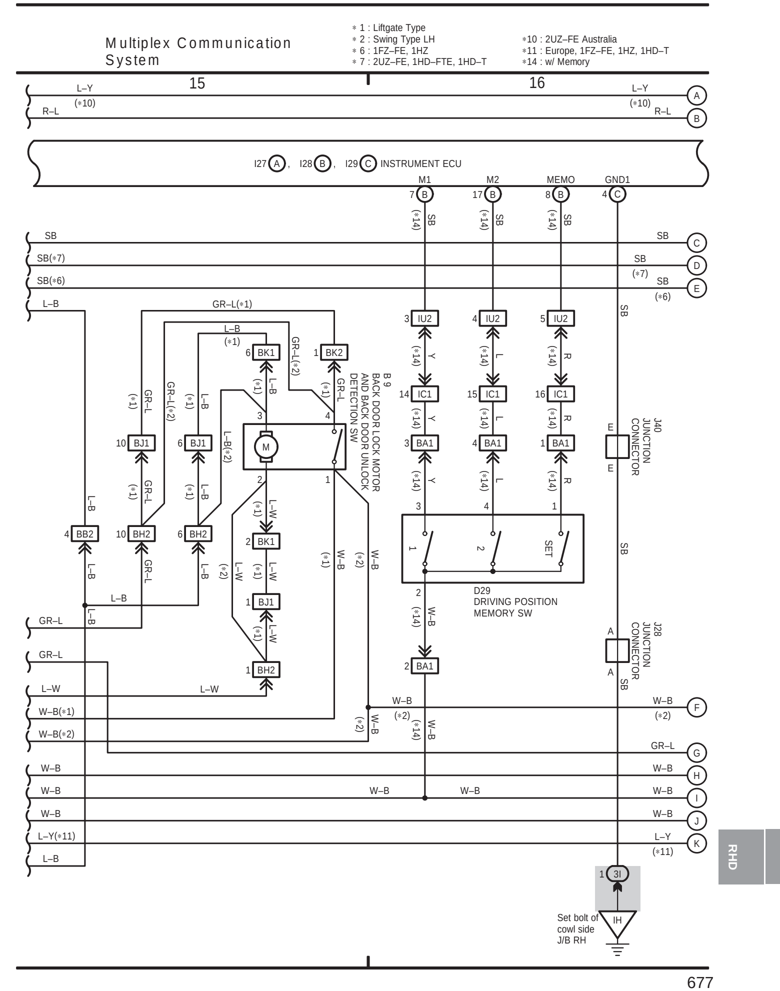
Multiplex Communication System

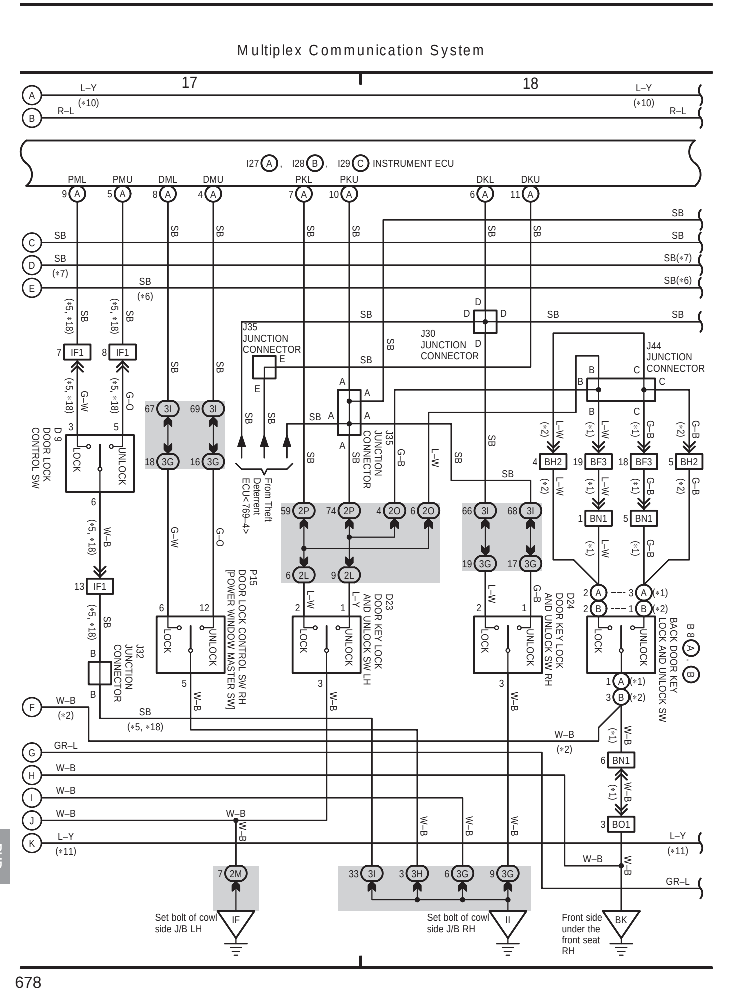
Multiplex Communication System

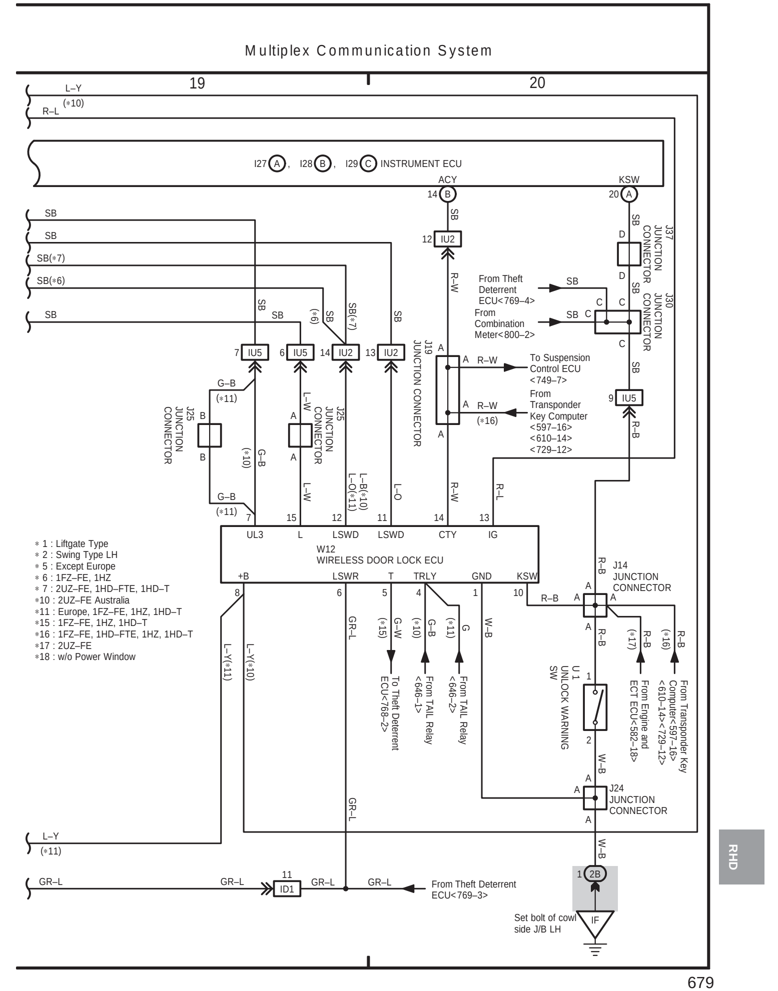
Multiplex Communication System

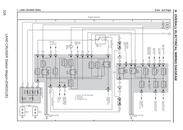

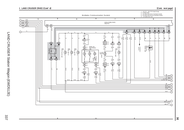

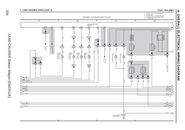

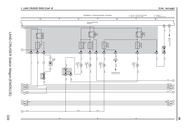

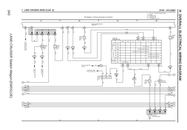

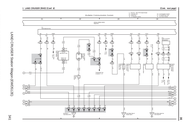

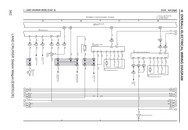

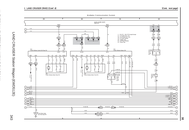

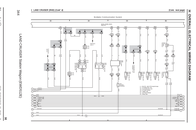

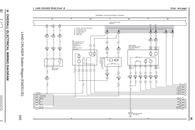

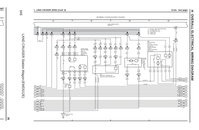

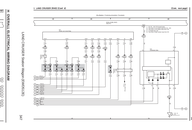

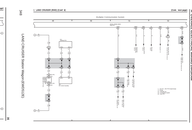

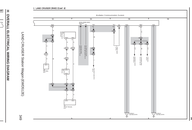

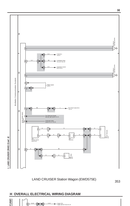

LAND CRUISER Station Wagon (EWD579U)

353

H OVERALL ELECTRICAL WIRING DIAGRAM

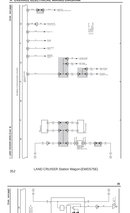

LAND CRUISER Station Wagon (EWD579U)

352

H OVERALL ELECTRICAL WIRING DIAGRAM

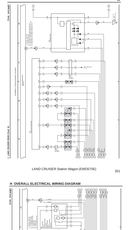

LAND CRUISER Station Wagon (EWD579U)

351

H OVERALL ELECTRICAL WIRING DIAGRAM

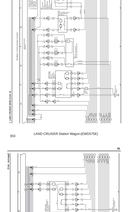

LAND CRUISER Station Wagon (EWD579U)

350

H OVERALL ELECTRICAL WIRING DIAGRAM

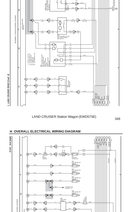

LAND CRUISER Station Wagon (EWD579U)

349

H OVERALL ELECTRICAL WIRING DIAGRAM

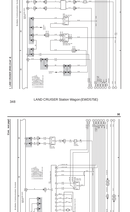

LAND CRUISER Station Wagon (EWD579U)

348

H OVERALL ELECTRICAL WIRING DIAGRAM

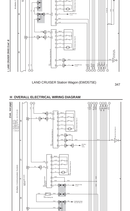

LAND CRUISER Station Wagon (EWD579U)

347

H OVERALL ELECTRICAL WIRING DIAGRAM

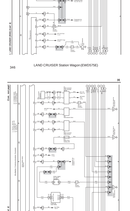

LAND CRUISER Station Wagon (EWD579U)

346

H OVERALL ELECTRICAL WIRING DIAGRAM

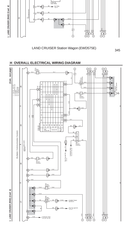

LAND CRUISER Station Wagon (EWD579U)

345

H OVERALL ELECTRICAL WIRING DIAGRAM

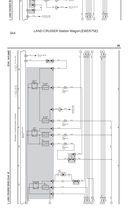

LAND CRUISER Station Wagon (EWD579U)

344

H OVERALL ELECTRICAL WIRING DIAGRAM

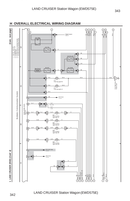

LAND CRUISER Station Wagon (EWD579U)

343

H OVERALL ELECTRICAL WIRING DIAGRAM

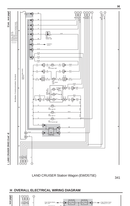

LAND CRUISER Station Wagon (EWD579U)

342

H OVERALL ELECTRICAL WIRING DIAGRAM

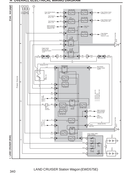

LAND CRUISER Station Wagon (EWD579U)

341

H OVERALL ELECTRICAL WIRING DIAGRAM

LAND CRUISER Station Wagon (EWD579U)

340

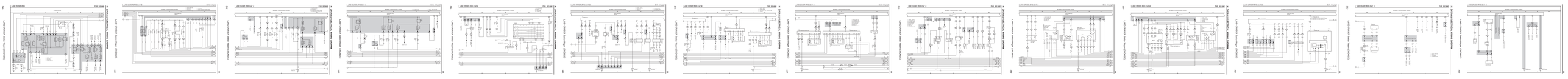

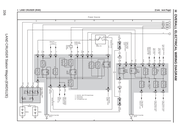

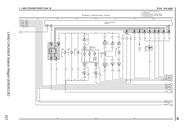

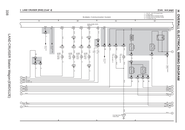

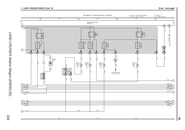

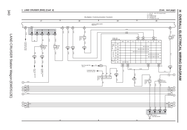

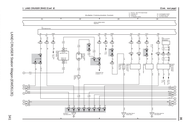

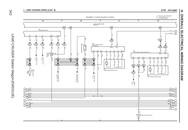

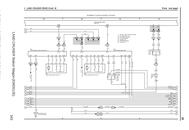

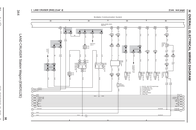

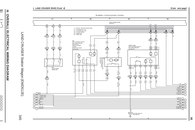

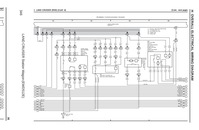

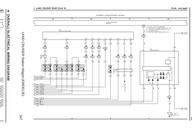

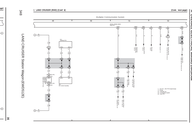

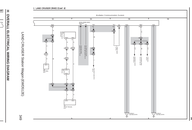

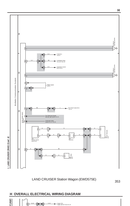

LAND CRUISER Station Wagon (EWD579U)

353

H OVERALL ELECTRICAL WIRING DIAGRAM

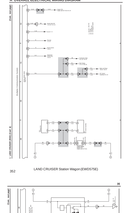

LAND CRUISER Station Wagon (EWD579U)

352

H OVERALL ELECTRICAL WIRING DIAGRAM

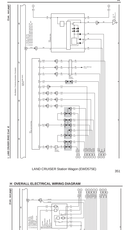

LAND CRUISER Station Wagon (EWD579U)

351

H OVERALL ELECTRICAL WIRING DIAGRAM

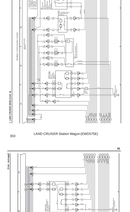

LAND CRUISER Station Wagon (EWD579U)

350

H OVERALL ELECTRICAL WIRING DIAGRAM

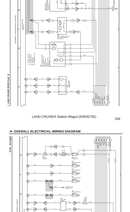

LAND CRUISER Station Wagon (EWD579U)

349

H OVERALL ELECTRICAL WIRING DIAGRAM

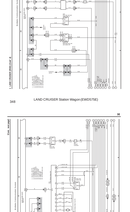

LAND CRUISER Station Wagon (EWD579U)

348

H OVERALL ELECTRICAL WIRING DIAGRAM

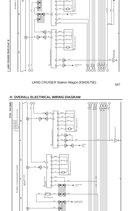

LAND CRUISER Station Wagon (EWD579U)

347

H OVERALL ELECTRICAL WIRING DIAGRAM

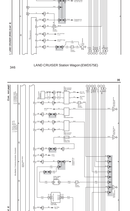

LAND CRUISER Station Wagon (EWD579U)

346

H OVERALL ELECTRICAL WIRING DIAGRAM

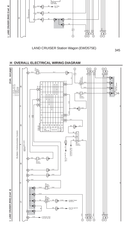

LAND CRUISER Station Wagon (EWD579U)

345

H OVERALL ELECTRICAL WIRING DIAGRAM

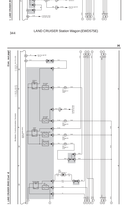

LAND CRUISER Station Wagon (EWD579U)

344

H OVERALL ELECTRICAL WIRING DIAGRAM

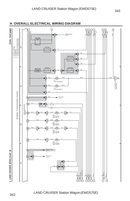

LAND CRUISER Station Wagon (EWD579U)

343

H OVERALL ELECTRICAL WIRING DIAGRAM

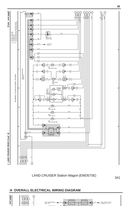

LAND CRUISER Station Wagon (EWD579U)

342

H OVERALL ELECTRICAL WIRING DIAGRAM

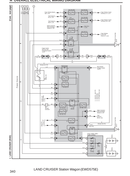

LAND CRUISER Station Wagon (EWD579U)

341

H OVERALL ELECTRICAL WIRING DIAGRAM

LAND CRUISER Station Wagon (EWD579U)

340

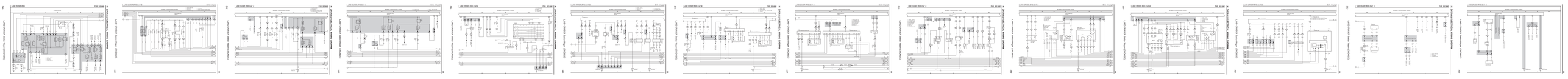

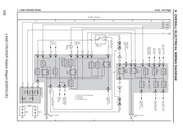

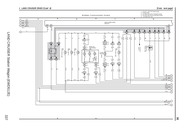

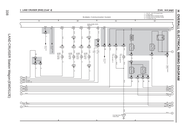

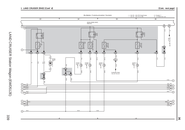

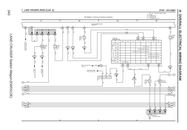

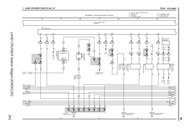

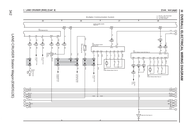

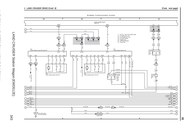

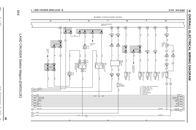

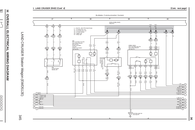

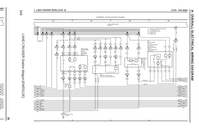

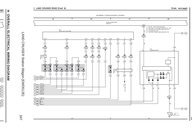

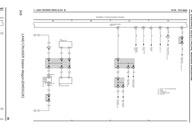

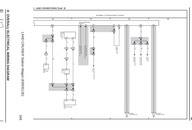

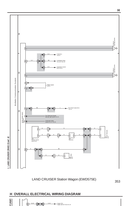

LAND CRUISER Station Wagon (EWD579U)

353

H OVERALL ELECTRICAL WIRING DIAGRAM

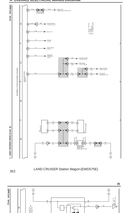

LAND CRUISER Station Wagon (EWD579U)

352

H OVERALL ELECTRICAL WIRING DIAGRAM

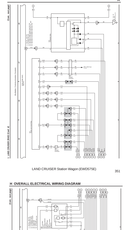

LAND CRUISER Station Wagon (EWD579U)

351

H OVERALL ELECTRICAL WIRING DIAGRAM

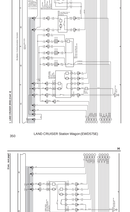

LAND CRUISER Station Wagon (EWD579U)

350

H OVERALL ELECTRICAL WIRING DIAGRAM

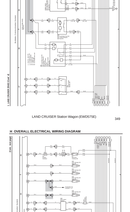

LAND CRUISER Station Wagon (EWD579U)

349

H OVERALL ELECTRICAL WIRING DIAGRAM

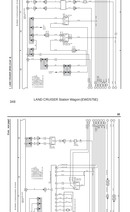

LAND CRUISER Station Wagon (EWD579U)

348

H OVERALL ELECTRICAL WIRING DIAGRAM

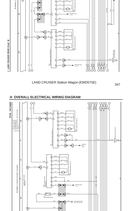

LAND CRUISER Station Wagon (EWD579U)

347

H OVERALL ELECTRICAL WIRING DIAGRAM

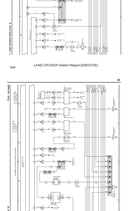

LAND CRUISER Station Wagon (EWD579U)

346

H OVERALL ELECTRICAL WIRING DIAGRAM

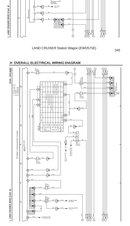

LAND CRUISER Station Wagon (EWD579U)

345

H OVERALL ELECTRICAL WIRING DIAGRAM

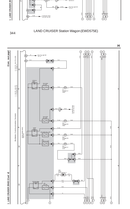

LAND CRUISER Station Wagon (EWD579U)

344

H OVERALL ELECTRICAL WIRING DIAGRAM

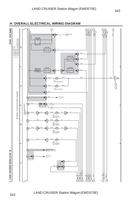

LAND CRUISER Station Wagon (EWD579U)

343

H OVERALL ELECTRICAL WIRING DIAGRAM

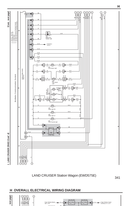

LAND CRUISER Station Wagon (EWD579U)

342

H OVERALL ELECTRICAL WIRING DIAGRAM

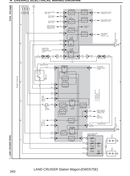

LAND CRUISER Station Wagon (EWD579U)

341

H OVERALL ELECTRICAL WIRING DIAGRAM

LAND CRUISER Station Wagon (EWD579U)

340

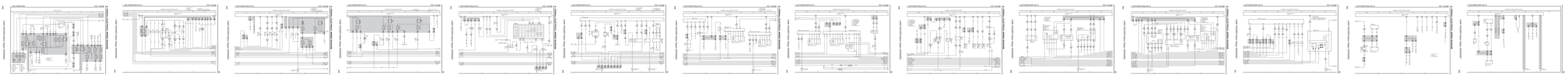

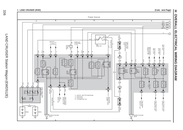

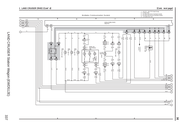

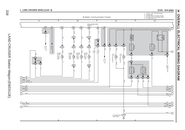

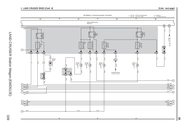

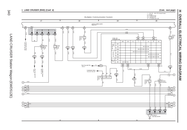

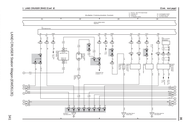

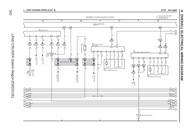

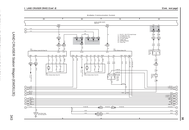

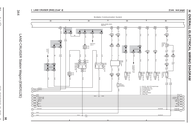

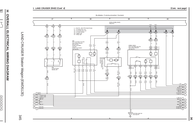

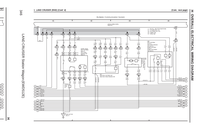

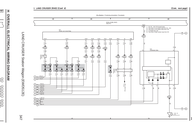

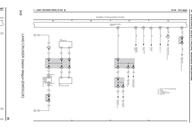

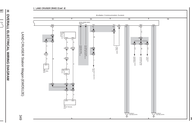

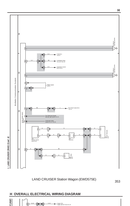

LAND CRUISER Station Wagon (EWD579U)

353

H OVERALL ELECTRICAL WIRING DIAGRAM

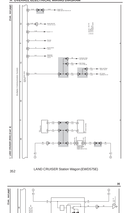

LAND CRUISER Station Wagon (EWD579U)

352

H OVERALL ELECTRICAL WIRING DIAGRAM

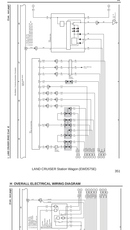

LAND CRUISER Station Wagon (EWD579U)

351

H OVERALL ELECTRICAL WIRING DIAGRAM

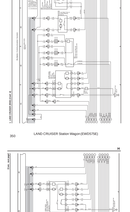

LAND CRUISER Station Wagon (EWD579U)

350

H OVERALL ELECTRICAL WIRING DIAGRAM

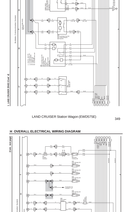

LAND CRUISER Station Wagon (EWD579U)

349

H OVERALL ELECTRICAL WIRING DIAGRAM

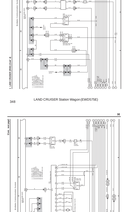

LAND CRUISER Station Wagon (EWD579U)

348

H OVERALL ELECTRICAL WIRING DIAGRAM

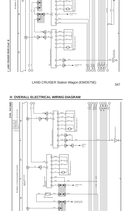

LAND CRUISER Station Wagon (EWD579U)

347

H OVERALL ELECTRICAL WIRING DIAGRAM

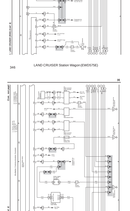

LAND CRUISER Station Wagon (EWD579U)

346

H OVERALL ELECTRICAL WIRING DIAGRAM

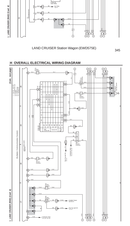

LAND CRUISER Station Wagon (EWD579U)

345

H OVERALL ELECTRICAL WIRING DIAGRAM

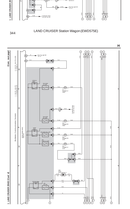

LAND CRUISER Station Wagon (EWD579U)

344

H OVERALL ELECTRICAL WIRING DIAGRAM

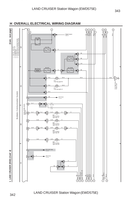

LAND CRUISER Station Wagon (EWD579U)

343

H OVERALL ELECTRICAL WIRING DIAGRAM

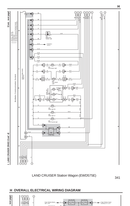

LAND CRUISER Station Wagon (EWD579U)

342

H OVERALL ELECTRICAL WIRING DIAGRAM

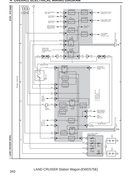

LAND CRUISER Station Wagon (EWD579U)

341

H OVERALL ELECTRICAL WIRING DIAGRAM

LAND CRUISER Station Wagon (EWD579U)

340

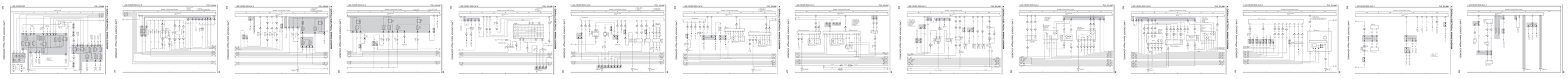

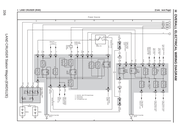

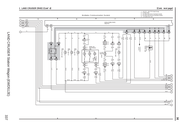

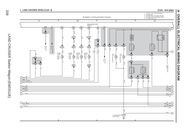

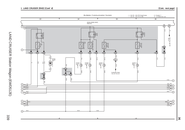

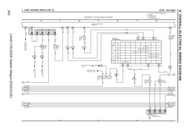

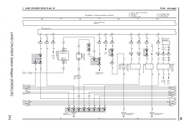

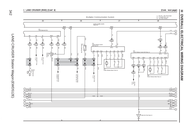

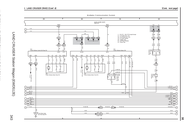

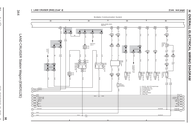

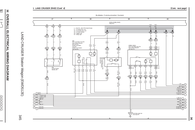

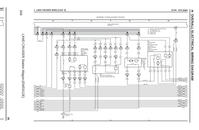

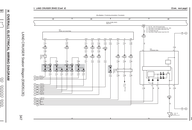

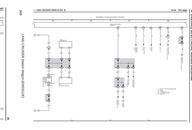

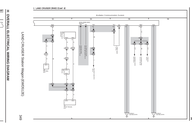

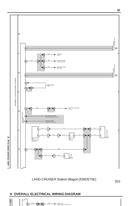

LAND CRUISER Station Wagon (EWD579U)

353

H OVERALL ELECTRICAL WIRING DIAGRAM

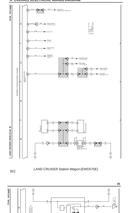

LAND CRUISER Station Wagon (EWD579U)

352

H OVERALL ELECTRICAL WIRING DIAGRAM

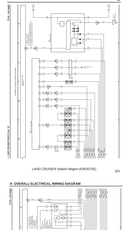

LAND CRUISER Station Wagon (EWD579U)

351

H OVERALL ELECTRICAL WIRING DIAGRAM

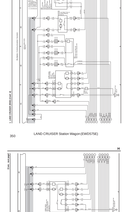

LAND CRUISER Station Wagon (EWD579U)

350

H OVERALL ELECTRICAL WIRING DIAGRAM

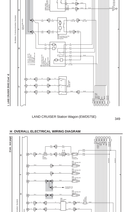

LAND CRUISER Station Wagon (EWD579U)

349

H OVERALL ELECTRICAL WIRING DIAGRAM

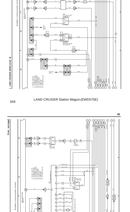

LAND CRUISER Station Wagon (EWD579U)

348

H OVERALL ELECTRICAL WIRING DIAGRAM

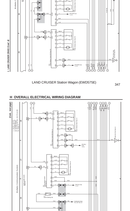

LAND CRUISER Station Wagon (EWD579U)

347

H OVERALL ELECTRICAL WIRING DIAGRAM

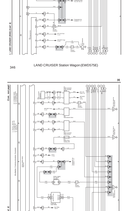

LAND CRUISER Station Wagon (EWD579U)

346

H OVERALL ELECTRICAL WIRING DIAGRAM

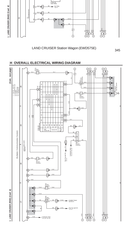

LAND CRUISER Station Wagon (EWD579U)

345

H OVERALL ELECTRICAL WIRING DIAGRAM

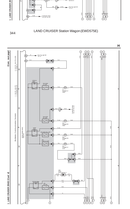

LAND CRUISER Station Wagon (EWD579U)

344

H OVERALL ELECTRICAL WIRING DIAGRAM

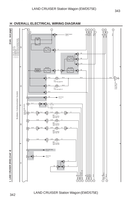

LAND CRUISER Station Wagon (EWD579U)

343

H OVERALL ELECTRICAL WIRING DIAGRAM

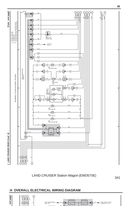

LAND CRUISER Station Wagon (EWD579U)

342

H OVERALL ELECTRICAL WIRING DIAGRAM

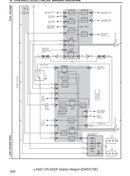

LAND CRUISER Station Wagon (EWD579U)

341

H OVERALL ELECTRICAL WIRING DIAGRAM

LAND CRUISER Station Wagon (EWD579U)

340

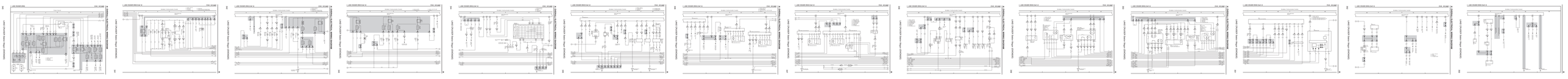

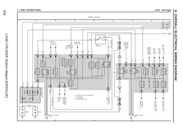

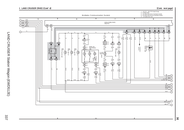

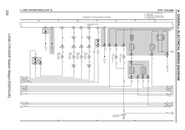

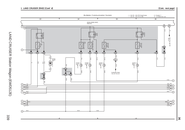

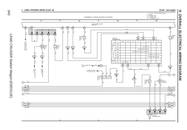

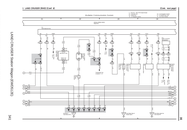

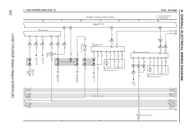

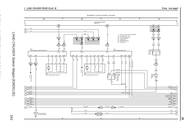

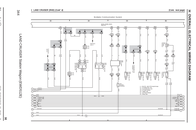

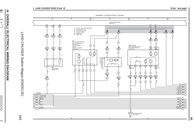

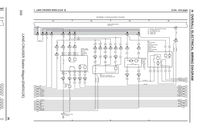

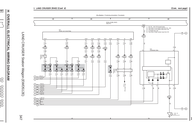

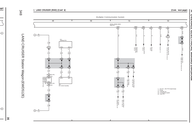

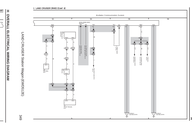

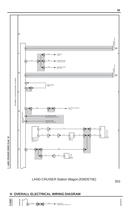

LAND CRUISER Station Wagon (EWD579U)

353

H OVERALL ELECTRICAL WIRING DIAGRAM

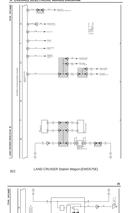

LAND CRUISER Station Wagon (EWD579U)

352

H OVERALL ELECTRICAL WIRING DIAGRAM

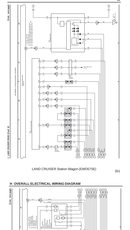

LAND CRUISER Station Wagon (EWD579U)

351

H OVERALL ELECTRICAL WIRING DIAGRAM

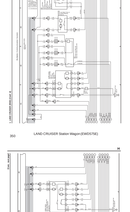

LAND CRUISER Station Wagon (EWD579U)

350

H OVERALL ELECTRICAL WIRING DIAGRAM

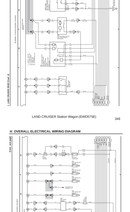

LAND CRUISER Station Wagon (EWD579U)

349

H OVERALL ELECTRICAL WIRING DIAGRAM

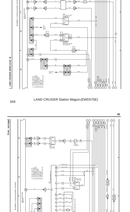

LAND CRUISER Station Wagon (EWD579U)

348

H OVERALL ELECTRICAL WIRING DIAGRAM

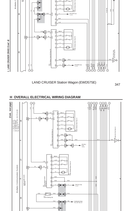

LAND CRUISER Station Wagon (EWD579U)

347

H OVERALL ELECTRICAL WIRING DIAGRAM

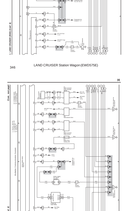

LAND CRUISER Station Wagon (EWD579U)

346

H OVERALL ELECTRICAL WIRING DIAGRAM

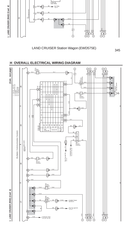

LAND CRUISER Station Wagon (EWD579U)

345

H OVERALL ELECTRICAL WIRING DIAGRAM

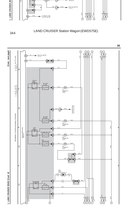

LAND CRUISER Station Wagon (EWD579U)

344

H OVERALL ELECTRICAL WIRING DIAGRAM

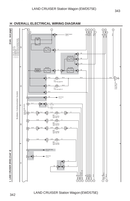

LAND CRUISER Station Wagon (EWD579U)

343

H OVERALL ELECTRICAL WIRING DIAGRAM

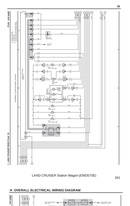

LAND CRUISER Station Wagon (EWD579U)

342

H OVERALL ELECTRICAL WIRING DIAGRAM

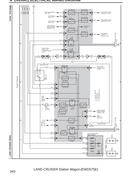

LAND CRUISER Station Wagon (EWD579U)

341

H OVERALL ELECTRICAL WIRING DIAGRAM

LAND CRUISER Station Wagon (EWD579U)

340

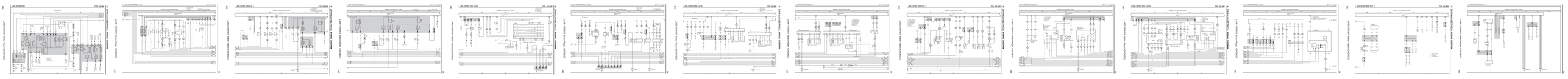

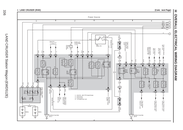

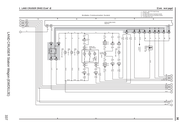

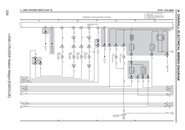

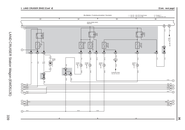

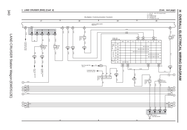

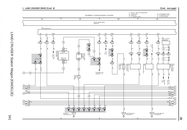

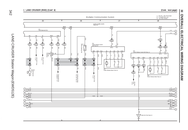

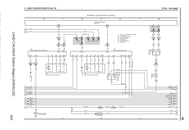

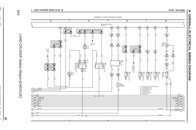

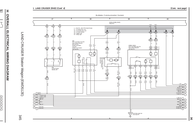

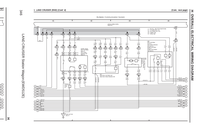

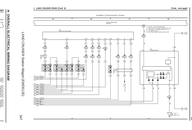

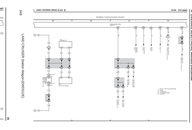

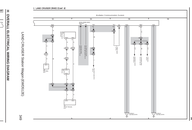

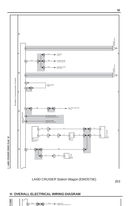

LAND CRUISER Station Wagon (EWD579U)

353

H OVERALL ELECTRICAL WIRING DIAGRAM

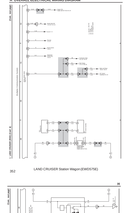

LAND CRUISER Station Wagon (EWD579U)

352

H OVERALL ELECTRICAL WIRING DIAGRAM

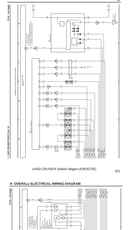

LAND CRUISER Station Wagon (EWD579U)

351

H OVERALL ELECTRICAL WIRING DIAGRAM

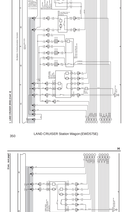

LAND CRUISER Station Wagon (EWD579U)

350

H OVERALL ELECTRICAL WIRING DIAGRAM

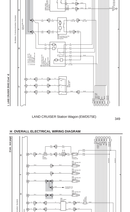

LAND CRUISER Station Wagon (EWD579U)

349

H OVERALL ELECTRICAL WIRING DIAGRAM

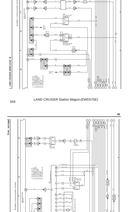

LAND CRUISER Station Wagon (EWD579U)

348

H OVERALL ELECTRICAL WIRING DIAGRAM

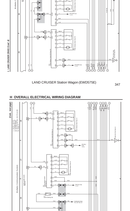

LAND CRUISER Station Wagon (EWD579U)

347

H OVERALL ELECTRICAL WIRING DIAGRAM

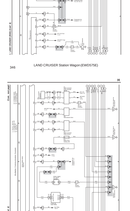

LAND CRUISER Station Wagon (EWD579U)

346

H OVERALL ELECTRICAL WIRING DIAGRAM

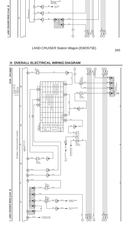

LAND CRUISER Station Wagon (EWD579U)

345

H OVERALL ELECTRICAL WIRING DIAGRAM

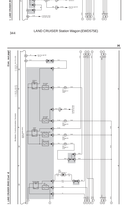

LAND CRUISER Station Wagon (EWD579U)

344

H OVERALL ELECTRICAL WIRING DIAGRAM

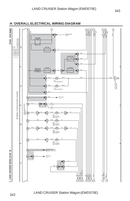

LAND CRUISER Station Wagon (EWD579U)

343

H OVERALL ELECTRICAL WIRING DIAGRAM

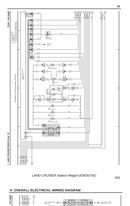

LAND CRUISER Station Wagon (EWD579U)

342

H OVERALL ELECTRICAL WIRING DIAGRAM

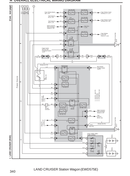

LAND CRUISER Station Wagon (EWD579U)

341

H OVERALL ELECTRICAL WIRING DIAGRAM

LAND CRUISER Station Wagon (EWD579U)

340

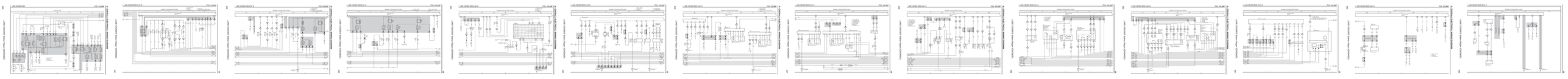

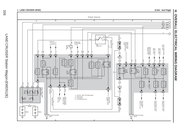

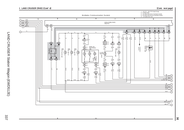

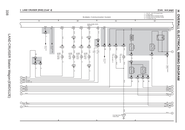

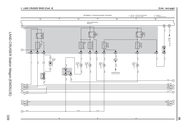

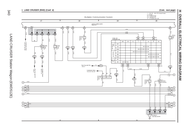

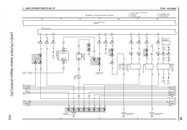

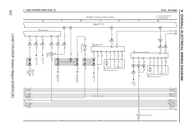

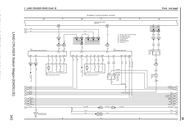

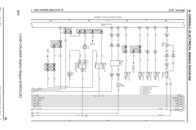

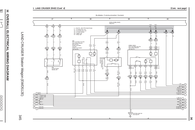

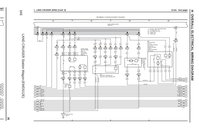

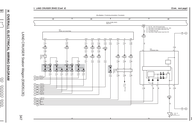

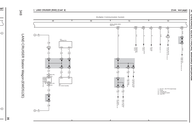

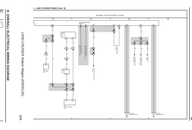

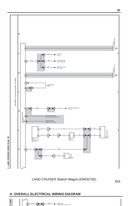

LAND CRUISER Station Wagon (EWD579U)

353

H OVERALL ELECTRICAL WIRING DIAGRAM

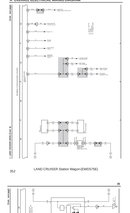

LAND CRUISER Station Wagon (EWD579U)

352

H OVERALL ELECTRICAL WIRING DIAGRAM

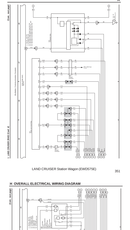

LAND CRUISER Station Wagon (EWD579U)

351

H OVERALL ELECTRICAL WIRING DIAGRAM

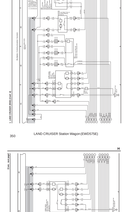

LAND CRUISER Station Wagon (EWD579U)

350

H OVERALL ELECTRICAL WIRING DIAGRAM

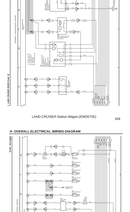

LAND CRUISER Station Wagon (EWD579U)

349

H OVERALL ELECTRICAL WIRING DIAGRAM

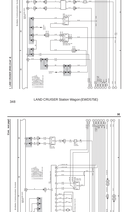

LAND CRUISER Station Wagon (EWD579U)

348

H OVERALL ELECTRICAL WIRING DIAGRAM

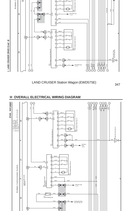

LAND CRUISER Station Wagon (EWD579U)

347

H OVERALL ELECTRICAL WIRING DIAGRAM

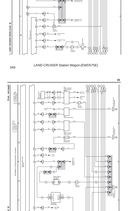

LAND CRUISER Station Wagon (EWD579U)

346

H OVERALL ELECTRICAL WIRING DIAGRAM

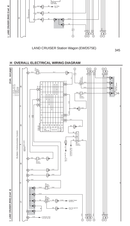

LAND CRUISER Station Wagon (EWD579U)

345

H OVERALL ELECTRICAL WIRING DIAGRAM

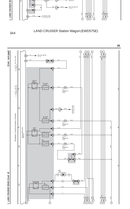

LAND CRUISER Station Wagon (EWD579U)

344

H OVERALL ELECTRICAL WIRING DIAGRAM

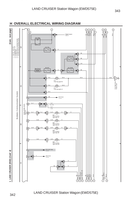

LAND CRUISER Station Wagon (EWD579U)

343

H OVERALL ELECTRICAL WIRING DIAGRAM

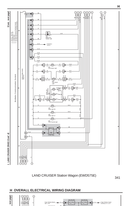

LAND CRUISER Station Wagon (EWD579U)

342

H OVERALL ELECTRICAL WIRING DIAGRAM

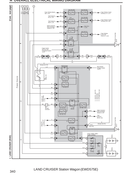

LAND CRUISER Station Wagon (EWD579U)

341

H OVERALL ELECTRICAL WIRING DIAGRAM

LAND CRUISER Station Wagon (EWD579U)

340

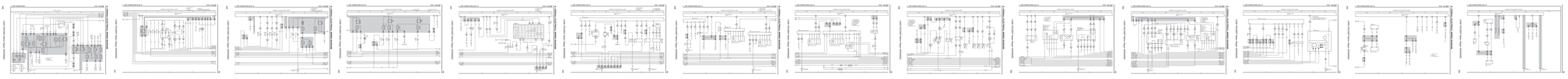

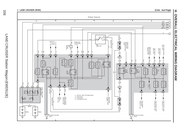

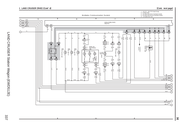

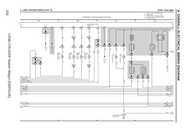

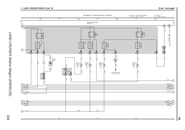

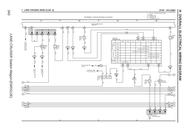

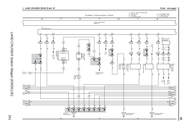

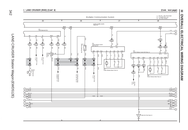

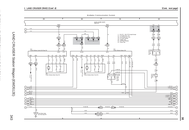

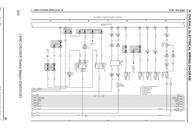

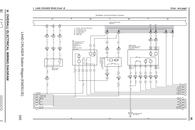

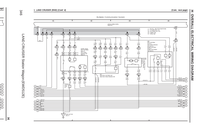

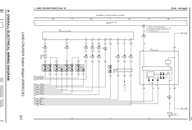

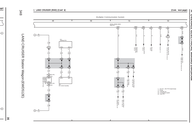

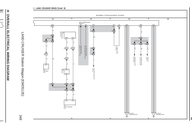

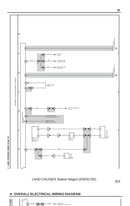

LAND CRUISER Station Wagon (EWD579U)

353

H OVERALL ELECTRICAL WIRING DIAGRAM

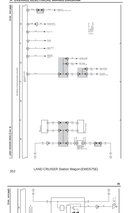

LAND CRUISER Station Wagon (EWD579U)

352

H OVERALL ELECTRICAL WIRING DIAGRAM

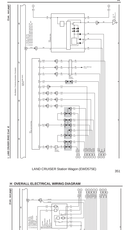

LAND CRUISER Station Wagon (EWD579U)

351

H OVERALL ELECTRICAL WIRING DIAGRAM

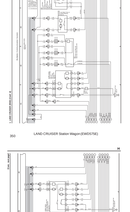

LAND CRUISER Station Wagon (EWD579U)

350

H OVERALL ELECTRICAL WIRING DIAGRAM

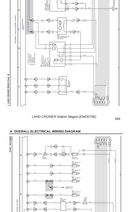

LAND CRUISER Station Wagon (EWD579U)

349

H OVERALL ELECTRICAL WIRING DIAGRAM

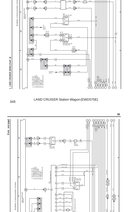

LAND CRUISER Station Wagon (EWD579U)

348

H OVERALL ELECTRICAL WIRING DIAGRAM

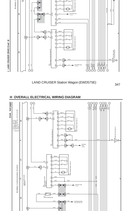

LAND CRUISER Station Wagon (EWD579U)

347

H OVERALL ELECTRICAL WIRING DIAGRAM

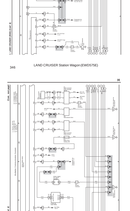

LAND CRUISER Station Wagon (EWD579U)

346

H OVERALL ELECTRICAL WIRING DIAGRAM

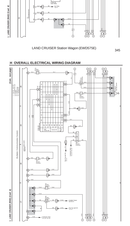

LAND CRUISER Station Wagon (EWD579U)

345

H OVERALL ELECTRICAL WIRING DIAGRAM

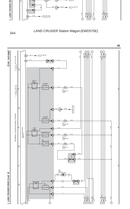

LAND CRUISER Station Wagon (EWD579U)

344

H OVERALL ELECTRICAL WIRING DIAGRAM

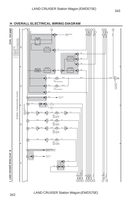

LAND CRUISER Station Wagon (EWD579U)

343

H OVERALL ELECTRICAL WIRING DIAGRAM

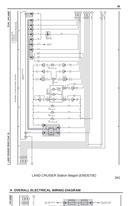

LAND CRUISER Station Wagon (EWD579U)

342

H OVERALL ELECTRICAL WIRING DIAGRAM

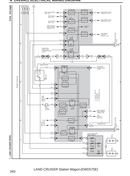

LAND CRUISER Station Wagon (EWD579U)

341

H OVERALL ELECTRICAL WIRING DIAGRAM

LAND CRUISER Station Wagon (EWD579U)

340

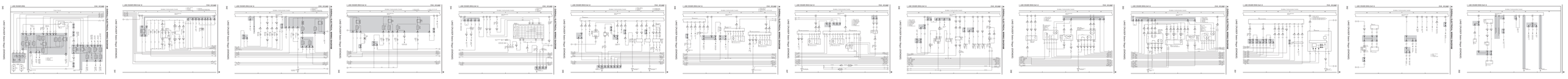

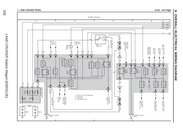

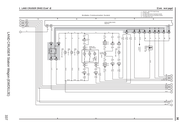

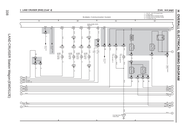

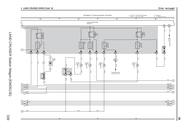

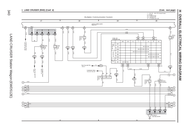

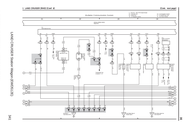

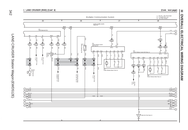

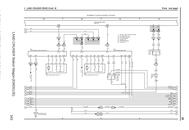

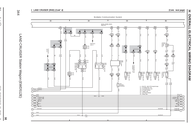

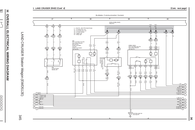

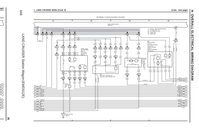

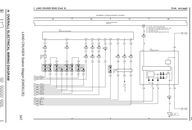

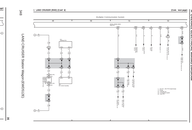

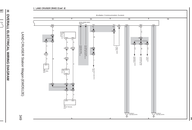

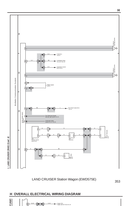

LAND CRUISER Station Wagon (EWD579U)

353

H OVERALL ELECTRICAL WIRING DIAGRAM

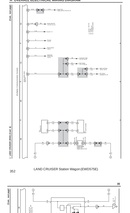

LAND CRUISER Station Wagon (EWD579U)

352

H OVERALL ELECTRICAL WIRING DIAGRAM

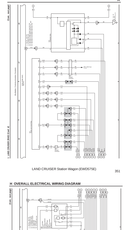

LAND CRUISER Station Wagon (EWD579U)

351

H OVERALL ELECTRICAL WIRING DIAGRAM

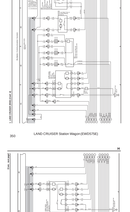

LAND CRUISER Station Wagon (EWD579U)

350

H OVERALL ELECTRICAL WIRING DIAGRAM

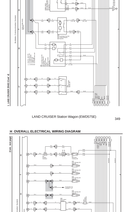

LAND CRUISER Station Wagon (EWD579U)

349

H OVERALL ELECTRICAL WIRING DIAGRAM

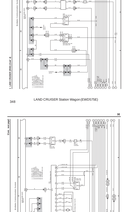

LAND CRUISER Station Wagon (EWD579U)

348

H OVERALL ELECTRICAL WIRING DIAGRAM

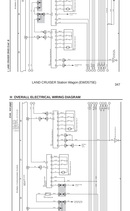

LAND CRUISER Station Wagon (EWD579U)

347

H OVERALL ELECTRICAL WIRING DIAGRAM

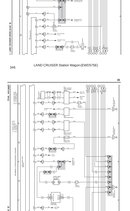

LAND CRUISER Station Wagon (EWD579U)

346

H OVERALL ELECTRICAL WIRING DIAGRAM

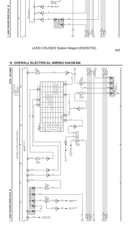

LAND CRUISER Station Wagon (EWD579U)

345

H OVERALL ELECTRICAL WIRING DIAGRAM

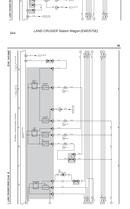

LAND CRUISER Station Wagon (EWD579U)

344

H OVERALL ELECTRICAL WIRING DIAGRAM

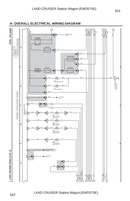

LAND CRUISER Station Wagon (EWD579U)

343

H OVERALL ELECTRICAL WIRING DIAGRAM

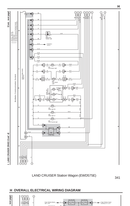

LAND CRUISER Station Wagon (EWD579U)

342

H OVERALL ELECTRICAL WIRING DIAGRAM

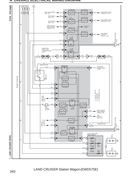

LAND CRUISER Station Wagon (EWD579U)

341

H OVERALL ELECTRICAL WIRING DIAGRAM

LAND CRUISER Station Wagon (EWD579U)

340

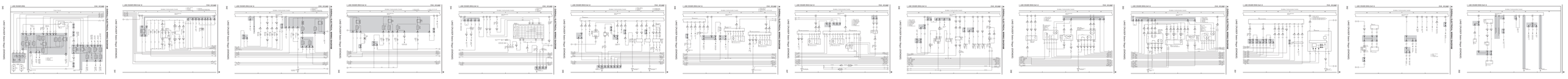

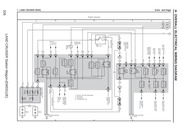

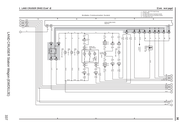

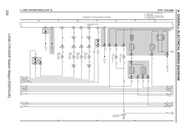

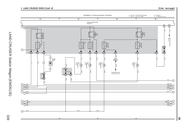

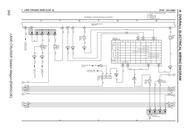

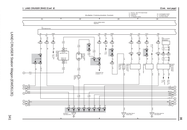

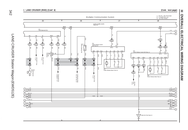

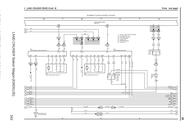

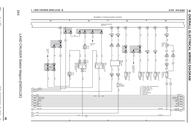

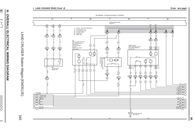

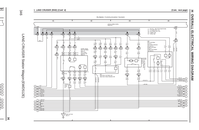

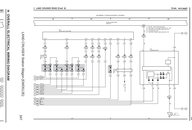

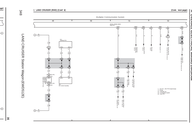

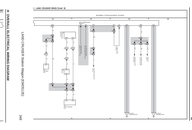

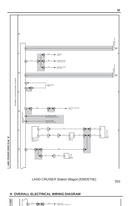

LAND CRUISER Station Wagon (EWD579U)

353

H OVERALL ELECTRICAL WIRING DIAGRAM

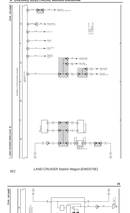

LAND CRUISER Station Wagon (EWD579U)

352

H OVERALL ELECTRICAL WIRING DIAGRAM

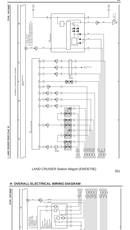

LAND CRUISER Station Wagon (EWD579U)

351

H OVERALL ELECTRICAL WIRING DIAGRAM

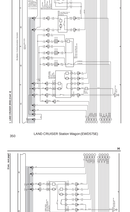

LAND CRUISER Station Wagon (EWD579U)

350

H OVERALL ELECTRICAL WIRING DIAGRAM

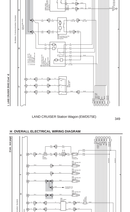

LAND CRUISER Station Wagon (EWD579U)

349

H OVERALL ELECTRICAL WIRING DIAGRAM

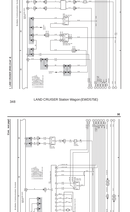

LAND CRUISER Station Wagon (EWD579U)

348

H OVERALL ELECTRICAL WIRING DIAGRAM

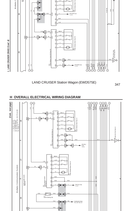

LAND CRUISER Station Wagon (EWD579U)

347

H OVERALL ELECTRICAL WIRING DIAGRAM

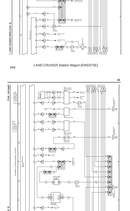

LAND CRUISER Station Wagon (EWD579U)

346

H OVERALL ELECTRICAL WIRING DIAGRAM

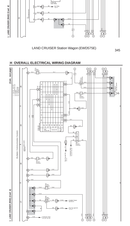

LAND CRUISER Station Wagon (EWD579U)

345

H OVERALL ELECTRICAL WIRING DIAGRAM

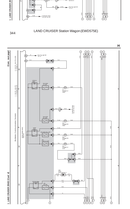

LAND CRUISER Station Wagon (EWD579U)

344

H OVERALL ELECTRICAL WIRING DIAGRAM

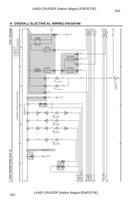

LAND CRUISER Station Wagon (EWD579U)

343

H OVERALL ELECTRICAL WIRING DIAGRAM

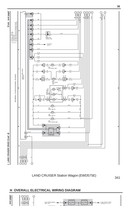

LAND CRUISER Station Wagon (EWD579U)

342

H OVERALL ELECTRICAL WIRING DIAGRAM

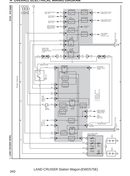

LAND CRUISER Station Wagon (EWD579U)

341

H OVERALL ELECTRICAL WIRING DIAGRAM

LAND CRUISER Station Wagon (EWD579U)

340

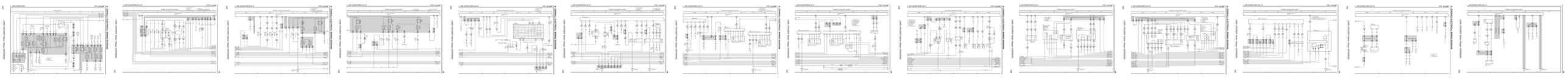

(Cont. next page)

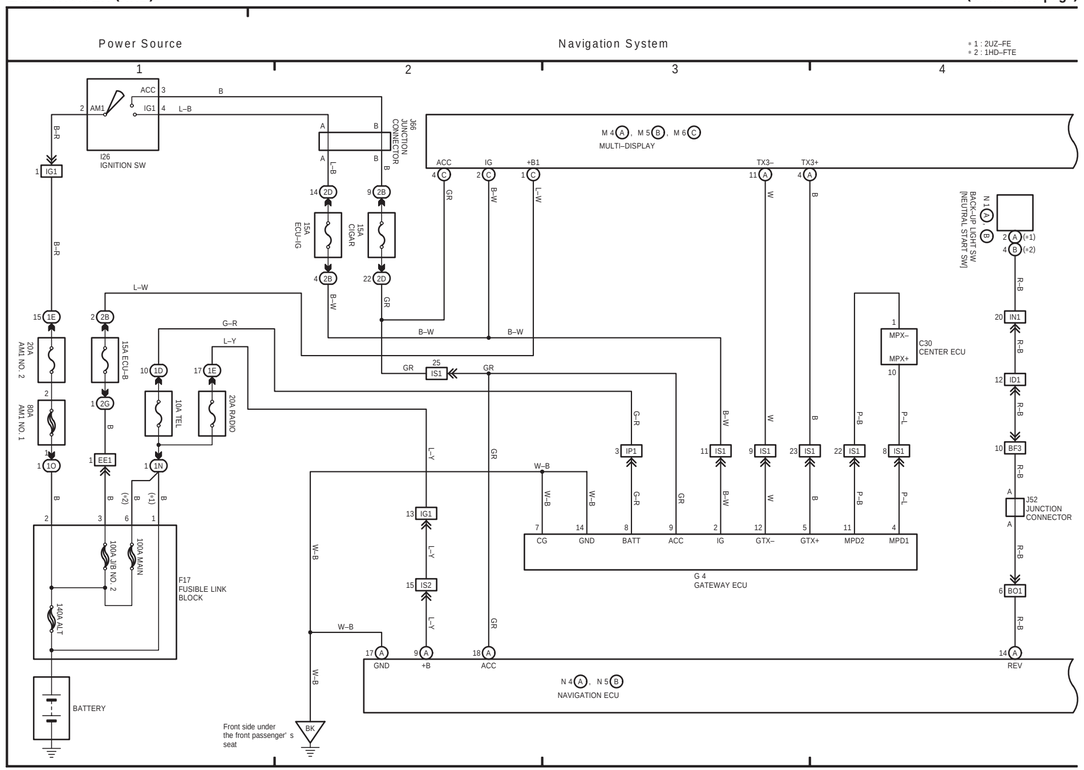

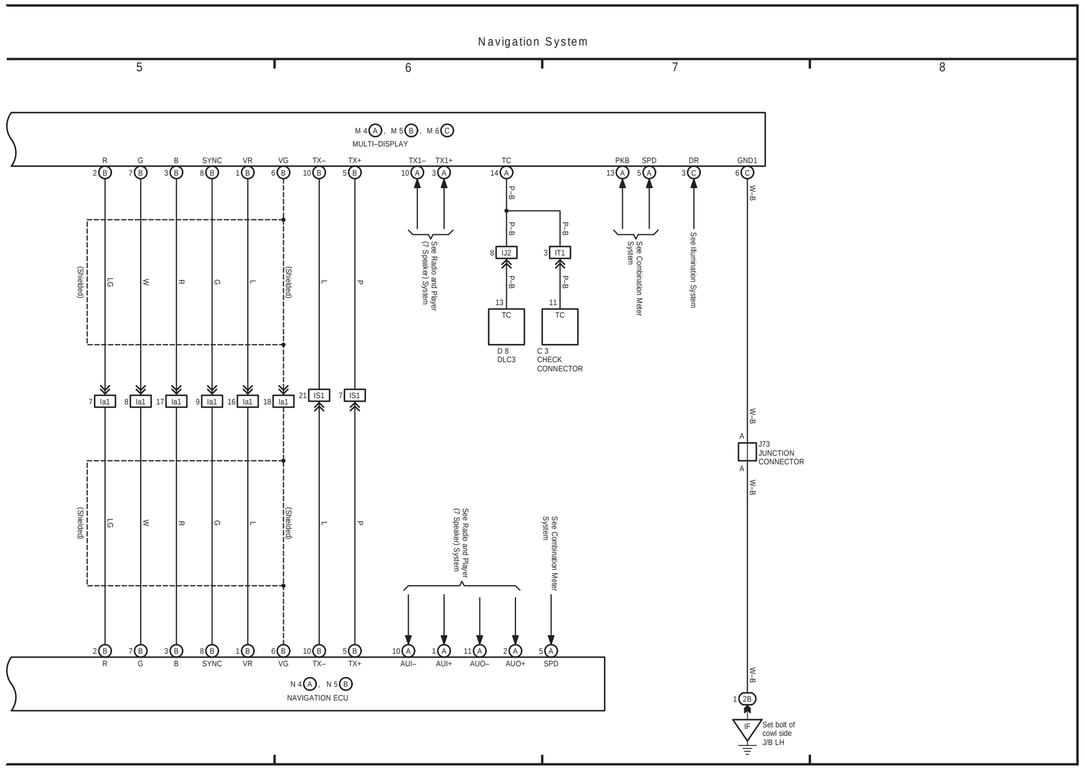

49 LAND CRUISER (RHD) (Cont. next page)

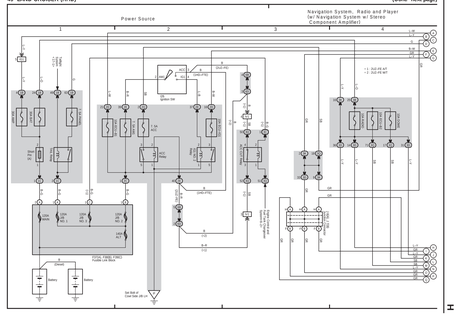

49 LAND CRUISER (RHD) (Cont' d) (Cont. next page)

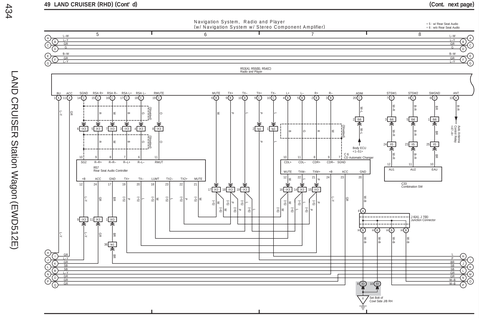

49 LAND CRUISER (RHD) (Cont' d) (Cont. next page)

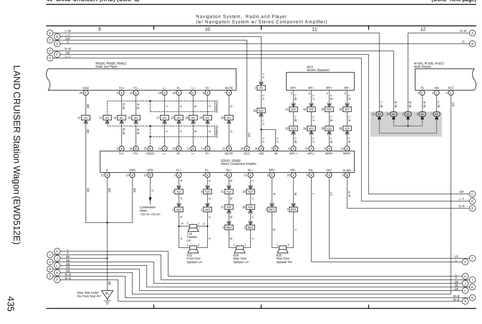

49 LAND CRUISER (RHD) (Cont' d) (Cont. next page)

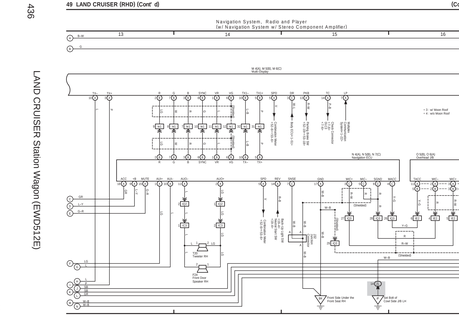

49 LAND CRUISER (RHD) (Cont' d)

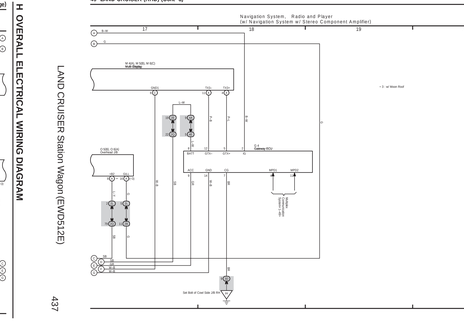

48 LAND CRUISER (RHD) (Cont. next page)

Power Source

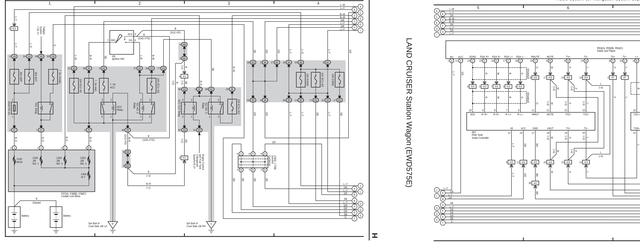

48 LAND CRUISER (RHD) (Cont. d) (Cont. next page)

Audio System (w/ Navigation System Separate Amplifier)

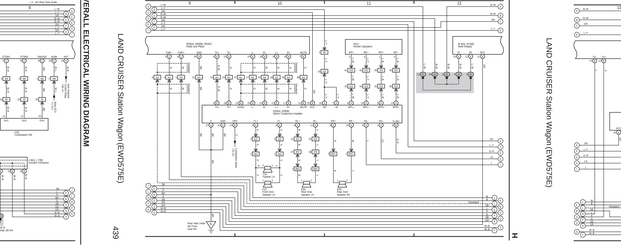

48 LAND CRUISER (RHD) (Cont. d) (Cont. next page)

Audio System (w/ Navigation System Separate Amplifier)

Navigation System, TOYOTA Parking Assist (Rear View Monitor)

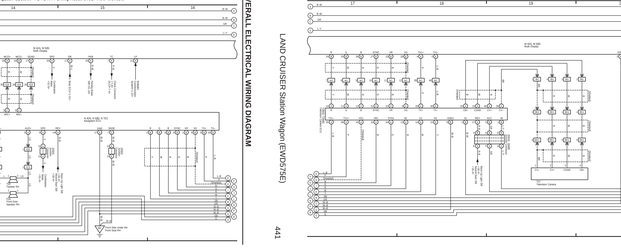

48 LAND CRUISER (RHD) (Cont. d) (Cont. next page)

Navigation System, TOYOTA Parking Assist (Rear View Monitor)

48 LAND CRUISER (RHD) (Cont. d) (Cont. next page)

Navigation System, TOYOTA Parking Assist (Rear View Monitor)

48 LAND CRUISER (RHD) (Cont. d)

Navigation System, TOYOTA Parking Assist (Rear View Monitor)

48 LAND CRUISER (RHD) (Cont. next page)

Power Source

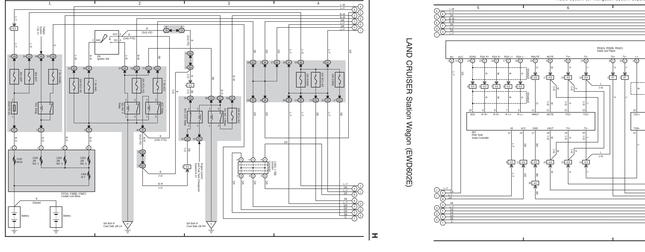

48 LAND CRUISER (RHD) (Cont. d) [Cont. next page]

Audio System (w/ Navigation System Separate Amplifier)

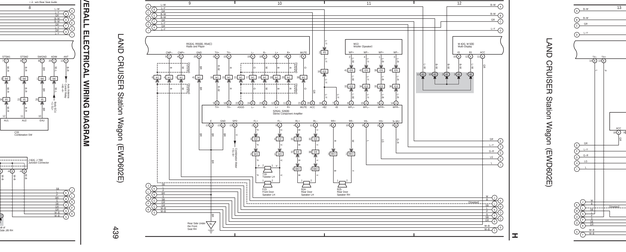

48 LAND CRUISER (RHD) (Cont. d) [Cont. next page]

Audio System (w/ Navigation System Separate Amplifier)

Navigation System, TOYOTA Parking Assist (Rear View Monitor)

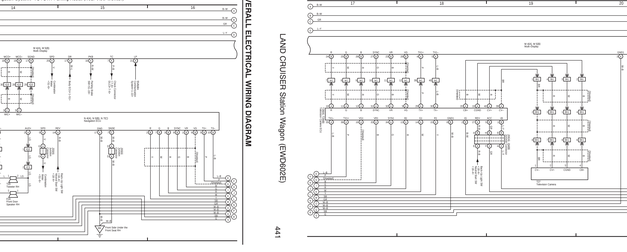

48 LAND CRUISER (RHD) (Cont. d) [Cont. next page]

Navigation System, TOYOTA Parking Assist (Rear View Monitor)

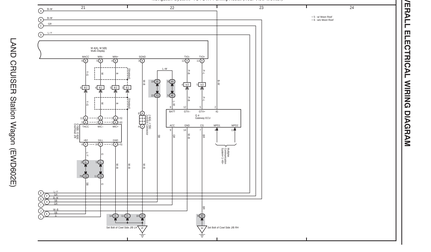

48 LAND CRUISER (RHD) (Cont. d) [Cont. next page]

Navigation System, TOYOTA Parking Assist (Rear View Monitor)

48 LAND CRUISER (RHD) (Cont. d)

Navigation System, TOYOTA Parking Assist (Rear View Monitor)

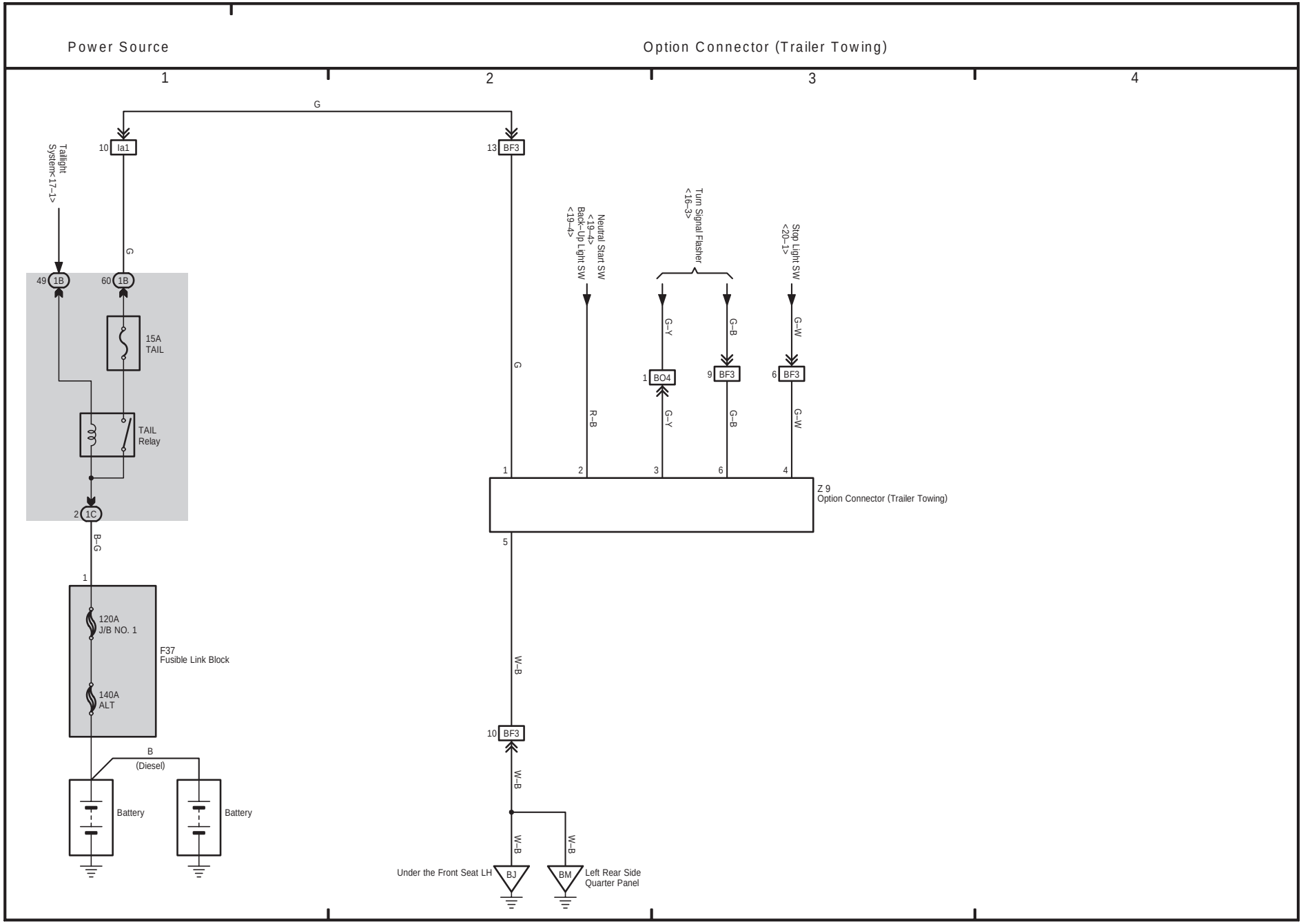
Power Source
Option Connector (Trailer Towing)
1
2
3
4
G
10 Ia1
13 BF3
Taillight System<17–1>
G
49 1B
60 1B
15A TAIL
TAIL Relay
2 1C
B–G
1
120A J/B NO. 1
F37 Fusible Link Block
140A ALT
B
(Diesel)
Battery
Battery
Neutral Start SW <19–4> Back–Up Light SW <19–4>
Turn Signal Flasher <16–3>
Stop Light SW <20–1>
G
R–B
G–Y
G–B
G–W
1 BO4
9 BF3
6 BF3
1
2
3
6
4
Z 9
Option Connector (Trailer Towing)
5
W–B
10 BF3
W–B
W–B
W–B
Under the Front Seat LH
BJ
BM
Left Rear Side Quarter Panel

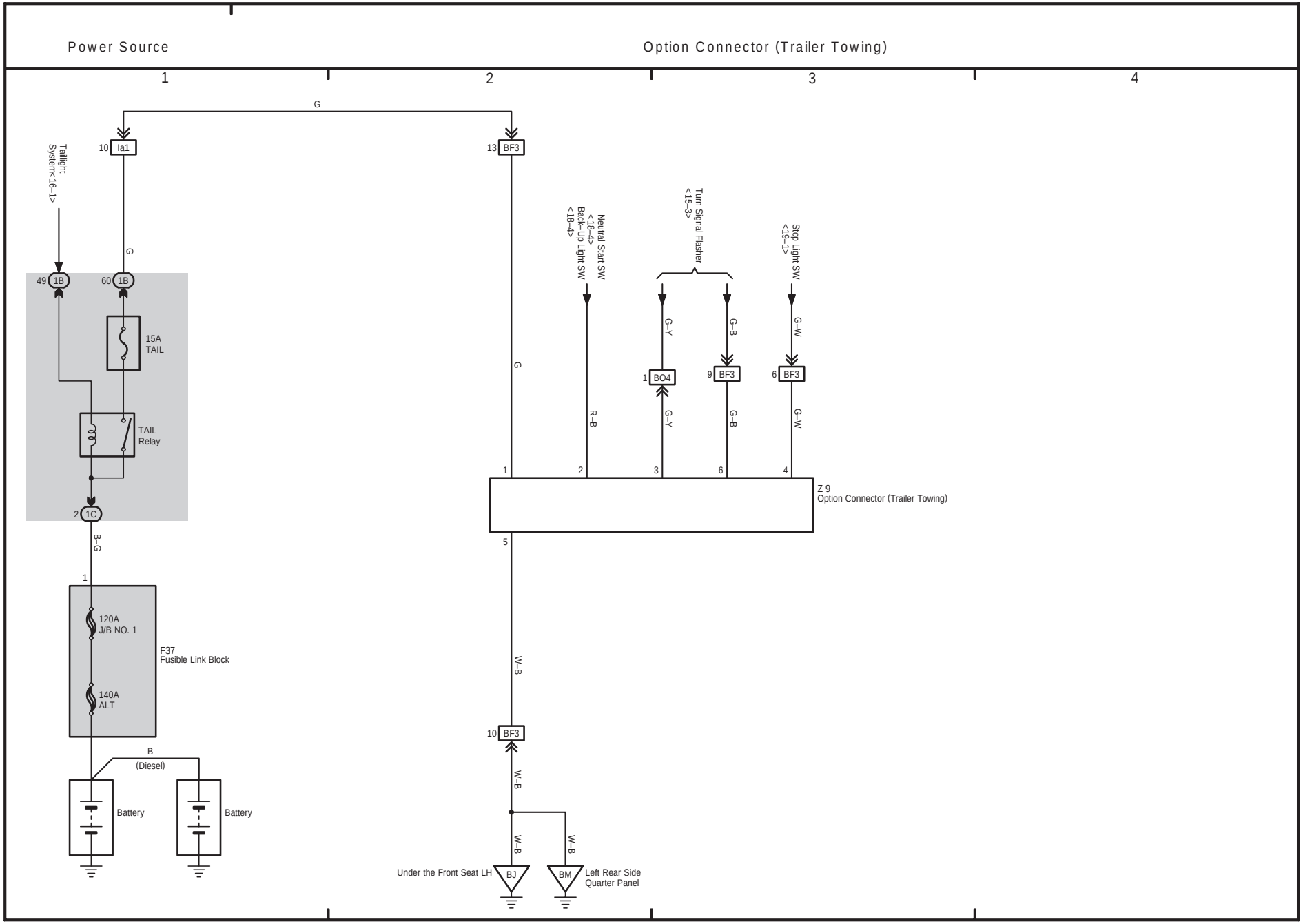
Power Source
Option Connector (Trailer Towing)
1
2
3
4
G
10 Ia1
13 BF3
Taillight System<16–1>
G
49 1B
60 1B
15A TAIL
TAIL Relay
2 1C
B–G
1
120A J/B NO. 1
F37 Fusible Link Block
140A ALT
B
(Diesel)
Battery
Battery
Neutral Start SW <18–4> Back–Up Light SW <18–4>
Turn Signal Flasher <15–3>
Stop Light SW <19–1>
G
R–B
G–Y
G–B
G–W
1 BO4
9 BF3
6 BF3
1
2
3
6
4
Z 9
Option Connector (Trailer Towing)
5
W–B
10 BF3
W–B
W–B
W–B
Under the Front Seat LH
BJ
BM
Left Rear Side Quarter Panel

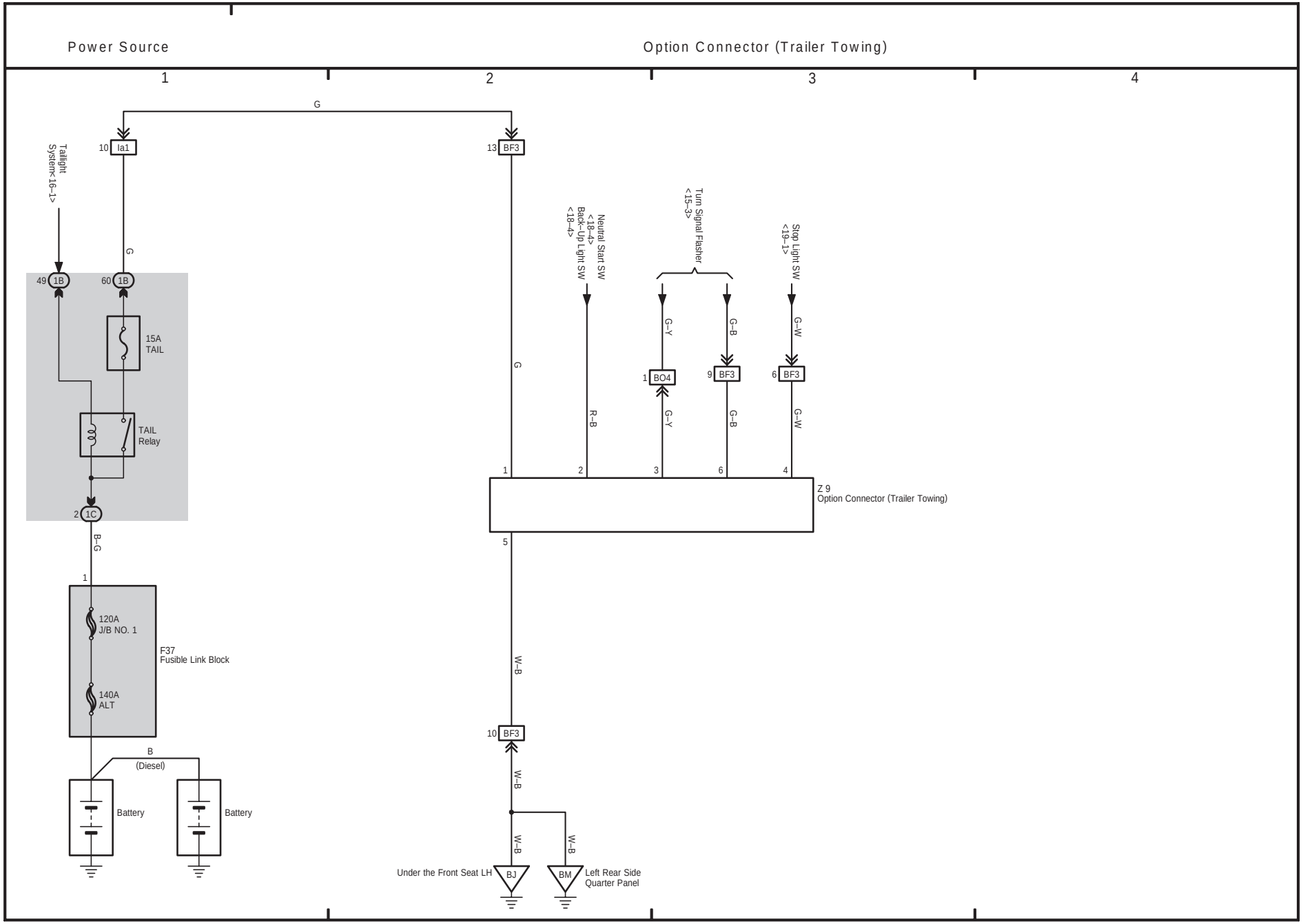
Power Source
Option Connector (Trailer Towing)
1
2
3
4
G
10 Ia1
13 BF3
Taillight System<16–1>
Neutral Start SW <18–4> Back–Up Light SW <18–4>
Turn Signal Flasher <15–3>
Stop Light SW <19–1>
G
G–Y
G–B
G–W
49 1B
60 1B
15A TAIL
TAIL Relay
1 BO4
9 BF3
6 BF3
R–B
2 1C
1
2
3
6
4
Z 9 Option Connector (Trailer Towing)
5
B–G
1
120A J/B NO. 1
F37 Fusible Link Block
140A ALT
W–B
10 BF3
B (Diesel)
Battery
Battery
Under the Front Seat LH
BJ
BM
Left Rear Side Quarter Panel

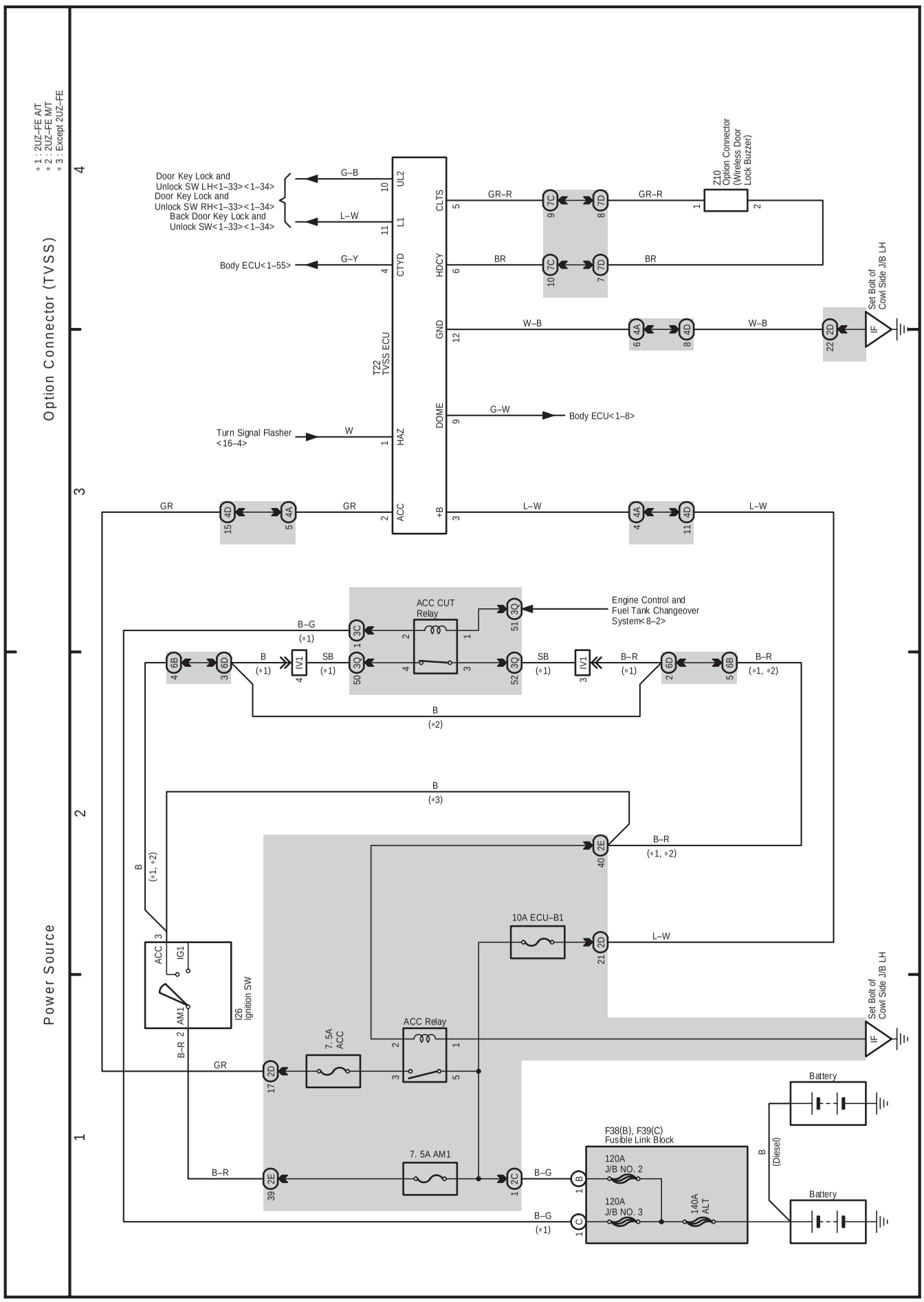
* 1 : 2UZ-FE A/T
* 2 : 2UZ-FE M/T
* 3 : Except 2UZ-FE
Option Connector (TVSS)
Power Source
1
2
3
4
Door Key Lock and Unlock SW LH<1–33><1–34>
Door Key Lock and Unlock SW RH<1–33><1–34>
Back Door Key Lock and Unlock SW<1–33><1–34>
Body ECU<1–55>
Turn Signal Flasher <16–4>
T22 TVSS ECU
UL2
L1
CTYD
HAZ
ACC
CLTS
HDCY
GND
DOME
+B
Z10 Option Connector (Wireless Door Lock Buzzer)
Set Bolt of Cowl Side J/B LH
Body ECU<1–8>
ACC CUT Relay
Engine Control and Fuel Tank Changeover System<8–2>
ACC Relay
10A ECU–B1
7. 5A ACC
7. 5A AM1
I26 Ignition SW
ACC
IG1
AM1
F38(B), F39(C) Fusible Link Block
120A J/B NO. 2
120A J/B NO. 3
140A ALT
Battery
(Diesel)

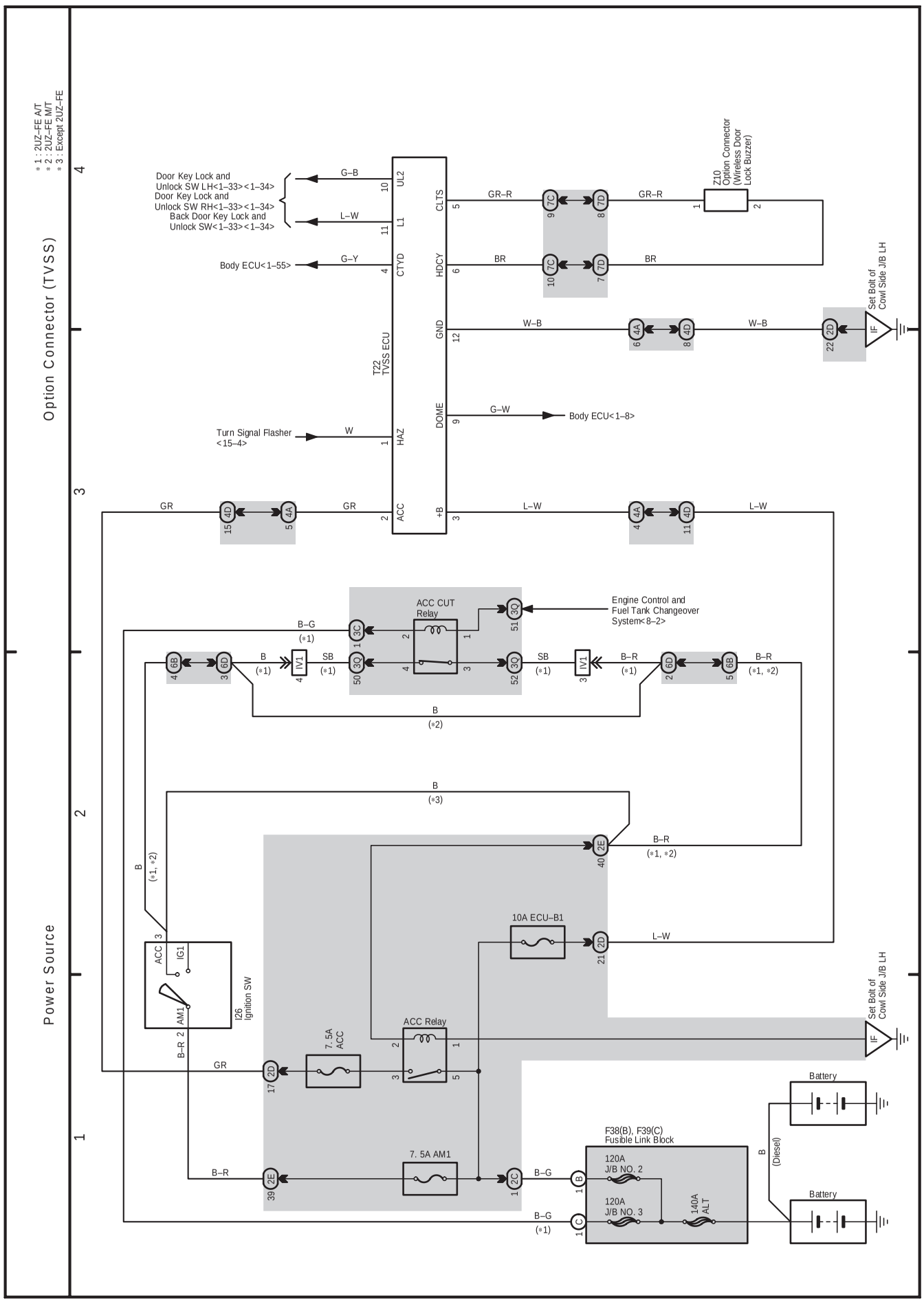
59 LAND CRUISER (RHD)
Power Source
Option Connector (TVSS)
1
2
3
4
* 1 : 2UZ-FE A/T
* 2 : 2UZ-FE M/T
* 3 : Except 2UZ-FE
Door Key Lock and Unlock SW LH<1–33><1–34>
Door Key Lock and Unlock SW RH<1–33><1–34>
Back Door Key Lock and Unlock SW<1–33><1–34>
Body ECU<1–55>
Turn Signal Flasher <15–4>
T22 TVSS ECU
UL2
L1
CTYD
HAZ
ACC
CLTS
HDCY
GND
DOME
+B
Z10 Option Connector (Wireless Door Lock Buzzer)
Set Bolt of Cowl Side J/B LH
Body ECU<1–8>
ACC CUT Relay
Engine Control and Fuel Tank Changeover System<8–2>
ACC Relay
10A ECU–B1
7. 5A ACC
7. 5A AM1
I26 Ignition SW
ACC
IG1
AM1
F38(B), F39(C) Fusible Link Block
120A J/B NO. 2
120A J/B NO. 3
140A ALT
Battery
(Diesel)

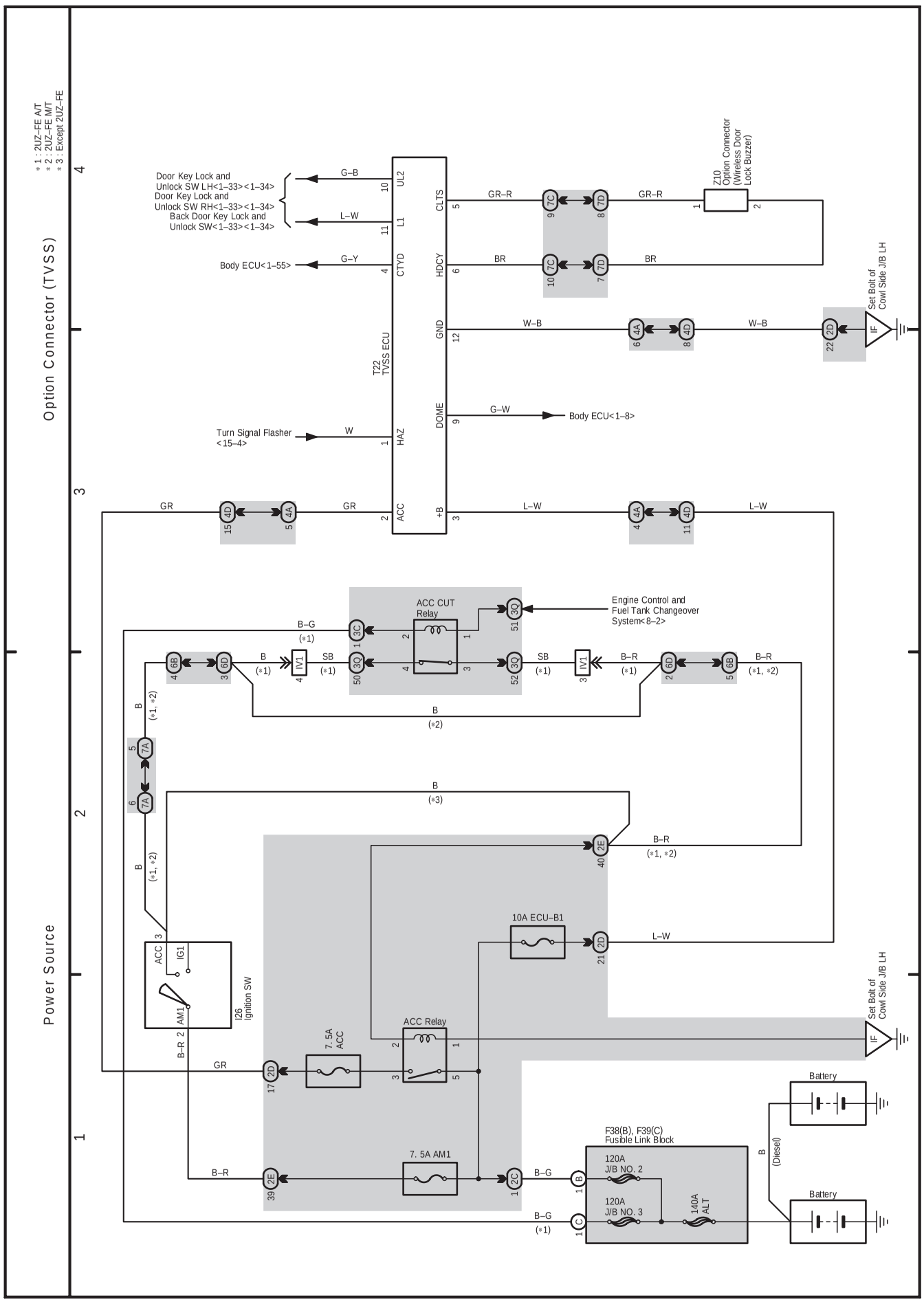
* 1 : 2UZ-FE A/T
* 2 : 2UZ-FE M/T
* 3 : Except 2UZ-FE
Option Connector (TVSS)
Power Source
1
2
3
4
Door Key Lock and Unlock SW LH<1–33><1–34>
Door Key Lock and Unlock SW RH<1–33><1–34>
Back Door Key Lock and Unlock SW<1–33><1–34>
Body ECU<1–55>
Turn Signal Flasher <15–4>
T22 TVSS ECU
UL2
L1
CTYD
HAZ
CLTS
HDCY
GND
DOME
ACC
+B
Z10 Option Connector (Wireless Door Lock Buzzer)
Set Bolt of Cowl Side J/B LH
Body ECU<1–8>
ACC CUT Relay
Engine Control and Fuel Tank Changeover System<8–2>
ACC Relay
I26 Ignition SW
ACC
IG1
AM1
7. 5A ACC
7. 5A AM1
10A ECU–B1
F38(B), F39(C) Fusible Link Block
120A J/B NO. 2
120A J/B NO. 3
140A ALT
Battery
(Diesel)

F ELECTRICAL WIRING DIAGRAM (System Circuits)

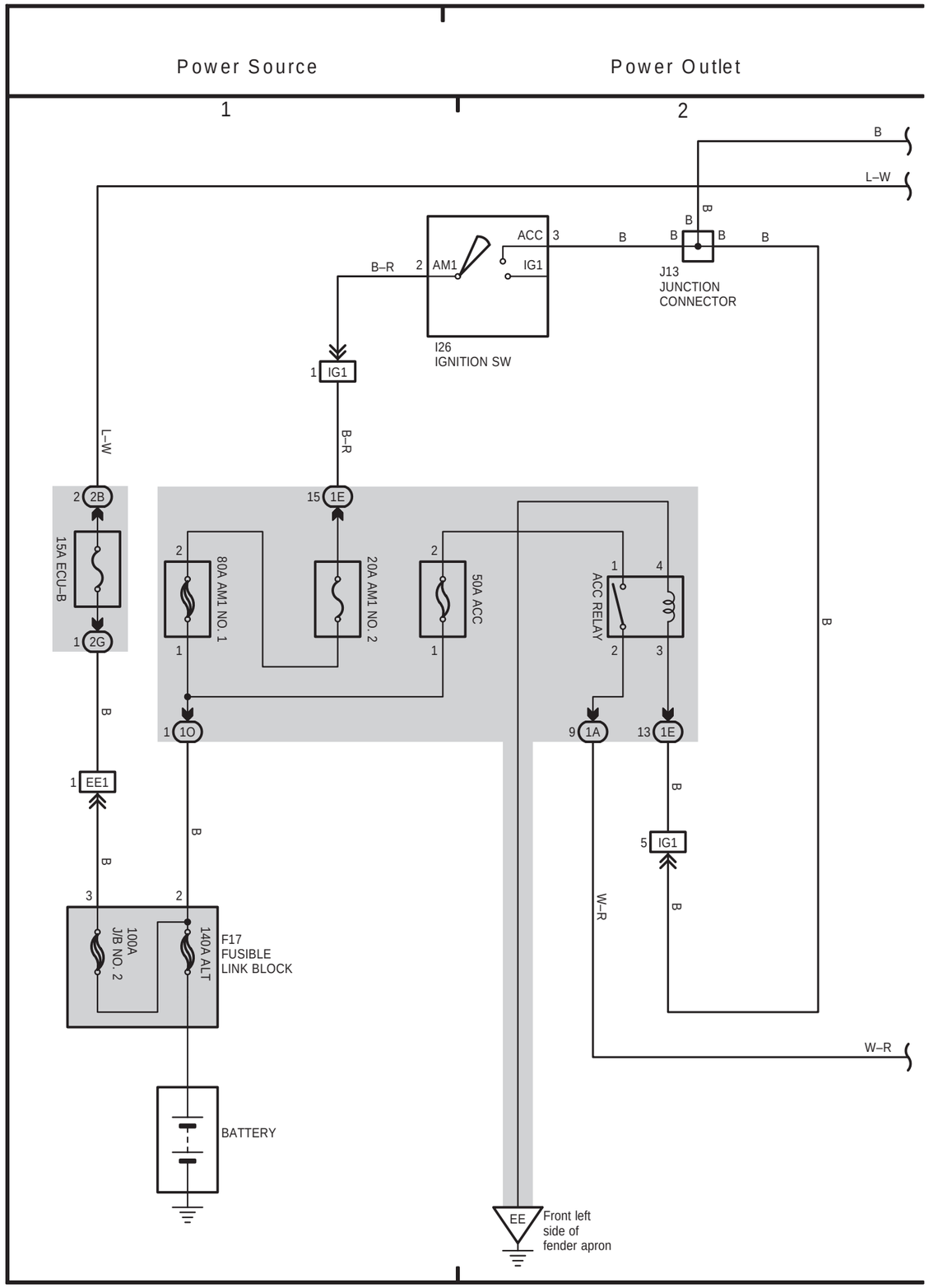

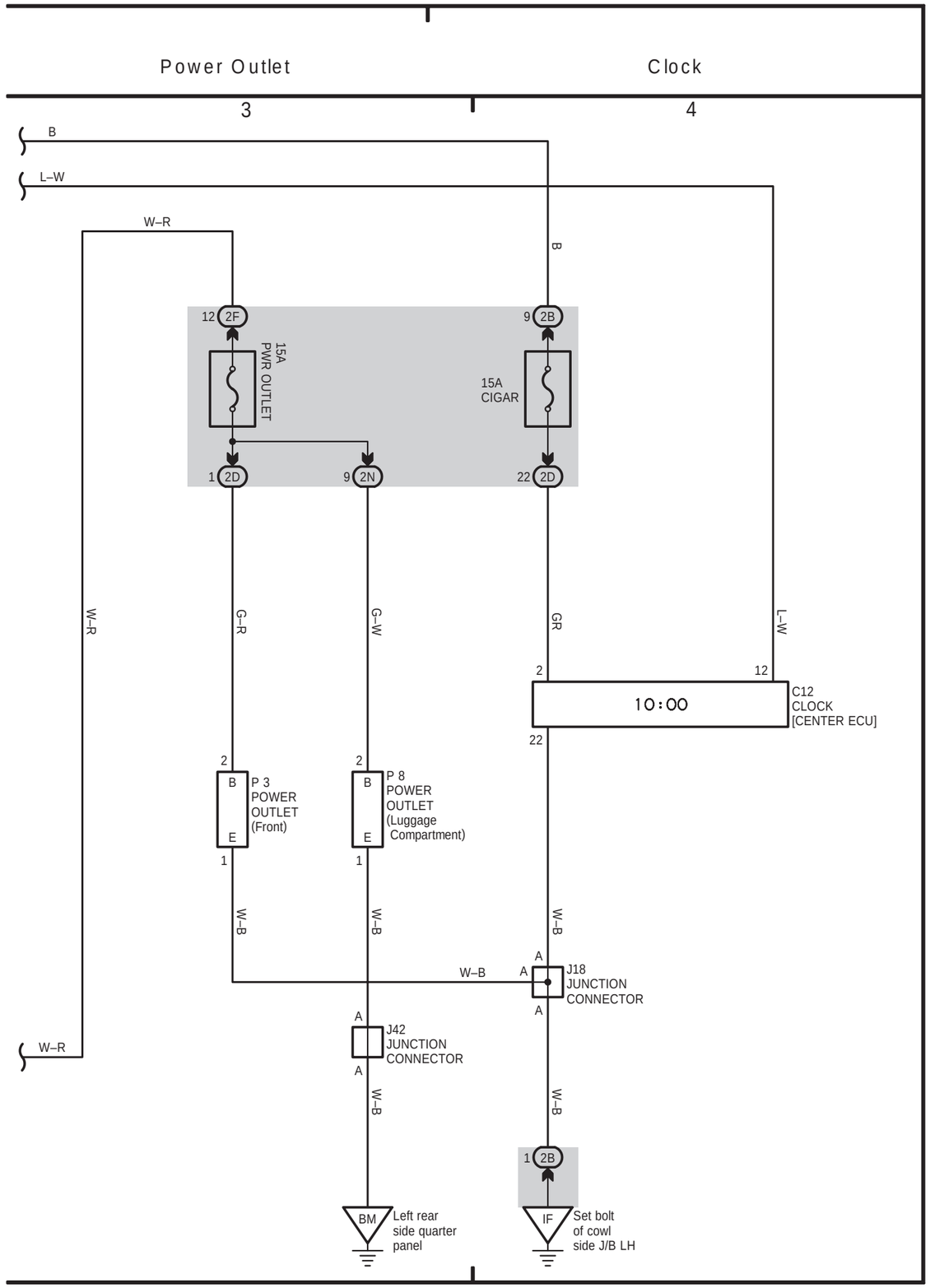

LAND CRUISER (RHD)

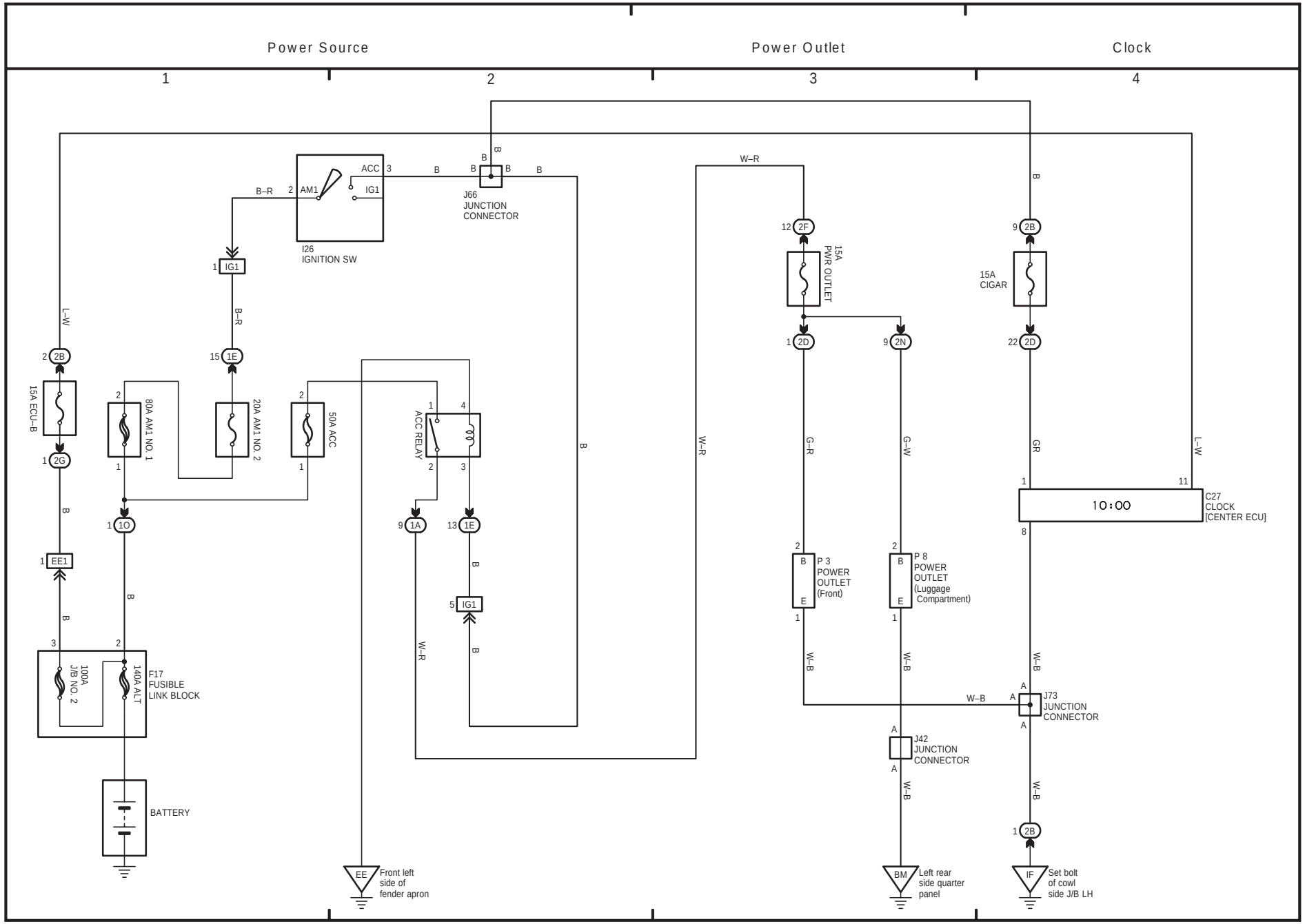

45 LAND CRUISER (RHD)

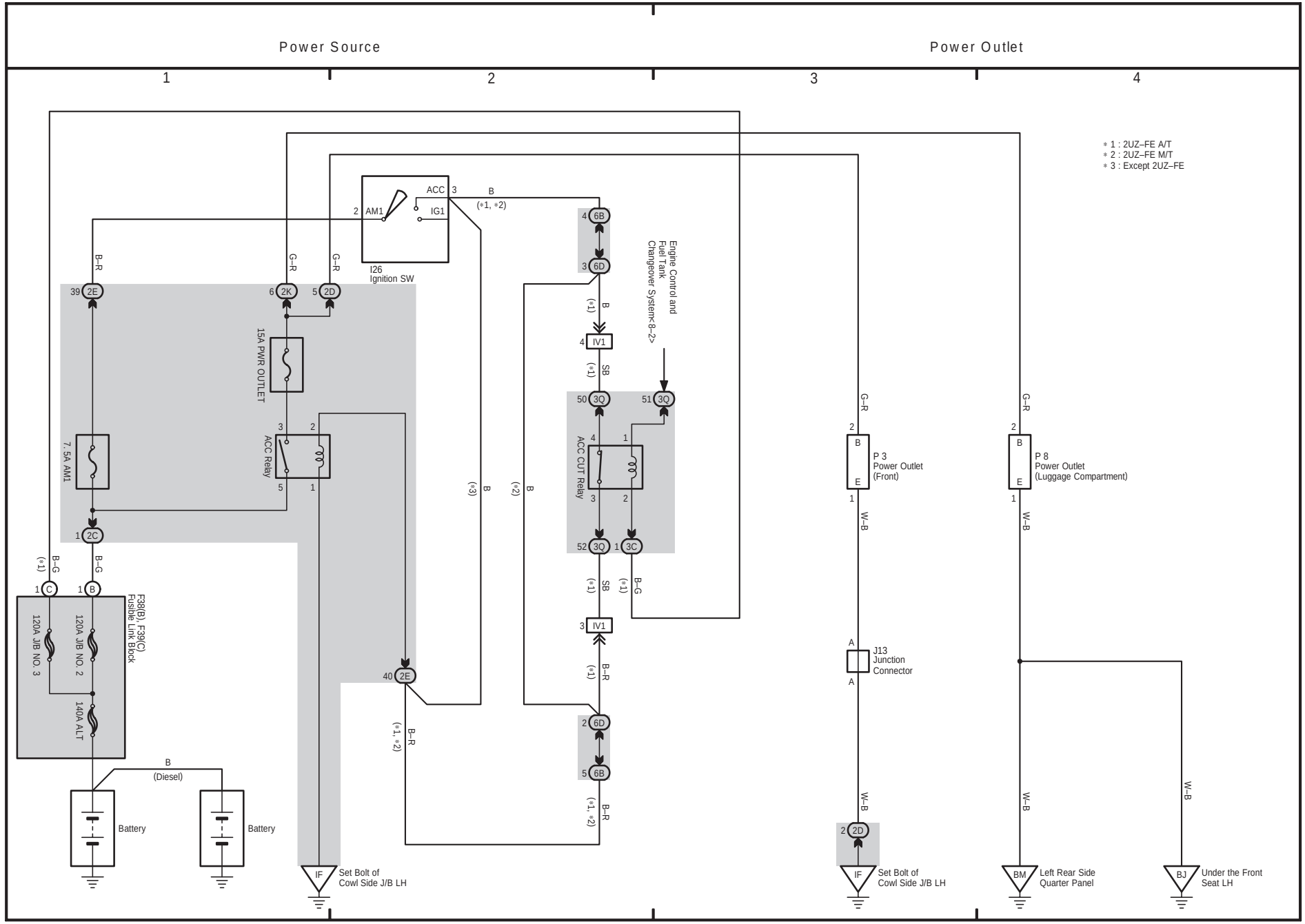

44 LAND CRUISER (RHD)

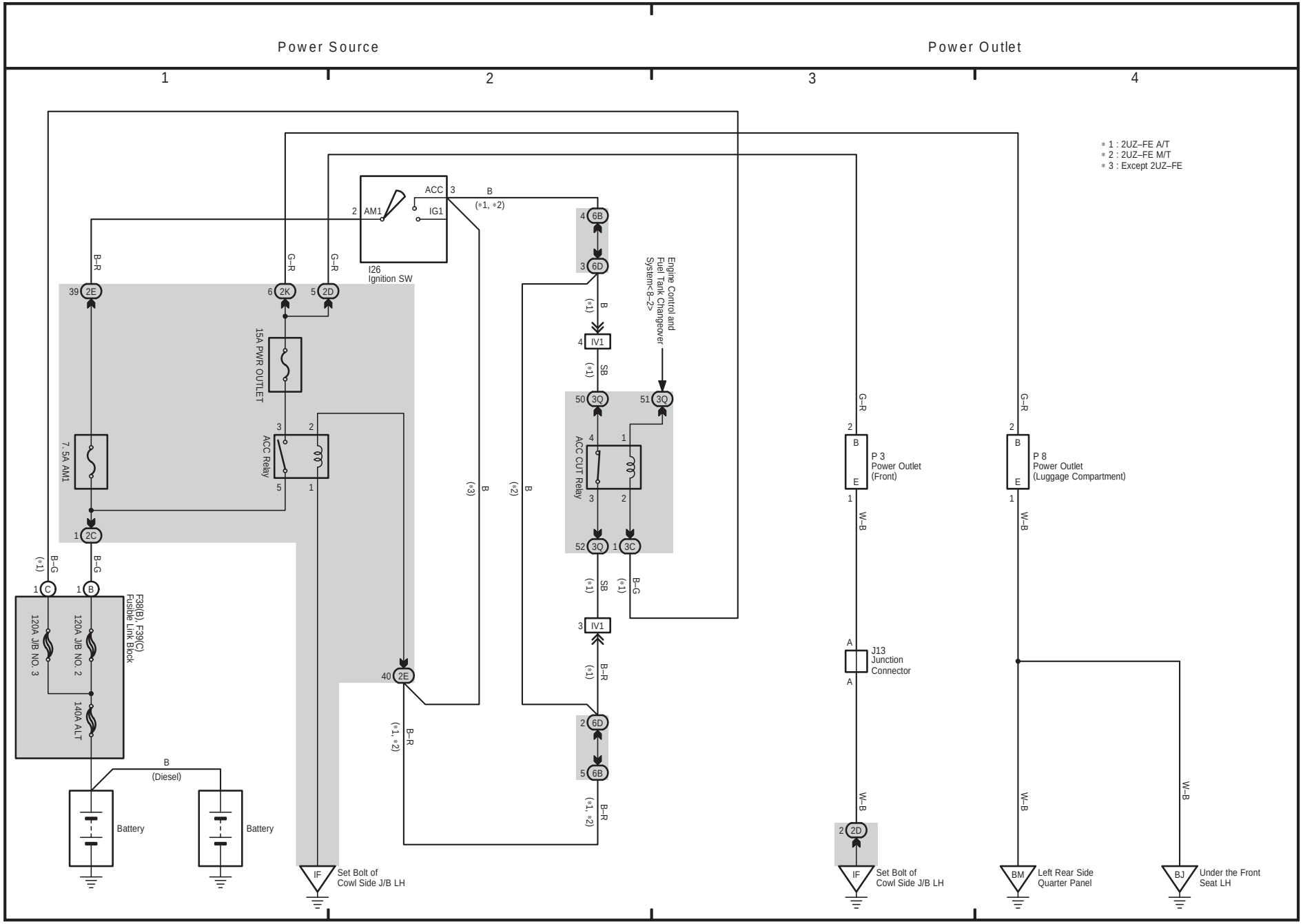

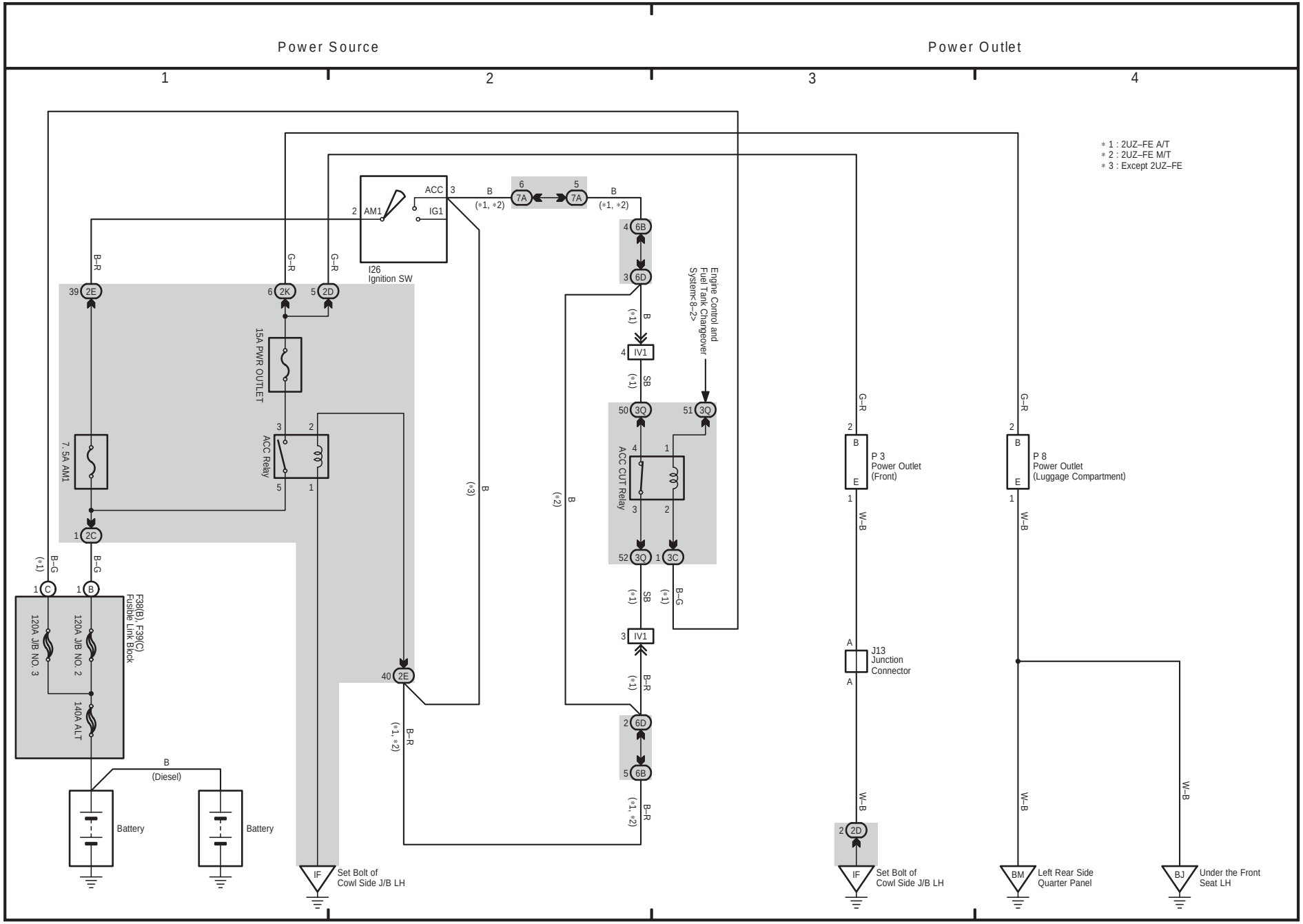
Power Source
Power Outlet
1
2
3
4
* 1 : 2UZ–FE A/T
* 2 : 2UZ–FE M/T
* 3 : Except 2UZ–FE
I26
Ignition SW
ACC
IG1
AM1
15A PWR OUTLET
7. 5A AM1
ACC Relay
ACC CUT Relay
Engine Control and Fuel Tank Changeover System<8–2>
F38(B), F39(C)
Fusible Link Block
120A JB NO. 3
120A JB NO. 2
140A ALT
Battery
Battery
(Diesel)
P 3
Power Outlet
(Front)
P 8
Power Outlet
(Luggage Compartment)
J13
Junction
Connector
Set Bolt of
Cowl Side J/B LH
Set Bolt of
Cowl Side J/B LH
Left Rear Side
Quarter Panel
Under the Front
Seat LH

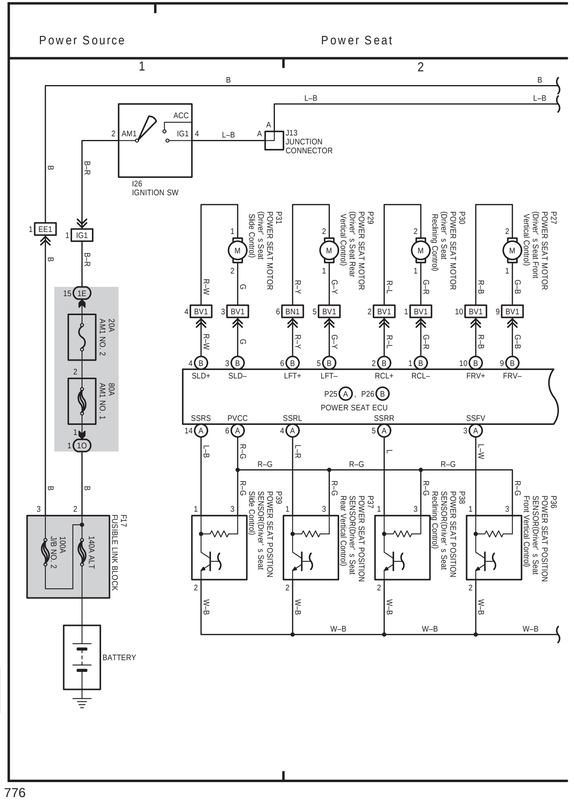
Power Source
Power Seat
1
2
ACC
IG1
AM1
I26
IGNITION SW
J13
JUNCTION CONNECTOR
EE1
1E
20A
AM1 NO. 2
80A
AM1 NO. 1
1O
FL7
FUSIBLE LINK BLOCK
100A
3JB NO. 2
140A ALT
BATTERY
P31
POWER SEAT MOTOR
(Driver' s Seat
Slide Control)
P29
POWER SEAT MOTOR
(Driver' s Seat Front
Vertical Control)
P30
POWER SEAT MOTOR
(Driver' s Seat
Reclining Control)
P27
POWER SEAT MOTOR
(Driver' s Seat Rear
Vertical Control)
SLD+
SLD–
LFT+
LFT–
RCL+
RCL–
FRV+
FRV–
P25 A , P26 B
POWER SEAT ECU
SSRS
PVCC
SSRL
SSRR
SSFV
P39
POWER SEAT POSITION
SENSOR(Driver' s Seat
Slide Control)
P37
POWER SEAT POSITION
SENSOR(Driver' s Seat
Rear Vertical Control)
P38
POWER SEAT POSITION
SENSOR(Driver' s Seat
Reclining Control)
P36
POWER SEAT POSITION
SENSOR(Driver' s Seat
Front Vertical Control)

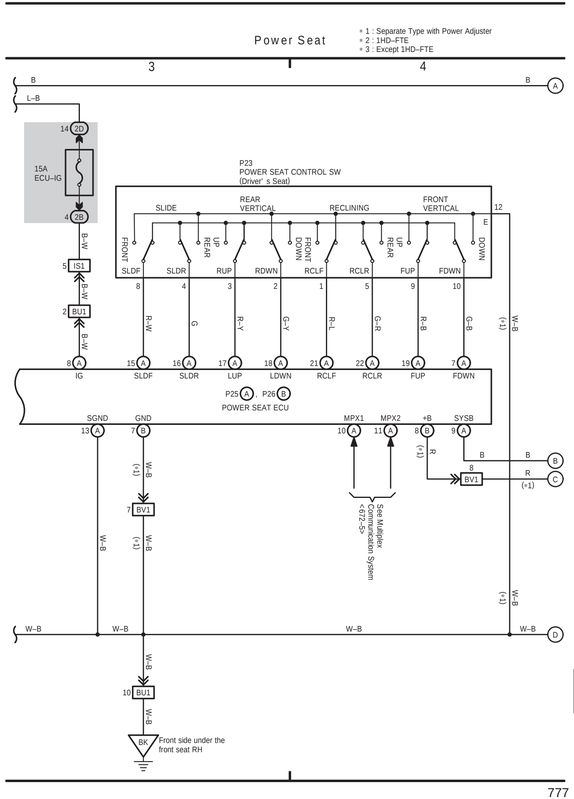
Power Seat
3
4
* 1 : Separate Type with Power Adjuster
* 2 : 1HD–FTE
* 3 : Except 1HD–FTE
15A
ECU–IG
2D
2B
IS1
BU1
P23
POWER SEAT CONTROL SW
(Driver' s Seat)
SLIDE
REAR VERTICAL
RECLINING
FRONT VERTICAL
FRONT
REAR
UP
DOWN
SLDF
SLDR
RUP
RDWN
RCLF
RCLR
FUP
FDWN
IG
SLDF
SLDR
LUP
LDWN
RCLF
RCLR
FUP
FDWN
P25 A , P26 B
POWER SEAT ECU
SGND
GND
MPX1
MPX2
+B
SYSB
BV1
Seat Multiplex Communication System <-672.2->
BK
Front side under the front seat RH

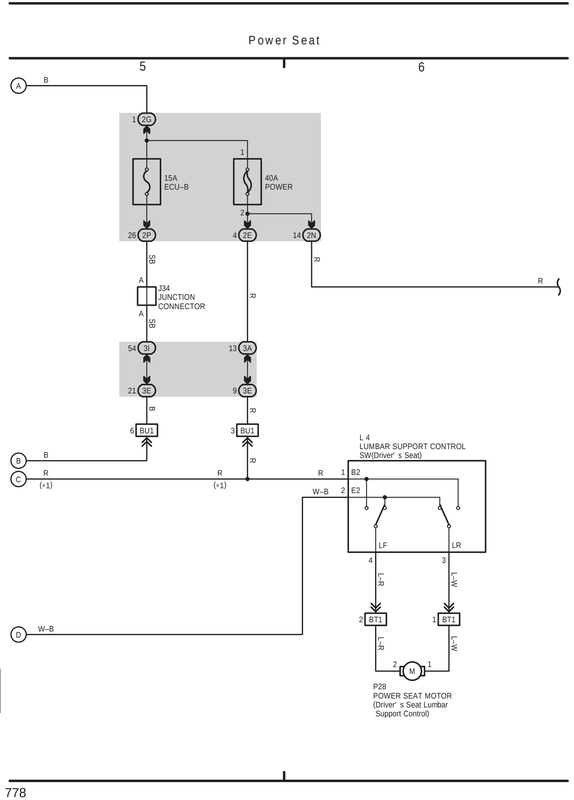
Power Seat
5
6
2G
15A
ECU–B
40A
POWER
2P
2E
2N
J34
JUNCTION CONNECTOR
3J
3A
3E
BU1
L 4
LUMBAR SUPPORT CONTROL SW(Driver' s Seat)
LF
LR
BT1
P28
POWER SEAT MOTOR
(Driver' s Seat Lumbar
Support Control)

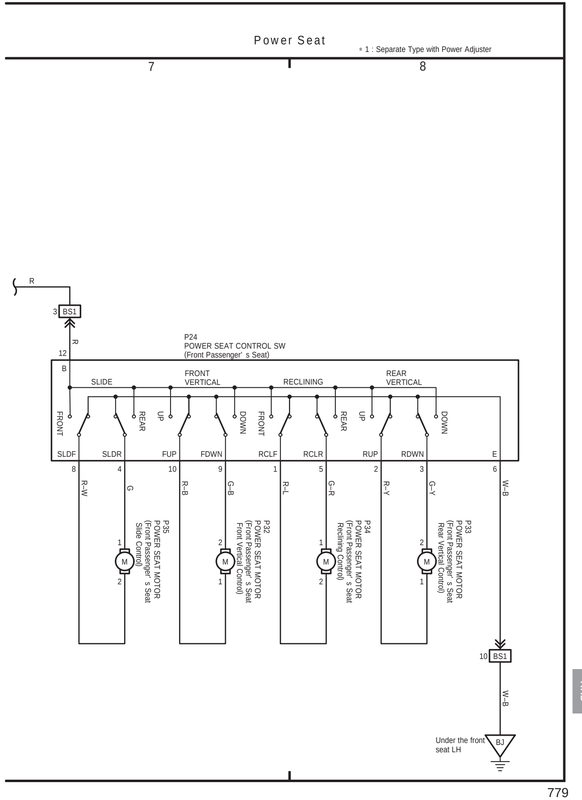
Power Seat
7
8
* 1 : Separate Type with Power Adjuster
BS1
P24
POWER SEAT CONTROL SW
(Front Passenger' s Seat)
SLIDE
FRONT VERTICAL
RECLINING
REAR VERTICAL
FRONT
REAR
UP
DOWN
SLDF
SLDR
FUP
FDWN
RCLF
RCLR
RUP
RDWN
P35
POWER SEAT MOTOR
(Front Passenger' s Seat
Slide Control)
P34
POWER SEAT MOTOR
(Front Passenger' s Seat
Front Vertical Control)
P32
POWER SEAT MOTOR
(Front Passenger' s Seat
Reclining Control)
P33
POWER SEAT MOTOR
(Front Passenger' s Seat
Rear Vertical Control)
BJ
Under the front seat LH

(Cont. next page)

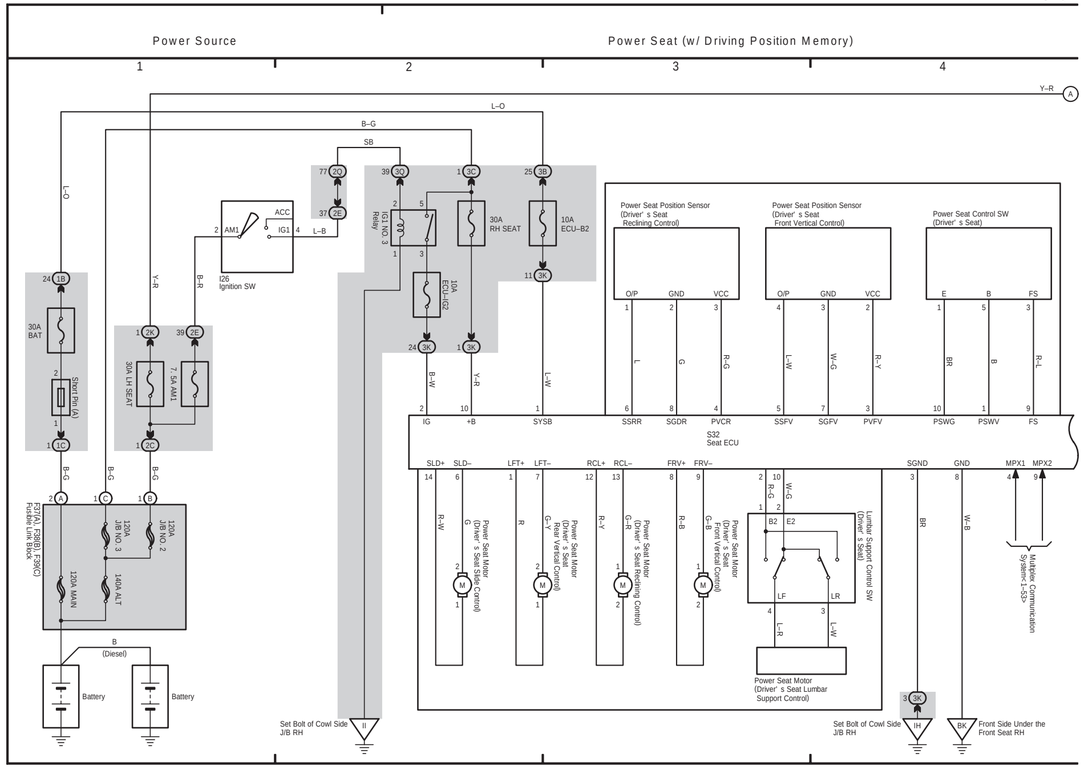

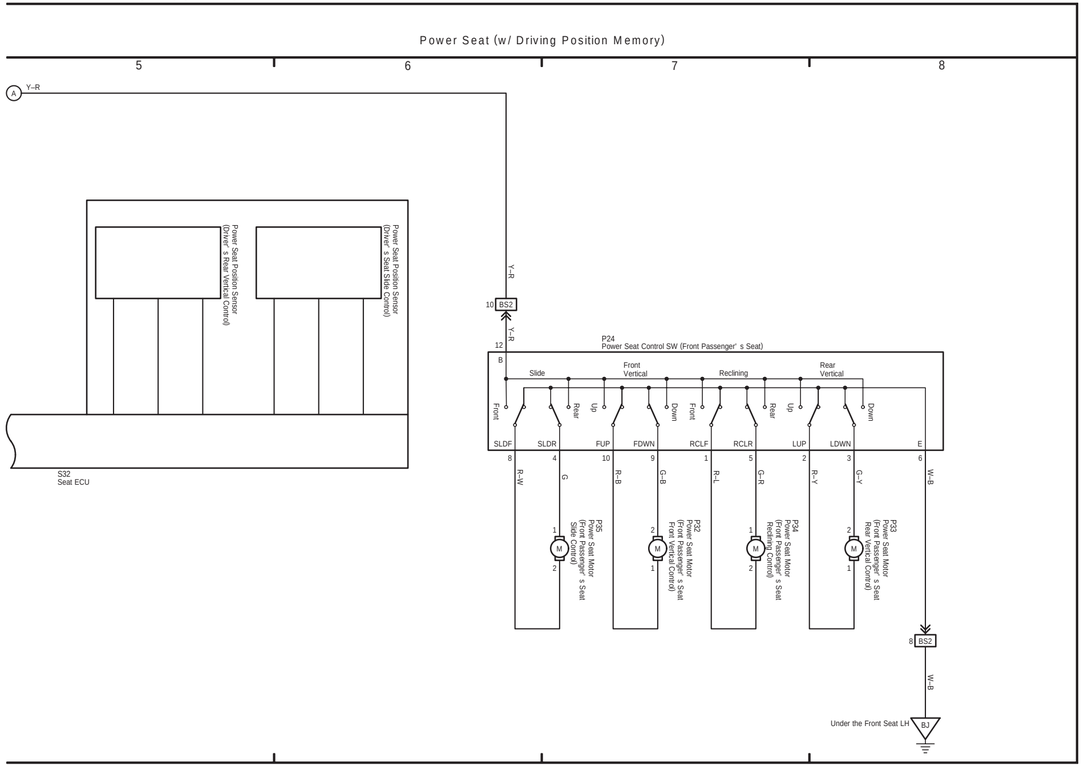

(Cont. next page)

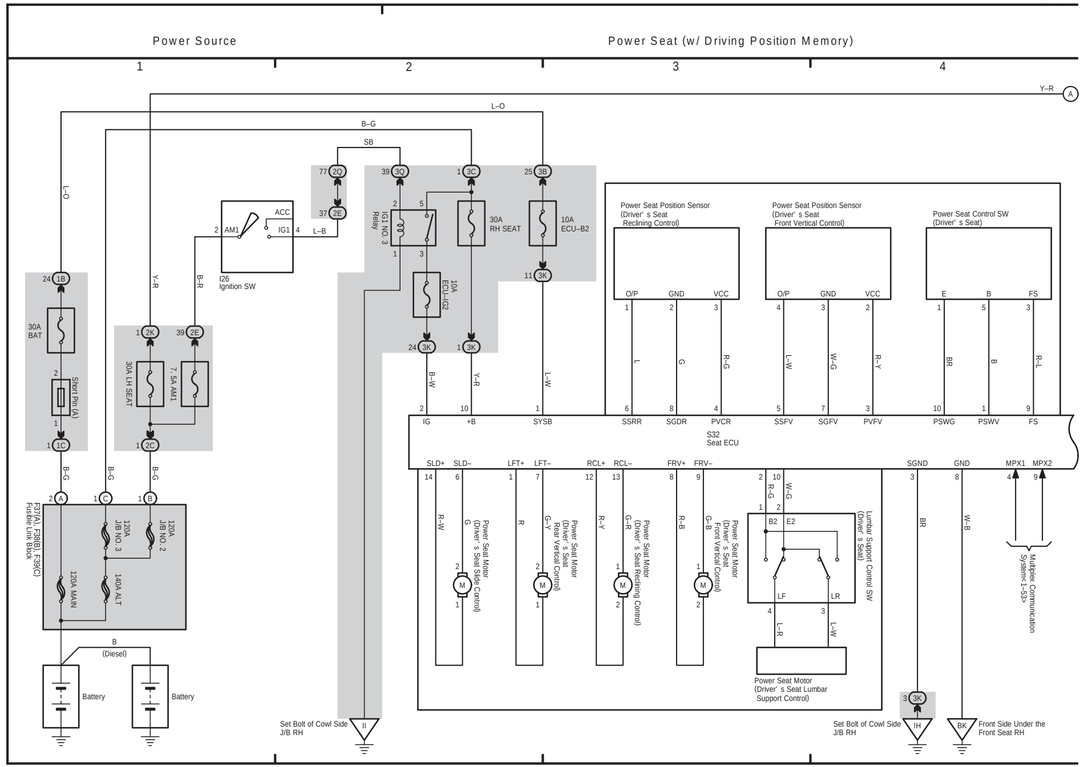

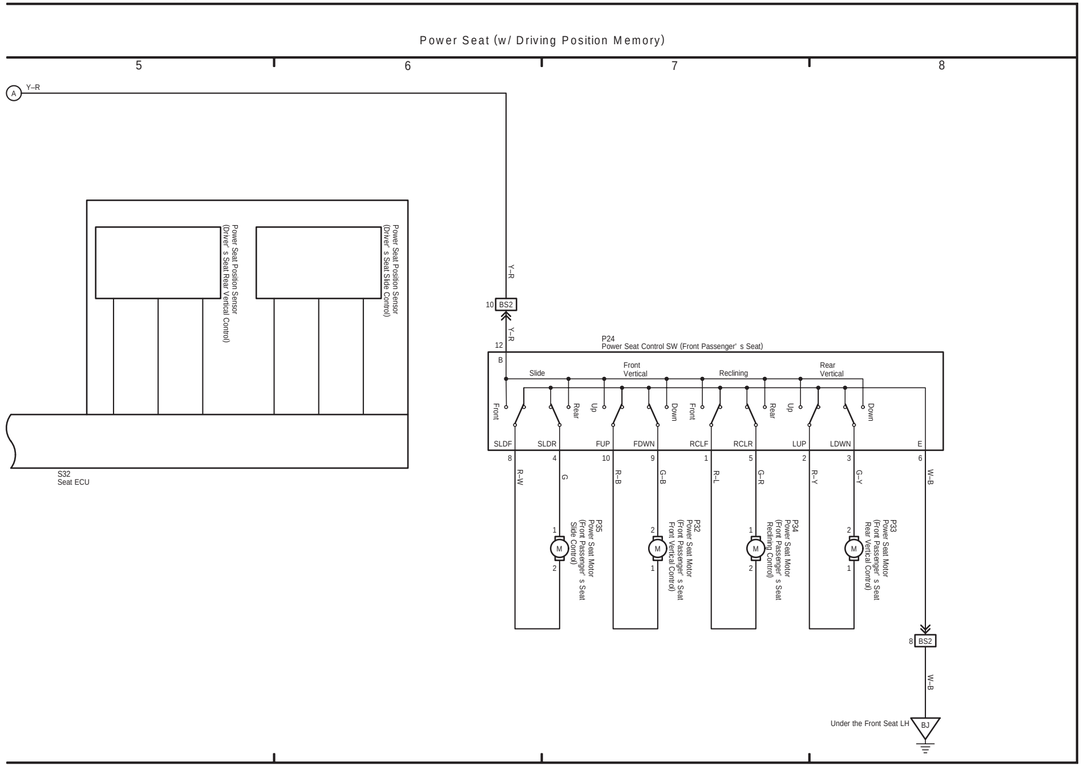

(Cont. next page)

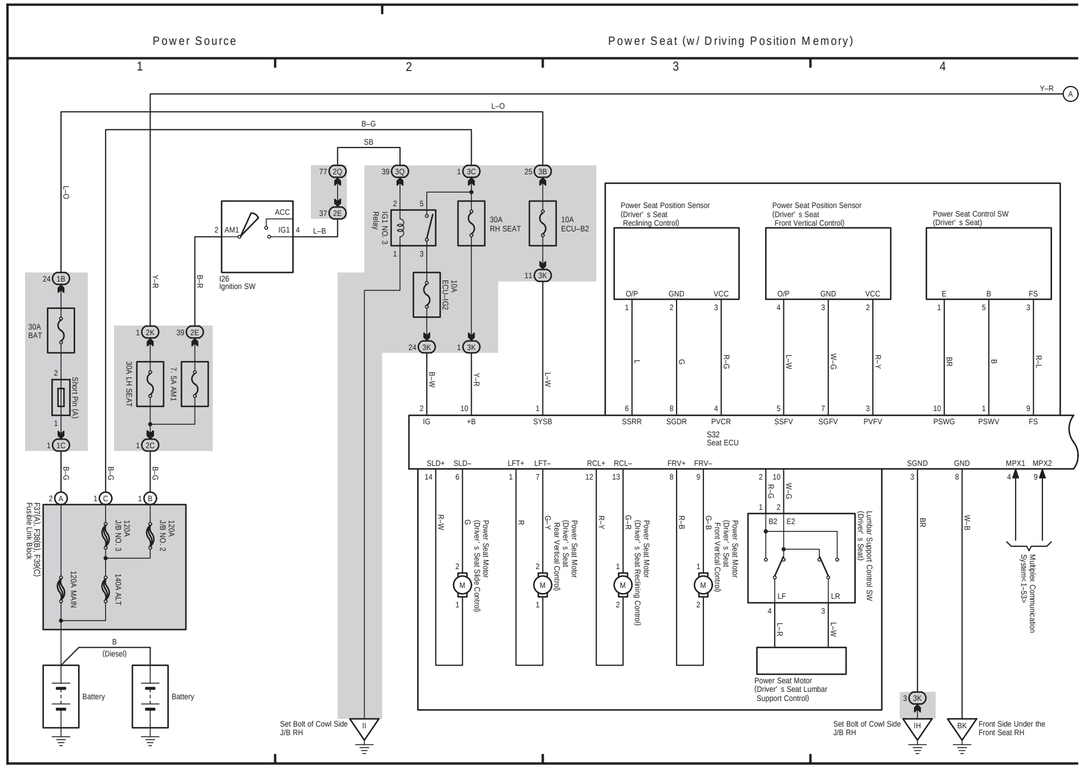

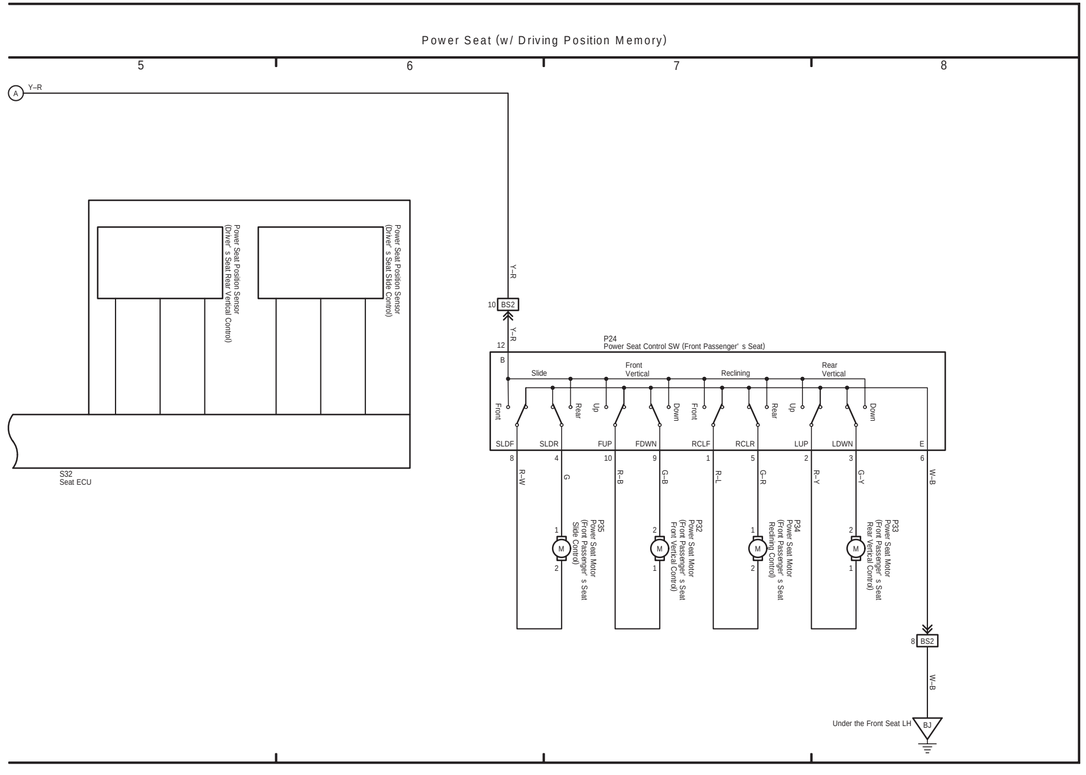

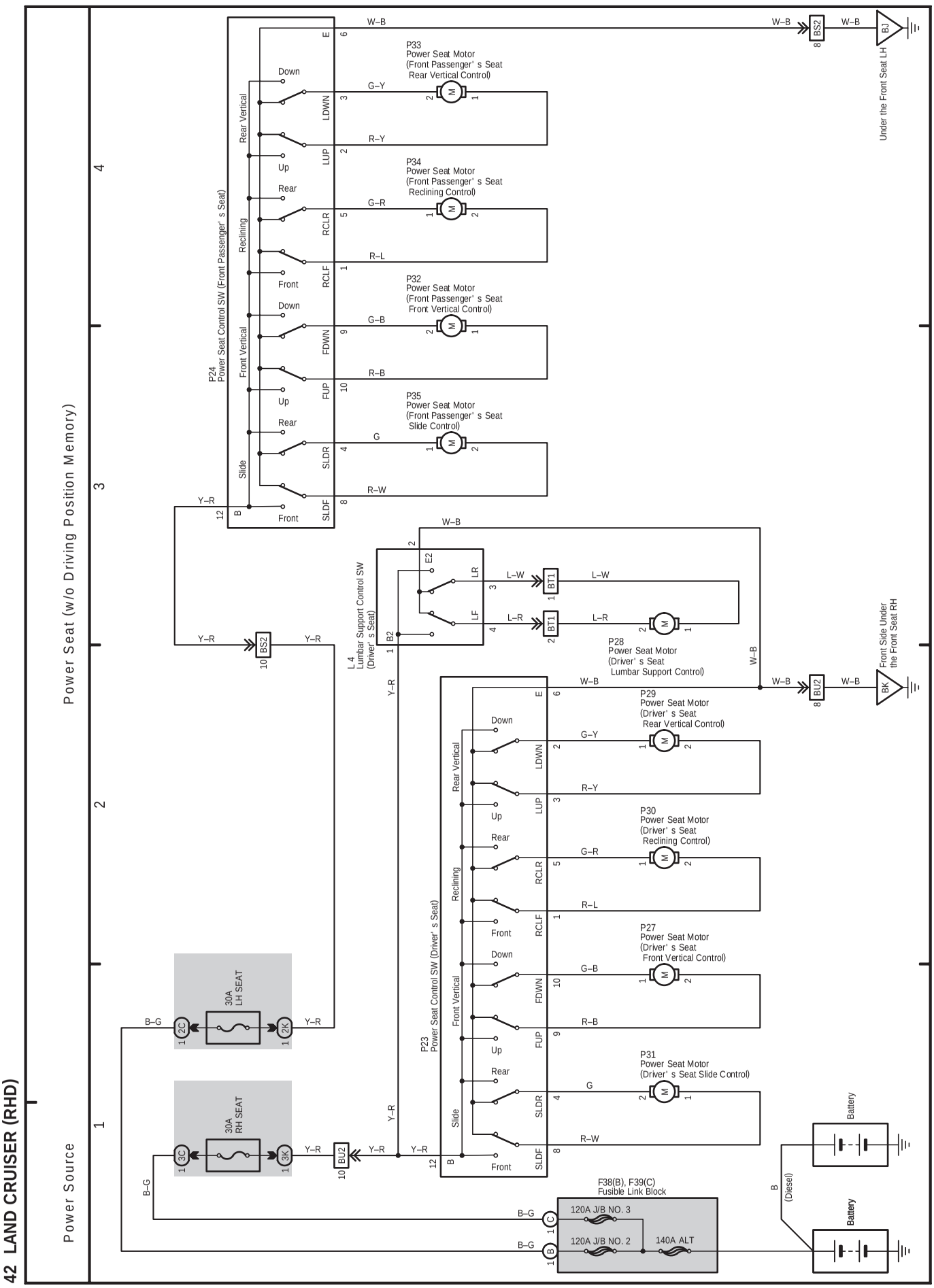
42 LAND CRUISER (RHD)
Power Source
Power Seat (w/o Driving Position Memory)
1
2
3
4
P24
Power Seat Control SW (Front Passenger' s Seat)
Rear Vertical
Reclining
Front Vertical
Slide
Down
Up
Rear
Front
LDWN
LUP
RCLR
RCLF
FDWN
FUP
SLDR
SLDF
P33
Power Seat Motor
(Front Passenger' s Seat
Rear Vertical Control)
P34
Power Seat Motor
(Front Passenger' s Seat
Reclining Control)
P32
Power Seat Motor
(Front Passenger' s Seat
Front Vertical Control)
P35
Power Seat Motor
(Front Passenger' s Seat
Slide Control)
W–B
G–Y
R–Y
G–R
R–L
G–B
R–B
G
R–W
Y–R
BS2
BJ
Under the Front Seat LH
L 4
Lumbar Support Control SW
(Driver' s Seat)
E2
LR
LF
L–W
L–R
BT1
P28
Power Seat Motor
(Driver' s Seat
Lumbar Support Control)
BU2
BK
Front Side Under
the Front Seat RH
P23
Power Seat Control SW (Driver' s Seat)
P29
Power Seat Motor
(Driver' s Seat
Rear Vertical Control)
P30
Power Seat Motor
(Driver' s Seat
Reclining Control)
P27
Power Seat Motor
(Driver' s Seat
Front Vertical Control)
P31
Power Seat Motor
(Driver' s Seat Slide Control)
30A
LH SEAT
2C
2K
30A
RH SEAT
3C
3K
B–G
F38(B), F39(C)
Fusible Link Block
120A J/B NO. 3
120A J/B NO. 2
140A ALT
Battery
(Diesel)

41 LAND CRUISER (RHD)

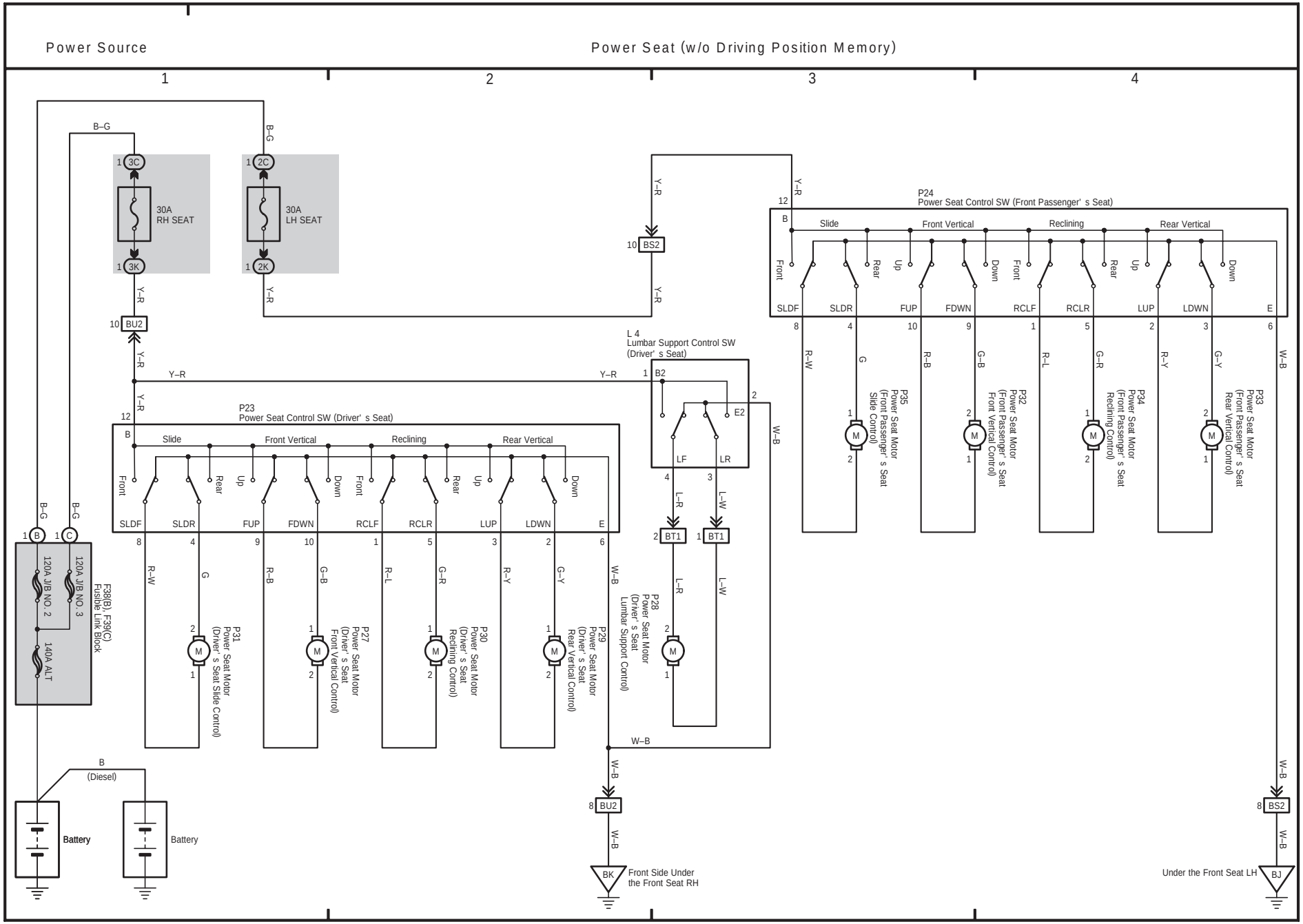

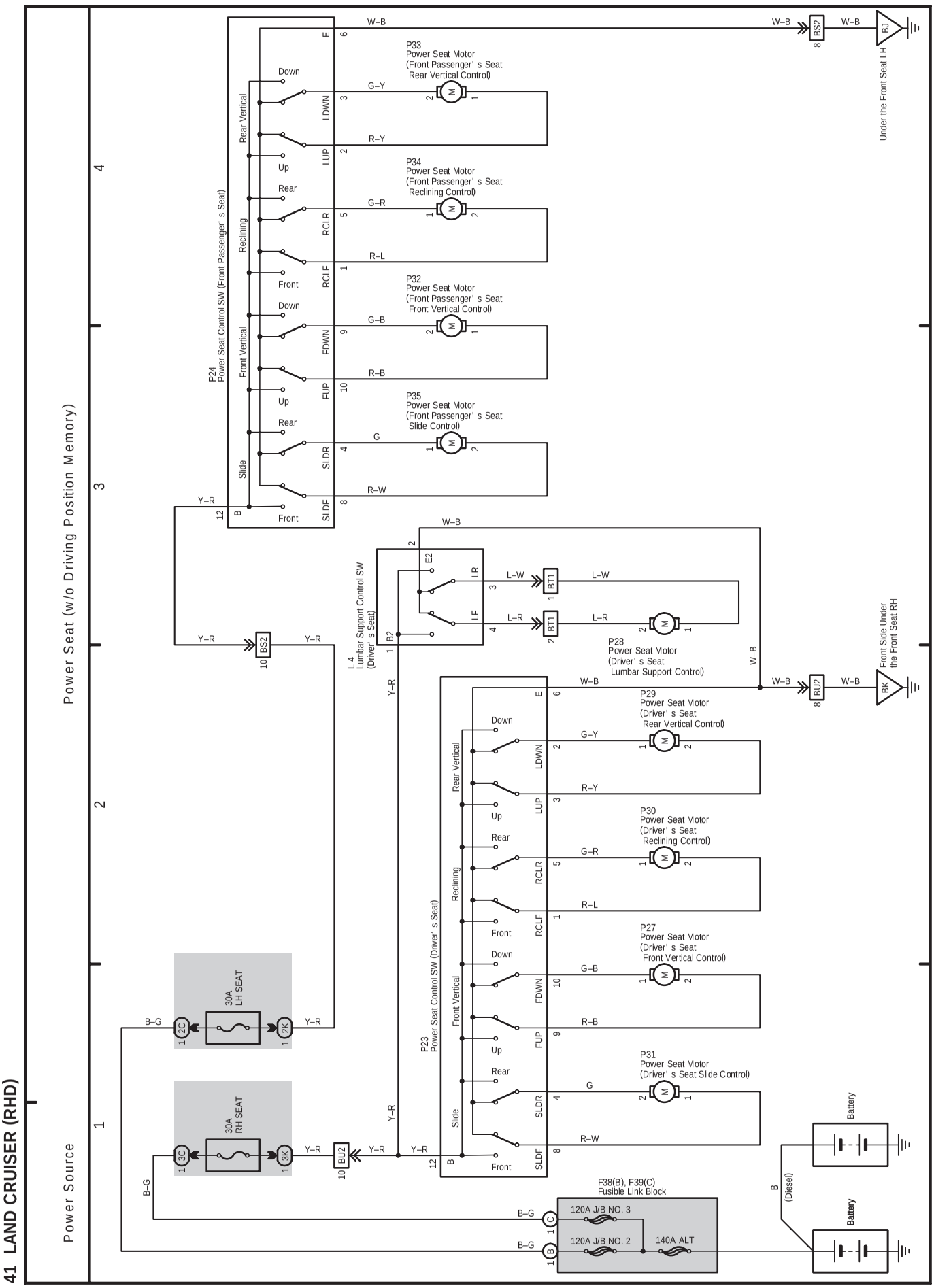
41 LAND CRUISER (RHD)
Power Source
Power Seat (w/o Driving Position Memory)
1
2
3
4
P24
Power Seat Control SW (Front Passenger' s Seat)
Rear Vertical
Reclining
Front Vertical
Slide
Down
Up
Rear
Front
LDWN
LUP
RCLR
RCLF
FDWN
FUP
SLDR
SLDF
P33
Power Seat Motor
(Front Passenger' s Seat
Rear Vertical Control)
P34
Power Seat Motor
(Front Passenger' s Seat
Reclining Control)
P32
Power Seat Motor
(Front Passenger' s Seat
Front Vertical Control)
P35
Power Seat Motor
(Front Passenger' s Seat
Slide Control)
W–B
G–Y
R–Y
G–R
R–L
G–B
R–B
G
R–W
Y–R
BS2
BJ
Under the Front Seat LH
L 4
Lumbar Support Control SW
(Driver' s Seat)
E2
LR
LF
L–W
L–R
BT1
P28
Power Seat Motor
(Driver' s Seat
Lumbar Support Control)
BU2
BK
Front Side Under
the Front Seat RH
P23
Power Seat Control SW (Driver' s Seat)
P29
Power Seat Motor
(Driver' s Seat
Rear Vertical Control)
P30
Power Seat Motor
(Driver' s Seat
Reclining Control)
P27
Power Seat Motor
(Driver' s Seat
Front Vertical Control)
P31
Power Seat Motor
(Driver' s Seat Slide Control)
30A
LH SEAT
30A
RH SEAT
2C
2K
3C
3K
B–G
F38(B), F39(C)
Fusible Link Block
120A J/B NO. 3
120A J/B NO. 2
140A ALT
Battery
B
(Diesel)

F ELECTRICAL WIRING DIAGRAM (System Circuits)

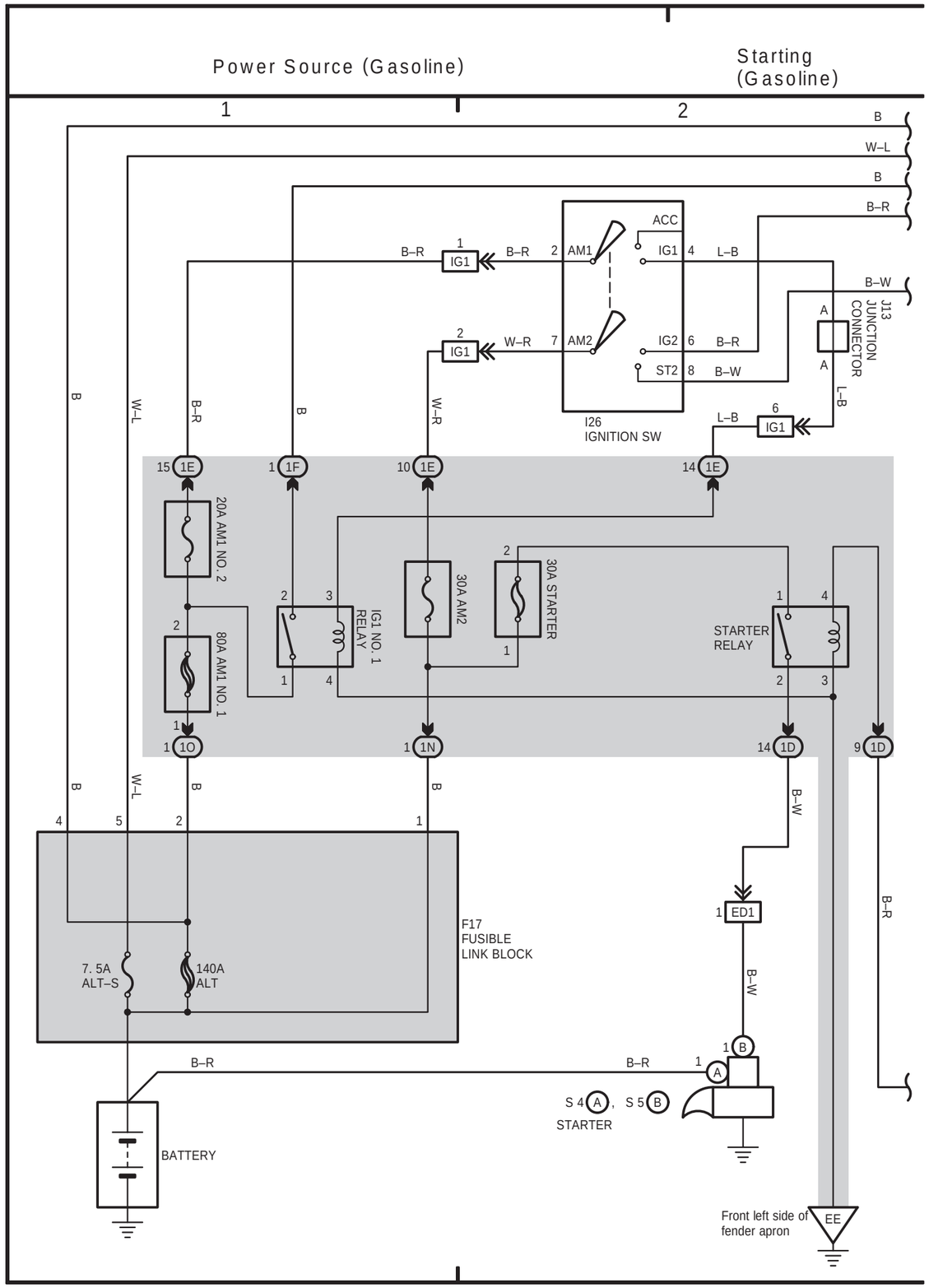

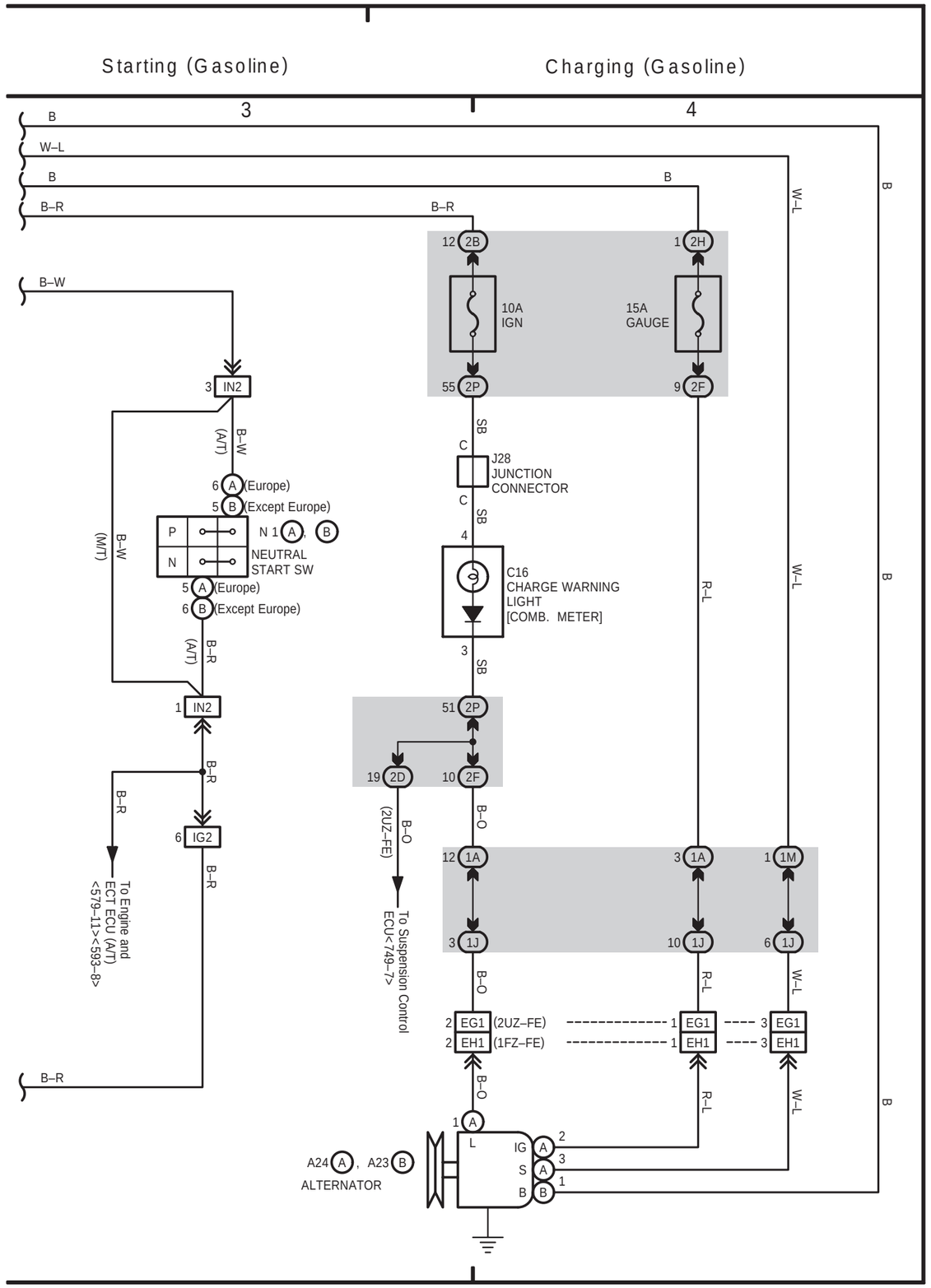

LAND CRUISER Station Wagon (EWD342F)

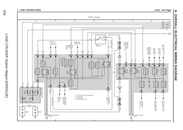

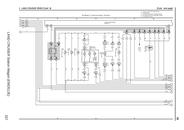

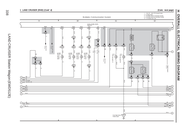

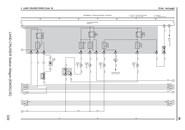

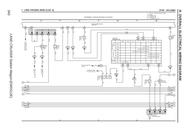

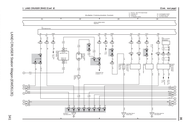

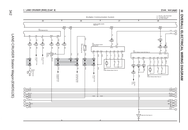

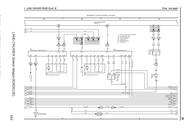

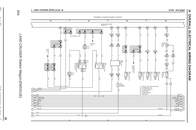

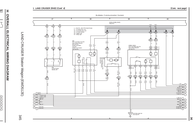

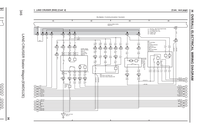

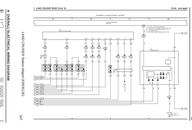

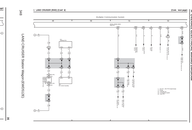

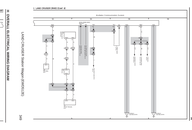

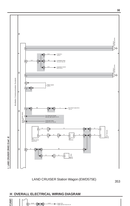

LAND CRUISER Station Wagon (EWD579U)

353

H OVERALL ELECTRICAL WIRING DIAGRAM

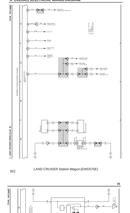

LAND CRUISER Station Wagon (EWD579U)

352

H OVERALL ELECTRICAL WIRING DIAGRAM

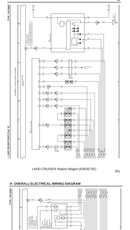

LAND CRUISER Station Wagon (EWD579U)

351

H OVERALL ELECTRICAL WIRING DIAGRAM

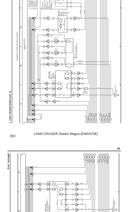

LAND CRUISER Station Wagon (EWD579U)

350

H OVERALL ELECTRICAL WIRING DIAGRAM

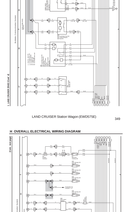

LAND CRUISER Station Wagon (EWD579U)

349

H OVERALL ELECTRICAL WIRING DIAGRAM

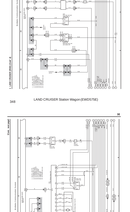

LAND CRUISER Station Wagon (EWD579U)

348

H OVERALL ELECTRICAL WIRING DIAGRAM

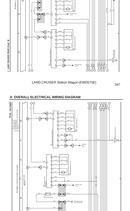

LAND CRUISER Station Wagon (EWD579U)

347

H OVERALL ELECTRICAL WIRING DIAGRAM

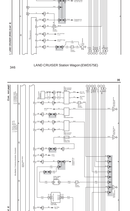

LAND CRUISER Station Wagon (EWD579U)

346

H OVERALL ELECTRICAL WIRING DIAGRAM

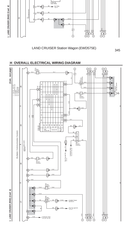

LAND CRUISER Station Wagon (EWD579U)

345

H OVERALL ELECTRICAL WIRING DIAGRAM

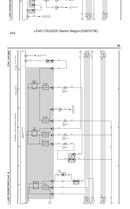

LAND CRUISER Station Wagon (EWD579U)

344

H OVERALL ELECTRICAL WIRING DIAGRAM

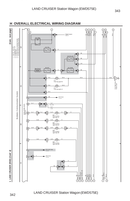

LAND CRUISER Station Wagon (EWD579U)

343

H OVERALL ELECTRICAL WIRING DIAGRAM

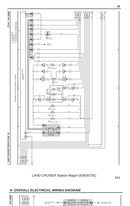

LAND CRUISER Station Wagon (EWD579U)

342

H OVERALL ELECTRICAL WIRING DIAGRAM

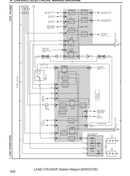

LAND CRUISER Station Wagon (EWD579U)

341

H OVERALL ELECTRICAL WIRING DIAGRAM

LAND CRUISER Station Wagon (EWD579U)

340

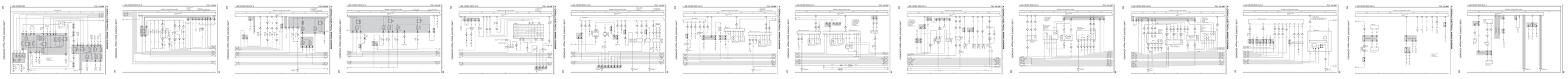

F ELECTRICAL WIRING DIAGRAM (System Circuits)

Power Source

Power Tilt and Power Telescopic

Power Tilt and Power Telescopic

1 2 3 4

∗ 1 : Europe, 1HZ and 1HD–T
∗ 2 : Except 1HZ, 1HD–T and Australia
∗ 3 : 1HD–FTE
∗ 4 : Except 1HD–FTE

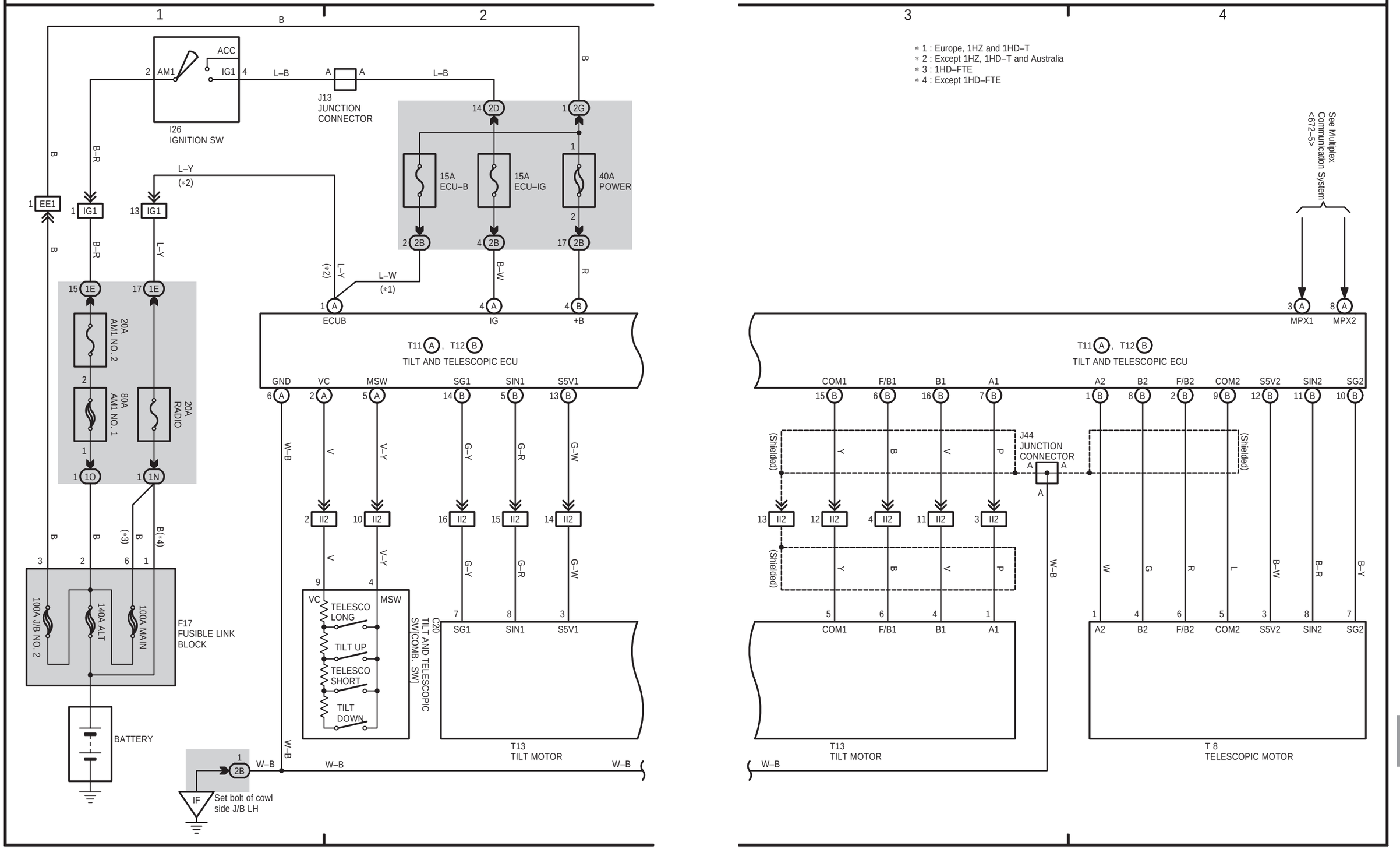

RHD

RHD

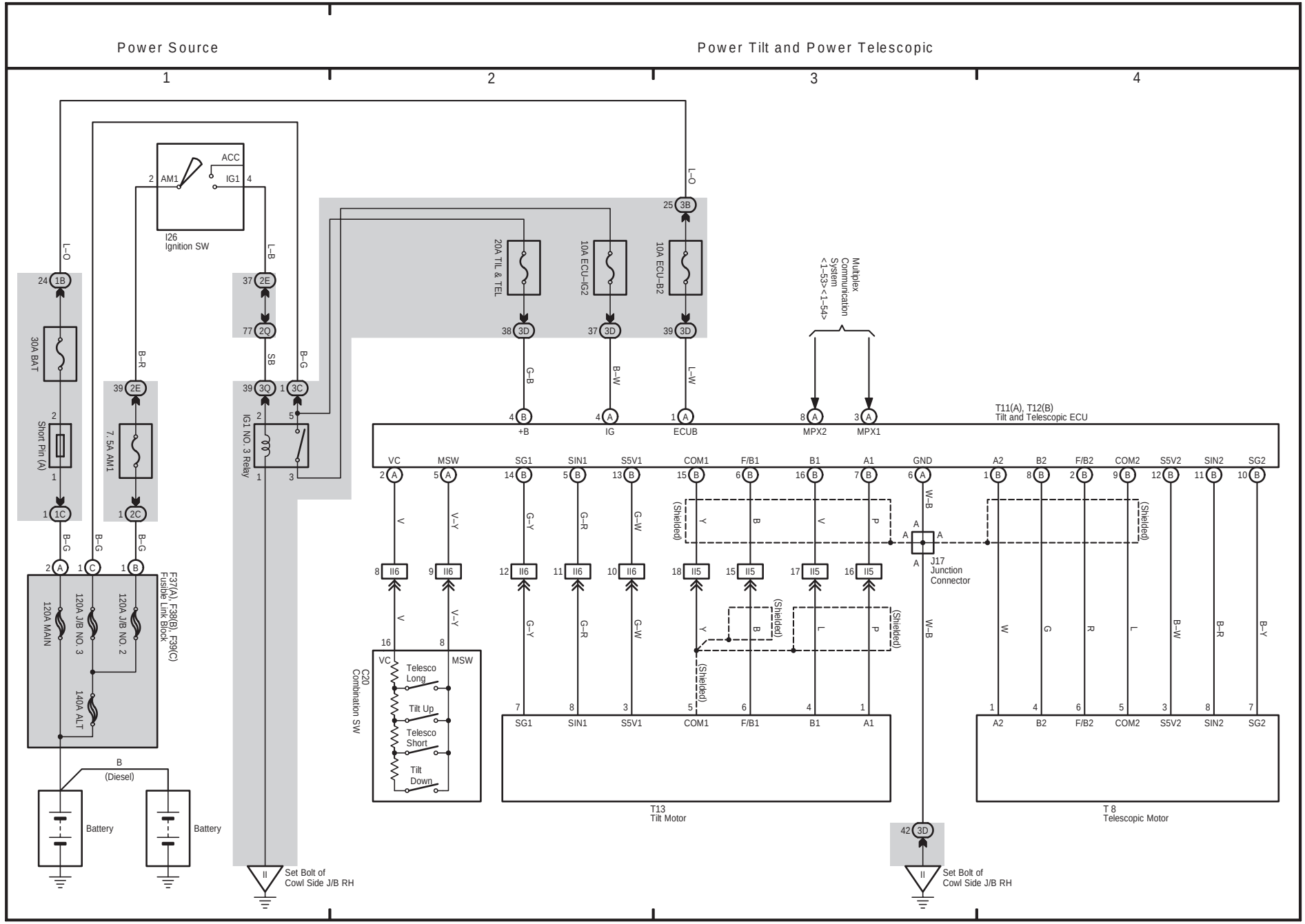
Power Source
Power Tilt and Power Telescopic
1
2
3
4
ACC
AM1
IG1
I26
Ignition SW
L–O
L–B
B–R
B–G
SB
30A BAT
Short Pin (A)
7.5A AM1
IG1 NO. 3 Relay
20A TIL & TEL
10A ECU–IG2
10A ECU–B2
Multiplex Communication System <1–53> <1–54>
G–B
B–W
L–W
T11(A), T12(B)
Tilt and Telescopic ECU
+B
IG
ECUB
MPX2
MPX1
VC
MSW
SG1
SIN1
S5V1
COM1
F/B1
B1
A1
GND
A2
B2
F/B2
COM2
S5V2
SIN2
SG2
V
V–Y
G–Y
G–R
G–W
Y
B
W–B
(Shielded)
J17
Junction
Connector
F37(A), F38(B), F39(C)
Fusible Link Block
120A MAIN
120A JB NO. 3
120A JB NO. 2
140A ALT
B
(Diesel)
Battery
C20
Combination SW
Telesco
Long
Tilt Up
Telesco
Short
Tilt
Down
T13
Tilt Motor
T 8
Telescopic Motor
Set Bolt of
Cowl Side J/B RH

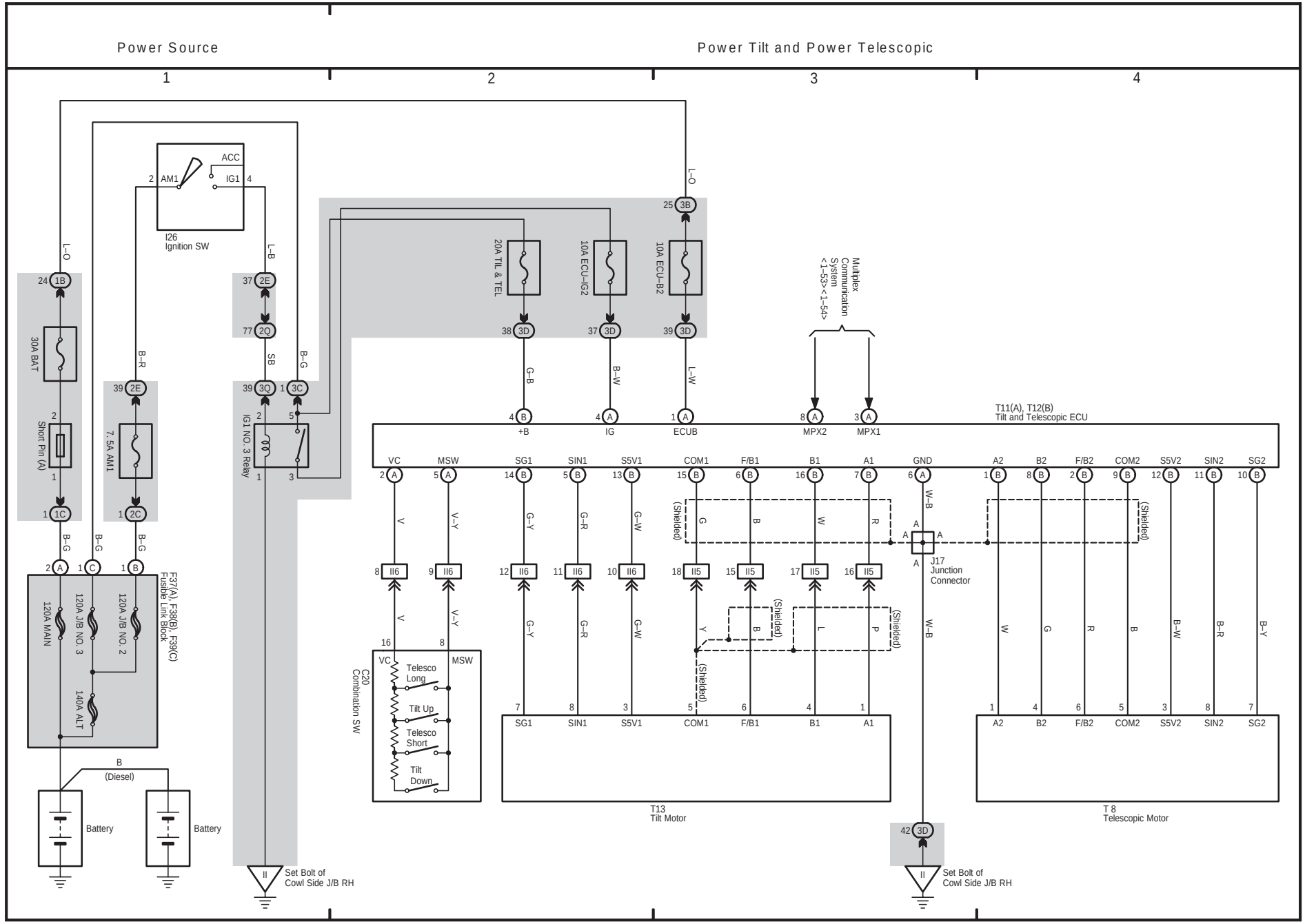
Power Source
Power Tilt and Power Telescopic
1
2
3
4
ACC
AM1
IG1
I26
Ignition SW
30A BAT
Short Pin (A)
7.5A AM1
IG1 NO. 3 Relay
20A TIL & TEL
10A ECU-IG2
10A ECU-B2
Multiplex Communication System
<1-53><1-54>
T11(A), T12(B)
Tilt and Telescopic ECU
+B
IG
ECUB
MPX2
MPX1
VC
MSW
SG1
SIN1
S5V1
COM1
F/B1
B1
A1
GND
A2
B2
F/B2
COM2
S5V2
SIN2
SG2
(Shielded)
J17
Junction
Connector
C20
Combination SW
Telesco
Long
Tilt Up
Telesco
Short
Tilt
Down
T13
Tilt Motor
T 8
Telescopic Motor
F37(A), F38(B), F39(C)
Fusible Link Block
120A MAIN
120A J/B NO. 3
120A J/B NO. 2
140A ALT
B
(Diesel)
Battery
Battery
Set Bolt of
Cowl Side J/B RH
Set Bolt of
Cowl Side J/B RH

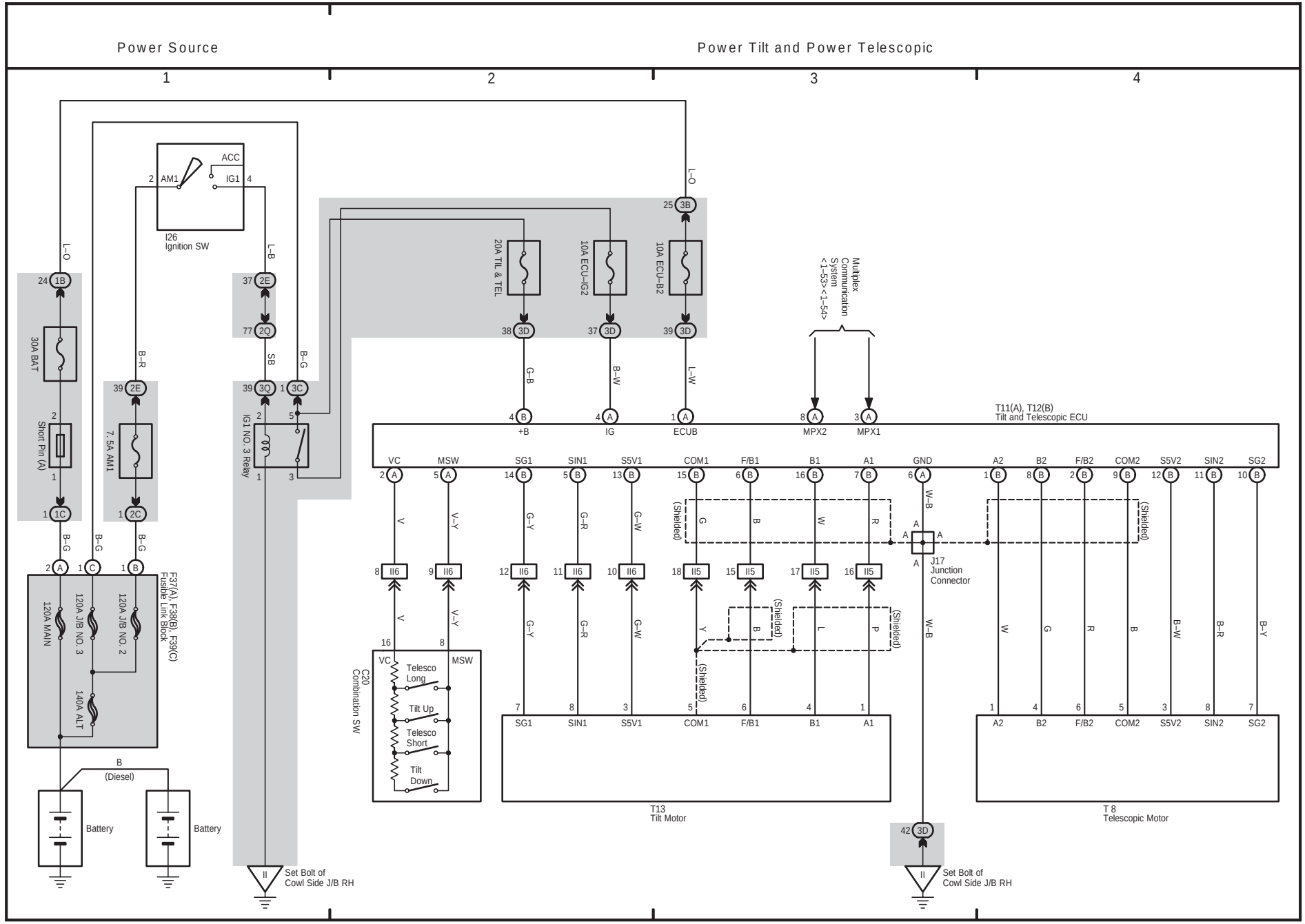
Power Source
Power Tilt and Power Telescopic
1
2
3
4
ACC
AM1
IG1
I26
Ignition SW
30A BAT
Short Pin (A)
7.5A AM1
IG1 NO. 3 Relay
20A TIL & TEL
10A ECU-IG2
10A ECU-B2
Multiplex Communication System
<1-53><1-54>
T11(A), T12(B)
Tilt and Telescopic ECU
+B
IG
ECUB
MPX2
MPX1
VC
MSW
SG1
SIN1
S5V1
COM1
F/B1
B1
A1
GND
A2
B2
F/B2
COM2
S5V2
SIN2
SG2
(Shielded)
J17
Junction
Connector
C20
Combination SW
Telesco
Long
Tilt Up
Telesco
Short
Tilt
Down
T13
Tilt Motor
T 8
Telescopic Motor
F37(A), F38(B), F39(C)
Fusible Link Block
120A MAIN
120A JB NO. 3
120A JB NO. 2
140A ALT
B
(Diesel)
Battery
Battery
Set Bolt of
Cowl Side J/B RH
Set Bolt of
Cowl Side J/B RH

F ELECTRICAL WIRING DIAGRAM (System Circuits)

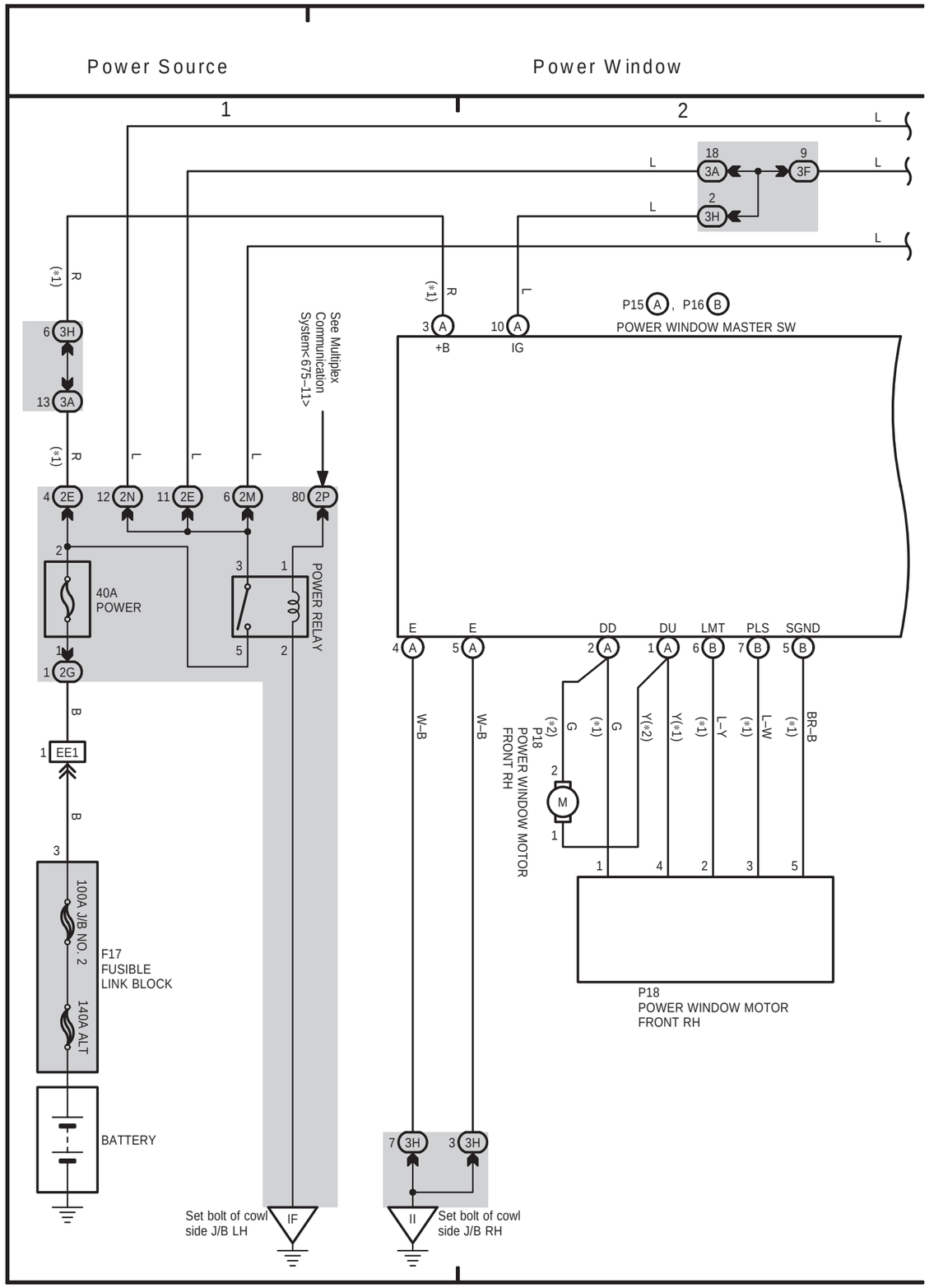

764

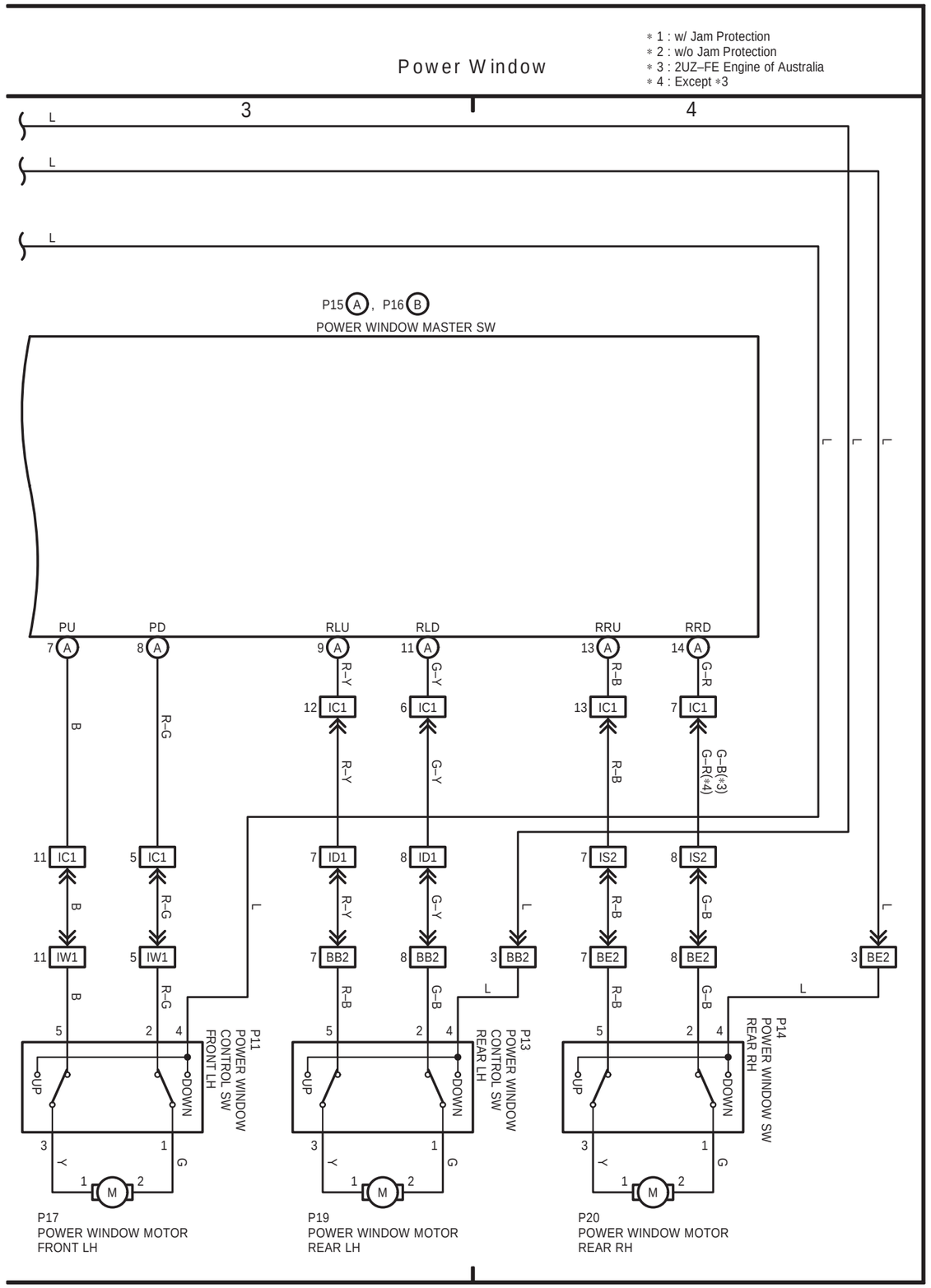

765

LAND CRUISER (RHD)

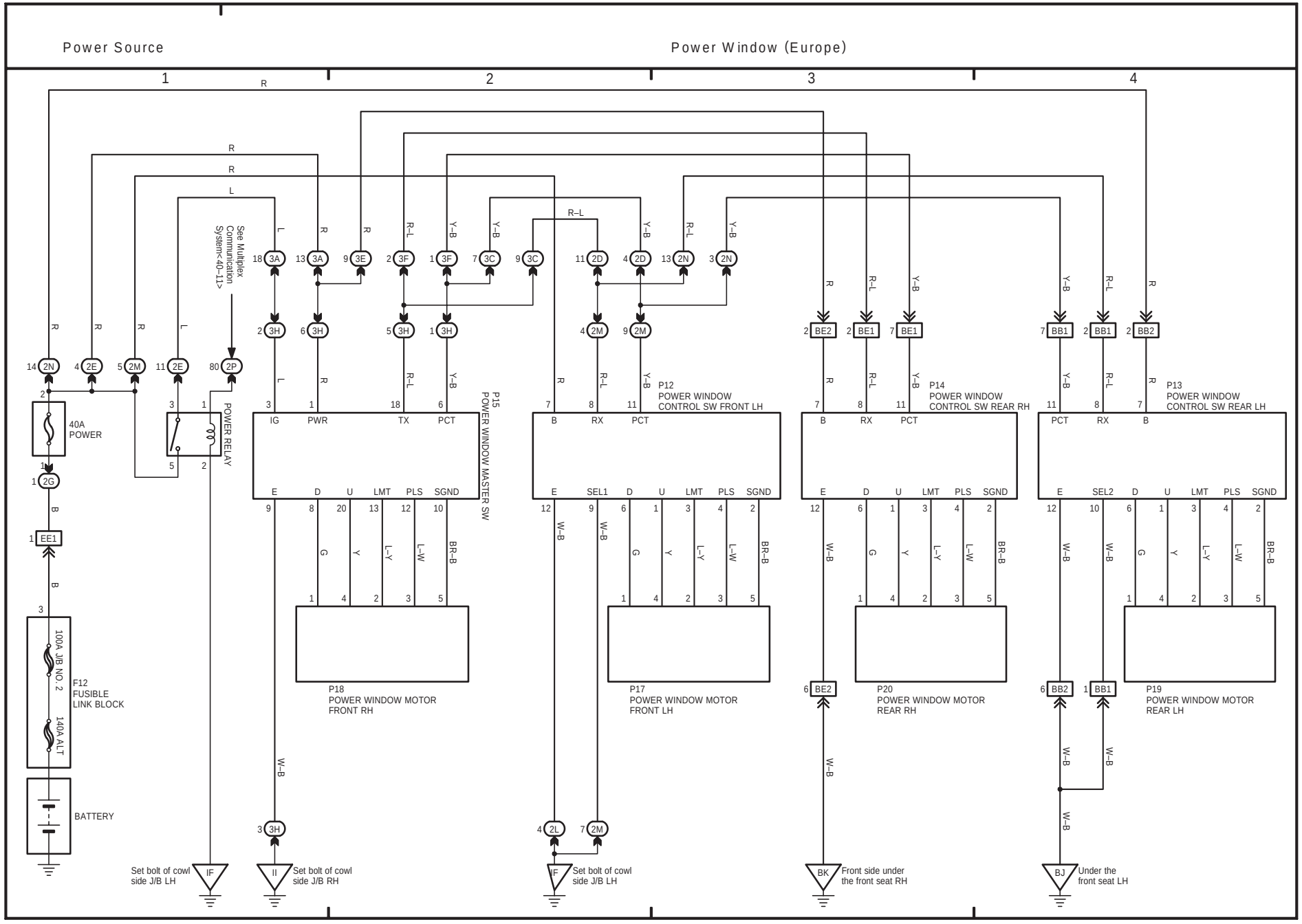

LAND CRUISER (RHD)

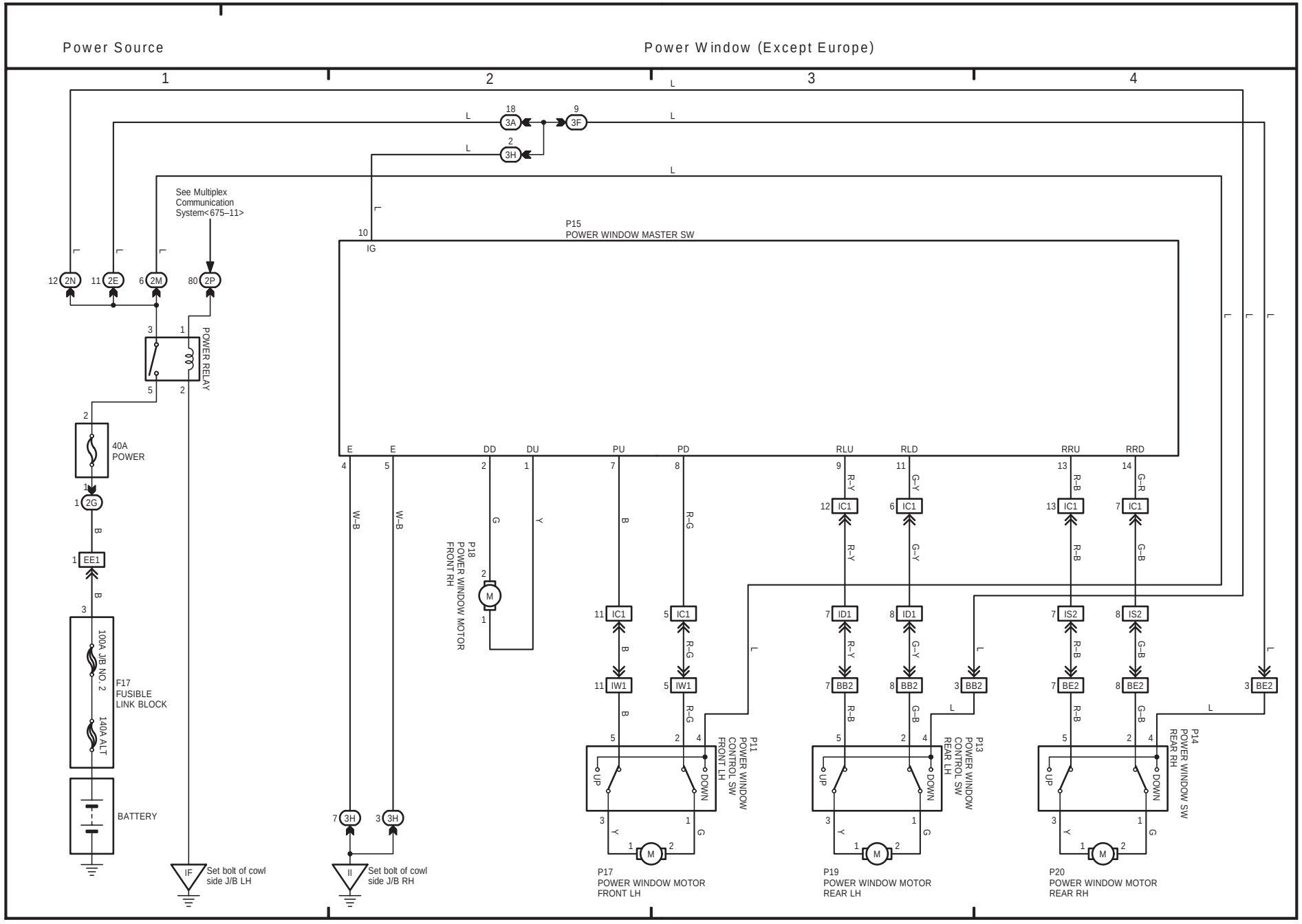

F ELECTRICAL WIRING DIAGRAM (System Circuits)

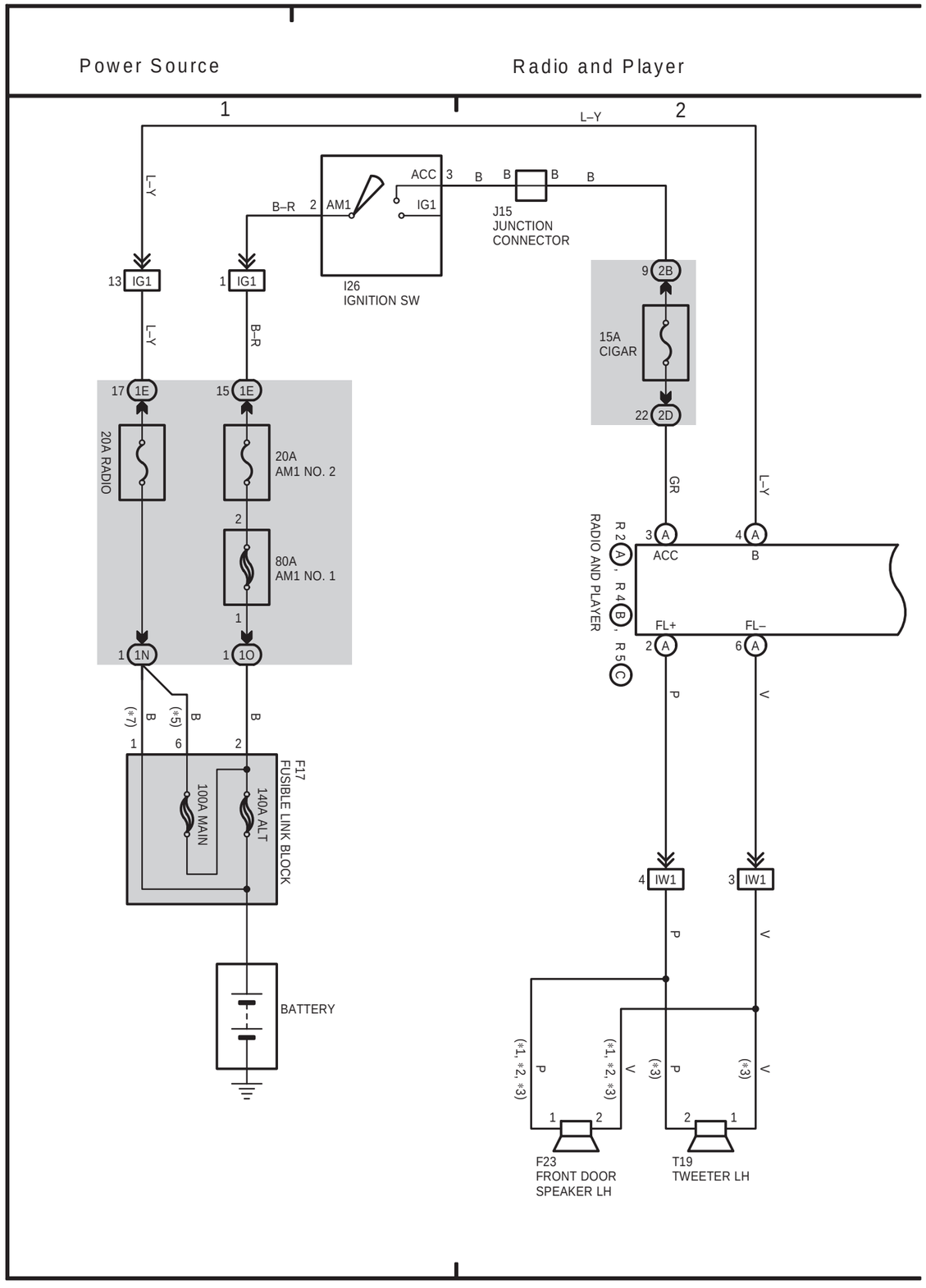

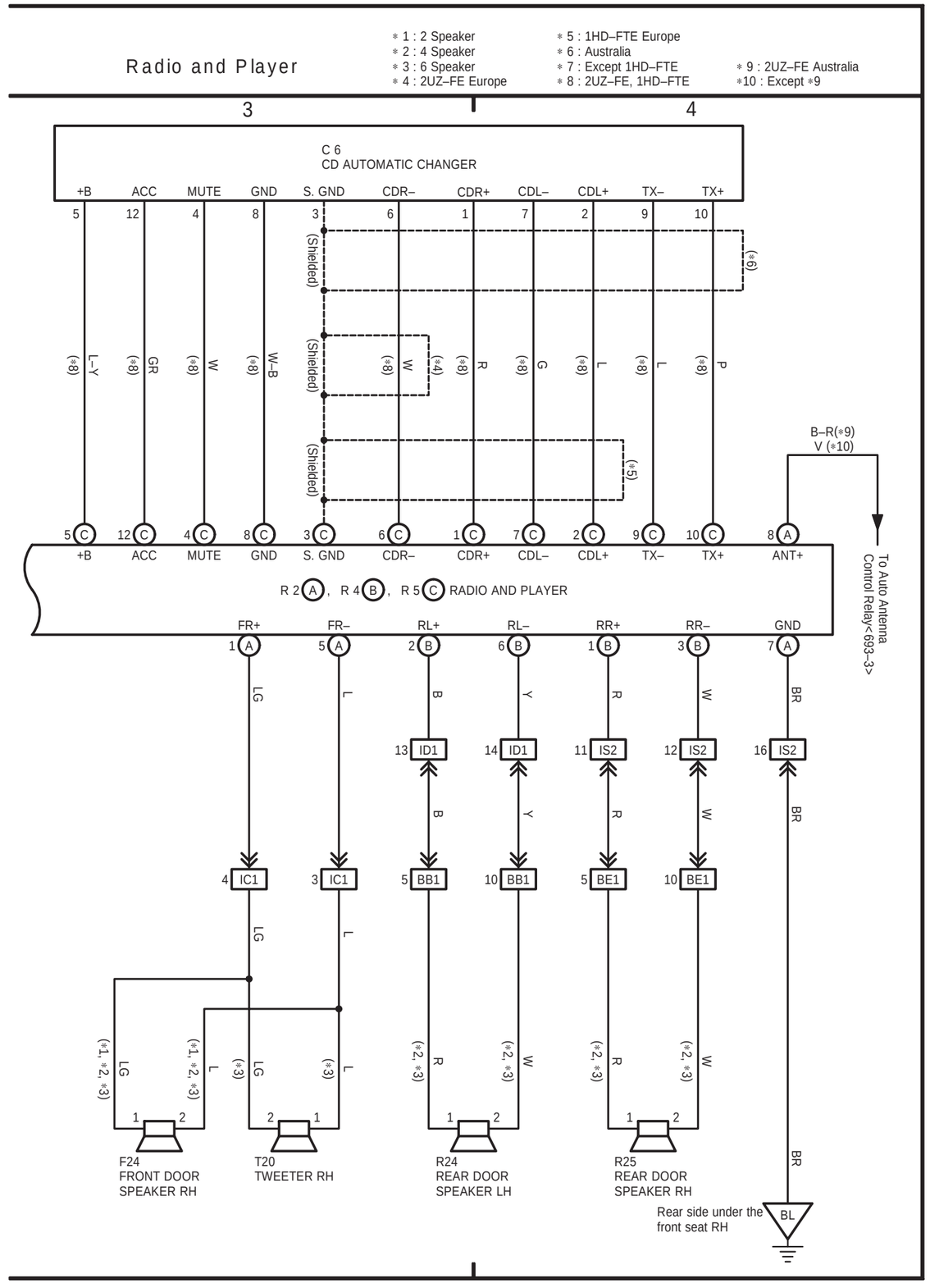

RHD

RHD

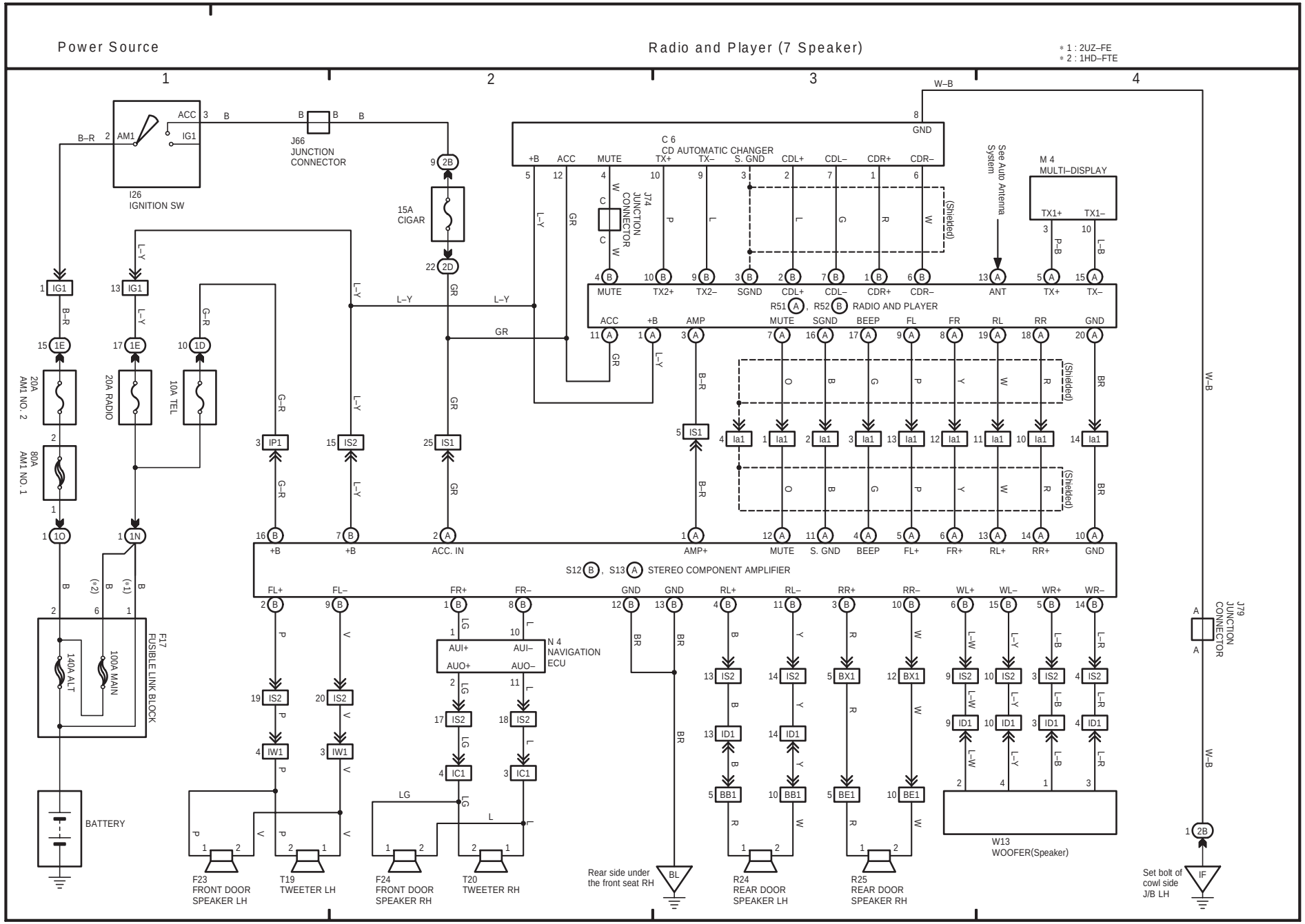
Power Source
Radio and Player (7 Speaker)
* 1 : 2UZ–FE
* 2 : 1HD–FTE
1
2
3
4
I26
IGNITION SW
ACC
IG1
AM1
J66
JUNCTION
CONNECTOR
15A
CIGAR
C 6
CD AUTOMATIC CHANGER
+B
ACC
MUTE
TX+
TX–
S. GND
CDL+
CDL–
CDR+
CDR–
GND
J74
JUNCTION
CONNECTOR
See Auto Antenna System
M 4
MULTI–DISPLAY
TX1+
TX1–
R51 , R52 RADIO AND PLAYER
ANT
AMP
BEEP
FL
FR
RL
RR
20A
AM1 NO. 2
20A RADIO
10A TEL
80A
AM1 NO. 1
F17
FUSIBLE LINK BLOCK
140A ALT
100A MAIN
BATTERY
S12 , S13 STEREO COMPONENT AMPLIFIER
AMP+
FL+
FL–
FR+
FR–
RL+
RL–
RR+
RR–
WL+
WL–
WR+
WR–
N 4
NAVIGATION
ECU
AUI+
AUI–
AUO+
AUO–
J79
JUNCTION
CONNECTOR
W13
WOOFER(Speaker)
F23
FRONT DOOR
SPEAKER LH
T19
TWEETER LH
F24
FRONT DOOR
SPEAKER RH
T20
TWEETER RH
Rear side under
the front seat RH
R24
REAR DOOR
SPEAKER LH
R25
REAR DOOR
SPEAKER RH
Set bolt of
cowl side
J/B LH
(Shielded)

49 LAND CRUISER (RHD) (Cont. next page)

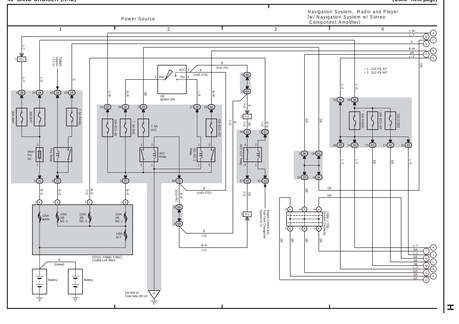

49 LAND CRUISER (RHD) (Cont' d) (Cont. next page)

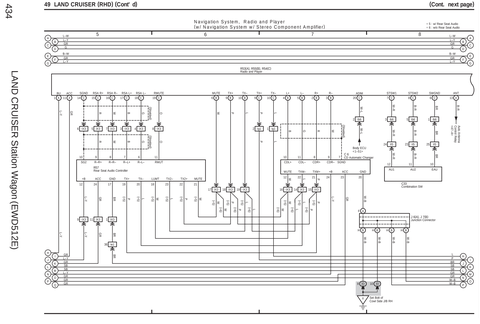

49 LAND CRUISER (RHD) (Cont' d) (Cont. next page)

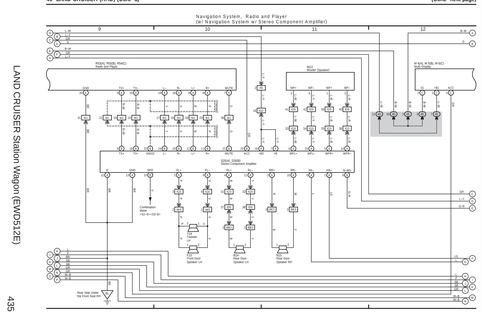

49 LAND CRUISER (RHD) (Cont' d) (Cont. next page)

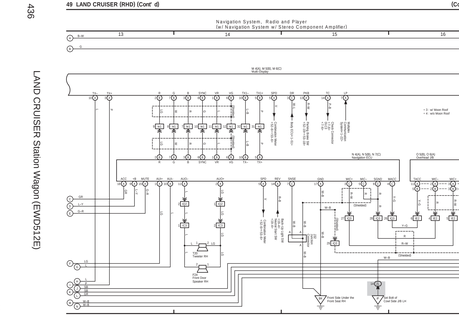

49 LAND CRUISER (RHD) (Cont' d)

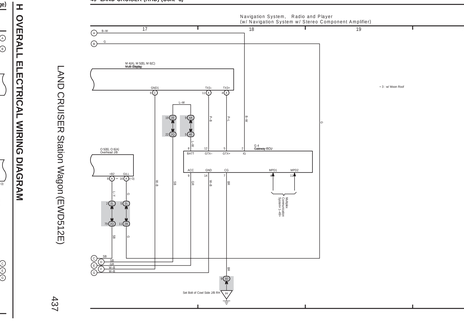

(Cont. next page)

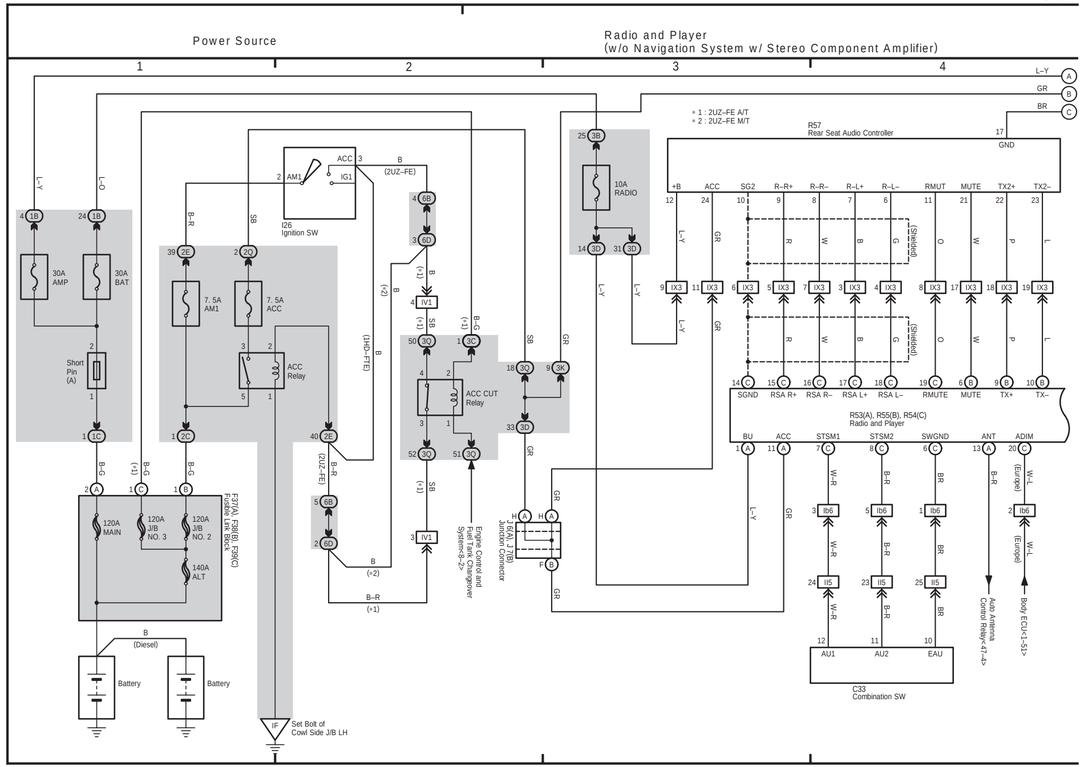

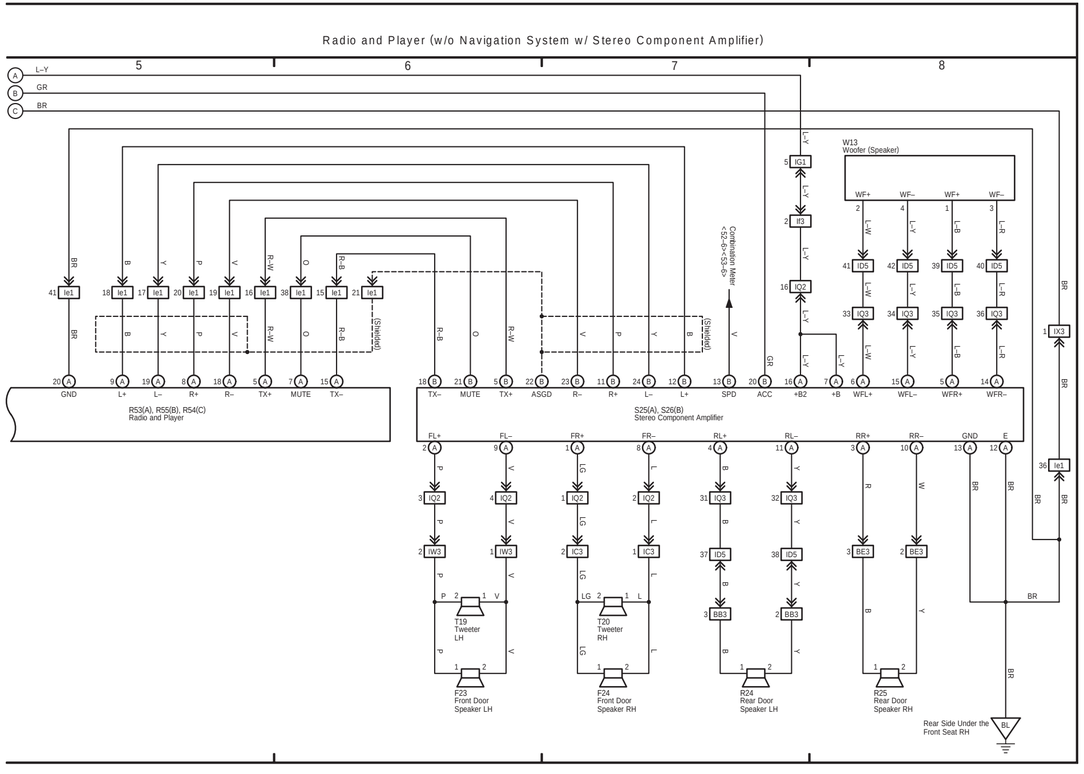

51 LAND CRUISER (RHD)

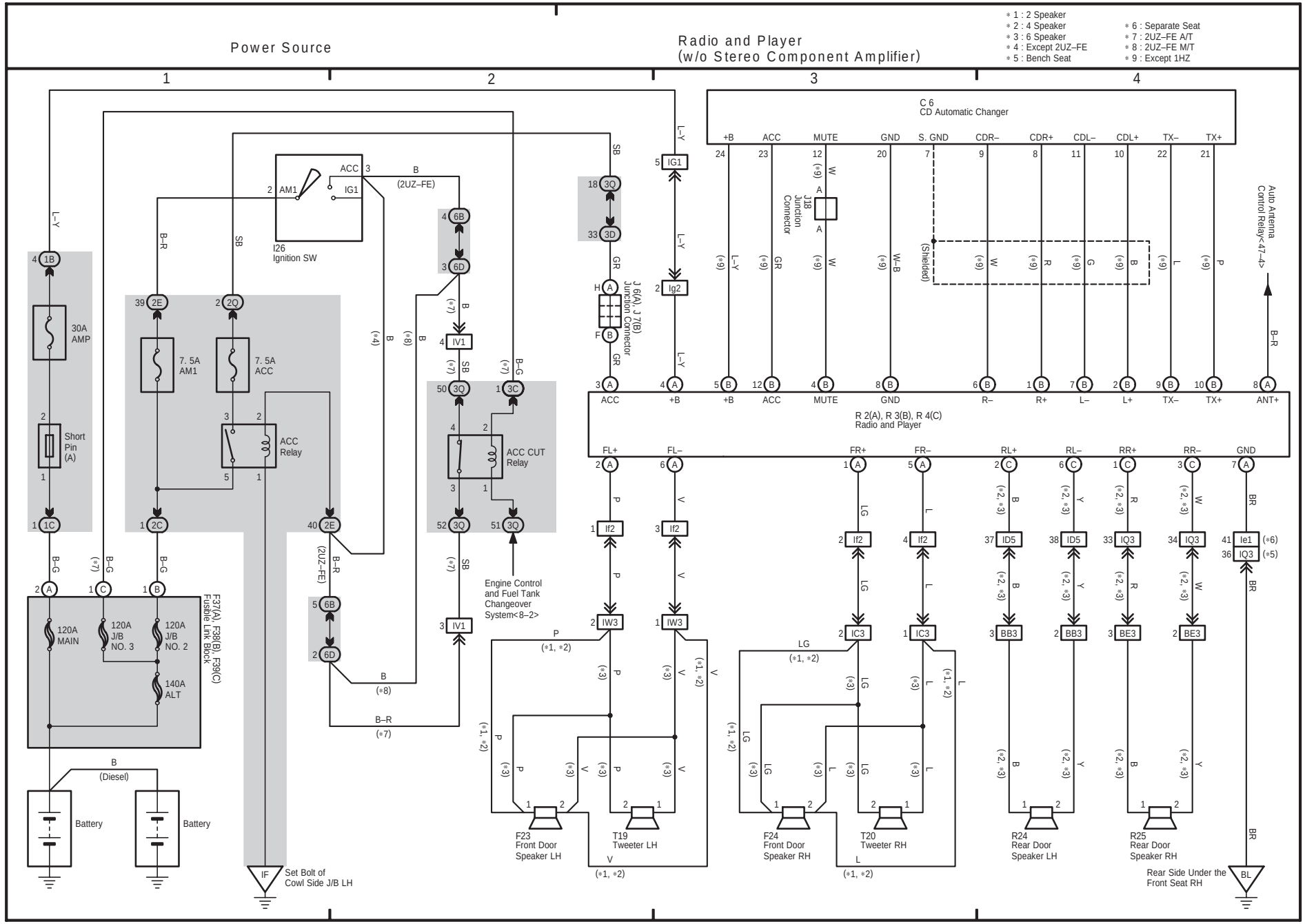

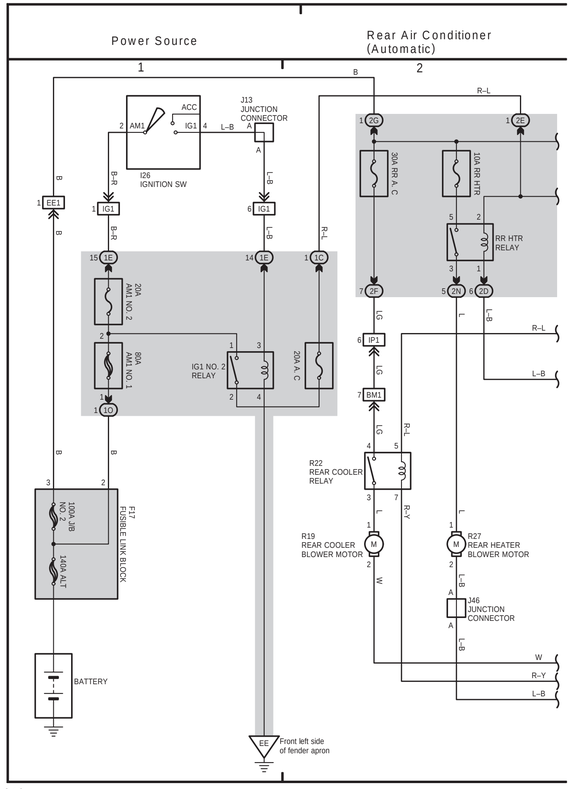

(Cont. next page)

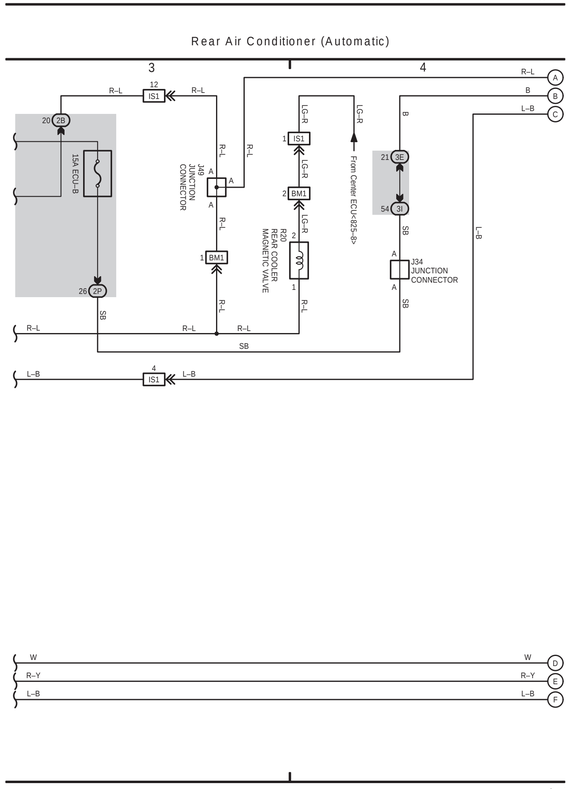

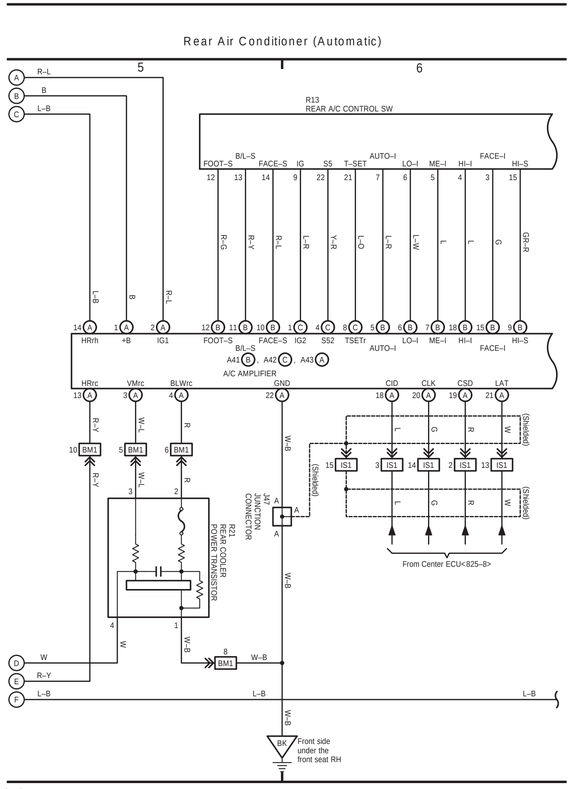

(Cont'd)

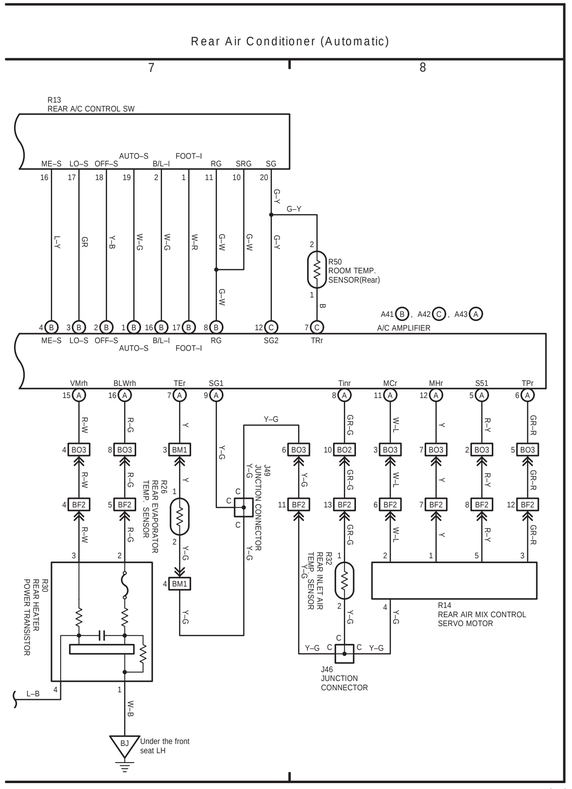

F ELECTRICAL WIRING DIAGRAM (System Circuits)

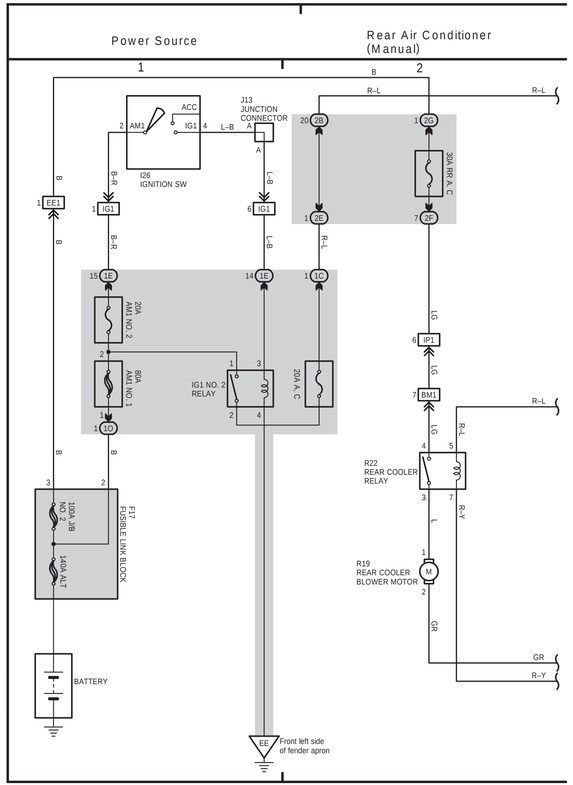

RHD

(Cont. next page)

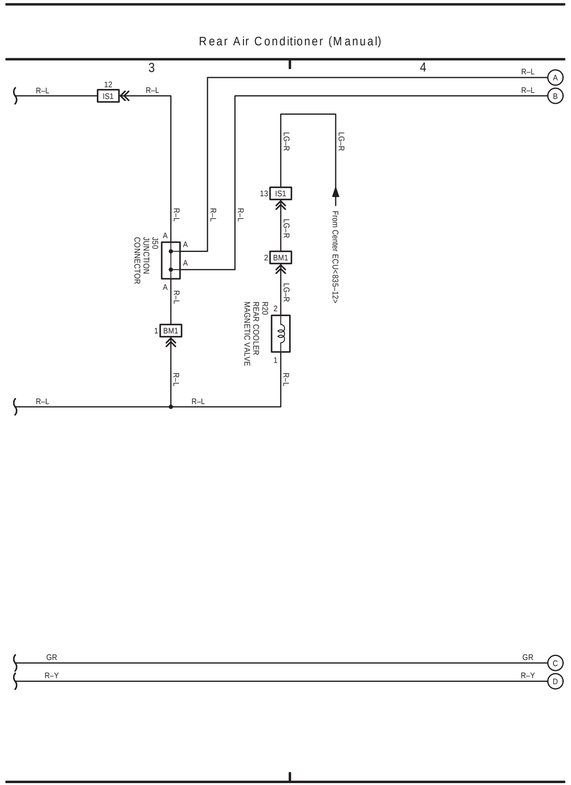

RHD

F ELECTRICAL WIRING DIAGRAM (System Circuits)

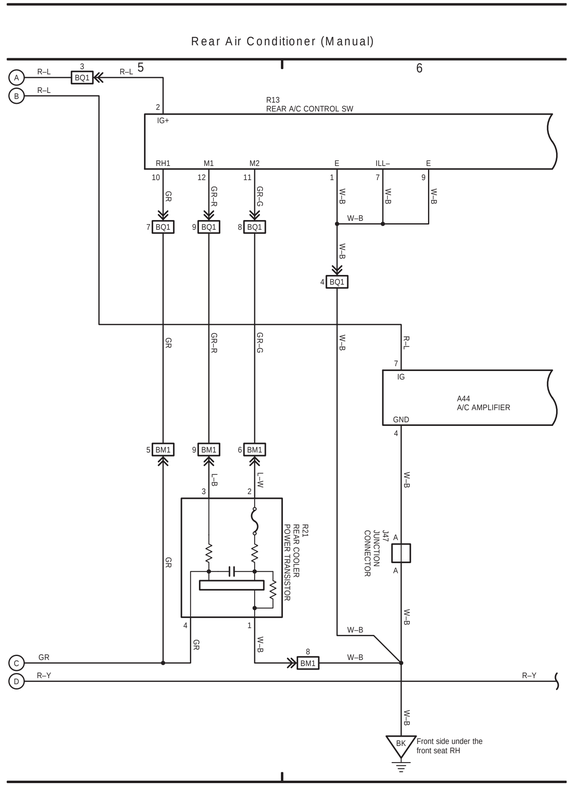

RHD

(Cont'd)

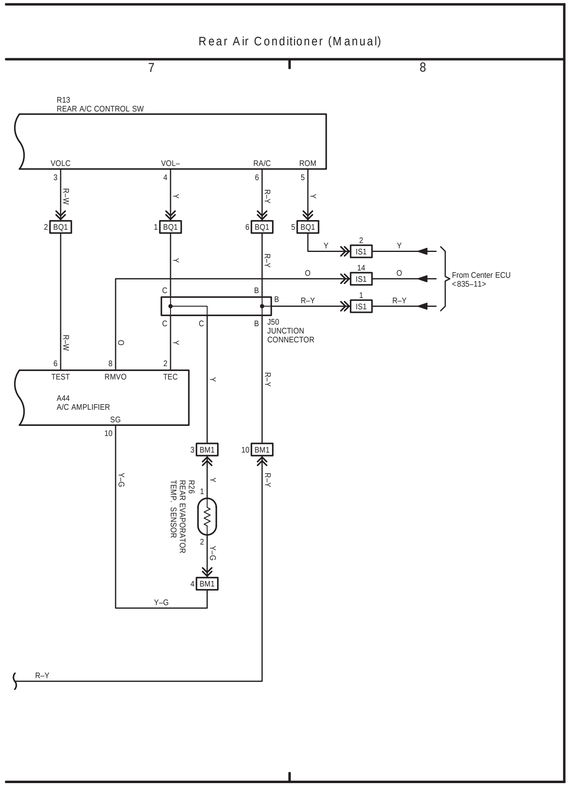

RHD

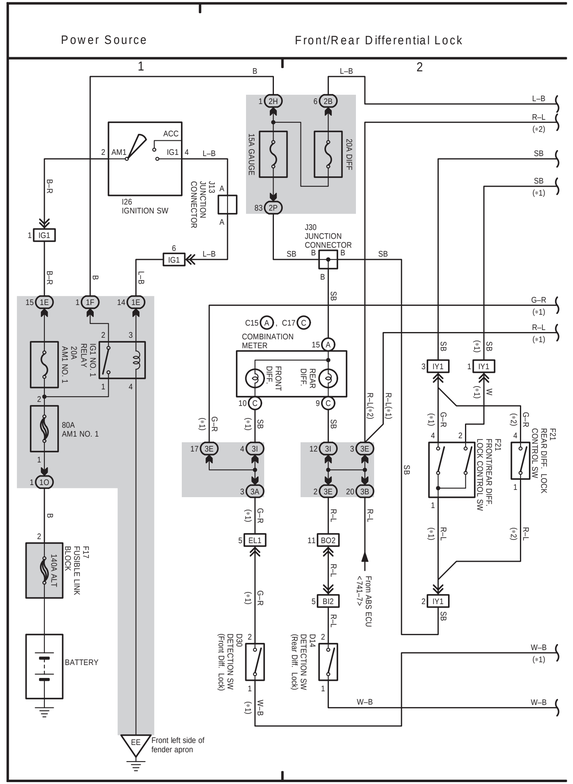

(Cont. next page)

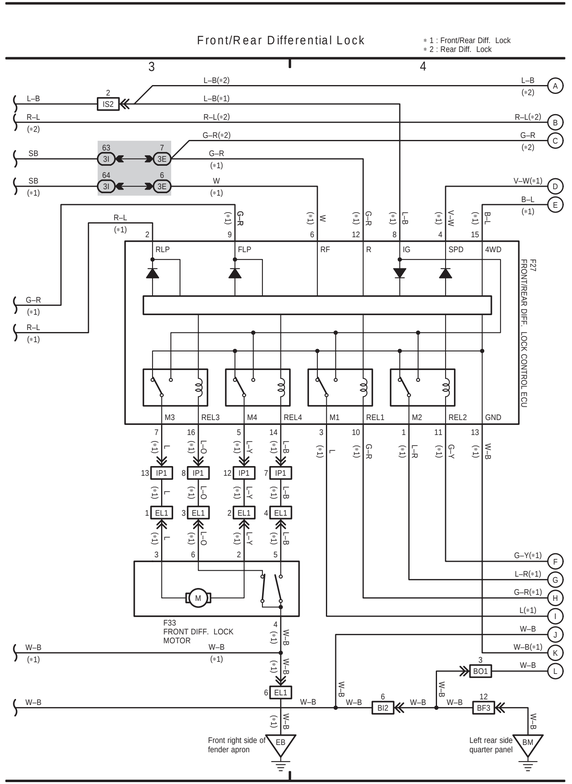

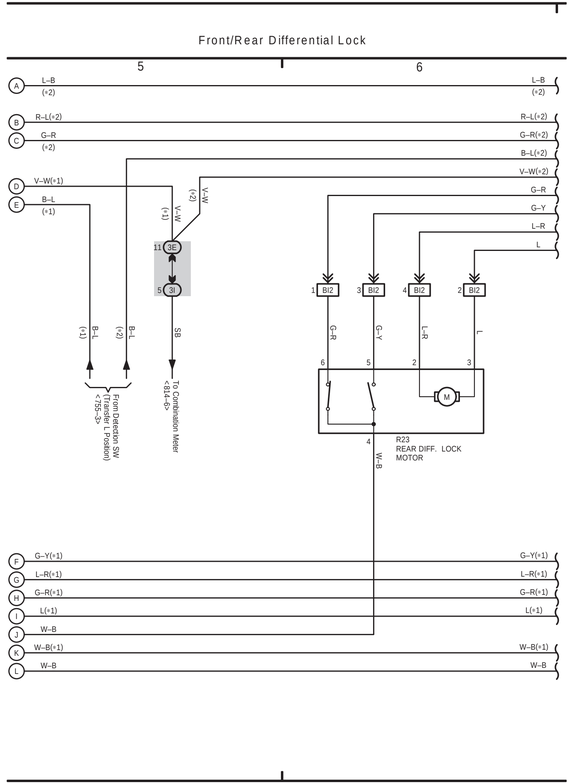

(Cont'd)

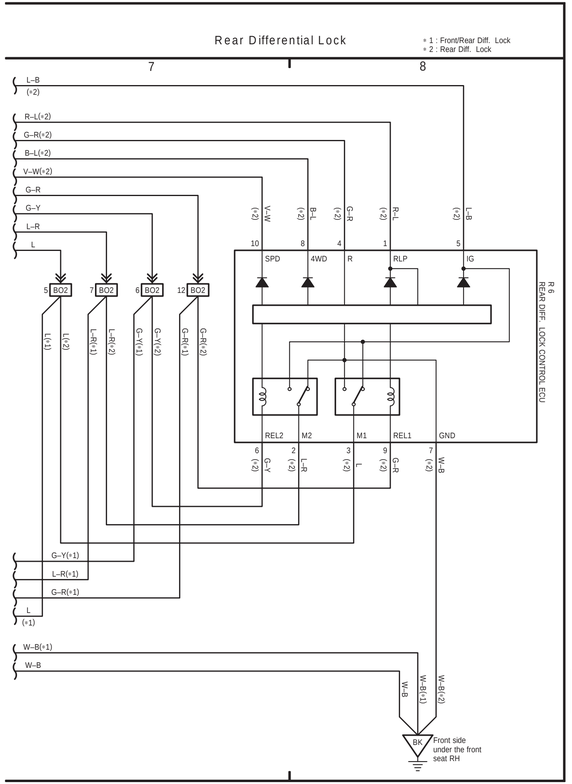

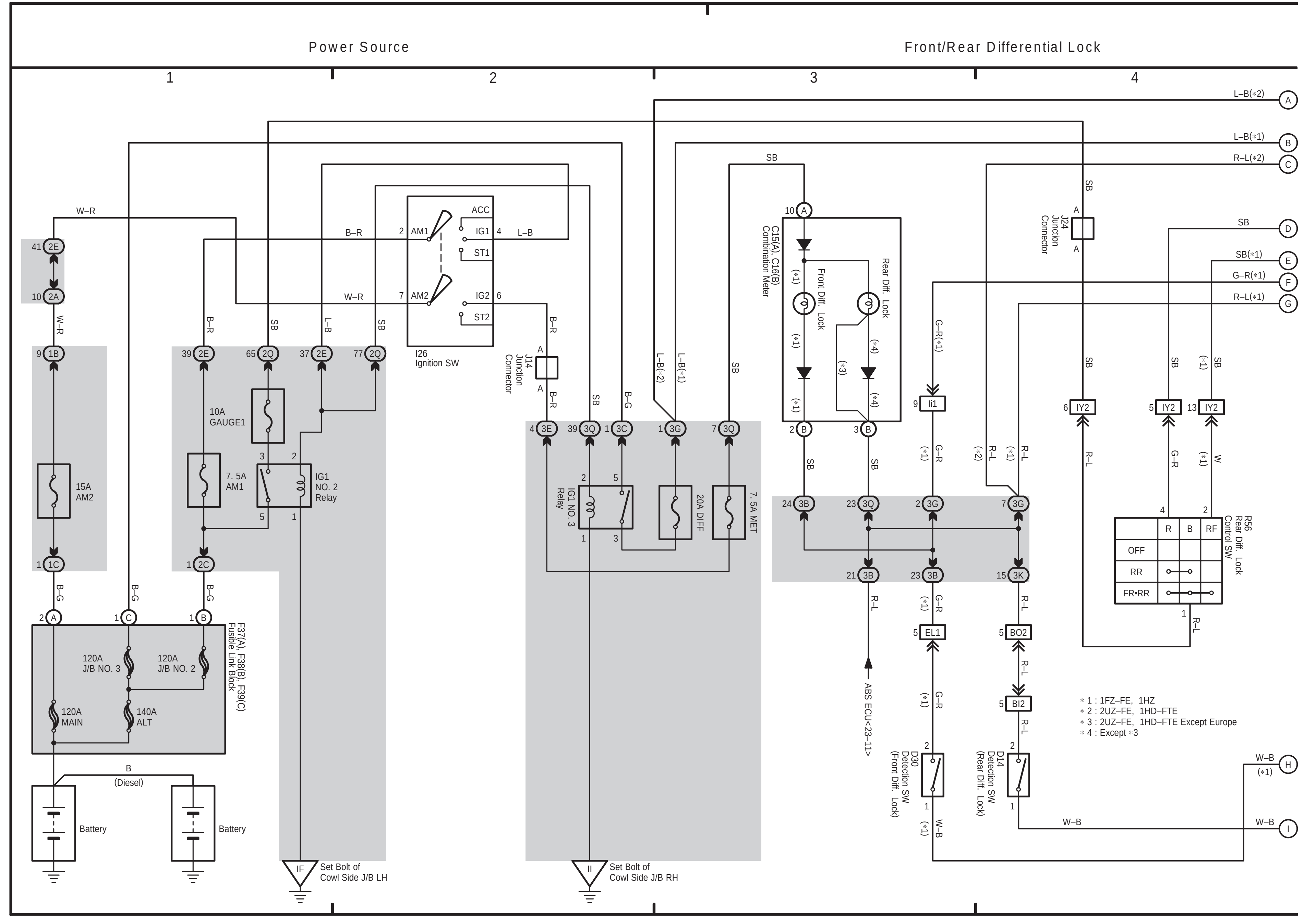
Power Source
Front/Rear Differential Lock
1
2
3
4
Battery
(Diesel)
Ignition SW
Set Bolt of Cowl Side J/B LH
Set Bolt of Cowl Side J/B RH
*1 : 1FZ–FE, 1HZ
*2 : 2UZ–FE, 1HD–FTE
*3 : 2UZ–FE, 1HD–FTE Except Europe
*4 : Except *3

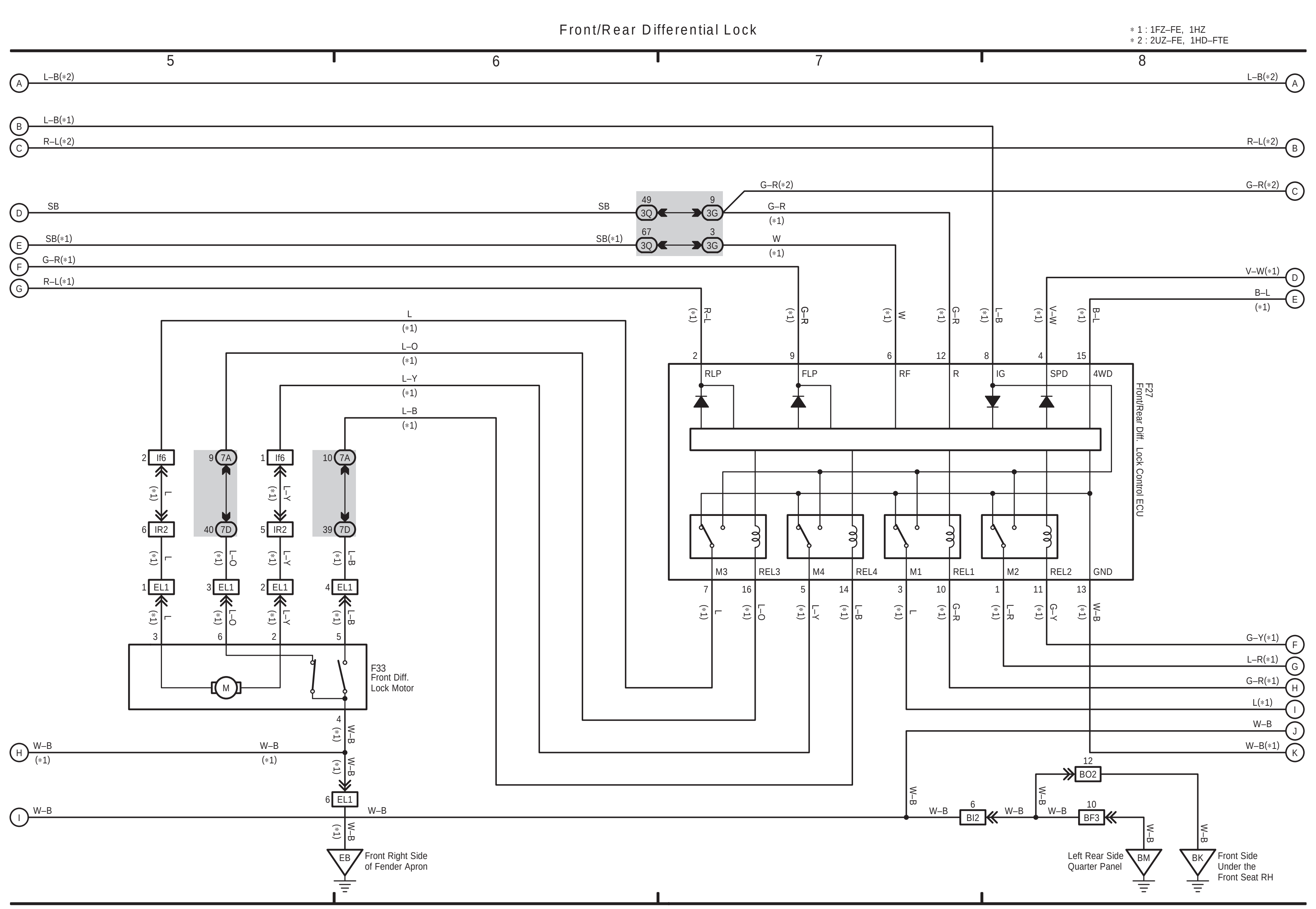
Front/Rear Differential Lock
5
6
7
8
*1 : 1FZ–FE, 1HZ
*2 : 2UZ–FE, 1HD–FTE
Front Diff. Lock Motor
Front Right Side of Fender Apron
Left Rear Side Quarter Panel
Front Side Under the Front Seat RH

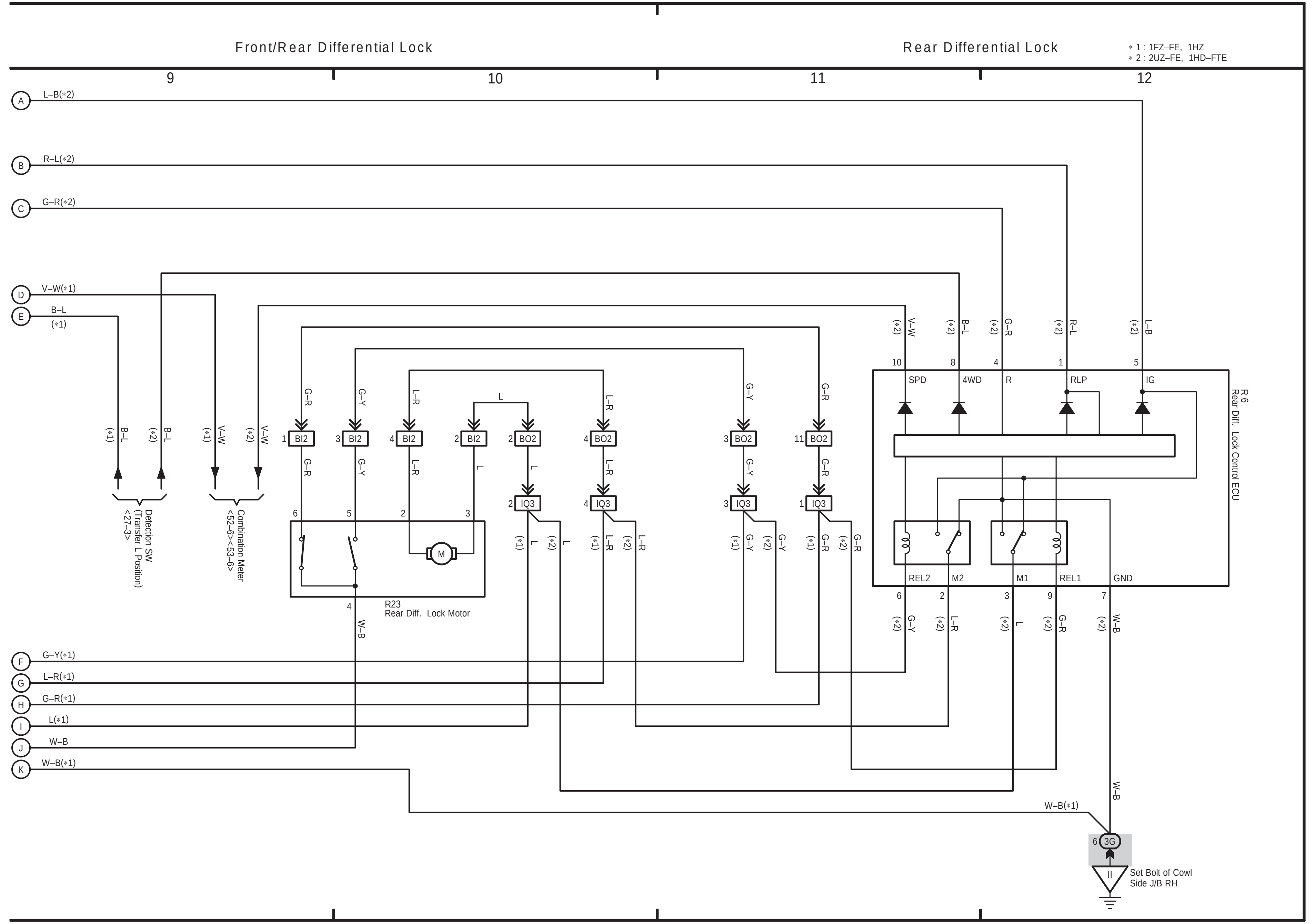
Front/Rear Differential Lock
Rear Differential Lock
9
10
11
12
*1 : 1FZ–FE, 1HZ
*2 : 2UZ–FE, 1HD–FTE
Rear Diff. Lock Motor
Set Bolt of Cowl Side J/B RH

(Cont. next page)

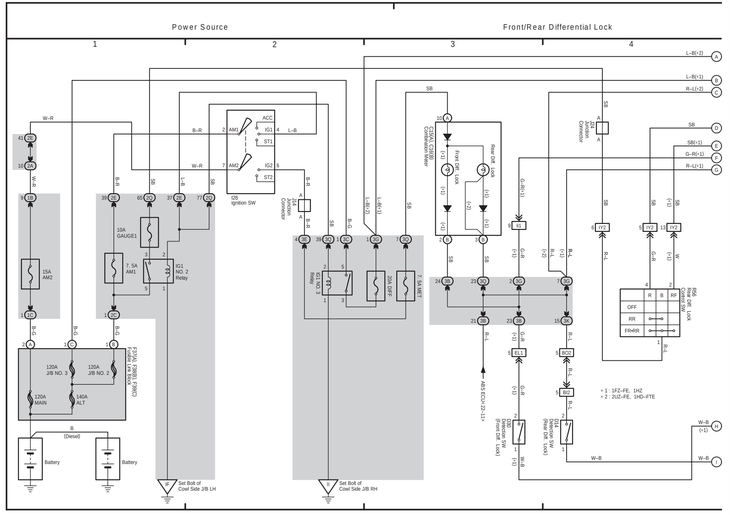

(Cont. next page)

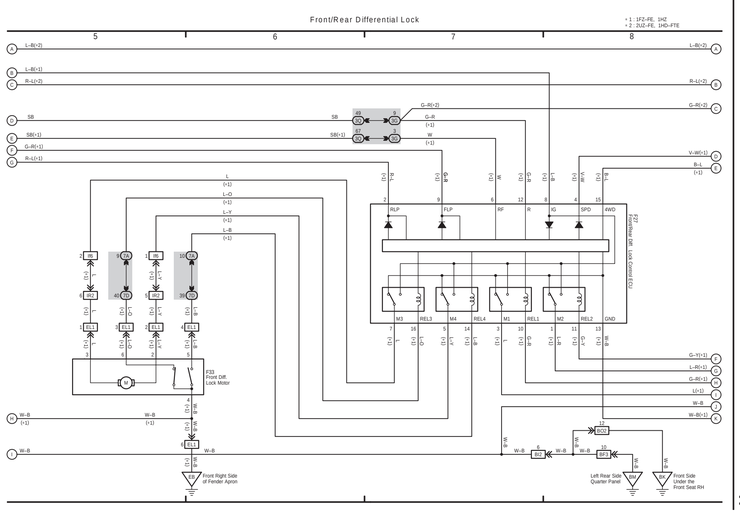

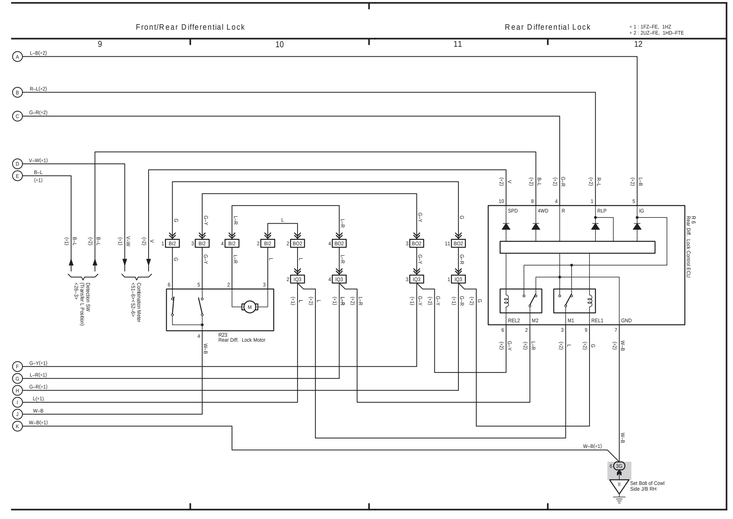

(Cont. next page)

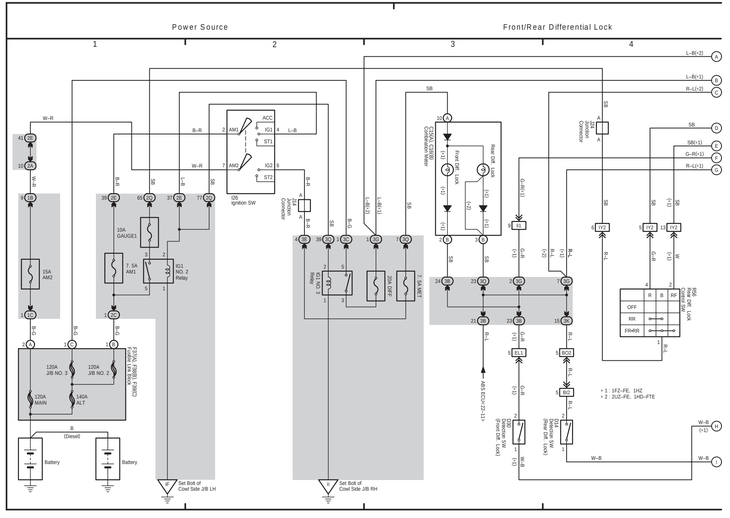

(Cont. next page)

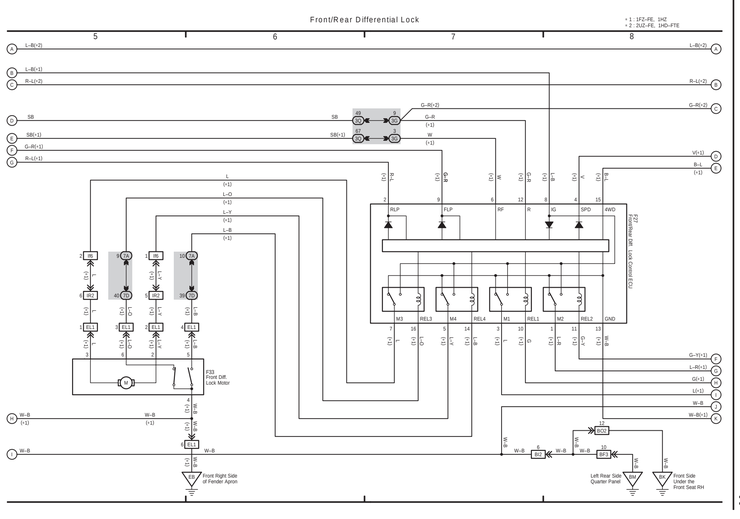

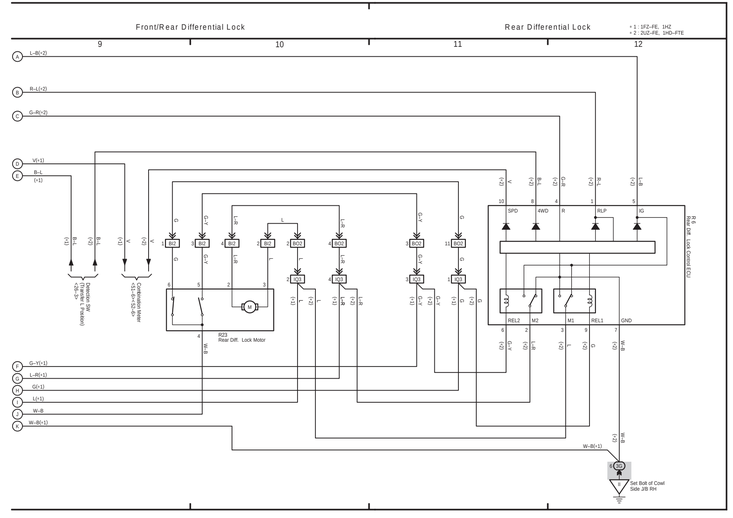

F ELECTRICAL WIRING DIAGRAM (System Circuits)

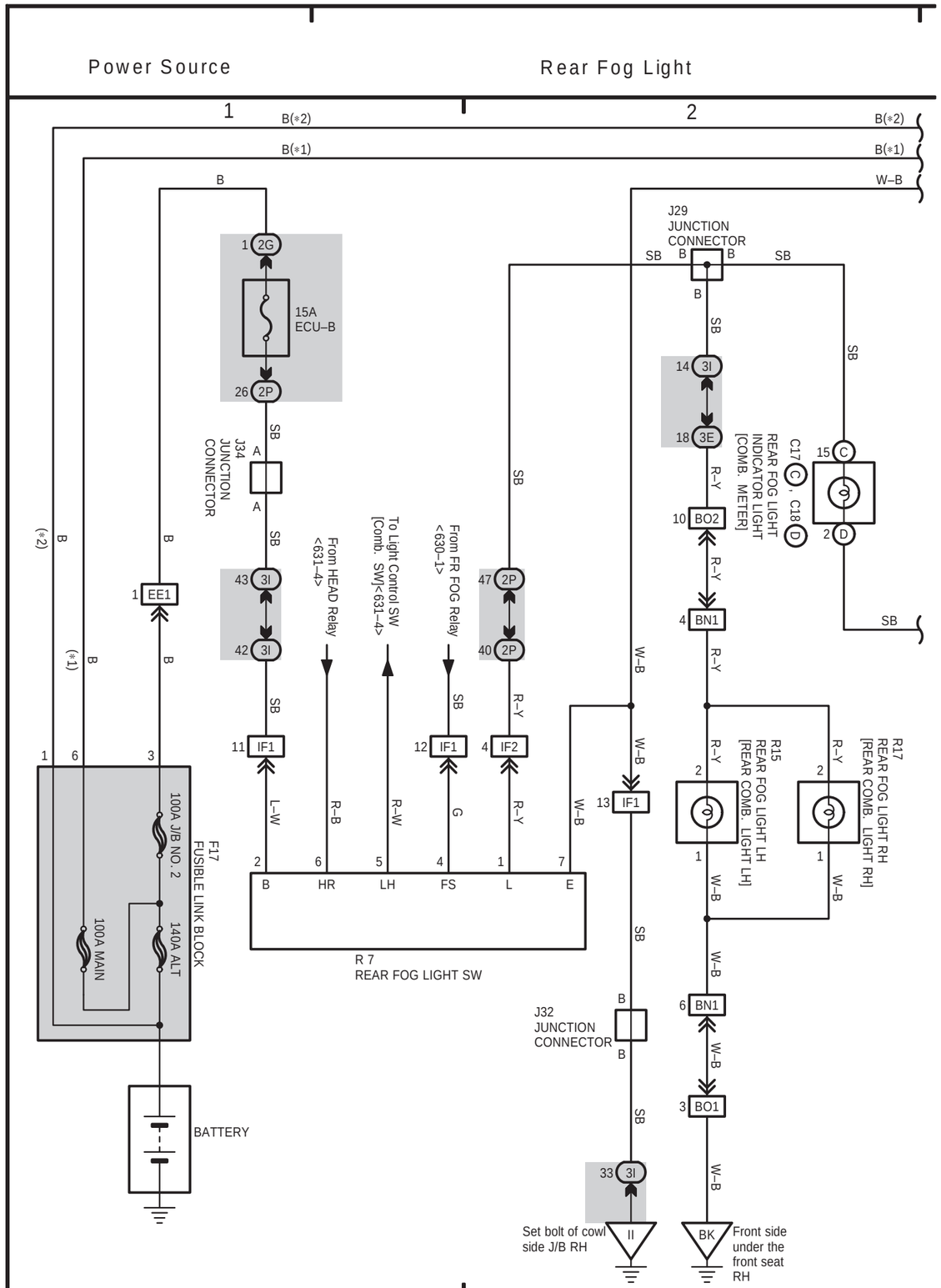

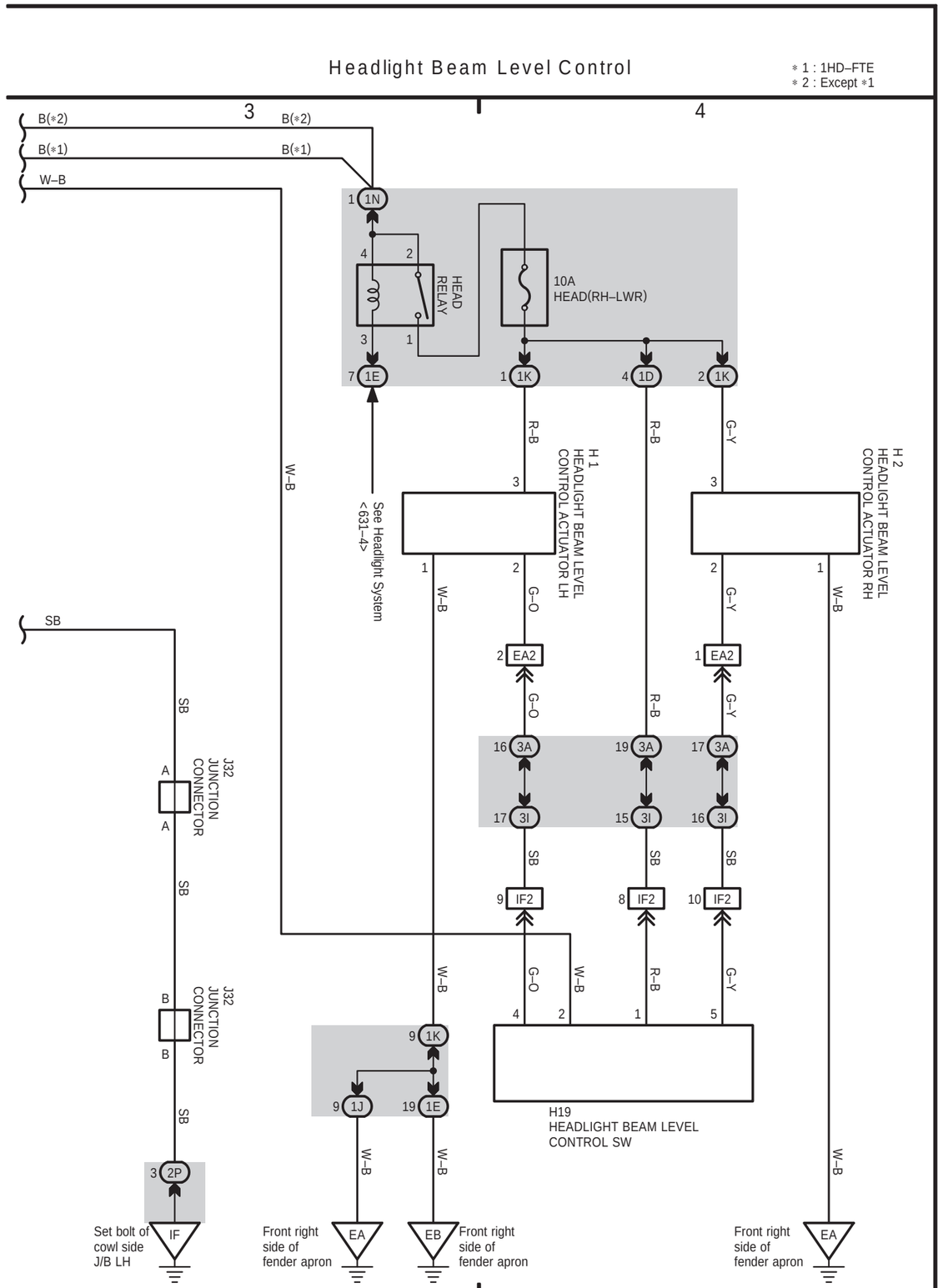

RHD

RHD

38 LAND CRUISER (RHD)

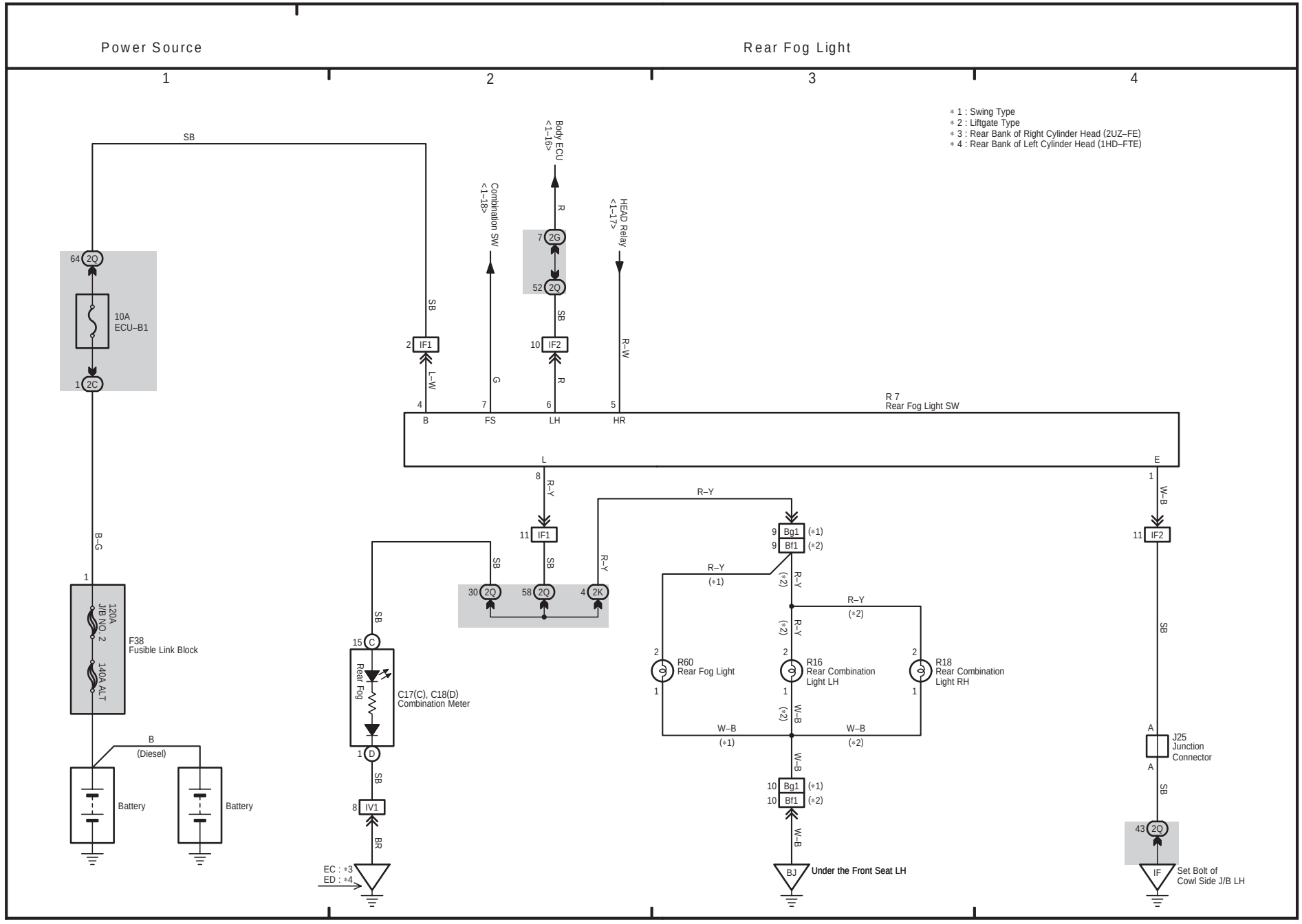

37 LAND CRUISER (RHD)

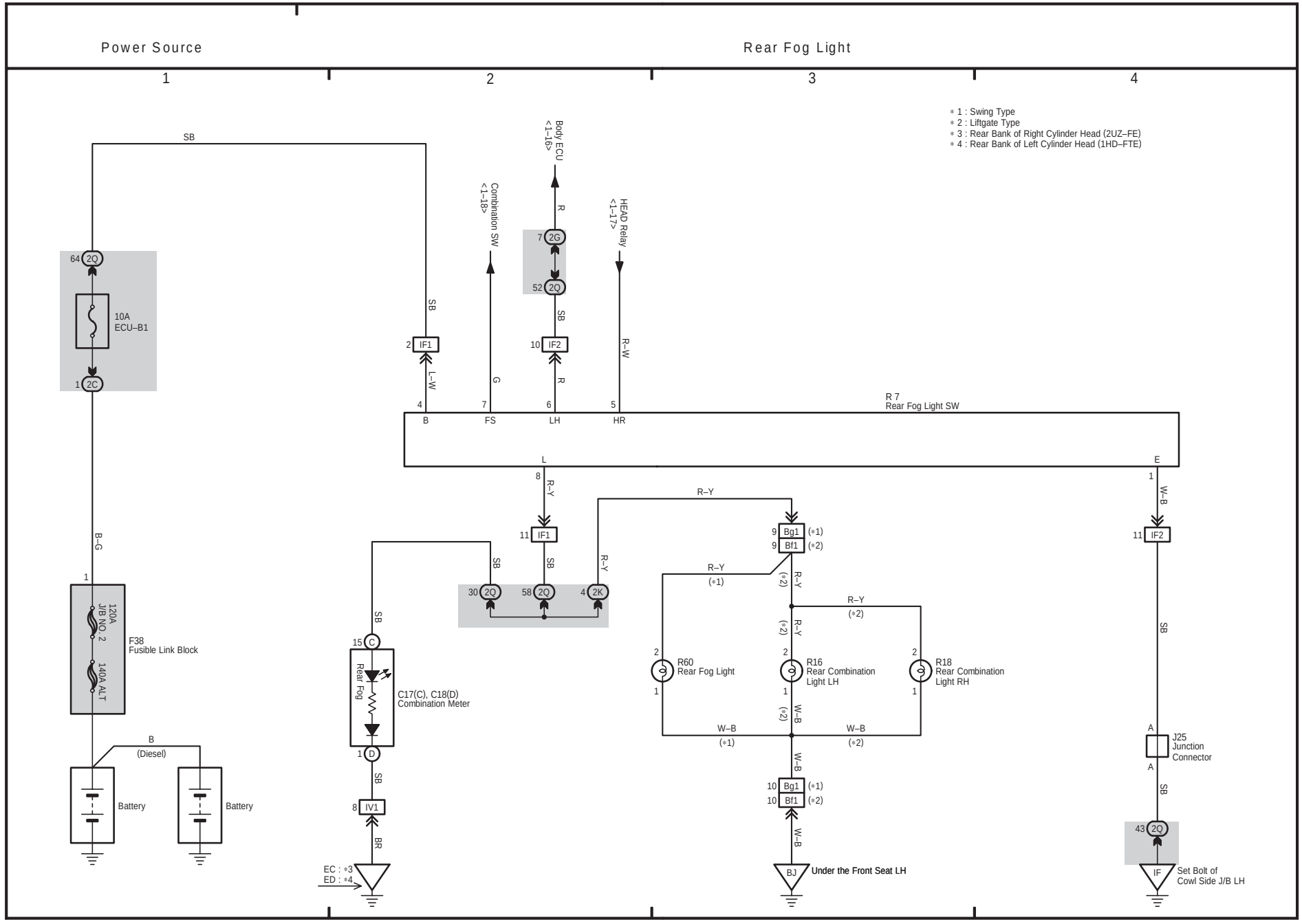

37 LAND CRUISER (RHD)

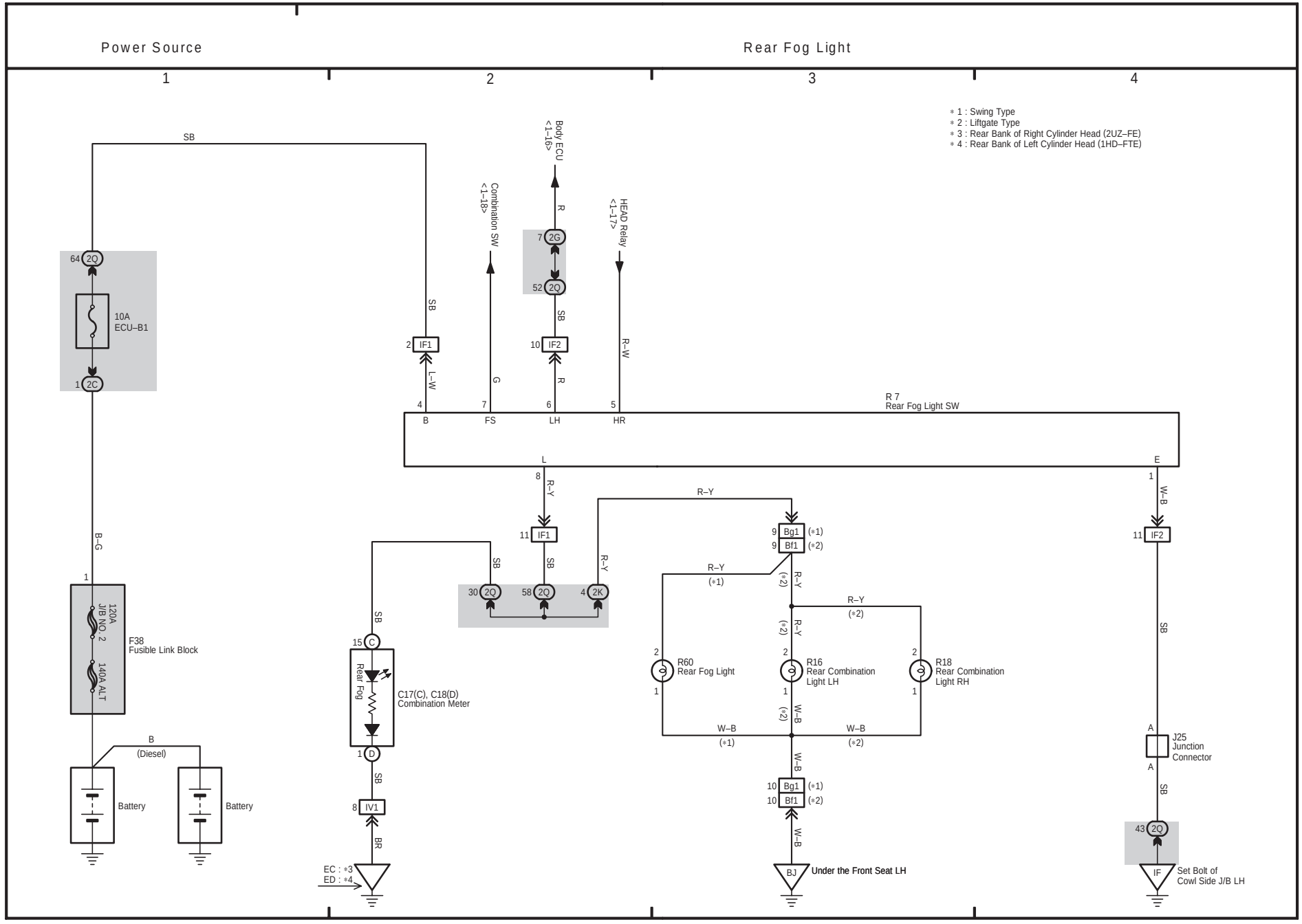

F ELECTRICAL WIRING DIAGRAM (System Circuits)

Power Source | Rear Heater | Rear Heater

1 | 2 | 3 | 4

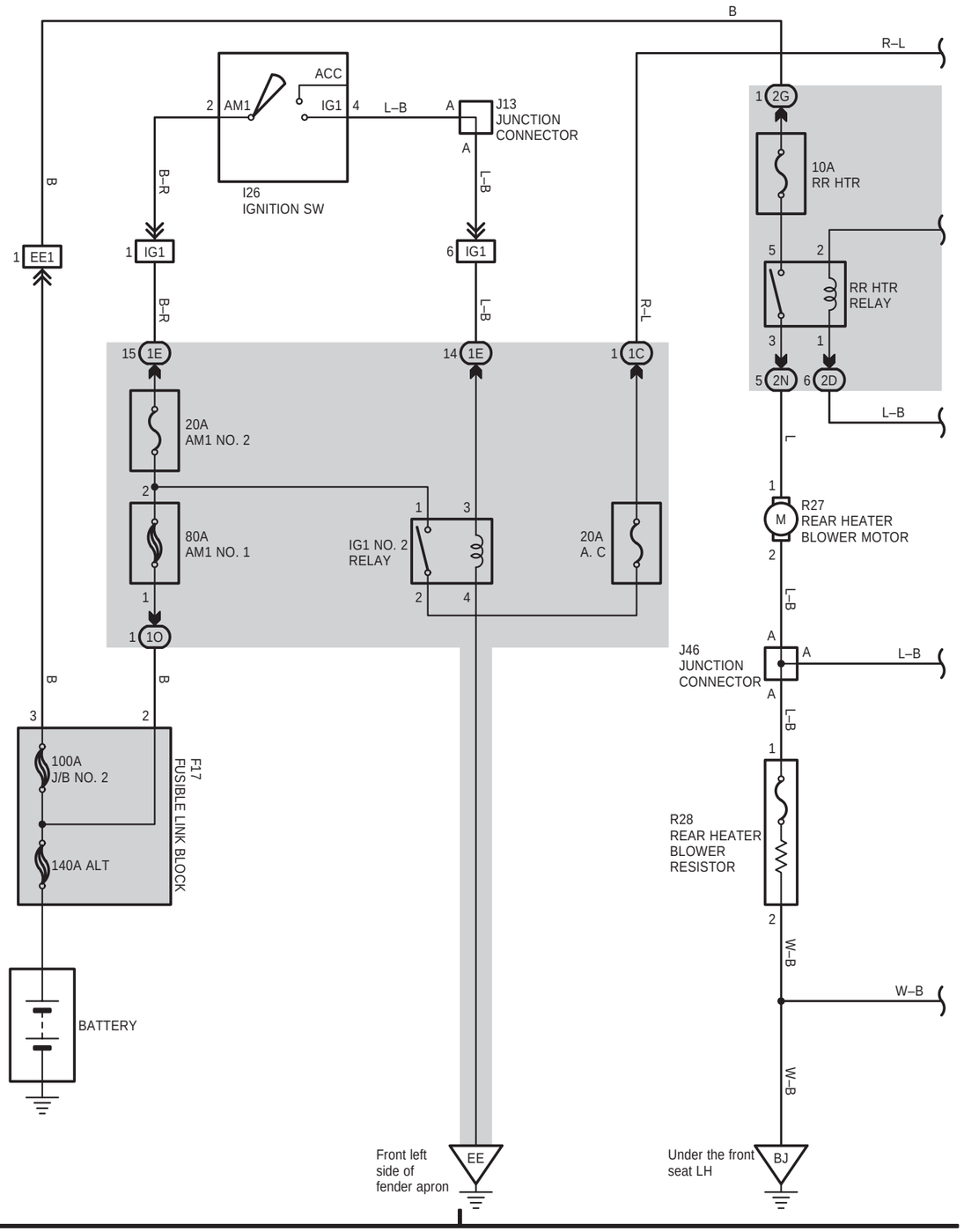

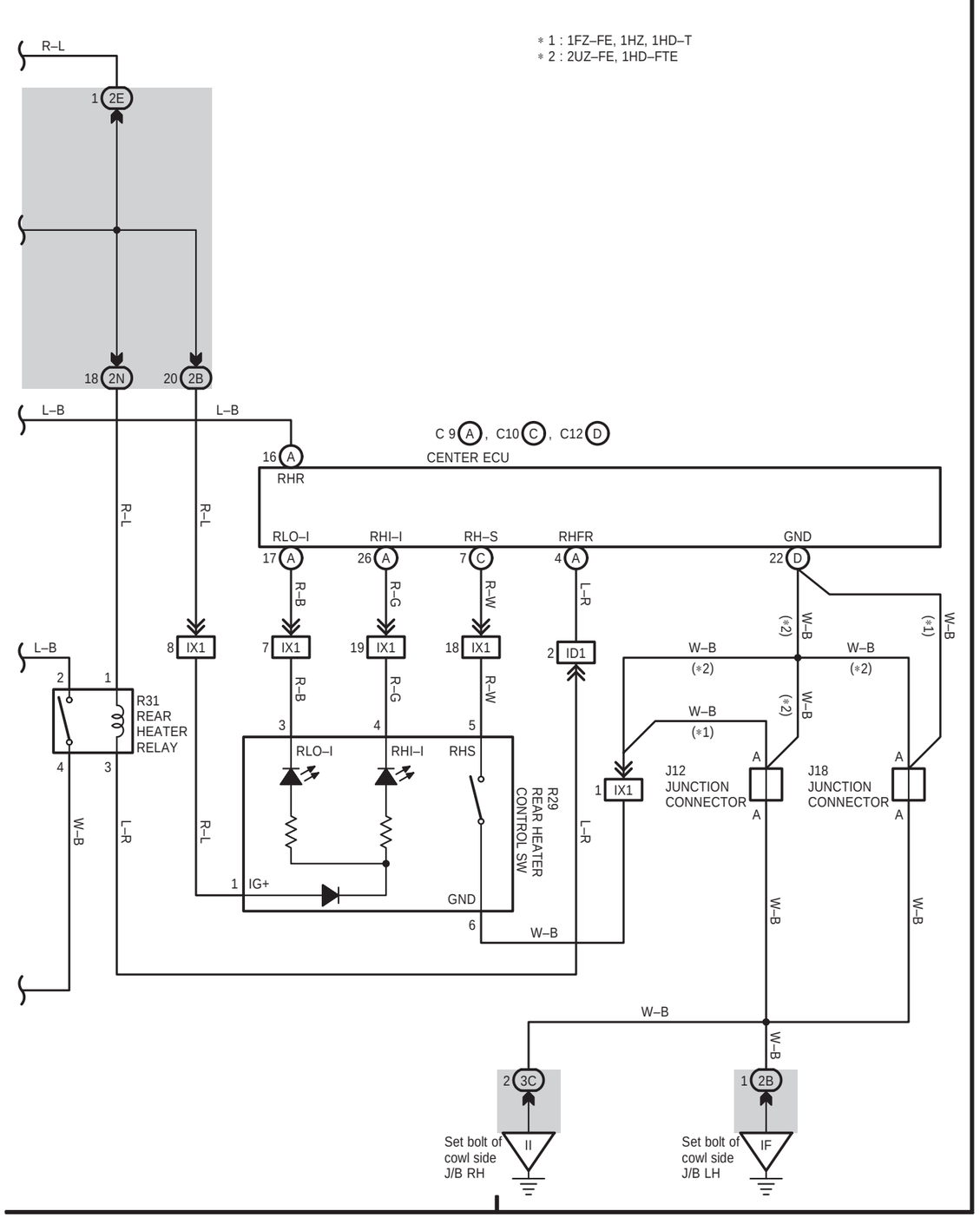

RHD

RHD

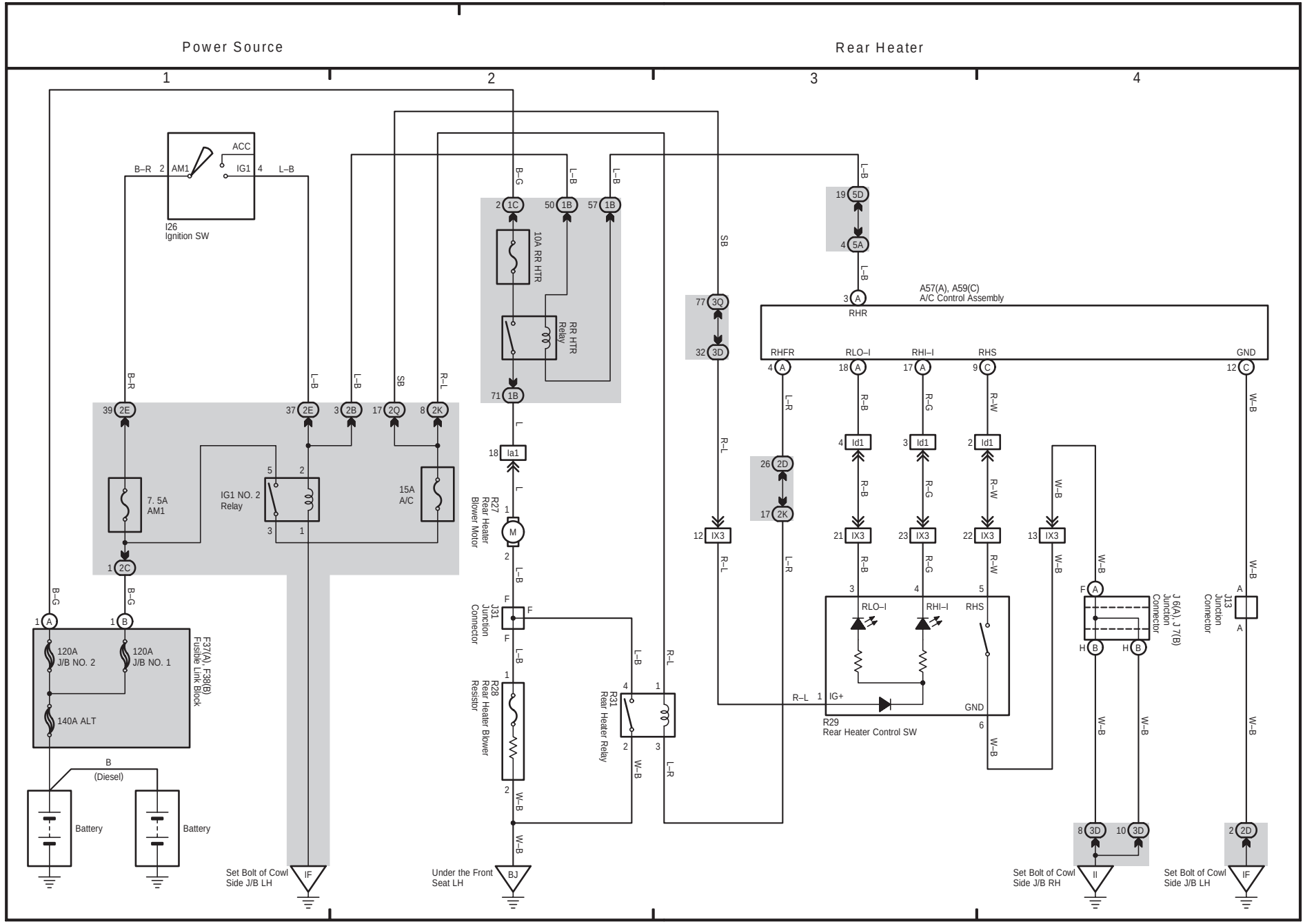
Power Source
Rear Heater
1
2
3
4
ACC
B–R
2
AM1
IG1
4
L–B
I26
Ignition SW
B–G
2 1C
50 1B
57 1B
10A RR HTR
RR HTR Relay
71 1B
L
18 Ia1
R27
Rear Heater Blower Motor
M
L–B
J31
Junction Connector
R28
Rear Heater Blower Resistor
W–B
R31
Rear Heater Relay
R–L
SB
77 3Q
32 3D
19 5D
4 5A
3 A
RHR
A57(A), A59(C)
A/C Control Assembly
RHFR
RLO–I
RHI–I
RHS
GND
4 A
18 A
17 A
9 C
12 C
L–R
R–B
R–G
R–W
W–B
4 Id1
3 Id1
2 Id1
26 2D
17 2K
12 IX3
21 IX3
23 IX3
22 IX3
13 IX3
R29
Rear Heater Control SW
IG+
J6(A), J7(B)
Junction Connector
J13
Junction Connector
39 2E
37 2E
3 2B
17 2Q
8 2K
7. 5A
AM1
IG1 NO. 2
Relay
15A
A/C
1 2C
1 A
1 B
B–G
120A
J/B NO. 2
120A
J/B NO. 1
140A ALT
F37(A), F38(B)
Fusible Link Block
B
(Diesel)
Battery
Battery
Set Bolt of Cowl
Side J/B LH
IF
Under the Front
Seat LH
BJ
8 3D
10 3D
Set Bolt of Cowl
Side J/B RH
II
2 2D
Set Bolt of Cowl
Side J/B LH
IF

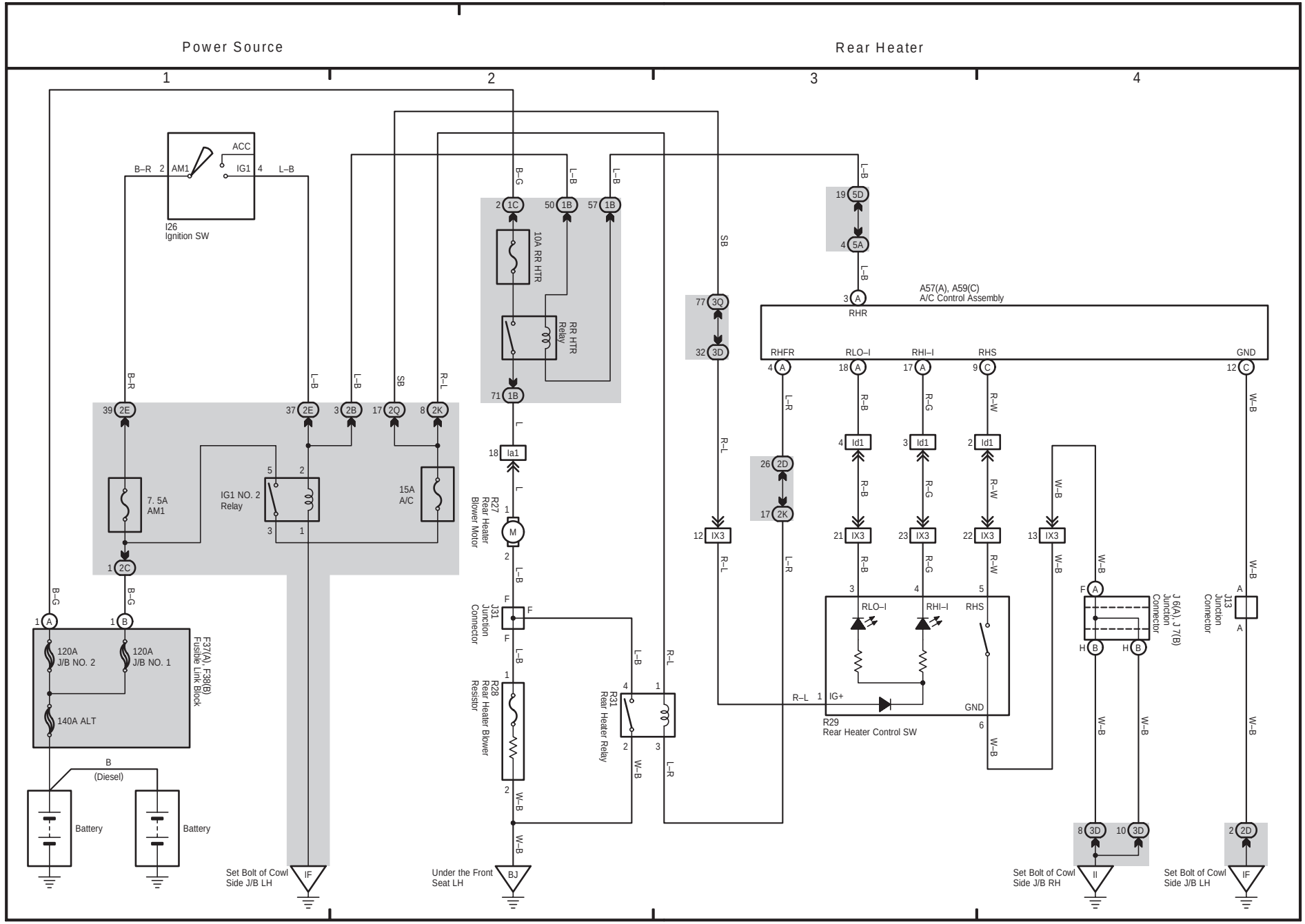
Power Source
Rear Heater
1
2
3
4
ACC
B–R
2
AM1
IG1
4
L–B
I26
Ignition SW
B–G
L–B
2 1C
50 1B
57 1B
10A RR HTR
RR HTR Relay
71 1B
SB
77 3Q
32 3D
19 5D
4 5A
3 A
RHR
A57(A), A59(C)
A/C Control Assembly
RHFR
RLO–I
RHI–I
RHS
GND
4 A
18 A
17 A
9 C
12 C
R–L
L–R
R–B
R–G
R–W
W–B
26 2D
17 2K
4 Id1
3 Id1
2 Id1
12 IX3
21 IX3
23 IX3
22 IX3
13 IX3
39 2E
37 2E
3 2B
17 2Q
8 2K
B–R
L–B
SB
R–L
7. 5A
AM1
IG1 NO. 2
Relay
15A
A/C
1 2C
B–G
1 A
1 B
120A
J/B NO. 2
120A
J/B NO. 1
140A ALT
F37(A), F38(B)
Fusible Link Block
B
(Diesel)
Battery
Battery
18 Ia1
L
M
R27
Rear Heater
Blower Motor
J31
Junction
Connector
R28
Rear Heater Blower
Resistor
R31
Rear Heater Relay
R29
Rear Heater Control SW
IG+
RLO–I
RHI–I
RHS
GND
J6(A), J7(B)
Junction
Connector
J13
Junction
Connector
8 3D
10 3D
2 2D
Set Bolt of Cowl
Side J/B LH
IF
Under the Front
Seat LH
BJ
Set Bolt of Cowl
Side J/B RH
II
Set Bolt of Cowl
Side J/B LH
IF

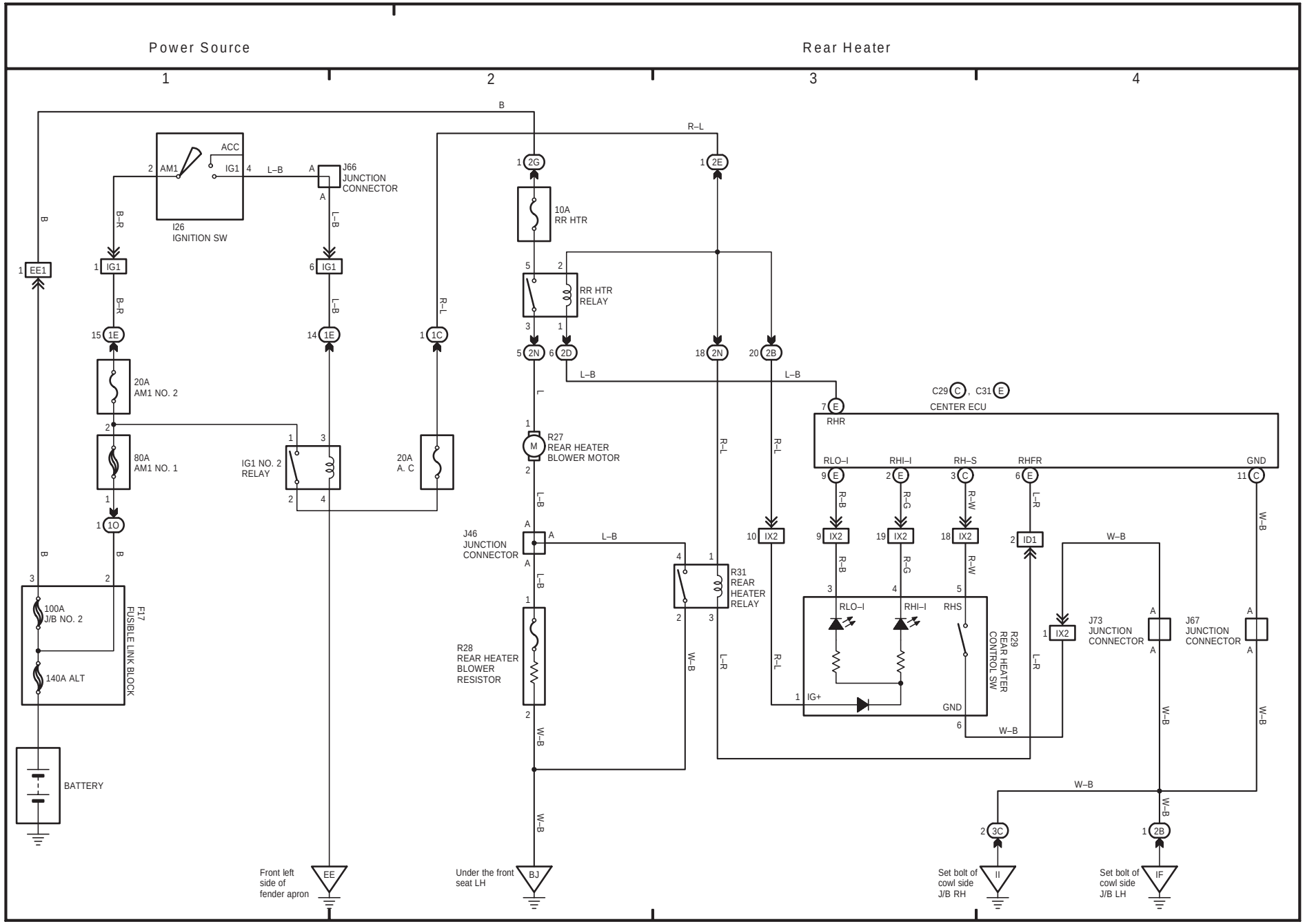
Power Source
Rear Heater
1
2
3
4
B
R–L
ACC
AM1
IG1
L–B
J66 JUNCTION CONNECTOR
I26 IGNITION SW
B–R
EE1
IG1
1E
20A AM1 NO. 2
80A AM1 NO. 1
1O
100A J/B NO. 2
140A ALT
F17 FUSIBLE LINK BLOCK
BATTERY
IG1 NO. 2 RELAY
20A A. C
1C
2G
2E
10A RR HTR
RR HTR RELAY
5N
6D
18N
20B
2D
2B
R27 REAR HEATER BLOWER MOTOR
J46 JUNCTION CONNECTOR
R31 REAR HEATER RELAY
R28 REAR HEATER BLOWER RESISTOR
W–B
C29 C, C31 E
CENTER ECU
7E RHR
RLO–I
RHI–I
RH–S
RHFR
GND
9E
2E
3C
6E
11C
R–B
R–G
R–W
L–R
W–B
IX2
ID1
J73 JUNCTION CONNECTOR
J67 JUNCTION CONNECTOR
R29 REAR HEATER CONTROL SW
RHS
IG+
Front left side of fender apron
EE
Under the front seat LH
BJ
Set bolt of cowl side J/B RH
3C
II
Set bolt of cowl side J/B LH
2B
IF

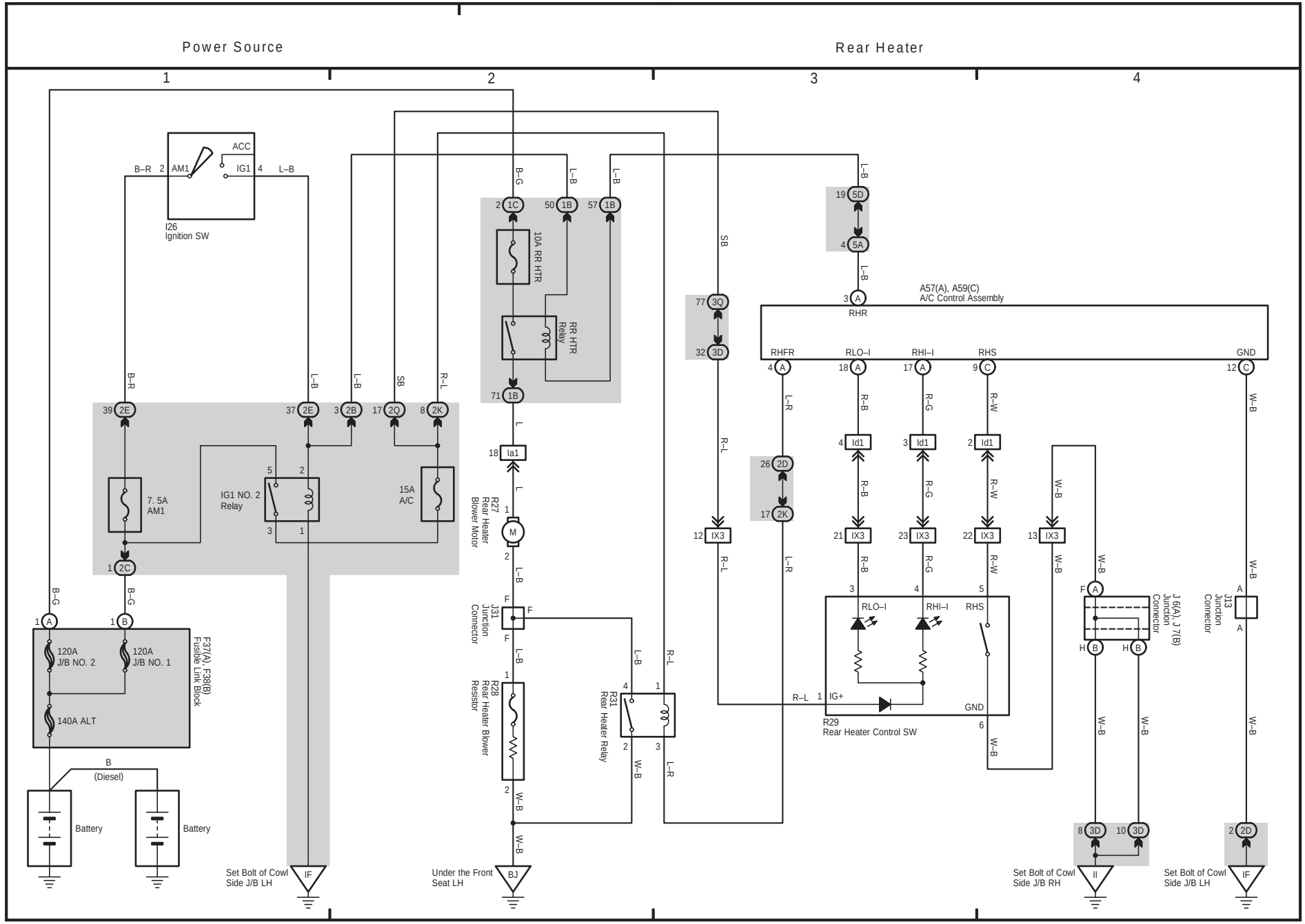
Power Source
Rear Heater
1
2
3
4
ACC
B–R
2
AM1
IG1
4
L–B
I26
Ignition SW
B–G
L–B
2 1C
50 1B
57 1B
10A RR HTR
RR HTR Relay
71 1B
18 Ia1
L
1
M
2
R27
Rear Heater Blower Motor
L–B
F
J31
Junction Connector
F
L–B
1
R28
Rear Heater Blower Resistor
2
W–B
W–B
SB
77 3Q
32 3D
R–L
12 IX3
R–L
19 5D
4 5A
L–B
3 A
RHR
A57(A), A59(C)
A/C Control Assembly
RHFR
RLO–I
RHI–I
RHS
GND
4 A
18 A
17 A
9 C
12 C
L–R
R–B
R–G
R–W
W–B
4 Id1
3 Id1
2 Id1
26 2D
17 2K
21 IX3
23 IX3
22 IX3
13 IX3
W–B
R–L
L–R
R–B
R–G
R–W
W–B
3
4
5
RLO–I
RHI–I
RHS
R–L
1
IG+
GND
6
W–B
R29
Rear Heater Control SW
R31
Rear Heater Relay
4
1
2
3
L–B
W–B
L–R
R–L
F A
H B
H B
J6(A), J7(B)
Junction Connector
A
A
J13
Junction Connector
W–B
W–B
W–B
W–B
W–B
8 3D
10 3D
2 2D
Set Bolt of Cowl Side J/B RH
II
Set Bolt of Cowl Side J/B LH
IF
39 2E
37 2E
3 2B
17 2Q
8 2K
7. 5A
AM1
IG1 NO. 2
Relay
5
2
3
1
15A
A/C
1 2C
B–G
B–G
1 A
1 B
120A
J/B NO. 2
120A
J/B NO. 1
140A ALT
F37(A), F38(B)
Fusible Link Block
B
(Diesel)
Battery
Battery
Set Bolt of Cowl Side J/B LH
IF
Under the Front Seat LH
BJ

F ELECTRICAL WIRING DIAGRAM (System Circuits)

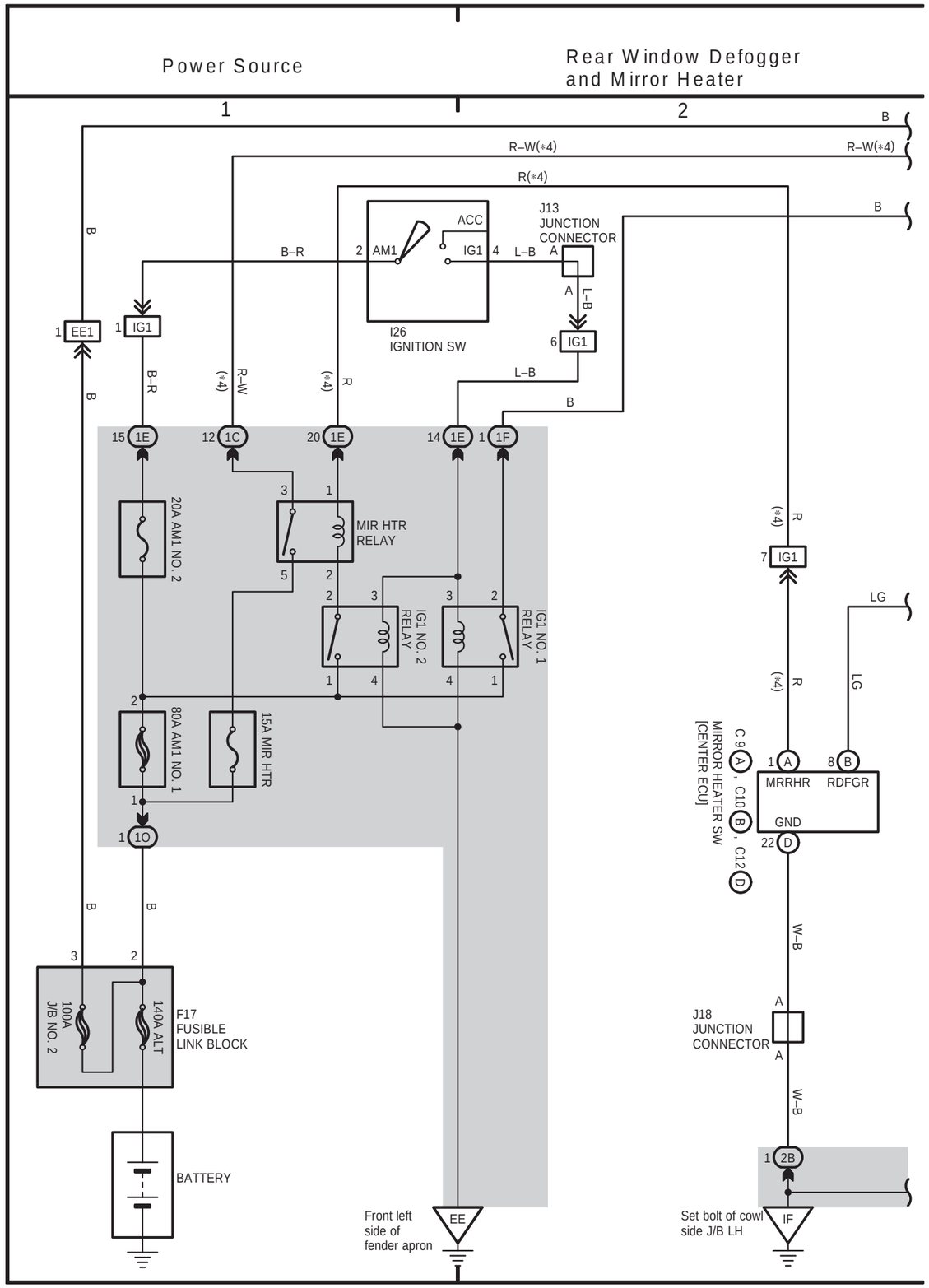

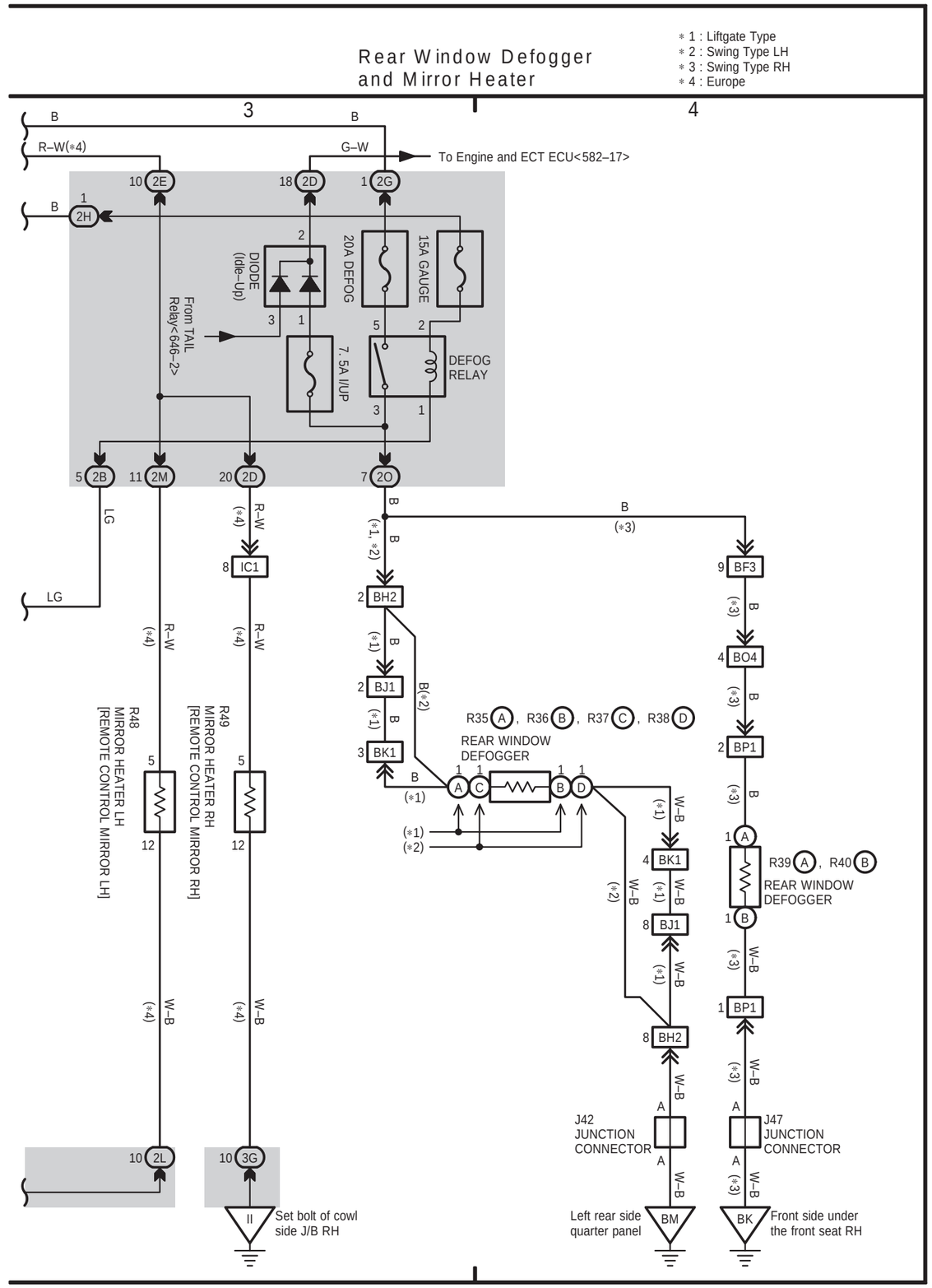

LAND CRUISER Station Wagon (EWD342F)

RHD

RHD

21 LAND CRUISER (RHD)

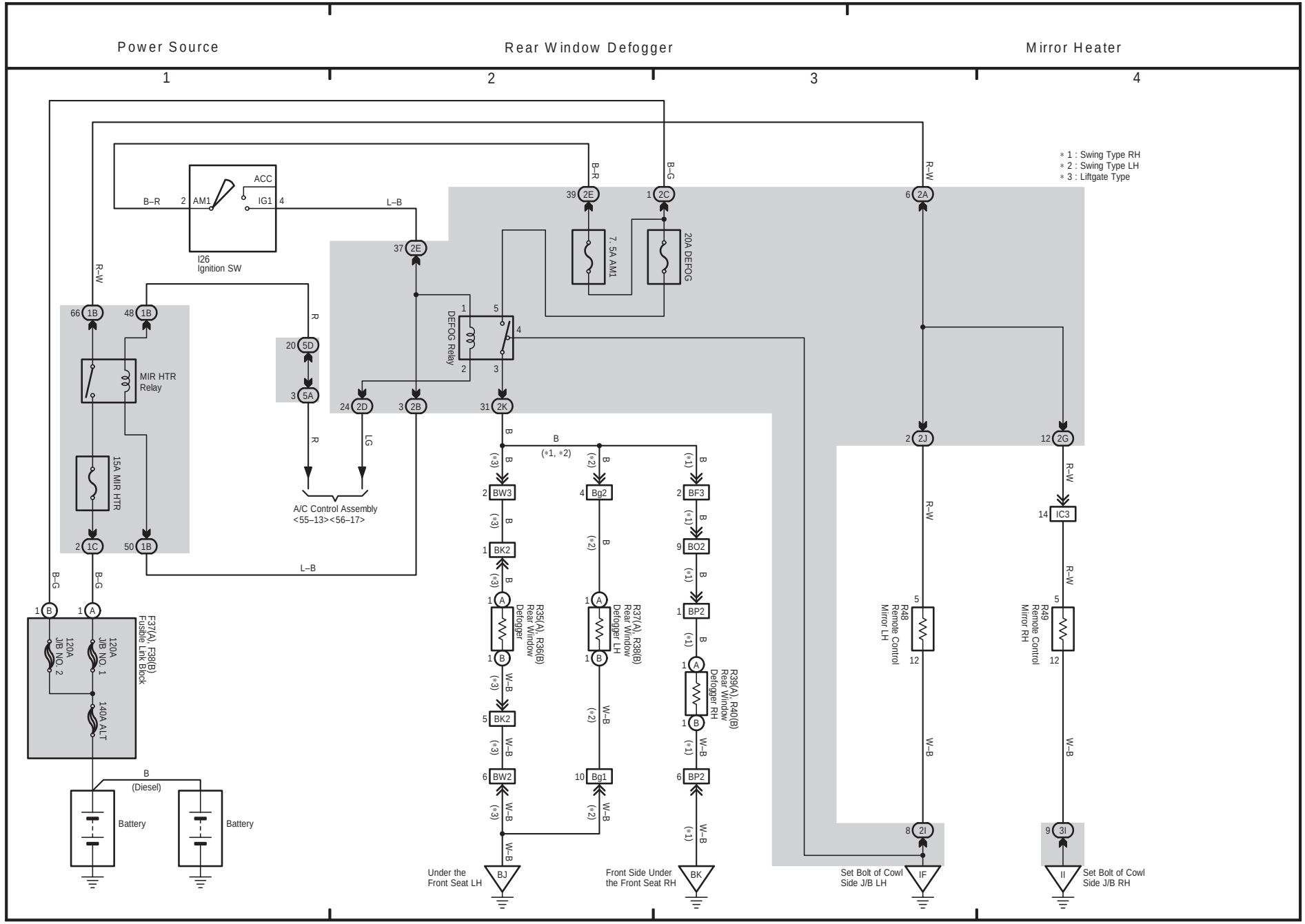

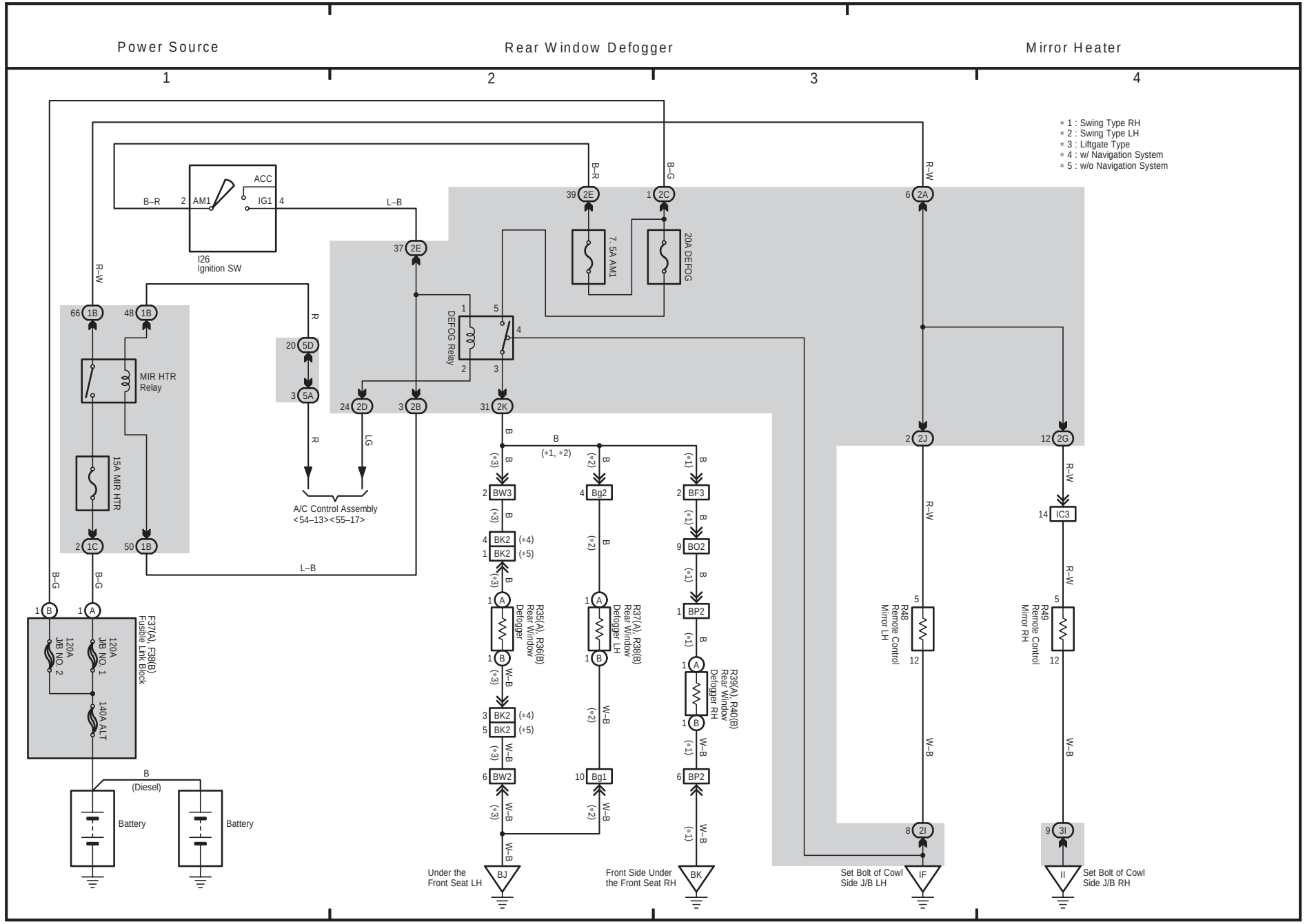
Power Source
Rear Window Defogger
Mirror Heater
1
2
3
4
* 1 : Swing Type RH
* 2 : Swing Type LH
* 3 : Liftgate Type
* 4 : w/ Navigation System
* 5 : w/o Navigation System
ACC
IG1
AM1
I26
Ignition SW
7.5A AM1
20A DEFOG
DEFOG Relay
MIR HTR Relay
15A MIR HTR
A/C Control Assembly
<54–13><55–17>
F37(A), F38(B)
Fusible Link Block
120A J/B NO. 2
120A J/B NO. 1
140A ALT
Battery
Battery
(Diesel)
R35(A), R36(B)
Rear Window Defogger
R37(A), R38(B)
Rear Window Defogger LH
R39(A), R40(B)
Rear Window Defogger RH
R48
Remote Control Mirror LH
R49
Remote Control Mirror RH
Under the Front Seat LH
Front Side Under the Front Seat RH
Set Bolt of Cowl Side J/B LH
Set Bolt of Cowl Side J/B RH

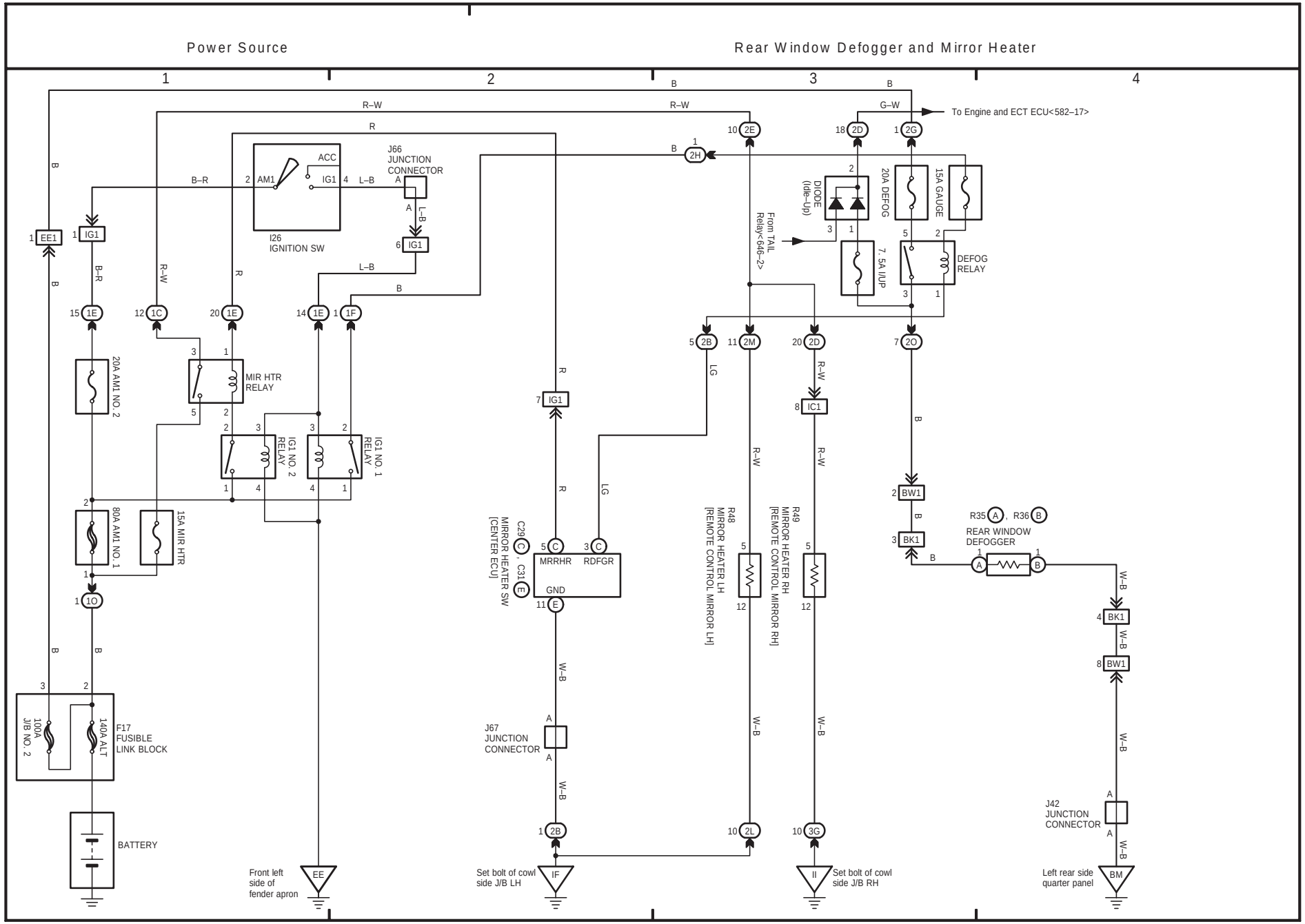
Power Source
Rear Window Defogger and Mirror Heater
1
2
3
4
To Engine and ECT ECU<582–17>
J66 JUNCTION CONNECTOR
I26 IGNITION SW
ACC
AM1
IG1
20A AM1 NO. 2
MIR HTR RELAY
IG1 NO. 2 RELAY
IG1 NO. 1 RELAY
80A AM1 NO. 1
15A MIR HTR
100A J/B NO. 2
140A ALT
F17 FUSIBLE LINK BLOCK
BATTERY
Front left side of fender apron
DIODE (Idle–Up)
20A DEFOG
15A GAUGE
7. 5A I/UP
DEFOG RELAY
From TAIL Relay<646–2>
C29, C31 MIRROR HEATER SW [CENTER ECU]
MRRHR
RDFGR
GND
R48 MIRROR HEATER LH [REMOTE CONTROL MIRROR LH]
R49 MIRROR HEATER RH [REMOTE CONTROL MIRROR RH]
R35, R36 REAR WINDOW DEFOGGER
J67 JUNCTION CONNECTOR
J42 JUNCTION CONNECTOR
Set bolt of cowl side J/B LH
Set bolt of cowl side J/B RH
Left rear side quarter panel

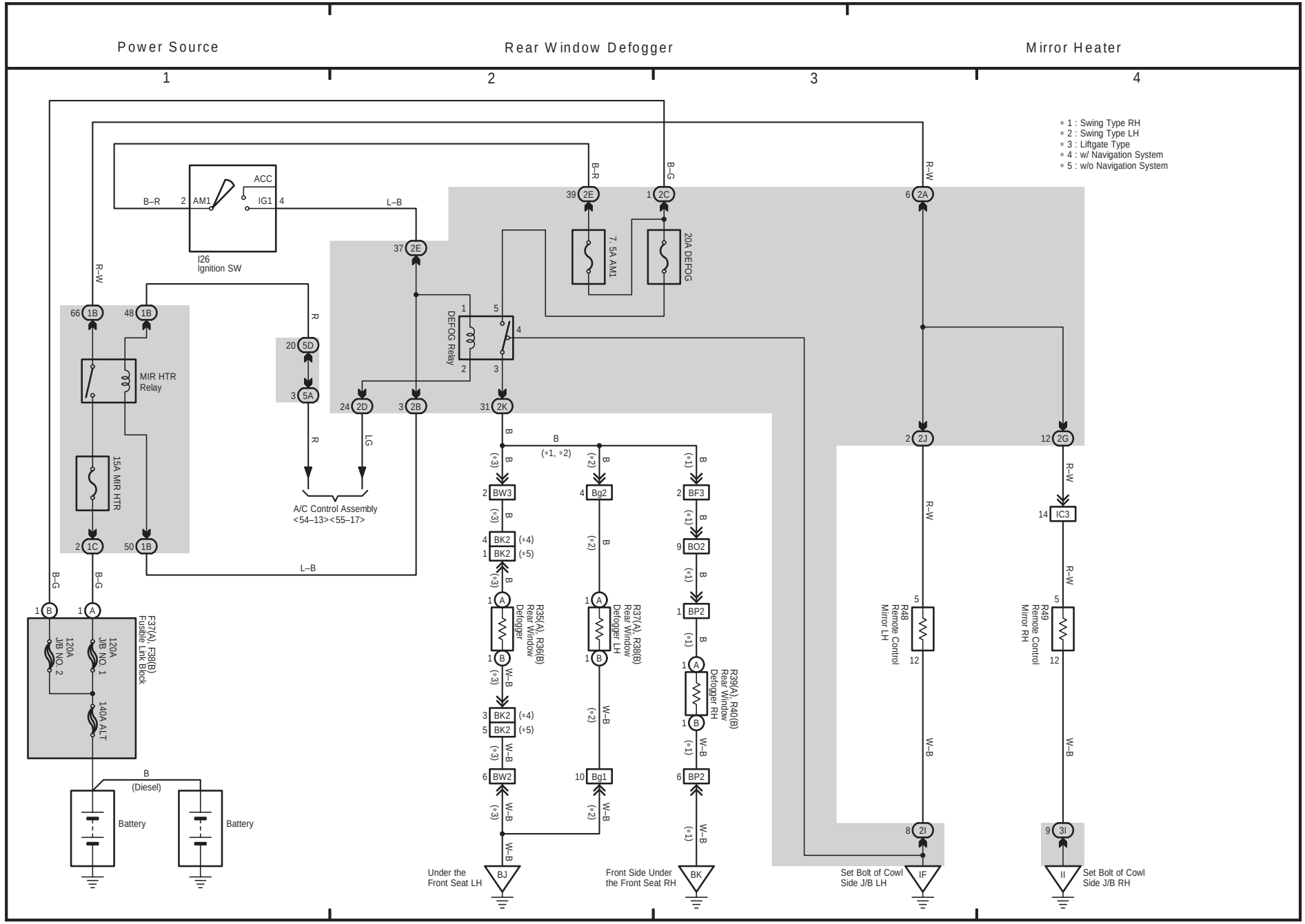
Power Source
Rear Window Defogger
Mirror Heater
1
2
3
4
* 1 : Swing Type RH
* 2 : Swing Type LH
* 3 : Liftgate Type
* 4 : w/ Navigation System
* 5 : w/o Navigation System
ACC
IG1
AM1
I26
Ignition SW
7.5A AM1
20A DEFOG
DEFOG Relay
MIR HTR
Relay
15A MIR HTR
A/C Control Assembly
<54–13><55–17>
F37(A), F38(B)
Fusible Link Block
120A
J/B NO. 2
120A
J/B NO. 1
140A ALT
Battery
Battery
(Diesel)
R35(A), R36(B)
Rear Window
Defogger
R37(A), R38(B)
Rear Window
Defogger LH
R39(A), R40(B)
Rear Window
Defogger RH
R48
Remote Control
Mirror LH
R49
Remote Control
Mirror RH
Under the
Front Seat LH
Front Side Under
the Front Seat RH
Set Bolt of Cowl
Side J/B LH
Set Bolt of Cowl
Side J/B RH

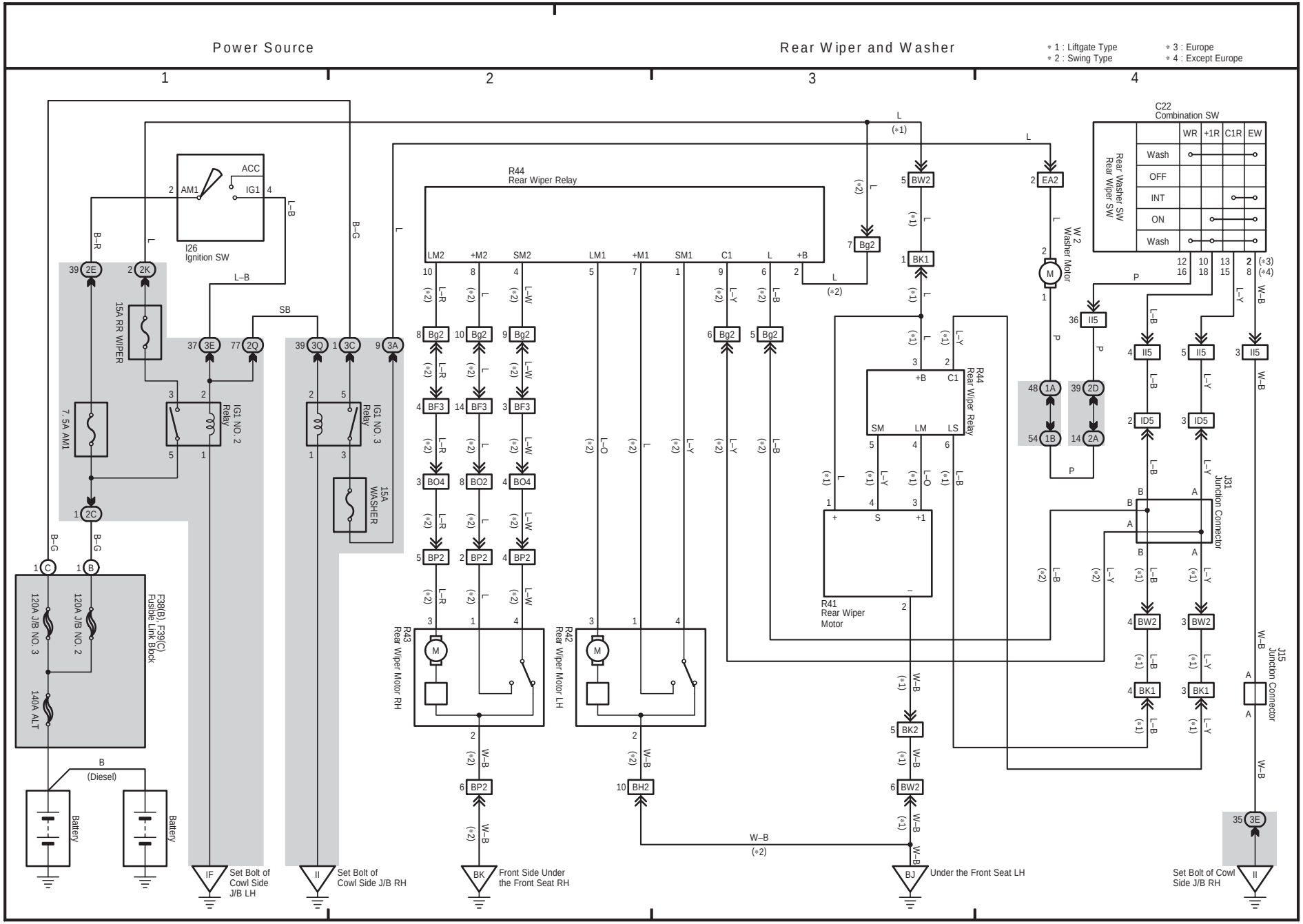
Power Source
Rear Wiper and Washer
* 1 : Liftgate Type
* 2 : Swing Type
* 3 : Europe
* 4 : Except Europe
1
2
3
4
ACC
AM1
IG1
I26
Ignition SW
15A RR WIPER
7.5A AM1
IG1 NO. 2 Relay
IG1 NO. 3 Relay
15A WASHER
F38(B), F39(C)
Fusible Link Block
120A J/B NO. 3
120A J/B NO. 2
140A ALT
B
(Diesel)
Battery
Battery
R44
Rear Wiper Relay
LM2
+M2
SM2
LM1
+M1
SM1
C1
L
+B
R43
Rear Wiper Motor RH
R42
Rear Wiper Motor LH
R41
Rear Wiper Motor
R44
Rear Wiper Relay
C22
Combination SW
WR
+1R
C1R
EW
Wash
OFF
INT
ON
Wash
Rear Washer SW
Rear Wiper SW
W 2
Washer Motor
J31
Junction Connector
J15
Junction Connector
IF
Set Bolt of Cowl Side J/B LH
II
Set Bolt of Cowl Side J/B RH
BK
Front Side Under the Front Seat RH
BJ
Under the Front Seat LH
Set Bolt of Cowl Side J/B RH

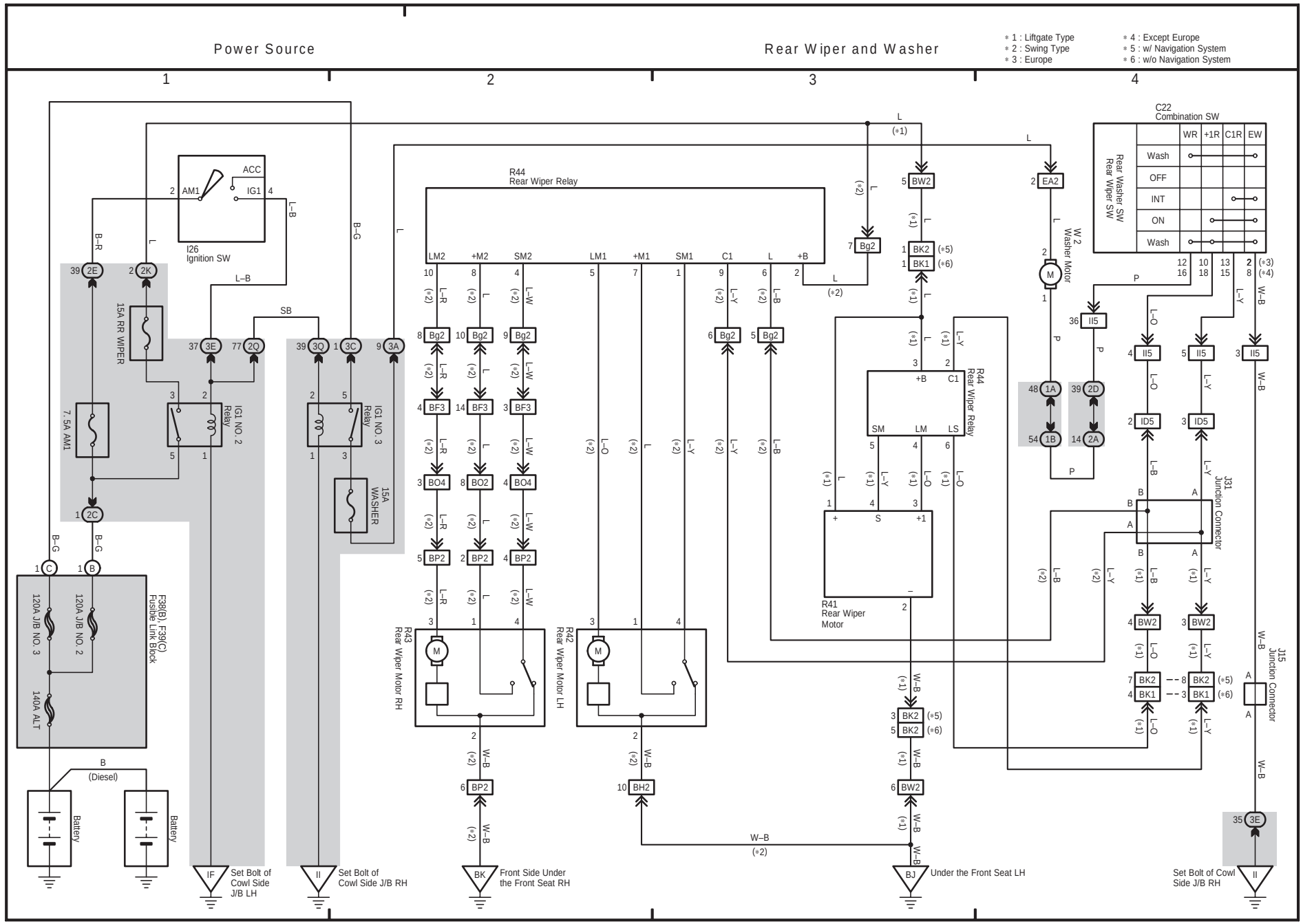
Power Source
Rear Wiper and Washer
1
2
3
4
* 1 : Liftgate Type
* 2 : Swing Type
* 3 : Europe
* 4 : Except Europe
* 5 : w/ Navigation System
* 6 : w/o Navigation System
I26
Ignition SW
ACC
AM1
IG1
15A RR WIPER
7.5A AM1
IG1 NO. 2 Relay
IG1 NO. 3 Relay
15A WASHER
R44
Rear Wiper Relay
R43
Rear Wiper Motor RH
R42
Rear Wiper Motor LH
R41
Rear Wiper Motor
C22
Combination SW
Rear Washer SW
Rear Wiper SW
WR
+1R
C1R
EW
Wash
OFF
INT
ON
W 2
Washer Motor
J31
Junction Connector
J15
Junction Connector
F38(B), F39(C)
Fusible Link Block
120A J/B NO. 3
120A J/B NO. 2
140A ALT
Battery
(Diesel)
IF
Set Bolt of Cowl Side J/B LH
II
Set Bolt of Cowl Side J/B RH
BK
Front Side Under the Front Seat RH
BJ
Under the Front Seat LH
Set Bolt of Cowl Side J/B RH

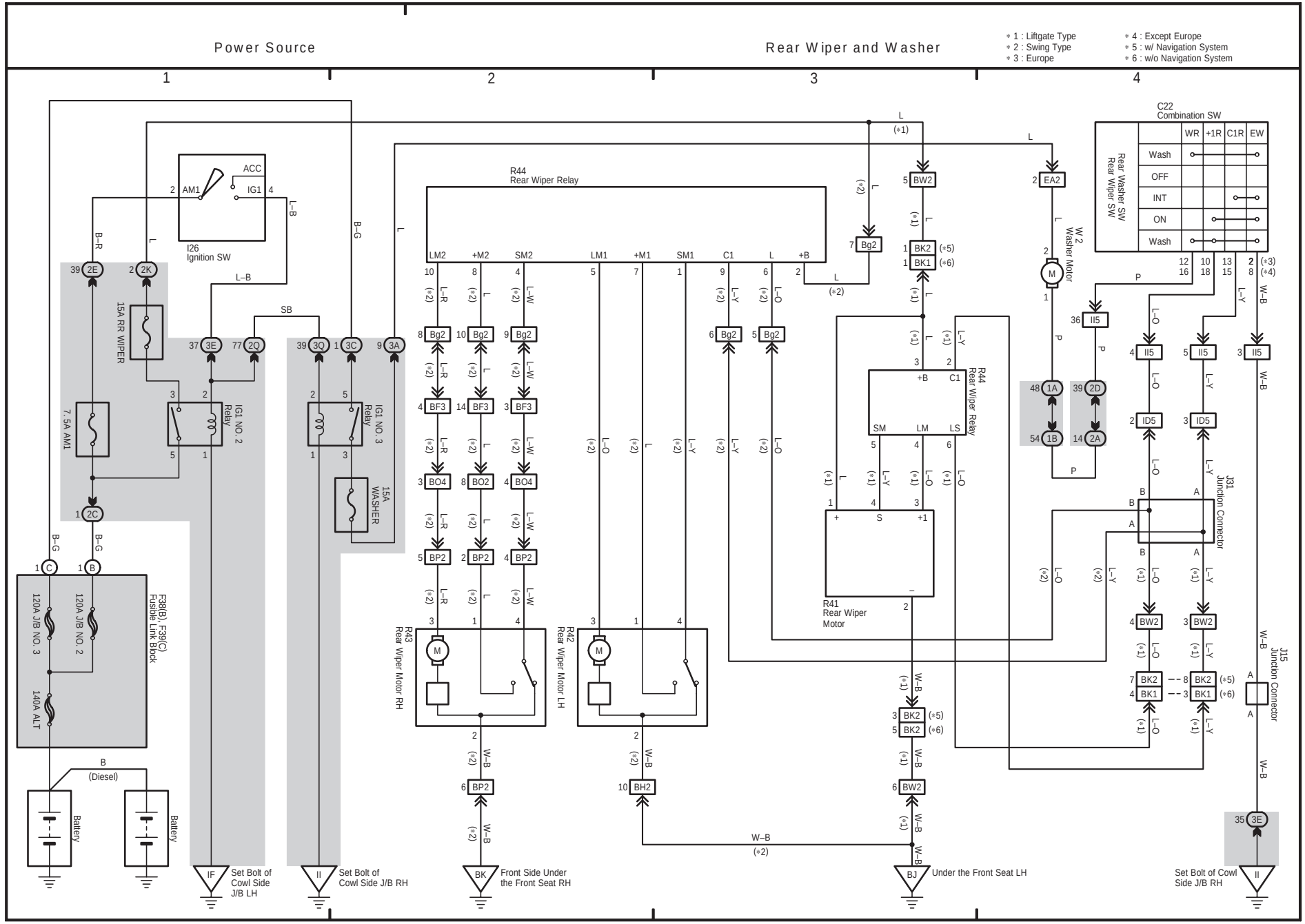
Power Source
Rear Wiper and Washer
1
2
3
4
* 1 : Liftgate Type
* 2 : Swing Type
* 3 : Europe
* 4 : Except Europe
* 5 : w/ Navigation System
* 6 : w/o Navigation System
I26
Ignition SW
ACC
AM1
IG1
15A RR WIPER
7.5A AM1
IG1 NO. 2 Relay
IG1 NO. 3 Relay
15A WASHER
F38(B) F39(C)
Fusible Link Block
120A J/B NO. 3
120A J/B NO. 2
140A ALT
B
(Diesel)
Battery
Battery
R44
Rear Wiper Relay
R43
Rear Wiper Motor RH
R42
Rear Wiper Motor LH
R41
Rear Wiper
Motor
C22
Combination SW
Rear Washer SW
Rear Wiper SW
WR
+1R
C1R
EW
Wash
OFF
INT
ON
Wash
W 2
Washer Motor
J31
Junction Connector
J15
Junction Connector
Set Bolt of Cowl Side J/B LH
Set Bolt of Cowl Side J/B RH
Front Side Under the Front Seat RH
Under the Front Seat LH
Set Bolt of Cowl Side J/B RH

F ELECTRICAL WIRING DIAGRAM (System Circuits)

Power Source

Remote Control Mirror
(w/ Driving Postion Memory)

1 2

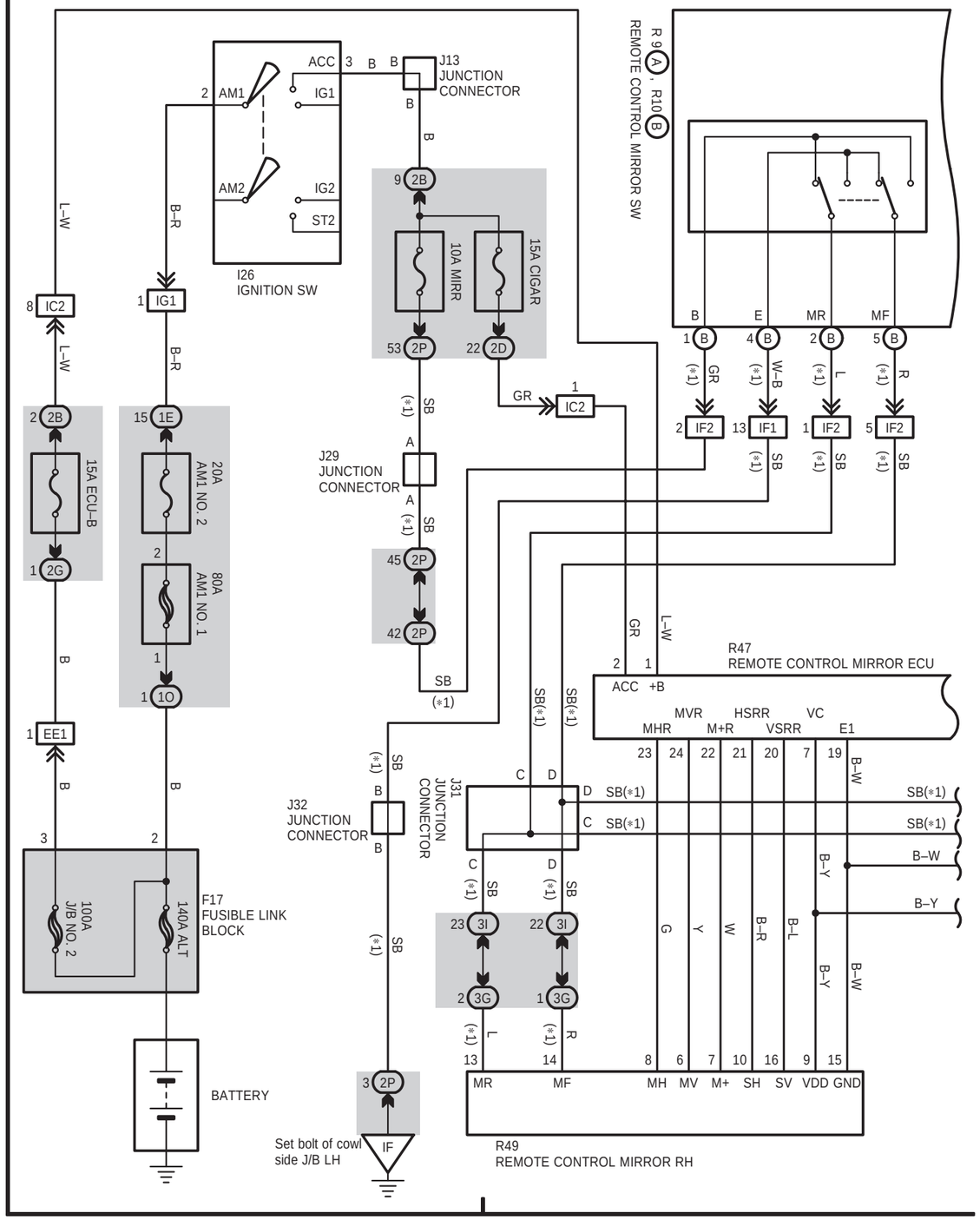

784

LAND CRUISER Station Wagon (EWD342F)

Remote Control Mirror
(w/ Driving Postion Memory)

3 4

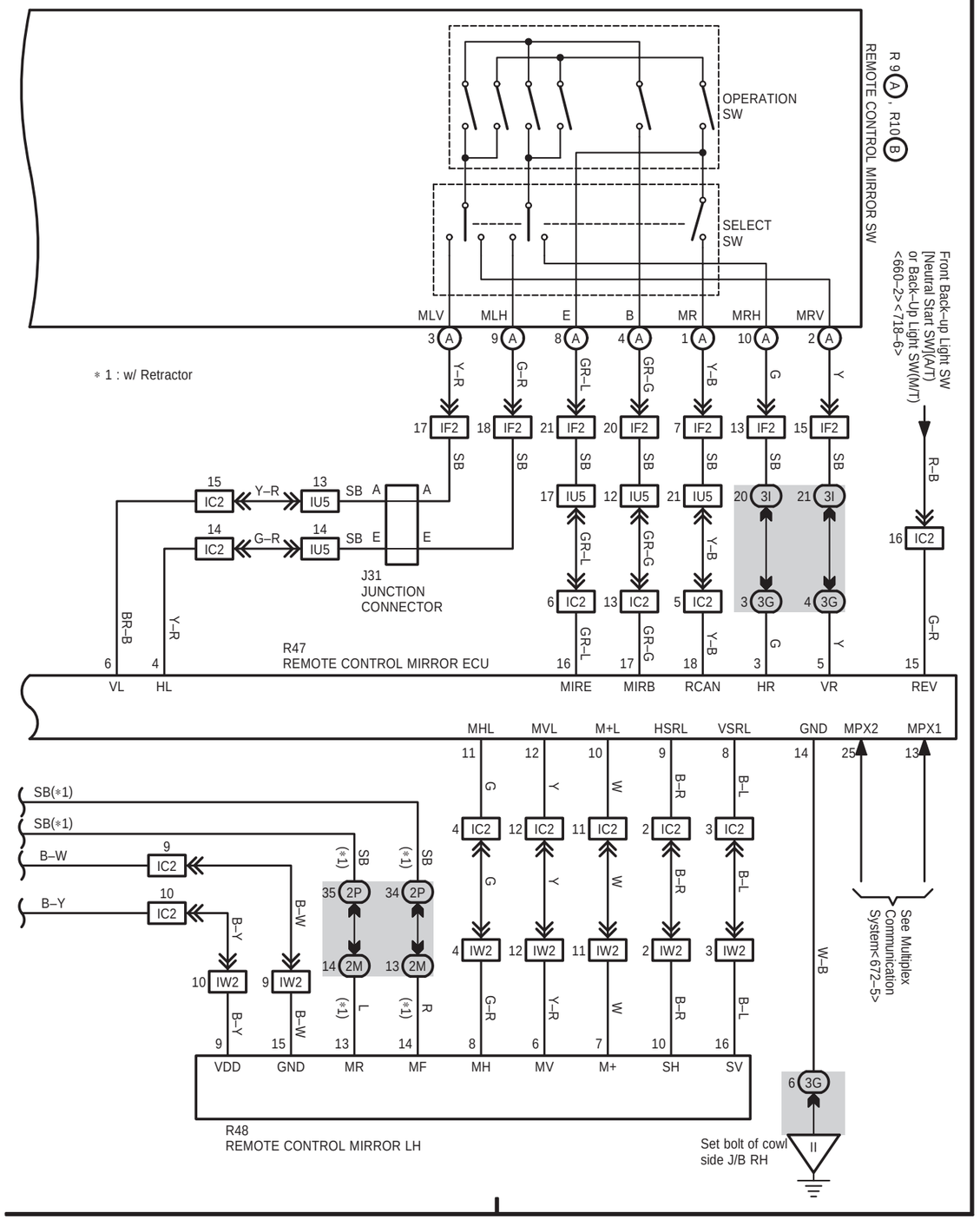

785

LAND CRUISER Station Wagon (EWD342F)

RHD

RHD

29 LAND CRUISER (RHD)

(Cont. next page)

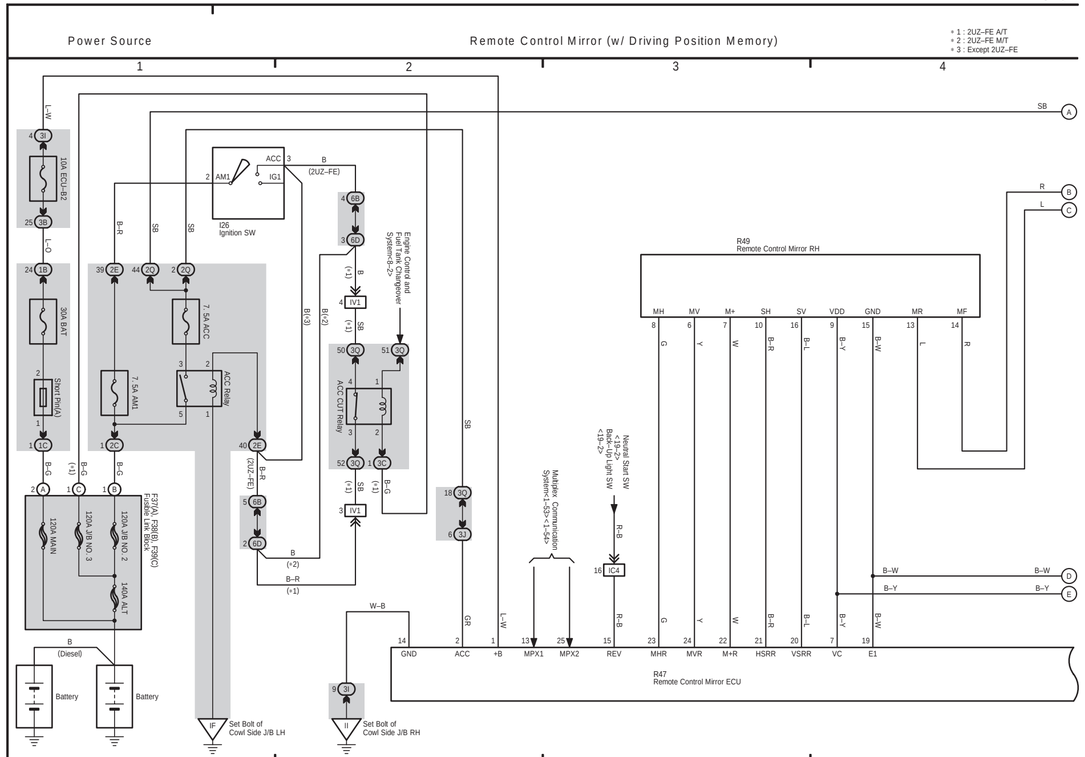

29 LAND CRUISER (RHD) (Cont' d)

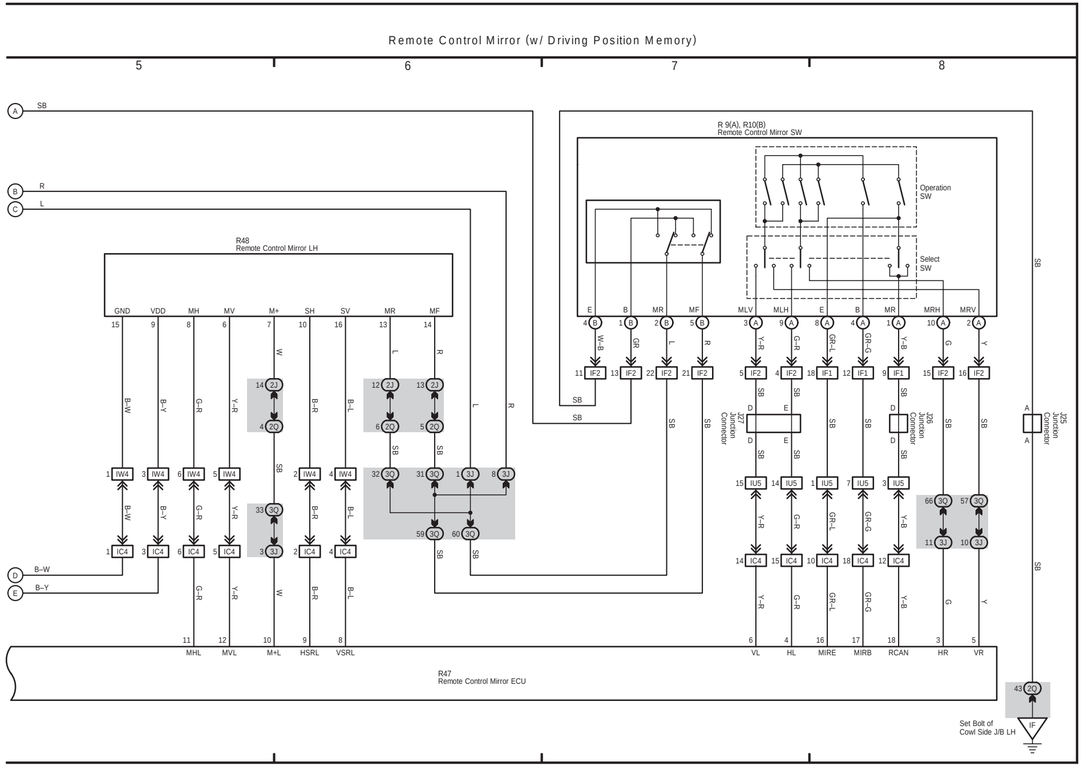

28 LAND CRUISER (RHD)

(Cont. next page)

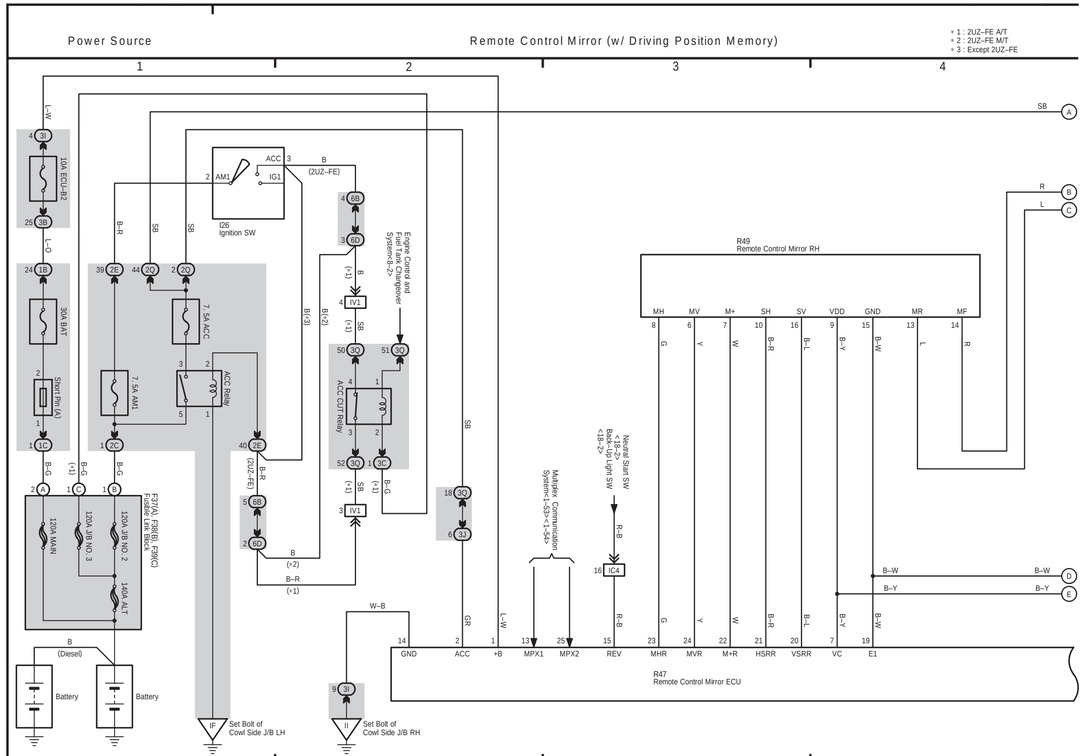

28 LAND CRUISER (RHD) (Cont' d)

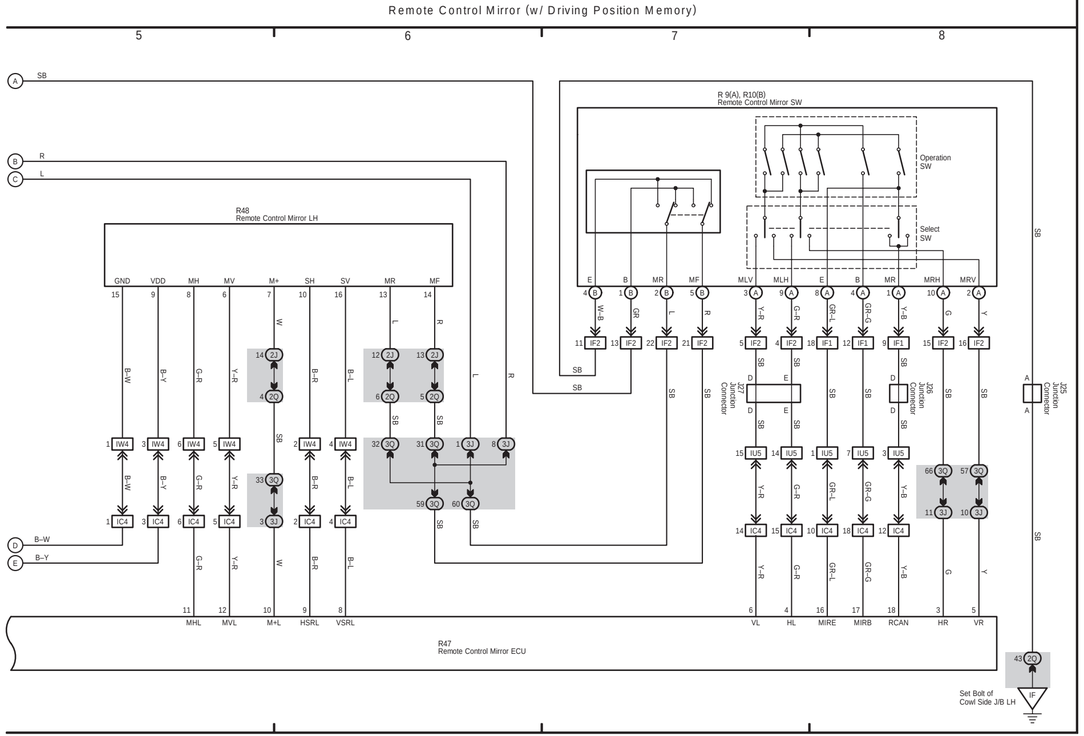

(Cont. next page)

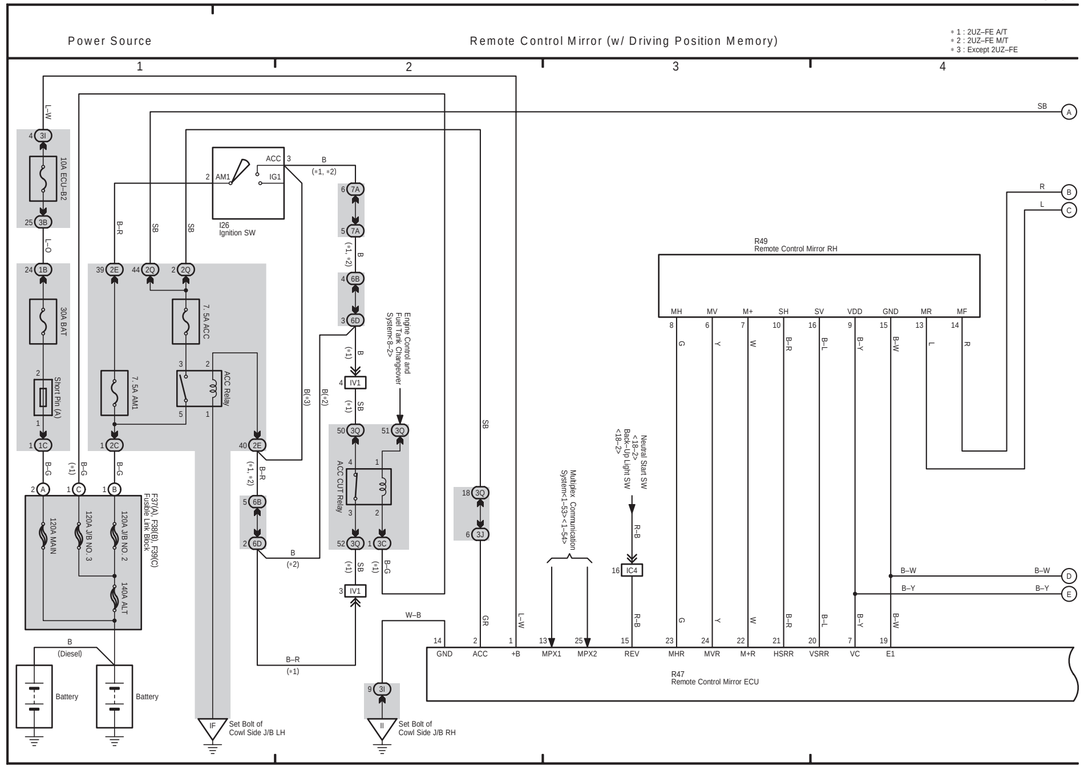

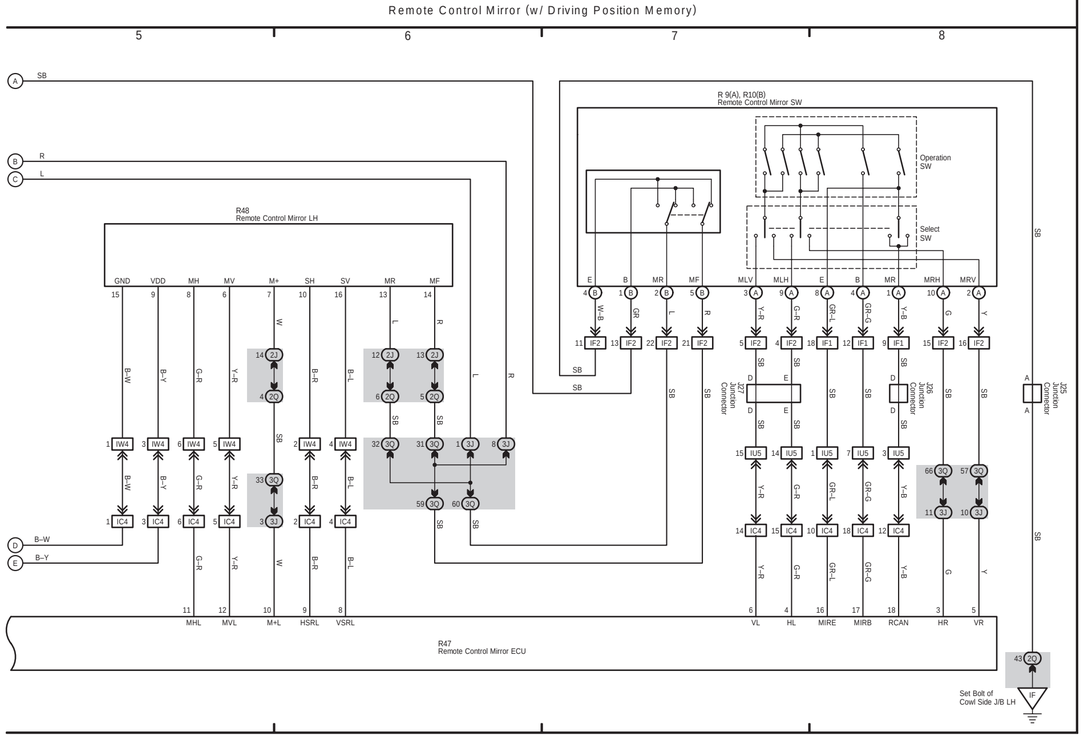

F ELECTRICAL WIRING DIAGRAM (System Circuits)

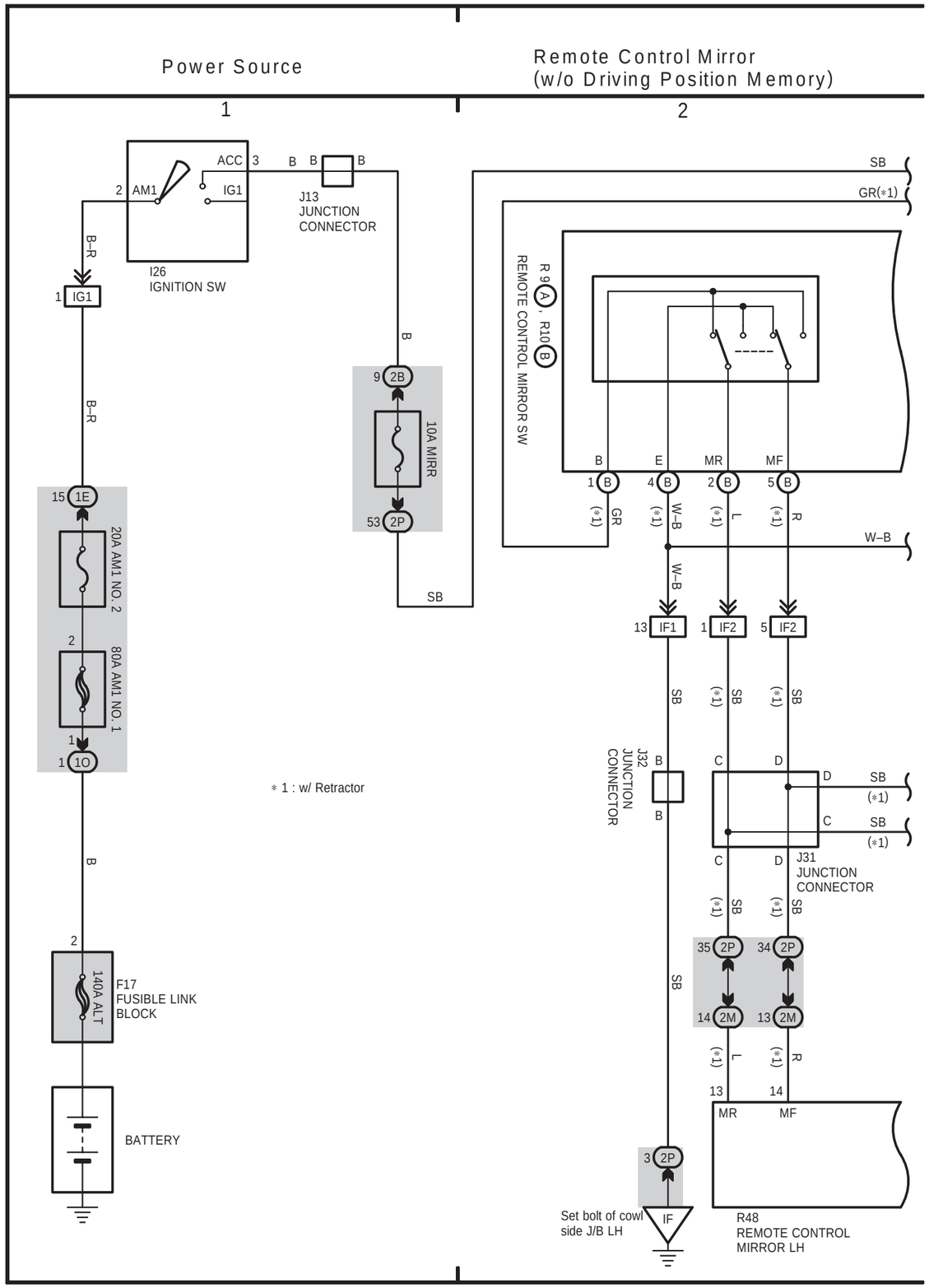

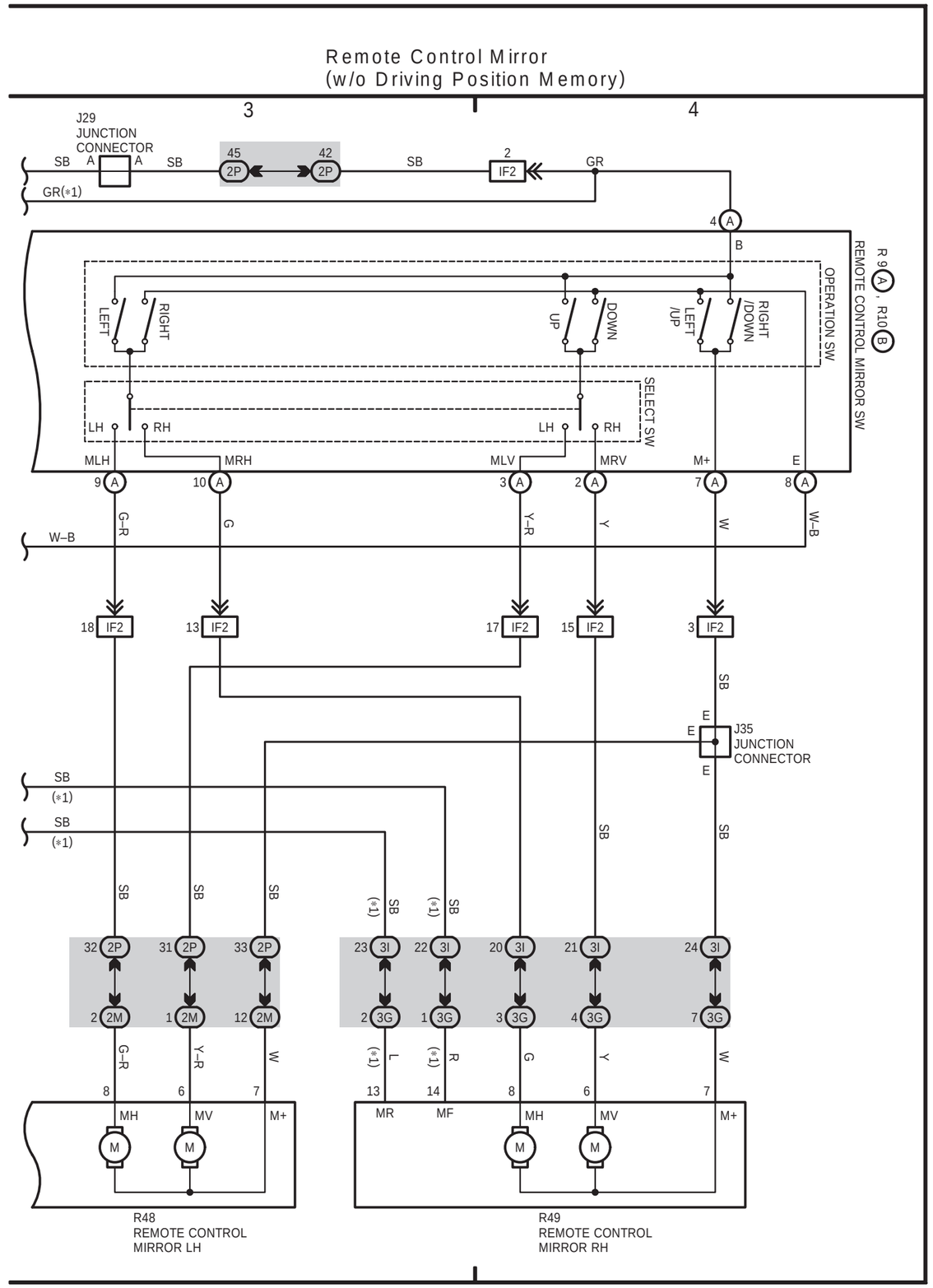

RHD

RHD

30 LAND CRUISER (RHD)

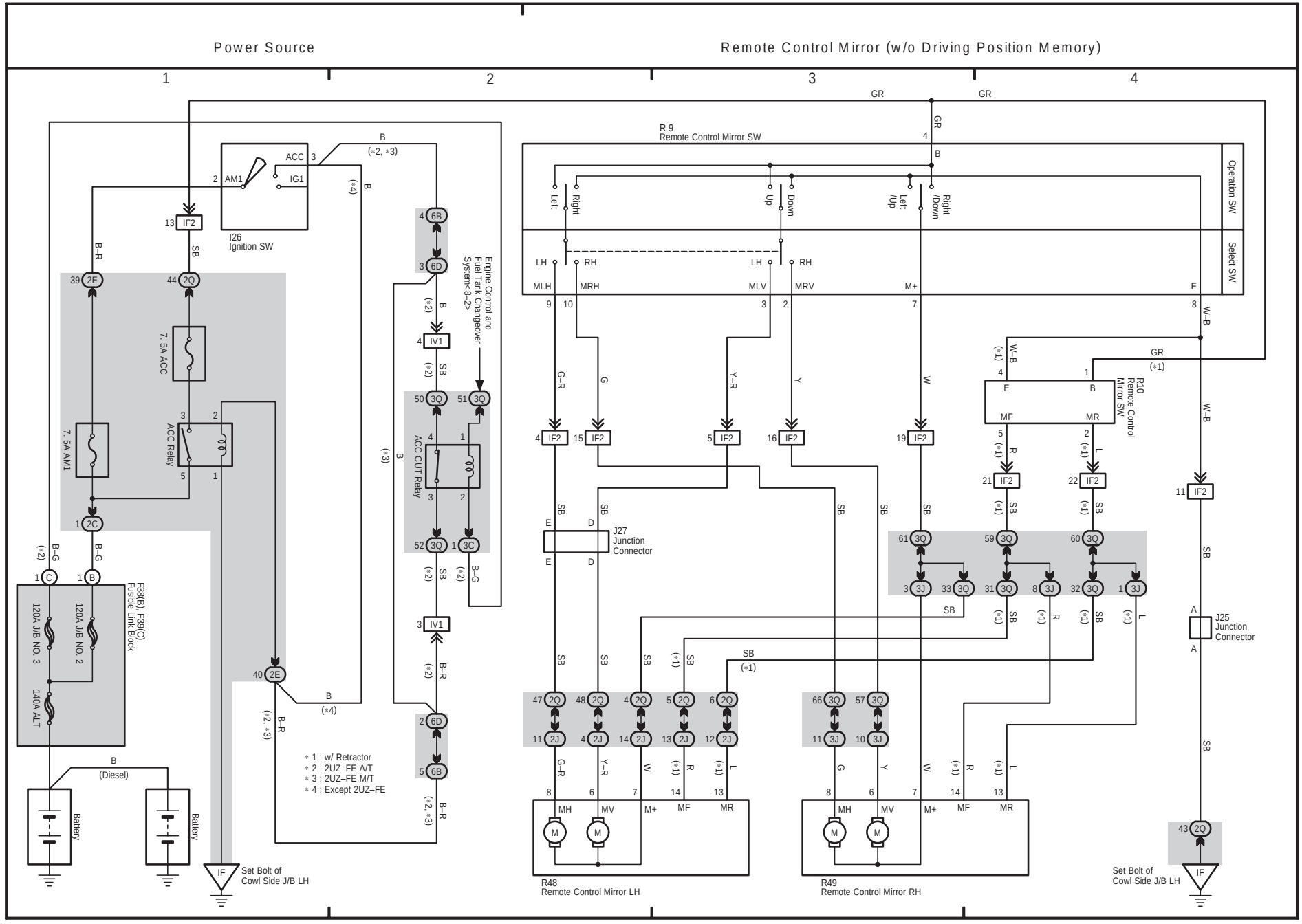

29 LAND CRUISER (RHD)

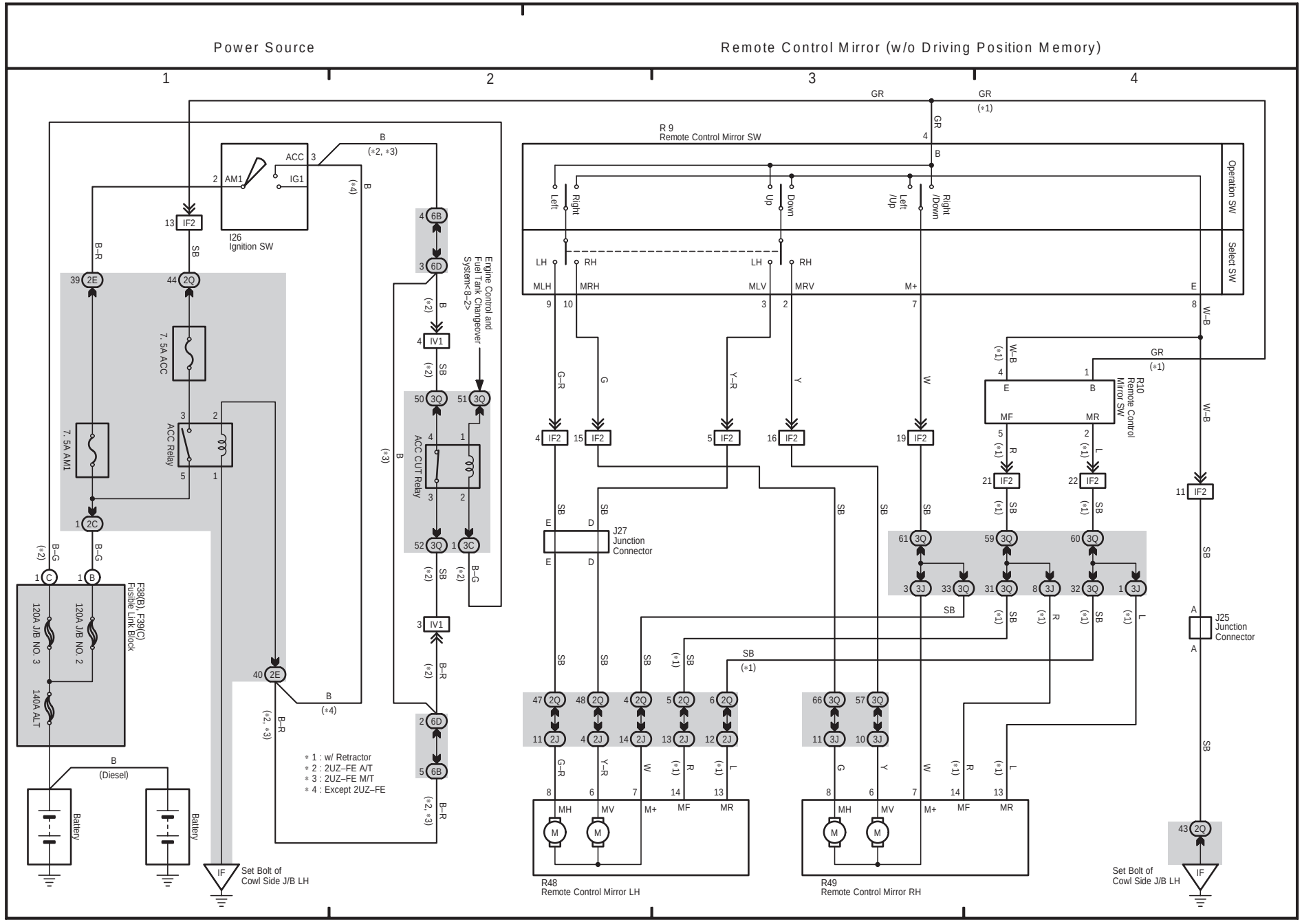

29 LAND CRUISER (RHD)

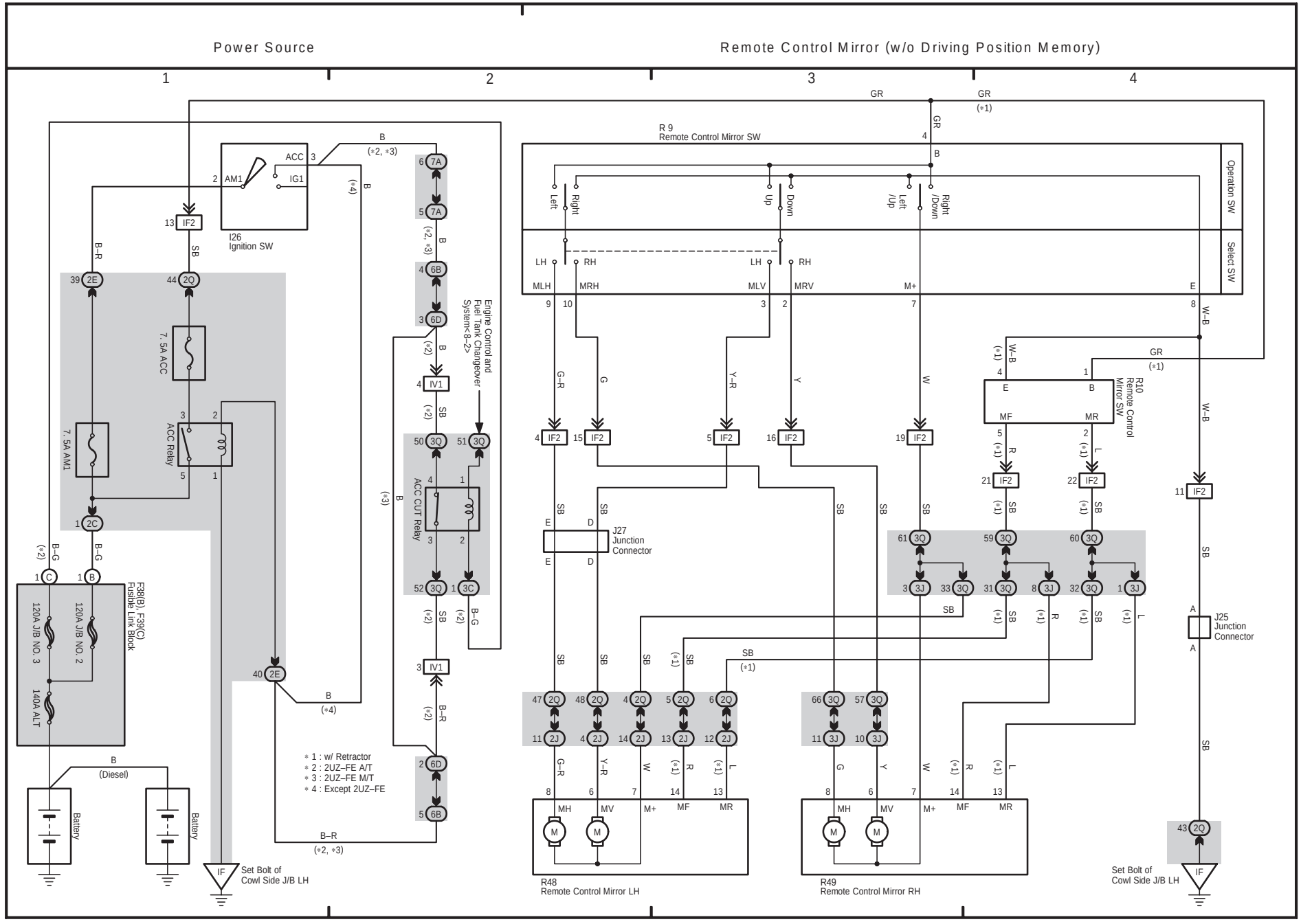

F ELECTRICAL WIRING DIAGRAM (System Circuits)

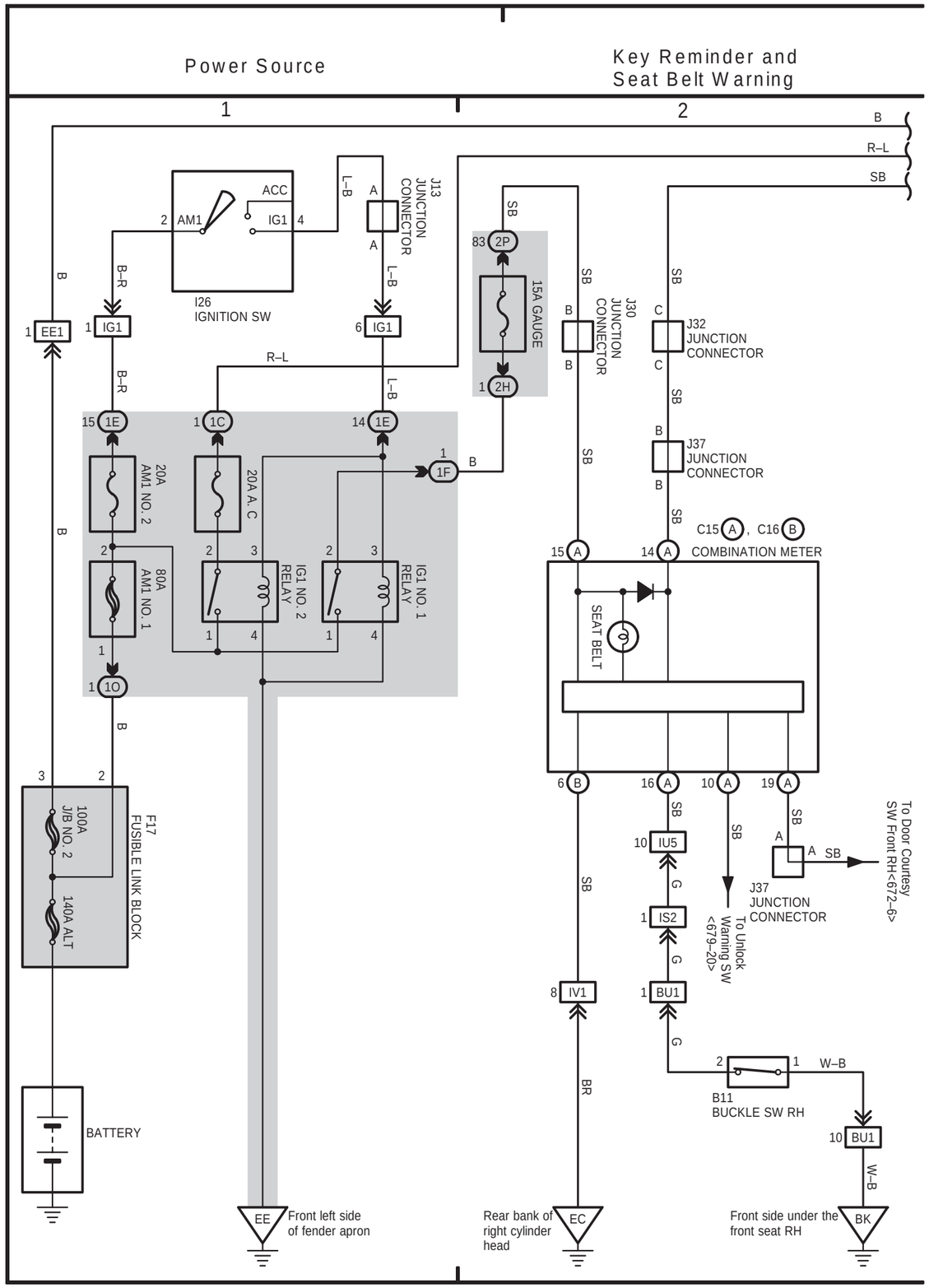

800

LAND CRUISER Station Wagon (EWD342F)

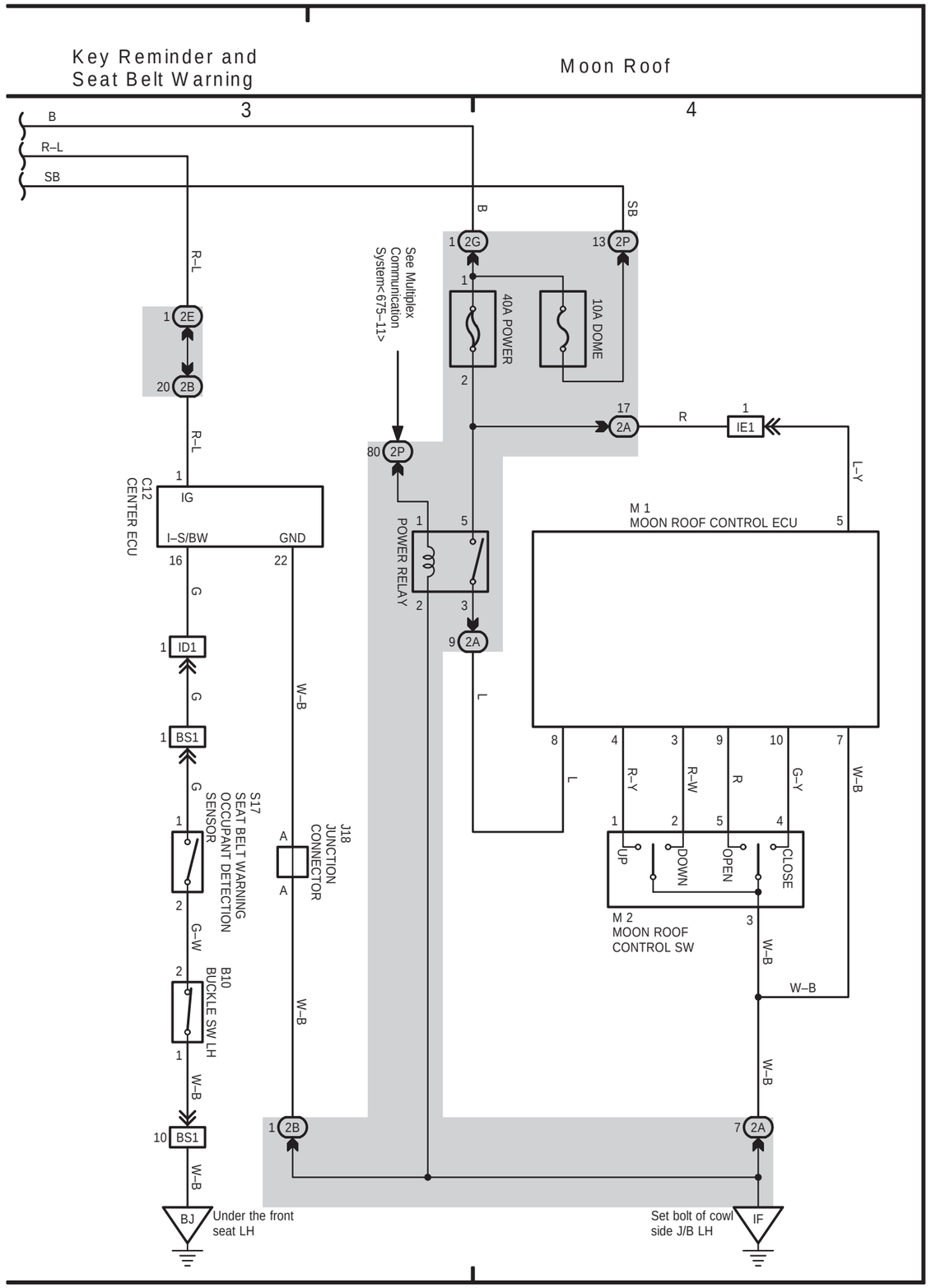

801

LAND CRUISER Station Wagon (EWD342F)

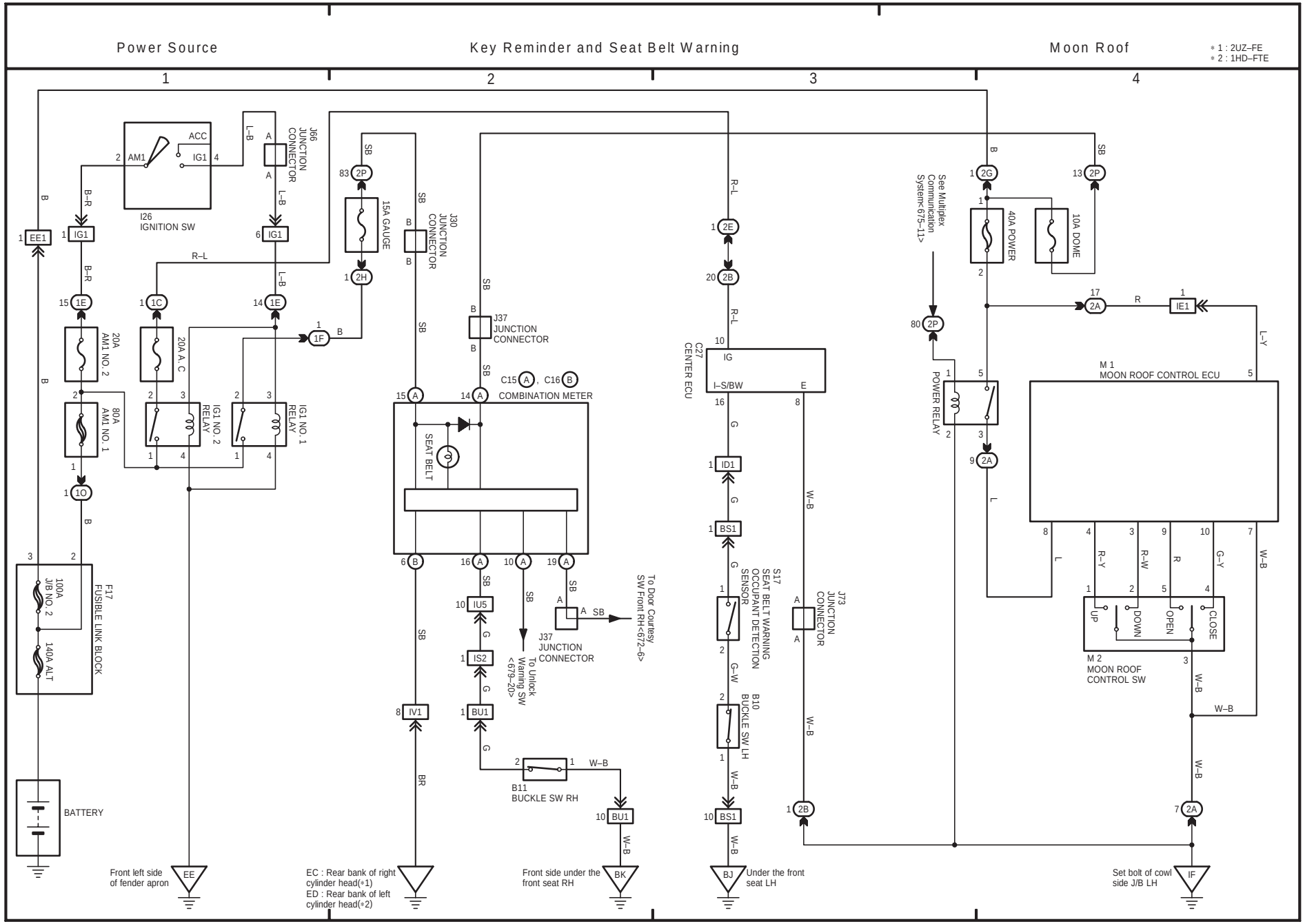
Power Source
Key Reminder and Seat Belt Warning
Moon Roof
* 1 : 2UZ–FE
* 2 : 1HD–FTE
1
2
3
4
I26
IGNITION SW
ACC
IG1
AM1
J66
JUNCTION
CONNECTOR
15A GAUGE
J30
JUNCTION
CONNECTOR
J37
JUNCTION
CONNECTOR
20A
AM1 NO. 2
80A
AM1 NO. 1
20A A. C
IG1 NO. 2
RELAY
IG1 NO. 1
RELAY
C15 A , C16 B
COMBINATION METER
SEAT BELT
C27
CENTER ECU
IG
I–S/BW
E
S17
SEAT BELT WARNING
OCCUPANT DETECTION
SENSOR
B10
BUCKLE SW LH
B11
BUCKLE SW RH
J73
JUNCTION
CONNECTOR
To Door Courtesy
SW Front RH<672–6>
To Unlock
Warning SW
<679–20>
J37
JUNCTION
CONNECTOR
See Multiplex
Communication
System<675–11>
40A POWER
10A DOME
POWER RELAY
M 1
MOON ROOF CONTROL ECU
M 2
MOON ROOF
CONTROL SW
UP
DOWN
OPEN
CLOSE
F17
FUSIBLE LINK BLOCK
100A
J/B NO. 2
140A ALT
BATTERY
Front left side
of fender apron
EC : Rear bank of right
cylinder head(*1)
ED : Rear bank of left
cylinder head(*2)
Front side under the
front seat RH
Under the front
seat LH
Set bolt of cowl
side J/B LH

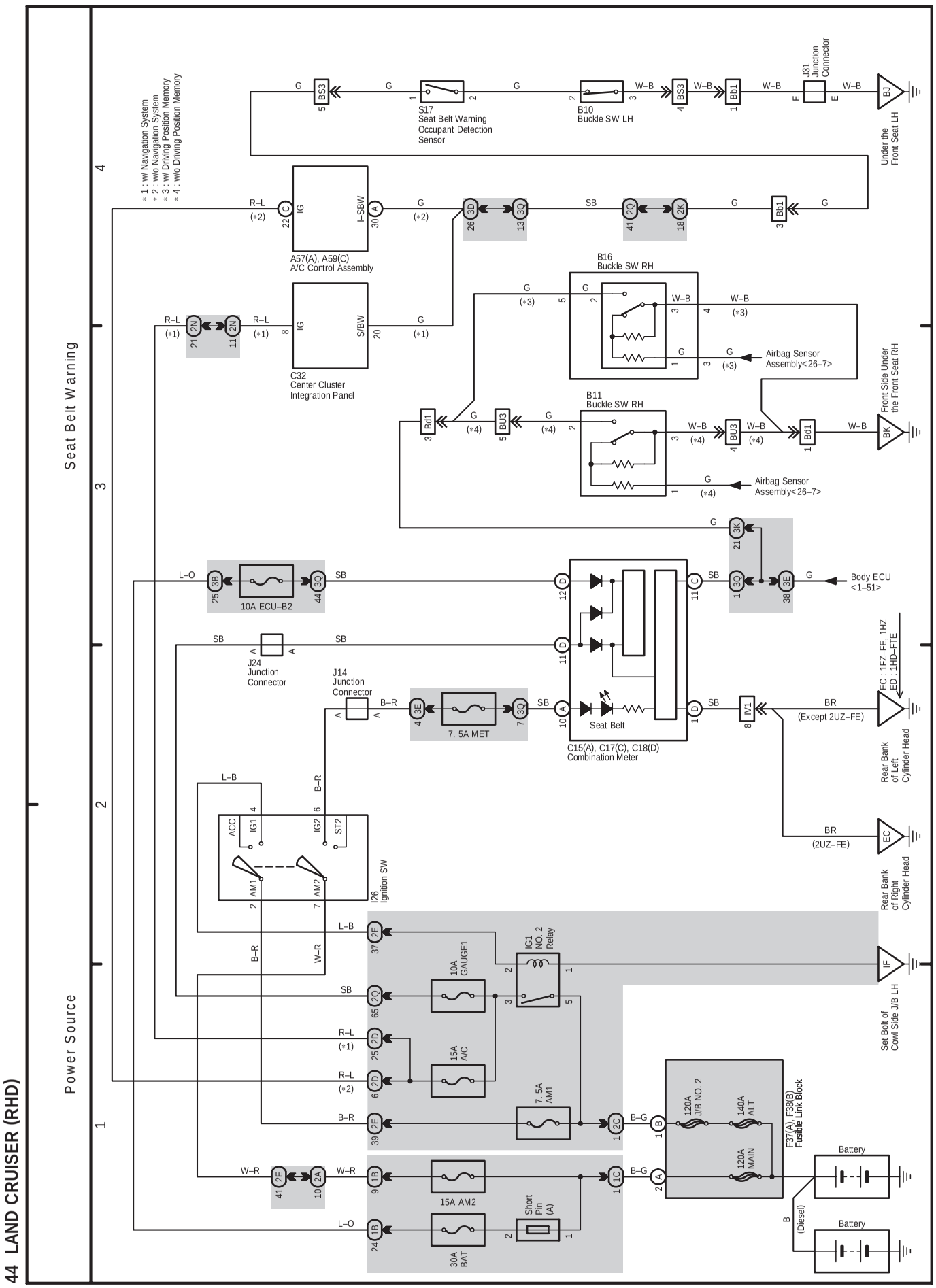
44 LAND CRUISER (RHD)
Power Source
Seat Belt Warning
1
2
3
4
* 1 : w/ Navigation System
* 2 : w/o Navigation System
* 3 : w/ Driving Position Memory
* 4 : w/o Driving Position Memory
S17
Seat Belt Warning
Occupant Detection
Sensor
B10
Buckle SW LH
J31
Junction
Connector
Under the
Front Seat LH
A57(A), A59(C)
A/C Control Assembly
C32
Center Cluster
Integration Panel
B16
Buckle SW RH
Airbag Sensor
Assembly< 26–7>
B11
Buckle SW RH
Airbag Sensor
Assembly< 26–7>
Front Side Under
the Front Seat RH
Body ECU
<1–51>
10A ECU–B2
J24
Junction
Connector
J14
Junction
Connector
7. 5A MET
C15(A), C17(C), C18(D)
Combination Meter
Seat Belt
EC : 1FZ–FE, 1HZ
ED : 1HD–FTE
BR
(Except 2UZ–FE)
Rear Bank
of Left
Cylinder Head
BR
(2UZ–FE)
EC
Rear Bank
of Right
Cylinder Head
I26
Ignition SW
ACC
IG1
IG2
ST2
AM1
AM2
10A
GAUGE1
IG1
NO. 2
Relay
15A
A/C
7. 5A
AM1
15A AM2
Short
Pin
(A)
30A
BAT
120A
J/B NO. 2
140A
ALT
120A
MAIN
F37(A), F38(B)
Fusible Link Block
Battery
Battery
B
(Diesel)
Set Bolt of
Cowl Side J/B LH
IF
BJ
BK
IV1
IG
I–SBW
S/BW
R–L
(*2)
R–L
(*1)
G
(*2)
G
(*1)
G
(*3)
G
(*4)
SB
L–O
B–R
W–R
L–B
B–G
W–B

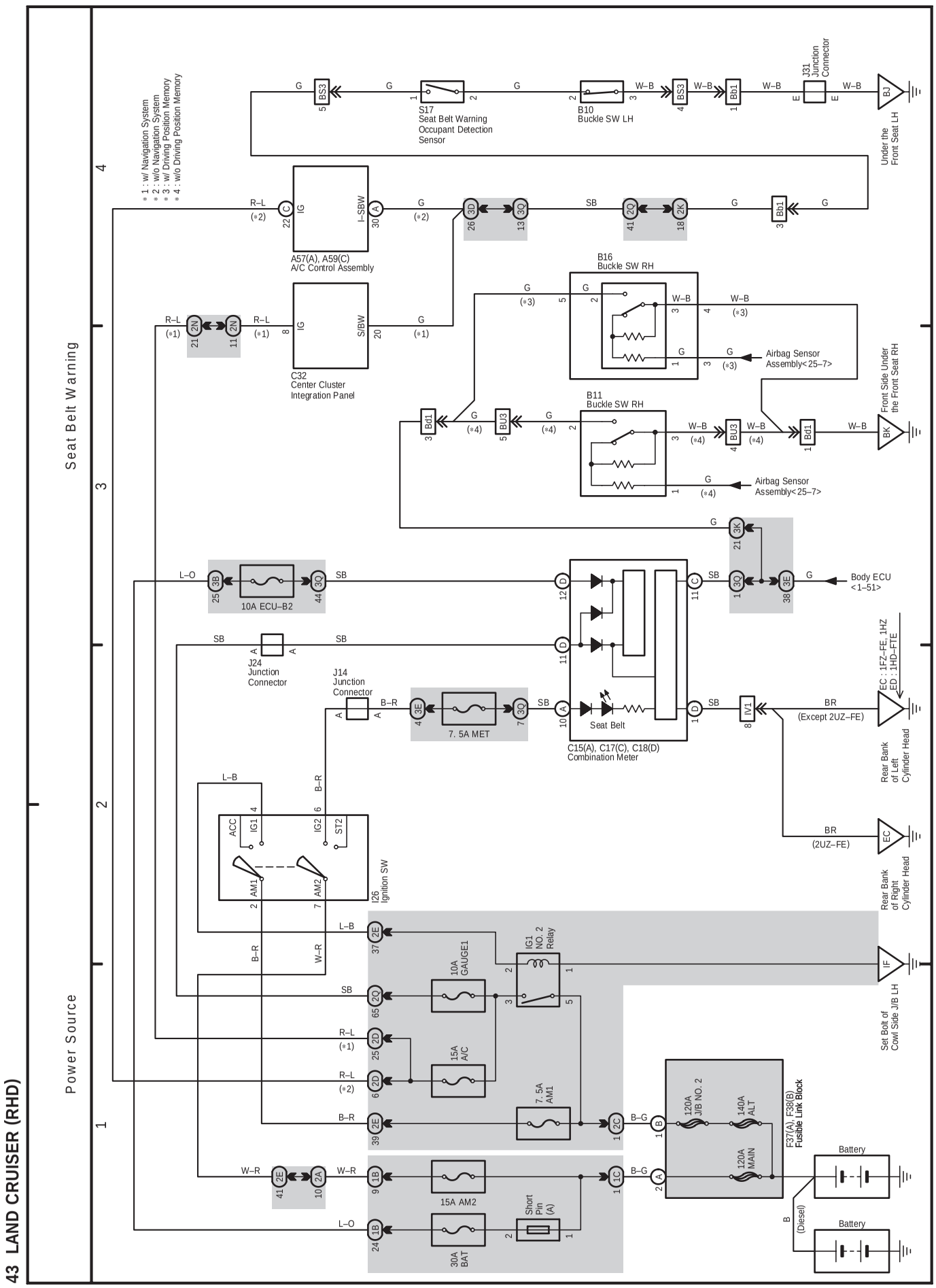
43 LAND CRUISER (RHD)
Power Source
Seat Belt Warning
* 1 : w/ Navigation System
* 2 : w/o Navigation System
* 3 : w/ Driving Position Memory
* 4 : w/o Driving Position Memory
S17
Seat Belt Warning
Occupant Detection
Sensor
B10
Buckle SW LH
J31
Junction
Connector
Under the
Front Seat LH
A57(A), A59(C)
A/C Control Assembly
C32
Center Cluster
Integration Panel
B16
Buckle SW RH
Airbag Sensor
Assembly< 25–7>
B11
Buckle SW RH
Airbag Sensor
Assembly< 25–7>
Front Side Under
the Front Seat RH
Body ECU
<1–51>
10A ECU–B2
J24
Junction
Connector
J14
Junction
Connector
7. 5A MET
C15(A), C17(C), C18(D)
Combination Meter
Seat Belt
EC : 1FZ–FE, 1HZ
ED : 1HD–FTE
Rear Bank
of Left
Cylinder Head
Rear Bank
of Right
Cylinder Head
I26
Ignition SW
IG1
NO. 2
Relay
10A
GAUGE1
15A
A/C
7. 5A
AM1
15A AM2
30A
BAT
Short
Pin
(A)
Set Bolt of
Cowl Side J/B LH
120A
J/B NO. 2
140A
ALT
120A
MAIN
F37(A), F38(B)
Fusible Link Block
Battery
Battery
(Diesel)

43 LAND CRUISER (RHD)

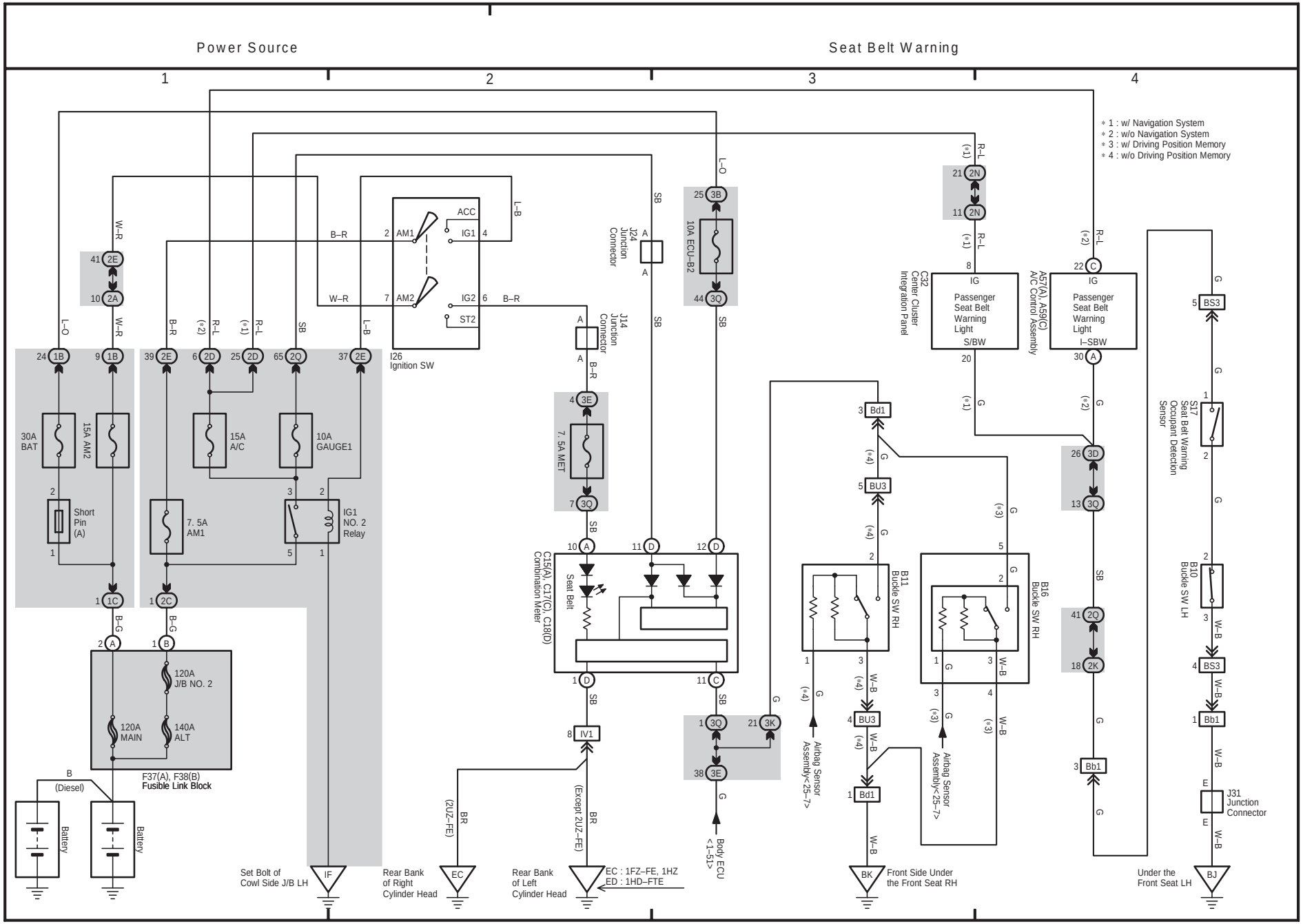

F ELECTRICAL WIRING DIAGRAM (System Circuits)

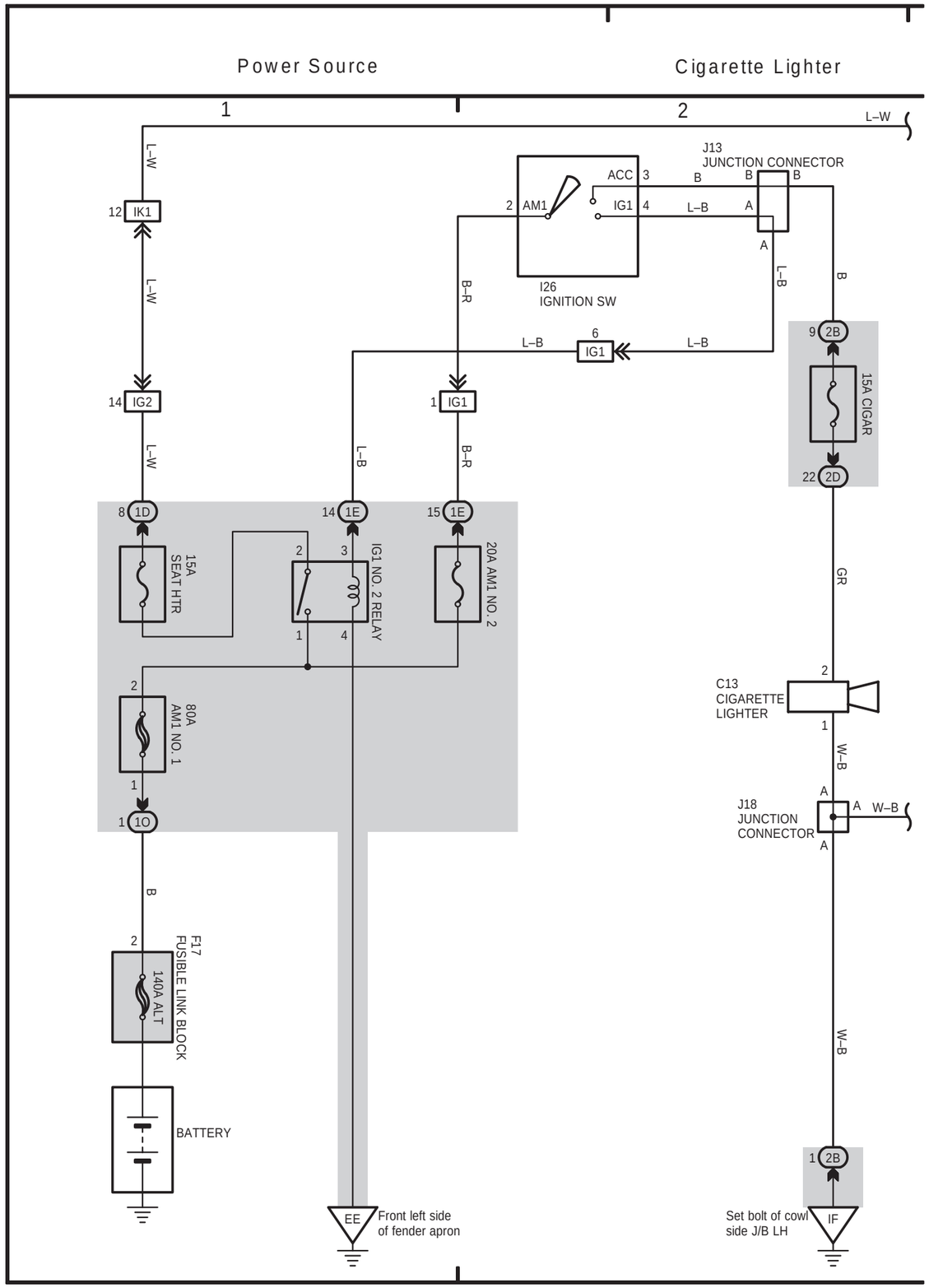

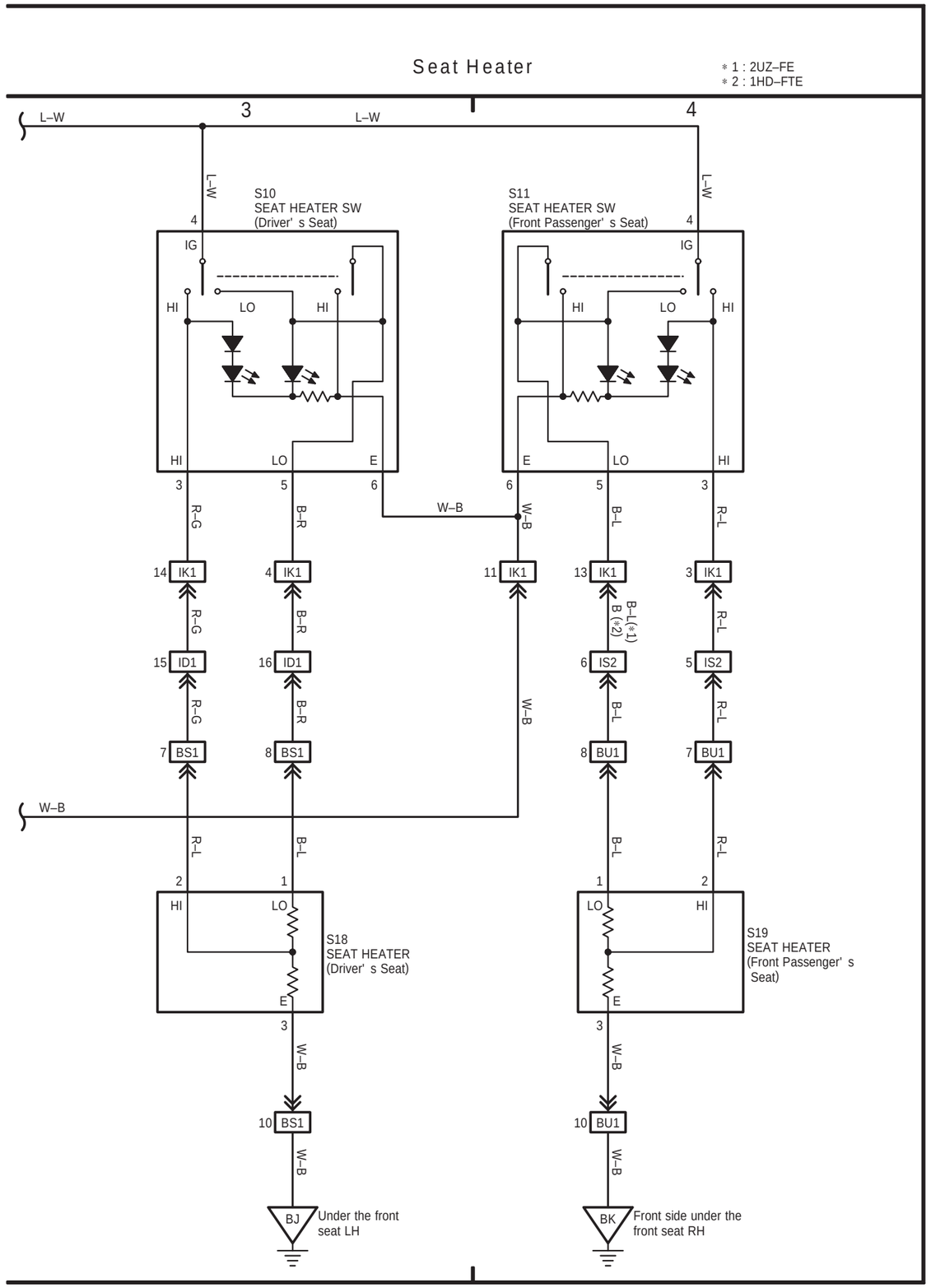

RHD

RHD

(Cont. next page)

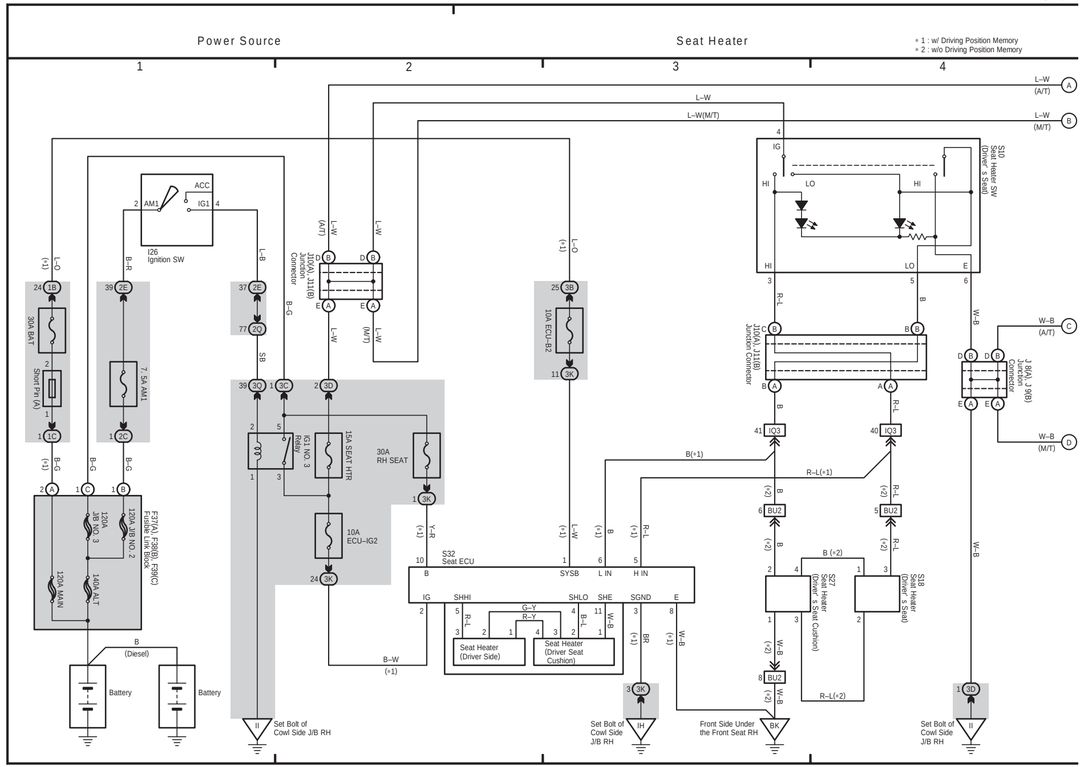

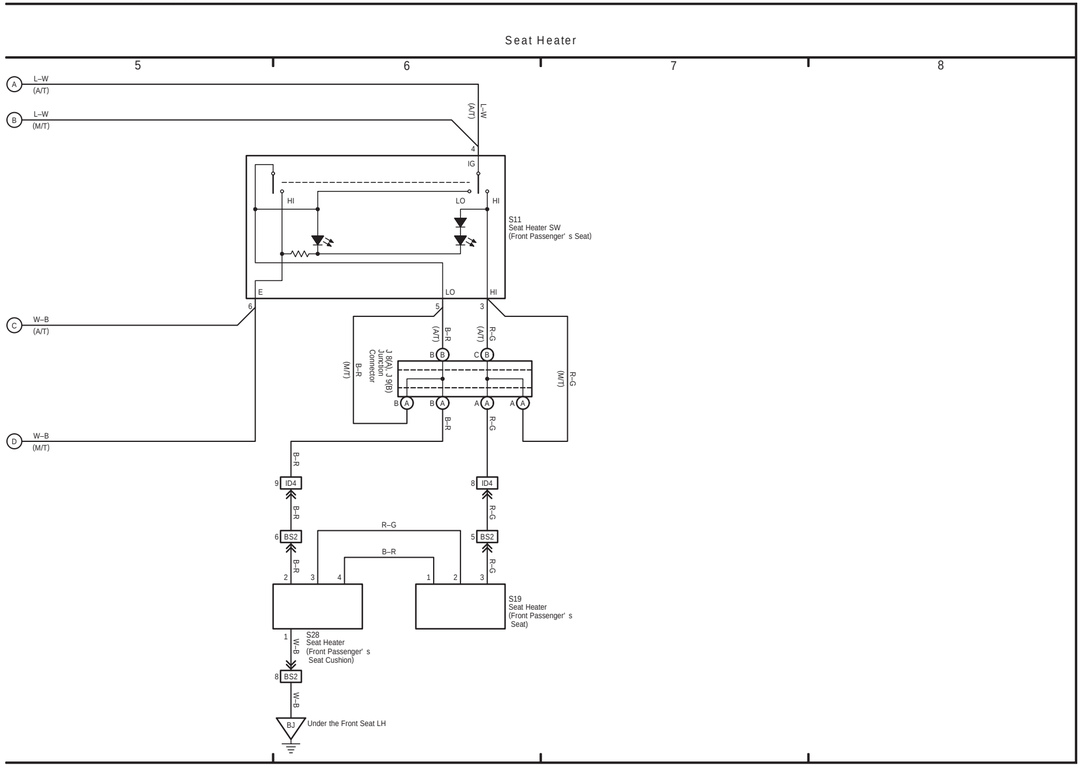

39 LAND CRUISER (RHD)

(Cont. next page)

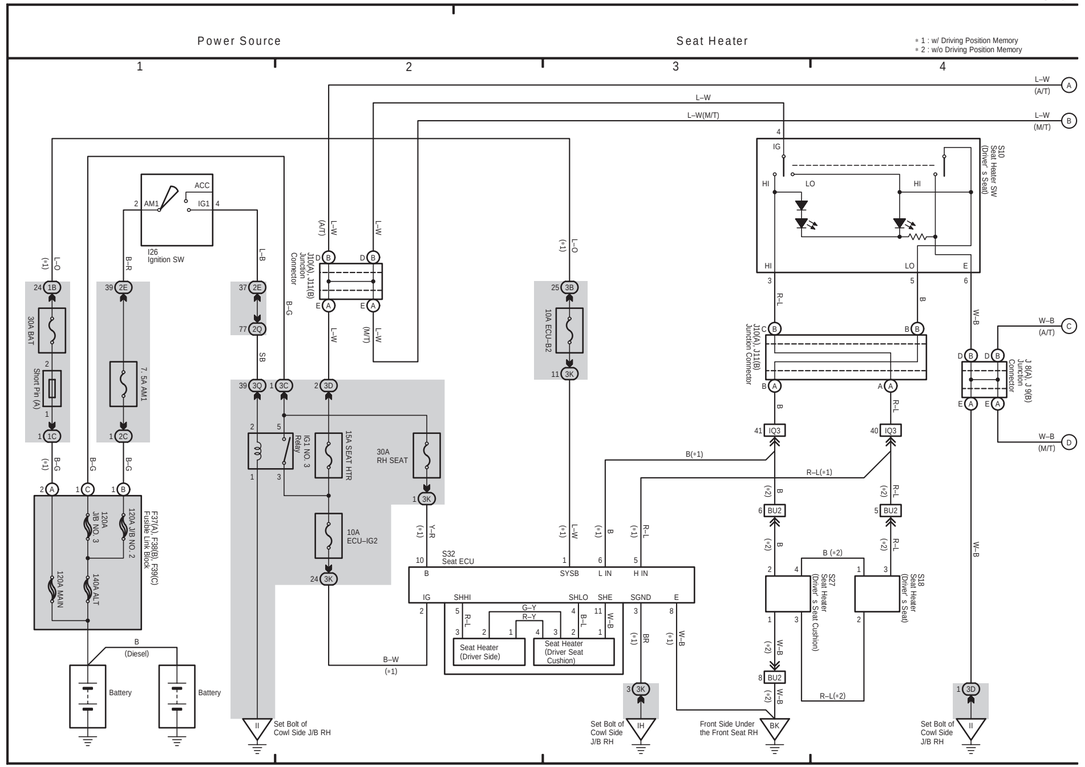

39 LAND CRUISER (RHD) (Cont' d)

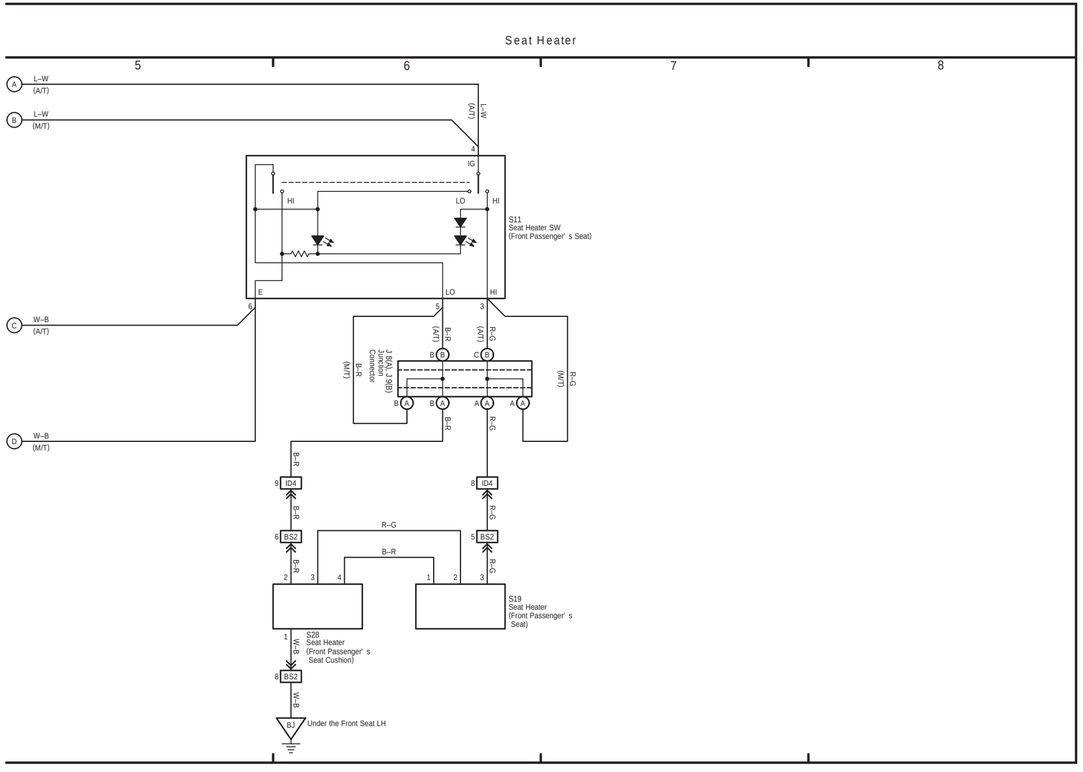

39 LAND CRUISER (RHD)

(Cont. next page)

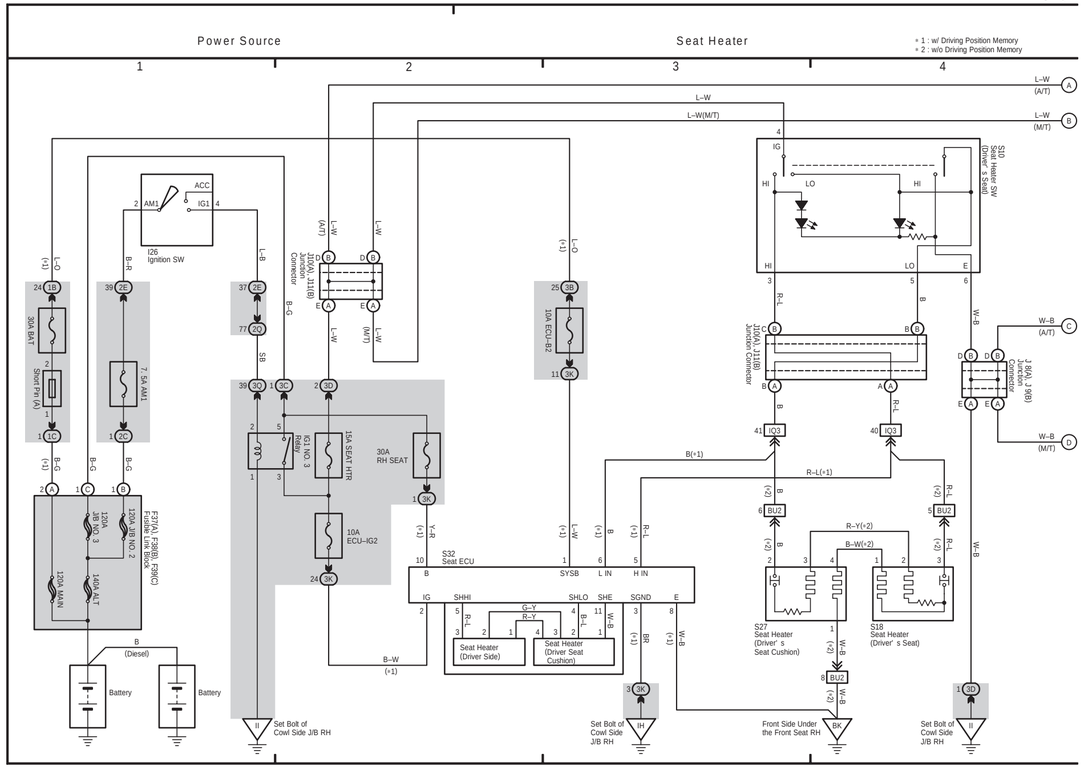

39 LAND CRUISER (RHD) (Cont' d)

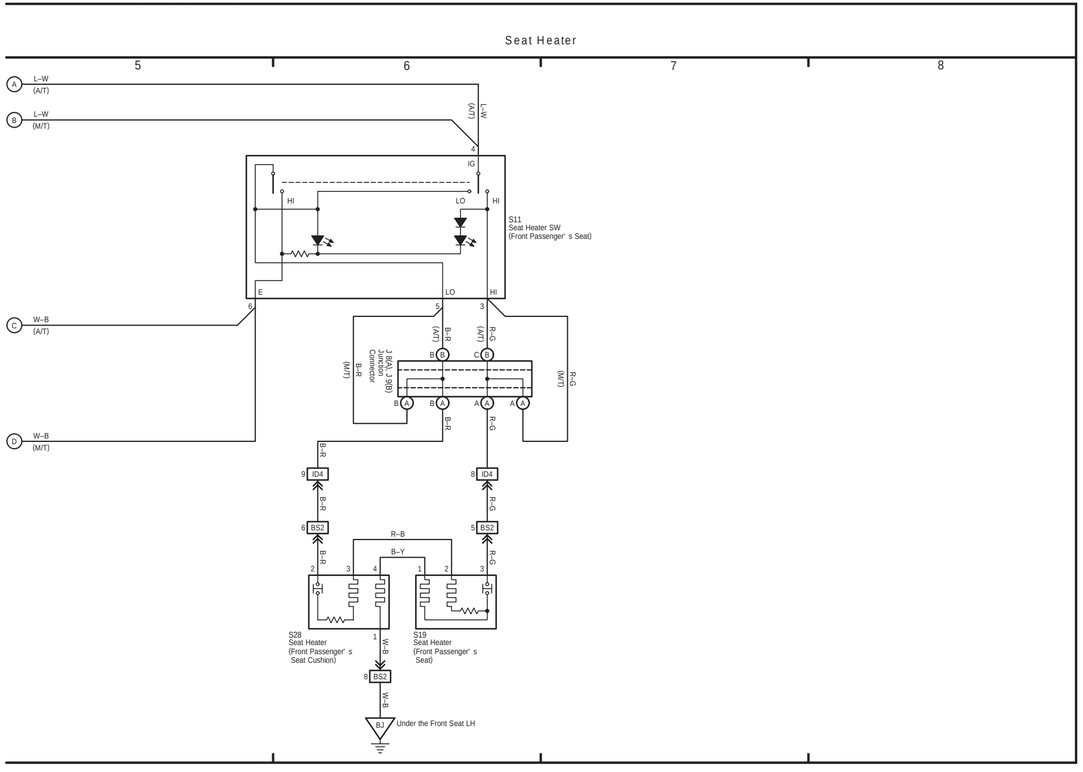

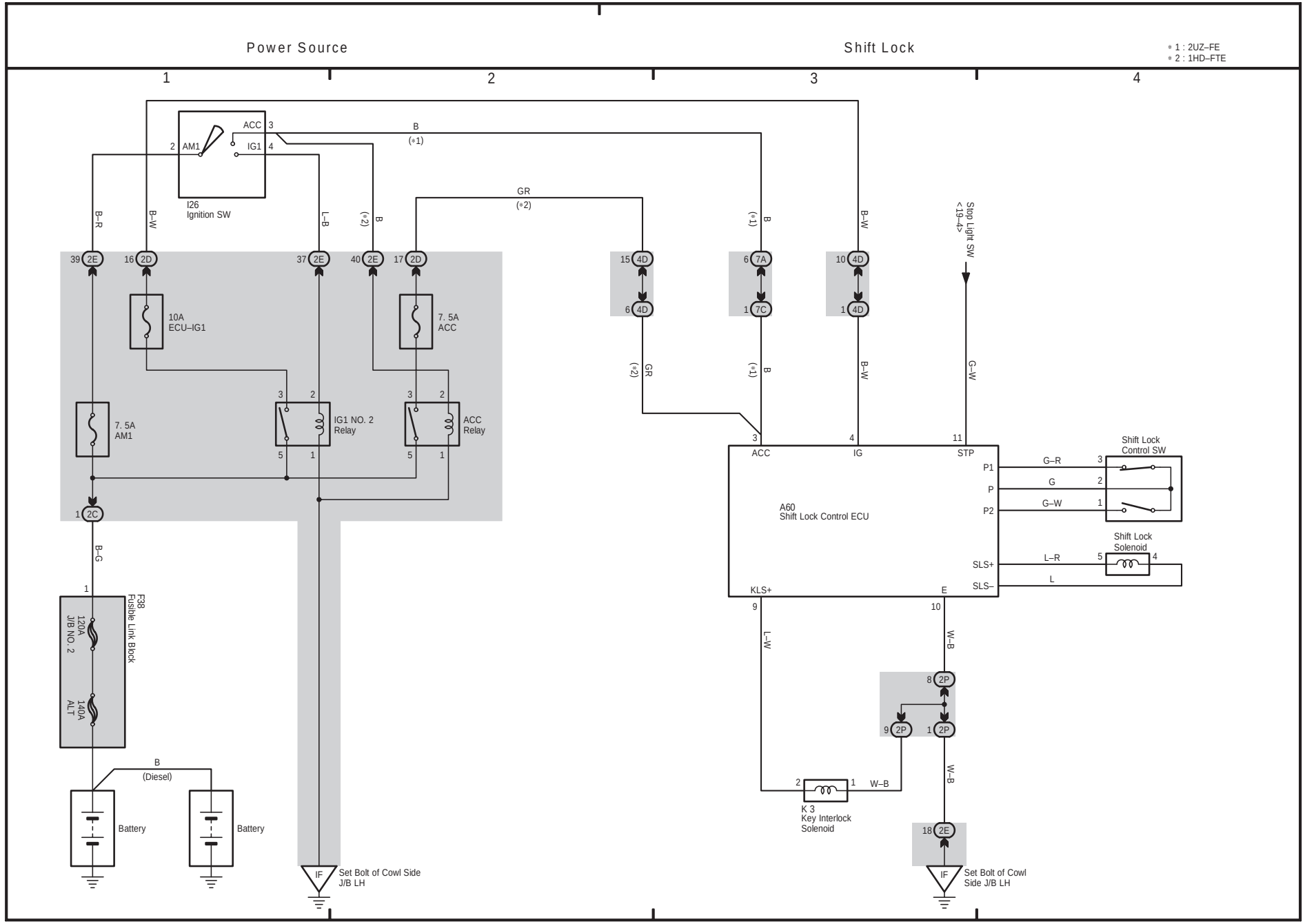
Power Source
Shift Lock
* 1 : 2UZ–FE
* 2 : 1HD–FTE
1
2
3
4
ACC
IG1
AM1
I26
Ignition SW
B
(*1)
GR
(*2)
B–R
B–W
L–B
B
(*2)
B
(*1)
B–W
Stop Light SW
<19–4>
10A
ECU–IG1
7. 5A
ACC
7. 5A
AM1
IG1 NO. 2
Relay
ACC
Relay
GR
(*2)
B
(*1)
B–W
G–W
ACC
IG
STP
A60
Shift Lock Control ECU
P1
P
P2
G–R
G
G–W
Shift Lock
Control SW
Shift Lock
Solenoid
L–R
L
SLS+
SLS–
KLS+
E
L–W
W–B
W–B
W–B
K 3
Key Interlock
Solenoid
B–G
F38
Fusible Link Block
120A
J/B NO. 2
140A
ALT
B
(Diesel)
Battery
Battery
IF
Set Bolt of Cowl Side
J/B LH
IF
Set Bolt of Cowl
Side J/B LH

F ELECTRICAL WIRING DIAGRAM (System Circuits)

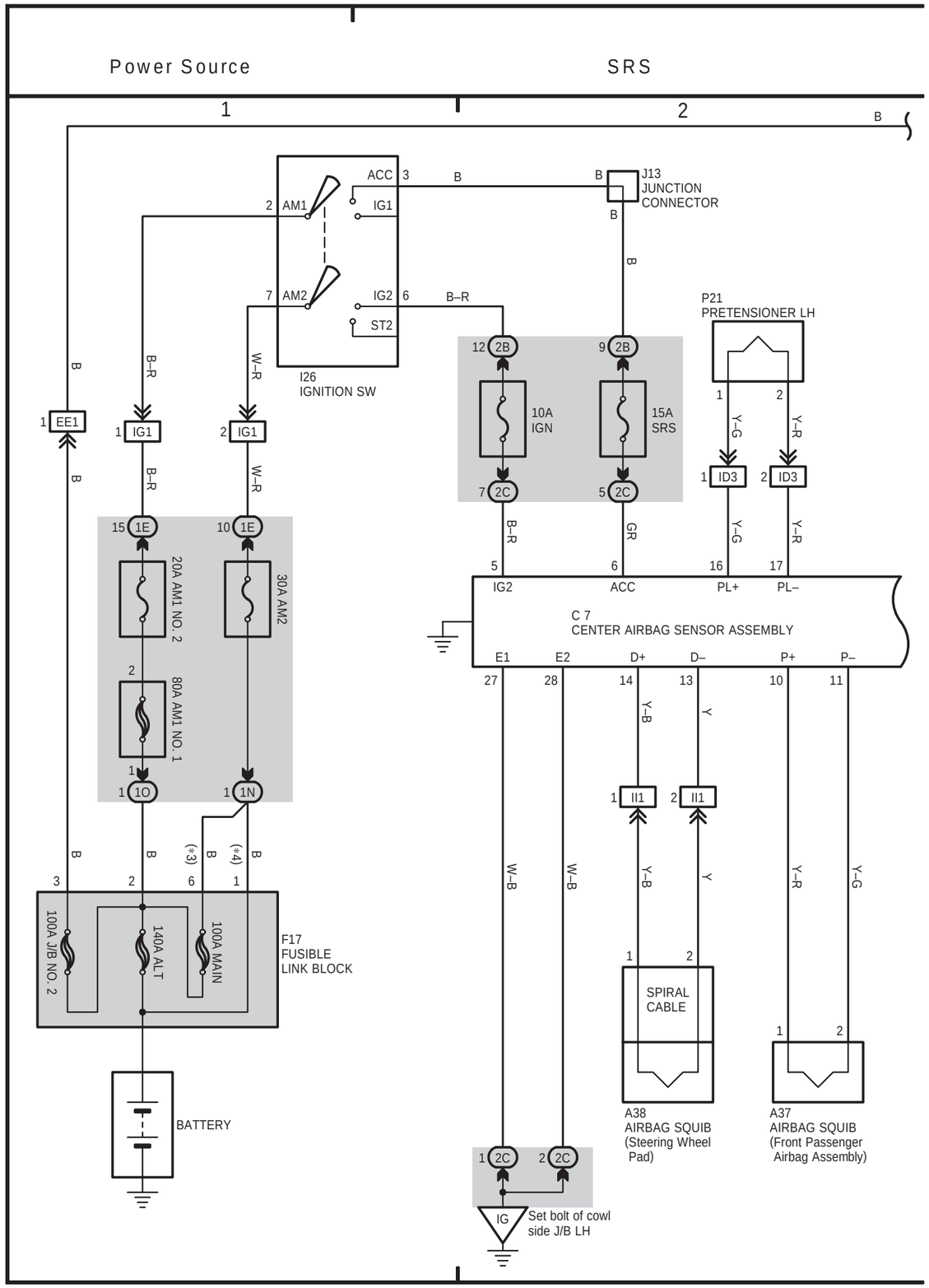

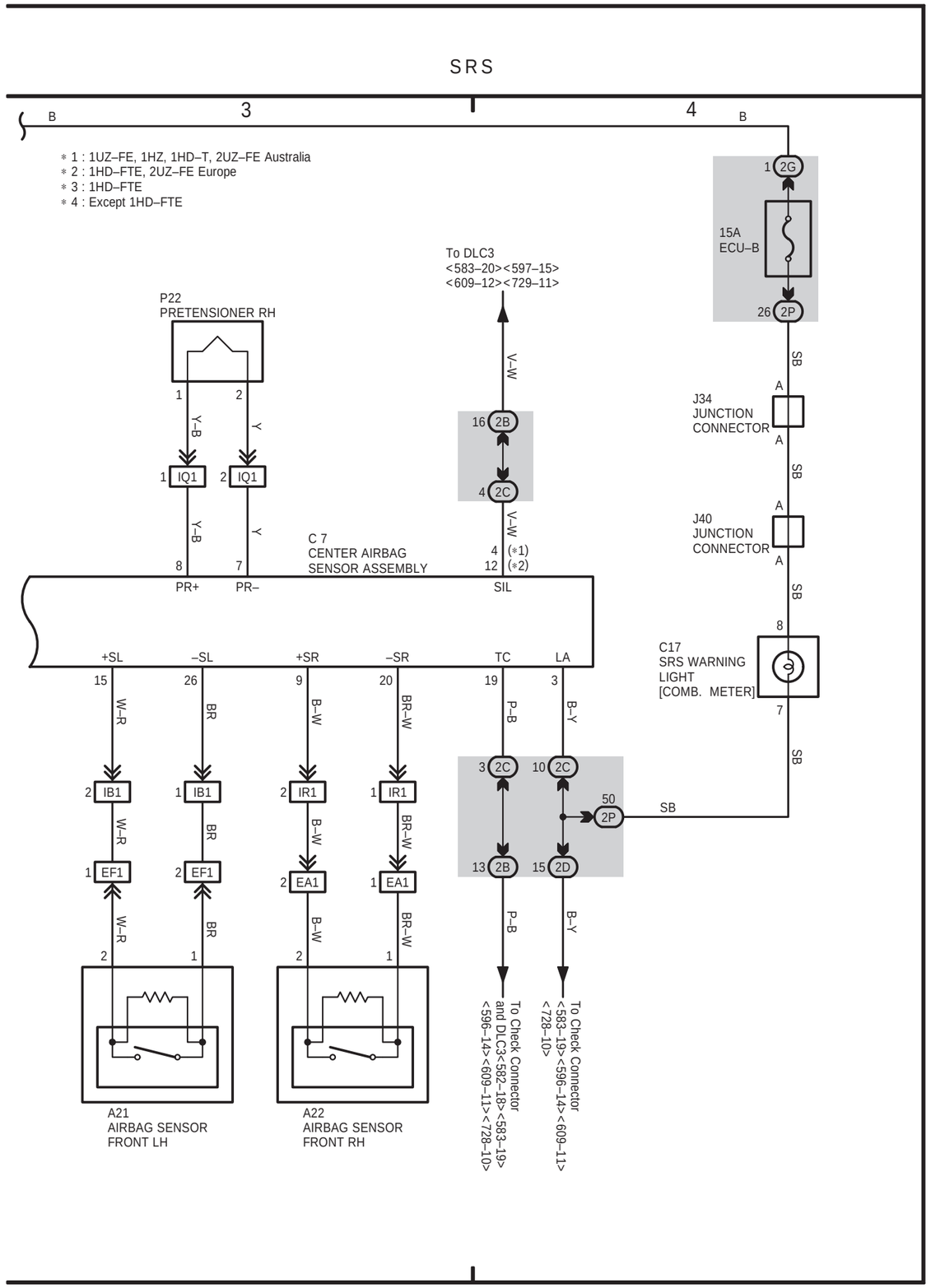

26 LAND CRUISER (RHD)

(Cont. next page)

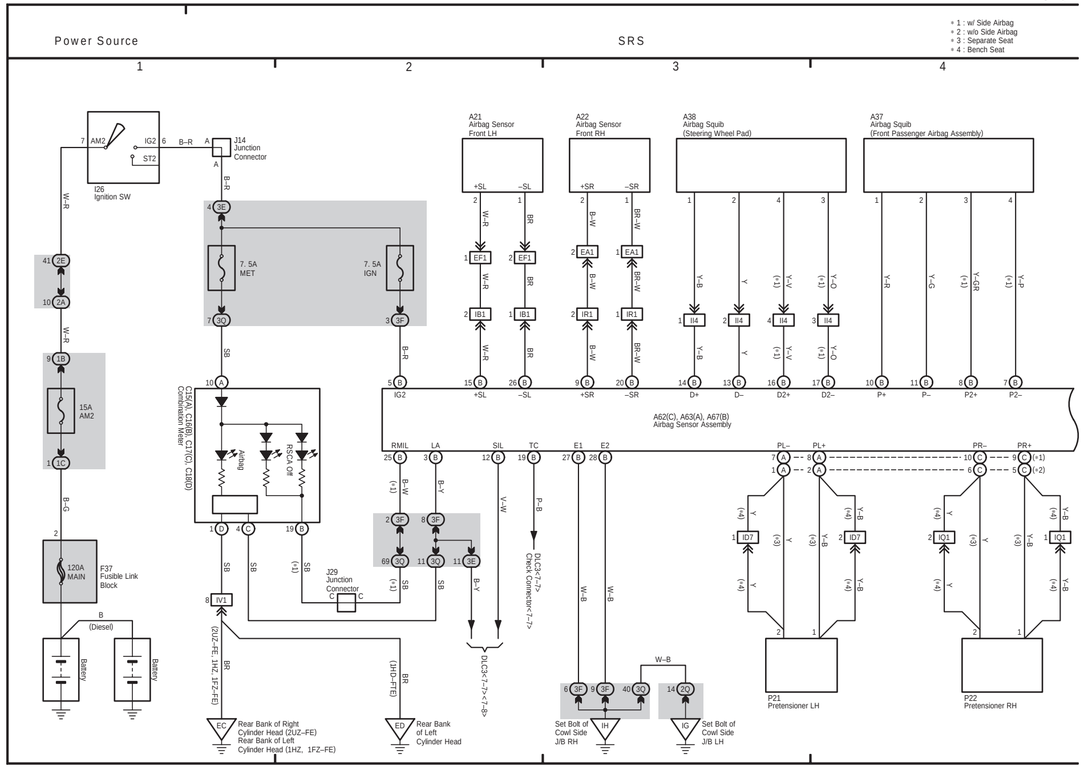

H OVERALL ELECTRICAL WIRING DIAGRAM

26 LAND CRUISER (RHD) (Cont' d)

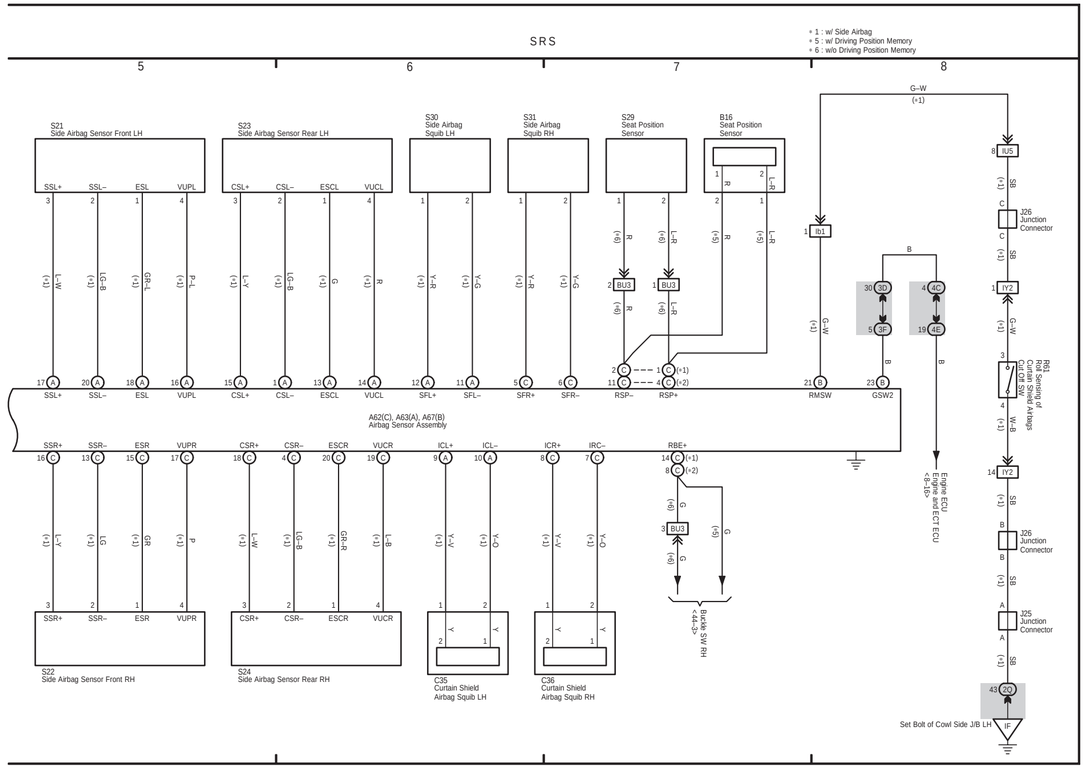

H

(Cont. next page)

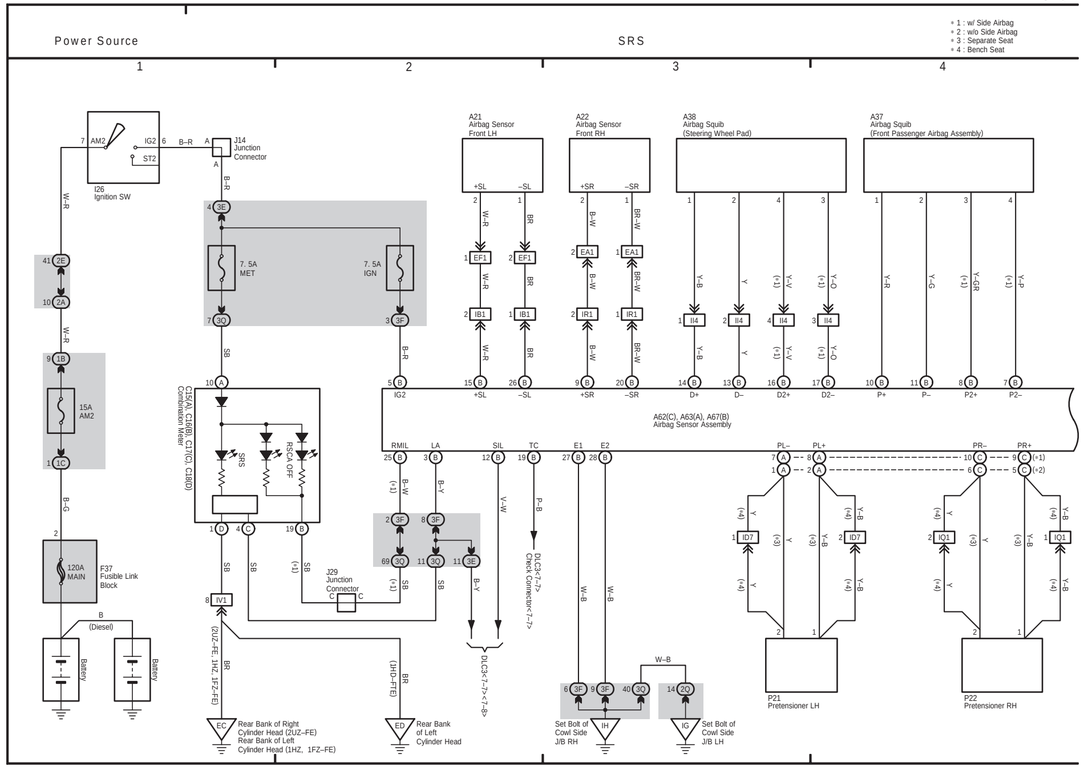

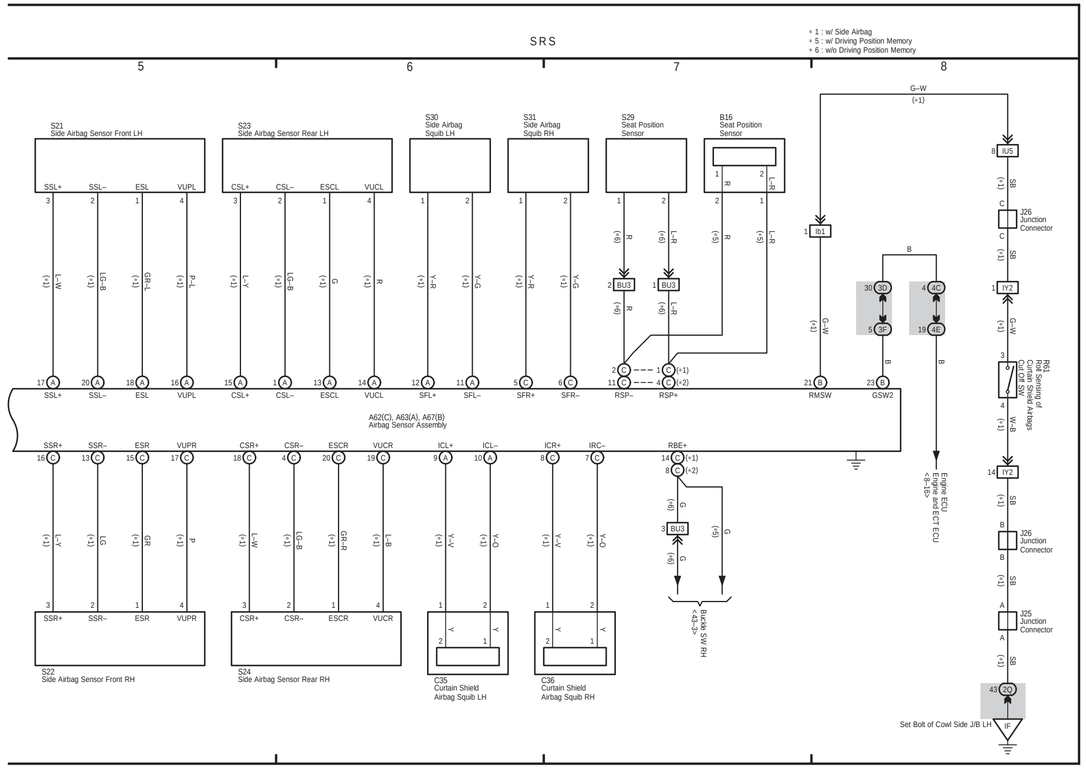

25 LAND CRUISER (RHD)

(Cont. next page)

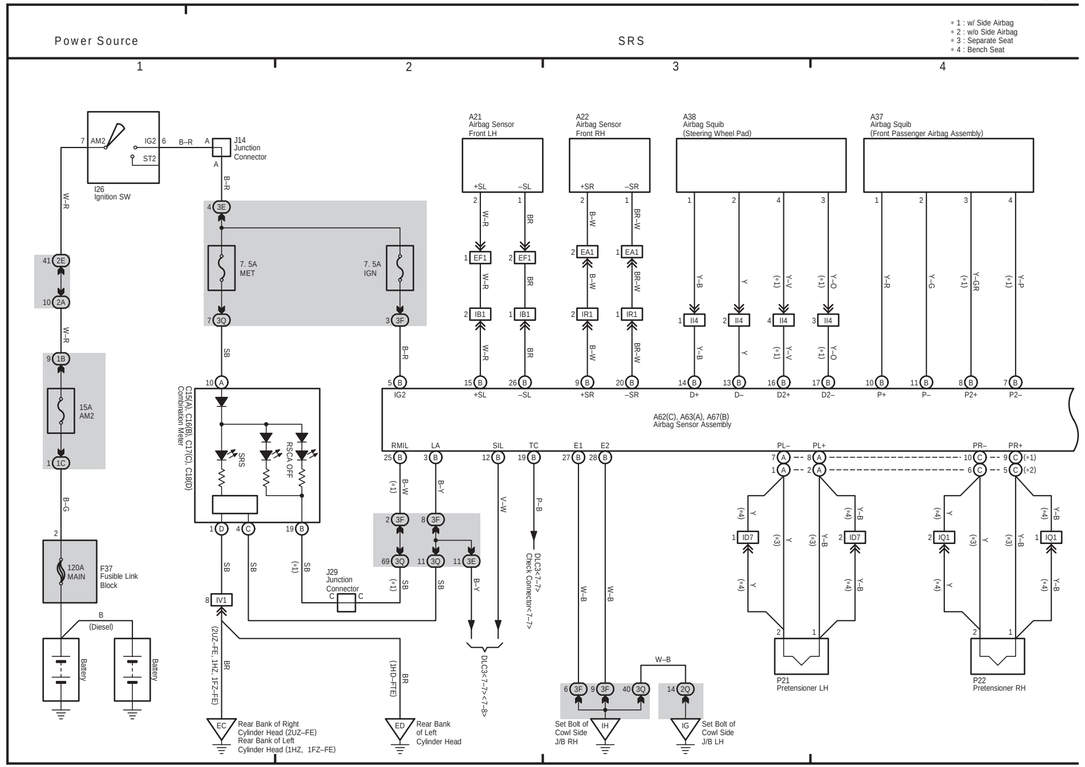

H OVERALL ELECTRICAL WIRING DIAGRAM

25 LAND CRUISER (RHD) (Cont' d)

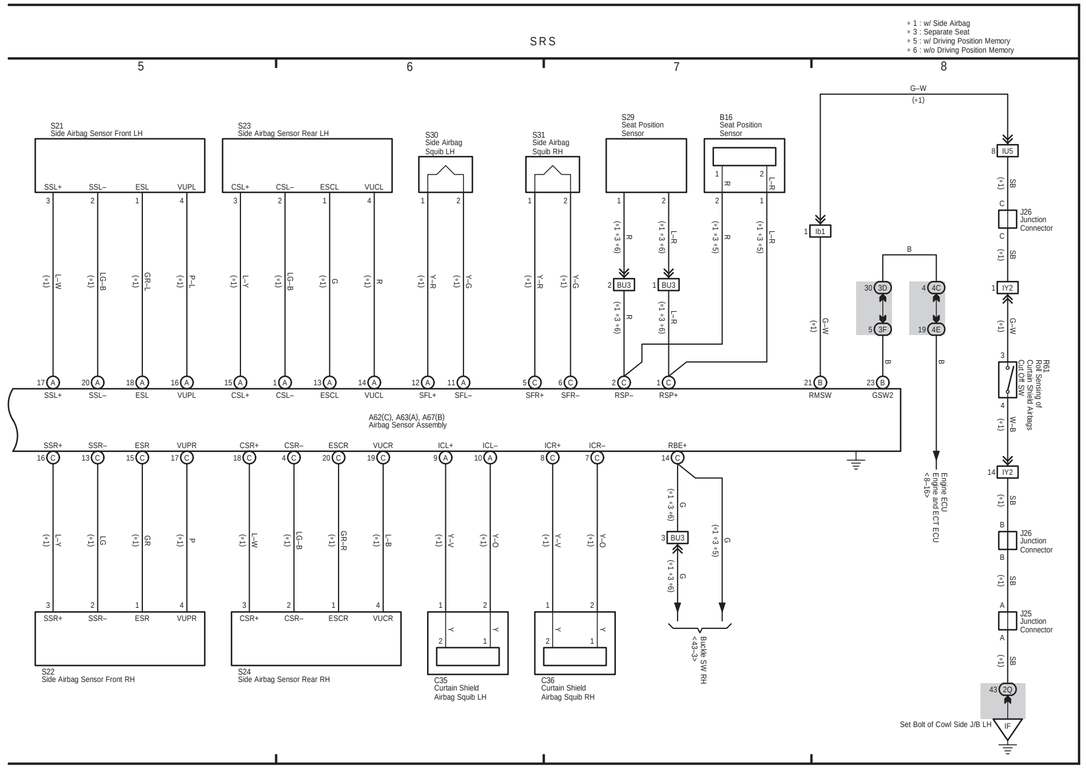

H

F ELECTRICAL WIRING DIAGRAM (System Circuits)

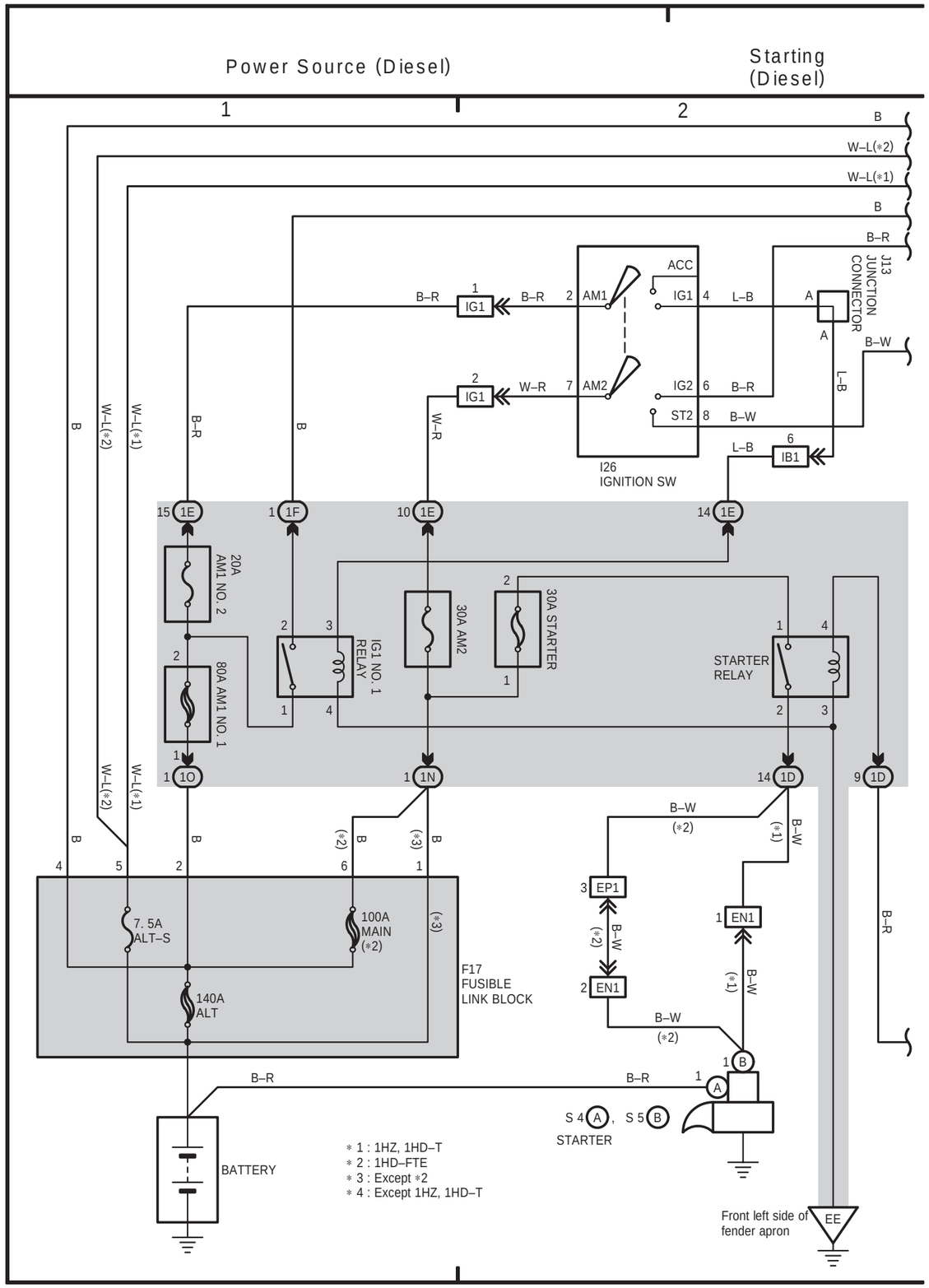

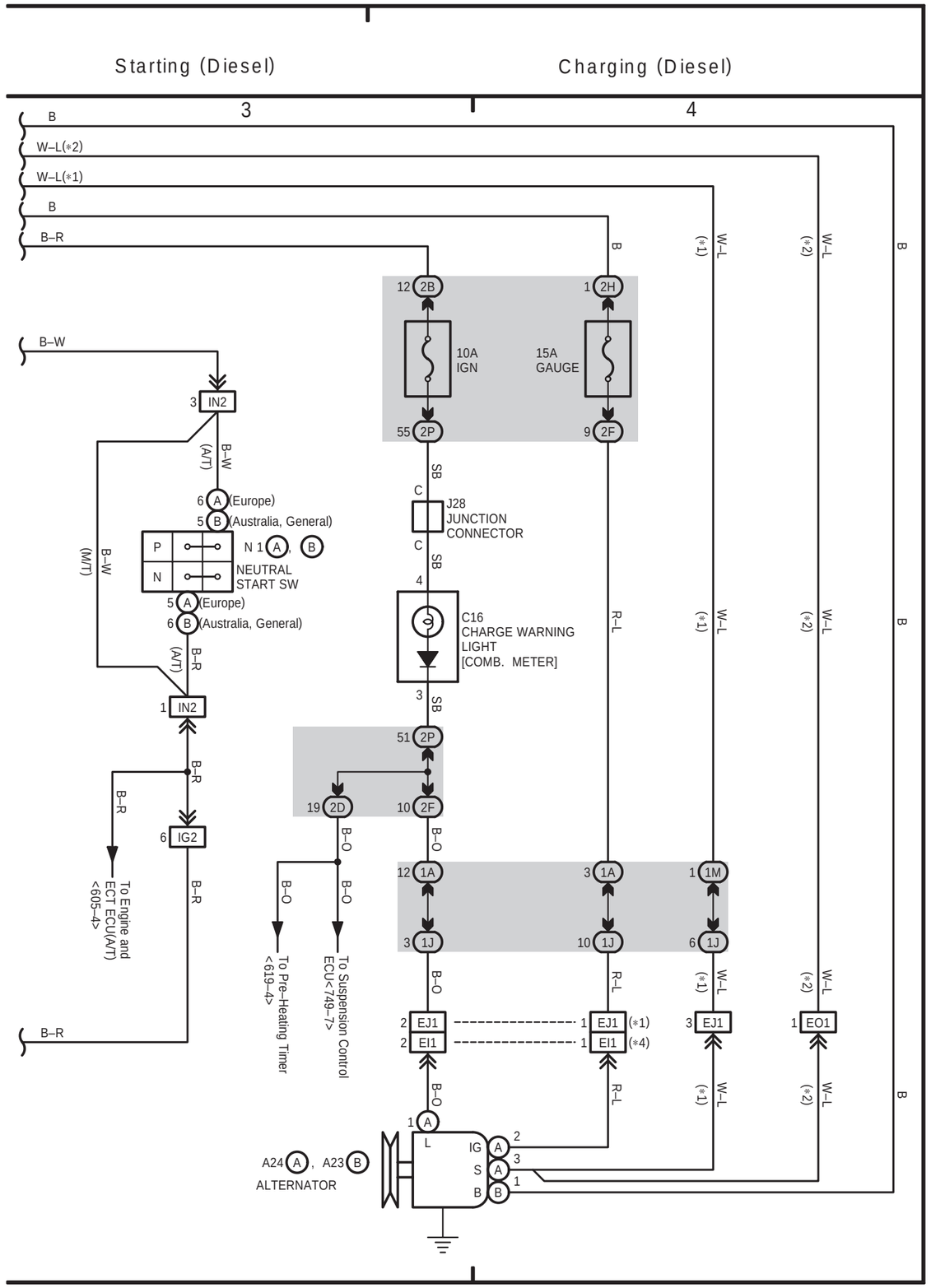

LAND CRUISER Station Wagon (EWD342F)

RHD

RHD

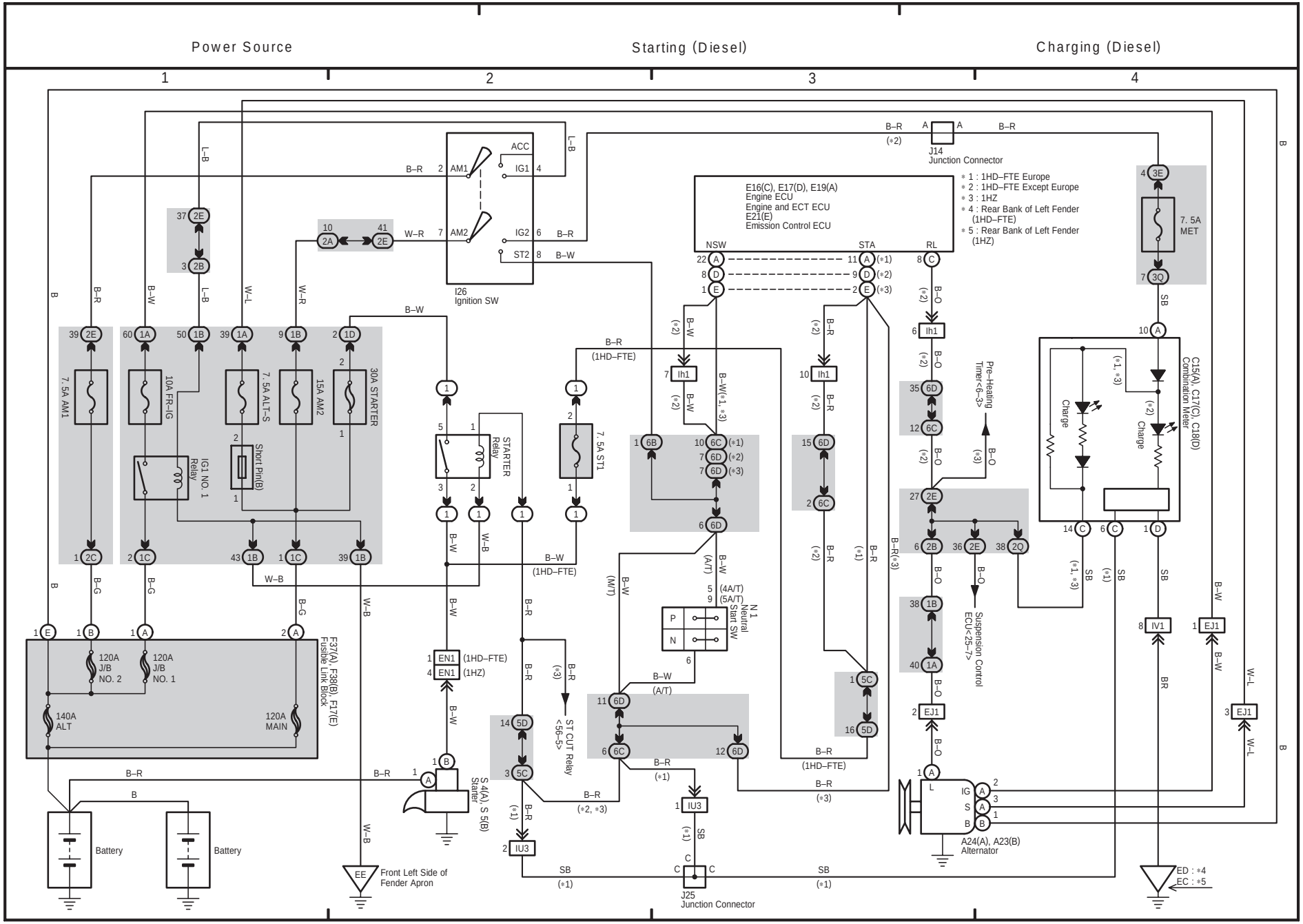
Power Source
Starting (Diesel)
Charging (Diesel)
1
2
3
4
E16(C), E17(D), E19(A)
Engine ECU
Engine and ECT ECU
E21(E)
Emission Control ECU
∗1 : 1HD–FTE Europe
∗2 : 1HD–FTE Except Europe
∗3 : 1HZ
∗4 : Rear Bank of Left Fender (1HD–FTE)
∗5 : Rear Bank of Left Fender (1HZ)
J14
Junction Connector
I26
Ignition SW
ACC
IG1
IG2
ST2
AM1
AM2
NSW
STA
RL
7. 5A MET
C15(A), C17(C), C18(D)
Combination Meter
Charge
Pre–Heating Timer<6–3>
Suspension Control ECU<25–7>
7. 5A AM1
10A FR–IG
7. 5A ALT–S
15A AM2
30A STARTER
IG1 NO. 1 Relay
Short Pin(B)
STARTER Relay
7. 5A ST1
N 1 Neutral Start SW
(4A/T)
(5A/T)
F37(A), F38(B), F17(E)
Fusible Link Block
120A J/B NO. 2
120A J/B NO. 1
140A ALT
120A MAIN
Battery
Battery
S 4(A), S 5(B)
Starter
A24(A), A23(B)
Alternator
ST CUT Relay <56–5>
EE
Front Left Side of Fender Apron
J25
Junction Connector
ED : ∗4
EC : ∗5

3 LAND CRUISER (RHD)

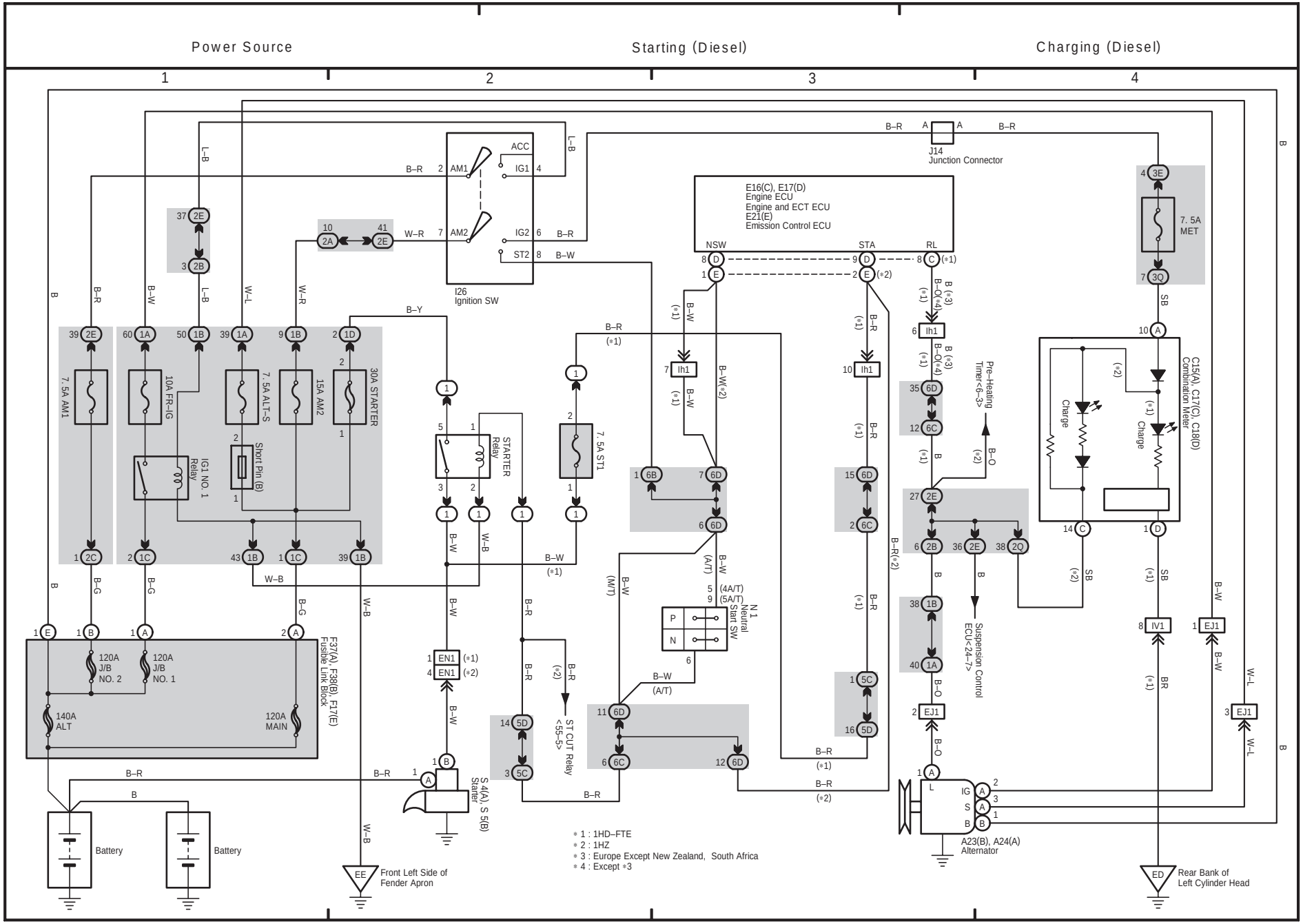

3 LAND CRUISER (RHD)

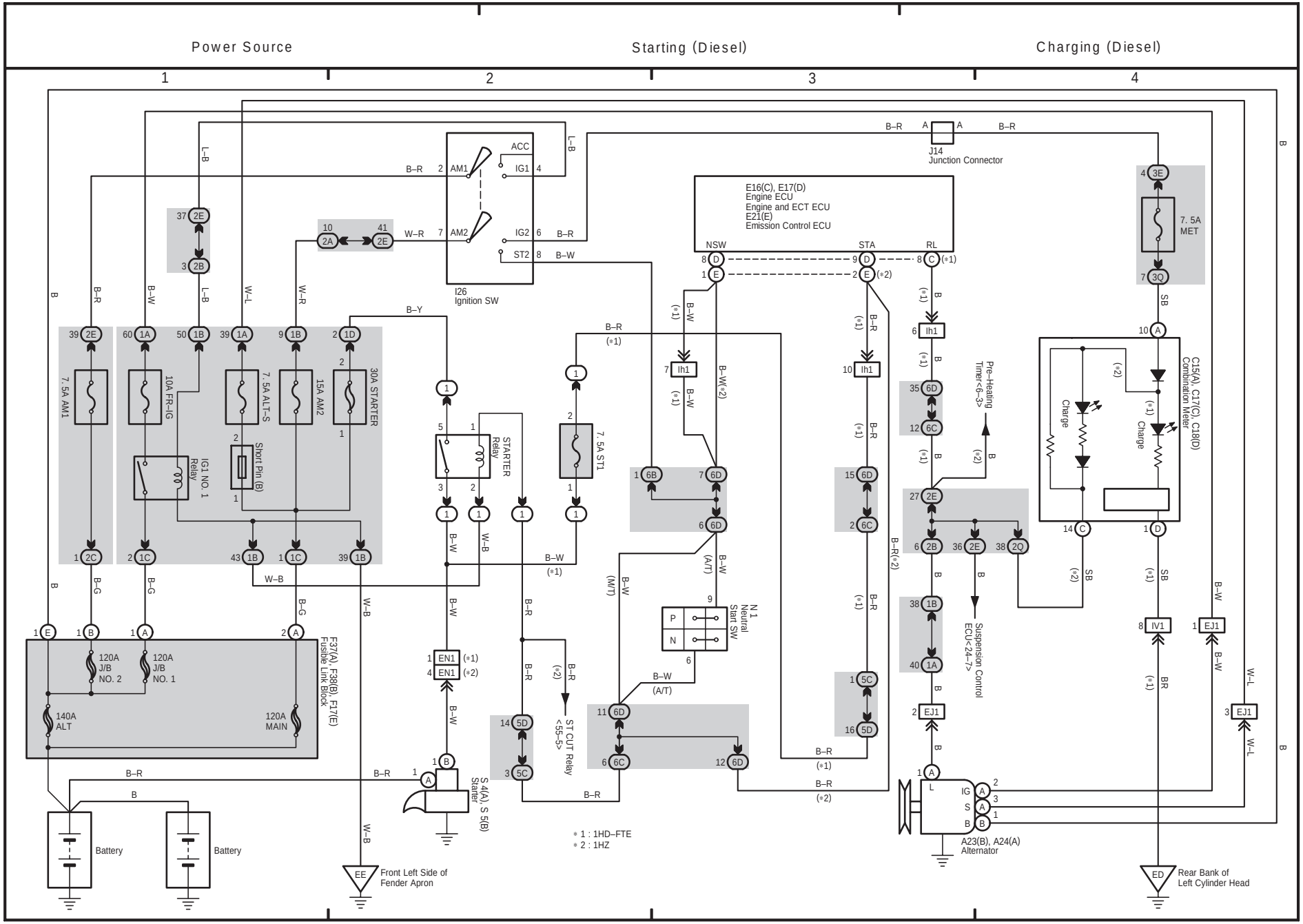

F ELECTRICAL WIRING DIAGRAM (System Circuits)

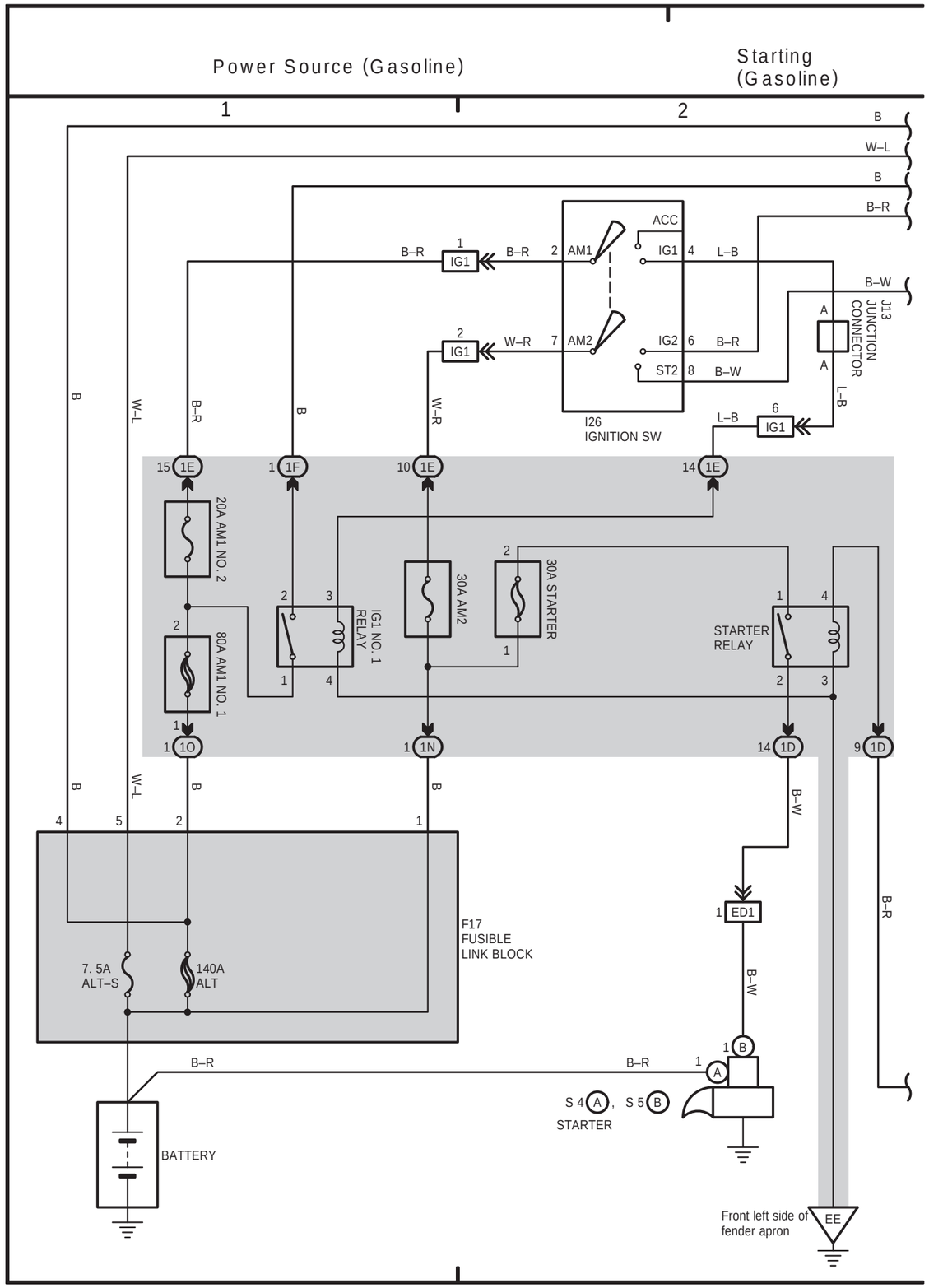

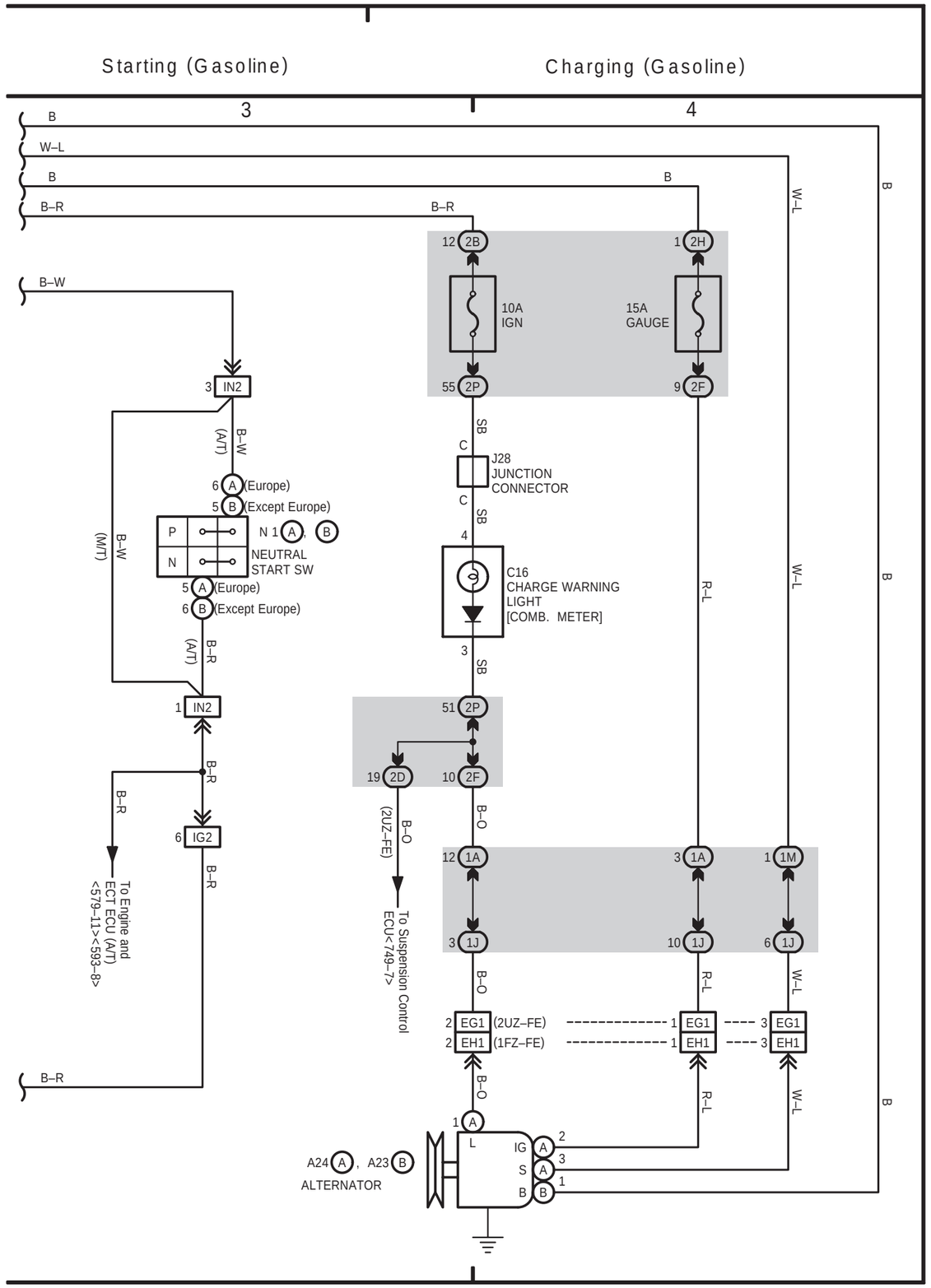

LAND CRUISER Station Wagon (EWD342F)

2 LAND CRUISER (RHD)

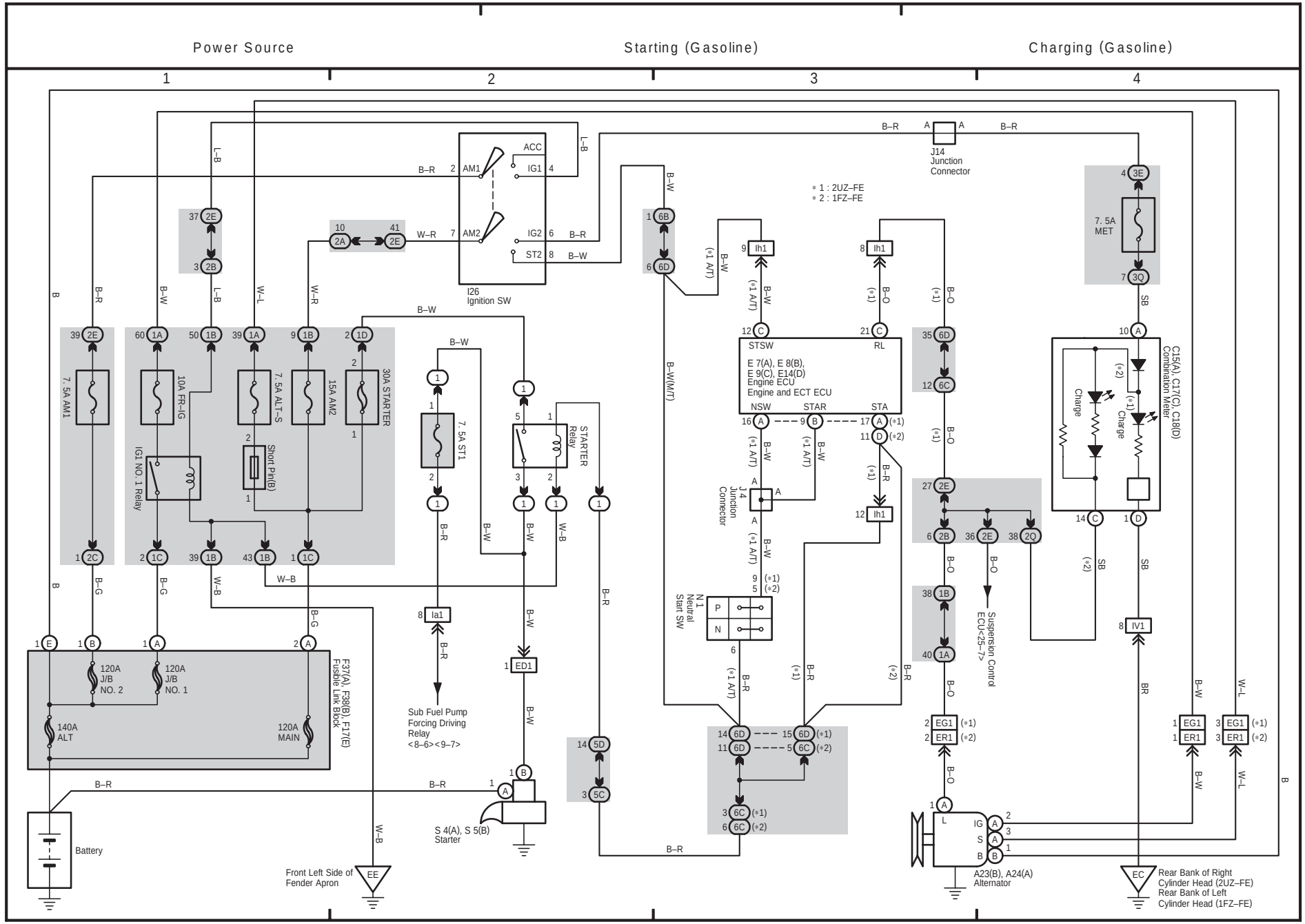

2 LAND CRUISER (RHD)

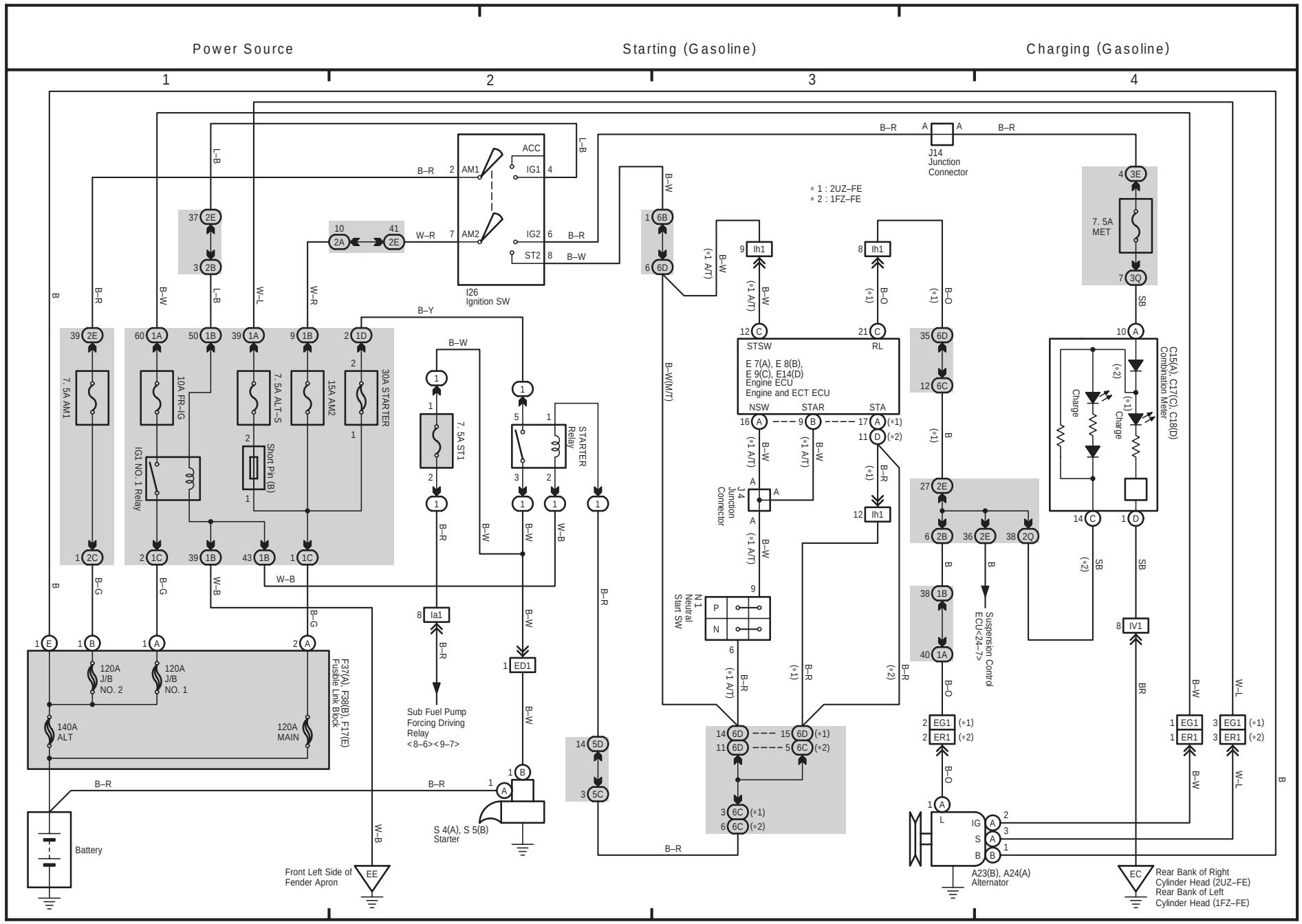

2 LAND CRUISER (RHD)

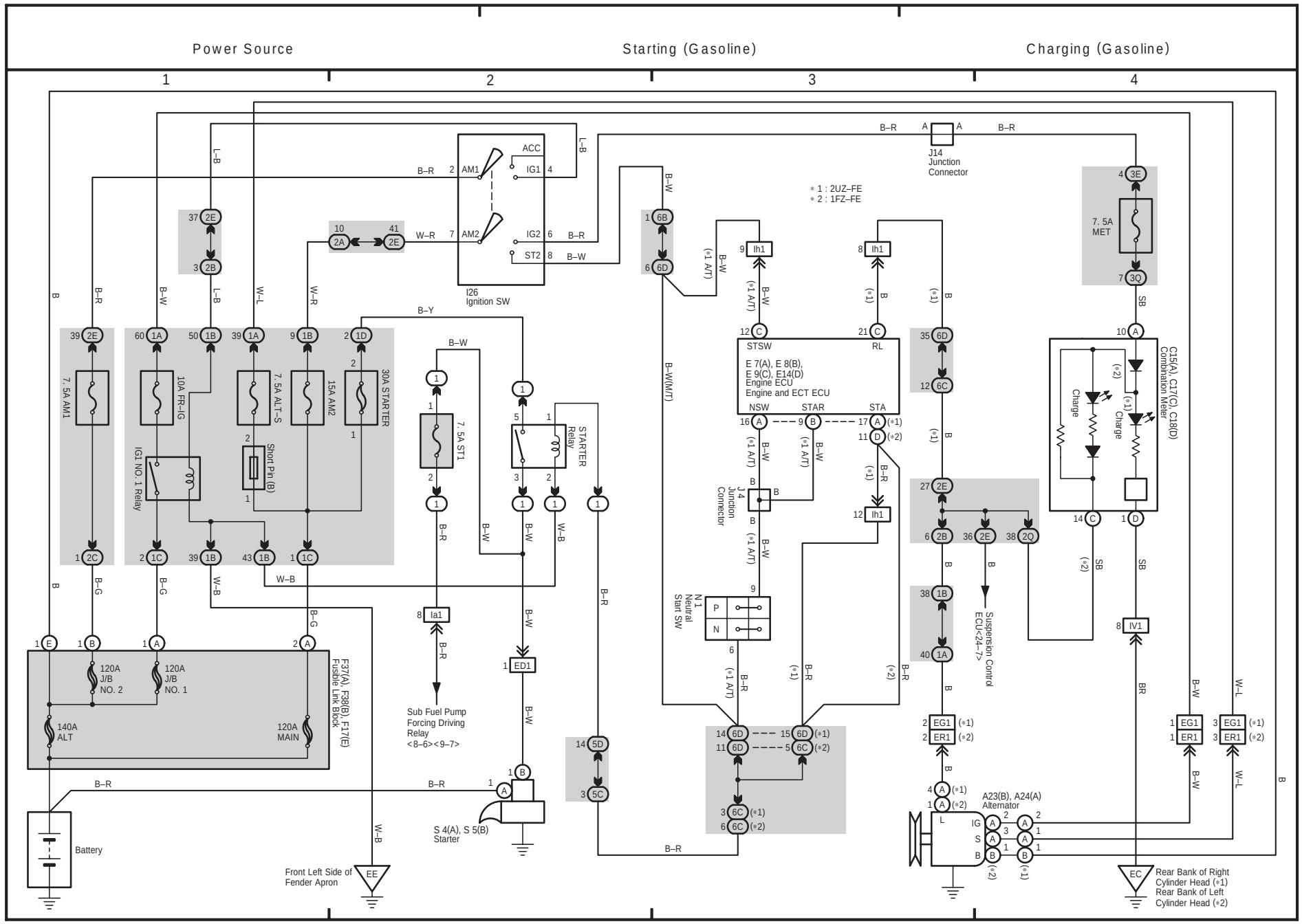

F ELECTRICAL WIRING DIAGRAM (System Circuits)

Power Source

Back–Up Light

Stop Light

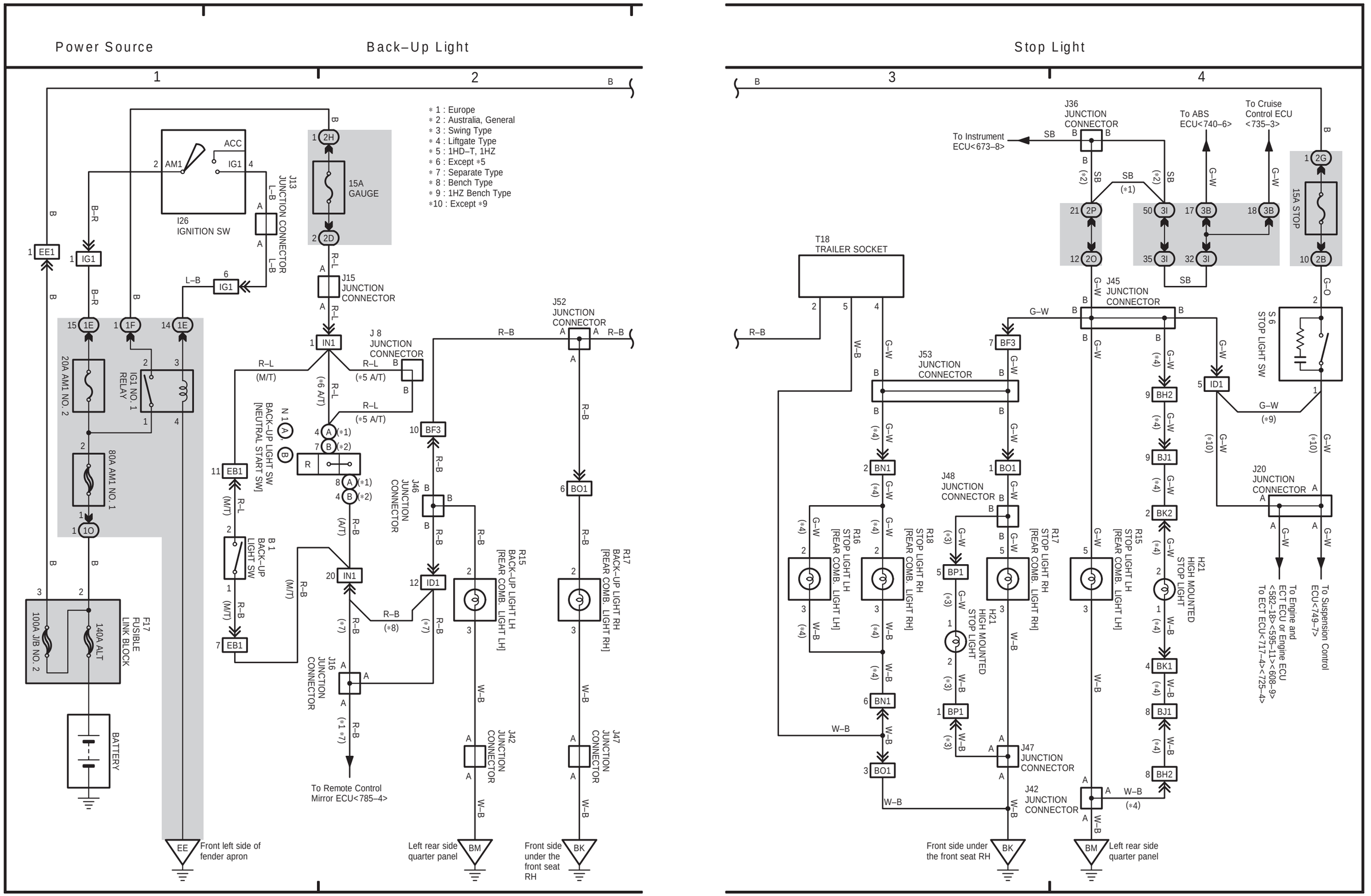

660

661

LAND CRUISER Station Wagon (EWD342F)

LAND CRUISER Station Wagon (EWD342F)

RHD

RHD

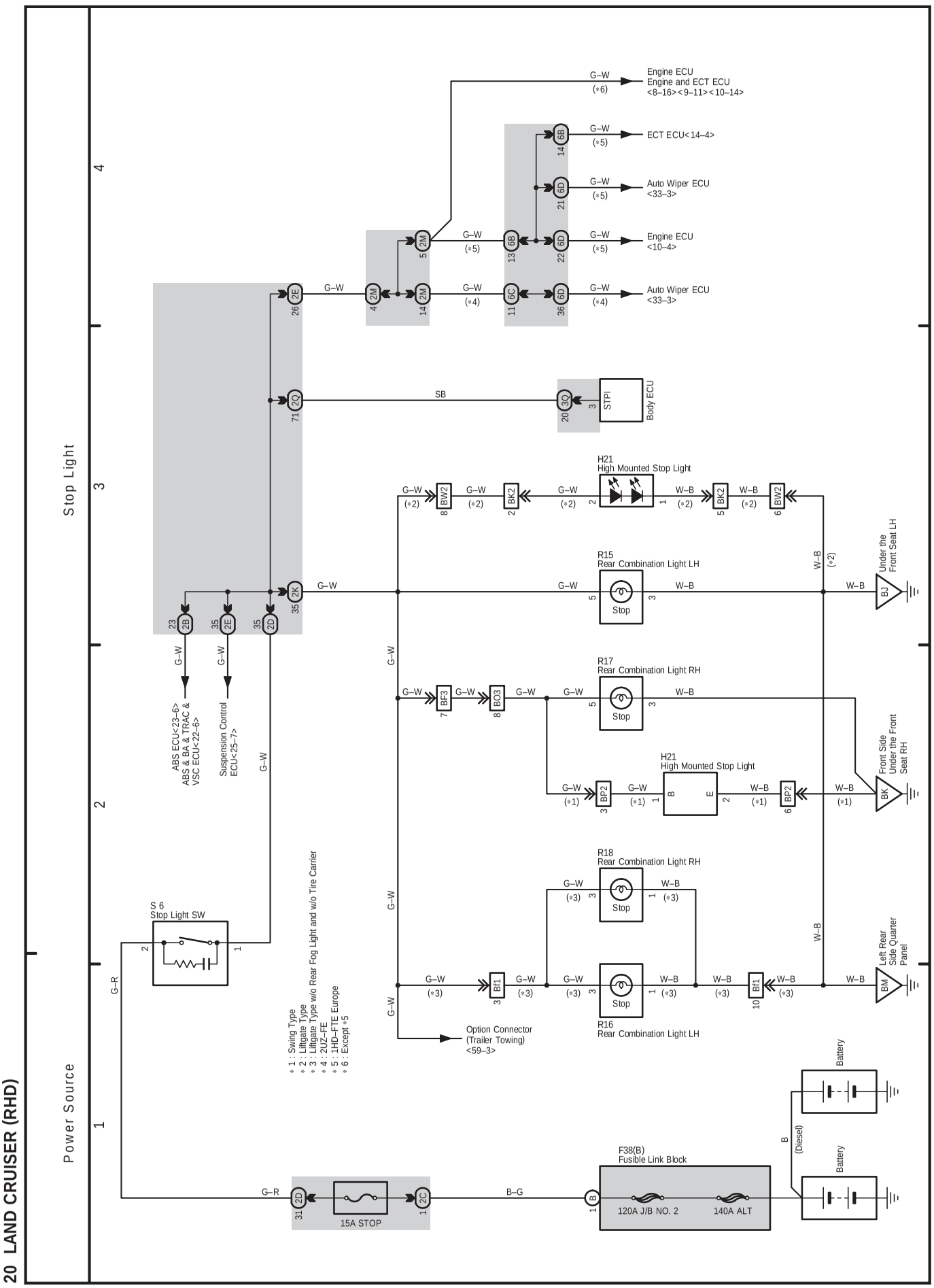
20 LAND CRUISER (RHD)
Power Source
Stop Light
1
2
3
4
Engine ECU
Engine and ECT ECU
<8–16><9–11><10–14>
ECT ECU<14–4>
Auto Wiper ECU
<33–3>
Engine ECU
<10–4>
Auto Wiper ECU
<33–3>
Body ECU
STPI
H21
High Mounted Stop Light
R15
Rear Combination Light LH
R17
Rear Combination Light RH
H21
High Mounted Stop Light
R18
Rear Combination Light RH
R16
Rear Combination Light LH
Stop
Under the
Front Seat LH
Front Side
Under the Front
Seat RH
Left Rear
Side Quarter
Panel
ABS ECU<23–6>
ABS & BA & TRAC &
VSC ECU<22–6>
Suspension Control
ECU<25–7>
S 6
Stop Light SW
Option Connector
(Trailer Towing)
<59–3>
F38(B)
Fusible Link Block
120A J/B NO. 2
140A ALT
15A STOP
Battery
Battery
(Diesel)
* 1 : Swing Type
* 2 : Liftgate Type
* 3 : Liftgate Type w/o Rear Fog Light and w/o Tire Carrier
* 4 : 2UZ–FE
* 5 : 1HD–FTE Europe
* 6 : Except *5

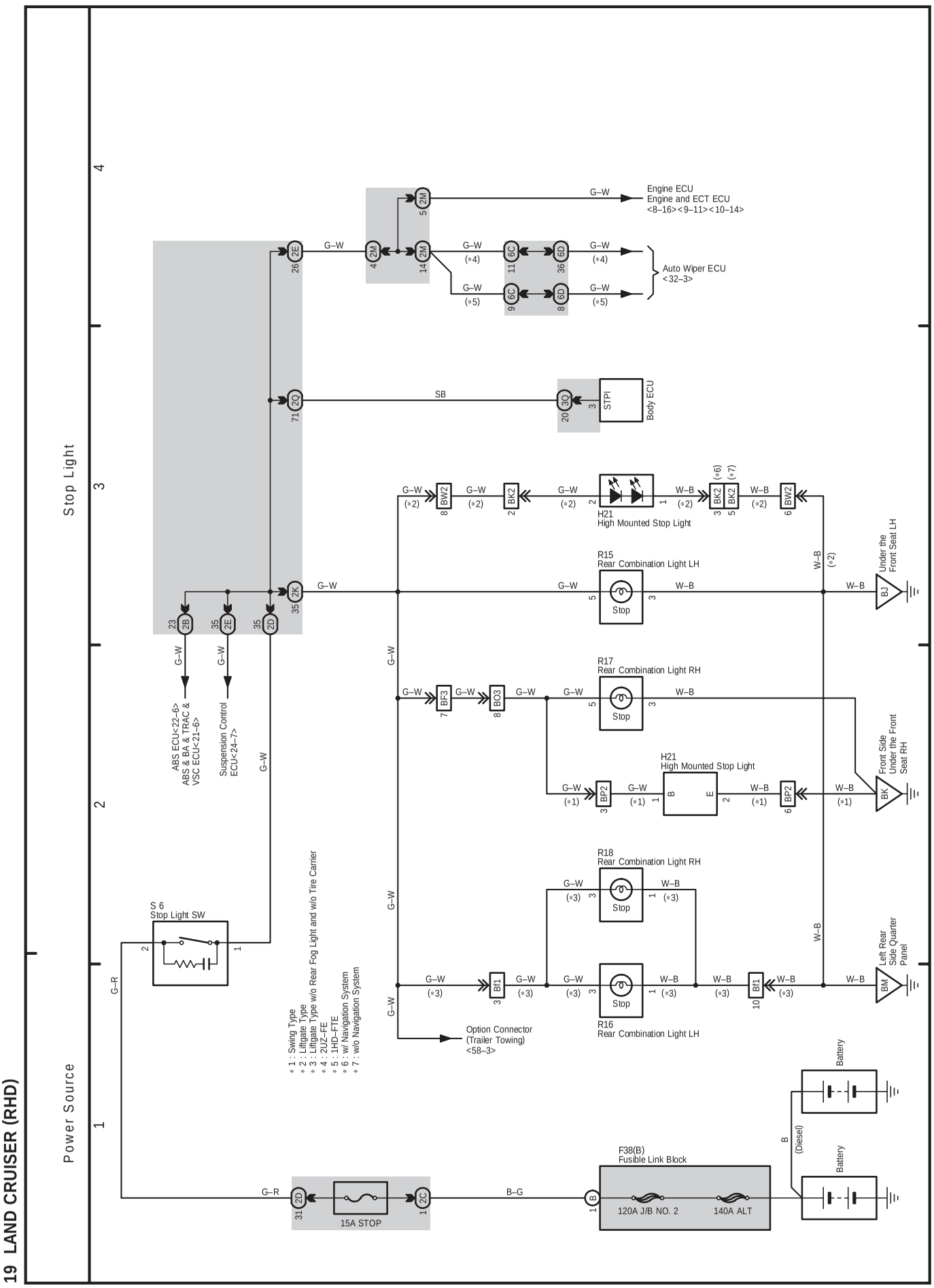
19 LAND CRUISER (RHD)
Power Source
Stop Light
1
2
3
4
Engine ECU
Engine and ECT ECU
<8–16><9–11><10–14>
Auto Wiper ECU
<32–3>
Body ECU
STPI
H21
High Mounted Stop Light
R15
Rear Combination Light LH
R17
Rear Combination Light RH
R18
Rear Combination Light RH
R16
Rear Combination Light LH
Under the
Front Seat LH
Front Side
Under the Front
Seat RH
Left Rear
Side Quarter
Panel
S 6
Stop Light SW
ABS ECU<22–6>
ABS & BA & TRAC &
VSC ECU<21–6>
Suspension Control
ECU<24–7>
Option Connector
(Trailer Towing)
<58–3>
F38(B)
Fusible Link Block
120A J/B NO. 2
140A ALT
15A STOP
Battery
Battery
(Diesel)
* 1 : Swing Type
* 2 : Liftgate Type
* 3 : Liftgate Type w/o Rear Fog Light and w/o Tire Carrier
* 4 : 2UZ–FE
* 5 : 1HD–FTE
* 6 : w/ Navigation System
* 7 : w/o Navigation System

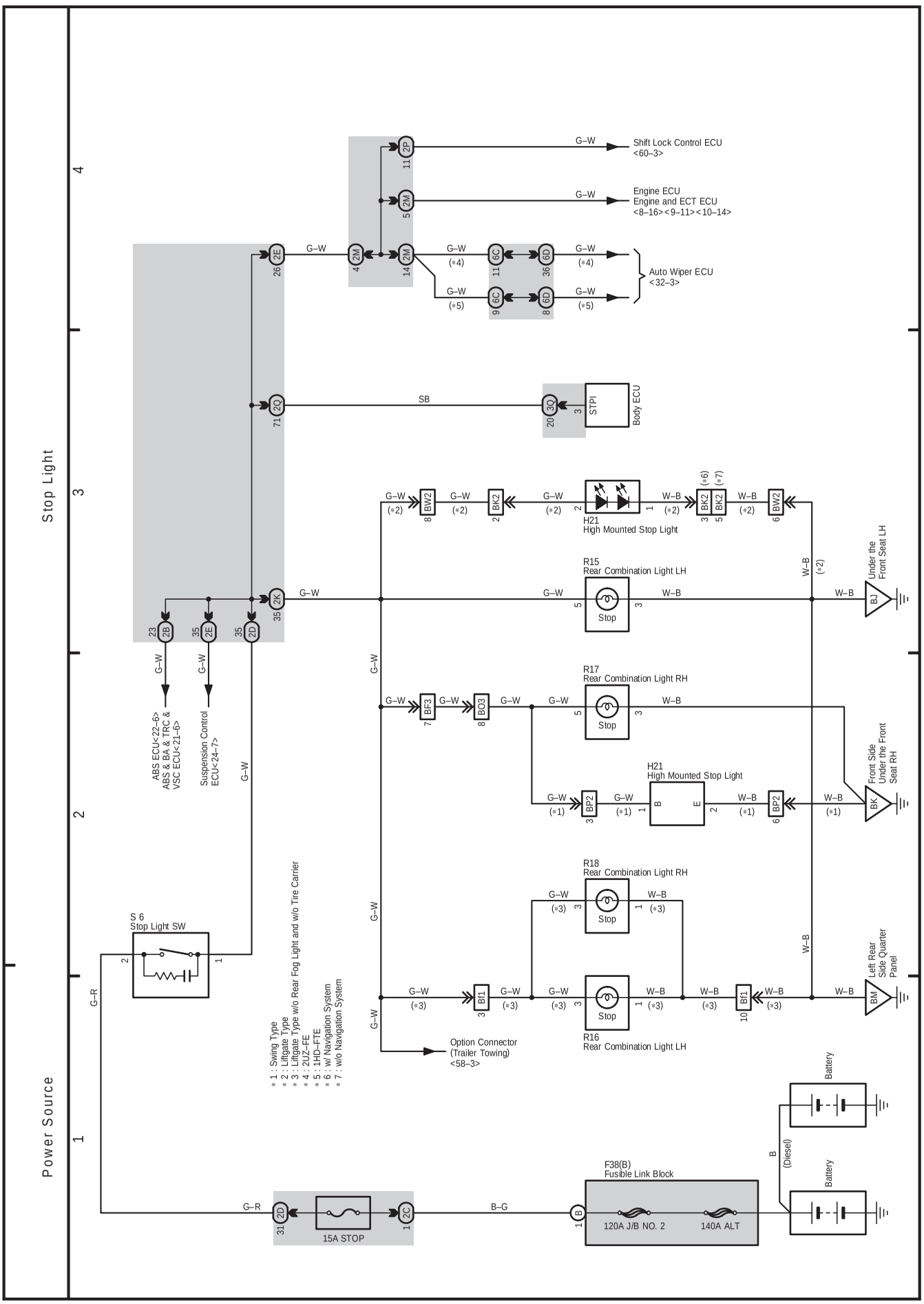
19 LAND CRUISER (RHD)
Power Source
Stop Light
1
2
3
4
Shift Lock Control ECU
<60–3>
Engine ECU
Engine and ECT ECU
<8–16><9–11><10–14>
Auto Wiper ECU
<32–3>
Body ECU
STPI
H21
High Mounted Stop Light
R15
Rear Combination Light LH
R17
Rear Combination Light RH
R18
Rear Combination Light RH
R16
Rear Combination Light LH
Stop
Under the
Front Seat LH
Front Side
Under the Front
Seat RH
Left Rear
Side Quarter
Panel
S 6
Stop Light SW
ABS ECU<22–6>
ABS & BA & TRC &
VSC ECU<21–6>
Suspension Control
ECU<24–7>
Option Connector
(Trailer Towing)
<58–3>
15A STOP
F38(B)
Fusible Link Block
120A J/B NO. 2
140A ALT
Battery
(Diesel)
* 1 : Swing Type
* 2 : Liftgate Type
* 3 : Liftgate Type w/o Rear Fog Light and w/o Tire Carrier
* 4 : 2UZ–FE
* 5 : 1HD–FTE
* 6 : w/ Navigation System
* 7 : w/o Navigation System

F ELECTRICAL WIRING DIAGRAM (System Circuits)

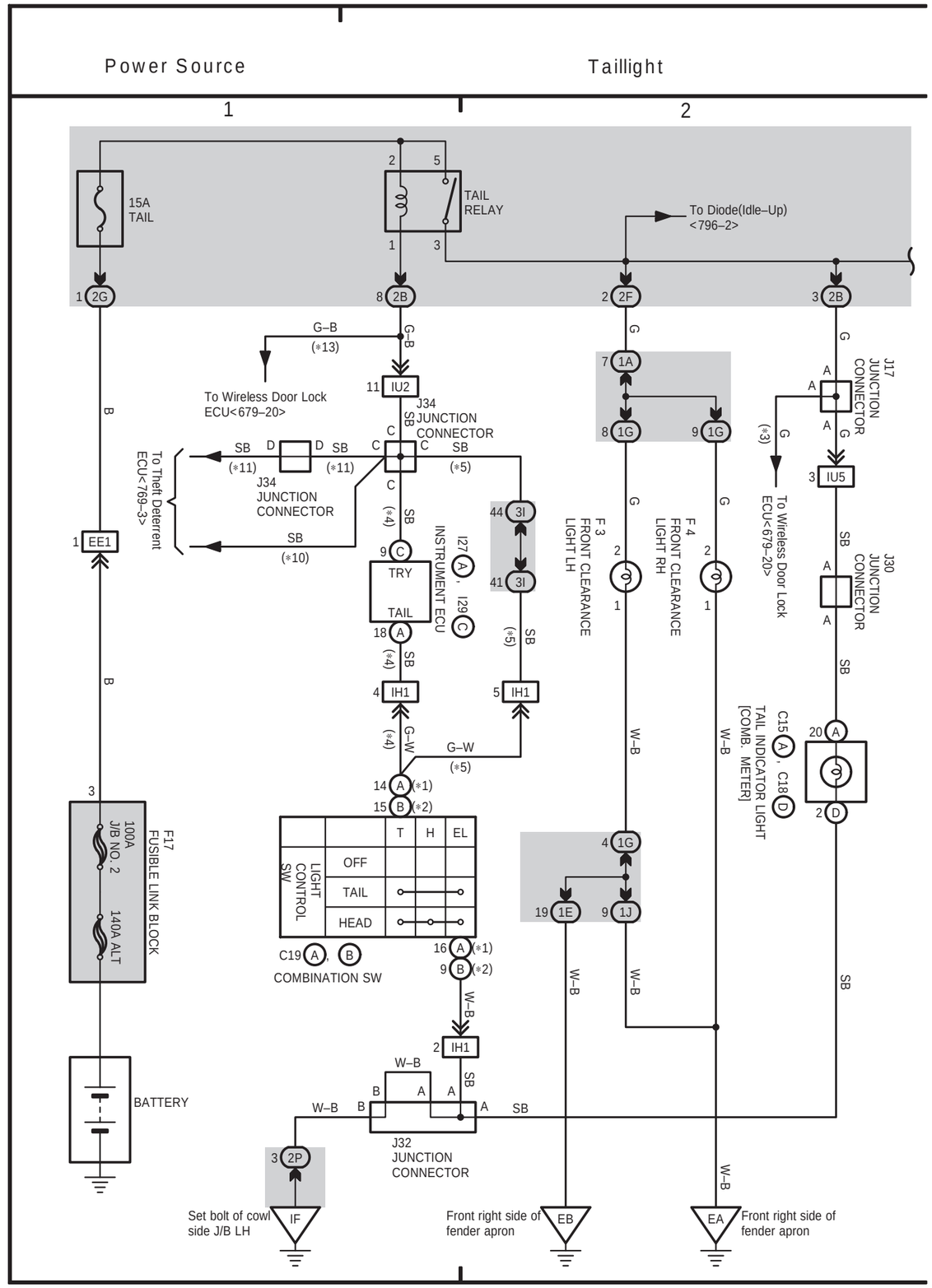

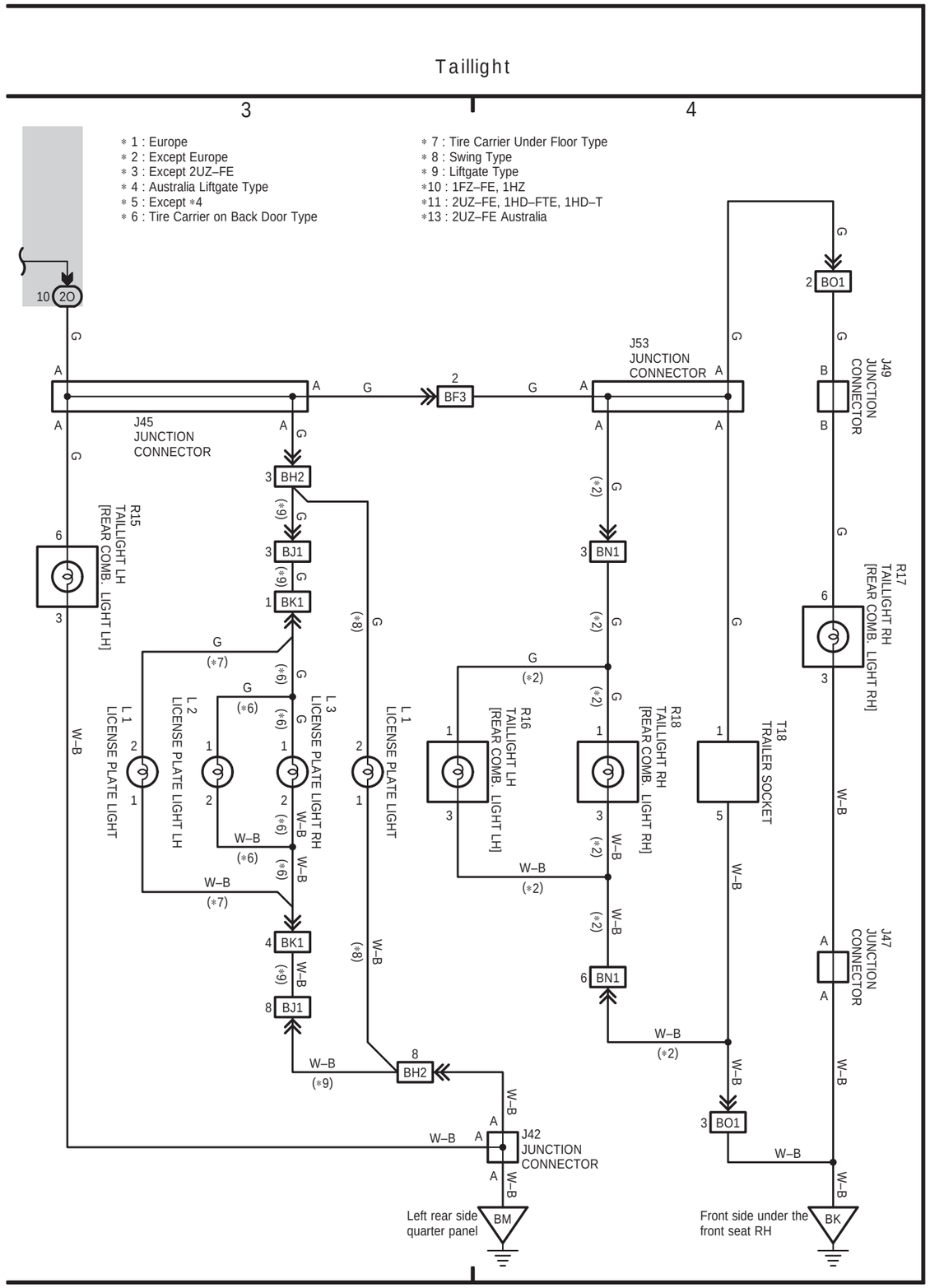

17 LAND CRUISER (RHD)

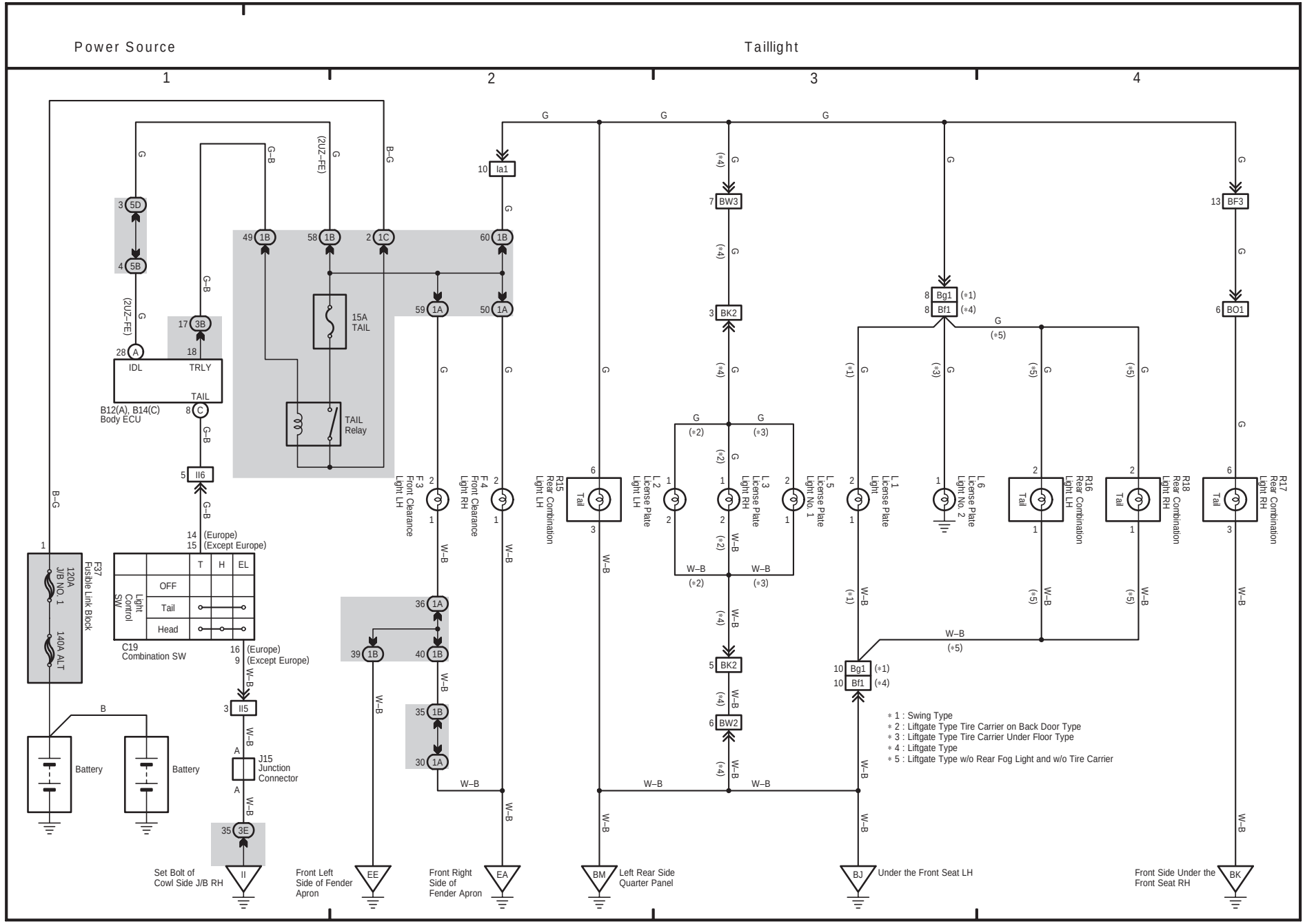

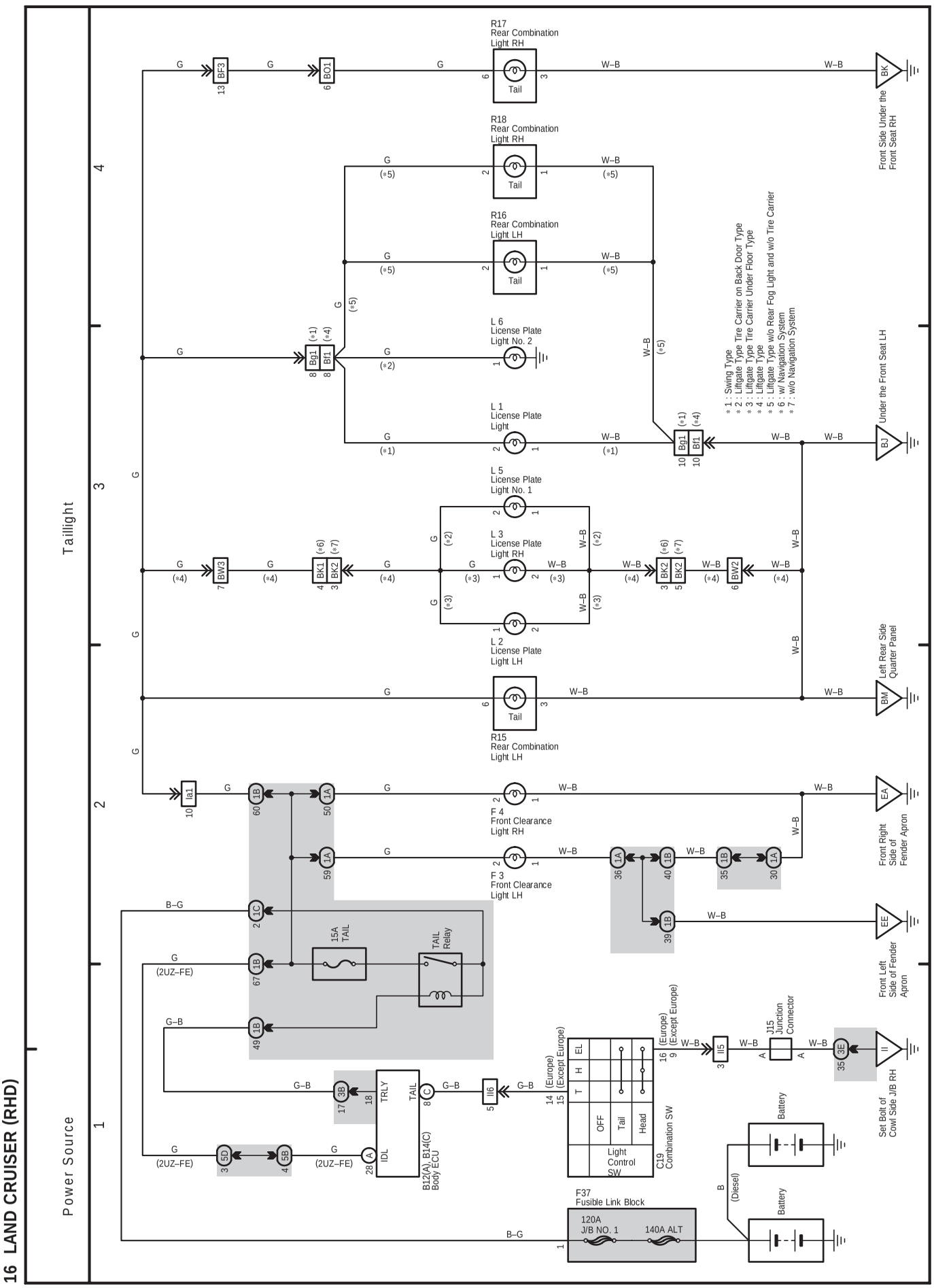
16 LAND CRUISER (RHD)
Taillight
Power Source
R17 Rear Combination Light RH
R18 Rear Combination Light RH
R16 Rear Combination Light LH
R15 Rear Combination Light LH
L 6 License Plate Light No. 2
L 1 License Plate Light
L 5 License Plate Light No. 1
L 3 License Plate Light RH
L 2 License Plate Light LH
F 4 Front Clearance Light RH
F 3 Front Clearance Light LH
Tail
Front Side Under the Front Seat RH
Under the Front Seat LH
Left Rear Side Quarter Panel
Front Right Side of Fender Apron
Front Left Side of Fender Apron
Set Bolt of Cowl Side J/B RH
* 1 : Swing Type
* 2 : Liftgate Type Tire Carrier on Back Door Type
* 3 : Liftgate Type Tire Carrier Under Floor Type
* 4 : Liftgate Type
* 5 : Liftgate Type w/o Rear Fog Light and w/o Tire Carrier
* 6 : w/ Navigation System
* 7 : w/o Navigation System
15A TAIL
TAIL Relay
B12(A), B14(C) Body ECU
TRLY
TAIL
IDL
C19 Combination SW
Light Control SW
OFF
Tail
Head
(Europe)
(Except Europe)
J15 Junction Connector
F37 Fusible Link Block
120A J/B NO. 1
140A ALT
Battery
(Diesel)

16 LAND CRUISER (RHD)

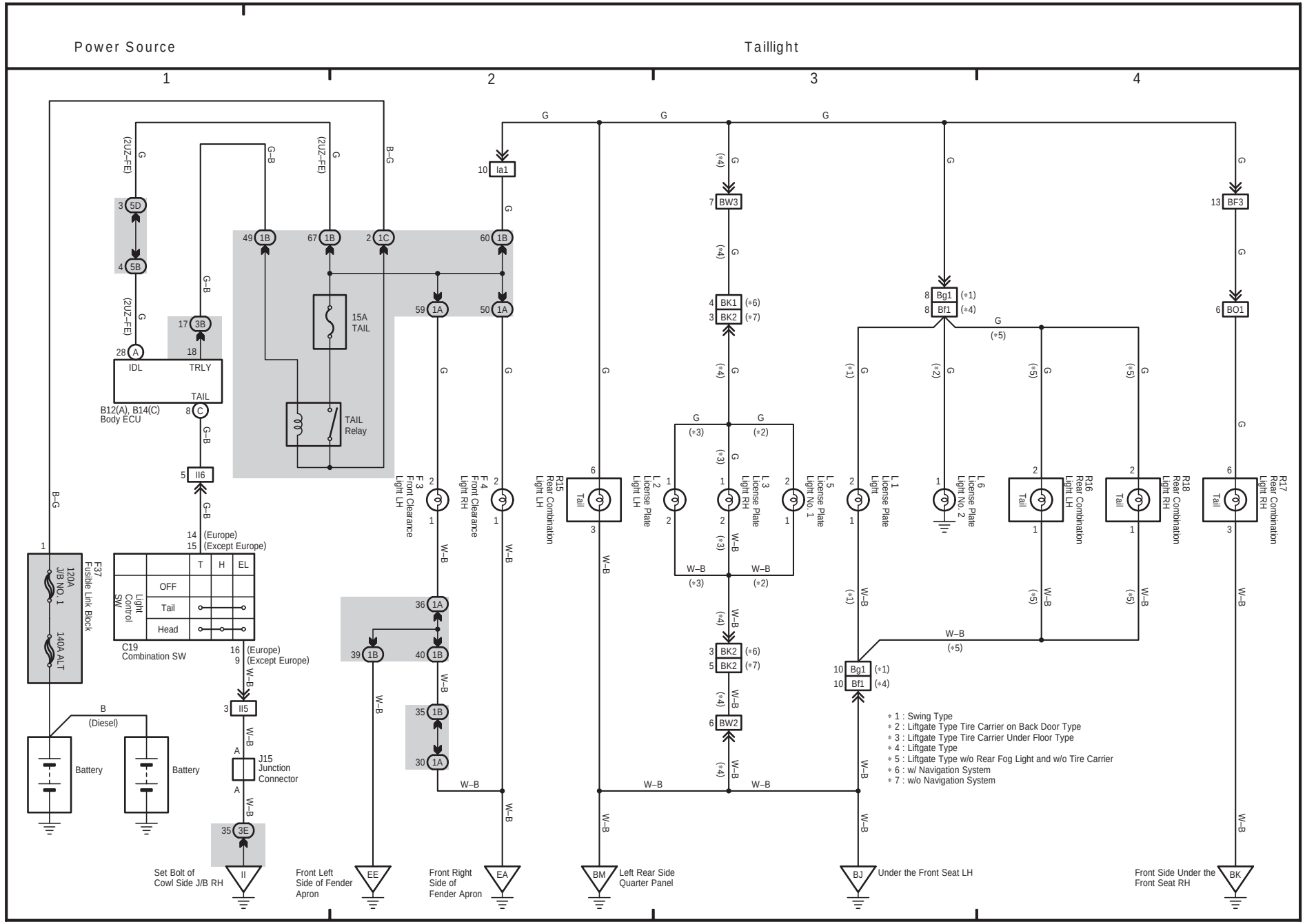

F ELECTRICAL WIRING DIAGRAM (System Circuits)

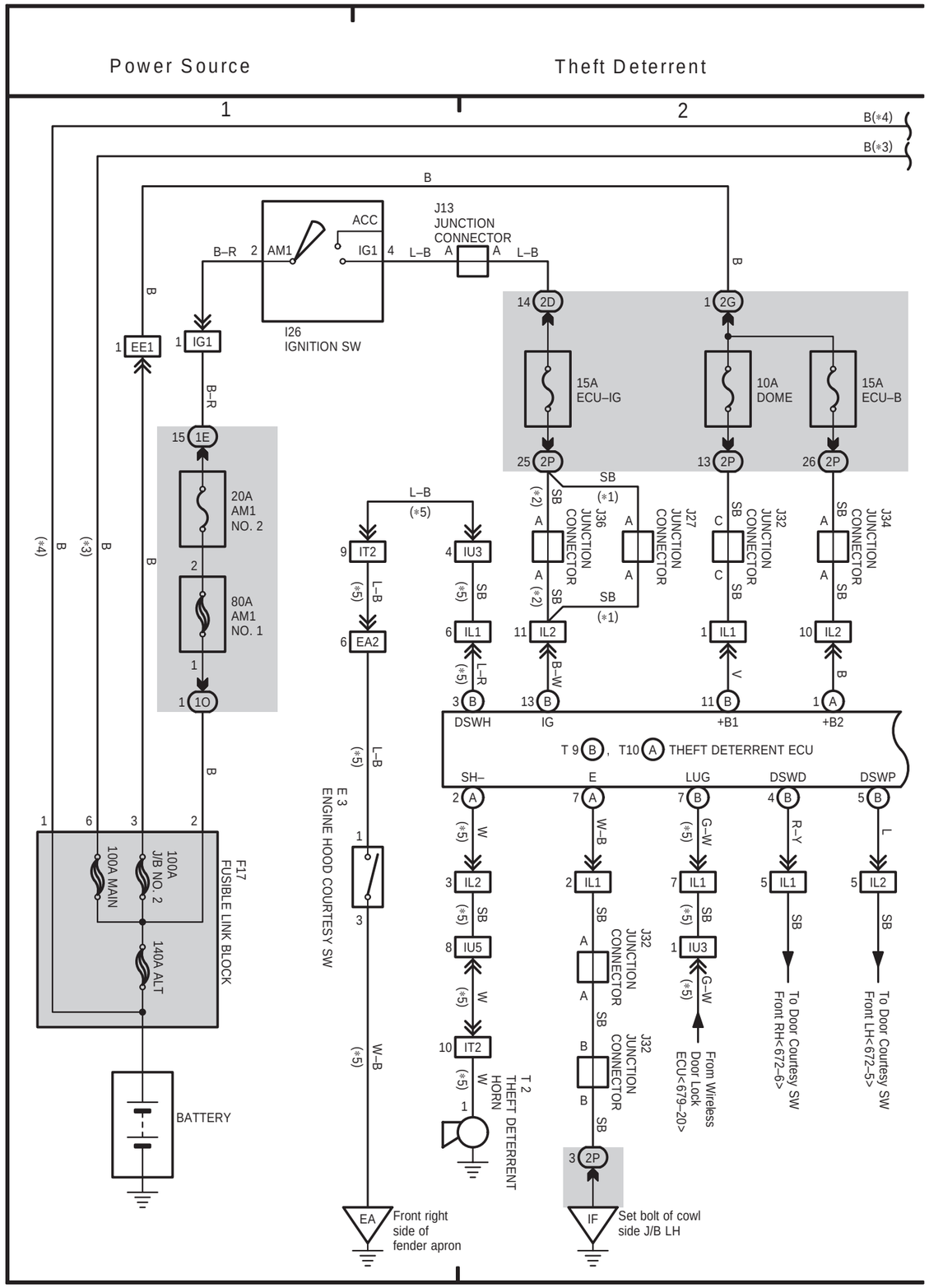

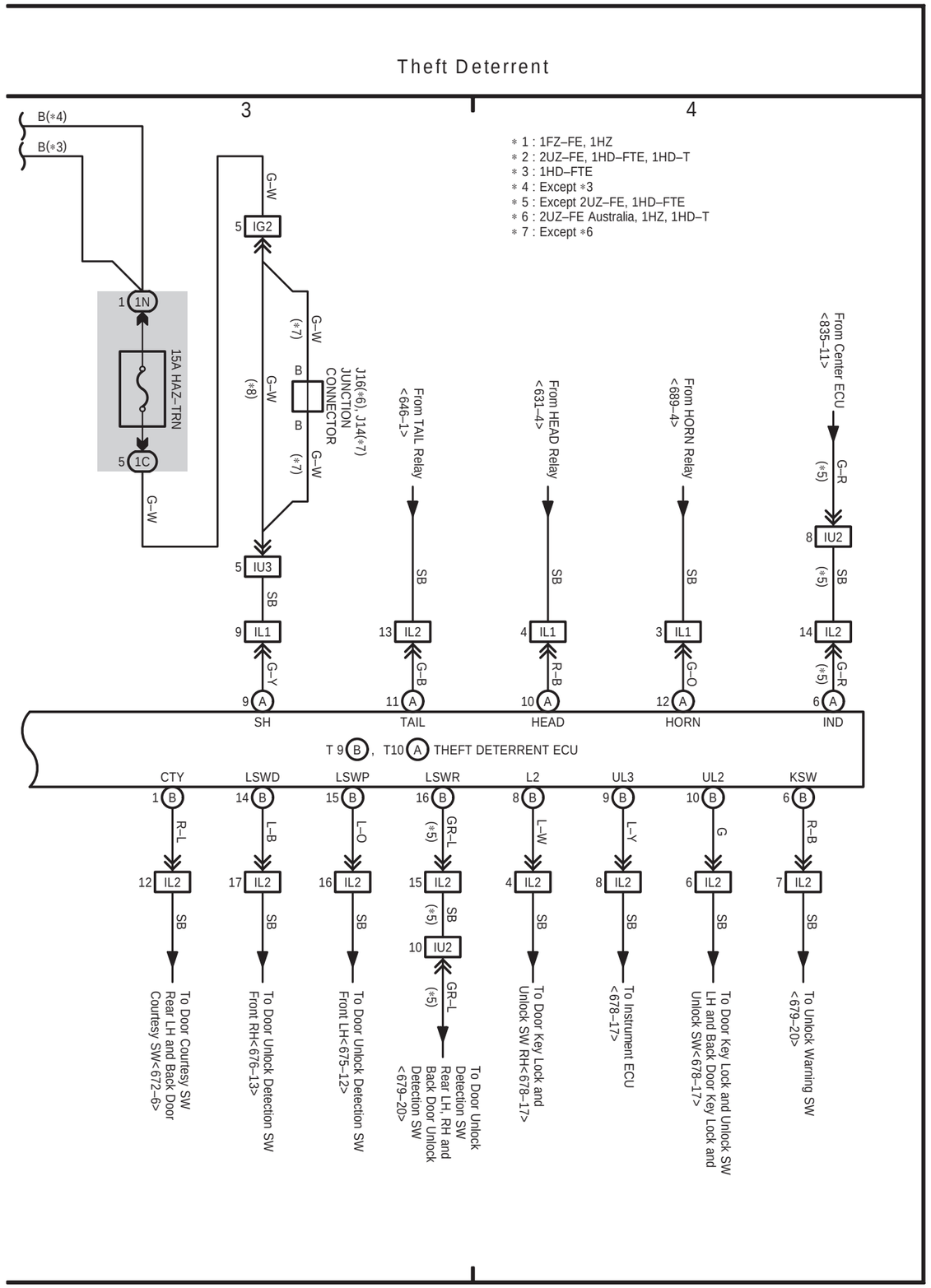

RHD

RHD

OVERALL ELECTRICAL WIRING DIAGRAM

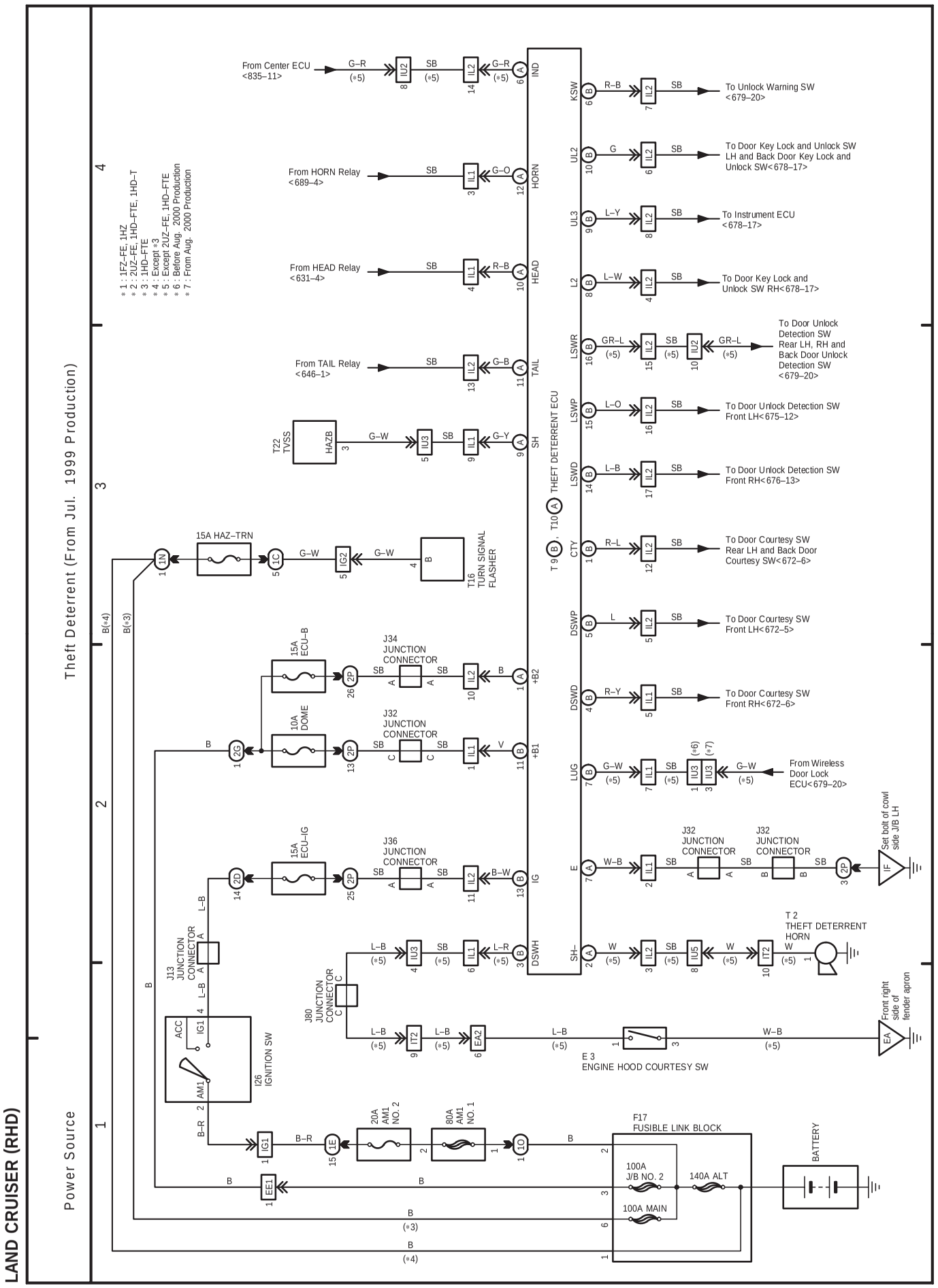

48 LAND CRUISER (RHD) (Cont. next page)

Power Source

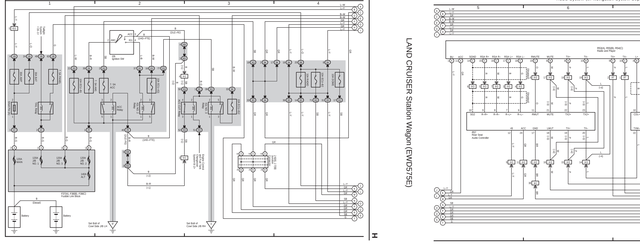

48 LAND CRUISER (RHD) (Cont. d) (Cont. next page)

Audio System (w/ Navigation System Separate Amplifier)

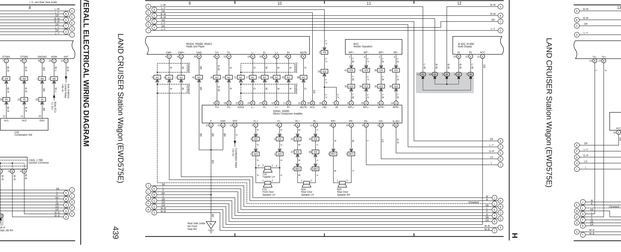

48 LAND CRUISER (RHD) (Cont. d) (Cont. next page)

Audio System (w/ Navigation System Separate Amplifier)

Navigation System, TOYOTA Parking Assist (Rear View Monitor)

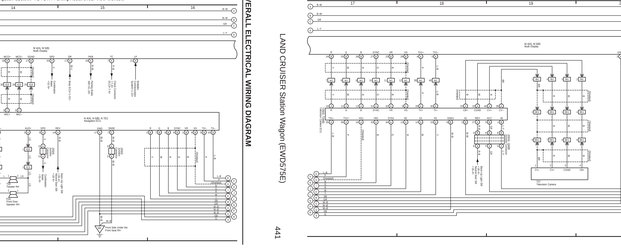

48 LAND CRUISER (RHD) (Cont. d) (Cont. next page)

Navigation System, TOYOTA Parking Assist (Rear View Monitor)

48 LAND CRUISER (RHD) (Cont. d) (Cont. next page)

Navigation System, TOYOTA Parking Assist (Rear View Monitor)

48 LAND CRUISER (RHD) (Cont. d)

Navigation System, TOYOTA Parking Assist (Rear View Monitor)

48 LAND CRUISER (RHD) (Cont. next page)

Power Source

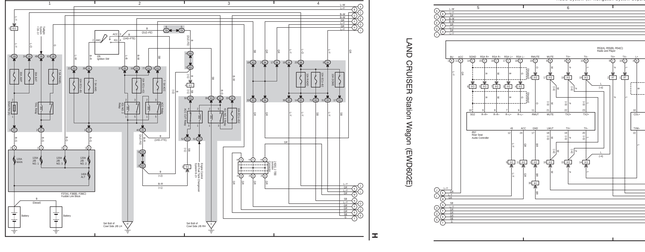

48 LAND CRUISER (RHD) (Cont. d) [Cont. next page]

Audio System (w/ Navigation System Separate Amplifier)

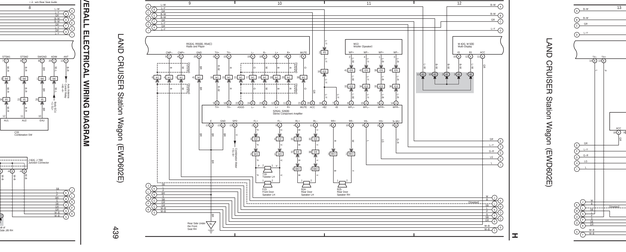

48 LAND CRUISER (RHD) (Cont. d) [Cont. next page]

Audio System (w/ Navigation System Separate Amplifier)

Navigation System, TOYOTA Parking Assist (Rear View Monitor)

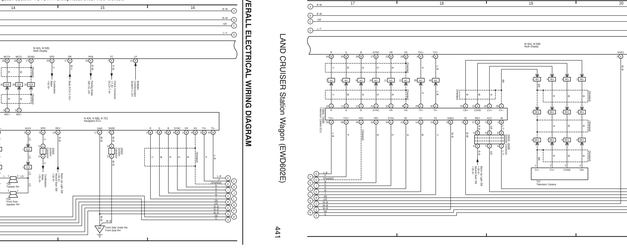

48 LAND CRUISER (RHD) (Cont. d) [Cont. next page]

Navigation System, TOYOTA Parking Assist (Rear View Monitor)

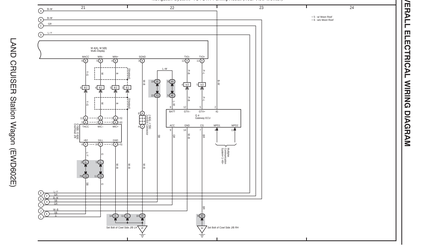

48 LAND CRUISER (RHD) (Cont. d) [Cont. next page]

Navigation System, TOYOTA Parking Assist (Rear View Monitor)

48 LAND CRUISER (RHD) (Cont. d)

Navigation System, TOYOTA Parking Assist (Rear View Monitor)

F ELECTRICAL WIRING DIAGRAM (System Circuits)

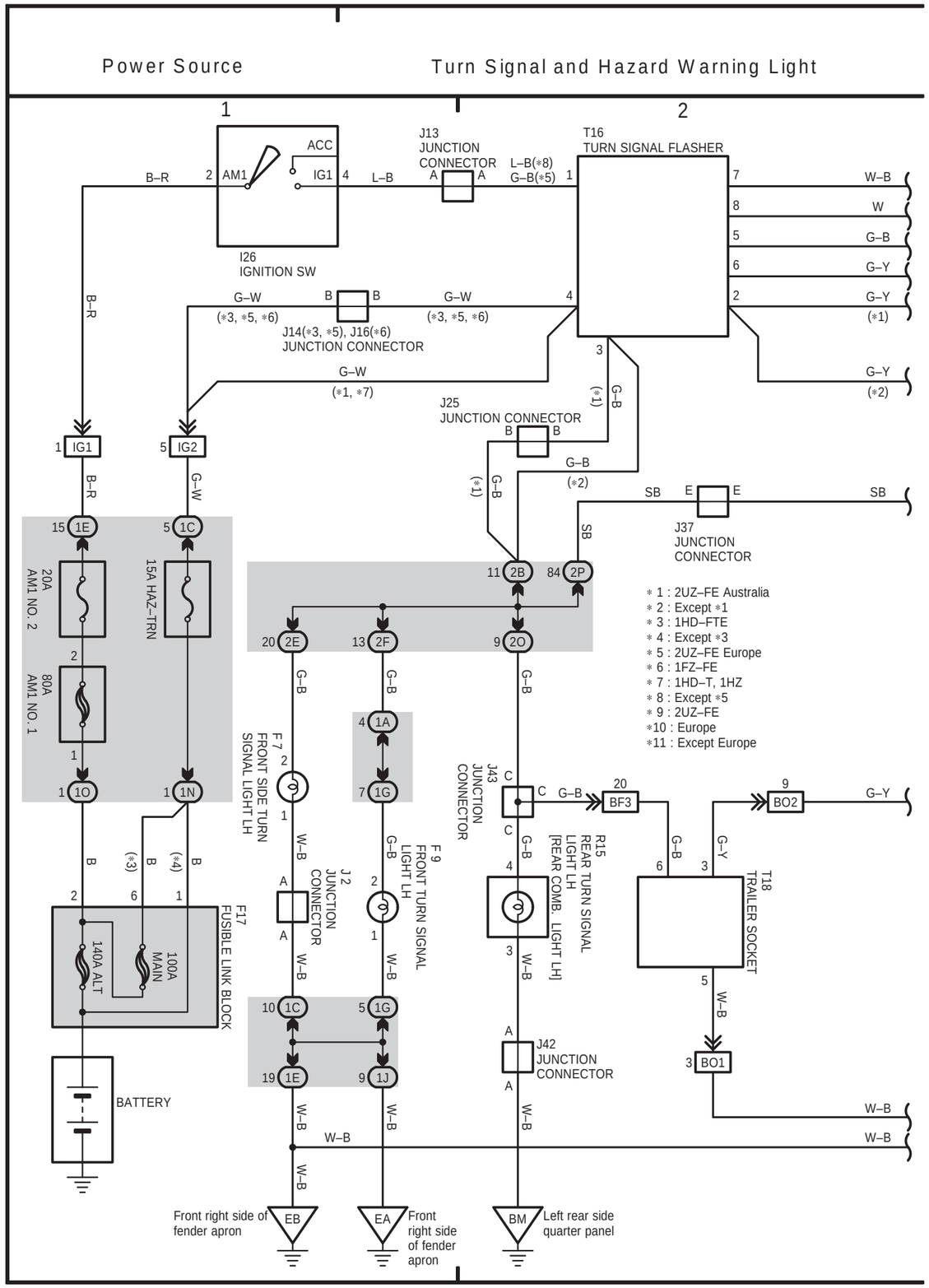

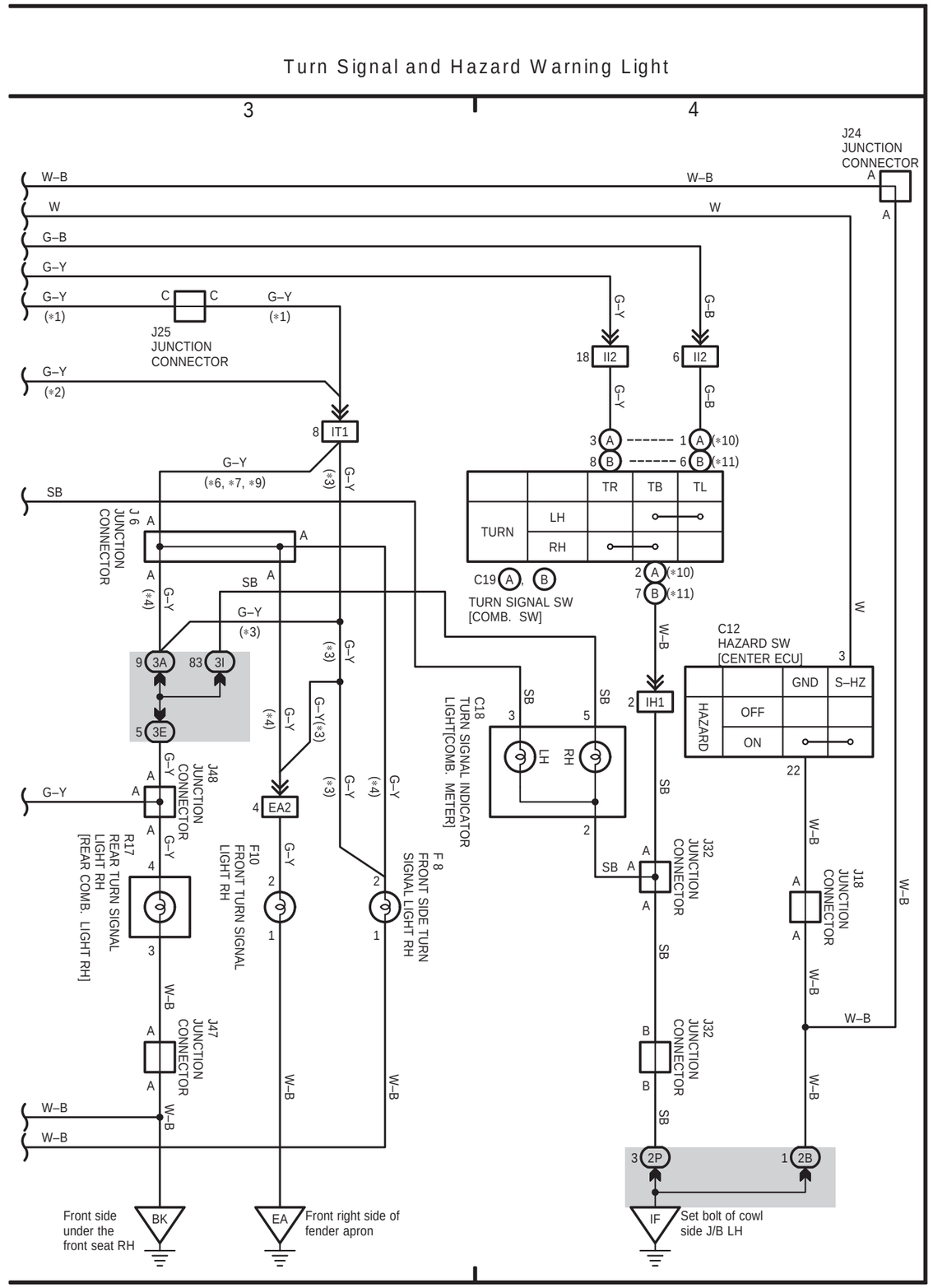

RHD

640

641

LAND CRUISER Station Wagon (EWD342F)

LAND CRUISER Station Wagon (EWD342F)

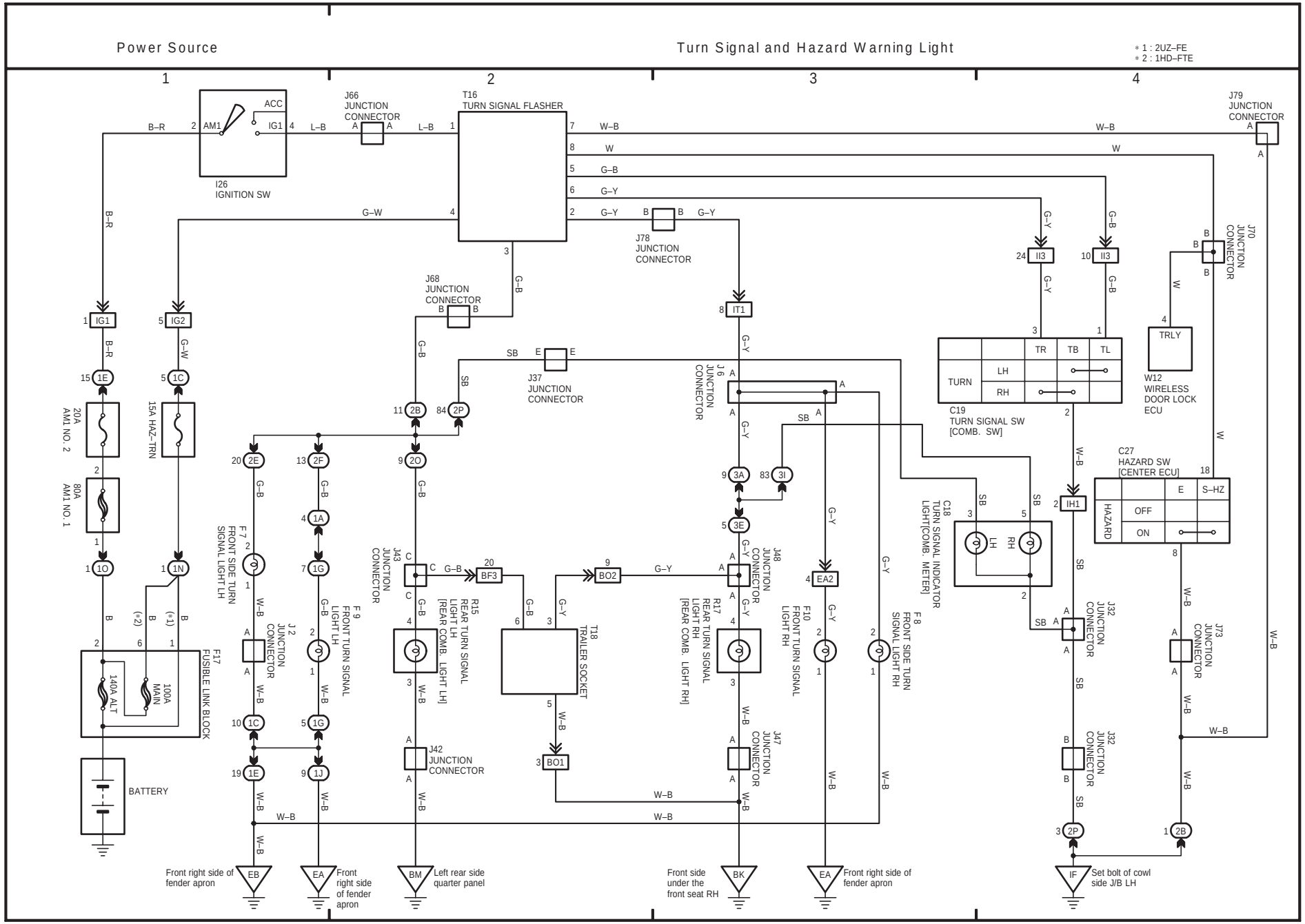
Power Source
Turn Signal and Hazard Warning Light
* 1 : 2UZ–FE
* 2 : 1HD–FTE
1
2
3
4
I26
IGNITION SW
ACC
IG1
AM1
J66
JUNCTION
CONNECTOR
T16
TURN SIGNAL FLASHER
J79
JUNCTION
CONNECTOR
J78
JUNCTION
CONNECTOR
J68
JUNCTION
CONNECTOR
J37
JUNCTION
CONNECTOR
J6
JUNCTION
CONNECTOR
J70
JUNCTION
CONNECTOR
C19
TURN SIGNAL SW
[COMB. SW]
TURN
LH
RH
TR
TB
TL
W12
WIRELESS
DOOR LOCK
ECU
TRLY
C27
HAZARD SW
[CENTER ECU]
HAZARD
OFF
ON
E
S–HZ
C18
TURN SIGNAL INDICATOR
LIGHT[COMB. METER]
20A
AM1 NO. 2
15A HAZ–TRN
80A
AM1 NO. 1
F17
FUSIBLE LINK BLOCK
140A ALT
100A
MAIN
BATTERY
F7
FRONT SIDE TURN
SIGNAL LIGHT LH
J12
JUNCTION
CONNECTOR
F9
FRONT TURN SIGNAL
LIGHT LH
J43
JUNCTION
CONNECTOR
R15
REAR TURN SIGNAL
LIGHT LH
[REAR COMB. LIGHT LH]
J42
JUNCTION
CONNECTOR
T18
TRAILER SOCKET
J48
JUNCTION
CONNECTOR
R17
REAR TURN SIGNAL
LIGHT RH
[REAR COMB. LIGHT RH]
F10
FRONT TURN SIGNAL
LIGHT RH
J47
JUNCTION
CONNECTOR
F8
FRONT SIDE TURN
SIGNAL LIGHT RH
J32
JUNCTION
CONNECTOR
J73
JUNCTION
CONNECTOR
Front right side of
fender apron
Front
right side
of fender
apron
Left rear side
quarter panel
Front side
under the
front seat RH
Front right side of
fender apron
Set bolt of cowl
side J/B LH
EB
EA
BM
BK
EA
IF

16 LAND CRUISER (RHD)

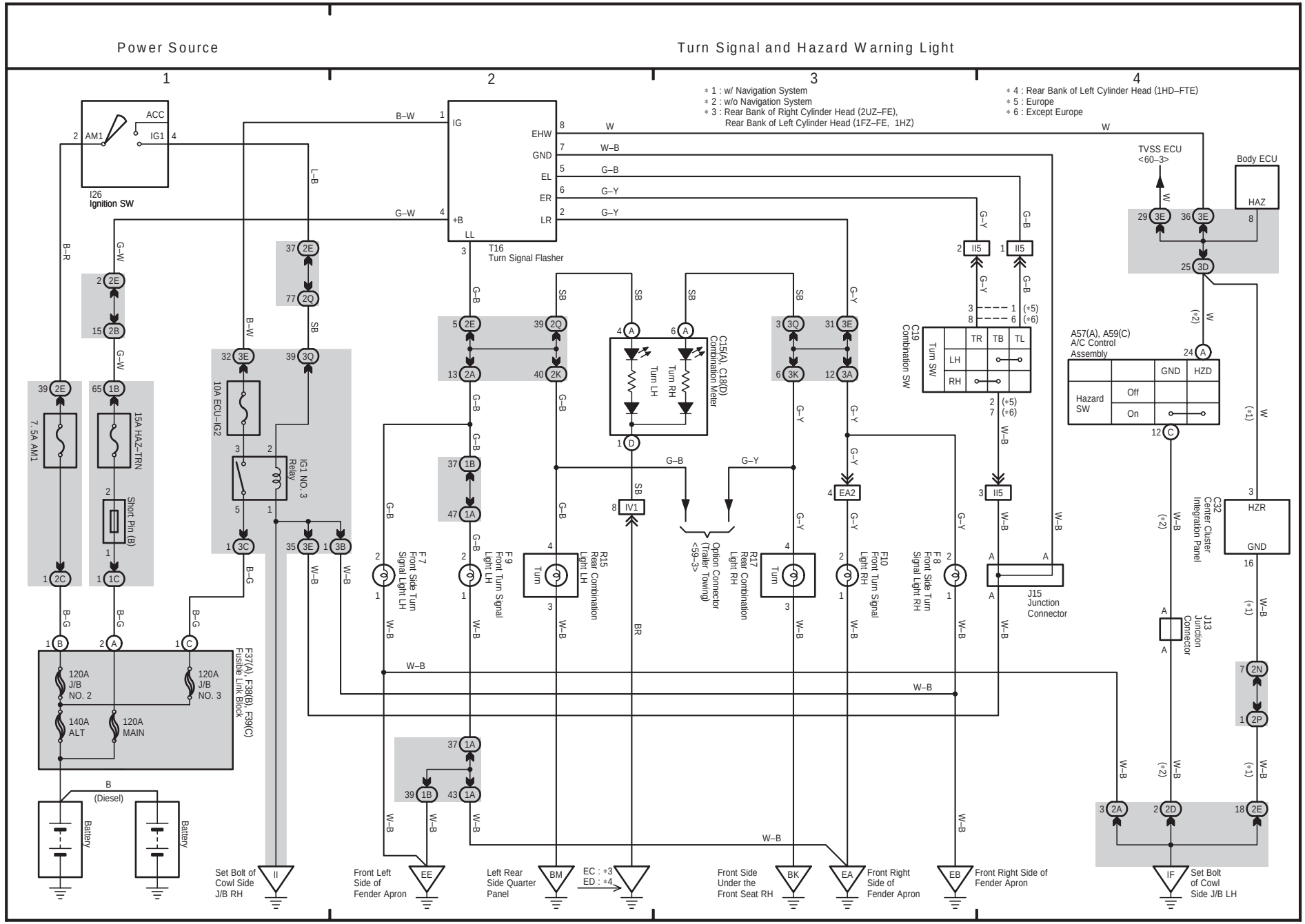

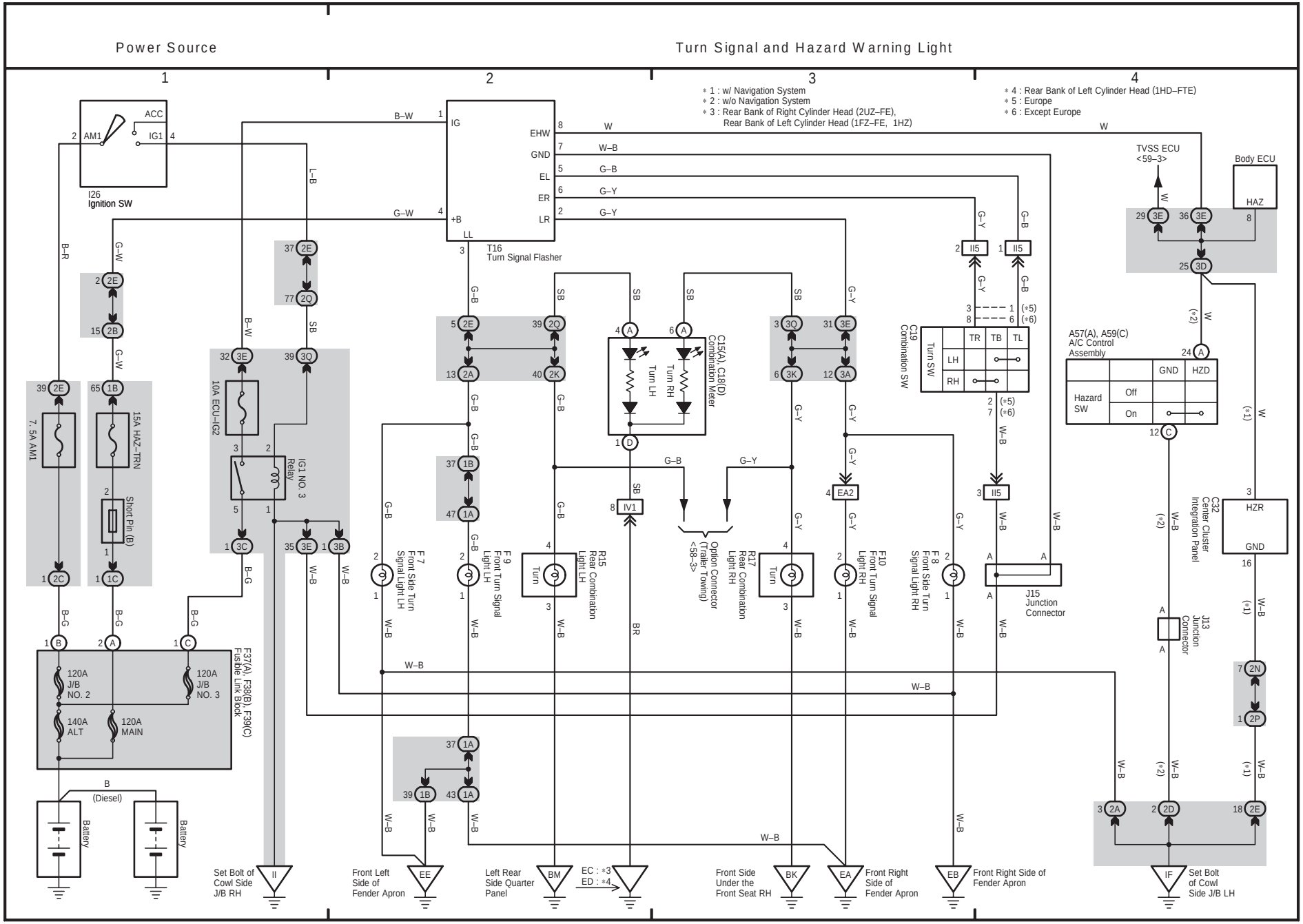
Power Source
Turn Signal and Hazard Warning Light
1
2
3
4
* 1 : w/ Navigation System
* 2 : w/o Navigation System
* 3 : Rear Bank of Right Cylinder Head (2UZ–FE), Rear Bank of Left Cylinder Head (1FZ–FE, 1HZ)
* 4 : Rear Bank of Left Cylinder Head (1HD–FTE)
* 5 : Europe
* 6 : Except Europe
I26 Ignition SW
ACC
IG1
AM1
T16 Turn Signal Flasher
IG
+B
LL
EHW
GND
EL
ER
LR
B–W
G–W
L–B
B–R
W
W–B
G–B
G–Y
SB
BR
TVSS ECU <59–3>
Body ECU
HAZ
HZR
GND
C19 Combination SW
Turn SW
TR
TB
TL
LH
RH
A57(A), A59(C) A/C Control Assembly
Hazard SW
Off
On
GND
HZD
C15(A), C18(D) Combination Meter
Turn LH
Turn RH
C32 Center Cluster Integration Panel
J15 Junction Connector
J13 Junction Connector
Option Connector <58–3> (Trailer Towing)
F7 Front Side Turn Signal Light LH
F9 Front Turn Signal Light LH
R15 Rear Combination Light LH
R17 Rear Combination Light RH
F10 Front Turn Signal Light RH
F8 Front Side Turn Signal Light RH
7.5A AM1
15A HAZ–TRN
Short Pin (B)
10A ECU–IG2
IG1 NO. 3 Relay
F37(A), F38(B), F39(C) Fusible Link Block
120A J/B NO. 2
120A J/B NO. 3
140A ALT
120A MAIN
B
(Diesel)
Battery
Battery
Set Bolt of Cowl Side J/B RH
Front Left Side of Fender Apron
Left Rear Side Quarter Panel
EC : *3
ED : *4
Front Side Under the Front Seat RH
Front Right Side of Fender Apron
Front Right Side of Fender Apron
Set Bolt of Cowl Side J/B LH

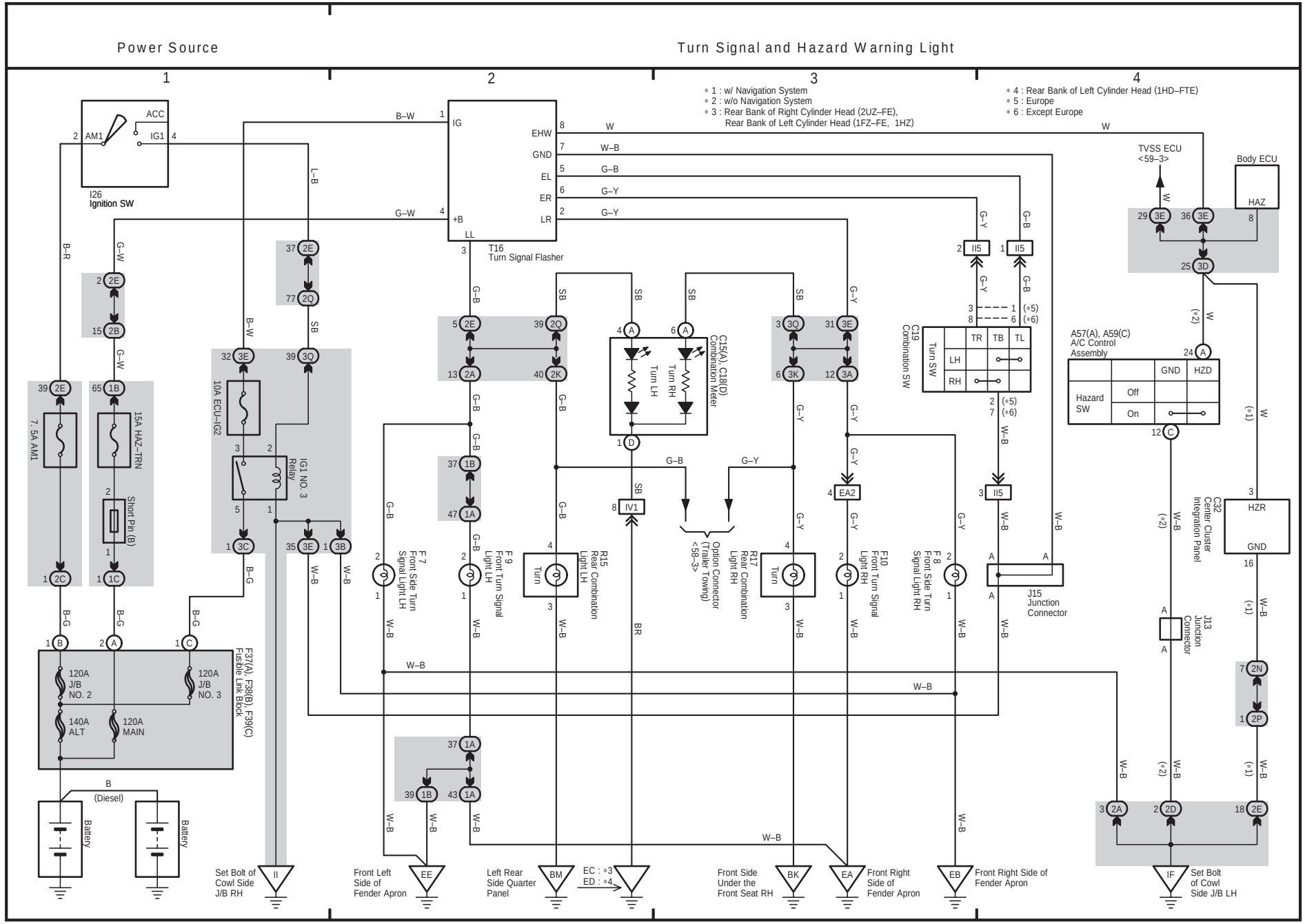
Power Source
Turn Signal and Hazard Warning Light
1
2
3
4
* 1 : w/ Navigation System
* 2 : w/o Navigation System
* 3 : Rear Bank of Right Cylinder Head (2UZ–FE), Rear Bank of Left Cylinder Head (1FZ–FE, 1HZ)
* 4 : Rear Bank of Left Cylinder Head (1HD–FTE)
* 5 : Europe
* 6 : Except Europe
I26 Ignition SW
ACC
IG1
AM1
T16 Turn Signal Flasher
IG
+B
LL
EHW
GND
EL
ER
LR
B–W
G–W
L–B
B–R
W
W–B
G–B
G–Y
SB
BR
TVSS ECU <59–3>
Body ECU
HAZ
HZR
C19 Combination SW
Turn SW
TR
TB
TL
LH
RH
A57(A), A59(C) A/C Control Assembly
Hazard SW
Off
On
GND
HZD
C15(A), C18(D) Combination Meter
Turn LH
Turn RH
C32 Center Cluster Integration Panel
J15 Junction Connector
J13 Junction Connector
Option Connector <58–3> (Trailer Towing)
F7 Front Side Turn Signal Light LH
F9 Front Turn Signal Light LH
R15 Rear Combination Light LH
R17 Rear Combination Light RH
F10 Front Turn Signal Light RH
F8 Front Side Turn Signal Light RH
10A ECU–IG2
IG1 NO. 3 Relay
7.5A AM1
15A HAZ–TRN
Short Pin (B)
F37(A), F38(B), F39(C) Fusible Link Block
120A J/B NO. 2
120A J/B NO. 3
140A ALT
120A MAIN
B
(Diesel)
Battery
Set Bolt of Cowl Side J/B RH
Front Left Side of Fender Apron
Left Rear Side Quarter Panel
EC : *3
ED : *4
Front Side Under the Front Seat RH
Front Right Side of Fender Apron
Front Right Side of Fender Apron
Set Bolt of Cowl Side J/B LH

24 LAND CRUISER (RHD) (Cont. next page)

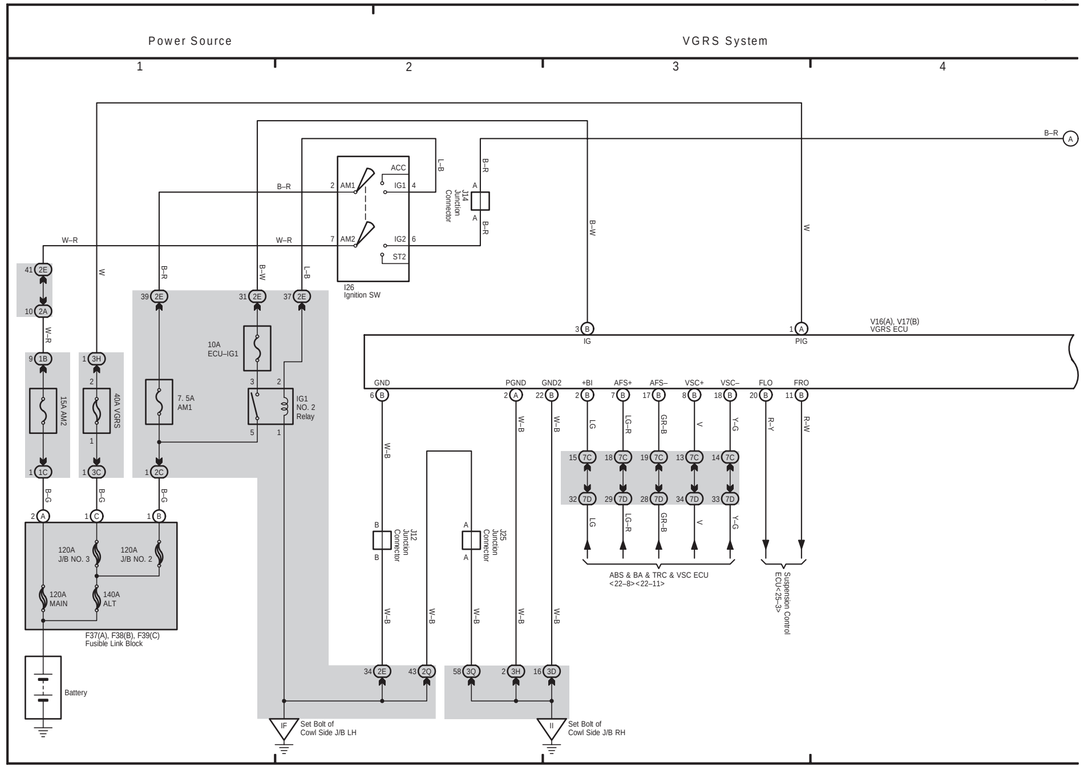

24 LAND CRUISER (RHD) (Cont' d)

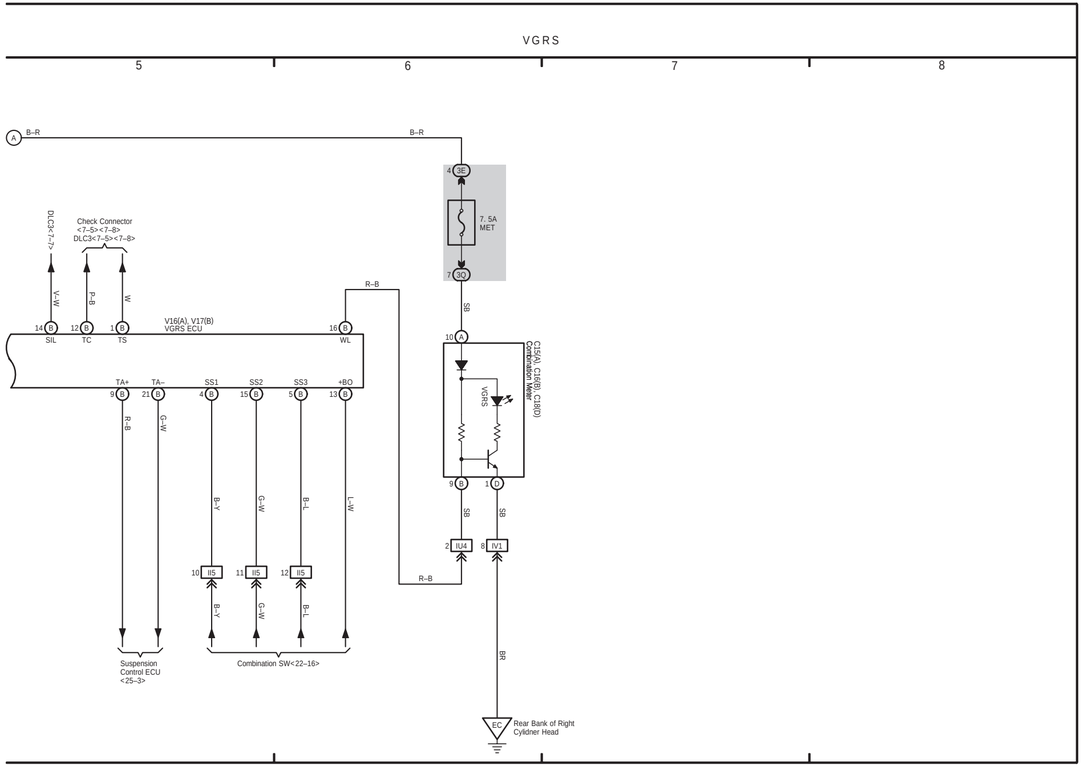

23 LAND CRUISER (RHD) (Cont. next page)

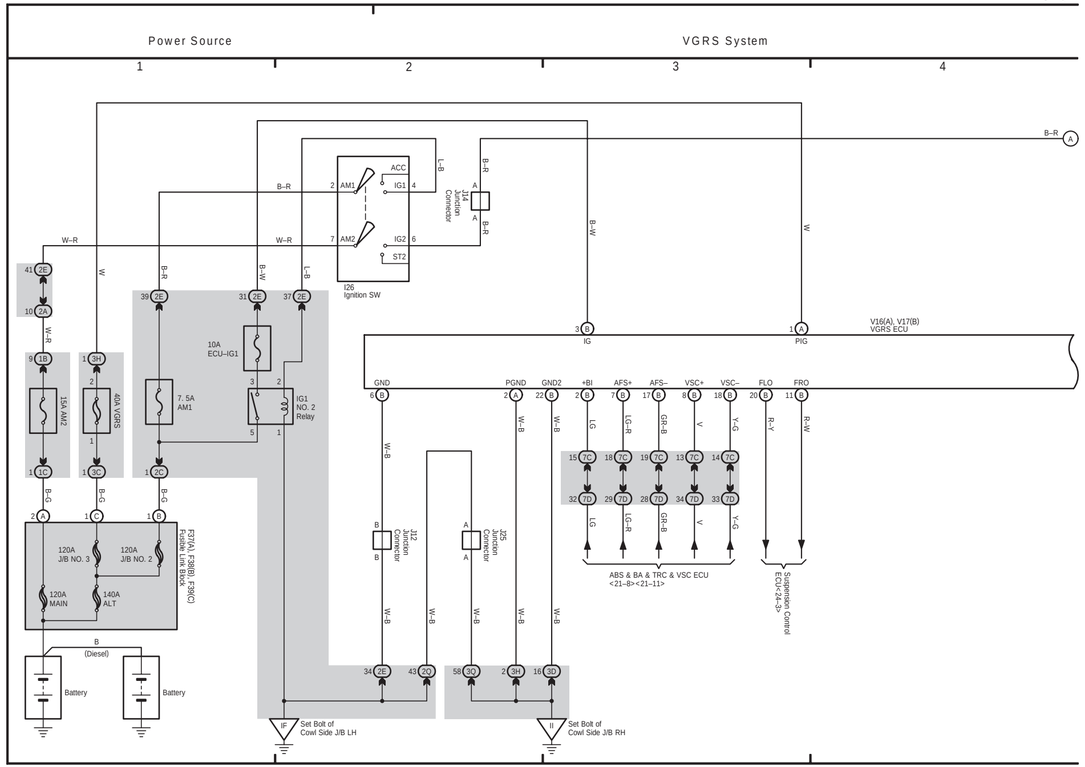

23 LAND CRUISER (RHD) (Cont' d)

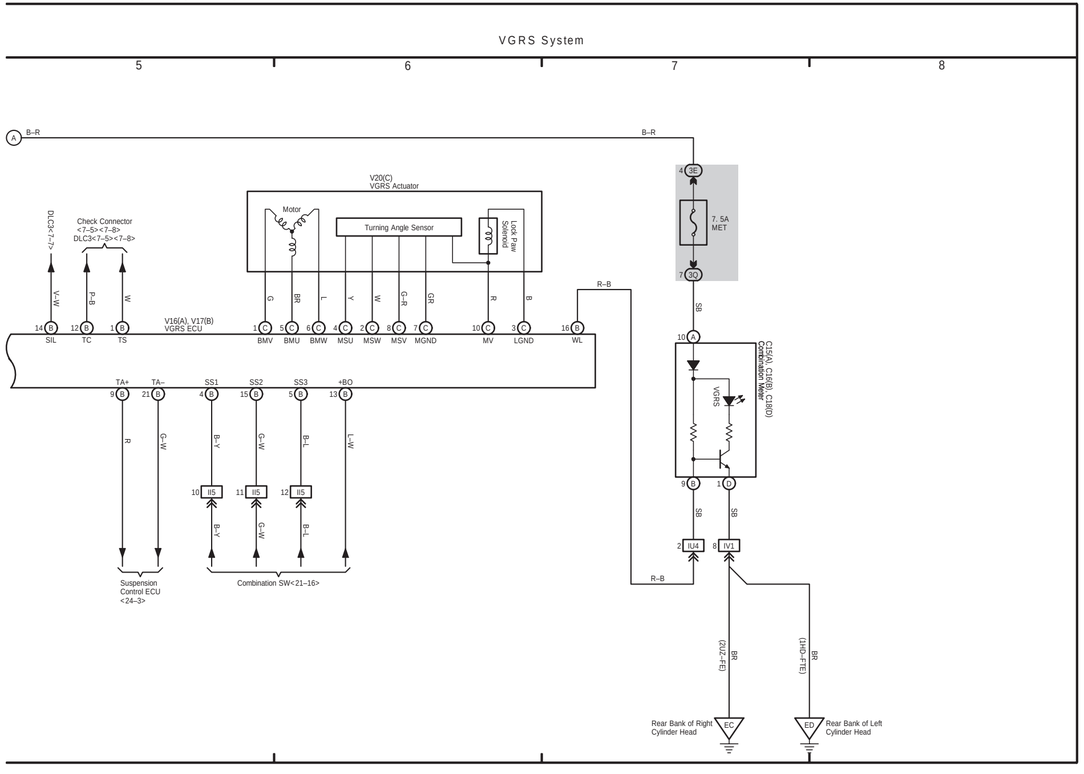

23 LAND CRUISER (RHD) (Cont. next page)

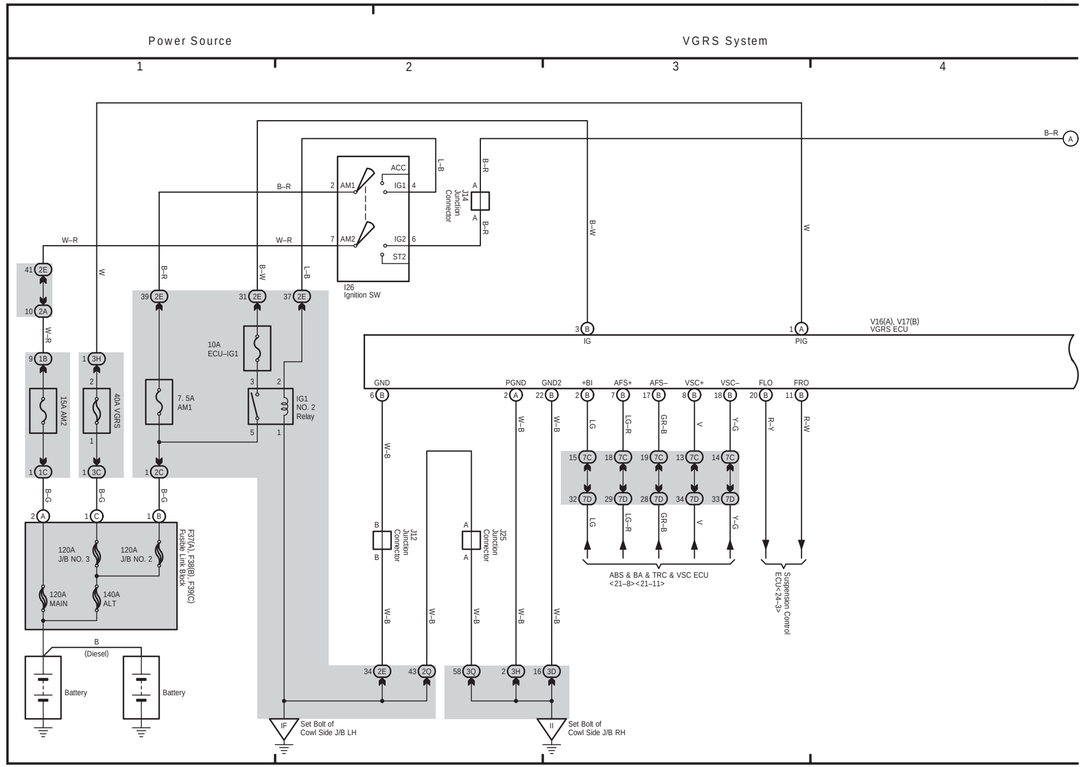

23 LAND CRUISER (RHD) (Cont' d)

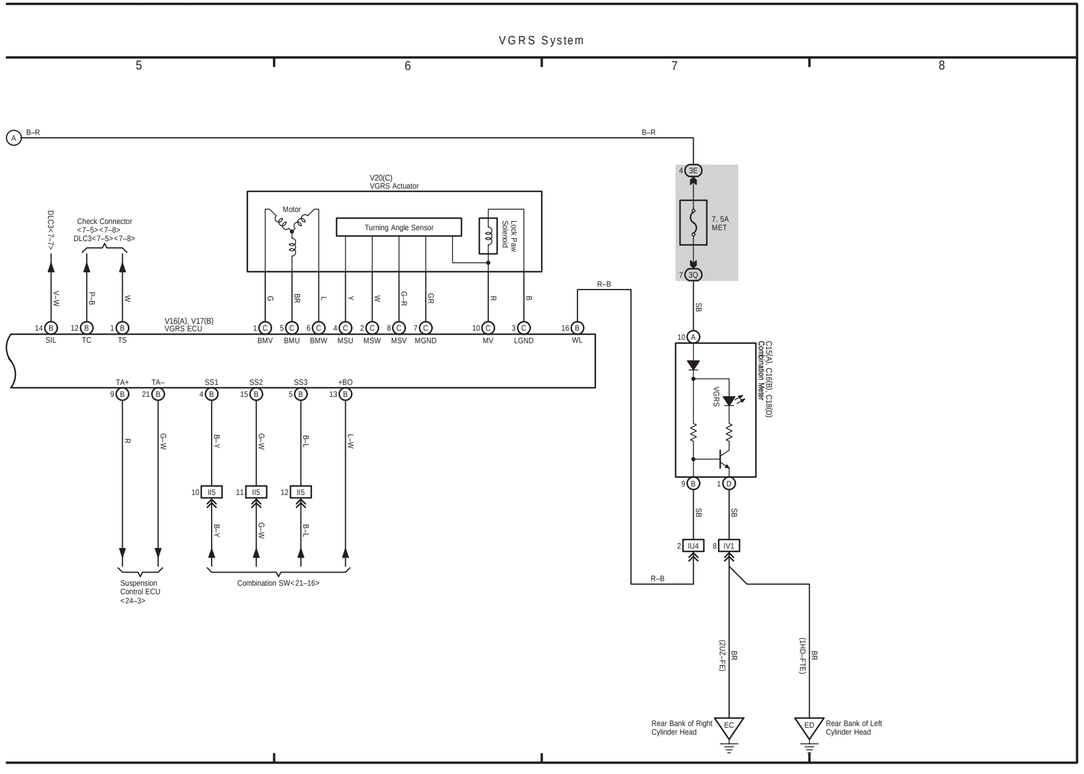

F ELECTRICAL WIRING DIAGRAM (System Circuits)

Power Source

Viscous Heater

Viscous Heater

1 2 3 4

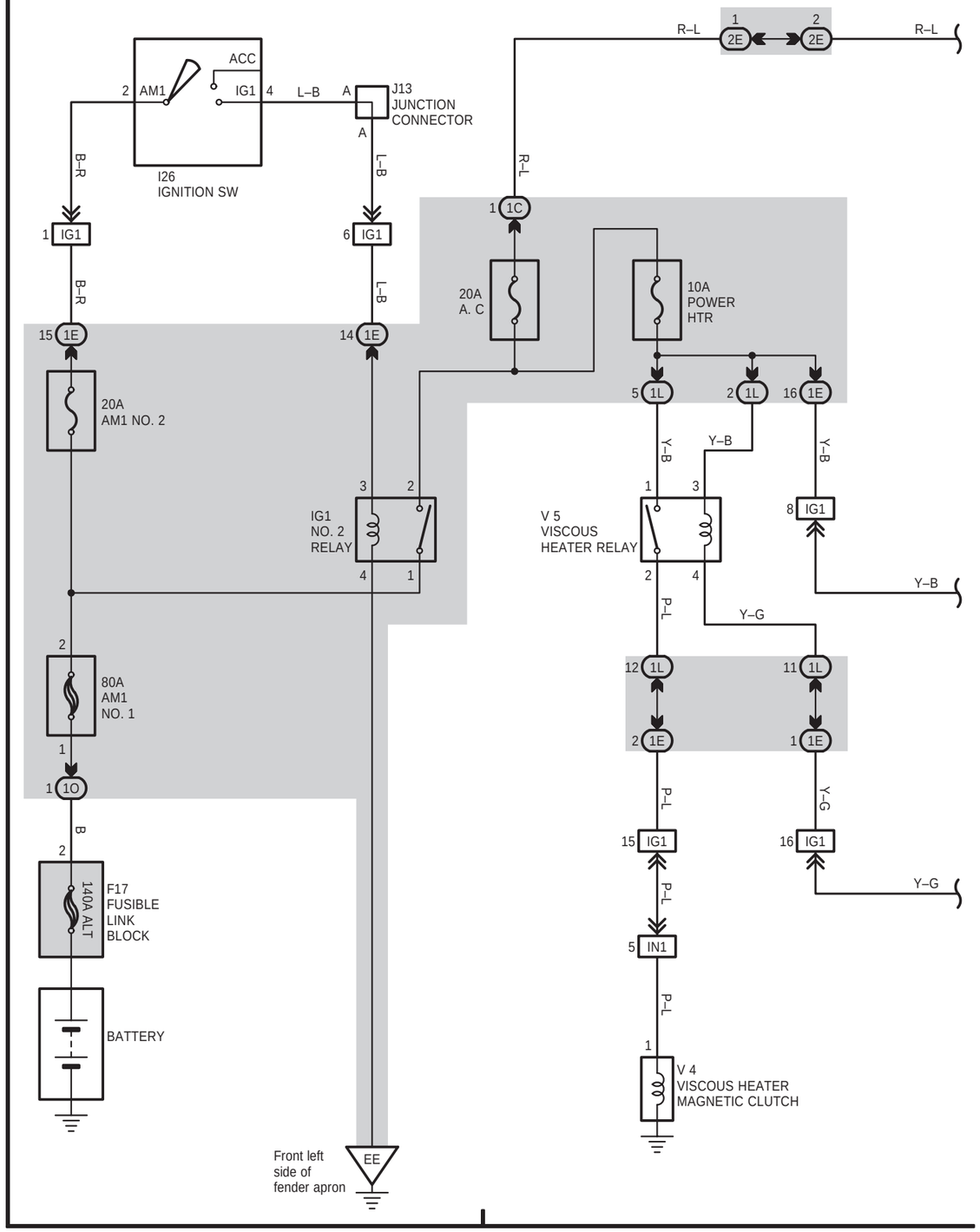

RHD

RHD

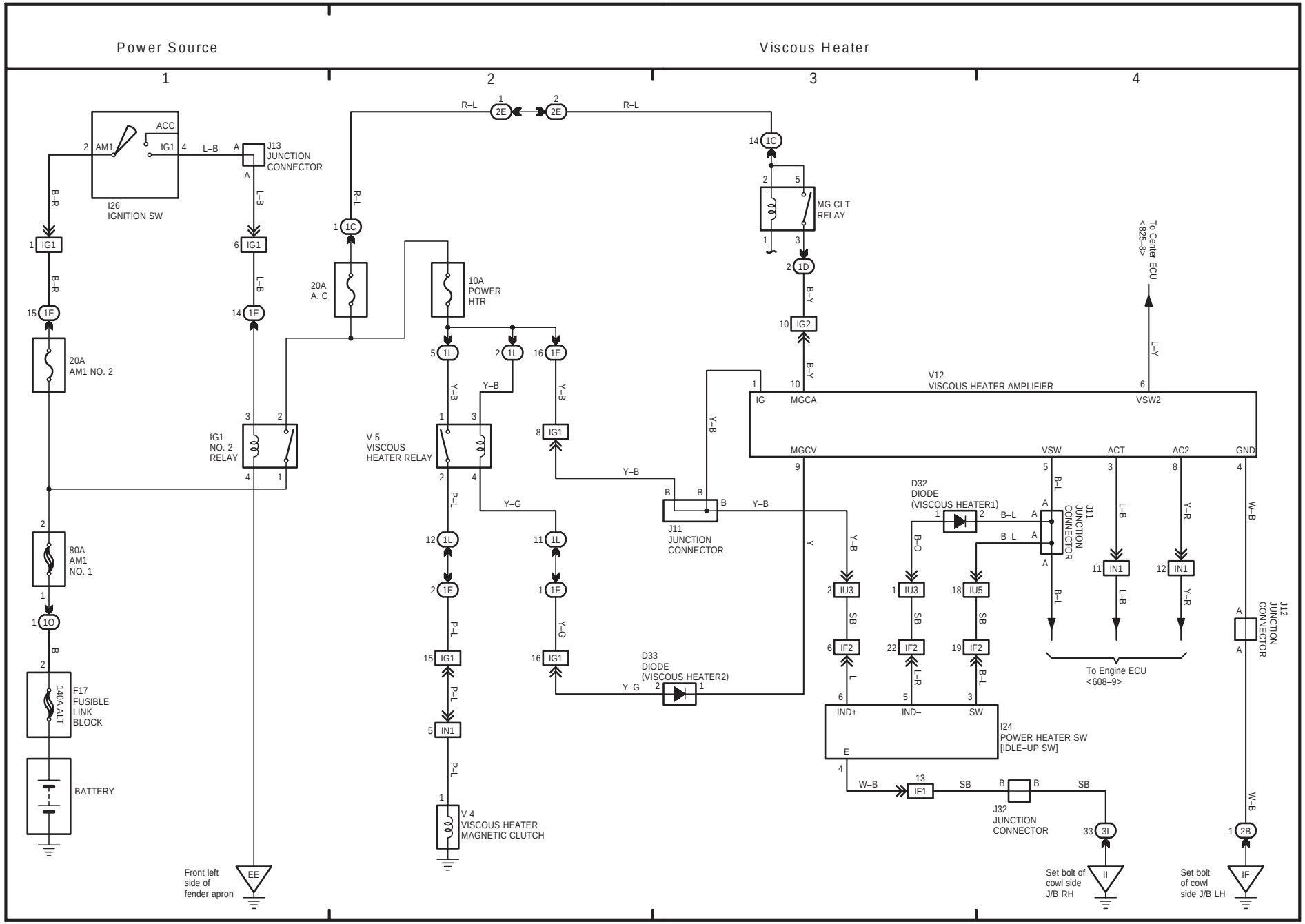
Power Source
Viscous Heater
1
2
3
4
ACC
AM1
IG1
I26
IGNITION SW
L–B
J13
JUNCTION
CONNECTOR
B–R
L–B
R–L
20A
A. C
10A
POWER
HTR
MG CLT
RELAY
B–Y
L–Y
To Center ECU
<825–8>
V12
VISCOUS HEATER AMPLIFIER
IG
MGCA
VSW2
MGCV
VSW
ACT
AC2
GND
20A
AM1 NO. 2
IG1
NO. 2
RELAY
V 5
VISCOUS
HEATER RELAY
Y–B
Y–G
J11
JUNCTION
CONNECTOR
D32
DIODE
(VISCOUS HEATER1)
B–L
B–O
J11
JUNCTION
CONNECTOR
80A
AM1
NO. 1
D33
DIODE
(VISCOUS HEATER2)
IU3
IU5
IF2
SB
L
L–R
B–L
IND+
IND–
SW
I24
POWER HEATER SW
[IDLE–UP SW]
To Engine ECU
<608–9>
IN1
L–B
Y–R
J12
JUNCTION
CONNECTOR
W–B
F17
FUSIBLE
LINK
BLOCK
140A ALT
BATTERY
P–L
V 4
VISCOUS HEATER
MAGNETIC CLUTCH
IF1
J32
JUNCTION
CONNECTOR
Front left
side of
fender apron
EE
Set bolt of
cowl side
J/B RH
II
Set bolt
of cowl
side J/B LH
IF

58 LAND CRUISER (RHD)

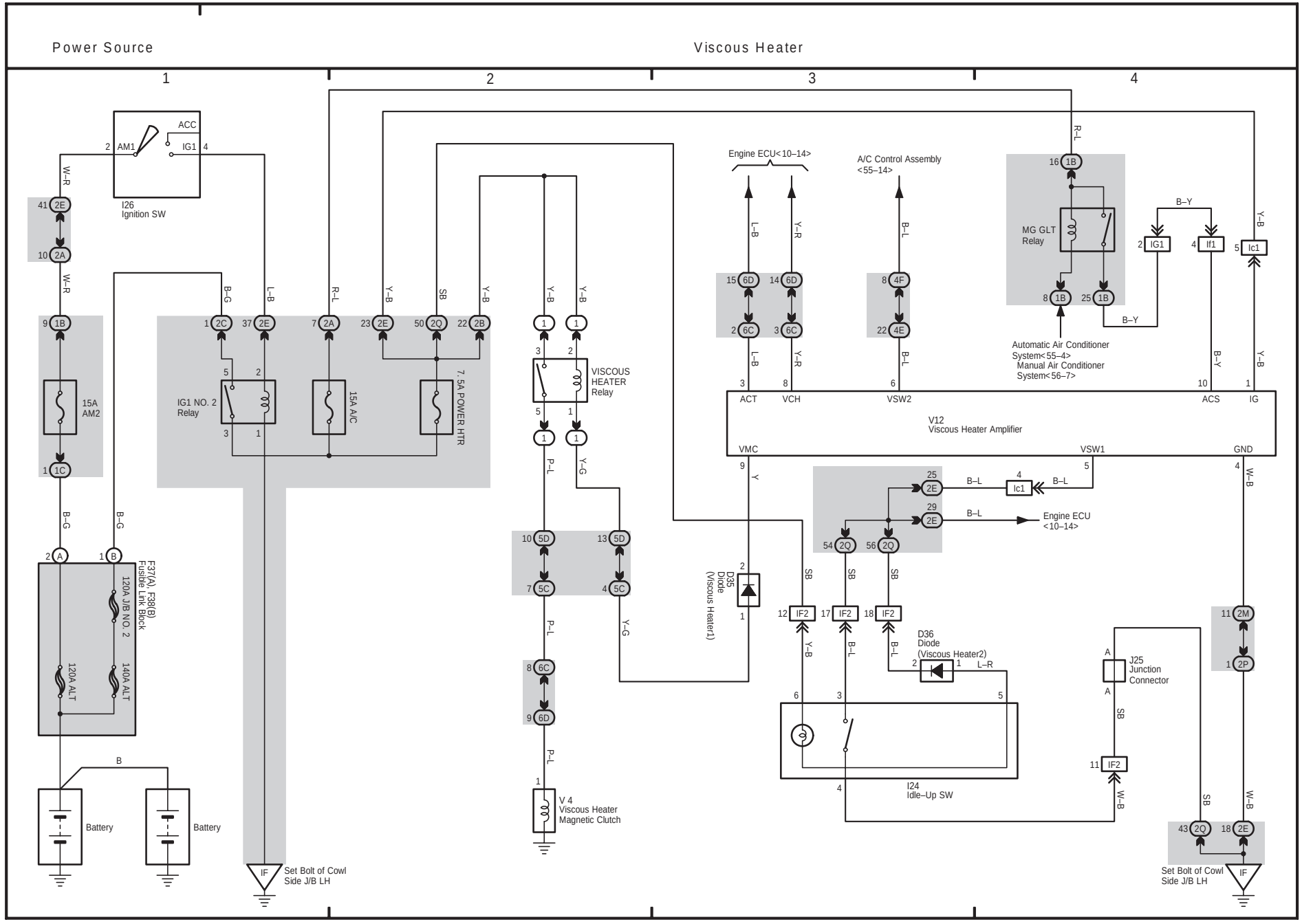

57 LAND CRUISER (RHD)

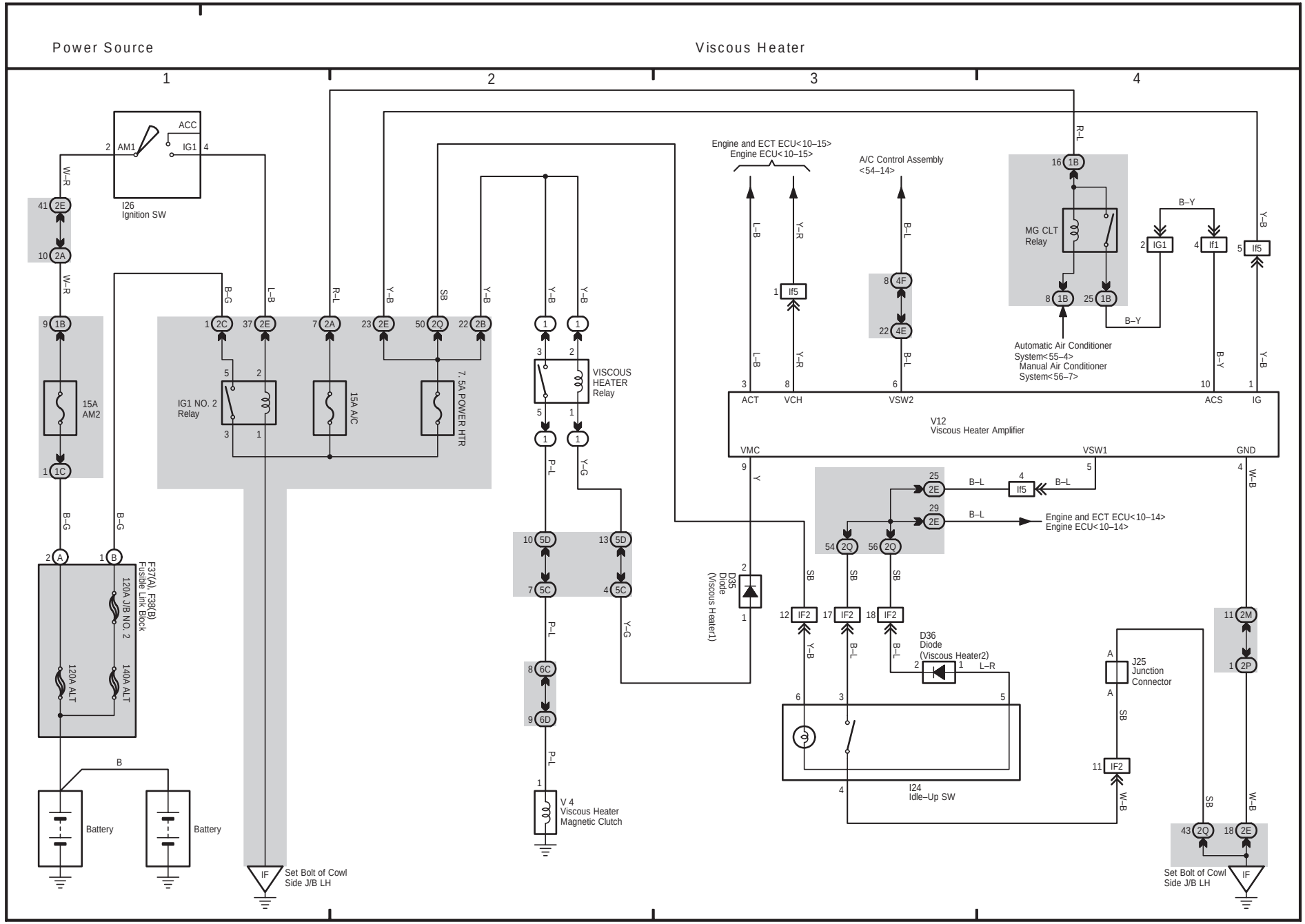

57 LAND CRUISER (RHD)

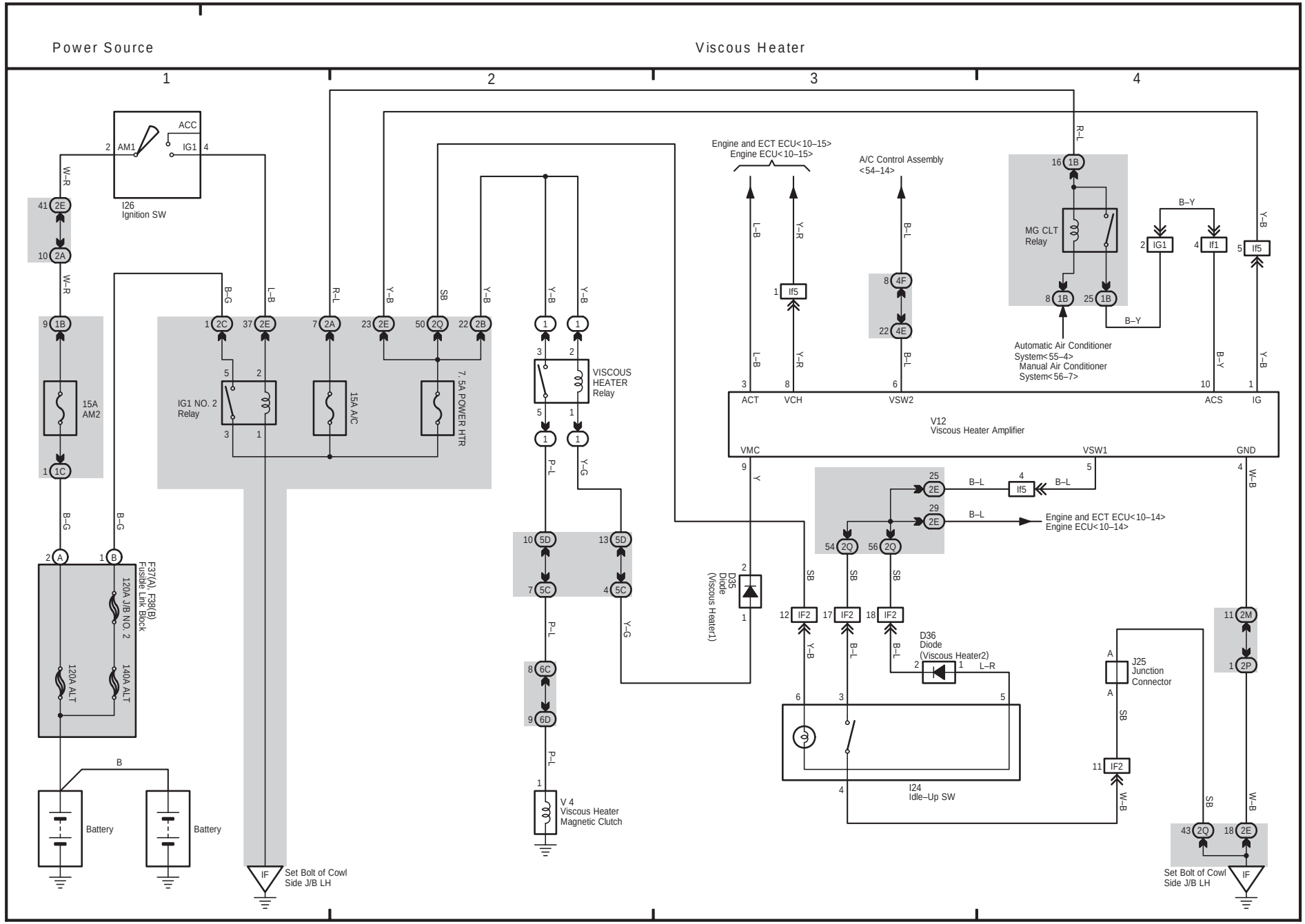

(Cont. next page)

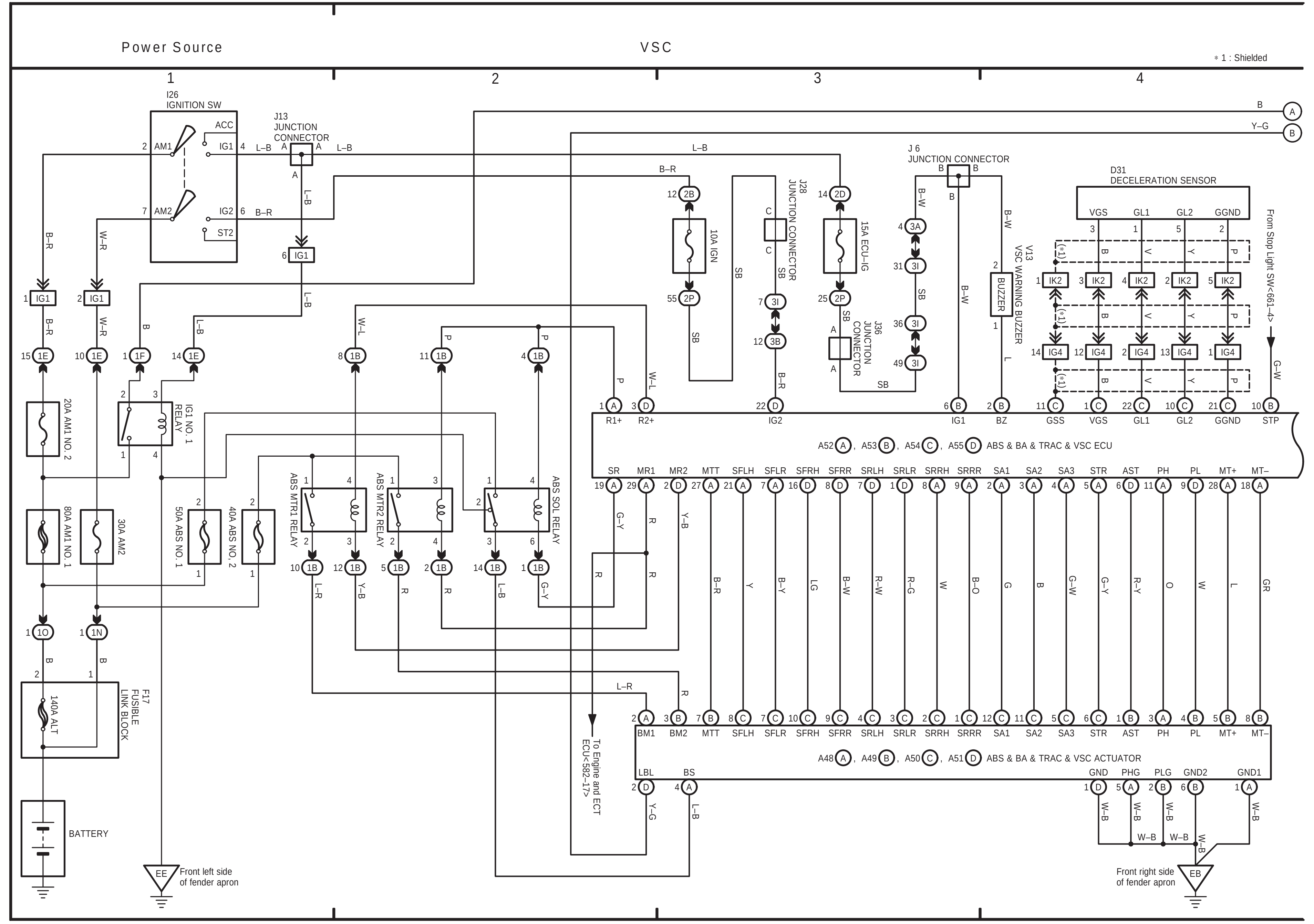

(Cont. next page)

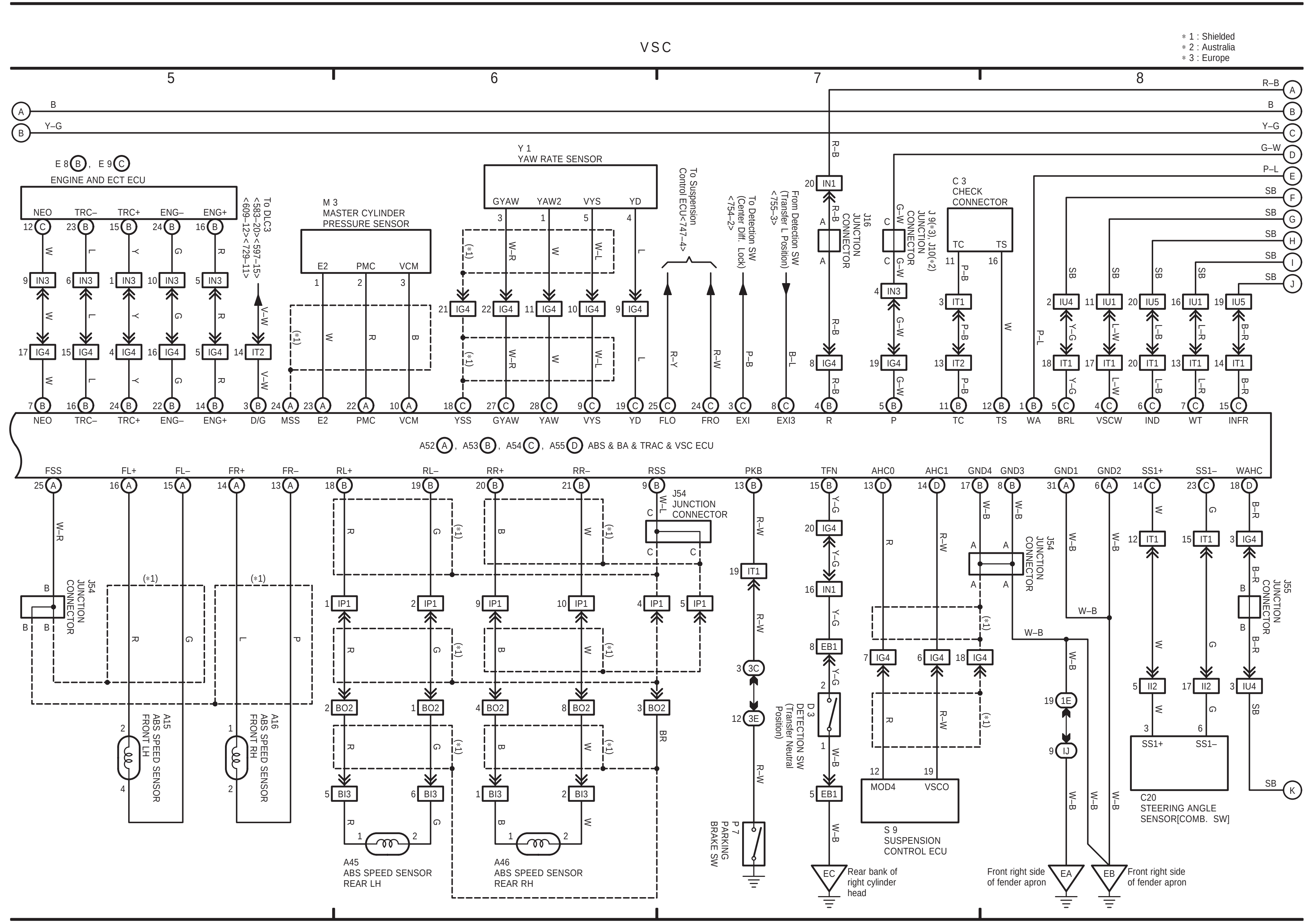

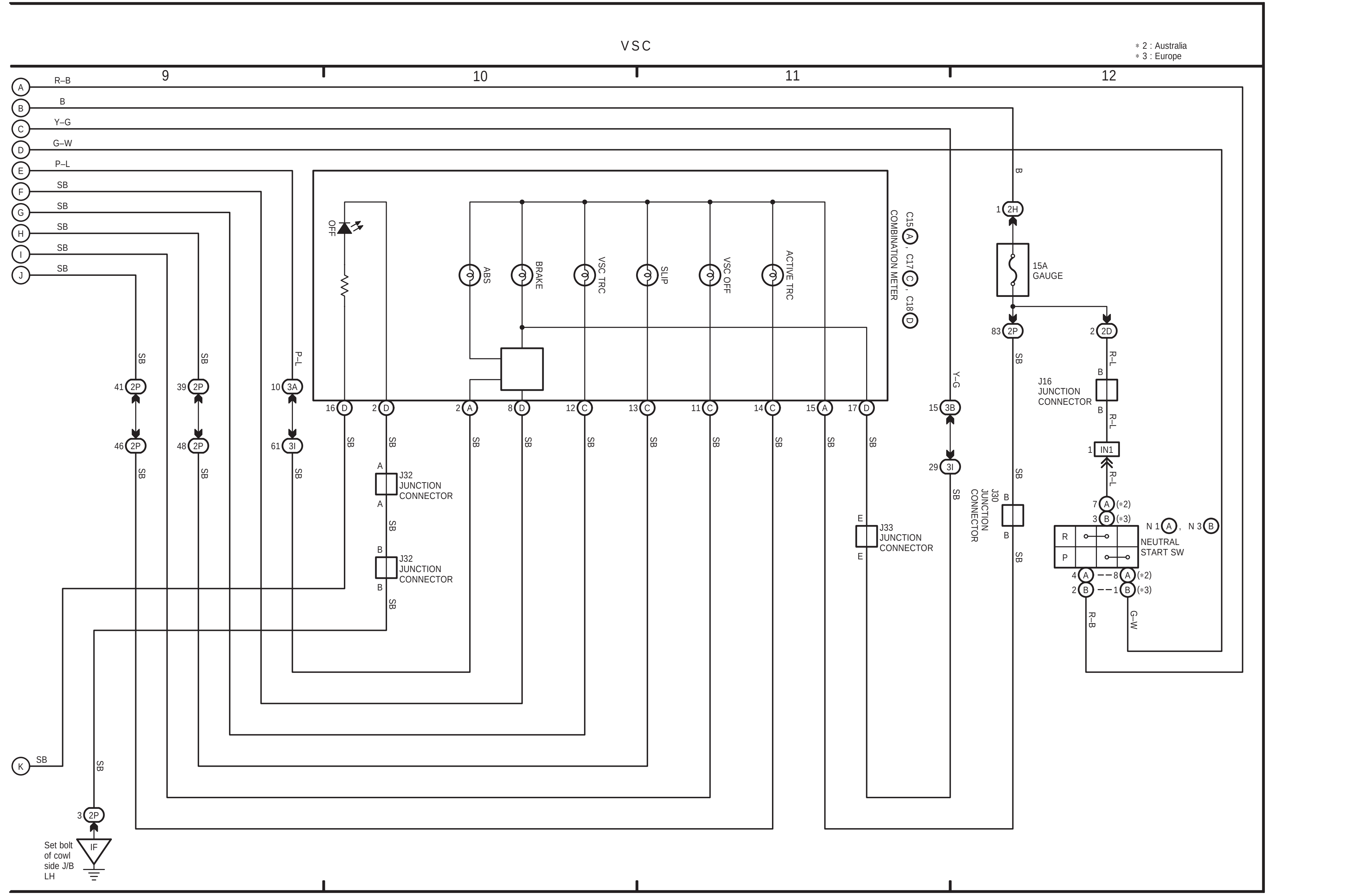

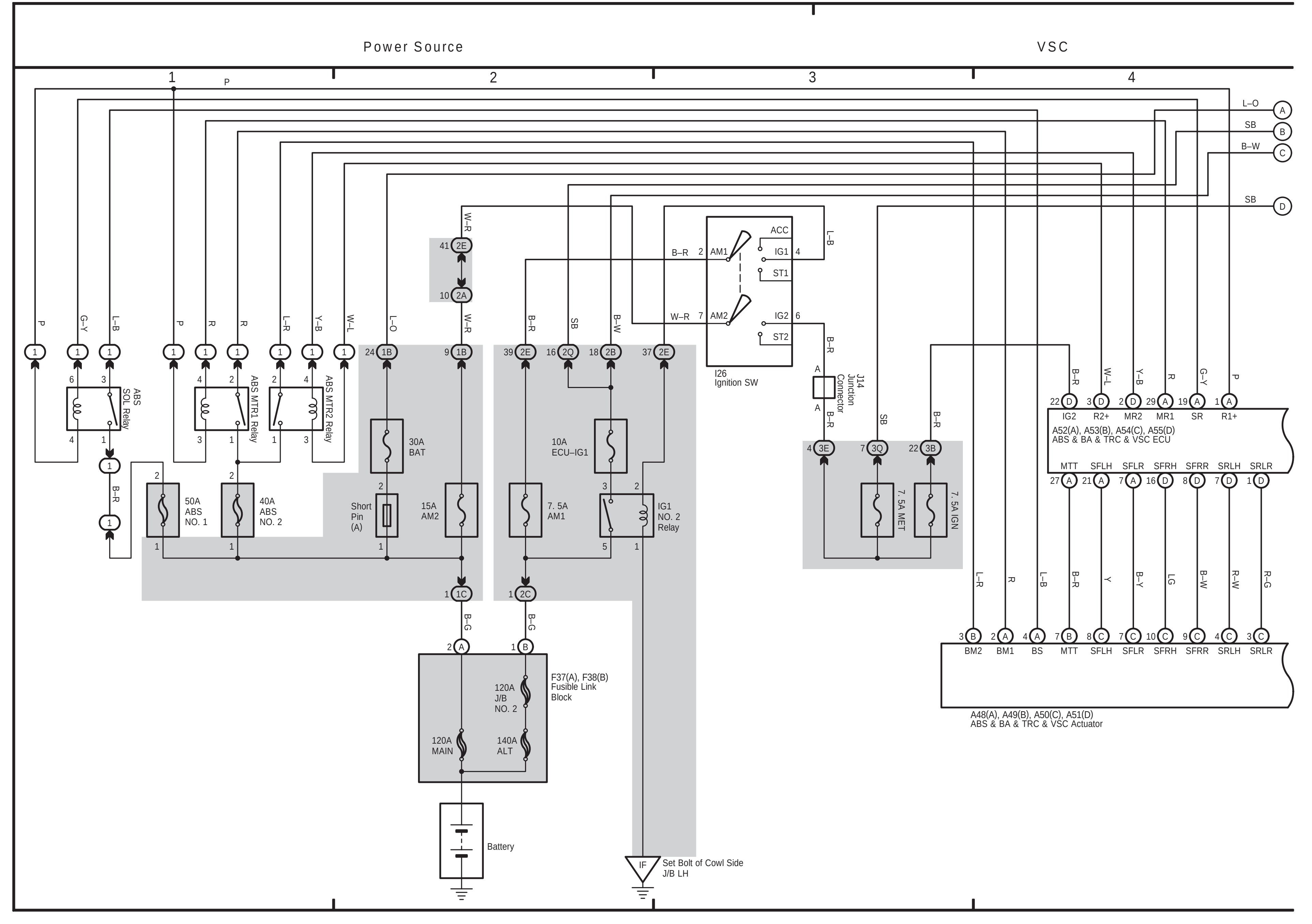
Power Source
VSC
1
2
3
4
Battery

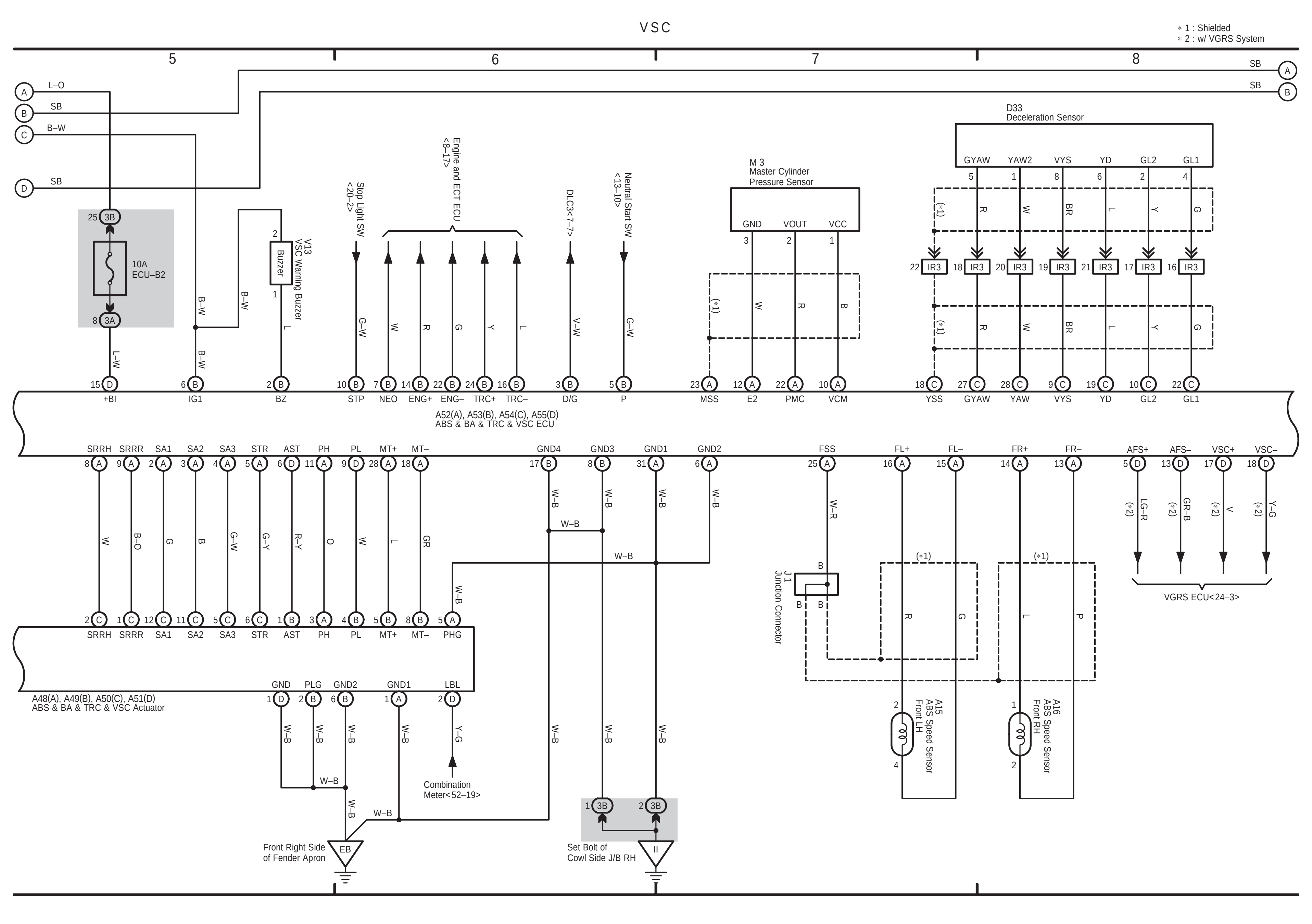
VSC
5
6
7
8

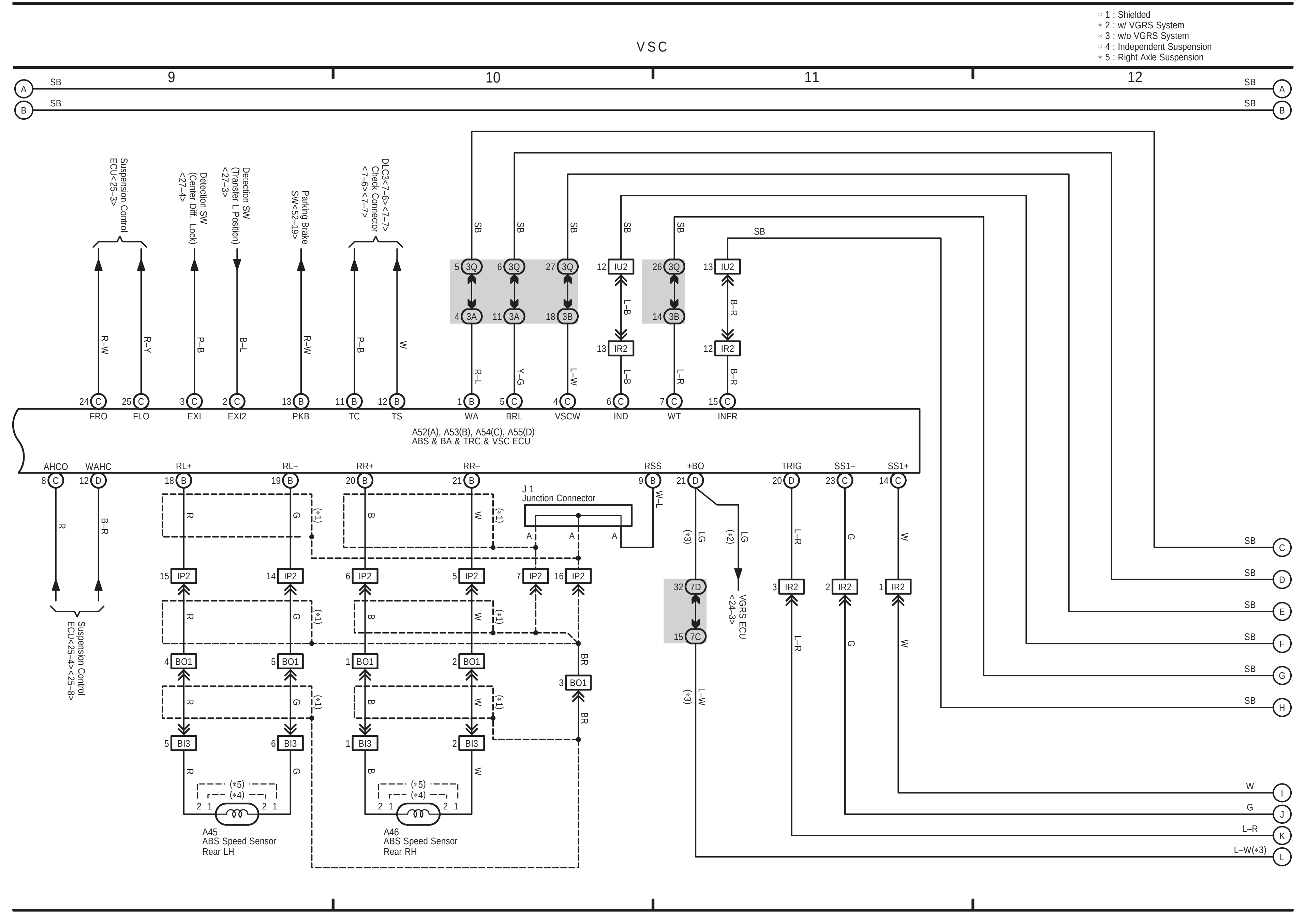
VSC
9
10
11
12

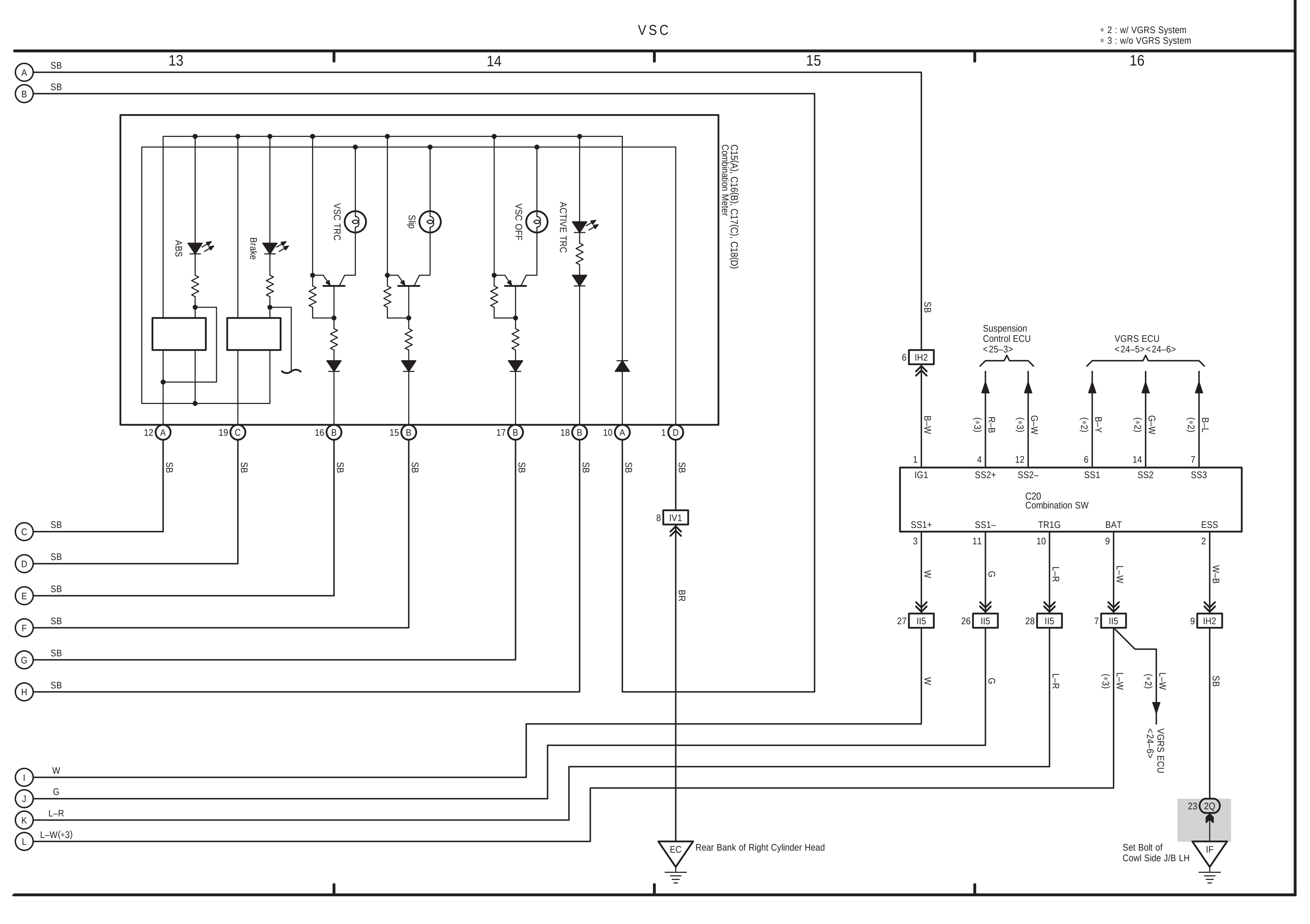
VSC
13
14
15
16

21 LAND CRUISER (RHD) (Cont. next page)

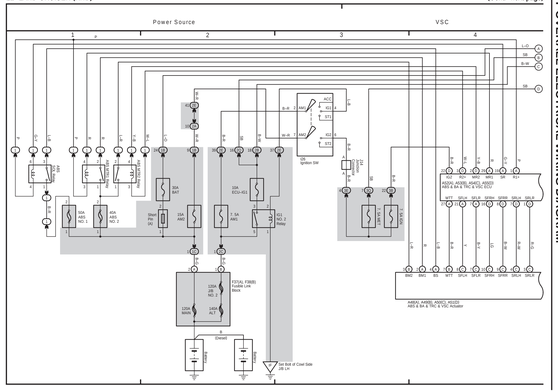

21 LAND CRUISER (RHD) (Cont' d) (Cont. next page)

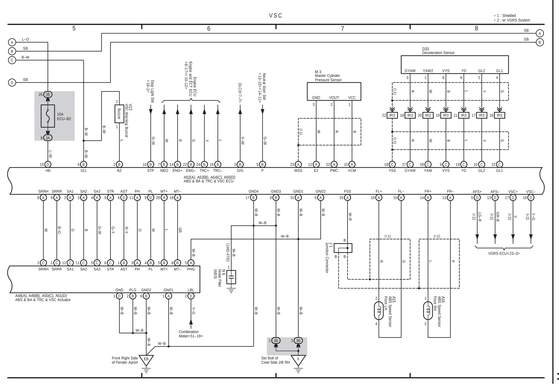

21 LAND CRUISER (RHD) (Cont' d) (Cont. next page)

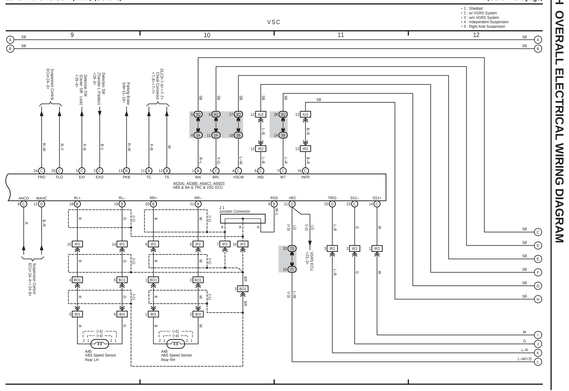

21 LAND CRUISER (RHD) (Cont' d)

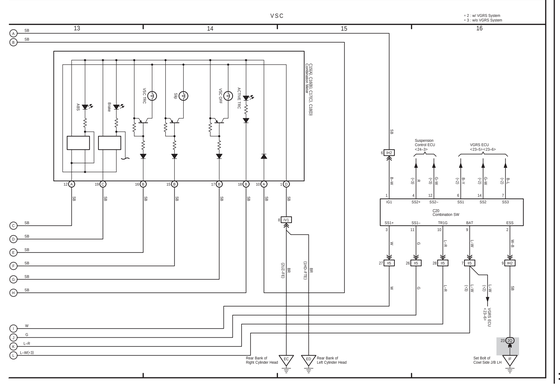

21 LAND CRUISER (RHD) (Cont. next page)

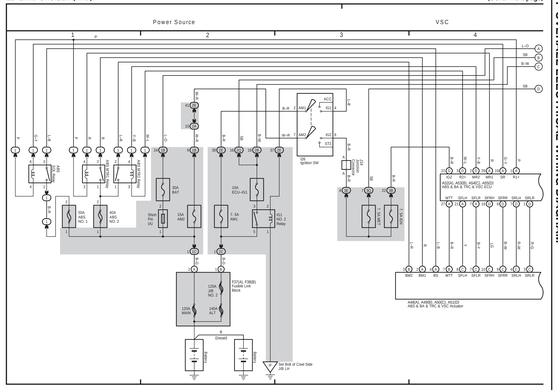

21 LAND CRUISER (RHD) (Cont' d) (Cont. next page)

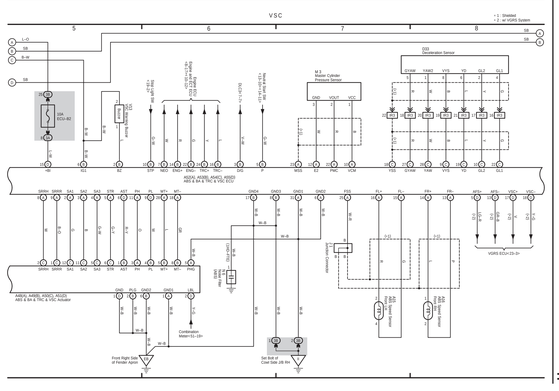

21 LAND CRUISER (RHD) (Cont' d) (Cont. next page)

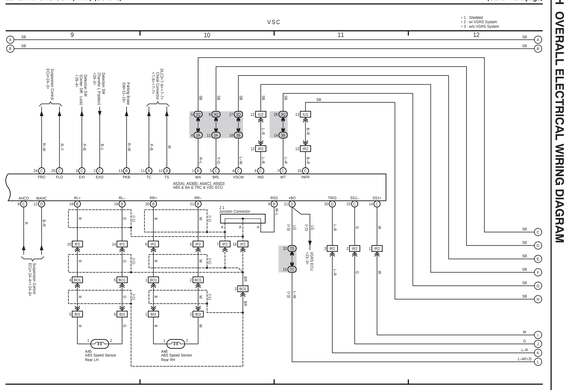

21 LAND CRUISER (RHD) (Cont' d)

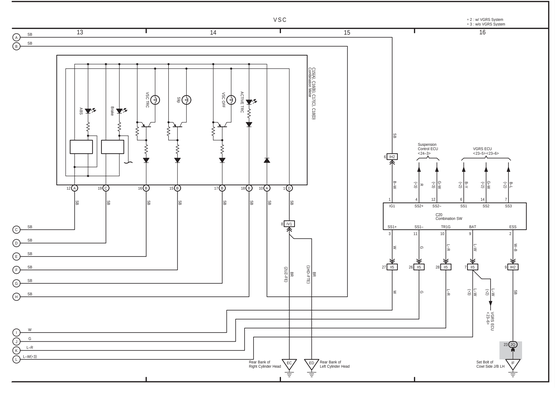

F ELECTRICAL WIRING DIAGRAM (System Circuits)

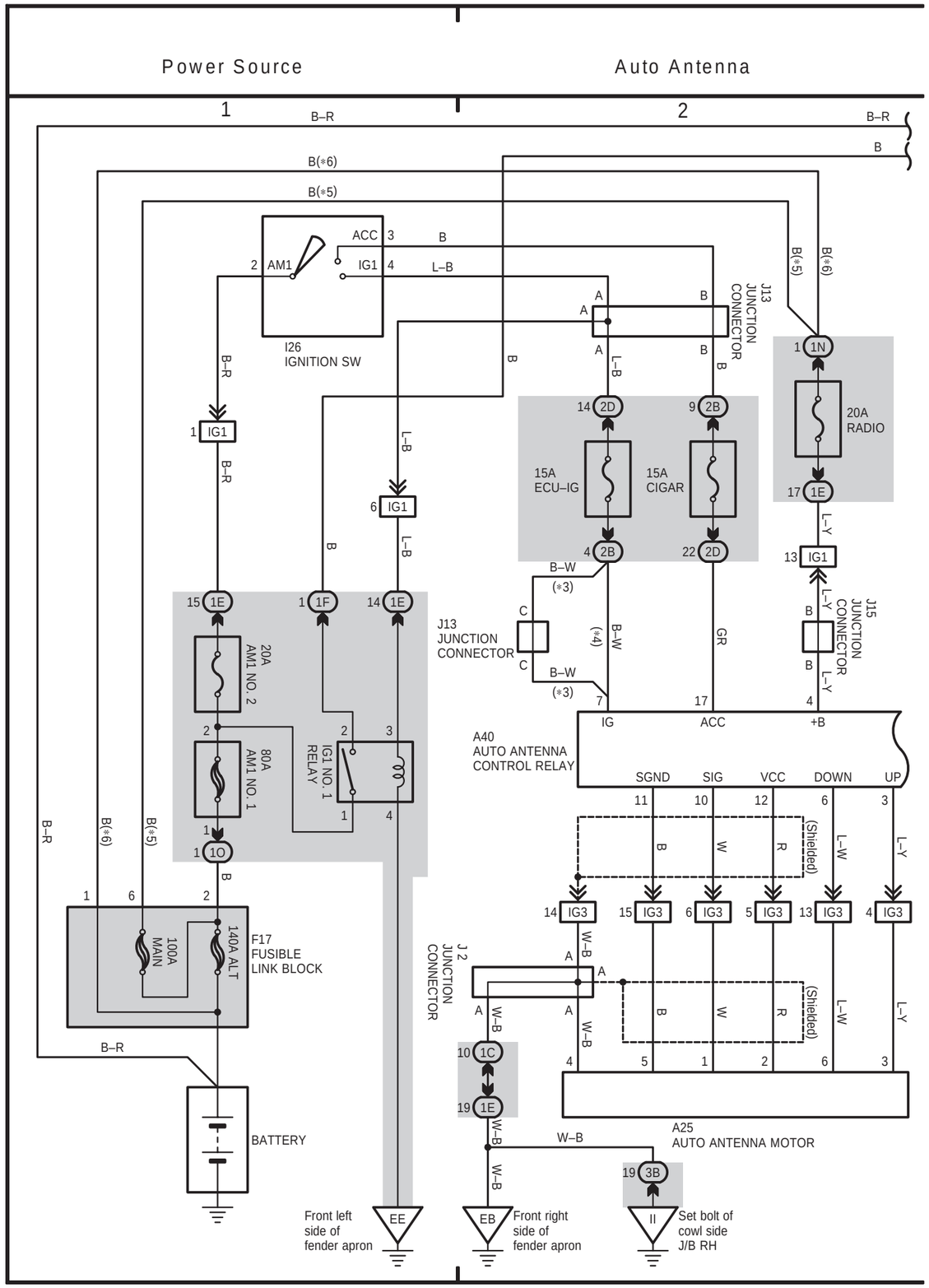

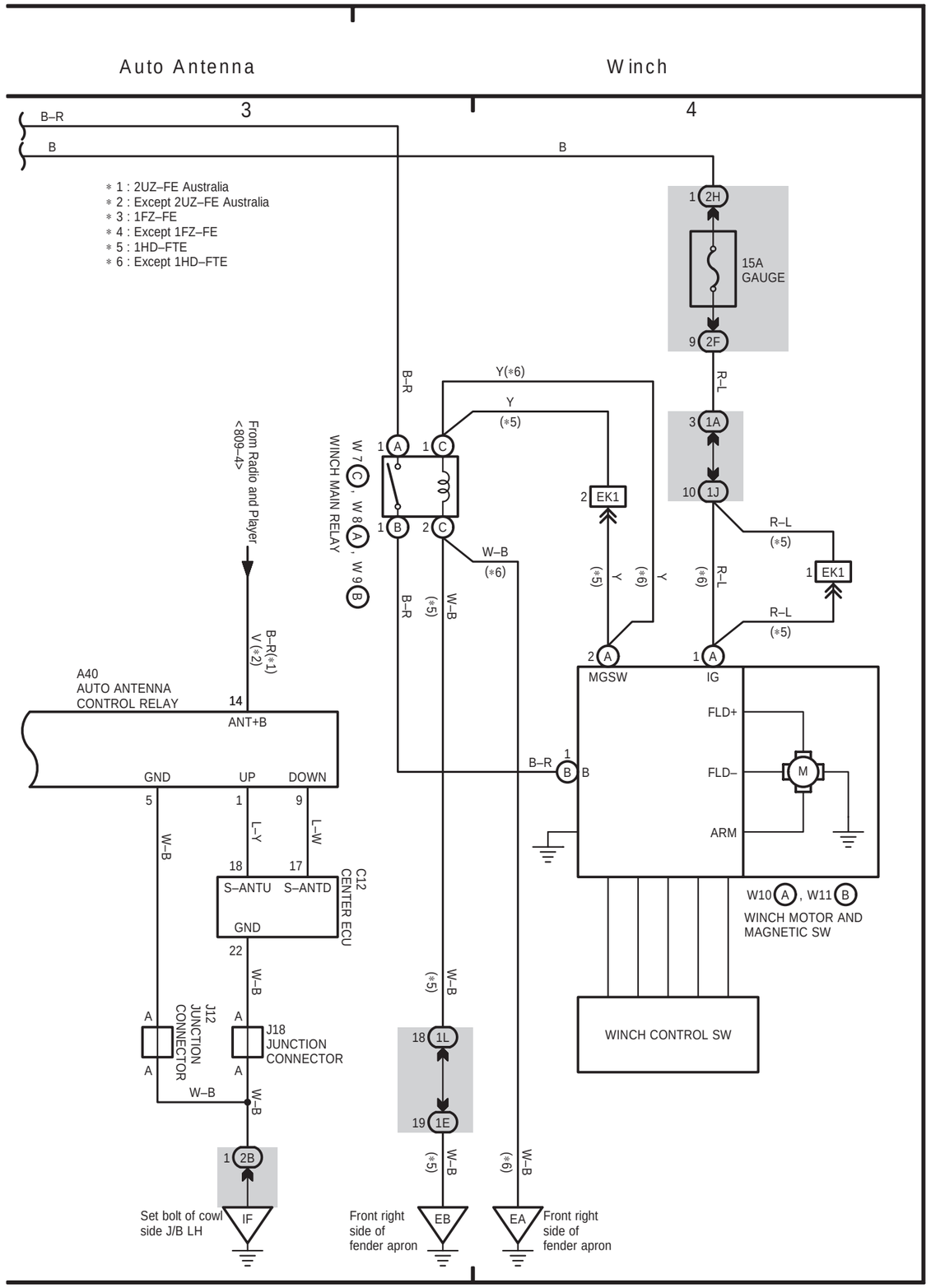

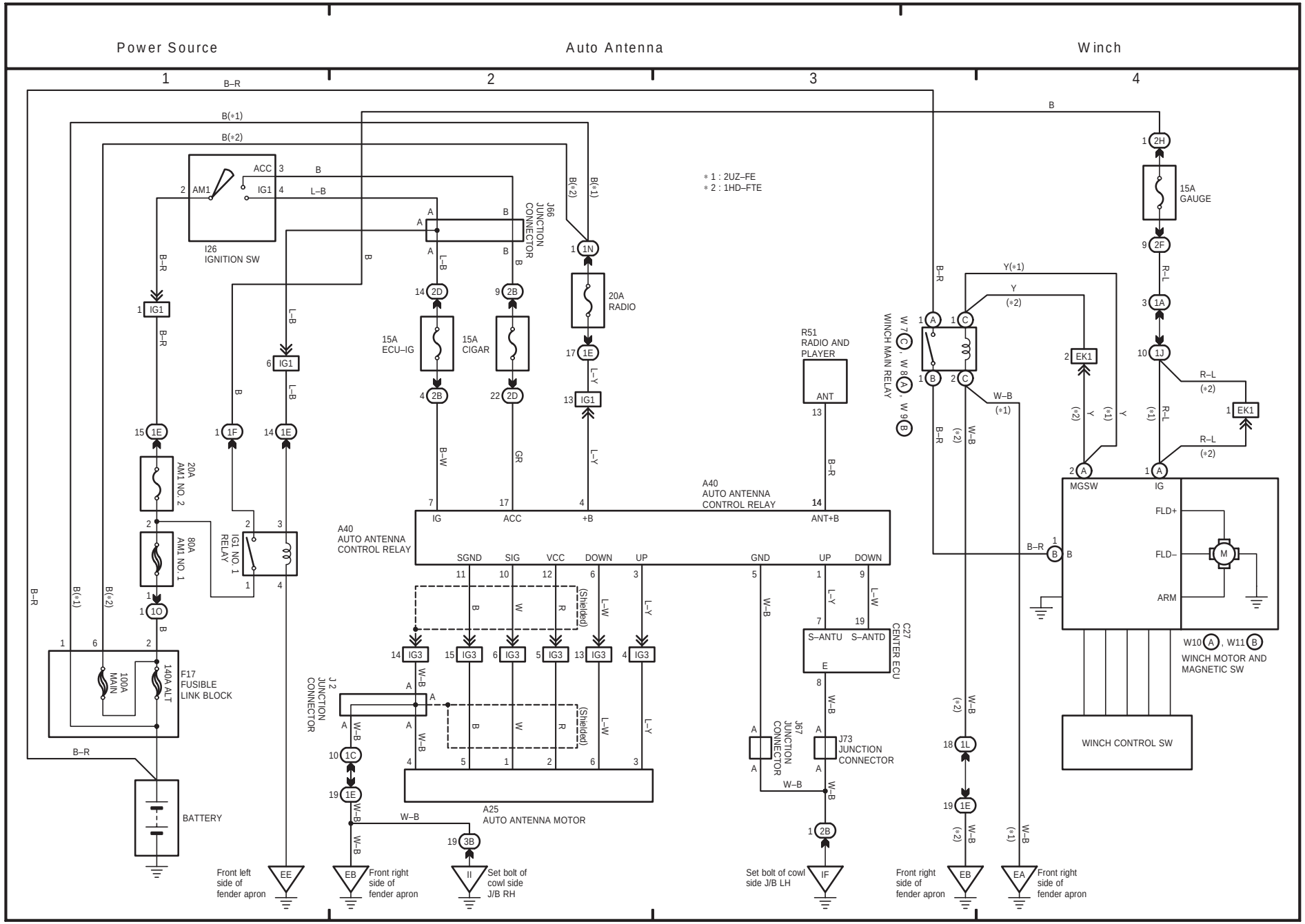
Power Source
Auto Antenna
Winch
1
2
3
4
B–R
B(*1)
B(*2)
B
ACC
IG1
AM1
I26
IGNITION SW
J66
JUNCTION
CONNECTOR
* 1 : 2UZ–FE
* 2 : 1HD–FTE
20A
RADIO
15A
ECU–IG
15A
CIGAR
R51
RADIO AND
PLAYER
ANT
W7 (C) , W8 (A) , W9 (B)
WINCH MAIN RELAY
Y(*1)
Y
(*2)
W–B
(*1)
15A
GAUGE
R–L
(*2)
(*1)
EK1
MGSW
IG
FLD+
FLD–
ARM
M
W10 (A) , W11 (B)
WINCH MOTOR AND
MAGNETIC SW
WINCH CONTROL SW
20A
AM1 NO. 2
80A
AM1 NO. 1
IG1 NO. 1
RELAY
F17
FUSIBLE
LINK BLOCK
100A
MAIN
140A ALT
BATTERY
A40
AUTO ANTENNA
CONTROL RELAY
IG
ACC
+B
ANT+B
B–W
GR
L–Y
L–B
L–W
W–B
R
W
B
(Shielded)
SGND
SIG
VCC
DOWN
UP
GND
IG3
J2
JUNCTION
CONNECTOR
A25
AUTO ANTENNA MOTOR
J67
JUNCTION
CONNECTOR
J73
JUNCTION
CONNECTOR
C27
CENTER ECU
S–ANTU
S–ANTD
E
Front left
side of
fender apron
EE
Front right
side of
fender apron
EB
Set bolt of
cowl side
J/B RH
II
Set bolt of cowl
side J/B LH
IF
Front right
side of
fender apron
EB
Front right
side of
fender apron
EA

46 LAND CRUISER (RHD)

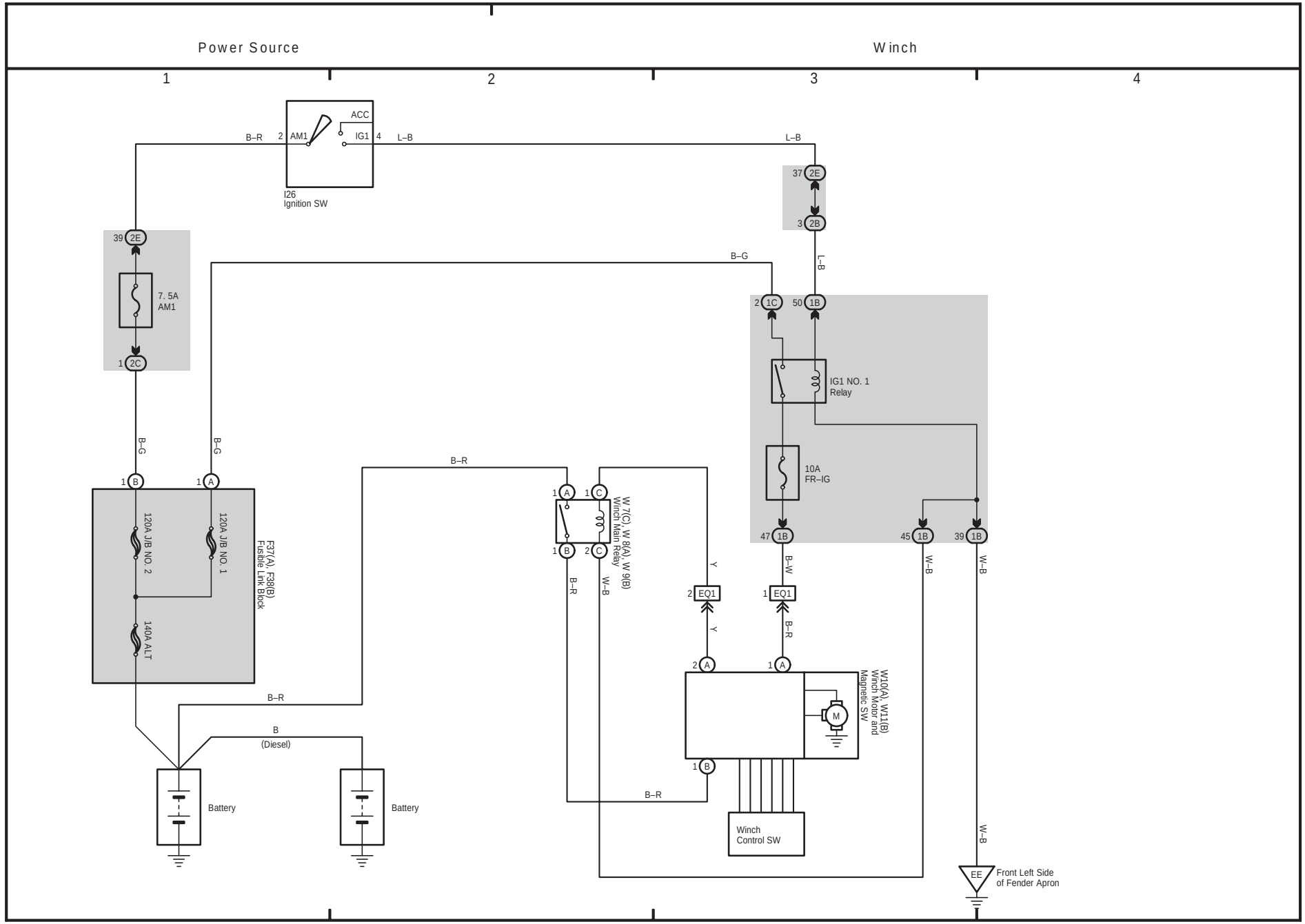

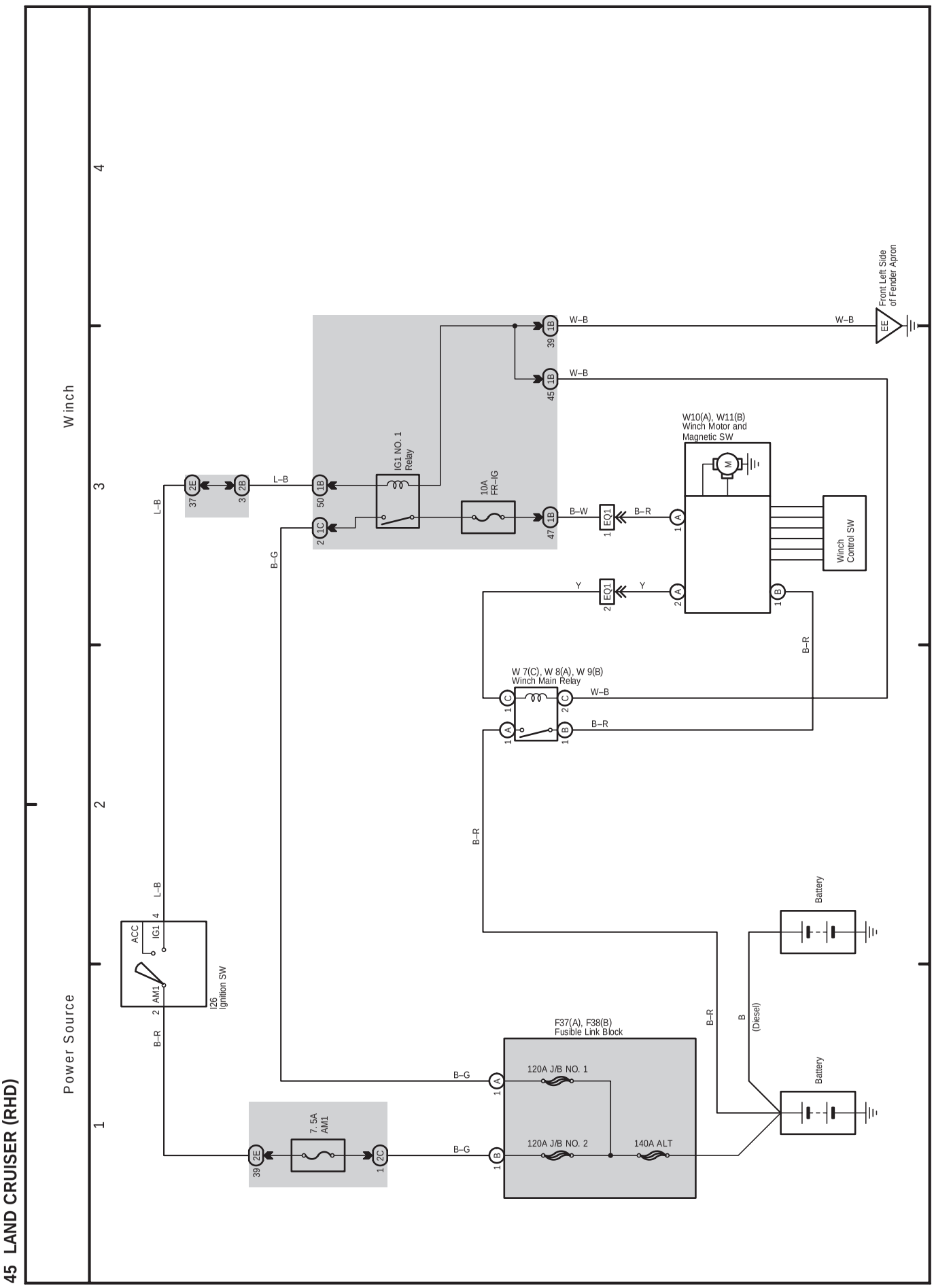
45 LAND CRUISER (RHD)
Power Source
Winch
1
2
3
4
Front Left Side of Fender Apron
EE
W–B
39 1B
45 1B
W10(A), W11(B) Winch Motor and Magnetic SW
M
Winch Control SW
IG1 NO. 1 Relay
10A FR–IG
37 2E
3 2B
50 1B
2 1C
47 1B
L–B
B–G
B–W
B–R
Y
EQ1
1 A
2 A
1 B
W 7(C), W 8(A), W 9(B) Winch Main Relay
1 C
2 C
1 A
1 B
ACC
IG1
AM1
4
2
I26 Ignition SW
Battery
B (Diesel)
F37(A), F38(B) Fusible Link Block
120A J/B NO. 1
120A J/B NO. 2
140A ALT
7. 5A AM1
39 2E
1 2C
1 A
1 B

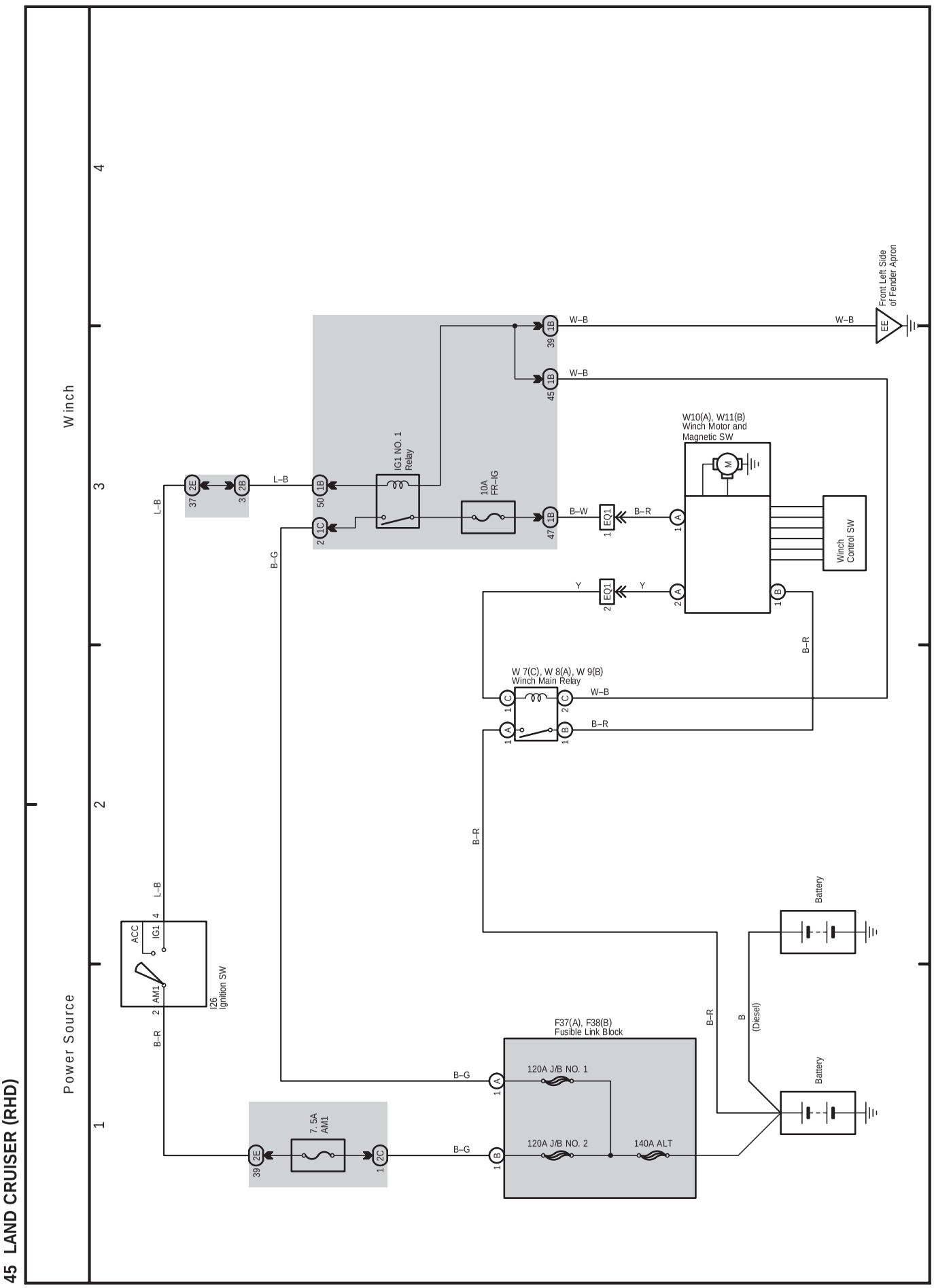
45 LAND CRUISER (RHD)
Power Source
Winch
1
2
3
4
Front Left Side of Fender Apron
EE
W–B
W10(A), W11(B) Winch Motor and Magnetic SW
M
Winch Control SW
IG1 NO. 1 Relay
10A FR–IG
EQ1
B–W
B–R
Y
L–B
B–G
W 7(C), W 8(A), W 9(B) Winch Main Relay
I26 Ignition SW
ACC
IG1
AM1
7. 5A AM1
F37(A), F38(B) Fusible Link Block
120A J/B NO. 1
120A J/B NO. 2
140A ALT
Battery
B (Diesel)