Jeep®

TECHNICAL SERVICE MANUAL

FOREWORD

All information and specifications in this manual are based on the latest data available at the time of publication. Jeep Corporation reserves the right to discontinue models and change specifications or design without notice or incurring obligation.

Trade names mentioned in this manual are for convenience only and are not intended to be a recommendation to use a specific brand of product. They are indicative of a class or type and may be substituted by an equivalent product.

Proper service and repair are essential to the safe and reliable operation of a motor vehicle. This manual contains recommended methods for performing proper service and repair. Use of improper methods could cause personal injury and render the vehicle unsafe.

Detailed descriptions of standard workshop safety procedures are not included in this manual. This manual does contain WARNINGS for some service procedures that could cause personal injury, and CAUTIONS for some procedures that could damage the vehicle or its components. Please understand that these WARNINGS and CAUTIONS do not cover all conceivable ways which service might be done or all possible hazardous consequences of each conceivable way. Anyone using service procedures or tools (whether or not recommended by Jeep Corporation) must satisfy himself that neither personal nor vehicle safety will be jeopardized by the procedures or tools selected.

1982 JEEP TECHNICAL SERVICE MANUAL

General Information

Maintenance

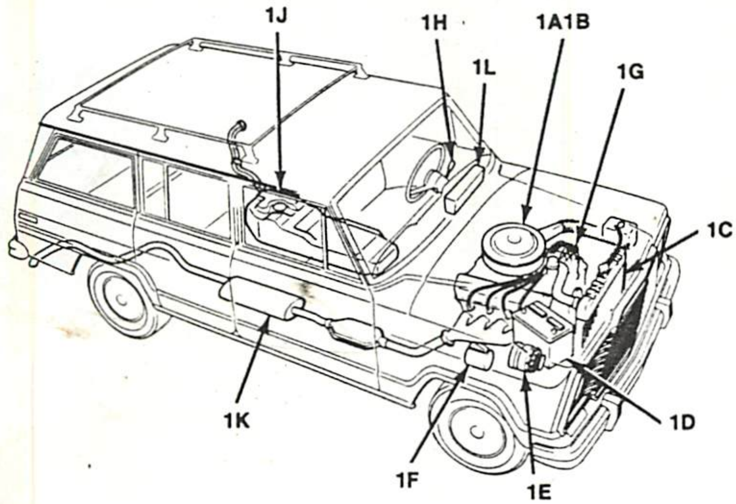

CHAPTERS
1A GENERAL SERVICE AND DIAGNOSIS
1B ENGINES
1C COOLING SYSTEMS
1D BATTERIES
1E CHARGING SYSTEM
1F STARTING SYSTEM
1G IGNITION SYSTEM
1H CRUISE COMMAND
1J FUEL SYSTEMS
1K EXHAUST SYSTEMS
1L ENGINE INSTRUMENTATION

PART 1 POWER PLANT

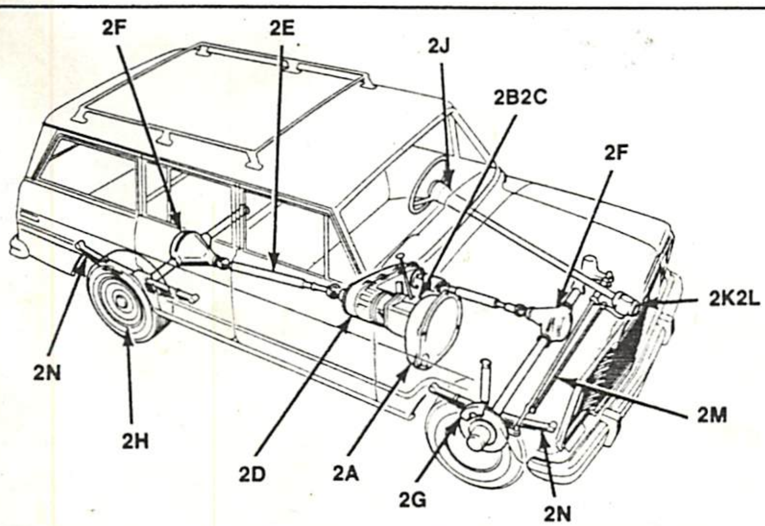

CHAPTERS
2A CLUTCH
2B MANUAL TRANSMISSION
2C AUTOMATIC TRANSMISSION
2D TRANSFER CASE
2E PROPELLER SHAFT
2F AXLES
2G BRAKES
2H WHEELS AND TIRES
2J STEERING COLUMNS
2K MANUAL STEERING GEAR
2L POWER STEERING GEAR AND PUMP
2M STEERING LINKAGE
2N SUSPENSION

PART 2 CHASSIS

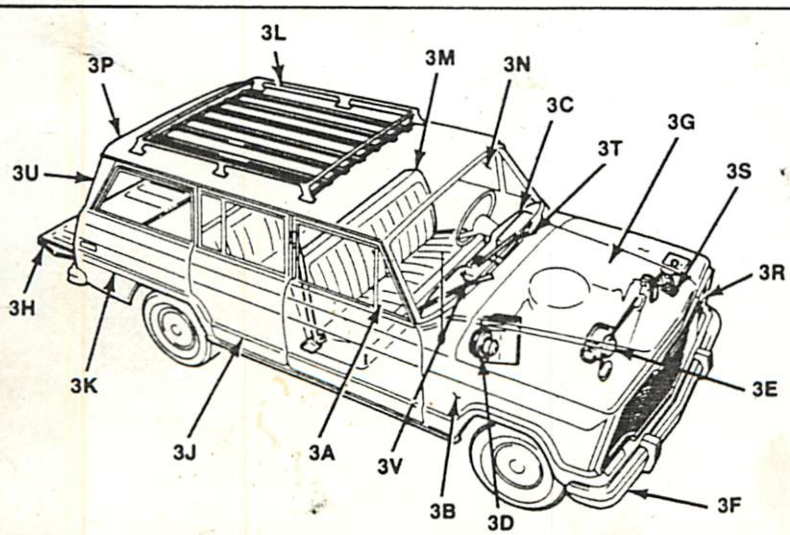

CHAPTERS
3A WATER LEAK/WIND NOISE DIAGNOSIS AND REPAIR
3B METAL REPAIR AND PAINTING
3C INSTRUMENT PANELS AND COMPONENTS
3D HEATER
3E AIR CONDITIONING
3F BODY AND FRAME COMPONENTS
3G HOODS
3H LIFTGATES — TAILGATES
3J DOORS
3K REAR QUARTER
3L HARDTOP ENCLOSURE — SUN ROOF AND LUGGAGE RACKS
3M SEAT ASSEMBLIES
3N WINDSHIELD — REAR WINDOW
3P HEADLINING — EXTERIOR DECALS AND OVERLAYS
3R LIGHTING SYSTEMS
3S HORN SYSTEMS
3T WINDSHIELD WIPERS
3U TAILGATE WINDOW DEFOGGER
3V RADIO SOUND SYSTEMS

PART 3 BODY

Alphabetical Index

Vacuum Line Routing Diagrams

Wiring Diagrams

Jeep Corporation
Service Department

GENERAL INFORMATION A

INDEX

HOW TO USE THIS MANUAL

Organization

This manual is divided into three major parts: Part 1—Power Plant, Part 2—Chassis and Part 3—Body. These parts are comprised of chapters pertaining to the various topics. The Index at the front of this manual has a locator tab for each part.

The first page of each chapter in this manual contains a black tab in a position corresponding to the tab on the Chapter Index page for each part. To locate a desired chapter, simply fold back the manual slightly so that the outside edges of the pages are exposed. Find the black tab that aligns with the tab on the Chapter Index page and open to the desired chapter.

Each chapter begins with an alphabetical index of subjects. Locate the desired subject and turn to the appropriate page. If the subject is broad, the chapter is divided into sections and a subject index of each section is also included. An alphabetical index of all subjects is located at the back of this manual.

Each chapter ends with specifications, torque charts and special tools pertinent to that chapter.

Warnings and Cautions

Detailed descriptions of standard workshop safety procedures are not included in this manual. This manual does contain WARNINGS for some service procedures that could cause personal injury, and CAUTIONS for some procedures that could damage the vehicle or its components. Please understand that these WARNINGS and CAUTIONS do not cover all conceivable ways which service might be done or all possible hazardous consequences of each conceivable way. Anyone using service procedures or tools (whether or not recommended by Jeep Corporation) must satisfy himself that neither personal nor vehicle safety will be jeopardized by the procedures or tools selected.

Diagnosis and Repair Simplification (DARS) Charts

In several places throughout this manual, Jeep Corporation's new Diagnosis and Repair Simplification (DARS) charts provide a graphic method of diagnosis and troubleshooting through the use of pictures and symbols.

The DARS charts are different from the ones you have used before. They are not "go-no go" decision trees or tables.

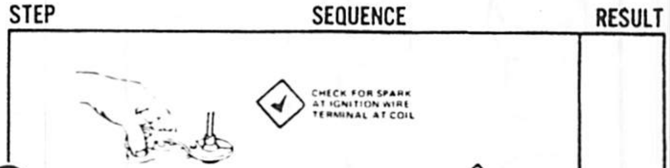

80371A

Instead, the new DARS charts use pictures plus a few words to help you solve a problem. . .

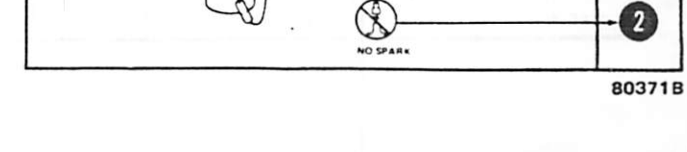

80371B

and symbols and words help guide you through each step. . .

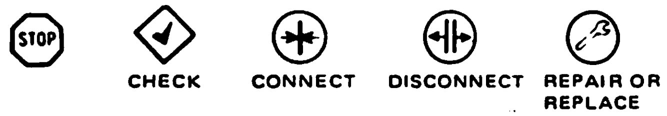

80371C

The charts are divided into three sections: **step, sequence** and **result.** Always start at the first step and go through the complete sequence from left to right.

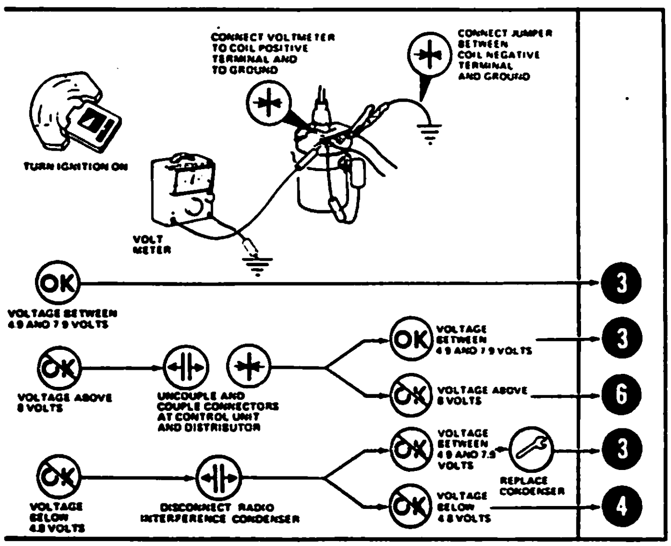

80371D

A sequence could be checking pressure in all tires and inflating to specified pressures. If the problem is solved, the symbol OK will send you to STOP. If the problem is not solved, the symbol OK will send you through another sequence of checks which ends with a result and tells you the next step to go to.

Work through each step of the DARS charts until the system is repaired STOP.

Service Diagnosis Charts

You will also find Service Diagnosis Charts throughout this manual. These charts list causes of specific problems in descending order of probability. It is more likely that a problem would result from the first listed "possible cause" than the fourth, for instance.

Visual inspection often leads directly to the correct solution. All service procedures should begin with a careful visual inspection of any suspected part or assembly.

Torque Information

Individual torque charts appear at the end of each chapter. Torque values are expressed two ways, Set-To and In-Use Recheck. The Set-To value is used when assembling components. The In-Use Recheck value is used to check pretightened items.

Refer to the Standard Torque Specifications and Capscrew Markings Chart in this chapter for torques not listed in individual torque charts. Note that torque specifications given in the chart are based on use of clean and dry threads. Reduce torque by 10 percent when threads are lubricated with engine oil and by 20 percent if new plated capscrews are used.

Standard Torque Specifications and Capscrew Markings Chart

CAPSCREW HEAD MARKINGS	CAPSCREW BODY SIZE Inches — Thread	SAE GRADE 1 or 2 (Used Infrequently)		SAE GRADE 5 (Used Frequently)		SAE GRADE 6 or 7 (Used at Times)		SAE GRADE 8 (Used Frequently)	
		Torque		Torque		Torque		Torque	
		Ft-Lb	Nm	Ft-Lb	Nm	Ft-Lb	Nm	Ft-Lb	Nm
Manufacturer's marks may vary. Three-line markings on heads shown below, for example, indicate SAE Grade 5.	1/4-20 -28	5 6	6.7791 8.1349	8 10	10.8465 13.5582	10	13.5582	12 14	16.2698 18.9815
	5/16-18 -24	11 13	14.9140 17.6256	17 19	23 0489 25.7605	19	25.7605	24 27	32.5396 36 6071
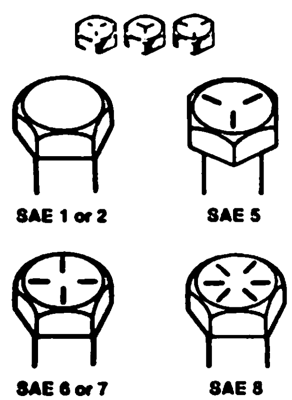	3/8-16 -24	18 20	24.4047 27.1164	31 35	42.0304 47.4536	34	46.0978	44 49	59.6560 66.4351
	7/16-14 -20	28 30	37.9629 40.6745	49 55	66.4351 74.5700	55	74.5700	70 78	94.9073 105.7538
	1/2-13 -20	39 41	52.8769 55.5885	75 85	101.6863 115.2445	85	115.2445	105 120	142.3609 162.6960
SAE 1 or 2 — SAE 5	9/16-12 -18	51 55	69.1467 74.5700	110 120	149.1380 162.6960	120	162.6960	155 170	210.1490 230.4860
	5/8-11 -18	83 95	112.5329 128.8027	150 170	203.3700 230.4860	167	226.4186	210 240	284.7180 325.3920
	3/4-10 -16	105 115	142.3609 155.9170	270 295	366.0660 399.9610	280	379.6240	375 420	508.4250 569.4360
	7/8- 9 -14	160 175	216.9280 237.2650	395 435	535.5410 589.7730	440	596.5520	605 675	820.2590 915.1650
SAE 6 or 7 — SAE 8	1- 8 -14	235 250	318.6130 338.9500	590 660	799.9220 894.8280	660	894.8280	910 990	1233.7780 1342.2420

70090

Torx-Head Fasteners

Various sizes of internal and external hex-lobular (Torx) head fasteners are used as attaching hardware on numerous components and assemblies in 1981 Jeep vehicles. Due to the ever-changing usage and application of automotive fasteners, Torx-head fasteners may not be identified as such throughout this manual. However, these fasteners may be removed or installed using Tool Set J-25359-C.

Service Manual Improvements

You are encouraged to report any errors, omissions, or recommendations for improving this publication. A form provided for this purpose is included at the end of this chapter.

1982 MODEL JEEP VEHICLES

CJ/Scrambler Models

Two CJ models are available for 1982: the 83.4-inch wheelbase CJ-5, model 85, and the 93.4-inch wheelbase CJ-7, model 87. See figures A-1 and A-2. Beyond the 10-inch difference in wheelbase, CJ-5 and CJ-7 differ primarily in available options. CJ-7 models are available with an automatic transmission, soft top with metal doors, moulded hardtop and moon roof. These options are not available on CJ-5 models.

The Renegade package continues to be offered on CJ models for 1982. The package features "Tracker PG" L78x15 tubeless tires mounted on 7-inch wide, styled-steel wheels along with unique exterior and interior trim.

The Laredo package is available on CJ models for 1982. It includes unique exterior paint and decals; chrome front bumper, rear bumperettes, mirror heads and arms, and body side steps; 15-inch x 7-inch styled-steel wheels with 9Rx15 "Wrangler" radial tires, and a deluxe interior with tachometer and clock.

A new CJ-7 Limited package is available for 1982. The package features special ride components, chrome front bumper, rear bumperettes, mirror heads and arms, bodyside steps; 15-inch x 7-inch white styled-steel wheels with black "Arriva" radial tires and a deluxe interior with special carpeting and padding.

Fig. A-1 CJ-5 Model

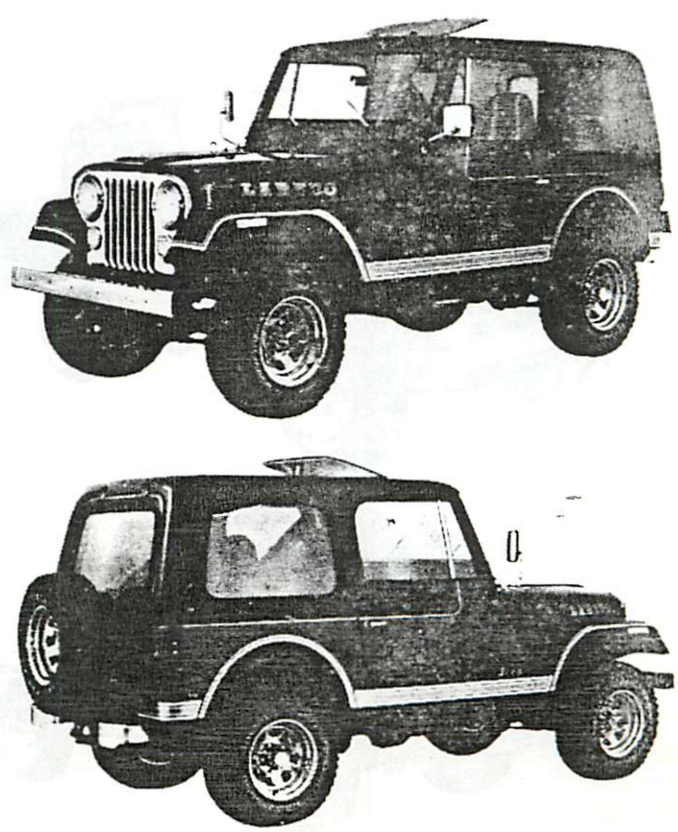

Fig. A-2 CJ-7 Model

The Scrambler is a 103.4-inch wheelbase, half-cab, sport/utility vehicle with a truck-type cargo box at the rear. Four body versions are available which are: a base model with open top configuration, a fabric top model with metal doors (fig. A-3), a fabric top model with fabric doors, and a hardtop model with metal doors (fig. A-4).

The standard powertrain for Scrambler models is the 151 CID four-cylinder engine, four-speed manual transmission, 3.54 ratio axles and the model 300 transfer case. A six-cylinder engine, automatic transmission, different ratio axles, and a Trac-Lok rear axle differential are all available as options.

Fig. A-3 Scrambler Hardtop with Metal Doors

Fig. A-4 Scrambler Soft Top with Metal Doors

Cherokee Models

For 1982, three Cherokee models are offered: the base 2-door model 16, the Wide Track model 17, and the 4-door model 18. See figures A-5, A-6 and A-7.

The 2-door model 16 is a dual purpose vehicle in the sports/utility class featuring an all-steel top, front disc brakes and foldup rear seat as standard.

The Wide Track model 17 features steel wheel opening extensions to accommodate L78x15 tubeless tires mounted on 8-inch wide, styled-steel wheels.

The 4-door model 18 features the convenience of rear doors in a station wagon-type vehicle. The model 18 has the same grille and taillamps as other Cherokee models.

Two trim packages are offered for 1982 Cherokee models. The Chief and Laredo packages are available on the model 17. Both packages feature deluxe interior trim and carpeting, chrome bumpers, and unique exterior trim.

Fig. A-5 Cherokee Model 16

Fig. A-6 Cherokee Model 17

Fig. A-7 Cherokee Model 18

Fig. A-8 Wagoneer Model 15

Wagoneer Model

For 1982, one Wagoneer model is offered: the model 15. The 4-door Wagoneer station wagon features deluxe interior trim and carpeting, chrome bumpers and power steering. A luxury trim package, the Limited, is offered. It features a leather and corduroy interior, unique exterior woodgrain with vinyl surround mouldings, forged aluminum wheels, and automatic transmission with Quadra-Trac full-time 4-wheel drive as standard. See figure A-8.

Truck Models

The truck models are available in two series: the J-10 Series model 24, 25 and 26, and the J-20 Series model 27 (figs. A-9, A-10 and A-11).

The J-10 models differ from the J-20 model in gross vehicle weight (GVW) ratings. For 1982, the J-10 Series GVW for models 24, 25 and 26 is 6200 while the J-20 model 27 GVW remains at 6800 with optional GVW of 7600 and 8400.

The Truck models are also identified by wheelbase. Models 24 and 25 have a 118.8-inch wheelbase; models 26 and 27 have a 130.8-inch wheelbase. The following chart outlines Truck differences by wheelbase and GVW ratings.

Truck Model Identification

Series	Model Number	Wheelbase (Inches)	Gross Vehicle Weight Rating		
			Standard	Option 1	Option 2
J-10	24	118.8	6200	–	–
J-10	25	118.8	6200	–	–
J-10	26	130.8	6200	–	–
J-20	27	130.8	6800	7600	8400

60532

Many trim packages are available on Truck models: Custom, Honcho, Laredo, Pioneer, Sportside and Honcho Sportside. The Custom and Pioneer package are available on all Trucks and features deluxe interior and exterior trim. The Honcho package is only available on model 25 and features deluxe interior and unique exterior trim, and 15-inch tires mounted on 8-inch wide, styled-steel wheels.

The Laredo package is available on model 25 trucks. The package includes unique exterior decals, 10R x 15 "Wrangler" radial tires mounted on 8-inch wide chrome styled-steel wheels, chrome rear step bumper, and deluxe interior.

The Sportside Truck package is available on model 25 and features a flare side box with bottom rear fenders and deluxe interior trim.

The Honcho Sportside package is available on model 25 and features a flare side box with bottom rear fender and special interior and exterior trim and decals.

Fig. A-9 J-10 Truck Model 24

Fig. A-10 J-10 Truck Model 25

Fig. A-11 J-20 Truck Model 27

VEHICLE IDENTIFICATION

Vehicle Identification Plate

A metal vehicle identification plate is affixed to the left-hand side of the dash panel (fig. A-12). The plate shows the Sales Order Number; the Vehicle Identification Number (VIN); Special Sales Request & Order (SSR & O) Number; Paint Option Number; Trim Option Number; and the Jeep Model Number.

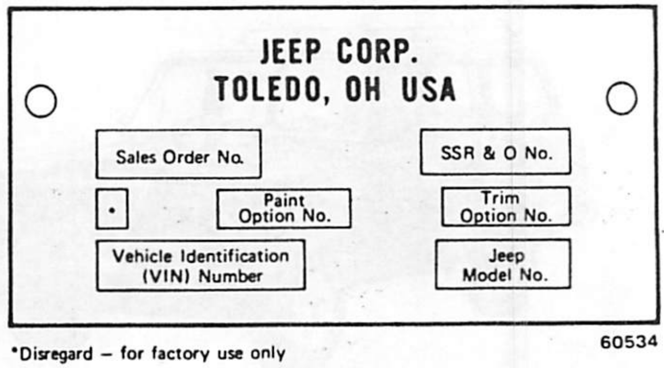

Fig. A-12 Vehicle Identification Plate

Vehicle Identification Number (VIN)

All Vehicle Identification Numbers contain 17 characters in a combination of letters and numbers that provide specific information about the vehicle. VIN's for all Jeep vehicles can be decoded using the following chart.

Special Sales Request and Order (SSR & O) Number

Certain Jeep vehicles are built to special order with other than standard parts or equipment. To assist the dealer in ordering correct replacement parts, an SSR & O number is assigned and a permanent record of the deviation is maintained by the factory. The SSR & O number is embossed on the Vehicle Identification Plate as shown in figure A-12.

Parts ordering procedure for SSR & O parts is detailed in the Jeep Parts Catalog.

Paint Option Number

The Paint Option Number is embossed on the Vehicle Identification Plate in the location shown in figure A-12.

Paint is not available from the factory. All colors shown below are available from Ditzler or DuPont paint jobbers by requesting the paint intermix formula. All colors are available from Sherwin-Williams in factory package cans. Option No. 999 indicates special paint. To obtain information on special paint, contact your Jeep Parts Distribution Center and provide the Vehicle Identification Number (VIN).

Trim Option Number

The Trim Option Number is embossed on the Vehicle Identification Plate as shown in figure A-12. Consult your Jeep Parts Catalog for trim ordering procedure. Special trim is indicated by trim option number 999. To obtain information on special trim, contact your Jeep Parts Distribution Center and provide the Vehicle Identification Number (VIN).

VIN Decoding Chart

Cherokee, Wagoneer and Truck

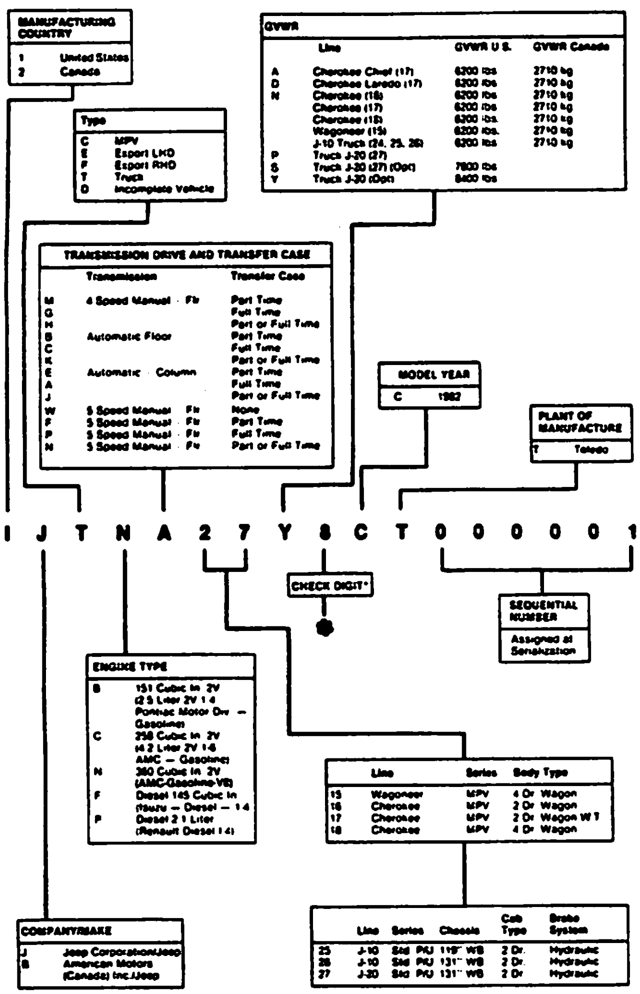

*NOTE: In order to comply with EEC directives 76/114 and 78/507, the check digit will be replaced with the letter 'E' in the VIN of all ECE vehicles.

CJ and Scrambler

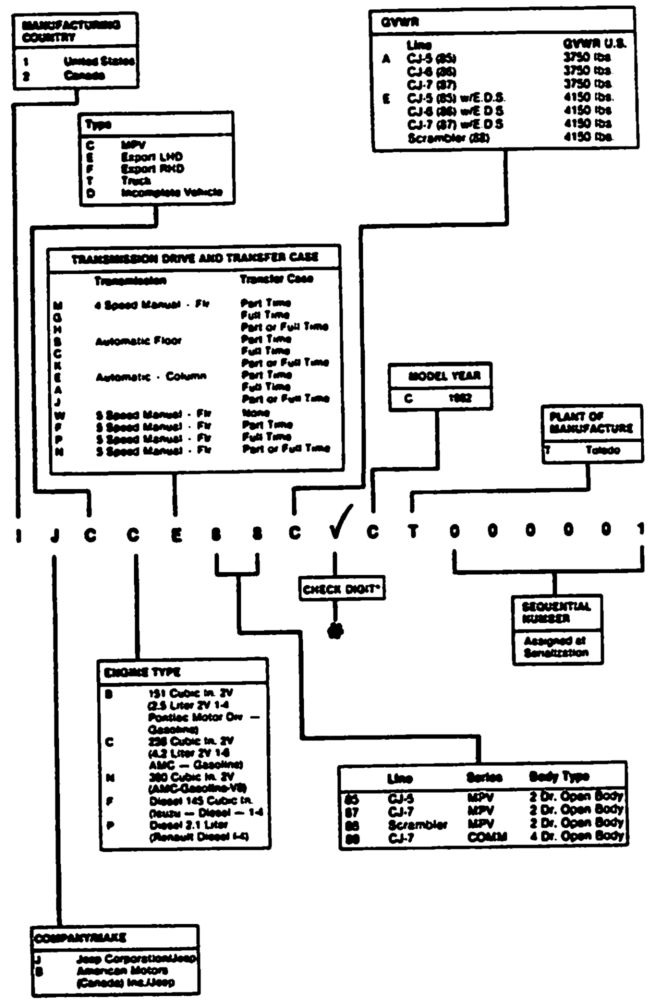

*NOTE: In order to comply with EEC directives 76/114 and 78/507, the check digit will be replaced with the letter 'E' in the VIN of all ECE vehicles.

●

STEP

1. Assign to each number in the vehicle identification number its actual mathematical value and assign to each letter the value specified for it in the following table:

TABLE I

A-1	J-1	T-3
B-2	K-2	U-4
C-3	L-3	V-5
D-4	M-4	W-6
E-5	N-5	X-7
F-6	P-7	Y-8
G-7	R-9	Z-9
H-8	S-2	

STEP

2. Multiply the assigned value for each character in the vehicle identification number by the weight factor specified for it in Table II. Multiply the check digit by 0.

TABLE II

Character	Weight Factor
1st	8
2nd	7
3rd	6
4th	5
5th	4
6th	3
7th	2
8th	10
9th (check digit)	0
10th	9
11th	8
12th	7
13th	6
14th	5
15th	4
16th	3
17th	2

STEP

3. Add the resulting products and divide the total by 11. The remainder is the check digit. If the remainder is 10, the check digit is X.

Example

Vehicle Identification	1 J T N A 2 7 Y 8 C T 0
Number Charcter	0 0 0 0 1
Assigned Value	1 1 3 5 1 2 7 8 0 2 3 0 0
	0 0 0 1
Multiply by	8 7 6 5 4 3 2 10 0 9 8 7
Weight Factor	6 5 4 3 2
Add Products	8+7+18+25+4+6+14+ 80+0+18+24+0+0+0+0 +0+2 = 206
Divided by 11	206/11 = 18 8/11
Check Digit	8

60535

Paint Option Numbers

Paint Option Number	Color
P1	Classic Black
9B	Olympic White
OM	Dark Brown Metallic
1C	Sherwood Green Metallic
1E	Copper Brown Metallic
1H	Chestnut Brown Metallic
1K	Deep Maroon Metallic
1M	Oriental Red
2A	Mist Silver Metallic
2B	Sun Yellow
2C	Slate Blue Metallic
2D	Deep Night Blue
2H	Topaz Gold Metallic
2J	Jamaican Beige

80379

Safety Certification Sticker

A safety sticker is placed on all vehicles to show that they meet federal motor vehicle safety certification standards (fig. A-13). It lists the VIN, month and year built, Gross Vehicle Weight Rating (GVWR), and Gross Axle Weight Rating (GAWR).

The sticker is located on the inside panel directly below the door opening on the drivers side on CJ-5, CJ-7 and Scrambler models. On Cherokee, Wagoneer and Truck models, it is on the door lock pillar on the driver's side.

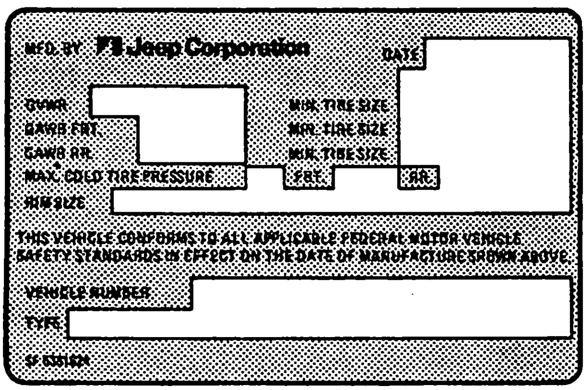

80384

Fig. A-13 Safety Sticker

KEYS AND LOCKS

Two square-headed and two oval-headed keys are provided, as applicable, with each vehicle. The square-headed (code D) key operates the ignition switch, front door locks, and Cherokee/Wagoneer tailgates. The oval-headed (code E) key operates the glove box lock. Each key has a code number stamped on the knock-out plug. In the event a key is lost, a new key can be made by converting the key code number to a key bitting number. Key bitting numbers can be obtained from a key cutting machine manufacturer's cross-reference list or by contacting your Zone office.

If a key is lost and the key code number is unknown, the correct number can be identified by the Zone office from the vehicle identification number.

If the ignition key is lost and the key code number is not available, a new key can be made by removing a door lock and taking it to a locksmith. The locksmith can determine the key bitting by inserting a blank key into the lock cylinder and cutting the blank to match the tumblers.

If the ignition switch lock is defective and the key is available, the cylinder and individual tumblers can be ordered and matched to the existing key. To determine the tumbler arrangement, place the key over the template (fig. A-14). Starting from the left, read across the horizontal lines and record first digit (number 1 position) of the key code. Continue this process for subsequent numbers 2 through 5.

NOTE: *The template shown in figure A-14 may be used to determine the key bitting code of a key for which the key code number is unknown.*

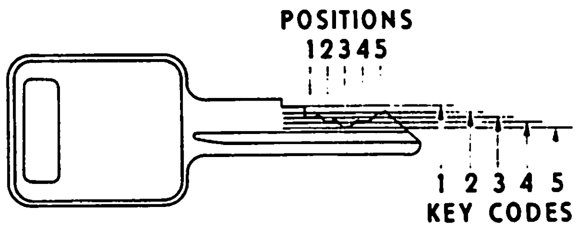

41049

Fig. A-14 Key Coding Template

TOWING

General

A conventional towing sling is recommended for use on all Jeep vehicles because of its stability and reduced likelihood of damage. The following instructions apply only to this device. When using other than sling-type towing equipment, be sure to follow the manufacturer's instructions.

A safety chain system that is completely independent of the lifting and towing attachment must be used. Be careful when installing safety chains so that they do not damage the vehicle.

If additional ground clearance is required, a towing dolly may be used. The end of the vehicle to be placed on the dolly should be lifted with the same equipment as when towing.

CJ and Scrambler Models

Front Towing—Front End Raised

Part Time Transfer Case

Do not exceed a towing speed of 30 mph (48 km/h) and do not exceed a towing distance of 15 miles (24 km).

Index and disconnect rear propeller shaft or place a dolly under rear wheels.

Rear Towing—Rear End Raised

Part Time Transfer Case

Do not exceed a towing speed of 30 mph (48 km/h) and do not exceed a towing distance of 15 miles (24 km). Index and disconnect front propeller shaft or place a dolly under front wheels.

If ignition key is available, turn ignition to Off position to unlock steering column. Clamp the steering wheel in the straight-ahead position. Do not use the steering column lock as a substitute for a clamping device.

If ignition key is not available, place front wheels on a dolly.

Cherokee-Wagoneer-Truck Models

Front Towing—Front End Raised

Part Time Transfer Case—Manual Transmission

Do not exceed a towing speed of 30 mph (48 km/h) and do not exceed a towing distance of 15 miles (24 km).

(1) Shift transmission into gear and the transfer case into N (Neutral).

Part Time Transfer Case—Automatic Transmission

Do not exceed a towing speed of 30 mph (48 km/h) and do not exceed a towing distance of 15 miles (24 km).

(1) Shift automatic transmission into Park.
(2) Shift transfer case into Neutral position.

Quadra-Trac—Automatic Transmission

Do not exceed a towing speed of 30 mph (48 km/h) and do not exceed a towing distance of 15 miles (24 km).

(1) Turn ignition switch to Off position to unlock steering wheel.
(2) Shift automatic transmission into Park.
(3) Shift transfer case into Neutral position.

Rear Towing—Rear End Raised

Part Time Transfer Case—Manual Transmission

Do not exceed a towing speed of 30 mph (48 km/h) and do not exceed a towing distance of 15 miles (24 km).

If ignition key is available, turn ignition to Off position to unlock steering column. Clamp the steering wheel in the straight-ahead position. Do not use steering column lock as a substitute for a clamping device. Shift transmission into gear and transfer case into Neutral. Turn selective drive hubs to 4 x 4/LOCK position.

If ignition key is not available, place front wheels on a dolly.

Part Time Transfer Case—Automatic Transmission

Do not exceed a towing speed of 30 mph (48 km/h) and do not exceed a towing distance of 15 miles (24 km).

If ignition key is available, turn ignition to Off position to unlock steering column. Clamp the steering wheel in the straight-ahead position. Do not use steering column lock as a substitute for a clamping device. Shift transmission into Park and transfer case into Neutral. Turn selective drive hubs to 4 x 4/LOCK position.

If ignition key is not available, place front wheels on a dolly.

Quadra-Trac—Automatic Transmission

Do not exceed a towing speed of 30 mph (48 km/h) and do not exceed a towing distance of 15 miles (24 km).

If ignition key is available, turn ignition to Off position to unlock steering column. Clamp steering wheel in the straight-ahead position. Do not use steering column lock as a substitute for a clamping device. Shift transmission into Park and transfer case into Neutral.

If ignition switch is not available, place front wheels on a dolly.

Safety Precautions

- Whenever possible, tow the vehicle from the rear to prevent damage to the transmission or rear axle.
- Secure loose or protruding parts of a damaged vehicle.
- The end of the vehicle being towed should be lifted a minimum of four inches off the ground. Check opposite end for adequate ground clearance.
- Always use a safety chain system that is independent of the lifting and towing attachment.
- Do not allow any of the towing equipment to bear on the fuel tank.
- Do not go under the vehicle while it is lifted by the towing equipment.
- Do not allow passengers to ride in a towed vehicle.
- Always observe all state and local laws regarding such items as warning signals, night illumination, speed, etc.
- Do not attempt a towing operation which could jeopardize the operator, any bystanders or other motorists.

CJ and Scrambler Models

Front (Refer to Figure A-15)

(1) Attach J-hooks over axle outboard of springs.
(2) Place towbar under spring shackles.
(3) Attach safety chains around spring shackles.

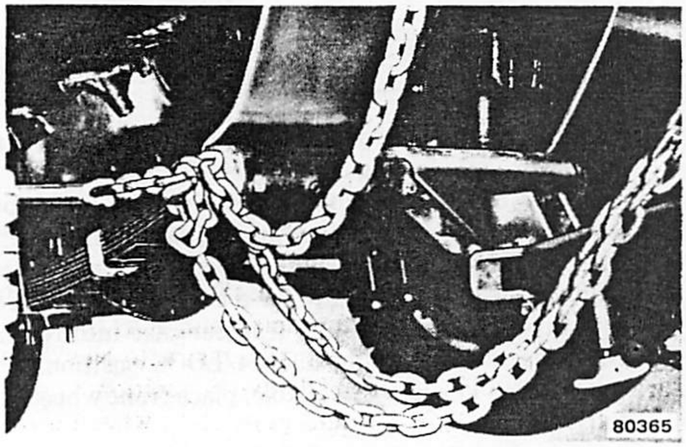

Fig. A-15 Front Towing—CJ and Scrambler Models

Rear (Refer to Figure A-16)

(1) Attach J-hooks around axle outboard of springs.
(2) Place towbar under bumper plate.
(3) Attach safety chains around spring shackles.

CAUTION: *To prevent damage to drive line members shift the transmission and transfer case into the correct position as outlined in the general towing instructions.*

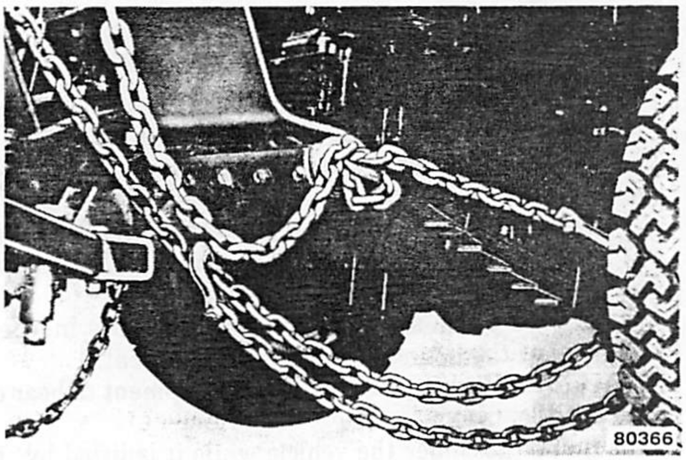

Fig. A-16 Rear Towing—CJ and Scrambler Models

Cherokee and Wagoneer Models

Front (Refer to Figure A-17)

(1) Attach J-hooks around axle outboard of shock absorbers.
(2) Place towbar under spring shackles.
(3) Attach safety chains around spring shackles.

CAUTION: *To prevent damage to drive line members, shift the transmission and transfer case into the correct position as outlined in the general towing instructions.*

Rear (Refer to Figure A-18)

(1) Attach J-hooks around axle outboard of shock absorber brackets.
(2) Place towbar under bumper.
(3) Attach safety chains around frame rails.

CAUTION: *To prevent damage to drive line members, shift the transmission and transfer case into the correct position as outlined in the general towing instructions.*

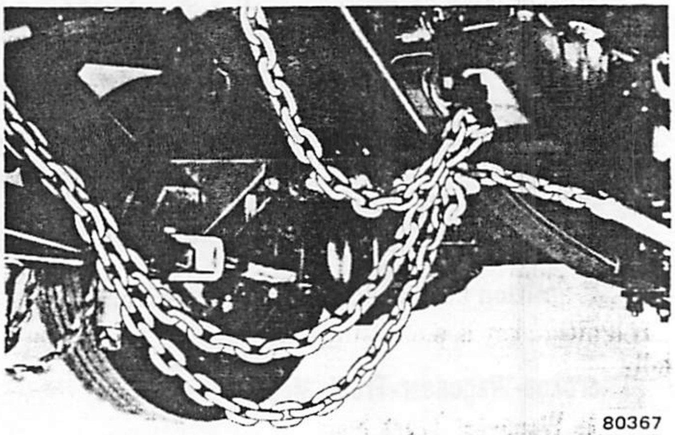

Fig. A-17 Front Towing—Cherokee and Wagoneer Models

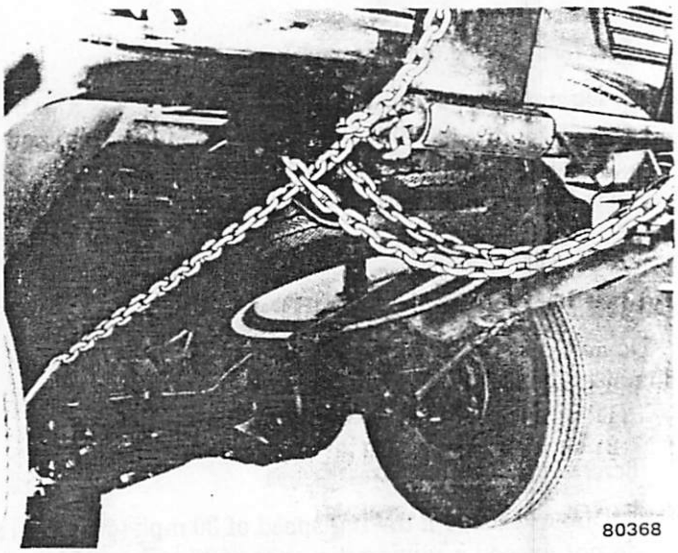

Fig. A-18 Rear Towing—Cherokee and Wagoneer Models

Truck Models

Front (Refer to Figure A-19)

(1) Attach J-hooks around axle outboard of shock absorbers.
(2) Place towbar under spring shackles.
(3) Attach safety chains around spring shackles.

CAUTION: *To prevent damage to drive line members, shift the transmission and transfer case into the correct position as outlined in the general towing instructions.*

Rear (Refer to Figure A-20)

(1) Attach J-hooks around axle outboard of shock absorbers.

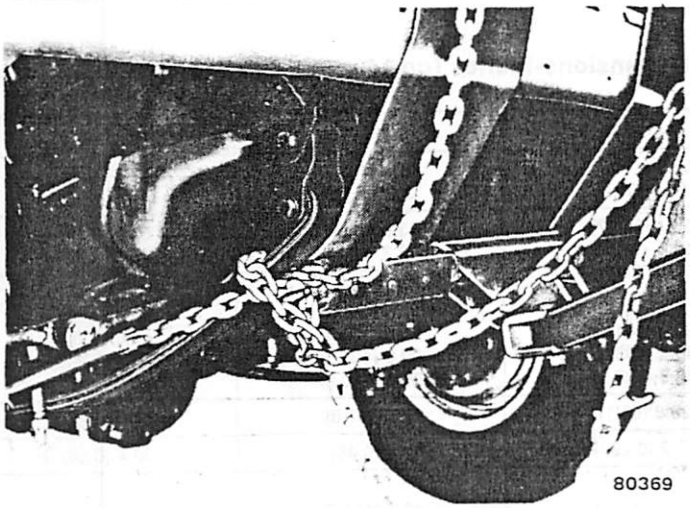
80369

Fig. A-19 Front Towing—Truck Models

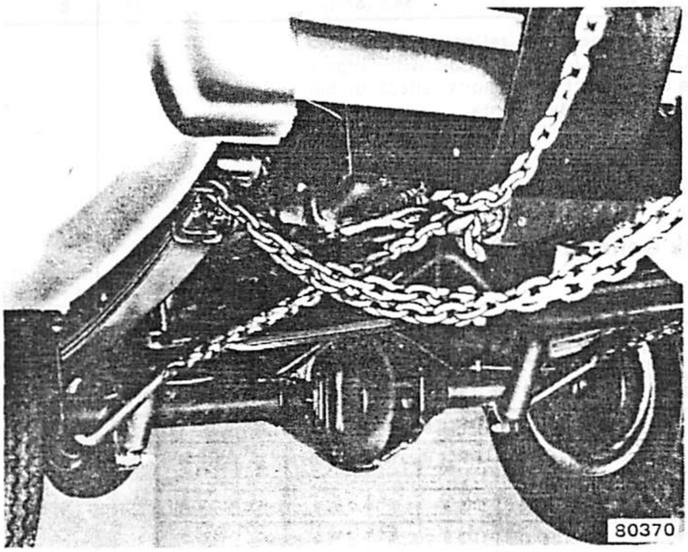
80370

Fig. A-20 Rear Towing—Truck Models

(2) Place towbar under frame cross rail.
(3) Attach safety chains around spring shackles.

CAUTION: *To prevent damage to drive line members, shift the transmission and transfer case into the correct position as outlined in the general towing instructions.*

CONVERSION OF ENGLISH AND METRIC MEASURES

Cubic Centimeters to Inches: To change cubic centimeters to cubic inches, multiply cubic centimeters by 0.061 (cc x 0.061 equals cubic inch).

Cubic Inches to Centimeters: To change cubic inches to cubic centimeters, multiply cubic inches by 16.39 (cubic inch x 16.39 equals cc).

Liters to Cubic Inches: To change liters to cubic inches, multiply liters by 61.02 (liter x 61.02 equals cubic inches).

Cubic Inches to Liters: To change cubic inches to liters, multiply cubic inches by 0.01639 (cubic inches x 0.01639 equals liters).

Cubic Centimeters to Liters: To change centimeters to liters, divide by 1000 (simply move the decimal point three figures to the left).

Liters to Cubic Centimeters: To change liters to cubic centimeters, move the decimal point three figures to the right.

Miles to Kilometers: To change miles to kilometers, multiply miles by 1.609 (miles x 1.609 equals kilometers).

Kilometers to Miles: To change kilometers to miles, multiply kilometers by 0.6214 (kilometers x 0.6214 equals miles).

Pounds to Kilograms: 1 pound equals 0.4536 kg.

Kilograms to Pounds: 1 kg equals 2.2046 pounds.

CJ and Scrambler General Dimensions-Inches (cm)

	CJ-5	CJ-7	Scrambler
Wheelbase	83.4 (211.8)	93.4 (237.2)	103.4 (262.6)
Overall Length — Body	144.2 (366.3)① 139.3 (353.8)②	153.2 (389.1) 153.2 (389.1)	166.2 (422.1)③ 177.2 (450.1)④
Overhang — Front — Rear	23.5 (59.7) 37.4 (95.0)① 32.4 (82.3)②	23.5 (59.7) 36.3 (92.2)	23.5 (59.7) 39.3 (99.8)③ 50.3 (127.8)④
Overall Width	59.9 (152.2)① 68.2 (173.2)②	65.3 (165.9)	65.3 (165.9)
Overall Height — Open Body — Soft Top — Hard Top	70.0 (177.8) 71.6 (181.9) N/A	70.9 (180.1) 71.9 (182.6) 71.0 (180.3)	70.8 (179.8) 71.5 (181.6) 71.6 (181.9)
Step Height — Front	27.8 (70.6)	27.1 (68.8)	27.4 (69.6)
Front Tread	52.4 (133.1)	55.8 (141.7)	55.8 (141.7)
Rear Tread	50.5 (128.3)	55.1 (140.0)	55.1 (140.0)
Minimum Ground Clearance	7.5 (19.1)	7.5 (19.1)	7.5 (19.1)
Minimum Turning Diameter-ft. (meters) curb to curb	33.5 (10.2)	35.8 (10.9)	38.8 (11.8)
Effective Leg Room Front (Accelerator) Rear (Minimum)	 37.9 (96.3) 30.5 (77.5)	 39.1 (99.3) 35.0 (88.9)	 39.1 (99.3) —

① With solid backpanel and rear mounted spare tire.
② With tailgate and side mounted spare tire.
③ With roll bar mounted spare tire.
④ With rear mounted swing-away spare tire carrier.

CJ and Scrambler General Dimensions-Inches (cm) Cont'd.

	CJ-5	CJ-7	Scrambler
Hip Room — Front — Rear	55.4 (140.7) 36.0 (91.4)	53.8 (136.7) 36.0 (91.4)	53.8 (136.7) —
Shoulder Room — Front — Rear	55.4 (140.7) 55.4 (140.7)	53.8 (136.7) 56.3 (143.0)	53.8 (136.7) —
Effective Head Room Front Soft Top Hard Top Rear Hard Top	 39.8 (101.1) 40.8 (103.6) 40.9 (103.9)	 40.6 (103.1) 39.9 (101.3) 39.6 (100.6)	 40.6 (103.1) 39.9 (101.3) —
Cargo Floor Height	26.8 (68.1)	26.7 (67.8)	26.9 (68.3)
Cargo Capacity — cubic feet (meters)	10.2 (0.29)⑤	16.0 (0.45)⑤	30.4 (0.86)⑤
Cargo Space Length at Floor Width at Wheelhouse/Floor Width of Tailgate Opening	 40.2 (102.1) 36.0 (91.4) 35.8 (90.9)	 46.8 (118.9) 36.0 (91.4) 34.5 (87.6)	 61.5 (156.2) 36.0 (91.4) 34.5 (87.6)

⑤ With rear seat removed.

NOTE: Length, width and overhang dimensions reflect rear mounted spare tire standard on CJ-5 and CJ-7, except CJ-5 with tailgate and side mounted spare tire. Height dimensions reflect roll bar as standard, which affects open body heights.

Cherokee, Wagoneer and Truck General Dimensions-Inches (cm)

	Cherokee			Wagoneer	Truck		
	Model 16 2-Dr.	Model 17 2-Dr.	Model 18 4-Dr.	Model 15	Model 25	Model 26	Model 46
Wheelbase	108.7 (276.1)	108.7 (276.1)	108.7 (276.1)	108.7 (276.1)	118.8 (301.8)	130.8 (332.2)	130.8 (332.2)
Overall Length — Body	186.4 (473.5)	186.4 (473.5)	186.4 (473.5)	186.4 (473.5)	194.0 (492.8)	206.0 (523.2)	206.0 (523.2)
Overhang — Front — Rear	31.3 (79.5) 46.4 (117.9)	31.3 (79.5) 46.4 (117.9)	31.3 (79.5) 46.4 (117.9)	31.3 (79.5) 46.4 (117.9)	31.3 (79.5) 43.9 (111.5)	31.3 (79.5) 43.9 (111.5)	31.3 (79.5) 43.9 (111.5)
Overall Width	74.8 (190.1)	78.9 (200.4)	74.8 (190.1)	74.8 (190.1)	78.9 (200.4)	78.9 (200.4)	78.9 (200.4)
Overall Height	66.4 (168.7)	67.9 (172.5)	66.4 (168.7)	66.4 (168.7)	69.0 (175.3)	69.5 (176.5)	70.0 (177.8)
Step Height — Front — Rear	19.1 (48.5) —	20.4 (51.8) —	19.1 (48.5) 20.0 (50.8)	19.1 (48.5) 20.0 (50.8)	20.6 (52.3) —	21.0 (53.3) —	21.4 (54.4) —
Front Tread	59.4 (150.9)	65.3 (165.9)	59.4 (150.9)	59.4 (150.9)	63.3 (160.8)	63.3 (160.8)	64.0 (162.6)
Rear Tread	57.8 (146.8)	62.3 (158.2)	57.8 (146.8)	57.8 (146.8)	63.8 (162.1)	63.8 (162.1)	65.4 (166.1)
Min. Ground Clearance	7.2 (18.3)	8.2 (20.8)	7.2 (18.3)	7.2 (18.3)	7.5 (19.1)	7.5 (19.1)	8.2 (20.8)
Min. Turning Dia.-Ft. (meters) curb to curb	37.7 (11.5)	39.4 (12.0)	37.7 (11.5)	37.7 (11.5)	40.6 (12.4)	44.5 (13.6)	44.5 (13.6)
Effective Leg Room Front (Accelerator) Rear (Minimum)	 40.5 (102.9) 37.0 (94.0)	 40.5 (102.9) 37.0 (94.0)	 40.5 (102.9) 37.0 (94.0)	 40.5 (102.9) 37.0 (94.0)	 40.5 (102.9) —	 40.5 (102.9) —	 40.5 (102.9) —
Hip Room — Front Rear	60.5 (153.7) 60.9 (154.7)	60.5 (153.7) 60.9 (154.7)	60.5 (153.7) 60.9 (154.7)	60.5 (153.7) 60.9 (154.7)	60.5 (153.7) —	60.5 (153.7) —	60.5 (153.7) —
Shoulder Room — Front Rear	58.3 (148.1) 58.3 (148.1)	58.3 (148.1) 58.3 (148.1)	58.3 (148.1) 58.3 (148.1)	58.3 (148.1) 58.3 (148.1)	58.3 (148.1) —	58.3 (148.1) —	58.3 (148.1) —
Effective Head Room Front Rear	 37.1 (94.2) 36.8 (93.5)	 37.1 (94.2) 36.8 (93.5)	 37.1 (94.2) 36.8 (93.5)	 37.1 (94.2) 36.8 (93.5)	 40.2 (102.1) —	 40.2 (102.1) —	 40.2 (102.1) —
Cargo Floor Height	24.8 (63.1)	26.4 (67.1)	24.8 (63.1)	24.8 (63.1)	26.8 (68.0)	28.0 (71.1)	27.8 (70.6)
Cargo Capacity — Cubic feet (meters)	95.1 (2.69)①	95.1 (2.69)①	95.1 (2.69)①	95.1 (2.69)①	68.0 (1.93)	77.7 (2.20)	77.7 (2.20)
Cargo Space Overall Length Length at Floor Width at Wheelhouse Width at Floor Width at Tailgate Opening Height of Slides and Tailgate	 — 81.6 (207.3) 44.3 (112.5) 60.9 (154.7) 54.9 (139.4) —	 — 81.6 (207.3) 44.3 (112.5) 60.9 (154.7) 54.9 (139.4) —	 — 81.6 (207.3) 44.3 (112.5) 60.9 (154.7) 54.9 (139.4) —	 — 81.6 (207.3) 44.3 (112.5) 60.9 (154.7) 54.9 (139.4) —	 86.5 (219.7) 83.6 (212.3) 50.0 (127.0) 68.0 (172.7) 57.2 (145.3) 20.5 (52.1)	 98.5 (250.2) 95.6 (242.8) 50.0 (127.0) 68.0 (172.7) 57.2 (145.3) 20.5 (52.1)	 98.5 (250.2) 95.6 (242.8) 50.0 (127.0) 68.0 (172.7) 57.2 (145.3) 20.5 (52.1)

① — With rear seat removed.

80363

1982 Powertrain-Driveline Combinations

Vehicle/ Model	Engine CID	Trans. Model	49 State Axle Ratio	Axle Ratio: California	Transfer Case	Trailer Towing Option
Scrambler and CJ-7 Models	4-151-2V 6-258-2V	T-4 T-4	3.54 - 4.09• 2.73 - 3.31•	Same	300 300	N.A. N.A.
	6-258-2V 6-258-2V	T-176 T-5	2.73 - 3.31• 2.73 - 3.31•		300 300	N.A. N.A.
	6-258-2V	999	2.73 - 3.31•		300	N.A.
CJ-5 Models	4-151-2V 6-258-2V	T-4 T-176	3.54 - 4.09• 2.73 - 3.31•		300 300	N.A. N.A.
	4-151-2V	T-5	3.54 - 4.09•		300	N.A.
Cherokee Models: 16, 17, 18	6-258-2V 6-258-2V 6-258-2V 8-360-2V 8-360-2V	T-176① T-5 999 T-176① 727	2.73 - 3.31• 2.73 - 3.31• 2.73 - 3.31• 2.73 - 3.31• 2.73 - 3.31•	Same Same Same Same Same	208① 208/219 208/219 208/219 219	3.31 3.31 3.31 3.31 3.31
Wagoneer Model 15	6-258-2V 6-258-2V 6-258-2V 6-258-2V 8-360-2V 8-360-2V	T-176① T-5 999 727 T-176 727	2.73 - 3.31• 2.73 - 3.31• 2.73 - 3.31• 2.73 - 3.31• 2.73 - 3.31• 2.73 - 3.31•	Same Same Same Same Same Same	208① 208/219 208/219 208/219 208 208/219	3.31 3.31 3.31 3.31 3.31 3.31
Truck Models 25, 26	6-258-2V 6-258-2V 6-258-2V 6-258-2V 8-360-2V 8-360-2V	T-176① T-5 999 727 T-176 727	2.73 - 3.31• 2.73 - 3.31• 2.73 - 3.31• 2.73 - 3.31• 2.73 - 3.31• 2.73 - 3.31•	Same Same Same Same Same Same	208① 208/219 208/219 208/219 208① 208/219	3.31 3.31 3.31 3.31 3.31 3.31
Truck Model 27	8-360-2V 8-360-2V	T-18 727	2.73 - 3.31• 2.73 - 3.31•	Same Same	208① 208/219	3.31 3.31

①N.A. California
Note: Trac-Loc and Free Wheeling Hubs N.A. with Auto/Quadra-Trac.
•Optional

60538

Metric System—SI

The International System of Units (Systeme International d'Unites) officially abbreviated "SI" in all languages – the modern metric system

QUANTITY	EXAMPLES OF APPLICATIONS	METRIC UNIT	SYMBOL
Length	Dimensions Tire rolling circumference Turning circle/radius Braking distance	meter	m
	Greater than 999 meters	kilometer	km
	Dimensions	millimeter	mm
	Depth of surface finish	micrometer	um
Area	Glass & Fabrics Brake & Clutch linings Radiator area etc.	square centimeter	cm^2
	Small areas	square millimeter	mm^2
Volume	Car Luggage Capacity	cubic meter	m^3
	Engine Capacity	liter	l
	Vehicle fluid capacity	cubic centimeter	cm^3
Volume Flow	Gas & Liquid	liter per second	l/s
Time Interval	Measurement of elapsed time	second minute hour day	s min h d
Velocity	General use Road speed	meter per second kilometer per hour	m/s km/h
Acceleration & Deceleration	General use	meter per second squared	m/s^2
Frequency	Electronics	hertz kilohertz megahertz	Hz kHz mHz
Rotational Speed	General use	revolution per minute revolution per second	rpm rps
Mass	Vehicle mass Legal load rating	megagram (1000 kg)	t
	General use Small masses	kilogram gram milligram	kg g mg
Density	General use	kilogram per cubic meter gram per cubic centimeter kilogram per liter	kg/m^3 g/cm^3 kg/l
Force	Pedal effort Clutch spring force Handbrake lever effort etc.	newton	N
Moment of Force (Torque)	Tightening Torque	newton meter	N•m
Power, Heat Flow Rate	General use Bulbs Alternator output Engine performance Starter motor performance	watt kilowatt	W kW

QUANTITY	EXAMPLES OF APPLICATIONS	METRIC UNIT	SYMBOL
Celsius Temperature	General use	degree Celsius	°C
Thermodynamic Temperature	General use	kelvin	k
Electric Current	General use	ampere milliampere microampere	A mA μA
Electric Potential Difference (Electromotive Force)	General use	kilovolt volt millivolt microvolt	kV V mV μV
Electric Resistance	General use	megohm kilohm ohm	MΩ kΩ Ω
Electric Capacitance	General use	farad microfarad picofarad	F μF pF
Fuel Consumption	Vehicle performance	liter per 100 kilometer	l/100 km
Oil Consumption	Vehicle performance	liter per 1000 kilometer	l/1000 km
Stiffness	Linear stiffness	kilonewton per meter	kN/m
Tire Revolutions	Tire Data	revolution per kilometer	rev/km
Pressure	Tire Coolant Lubricating oil Fuel pump delivery Engine compression Manifold vacuum Brake line (hydraulic) Car heating & ventilation Barometric pressure	kilopascal	kPa
Luminous Intensity	Bulbs	candela	cd

U.S.A./METRIC COMPARISON

QUANTITY	USA	METRIC	SYMBOL
Length	Inch-Foot-Mile	Meter	m
Weight (mass)	Ounce-Pound	Kilogram	Kg
Area	Square inch/Foot	Square Meter	m^2
Volume-Dry	Cubic inch/Foot	Cubic Meter	m^3
Liquid	Ounce-Pint-Quart-Gallon	Liter	l
Velocity	Feet Per Second	Meter per Second	m/s
Road Speed	Miles Per Hour	Kilometer per Hour	km/h
Force	Pound-Force	Newton	N
Torque	Foot-Pounds	Newton meter	N•m
Power	Horsepower	Kilowatt	kW
Pressure	Pounds Per Square Inch of Mercury	Kilopascal	kPa
Temperature	Degrees Fahrenheit	Degrees Kelvin and Celsius	K °C

70091

Decimal Equivalents

Millimeter	Decimal	Fraction	Drill Size
.1	.0039		
.15	.0059		
.2	.0079		
.25	.0098		
.3	.0118		
	.0135		80
.35	.0138		
	.0145		79
.39	.0156	1/64	
.4	.0157		
	.0160		78
.45	.0177		
	.0180		77
.5	.0197		
	.0200		76
	.0210		75
.55	.0217		
	.0225		74
.6	.0236		
	.0240		73
	.0250		72
.65	.0256		
	.0260		71
	.0280		70
.7	.0276		
	.0292		69
.75	.0295		
	.0310		68
.79	.0312	1/32	
.8	.0315		
	.0320		67
	.0330		66
.85	.0335		
	.0350		65
.9	.0354		
	.0360		64
	.0370		63
.95	.0374		
	.0380		62
	.0390		61
1.0	.0394		
	.0400		60
	.0410		59
1.05	.0413		
	.0420		58
	.0430		57
1.1	.0433		
1.15	.0452		
	.0465		56
1.19	.0469	3/64	
1.2	.0472		
1.25	.0492		
1.3	.0512		
	.0520		55
1.35	.0531		
	.0550		54
1.4	.0551		
1.45	.0570		
1.5	.0591		
	.0595		53
1.55	.0610		
1.59	.0625	1/16	
1.6	.0629		
	.0635		52
1.65	.0649		
1.7	.0669		
	.0670		51

Millimeter	Decimal	Fraction	Drill Size
1.75	.0689		
	.0700		50
1.8	.0709		
1.85	.0728		
	.0730		49
1.9	.0748		
	.0760		48
1.95	.0767		
1.98	.0781	5/64	
	.0785		47
2.0	.0787		
2.05	.0807		
	.0810		46
	.0820		45
2.1	.0827		
2.15	.0846		
	.0860		44
2.2	.0866		
2.25	.0885		
	.0890		43
2.3	.0905		
2.35	.0925		
	.0935		42
2.38	.0937	3/32	
2.4	.0945		
	.0960		41
2.45	.0964		
	.0980		40
2.5	.0984		
	.0995		39
	.1015		38
2.6	.1024		
	.1040		37
2.7	.1063		
	.1065		36
2.75	.1082		
2.78	.1094	7/64	
	.1100		35
2.8	.1102		
	.1110		34
	.1130		33
2.9	.1141		
	.1160		32
3.0	.1181		
	.1200		31
3.1	.1220		
3.18	.1250	1/8	
3.2	.1260		
3.25	.1279		
	.1285		30
3.3	.1299		
3.4	.1338		
	.1360		29
3.5	.1378		
	.1405		28
3.57	.1406	9/64	
3.6	.1417		
	.1440		27
3.7	.1457		
	.1470		26
3.75	.1476		
	.1495		25
3.8	.1496		
	.1520		24
3.9	.1535		
	.1540		23
3.97	.1562	5/32	

Millimeter	Decimal	Fraction	Drill Size
	.1570		22
4.0	.1575		
	.1590		21
	.1610		20
4.1	.1614		
4.2	.1654		
	.1660		19
4.25	.1673		
4.3	.1693		
	.1695		18
4.37	.1719	11/64	
	.1730		17
4.4	.1732		
	.1770		16
4.5	.1771		
	.1800		15
4.6	.1811		
	.1820		14
4.7	.1850		13
4.75	.1870		
4.76	.1875	3/16	
4.8	.1890		12
	.1910		11
4.9	.1929		
	.1935		10
	.1960		9
5.0	.1968		
	.1990		8
5.1	.2008		
	.2010		7
5.16	.2031	13/64	
	.2040		6
5.2	.2047		
	.2055		5
5.25	.2067		
5.3	.2086		
	.2090		4
5.4	.2126		
	.2130		3
5.5	.2165		
5.56	.2187	7/32	
5.6	.2205		
	.2210		2
5.7	.2244		
5.75	.2263		
	.2280		1
5.8	.2283		
5.9	.2323		
	.2340		A
5.95	.2344	15/64	
6.0	.2362		
	.2380		B
6.1	.2401		
	.2420		C
6.2	.2441		
6.25	.2460		D
6.3	.2480		
6.35	.2500	1/4	E
6.4	.2520		
6.5	.2559		
	.2570		F
6.6	.2598		
	.2610		G
6.7	.2638		
6.75	.2657	17/64	
6.75	.2657		
	.2660		H

Millimeter	Decimal	Fraction	Drill Size
6.8	.2677		
6.9	.2716		
	.2720		I
7.0	.2756		
	.2770		J
7.1	.2795		
	.2811		K
7.14	.2812	9/32	
7.2	.2835		
7.25	.2854		
7.3	.2874		
	.2900		L
7.4	.2913		
	.2950		M
7.5	.2953		
7.54	.2968	19/64	
7.6	.2992		
	.3020		N
7.7	.3031		
7.75	.3051		
7.8	.3071		
7.9	.3110		
7.94	.3125	5/16	
8.0	.3150		
	.3160		O
8.1	.3189		
8.2	.3228		
	.3230		P
8.25	.3248		
8.3	.3268		
8.33	.3281	21/64	
8.4	.3307		
	.3320		Q
8.5	.3346		
8.6	.3386		
	.3390		R
8.7	.3425		
8.73	.3437	11/32	
8.75	.3445		
8.8	.3465		
	.3480		S
8.9	.3504		
9.0	.3543		
	.3580		T
9.1	.3583		
9.13	.3594	23/64	
9.2	.3622		
9.25	.3641		
9.3	.3661		
	.3680		U
9.4	.3701		
9.5	.3740		
9.53	.3750	3/8	
	.3770		V
9.6	.3780		
9.7	.3819		
9.75	.3838		
9.8	.3858		
	.3860		W
9.9	.3898		
9.92	.3906	25/64	
10.0	.3937		
	.3970		X
	.4040		Y
10.32	.4062	13/32	
	.4130		Z
10.5	.4134		

Millimeter	Decimal	Fraction
10.72	.4219	27/64
11.0	.4330	
11.11	.4375	7/16
11.5	.4528	
11.51	.4531	29/64
11.91	.4687	15/32
12.0	.4724	
12.30	.4843	31/64
12.5	.4921	
12.7	.5000	1/2
13.0	.5118	
13.10	.5156	33/64
13.49	.5312	17/32
13.5	.5315	
13.89	.5469	35/64
14.0	.5512	
14.29	5625	9/16
14.5	.5709	
14.68	.5781	37/64
15.0	.5906	
15.08	.5937	19/32
15.48	.6094	39/64
15.5	.6102	
15.88	.6250	5/8
16.0	.6299	
16.27	.6406	41/64
16.5	.6496	
16.67	.6562	21/32
17.0	.6693	
17.06	.6719	43/64
17.46	.6875	11/16
17.5	.6890	
17.86	.7031	45/64
18.0	.7087	
18.26	.7187	23/32
18.5	.7283	
18.65	.7344	47/64
19.0	.7480	
19.05	.7500	3/4
19.45	.7656	49/64
19.5	.7677	
19.84	.7812	25/32
20.0	.7874	
20.24	.7969	51/64
20.5	.8071	
20.64	.8125	13/16
21.0	.8268	
21.03	.8281	53/64
21.43	.8437	27/32
21.5	.8465	
21.83	.8594	55/64
22.0	.8661	
22.23	.8750	7/8
22.5	.8858	
22.62	.8906	57/64
23.0	.9055	
23.02	.9062	29/32
23.42	.9219	59/64
23.5	.9252	
23.81	.9375	15/16
24.0	.9449	
24.21	.9531	61/64
24.5	.9646	
24.61	.9687	31/32
25.0	.9843	
25.03	.9844	63/64
25.4	1.0000	1

80280

NOTES

Cut Here

READER'S COMMENTS

1982 Jeep Technical Service Manual

Jeep Corporation needs user feedback—your critical evaluation of this Manual. Your comments and suggestions will help us in our continuous effort to improve the quality and usefulness of our service manual.

What is your general reaction to this manual? In your judgment is it complete, accurate, well organized, well written? Is it easy to use? ____________________

____

____

____

What features are most useful? ____________________________________

____

____

____

What faults do you find with the manual? ____________________________

____

____

____

____

Does this manual satisfy your needs? ________ Why? ____________________

____

____

____

Would you please indicate any errors you have found. ____________________

____

____

____

Name ____________________ Year and Model ____________________

Street ____________________________ Occupation ________________

City ____________________ State ____________ Zip or Country ________

All comments become the property of the Jeep® Corporation.

0093

Fold Here

Do Not Tear – Fold Here and Staple

NO POSTAGE
NECESSARY
IF MAILED
IN THE
UNITED STATES

BUSINESS REPLY MAIL

FIRST CLASS PERMIT NO. 1117 DETROIT, MICH.

POSTAGE WILL BE PAID BY ADDRESSEE

JEEP CORPORATION
ATTN: SERVICE DEPT.
P.O. BOX 442
DETROIT, MICHIGAN 48232

MAINTENANCE B

INDEX

GENERAL

This section describes the service procedures required to keep Jeep vehicles in good running condition. These services are based on changes in driving conditions, accumulated odometer mileage or time intervals (whichever comes first), or are unscheduled as required by changes in usage, handling or performance. The section is divided into three parts: (1) Maintenance Schedule, (2) Description of Services according to components (listed alphabetically), (3) Unscheduled Maintenance.

Maintenance Schedule

Two maintenance schedules are listed: one for Engine Maintenance; one for Chassis Maintenance (including body).

The services listed are those which experience and testing have indicated are most likely needed at the time or distance intervals shown.

Perform the maintenance services as indicated in the **Engine Maintenance Schedule** and the **Chassis Maintenance Schedule**. The schedule tells you the component and required service, followed by the time and/or distance interval (mileage) at which the service should be performed, under both normal and heavy-duty operation. For example:

	Each Fuel Fill			
Miles (Thousands)		5	12.5	20
Kilometers (Thousands)		8	20	32
Months		5	12.5	20
1) Check Engine Oil	•			
2) Change Engine Oil		•	•	•

Number 1 tells you that the engine oil level should be checked at each fuel fill. Number 2 tells you to change the engine oil every five months or 5,000 miles (8 000 km), whichever comes first, **under normal use**. The numbers appearing to the left of each component correspond with those on the **Engine and Chassis Illustrations** (figs. B-1, B-2, B-3 and B-4).

Fuel Requirements

U.S. Models

All engines require the use of unleaded fuel to reduce exhaust emissions, and to protect the catalytic converters. Use a fuel with an antiknock index (AKI) of at least 87. A lower octane AKI is acceptable at elevations above 1,500 feet (450 meters).

Canadian Models

Vehicles certified for sale in Canada and not equipped with a catalytic converter or an electronic fuel feedback system may use leaded or unleaded fuel. Select a fuel with a Research Octane Number of at least 91 and a Motor Octane Number of at least 83 (Antiknock Index of at least 87).

Owner's Responsibility

It is the owner's responsibility to determine driving conditions (normal or heavy-duty operation), to have the vehicle serviced according to the **Maintenance Schedule**, and to pay for the necessary parts and labor.

CAUTION: *Failure to perform maintenance services at the proper intervals as outlined in the Maintenance Schedule constitutes negligence and may void provisions of the new-vehicle warranty.*

Heavy-Duty Operation

Heavy-duty operation consists of off-road or dusty conditions for over thirty percent of use, commercial load-carrying or delivery, snow plowing, pulling trailers weighing over 2,000 pounds (900 kg) loaded, or extended engine idling during normal use. If your vehicle is used in heavy-duty operation, perform the service listed in the **Engine Maintenance Schedule** and the **Chassis Maintenance Schedule** according to the intervals designated under heavy-duty. (If no heavy-duty service is indicated for a particular component, perform the service at the normal time and/or distance interval noted.)

CAUTION: *Immediately after extended operation in sand, mud or water, thoroughly clean brakelinings, brakedrums and front axle U-joints and yokes, to prevent undue wear and unnecessary part failure.*

CAUTION: *If the vehicle is driven through water deep enough to cover the hubs, the wheel ends and axle differentials should be disassembled and inspected for water damage or contamination.*

After First 200 Miles (300 km)

Check and retighten wheel nuts securely, if necessary. Tighten CJ models to 80 foot-pounds (108 N•m) torque, Cherokee, Wagoneer and J-10 Truck models to 75 foot-pounds (102 N•m) torque. Tighten J-20 (6800, 7600, 8400 GVWR) Truck to 130 foot-pounds (176 N•m) torque.

1982 JEEP MAINTENANCE SCHEDULE

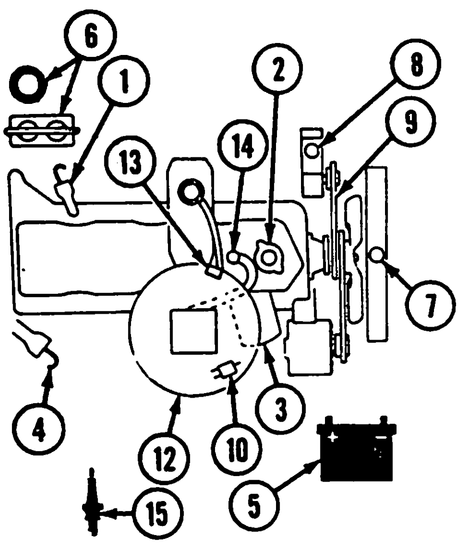

11 NOT APPLICABLE

Fig. B-1 Four-Cylinder Engine

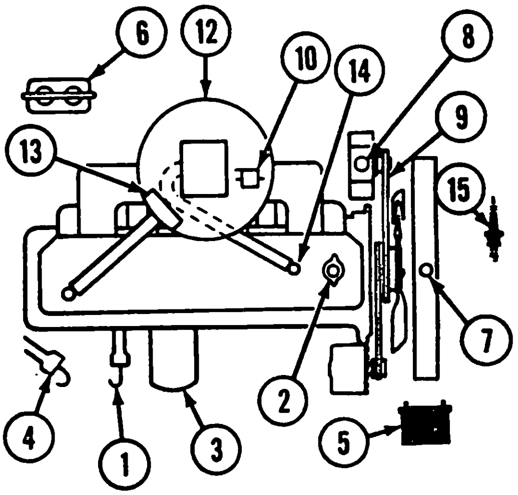

11 NOT APPLICABLE

Fig. B-2 Six-Cylinder Engine

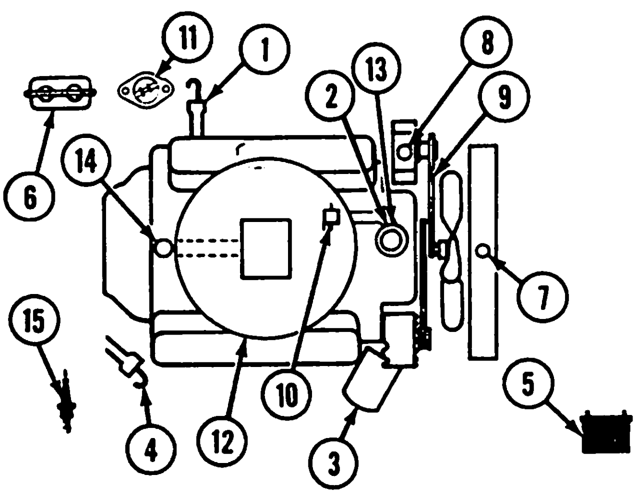

Fig. B-3 Eight-Cylinder Engine

1982 JEEP ENGINE MAINTENANCE

Miles (Thousands) / Kilometers (Thousands) / Months	Each Fuel Fill	5 / 8 / 5	12.5 / 20 / 12.5	20 / 32 / 20	27.5 / 44 / 27.5	30 / 48 / 30	35 / 56 / 35	42.5 / 68 / 42.5	50 / 80 / 50
1) Check Engine Oil Level	●								
2) Change Engine Oil		●	●	●	●		●	●	●
3) Change Engine Oil Filter (4-Cylinder California)		●	♦	●	♦		●	♦	●
3) Change Engine Oil Filter (Except 4-Cylinder California)		●	●	●	●		●	●	●
4) Check Automatic Transmission Fluid		●	●	●	●		●	●	●
5) Check Battery		●	●	●	●		●	●	●
6) Check Brake Master Cylinder Fluid Level		●	●	●	●		●	●	●
7) Check Cooling System Fluid Level		●	●	●	●		●	●	●
7) Drain and Change Coolant①			●						
8) Check Hydraulic Clutch Reservoir Fluid Level		●	●	●	●		●	●	●
8) Check Power Steering Pump Fluid Level		●	●	●	●		●	●	●
9) Check Drive Belt Tension		♦				●		♦	
9) Check Drive Belt Tension (8-Cyl.)		●				●		●	
10) Replace Fuel Filter (4- and 6-Cyl.)			♦		♦			♦	
10) Replace Fuel Filter (8-Cyl.)			●		●			●	
11) Lubricate Exhaust Heat Valve (8-Cylinder only)						●			
12) Replace Air Cleaner Filter②						●			
13) Replace PCV Filter (4-Cylinder California)						●			
13) Clean PCV Filter (8- 6- and 4-Cylinder except 4-Cyl. California)③						●			
14) Replace PCV Valve						♦			
14) Replace PCV Valve (8-Cyl.)						●			
14) Inspect PCV Hoses and Connections						♦			
14) Inspect PCV Hoses and Connections (8-Cylinder)						●			
15) Tune Up									
Check and Adjust Curb and Fast Idle Speed		●				♦			
Check and Adjust Curb and Fast Idle Speed (8-Cylinder)						●			
Check Distributor Vacuum and Centrifugal Advance Mechanism						♦			
Check Distributor Vacuum and Centrifugal Advance Mechanism (8-Cylinder)						●			
Check Distributor Cap and Rotor						♦			
Check Distributor Cap and Rotor (8-Cyl.)						●			
Check and Adjust Carburetor Mounting Bolts (4-Cylinder)		●							
Clean Choke System						●			
Check TAC Control System						♦			
Check TAC Control System (8-Cyl.)						●			
Check Fuel System, Filler Cap, Tank, Lines, Hoses and Connections			●		●			●	
Check Air System Hoses (8-Cylinder)						●			
Check Vacuum Fittings, Hoses and Connections						♦			
Check Vacuum Fittings, Hoses and Connections (8-Cyl.)						●			
Check Coil and Spark Plug Wires			♦		♦			♦	
Check Coil and Spark Plug Wires (8-Cyl.)			♦		●			♦	
Check Exhaust System		●	●	●	●		●	●	●

● **Required** ♦ **Recommended, But Not Required**

① **Change coolant initially at 12,500 mi (20 000 km) or 12½ months, whichever comes first, then at the start of each winter season. Maintain a 50/50 mixture of coolant and water (−34°F/−36°C Freezing Point) for cooling system corrosion protection during the summer season.**

② **Replace air cleaner element once in between each normally scheduled change under heavy duty driving conditions - particularly driving predominantly on dusty roads.**

③ **On 6-Cylinder models, clean PCV filter in air cleaner. On 8-Cylinder models, clean PCV filter in oil filler cap.**

1982 JEEP ENGINE MAINTENANCE (Continued)

Miles (Thousands) / Kilometers (Thousands) / Months	Each Fuel Fill	5 / 8 / 5	12.5 / 20 / 12.5	20 / 32 / 20	27.5 / 44 / 27.5	30 / 48 / 30	35 / 56 / 35	42.5 / 68 / 42.5	50 / 80 / 50
Check Ignition Timing						⧫			
Check Ignition Timing			●		●			●	
Replace Spark Plugs						●			
Replace Oxygen Sensor (4-Cylinder California)						●			
Reset Oxygen Sensor Signal (4-Cylinder California)						●			
Replace Charcoal Canister Air Inlet Filter (8-Cylinder)						●			

● Required ⧫ Recommended, But Not Required

① Change coolant initially at 12,500 mi (20 000 km) or 12½ months, whichever comes first, then at the start of each winter season. Maintain a 50/50 mixture of coolant and water (−34°F/ −36°C Freezing Point) for cooling system corrosion protection during the summer season.

② Replace air cleaner element once in between each normally scheduled change under heavy duty driving conditions - particularly driving predominantly on dusty roads.

③ On 6-Cylinder models, clean PCV filter in air cleaner. On 8-Cylinder models, clean PCV filter in oil filler cap.

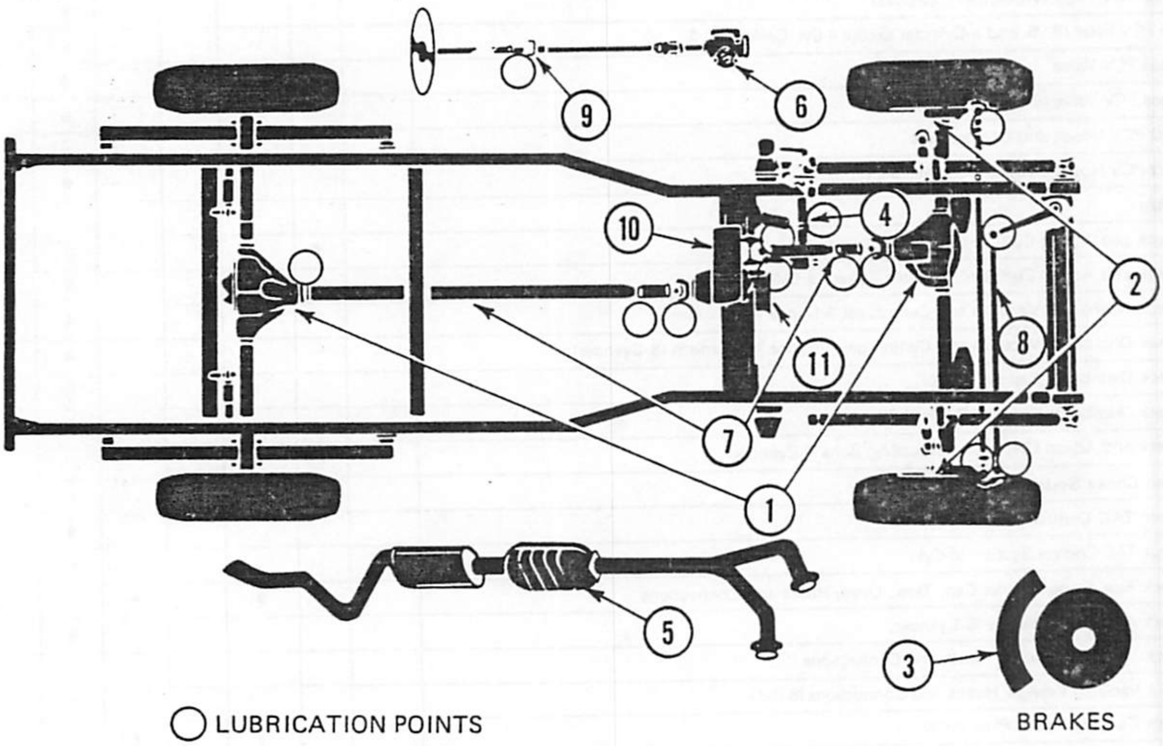

Fig. B-4 Chassis Illustration

Perform the maintenance services at the intervals shown. The symbol tells you what service is required, followed by the time and/or distance interval. For example: Front Wheel Bearings (Number 2) should be lubricated every 30,000 miles (48 000 km) under normal use, and every 15,000 miles (24 000 km) under heavy-duty operation. (The footnotes provide additional information about certain components and services.)

1982 JEEP CHASSIS MAINTENANCE SCHEDULE

Miles	EACH	2.500	5.000	8.750	12.500	16.250	20.000	23.750	27.500	30.000	32.500	35.000	38.750	42.500	46.250	50.000
Kilometers	FUEL	4 000	8 000	14 000	20 000	26 000	32 000	38 000	44 000	48 000	52 000	56 000	62 000	68 000	74 000	80 000
Months	FILL	2.5	5	9	12½	16	20	24	27½	30	32	35	39	42½	46	50
1) Check Axle Differentials (Front & Rear)		HD	• HD	HD	• HD	HD	• HD	HD	• HD		HD	• HD	HD	• HD	HD	• HD
1) Replace Axle Differential Fluid (Front & Rear)										•						
2) Lubricate Front Wheel Bearings ⓐ					HD				• HD					HD		
2) Lubricate Manual Locking Hubs					HD				• HD					HD		
3) Check Brakes & Chassis ⓑ			HD		• HD		HD		• HD			HD		• HD		HD
3) Lubricate Body Components ⓑ			HD		• HD		HD		• HD			HD		• HD		HD
4) Lubricate Clutch Level & Linkage (CJ)		HD	• HD	HD	• HD	HD	• HD	HD	• HD	HD	HD	• HD	HD	• HD	HD	• HD
4) Lubricate Clutch Lever & Linkage (Cherokee, Wagoneer, Truck)			HD		• HD		HD		• HD			HD		• HD		HD
5) Inspect Exhaust System ⓒ		HD	• HD		• HD		• HD		• HD		HD	• HD		• HD		• HD
6) Check Manual Steering Gear		HD	• HD	HD	• HD	HD	• HD	HD	• HD	HD	HD	• HD	HD	• HD	HD	• HD
7) Lubricate Propeller Shafts (Front and Rear) (CJ) ⓓ		HD	• HD	HD	• HD	HD	• HD	HD	• HD	HD	HD	• HD	HD	• HD	HD	• HD
7) Lubricate Propeller Shafts (Front & Rear) Cherokee, Wagoneer, Truck) ⓓ			HD		• HD		• HD		• HD			• HD		• HD		• HD
8) Check and Lubricate Steering Linkage (CJ) ⓔ		HD	• HD	HD	• HD	HD	• HD	HD	• HD	HD	HD	• HD	HD	• HD	HD	• HD
8) Check and Lubricate Steering Linkage (Cherokee, Wagoneer, Truck) ⓔ			HD		• HD		• HD		• HD			• HD		• HD		• HD
9) Check Windshield Washer Level Fluid	•															
10) Check Transfer Case Fluid		HD	• HD	HD	• HD	HD	• HD	HD	• HD		HD	• HD	HD	• HD	HD	• HD
10) Replace Transfer Case Fluid										•						
11) Check Manual Transmission Fluid		HD	• HD	HD	• HD	HD	• HD	HD			HD	• HD	HD	• HD	HD	• HD
11) Replace Manual Transmission Fluid									•							
11) Replace Automatic Transmission Fluid & Filter					HD		HD		•			HD		HD		

ⓐ Replace spindle oil and bearing seals on front wheel bearings (rear wheel bearings do not require periodic or scheduled lubrication).

ⓑ Check the following items as indicated. Correct to specifications as necessary: BRAKES - Front and rear brake linings for wear; rear brake self-adjusting mechanism for proper operation; master cylinder, calipers, wheel cylinders and differential warning valves for leaks; brake lines, fittings and hoses for condition and leaks; parking brake for proper operation; overall brake condition and action. STEERING/SUSPENSION - Manual or power steering gear and linkage for leaks, looseness or wear; springs, shock absorbers, steering damper and bushings for leaks, looseness or wear; tire condition; overall steering suspension condition and action. BODY LUBRICATION - Lubricate the following items with the recommended lubricants: ashtry slides; courtesy light buttons; door, hood, liftgate, tailgate latches and hinges; front seat tracks; glove box door latch and hinge; locks; windshield hinges and holddown knobs (CJ Scrambler only.) ALSO - Adjust parking brake and manual transmission clutch free play, if necessary; adjust tire pressures to specifications; lubricate Model 300 transfer case linkage.

ⓒ Check exhaust system for leaks, damage, misalignment or grounding against body sheet metal or frame. Check catalytic converter for bulging or heat damage.

ⓓ Lubricate sleeve yokes (splines) and single and double cardan U-joints.

ⓔ Inspect and replace torn or ruptured grease seals, replace damaged steering components, and lubricate ball joints.

DESCRIPTION OF SERVICES—ENGINE COMPONENTS

1. Oil Check

Check engine oil level at each fuel fill. Add oil as necessary.

2. Oil Change

Change engine oil after the first 5,000 miles (8 000 km) and every 5,000 miles (8 000 km) thereafter. As periods for oil changes are affected by a variety of conditions, no single mileage figure applies for all types of driving.

Five-thousand miles (8 000 km) is the maximum amount of miles that should elapse between changes; more frequent changes are beneficial, and for this reason, oil should be changed every five months even though 5,000 miles (8 000 km) may not have elapsed on the vehicle odometer.

Drain crankcase only after engine has reached normal operating temperature to ensure complete drainage of used oil.

For maximum engine protection and fuel economy under all driving conditions, use a "fuel saving" oil meeting API Engine oil Service Classification "SF." The term "SF" must appear on the container singly or in conjunction with other designations. There should also be some indication on the label that the oil is "fuel saving." "SF" engine oils protect against oil oxidation, high temperature engine deposits, rust and corrosion.

Many reputable oil companies now market fuel-saving engine oils.

Multi-viscosity oils protect engines over a wide range of operating temperatures and driving conditions and therefore can be used all year round. Select oil viscosity according to the lowest air temperature expected before the next oil change.

Engine Oil Viscosity

Lowest Temperature Anticipated	Recommended Multi-Viscosity
Above +40°F +5°C	SAE 10-W-30, 20W-40, or 10W-40
Above 0°F -18°C	SAE 10W-30 or 10W-40
Below 0°F -18°C	SAE 5W-20 or 5W-30

60542

Crankcase capacity is 3.0 quarts (2.84 liters) for four-cylinder engines, 5 quarts (4.7 liters) for six-cylinder engines, 4 quarts (3.8 liters) for eight-cylinder engines. Add one additional quart (1 liter) when the filter is changed. Do not add any additional oil when the filter is changed on four-cylinder engines.

3. Oil Filter

Change the oil filter every 5,000 miles (8 000 km) or every five months, whichever comes first, under normal conditions.

A full-flow oil filter is mounted on the lower center right side of six-cylinder engines, lower right side on four-cylinder engines and lower right side on eight-cylinder engines.

Remove the throwaway filter unit from the adapter with Oil Filter Removal Tool J-22700, or equivalent. To install, turn the replacement unit by hand until the gasket contacts the seat and then tighten an additional one-half turn.

CAUTION: *Use only a short-type, full-flow oil filter (AMC/Jeep Part No. 8993146, or equivalent) for replacement. Filters exceeding 4-1/4 inches (108 mm) in length could be punctured by the engine support or frame rail resulting in loss of oil and possible engine damage.*

4. Automatic Transmission (Fluid Check)

Inspect fluid level at scheduled interval. Check while the transmission is at normal operating temperature. This occurs after at least 15 miles (25 km) of expressway driving or equivalent city driving. At normal operating temperature, the gauge end of the dipstick will be too hot to make an accurate fluid level check perform the following steps:

(1) Bring transmission up to normal operating temperature as indicated above.
(2) Place vehicle on level surface.
(3) Have engine running at idle speed.
(4) Apply parking brake.
(5) Move gearshift lever through all positions, leaving it in Neutral.

WARNING: *To guard against injury, stay clear of fan and drive belts when engine is running.*

(6) Remove dipstick, located in fill tube at right rear of engine near dash panel, and wipe clean.
(7) Insert dipstick until cap seats.
(8) Remove dipstick and note reading. The fluid level should be between the ADD and FULL marks. If at or below the ADD mark, add sufficient fluid to raise level to FULL mark.

Use AMC/Jeep Automatic Transmission Fluid, or equivalent, labeled Dexron® or Dexron II®.

CAUTION: *Do not overfill. Overfilling can cause foaming which can lead to overheating, fluid oxidation, or varnish formation. These conditions can cause interference with normal valve, clutch, and servo operation. Foaming can also cause fluid to escape from the transmission vent where it may be mistaken for a leak.*

When checking fluid level, also check fluid condition. If fluid smells burned or is full of metal or friction material particles, a complete transmission overhaul may be needed. Examine the fluid closely. If doubtful about its condition, drain out a sample for a double check.

Refer to Chassis Components for procedures on changing automatic transmission fluid and linkage adjustment.

5. Battery

WARNING: *Wear safety glasses, rubber gloves and protective clothing when servicing the battery. Battery fluid contains sulfuric acid and must be kept away from skin, eyes, clothing and the vehicle painted surfaces. If acid contacts any of these,* **flush immediately with large amounts of water. If acid contacts skin or eyes get medical attention.** *Do not smoke while checking or servicing the battery and keep open flames or sparks away from battery filler caps since explosive gas is always present.*

Check electrolyte level at scheduled interval. Lift the battery cell caps (fig. B-5) and look into each filler well. Maintain the fluid level above the battery plates to the bottom of the filler well ring. Add distilled water or drinking water free of high mineral content. In freezing weather, add water before driving to assure mixing with acid and to prevent freezing.

NOTE: *Electrolyte level inspection does not apply to maintenance free batteries.*

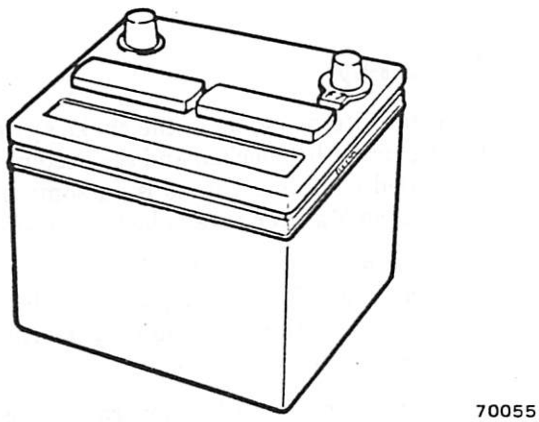

Fig. B-5 Battery

In addition to regular fluid checks, inspect overall battery condition before every winter season according to the following procedure:

(1) Disconnect battery negative cable and then positive cable.

(2) Clean cables and terminal posts with a wire-brush terminal cleaner.

(3) Check battery fluid level and replenish, if necessary (fig. B-4).

(4) Remove battery holddown and clean battery case and battery tray, if necessary, with a solution of baking soda and water; then rinse thoroughly.

(5) Position battery in tray and fasten holddown. Do not overtighten.

(6) Attach positive cable and then the negative cable.

(7) Apply a small amount of grease or protective coating to cable ends to minimize corrosion.

6. Brake Master Cylinder

Check fluid level at scheduled interval.

Clean the top of the cover and surrounding housing area. Unsnap the bail and remove the cover. The fluid should be 1/4 inch (6 mm) below the rim of each well in the reservoir. If not, add brake fluid as required and install cover. Use only Jeep Heavy-Duty Brake Fluid, or equivalent, meeting SAE Standard J1703, and Federal Standard No.. 116, DOT 3 Fluid.

Refer to Chassis Components for procedures on brake and chassis inspection.

7. Coolant

Check coolant level at scheduled interval when the engine is cold. If coolant should be needed, fill radiator to approximately 1-1/2 to 2 inches (38 to 51 mm) below the filler neck when cold, or 1/2 to 1 inch (13 to 25 mm) at normal operating temperature. Add a 50/50 mixture of ethylene glycol antifreeze and pure water. In an emergency, water alone may be used. Check the freeze protection at the earliest opportunity, as the addition of water will reduce the antifreeze and corrosion protection afforded by the coolant mixture. Do not overfill, as loss of coolant—due to expansion—will result.

Year-round coolant is installed at the factory to last through two years of normal operation, if the coolant is maintained at the original concentration.

In normal operation, flush and refill the cooling system at the **Maintenance Schedule** interval.

When replacing coolant use a 50/50 mixture of high-quality, ethylene glycol antifreeze and water. Use this mixture year-round for protection against corrosion, boiling and engine damage.

8. Power Steering Pump

Check fluid level at scheduled interval.

Lubricant level can be checked with fluid either hot or cold. If below the FULL HOT or FULL COLD marking on the dipstick attached to the reservoir cap (fig. B-6), add AMC/Jeep Power Steering Fluid, or equivalent.

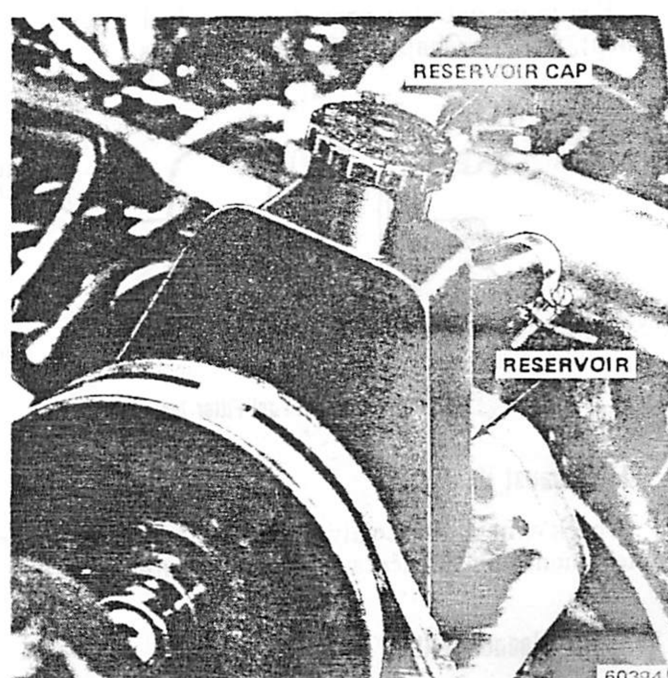

Fig. B-6 Power Steering Pump Dipstick Location

9. Drive Belts

Check belts driving fan, air pump, alternator, power steering pump and air conditioning compressor for cracks, fraying, wear, and general condition at scheduled interval. Use Tension Gauge J-23600 to check drive belt tension. Compare reading obtained against the tension specified for used belts in the following chart. If installing a new belt, use the new belt setting shown in the chart. Refer to Chapter 1C—Cooling for replacement or adjustment procedures.

Drive Belt Tension

	Initial Newtons New Belt	Reset Newtons Used Belt	Initial Pounds New Belt	Reset Pounds Used Belt
Air Conditioner				
Six-Cylinder	556-689	400-512	125-155	90-115
Eight-Cylinder	556-689	400-512	125-155	90-115
Air Pump				
Six-Cylinder w/PS	289-334	267-311	65-75	60-70
Other Six-Cylinder and all Eight-Cylinder	556-689	400-512	125-155	90-115
Fan – All Engines	556-689	400-512	125-155	90-115
Power Steering – All Engines	556-689	400-512	125-155	90-115
Serpentine				
Six-Cylinder Calif.	800-890	623-712	180-200	140-160

80414

10. Fuel Filter

Replace the fuel filter at scheduled interval. Be sure to position the fuel return line at the top of the filter (fig. B-7).

For more detailed procedures on fuel filter replacement, refer to Chapter 1J—Fuel Systems.

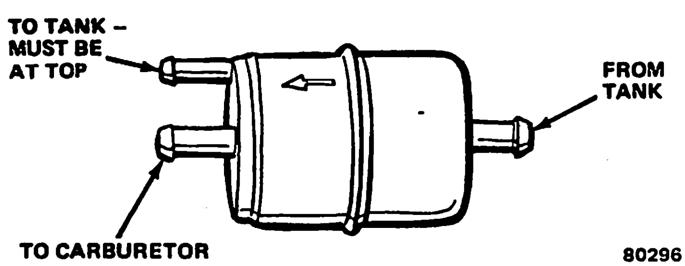

Fig. B-7 Correct Fuel Filter Installation

11. Exhaust Heat Valve

Check exhaust heat valve (eight-cylinder only) for free movement and lubricate at scheduled interval.

12. Air Cleaner (Filter)

Procedures for air cleaner servicing and replacement are located in Chapter 1J—Fuel Systems.

13. PCV Filter

Clean the PCV Filter at scheduled interval. Refer to Chapter 1A—General Service and Diagnosis for detailed procedure.

14. PCV Valve

Replace PCV valve at scheduled interval. Refer to Chapter 1J—Fuel Systems for detailed procedures.

15. Tune-Up

Certain items (such as the choke system and ignition timing) must be checked and serviced between regularly scheduled complete tune-ups on some models. Refer to the Engine Maintenance Schedule for details.

Perform a complete precision tune-up at the scheduled interval. Perform a precision electronic diagnosis whenever questionable engine performance occurs between scheduled tune-ups.

Refer to Chapter 1A—General Service and Diagnosis for detailed procedures and specifications.

DESCRIPTION OF SERVICES—CHASSIS COMPONENTS

1. Axle Differentials (Front and Rear)

Check fluid levels at scheduled interval.

The lubricant level of all differentials should be at the level of the fill hole (fig. B-8). If not, bring to level by adding the recommended lubricant.

Change fluid as recommended in the Chassis Maintenance Schedule. Fluid type and quantity required are listed in the Recommended Fluids and Lubricants chart and the Fluid Capacities chart at the end of this chapter by axle model. To change fluid:

(1) Remove axle differential housing cover.

(2) Allow lubricant to drain completely.

(3) On all differentials except Trac-Loc, flush the differential with a flushing oil or light engine oil to clean out the housing (do not use water, steam, kerosene or gasoline for flushing). Trac-Loc differentials may be cleaned only by disassembling the unit and wiping with clean, lint-free rags. Do not flush the unit.

(4) Check condition of differential housing cover gasket. Replace if necessary.

(5) Install gasket and differential housing cover.

(6) Tighten cover bolts to 15 to 25 foot-pounds (20 to 34 N•m) torque.

(7) Remove fill plug and add new lubricant to fill hole level (fig. B-8).

(8) Install fill plug.

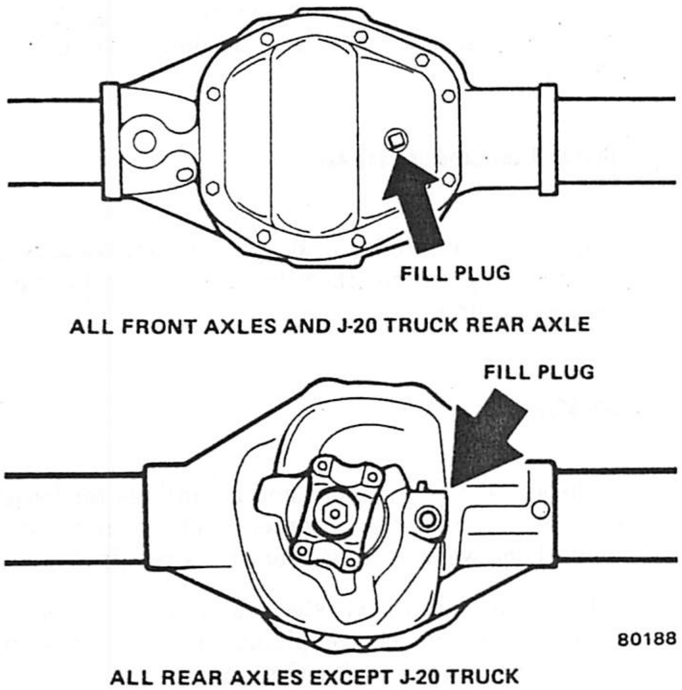

Fig. B-8 Axle Fill Plug Locations

2. Bearings—Front Wheel

Lubricate front wheel bearings as scheduled using a high quality wheel bearing lubricant (see Recommended Fluids and Lubricants chart). Be sure to force grease between rollers. Check the bearing races for signs of pitting, brinelling or overheating. Wipe the spindle clean and apply a small amount of grease to prevent rust. Wipe the wheel hub clean and apply a small amount of grease inside the hub.

CAUTION: *Do not overfill the wheel hub. Too much grease can cause overheating and bearing damage, or it can leak and contaminate brakelinings.*

Install the inner bearing and a new grease seal. Assemble the hub assembly and adjust bearings as described in Chapter 2F—Axles and Front Hubs.

Inspect bearings, and clean and repack if necessary, when they are removed for other services.

Manual Locking Hubs

Inspect and lubricate manual locking hubs as scheduled using chassis lubricant. For a more detailed procedure, refer to Chapter 2F—Axles and Front Hubs.

Brake and Chassis Inspection

Brakes

Inspect linings for wear, cracks, charred surfaces or broken rivets, and for contamination by brake fluid, axle lubricant or other contaminants. Refer to the following inspection procedures.

Front Brakelinings—CJ and Scrambler Models

Check both ends of the outboard lining by looking in at each end of the caliper (fig. B-9). These are the points at which the highest rate of wear normally occurs. At the same time, check the lining thickness of the inboard shoe to make sure that it has not worn prematurely. Look through the inspection port to view the inboard shoe and lining. Whenever the thickness of any lining is worn to the approximate thickness of the metal shoe, all shoe and lining assemblies on both brakes should be replaced.

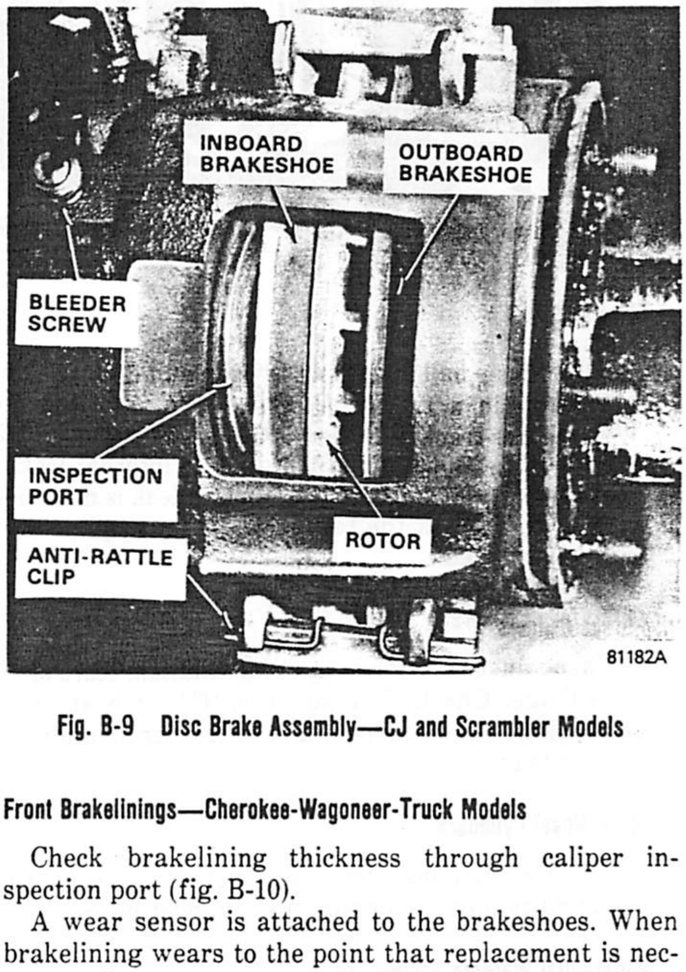

Fig. B-9 Disc Brake Assembly—CJ and Scrambler Models

Front Brakelinings—Cherokee-Wagoneer-Truck Models

Check brakelining thickness through caliper inspection port (fig. B-10).

A wear sensor is attached to the brakeshoes. When brakelining wears to the point that replacement is necessary, the sensor contacts the disc, making a screeching or scraping noise to warn the driver that brakeshoes need replacement.

Rear Brakelinings—All Models

Replace linings worn to within 1/32 inch (.78 mm) of rivet head.

Rear Self-Adjusting Mechanism

Operate the adjuster cable (CJ) or adjuster lever and pivot (Cherokee, Wagoneer and Truck). Check for ease of operation of the adjuster screw assembly. Check condition of the adjuster components for bending, frayed cables, loose or overheated springs, or binding.

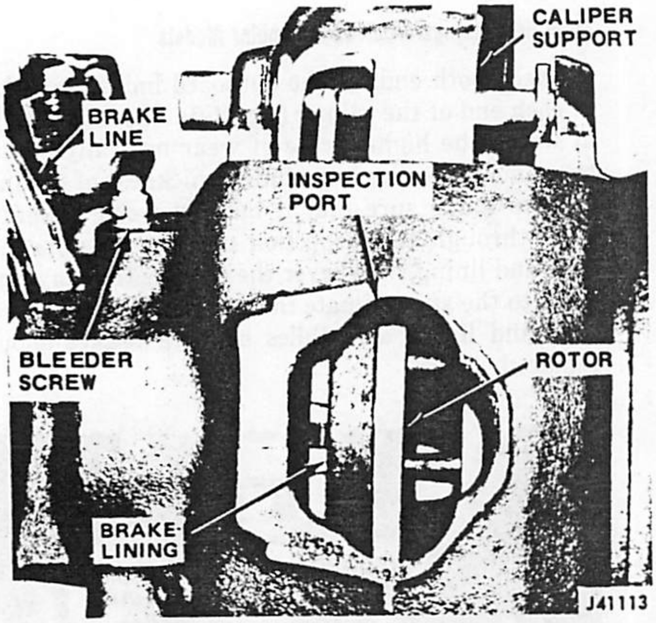

Fig. B-10 Caliper Inspection Port—Cherokee-Wagoneer-Truck Models

Master Cylinder

Inspect the cap bail for proper tension and fit. The cap should maintain a tight seal. Check the rubber diaphragm seal for cracks, cuts or distortion. Check fittings and housing for signs of leakage. If internal leaks are suspected or if fluid loss occurs but a leak is not evident, check for leaks at the rear of the master cylinder. Correct as required.

Disc Brake Calipers

Check dust boot for correct installation, tears or signs of leakage. Check slide surfaces (CJ) or bushings and pins (Cherokee, Wagoneer and Truck) for binding, corrosion or tears.

Rear Wheel Cylinders

Pull the dust boot back and inspect for leaks. Check the condition of the pistons and cylinder bores.

Differential Warning Valve

Check the valve and housing for signs of leaks, kinked lines or loose fittings.

Brakelines, Fitting and Hoses

Check for cracks, swelling, kinks, distortion or leaks. Also inspect position to be sure no lines are rubbing against exhaust system parts or other components.

Parking Brake

Operate the parking brake pedal and release and check for smooth operation and brake holding ability. Inspect cables for binds, kinks or frays. With the brake released, the rear wheels should turn freely. Adjust the parking brake, if necessary, as described in Chapter 2G—Brakes.

Overall Brake Condition and Action

Check for improper brake action, performance complaints or signs of overheating, dragging or *pulling*. Correct as required.

Chassis

Inspect spring bushings and mountings for looseness or wear. Check shock absorbers and bushings for loose mountings, wear or leaks. Correct as required.

Check for improper steering action or suspension noises, performance complaints or signs of shimmy, pulling, rubbing or undue tire wear.

Check tires for visible signs of wear which may indicate underinflation or need for front-end alignment, tire rotation or wheel balancing. Also check for bulging, cracks or other road hazard damage. Check and adjust inflation pressures according to the specifications listed in the tire pressure sticker on the glove box door.

3. Body Lubrication

Lubricate the items listed at scheduled interval using lubricant specified in the Recommended Fluids and Lubricants chart at the end of this section. Refer to figures B-11 through B-18 for application of lubricant. When lubricating weatherstrips and seals, apply the lubricant to a rag and wipe it on the seal to avoid dust-collecting overspray which can soil passenger clothing.

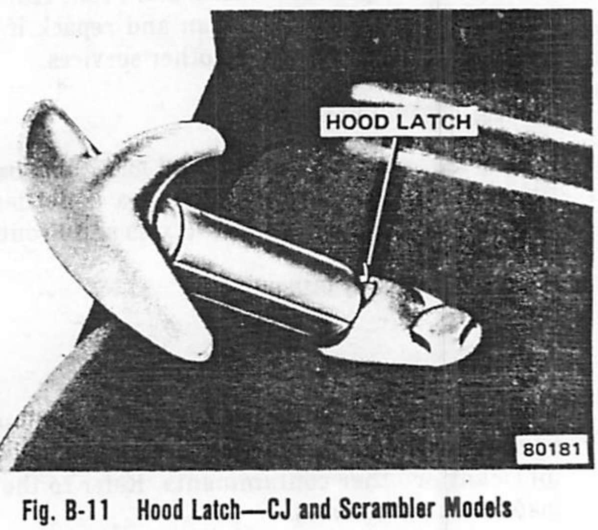

Fig. B-11 Hood Latch—CJ and Scrambler Models

4. Clutch Lever and Linkage

Lubricate at scheduled interval. Apply AMC/Jeep All-Purpose Lubricant, or equivalent, or multi-purpose chassis lubricant (lithium base) to the one lube fitting on the clutch bellcrank.

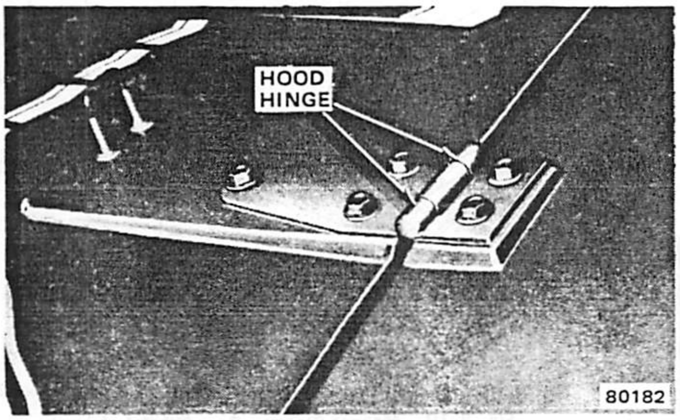

Fig. B-12 Hood Hinge—CJ and Scrambler Models

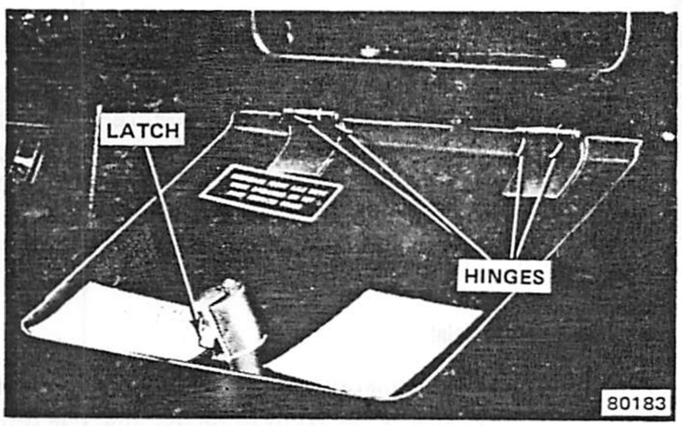

Fig. B-13 Glove Box Latch and Hinge—CJ and Scrambler Models

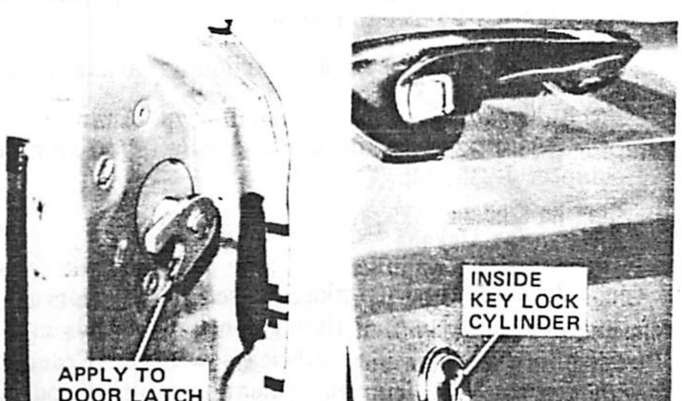

Fig. B-14 Door Latch and Lock—Cherokee-Wagoneer-Truck Models

5. Exhaust System Inspection

Inspect the exhaust system at scheduled interval for the following conditions. Correct as required.

- Exhaust system leaks, damage, misalignment
- Grounding against body sheet metal or frame
- Catalytic converter "bulging" or heat damage

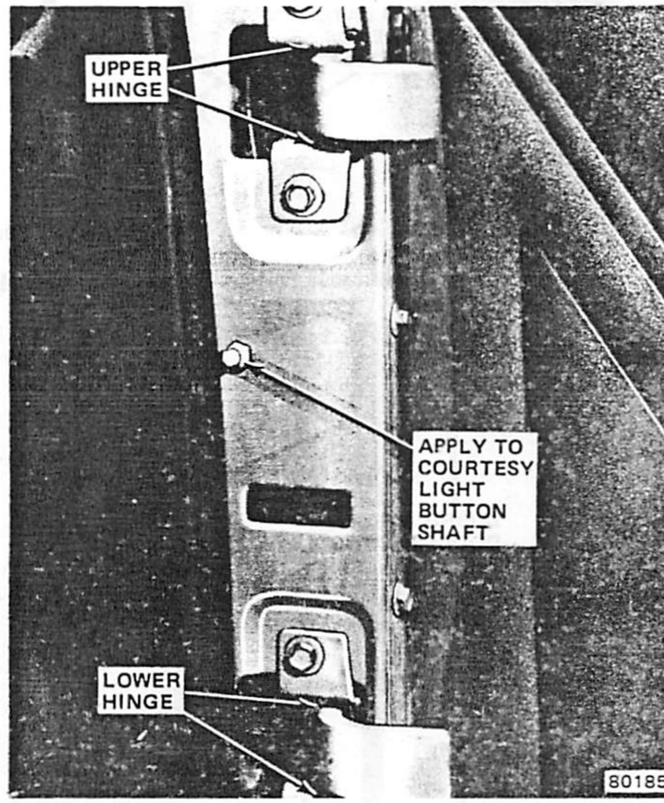

Fig. B-15 Door Hinges and Courtesy Light Button—Cherokee-Wagoneer-Truck Models

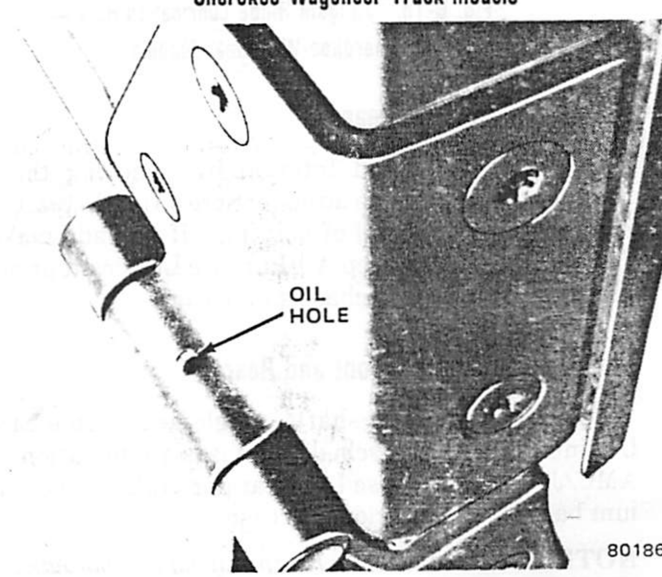

Fig. B-16 Windshield Hinge Lubrication Hole—CJ and Scrambler Models

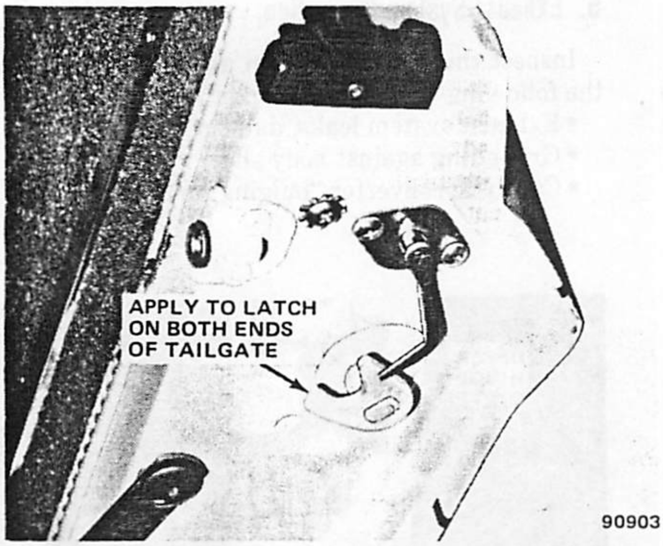

Fig. B-17 Tailgate Lubrication Points—Cherokee-Wagoneer Models

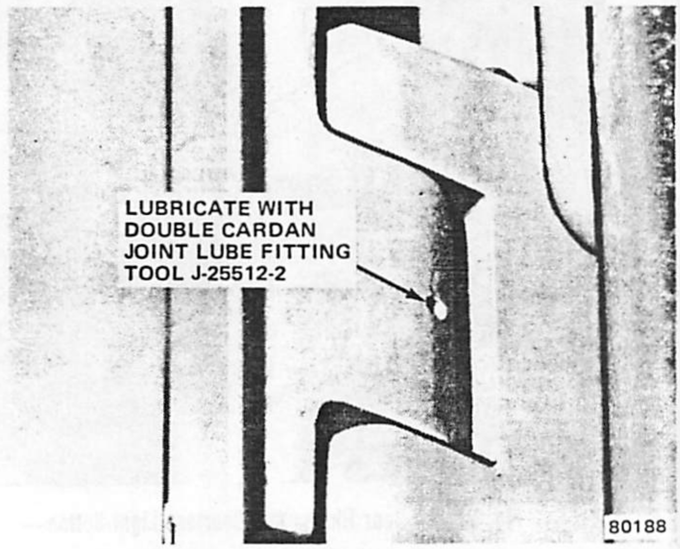

Fig. B-18 Tailgate Hinge Lubrication Hole—Cherokee-Wagoneer Models

6. Manual Steering Gear

Check at scheduled interval by removing the side cover bolt opposite the adjuster screw (fig. B-19). Lubricant should be to level of bolt hole. If not, add make-up fluid such as AMC/Jeep All-Purpose Lubricant or multi-purpose lithium base chassis lubricant.

7. Propeller Shafts (Front and Rear)

Lubricate propeller shafts, single and double cardan U-joints, during the scheduled chassis lubrication with AMC/Jeep All-Purpose Lubricant or multi-purpose lithium base chassis lubricant grease.

NOTE: *Undercoating or rustproofing compounds could unbalance the propeller shafts and cause drivetrain vibrations. Remove any such compounds using the appropriate solvent.*

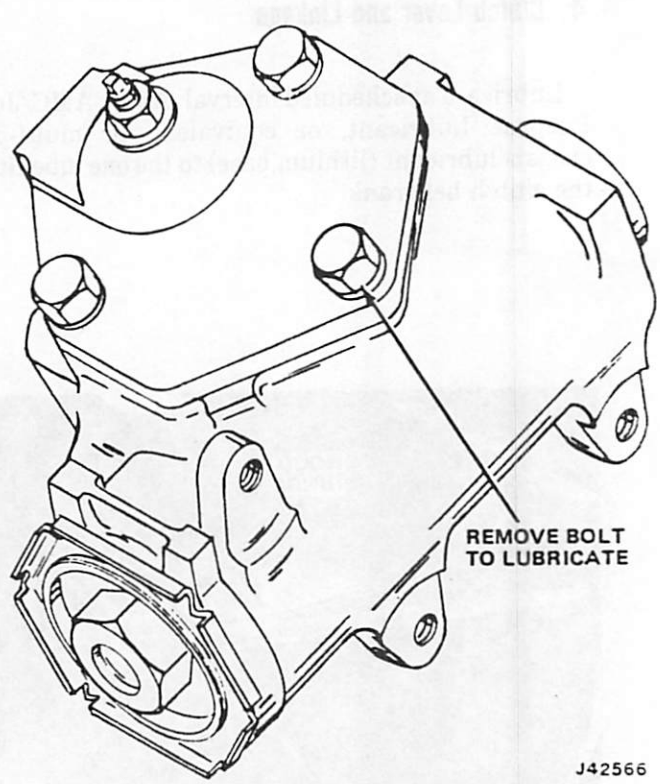

Fig. B-19 Manual Steering Gear Fill Hole Location

Sleeve Yokes (Splines)

Apply grease gun pressure to sleeve yoke grease fitting until lubricant appears at pressure relief hole in expansion plug at sleeve yoke end of spline. At this point, cover pressure relief hole with finger and continue to apply pressure until grease appears at sleeve yoke seal. This will ensure complete lubrication of spline.

Double Cardan Joint

Lubricate the constant velocity center bearing at the transfer case end of the front propeller shaft as follows:

(1) Raise vehicle on frame-contact type hoist (front wheels must be free to rotate).

(2) Clean dirt from around double cardan joint (fig. B-20).

(3) Lubricate joint using needle-type Lubrication Adapter J-25512-2.

8. Steering Linkage

Lubricate steering linkage at scheduled interval.

Clean the four lube fittings on tie-rod ends and connecting rod ends, and lubricate with AMC/Jeep All-Purpose Lubricant, or equivalent, or multi-purpose lithium base chassis lubricant.

Also, inspect and replace as needed torn or ruptured grease seals, replace damaged steering components and lubricate ball joints.

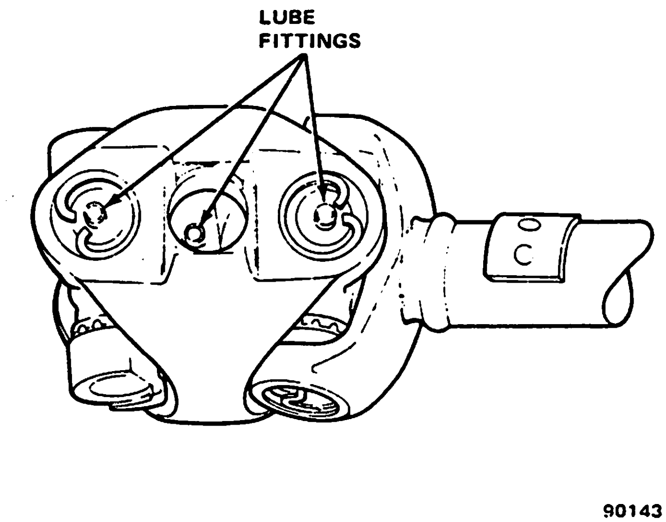

Fig. B-20 Double Cardan Joint

Check manual or power steering gear assembly for leaks, housing cracks or loose frame mounting. Inspect steering damper for leaks or loose mounting. Also, check steering tie rods and connecting rod for bending, looseness or wear.

9. Check Windshield Washer Fluid Level

Check fluid level with each fuel fill.

10. Transfer Case—Fluid Level Check

Fluid levels in the transfer case must be checked as scheduled. To check lubricant level, remove the transfer case fill plug located on the rear of the transfer case. Lubricant should be level with the fill plug hole (figs. B-21 through B-23). If not, bring up level with specified lubricant and install fill plug. Refer to Recommended Fluids and Lubricants chart located at the end of this chapter for lubricant specification and to Fluid Capacities chart for transfer case capacity.

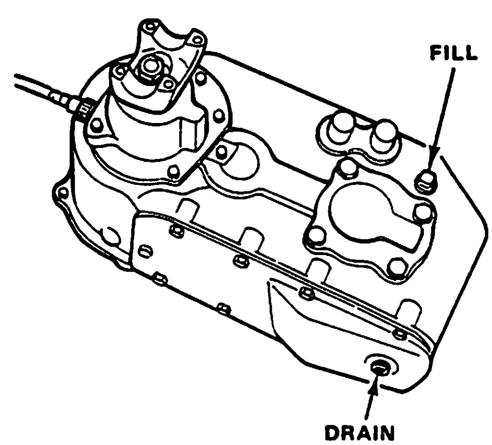

Fig. B-21 Transfer Case Drain and Fill Plugs—Model 300

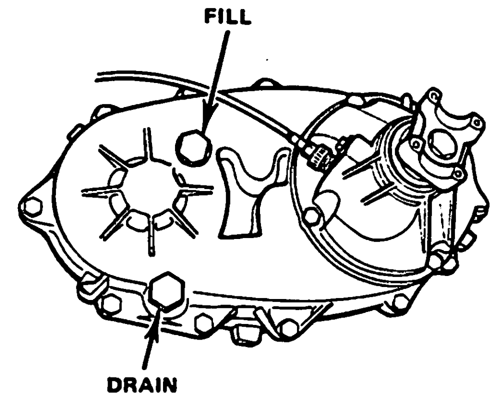

Fig. B-22 Transfer Case Drain and Fill Plugs—Model 208

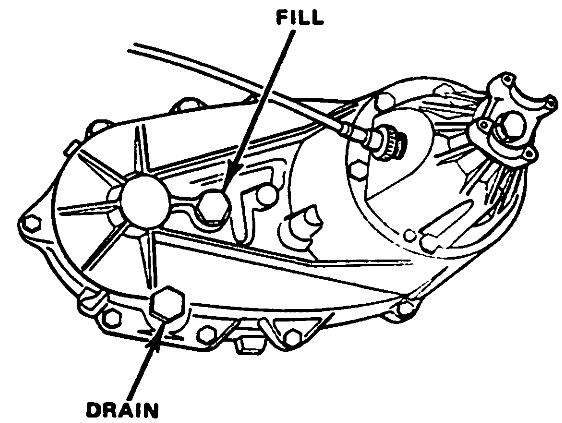

Fig. B-23 Transfer Case Drain and Fill Plugs—Quadra-Trac

Transfer Case—Fluid Change

Drain and change transfer case at scheduled interval. To change fluid:

(1) Remove fill plugs then drain plugs.
(2) Allow transfer case to drain completely.
(3) Install drain plugs.
(4) Fill with specified lubricant to level of fill hole.
(5) Install fill plugs.

CAUTION: *Do not overtighten fill and drain plugs. Tighten plugs to 15 to 25 foot-pounds (20.3 to 33.9 N•m) torque. Overtightening can strip threads or break the aluminum case.*

11. Transmission

Refer to Engine Components for procedure on checking fluid level for automatic transmission.

Fluid levels in the transfer case and manual transmission must be checked at the same time, as scheduled. Fill plugs for all manual transmissions are located on the right side of the assembly.

To check lubricant level, remove the transmission fill plug. Lubricant should be level with each fill plug hole.

If not, bring up to level with specified lubricant and install fill plug. Refer to Recommended Fluids and Lubricants chart and Fluid Capacities chart at the end of this chapter.

Automatic Transmission Fluid Changes

Drain and refill the automatic transmission every 27,500 miles (44 000 km) for vehicles in normal service and every 12,500 miles (20 000 km) for vehicles in heavy-duty service. Change fluid immediately after vehicle operation, before it cools.

(1) Remove transmission pan screws, pan, and gasket.

(2) Remove and discard oil filter (fig. B-24).

(3) Remove and discard O-ring seal from pick-up pipe.

(4) Install new O-ring seal on pick-up pipe and install strainer and pipe assembly.

(5) Clean pan thoroughly and position new gasket on pan. Use petroleum jelly, or equivalent, to position gasket.

(6) Install pan. Secure with attaching screws and tighten to 10 to 13 foot-pounds (14 to 18 N•m) torque.

(7) Pour approximately 5 quarts (4.71 liters) of Dexron II* automatic transmission fluid into filler pipe. Be sure container spout, funnel, or other items in contact with fluid are clean.

(8) Start engine and allow it to idle a few minutes.

(9) Apply brake pedal and parking brake. Shift transmission into all positions then place the selector lever in N (Neutral).

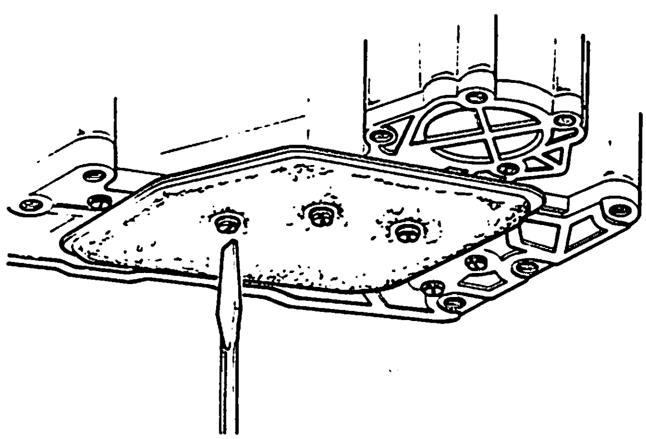

Fig. B-24 Removing Automatic Transmission Filter

(10) With transmission at operating temperature, check fluid level. Add fluid, if necessary, to bring level to FULL mark.

Manual Transmission Fluid Change

Manual transmission and transfer case lubricating fluid should be changed at the same time, as scheduled. See Recommended Fluids and Lubricants at the end of this chapter for fluid specification, and the Fluid Capacities Chart for quantity. To change fluid:

(1) Remove fill plugs then drain plugs.

(2) Allow units to drain completely.

(3) Install drain plugs.

(4) Fill to level of fill holes.

(5) Install fill plugs.

UNSCHEDULED MAINTENANCE

General

Services detailed in this subsection are not listed in the Maintenance Schedule for performance at a specified interval. They are to be performed as required to restore vehicle to original specifications. Unscheduled maintenance services include such items as fuel system cleaning; engine carbon deposit removal; retightening loose parts and connections; replacement of manual transmission clutch components, brakelinings, shock absorbers, light bulbs, wiper blades, belts or hoses; replacement of interior trim, bright metal trim, painted parts and other appearance items or rubber-like parts. Need for these unscheduled services is usually indicated by a change in performance, handling, or the appearance of the vehicle or a particular component. Owners, users and service mechanics should be alert for indications that service or replacement is needed.

Catalytic Converter

The catalytic converter(s) used on 1982 Jeep models will become contaminated if leaded gas is used, or if the engine or emission controls are not maintained as scheduled. If this occurs, the catalyst—the alumina-coated beads in the converter—or the entire converter must be replaced. Refer to the catalyst replacement procedure in Chapter 1K—Exhaust Systems.

Fluid Capacities

Cherokee, Wagoneer and Truck

CAPACITIES Approximate Refill	U.S. Measure	Imperial Measure	Metric Measure
Engine Oil			
258 CID Engine (includes 1 quart for filter change)	6.0 quarts	5.0 quarts	5.7 liters
360 CID Engines (includes 1 quart for filter change)	5.0 quarts	4.2 quarts	4.7 liters
Cooling System (includes 1 quart for heater)			
258 CID Engine	10.5 quarts	8.7 quarts	9.9 liters
360 CID Engine	14.0 quarts	11.6 quarts	13.2 liters
Transfer Case			
Model 208	6.0 pints	5.0 pints	2.8 liters
Quadra-Trac	4.0 pints	3.3 pints	1.9 liters
Transmission			
Manual 4-Speed — T-4	3.5 pints	2.9 pints	1.7 liters
Manual 4-Speed — T-176	3.5 pints	2.9 pints	1.7 liters
Manual 4-Speed — T-18	6.5 pints	5.5 pints	3.1 liters
Manual 5-Speed — T-5	4.0 pints	3.7 pints	1.9 liters
Automatic — Model 999 (Change Only)	8.5 pints	7.1 pints	4.0 liters
Automatic — Model 999 (At Overhaul)	17.0 pints	14.1 pints	8.0 liters
Automatic — Model 727 (Change Only)	8.5 pints	7.1 pints	4.0 liters
Automatic — Model 727 (At Overhaul)	17.0 pints	14.1 pints	8.0 liters
Axles			
Cherokee Front Axle	3.0 pints	2.5 pints	1.4 liters
Cherokee Rear Axle	4.8 pints	4.0 pints	2.3 liters
Wagoneer Front Axle	3.0 pints	2.5 pints	1.4 liters
Wagoneer Rear Axle	4.8 pints	4.0 pints	2.3 liters
J-10 Truck Front Axle	3.0 pints	2.5 pints	1.4 liters
J-10 Truck Rear Axle	4.8 pints	4.0 pints	2.3 liters
J-20 Truck Front Axle	3.0 pints	2.5 pints	1.4 liters
J-20 Truck Rear Axle	6.0 pints	5.0 pints	2.8 liters
Gas Tanks (Approximate Capacity)			
Cherokee Models	20.3 gallons	16.9 gallons	76.8 liters
Wagoneer Models	20.3 gallons	16.9 gallons	76.8 liters
Truck Models	18.2 gallons	15.2 gallons	68.9 liters

CJ and Scrambler

CAPACITIES Approximate	U.S. Measure	Imperial Measure	Metric Measure
Engine Oil			
151 CID Engine (includes 1/2 quart for filter change)	3.0 quarts	2.5 quarts	2.8 liters
258 CID Engine (includes 1 quart for filter change)	6.0 quarts	5.0 quarts	5.7 liters
Cooling System (includes 1 quart for heater)			
151 CID Engine	7.8 quarts	6.5 quarts	7.4 liters
258 CID Engine	10.5 quarts	8.7 quarts	9.9 liters
Transfer Case			
Model 300	4.0 pints	3.3 pints	1.9 liters
Transmission			
Manual 4-Speed — T-4	3.5 pints	2.9 pints	1.7 liters
Manual 4-Speed — T-176	3.5 pints	2.9 pints	1.7 liters
Manual 5-Speed — T-5	4.0 pints	3.7 pints	1.9 liters
Automatic — Model 999 (Change Only)	8.5 pints	7.1 pints	4.0 liters
Automatic — Model 999 (At Overhaul)	17.0 pints	14.1 pints	8.0 liters
Axles			
CJ/Scrambler Front Axle	2.5 pints	2.1 pints	1.9 liters
CJ/Scrambler Rear Axle	4.8 pints	4.0 pints	2.3 liters
Gas Tanks (Approximate Capacity)			
CJ/Scrambler Models	14.8 gallons	12.3 gallons	56.0 liters
CJ/Scrambler Models	20.0 gallons	16.66 gallons	76.0 liters

Recommended Fluids and Lubricants

ENGINE	
COMPONENT	**SPECIFICATION**
Distributor rotor tip*	AMC/Jeep Silicone Dielectic Compound or equivalent.
Engine coolant	High quality ethylene glycol (permanent antifreeze) and clean water mixture.
Engine oil	API classification "SF." Refer to oil viscosity chart for correct SAE grade.
Exhaust manifold heat valve	AMC/Jeep Heat Valve Lubricant or equivalent.
CHASSIS	
COMPONENT	**SPECIFICATION**
Automatic transmission	AMC/Jeep Automatic Transmission Fluid or equivalent labeled Dexron II®.
Brake master cylinder*	AMC/Jeep Brake Fluid or equivalent marked FMVSS No. 116, DOT-3 and SAE J-1703. CAUTION: Use only recommended brake fluids.
Hydraulic clutch reservoir (4-cylinder only)	AMC/Jeep Brake Fluid of equivalent marked FMVSS No. 116, DOT-3 and SAE J-1703. Caution: Use only recommended brake fluids.
Clutch lever and linkage	AMC/Jeep All-Purpose Lubricant or equivalent lithium base chassis lubricant.
Conventional axle differentials	AMC/Jeep Rear Axle Lubricant or gear lubricant of SAE 85W-90 (API-GL5) quality.
Drum brake support plate ledges*	AMC/Jeep Brake Corrosion Control Lubricant
Front suspension ball joints, steering linkage, propeller shafts, single and double cardan joints and yokes	AMC/Jeep All-Purpose Lubricant or equivalent lithium base chassis lubricant.
Front wheel bearings	AMC/Jeep All-Purpose Lubricant or equivalent lithium base chassis lubricant.
Manual locking hubs	AMC/Jeep All-Purpose Lubricant or equivalent lithium base chassis lubricant.
Manual steering gear*	AMC/Jeep All-Purpose Lubricant or equivalent lithium base chassis lubricant.

CHASSIS (Continued)	
COMPONENT	**SPECIFICATION**
Manual transmission Model T-176 Model T-18	SAE 85W-90 gear lubricant (API-GL5).
Manual transmission Model T-4 Model T-5	AMC/Jeep Automatic Transmission Fluid or equivalent labeled Dexron II®.
Model 208 transfer case	AMC/Jeep Automatic Transmission Fluid or equivalent labeled Dexron II®.
Model 300 transfer case	SAE 85W-90 gear lubricant (API-GL5).
Parking brake pedal mechanism*	3-M Spray Lube 8902 or equivalent.
Power steering pump and gear*	AMC/Jeep Power Steering Fluid or equivalent.
Quadra-Trac transfer case	AMC/Jeep Automatic Transmission Fluid or equivalent labeled Dexron II®.
Check Windshield Washer Fluid Level	AMC/Jeep Windshield Washer Solvent or Equivalent
Trac-Lok axle differential	AMC/Jeep Rear Axle Lubricant or limited-slip gear lubricant of SAE 85W-90 (API-GL5) quality.
BODY	
COMPONENT	**SPECIFICATION**
Ashtray slides	3-M Spray Lube 8902 or equivalent.
Front seat tracks	3-M Spray Lube 8902 or equivalent.
Hinges: door, hood, liftgate, tailgate, glove box	3-M Spray Lube 8902 or equivalent.
Hinges: tailgate (Cherokee, Wagoneer)	AMC/Jeep All-Purpose Lubricant or equivalent lithium base chassis lubricant.
Key lock cylinders	Powdered graphite, AMC/Jeep Silicone Lubricant Spray or light oil.
Latches: door, hood, liftgate, tailgate, glove box	3-M Spray Lube 8902 or equivalent.
Moon roof	Petroleum Jelly
Weatherstrips: door, window, liftgate, tailgate	AMC/Jeep Silicone Lubricant Spray or equivalent.
Windshield hinges and holddown knobs (CJ)	3-M Spray Lube 9902 or equivalent.

***No routine drain and refill or application of lubricant is required. Specification is for maintaining fluid levels or reassembling components. Refer to the Maintenance Schedules for intervals.**

PART 1
POWER PLANT

CHAPTER INDEX

GENERAL SERVICE AND DIAGNOSIS 1A

SECTION INDEX

GENERAL INFORMATION

GENERAL

This chapter contains **general** information that applies to all Jeep engines: 151 CID four-cylinder, 258 CID six-cylinder, and 360 CID eight-cylinder engines. Refer to Chapter 1B—Engines for **specific** procedures involving engine replacement, engine disassembly, internal component repair and replacement, and mechanical specifications.

The Engine Diagnosis section of this chapter presents information and procedures useful for locating problems not normally encountered during routine maintenance and tune-ups.

The Engine Tune-Up section of this chapter presents a systematic approach to the performance of a complete, precision tune-up required at the interval specified in the Engine Maintenance Schedule.

Emission Control Components – Canada Light Duty Vehicles

Engine and Carb.	Vehicle	Cooling System Type	Transmission	Air Injection	Air Control Valve	Diverter Valve	Catalytic Converter	Pre-Cat Converter	EGR	EGR TVS	EGR CTO Valve Temp.	TAC Type	TAC TVS	TAC Delay Valve (R) and Check Valve	Vacuum Advance CTO Valve Temp.	Non-Linear Valve	HD Vacuum Advance CTO Valve Temp.	Vacuum Advance Delay Valve	Carb. Vent to Canister	Electric Choke	Sole-Vac Idle Control	Sole-Vac TVS	Decel Valve	Microprocessor	Vacuum Switch Assembly	Trap Door (Air Cleaner)	PCV
258 CID 2V	CJ Scrambler	STD	M	•	—	•	•	—	•	•	115°F (46°C)	V	•	•	155°F (68°C)	—	—	R •	•	•	•	•	—	—	—	•	•
		HD	M	•	—	•	•	—	•	•	115°F (46°C)	V	•	•	155°F (68°C)	—	220°F (101°C)	R •	•	•	•	•	—	—	—	•	•
		STD	A	•	—	•	•	—	•	•	115°F (46°C)	V	•	•	155°F (68°C)	•	—	R •	•	•	•	•	—	—	—	•	•
		HD	A	•	—	•	•	—	•	•	115°F (46°C)	V	•	•	155°F (68°C)	•	220°F (101°C)	R •	•	•	•	•	—	—	—	•	•
	CKE WAG TRK	STD	M A	—	—	—	—	—	•	•	115°F (46°C)	V	•	•	155°F (68°C)	—	—	R •	•	•	•	—	—	•	•	•	•

90789

manufactured for sale in Canada. Vehicles designated California are the only vehicles certified for sale in the state of California.

EMISSION COMPONENTS

It is frequently helpful to know at a glance the emission control-related components that are installed on a particular vehicle. This information is contained in the emission control component charts. Vehicles designated 49-State are certified for sale in all states (and Canada) except California. Vehicles designated Canadian are

NOTE: *All reference to CJ vehicles also pertains to Scrambler vehicles.*

Emission Control Components - 49-State Light Duty Vehicles

Engine and Carb.	Vehicle	Cooling System Type	Transmission	Air Injection	Air Control Valve	Diverter Valve	Catalytic Converter	EGR	EGR TVS	EGR Forward Delay Valve	EGR CTO Valve Temp.	TAC Type	TAC TVS	TAC Delay Valve (R) and Check Valve	Vacuum Advance CTO Valve Temp.	Non-Linear Valve	HD Vacuum Advance CTO Valve Temp.	Vacuum Advance Delay Valve	Carb. Vent to Canister	Electric Choke	Sole-Vac Idle Control	Throttle Solenoid	Microprocessor	Vacuum Switch Assembly	Trap Door (Air Cleaner)	PCV
151 CID 2V	CJ Scrambler	STD	M	—	—	—	•	•	•	—	100°F (38°C)	V	•	•	120°F (49°C)	—	—	DR •	•	•	—	•	—	—	—	•
		HD	M	—	—	—	•	•	•	—	100°F (38°C)	V	•	•	120°F (49°C)	—	220°F (101°C)	DR •	•	•	—	•	—	—	—	•
258 CID 2V	CJ Scrambler	STD	M	•	•	•	•	•	•	•	115°F (46°C)	V	•	•	155°F (68°C)	—	—	R •	•	•	•	—	—	—	•	•
		HD	M	•	•	•	•	•	•	•	115°F (46°C)	V	•	•	155°F (68°C)	—	220°F (101°C)	R •	•	•	•	—	—	—	•	•
		STD	A	•	•	•	•	•	•	—	115°F (46°C)	V	•	•	155°F (68°C)	•	—	R •	•	•	•	—	—	—	•	•
		HD	A	•	•	•	•	•	•	—	115°F (46°C)	V	•	•	155°F (68°C)	•	220°F (101°C)	R •	•	•	•	—	—	—	•	•
	Cherokee Wagoneer J-10 Truck	STD	M	•	•	•	•	•	•	•	115°F (46°C)	V	•	•	155°F (68°C)	—	—	R •	•	•	•	—	•	•	•	•
		HD	M	•	•	•	•	•	•	•	115°F (46°C)	V	•	•	155°F (68°C)	—	220°F (101°C)	R •	•	•	•	—	•	•	•	•
		STD	A	•	•	•	•	•	•	—	115°F (46°C)	V	•	•	155°F (68°C)	—	—	R •	•	•	•	—	•	•	•	•
		HD	A	•	•	•	•	•	•	—	115°F (46°C)	V	•	•	155°F (68°C)	—	220°F (101°C)	R •	•	•	•	—	•	•	•	•
360 CID 2V	Cherokee Wagoneer Truck 25	STD	M4	•	•	•	•	•	•	—	115°F (46°C)	V	•	•	155°F (68°C)	•	—	R •	•	•	—	— ①	—	—	•	•
		HD	M4	•	•	•	•	•	•	—	115°F (46°C)	V	•	•	155°F (68°C)	•	220°F (101°C)	R •	•	•	—	— ①	—	—	•	•
		STD	A	•	•	•	•	•	•	—	115°F (46°C)	V	•	•	155°F (68°C)	•	—	R •	•	•	—	•	—	—	•	•
		HD	A	•	•	•	•	•	•	—	115°F (46°C)	V	•	•	155°F (68°C)	•	220°F (101°C)	R •	•	•	—	•	—	—	•	•

Trans. — Transmission Type: Manual (M) or Automatic (A)
Cat. Conv. — Catalytic Converter
CTO — Coolant Temperature Override
EGR — Exhaust Gas Recirculation
TVS — Thermal Vacuum Switch
Delay Valve — R = Reverse Delay
— F = Forward Delay
— DR = Dual Reverse Delay

PCV — Positive Crankcase Ventilation
TAC — Thermostatically Controlled Air Cleaner (vacuum)
• — On all models in vehicle specified
STD — Standard
HD — Heavy Duty
① — Dash Pot

NOTE: All vehicles have Fuel Tank Vapor Control, Vacuum Operated TAC Systems, and PCV Valves. All temperatures are nominal.

90181

Emission Control Components—California Light Duty Vehicles

Engine and Carb.	Vehicle	Cooling System Type	Transmission	Air Injection	Air Switch Valve	Diverter Valve	Catalytic Converter	EGR	EGR Forward Delay Valve	EGR TVS	EGR CTO Valve Temp.	TAC Type	TAC TVS	TAC Delay Valve (R) and Check Valve	Vacuum Advance CTO Valve Temp.	HD Spark CTO Valve Temp.	Spark Delay Valve	Carb. Vent to Canister	Electric Choke	Sole-Vac Idle Control	Throttle Solenoid	Decel Valve	Microprocessor	Vacuum Switch Assembly	Trap Door (Air Cleaner)	PCV	Ignition Advance Control Soilnoid
151 CID 2V	CJ-Scrambler	STD	M	—	—	—	•	•	—	•	130°F (54°C)	V	•	•	120°F (49°C)	—	DR •	•	•	—	•	•	•	•	—	•	• ①
		HD	M	—	—	—	•	•	—	•	130°F (54°C)	V	•	•	120°F (49°C)	—	DR •	•	•	—	•	•	•	•	—	•	• ①
		STD	A	—	—	—	•	•	—	•	130°F (54°C)	V	•	•	120°F (49°C)	—	DR •	•	•	—	•	•	•	•	—	•	—
		HD	A	—	—	—	•	•	—	•	130°F (54°C)	V	•	•	120°F (49°C)	—	DR •	•	•	—	•	•	•	•	—	•	—
258 CID 2V	CJ-Scrambler	STD	M	•	•	•	•	•	•	•	115°F (46°C)	V	•	•	130°F (54°C)	—	R •	•	•	•	—	—	•	•	•	•	—
		HD	M	•	•	•	•	•	•	•	115°F (46°C)	V	•	•	130°F (54°C)	220°F (105°C)	R •	•	•	•	—	—	•	•	•	•	—
		STD	A	•	•	•	•	•	—	•	115°F (46°C)	V	•	•	130°F (54°C)	—	R •	•	•	•	—	—	•	•	•	•	—
		HD	A	•	•	•	•	•	—	•	115°F (46°C)	V	•	•	130°F (54°C)	220°F (105°C)	R •	•	•	•	—	—	•	•	•	•	—
	Cherokee Wagoneer Truck 25	STD	M4	•	•	•	•	•	•	•	115°F (46°C)	V	•	•	130°F (54°C)	—	R •	•	•	•	—	—	•	•	•	•	—
		HD	M4	•	•	•	•	•	•	•	115°F (46°C)	V	•	•	130°F (54°C)	220°F (105°C)	R •	•	•	•	—	—	•	•	•	•	—
		STD	A	•	•	•	•	•	—	•	115°F (46°C)	V	•	•	130°F (54°C)	—	R •	•	•	•	—	•	•	•	•	•	—
		HD	A	•	•	•	•	•	—	•	115°F (46°C)	V	•	•	130°F (54°C)	220°F (105°C)	R •	•	•	•	—	—	•	•	•	•	—

Trans. — Transmission Type: Manual (M) or Automatic (A)
Cat. Conv. — Catalytic Converter
CTO — Coolant Temperature Override
EGR — Exhaust Gas Recirculation
TVS — Thermal Vacuum Switch

Delay Valve — R = Reverse Delay
— F = Forward Delay
— DR = Dual Reverse Delay
PCV — Positive Crankcase Ventilation
TAC — Thermostatically Controlled Air Cleaner (vacuum or mechanical)

• — On all models in vehicle specified
STD — Standard
HD — Heavy Duty
VSD — Vacuum Signal Dump
① — With A/C

NOTE: All vehicles have Fuel Tank Vapor Control, Vacuum Operated TAC Systems and PCV Valves. All temperatures are nominal.

90182

ENGINE DIAGNOSIS

GENERAL

An engine diagnosis is helpful for identifying the causes of malfunctions not remedied by routine maintenance and tune-ups. These malfunctions are classified as either **mechanical** (e.g. a strange noise), or **performance** (e.g. engine idles rough and stalls). Refer to the Service Diagnosis—Mechanical chart and the Service Diagnosis—Performance chart.

Additional tests and diagnostic procedures may be necessary to pinpoint a particular problem. This information is provided within Diagnosis with Scope Analyzer, Cylinder Compression Pressure Test, Cylinder Combustion Pressure Leakage Test, Cylinder Head Gasket Failure Diagnosis and Intake Manifold Leakage Diagnosis.

Service Diagnosis—Mechanical

Condition	Possible Cause	Correction
EXTERNAL OIL LEAKS	(1) Fuel pump gasket broken or improperly seated.	(1) Replace gasket.
	(2) Cylinder head cover RTV Sealant broken or improperly seated.	(2) Replace sealant; check cylinder head cover gasket flange and cylinder head sealant surface for distortion.
	(3) Oil filter gasket broken or improperly seated.	(3) Replace oil filter.
	(4) Oil pan side gasket broken or improperly seated.	(4) Replace gasket; check oil pan gasket flange for distortion.
	(5) Oil pan front oil seal broken or improperly seated.	(5) Replace seal; check timing case cover and oil pan seal flange for distortion.
	(6) Oil pan rear oil seal broken or improperly seated.	(6) Replace seal; check oil pan rear oil seal flange; check rear main bearing cap for cracks, plugged oil return channels, or distortion in seal groove.
	(7) Excess crankcase pressure because of restricted PCV valve.	(7) Replace PCV valve.
	(8) Timing case cover oil seal broken or improperly seated.	(8) Replace seal.
	(9) Oil pan drain plug loose or has stripped threads.	(9) Repair as necessary and tighten.
	(10) Rear oil gallery plug loose.	(10) Use appropriate sealant on gallery plug and tighten.
	(11) Rear camshaft plug loose or improperly seated.	(11) Seat camshaft plug or replace and seal, as necessary.
	(12) Distributor base gasket damaged.	(12) Replace distributor base gasket.
EXCESSIVE OIL CONSUMPTION	(1) Oil level too high.	(1) Lower oil level to specifications.
	(2) Oil too thin.	(2) Replace with specified oil.
	(3) Valve stem oil deflectors are damaged, missing, or incorrect type.	(3) Replace valve stem oil deflectors.
	(4) Valve stems or valve guides worn.	(4) Check stem-to-guide clearance and repair as necessary.
	(5) Piston rings broken, missing.	(5) Replace missing or broken rings.
	(6) Incorrect piston ring gap.	(6) Check ring gap, repair as necessary.
	(7) Piston rings sticking or excessively loose in grooves.	(7) Check ring side clearance, repair as necessary.
	(8) Compression rings installed upside down.	(8) Repair as necessary.
	(9) Cylinder walls worn, scored, or glazed.	(9) Repair as necessary.

60259A

Service Diagnosis—Mechanical (Continued)

Condition	Possible Cause	Correction
EXCESSIVE OIL CONSUMPTION (Continued)	(10) Piston ring gaps not properly staggered.	(10) Repair as necessary.
	(11) Excessive main or connecting rod bearing clearance.	(11) Check bearing clearance, repair as necessary.
	(12) PCV valve stuck closed	(12) Replace PCV valve.
NO OIL PRESSURE	(1) Low oil level.	(1) Add oil to correct level.
	(2) Oil pressure gauge or sending unit inaccurate.	(2) Refer to Oil Pressure Gauge in Chapter 1L.
	(3) Oil pump malfunction.	(3) Refer to Oil Pump in Chapter 1B
	(4) Oil pressure relief valve sticking.	(4) Remove and inspect oil pressure relief valve assembly. Refer to Chapter 1B.
	(5) Oil passages on pressure side of pump obstructed.	(5) Inspect oil passages for obstructions.
	(6) Oil pickup screen or tube obstructed.	(6) Inspect oil pickup for obstructions.
	(7) Loose oil inlet tube.	(7) Replace inlet tube.
LOW OIL PRESSURE	(1) Low oil level.	(1) Add oil to correct level.
	(2) Oil excessively thin due to dilution, poor quality, or improper grade.	(2) Drain and refill crankcase with correct grade oil.
	(3) Oil pressure relief spring weak or sticking.	(3) Remove and inspect oil pressure relief valve assembly.
	(4) Oil pickup tube and screen assembly has restriction or air leak.	(4) Remove and inspect oil inlet tube and screen assembly. (Fill pickup with lacquer thinner to find leaks.) Replace if defective.
	(5) Excessive oil pump clearance.	(5) Check clearances; refer to Oil Pump in Chapter 1B.
	(6) Excessive main, rod, or camshaft bearing clearance.	(6) Measure bearing clearances, repair as necessary.
HIGH OIL PRESSURE	(1) Improper grade oil.	(1) Drain and refill crankcase with correct grade oil.
	(2) Oil pressure gauge or sending unit inacurrate.	(2) Refer to Oil Pressure Gauge in Chapter 1L.
	(3) Oil pressure relief valve sticking closed.	(3) Remove and inspect oil pressure relief valve assembly.
	(4) Oil pressure relief valve anti-lock port blocked (eight-cylinder only).	(4) Check for obstruction; repair as necessary.
MAIN BEARING NOISE	(1) Insufficient oil supply.	(1) Check for low oil level or low oil pressure.
	(2) Main bearing clearance excessive.	(2) Check main bearing clearance, repair as necessary.
	(3) Crankshaft end play excessive.	(3) Check end play, repair as necessary.

Service Diagnosis—Mechanical (Continued)

Condition	Possible Cause	Correction
MAIN BEARING NOISE	(4) Loose flywheel or drive plate.	(4) Tighten flywheel or drive plate bolts.
	(5) Loose or damaged vibration damper.	(5) Repair as necessary.
CONNECTING ROD BEARING NOISE	(1) Insufficient oil supply.	(1) Check for low oil level or low oil pressure.
	(2) Bearing clearance excessive or bearing missing.	(2) Check clearance, repair as necessary.
	(3) Crankshaft connecting rod journal out-of-round.	(3) Check journal measurements, repair or replace as necessary.
	(4) Misaligned connecting rod or cap.	(4) Repair as necessary.
	(5) Connecting rod bolts tightened improperly.	(5) Tighten bolts to specified torque.
PISTON NOISE	(1) Piston-to-cylinder wall clearance excessive (scuffed piston).	(1) Check clearance, repair as necessary.
	(2) Cylinder walls excessively tapered or out-of-round.	(2) Check cylinder wall measurements, rebore cylinder.
	(3) Piston ring broken.	(3) Replace all rings on that piston.
	(4) Loose or seized piston pin.	(4) Check piston-to-pin clearance, repair as necessary.
	(5) Connecting rods misaligned.	(5) Check rod alignment, straighten or replace.
	(6) Piston ring side clearance excessively loose or tight.	(6) Check ring side clearance, repair as necessary.
	(7) Carbon build-up on piston is excessive.	(7) Clean carbon from piston.
VALVE TRAIN NOISE	(1) Insufficient oil supply.	(1) Check for: (a) Low oil level. (b) Low oil pressure. (c) Plugged pushrods. (d) Wrong hydraulic tappets. (e) Plugged oil gallery in block. (f) Excessive tappet to bore clearance
	(2) Push rods worn or bent.	(2) Replace worn or bent push rods.
	(3) Rocker arms or pivots worn.	(3) Replace worn rocker arms or pivots.
	(4) Dirt or chips in hydraulic tappets.	(4) Clean tappets.
	(5) Excessive tappet leak-down.	(5) Replace valve tappet.
	(6) Tappet face worn.	(6) Replace tappet; check corresponding cam lobe for wear.
	(7) Broken or cocked valve springs.	(7) Properly seat cocked springs; replace broken springs.
	(8) Stem-to-guide clearance excessive.	(8) Check stem-to-guide clearance, ream guide, install oversize valve.
	(9) Valve bent.	(9) Replace valve.

60259B

Service Diagnosis—Mechanical (Continued)

Condition	Possible Cause	Correction
VALVE TRAIN NOISE (Continued)	(10) Loose rocker arms.	(10) Tighten bolts to specified torque.
	(11) Valve seat runout excessive.	(11) Regrind valve seat/valves.
	(12) Missing valve lock.	(12) Install valve lock.
	(13) Push rod rubbing or contacting cylinder head.	(13) Remove cylinder head and remove obstruction in head.
	(14) Excessive oil level (4-cyl.).	(14) Correct oil level.

Service Diagnosis—Performance

Condition	Possible Cause	Correction
HARD STARTING (STARTER MOTOR OPERATES NORMALLY)	(1) Binding linkage, choke valve or choke piston.	(1) Repair as necessary.
	(2) Restricted choke vacuum and hot air passages.	(2) Clean passages.
	(3) Improper fuel level.	(3) Adjust float level.
	(4) Dirty, worn or faulty needle valve and seat.	(4) Repair as necessary.
	(5) Float sticking.	(5) Repair as necessary.
	(6) Exhaust manifold heat valve stuck (eight-cylinder engine only).	(6) Lubricate or replace.
	(7) Faulty fuel pump.	(7) Replace fuel pump.
	(8) Incorrect choke cover adjustment.	(8) Adjust choke cover.
	(9) Inadequate unloader adjustment.	(9) Adjust unloader.
	(10) Faulty ignition coil.	(10) Test and replace as necessary.
	(11) Improper spark plug gap.	(11) Adjust gap.
	(12) Incorrect initial timing.	(12) Adjust timing.
	(13) Incorrect valve timing.	(13) Check valve timing; repair as necessary.
ROUGH IDLE OR STALLING	(1) Incorrect curb or fast idle speed.	(1) Adjust curb or fast idle speed.
	(2) Incorrect initial timing.	(2) Adjust timing to specifications.
	(3) Improper idle mixture adjustment.	(3) Adjust idle mixture.
	(4) Damaged tip on idle mixture screw(s).	(4) Replace mixture screw(s).
	(5) Improper fast idle cam adjustment	(5) Adjust fast idle speed.
	(6) Faulty EGR valve operation.	(6) Test EGR system and replace as necessary.
	(7) Faulty PCV valve air flow.	(7) Test PCV valve and replace as necessary.

Service Diagnosis—Performance (Continued)

Condition	Possible Cause	Correction
ROUGH IDLE OR STALLING (Continued)	(8) Exhaust manifold heat valve inoperative (eight-cylinder engine only).	(8) Lubricate or replace heat valve as necessary.
	(9) Choke binding.	(9) Locate and eliminate binding condition.
	(10) Improper choke setting.	(10) Adjust choke.
	(11) Faulty TAC unit.	(11) Repair as necessary.
	(12) Air leak into manifold vacuum.	(12) Check manifold vacuum and repair as necessary.
	(13) Improper fuel level.	(13) Adjust fuel level.
	(14) Faulty distributor rotor or cap.	(14) Replace rotor or cap.
	(15) Leaking engine valves.	(15) Perform cylinder combustion or compression test, repair as necessary
	(16) Incorrect ignition wiring.	(16) Check wiring and correct as necessary.
	(17) Faulty ignition coil.	(17) Test coil and replace as necessary.
	(18) Clogged air bleed or idle passages.	(18) Clean passages.
	(19) Restricted air cleaner.	(19) Clean or replace air cleaner.
FAULTY LOW-SPEED OPERATION	(1) Clogged idle transfer slots.	(1) Clean transfer slots.
	(2) Restricted idle air bleeds and passages.	(2) Clean air bleeds and passages.
	(3) Restricted air cleaner.	(3) Clean or replace air cleaner.
	(4) Improper fuel level.	(4) Adjust fuel level.
	(5) Faulty spark plugs.	(5) Clean or replace spark plugs.
	(6) Dirty, corroded, or loose secondary circuit connections.	(6) Clean or tighten secondary circuit connections.
	(7) Faulty ignition coil wire.	(7) Replace coil wire.
	(8) Faulty distributor cap.	(8) Replace cap.
FAULTY ACCELERATION	(1) Improper pump stroke.	(1) Adjust pump stroke.
	(2) Incorrect ignition timing.	(2) Adjust timing.
	(3) Inoperative pump discharge check ball or needle.	(3) Clean or replace as necessary.
	(4) Faulty elastomer valve. (Eight-cylinder engine only.)	(4) Replace valve.

70334B

Service Diagnosis—Performance (Continued)

Condition	Possible Cause	Correction
FAULTY ACCELERATION (Continued)	(5) Worn or damaged pump diaphragm or piston.	(5) Replace diaphragm or piston.
	(6) Leaking main body cover gasket.	(6) Replace gasket.
	(7) Engine cold and choke too lean.	(7) Adjust choke.
	(8) Improper metering rod adjustment (BBD Model carburetor)	(8) Adjust metering rod.
	(9) Faulty spark plug(s).	(9) Clean or replace spark plug(s).
	(10) Leaking engine valves.	(10) Check cylinder leakdown rate or compression, repair as necessary.
	(11) Faulty coil.	(11) Test coil and replace as necessary.
FAULTY HIGH SPEED OPERATION	(1) Incorrect ignition timing.	(1) Adjust timing.
	(2) Faulty distributor centrifugal advance.	(2) Check centrifugal advance and repair as necessary.
	(3) Faulty distributor vacuum advance.	(3) Check vacuum advance and repair as necessary.
	(4) Low fuel pump volume.	(4) Replace fuel pump.
	(5) Wrong spark plug gap; wrong plug.	(5) Adjust gap; install correct plug.
	(6) Faulty choke operation.	(6) Adjust choke.
	(7) Partially restricted exhaust manifold, exhaust pipe, muffler or tailpipe.	(7) Eliminate restriction.
	(8) Clogged vacuum passages.	(8) Clean passages.
	(9) Improper size or obstructed main jet.	(9) Clean or replace as necessary.
	(10) Restricted air cleaner.	(10) Clean or replace as necessary.
	(11) Faulty distributor rotor or cap.	(11) Replace rotor or cap.
	(12) Faulty coil.	(12) Test coil and replace as necessary.
	(13) Leaking engine valve(s).	(13) Perform cylinder combustion or compression test, repair as necessary.
	(14) Faulty valve spring(s).	(14) Inspect and test valve spring tension and replace as necessary.
	(15) Incorrect valve timing.	(15) Check valve timing and repair as necessary.

70334C

Service Diagnosis—Performance (Continued)

Condition	Possible Cause	Correction
FAULTY HIGH SPEED OPERATION (Continued)	(16) Intake manifold restricted.	(16) Remove restriction or replace manifold.
	(17) Worn distributor shaft.	(17) Replace shaft.
MISFIRE AT ALL SPEEDS	(1) Faulty spark plug(s).	(1) Clean or replace spark plug(s).
	(2) Faulty spark plug wire(s).	(2) Replace as necessary.
	(3) Faulty distributor cap or rotor.	(3) Replace cap or rotor.
	(4) Faulty ignition coil.	(4) Test coil and replace as necessary.
	(5) Trigger wheel too high.	(5) Set to specifications.
	(6) Primary circuit shorted or open intermittently.	(6) Trace primary circuit and repair as necessary.
	(7) Leaking engine valve(s).	(7) Perform cylinder combustion or compression test, repair as necessary.
	(8) Faulty hydraulic tappet(s).	(8) Clean or replace tappet(s).
	(9) Faulty valve spring(s).	(9) Inspect and test valve spring tension, repair as necessary.
	(10) Worn lobes on camshaft.	(10) Replace camshaft.
	(11) Air leak into manifold vacuum.	(11) Check manifold vacuum and repair as necessary.
	(12) Improper carburetor adjustments.	(12) Adjust carburetor.
	(13) Fuel pump volume or pressure low.	(13) Replace fuel pump.
	(14) Cylinder head gasket failure.	(14) Replace gasket.
	(15) Intake or exhaust manifold passage(s) restricted.	(15) Pass chain through passages.
	(16) Wrong trigger wheel.	(16) Install correct wheel.
POWER NOT UP TO NORMAL	(1) Incorrect ignition timing.	(1) Adjust timing.
	(2) Faulty distributor rotor.	(2) Replace rotor.
	(3) Trigger wheel positioned too high or loose on shaft.	(3) Reposition or replace trigger wheel.
	(4) Incorrect spark plug gap.	(4) Adjust gap.
	(5) Faulty fuel pump.	(5) Replace fuel pump.
	(6) Incorrect valve timing.	(6) Check valve timing and repair as necessary.
	(7) Faulty ignition coil.	(7) Test coil and replace as necessary.
	(8) Faulty ignition wires.	(8) Test wires and replace as necessary.

70334D

Service Diagnosis—Performance (Continued)

Condition	Possible Cause	Correction
POWER NOT UP TO NORMAL (Continued)	(9) Leaking engine valves.	(9) Perform cylinder combustion or compression test, and repair as necessary.
	(10) Cylinder head gasket failure.	(10) Replace gasket.
	(11) Leaking piston rings.	(11) Check compression and repair as necessary.
	(12) Worn distributor shaft.	(12) Replace shaft.
INTAKE BACKFIRE	(1) Improper ignition timing.	(1) Adjust timing.
	(2) Faulty accelerator pump discharge.	(2) Repair as necessary.
	(3) Improper choke operation.	(3) Repair as necessary.
	(4) Defective EGR CTO valve.	(4) Replace EGR CTO valve.
	(5) Defective TAC unit.	(5) Repair as necessary.
	(6) Lean fuel mixture.	(6) Check float level or manifold vacuum for air leak. Remove sediment from bowl.
EXHAUST BACKFIRE	(1) Air leak into manifold vacuum.	(1) Check manifold vacuum and repair as necessary.
	(2) Faulty diverter valve.	(2) Test diverter valve and replace as necessary.
	(3) Faulty choke operation.	(3) Repair as necessary.
	(4) Exhaust leak.	(4) Locate and eliminate leak.
PING OR SPARK KNOCK	(1) Incorrect ignition timing.	(1) Adjust timing.
	(2) Distributor centrifugal or vacuum advance malfunction.	(2) Check advance and repair as necessary.
	(3) Excessive combustion chamber deposits.	(3) Use combustion chamber cleaner.
	(4) Carburetor set too lean.	(4) Adjust carburetor.
	(5) Air leak into manifold vacuum.	(5) Check manifold vacuum and repair as necessary.
	(6) Excessively high compression.	(6) Check compression and repair as necessary.
	(7) Fuel octane rating excessively low.	(7) Try alternate fuel source.
	(8) Heat riser stuck in heat ON position (eight-cylinder engine only).	(8) Free-up or replace heat riser.
	(9) Sharp edges in combustion chamber.	(9) Grind smooth.
SURGING (CRUISING SPEEDS TO TOP SPEEDS)	(1) Low fuel level.	(1) Adjust fuel level.
	(2) Low fuel pump pressure or volume.	(2) Replace fuel pump.

70334E

Service Diagnosis—Performance (Continued)

Condition	Possible Cause	Correction
SURGING (CRUISING SPEEDS TO TOP SPEEDS) (Continued)	(3) Metering rod(s) not adjusted properly (BBD Model Carburetor).	(3) Adjust metering rod.
	(4) Improper PCV valve air flow.	(4) Test PCV valve and replace as necessary.
	(5) Air leak into manifold vacuum.	(5) Check manifold vacuum and repair as necessary.
	(6) Clogged main jet(s).	(6) Clean main jet(s).
	(7) Undersize main jet(s).	(7) Replace main jet(s).
	(8) Blocked air bleeds.	(8) Clean air bleeds.
	(9) Clogged fuel filter screen.	(9) Replace fuel filter.
	(10) Restricted air cleaner.	(10) Clean or replace air cleaner.

70344F

DIAGNOSIS WITH SCOPE ANALYZER

The scope analyzer is an ignition system tester that provides a quick and accurate means for diagnosis of ignition system performance problems. All phases of the ignition cycle are displayed graphically on an oscilloscope (cathode ray tube) as they occur during engine operation.

The manufacturers of scope analyzer equipment provide descriptions of the test procedures possible with their equipment. This section is not intended to describe all uses of scope analyzer equipment, but to indicate differences in scope pattern between the HEI (High Energy Ignition) and SSI (Solid State Ignition) systems used on Jeep engines (fig. 1A-1).

The upper display illustrates a typical scope pattern for the HEI system from one ignition to the next ignition and areas of the pattern significant for diagnosis. The scope pattern displays the time duration horizontally and voltage amplitude vertically.

Compare the scope pattern of the HEI system with the typical pattern of the SSI system.

The SSI waveform pattern drops further below the zero voltage level (i.e., negative) during oscilation dampening but otherwise is similar to that of the HEI system in this area.

Other than the differences noted, scope analyzer ignition system diagnosis for HEI and SSI systems is essentially the same.

CYLINDER COMPRESSION PRESSURE TEST

The results of a cylinder compression pressure test can be utilized identifying the cylinder(s) with an abnormal compression pressure. With this information available, additional testing/inspection will provide the exact cause of the pressure loss.

(1) Clean spark plug recesses with compressed air.

(2) Remove spark plugs.

(3) Remove coil wire from distributor caps and connect to ground.

(4) Secure throttle in wide open position.

NOTE: *Ensure battery and starter motor are in good operating condition before starting test. Otherwise, indicated compression pressures may not be valid for diagnosis purposes.*

(5) Insert compression pressure gauge, engage starter motor and turn engine for three revolutions. Record compression pressure on third revolution.

(6) Test remaining cylinders and record compression pressures.

(7) Refer to Compression Pressure chart.

Compression Pressure

Engine	Pressure—PSI (kPa)	Max. Cyl. Deviation—PSI (kPa)
Four-Cylinder	140 (965)	30 (207)
Six-Cylinder	120-140 (827-965)	30 (207)
Eight-Cylinder	120-140 (827-965)	30 (207)

81091

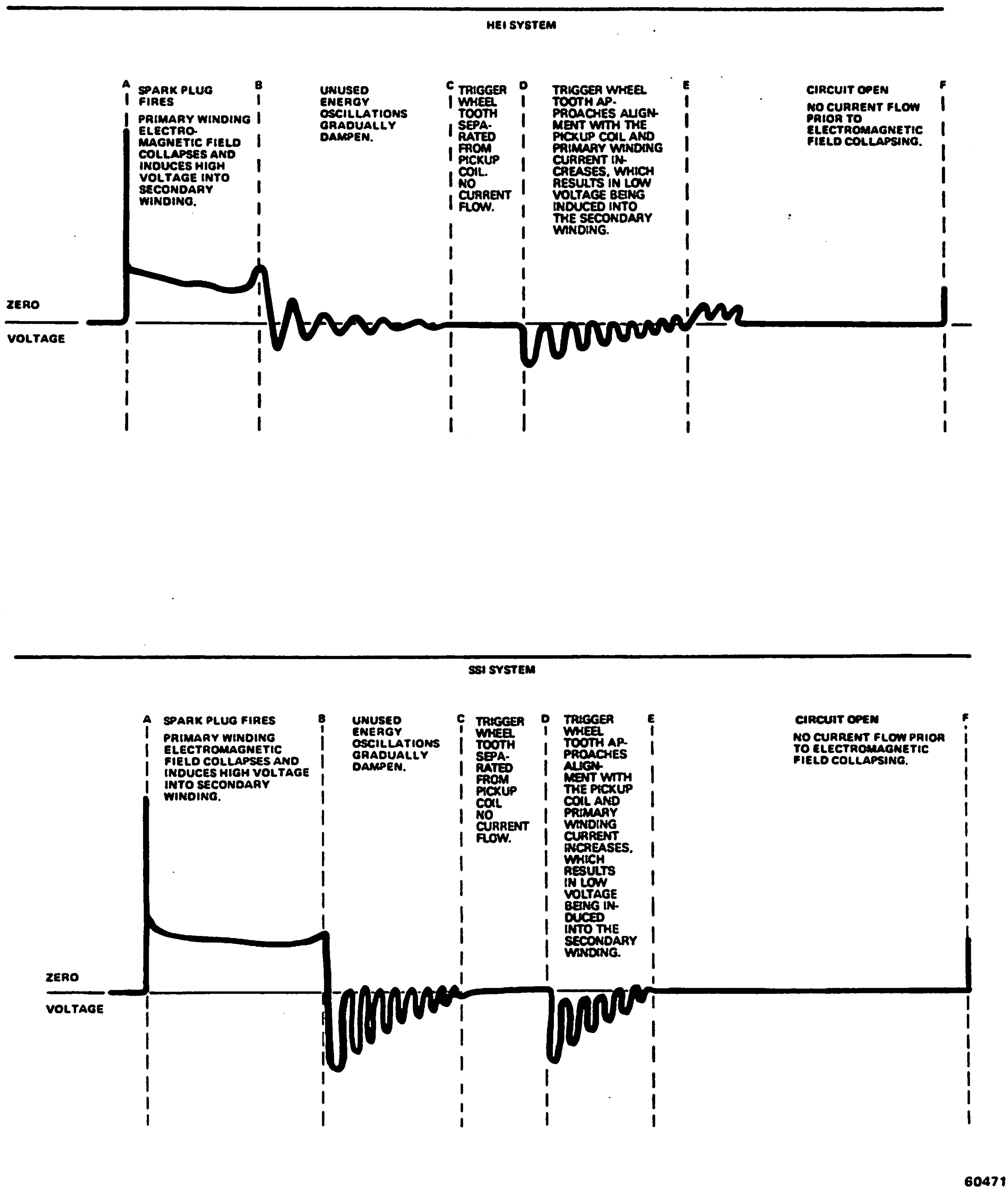

Fig. 1A-1 Scope Diagnosis Patterns

CYLINDER COMBUSTION PRESSURE LEAKAGE TEST

Satisfactory engine performance depends upon a mechanically sound engine. In many instances, unsatisfactory performance or rough idle is caused by combustion chamber leakage. A cylinder compression pressure test alone may not reveal this fault. The pressure leakage test outlined below provides an accurate means of evaluating engine condition. Pressure leakage testing will indicate if the exhaust or intake valves are improperly seated, if leaks exist between adjacent cylinders, if there are leaks into the water jacket and any other causes of compression pressure loss.

(1) Inspect coolant level and add as required. Do not install radiator cap.

(2) Start and operate engine until it attains normal operating temperature, then turn ignition Off.

(3) Remove spark plugs.

(4) Remove oil filler cap.

(5) Remove air cleaner.

(6) Position carburetor fast idle speed screw on top step of fast idle cam.

(7) Calibrate test equipment according to manufacturer's instructions.

NOTE: *Shop air source for testing should maintain 70 psi (483 kPa) minimum and 200 psi (1380 kPa) maximum (80 psi* [552 kPa] recommended).

(8) Perform test procedure on each cylinder according to equipment manufacturer's instructions.

NOTE: *While testing, listen for air escaping through carburetor, tailpipe and oil filler opening, and look for bubbles in radiator coolant.*

(9) All gauge indications should be equal, with no more than 25 percent leakage. For example, at 80 psi (552 kPa) input pressure, a minimum of 60 psi (414 kPa) should be maintained in cylinder. Refer to Cylinder Combustion Pressure Leakage Test Diagnosis.

CYLINDER HEAD GASKET FAILURE DIAGNOSIS

A "blown" cylinder head gasket usually results in a loss of power, loss of coolant and engine misfire. A "blown" cylinder head gasket may develop between adjacent cylinders or between a cylinder and adjacent water jacket.

A cylinder head gasket "blown" between two adjacent cylinders is usually indicated by a loss of power and engine misfire.

A cylinder head gasket "blown" between a cylinder and an adjacent water jacket is indicated by foaming of coolant or overheating and loss of coolant.

Replace a "blown" cylinder head gasket using the procedure outlined in Chapter 1B—Engines.

Cylinder-to-Cylinder Leakage Test

To determine if the cylinder head gasket is "blown" between cylinders, perform a compression pressure test as outlined under Cylinder Compression Pressure Test. A cylinder head gasket "blown" between two cylinders will result in approximately a 50 to 70 percent reduction in compression pressure in the two affected cylinders.

Cylinder Combustion Pressure Leakage Test Diagnosis

Condition	Possible Cause	Correction
(1) Air escapes through carburetor.	(1) Intake valve leaks.	(1) Refer to Valve Reconditioning (Chapter 1B).
(2) Air escapes through tailpipe.	(2) Exhaust valve leaks.	(2) Refer to Valve Reconditioning (Chapter 1B).
(3) Air escapes through radiator.	(3) Head gasket leaks or crack in cylinder block.	(3) Remove cylinder head and inspect.
(4) More than 25% leakage into adjacent cylinder.	(4) Head gasket leaks or crack in cylinder block or head between adjacent cylinders.	(4) Remove cylinder head and inspect.
(5) More than 25% leakage and air escapes through oil filler cap opening only.	(5) Stuck or broken piston ring(s); cracked piston; worn rings and/or cylinder wall.	(5) Inspect for broken ring(s) or piston. Measure ring gap and cylinder diameter, taper, and out-of-round.

70335

Cylinder-to-Water Jacket Leakage Test

WARNING: *Use extreme caution when engine is operating. Do not stand in direct line with fan. Do not put hands near pulleys, belts or fan. Do not wear loose clothing.*

(1) Remove radiator cap and start engine. Allow engine to warm up until thermostat opens.

(2) If large compression/combustion pressure leak exists, bubbles will be visible in coolant.

(3) If bubbles are not visible, install radiator pressure tester and pressurize system. If cylinder compression and combustion pressure is leaking into water jacket, pointer will pulsate with every combustion stroke of piston.

INTAKE MANIFOLD LEAKAGE DIAGNOSIS

An intake manifold air leak is characterized by lower than normal manifold vacuum. One or more cylinders may be "dead."

Exterior Leak

Two tests are possible, one with engine oil and one with acetylene.

WARNING: *Use extreme caution when engine is operating. Do not stand in direct line with fan. Do not put hands near pulleys, belts or fan. Do not wear loose clothing.*

(1) Start engine.

(2) Apply oil to gasket edge areas between intake manifold and cylinder head. If oil is forced into manifold, or if smoke is evident in exhaust, manifold has air leak.

(3) Open acetylene valve of oxyacetylene torch. **Do not ignite.** Pass torch tip over gasket edge areas. If engine speed increases, manifold has leak.

Interior Leak—Eight-Cylinder Engine Only

WARNING: *Use extreme caution when engine is operating. Do not stand in direct line with fan. Do not put hands near pulleys, belts or fan. Do not wear loose clothing.*

(1) Start engine. Remove PCV valve hose from intake manifold.

(2) Plug PCV valve hose fitting in manifold. Allow PCV valve to hang free.

(3) Remove oil filler cap. Cover filler tube with palm of hand. If vacuum is felt, crankcase is exposed to intake manifold or cylinder head vacuum.

(4) Remove intake manifold. Inspect for casting flaws.

(5) Inspect cylinder head for casting flaws. Thoroughly inspect area around intake valves and intake valve ports.

(6) With valve closed, fill port with gasoline and inspect for leaks. Alternate method: wrap shop cloth around air nozzle and apply air pressure to port. Listen for leaks.

ENGINE TUNE-UP

GENERAL

A complete, precision tune-up is required at the interval outlined in the Engine Maintenance Schedule—Chapter B. A tune-up will accomplish several things. First, it will assure that the engine is operating as efficiently and as economically as it was designed to operate. Second, it will assure that the undesirable exhaust and fuel vapor emissions are within the limits defined by Federal and state regulations.

A complete, precision tune-up includes all of the tasks listed in the Engine Maintenance Schedule. Some tasks involve highly-precision emission control devices. These devices are discussed within the applicable systems in their respective chapters of this manual. They are included in this chapter for reference only.

For convenience, when performing a precision tune-up, the necessary services are grouped together by either assembly or system.

ENGINE ASSEMBLY

Oil Filler Cap

On eight-cylinder engines, a polyurethane foam filter in the oil filler cap filters air coming into the PCV system. To clean the filter, apply light air pressure in the direction opposite normal airflow (through the filler tube opening). If the filter is deteriorated, replace the filler cap.

Drive Belts

Inspect belts for defects such as fraying or cracking. Test belt tension. Belt tension testing, adjustment, arrangement and tension specifications are listed in Chapter 1C—Cooling Systems.

Vacuum Fittings and Hoses

Inspect vacuum hose fittings for looseness and corrosion. Inspect rubber hoses for brittleness and cracking. Thoroughly inspect the hose ends that are slipped onto nipples. Engine performance may be adversely affected by air leaks in such unlikely places as the heater and air conditioner control vacuum hoses, Cruise Command hoses or the power brake booster vacuum hose.

IGNITION SYSTEM

Spark Plugs

Remove and examine spark plugs for burned electrodes and fouled, cracked or broken porcelain insulators. Keep plugs arranged in the order removed from the engine. An isolated plug displaying an abnormal condition indicates that a problem exists in the cylinder from where it was removed. Replace plugs at the mileage interval recommended in the Engine Maintenance Schedule. Plugs that have less engine mileage may be cleaned and reused if not otherwise defective. Refer to Spark Plug Condition. After cleaning, file the center electrode flat with a point file. Adjust the gap (separation) between electrodes to 0.033-0.038 inch (0.84-0.97 mm) for six- and eight-cylinder engines, and 0.060 inch (1.52 mm) for four-cylinder engines (fig. 1A-2).

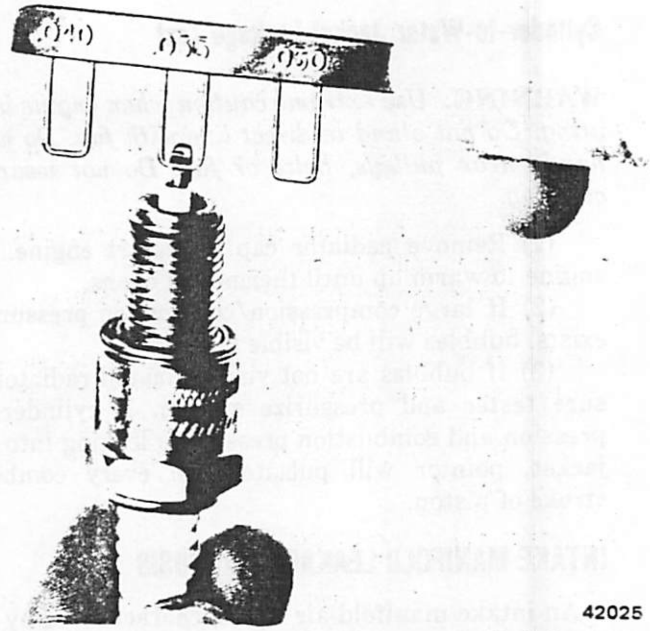

42025

Fig. 1A-2 Spark Plug Gap Measurement—Typical

Always use a torque wrench when installing spark plugs. Distortion from overtightening will change the gap (separation) of the plug electrodes. For four- and six-cylinder engines, tighten plugs with 7 to 15 foot-pounds (9.5 to 23 N•m) torque. For eight-cylinder engines, tighten plugs with 25 to 30 foot-pounds (34 to 41 N•m) torque.

Spark Plug Condition

Refer to figure 1A-3. Compare the spark plugs with the illustrations and the following descriptions.

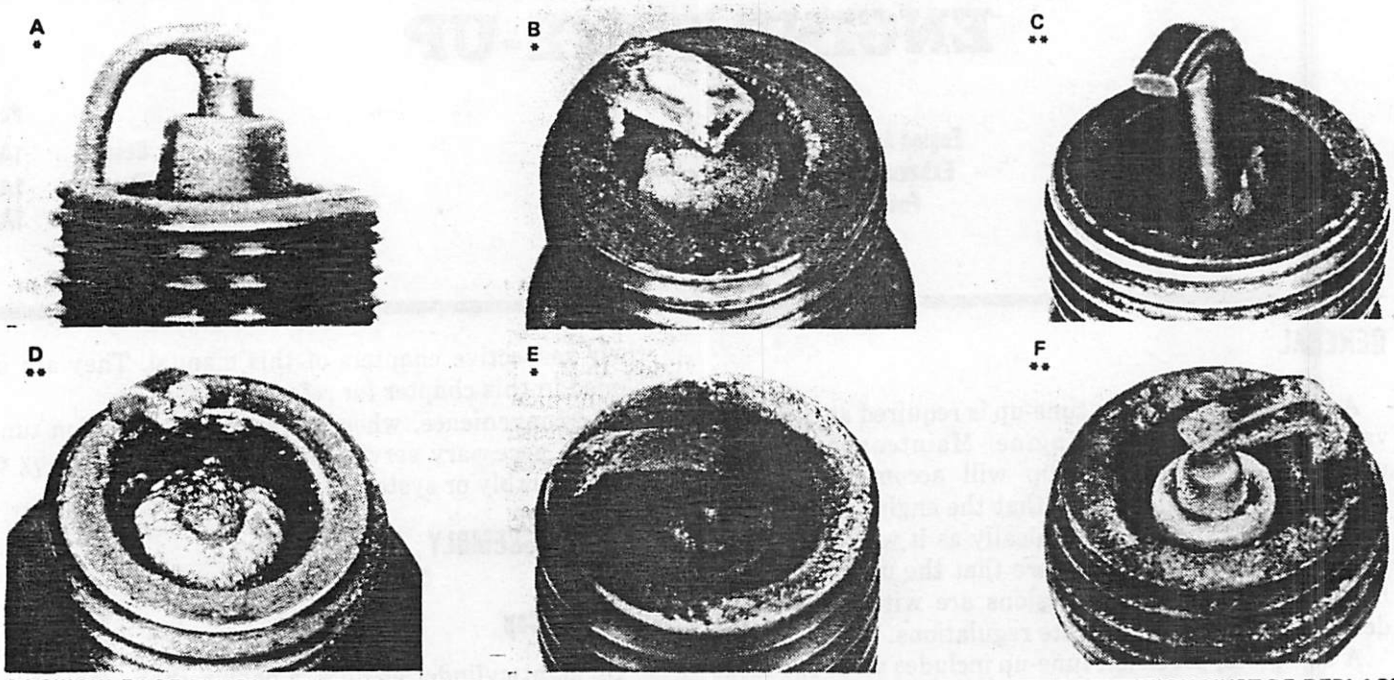

* LOW MILEAGE PLUGS WITH THIS CONDITION MAY BE CLEANED ** PLUGS WITH THIS CONDITION MUST BE REPLACED

Fig. 1A-3 Typical Spark Plug Conditions

60770

A—Electrode Gap Bridging

Electrode gap bridging may be traced to loose deposits in the combustion chamber. These deposits accumulate on the plugs during continuous stop-and-go driving. When the engine is suddenly subjected to a high torque load, the deposits partially liquefy and bridge the gap (i.e., short circuit the electrodes).

B—Scavenger Deposits

Fuel scavenger deposits may be either white or yellow. They may appear to be harmful but this is a normal condition caused by chemical additives in certain fuels. Such additives are designed to change the chemical nature of deposits and decrease spark plug misfire tendencies. Notice that accumulation on the ground (side) electrode and shell area may be heavy, but the deposits are easily removed. Plugs with scavenger deposits can be considered normal in condition and can be cleaned using standard procedures.

C—Chipped Electrode Insulator

A chipped electrode insulator usually results from bending the center electrode while adjusting the spark plug electrode gap (separation). Under certain conditions, severe detonation can also separate the insulator from the center electrode.

D—Preignition Damage

Preignition damage is caused by excessive combustion chamber temperature. First, the center electrode dissolves and, somewhat later, the ground (side) electrode. Insulators appear relatively deposit free. Determine if the spark plug has the correct heat range rating, if ignition timing is overadvanced or if other conditions are causing engine overheating.

NOTE: *The heat range rating refers to the operating temperature of a particular type spark plug. Spark plugs are designed to operate within specific temperature ranges depending upon the thickness and length of the center electrode porcelain insulator.*

E—Cold Fouling (or Carbon Fouling)

The deposits that cause cold fouling are basically carbon. A dry, black deposit on one or two plugs in a set may be caused by "sticking" valves or defective spark plug wires. Cold (carbon) fouling of the entire set may be caused by a clogged air cleaner, a sticking exhaust manifold heat valve (eight-cylinder engine only) or a faulty carburetor choke.

F—Spark Plug Overheating

Overheating is indicated by a white or gray electrode insulator that also appears blistered. The increase in electrode gap (separation) will be considerably in excess of 0.001 inch per 1000 miles (0.025 mm per 1 609 km) of engine operation. This suggests that a plug with a cooler heat range rating should be used. Overadvanced ignition timing, detonation and cooling system malfunctions can also cause spark plug overheating.

NOTE: *Some fuel refiners in several areas of the United States have introduced a manganese additive (MMT) for unleaded fuel. During combustion, fuel with MMT causes the entire tip of the spark plug to be coated with a rust-colored deposit. This rust color may be misdiagnosed as being caused by coolant in the combustion chamber. Spark plug performance is not affected by MMT deposits.*

Spark Plug and Ignition Coil Wires

To remove wires from spark plugs, twist the rubber protector boot approximately 1/2-turn to break the seal. Grasp the boot and pull it from the plug with constant force. Do not pull on the wire itself because this will damage the conductor and terminal connection.

To remove wires from the distributor cap or ignition coil tower, loosen the boot first, then grasp the upper part of the boot and the wire and gently pull straight up.

Wire Resistance Test

Do not puncture spark plug wires with a probe while performing any test. This may cause a separation in the conductor. The preferred method is to remove the suspected wire and use an ohmmeter to test for the correct resistance according to the length of the particular wire. Refer to Spark Plug and Coil Wire Resistance Wire Values chart.

Spark Plug and Coil Wire Resistance Values

Inches	Ohms
0 to 15	3,000 to 10,000
15 to 25	4,000 to 15,000
25 to 35	6,000 to 20,000
Over 35	8,000 to 25,000

60748

When installing spark plug wires and the ignition coil high voltage wire, ensure mechanically tight connections are made at the spark plugs, distributor cap tower and ignition coil tower. The wire protector boots on the spark plugs and distributor cap towers and coil tower must fit tightly. A partially seated wire terminal creates an air separation (resistance) in the high voltage circuit and the resulting arcing will cause terminal corrosion, wire conductor damage and decrease the voltage at the spark plugs.

When replacing spark plug wires, route the wires correctly and secure them within the proper retainers. Failure to route the wires properly can result in radio ignition noise and cross ignition of the plugs, or short circuit the wires to ground.

Ignition Coil

Always test a suspected defective ignition coil on the engine. Because a coil may "break down" after the engine has heated it to operating temperature, it is important that the coil be at normal operating temperature when tested. If using an ignition coil tester (not an ohmmeter) perform the tests according to the instructions provided by the manufacturer of the equipment. Refer to Chapter 1G—Ignition Systems for additional information.

Distributor

The distributor used with all engines is a solid state, electronically controlled type (i.e., no contact points). Other than the cap and rotor inspection listed in the Engine Maintenance Schedule, there is no scheduled maintenance for distributors. Refer to Chapter 1G—Ignition Systems for distributor service procedures.

Distributor Rotor Inspection

Visually inspect the rotor for cracks, evidence of corrosion and the effects of arcing on the metal tip, and evidence of mechanical interference with the cap (fig. 1A-4). Some charring is normal on the end of the metal tip. The silicone dielectric compound applied to the rotor tip for radio interference noise suppression (six-and eight-cylinder engines) will appear charred. This is normal. Do not remove the charred compound. Test the spring for insufficient tension. Replace a rotor that displays any of the adverse conditions illustrated in figure 1A-4. Coat the tip of a replacement rotor (six- and eight-cylinder engines only) with Jeep Silicone Dielectric Compound, or equivalent.

Distributor Cap Inspection

Remove the distributor cap and wipe clean with a dry cloth. Perform a visual inspection for cracks, carbon paths, broken towers, charred or eroded terminals and

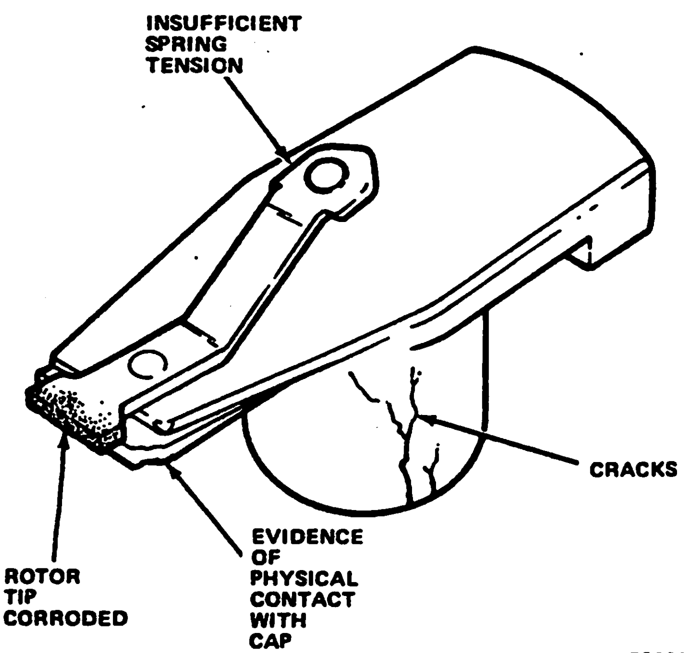

Fig. 1A-4 Rotor Inspection

damaged rotor button (fig. 1A-5). Replace any cap that displays any of the adverse conditions illustrated in figure 1A-5. When replacing a cap, transfer one spark plug wire at a time to the replacement cap. If necessary, refer to Distributor Wiring Sequence illustrated in Specifications. Ensure each wire is installed in the tower corresponding to its original tower position. Insert the wire terminals firmly into the towers.

Replace the cap if the terminal ends inside the cap are excessively eroded (fig. 1A-5). The vertical face of a terminal end will indicate some evidence of erosion from normal operation. Examine the terminal ends for evidence of mechanical interference with the rotor tip.

Ignition System Timing

A graduated timing degree scale located on the timing case cover is used for timing each ignition system. An index notch milled into the vibration damper is used to reference the No. 1 cylinder ignition position of the crankshaft with the correct timing mark on the graduated scale (figs. 1A-6 and 1A-7).

Magnetic Timing Probe

A socket integral with the timing degree scale on the timing case cover is provided for use with a special magnetic timing probe that detects the milled notch in the vibration damper. The probe is inserted through the socket until it touches the vibration damper and is automatically spaced away from the damper by damper eccentricity. Ignition timing is indicated on a meter or computer printout, depending on the manufacturer's equipment.

The socket is located at 9.5° ATDC, and the equipment is calibrated to compensate for the degree difference. **Do not use the socket location when timing an ignition system with a conventional timing light.**

Ignition Timing Procedure

Refer to Tune-Up Specification charts and Emission Control Information label located in the engine compartment.

(1) Disconnect and plug distributor vacuum advance hose opening.

(2) With ignition switch off, connect ignition timing light and properly calibrated tachometer.

NOTE: *If the timing light has an adjustable advance control feature, turn the control to the OFF position.*

(3) For six-cylinder engines, disconnect two-wire connector (yellow and black wires) at electronic ignition module and short circuit ignition module connector terminals with jumper wire. This step does not apply to 49-state designated CJ vehicles.

NOTE: *When the ignition module connector terminals are short circuited with the jumper wire the electronic retard circuit is deactivated. This is necessary to accurately adjust the ignition timing.*

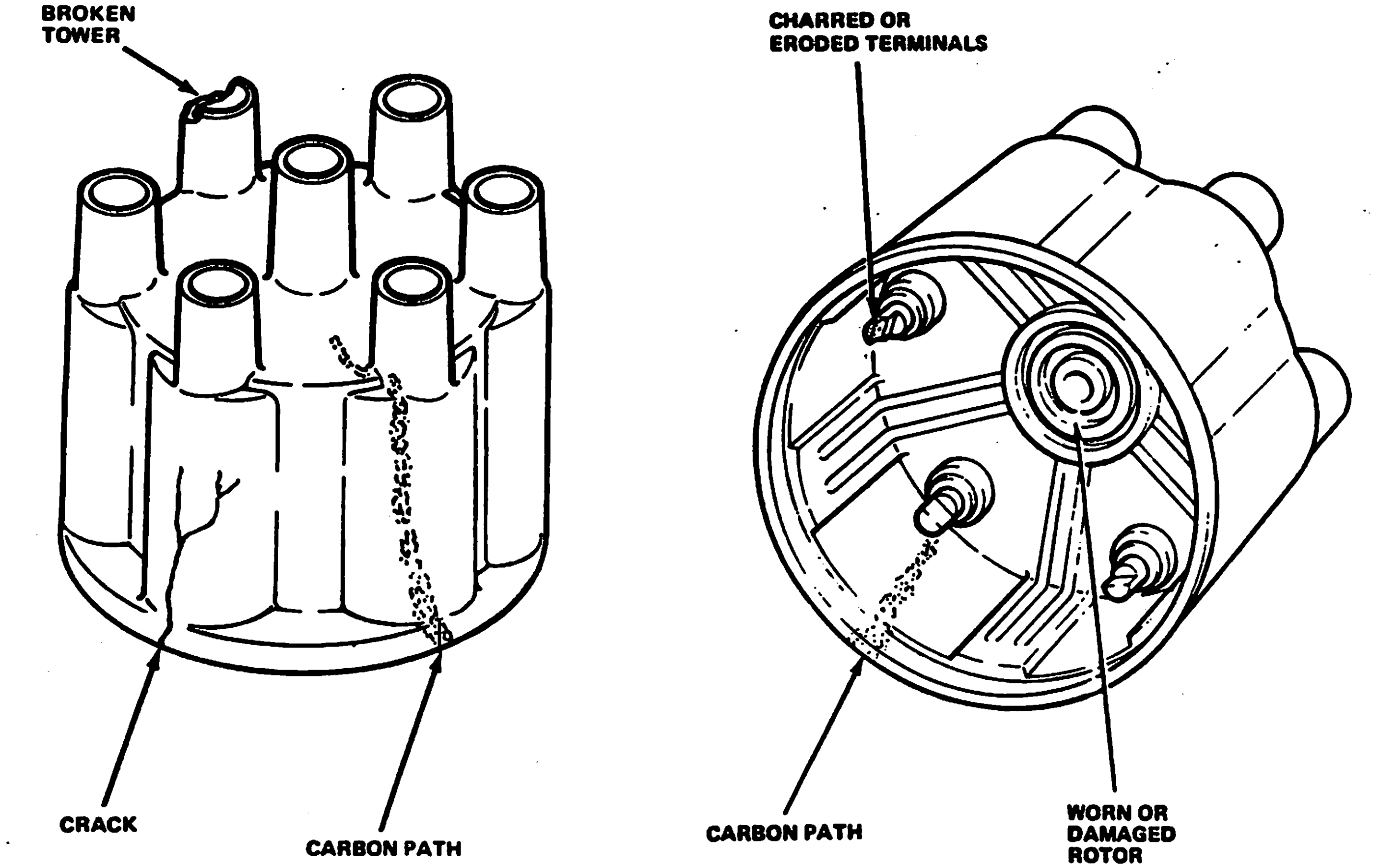

Fig. 1A-5 Distributor Cap Inspection—Typical

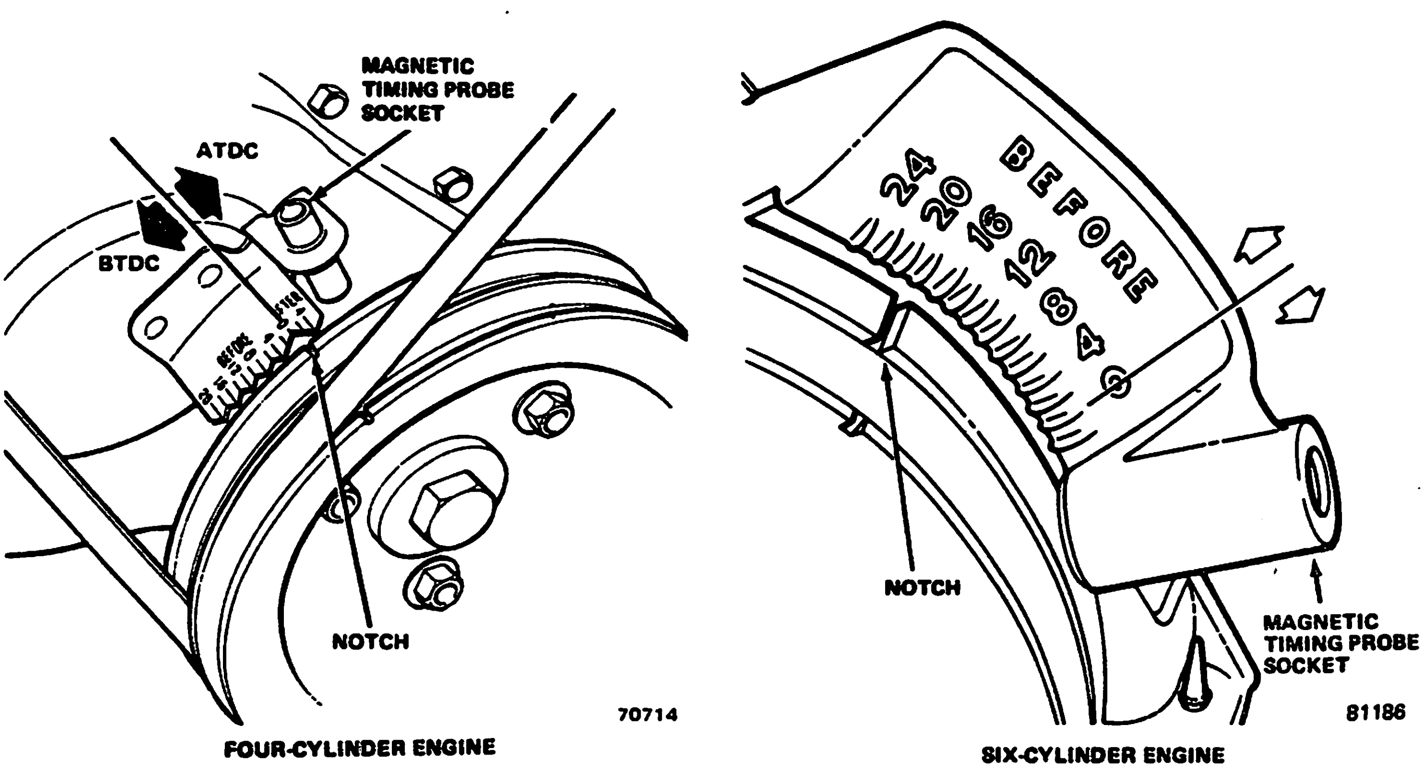

Fig. 1A-6 Timing Degree Scale and Notch Location—Four- and Six-Cylinder Engines

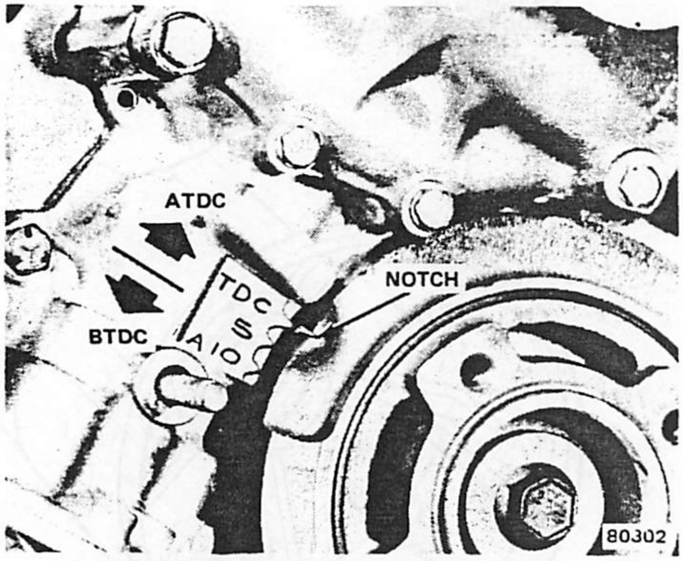

Fig. 1A-7 Timing Degree Scale and Notch Location—Eight-Cylinder Engine

WARNING: *Use extreme caution when engine is operating. Do not stand in direct line with fan. Do not put hands near pulleys, belts or fan. Do not wear loose clothing.*

(4) Engage parking brake, start engine and allow to warm up to normal operating temperature. Place automatic transmission in Drive, manual transmission in Neutral position.

(5) Adjust idle speed to specified curb (slow) idle rpm. Refer to Tune-Up Specifications charts and Emission Control Information label.

WARNING: *Use extreme caution when engine is operating. Do not stand in direct line with fan. Do not put hands near pulleys, belts or fan. Do not wear loose clothing.*

(6) Adjust ignition timing to degrees specified in Tune-Up Specifications—On Vehicle chart by loosening distributor holddown clamp and rotating distributor.

(7) For six-cylinder engines (except 49-State 6-cylinder CJ) increase engine speed to 1600 rpm while observing and adjusting ignition timing.

(8) Tighten distributor holddown clamp and verify that ignition timing is correct.

(9) Turn off engine and remove timing light and tachometer. Connect No. 1 spark plug wire, if disconnected. Connect hose to distributor vacuum advance mechanism. If applicable, remove jumper wire and connect electronic ignition module connector to wire harness connector.

Testing Distributor Advance Mechanisms

Adjustable Advance Control Timing Light Procedure

(1) Connect timing light and tachometer as described above. Disconnect and plug vacuum advance hose. Connect vacuum pump (with gauge) to distributor vacuum advance mechanism.

(2) For six-cylinder engines, disconnect two-wire connector (yellow and black wires) at electronic ignition module and short circuit ignition module connector terminals with jumper wire. This will deactivate electronic retard circuit in module. This step does not apply to 49-state designated CJ vehicles.

WARNING: *Use extreme caution when engine is operting. Do not stand in direct line with fan. Do not put hands near pulleys, belts or fan. Do not wear loose clothing.*

(3) Start engine and allow to warm-up to normal operating temperature. Set parking brake, place automatic transmission in Drive, manual in Neutral position.

(4) Increase engine speed to 2000 rpm. Apply 18 in. Hg (60.8 kPa) vacuum to distributor vacuum advance mechanism.

(5) Observe timing degree scale and turn advance control on ignition timing light until ignition timing (degrees BTDC) has returned to idle speed specification (1600 rpm for six-cylinder engines). Degrees indicated on advance meter should be total degrees advance as specified in Distributor Curves in Specifications. Add vacuum advance degrees at 18 in. Hg (60.8 kPa) to mechanical advance degrees at 2000 rpm. For example, for six-cylinder engine, total advance should be 28.5 to 39 degrees BTDC.

(6) If total advance at 2000 rpm with 18 in. Hg (60.8 kPa) vacuum applied is less than specification, disconnect vacuum pump and, with engine at 2000 rpm, determine maximum centrifugal degrees advance. Refer to Distributor Curves in Specifications.

(7) If centrifugal advance degrees are within specification, replace vacuum advance mechanism.

(8) Turn off engine; remove timing light and tachometer; remove jumper wire and connect electronic ignition module connector to wire harness connector (six-cylinder engine only); and connect vacuum hose to distributor.

Testing Distributor Advance Mechanisms—Off Engine

Total distributor advance degrees also may be determined with the distributor removed from the engine. Follow the distributor test equipment manufacturer's instructions.

Information provided in the Distributor Curves is for on-engine testing. If the distributor advance mechanisms are tested with a distributor tester, convert the information in the Distributor Curves from engine rpm to distributor rpm and from engine degrees advance to distributor degrees advance. Divide engine rpm by 2 to obtain distributor rpm. Divide engine degrees advance by 2 to obtain distributor degrees advance. For instance, if the Distributor Curve indicates 8 to 12 degrees advance at 2000 rpm, the corresponding on-tester specifications would be 4 to 6 degrees advance at 1000 rpm.

NOTE: *The specified vacuum inches of mercury (or kPa) is the same, regardless if test is on-engine or off-engine.*

FUEL SYSTEM

General Inspection

Fuel systems depend on hoses and rigid tubing to route liquid fuel, fuel vapors and vacuum. Fuel vapor and air leaks upset the operation of the engine and may reduce the effectiveness of the emission control devices. Liquid fuel leaks not only waste fuel but also create a fire hazard. Carefully inspect hoses and tubing for cracks, dents, corrosion and abnormal bends. Inspect fittings for corrosion or looseness. Inspect the fuel tank for leaks caused by loose mounting straps, broken seams, dents or corrosion. Inspect filler neck grommets and hoses for proper installation.

Air Cleaner

Replace the dry-type air cleaner filter element during each precision tune-up. Under extreme conditions (e.g., dusty environment), more frequent replacement is recommended.

Fuel Filter

All Jeep vehicles have two fuel filters. The in-tank filter is designed to be maintenance-free. The in-line filter between the fuel pump and carburetor and in-carburetor filter (four-cylinder engine) require periodic replacement. When installing the replacement filter (six- and eight-cylinder engines), ensure the fuel return nipple is positioned at the top of the filter.

Carburetor Idle Speed Adjustment

General

The engine and related systems must be operating properly before performing idle speed adjustments.

The idle mixture should not require adjustment as part of a precision tune-up. The idle mixture adjustment screws are sealed on all carburetors (figs. 1J-8, 1J-9 and 1J-10). The plugs or dowel pins must be removed before the idle mixture can be adjusted. This effectively prevents indiscriminate adjustments. Do not remove the plug(s) or dowel pins and readjust the mixture screw(s) unless involved in a major carburetor overhaul, throttle body replacement or the emission of excessive CO at idle speed has been determined by a competent authority. Refer to Chapter 1J—Fuel Systems.

Idle Speed Control (Six-Cylinder Engines)

The Sole-Vac throttle positioner is part of the model BBD carburetor assembly. It is activated in two ways: by an electric holding solenoid and by a pneumatic vacuum actuator. The holding solenoid will maintain throttle position, but it does not have the ability to move

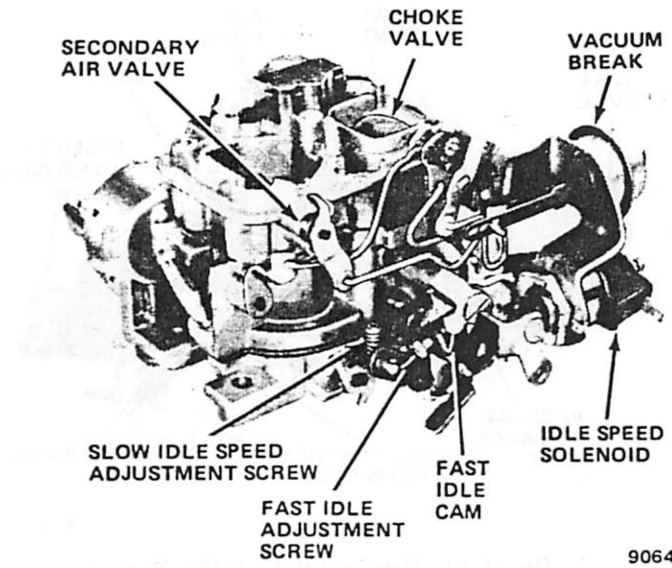

Fig. 1A-8 Rochester Model 2SE and E2SE Carburetors

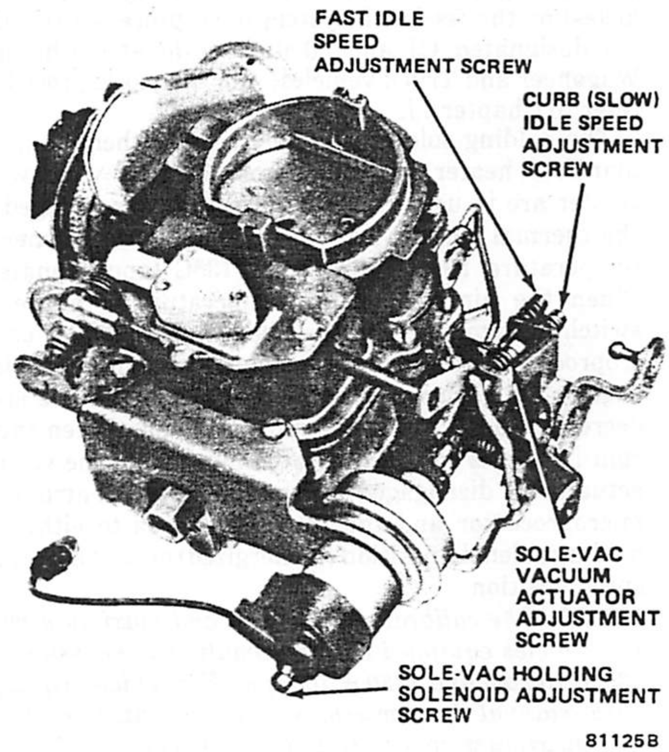

Fig. 1A-9 Carter Model BBD Carburetor

the throttle to a new position. The vacuum actuator portion of the Sole-Vac, however, is capable of moving the throttle to a new position when manifold vacuum is applied to it.

The Sole-Vac throttle positioner has three positions. One is the off, or deactivated, position (curb idle); the second is the holding solenoid position; and the third is the vacuum actuator position. An electric vacuum switching solenoid allows manifold vacuum stored in a reservoir to reach the vacuum actuator and engage it. The electric vacuum switching solenoid is energized by

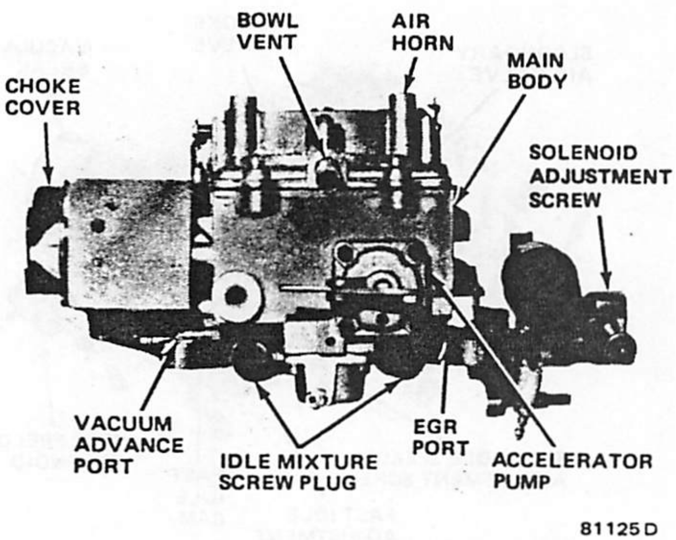

Fig. 1A-10 Motorcraft Model 2150 Carburetor

the idle speed controller (49-state designated CJ vehicles) or the feedback system microprocessor (California designated CJ and 50-state designated Cherokee, Wagoneer and Truck vehicles). For diagnosis procedure, refer to Chapter 1J.

The holding solenoid is energized if either the intake manifold heater, air conditioner or rear window defroster are in use. The vacuum actuator is engaged via the thermal electric switch (TES) if the air cleaner air temperature is below 55°F or 13°C (approximately). When the air cleaner air temperature is above the switching temperature, the idle speed controller or microprocessor energizes the vacuum switching solenoid to engage the vacuum actuator every time the idle speed decreases to the calibrated minimum rpm. When engine rpm increases to the calibrated maximum, the vacuum actuator is disengaged by the idle speed controller or microprocessor and the throttle returns to either the holding solenoid position (if energized) or to the curb idle speed position.

NOTE: *The calibrated minimum and maximum rpm's for vehicles equipped with automatic transmissions are 435 ± 10 rpm and 1050 ± 100 rpm. For vehicles equipped with manual transmissions, the calibrated minimum and maximum rpm's are 463 ± 10 rpm and 1175 ± 150 rpm.*

Adjustment Precautions and General Information

- Because vehicles with automatic transmissions are adjusted in Drive, set the parking brake firmly and do not accelerate the engine.
- Allow the engine to heat to normal operating temperature before adjusting the idle speed.
- Perform the adjustment with the air cleaner installed or with the air cleaner removed and associated vacuum hoses plugged and carburetor choke valve open. The A/C compressor clutch wire connector must be disconnected and the deceleration valve vacuum hose removed and plugged for four-cylinder engines.
- Do not operate the engine at idle speed more than three minutes at a time.
- Ensure the ignition timing is correct before adjusting the idle speed.
- Use extreme caution when engine is operating. Do not stand in direct line with fan. Do not put hands near pulleys, belts or fan. Do not wear loose clothing.

Idle Speed Adjustment Procedure—Four-Cylinder Engine with Model E2SE Carburetor

NOTE: *When adjusting idle speed, put manual transmission in Neutral.*

WARNING: *Set parking brake firmly. Do not accelerate engine.*

(1) Connect tachometer to ignition coil or pigtail wire connector.

(2) Disconnect hose from distributor vacuum advance mechanism and plug hose. Connect timing light.

(3) Adjust (if necessary) ignition timing with engine at or below specified idle speed.

(4) Connect vacuum hose to distributor vacuum advance mechanism. Disconnect timing light.

(5) Disconnect deceleration valve and purge hose from vapor cannister and plug hoses. Remove air cleaner.

NOTE: *The electronic fuel control system must be operating in the closed-loop mode during the idle speed adjustment. The system should be operating in the closed-loop mode when the engine heats to normal operating temperature. However, to ensure closed-loop mode of operation, the use of a dwell meter is recommended.*

(6) Insert dwell meter probes into terminal 6 (+) and terminal 13 (-) of diagnostic connector (fig. 1A-11). Turn meter selector switch to "six-cylinder" scale position.

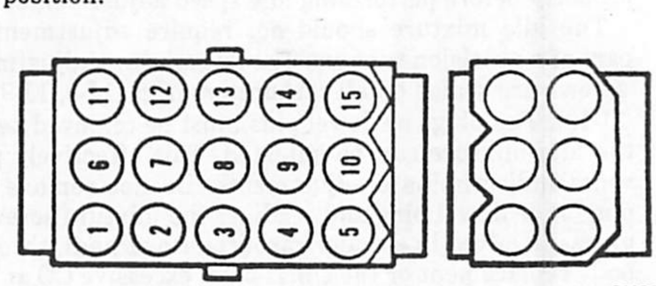

Fig. 1A-11 Diagnostic Connector

(7) Dwell meter pointer should be oscillating (15-degree sweep maximum) and pointer should be located within 10 to 50 degree range.

NOTE: *If dwell meter indicates system is in closed-loop mode of operation, continue with adjustment procedure. If not, the engine may not be sufficiently heated and the* *system is in the open-loop mode of operation. If this condition continues after several minutes with the engine at normal operating temperature, refer to Chapter 1J—Fuel Systems for diagnostic procedure.*

(8) If equipped with air conditioning, adjust idle speed screw (fig. 1A-8) to obtain specified engine rpm. Turn A/C control switch On. Open throttle momentarily to ensure solenoid armature is fully extended. Adjust solenoid idle speed screw (fig. 1A-8) to obtain specified engine rpm. Turn A/C control switch off.

(9) If not equipped with air conditioning, adjust solenoid idle speed screw (fig. 1A-8) with solenoid energized to obtain specified engine rpm. Disconnect solenoid wire connector and adjust idle speed screw to obtain specified curb idle speed. Connect solenoid wire connector.

(10) Disconnect hose from EGR (exhaust gas recirculating) valve and plug hose.

(11) With fast idle speed screw on top step of fast idle speed cam, adjust fast idle speed to obtain specified engine rpm.

(12) Stop engine. Install air cleaner. Connect all vacuum hoses and A/C compressor wire connector. Disconnect tachometer.

Idle Speed Adjustment Procedure—Four-Cylinder Engine with Model 2SE Carburetor

(1) Connect tachometer to ignition coil or pigtail wire connector.

(2) Disconnect hose from distributor vacuum advance mechanism and plug hose. Connect timing light.

(3) Adjust (if necessary) ignition timing with engine at or below specified idle speed.

(4) Connect vacuum hose to distributor vacuum advance mechanism. Disconnect timing light.

(5) Disconnect deceleration valve hose and canister purge hose. Plug hoses. Remove air cleaner.

(6) If equipped with air conditioning, adjust idle speed screw (fig. 1A-8) to obtain specified engine rpm. Turn A/C control switch On. Open throttle momentarily to ensure solenoid armature is fully extended. Adjust solenoid idle speed screw (fig. 1A-8) to obtain specified engine rpm. Turn A/C control switch Off.

(7) If not equipped with air conditioning, adjust solenoid idle speed screw (fig. 1A-8) with solenoid energized to obtain specified engine rpm. Disconnect solenoid wire connector and adjust idle speed to obtain specified engine curb idle speed rpm.

(8) Disconnect hose from exhaust gas recirculating (EGR) valve and plug.

(9) With fast idle speed screw (fig. 1A-8) on top step of fast idle speed cam, adjust fast idle speed screw to obtain specified engine rpm.

(10) Stop engine. Install air cleaner and connect all vacuum hoses. Disconnect tachometer.

Idle Speed Adjustment Procedure—Six-Cylinder Engine

(1) Connect tachometer to ignition coil negative terminal or pigtail wire connector. Start and allow engine to attain normal operating temperature. Carburetor choke and intake manifold heater must be off. This occurs when engine coolant heats to approximately 160°F (71°C).

NOTE: *When adjusting the idle speed, place manual transmission in Neutral or automatic transmission in Drive. Turn all accessories Off.*

WARNING: *Set parking brake firmly. Do not accelerate engine.*

(2) Disconnect vacuum hose from Sole-Vac vacuum actuator and plug. Disconnect holding solenoid wire connector. Adjust carburetor curb (slow) idle speed adjustment screw (fig. 1A-9) to obtain specified curb (slow) idle engine rpm if not within specification. Refer to Emission Control Information label and Tune-Up Specifications chart.

(3) Apply direct source of vacuum to vacuum actuator. Use Vacuum Pump Tool J-23738, or equivalent.

(4) When throttle positioner is fully extended, turn vacuum actuator adjustment screw on throttle lever until specified engine rpm is obtained.

(5) Disconnect vacuum source from vacuum actuator.

(6) If equipped, turn air conditioner On.

(7) With jumper wire, apply battery voltage (12V) to energize holding solenoid (fig. 1A-9). Hold throttle open manually to allow throttle positioner to fully extend.

NOTE: *Without the vacuum actuator, throttle must be opened manually to allow Sole-Vac throttle positioner to be fully extended.*

(8) If holding solenoid idle speed is not within tolerance, adjust Sole-Vac (hex-head adjustment screw) to obtain specified engine rpm.

(9) Remove jumper wire from Sole-Vac holding solenoid wire connector.

(10) Connect Sole-Vac holding solenoid wire connector.

(11) Connect original hose to vacuum actuator.

(12) Disconnect tachometer.

Idle Speed Adjustment Procedure—Eight-Cylinder Engine

NOTE: *When adjusting the idle speed, put manual transmission in Neutral. Put automatic transmission in Drive.*

WARNING: *Set parking brake firmly. Do not accelerate engine.*

(1) Connect tachometer, start engine and warm to normal operating temperature. Choke must be off.

(2) If not within OK range, turn curb idle adjustment screw to obtain specified curb idle rpm.

(3) Turn hex screw on solenoid carriage to obtain specified idle rpm.

(a) Tighten locknut, if equipped.

(b) Disconnect solenoid wire connector and adjust curb idle screw to obtain 500 rpm idle speed.

(c) Connect solenoid wire connector.

(d) If model 2150 carburetor is equipped with dashpot: with throttle at curb idle position, fully depress dashpot stem and measure clearance between stem and throttle lever. Clearance should be 0.093 inch (2.36 mm). Adjust by loosening locknut and turning dashpot.

Choke Linkage

Inspect all choke linkages, including the fast idle cam, for free movement at the engine mileage interval specified in the Engine Maintenance Schedule.

Clean choke linkage by applying Jeep Carburetor and Combustion Area Cleaner, or equivalent. Never use oil to lubricate choke linkage.

For choke circuit adjustment procedures, refer to Chapter 1J—Fuel Systems.

PCV Air Inlet Filter

Four- and Six-Cylinder Engines

A polyester non-woven felt PCV air inlet filter is located in a retainer inside the air cleaner. Rotate the retainer to remove it from the air cleaner (fig. 1A-12). Replace or clean the filter at the engine mileage interval specified in the Engine Maintenance Schedule. Clean with kerosene or detergent and water. Squeeze excess liquid from filter. Do not wring or twist. After cleaning, lightly oil the filter with clean engine lube oil.

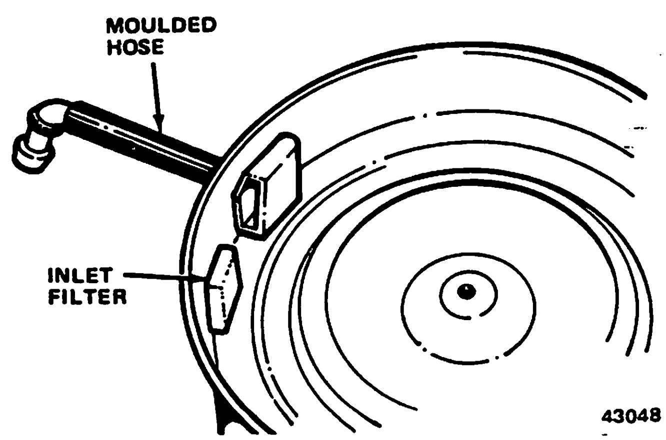

Fig. 1A-12 PCV Air Inlet Filter—Four- and Six-Cylinder Engines

Eight-Cylinder Engine

A PCV air inlet filter is located in the sealed oil filler cap. To clean the filter, apply light air pressure in the direction opposite normal air flow (through the filler tube opening in the cap). Do not apply oil to the filter. If the filter is deteriorated, replace the filler cap.

Fuel Tank Vapor Emission Control System

The fuel tank, filler cap, fuel hoses and vent hoses must be maintained in good condition to prevent raw fuel vapor (hydrocarbons) from entering the atmosphere.

Inspect the filler cap for evidence of fuel leakage stains at the filler neck opening. Remove the cap and examine the condition of the sealing gasket. Replace the filler cap if the gasket is damaged or deteriorated.

Inspect the fuel tank for evidence of fuel leakage stains. Trace stain to its origin and repair or replace the tank as required.

Inspect the fuel and vent hoses for leakage or damage. Repair or replace as required. Ensure all connections are tight.

If liquid fuel is present in the fuel vapor storage canister, inspect the liquid check valve and replace if necessary.

Fuel Vapor Storage Canister Filter

The filter pad located at the bottom of the canister is the only serviceable part of the canister assembly. Replace at the interval specified in the Engine Maintenance Schedule.

Thermostatically Controlled Air Cleaner (TAC) System

Inspect the air valve in the air cleaner snorkel for proper operation. If necessary, refer to Chapter 1J—Fuel Systems for functional test procedure.

Inspect hoses for cracks and brittleness. Replace as necessary.

EXHAUST SYSTEMS

Air Injection Systems

Inspect hoses and hose connections for defects. Replace as necessary. Refer to Chapter 1K—Exhaust Systems for system functional test procedures.

Exhaust Manifold Heat Valve—Eight-Cylinder Engine

The exhaust manifold heat valve is an often overlooked, but highly important, emission control related device. This valve can affect the fuel economy, engine performance and driveability, and cause excessive emission of undesirable exhaust gases.

Inspect the valve (located in front exhaust pipe) for correct operation and lubricate with Jeep Heat Valve Lubricant, or equivalent. Refer to Chapter 1K—Exhaust Systems for additional service procedures.

Tune-Up Specifications—On-Vehicle

CID and Venturi	Vehicle	Trans.	Curb Idle Speed - RPM①	Sole-Vac Speed RPM		Initial Timing BTDC at Curb 1600 RPM② With Vacuum Advance Hose Disconnected	Distributor Model Number	Vacuum Advance Mechanism	Centrifugal Degrees Advance At 2000 RPM	Vacuum Degrees Advance	Spark Plug Type And Gap
			Set To	Holding Solenoid Energized	Vacuum Actuator Energized	Set To					
258 2V	CJ	Manual (49-S)	650 ± 70	750 ± 50	900 ± 50	8° ± 1° ③	3241334	8122802	8°-13°	Refer To Distributor Curves	Champion RFN14LY (Alternate FN14LY) 0.035 inch (0.033 to 0.038) inch (0.84) to 0.97 mm) Gap
		Manual (Calif.)	650 ± 70	750 ± 50	900 ± 50	15° ± 1° ③	3231333	8122802	9.5°-13°		
		Automatic (49-S)	550 ± 70	650 ± 50	800 ± 50	8° ± 1°	3241334	8122802	8°-13°		
		Automatic (Calif.)	550 ± 70	650 ± 50	800 ± 50	15° ± 1°	3241333	8122802	9.5°-13°		
	Cherokee Wagoneer Truck	Manual (50-S)	600 ± 70	750 ± 50	900 ± 50	15° ± 1°	3241333	8122802	9.5°-13°		
		Automatic (50-S)	500 ± 70	650 ± 50	800 ± 50	15° ± 1°					
		Manual (Hi-ALT)	600 ± 70	750 ± 50	900 ± 50	19° ± 1°	3241333	8122802	9.5°-13°		
		Automatic (Hi-ALT)	500 ± 70	650 ± 50	800 ± 50	21° ± 1°	3241333	8122802	9.5°-13°		

NOTE: Automatic Adjusted in Drive; Manual in Neutral

81158

①Sole-Vac de-energized. ② Electronic retard deactivated

③ Timing set at curb idle (49S CJ)

CID and Venturi	Vehicle	Transmission	Slow Idle RPM		Initial Timing at Curb Idle With Vacuum Advance Hose Disconnected	Distributor Model Number	Vacuum Mechanism Number	Centrifugal Degrees Advance at 2000 RPM	Vacuum Degrees Advance	Spark Plug
			Set To	OK Range						
151 2V	CJ Scrambler	Manual (49-S)	900	800-1000	12° ± 1°	1110598	8134116	5°-7°	Refer To Distributor Curves	Type AC R44TSX 0.060 Inch (1.52 mm) Gap
		Manual (Calif.)	900	800-1000	8° ± 1000	1110598	8134116	5°-7°		
		Manual (HI—ALT)	900	800-1000	17° ± 1°	1110598	8134116	5°-7°		
360 2V	Cherokee Wagoneer Truck	Manaul (49-S)	600	550-650	10° ± 1°	3233174	8129470	6°-10.5°		RN12Y (Alt. N12Y) Gap 0.033 (0.84 mm) to 0.038 (0.97 mm)
		Automatic (49-S)	600	550-650	10° ± 1°	3233174	8129470	6°-10.5°		
		Manual/Automatic (HI—ALT)	600	550-650	16° ± 1°	3233174	8129470	6°-10.5°		

NOTE: Automatic Adjusted in Drive; Manual in Neutral. Idle Speed is 500 rpm with solenoid de-energized.

90206

Distributor Curves—On-Vehicle

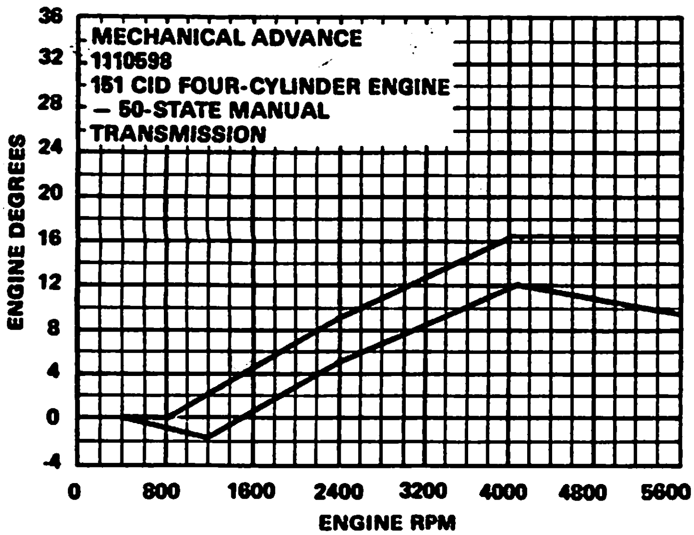

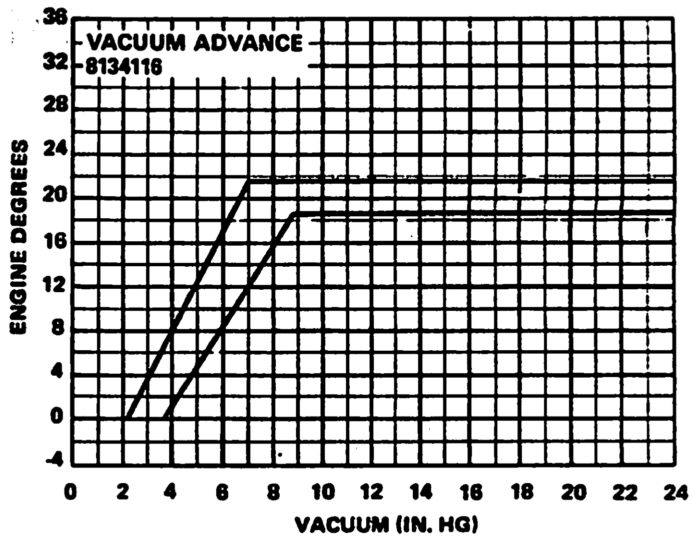

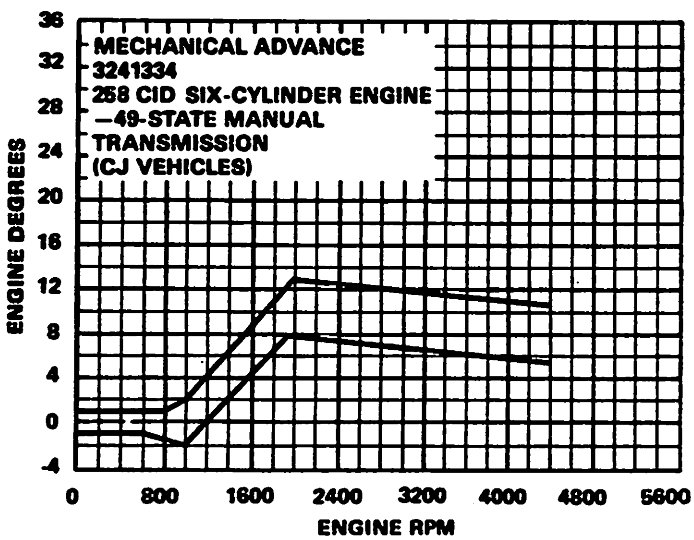

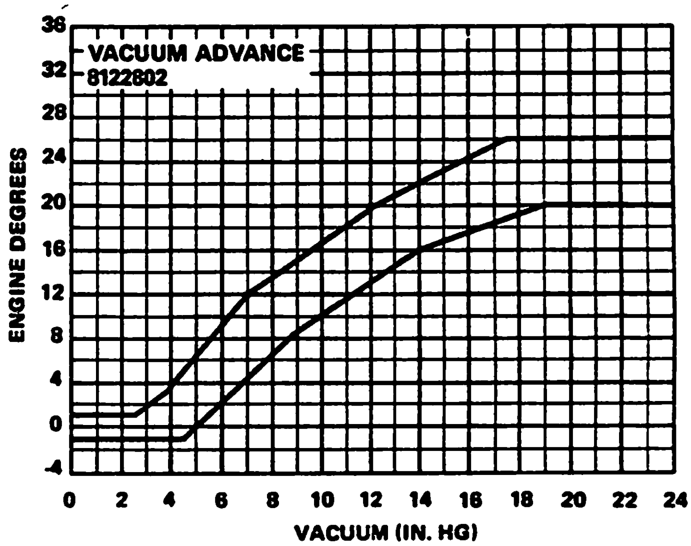

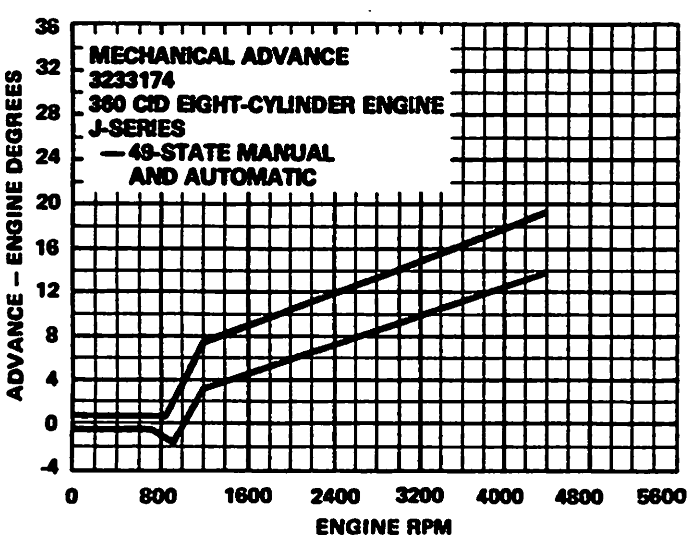

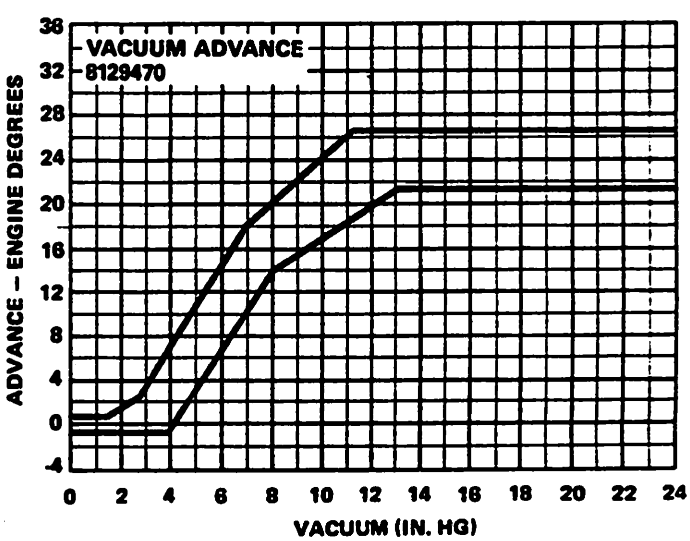

90185A

Distributor Curves—On-Vehicle

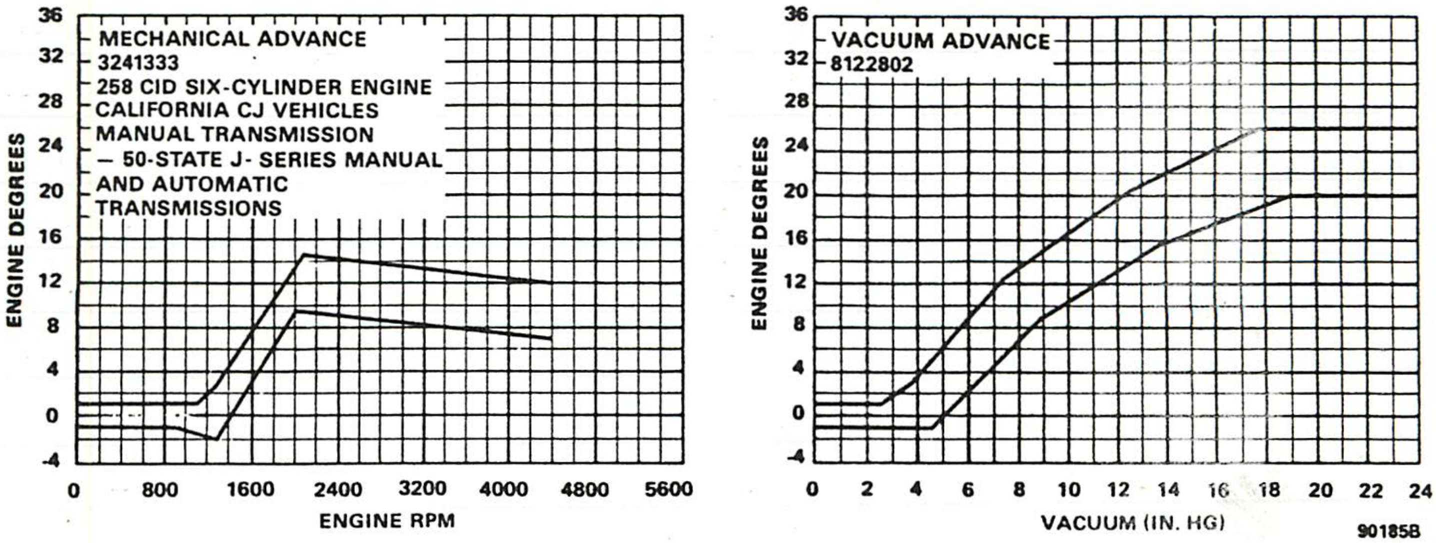

90185B

Distributor Wiring Sequence and Engine Firing Order

Four-Cylinder Engine

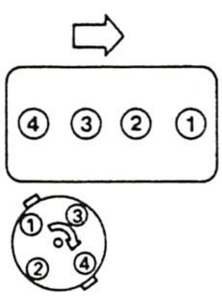

90968

Six-Cylinder Engine

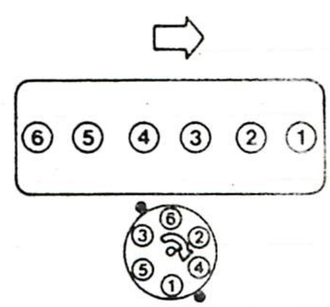

42189

Eight-Cylinder Engine

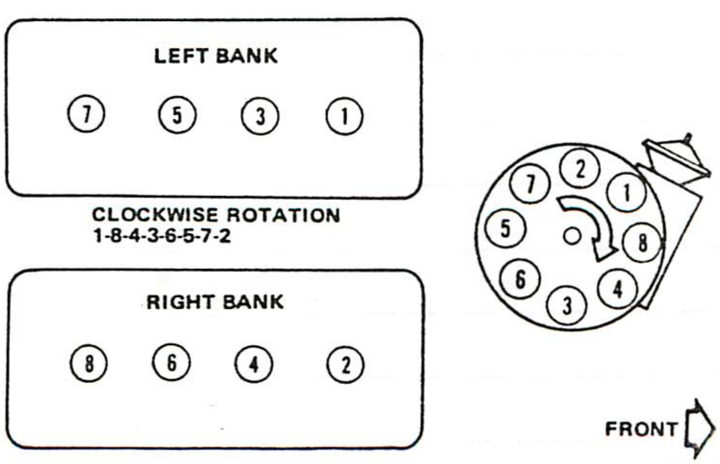

42189

NOTES

ENGINES 1B

SECTION INDEX

FOUR-CYLINDER ENGINE

GENERAL

The 151 CID (2.5 liter) four-cylinder engine (fig. 1B-1, 2 and 3) installed in CJ vehicles has a cross-flow cylinder head, five main crankshaft bearings, hydraulic valve tappets, conventional ball socket valve rocker arms, a camshaft that is gear driven directly from the crankshaft and a coolant heated aluminum intake manifold.

Identification

The two-character engine identification code is stamped into the left hand rear top corner of the block (fig. 1B-4).

In addition, engines built for sale in Georgia and Tennessee have a nonrepeating number stamped into the left rear block flange (fig. 1B-4).

Two-Character Engine Code

The following the two-character engine ID codes represent the data listed adjacent to each code.

- 4P—49S, Manual Trans, WO/AC
- 4Z—Calif. Manual Trans, WO/AC

Engine Mounting

Resilient rubber cushions support the engine (fig. 1B-5) and transmission at three points: at each side on the centerline of the engine and at the rear between the transmission extension housing and the rear support crossmember. Replacement of a cushion may be accomplished by supporting the weight of the engine or transmission at the area of the cushion.

NOTE: *Remove the screws that attach the shroud to the radiator to prevent damage to the shroud by the fan.*

ENGINE REPLACEMENT

Removal

(1) Open hood.

(2) Remove battery negative cable from battery. Remove body ground wire from dash panel.

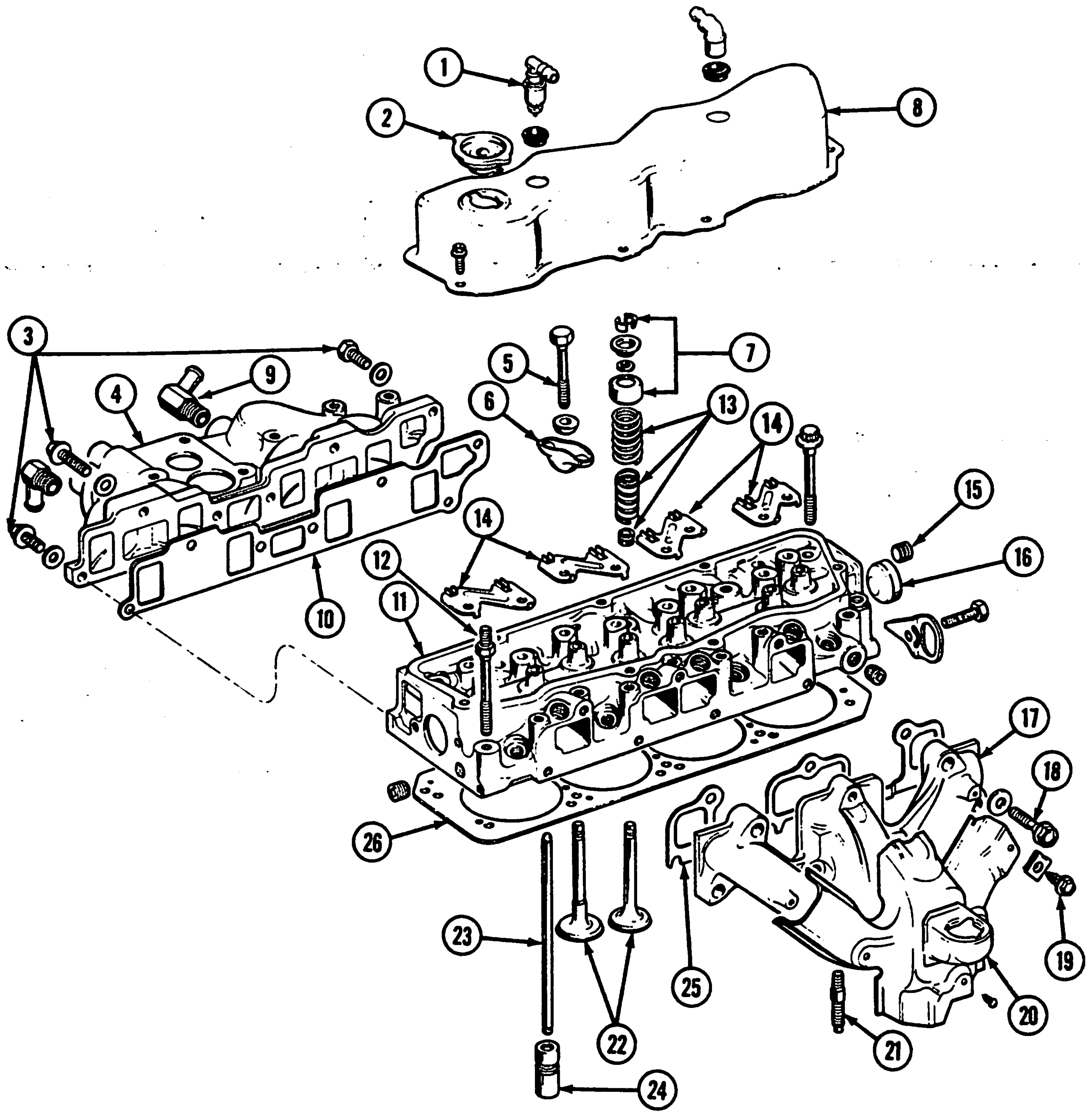

1. PCV VALVE
2. OIL FILLER CAP
3. INTAKE MANIFOLD ATTACHING BOLTS
4. INTAKE MANIFOLD
5. ROCKER ARM CAPSCREW
6. ROCKER ARM
7. VALVE SPRING RETAINER ASSEMBLY
8. CYLINDER HEAD COVER (ROCKER COVER)
9. COOLANT HOSE FITTING
10. INTAKE MANIFOLD GASKET
11. CYLINDER HEAD
12. CYLINDER HEAD STUD BOLT
13. VALVE SPRING AND OIL DEFLECTOR
14. PUSH ROD GUIDE
15. CYLINDER HEAD PLUG
16. CYLINDER HEAD CORE PLUG
17. EXHAUST MANIFOLD
18. EXHAUST MANIFOLD BOLT
19. OIL LEVEL INDICATOR TUBE ATTACHING SCREW
20. EXHAUST MANIFOLD HEAT SHROUD (HEAT SHIELD)
21. EXHAUST MANIFOLD TO EXHAUST PIPE STUD
22. VALVES
23. PUSH ROD
24. TAPPET
25. EXHAUST MANIFOLD GASKET
26. CYLINDER HEAD GASKET

90792A

Fig. 1B-1 Four-Cylinder Engine Assembly—Head

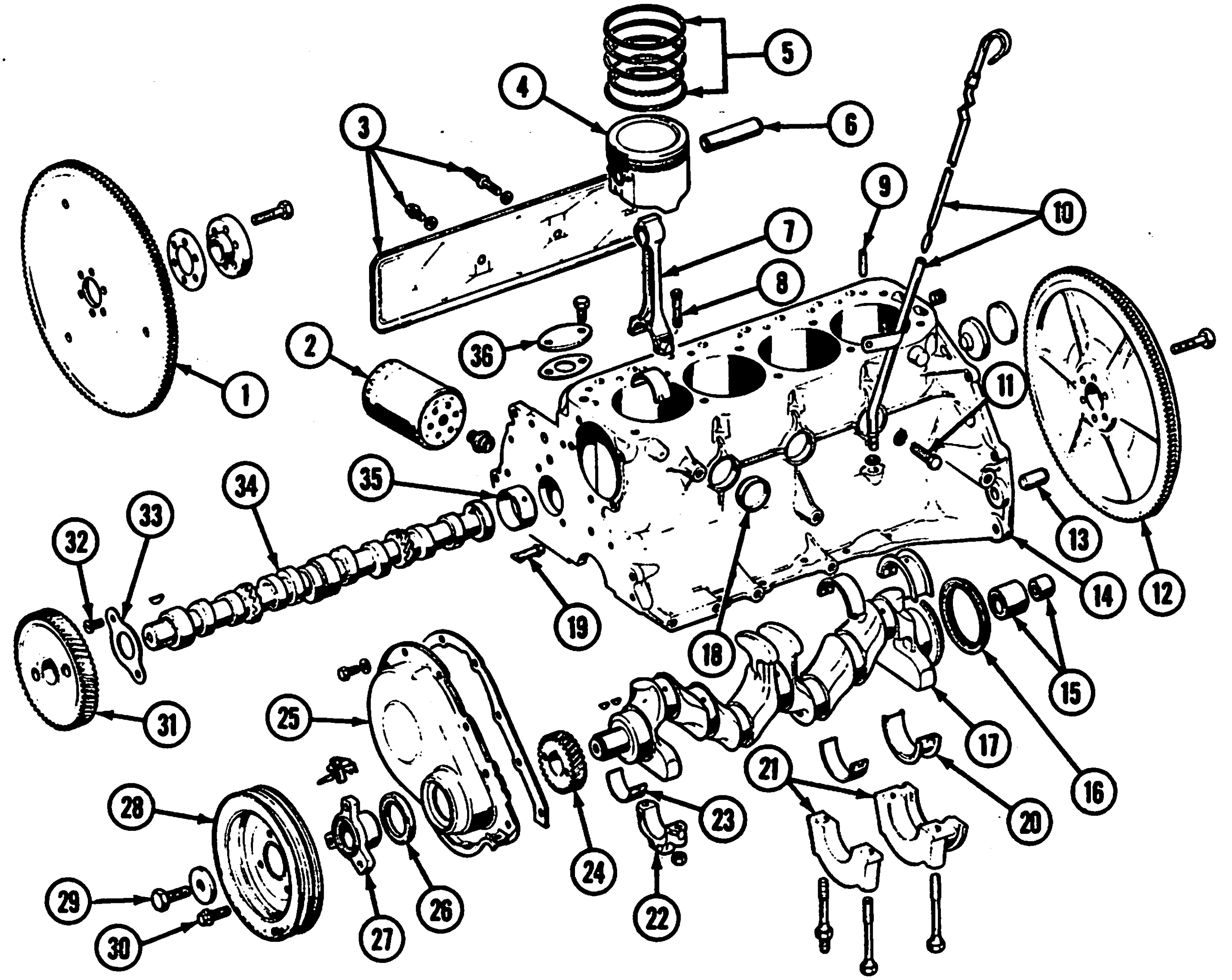

1. DRIVE PLATE AND RING GEAR (AUTOMATIC TRANS)
2. OIL FILTER
3. PUSH ROD COVER AND BOLTS
4. PISTON
5. PISTON RING
6. PISTON PIN
7. CONNECTING ROD
8. CONNECTING ROD BOLT
9. DOWEL
10. OIL LEVEL INDICATOR AND TUBE
11. BLOCK DRAIN
12. FLYWHEEL AND RING GEAR (MANUAL TRANS)
13. DOWEL
14. CYLINDER BLOCK
15. PILOT AND/OR CONVERTER BUSHING
16. REAR OIL SEAL
17. CRANKSHAFT
18. BLOCK CORE PLUG
19. TIMING GEAR OIL NOZZLE
20. MAIN BEARINGS
21. MAIN BEARING CAPS
22. CONNECTING ROD BEARING CAP
23. CONNECTING ROD BEARING
24. CRANKSHAFT GEAR
25. TIMING GEAR COVER (FRONT)
26. TIMING GEAR COVER OIL SEAL
27. CRANKSHAFT PULLEY HUB
28. CRANKSHAFT PULLEY
29. CRANKSHAFT PULLEY HUB BOLT
30. CRANKSHAFT PULLEY BOLT
31. CRANKSHAFT TIMING GEAR
32. CAMSHAFT THRUST PLATE SCREW
33. CAMSHAFT THRUST PLATE
34. CAMSHAFT
35. CAMSHAFT BEARING
36. OIL PUMP DRIVESHAFT RETAINER PLATE, GASKET AND BOLT

907928

Fig. 1B-2 Four-Cylinder Engine Assembly—Block

(3) Remove air cleaner assembly.

(4) Raise vehicle and support with safety stands.

(5) Remove exhaust pipe from exhaust manifold. Disconnect oxygen sensor connector, if equipped.

(6) Disconnect battery cable and solenoid wire from starter motor solenoid.

(7) Remove starter motor bolts and rear bracket nut. Remove starter motor.

(8) Disconnect wire connector from distributor and from oil pressure sending unit.

(9) Remove engine mounting nuts.

(10) Remove hydraulic clutch slave cylinder and flywheel inspection plate.

(11) Remove transmission clutch/converter housing-to-engine bolts.

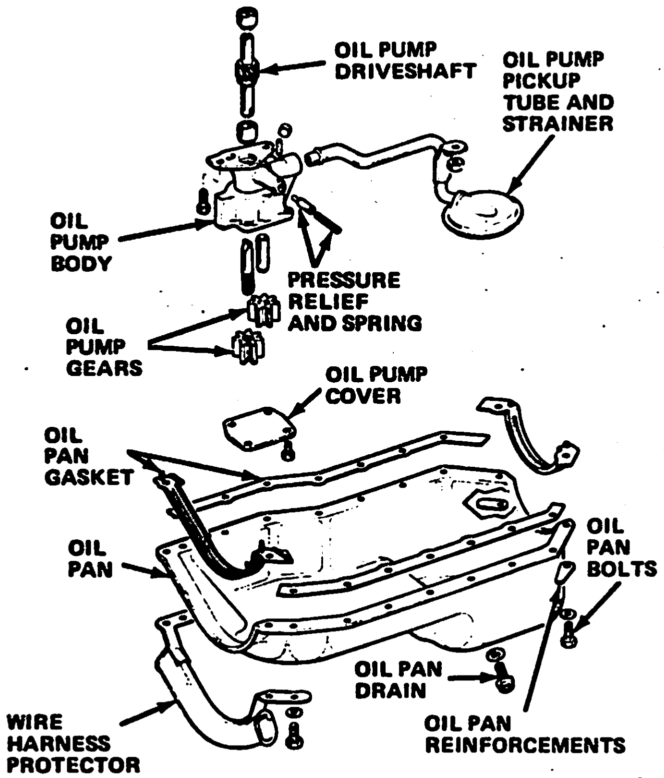

Fig. 1B-3 Four-Cylinder Engine Assembly—Oil Pan and Pump

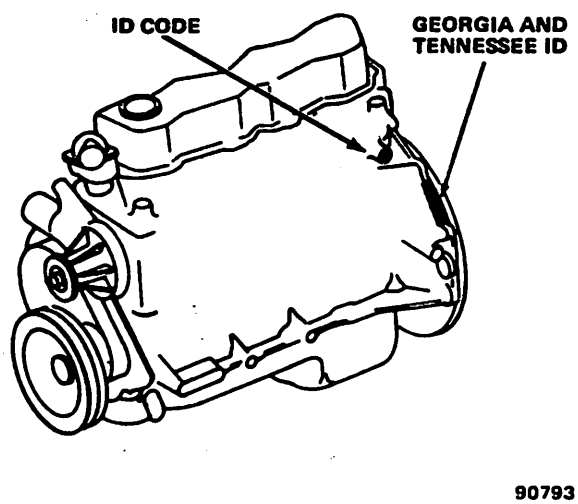

Fig. 1B-4 Engine ID Code Locations

(12) Lower vehicle.

(13) Support transmission with floor jack.

(14) Identify, tag and remove vacuum hoses from canister and carburetor.

(15) Remove bowl vent hose from carburetor. Disconnect mixture control solenoid wire connector from carburetor, if equipped.

(16) Remove wires from alternator.

(17) Disconnect throttle cable from bracket and from carburetor.

(18) Disconnect choke and solenoid wires at carburetor.

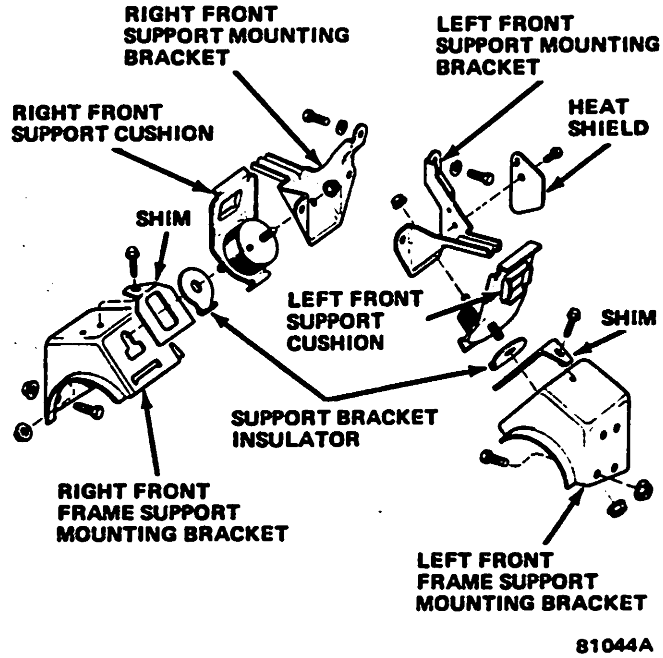

Fig. 1B-5 Four-Cylinder Engine Mounting

(19) Disconnect engine coolant temperature sender wire connector.

WARNING: *Do not loosen radiator draincock with system hot and under pressure because serious burns from coolant can occur.*

(20) Drain radiator and remove lower radiator hose.

(21) Remove heater hoses from heater core inlet and outlet tubes.

NOTE: *DO NOT WASTE reusable coolant. If solution is clean, drain coolant into a clean container for reuse.*

NOTE: *It may be necessary to attach a flexible hose to draincock to route coolant to container.*

(22) Remove fan shroud bolts. Remove upper radiator hose, radiator and shroud.

(23) Remove power steering hoses at pump.

CAUTION: *Manual transmission may have to be raised to provide a smooth engine/transmission separation.*

(24) Attach engine hoisting sling and remove engine.

Installation

(1) Lower engine into engine compartment. Ensure that transmission shaft mates correctly with clutch disc and pilot bushing.

(2) Connect power steering hoses.

(3) Connect and secure heater hoses to heater core with clamps.

(4) Connect following wire connectors:

(a) Coolant Temperature sender

(b) Oil pressure sender

(c) Choke and solenoid

(d) Mixture control solenoid, if equipped.

(5) Connect vacuum hoses to canister and carburetor. Ensure hoses are connected correctly according to identifying tags that were attached prior to removal.

(6) Connect bowl vent hose to carburetor.

(7) Connect alternator wires.

(8) Attach throttle cable to carburetor. Secure cable in position with bracket.

(9) Position fan shroud over fan. Install radiator and connect upper and lower radiator hoses. Attach shroud to radiator. Fill system with coolant.

NOTE: *Refer to Chapter 1C—Cooling Systems for additional information.*

(10) Raise vehicle.

(11) Install flywheel inspection plate and hydraulic clutch slave cylinder (manual transmission only). Tighten bolts with 225 inch-pounds (25 N•m) torque.

(12) Install engine mounting nuts. Tighten with 34 foot-pounds (46 N•m) torque.

(13) Install starter motor. Tighten bolts with 27 foot-pounds (37 N•m) torque and bracket nut with 40 inch-pounds (4.5 N•m) torque.

(14) Connect battery cable and solenoid wire to starter motor solenoid.

(15) Connect distributor wire connector.

(16) Connect exhaust pipe to exhaust manifold. Tighten securing nuts with 35 foot-pounds (50 N•m) torque. Connect oxygen sensor wire connector, if equipped.

(19) Connect battery negative cable and body ground wire.

(20) Install air cleaner.

WARNING: *Use extreme caution when engine is operating. Do not stand in direct line with fan. Do not put hands near pulleys, belts or fan. Do not wear loose clothing.*

(21) Start engine and inspect for leaks. Refill fluids as necessary.

VALVES AND ACTUATING COMPONENTS

General

Motion is transmitted from the camshaft through the hydraulic tappet and push rod to the rocker arm. Each rocker arm moves on its pivot ball and transmits the camshaft motion to the valve. The rocker arm and pivot ball are retained by a capscrew (fig. 1B-6).

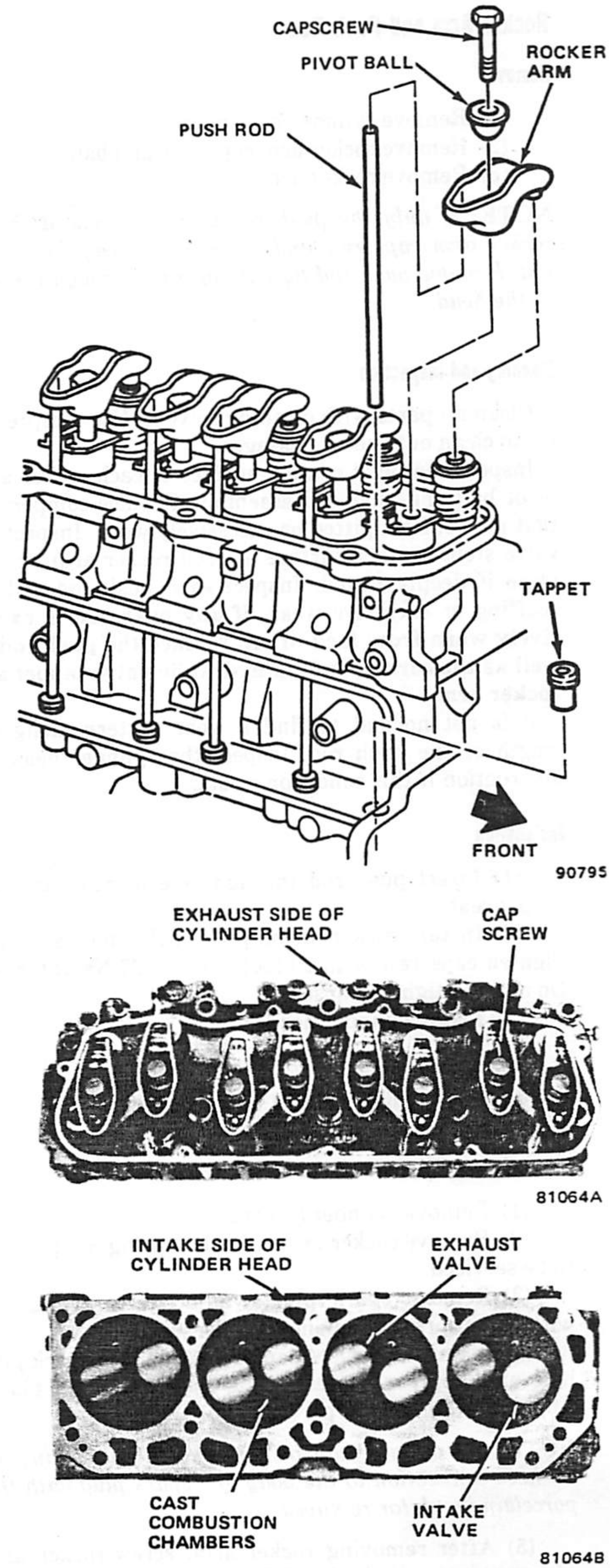

Fig. 1B-6 Valves and Actuating Components

Rocker Arm and Push Rod

Removal

(1) Remove cylinder head cover.
(2) Remove rocker arm capscrew and ball.
(3) Remove rocker arm.

NOTE: *If only the push rod is to be replaced, loosen rocker arm capscrew and swing arm away from push rod. Remove push rod by pulling it up through the hole in the head.*

Cleaning and Inspection

Clean all parts with cleaning solvent. Use compressed air to clean out the oil passages.

Inspect the pivot contact surface of each rocker arm, pivot ball and push rod assembly. Replace components that are scuffed, pitted or excessively worn. Inspect the valve stem contact surface of each rocker arm and replace if deeply pitted. Inspect each push rod end for scuffing or excessive wear. **If any push rod is excessively worn from lack of oil, replace the push rod as well as the corresponding hydraulic valve tappet and rocker arm.**

It is not normal to find a wear pattern along the length of the push rod. Inspect the cylinder head for obstruction if this condition exists.

Installation

(1) Insert push rod through hole in head and into tappet seat.
(2) Install rocker arm, pivot ball and capscrew. Tighten capscrew with 20 foot-pounds (27 N•m) torque. Do not overtighten capscrew.
(3) Install cylinder head cover.

Valve Springs, Shields and/or Seal Replacement

Removal

(1) Remove cylinder head cover.
(2) Remove rocker arms of valve spring components to be serviced.
(3) Remove spark plug(s) adjacent to cylinder(s) with valve spring components to be serviced.
(4) Install air hose Adapter J-22794 into spark plug hole and apply air pressure to hold valves in place. Apply minimum of 90 psi (621 kPa) air pressure.

NOTE: *An adapter can be constructed by welding an air hose connection to the body of a spark plug with the porcelain insulator removed.*

(5) After removing rocker arm, screw rocker arm capscrew into cylinder head. Insert slotted end of Tool J-5892-1 under head of rocker arm capscrew. Compress valve spring (fig. 1B-7) and hold to allow removal of valve spring retainer cap locks. Remove tool, retainer locks, cap, shield, spring, and valve stem oil seal (fig. 1B-8).

NOTE: *Retain components in same order removed to facilitate installation in original position.*

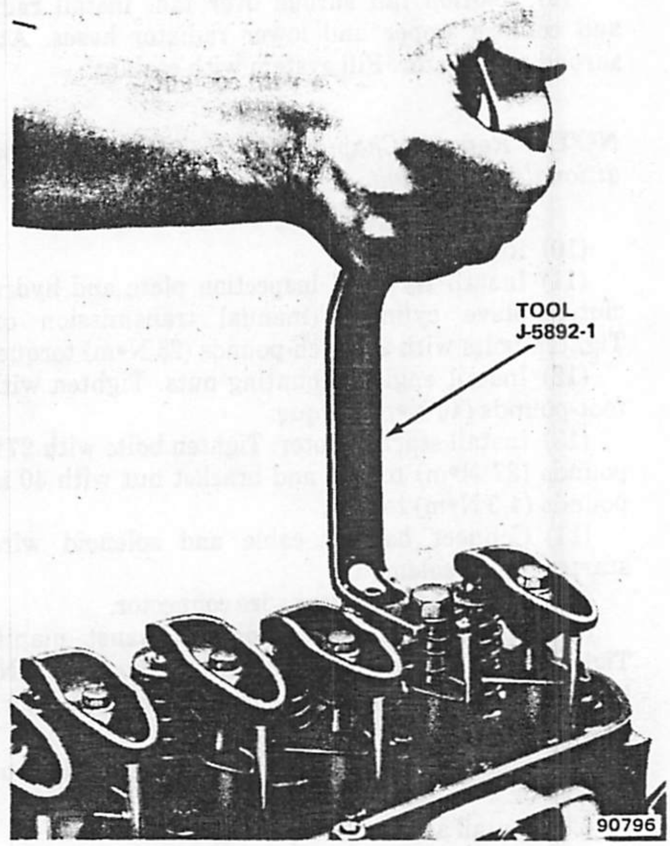

Fig. 1B-7 Compressing Valve Springs

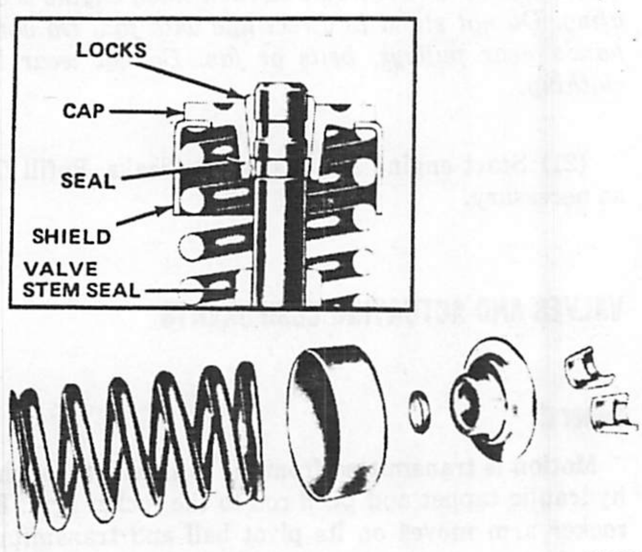

Fig. 1B-8 Valve Spring Assembly

Valve Spring Tension Test

Use Valve Spring Tester J-8056, or equivalent, to test each valve spring for the specified tension values (fig. 1B-9). Replace springs that are not within specification and that bind because of warpage.

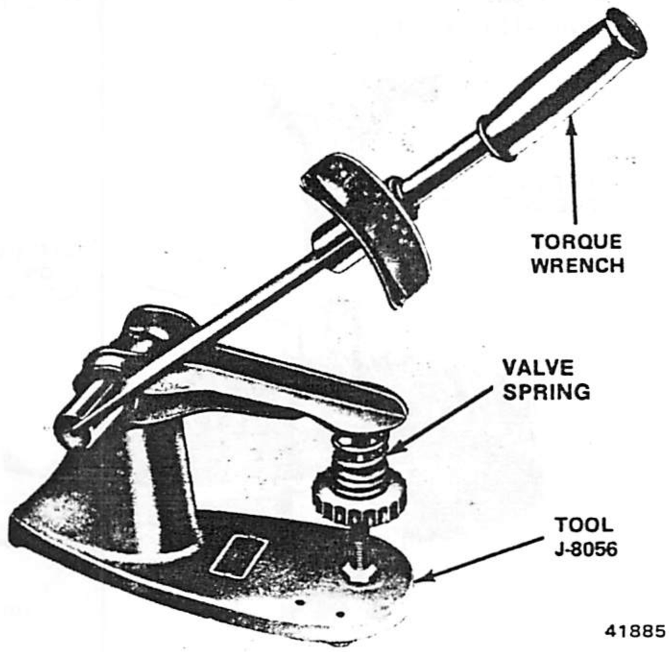

Fig. 1B-9 Testing Valve Spring—Typical

Installation

Always install a new valve stem oil seal whenever valve spring retainer cap locks have been disturbed.

(1) Position oil seal, spring, shield and cap over valve stem.

(2) With Tool J-5892-1, compress valve spring and install retainer cap locks. Remove tool.

(3) Install rocker arm, pivot ball and capscrew over stud. Tighten capscrew with 20 foot-pounds (27 N•m) torque. Do not overtighten.

(4) Install cylinder head cover.

(5) Remove air hose adapter and install spark plug.

CAMSHAFT AND DRIVE

The cast iron camshaft is supported by three bearings and is gear driven. An iron crankshaft gear drives the camshaft through a plastic composition timing gear with a steel hub (fig. 1B-10).

The cam lobes are ground, hardened and tapered with the high side toward the rear. This, coupled with the spherical face on the tappet, causes the tappets to rotate.

The camshaft bearings are lubricated through oil holes that intersect the main oil gallery.

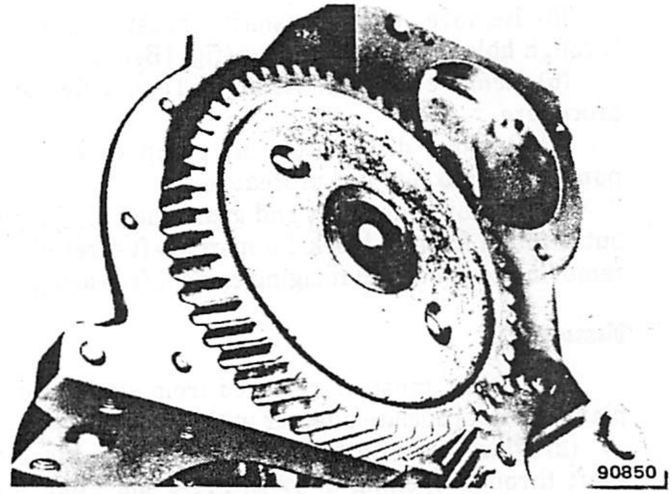

Fig. 1B-10 Camshaft and Crankshaft Gears

Camshaft Replacement

Removal

(1) Remove air cleaner.

WARNING: *DO NOT remove block drain plugs or loosen radiator draincock with system hot and under pressure because serious burns from coolant can occur.*

(2) Drain cooling system.

NOTE: *Do not waste reusable coolant. If solution is clean, drain coolant into a clean container for reuse.*

NOTE: *It may be necessary to attach a flexible hose to the drains to route the coolant to the container.*

(3) Remove timing gear cover. Refer to Timing Gear Cover Removal for procedure.

(4) Disconnect radiator hoses at radiator. Remove radiator. Refer to Radiator Removal in Chapter 1C—Cooling Systems.

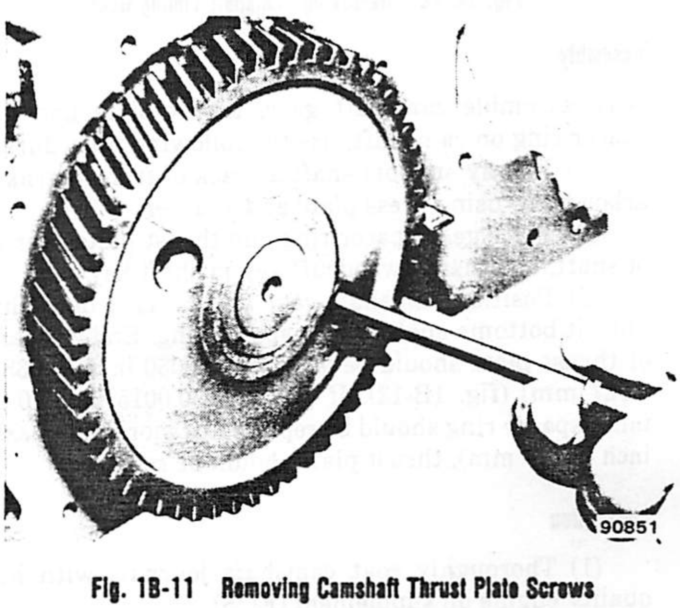

Fig. 1B-11 Removing Camshaft Thrust Plate Screws

(5) Remove two camshaft thrust plate screws through holes in camshaft gear (fig. 1B-11).

(6) Remove tappets. Refer to Tappet Removal for procedure.

(7) Remove distributor, oil pump drive and fuel pump. Refer to removal procedures.

(8) Remove camshaft and gear assembly by pulling out through front of block. Support shaft carefully when removing to prevent damaging camshaft bearings.

Disassembly

(1) If gear must be removed from shaft, use press plate and appropriate adapter with arbor press.

(2) Place tools on table of arbor press. Place camshaft through opening in tools. Press shaft out of gear using socket wrench or other suitable tool (fig. 1B-12).

NOTE: *Thrust plate must be properly aligned to ensure woodruff key in shaft does not damage it when the shaft is pressed out of gear.*

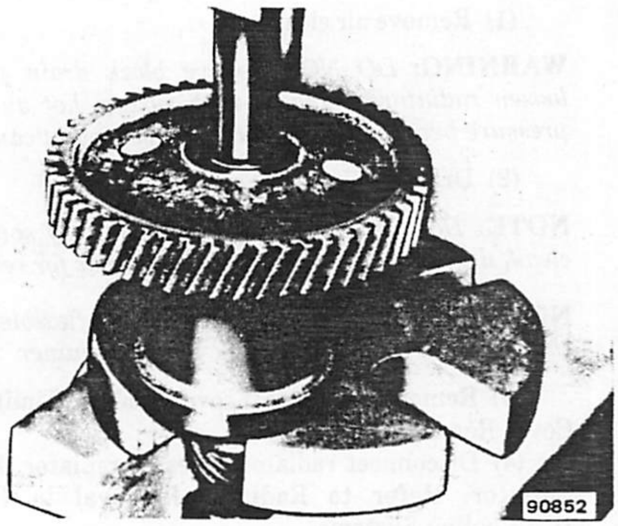

Fig. 1B-12 Removing Camshaft Timing Gear

Assembly

To assemble camshaft gear, thrust plate and gear spacer ring on camshaft, use the following procedure.

(1) Firmly support shaft at back of front journal in arbor press using press plate and adapter.

(2) Place gear spacer ring and thrust plate over end of shaft, and install woodruff key in shaft keyway.

(3) Position camshaft gear and press it onto shaft until it bottoms against gear spacer ring. End clearance of thrust plate should be 0.0015 to 0.0050 inch (0.038 to 0.127 mm) (fig. 1B-13). If less than 0.0015 inch (0.038 mm), spacer ring should be replaced. If more than 0.0050 inch (0.127 mm), thrust plate should be replaced.

Installation

(1) Thoroughly coat camshaft journals with high quality engine oil supplement (EOS).

(2) Install camshaft assembly in engine block. Use care to prevent damaging bearings or camshaft.

(3) Turn crankshaft and camshaft so that valve timing marks on gear teeth are aligned. Engine is now in number four cylinder firing position. Install camshaft thrust plate-to-block screws and tighten with 75 inch-pounds (10 N•m) torque.

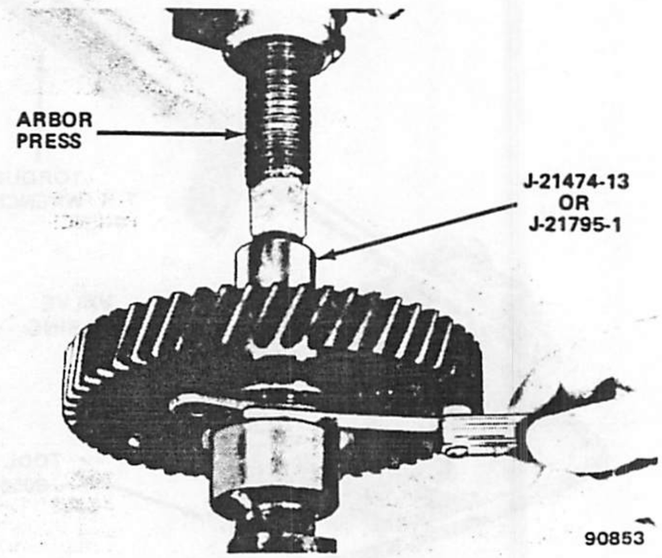

Fig. 1B-13 Installing Camshaft Timing Gear and Measuring Thrust Plate End Clearance

(4) Install timing gear cover and gasket.

(5) Line up keyway in hub with key on crankshaft and slide hub onto shaft. Install center bolt and tighten with 160 foot-pounds (212 N•m) torque.

(6) Install valve tappets, push rods, push rod cover, oil pump shaft and gear assembly and fuel pump. Install distributor according to following procedure.

(a) Turn crankshaft 360 degrees to firing position of number one cylinder (number one exhaust and intake valve tappets both on base circle [heel] of camshaft and timing notch on vibration damper indexed with top dead center mark [TDC] on timing degree scale).

(b) Install distributor and align shaft so that rotor arm points toward number one cylinder spark plug contact.

(7) Install rocker arms and pivot balls over push rods. With tappets on base circle (heel) of camshaft, tighten rocker arm capscrews with 20 foot-pounds (27 N•m) torque. Do not overtighten.

(8) Install cylinder head cover. Refer to Cylinder Head Cover Installation for procedure.

(9) Install intake manifold. Refer to Intake Manifold Installation for procedure.

(10) Install radiator and lower radiator hose.

(11) Install belt, fan and shroud. Tighten fan bolts with 18 foot-pounds (34 N•m) torque. Install upper radiator hose. Tighten belts.

NOTE: *The fan assembly and pulley must be installed with the drive belt(s) in position on pulleys.*

(12) Install engine coolant.

WARNING: *Use extreme caution when engine is operating. Do not stand in direct line with fan. Do not put hands near pulleys, belts or fan. Do not wear loose clothing.*

(13) Start engine. Inspect for oil and coolant leaks. Adjust ignition timing.

(14) Install air cleaner.

Camshaft Bearings

NOTE: *Engine must be removed for camshaft bearing service.*

Replacement

(1) With camshaft and flywheel/drive plate removed, drive out expansion plug from rear cam bearing from inside block.

(2) Using Bearing Remover J-21473-1, drive front bearing toward rear and rear bearing toward front.

(3) Install extension J-21054-1 and drive center bearing out toward rear (fig. 1B-14).

(4) Position replacement bearing on tool and install.

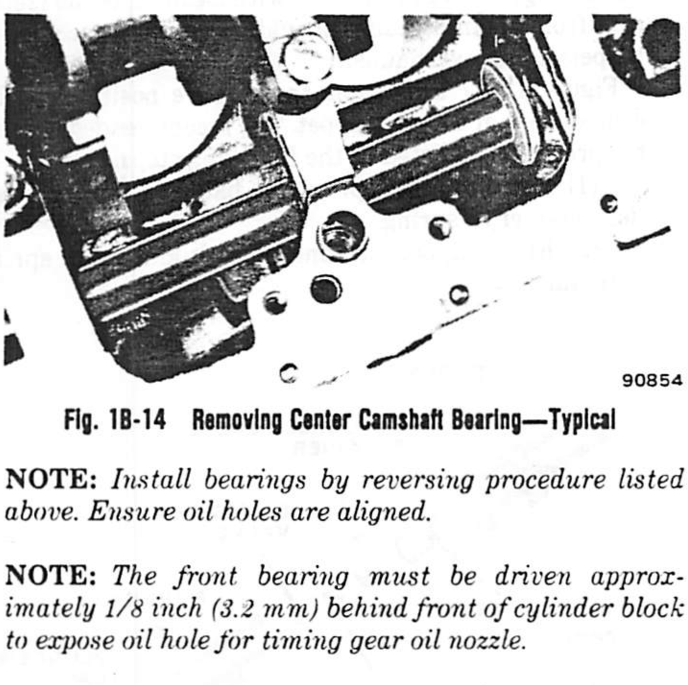

Fig. 1B-14 Removing Center Camshaft Bearing—Typical

NOTE: *Install bearings by reversing procedure listed above. Ensure oil holes are aligned.*

NOTE: *The front bearing must be driven approximately 1/8 inch (3.2 mm) behind front of cylinder block to expose oil hole for timing gear oil nozzle.*

HYDRAULIC VALVE TAPPETS

Hydraulic valve tappets are used to keep all parts of the valve train in constant contact. Each tappet automatically adjusts to maintain zero lash under all conditions.

The hydraulic tappet assembly (fig. 1B-15) consists of a steel body, plunger, push rod seat, metering valve, plunger spring, ball check valve and spring, ball check valve retainer, and retainer ring.

The tappet operates in a guide bore that intersects with the main oil gallery.

The operating cycle of the hydraulic tappet begins when the tappet is on the heel of the cam lobe (engine valve closed). A groove in the tappet body aligns with the tappet oil gallery, admitting pressurized oil into the tappet. A hole and groove arrangement admits the oil to the inside of the plunger. Oil is forced past the plunger check valve and fills the chamber between the plunger and tappet body. When the chamber is full, pressurized oil flows around the metering valve, which controls the amount of oil that flows up the push rod to lubricate the rocker arm assembly. These events all take place while the tappet is on the heel of the cam lobe. As the cam turns, the lobe begins exerting force on the tappet body. This force is transmitted by the trapped oil in the tappet chamber to the plunger and finally to the pushrod and rocker arm assembly. The engine valve opens. While the valve is open, the trapped oil is subjected to considerable pressure and some of it escapes between the plunger and the tappet body (leak-down). The cycle is completed as the cam lobe rotates back to the starting position and another charging cycle begins. In this way, zero valve lash is maintained.

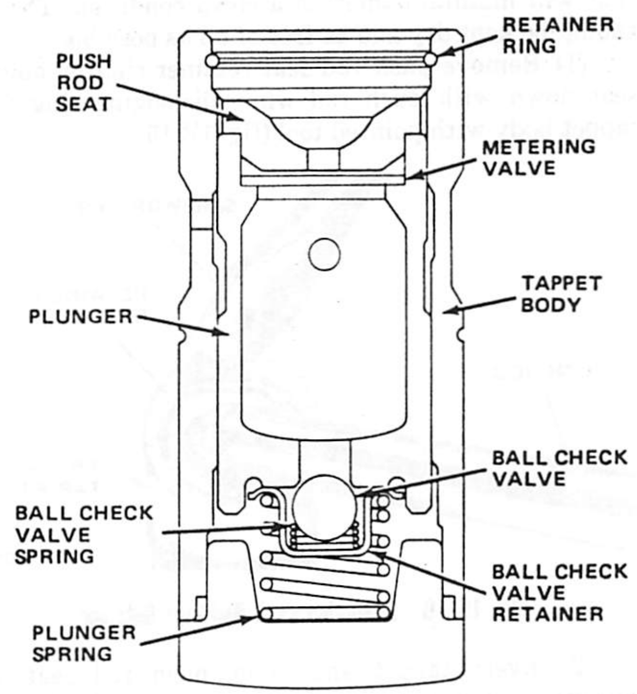

Fig. 1B-15 Hydraulic Valve Tappet

Replacement

(1) Remove cylinder head cover, intake manifold and push rod cover. Refer to removal procedures.

(2) Loosen rocker arm and rotate for access clearance to push rod.

(3) Remove push rod and valve tappet. Hydraulic Valve Tappet Remover J-3049 will facilitate removal of tappet.

NOTE: *If a replacement tappet is to be installed, ensure that all sealer coating is removed from inside of replacement tappet and test for correct leak-down rate.*

Disassembly

Because of the important function that hydraulic valve tappets have in the operation of an engine and the close manufacturing tolerances, proper handling, and above all, cleanliness, cannot be overstressed when servicing the components.

New tappets are serviced as individual units packaged with a plastic coating. Do not remove coating until ready to test the leak-down rate. It is not necessary to remove the oil from replacement tappets prior to testing the leak-down rate because it is special leak-down test oil.

Valve Tappet Cleaning Tank J-5821 is recommended for cleaning valve tappets. The tank should only be used for cleaning valve tappets and should be kept covered when not in use. All servicing should be done in an area isolated from grinders and other sources of dust and foreign material.

Tappets should at all times be stored in a covered box that will maintain them in a clean condition. The box should be kept dry and as free of oil as possible.

(1) Remove push rod seat retainer ring by holding seat down with push rod while dislodging ring from tappet body with pointed tool (fig. 1B-16).

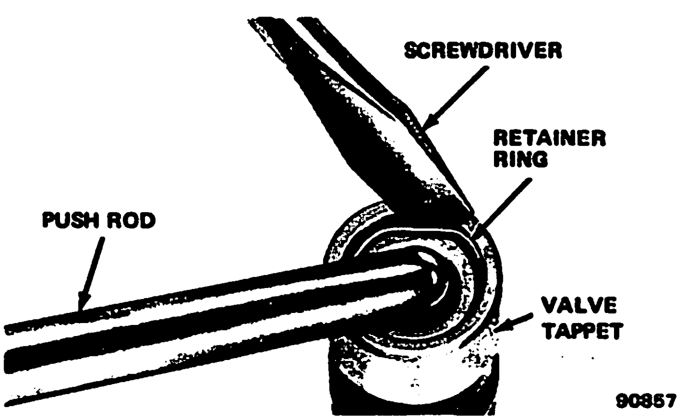

Fig. 1B-16 Removing Push Rod Seat Retainer

(2) Invert tappet and allow push rod seat and plunger to slide out of body. If plunger sticks in body, place tappet in large end of hydraulic valve tappet plunger remover Tool (J-4160) with push rod end of tappet downward. Hold tool firmly in hand with thumb over tappet body and sharply strike tool against block of wood until plunger falls out.

NOTE: *It may be necessary to soak a tappet that has a stuck plunger in cleaning solvent for several minutes before plunger can be removed.*

(3) With oil drained from tappet bodies, place all components of each tappet assembly in separate compartment of tray.

NOTE: *The valve tappet body and plunger are selectively fitted and must not be interchanged with other tappets. Also, keeping all components of each tappet separate will aid in trouble diagnosis.*

Cleaning and Inspection

Thoroughly clean and inspect tappet surfaces for nicks, scratches and scores. Inspection of the check ball and seat should be done with a magnifying glass. The tappet base should also be inspected for wear. If heavy wear is indicated on the cam mating surface, the same lobe of the cam should also be examined. Always clean tappets using only approved solvent and a soft brush. Never use a wire brush or sand paper.

Assembly

All components must be absolutely clean when assembling a hydraulic valve tappet. Because lint and dust may adhere to the components, they should not be dried with compressed air or wiped with a cloth. All parts should be rinsed in clean kerosene and assembled without drying. A small container with clean kerosene (separate from cleaning tank) should be used for each set of tappets being overhauled.

Figure 1B-17 illustrates the relative position of the components of a valve tappet. The recommended assembly procedure is listed in the following steps.

(1) Rinse plunger spring and ball retainer and position retainer in spring.

(2) Rinse tappet ball and place it and small spring in retainer.

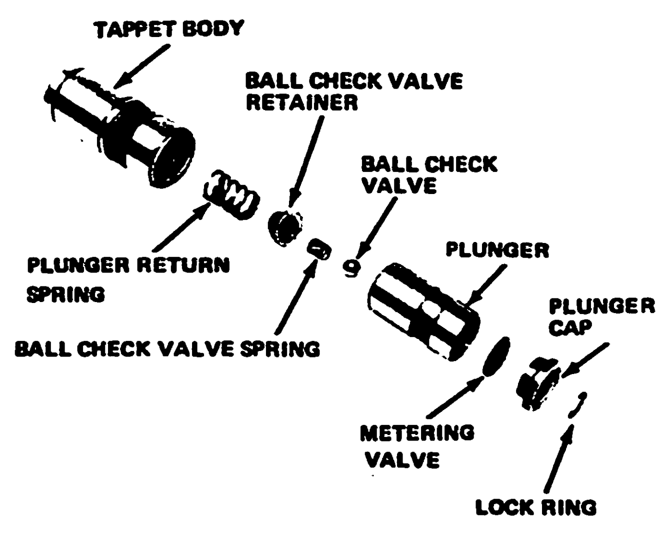

Fig. 1B-17 Hydraulic Valve Tappet—Exploded View

(3) Rinse plunger and place on retainer so that seat on plunger mates with ball.

(4) Invert plunger with parts assembled thus far and, after rinsing tappet body, position body over spring and plunger.

(5) Place tappet body on clean paper, rinse and install push rod seat and retainer ring.

(6) After tappet has been assembled, place in tappet box and close lid to preserve cleanliness.

Leak-Down Test

After all tappets have been assembled, the leak-down rate must be tested before they are installed in the engine. Hydraulic Valve Tappet Leak-Down Tester J-5790 (fig. 1B-18) is designed for testing the leak-down rate of tappets to determine whether or not they are within the specified limits. As with previous service operations involving tappets, cleanliness is paramount. The tester cup and ram should be thoroughly cleaned and testing should be done in an area free of dust and dirt. The testing procedure is described in the following steps:

(1) Fill tester cup to approximately one inch from top with special fluid (J-5268 or equivalent) that is available from tester manufacturer.

(2) Swing weight arm up out of way, raise ram, and position tappet into boss in center of tester cup.

(3) Adjust ram (with weight arm clear of ram) so that pointer is positioned at set line (marked "S"). Tighten jamnut to maintain set position.

(4) Operate tappet through full travel of plunger by pumping weight arm to fill tappet with test fluid and force out air (tappet must be completely submerged at all times). Continue pumping for several strokes after definite resistance is detected.

(5) Raise weight arm to allow plunger spring to expand fully; lower arm onto ram and turn handle slowly (1 revolution every 2 seconds).

Time indicator travel from lower line (first line above set line) to line marked 0.094 or 3/32 inch (2.39 mm), while still rotating cup with handle (fig. 1B-18). Tappet is satisfactory if leak-down interval is between 12 and 90 seconds.

Installation

(1) Place each tappet in original tappet boss.

(2) Replace push rods.

(3) Position rocker arms and pivot balls on push rods.

(4) With tappet on base circle (heel) of camshaft, tighten each rocker arm capscrew with 20 foot-pounds (27 N•m) torque. Do not over tighten.

(5) Replace push rod cover.

(6) Install intake manifold.

(7) Install cylinder head cover.

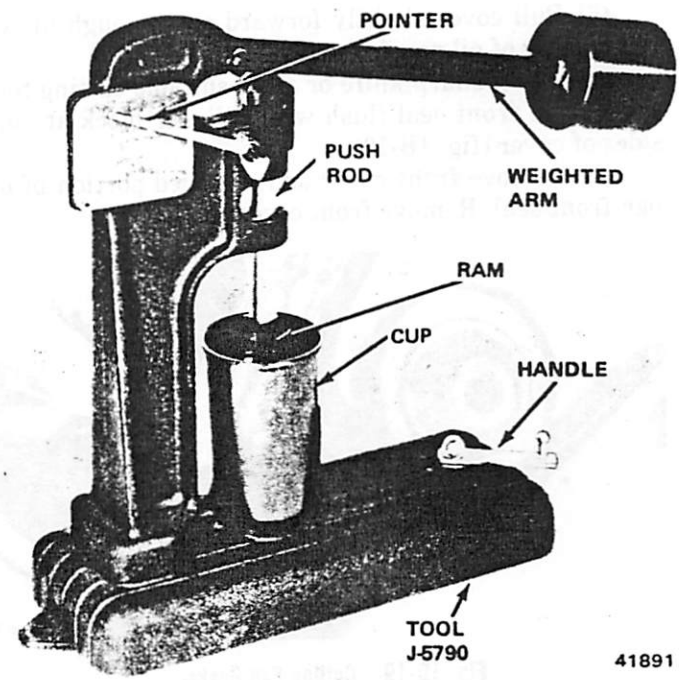

Fig. 1B-18 Testing Leak-Down Rate

CRANKSHAFT VIBRATION DAMPER PULLEY HUB AND OIL SEAL REPLACEMENT

(1) Remove drive belts.

(2) Remove center bolt and slide damper and hub from shaft.

(3) Carefully pry oil seal from front cover with a large screwdriver. Do not bend or distort sheet metal cover.

(4) Install new seal with helical lip toward rear of engine. Drive seal carefully into place using Tool J-23042.

(5) Coat oil seal contact area of vibration damper with engine oil.

(6) Position hub on crankshaft and slide into position until it contacts crankshaft gear.

(7) Install center bolt and tighten with 160 foot-pounds (212 N•m) torque.

(8) Install belts and adjust tensions. Refer to Chapter 1C—Cooling Systems for procedures.

NOTE: *Damper-to-hub bolts should have a locking agent applied to their threads. Coat threads with Dry-lock 299, or equivalent, before installing.*

TIMING CASE COVER REPLACEMENT

(1) Remove battery negative cable.

(2) Remove crankshaft vibration damper pulley hub. Refer to Crankshaft Vibration Damper Pulley Hub Replacement.

(3) Remove fan and shroud nuts. Loosen belts. Remove fan and shroud.

(4) Remove oil pan-to-timing case cover screws.

(5) Pull cover slightly forward only enough to permit cutting of oil pan front seal.

(6) Using sharp knife or other suitable cutting tool, cut oil pan front seal flush with cylinder block at both sides of cover (fig. 1B-19).

(7) Remove front cover and attached portion of oil pan front seal. Remove front cover gasket.

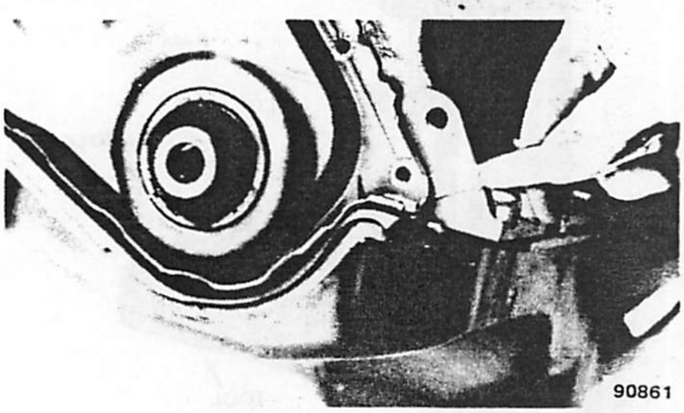

Fig. 1B-19 Cutting Pan Gasket

(8) Clean gasket surfaces on block and timing case cover.

(9) Cut tabs from replacement oil pan front seal (fig. 1B-20). Use sharp instrument to ensure clean cut.

(10) Install seal on timing gear cover. Press tips into holes provided in cover.

(11) Coat gasket with gasket sealer and place in position on cover.

(12) Apply 1/8-inch (3 mm) bead of RTV sealant to joint formed at oil pan and cylinder block (fig. 1B-21).

(13) Install Alignment Tool J-23042 in timing case cover seal (fig. 1B-22).

NOTE: *It is important that an alignment tool be used to align the timing case cover so that vibration damper hub installation will not damage seal and to ensure that seal is positioned evenly around hub.*

(14) Position timing case cover on block. Insert and partially tighten two oil pan-to-timing case cover screws.

(15) Install timing case cover-to-block attaching screws.

(16) Tighten all cover attaching screws to specifications and remove centering Tool J-23042.

(17) Install pulley hub. Refer to Crankshaft Vibration Damper Pulley Hub Replacement.

(18) Install fan and shroud.

NOTE: *The fan assembly and pulleys must be installed with the drive belts in position on pulleys. Tighten attaching nuts with 18 foot-pounds (34 N•m) torque.*

(19) Tighten belts.

(20) Connect battery negative cable.

(21) Tighten belts.

(22) Connect battery negative cable.

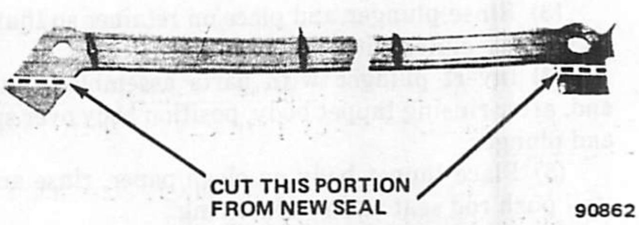

Fig. 1B-20 Oil Pan Seal Modification

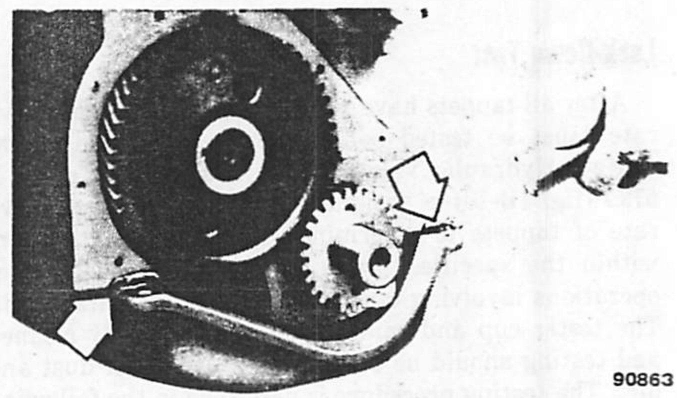

Fig. 1B-21 Applying RTV Sealant

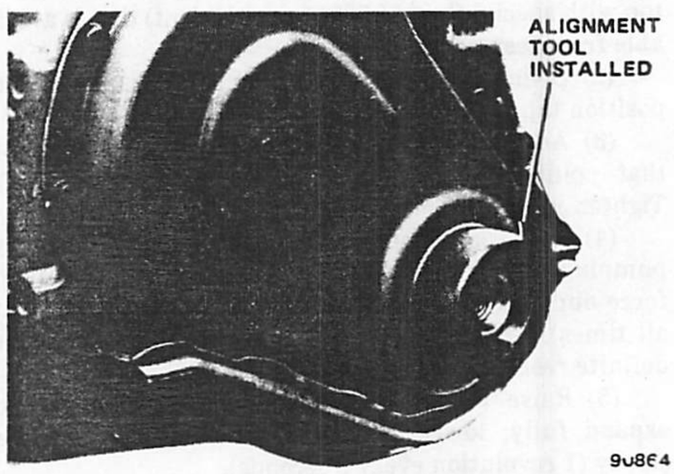

Fig. 1B-22 Timing Case Cover Alignment Tool Installed

INTAKE MANIFOLD

The intake manifold is cast aluminum and has a single level design. A cast passage in the manifold allows engine coolant to pass through to utilize hot coolant heat to warm the manifold and carburetor. This results in better fuel vaporization. An EGR port is also cast in the manifold and receives exhaust gas from an internal exhaust passage through the cylinder head.

Intake Manifold Replacement

WARNING: *The battery negative cable must be removed to prevent a potential fire hazard when the fuel pipe is disconnected.*

(1) Remove battery negative cable.
(2) Remove air cleaner and PCV valve hose.

WARNING: *DO NOT remove block drain plugs or loosen radiator draincock with system hot and under pressure because serious burns from coolant can occur.*

(3) Drain cooling system.

NOTE: *DO NOT WASTE reusable coolant. If solution is clean, drain into a clean container for reuse.*

(4) Tag and remove vacuum hoses (ensure distributor vacuum advance hose is removed).
(5) Disconnect fuel pipe and electrical wire connections from carburetor.
(6) Disconnect carburetor throttle linkage. Remove carburetor and carburetor spacer.
(7) Remove bellcrank and throttle linkage brackets and move to one side for clearance.
(8) Remove heater hose at intake manifold.
(9) Remove air pump and bracket, if equipped. Note position of spacers for installation.
(10) Remove manifold-to-cylinder head bolts and remove manifold.
(11) Position replacement gasket and install replacement manifold on cylinder head. Start all bolts.
(12) Tighten manifold-to-cylinder head bolts using sequence illustrated in figure 1B-23. Tighten all bolts with 37 foot-pounds (50 N•m) torque.

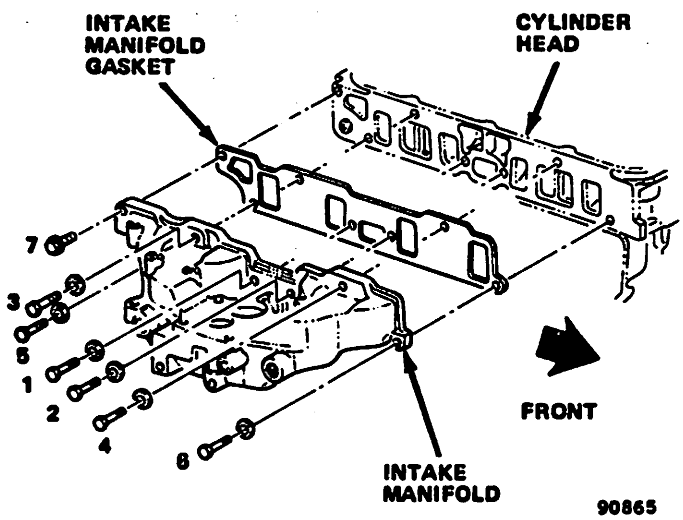

Fig. 1B-23 Intake Manifold Bolt Tightening Sequence

(13) Install air pump, bracket and spacers. Ensure spacers are installed in correct positions.
(14) Connect heater hose to intake manifold.
(15) Install bellcrank and throttle linkage brackets.
(16) Connect carburetor throttle linkage to brackets and bellcrank.
(17) Install carburetor spacer and tighten bolts with 15 foot-pounds (20 N•m) torque.
(18) Install carburetor and gasket. Tighten nuts with 15 foot-pounds (20 N•m) torque.
(19) Install fuel pipe and electrical wire connections. Install vacuum hoses.
(20) Install battery negative cable.

WARNING: *Use extreme caution when engine is operating. Do not stand in direct line with fan. Do not put hands near pulleys, belts or fan. Do not wear loose clothing.*

(21) Refill cooling system. Start engine and inspect for leaks.
(22) Install air cleaner and PCV valve hose.

EXHAUST MANIFOLD

The exhaust manifold is made of cast nodular iron. The manifold is equipped with a heat stove that is used to provide heated air for the carburetor air intake. This results in better fuel vaporization.

Exhaust Manifold Replacement

(1) Remove air cleaner and heated air tube.
(2) Remove engine oil dipstick tube attaching bolt.
(3) Remove oxygen sensor, if equipped.
(4) Raise vehicle and disconnect exhaust pipe from manifold. Lower vehicle.
(5) Remove exhaust manifold bolts and remove manifold and gasket.
(6) Install replacement gasket and exhaust manifold on cylinder head. Tighten all bolts with 39 foot-pounds (52 N•m) torque in the sequence illustrated in figure 1B-24.
(7) Install dipstick tube attaching bolt.

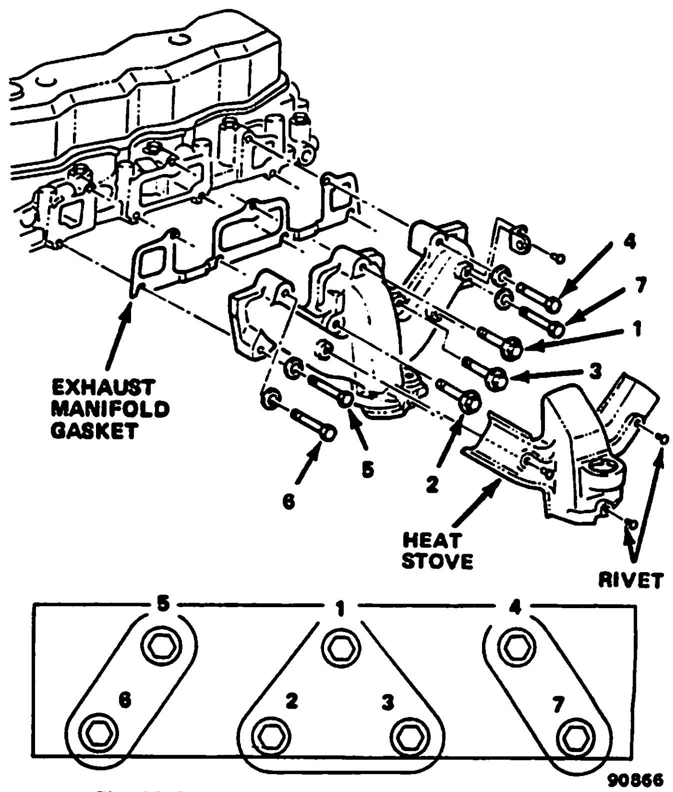

Fig. 1B-24 Exhaust Manifold Tightening Sequence

(8) Install heated air tube and air cleaner.
(9) Install oxygen sensor, if removed.
(10) Raise vehicle and connect exhaust pipe to manifold. Tighten nuts with 35 foot-pounds (47 N•m) torque. Lower vehicle.

CYLINDER HEAD COVER

Removal

(1) Remove air cleaner.
(2) Remove PCV valve (or hose).
(3) Remove cylinder head cover bolts.
(4) Remove spark plug wires from spark plugs and bracket clips.
(5) Remove cylinder head cover by tapping with a rubber hammer to loosen RTV gasket seal. Do not pry on cover.

Installation

(1) Thoroughly clean sealing surfaces on cylinder head cover and cylinder head.
(2) Apply continuous 3/16-inch (5 mm) diameter bead of RTV sealant on cylinder head cover as illustrated in figure 1B-25.
(3) Position cover on head, install retaining bolts and tighten with 7 foot-pounds (10 N•m) torque.
(4) Install spark plug wires, PCV valve (or hose) and air cleaner.

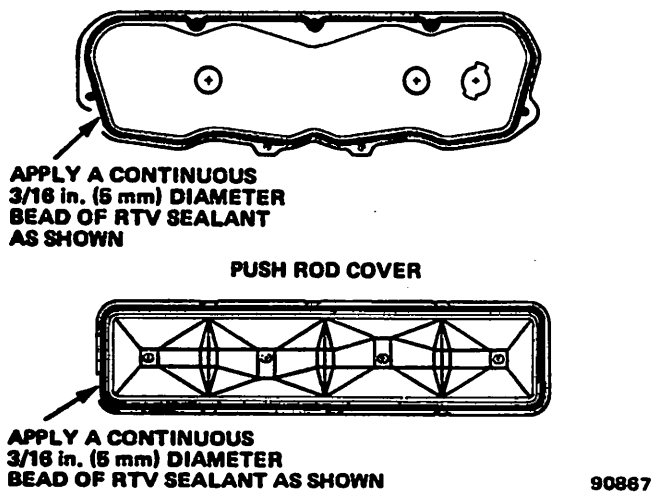

Fig. 1B-25 Cylinder Head Cover and Push Rod Cover RTV Sealant Application

PUSH ROD COVER

Removal

(1) Remove intake manifold. Refer to Intake Manifold for replacement procedure.
(2) Remove push rod cover bolts and remove cover.

Installation

(1) Thoroughly clean sealing surfaces on push rod cover and cylinder block.
(2) Apply continuous 3/16-inch (5 mm) bead of RTV sealant on push rod cover as illustrated in figure 1B-25.
(3) Install cover and cover-to-block bolts. Tighten bolts with 75 inch-pounds (9 N•m) torque.
(4) Install intake manifold. Refer to Intake Manifold for replacement procedure.

CYLINDER HEAD

The cast iron cylinder head is designed to provide a compression ratio of 8.2:1. It is cast with individual intake and exhaust ports for each cylinder. The valve guides are cast integral with the head and the rocker arms are retained on individual threaded capscrews. The combustion chambers are cast to ensure uniform shape for all cylinders. The spark plugs are located near the intake valves to provide maximum combustion efficiency. The intake valves have 46 degree seat angles and are large to provide sufficient air/fuel intake for high power requirements. The exhaust valve seat angle is also 46 degrees. The 46 degree seat angle assures valve-to-seat contact at the outer diameter of the seat.

External shields are used on both the intake and exhaust valves to reduce the amount of oil splashed against the stems. Valve stem seals are also used on both the intake and exhaust valves to prevent oil from entering the valve guides. The face angles of both the intake and exhaust valves are 45 degrees.

Removal

WARNING: *The battery negative cable must be removed to prevent a potential fire hazard when the fuel pipe is disconnected.*

(1) Disconnect battery negative cable.
(2) Remove cylinder head cover. Refer to Cylinder Head Cover Removal for procedure.

WARNING: *DO NOT remove block drain plugs or loosen radiator draincock with system hot and under pressure because serious burns from coolant can occur.*

(3) Drain block.

NOTE: *DO NOT WASTE reusable coolant. If solution is clean, drain coolant into a clean container for reuse.*

(4) Remove exhaust pipe.
(5) Tag and disconnect vacuum hoses.

NOTE: *Ensure vacuum advance hose is tagged and disconnected.*

(6) If equipped, remove air pump and bracket, and put aside. Note position of spacers for installation reference.

(7) Disconnect fuel pipe from carburetor. Move pipe over and align with opening in intake manifold to facilitate cylinder head removal.

(8) Remove rear heater hose and upper radiator hose.

(9) Remove power steering pump and bracket assembly.

NOTE: *Do not disconnect power steering hoses from pump or gear.*

(10) Remove dipstick.

(11) Remove rocker arm assemblies and push rods.

NOTE: *Note location of rocker arms to facilitate installation in their original locations.*

CAUTION: *To prevent slipping, use a 12 mm 12-point socket wrench to ensure a tight fit on the bolt heads.*

(12) Remove cylinder head bolts.

(13) Remove cylinder head by inserting pry bar into alternator bracket and prying upward.

Installation

The gasket mating surfaces on both the head and the block must be smooth and clean, i.e., no foreign matter, nicks or heavy scratches. The cylinder head bolt threads in the block and on the cylinder head bolts must also be clean, if not, bolt tightening torque will be inaccurate.

(1) Place replacement cylinder head gasket in position over dowel pins and flat on cylinder block.

(2) Carefully guide cylinder head into place over dowel pins and gasket.

(3) Coat underside of heads and threads of cylinder head bolts with sealing compound and install finger-tight.

CAUTION: *To prevent slipping, use a 12 mm 12-point socket wrench to ensure a tight fit on the bolt heads.*

(4) Tighten cylinder head bolts in steps following sequence depicted in figure 1B-26. The final torque is 92 foot-pounds (125 N•m).

(5) Install push rods, rocker arm assemblies and cylinder head cover. Tighten rocker arm capscrews with 20 foot-pounds (27 N•m) torque. Refer to Cylinder Head Cover for procedure.

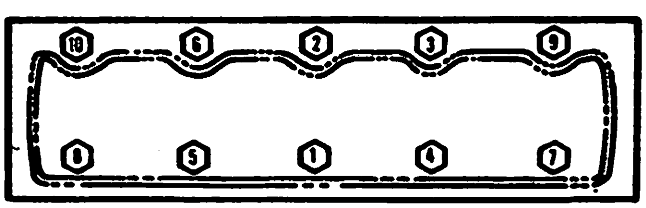

Fig. 1B-26 Cylinder Head Tightening Sequence

(6) Install power steering pump and bracket.

(7) If removed, install air pump, bracket and spacers. Ensure spacers are installed in correct positions. Tighten belt to specified tension. Refer to Chapter 1C—Cooling Systems for procedure.

(8) Connect fuel pipe to carburetor.

(9) Install heater hose and upper radiator hose, tighten clamps.

(10) Connect vacuum hoses.

(11) Connect exhaust pipe to manifold. Tighten nuts with 35 foot-pounds (47 N•m) torque.

(12) Refill cooling system with coolant.

(13) Install dipstick.

(14) Connect battery negative cable.

WARNING: *Use extreme caution when engine is operating. Do not stand in direct line with fan. Do not put hands near pulleys, belts or fan. Do not wear loose clothing.*

(15) Start engine and inspect for leaks.

Valves and Seats

Reconditioning of valves and valve seats is very important because the seating of the valves must be precise for the engine to produce specified power and provide reliable performance.

Another important factor is the cooling of the valve heads. Close contact between each valve and its seat is imperative to ensure that the heat in the valve head will be properly transferred to the cylinder head.

Several different types of equipment are available for refacing valves and valve seats. The instructions provided by the manufacturer of the equipment being used should be carefully followed to attain proper results.

Regardless of the type of equipment used it is essential that valve bores be free from carbon and other foreign matter to ensure correct centering of the pilot in the guide.

Valve Guide Bores

Valves with oversize stems are available for both intake and exhaust valves. Guides should be reamed and replacement oversize valves installed whenever clearances exceed specifications.

Cylinder Head Disassembly

(1) With cylinder head removed, remove rocker arm capscrews, pivot balls and rocker arms. Install capscrews.

(2) Using Tool J-5892-1, compress each valve spring and remove locks. Release tool and remove spring cap, spring shield, spring, and oil seal. Wash all parts in cleaning solvent and dry thoroughly.

(3) Remove valves from cylinder head and place in rack in proper sequence to facilitate assembly in their original positions.

(4) Clean all carbon from combustion chambers and valve ports.

(5) Thoroughly clean valve guides using Tool J-8101.

(6) Clean all carbon and sludge from push rods and rocker arms.

(7) Clean valve stems and head on buffing wheel. Inspect valves for burned heads, cracked faces and damaged stems.

(8) Remove carbon and other deposits from head gasket mating surfaces.

(9) Inspect cylinder head for cracks in exhaust ports, combustion chambers, and external cracks in water jacket.

(10) Measure fit of valve stems in their respective guides.

NOTE: *Excessive valve stem-to-guide clearance will cause reduced power, rough idling and noisy valves, and may cause valve breakage. Insufficient clearance will result in noisy and sticky functioning of the valve and cause rough idling.*

(a) Using a micrometer, measure diameter of valve stem in three places; top, center and bottom. Exhaust valves have tapered stems and are approximately 0.001-inch (0.025 mm) larger at top of stem than at head end.

(b) Insert telescoping gauge in valve guide bore to measure valve-to-valve guide clearance (fig. 1B-27).

(c) If clearance is not within specified limits, use next oversize valve stem size and ream bore to fit using suitable reamer with Tool J-5830-02. Service valves are available with standard, 0.003-inch (0.076 mm) and 0.005-inch (0.127 mm) oversize stem diameters.

(11) Test valve spring tension with suitable tester. Refer to Valve Spring Tension Testing.

NOTE: *Springs should be tested by compressing to a specified height, and measuring force required to maintain that height. (See Specifications.) Weak springs should be replaced if not within 10 force-pounds (44 N) of the specified load (without dampers).*

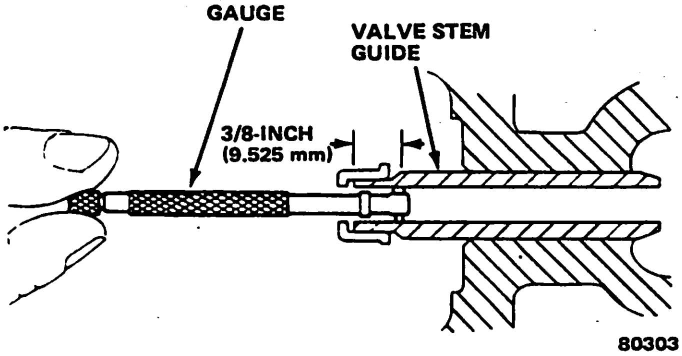

Fig. 1B-27 Measuring Valve Guide Bore with Telescoping Gauge

Cylinder Head Assembly

(1) Insert valve in original port.

(2) Assemble valve spring and related parts according to following procedure:

(a) Set valve spring, shield and cap in place.

(b) Compress spring with Tool J-5892-1.

(c) With Tool J-22330 install oil seal in lower groove of stem. Ensure seal is flat and not twisted.

(d) Install locks and release compressing tool. Ensure locks are seated properly in upper groove of valve stem.

(3) Install remaining valves according to procedure described above.

(4) Test each valve stem oil seal by placing Valve Seal Installer and Tester Tool J-22330 over end of valve stem and against cap.

(5) Measure installed height of valve springs using a narrow, thin scale. Use of a cutaway scale will help. Measure from top of spring seat to top of valve spring or oil shield. If spring exceeds specified height, install 1/16-inch (1.59 mm) valve spring seat shim.

CAUTION: *Never shim a spring excessively. Installed height should never be less than specified minimum height.*

ENGINE LUBRICATION SYSTEM

Engine lubrication is accomplished through a gear type pump that pumps engine oil from the oil pan sump, through the full flow oil filter and into an oil passage that runs along the right side of the block and intersects the hydraulic valve tappet bores. Oil from this passage is routed to the crankshaft main and camshaft bearings through smaller drilled passages. Oil is supplied to the rocker arms through holes in the hydraulic valve tappets, which force oil up through the tubular push rods to the rocker arms. The oil is metered by a valve located within each tappet body.

Two valves are incorporated into the lubrication system to ensure the proper flow of oil. A bypass valve is located within the oil filter mounting boss that will continue oil flow in the event that the filter becomes clogged or restricted. The pressure regulator valve located in the oil pump body maintains adequate pressure for the lubrication system and bypasses any excess oil back to the oil pan sump.

Many internal engine parts have no direct oil source and are either gravity or splash lubricated from other directly lubricated components. The timing gears are lubricated by oil that is supplied through a passage from the front of the camshaft to a calibrated nozzle above the crankshaft timing gear. The engine lubrication system diagram is depicted in figure 1B-28.

A full flow oil filter is standard equipment on the engine and is mounted on the right side of the engine. All oil from the pump passes through the filter before going to the engine oil galleries. In the filter, the oil passes through a filtering element that removes foreign particles.

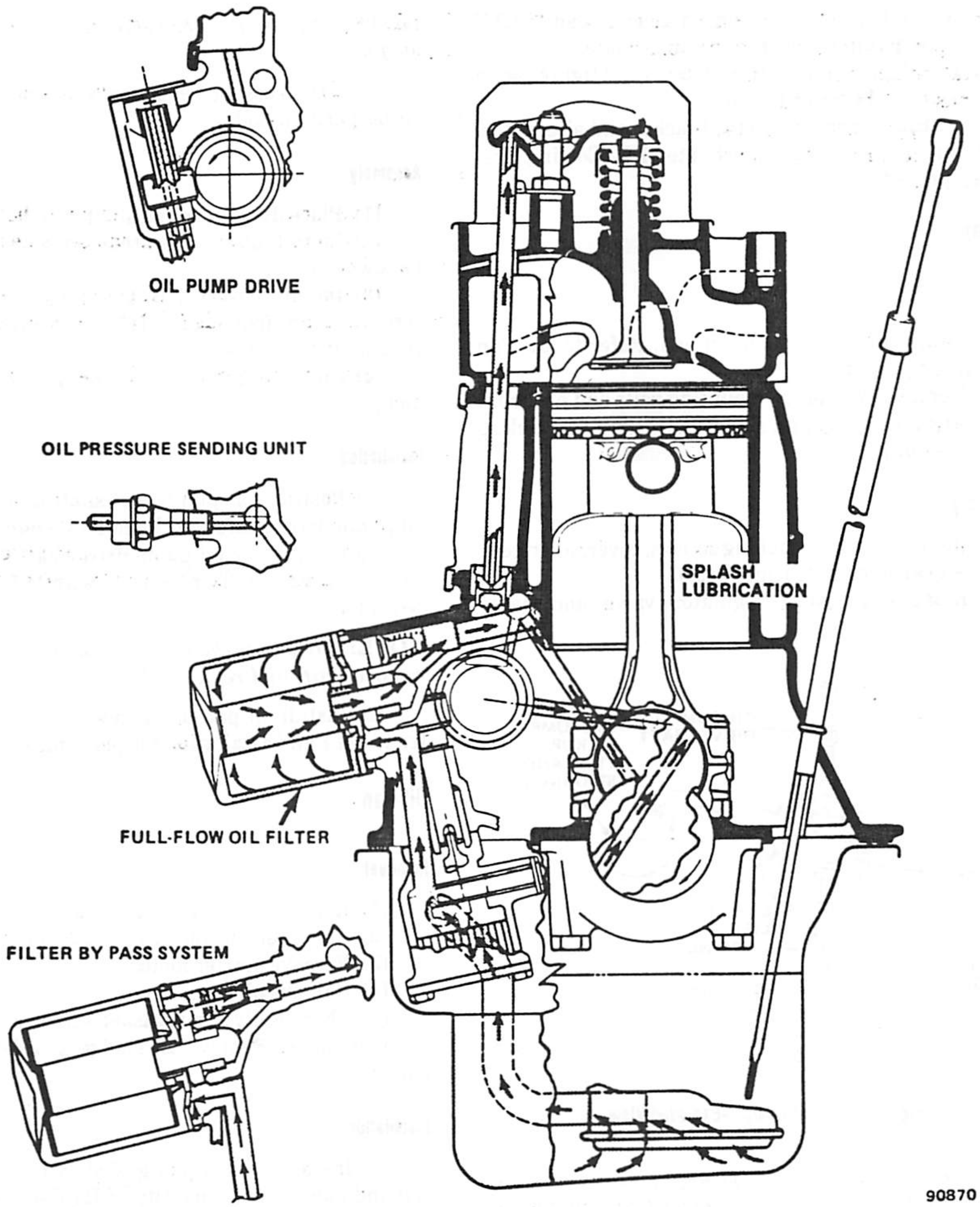

Fig. 1B-28 Engine Lubrication System Diagram

Oil Pump Drive Shaft

Removal

(1) Remove alternator and upper bracket.

(2) Remove oil pump drive shaft retainer plate bolts and remove bushing and shaft assembly.

Installation

(1) Install oil pump drive shaft assembly by turning shaft until it meshes with camshaft drive gear and inserts properly in oil pump body.

(2) Thoroughly clean sealing surfaces on cylinder block and retainer plate.

(3) Apply 1/16-inch (1.6 mm) diameter bead of RTV sealant to oil pump drive shaft retainer plate.

(4) Install retainer plate with bolts and tighten with 10 foot-pounds (14 N•m) torque.

(5) Install upper alternator bracket and alternator. Adjust belt tension. Refer to Chapter 1C—Cooling Systems for procedure.

Oil Pump

Removal

(1) Drain oil and remove oil pan. Refer to Oil Pan Removal for procedure.

(2) Remove two flange mounting bolts and nut from main bearing cap bolt and remove oil pump and pickup assembly as unit.

Disassembly

(1) Remove cover attaching screws, cover, idler gear and drive gear and shaft (fig. 1B-29).

(2) Remove pressure regulator valve and valve parts.

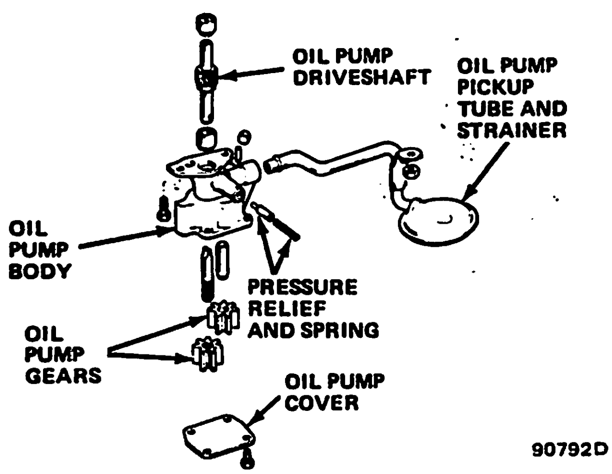

Fig. 1B-29 Oil Pump—Exploded View

NOTE: *Do not disturb oil pickup pipe on strainer screen or body. This pipe is attached during factory assembly.*

(3) If any of the following discrepancies are observed during inspection, complete pump assembly should be replaced.

(a) Pump body has cracks or excessive wear.

(b) Pump gears have cracks, excessive wear and damage.

(c) Shaft is loose in housing.

(d) Inside of cover has wear that would permit oil to leak past ends of gears.

(e) Oil pick-up assembly has damage to strainer screen or relief grommet.

NOTE: *If present, remove debris from strainer screen surface.*

(f) Pressure regulator valve plunger does not fit properly in body.

Assembly

(1) Place drive gear and shaft in pump body.

(2) Install idler gear so that smooth side of gear will be toward cover.

(3) Install cover and attaching screws. Tighten screws with 9 foot-pounds (17 N•m) torque and ensure that shaft turns freely.

(4) Install regulator valve plunger, spring, retainer and pin.

Installation

(1) Position oil pump gear shaft tang to align with oil pump drive shaft slot. Install oil pump-to-block positioning flange over oil pump drive shaft lower bushing. Do not use gasket. Tighten bolts with 18 foot-pounds (25 N•m) torque.

NOTE: *Oil pump should slide easily into place. If not, remove shaft and relocate slot.*

(2) Install oil pan using new gaskets and seals. Refer to Oil Pan Installation for procedure.

Oil Pan

Removal

(1) Remove battery negative cable.

(2) Raise vehicle and drain engine oil from oil pan.

(3) Remove starter motor.

(4) Remove oil pan.

(5) Thoroughly clean gasket surfaces of oil pan and cylinder block. Remove all sludge and debris from oil pan sump.

Installation

(1) Install rear oil pan gasket in rear main bearing cap and apply small quantity of RTV sealant in depression where pan gasket contacts block.

(2) Position gasket on oil pan. Apply 1/8 x 1/4-inch (3 x 6 mm) bead of RTV sealant at split lines of front and side gasket.

(3) Position oil pan. Insert and tighten screws with 45 inch-pounds (5 N•m) torque.

(4) Install starter motor. Tighten 3/8-inch bolts with 17 foot-pounds (24 N•m) torque. Tighten nut with 40 inch-pounds (4.5 N•m) torque. Connect battery cable and solenoid wire to starter motor solenoid.

(5) Lower vehicle.

(6) Connect battery negative cable. Refill crankcase with oil.

PISTONS AND CONNECTING RODS

The pistons are lightweight, cast aluminum with slipper skirt and cam ground so that the diameter across the thrust face is larger than the diameter fore and aft of the engine. Two compression rings and one oil control ring are used. All are located above the piston pin.

The piston pins are offset toward the thrust side (right-hand side) to provide a gradual change in thrust pressure against the cylinder wall as the piston travels within the cylinder. The piston pins are tempered steel and have a floating fit in the pistons. They are retained in the connecting rods by a press fit.

The connecting rods are made of Armasteel. Full pressure lubrication is directed to the connecting rods by drilled oil passages from the adjacent main bearing journal. Oil holes at the connecting rod journals are located so that oil is supplied to give maximum lubrication just prior to full bearing load.

Removal

(1) Remove cylinder head according to procedure described in Cylinder Head Removal.

(2) Remove oil pan according to procedure described in Oil Pan Removal.

(3) Remove ridge and/or deposits from upper end of cylinder bores with ridge reamer tool. Before ridge or deposits are removed, turn crankshaft until piston is at bottom of stroke and place a cloth on top of piston to collect cuttings. After ridge and/or deposits are removed, turn crankshaft until piston is at top of stroke and remove cloth and cuttings.

(4) Inspect connecting rod and piston for cylinder number identification and, if not identified, mark them.

(5) Remove bearing cap and install Connecting Rod Bolt Guide Set J-6305-11.

(6) Carefully remove connecting rod and piston assembly by pushing out with knurled handle of long guide.

Disassembly

CAUTION: *Use care at all times when handling and servicing connecting rods and pistons. To prevent possible damage to these units, do not clamp rod or piston in vise because they may become distorted. Do not allow pistons to strike against one another, against hard objects or bench surfaces because distortion of piston contour or nicks in the soft aluminum material may result.*

(1) Remove piston rings using suitable piston ring removal tool.

(2) Install guide bushing of Piston Pin Removal and Installation Tool J-24086.

(3) Position piston and connecting rod assembly on support and place assembly on arbor press (fig. 1B-30).

(4) Press pin out of connecting rod with Piston Pin Removal Tool J-24086.

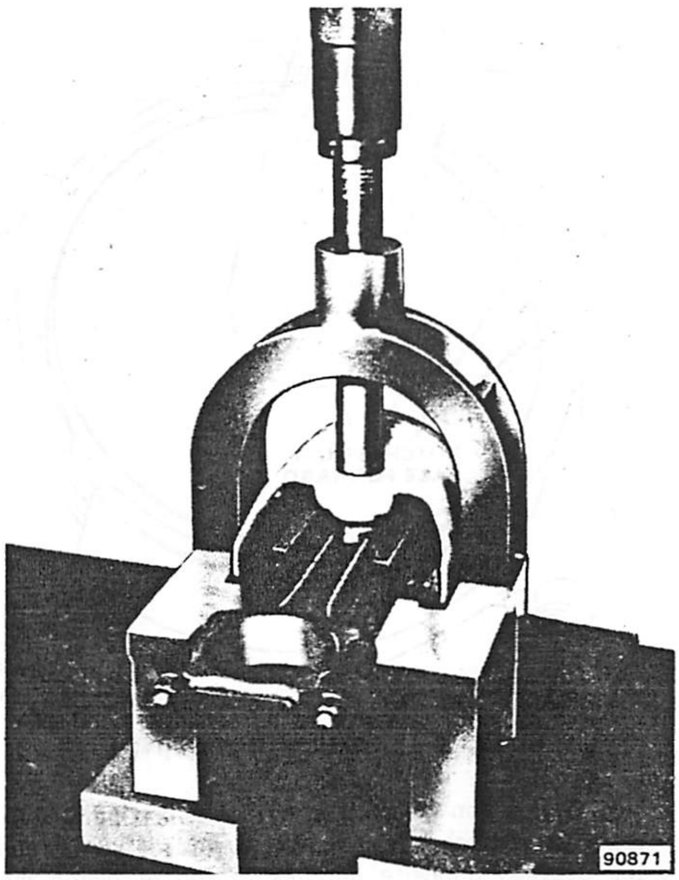

Fig. 1B-30 Removing Piston Pin

(5) Remove assembly from press, remove piston pin from support and remove tool from piston and rod.

(6) Clean carbon, varnish, and gum deposits from piston surfaces, including underside of piston head. Clean ring grooves and oil holes in oil ring groove with appropriate cleaning tools and solvent.

(7) Clean piston pin, rod, cap, bolts and nuts in appropriate solvent. Reinstall cap on connecting rod to prevent inadvertent mixing of caps and connecting rods.

(8) Carefully examine piston for rough or scored surfaces; cracks in skirt or head; cracked, broken, or worn ring lands; and scored, galled, or worn piston bosses. Damaged or defective pistons should be replaced.

(9) Inspect piston pin for scoring, roughness, or uneven wear and proper fit.

(10) Inspect rod bearing inserts to ensure they are not damaged. Fit of bearings should be determined when engine is being assembled.

Assembly

There are two notches cast in the top of all piston heads to facilitate proper installation. The pistons should always be installed with the notches toward the front of the engine (fig. 1B-31).

(1) Lubricate piston pin holes in piston and connecting rod lightly with graphite lubricant.

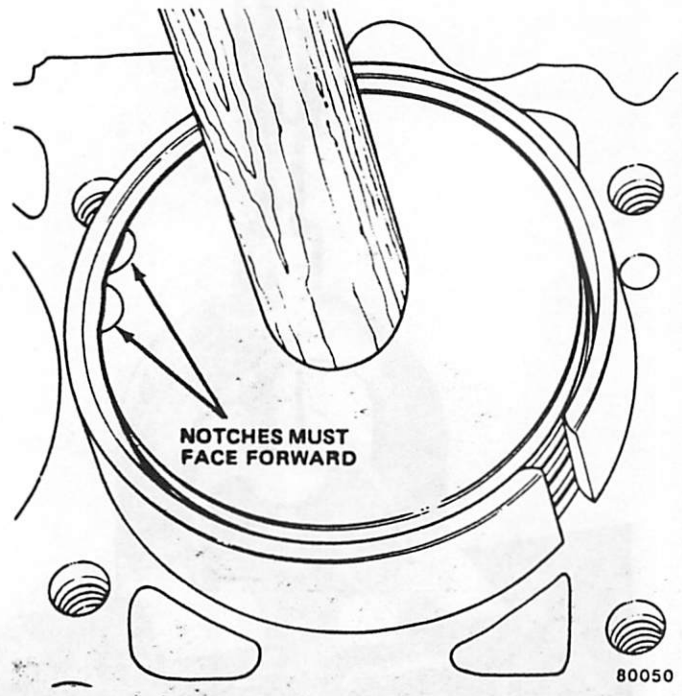

Fig. 1B-31 Installing Piston in Cylinder

(2) Position connecting rod in its original piston so that raised notch side of rod (fig. 1B-32) at bearing end is 180 degrees opposite notches in top of piston when installed.

(3) Position piston and rod on support, and insert pilot through piston and rod. Note positions of notches.

(4) Place support on arbor press, start pin into position and press on installation tool until guide bushing bottoms (fig. 1B-30).

(5) Remove installation tool and support assembly from piston and connecting rod assembly.

(6) Inspect piston pin for freedom of movement in piston bore.

(7) Install piston rings with appropriate installation tool. Refer to Piston Ring Installation for procedure.

Installation

(1) Install Connecting Rod Bolt Guide Set J-6305-11 on connecting rod bolts.

(2) Using appropriate piston ring compressor, insert rod and piston assembly into cylinder so that notches in top of piston is facing front of engine (fig. 1B-31).

(3) From beneath engine, position connecting rod with upper bearing insert in place against journal.

(4) Remove Guide Set J-6305-11 and install lower bearing insert and cap. Tighten capnuts with 30 foot-pounds (40 N•m) torque.

(5) Install oil pan.

(6) Install cylinder head, intake manifold and exhaust manifold.

(7) Connect fuel pipe and vacuum hoses to carburetor.

(8) Install push rods, place rocker arms in position and tighten rocker arm nuts. Do not over tighten nuts.

(9) Install cylinder head cover.

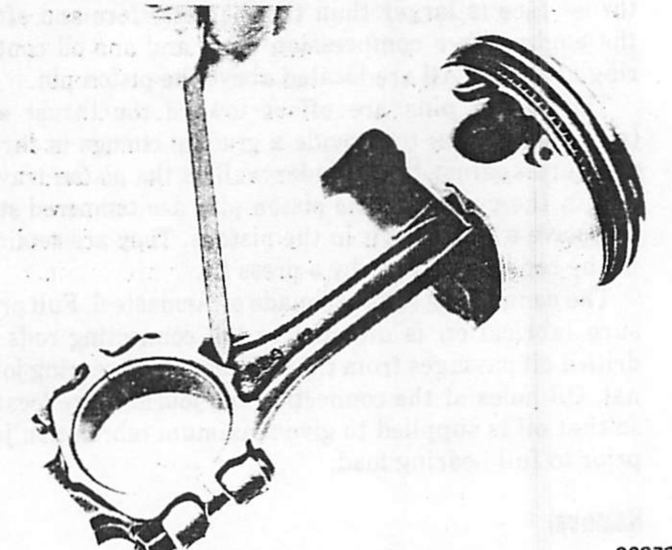

Fig. 1B-32 Raised Notch Location

Connecting Rod Bearings

The connecting rod bearings are the precision insert type and should be replaced if the clearances are excessive. Service bearings are available in standard size, 0.001-inch (0.025 mm), 0.002-inch (0.050 mm) and 0.010-inch (0.254 mm) undersize for use with replacement and remanufactured crankshafts.

Replacement and Inspection

Before removal of the connecting rod and cap, stamp the side of the connecting rod and cap with corresponding cylinder number to assure matched reassembly.

(1) With oil pan and oil pump removed, remove connecting rod cap and bearing.

(2) Inspect bearing inserts for evidence of wear or damage.

(3) Wipe bearings and journal clean of oil.

(4) Measure journal for out-of-round or taper with micrometer. If not within specification, replace or recondition crankshaft. If within specification and replacement bearing inserts are to be installed, measure maximum diameter of journal to determine required size of replacement bearing inserts.

(5) If within specification, measure replacement or original bearing clearances with Plastigage, or equivalent.

(6) If bearing is being fitted to out-of-round journal, allow for maximum diameter of journal. If bearing is fitted to minimum diameter and journal is out-of-round, interference between bearing and journal will result and rapid bearing failure will occur.

(a) Place strip of Plastigage on full width of journal on area that is contacted by bearing (parallel to crankshaft).

(b) Install bearing inserts in connecting rod and cap.

(c) Install rod and bearing cap and evenly tighten nuts with 30 foot-pounds (40 N•m) torque.

NOTE: *Do not turn the crankshaft with the Plastigage installed.*

(d) Remove bearing cap and, with scale on envelope, measure width of Plastigage strip at widest point (fig. 1B-33).

(e) If clearance exceeds specification, select correct replacement size bearing inserts and remeasure clearance.

NOTE: *Ensure that size of removed bearing is ascertained to determine correct size for replacement bearing inserts. If the clearance cannot be brought to specification, the journal must be ground undersize. If the journal is already at maximum undersize, the crankshaft must be replaced.*

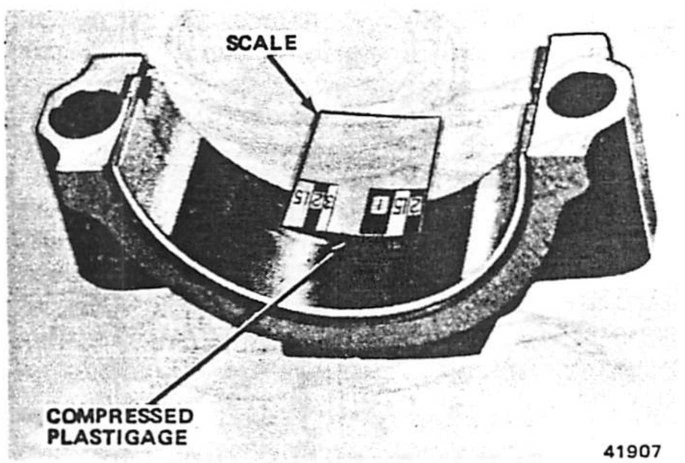

Fig. 1B-33 Connecting Rod Bearing Clearance Measurement with Plastigage

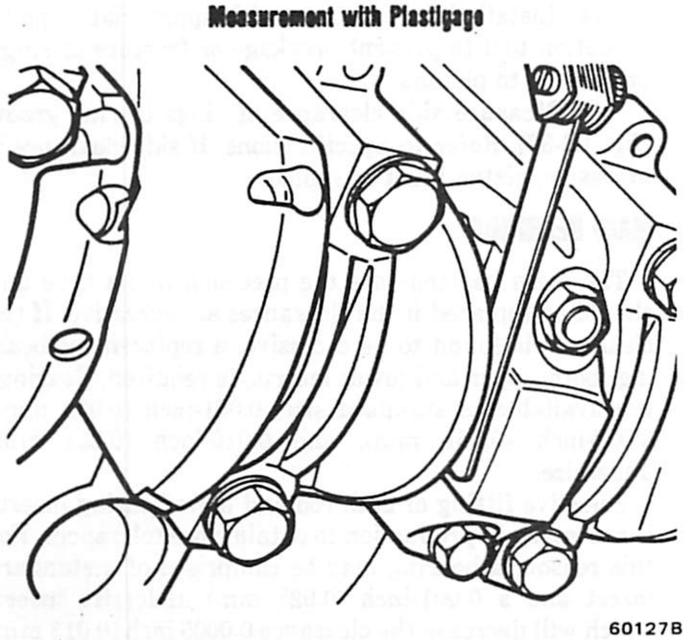

Fig. 1B-34 Measuring Connecting Rod Side Clearance

(7) Coat bearing surface with oil, install inserts, rod and bearing cap. Tighten nuts with 30 foot-pounds (40 N•m) torque.

(8) When all connecting rod bearings have been installed, tap each rod lightly (parallel with journal) to ensure they have correct clearance.

(9) Measure all connecting rod side clearances (refer to Specifications) between connecting rod caps (fig. 1B-34).

Piston Fit

Pistons should be fitted in the bores by actually measuring the fit (measure OD of piston at the measuring locations and ID of cylinder bore). Refer to engine specifications for correct clearances. If cylinder bores have been reconditioned, or if pistons are being replaced, reconditioning of bores and fitting of pistons should be closely coordinated.

If bore has been honed, it should be washed thoroughly with hot, soapy water and a stiff bristle brush. Thoroughly oil bores after washing.

Using a cylinder measurement gauge, measure the cylinder bore crosswise to the block to determine the smallest diameter. Record the smallest diameter of each bore.

NOTE: *When measuring cylinder bores and pistons, it is very important that the block and pistons be at room temperature. If any or all of the parts are warmer or cooler than normal room temperature, improper fitting will result.*

Measure the piston skirt perpendicular (90 degrees from) to the piston pin boss (piston pin removed) and at the measuring locations indicated in figure 1B-35.

NOTE: *Ensure the micrometer is in full contact.*

As the pistons are measured, they should be marked for size identification and the measurements recorded.

If there is excessive clearance between a cylinder bore and the piston that was originally installed, a replacement piston should be used. Replacement pistons are available in both standard size and oversize.

Because the sizes are nominal or basic sizes, it is important that replacement pistons be measured to ensure proper fit. All replacement pistons are equipped with selectively fitted piston pins.

After all measurements have been completed, match the replacement pistons with cylinders that will provide the correct clearance. Honing of the cylinder bore may be necessary to effect a proper fit. When properly mated, mark each piston with the matching cylinder number to ensure it will not become mis-matched.

Piston Pins

Piston pins normally do not become loose enough to cause a knock or tapping until after very high mileage accumulation on the engine and in such instances the piston and rod can be reamed and oversize pins installed.

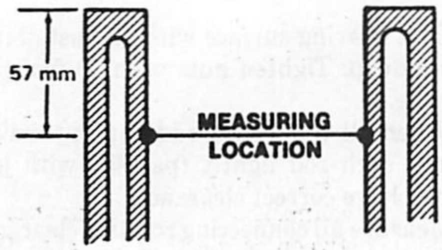

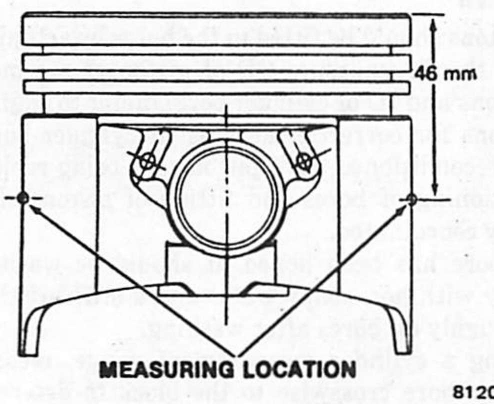

Fig. 1B-35 Piston Measurement Locations

Installation

The piston pin fit specification in the piston is 0.0002 to 0.0004 inch (0.005 to 0.010 mm) loose with pin and bosses clean and dry.

NOTE: *Piston and pin must be at room temperature when determining fit and pin must gravity-fall from the piston.*

Piston Rings

Replacement rings are available for standard size pistons and for 0.005-inch, 0.010-inch (0.254 mm) and 0.030-inch (0.762 mm) oversize pistons. When selecting rings, ensure they correspond to the size of the piston (i.e., standard rings for standard pistons, 0.005-inch oversize rings for 0.005-inch oversize pistons, 0.010-inch oversize rings for 0.010-inch oversize pistons, etc.). Ring gap and side clearance should be measured when installing rings as follows:

(1) Inspect pistons to ensure that ring grooves and oil return holes have been properly cleaned.

(2) Place ring at lower end of ring travel area in cylinder bore. Level ring in bore by pushing it into position with inverted piston.

(3) Measure gap between ends of ring with feeler gauge (fig. 1B-36). Refer to Specifications.

NOTE: *An incorrect ring gap indicates that the wrong size rings are being used. If rings are selected according to the size of the bore, they should have the proper gap. It should not be necessary to alter ring gap by filing.*

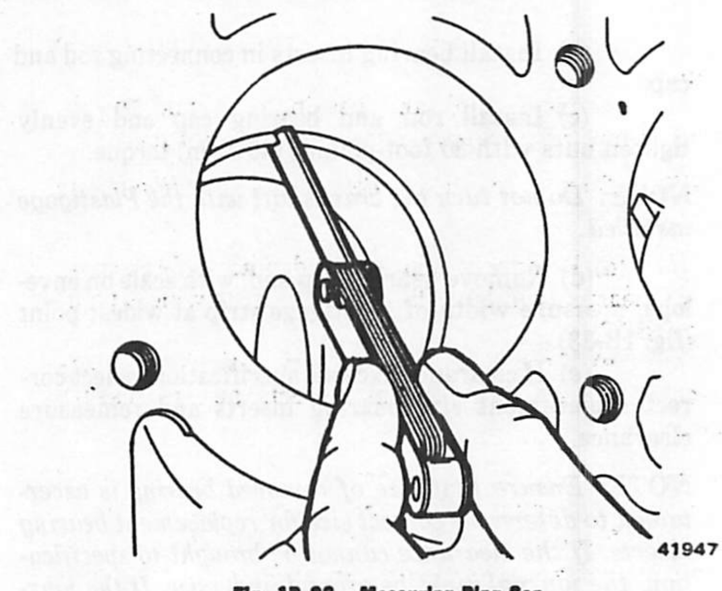

Fig. 1B-36 Measuring Ring Gap

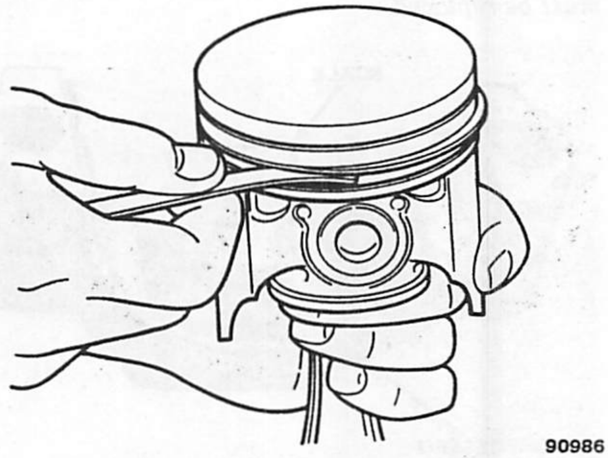

Fig. 1B-37 Ring Side Clearance Measurement

(4) Install rings on piston with appropriate ring installation tool to prevent breakage or fracture of rings, or damage to pistons.

(5) Measure side clearance of rings in ring groove (fig. 1B-37). Refer to Specifications. If side clearance is excessive, piston must be replaced.

MAIN BEARINGS

The main bearings are the precision insert type and should be replaced if the clearances are excessive. If the clearance is found to be excessive, a replacement bearing, both upper and lower inserts, is required. Bearings are available in standard size, 0.001-inch (0.025 mm), 0.002-inch (0.051 mm), and 0.010-inch (0.254 mm) undersize.

Selective fitting of both rod and main bearing inserts is necessary in production to obtain close tolerances. For this reason, a bearing may be comprised of a standard insert and a 0.001-inch (0.025 mm) undersize insert, which will decrease the clearance 0.0005 inch (0.013 mm) from that of two standard bearing inserts.

Inspection

In general, the lower insert (except No. 1 bearing) will have greater wear and the most distress from fatigue. If upon inspection the lower insert is suitable for use, it can be assumed that the upper insert is also satisfactory. If the lower insert has evidence of wear or damage, both upper and lower inserts should be replaced. Never replace one insert without replacing the other.

Clearance Measurement

To obtain the most accurate results with Plastigage, or equivalent, certain precautions must be observed. If the engine has been removed from the vehicle and turned upside down, the crankshaft will rest on the upper bearings and the total clearance can be measured between the lower bearing insert and journal. If the engine is installed in the vehicle, the crankshaft should be supported upward to remove the clearance from the upper bearing insert. The total clearance can then be measured between the lower bearing insert and journal.

To assure proper seating of the crankshaft, all bearing cap bolts must be tightened with the specified torque. In addition, before measuring the fit of bearings, the surface of the crankshaft journal and bearing should be wiped clean of oil.

(1) With oil pan and oil pump removed and starting with rear main bearing, remove bearing cap and wipe oil from journal and bearing cap.

(2) Place strip of Plastigage on full width of bearing surface area (parallel with crankshaft) on journal.

NOTE: *Do not rotate the crankshaft while the Plastigage is between the bearing and journal.*

(3) Install bearing cap and insert. Tighten retaining bolts evenly with 65 foot-pounds (88 N•m) torque..

(4) Remove bearing cap. Flattened Plastigage will be adhering to either bearing insert or journal.

(5) Without removing Plastigage, measure its compressed width (at the widest point) (fig. 1B-38).

NOTE: *Normally, main bearing journals wear evenly and are not out-of-round. However, if a bearing is being fitted to an out-of-round journal, fit to the maximum diameter of the journal. If the bearing is fitted to the minimum diameter and the journal is out-of-round, interference between the bearing and journal will result and rapid bearing failure will occur. If the flattened Plastigage tapers toward the middle or ends, there is a difference in clearance indicating taper, low spot or an irregularity in the bearing or journal. Measure the journal with a micrometer if the flattened Plastigage indicates more than 0.0005-inch (0.013 mm) difference.*

(6) If bearing clearance is within specification, bearing inserts are satisfactory. If clearance is not within specification, replace inserts. Always replace both upper and lower inserts as a unit.

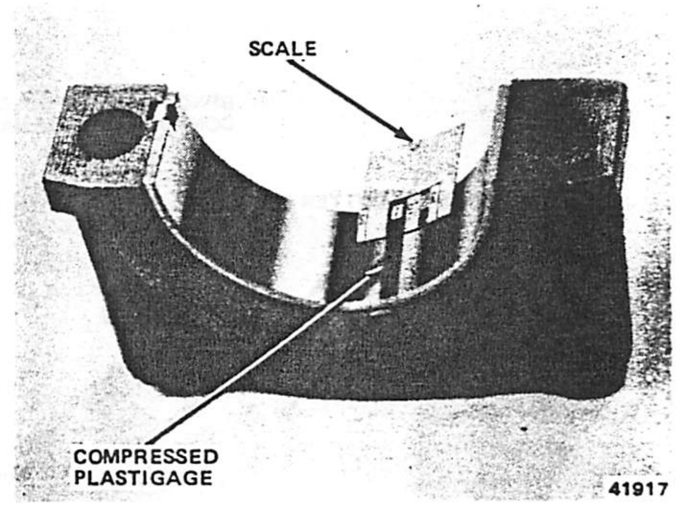

Fig. 1B-38 Measuring Bearing Clearance

(7) Standard 0.001-inch (0.254 mm) or 0.002-inch (0.508 mm) undersize bearing inserts should produce correct clearance.

(8) Proceed to next journal. After clearances of all journals and bearings have been measured, rotate crankshaft to ensure that there is no excessive drag.

(9) Measure crankshaft end play (refer to Specifications) by forcing crankshaft to extreme front position. Measure at front end of thrust bearing with feeler gauge.

Replacement

Main bearings may be replaced with either the crankshaft installed or removed from the engine.

Crankshaft Removed From Engine

(1) Remove and inspect crankshaft.

(2) Remove main bearing inserts from cylinder block and main bearing caps.

(3) Coat bearing surfaces of replacement main bearing inserts with oil and position in cylinder block and main bearing caps. Install crankshaft and caps with arrows pointing toward rear of engine. Tighten caps with 65 foot-pounds (88 N•m) torque.

Crankshaft Installed

(1) With oil pan, oil pump and spark plugs removed, remove cap from main bearing requiring replacement and remove lower bearing insert from cap.

(2) Insert upper main bearing insert removal and installation tool in oil hole in crankshaft journal. If tool is not available, tool (fig. 1B-39) may be fabricated from cotter pin by bending as required.

(3) Rotate crankshaft clockwise as viewed from front of engine. This will roll upper bearing insert out of block.

(4) Apply oil to replacement upper bearing insert and position plain (unnotched) end between crankshaft

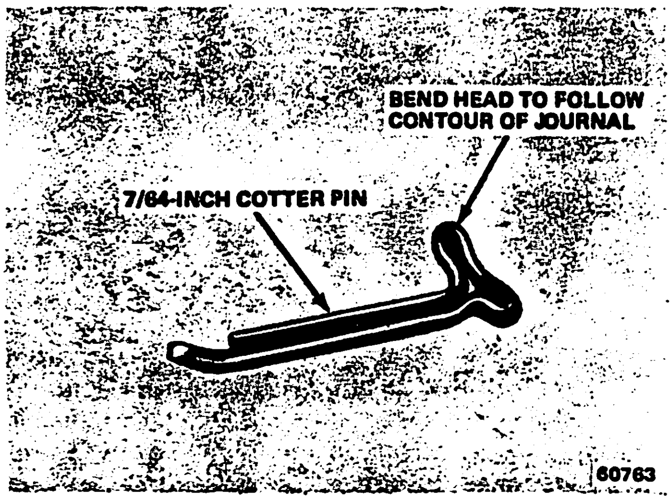

Fig. 1B-39 Fabricated Upper Main Bearing Insert Removal and Installation Tool

and indented or notched side of block. Rotate bearing into place and remove tool from oil hole in crankshaft journal.

(5) Apply oil to replacement lower bearing insert and install in bearing cap.

(6) Install main bearing cap with arrows pointing toward rear of engine.

(7) Tighten main bearing cap bolts with 65 foot-pounds (88 N•m) torque.

Rear Main Bearing Oil Seal Replacement

Removal

The rear main bearing oil seal is a one piece unit and can be removed and installed without removal of the oil pan or crankshaft.

(1) Disconnect battery negative cable.

(2) Raise vehicle.

(3) Remove transmission and transfer case as an assembly. Refer to Transmission Removal in Chapter 2B or 2C for procedure.

(4) Remove starter motor cable and solenoid wire. Remove starter motor.

(5) If manual transmission, remove inspection plate from flywheel housing.

(6) If manual transmission, remove hydraulic clutch slave cylinder from flywheel housing.

(7) Remove flywheel/drive plate housing bolts and housing from engine.

(8) If manual transmission, remove clutch pressure plate and disc assembly by loosening bolts 1/4 turn in equal amounts until pressure is relieved.

(9) Mark flywheel/drive plate location to facilitate correct assembly. Remove bolts and flywheel/drive plate.

(10) Using a small blade screwdriver, pry out rear main oil seal. Use care to prevent damaging seating groove or crankshaft.

Installation

(1) Center replacement seal over crankshaft with lip of seal facing toward front of engine. With a soft hammer (plastic), tap around perimeter of seal until it seats in groove. Use care to prevent seal from binding on crankshaft and not seating properly.

(2) Attach flywheel/drive plate to crankshaft and tighten bolts with 68 foot-pounds (93 N•m) torque.

(3) If manual transmission, install clutch pressure plate and disc assembly. Tighten bolts 1/4 turn in equal amounts until assembly is flush against flywheel. Tighten bolts with 18 foot-pounds (25 N•m) torque.

NOTE: *Use Alignment Tool J-5824-01, or equivalent, to align clutch disc prior to tightening bolts.*

(4) Install flywheel/drive plate housing and tighten bolts with 35 foot-pounds (47 N•m) torque.

(5) If manual transmission, install inspection plate on flywheel housing.

(6) If manual transmission, install hydraulic clutch slave cylinder on flywheel housing. Tighten bolts with 18 foot-pounds (25 N•m) torque.

(7) Install transmission/transfer case assembly. Refer to Chapter 2B for procedure.

(8) Install starter motor, cable and solenoid wire. Refer to Chapter 2B or 2C for procedure.

(9) Lower vehicle.

(10) Connect battery negative cable.

WARNING: *Use extreme caution when engine is operating. Do not stand in direct line with fan. Do not put hands near pulleys, belts or fan. Do not wear loose clothing.*

(11) Start engine and inspect for leaks.

CRANKSHAFT REPLACEMENT

Removal

(1) Remove engine from vehicle.

(2) Mount engine on suitable stand.

(3) Remove spark plugs.

(4) Remove fan and pulley.

(5) Remove crankshaft vibration damper and hub assembly.

(6) Remove oil pan and oil pump assembly.

(7) Remove timing case cover.

(8) Remove crankshaft timing gear.

(9) Remove connecting rod bearing caps and bearing inserts. Mark each for installation identity.

(10) Move connecting rod and piston assemblies away from crankshaft.

(11) Remove main bearing caps with bearing inserts and mark for installation identity.

(12) Remove crankshaft and upper bearing inserts. Mark inserts for installation identity.

Installation

(1) With upper main bearing inserts installed, position replacement crankshaft in block.

(2) Install main bearing caps (with lower bearing inserts), but do not tighten cap bolts. Oil bearings prior to assembly.

(3) Move connecting rods (with upper bearing inserts installed) and pistons into place.

(4) Install rod bearing caps (with bearing inserts), but do not tighten nuts. Apply oil to bearings prior to assembly.

(5) With rubber mallet, strike both ends of crankshaft to center thrust bearing. Rearward first, forward last.

(6) Tighten main bearing caps (65 foot-pounds, 88 N•m), then measure crankshaft end play. It should be between 0.0015 inch (0.038 mm) and 0.0085 inch (0.216 mm).

(7) Tighten connecting rod bearing caps (30 foot-pounds, 40 N•m).

(8) Measure bearing clearances using Plastigage method.

(9) Install key from original crankshaft in replacement crankshaft keyway.

(10) Install crankshaft timing gear and ALIGN TIMING MARKS ON TIMING GEARS BY ROTATING CRANKSHAFT, IF NECESSARY.

(11) Install timing case cover using replacement seal and gaskets.

(12) Install oil pump assembly and oil pan using replacement rear seal in rear main bearing cap and replacement front seal for timing case cover. Press front seal tips into holes in timing case cover.

(13) Coat front cover oil seal contact area of vibration damper hub with oil and push into position.

(14) Install fan pulley and fan.

NOTE: *The fan assembly and pulley must be installed with the drive belt(s) in position on pulley.*

(15) Install spark plugs.

(16) Remove engine from stand.

(17) Install engine in vehicle.

CYLINDER BLOCK

The cylinder block is manufactured from cast iron and has 4 in-line cylinders that are numbered from front to rear, 1 through 4. Five main bearings support the crankshaft, which is retained by recessed bearing caps that are machined with the block for proper alignment and clearances.

The cylinders are completely encircled by coolant jackets. (For details of engine cooling system, refer to Chapter 1C—Cooling Systems.)

Cylinder Bores

Inspect cylinder bores for out-of-round or excessive taper with an accurate Cylinder Measurement Gauge Tool J-8087, or equivalent. Measure at top, middle and bottom of bore (fig. 1B-40).

Measure cylinder bore parallel and at right angles to the centerline of the engine to determine out-of-roundness. Variation in measurement from top to bottom of cylinder indicates the taper in the cylinder. Figure 1B-41 illustrates the areas in the cylinder bore where wear normally occurs. If dimension **A** is larger than dimension **B** by 0.002 inch (0.051 mm) or more, it indicates the necessity for cylinder boring and installing replacement rings and pistons. Cylinder bores can be measured by setting the cylinder measurement gauge dial at zero in the cylinder bore at the location of desired measurement. Lock dial indicator at zero before removing from cylinder bore, and measure across the gauge contact points with outside micrometer (with the gauge at the same zero setting when removed from the cylinder).

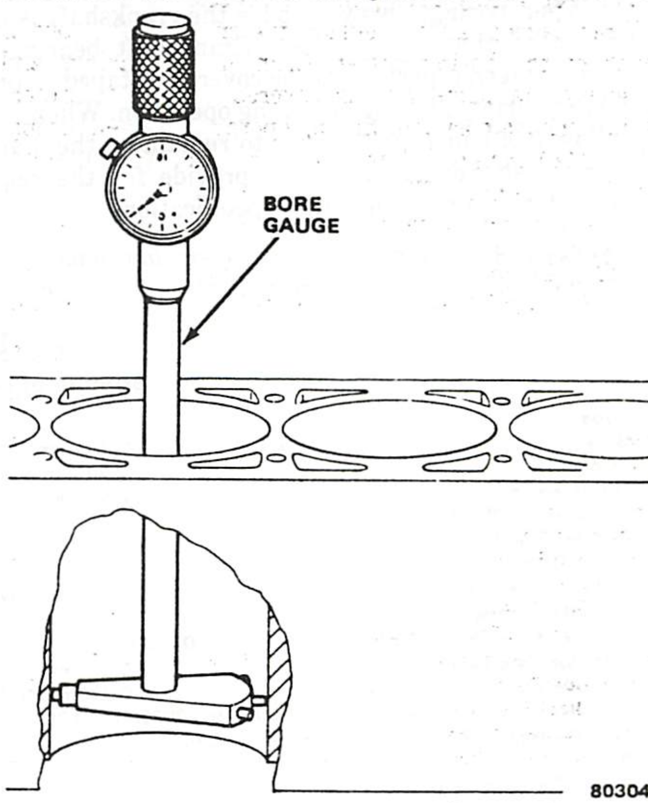

Fig. 1B-40 Measuring Cylinder Bore with Bore Gauge

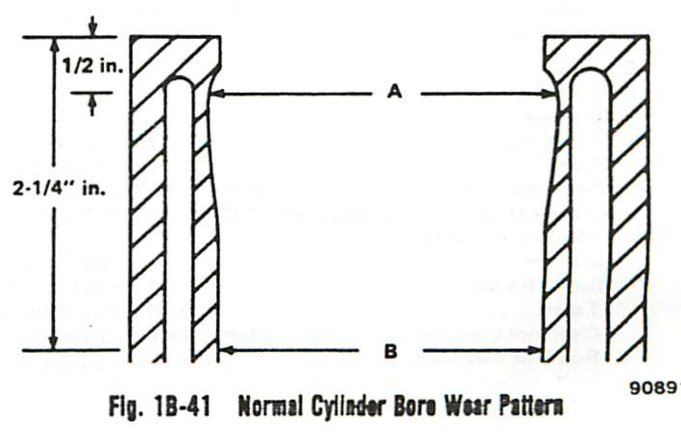

Fig. 1B-41 Normal Cylinder Bore Wear Pattern

Honing or Boring

If a piston other than standard size is to be installed, the cylinder should be bored, rather than honed, to obtain a true bore.

When honing to eliminate taper in the cylinder, use full strokes. Measure cylinder at top, middle and bottom of bore repeatedly during honing process.

When boring, always ensure the crankshaft is out of reach of the boring cutter. Crankshaft bearings and other internal parts must be covered or taped to protect them during a boring or honing operation. When boring, allow 0.001 inch (0.025 mm) to remain on the diameter for finish honing. This will provide for the required piston-to-cylinder clearance specifications.

NOTE: *A honing or boring operation must be performed carefully to ensure that the specified clearance between pistons, rings, and cylinder bores is maintained.*

By measuring the piston to be installed at the measuring locations and adding the mean of the clearance specification, the correct finish hone cylinder dimension can be determined. It is important that both the cylinder and piston be measured at normal room temperature.

After honing and before the piston is inserted for fit, each cylinder bore must be thoroughly cleaned. Use a hot, soapy water solution and wipe dry to remove all traces of abrasive. If all traces of abrasive are not removed, rapid wear of new rings and piston will result. After washing, thoroughly oil cylinder bores.

Intermixing different size pistons has no effect on engine balance because all pistons from standard size up to 0.030-inch (0.762 mm) oversize weigh exactly the same.

SPECIFICATIONS

Specifications—Four-Cylinder Engine

Type	In-Line
Bore	101.6 mm (4.00 in.)
Stroke	76.2 mm (3.0 in.)
Displacement	2.5 litre, 151 cu. in.
Compression Ratio	8.24:1
Compression Pressure, Desired	140 psi at 160 rpm
Firing Order	1, 3, 4, 2
Number One Cylinder	Front Cylinder
Cylinder Number, Front to Rear	1, 2, 3, 4
Cylinder Bore, Out-of-Round	0.038mm (0.0015 in. max.)
Cylinder Bore Taper	0.051mm (0.002 in.)
Cylinder Block Deck Clearance	0.076mm (0.003 in.)
Cylinder Head – Flatness	0.0025-0.2032mm (0.001-0.008 in.)
Cylinder Head – Combustion Chamber Volume	52.25 cc ± 0.5 cc
Piston	
Piston Clearance in Bore	
Top	0.0635-0.0838mm (0.0025 in.-0.0033 in.)
Bottom	0.043-0.1041mm (0.0017 in.-0.0041 in.)
Piston Diameter	101.519-101.580mm (3.9968-3.9992 in.)
Compression Ring Side Clearance Top	0.0762mm (0.0030 in.)
Compression Ring Side Clearance	
Bottom	0.0762mm (0.0030 in.)
Compression Ring Width	
Top	1.9685-1.9812mm (0.0775-0.0780 in.)
Bottom	1.9685-1.9812mm (0.0775-0.0780 in.)
Upper Compression Ring Gap	0.25-0.56mm (0.010-0.022 in.)
Lower Compression Ring Gap	0.25-0.71mm (0.010-0.028 in.)
Oil Ring Gap	0.381-1.397mm (0.015-0.055 in.)
Piston Pin	
Diameter	23.547-23.557mm (0.92705-0.92745 in.)
Length	76.2mm (3.00 in.)
Pin to Piston	
Clearance	0.003-0.013mm (0.0003-0.0005 in.)
Fit in Rod	Press
Crankshaft	
Main Bearing Journal	
Diameter	58.39mm (2.2988 in.)
Out of Round	0.0127mm (0.0005 in. max.)
Taper	0.0127mm (0.0005 in. max.)
Clearance Limit New	0.05588mm (0.0005-0.0022 in. max.)
Crankshaft End Play New	0.0889-0.2159mm (0.0035-0.0085 in. max.)
Rod Bearing Journal	
Diameter	50.8mm (2.000 in.)
Out of Round	0.0127mm (0.0005 in. max.)
Taper	0.0127mm (0.0005 in. max.)
Clearance Limit New	0.0127-0.06604mm (0.0005-0.0026 in.)
Rod Side Clearance	0.1492-0.4362mm (0.017 in.)

Lobe Lift	
Intake	5842mm (0.230 in.)
Exhaust	5.842mm (0.230 in.)
Journal Diameter	47.4726mm (1.869 in.)
Journal Clearance	0.01778-0.0685mm (0.0007-0.0027 in.)
End Play Clearance	0.031-0.127mm (0.0015-0.1150 in.)
Cylinder Block Deck Clearance	0.076mm (0.003 in.)
Valves	
Valve Train	
Lash Intake and Exhaust	0
Rocker Arm Ratio	1.76:1
Push Rod Length	226.746mm (8.927 in.)
Valve Timing	
Intake – Opens	23° BTDC
– Closes	249° ATDC
– Duration	272°
Exhaust – Opens	246° BTDC
– Closes	27° ATDC
– Duration	272°
Maximum Lift (Intake and Exhaust)	10.1mm (0.398 in.)
Valve Lifter	
Leak-Down Rate	12 to 90 sec. with 50 lb. Force
Lifter Body Diameter	21.3868-21.4046mm (0.8120-0.8427 in.)
Plunger Travel	3.175mm ().125 in.)
Clearance in Boss	0.625mm (0.0025 in.)
Lifter Bore Diameter	21.425-21.450mm (0.8435-0.8445 in.)
Intake Valves	
Face Angle	45°
Seat Angle	46°
Head Diameter	43.688mm (1.72 in.)
Stem Diameter	8.6995-8.68172mm (0.3425-0.3418 in.)
Overall Length	115.75mm (1.557 in.)
Stem-to-Guide Clearance	0.0254-0.06858mm (0.0010-0.0027 in.)
Valve Seat Width	0.897-1.897mm (0.353-0.0747 in.)
Valve Installed Height (Spring Seat to Valve Tip)	52.265mm (2.057 in.)
Valve Stem Height	50.8mm (2.00 in.)
Exhaust Valves	
Face Angle	45°
Seat Angle	46°
Head Diameter	38.4mm (1.50 in.)
Stem Diameter	8.766-8.682 (3.418-3.125 in.)
Overall Length	114.02 (4.489 in.)

Specifications—Four-Cylinder Engine (Continued)

Stem-to-Guide Clearance Top . 0.0254-0.6858mm (0.0020-0.0027 in.)
Valve Seat Width . . . . 1.468-2.468mm (0.058-0.097 in.)
Valve Installed Height
(Spring Seat to Valve Tip) . . . . 44.024mm (1.73 in.)
Valve Stem Height . . . . 50.8mm (2.00 in.)

Valve Springs
Intake and Exhaust
Valve Spring Force and Length-
Valve Closed. . . 347-383 N at 42.16mm (78-86 lb. force at 1.66 in.)

Valve Spring Force and Length-
Valve Open . 765-801 N at 31.85mm (172-180 lb. force at 1.254 in.)

Oil Capacity
Without Filter Change . . . . 2.838 litre (3 qts.)
With Filter Change . . . . 2.838 litre (3 qts.)
Filter Type (full flow) . . . . PF40 or equivalent
Oil Pressure at rpm . . . . 248-283 kPa (36-41 psi) at 2000 rpm
Oil Pump Gear to Body Clearance . . . . . 0.10mm (0.004 in.) maximum
Gear End Clearance, Feeler Gauge . . . .0.05-0.13mm (0.0020-0.005 in.) Above Pump Body

Torque Specifications

Service Set-To Torques should be used when assembling components. Service In-Use Recheck Torques should be used for checking a pre-tightened item

	USA (ft-lbs)		Metric (N-m)	
	Service Set-To Torque	Service In-Use Recheck Torque	Service Set-To Torque	Service In-Use Recheck Torque
Adapter-to-Intake Manifold Bolt (Carb. Spacer)	13	10-16	17	14-20
Air Injector Manifold Tube Fittings	28	25-31	38	35-41
Camshaft Thrust Plate-to-Block Bolt	80 in-lb	77-83 in-lb	9	6-12
Carburetor-to-Manifld Nut	13	10-16	17	14-20
Connecting Rod Nut	30	27-33	40	37-43
Converter-to-Drive Plate	40	35-40	54	51-57
Cylinder Head-to-Block Bolt	92	81-103	125	110-140
Damper Pulley Hub Bolt	160	157-163	220	217-223
Distributor Clamp Pivot-to-Block Bolt	12	9-15	17	14-21
Distributor Retaining Clamp Bolt	9	6-12	12	9-15
Drive Plate Ring Gear Assembly-to-Crankshaft Bolt	45	42-48	60	57-63
EGR Valve-to-Manifold Bolt	150 in-lb	147-153 in-lb	12	9-15
Exhaust Manifold-to-Cylinder Head Bolt	37	36-42	50	47-53
Exhaust Pipe-to-Manifold Nut/Bolt	35	30-40	47	41-50
Fan and Pulley-to-Water Pump Bolt	18	15-21	24	21-27
Flywheel Housing-to-Engine Bolts	54	51-57	73	70-76
Flywheel-to-Crankshaft Bolt	68	65-71	93	90-96
Fuel Pump-to-Block Bolt	15	12-18	20	17-23
Intake Manifold-to-Cylinder Head Bolt	37	34-40	50	47-53
Main Bearing-to-Block Bolt	65	62-68	88	85-91
Oil Filter	12	9-15	17	14-20
Oil Filter-to-Block Connector	35	32-38	47	44-50
Oil Pan Drain Plug	25	23-28	34	31-37
Oil Pan Front, Side, Rear Bolt	45 in-lb	43-48	5	2-8
Oil Pump Cover Bolt	9	6-12	17	14-20
Oil Pump-to-Block Bolt	18	15-21	25	22-28
Oil Pump-to-Drive Shaft Plate Bolt	10	7-13	14	11-17
Oil Screen Support Nut	28	25-31	38	35-41
Pressure Plate-to-Flywheel Bolts	18	15-22	25	20-30
Pulley-to-Crankshaft Hub Bolts	25	22-28	34	31-37
Push Rod Cover-to-Block Bolt	80 in-lb	77-83 in-lb	9	6-12
Radiator Hoses, All Clamps	25 in-lb	22-28 in-lb	3	1-6
Rocker Arm Cover Bolt	7	4-10	10	7-13
Rocker Arm Capscrew	20	17-23	27	24-30
Starter Motor-to-Block Bolt	17	14-20	24	21-27
Thermostat Housing Bolt	22	19-25	30	27-33
Thermostat Housing Cover Bolt	17	14-20	23	20-26
Timing Cover Bolt	45 in-lb	42-48 in-lb	5	2-8
Timing Cover-to-Block Bolt	80 in-lb	77-83 in-lb	9	6-12
Water Pump-to-Block Bolt	17	14-20	23	20-26

All Torque values given in foot-pounds and newton-meters with dry fits unless otherwise specified.

90892

Four-Cylinder Engine Firing Order

Firing Order
1–3–4–2

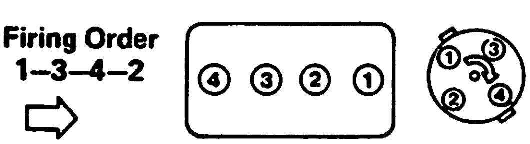

90968

SIX-CYLINDER ENGINE

GENERAL

The 258 CID (4.2 liter), in-line, overhead valve, lightweight six-cylinder engine (figs. 1B-42, 1B-43 and 1B-44) operates only on no-lead gasoline. The cylinders are numbered from front to rear and the firing order is 1-5-3-6-2-4. Crankshaft rotation is clockwise, viewed from

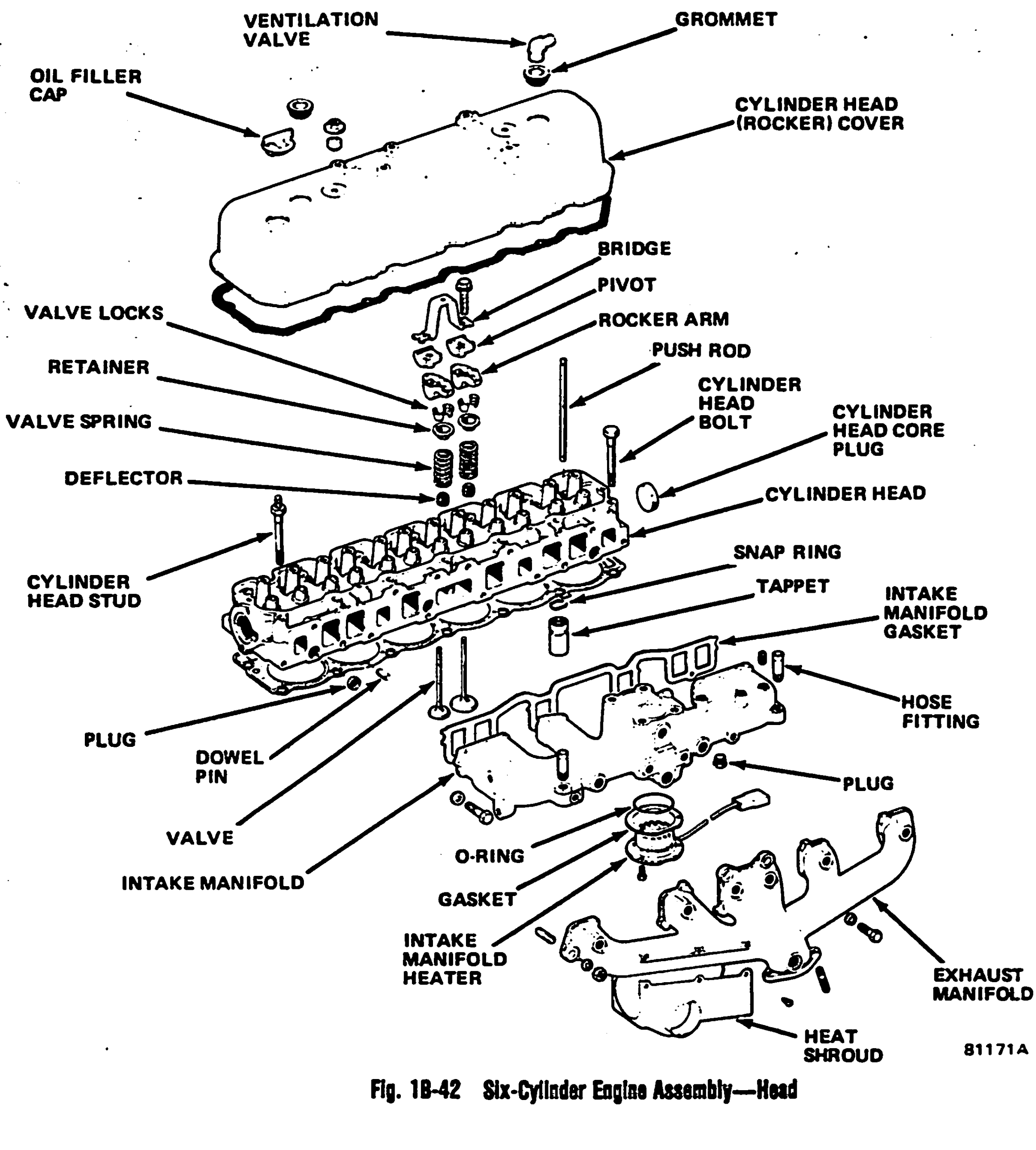

Fig. 1B-42 Six-Cylinder Engine Assembly—Head

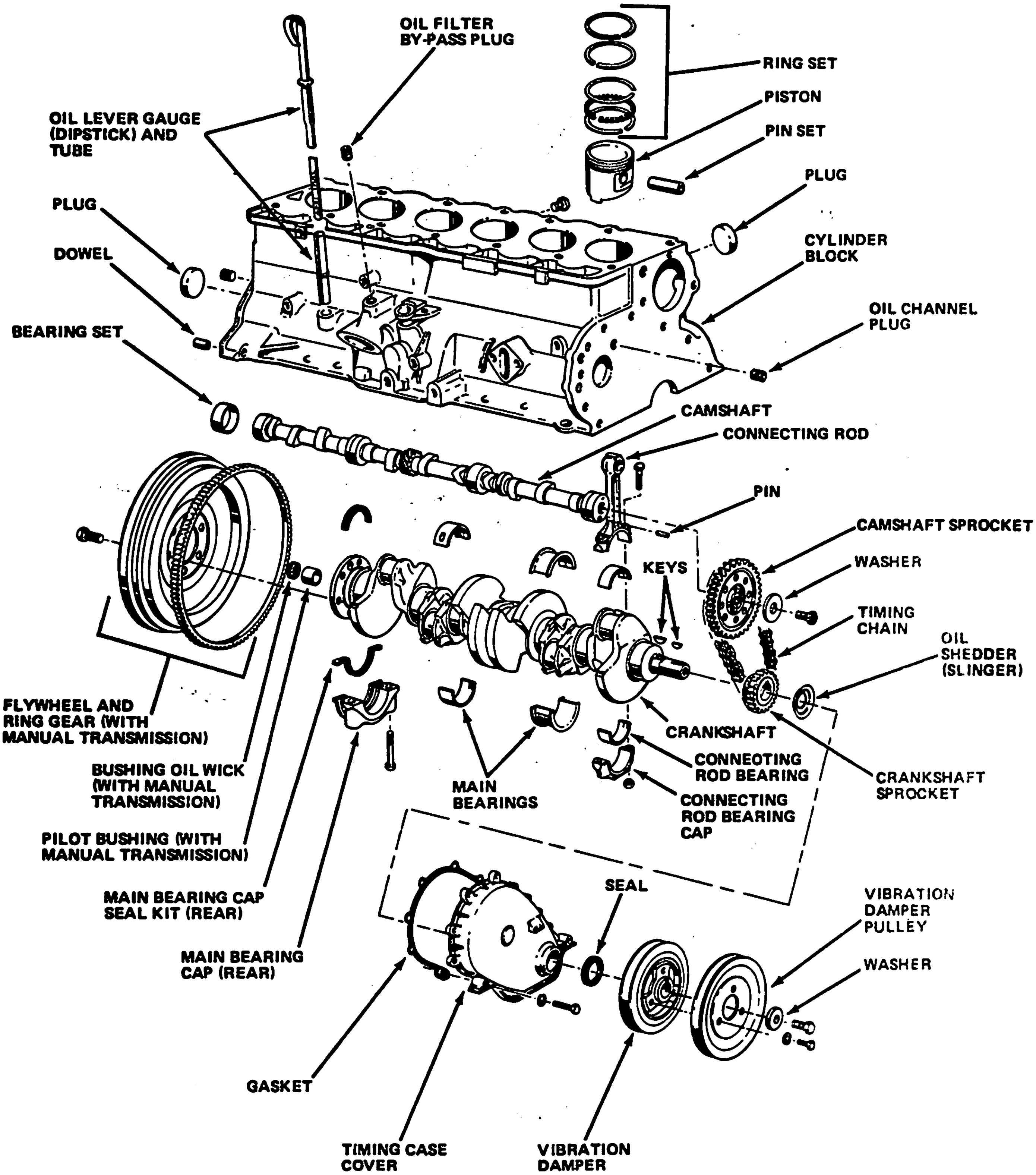

81171B

Fig. 1B-43 Six-Cylinder Engine Assembly—Cylinder Block

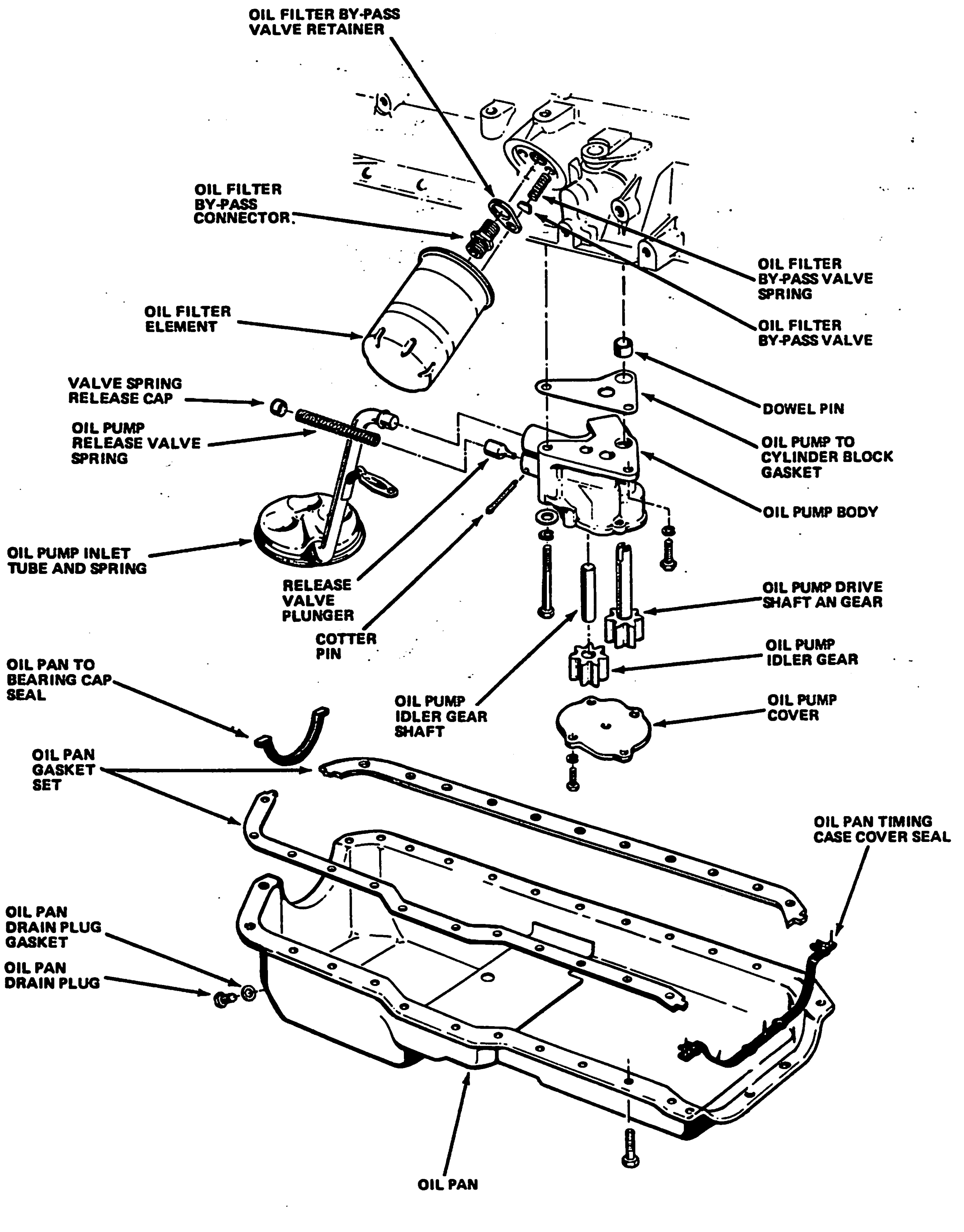

Fig. 1B-44 Six-Cylinder Engine Assembly—Oil Pan and Pump the front. The crankshaft is supported by seven two-piece bearings (inserts). The camshaft is supported by four one-piece, line bored bearings.

The six-cylinder engine features a quench-type combustion chamber, which creates turbulance and fast burning of the air/fuel mixture for good fuel economy.

Identification

Build Date Code

The engine Build Date Code is located on a machined surface on the left side of the block (viewed from front) between the No. 2 and No. 3 cylinders (fig. 1B-43).

The numbers in the code identify the year, month and day that the engine was built.

The code letter identifies the cubic inch displacement, carburetor type and compression ratio. The data are decoded as listed in the Engine Build Date Code Chart.

Engine Build Date Code

Letter Code	CID	Carburetor	Compression Ratio
C	258	2V	8.6:01

1st Character (Year)	2nd and 3rd Characters (Month)	4th Character (Engine Type)	5th and 6th Characters (Day)
1—1981 2—1982	01 - 12	C	01 - 31

EXAMPLE: 1 10 C 18

60257

The example code identifies a 258 CID (4.2 liter) engine with 2V carburetor and 8.6:1 compression ratio that was built on October 18, 1981.

Oversize or Undersize Components

Some engines may be built with oversize or undersize components, such as oversize cylinder bores, undersize crankshaft main bearing journals, undersize connecting rod journals or oversize camshaft bearing bores. These engines are identified by a letter code stamped on a boss between the ignition coil and distributor (fig. 1B-45). The letters are decoded as listed in the Oversize or Undersize Components chart.

SHORT ENGINE ASSEMBLY (SHORT BLOCK)

A service replacement short engine assembly (short block) may be installed whenever the original engine block is worn or damaged beyond feasible repair. It consists of engine block, piston and rod assemblies and crankshaft. The camshaft must be procured separately and installed before engine is installed in a vehicle.

NOTE: *Short engine assemblies have an S stamped on the same surface as the build date code for identification.*

Installation includes transfer of component parts from the worn or damaged original engine. Follow the appropriate procedures for cleaning, inspection, installation and tightening as outlined in this chapter.

Oversize or Undersize Components

Code Letter	Definition	
B	All cylinder bores	-0.010-inch (0.254mm) oversize
M	All crankshaft main bearing journals	-0.010-inch (0.254mm) undersize
P	All connecting rod bearing journals	-0.010-inch (0.254mm) undersize
C	All camshaft bearing bores	-0.010-inch (0.254mm) oversize

EXAMPLE: The code letters PM mean that the crankshaft main bearing journals and connecting rod journals are 0.010-inch undersize.

60258

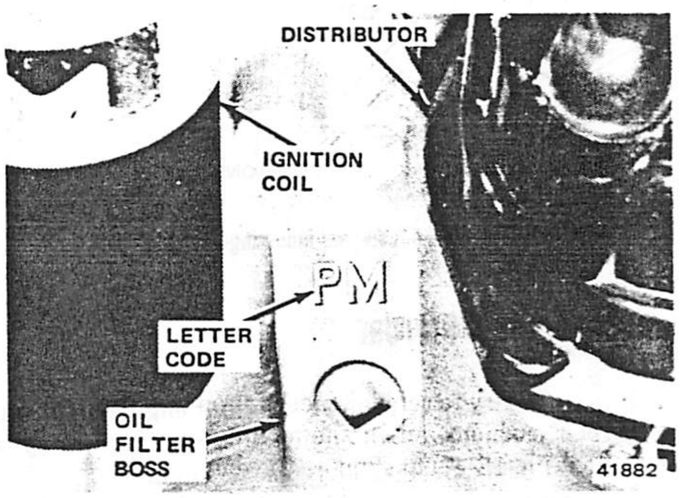

Fig. 1B-45 Oversize or Undersize Letter Code Location

ENGINE MOUNTING

Resilient rubber cushions support the engine and transmission at three points: at each side on the centerline of the engine and at the rear between the transmission extension housing and the rear support crossmember (fig. 1B-46). Replacement of a cushion may be accomplished by supporting the weight of the engine or transmission at the area of the cushion.

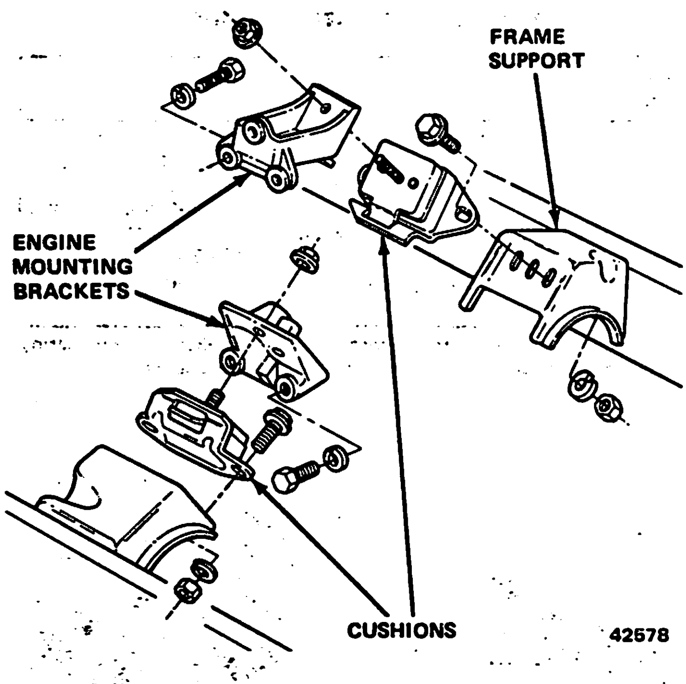

Fig. 1B-46 Engine Mounting—Typical

ENGINE HOLDING FIXTURE

If it is necessary to remove the front engine mounting brackets or cushions, an engine holding fixture may be fabricated (fig. 1B-47) to support the engine.

The engine also may be supported by a jack placed under the oil pan skid plate. Use a board between the jack and skid plate to distribute the weight evenly.

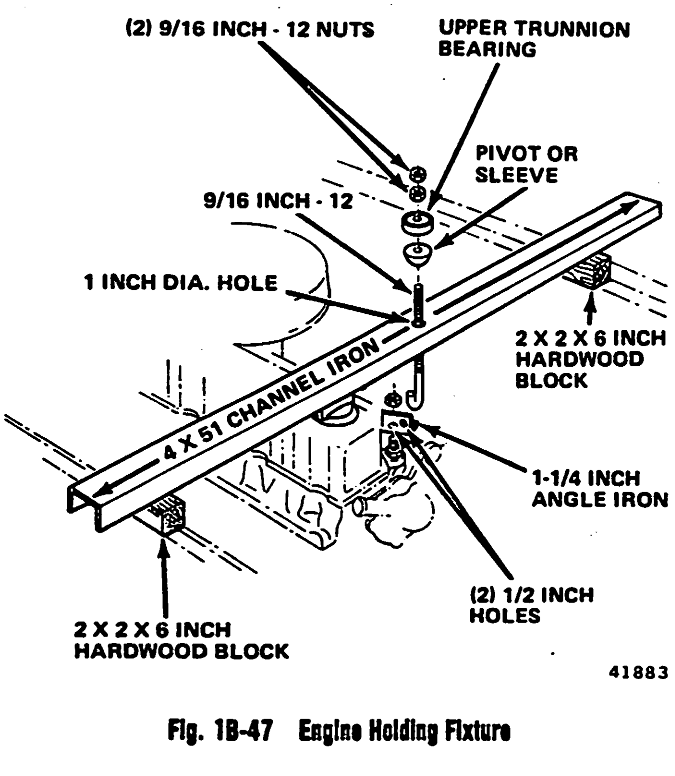

Fig. 1B-47 Engine Holding Fixture

ENGINE REMOVAL

The engine is removed without the transmission and flywheel/drive plate housing. Raise the vehicle slightly to provide working clearance.

(1) Drain cooling system.

NOTE: *Drain coolant in a clean container for re-use.*

(2) On all vehicles except CJ, remove hood. Mark hinge locations for installation alignment.

(3) Remove battery on Cherokee, Wagoneer and Truck vehicles. On CJ vehicles, disconnect battery negative cable.

(4) Remove air cleaner. Disconnect and plug fuel pipe connected to fuel pump. Disconnect fuel return pipe from hose at connection on frame.

(5) Disconnect heater hoses at front of engine and rear of intake manifold on CJ vehicles, and at heater on other vehicles.

(6) Disconnect throttle cable from engine.

(7) Disconnect throttle valve rod, if equipped.

(8) Disconnect wiring harness from engine and alternator and lay aside.

(9) Identify and tag vacuum hoses, and disconnect from engine.

(10) Disconnect shroud, if equipped, from radiator.

(11) Remove radiator, fan and shroud. Install bolt in pulley after fan is removed to maintain pulley in alignment with bolt holes in water pump.

(12) Disconnect cable from starter motor. Remove starter motor.

(13) Remove engine mount cushion-to-frame attaching nuts.

(14) Disconnect exhaust pipe.

(15) If equipped with manual transmission:

(a) Remove flywheel housing bolts.

(b) Remove clutch linkage and shield.

(16) If equipped with automatic transmission:

(a) Remove drive plate access cover.

(b) Mark converter and drive plate to facilitate correct installation alignment.

(c) Remove converter-to-drive plate bolts. Rotate crankshaft for access to each bolt.

(d) Remove drive plate housing-to-engine bolts. Remove oil pan screws that retain transmission fluid cooler lines.

(17) Support transmission with jack.

(18) If equipped with power steering, disconnect hoses at steering gear. Tie hoses to engine to prevent draining.

(19) If equipped with air conditioning:

(a) Turn compressor service fitting valve stem to seat position.

(b) Loosen service fitting.

(c) Allow compressor refrigerant to escape.

(d) Remove fittings from compressor.

(20) Attach engine lift device. Pull engine forward to disengage from transmission. Lift upward to remove.

ENGINE INSTALLATION

(1) Remove right engine mount from cylinder block.

(2) Lower engine into compartment. Attach engine to transmission.

(3) Install flywheel/drive plate housing bolts and remove transmission jack.

(4) Attach right engine mount to cylinder block. Lower engine and tighten all engine mount bolts and nuts.

(5) If equipped with manual transmission:

(a) Install flywheel housing shield and clutch linkage.

(b) Adjust clutch, if necessary.

(6) If equipped with automatic transmission:

(a) Align marks on converter and drive plate. Install converter-to-drive plate bolts.

(b) Install drive plate access cover.

(c) Attach transmission fluid cooler lines to engine with oil pan screws.

(7) Install exhaust pipe.

(8) Install starter motor and connect cable.

(9) Remove lifting device.

(10) Connect fuel supply and return pipes.

(11) If equipped with power steering, connect hoses to steering gear.

(12) Connect electrical wires and vacuum hoses.

(13) Connect heater hoses.

(14) Install fan. If equipped with shroud, position shroud over fan blades.

(15) Install radiator and attach shroud to radiator.

(16) Connect radiator hoses. If equipped with automatic transmission, connect fluid cooler lines to radiator.

(17) Install throttle linkage.

(18) Connect throttle valve rod and retainer. Install throttle valve and spring.

(19) If equipped with air conditioning:

(a) Connect service valves to compressor.

(b) Open valve to mid-position.

(c) Open service port slightly. Allow small amount of refrigerant to escape to purge compressor of air.

(d) Tighten port cap.

(20) Install battery, if removed, and connect cables.

(21) Install coolant.

WARNING: *Use extreme caution when engine is operating. Do not stand in direct line with fan. Do not put hands near pulleys, belts or fan. Do not wear loose clothing.*

(22) Start engine. While engine is warming up, install hood.

(23) Inspect for fuel, oil and water leaks. Turn engine off and check fluid levels.

(24) Install air cleaner and road-test vehicle.

VALVES AND ACTUATING COMPONENTS

General

The six-cylinder engine has overhead valves that are operated by push rods and rocker arms. A chain-driven camshaft is mounted in the cylinder block. Hydraulic valve tappets provide automatic valve lash adjustments.

Rocker Arm Assembly

The intake and exhaust rocker arms of each cylinder pivot on a bridge and pivot assembly that is secured with two capscrews as illustrated in figure 1B-48. The bridge and pivot assembly maintains correct rocker arm-to-valve tip alignment. Each rocker arm is actuated by a hollow steel push rod with a hardened steel ball at each end. The hollow push rods route oil to the rocker arm assemblies.

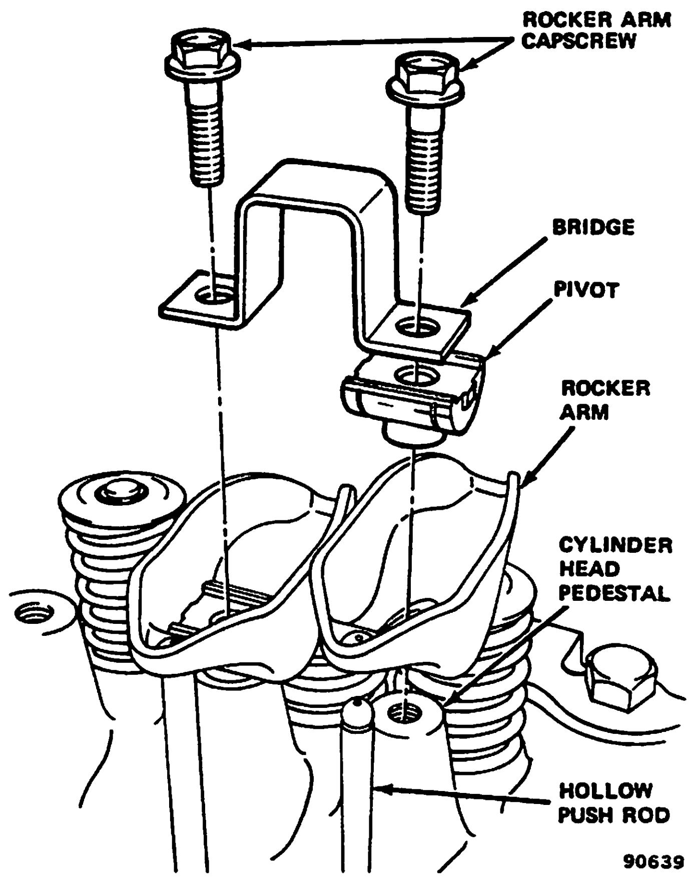

Fig. 1B-48 Rocker Arm Assembly

Removal

(1) Remove cylinder head cover and gasket.

(2) Remove two capscrews at each bridge and pivot assembly. Alternately loosen capscrews one turn at a time to avoid damaging bridge.

(3) Remove bridge and pivot assemblies and corresponding pairs of rocker arms and place on bench in same order as removed.

(4) Remove push rods and place on bench in same order as removed.

Cleaning and Inspection

Clean all parts with a cleaning solvent and use compressed air to blow out oil passages in the rocker arms and push rods.

Inspect the pivoting surface of each rocker arm and pivot. Replace any parts that are scuffed, pitted or excessively worn. Inspect valve stem tip contact surface of each rocker arm and replace any rocker arm that is deeply pitted. Inspect each push rod end for excessive wear and replace as required. If any push rod is excessively worn because of lack of oil, replace the push rod and inspect the corresponding tappet.

It is not normal to find a wear pattern along the length of the push rod. Examine the cylinder head for obstruction if this condition exists.

Installation

(1) Install each push rod in same location from where it was removed. **Ensure bottom end of each rod is centered in plunger cap of hydraulic valve tappet.**

(2) Install bridge and pivot assemblies and pair of rocker arms adjacent to same cylinders from where they were removed.

(3) Loosely install capscrews on each bridge and pivot assembly.

(4) At each bridge, tighten capscrews alternately, one turn at a time, to avoid damaging bridge. Tighten with 19 foot-pounds (26 N•m) torque.

(5) Install cylinder head cover and gasket.

Valves

NOTE: *The following procedures apply only after the cylinder head has been removed from the engine. Refer to Cylinder Head for removal procedure.*

Disassembly

(1) Compress each valve spring with Valve Spring Compressor Tool J-22534-01 and remove valve locks, retainers, springs and valve stem oil deflectors.

(2) Remove valves and place in rack in same order as removed from cylinder head.

Cleaning and Inspection

(1) Clean all carbon deposit from combustion chambers, valve ports, valve stems and head.

(2) Clean all foreign matter and gasket cement from cylinder head machined surface.

(3) Inspect for cracks in combustion chambers and valve ports.

(4) Inspect for cracks in gasket mating surface around each coolant passage.

(5) Inspect valves for burned, cracked or warped heads. Inspect for scuffed or bent valve stems. Replace valves displaying any damage.

Valve Refacing

Use a valve refacing machine to reface intake and exhaust valves to the specified angle. After refacing, at least 1/32-inch (0.787 mm) margin must remain. If not, replace the valve. Examples of correct and incorrect valve refacing are illustrated in figure 1B-49.

The valve stem tip can be resurfaced and rechamfered when worn. Do not remove more than 0.020 inch (0.508 mm).

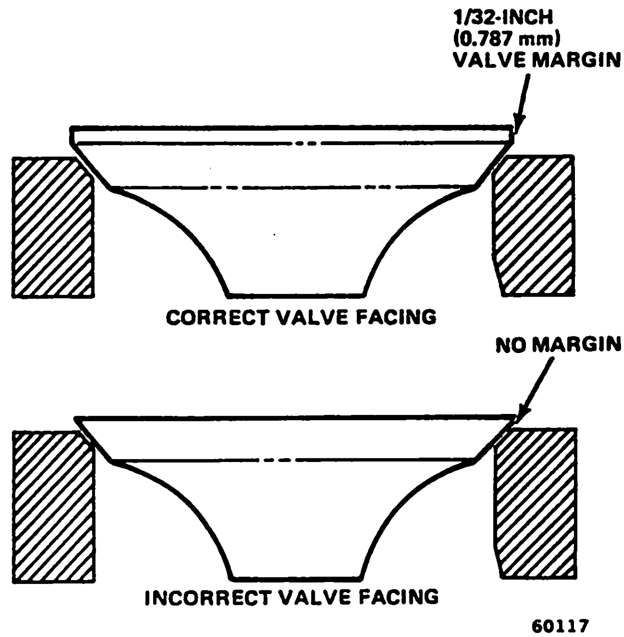

Fig. 1B-49 Valve Refacing

Valve Seat Refacing

Install a pilot of the correct size in the valve guide and reface the valve seat to the specified angle with a dressing stone in good condition. Remove only enough metal to provide a smooth finish.

Use tapered stones to obtain the specified seat widths when required.

Control seat runout to a maximum of 0.0025 inch (0.064 mm) (fig. 1B-50).

Valve Stem Oil Deflector Replacement

Nylon valve stem oil deflectors are installed on each valve stem to prevent lubricating oil from entering the combustion chamber through the valve guides. Replace the oil deflectors whenever valve service is performed or if the deflectors have deteriorated.

Valve stem oil deflector replacement requires removal of valve spring(s). Refer to Valve Springs for procedure.

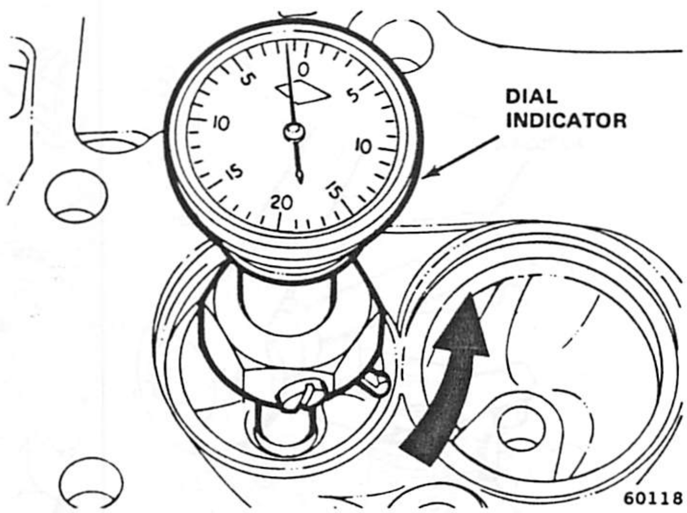

Fig. 1B-50 Measuring Valve Seat Runout

Valve Guides

The valve guides are an integral part of the cylinder head and are not replaceable. When the stem-to-guide clearance is excessive, ream the valve guide bores to accommodate the next larger oversize valve stem. Oversize service valves are available with 0.003-inch (0.076 mm), 0.015-inch (0.381 mm), and 0.030-inch (0.762 mm) stem diameter sizes. Refer to Valve Guide Reamer Sizes chart for reamer sizes.

Valve Guide Reamer Sizes

Reamer Tool Number	Size
J-6042-1	0.003-inch (0.076 mm)
J-6042-5	0.015-inch (0.381 mm)
J-6042-4	0.030-inch (0.762 mm)

60260

NOTE: *Ream valve guides in steps, starting with the 0.003-inch (0.076 mm) oversize reamer and progressing to the size required.*

Valve Stem-to-Guide Clearance

Valve stem-to-guide clearance may be measured by either of the following two methods.

Preferred Method:

(1) Remove valve from head and clean valve guide bore with solvent and bristle brush.

(2) Insert telescoping gauge into valve guide bore approximately 3/8 inch (9.525 mm) from valve spring side of head (fig. 1B-51) with contacts crosswise to cylinder head. Measure telescoping gauge contacts with micrometer.

(3) Repeat measurement with contacts lengthwise to cylinder head.

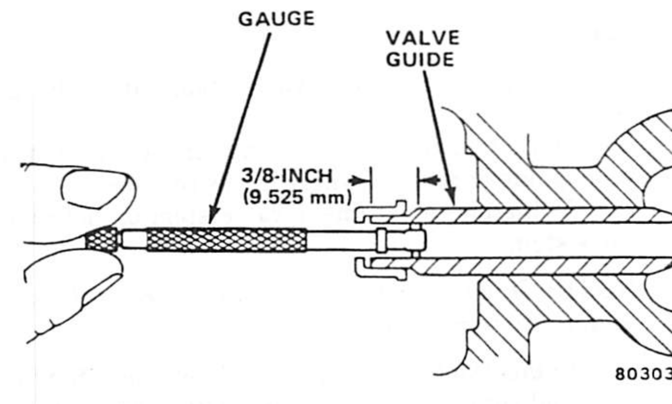

Fig. 1B-51 Valve Stem-to-Guide Clearance Measurement with Telescoping Gauge

(4) Compare crosswise to lengthwise measurements to determine out-of-roundness. If measurements differ by more than 0.0025 inch (0.064 mm), ream guide bore to accommodate oversize valve stem.

(5) Compare valve guide bore diameter with diameter listed in Specifications. If measurement differs more than 0.003 inch (0.076 mm), ream guide to accommodate oversize valve stem.

Alternate Method:

(1) Use dial indicator to measure lateral movement of valve stem with valve installed in its guide and barely off valve seat (fig. 1B-52).

(2) Correct clearance is 0.001 to 0.003 inch (0.025 mm to 0.076 mm). If indicated movement exceeds acceptable clearance, ream guide to accommodate oversize valve stem.

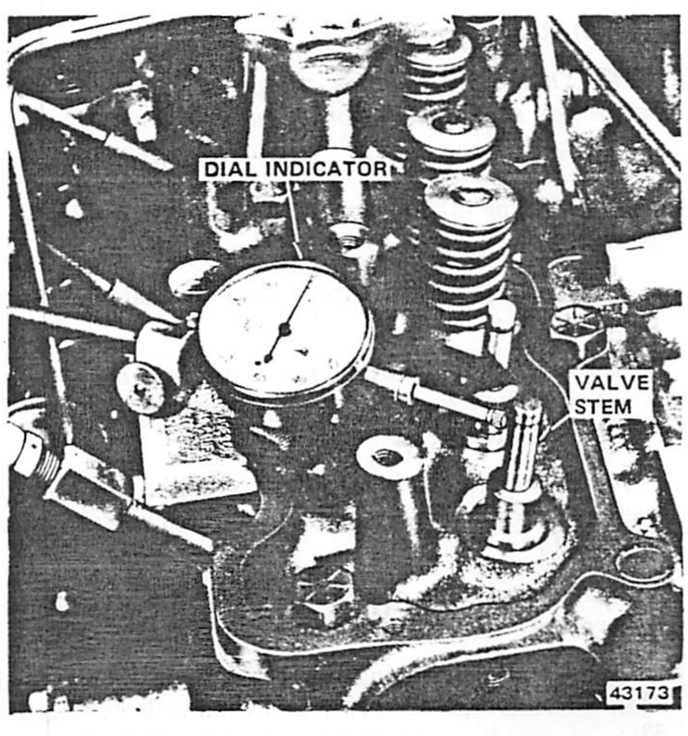

Fig. 1B-52 Valve Stem-to-Guide Clearance Measurement with Dial Indicator

Assembly

(1) Thoroughly clean valve stems and valve guide bores.

(2) Lightly lubricate stem and install valve in same valve guide bore from where it was removed.

(3) Install replacement valve stem oil deflector on valve stem.

NOTE: *If valves with oversize stems are used, oversize oil deflectors are also required.*

(4) Position valve spring and retainer on cylinder head and compress valve spring with compressing tool. Install valve locks and release tool.

(5) Tap valve spring from side-to-side with hammer to assure spring is properly seated on cylinder head.

Valve Springs

Valve Spring and Oil Deflector Removal

NOTE: *This procedure is for removal of valve springs and oil deflectors with the cylinder head installed on the engine. Refer to Valves for removal procedure with the head removed from the engine.*

The valve spring is held in place on the valve stem by a retainer and a pair of conical-type valve locks. The locks can be removed only by compressing the valve spring.

(1) Remove cylinder head cover.

(2) Remove bridge and pivot assemblies and rocker arms.

(3) Remove push rods.

NOTE: *Retain push rods, bridge and pivot assemblies and rocker arms in same order and position as removed.*

(4) Remove spark plug from each cylinder.

NOTE: *Steps (5) through (9) apply to each cylinder to be serviced.*

(5) Install 14-mm (thread size) air adapter in spark plug hole.

NOTE: *An adapter can be fabricated by welding an air hose connection to the body of a spark plug having the porcelain removed.*

(6) Connect air hose to adapter and maintain at least 90 psi (620 kPa) in cylinder to force valves against their seats.

NOTE: *On vehicles equipped with air conditioning, use a flexible air adapter when servicing No. 1 cylinder.*

(7) Use Valve Spring Remover and Installer Tool J-22534-01 to compress spring and remove locks (fig. 1B-53).

(8) Remove valve spring and retainer.

(9) Remove valve stem oil deflector.

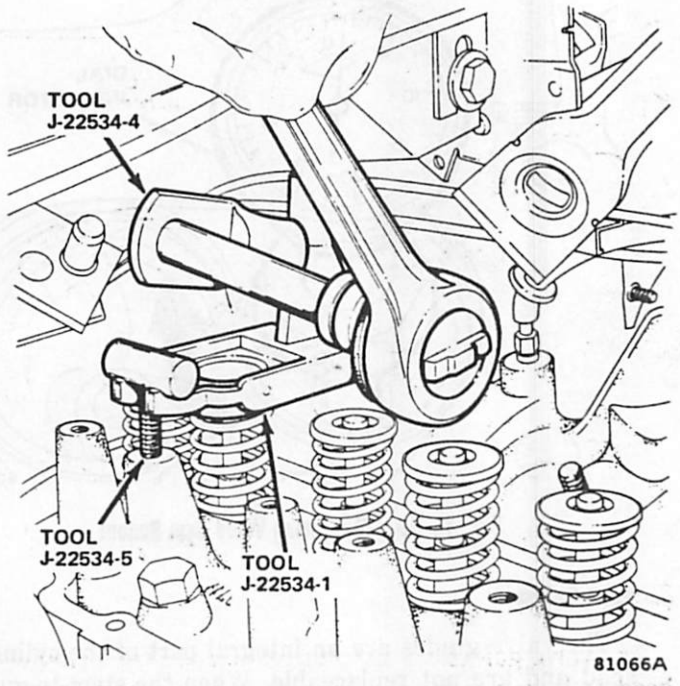

Fig. 1B-53 Valve Spring Removal

Valve Spring Tension Test

Use Valve Spring Tester J-8056, or equivalent, to test each valve spring for the specified tension value (fig. 1B-54). Replace valve springs that are not within the specification.

Oil Deflector and Valve Spring Installation

NOTE: *The following procedure applies to each cylinder being serviced.*

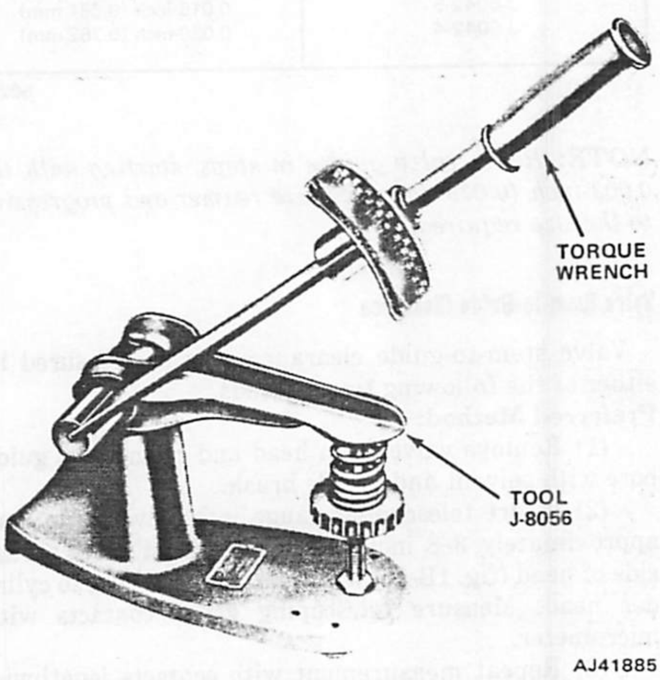

Fig. 1B-54 Valve Spring Tester—Typical

(1) Use 7/16-inch deep socket and small hammer to gently tap oil deflector onto valve stem.

CAUTION: *Install the deflector carefully to prevent damage from the sharp edges of the valve lock groove.*

(2) Install valve spring and retainer.

(3) Compress valve spring with tool J-22534-01 and position valve locks. Release spring tension and remove tool.

NOTE: *Tap spring from side-to-side to ensure spring is seated properly on cylinder head.*

(4) Disconnect air hose, remove adapter from spark plug hole and install spark plug.

(5) Install push rods. Ensure bottom end of each rod is centered in plunger cap of hydraulic valve tappet.

(6) Install rocker arms and bridge and pivot assembly. At each bridge and pivot assembly tighten capscrews alternately, one turn at a time, to avoid damaging bridge.

(7) Install cylinder head cover. Refer to Cylinder Head Cover for procedure.

CAMSHAFT AND BEARINGS

The camshaft is supported by form steel-shelled, babbitt-lined bearings pressed into the block and line reamed. The step-bored camshaft bearing bores are larger at the front bearing than at the rear to permit easy removal and installation of the camshaft. Camshaft bearings are pressure lubricated.

NOTE: *It is not advisable to replace camshaft bearings unless the special removal and installation tools are available.*

Camshaft end play is maintained by the load placed on the camshaft by the oil pump and distributor drive gear. The helical cut of the gear holds the camshaft sprocket thrust face against the cylinder block face. Camshaft end play is zero during engine operation.

Measuring Cam Lobe Lift

(1) Remove cylinder head cover.

(2) Remove bridge and pivot assemblies and rocker arms.

(3) Remove spark plugs.

(4) Install dial indicator on end of push rod. Use piece of rubber tubing to hold dial indicator plunger squarely on push rod (fig. 1B-55).

(5) Rotate crankshaft until cam lobe base (heel) circle (push rod down) is under valve tappet. Set dial indicator to zero.

(6) Rotate crankshaft until push rod reaches its maximum upward travel. Note distance on dial indicator. Refer to Specifications for correct cam lobe lift.

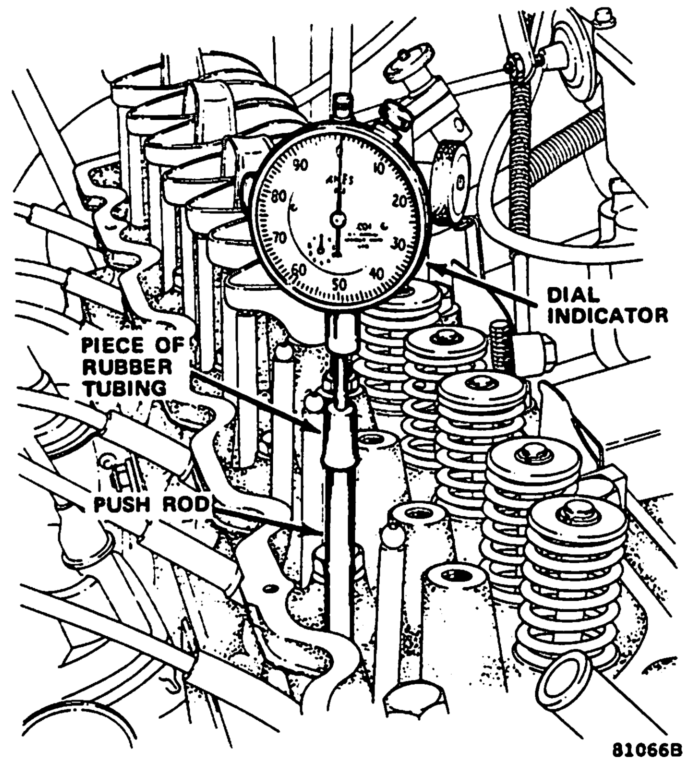

Fig. 1B-55 Cam Lobe Lift Measurement and Valve Timing

Valve Timing

(1) Disconnect ignition wires and remove spark plugs.

(2) Remove cylinder head cover.

(3) Remove bridge and pivot assembly and rocker arms from No. 1 cylinder.

(4) Rotate crankshaft until No. 6 piston is at TDC on compression stroke.

(5) Rotate crankshaft counterclockwise (viewed from front of engine) 90°.

(6) Install dial indicator on end of No. 1 cylinder intake valve push rod. Set dial indicator to zero (fig. 1B-55).

(7) Rotate crankshaft clockwise (viewed from front of engine) until dial indicator pointer indicates 0.016-inch (0.406 mm) lift.

(8) Timing mark on vibration damper should be indexed with TDC mark on timing degree scale. If timing mark is more than 1/2 inch (12.7 mm) from TDC in either direction, valve timing is incorrect.

Camshaft Removal

(1) Drain cooling system.

NOTE: *Drain coolant in clean container if reusable.*

(2) Remove radiator and fan assembly.

(3) Remove air conditioner condenser and receiver assembly as charged unit, if equipped.

(4) Remove fuel pump.

(5) Remove distributor and ignition wires.

(6) Remove cylinder head cover.

(7) Remove rocker arms and bridge and pivot assemblies.

(8) Remove push rods.

NOTE: *Retain push rods, bridge and pivot assemblies and rocker arms in the same order as removed.*

(9) Remove cylinder head and gasket.

(10) Remove hydraulic tappets.

(11) Remove timing case cover. Refer to Timing Case Cover Removal for procedure.

(12) Remove timing chain and sprockets. Refer to Timing Chain Removal for procedure.

(13) Remove front bumper or grille as required.

(14) Remove camshaft.

Camshaft Inspection

Inspect the camshaft bearing journals for an uneven wear pattern or rough finish. If either condition exists, inspect camshaft bearings. Inspect loaded (bottom) side of bearing. This is the most probable location for bearing failure. Replace camshaft and bearings as required. Refer to Camshaft Bearing Replacement for procedure.

Inspect the distributor drive gear for damage or excessive wear. Replace if necessary.

Inspect each cam lobe and the corresponding hydraulic valve tappet for wear. If the face of the tappet(s) is worn concave, the corresponding camshaft lobe(s) will also be worn. Replace both the camshaft and the tappet(s).

If the camshaft appears to have been rubbing heavily against the timing case cover, examine the oil pressure relief holes in the rear cam journal. These holes relieve oil pressure between the end of the camshaft and the rear bearing plug.

Camshaft Installation

(1) Lubricate camshaft with Jeep Engine Oil Supplement (E.0.S), or equivalent.

(2) Install camshaft carefully to prevent damaging camshaft bearings.

(3) Install timing chain, crankshaft sprocket and camshaft sprocket with timing marks aligned. Refer to Timing Chain Installation for procedure.

(4) Install camshaft sprocket retaining screw and tighten.

(5) Install timing case cover with replacement oil seal. Refer to Timing Case Cover Installation for procedure.

(6) Install vibration damper.

(7) Install damper pulley, if removed.

(8) Install engine fan and hub assembly.

(9) Install drive belt(s) and tighten to specified tension. Refer to Chapter 1C—Cooling Systems.

(10) Install fuel pump.

(11) Rotate crankshaft until No. 1 piston is at TDC position on compression stroke.

(12) Install distributor and ignition wires. Install distributor with rotor aligned with No. 1 terminal on cap when distributor housing is fully seated on block.

(13) Install hydraulic tappets. Lubricate tappets and all valve train components with Jeep Engine Oil Supplement (EOS), or equivalent.

NOTE: *The EOS must remain in the engine for at least 1,000 miles (1 609 km) but need not be drained until the next scheduled oil change.*

(14) Install cylinder head and gasket.

(15) Install push rods.

(16) Install rocker arms and bridge and pivot assemblies. Alternately tighten capscrews for each bridge one turn at a time to avoid damaging bridge.

(17) Install cylinder head cover. Refer to Cylinder Head Cover for procedure.

(18) Install air conditioner condenser and receiver assembly, if equipped.

CAUTION: *Open both service valves before the air conditioning system is operated.*

(19) Install radiator, connect hoses and fill cooling system with specified mixture. Refer to Chapter 1C—Cooling Systems.

(20) Install front bumper or grille, if removed.

(21) Check ignition timing and adjust as required.

Camshaft Bearing Replacement

Camshaft bearing replacement requires that the engine be removed from the vehicle. Remove timing case cover, crankshaft, camshaft and rear bearing plug. When installing bearings, use a screw-type tool that provides constant force. Do not use a driver-type tool to install bearings. Care must be taken to align oil holes in bearings with oil gallery access holes in the cylinder block. It is not necessary to line ream camshaft bearings after installation.

HYDRAULIC VALVE TAPPETS

The hydraulic valve tappet consists of the tappet body, plunger, plunger return spring, check valve assembly metering disc, plunger cap and lockring (fig. 1B-56).

The tappet operates in a guide bore that intersects with the main oil gallery.

Operation

The operating cycle of the hydraulic tappet begins when the tappet is on the heel (base circle) of the cam lobe (engine valve closed). A groove in the tappet body aligns with the tappet oil gallery to admit pressurized oil into the tappet (fig. 1B-57). A hole and groove arrangement admits the oil to the inside of the plunger. Oil is

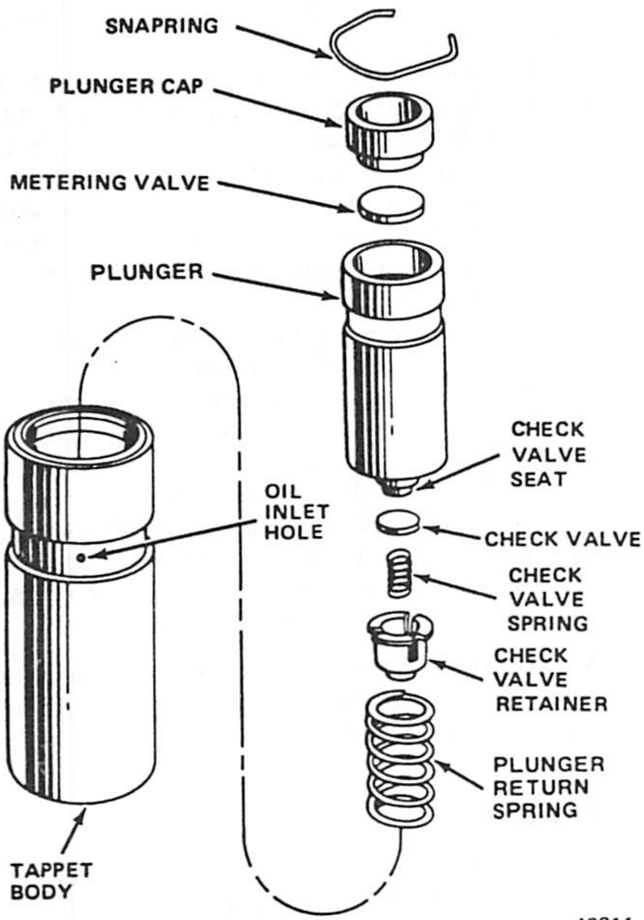

Fig. 1B-56 Hydraulic Valve Tappet Components

forced past the plunger check valve and fills the chamber between the plunger and tappet body. When the chamber is full, additional oil in the plunger body unseats the metering disc, and a spurt of oil flows up inside the push rod to lubricate the rocker assembly. These events described above all occur while the tappet is on the heel of the cam lobe. As the cam turns, the lobe begins exerting force on the tappet body. This force is transmitted by the trapped oil in the tappet chamber to the plunger and finally to the push rod and rocker assembly. The engine valve opens. While the valve is open, the trapped oil is subjected to considerable pressure and some of it escapes between the plunger and the tappet body (leak-down). The cycle is completed as the cam lobe rotates back to the starting position and another charging cycle begins. In this way, zero valve lash is maintained and engine noise is reduced.

Removal

(1) Drain cooling system.

NOTE: *Drain coolant in clean container if reusable.*

(2) Remove cylinder head cover.

(3) Remove bridge and pivot assemblies and rocker arms.

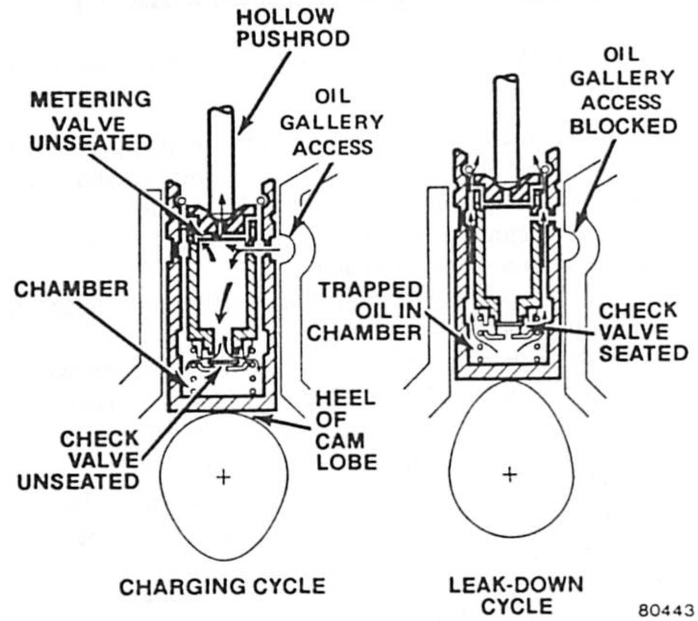

Fig. 1B-57 Hydraulic Valve Tappet Operation

NOTE: *When removing the two capscrews from each bridge, alternately loosen each screw one turn at a time to avoid damaging bridge.*

(4) Remove push rods.

NOTE: *Retain rocker arms, bridge and pivot assemblies and push rods in the same order as removed.*

(5) Remove cylinder head and gasket.

(6) Remove tappets through push rod openings in block with Hydraulic Valve Tappet Remover and Installer Tool J-21884 (fig. 1B-58).

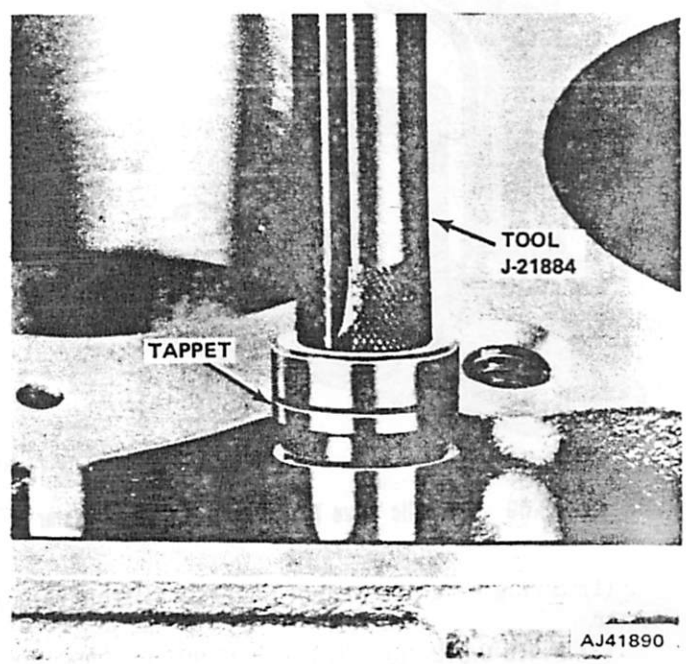

Fig. 1B-58 Hydraulic Valve Tappet Removal

Disassembly, Cleaning, Inspection and Reassembly

NOTE: *Retain tappet components in the same order as removed.*

(1) Release lockring and remove plunger cap, metering disc, plunger, check valve assembly and plunger return spring from tappet body (fig. 1B-56).

(2) Clean components in cleaning solvent to remove all varnish and gum deposits.

(3) Inspect for evidence of scuffing on side and face of tappet body.

(4) Inspect each tappet face for concave wear by laying straightedge across face. If face is concave, corresponding lobe on camshaft is also worn, and replacement of camshaft and tappet(s) is necessary.

(5) Install plunger return spring, check valve assembly, plunger, metering disc and plunger cap in tappet body (fig. 1B-56).

(6) Compress plunger assembly using push rod on plunger cap, and install lockring.

Hydraulic Valve Tappet Leak-Down Test

After cleaning, inspection and reassembly, leak-down test each tappet to ensure zero-lash operation. Figure 1B-59 illustrates tool J-5790, which can be used to accurately test tappet leak-down rate.

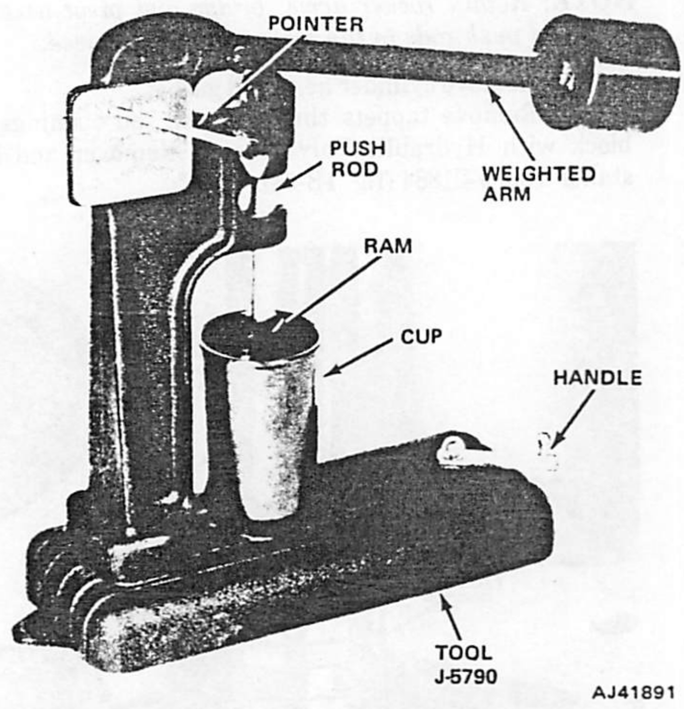

Fig. 1B-59 Hydraulic Valve Tappet Leak-Down Rate Tester

(1) Swing weighted arm of tester away from ram of tester.

(2) Place 0.312- to 0.313-inch (7.925 to 7.950 mm) diameter ball bearing on tappet plunger cap.

(3) Lift ram and place tappet with ball bearing inside tester cup.

(4) Lower ram, then adjust nose of ram until it contacts ball bearing. Do not tighten hex nut on ram.

(5) Fill tester cup with Valve Tappet Test Oil J-5268, or equivalent, until tappet is completely covered.

(6) Swing weighted arm onto ram and pump up and down on tappet to remove air. When air bubbles cease, swing weighted arm away and allow plunger to rise to normal position.

(7) Adjust nose of ram to align pointer with SET mark on scale of tester and tighten hex nut.

(8) Slowly swing weighted arm onto ram. Rotate cup by turning handle at base of tester clockwise one revolution every two seconds.

(9) Time leak-down interval from instant pointer aligns with START mark on scale until pointer aligns with 0.125 mark. Acceptable tappet will require 20 to 110 seconds to leak-down. Discard tappets that have leak-down interval outside this range.

NOTE: *Do not charge the tappet assemblies with engine oil. They will charge themselves within 3 to 8 minutes of engine operation.*

Installation

(1) Dip each tappet assembly in Jeep Engine Oil Supplement (EOS), or equivalent.

(2) Use Hydraulic Valve Tappet Remover and Installer Tool J-21884 to install each tappet in same bore from where it was removed.

(3) Install cylinder head and replacement gasket and tighten screws. Refer to Cylinder Head Installation for tightening sequence.

(4) Install push rods in same order as removed.

(5) Install rocker arms and bridge and pivot assemblies. Loosely install capscrews at each bridge. Tighten capscrews alternately, one turn at a time, to avoid damaging or breaking bridge.

(6) Pour remaining EOS over entire valve train.

NOTE: *The EOS must remain in the engine for at least 1,000 miles (1 607 km) but need not be drained until the next scheduled oil change.*

(7) Install cylinder head cover. Refer to Cylinder Head Cover for procedure.

(8) Install coolant.

TIMING CASE COVER

The timing case cover is provided with a seal and oil slinger to prevent oil leakage at the vibration damper hub (fig. 1B-60). A socket is attached in the cover for the use of a magnetic timing probe. A graduated timing degree scale is located on the cover for standard ignition timing.

It is important that the timing case cover be properly aligned with the crankshaft to prevent eventual damage to the oil seal. The oil seal may be replaced without removing the timing case cover.

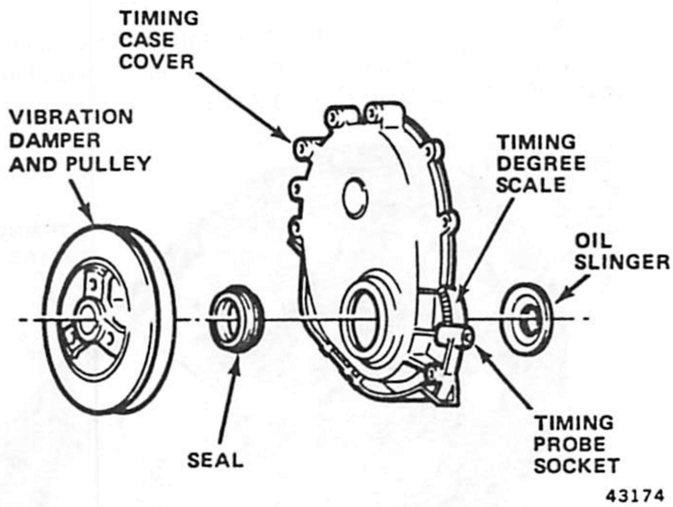

Fig. 1B-60 Timing Case Cover

Removal

(1) Remove drive belt(s), engine fan and hub assembly, damper pulley and vibration damper. Refer to Vibration Damper and Pulley Removal for procedure.

(2) Remove oil pan-to-timing case cover screws and cover-to-block screws.

(3) Remove timing case cover and gasket from engine.

(4) Cut off oil pan gasket end tabs flush with front face of cylinder block and remove gasket tabs.

(5) Clean timing case cover, oil pan and cylinder block gasket surfaces.

(6) Remove crankshaft oil seal from timing case cover.

Installation

(1) Apply seal compound (Perfect Seal, or equivalent) to both sides of replacement timing case cover gasket and position gasket on cylinder block.

(2) Cut end tabs off replacement oil pan gasket corresponding to pieces cut off original gasket. Cement these pieces on oil pan.

(3) Coat oil pan seal end tabs generously with Permatex No. 2, or equivalent, and position seal on timing case cover (fig. 1B-61).

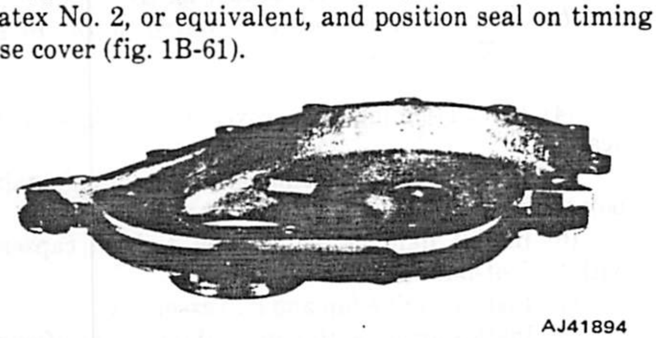

Fig. 1B-61 Oil Pan Front Seal Installation

(4) Position timing case cover on engine. Place Timing Case Cover Alignment Tool and Seal Installer J-22248 in crankshaft opening of cover (fig. 1B-62).

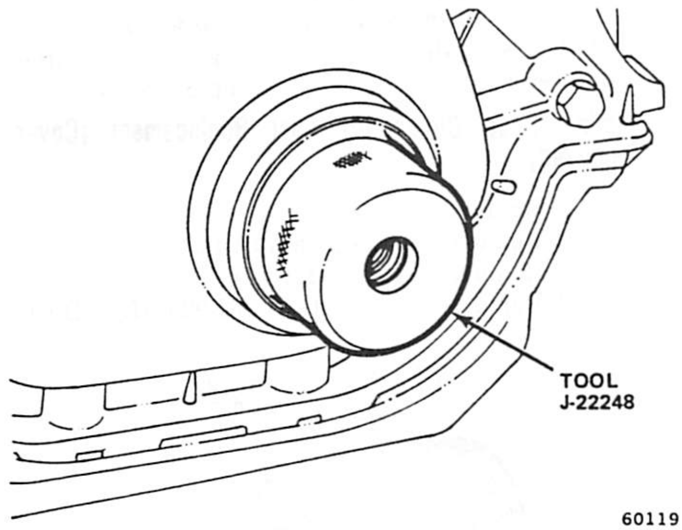

Fig. 1B-62 Timing Case Cover Alignment

(5) Install cover-to-block screws and oil pan-to-cover screws. Tighten cover-to-block screws with 5 foot-pounds (7 N•m) torque and oil pan-to-cover screws with 11 foot-pounds (15 N•m) torque.

(6) Remove cover aligning tool and position replacement oil seal on tool with seal lip facing outward. Apply light film of Perfect Seal, or equivalent, on outside diameter of seal.

(7) Insert draw screw from Tool J-9163 into seal installing tool. Tighten nut against tool until tool contacts cover (fig. 1B-63).

(8) Remove tools and apply light film of engine oil to seal lip.

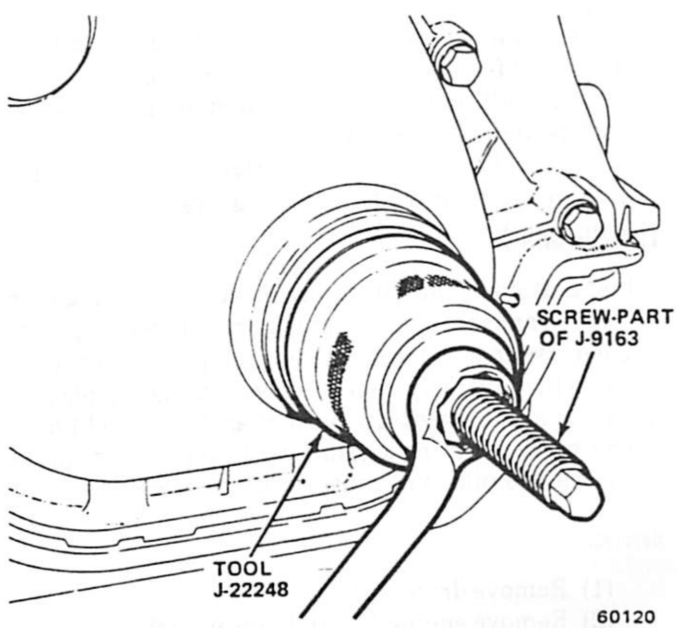

Fig. 1B-63 Timing Case Cover Oil Seal Installation

(9) Install vibration damper and tighten retaining screw with 80 foot-pounds (108 N•m) torque.

(10) Install damper pulley. Tighten capscrews with 20 foot-pounds (27 N•m) torque.

(11) Install engine fan and hub assembly.

(12) Install drive belt(s) and tighten to specified tension. Refer to Chapter 1C—Cooling Systems.

Timing Case Cover Oil Seal Replacement (Cover not Removed)

(1) Remove drive belts.

(2) Remove vibration damper pulley.

(3) Remove vibration damper.

(4) Remove oil seal with Tool J-9256 (fig. 1B-64).

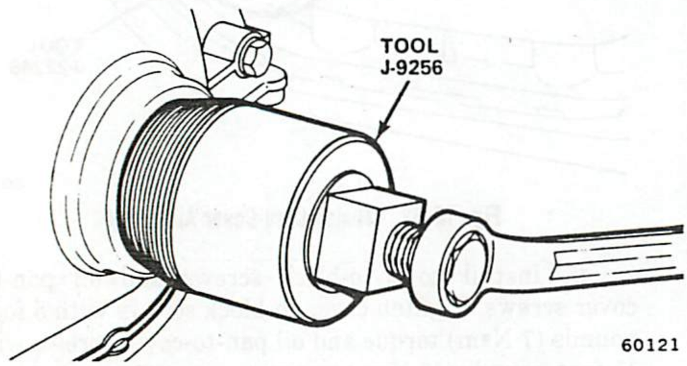

Fig. 1B-64 Timing Case Cover Oil Seal Removal

(5) Position replacement oil seal on Timing Case Cover Alignment Tool and Seal Installer J-22248 with seal lip facing outward. Apply light film of Perfect Seal, or equivalent, to outside diameter of seal.

(6) Insert draw screw from Tool J-9163 into seal installing tool. Tighten nut against tool until tool contacts cover.

(7) Remove tools. Apply light film of engine oil to seal lip.

(8) Install vibration damper and tighten retaining bolt with 80 foot-pounds (108 N•m) torque.

(9) Install damper pulley. Tighten capscrews with 20 foot-pounds (27 N•m) torque.

(10) Install drive belt(s) and tighten to specified tension. Refer to Chapter 1C—Cooling Systems.

TIMING CHAIN

Installation of the timing chain with the timing marks of the crankshaft and camshaft sprockets properly aligned assures correct valve timing. A worn timing chain will adversely affect valve timing. Replace the timing chain if it deflects more than 1/2 inch (13 mm).

The correct timing chain has 48 pins. A chain with more than 48 pins will cause excessive slack.

Removal

(1) Remove drive belt(s).

(2) Remove engine fan and hub assembly.

(3) Remove vibration damper pulley.

(4) Remove vibration damper.

(5) Remove timing case cover.

(6) Remove oil seal from timing case cover.

(7) Remove camshaft sprocket retaining screw and washer.

(8) Rotate crankshaft until timing mark on crankshaft sprocket is closest to and on centerline with timing mark of camshaft sprocket (fig. 1B-65).

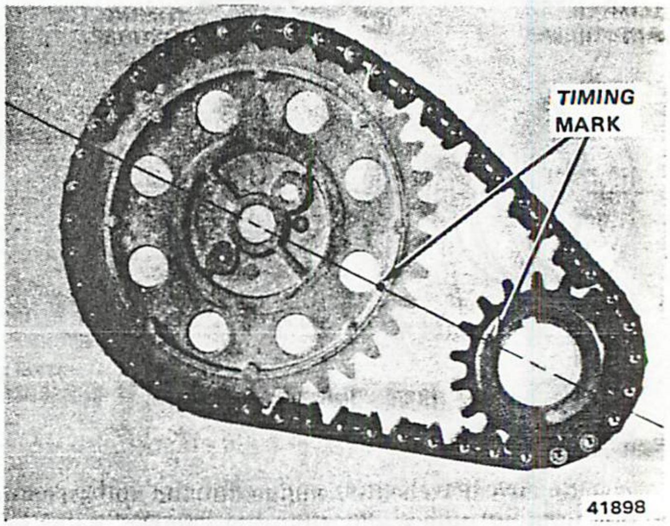

Fig. 1B-65 Timing Sprocket Alignment

(9) Remove crankshaft sprocket, camshaft sprocket and timing chain as assembly. Disassemble chain and sprockets.

Installation

(1) Assemble timing chain, crankshaft sprocket and camshaft sprocket with timing marks aligned (fig. 1B-65).

(2) Install assembly on crankshaft and camshaft.

(3) Install camshaft sprocket retaining screw and washer and tighten with 50 foot-pounds (68 N•m) torque.

NOTE: *To verify correct installation of the timing chain, position timing mark of the camshaft sprocket at approximately one o'clock position. This positions timing mark of crankshaft sprocket at a location where the adjacent tooth meshes with chain (fig. 1B-66). Count the number of chain pins between timing marks of both sprockets. There must be 15 pins.*

(4) Install timing case cover and replacement oil seal.

(5) Install vibration damper and tighten retaining bolt with 80 foot-pounds (108 N•m) torque.

(6) Install damper pulley and tighten capscrews with 20 foot-pounds (27 N•m) torque.

(7) Install engine fan and hub assembly.

(8) Install drive belt(s) and tighten to specified tension. Refer to Chapter 1C—Cooling Systems.

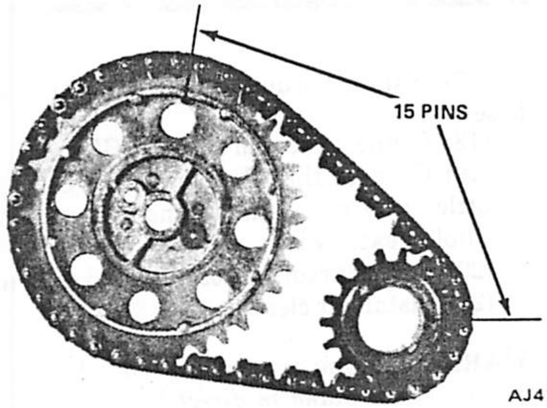

Fig. 1B-66 Timing Chain Installation

INTAKE AND EXHAUST MANIFOLDS

The aluminum intake and cast iron exhaust manifolds (fig. 1B-67) are attached to the cylinder head on the left side of the engine. A gasket is used between the intake manifold and the cylinder head. No gasket is used between the exhaust manifold and cylinder head.

An exhaust gas recirculation (EGR) valve is mounted on the side of the intake manifold. The intake manifold has an electric heater that improves fuel vaporization during engine warmup and shortens choke operation time. Coolant is also routed through the intake manifold to improve fuel vaporization.

Intake and Exhaust Manifold Replacement

NOTE: *It is not necessary to remove the carburetor from the intake manifold until after manifold is removed. After removing the carburetor from the intake manifold, it may be set to one side with vacuum hoses still attached.*

Removal

NOTE: *It is not necessary to remove the carburetor from the intake manifold.*

(1) Remove air cleaner. Disconnect fuel pipe, carburetor air horn vent hose, solenoid wire, vacuum hose and choke heater wire.

(2) Disconnect throttle cable from throttle bellcrank. Disconnect throttle valve rod, if equipped.

(3) Disconnect PCV vacuum hose and heater wire from intake manifold.

WARNING: *Do not loosen radiator draincock with system hot and under pressure because serious burns from coolant can occur.*

NOTE: *Do not waste reusable coolant. Drain into clean container for reuse.*

(4) Drain coolant below intake manifold level.

(5) Disconnect coolant hoses from intake manifold.

(6) Disconnect vacuum advance CTO valve vacuum hoses.

(7) Disconnect vacuum hose from EGR valve. Disconnect EGR tube fittings from intake and exhaust manifold.

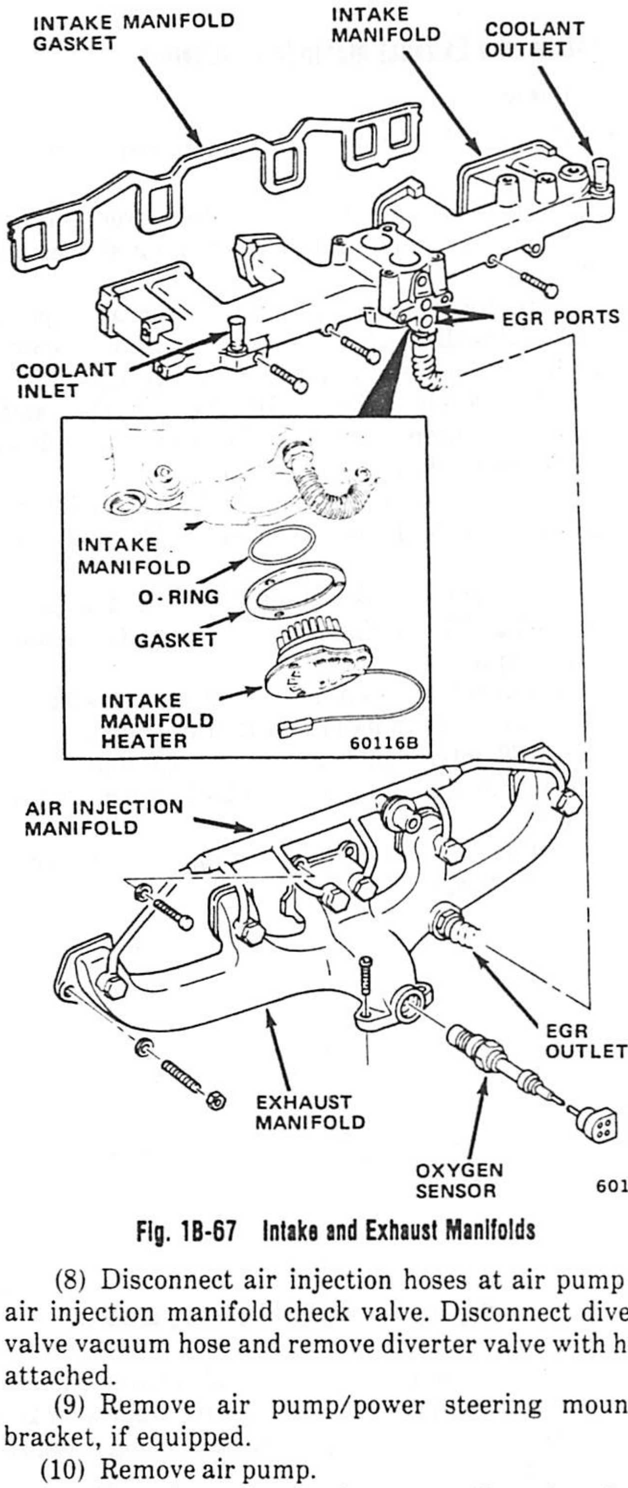

Fig. 1B-67 Intake and Exhaust Manifolds

(8) Disconnect air injection hoses at air pump and air injection manifold check valve. Disconnect diverter valve vacuum hose and remove diverter valve with hoses attached.

(9) Remove air pump/power steering mounting bracket, if equipped.

(10) Remove air pump.

(11) Detach power steering pump, if equipped, and set aside. Do not remove hoses.

(12) Remove air conditioner drive belt idler pulley assembly from cylinder head, if equipped.

(13) Disconnect exhaust pipe from exhaust manifold flange. Remove oxygen sensor, if equipped.

(14) Remove manifold attaching bolts, nuts and clamps. Remove intake and exhaust manifolds. Discard intake manifold gasket.

(15) Clean mating surfaces of manifolds and cylinder head.

Intake and Exhaust Manifold Installation

Installation

Ensure all fittings are transferred to replacement manifold.

(1) Position exhaust manifold over end studs on cylinder head and install positioning sleeves over end studs.

(2) Secure exhaust manifold to head at positions 1 and 2 (fig. 1B-68). Tighten bolts with 23 foot-pounds (31 N•m) torque. Remove positioning sleeves.

(3) Loosely connect EGR tube to intake manifold.

(4) Position intake manifold gasket over dowels and flush against head.

(5) Position intake manifold over dowels and flush against gasket. Loosely connect EGR tube to exhaust manifold.

(6) Secure intake manifold to head at positions 3 and 4 (fig. 1B-68). Tighten bolts with 23 foot-pounds (31 Nm) torque.

(7) Install remaining bolts at positions 5 through 10 and nuts at positions 11 and 12 (fig. 1B-68).

(8) Tighten bolts and nuts according to sequence depicted in figure 1B-68 with 23 foot-pounds (31 N•m) torque.

(9) Tighten EGR tube fitting with 30 foot-pounds (41 N•m) torque.

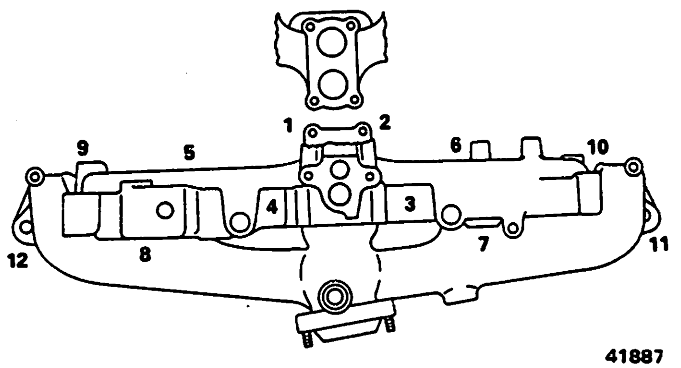

Fig. 1B-68 Manifold Tightening Sequence

(10) Position flange gasket and connect exhaust pipe to exhaust manifold flange. Tighten nuts with 20 foot-pounds (27 N•m) torque. Install oxygen sensor, if removed.

(11) Connect fuel pipe and air horn vent hose to carburetor. Connect solenoid wire connector and vacuum hose.

(12) Install A/C drive belt idler pulley assembly, if removed.

(13) Install air pump, if removed.

(14) Install air pump/power steering pump mounting bracket, if removed.

(15) Install diverter valve. Connect air hoses to air pump and check valve. Connect vacuum hose.

(16) Install drive belt(s) and tighten to specified tension. Refer to Chapter 1C—Cooling Systems.

(17) Install vacuum advance CTO valve vacuum hoses.

(18) Connect vacuum hose to EGR valve.

(19) Connect throttle cable and PCV hose. Connect throttle valve rod, retainer and spring. Connect intake manifold heater wire.

(20) Connect coolant hoses to intake manifold.

(21) Install air cleaner.

WARNING: *Use extreme caution when engine is operating. Do not stand in direct line with fan. Do not put hands near pulleys, belts or fan. Do not wear loose clothing.*

(22) Start engine and inspect for air leaks into vacuum fittings, and exhaust and coolant leaks.

Intake Manifold Replacement

(1) Remove air cleaner.

(2) Disconnect heater wire from choke cover terminal, solenoid wire and vacuum hose.

(3) Disconnect carburetor control shaft from carburetor.

(4) Remove intake manifold from engine. Refer to Intake and Exhaust Manifold Removal for procedure.

(5) Remove carburetor from intake manifold and set aside. Remove carburetor insulator block.

(6) Remove carburetor mounting studs from intake manifold.

(7) Remove throttle control bracket.

(8) Remove EGR valve and studs and install in replacement manifold.

(9) Remove intake manifold heater and install in replacement manifold.

(10) Install throttle control bracket. Tighten nuts with 24 to 48 inch-pounds (3 to 5 N•m) torque.

(11) Install vacuum hose fittings.

(12) Install intake manifold. Refer to Intake and Exhaust Manifold Installation for procedure.

(13) Install vacuum hoses.

(14) Install carburetor studs, replacement gaskets and spacer.

(15) Install carburetor and connect linkage, fuel pipe and hoses.

(16) Tighten carburetor mounting nuts with 14 foot-pounds (19 N•m) torque.

(17) Connect and choke heater wire to choke cover terminal. Connect solenoid wire connector and vacuum hose.

WARNING: *Use extreme caution when engine is operating. Do not stand in direct line with fan. Do not put hands near pulleys, belts or fan. Do not wear loose clothing.*

(18) Start engine and inspect for leaks.

(19) Install air cleaner.

Exhaust Manifold Replacement

NOTE: *It is necessary to disconnect both the intake and exhaust manifolds from the engine because they have common attaching hardware. It is not necessary to remove the carburetor from the intake manifold.*

(1) Remove air cleaner.

(2) Disconnect choke heater wire from choke cover terminal. Disconnect solenoid wire connector and vacuum hose.

(3) Disconnect carburetor control shaft from carburetor.

(4) Remove carburetor from intake manifold and set aside.

(5) Remove intake and exhaust manifolds from engine. Refer to Intake and Exhaust Manifold Removal for procedure.

(6) Remove throttle control bracket.

(7) Remove spark vacuum advance valve hose clamp and install on replacement manifold.

(8) Remove air injection manifold and fittings and install on replacement manifold.

(9) Install throttle control bracket. Tighten nuts with 24 to 48 foot-pounds (3 to 5 N•m) torque.

(10) Install intake and exhaust manifolds. Refer to Intake and Exhaust Manifold Installation for procedure.

(11) Install carburetor spring bracket.

(12) Install carburetor on intake manifold.

(13) Tighten carburetor mounting nuts with 14 foot-pounds (19 N•m) torque.

(14) Install carburetor control shaft. Install throttle return spring.

(15) Connect choke heater wire to choke cover terminal. Connect solenoid wire connector and vacuum hose.

(16) Connect exhaust pipe to exhaust manifold. Tighten nuts with 20 foot-pounds (27 N•m) torque.

WARNING: *Use extreme caution when engine is operating. Do not stand in direct line with fan. Do not put hands near pulleys, belts or fan. Do not wear loose clothing.*

(17) Start engine and inspect for leaks.

(18) Install air cleaner.

CYLINDER HEAD AND COVER

The cylinder head incorporates hardened exhaust valve seats and exhaust valves with flash chrome stems.

Cylinder Head Cover

CAUTION: *Cylinder head cover is molded plastic. Use care when removing and installing.*

Removal

(1) Remove air cleaner and PCV molded hose.

(2) Disconnect distributor vacuum spark advance hose at spark CTO valve. Disconnect fuel pipe at fuel pump and move aside to allow removal of cylinder head cover.

(3) Disconnect PCV valve from grommet in cylinder head cover. Disconnect hoses from canister.

(4) Remove cylinder head cover holddown nuts. Insert thin bladed tool (e.g., razor blade or putty knife) between cover and head and cut RTV sealant to loosen from head.

CAUTION: *Do not strike cover with mallet to loosen RTV sealant.*

(5) Inspect cylinder head cover for cracks.

Installation

A room temperature vulcanizing (RTV) silicone rubber adhesive is required for installation. Use Jeep Gasket-in-a-Tube, or equivalent.

(1) Remove sealant or adhesive and gasket material from sealing surface area of cylinder head and cover.

(2) Thoroughly clean gasket mating surfaces on cylinder head and cover.

NOTE: *Use fresh RTV sealant (i.e., sealant must not have been stored more than one year and storage area temperature must have been less than 80°F (27°C).*

(3) Apply 1/8-inch (3.2 mm) bead of RTV sealant along entire length of cover flange.

(4) Before RTV sealant begins to cure, install cover on cylinder head. Do not allow RTV sealant to contact rocker arms.

CAUTION: *Do not overtighten nuts because cover may crack from excess stress.*

(5) Initially, tighten nuts by hand, then tighten with 24 inch-pounds (3 N•m) torque.

(6) Connect PCV valve to grommet in cylinder head cover, connect canister hoses and connect fuel pipe to carburetor.

(7) Install air cleaner and connect PCV hose.

Cylinder Head

Removal

(1) Drain coolant and disconnect hoses from thermostat housing.

(2) Remove air cleaner.

(3) Remove cylinder head cover and sealant. Refer to Cylinder Cover Removal for procedure.

(4) Remove bridge and pivot assemblies and rocker arms. Alternately loosen each capscrew one turn at a time to avoid damaging bridge.

(5) Remove push rods.

NOTE: *Retain push rods, bridge and pivot assemblies and rocker arms in same order as removed.*

(6) Disconnect power steering pump, air pump and brackets. Lay pumps and brackets aside. Do not disconnect hoses.

(7) Remove intake and exhaust manifolds from cylinder head. Refer to Intake and Exhaust Manifold Removal for procedure.

(8) If equipped with air conditioning, perform the following:

(a) Remove air conditioning drive belt idler pulley bracket from cylinder head.

(b) Loosen alternator drive belt. Remove alternator bracket-to-head mounting bolt.

(c) Remove bolts from compressor mounting bracket and set compressor aside.

(9) Disconnect ignition wires and remove spark plugs.

(10) Disconnect coolant temperature sending unit wire and battery negative cable.

(11) Remove ignition coil and bracket assembly.

(12) Remove cylinder head bolts, cylinder head and gasket.

Cleaning and Inspection

(1) Thoroughly clean machined surfaces of cylinder head and block. Remove all deposits and gasket cement.

(2) Remove carbon deposits from combustion chambers and top of pistons.

(3) Use straightedge and feeler gauge to determine flatness of cylinder head and block mating surfaces. Refer to Specifications.

Installation

(1) If cylinder head is to be replaced and original valves used, measure valve stem diameter. Only standard size valve stems can be used with service replacement cylinder head unless replacement head valve guide bores are reamed to accommodate oversize valve stems. Remove all carbon deposits and reface valves as outlined within Valve Refacing procedure.

(2) Install valves in cylinder head using replacement valve stem oil deflectors.

(3) Transfer all detached components from original head that are not included with replacement head. Do not install coolant temperature sending unit until coolant is installed. This permits trapped air to escape from block and head.

CAUTION: *Do not apply sealing compound on head and block mating surfaces. Do not allow sealing compound to enter cylinder bore.*

(4) Apply an even coat of Perfect Seal sealing compound, or equivalent, to both sides of replacement head gasket and position gasket flush on block with word TOP facing upward.

(5) Install cylinder head. Tighten bolts in sequence with 85 foot-pounds (115 N•m) torque (fig. 1B-69).

(6) Connect battery negative cable.

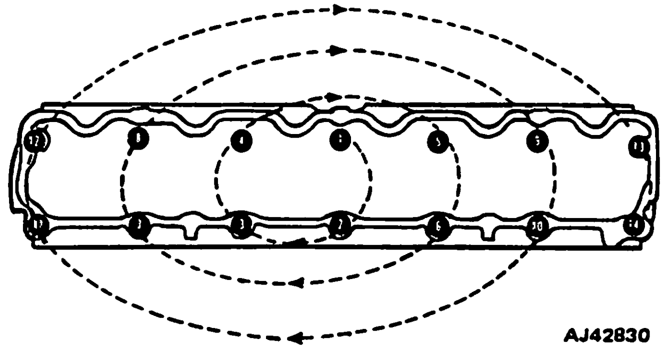

Fig. 1B-69 Cylinder Head Tightening Sequence

(7) Install ignition coil and bracket assembly.

(8) Install spark plugs and connect ignition wires.

(9) Attach air conditioning compressor mounting bracket to cylinder head, if removed.

(10) Install intake and exhaust manifolds. Refer to figure 1B-68 for correct tightening sequence. Refer to Intake Manifold Replacement for procedure.

(11) Install alternator bracket on head. Install alternator, belt and adjust tension. Refer to Chapter 1C—Cooling Systems for procedure.

(12) Install power steering bracket and pump. Adjust belt tension. Refer to Chapter 1C—Cooling Systems for procedure.

(13) Install air pump bracket on head. Install air pump and belt. Adjust belt tension. Refer to Chapter 1C—Cooling Systems for procedure.

(14) Install each push rod in its original location.

(15) Install rocker arms and bridge and pivot assemblies in original locations. Loosely install capscrews for each bridge and tighten capscrews alternately, one turn at a time, to avoid damaging bridge. Tighten screws with 19 foot-pounds (26 N•m) torque.

(16) Install cylinder head cover. Use silicone rubber (RTV) sealant.

(17) Connect coolant hoses to thermostat housing and fill cooling system to specified level. Refer to Cooling System Specifications, Chapter 1C. Install temperature sending unit.

NOTE: *The head gasket is constructed of aluminum-coated embossed steel and does not require the head bolts to be retightened after the engine has been operated.*

(18) Install fuel pipe and vacuum advance hose.

WARNING: *Use extreme caution when engine is operating. Do not stand in direct line with fan. Do not put hands near pulleys, belts or fan. Do not wear loose clothing.*

(19) Operate engine with radiator cap off. Inspect for leaks and continue operating engine until thermostat opens. Add coolant, if required. To vent air from system refer to Chapter 1C—Cooling Systems.

(20) Install air cleaner.

LUBRICATION SYSTEM

General

A gear-type positive displacement pump is mounted at the underside of the block opposite the No. 4 main bearing (fig. 1B-70). The pump brings oil up through the pickup screen and inlet tube from the sump at the rear of the oil pan. The oil is driven between the drive and idler gears and the pump body, then is forced through the outlet to the block. An oil gallery in the block routes the oil to the inlet side of the full flow oil filter. After passing through the filter element, the oil flows from the center outlet of the filter head through an oil gallery up to the main oil gallery, which extends the entire length of the block.

Smaller galleries extend downward from the main oil gallery to the upper insert of each main bearing. The crankshaft is drilled internally to route oil from the main bearing journals (except No. 4) to the connecting rod journals. Each connecting rod bearing cap has a small squirt hole. Oil flows through the squirt hole and is dispersed as the crankshaft rotates. This dispersed oil lubricates the camshaft lobes, distributor drive gear, cylinder walls and piston pins.

The hydraulic valve tappets receive oil directly from the main oil gallery. Oil is also routed to the camshaft bearings through galleries. The front camshaft bearing journal directs oil through the camshaft sprocket to the timing chain. Rotation of the sprocket lubricates the crankshaft sprocket and chain. Oil drains back to the oil pan under the No. 1 main bearing cap.

The oil supply for the rocker arms and bridge and pivot assemblies is provided by the hollow push rods from the hydraulic valve tappets. Oil passes from each tappet through the hollow push rod to a hole in the corresponding rocker arm. Oil from the rocker arms lubricates the valve train components, then flows down through the push rod guide bores in the cylinder head past the valve tappet area, and returns to the oil pan.

Oil Filter

A full flow oil filter, mounted on the lower right side of the engine, is accessible through the hood opening. A bypass valve incorporated in the filter mounting head on the cylinder block provides a safety factor if the filter should become inoperative as a result of dirt or sludge accumulation (fig. 1B-71).

CAUTION: *Use the short, 4.25-inch (107.95 mm) filter on six-cylinder engine CJ vehicles. If the long, 5.44-inch (138.18 mm) filter is used, it may contact the engine support bracket or frame rail. This can puncture the filter and result in a loss of oil and possible engine damage.*

Tool J-22700 will facilitate removal of the oil filter. Before installation, apply a thin film of oil to the replacement filter gasket. Turn filter until gasket contacts the seat of the filter head. Tighten by hand only, following the instructions on the replacement filter. If the instructions are not printed on the filter, tighten the filter until the gasket contacts the seat and then tighten an additional 3/4 turn.

Operate engine at fast idle and check for leaks.

Oil Pump

The positive-displacement gear-type oil pump is driven by the distributor shaft, which is driven by a gear connected to the camshaft. Lubrication oil is pumped from the sump through an inlet tube and screen assembly that is pressed into the pump body (fig. 1B-71). The pump incorporates a non-adjustable pressure release valve to regulate maximum pressure. The spring tension is calibrated for 75 psi (517 kPa) maximum pressure. In the pressure release position, the valve permits oil to bypass through a passage in the pump body to the inlet side of the pump.

Removal

NOTE: *Oil pump removal or replacement will not affect the distributor timing because the distributor drive gear remains in mesh with the camshaft gear.*

(1) Drain engine oil.

(2) Remove oil pan. Refer to Oil Pan Removal for procedure.

CAUTION: *Do not disturb position of oil inlet tube and screen assembly in pump body. If tube is moved within pump body, a replacement tube and screen assembly must be installed to assure an airtight seal.*

(3) Remove oil pump retaining screws, oil pump and gasket.

Disassembly and Inspection

(1) Remove cover retaining screws, cover and gasket from pump body.

(2) Measure gear end clearance.

- **Preferred Method:**

(a) Place strip of Plastigage across full width of each gear end (fig. 1B-72).

(b) Apply a bead of Loctite 515, or equivalent, around perimeter of pump cover and install. Tighten screws with 70 inch-pounds (8 N•m) torque.

(c) Remove pump cover and determine amount of clearance by measuring width of compressed Plastigage with scale on Plastigage envelope. Correct clearance by this method is 0.002 to 0.006 inch (0.002 inch preferred) [0.051 to 0.203 mm (0.051 mm preferred)].

- **Alternate Method:**

(a) Place straightedge across ends of gears and pump body.

(b) Select feeler gauge that fits snugly but freely between straightedge and pump body (fig. 1B-73).

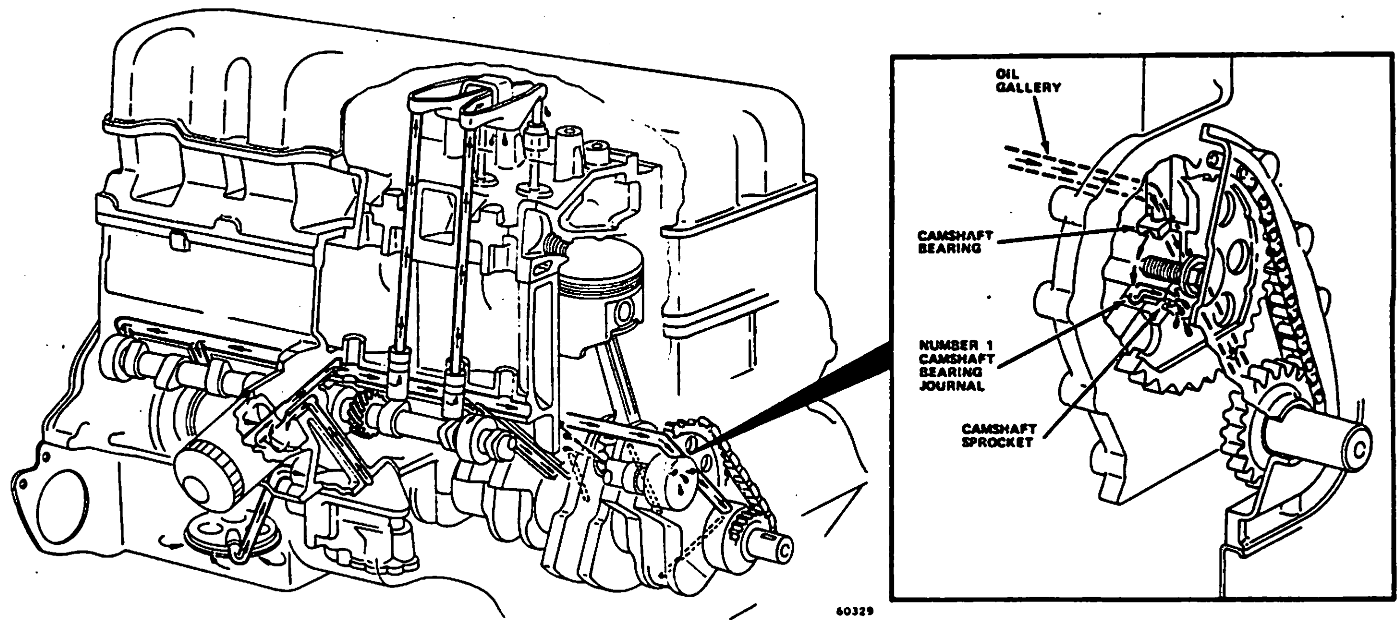

Fig. 1B-70 Lubrication System

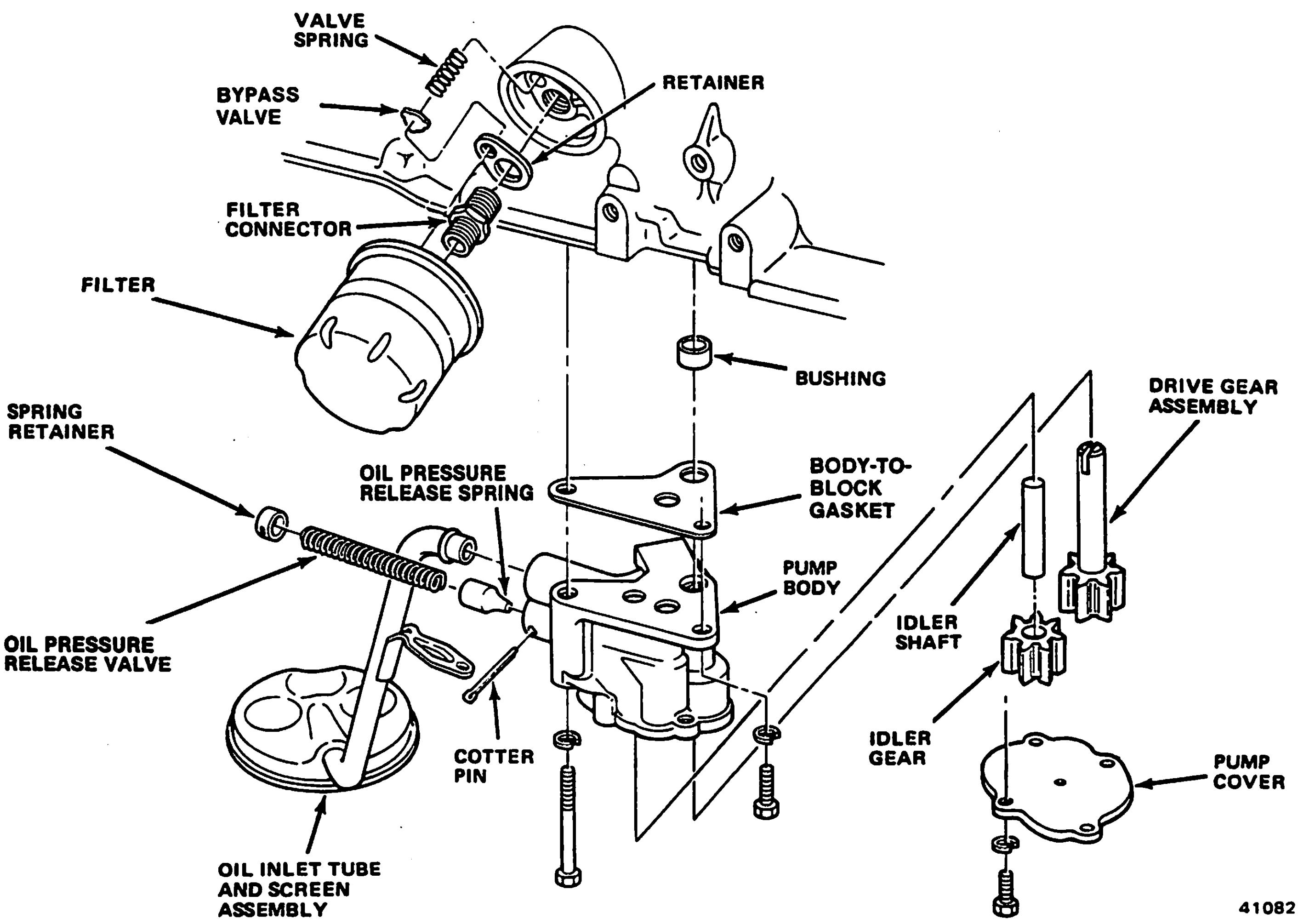

Fig. 1B-71 Oil Filter and Oil Pump Assembly

Correct clearance by this method is 0.004 to 0.008 inch (0.007 inch preferred). [0.102 to 0.203 mm (0.178 mm preferred)]. If gear end clearance is excessive, replace oil pump assembly.

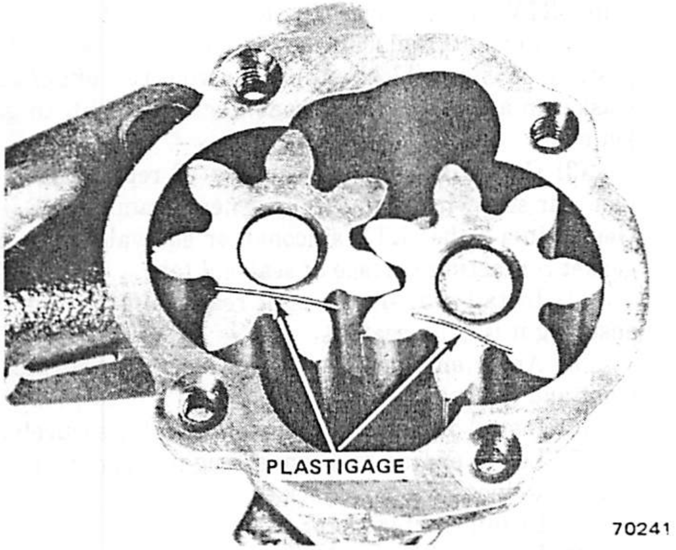

Fig. 1B-72 Oil Pump Gear End Clearance Measurement—Plastigage Method

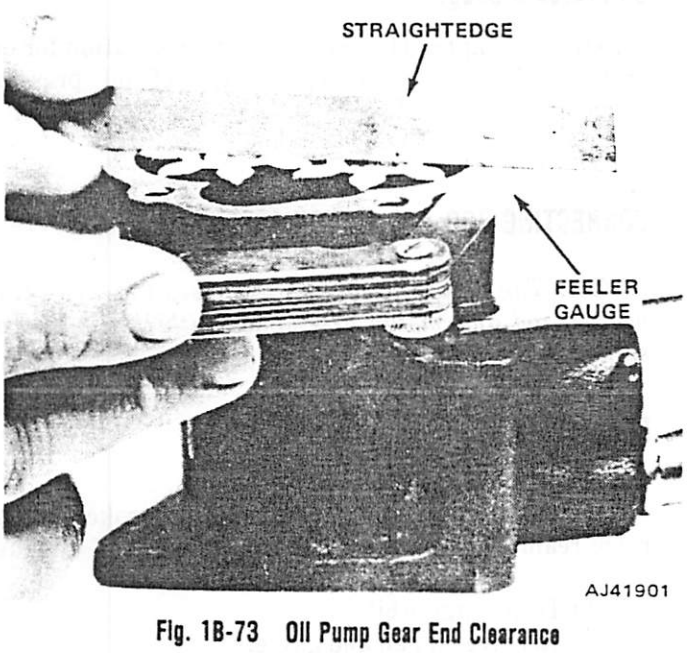

Fig. 1B-73 Oil Pump Gear End Clearance Measurement—Feeler Gauge Method

(3) Measure gear-to-body clearance by inserting feeler gauge between gear tooth and pump body inner wall directly opposite point of gear mesh. Select feeler gauge that fits snugly but freely (fig. 1B-74). Rotate gears and measure each tooth clearance in this manner. Correct clearance is 0.0005 to 0.0025 inch (0.0005 preferred) [0.013 to 0.064 mm (0.013 mm preferred)]. If gear-to-body clearance is more than specified, replace idler gear, idler shaft and drive gear assembly.

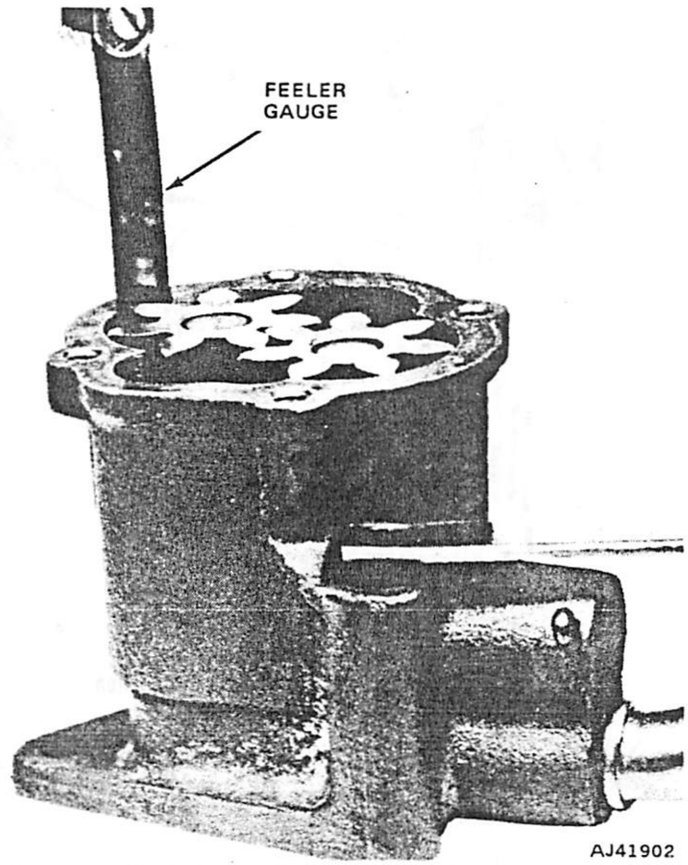

Fig. 1B-74 Oil Gear-to-Body Clearance Measurement

(4) Remove cotter pin and slide spring retainer, spring and oil pressure release valve plunger out of pump body. Examine for sticking condition during disassembly. Clean or replace as necessary.

NOTE: *The oil inlet tube must be moved to allow removal of the release valve. Install a replacement pickup tube and screen assembly.*

Assembly and Installation

NOTE: *Two release valve plunger sizes (standard and oversize) are available. If replacing valve, ensure correct replacement valve, with standard size or 0.010-inch (0.254 mm) oversize diameter plunger, is obtained and installed.*

(1) Install oil pressure release valve plunger, spring, retainer and cotter pin.

(2) If position of inlet tube in pump body has been disturbed, install replacement tube and screen assembly. Apply light film of Permatex No. 2, or equivalent, around end of tube. Use Tool J-21882 to drive tube into body. Ensure support bracket is properly aligned (fig. 1B-75).

(3) Install idler shaft, idler gear and drive gear assembly.

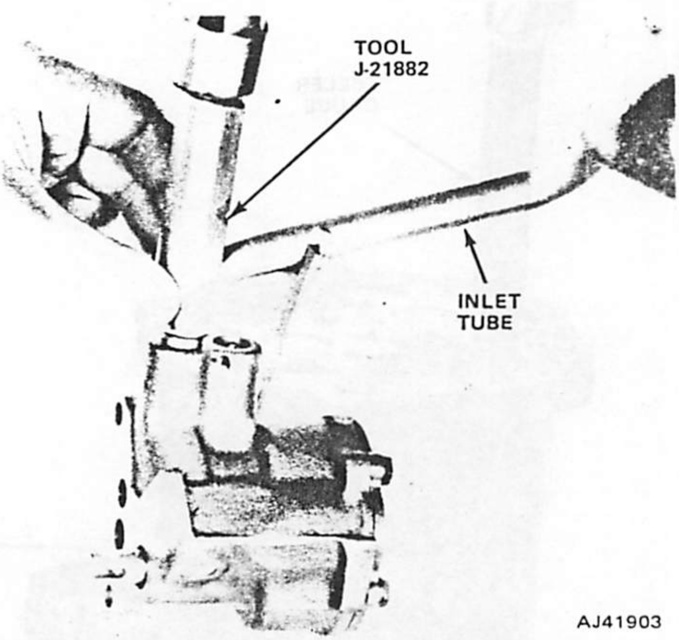

Fig. 1B-75 Oil Pump Inlet Tube Installation

NOTE: *To ensure self-priming of the oil pump, fill pump with petroleum jelly before installing the oil pump cover. Do not use grease.*

(4) Apply a bead of Loctite 515, or equivalent, around perimeter of pump cover and install. Tighten cover screws with 70 inch-pounds (8 N•m) torque.

NOTE: *Inspect for gear binding before installing the oil pump.*

(5) Install oil pump with replacement gasket. Tighten short screws with 10 foot-pounds (14 N•m) torque and long screws with 17 foot-pounds (23 N•m) torque.

(6) Install oil pan, using replacement gaskets and seals. Refer to Oil Pan Installation. Fill crankcase with replacement engine oil to specified level.

Oil Pan

Removal

(1) Raise vehicle and drain engine oil.
(2) Remove starter motor.
(3) On CJ Vehicles:
(a) Place jack under transmission.
(b) Disconnect engine right support cushion bracket from block and raise engine to allow sufficient clearance for oil pan removal.
(4) Remove oil pan.
(5) Remove oil pan front and rear neoprene oil seals and side gaskets.
(6) Thoroughly clean gasket surfaces of oil pan and engine block. Remove all sludge and residue from oil pan sump.

Installation

(1) Install replacement oil pan front seal on timing case cover. Apply generous amount of Jeep Gasket-in-a-Tube (RTV silicone), or equivalent, to end tabs.
(2) Cement replacement oil pan side gaskets into position on engine block. Apply generous amount of Jeep Gasket-in-a-Tube (RTV silicone), or equivalent, to gasket ends.
(3) Coat inside curved surface of replacement oil pan rear seal with soap. Apply generous amount of Jeep Gasket-in-a-Tube (RTV silicone), or equivalent, to side gasket contacting surface of seal end tabs.
(4) Install seal in recess of rear main bearing cap, ensuring it is fully seated.
(5) Apply engine oil to oil pan contacting surface of front and rear oil pan seals.
(6) Install oil pan and tighten drain plug securely.
(7) Lower engine and connect right support cushion bracket to block. Remove jack.
(8) Install starter motor.
(9) Lower vehicle and fill crankcase with clean lube oil to specified level.

Oil Pressure Gauge

Refer to Chapter 1L—Engine Instrumentation for operation, diagnosis and replacement of oil pressure gauge.

CONNECTING ROD AND PISTON ASSEMBLIES

NOTE: *The following procedure is used to service connecting rod and piston assemblies with the engine installed in the vehicle.*

Removal

(1) Remove cylinder head.
(2) Position pistons near bottom of stroke and use ridge reamer to remove ridge from top end of cylinder walls.
(3) Drain engine oil.
(4) Remove oil pan and gaskets.
(5) Remove connecting rod bearing caps and inserts and retain in same order as removed.

NOTE: *Connecting rods and caps are stamped with the corresponding cylinder number.*

CAUTION: *Ensure that connecting rod bolts do not scratch the connecting rod journals or cylinder walls. Short pieces of rubber hose slipped over the bolts will provide protection during removal.*

(6) Remove connecting rod and piston assemblies through top of cylinder bores.

Installation

(1) Clean cylinder walls thoroughly. Apply light film of clean engine oil to walls with clean, lint-free cloth.

(2) Install piston rings on pistons. Refer to Piston Rings for procedure.

(3) Lubricate piston and rings with clean engine oil.

CAUTION: *Ensure that connecting rod screws do not scratch the connecting rod journals or cylinder walls. Short pieces of rubber hose slipped over the screws will provide protection during installation.*

(4) Use Piston Ring Compressor Tool J-5601 to install connecting rod and piston assemblies through top of cylinder bores (fig. 1B-76).

(5) Install connecting rod bearing caps and inserts in same order as removed.

NOTE: *Oil squirt holes in connecting rods must face camshaft.*

(6) Install oil pan using replacement gaskets and seals. Tighten drain plug.

(7) Install gasket and cylinder head.

(8) Fill crankcase with clean oil to specified dipstick level.

CONNECTING RODS

The connecting rods are malleable iron, balanced assemblies with bearing inserts at the crankshaft journal end. The piston pin is 2,000 pound(907.2 kN)press-fitted.

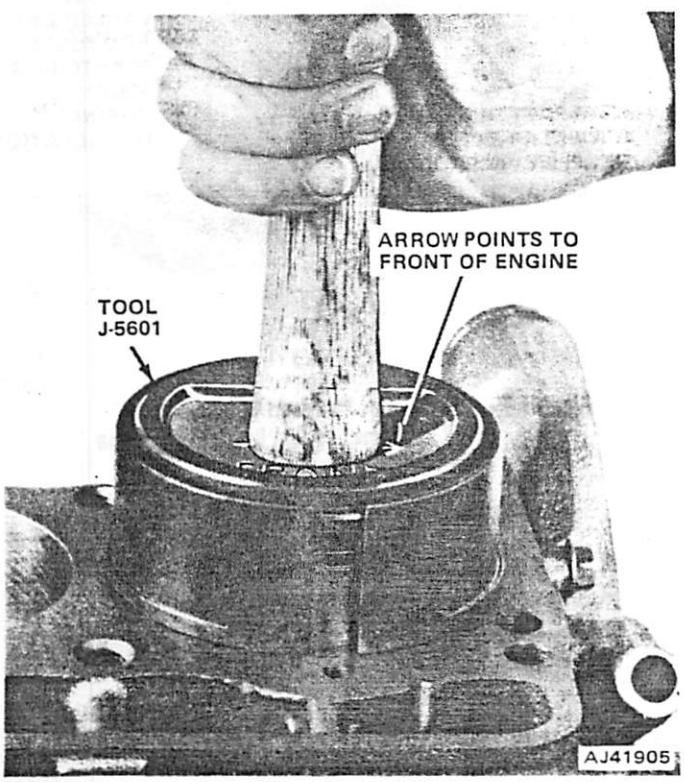

Fig. 1B-76 Piston Installation

A squirt hole in the crankshaft end of the connecting rod provides lubrication for the camshaft lobes, distributor drive gear, cylinder walls and piston pins. The squirt hole faces the camshaft when the connecting rod is installed.

Misaligned or bent connecting rods cause abnormal wear on pistons, piston rings, cylinder walls, connecting rod bearings and crankshaft connecting rod journals. If wear patterns or damage to any of these components indicate the probability of a misaligned connecting rod, check rod alignment. Replace misaligned or bent rods.

Side Clearance Measurement

Slide snug-fitting feeler gauge between connecting rod and crankshaft journal flange. Correct clearance is 0.010 to 0.019 inch (0.25 to 0.48 mm). Replace connecting rod if side clearance is not within the specification.

Connecting Rod Bearings

The connecting rod bearings are steel-backed aluminum-alloy.

Each bearing is selectively fitted to its respective journal to obtain the desired operating clearance. **In production,** the select fit is obtained by using various-sized, color-coded bearing inserts as described in the Bearing Fitting chart. The bearing color code appears on the edge of the insert.

NOTE: *Bearing size is not stamped on inserts installed during production.*

The rod journal size is identified **in production** by a color coded paint mark on the adjacent cheek or counterweight toward the flanged (rear) end of the crankshaft. The color codes used to indicate journal size are listed in the Bearing Fitting chart.

Service replacement bearing inserts are available as pairs in the following sizes: standard, 0.001-, 0.002-, 0.010- and 0.012-inch undersize. The bearing size is stamped on the back of service replacement inserts.

NOTE: *The 0.002- and 0.012-inch undersize inserts are not used for production assembly.*

When required, upper and lower bearing inserts of different sizes may be used as a pair. A standard size insert is sometimes used in combination with a 0.001-inch (0.025 mm) undersize insert to reduce clearance 0.0005 inch. (0.013 mm)

NOTE: *Never use a pair of bearing inserts with more than 0.001-inch (0.025 mm) difference in size.*

Removal

(1) Drain engine oil.

(2) Remove oil pan and gaskets.

(3) Rotate crankshaft as required to position two connecting rods at a time at bottom of stroke.

Connecting Rod Bearing Fitting Chart

Crankshaft Connecting Rod Journal Color and Diameter in Inches (Journal Size)	Bearing Color Code	
	Upper Insert Size	Lower Insert Size
Yellow —2.0955 to 2.0948 (53.2257-53.2079mm) (Standard)	Yellow —Standard	Yellow —Standard
Orange —2.0948 to 2.0941 (53.2079-53.1901mm) (0.0007 Undersize)	Yellow —Standard	Black —0.001-inch (0.025mm) Undersize
Black —2.0941 to 2.0934 (53.1901-53.1723mm) (0.0014 Undersize)	Black —0.001-inch (0.025mm) Undersize	Black —0.001-inch (0.025mm) Undersize
Red —2.0855 to 2.0848 (53.9717-52.9539mm) (0.010 Undersize)	Red —0.010-inch (0.254mm) Undersize	Red —0.010-inch (0.254mm) Undersize

60261

Example:

Bearing Insert Pairs

Insert	Correct	Incorrect
Upper	Standard	Standard
Lower	0.001-inch (0.025mm) undersize	0.002-inch (0.051mm) undersize

70242

(4) Remove connecting rod bearing cap. Remove lower bearing insert.

(5) Remove upper bearing insert by rotating it out of connecting rod.

NOTE: *Do not interchange bearing caps. Each connecting rod and its matching cap is stamped with the cylinder number on a machined surface adjacent to the oil squirt hole, which faces the camshaft side of the engine block.*

Inspection

(1) Clean inserts.

(2) Inspect linings and backs of inserts for irregular wear pattern. Note any scraping, stress cracks or discoloration (fig. 1B-77). If bearing has "spun" in rod, replace bearing and connecting rod and inspect crankshaft journal for scoring.

(3) Inspect for material imbedded in linings that may indicate piston, timing sprocket, distributor gear or oil pump gear problems. Figures 1B-78 and 1B-79 depict common score patterns.

(4) Inspect fit of bearing locking tab in rod cap. If inspection indicates that insert may have been caught between rod and rod cap, replace upper and lower bearing inserts.

(5) Inspect insert in area of locking tab. Abnormal wear indicates bent tabs or improper installation of inserts (fig. 1B-80).

(6) Replace bearing inserts that are damaged or worn.

Measuring Bearing Clearance with Plastigage

(1) Wipe journal clean.

(2) Lubricate upper insert and install in rod.

(3) Install lower insert in bearing cap. Lower insert must be dry. Place strip of Plastigage across full width of lower insert at center of bearing cap.

NOTE: *Plastigage must not crumble in use. If brittle, obtain a fresh stock.*

(4) Attach bearing cap to connecting rod and tighten nuts with 28 foot-pounds (38 N•m) torque.

NOTE: *Do not rotate crankshaft. Plastigage will shift, resulting in inaccurate clearance indication.*

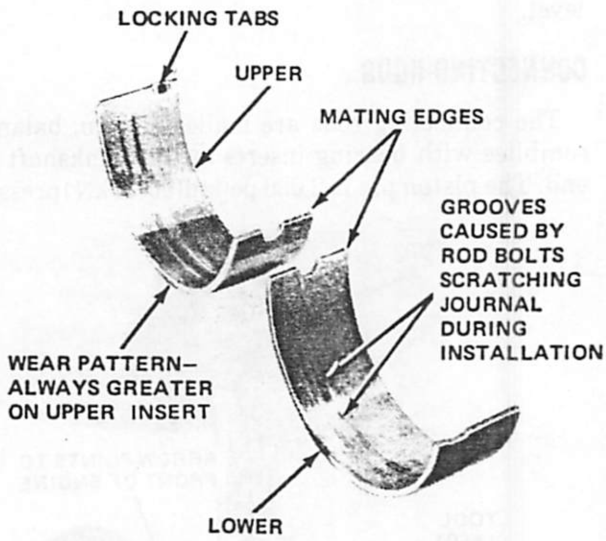

Fig. 1B-77 Connecting Rod Bearing Inspection

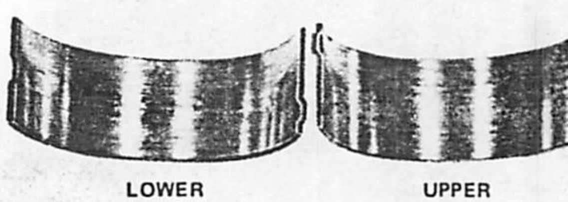

Fig. 1B-78 Scoring Caused by Insufficient Lubrication

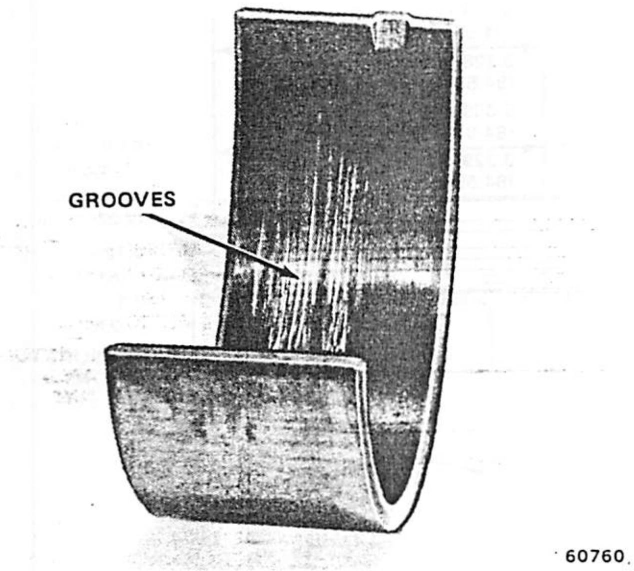

Fig. 1B-79 Scoring Caused by Imbedded Material

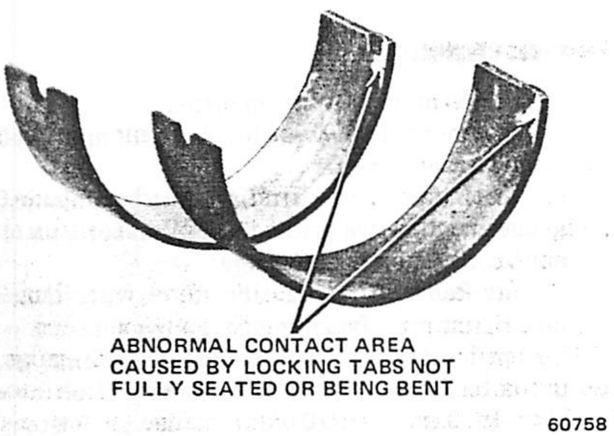

Fig. 1B-80 Locking Tab Inspection

(5) Remove bearing cap and determine amount of clearance by measuring width of compressed Plastigage with scale on Plastigage envelope (fig. 1B-81). Correct clearance is 0.001 to 0.0025 inch (0.025 to 0.064 mm).

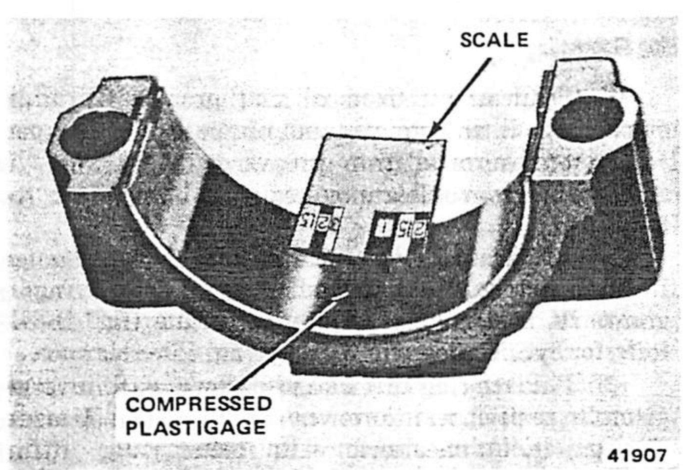

Fig. 1B-81 Rod Bearing Clearance Measurement with Plastigage

NOTE: *Plastigage should maintain the same size across the entire width of the insert. If size varies, it may indicate a tapered journal, bent connecting rod or foreign material trapped between the insert and rod.*

(6) If correct clearance is indicated, bearing fitting is not necessary. Remove Plastigage from crankshaft and bearing and proceed to Installation.

CAUTION: *Never use inserts that differ more than one bearing size as a pair. For example, do not use a standard upper and 0.002-inch undersize lower insert.*

(7) If clearance exceeds specification, install 0.001-inch (0.025 mm) undersize bearing inserts and measure clearance as described in steps (1) through (5) above.

NOTE: *The clearance indicated with a 0.001-inch (0.025 mm) undersize bearing installed will determine if a pair of 0.001-inch undersize inserts or some other combination is needed to provide the correct clearance. For example, if the initial clearance was 0.003 inch (0.076 mm), 0.001-inch (0.025 mm) undersize inserts would reduce clearance by 0.001 inch (0.025 mm). Oil clearance would be 0.002 inch (0.051 mm) and within specification. A 0.002-inch (0.051 mm) undersize insert and a 0.001-inch (0.025 mm) undersize insert would reduce this clearance an additional 0.0005 inch (0.013 mm). Oil clearance would then be 0.0015 inch (0.038 mm).*

(8) If oil clearance exceeds specification when pair of 0.002-inch (0.051 mm) undersize inserts are installed, measure connecting rod journal on crankshaft with micrometer. If journal size is correct (not less than 2.0934 inch or 53.172 mm), inside diameter of connecting rod is incorrect and rod must be replaced. If journal size is incorrect, replace crankshaft or grind journal to accept suitable undersize bearing.

Measuring Bearing Clearance with Micrometer

(1) Wipe connecting rod journal on crankshaft clean.

(2) Use micrometer to measure maximum diameter of rod journal at four locations. Measure diameter at two locations 90° apart at each end of journal.

(3) Examine for taper and out-of-round condition. Correct tolerance is 0.0005-inch (0.013 mm) maximum for both taper and out-of-round. If any rod journal is not within specification, crankshaft must be replaced.

(4) Compare measurement obtained with journal diameters listed in Connecting Rod Bearing Fitting Chart and select inserts required to obtain specified bearing clearance.

Installation

(1) Lubricate bearing surface of each insert with clean engine oil.

CAUTION: *Use care when rotating the crankshaft with bearing caps removed. Ensure the connecting rod bolts do not accidentally come in contact with the rod journals and scratch the surface. Bearing failure would result. Short pieces of rubber hose slipped over the connecting rod bolts will provide protection during installation.*

(2) Install bearing inserts, cap and retaining nuts. Tighten with 33 foot-pounds (45 N•m) torque.

(3) Install oil pan using replacement gaskets and seals. Tighten drain plug.

(4) Fill crankcase with clean oil to specified level.

PISTONS

Aluminum alloy Autothermic pistons are used. Steel reinforcements provide strength and control expansion. The ring land area above the piston pin provides for two compression rings and one oil control ring.

The piston pin boss is offset from the centerline of the piston to place it nearer the thrust side of the piston, minimizing piston slap.

An arrow on the top surface of the piston indicates the correct installation position in the bore. The arrow points toward the front of engine when installed correctly (fig. 1B-82).

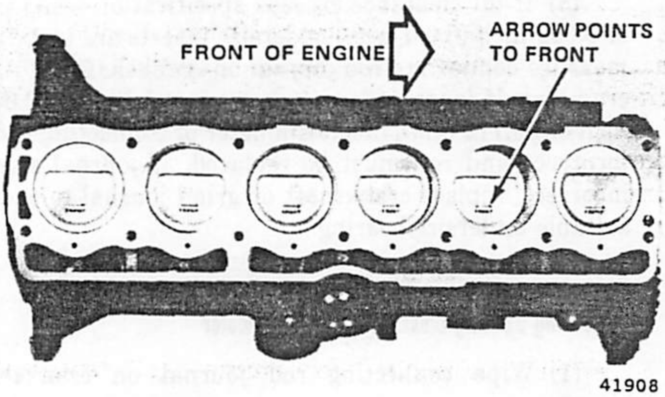

Fig. 1B-82 Pistons Correctly Positioned in Cylinders

Piston Fitting

Micrometer Method

(1) Measure inside diameter of cylinder bore 2-5/16 inches (58.725 mm) below top of cylinder.

(2) Measure outside diameter of piston.

NOTE: *Pistons are cam ground and must be measured at a right angle (90°) to piston pin at centerline of pin (fig. 1B-83).*

(3) Difference between cylinder bore diameter and piston diameter is piston-to-bore clearance.

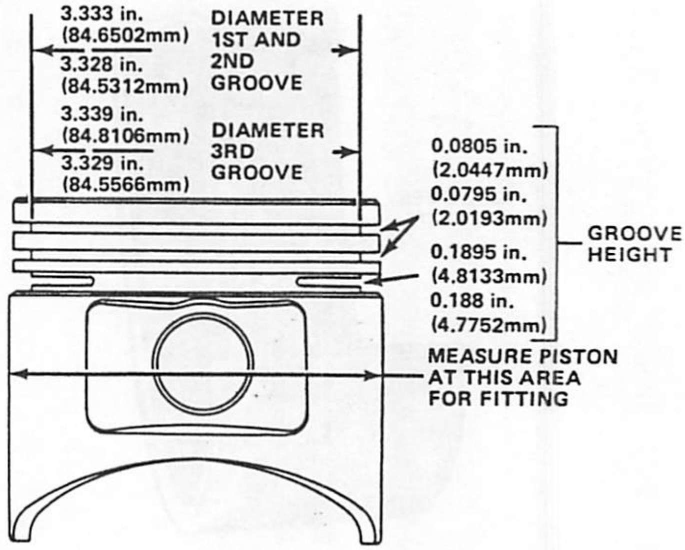

Fig. 1B-83 Piston Measurement

Feeler Gauge Method

(1) Remove rings from piston.

(2) Insert long 0.0005-inch (0.013 mm) feeler gauge into cylinder bore.

(3) Insert piston, top first, into bore alongside feeler gauge. With entire piston inserted in bore, piston should not bind against feeler gauge.

(4) Repeat steps (2) and (3) above with long 0.002-inch (0.051 mm) feeler gauge. Piston should bind.

If piston binds on 0.0005-inch (0.013 mm) gauge, piston is too large or bore is too small. If piston does not bind on 0.002-inch (0.051 mm) gauge, piston may be enlarged by knurling or shot-peening. Replace pistons that are 0.004 inch (0.102 mm) or more undersize.

Piston Rings

The two compression rings are made of cast iron. The oil control ring is a three-piece steel design.

Ring Fitting

(1) Clean carbon from all ring grooves. Oil drain openings in oil ring grooves and pin boss must be open. Do not remove metal from grooves or lands. This will change ring groove clearances and will damage ring-to-land seating.

(2) Measure ring side clearance with feeler gauge fitted snugly between ring land and ring. Rotate ring in groove. It must move freely at all points (fig. 1B-84). Refer to Specifications for correct ring side clearance.

(3) Place ring in bore and push down with inverted piston to position near lower end of ring travel. Measure ring gap (joint clearance) with feeler gauge fitting snugly in ring end gap (fig. 1B-85). Refer to Specifications for correct ring gap clearance.

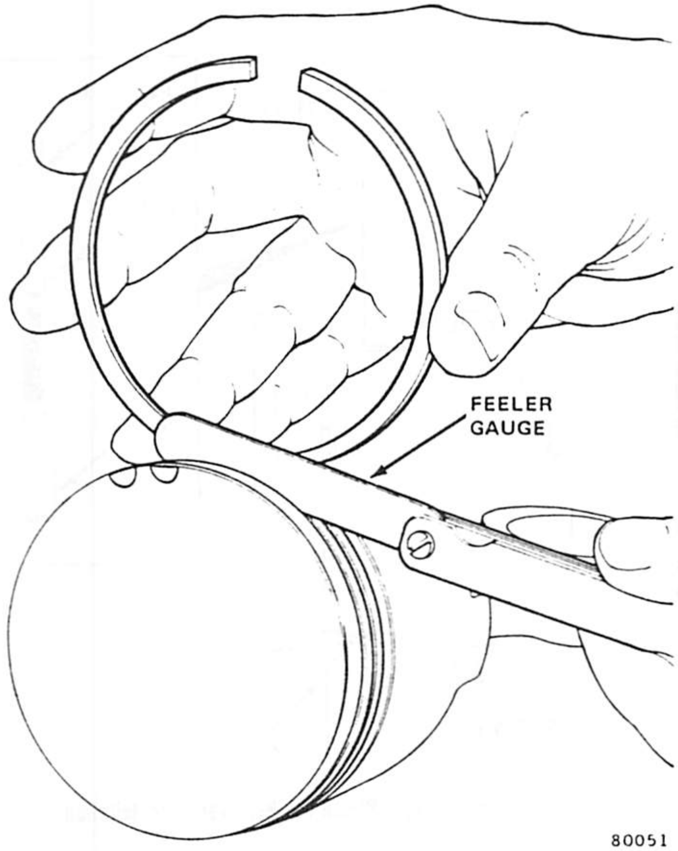

Fig. 1B-84 Ring Side Clearance

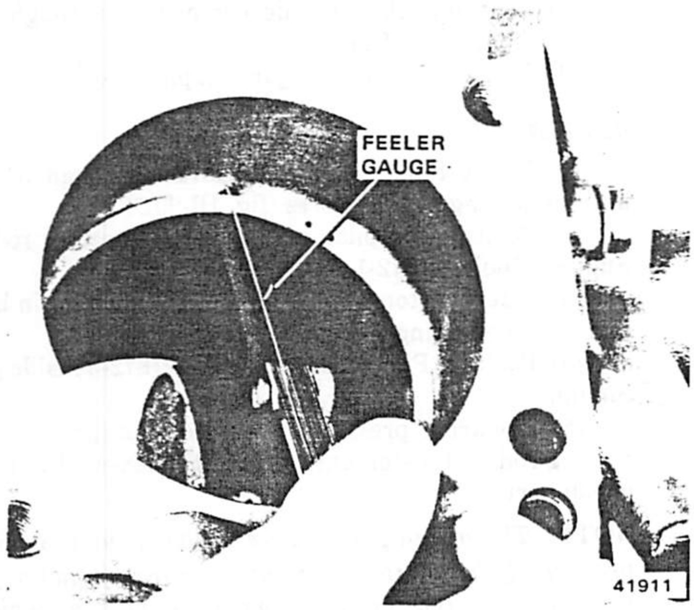

Fig. 1B-85 Ring Gap Clearance

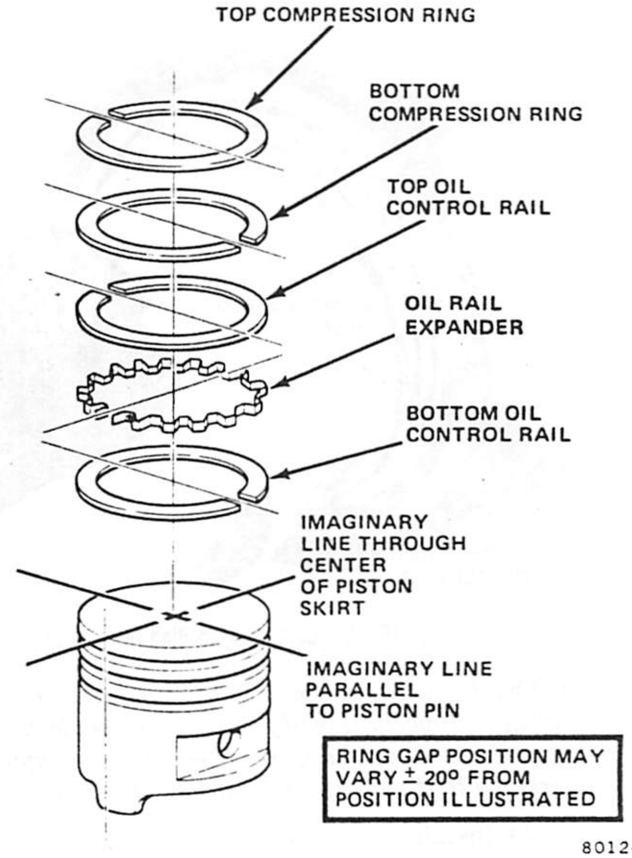

Fig. 1B-86 Piston Ring Gap Position

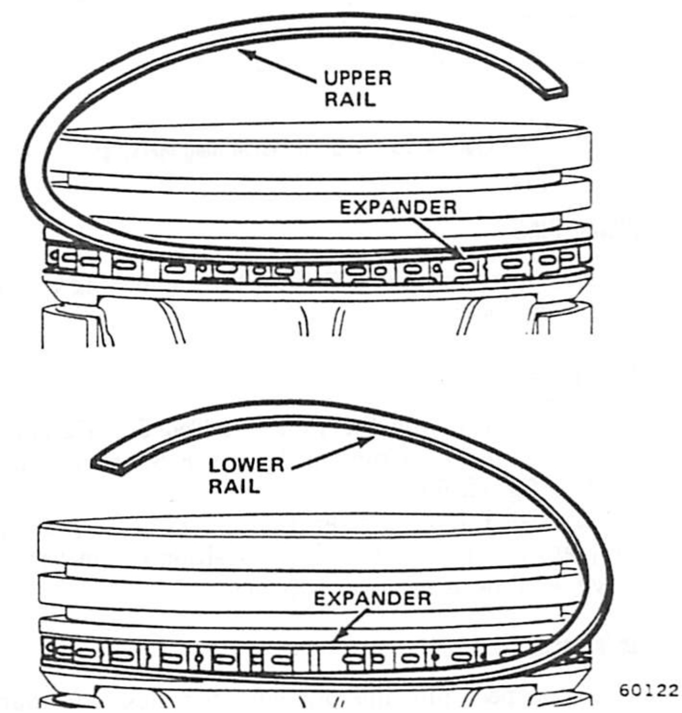

Fig. 1B-87 Oil Control Ring Rail Installation

Installation

Refer to figure 1B-86 for position of ring gaps when installing rings.

(1) Install oil control rings as indicated by instructions in package. It is not necessary to use tool to install upper and lower rails (fig. 1B-87). Insert expander ring first, then side rails.

(2) Install lower compression ring using ring installer to expand ring around piston (fig. 1B-88).

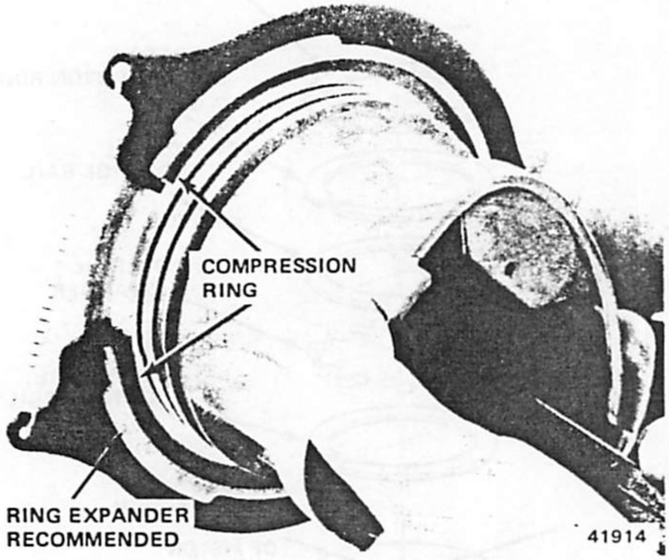

Fig. 1B-88 Compression Ring Installation

NOTE: *Ensure upper and lower compression rings are installed properly. Ideally, ring gaps should be located 180 degrees apart. Figure 1B-89 depicts typical ring markings that indicate the top side of each ring.*

(3) Install upper compression ring using ring installer to expand ring around piston (fig. 1B-88). Position ring gap 180° from lower compression ring.

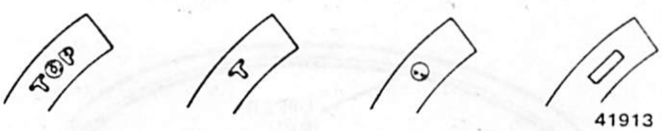

Fig. 1B-89 Typical Piston Ring Markings

Piston Pins

Piston pins are press fit into the connecting rod and require no locking device.

Removal

(1) Using Piston Pin Remover Tool J-21872 and arbor press, place piston on Remover Support Tool J-21872-1 (fig. 1B-90).

(2) Use Piloted Driver Tool J-21872-3 to press pin completely out of piston. Note position of pin through gauge window of remover support.

Pin Inspection

(1) Inspect pin and pin bore for nicks and burrs. Remove as necessary.

NOTE: *Never reuse piston pin after it has been installed in and removed from a connecting rod.*

(2) With pin removed from piston, clean and dry piston pin bore and replacement piston pin.

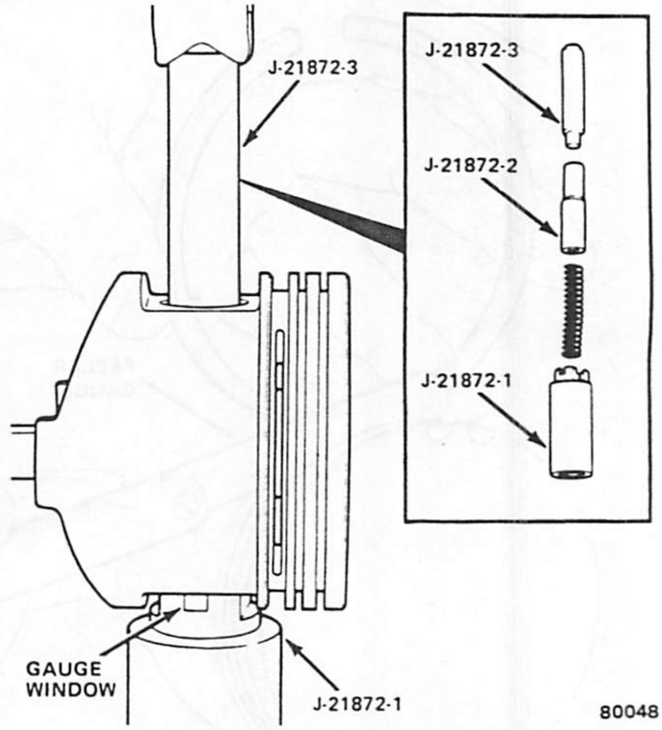

Fig. 1B-90 Piston Pin Removal or Installation

(3) Position piston so that pin bore is in vertical position. Insert pin in bore. At room temperature, the replacement pin should slide completely through pin bore without using force.

(4) Replace piston if pin jams in pin bore.

Installation

(1) Insert Pin Pilot Tool J-21872-2 through piston and connecting rod pin bores (fig. 1B-90).

(2) Position pin pilot, piston and connecting rod on Support Tool J-21872-1.

(3) Insert piston pin through upper piston pin bore and into connecting rod pin bore.

(4) Position Piloted Driver Tool J-21872-3 inside piston pin.

(5) Use arbor press to press piston pin through connecting rod and piston until pin pilot indexes with mark on support.

NOTE: *The piston pin requires a 2,000 pound (8.9 kN) press-fit. If little effort is required to install piston pin in connecting rod, or if rod moves along pin, replace connecting rod.*

(6) Remove piston and connecting rod assembly from press. Pin should be centered in rod, ±0.0312 inch (0.792 mm).

CRANKSHAFT

The nodular iron crankshaft is counterweighted and balanced. The crankshaft has four counterweights, seven main bearing journals and six connecting rod journals. End thrust is controlled by the No. 3 main bearing.

An oil slinger is located at the rear main journal, inboard of the rear oil seal. The component parts and crankshaft are first individually balanced and then the complete assembly is balanced as a unit.

Service replacement vibration dampers, crankshafts, flywheels, drive plates, torque converters and clutch components are balanced individually and may be replaced as required without balancing the complete assembly.

Removal or Replacement

If the crankshaft is damaged to the extent that reconditioning is not feasible, it must be replaced. Removal and installation procedures are outlined under Cylinder Block.

Crankshaft End Play Measurement

The crankshaft end play is controlled by the No. 3 main bearing inserts, which are flanged for this purpose.

(1) Attach dial indicator to cylinder block adjacent to No. 3 main bearing (fig. 1B-91).

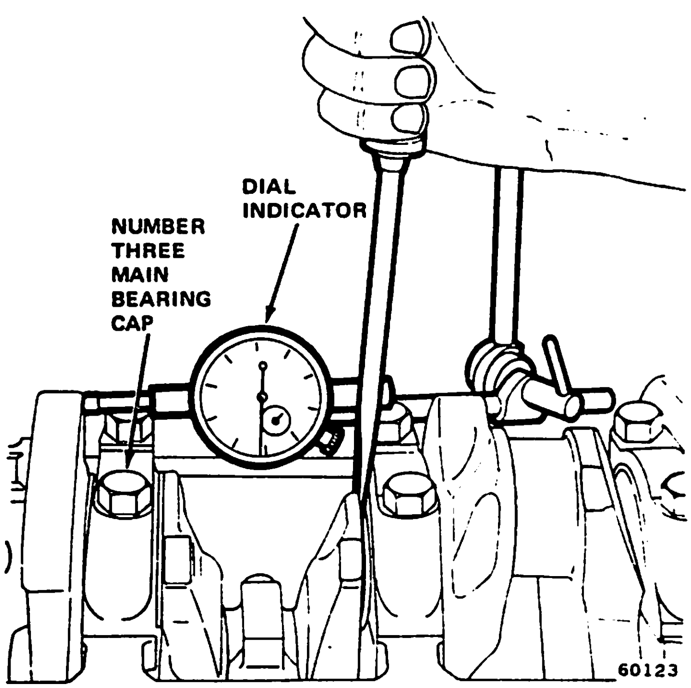

Fig. 1B-91 Measuring Crankshaft End Play

(2) Pry shaft forward with flat-bladed screwdriver and with dial indicator stem on face of crankshaft counterweight, set to zero.

(3) Pry shaft fore and aft and observe dial indicator. The end play is the difference between the high and low measurements. The correct crankshaft end play is 0.0015 to 0.0065 inch (0.0020 to 0.0025 desired) [0.038 to 0.165 mm (0.051 to 0.064 mm desired)].

(4) If end play is not within specifications, inspect crankshaft bearing thrust faces for wear. If wear is apparent, replace thrust bearing and measure end play. If end play is still not within specifications, replace crankshaft.

NOTE: *When replacing the thrust bearings, pry the crankshaft fore and aft to align the faces of the thrust bearings before the final tightening.*

Crankshaft Main Bearings

The main bearings are a steel-backed, micro-babbitt, precision type. The main bearing caps are numbered (front to rear) from 1 through 7, and an arrow indicates the forward position. The upper main bearing inserts are grooved while the lower inserts are smooth.

Each bearing is selectively fitted to its respective journal to obtain the desired operating clearance. **In production,** the select fit is obtained by using various sized color coded bearing inserts as described in the Main Bearing Fitting Chart. The bearing color code appears on the edge of the insert.

NOTE: *Bearing size is not stamped on inserts installed during production assembly.*

The main bearing journal size is identified **in production** by a color-coded paint mark on the adjacent cheek toward the flanged (rear) end of the crankshaft, except for the rear main journal, where the paint mark is on the crankshaft rear flange.

When required, upper and lower bearing inserts of different sizes may be used as a pair. A standard size insert is sometimes used in combination with a 0.001-inch (0.025 mm) undersize insert to reduce clearance by 0.0005 inch (0.013 mm).

Example:

Bearing Insert Pairs

Insert	Correct	Incorrect
Upper	Standard	Standard
Lower	0.001-inch (0.025mm) undersize	0.002-inch (0.051mm) undersize

70242

CAUTION: *Never use a pair of bearing inserts with greater than 0.001-inch (0.025 mm) difference in size.*

CAUTION: *When replacing bearing inserts, all the odd size inserts must be either all on the top (in block) or all on the bottom (in main bearing caps).*

Service replacement bearing inserts are available as pairs in the following sizes: standard, 0.001-, 0.002-, 0.010- and 0.012-inch undersize. The size is stamped on the back of service replacement inserts.

NOTE: *The 0.012-inch undersize insert is not used in production.*

Removal

(1) Drain engine oil.
(2) Remove oil pan.
(3) Remove main bearing cap and insert.
(4) Remove lower insert from bearing cap.
(5) Loosen other bearing caps and insert small cotter pin in crankshaft oil hole. Fabricate cotter pin as illustrated in figure 1B-92.

(6) With cotter pin in place, rotate crankshaft so that upper bearing insert rotates in direction of its locking tab.

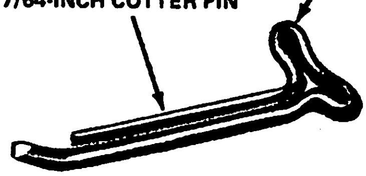

Fig. 1B-92 Fabricated Upper Main Bearing Removal Tool

Main Bearing Fitting Chart

Crankshaft No. 1 Main Bearing Journal Color Code and Diameter In Inches (mm)	Cylinder Block No. 1 Main Bearing Bore Color Code and Size In Inches (mm)	Bearing Insert Color Code	
		Upper Insert Size	Lower Insert Size
Yellow — 2.5001 to 2.4996 (Standard) (63.5025 to 63.4898mm)	Yellow — 2.6910 to 2.6915 (68.3514 to 68.3641mm)	Yellow — Standard	Yellow — Standard
	Black — 2.6915 to 2.6920 (68.3641 to 68.3768mm)	Yellow — Standard	Black — 0.001-inch Undersize (0.025mm)
Orange — 2.4996 to 2.4991 (0.0005 Undersize) (63.4898 to 63.4771mm)	Yellow — 2.6910 to 2.6915 (68.3514 to 68.3641mm)	Yellow — Standard	Black — 0.001-inch Undersize (0.025mm)
	Black — 2.6915 to 2.6920 (68.3641 to 68.3768mm)	Black — 0.001-inch Undersize (0.025mm)	Green — 0.002-inch Undersize (0.051mm)
Black — 2.4991 to 2.4986 (0.001 Undersize) (63.4771 to 63.4644mm)	Yellow — 2.6910 to 2.6915 (68.3514 to 68.3641mm)	Black — 0.001-inch Undersize (0.025mm)	Black — 0.001-inch Undersize (0.025mm)
	Black — 2.6915 to 2.6920 (68.3641 to 68.3768mm)	Black — 0.001-inch Undersize (0.025mm)	Green — 0.002-inch Undersize (0.051mm)
Green — 2.4986 to 2.4981 (0.0015 Undersize) (63.4644 to 63.4517mm)	Yellow — 2.6910 to 2.6915 (68.3514 to 68.3641mm)	Black — 0.001-inch Undersize (0.025mm)	Green — 0.002-inch Undersize (0.051mm)
Red — 2.4901 to 2.4986 (0.010 Undersize) (63.2485 to 63.2358mm)	Yellow — 2.6910 to 2.6915 (68.3541 to 68.3641mm)	Red — 0.010-inch Undersize (0.254mm)	Red — 0.010-inch Undersize (0.254mm)

60262A

NOTE: With Green and Red Coded Crankshaft Journals, Use Yellow Coded Cylinder Block Bores Only.

Crankshaft Connecting Rod Journal 2-6 Color Code and Diameter in Inches (Journal Size)	Bearing Insert Color Code	
	Upper Insert Size	Lower Insert Size
Yellow — 2.5001 to 2.4996 (Standard) (63.5025 to 63.4898 mm)	Yellow — Standard	Yellow — Standard
Orange — 2.4996 to 2.4991 (0.0005 Undersize) (63.4898 to 63.4771 mm)	Yellow — Standard	Black — 0.001-inch Undersize (0.025mm)
Black — 2.4991 to 2.4986 (0.001 Undersize) (63.4771 to 63.4644 mm)	Black — 0.001-inch Undersize (0.025mm)	Black — 0.001-inch Undersize (0.025mm)
Green — 2.4986 to 2.4981 (0.0015 Undersize) (63.4644 to 63.4517 mm)	Black — 0.001-inch Undersize (0.025mm)	Green — 0.002-inch Undersize (0.051mm)
Red — 2.4901 to 2.4986 (0.010 Undersize) (63.2485 to 63.2358 mm)	Red — 0.010-inch Undersize (0.254mm)	Red — 0.010-inch Undersize (0.254mm)

60262B

Crankshaft Connecting Rod Journal 7 Color Code and Diameter in Inches (Journal Size)	Bearing Insert Color Code	
	Upper Insert Size	Lower Insert Size
Yellow – 2.4995 to 2.4990 (Standard) (63.4873 to 63.4746 mm)	Yellow – Standard	Yellow – Standard
Orange – 2.4990 to 2.4985 (0.0005 Undersize) (63.4746 to 63.4619 mm)	Yellow – Standard	Black – 0.001-inch Undersize (0.025mm)
Black – 2.4985 to 2.4980 (0.001 Undersize) (63.4619 to 63.4492 mm)	Black – 0.001-inch Undersize (0.025mm)	Black – 0.001-inch Undersize (0.025mm)
Green – 2.4980 to 2.4975 (0.0015 Undersize) (63.4492 to 63.4365 mm)	Black – 0.001-inch Undersize (0.025mm)	Green – 0.002-inch Undersize (0.051mm)
Red – 2.4895 to 2.4890 (0.010 Undersize) (63.2333 to 63.2206 mm)	Red – 0.010-inch Undersize (0.254mm)	Red – 0.010-inch Undersize (0.254mm)

60262C

NOTE: *Because there is no hole in the number 4 main journal, use a tongue depressor or similar soft-faced tool to remove the bearing (fig. 1B-93). After moving the insert approximately one inch (25.4 mm), the insert can be removed by applying pressure under the tab.*

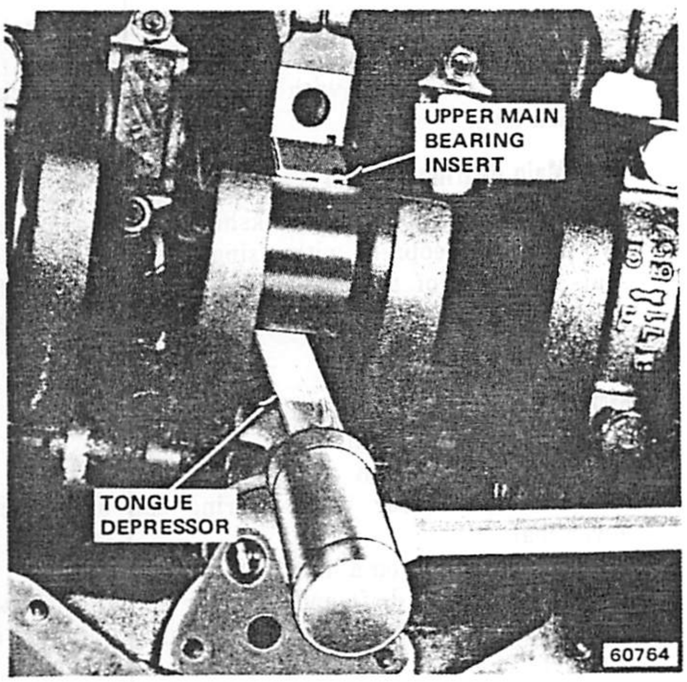

Fig. 1B-93 Removing No. 4 Main Bearing Insert

(7) In the same manner described above, remove remaining bearings one at a time for inspection.

Inspection

(1) Wipe lower insert clean and inspect for abnormal wear pattern and for metal or other foreign material imbedded in lining. Normal main bearing wear pattern is illustrated in figure 1B-94.

NOTE: *If the crankshaft journal is scored, remove the engine for crankshaft repair.*

(2) Inspect back of insert for fractures, scrapings or irregular wear pattern.

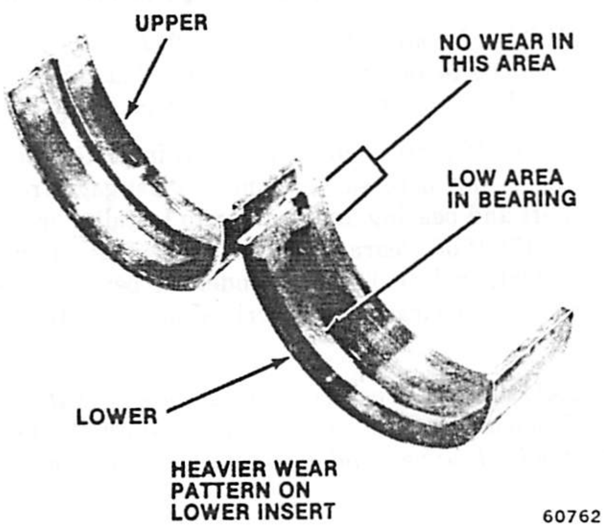

Fig. 1B-94 Normal Main Bearing Wear Pattern

(3) Inspect locking tabs for damage.

(4) Replace bearing inserts that are damaged or worn.

Measuring Bearing Clearance with Plastigage (Crankshaft Installed)

NOTE: *Measure clearance of one bearing at a time. All other bearings must remain tightened.*

(1) Remove main bearing cap and insert.

(2) Clean insert and exposed portion of crankshaft journal.

(3) Place strip of Plastigage across full width of bearing insert.

(4) Install bearing cap and tighten bolts with 80 foot-pounds (108 N•m) torque.

(5) Remove bearing cap and determine amount of clearance by measuring width of compressed Plastigage with scale on Plastigage envelope (fig. 1B-95). Correct clearance is 0.001 to 0.003 inch (0.025 to 0.076 mm). The Plastigage should maintain same size across entire width of insert. If size varies, it may indicate tapered journal or foreign material trapped behind insert.

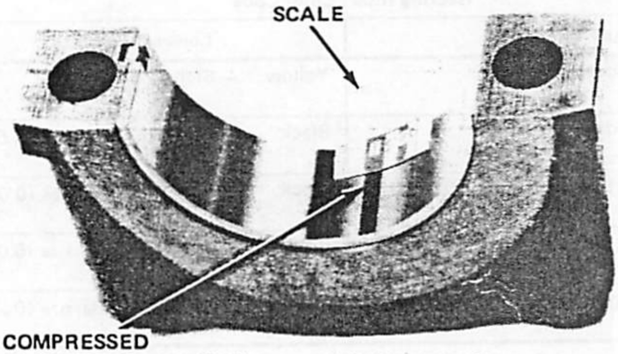

Fig. 1B-95 Measuring Main Bearing Clearance with Plastigage

NOTE: *Do not rotate crankshaft. Plastigage will shift, resulting in inaccurate indication. Plastigage must not crumble. If brittle, obtain fresh stock.*

(6) If correct oil clearance is indicated, bearing fitting is not necessary. Remove Plastigage from crankshaft and bearing and proceed to Installation.

(7) If oil clearance exceeds specification, install pair of 0.001-inch (0.025 mm) undersize bearing inserts and measure clearance as described in steps (4) through (6) above.

CAUTION: *Never use a pair of inserts that differ more than one bearing size as a pair. For example, do not use a standard upper and 0.002-inch (0.051 mm) undersize lower insert.*

NOTE: *The clearance indicated with the 0.001-inch (0.025 mm) undersize inserts installed will determine if the pair of 0.001-inch (0.025 mm) undersize inserts or some other combination will provide the correct clearance. For example, if the clearance was 0.0035 inch (0.089 mm) originally, a pair of 0.001-inch (0 025 mm) undersize inserts would reduce the clearance by 0.001 inch (0.025 mm). Oil clearance would be 0.0025 inch (0.064 mm) and within specification. A 0.002-inch (0.051 mm) undersize insert and a 0.001-inch (0.025 mm) undersize insert would reduce this clearance an additional 0.0005 inch (0.013 mm) and the oil clearance would be 0.002 inch (0.051 mm).*

(8) If oil clearance exceeds specification using 0.002-inch (0.051 mm) undersize bearing inserts, measure crankshaft journal with micrometer. If journal size is correct, crankshaft bore in cylinder block may be misaligned, which requires cylinder block replacement or machining to true bore. If journal size is less than 2.4981 inch (63.4517 mm), replace crankshaft or grind to accept suitable undersize inserts.

Measuring Main Bearing Journal with Micrometer (Crankshaft Removed)

(1) Clean main bearing journal.

(2) Measure maximum diameter of journal with micrometer. Measure at two locations 90 degrees apart at each end of journal.

(3) Compare measurements obtained with journal diameters listed in Main Bearing Fitting Chart and select inserts required to obtain specified bearing clearance.

Installation

(1) Lubricate bearing surface of each insert with clean engine oil.

(2) Loosen all main bearing caps and install main bearing upper insert(s).

(3) Install lower insert(s) and main bearing caps. Tighten bolts with 40 foot-pounds (54 N•m) torque. Then tighten with 70 foot-pounds (95 N•m) torque. Finally, tighten with 80 foot-pounds (108 N•m) torque. Rotate crankshaft after tightening each main bearing cap to ensure it rotates freely.

NOTE: *When installing a crankshaft kit (crankshaft plus bearing inserts), measure each bearing with Plastigage to determine if fit is correct.*

(4) Install oil pan, using replacement gaskets and seals. Tighten drain plug.

(5) Fill crankcase with clean lube oil to specified dipstick level.

Rear Main Bearing Oil Seal

The rear main bearing crankshaft oil seal consists of two pieces of neoprene with a single lip that effectively seals the rear of the crankshaft. To ensure leak-free operation, replace the upper and lower seal halves in pairs.

Removal

(1) Drain engine oil.

(2) Remove oil pan.

(3) Remove rear main bearing cap and discard lower seal.

(4) Loosen all remaining main bearing caps.

(5) Use brass drift and hammer to tap upper seal until seal protrudes enough to permit pulling it out completely.

(6) Remove oil pan front and rear neoprene oil seals and oil pan side gaskets.

(7) Clean gasket surfaces of oil pan and engine block. Remove all sludge and residue from oil pan sump.

(8) Clean main bearing cap thoroughly to remove all sealer.

Installation

(1) Wipe seal surface of crankshaft clean and lightly coat with engine oil.

(2) Coat lip of seal with engine oil.

(3) Install upper seal into engine block.

NOTE: *Lip of seal must face toward front of engine.*

(4) Coat both sides of lower seal end tabs with RTV silicone (Jeep Gasket-in-a-Tube, or equivalent). Use care to prevent applying sealer to lip of seal.

(5) Coat outer curved surface of lower seal with soap and lip of seal with engine oil.

(6) Install seal into cap recess and seat it firmly.

(7) Coat both chamfered edges of rear main bearing cap with RTV silicone sealant (fig. 1B-96).

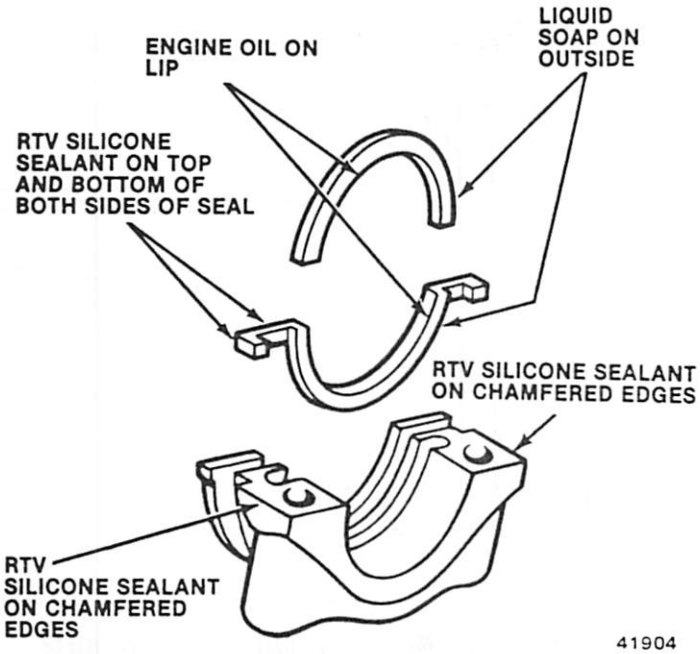

Fig. 1B-96 Rear Main Oil Seal and Cap Installation

CAUTION: *Do not apply sealer to cylinder block mating surfaces of rear main bearing cap because bearing clearance would be affected.*

(8) Install rear main bearing cap.

(9) Tighten all main bearing bolts in steps with 40, 70 and 80 foot-pounds (54, 95 and 108 N•m) torque.

(10) Install oil pan using replacement gaskets and seals. Tighten drain plug.

(11) Fill crankcase with clean oil to specified dipstick level.

Vibration Damper and Pulley

The vibration damper is balanced independently and then rebalanced as part of the complete crankshaft assembly.

Do not attempt to duplicate the vibration damper balance holes when installing a service replacement. The vibration damper is not repairable and is serviced only as a complete assembly.

Removal

(1) Remove drive belt(s).

(2) Remove three retaining bolts and separate vibration damper pulley from vibration damper.

(3) Remove vibration damper retaining screw and washer.

(4) Use Vibration Damper Remover Tool J-21791 to remove damper from crankshaft (fig. 1B-97).

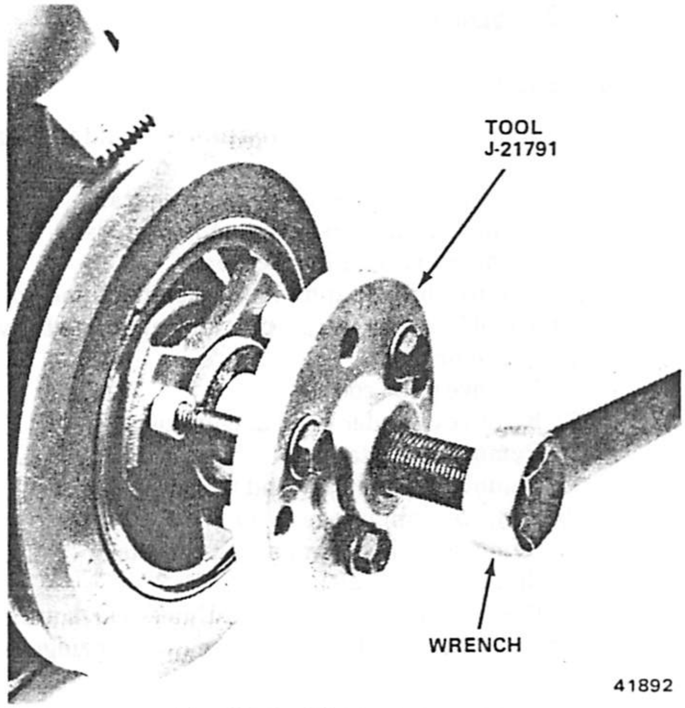

Fig. 1B-97 Vibration Damper Removal

(2) Install vibration damper retaining screw and washer. Tighten screw with 80 foot-pounds (108 N•m) torque.

(3) Install damper pulley with retaining bolts. Tighten bolts with 20 foot-pounds (27 N•m) torque.

(4) Install drive belt(s) and tighten to specified tension. Refer to Chapter 1C—Cooling System.

Flywheel/Drive Plate and Ring Gear Assembly

The ring gear can be replaced only for vehicles equipped with manual transmission. The ring gear is welded to and balanced as part of the converter drive plate on vehicles with automatic transmissions. The entire drive plate and ring gear assembly must be replaced on automatic transmission equipped vehicles.

Ring Gear Replacement (Manual Transmission)

(1) Position flywheel on arbor press with steel blocks equally spaced around perimeter and under ring gear.

(2) Press flywheel through ring gear.

NOTE: *Ring gear can also be removed by breaking with chisel.*

(3) Apply heat to expand inside diameter of replacement ring gear.

(4) Press flywheel into replacement ring gear.

NOTE: *On manual transmission equipped vehicles, the flywheel is balanced as an individual component and also as part of the crankshaft assembly. Do not attempt to duplicate original flywheel balance holes when installing a service replacement. Service flywheels are balanced during manufacture.*

CYLINDER BLOCK

Disassembly

(1) Remove engine as outlined within Engine Removal.
(2) Place engine assembly on engine stand.
(3) Remove intake and exhaust manifolds.
(4) Remove cylinder head cover.
(5) Remove bridge and pivot assemblies and rocker arms. Back off each capscrew one turn at a time to avoid damaging the bridge.
(6) Remove push rods.
(7) Remove cylinder head and gasket.
(8) Remove valve tappets.
(9) Remove drive pulley and vibration damper.
(10) Remove timing case cover.
(11) Remove timing chain and sprockets.
(12) Remove camshaft.
(13) Position pistons, one at a time, near bottom of stroke and use a ridge reamer to remove any ridge from top end of cylinder walls.
(14) Remove oil pan and gaskets.
(15) Remove oil pump.
(16) Remove connecting rod bearing caps and inserts and retain in same order as removed.

NOTE: *Connecting rods and caps are stamped with the number of the corresponding cylinder.*

(17) Remove piston and connecting rod assemblies through top of cylinder bores.

NOTE: *Ensure that the connecting rod bolts do not scratch the connecting rod journals or cylinder walls. Short pieces of rubber hose slipped over the rod bolts will prevent damage to the cylinder bores and crankshaft.*

(18) Remove main bearing caps and inserts.
(19) Remove crankshaft.

Cylinder Bore Reconditioning

Measuring Cylinder Bore

Use a bore gauge to measure the cylinder bore (fig. 1B-98). If a bore gauge is not available, use an inside micrometer.

(1) Measure cylinder bore crosswise to block near top of bore. Repeat measurement at bottom of bore.
(2) Determine taper by subtracting smaller dimension from larger dimension.
(3) Turn measuring device 120° and repeat step (1). Then turn another 120° and repeat measurements.
(4) Determine out-of-round by comparing difference between measurements taken 120° apart.

If the cylinder taper does not exceed 0.001 inch (0.025 mm) and the out-of-round does not exceed 0.001 inch (0.025 mm), the cylinder bore may be trued by honing. If

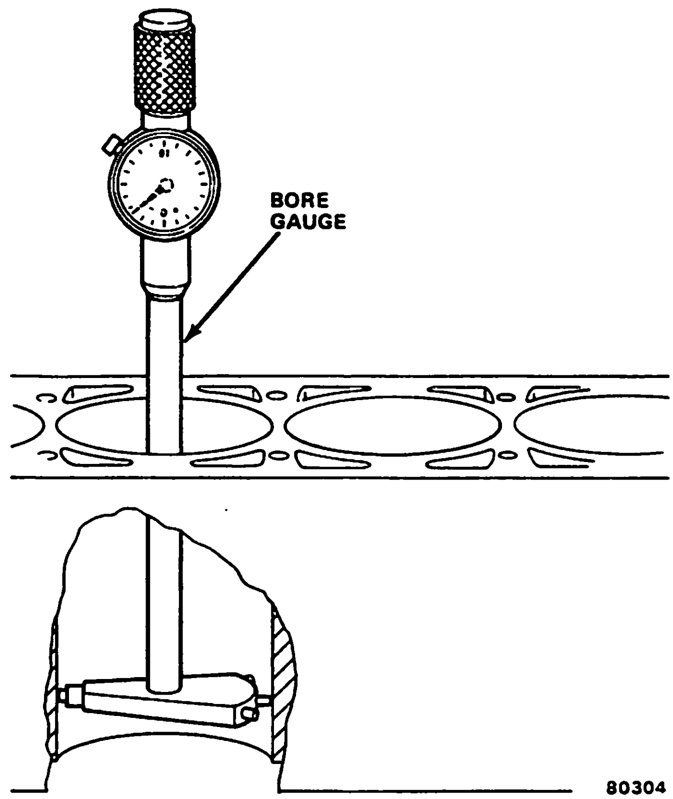

Fig. 1B-98 Measuring Cylinder Bore with Bore Gauge

the cylinder taper or out-of-round condition exceeds these limits, bore and then hone the cylinder for an oversize piston.

Resurfacing Cylinder Bore

CAUTION: *Do not use rigid type hones to remove cylinder wall glaze. A slight amount of taper always exists in cylinder walls after an engine has been in service for a period of time.*

(1) Use expanding hone to true cylinder bore and to remove glaze for faster ring seating. Move hone up and down at sufficient speed to produce uniform 60° angle crosshatch pattern on cylinder walls. Do not use more than ten strokes per cylinder (a stroke is one down and one up movement).

CAUTION: *Protect engine bearings and lubrication system from abrasives.*

(2) Scrub cylinder bores clean with solution of hot water and detergent.
(3) Immediately apply light engine oil to cylinder walls. Wipe with clean, lint-free cloth.

Assembly

(1) Install upper main bearing inserts in cylinder block.
(2) Install crankshaft.
(3) Install lower main bearing inserts and caps. Apply oil to insert before installing. Tighten bolts in steps

of 40, 70 and 80 foot-pounds torque (54, 95, 108 N•m). Plastigage all inserts if replacement inserts or crankshaft have been installed.

(4) Clean cylinder bores thoroughly. Apply light film of clean engine oil to bores with clean, lint-free cloth.

(5) Install piston rings on piston. Refer to Piston Rings for procedure.

(6) Lubricate piston and rings with clean engine oil.

(7) Use Piston Ring Compressor Tool J-5601 to install connecting rod and piston assemblies through top of cylinder bores (fig. 1B-82).

NOTE: *Ensure that connecting rod bolts do not scratch the connecting rod journals or cylinder walls. Short lengths of rubber hose slipped over the connecting rod bolts will provide protection during installation.*

(8) Apply oil to inserts. Install connecting rod bearing inserts and caps in same location as removed. Tighten retaining nuts with 33 foot-pounds (45 N•m) torque.

NOTE: *Oil squirt holes in connecting rods must face camshaft.*

(9) Install oil pump with replacement pickup tube and screen assembly.

(10) Install oil pan using replacement gaskets and seals. Tighten drain plug.

(11) Install camshaft and timing chain—sprocket assembly.

(12) Install timing case cover.

(13) Install vibration damper and drive pulley.

(14) Install valve tappets.

(15) Install gasket and cylinder head.

(16) Install push rods.

(17) Install rocker arms and bridge and pivot assemblies. Loosely install capscrews at each bridge, then tighten capscrews alternately, one turn at a time, to avoid damaging or breaking bridge.

(18) Install cylinder head cover, using silicone (RTV) rubber sealant.

(19) Install intake and exhaust manifolds.

(20) Remove engine from engine stand.

(21) Install engine assembly as outlined within Engine Installation.

SPECIFICATIONS

Six-Cylinder Engine Specifications

	(USA) Inches Unless Otherwise Specified	(METRIC) Millimeters Unless Otherwise Specified
Type	In Line, OHV, Six-cylinder	
Bore	3.75	95.25
Stroke	3.895	98.93
Displacement	258 cubic inches	4.2 liter
Compression Ratio	8.6:1	
Compression Pressure	120-150 psi	827-1034 kPa
Maximum Variation Between Cylinders	30 psi	206 kPa
Firing Order	1-5-3-6-2-4	
Taxable Horsepower	33.75 Bhp	25.2 kW
Fuel	unleaded	
Camshaft		
Fuel Pump Eccentric Diameter	1.615-1.625	41.02-41.28
Tappet Clearance	Zero Lash (Hydraulic tappets)	
End Play	Zero (engine operating)	
Bearing Clearance	0.001-0.003	0.025-0.076
Bearing Journal Diameter		
No. 1	2.029-2.030	51.54-51.56
No. 2	2.019-2.020	51.28-51.31
No. 3	2.009-2.010	51.03-51.05
No. 4	1.999-2.000	50.78-50.80
Base Circle Runout	0.001 (max)	0.03 (max)
Cam Lobe Lift	0.253	6.43
Valve Lift	0.405	10.29
Intake Valve Timing		
Opens	9° BTDC	
Closes	73° ABDC	
Exhaust Valve Timing		
Opens	57° BBDC	
Closes	25° ATDC	
Valve Overlap	34°	
Intake Duration	262°	
Exhaust Duration	262°	

	(USA) Inches Unless Otherwise Specified	(METRIC) Millimeters Unless Otherwise Specified
Connecting Rods		
Total Weight (less bearings)	695-703 grams	
Total Length (center-to-center)	5.873-5.877	149.17-149.28
Piston Pin Bore Diameter	0.9288-0.9298	23.59-23.62
Connecting Rod Bore (less bearings)	2.2085-2.2080	56.09-56.08
Bearing Clearance	0.001-0.003 (0.0015-0.002 preferred)	0.03-0.08 (0.044-.05 preferred)
Side Clearance	0.010-0.019	0.25-0.48
Maximum Twist	0.001 per inch	0.025 per 25.4 mm
Maximum Bend	0.0005 per inch	0.0127 per 25.4 mm
Crankshaft		
End Play	0.0015-0.0065	0.038-0.165
Main Bearing Journal Diameter	2.4996-2.5001	63.489-63.502
Main Bearing Journal Width		
No. 1	1.086-1.098	27.58-27.89
No. 3	1.271-1.273	32.28-32.33
No. 2-4-5-6-7	1.182-1.188	30.02-30.18
Main Bearing Clearance	0.001-0.0025 (0.002 preferred)	0.03-0.06 (0.051 preferred)
Connecting Rod Journal Diameter	2.0934-2.0955	53.17-53.23
Connecting Rod Journal Width	1.070-1.076	27.18-27.33
Maximum Out-of-Round (All Journals)	0.0005	0.013
Maximum Taper (All Journals)	0.0005	0.013
Cylinder Block		
Deck Height	9.487-9.493	240.97-241.12
Deck Clearance	0.0148 (below block)	0.376 (below block)

60263A

Six-Cylinder Engine Specifications (Continued)

	(USA) Inches Unless Otherwise Specified	(METRIC) Millimeters Unless Otherwise Specified
Cylinder Block (cont'd.)		
Cylinder Bore Diameter (standard)	3.7501-3.7533	95.253-95.334
Maximum Taper	0.001	0.025
Maximum Out-of-Round	0.001	0.025
Tappet Bore Diameter	0.9055-0.9065	23.000-23.025
Cylinder Block Flatness	0.001/1-0.002/6 (0.008 max)	0.03/25-0.05/152 (0.20 max)
Cylinder Head		
Combustion Chamber Volume	64.45-67.45cc	
Valve Arrangement	EI-IE-IE-EI-EI-IE	
Valve Guide ID (Integral)	0.3735-0.3745	9.487-9.512
Valve Stem-to-Guide Clearance	0.001-0.003	0.03-0.08
Intake Valve Seat Angle	30°	
Seat Angle	44.5°	
Valve Seat Exhaust Valve Width	0.040-0.060	1.02-1.52
Valve Seat Runout	0.0025	0.064
Cylinder Head Flatness	0.001/1-0.002/6 (0.008 max)	0.03/25-0.05/152 (0.20 max)
Lubrication System		
Engine Oil Capacity	5 quarts (Add 1 quart with filter change)	4.5 liters (Add 0.9 liter with filter change)
Normal Operating Pressure	13 psi at 600 rpm; 37-75 psi (max) at 1600+ rpm	89.6 kPa at 600 rpm; 255.1-517.1 kPa (max) at 1600+ rpm
Oil Pressure Release	75 psi (max)	517.1 kPa (max)
Gear-to-Body Clearance (Radial)	0.002-0.004 (.002 preferred)	0.051-0.102 (.051 preferred)
Gear End Clearance, Plastigage	0.002-0.006 (0.002 preferred)	0.051-0.152 (0.051 preferred)
Gear End Clearance, Feeler Gauge	0.004-0.008 (0.007 preferred)	0.1016-0.2032 (0.1778 preferred)
Pistons		
Weight (less pin)	510-514 grams	
Piston Pin Bore Centerline-to-Piston Top	1.651-1.655	41.94-42.04
Piston-to-Bore Clearance	0.0009-0.0017 (0.0012-0.0013 preferred)	0.023-0.043 (0.030-0.033 preferred)
Piston Ring Gap Clearance – Compression (both)	0.010-0.020	0.25-0.51
Piston Ring Gap Clearance – Oil Control Steel Rails	0.010-0.025	0.25-0.64

	(USA) Inches Unless Otherwise Specified	(METRIC) Millimeters Unless Otherwise Specified
Piston Ring Side Clearance		
No. 1 Compression	0.0017-0.0032 (0.0017 preferred)	0.043-0.081 (0.043 preferred)
No. 2 Compression	0.0017-0.0032 (0.0017 preferred)	0.043-0.081 (0.043 preferred)
Oil Control	0.001-0.008 (0.003 preferred)	0.03-0.20 (0.08 preferred)
Piston Ring Groove Height		
Compression (both)	0.0795-0.0805	2.019-2.045
Oil Control	0.188-0.1895	4.78-4.80
Piston Ring Groove Diameter		
No. 1 and No. 2	3.324-3.329	84.43-84.56
Oil Control	3.329-3.339	84.56-84.81
Piston Pin Bore Diameter	0.9308-0.9313	23.642-23.655
Piston Pin Diameter	0.9304-0.9309	23.632-23.645
Piston-to-Pin Clearance	0.0003-0.0005 loose (0.0005 preferred)	0.008-0.013 loose (0.013 preferred)
Piston-to-Pin Connecting Rod	2000 lbf press-fit	8.9kN press-fit
Rocker Arms, Push Rods and Tappets		
Rocker Arm Ratio	1.6:1	
Push Rod Length	9.640-9.660	244.856-245.364
Push Rod Diameter	0.312-0.315	7.92-8.00
Hydraulic Tappet Diameter	0.904-0.9045	22.962-22.974
Tappet-to-Bore Clearance	0.001-0.0025	0.03-0.05
Valves		
Valve Length (Tip-to-Gauge Dim. Line)	4.7895-4.8045	121.653-122.034
Valve Stem Diameter	0.3715-0.3725	9.436-9.462
Stem-to-Guide Clearance	0.001-0.003	0.03-0.08
Intake Valve Head Diameter	1.782-1.792	45.26-45.52
Intake Valve Face Angle	29°	
Exhaust Valve Head Diameter	1.401-1.411	35.59-35.84
Exhaust Valve Face Angle	44°	
Maximum Allowable Removed for Tip Refinishing	0.010	0.25
Valve Springs		
Free Length	1.99 approx.	50.55 approx.
Spring Tension		
Valve Closed	64-72 lbf at 1.786	285-320 N at 45.4
Valve Open	188-202 lbf at 1.411	836-898N at 35.84
Inside Diameter	0.948-0.968	24.08-24.59

602638

Six-Cylinder Engine Firing Order

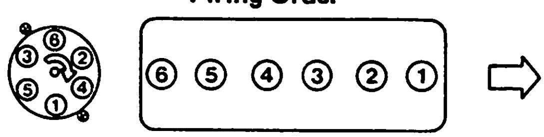

Torque Specifications

Service Set-To Torques should be used when assembling components. Service In-Use Recheck Torque should be used for checking a pre-tightened item.

	USA (ft-lbs)		Metric (N·m)	
	Service Set-To Torque	Service In-Use Recheck Torque	Service Set-To Torque	Service In-Use Recheck Torque
Air Injection Tube-to-Manifold	20	15-20	27	20-27
Air Pump-to-Bracket	20	15-22	27	20-30
Air Pump Brackets-to-Engine (A.C. Compressor or Pedestals)	25	18-28	34	24-38
Air Pump Adjusting Strap-to-Pump	20	15-22	27	20-30
Alternator Pivot Bolt or Nut	28	20-35	38	27-47
Alternator Adjusting Bolt	18	15-20	24	20-27
Alternator Mounting Bracket-to-Engine	28	23-30	38	31-41
Alternator Pivot Mounting Bolt-to-Head	33	30-35	45	41-47
Block Heater Nut	20 in-lbs	17-25 in-lbs	2	2-3
Camshaft Sprocket Screw	50	45-55	68	61-75
Carburetor Hold-Down Nuts	14	12-20	19	16-27
Coil Bracket-to-Cylinder Head	14	10-18	19	14-24
Connecting Rod Bolt Nuts	33	30-35	45	41-47
Cylinder Head Capscrews	85	80-90	115	108-122
Cylinder Head Cover Nuts	28 in-lbs	25-31 in-lbs	3.2	2.8-3.5
Crankshaft Pulley-to-Damper	20	15-25	27	20-34
Clutch Housing Spacer-to-Block Screws	12	9-15	16	12-20
Clutch Housing-to-Block Screws (top)	27	22-30	37	30-41
Clutch Housing-to-Block Screws (bottom)	43	37-47	58	50-64
Differential Housing to Left Engine Mounting Bolt	40	35-50	54	47-68
Distributor Clamp Bracket Screw	13	10-18	18	14-24
Drive Plate-to-Converter Screw	22	20-25	30	27-34
EGR Valve Tube Nuts	30	25-35	41	34-47
EGR Valve	13	9-18	18	12-24
Exhaust Manifold Bolts	23	18-28	31	24-38
Exhaust Pipe-to-Manifold	20	15-25	27	20-34
Fan and Hub Assembly Bolts	18	12-25	24	16-34
Flywheel or Drive Plate-to-Crankshaft	105	95-115	142	129-156
Front Crossmember-to-Sill	65	55 min.	88	75 min.
Front Support Bracket-to-Block	35	25-40	47	34-54
Front Support Bracket-to-Block (Eagle)	45	40-50	47	34-54
Front Support Cushion-to-Bracket	33	27-38	45	36-52
Front Support Cushion-to-Crossmember	37	30-45	50	41-61
Fuel Pump Screws	16	13-19	22	18-26
Idler Arm Bracket-to-Sill	50	35-60	68	47-81
Idler Pulley Bracket-to-Front Cover Nut	7	4-9	9	5-12
Idler Pulley Bearing Shaft-to-Bracket Nut	33	28-38	45	38-52
Intake Manifold Coolant Fittings	20	15-25	27	20-34
Intake Manifold Heater Screws	7	5-9	9	7-12
Intake Manifold Screws	23	18-28	31	24-38
Main Bearing Capscrews	80	75-85	108	101-115
Oil Filter Adapter	48	42-55	65	57-75
Oil Pan Drain Plug	30	25-35	41	34-47
Oil Pan Screws — 1/4 inch — 20	7	5-9	9	7-12
Oil Pan Screws — 5/16 inch — 18	11	9-13	15	12-18
Oil Pump Cover Screws	70 in-lbs	60-80 in-lbs	8	7-9
Oil Pump Attaching Screws (Short)	10	8-13	14	11-18
Oil Pump Attaching Screws (Long)	17	12-20	23	16-27
Oxygen Sensor	35	32-38	48	43-52
Power Steering Pump Adapter Screw	23	18-28	31	24-38
Power Steering Pump Bracket Screw	43	37-47	58	50-64
Power Steering Pump Mounting Screw	28	25-35	38	34-47
Power Steering Pump Pressure Hose Nut	38	30-45	52	41-61
Power Steering Pump Pulley Nut	58	40-65	79	54-88
Rear Crossmember-to-Side Sill Nut	30	20-35	41	27-47
Rear Support Bracket-to-Transmission	33	27-38	45	37-52
Rear Support Cushion-to-Bracket	30	25-35	41	34-47
Rear Support Cushion-to-Crossmember	18	12-25	24	16-34
Rocker Arm Assembly-to-Cylinder Head	19	16-26	26	22-35
Spark Plug	11	7-15	15	10-20
Starter Motor-to-Converter Housing Bolt	18	13-25	24	18-34
Timing Case Cover-to-Block Screws	5	4-8	7	5-11
Timing Case Cover-to-Block Studs	16	13-19	22	18-26
Thermostat Housing Bolt	13	10-18	18	14-24
Vibration Damper Bolt (Lubricated)	80	70-90	108	95-122
Water Pump Bolt	13	9-18	18	12-24

All Torque values given in foot-pounds and newton-meters with dry fits unless otherwise specified.

Refer to the Standard Torque Specifications and Capscrew Markings Chart in Chapter A of this manual for any torque specifications not listed above.

60264B

EIGHT-CYLINDER ENGINE

GENERAL

The 360 (6 liters) CID engine is a 90-degree V-8 cylinder design incorporating overhead valves (figs. 1B-99 and 1B-100). The cylinders are numbered from front to rear: 1-3-5-7 on the left bank and 2-4-6-8 on the right bank. The cylinder firing order is 1-8-3-6-5-7-2.

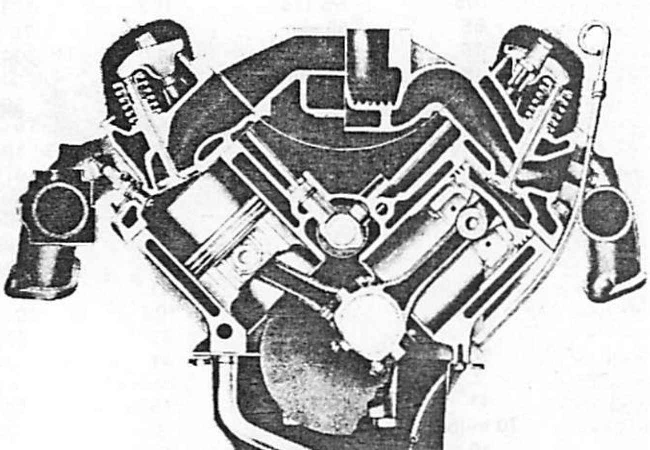

41920

Fig. 1B-99 Sectional View of Eight-Cylinder Engine Assembly

The crankshaft, supported by five two-piece main bearing inserts, rotates in a counterclockwise direction as viewed from the rear. The camshaft is supported by five one-piece, line-bored bearings.

Bridge and pivot assemblies control movement of intake and exhaust rocker arms and are paired by cylinder.

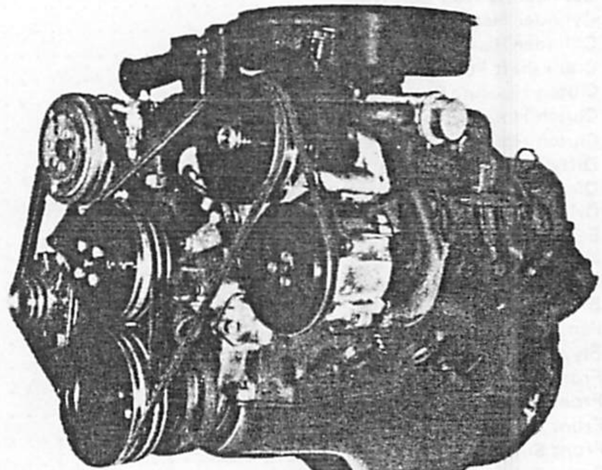

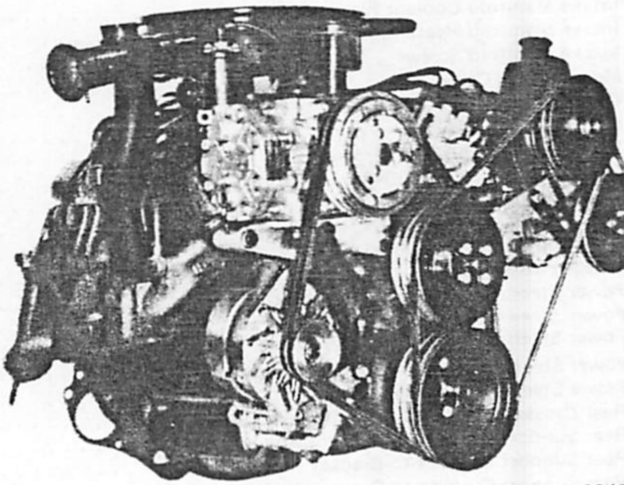

60487

Fig. 1B-100 Typical Eight-Cylinder Engine Assembly

Engine Identification

The cubic-inch displacement numbers are cast into both sides of the cylinder block. These numbers are located between the engine mounting bracket bosses.

Engine Type and Build Date Code

The engine Type and Build Date Code is located on a plate attached to the right bank cylinder head cover (fig. 1B-101).

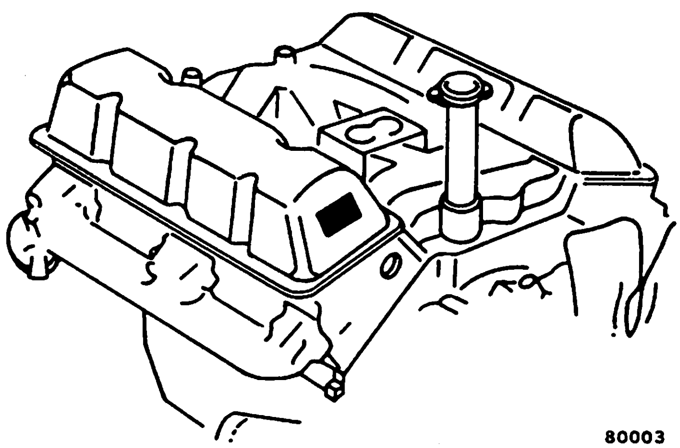

Fig. 1B-101 Engine Type and Build Date Code Location

The code numbers identify the year, month, and day that the engine was built. The code letter identifies the cubic inch displacement, number of carburetor venturi and compression ratio.

The example code identifies a 360 CID (6 liters) engine with 2V carburetor and 8.25:1 compression ratio built on October 15, 1981.

Engine Type and Build Date Code

Letter Code	CID	Carburetor	Compression Ratio
N	360	2V	8.25:1

1st Character (Year)	2nd and 3rd Characters (Month)	4th Character (Engine Type)	5th and 6th Characters (Day)
1—1981 2—1982	01 - 12	N	01 - 31

EXAMPLE: 1 10 N 15

60265

Oversize or Undersize Components

It is sometimes necessary to machine all cylinder bores 0.010-inch (0.254 mm) oversize, all crankshaft main bearing journals 0.010-inch (0.254 mm) undersize, all connecting rod journals 0.010-inch (0.254 mm) undersize, or all camshaft bearing bores 0.010-inch (0.254 mm) oversize. If so, the engine has a single or double letter code stamped adjacent to the Engine Type and Build Date Code on the plate attached to the right bank cylinder head cover. The code is explained in the Oversize or Undersize Components Code chart.

Oversize or Undersize Components Code

Single Letter B	cylinder bore 0.010-inch (0.254mm) oversize
Single Letter M	main bearings 0.010-inch (0.254mm) undersize
Single Letter F	connecting rod bearings 0.010-inch (0.254mm) undersize
Double Letters PM	main and connecting rod bearings 0.010-inch (0.254mm) undersize
Single Letter C	camshaft bearing bores 0.010-inch (0.254mm) oversize

60258

SHORT ENGINE ASSEMBLY (SHORT BLOCK)

A service replacement short engine assembly (short block) may be installed whenever the original engine block is damaged beyond feasible repair. A short engine assembly consists of an engine block, piston and connecting rod assemblies, crankshaft, camshaft, timing sprockets and chain. When installing a short engine assembly, always install a replacement oil pump pickup tube and screen assembly.

NOTE: *Short engine assemblies include a replacement engine type and build date code plate. Remove the original plate and attach the replacement plate to right cylinder head cover.*

ENGINE MOUNTING

Installation includes transfer of required component parts from the worn or damaged original engine. Follow the appropriate procedures for cleaning, inspection and tightening as outlined in this section.

Resilient rubber mounting cushions support the engine and transmission at three points. A cushion is located at each side on the centerline of the engine. The rear is supported by a cushion between the transmission extension housing and the rear support crossmember (fig. 1B-102).

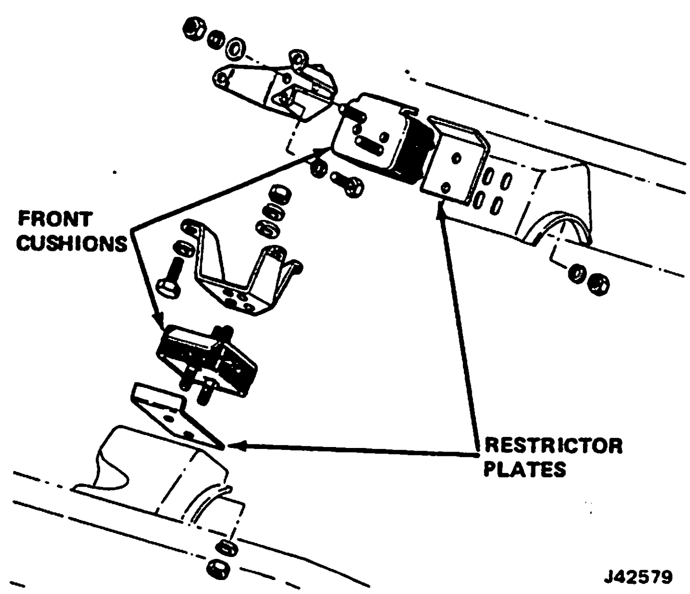

Fig. 1B-102 Typical Engine Mounting

Removal or replacement of any cushion may be accomplished by supporting the weight of the engine or transmission in the area of the cushion.

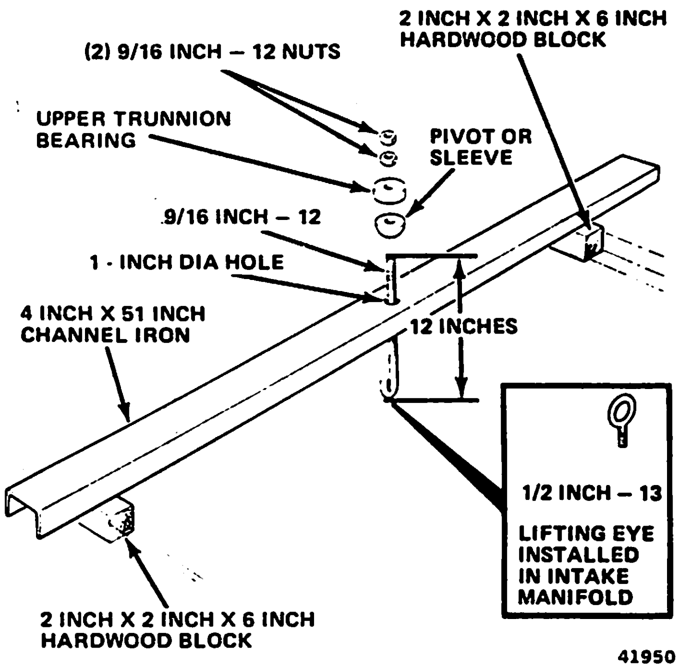

Fig. 1B-103 Engine Holding Fixture

ENGINE HOLDING FIXTURE

If necessary to remove the front engine mounts to perform service such as oil pan removal, fabricate an engine holding fixture such as that illustrated in figure 1B-103.

ENGINE REMOVAL

The engine is removed with the transmission and flywheel/drive plate housing detached.

(1) On Cherokee, Wagoneer and Truck vehicles, mark hood hinge locations at hood panel for ease of alignment during installation. Remove hood from hinges.

(2) Remove air cleaner assembly.

WARNING: *If engine has been recently operated, use care to prevent scalding by hot coolant. System is pressurized.*

(3) Drain cooling system and disconnect upper and lower radiator hoses. Disconnect heater hoses.

NOTE: *If coolant is reusable, drain into clean container.*

(4) If equipped with automatic transmission, disconnect fluid cooler tubing from radiator and where attached to engine.

NOTE: *If the vehicle is equipped with a radiator shroud, separate the shroud from the radiator to facilitate removal and installation of the radiator and fan assembly.*

(5) Remove radiator.

(6) Remove fan assembly. If equipped with power steering, remove fluid from pump reservoir and disconnect hoses.

(7) If equipped with air conditioning, turn both service valves clockwise to front-seated position. Vent compressor refrigerant charge by slowly loosening service valve fittings. Remove service valves from compressor.

(8) Remove Cruise Command vacuum servo bellows and mounting bracket as an assembly, if equipped.

(9) On Cherokee, Wagoneer and Truck vehicles, remove battery.

(10) Disconnect wire harness from engine and move aside.

(11) Disconnect following hoses, as applicable:

(a) Fuel supply and return hoses at chassis tubing.

(b) Vacuum hose at power brake unit.

(c) Vacuum hose for heater damper doors at intake manifold.

(12) If equipped with automatic transmission, disconnect transmission filler tube bracket from right cylinder head. Do not remove filler tube from transmission.

(13) Remove both engine front support cushion-to-frame retaining nuts.

(14) Support weight of engine with lifting device.

(15) On vehicles equipped with automatic transmission, remove upper screws securing drive plate housing to engine. If equipped with manual transmission, remove upper screws securing flywheel housing to engine.

(16) Disconnect exhaust pipe from exhaust manifolds and support bracket.

(17) Remove starter motor.

(18) Support transmission with floor jack.

(19) If equipped with automatic transmission:

(a) Remove drive plate housing inspection cover. Scribe mark to indicate assembled position of converter and drive plate and remove converter-to-drive plate bolts.

(b) Remove lower throttle valve and inner manual linkage support. Disconnect throttle valve rod at lower end of bellcrank.

(20) Remove remaining screws securing flywheel/drive plate housing to engine. If equipped with manual transmission, remove flywheel housing lower cover.

CAUTION: *If equipped with power brakes, avoid damaging the power unit while removing the engine.*

(21) Remove engine by lifting upward and forward.

(22) Remove remaining screws securing flywheel/drive plate housing to engine. If equipped with manual transmission, remove flywheel housing lower cover.

ENGINE INSTALLATION

(1) Lower engine slowly into engine compartment and align with flywheel/drive plate housing. With manual transmissions, ensure clutch shaft is aligned properly with splines of clutch driven plate.

(2) Install flywheel/drive plate housing screws. Tighten screws with specified torque. Automatic transmission: 28 foot-pounds (38 N•m). Manual transmission: 27 foot-pounds (37 N•m).

(3) Remove floor jack used to support transmission.

(4) If equipped with automatic transmission, align scribe marks previously made on converter and drive plate, install converter-to-drive plate bolts and tighten with specified torque. Install throttle valve bellcrank and manual linkage support.

(5) Install inspection cover (automatic transmission) or flywheel housing lower cover (manual transmission).

(6) Install starter motor.

(7) Lower engine onto supports. Remove lifting device.

(8) Install front support cushion retaining nuts. Tighten nuts with 33 foot-pounds (45 N•m) torque.

(9) Connect exhaust pipe to exhaust manifolds and support bracket.

(10) If equipped with automatic transmission, connect transmission filler tube bracket to right cylinder head.

(11) Install battery, if removed.

(12) Install Cruise Command vacuum servo bellows and mounting bracket, if removed.

(13) Connect all wires, tubing, linkage and hoses to engine.

(14) Connect receiver outlet to disconnect coupling. Connect condenser and evaporator lines to compressor.

CAUTION: *Both service valves must be open before the air conditioning system is operated.*

(15) Purge compressor of air.

(16) If equipped with power steering, connect hoses and fill pump reservoir to specified level.

(17) Install radiator fan assembly and tighten retaining screws with 18 foot-pounds (24 N•m) torque.

(18) Install radiator and connect upper and lower hoses. If equipped with automatic transmission, connect fluid cooler tubing.

(19) Fill cooling system to specified level.

(20) Install air cleaner assembly.

(21) Install air cleaner assembly.

WARNING: *Use extreme caution when engine is operating. Do not stand in direct line with fan. Do not put hands near pulleys, belts or fan. Do not wear loose clothing.*

(21) Start engine. Inspect all connections for leaks. Stop engine.

(22) If removed, install and align hood assembly.

(23) If removed, install transmission access cover, floormat and transfer case shift lever boot.

VALVES AND ACTUATING COMPONENTS

General

All eight-cylinder engines have overhead valves operated by hydraulic tappets, push rods and rocker arms. A chain-driven camshaft is mounted in the cylinder block. The hydraulic valve tappets provide automatic valve lash adjustment.

Rocker Arm Assembly

The intake and exhaust rocker arms for each cylinder pivot on a bridge and pivot assembly that is secured to the cylinder head by two capscrews (fig. 1B-104). The bridge and pivot assembly maintains correct rocker arm-to-valve tip alignment. Each rocker arm is actuated

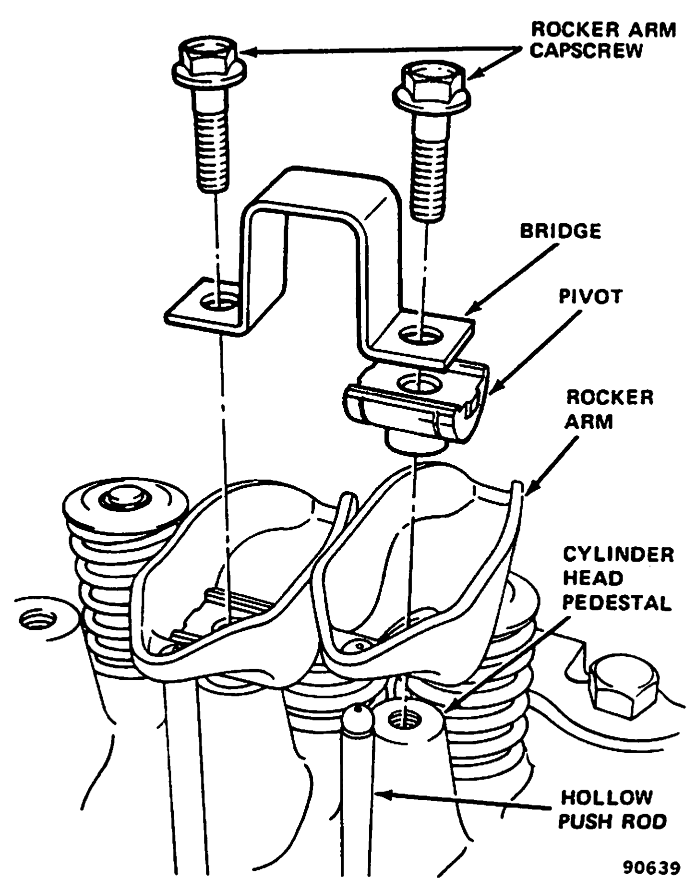

Fig. 1B-104 Rocker Arm Assembly

by a hollow steel push rod with a hardened steel ball at each end. The hollow push rods also route oil to the rocker arm assemblies.

Removal

(1) Remove cylinder head cover.
(2) Remove two capscrews at each bridge. Alternately loosen capscrews one turn at a time to avoid damaging bridge.
(3) Remove bridge and pivot assemblies and place on bench in same order as removed.
(4) Remove rocker arms and place on bench in same order as removed.
(5) Remove push rods and place on bench in same order as removed.

Cleaning and Inspection

Clean all parts with cleaning solvent. Use compressed air to clean out the oil passages in the rocker arms and push rods.

Inspect the pivot contact surface of each rocker arm and push rod. Replace parts that are scuffed, pitted or excessively worn. Inspect the valve stem contact surface of each rocker arm and replace if deeply pitted. Inspect each push rod end for scuffing or excessive wear. **If any push rod is excessively worn from lack of oil, replace the push rod as well as the corresponding hydraulic valve tappet and rocker arm.**

It is not normal for a wear pattern to exist along the length of the push rod. Inspect the cylinder head for obstruction if this condition exists.

Installation

(1) Install push rods. **Ensure bottom end of each rod is centered in plunger cap of hydraulic valve tappet.**
(2) Install bridge and pivot assembly and pair of rocker arms adjacent to cylinder from where they were originally removed.
(3) Loosely install two capscrews through each bridge. Tighten capscrews alternately, one turn at a time, to avoid damaging bridge. Tighten with 19 foot-pounds (26 N•m) torque.
(4) Reseal and install cylinder head cover.
(5) Install retaining screws and washers. Tighten screws with 50 inch-pounds (6 N•m) torque.

Valves

The following procedures apply only after the cylinder head has been removed from the engine and the bridge and pivot assemblies, rocker arms and push rods removed from the head. If the head has not been removed from the engine, refer to Cylinder Head for removal procedure.

Removal

(1) Compress each valve spring with C-clamp type spring compressor tool. Remove valve locks and retainers. Release compressor tool.
(2) Remove valve springs.
(3) Remove valve stem oil deflectors.
(4) Remove valves individually and place in rack in same order as installed in cylinder head.

Cleaning and Inspection

Remove all carbon deposits from the combustion chambers, valve ports, and valve stems and heads.

Remove all foreign material and gasket cement from the cylinder head gasket mating surface.

Inspect for cracks in the combustion chambers and valve ports and in the gasket surface area at each coolant passage.

Inspect for burned or cracked valve heads and scuffed valve stems. Replace any valve that is bent, warped or scuffed.

Valve Refacing

Use a valve refacing machine to reface intake and exhaust valves to specified angle. After refacing, at least 1/32-inch (0.787 mm) margin must remain. If not, replace the valve. Examples of correct and incorrect valve refacing are illustrated in figure 1B-105.

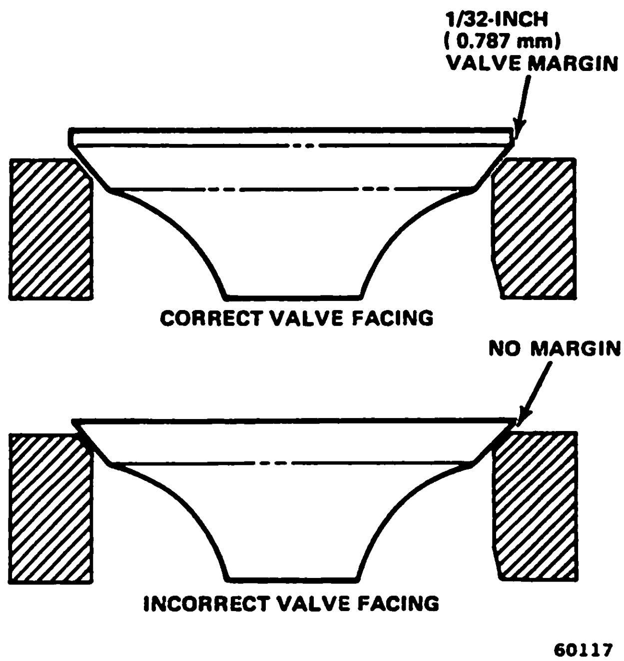

Fig. 1B-105 Valve Refacing

Resurface and rechamfer the valve stem tip when excessively worn. **Never remove more than 0.020 inch (0.508 mm).**

Valve Seat Refacing

Install a pilot of the correct size in the valve guide and reface the valve seat to the specified angle with a dressing stone in good condition. Remove only enough metal to provide a smooth finish. This is especially important on exhaust valve seats. The seat hardness varies in depth. Use tapered stones to obtain the specified seat widths when required. Maximum seat runout is 0.0025 inch (0.064 mm) (fig. 1B-106).

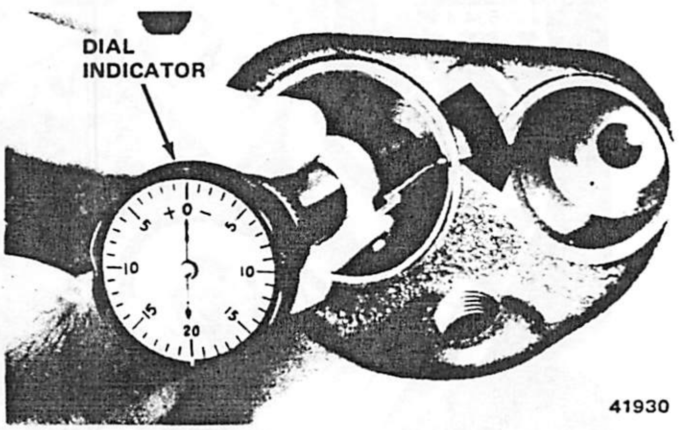

Fig. 1B-106 Valve Seat Runout Measurement

Valve Stem Oil Deflector Replacement

Nylon valve stem oil deflectors are installed on each valve stem to prevent lubrication oil from entering the combustion chamber through the valve guide bores. Replace oil deflectors whenever valve service is performed or if the deflectors have deteriorated.

Oil deflector replacement requires removal of valve springs. Refer to Valve Springs for procedure.

Valve Guides

The valve guides are an integral part of the cylinder head and are not replaceable. When the stem-to-guide clearance is excessive, ream the valve guide bores to the next larger valve stem size. Service valves are available with 0.003-inch (0.076 mm), 0.015-inch (0.127 mm) and 0.030-inch (0.760 mm) oversize stems.

Refer to the Valve Guide Reamer Size chart for listing of reamers.

Valve Guide Reamer Sizes

Reamer Tool Number	Size
J-6042-1	0.003-inch (0.076mm)
J-6042-5	0.015-inch (0.381mm)
J-6042-4	0.030-inch (0.762mm)

60268

NOTE: *Ream valve guide bores in steps. Start with the 0.003-inch (0.076 mm) reamer and progress to the size required.*

Valve Stem-to-Guide Clearance

Valve stem-to-guide clearance can be measured by either one of two methods:

Preferred Method

(1) Remove valve from head and clean valve guide bore with solvent and bristle brush.

(2) Insert telescoping gauge into valve guide bore approximately 3/8 inch (9.525 mm) from valve spring side of head (fig. 1B-107) with contacts crosswise to head. Measure telescoping gauge with micrometer.

(3) Repeat measurement with contacts lengthwise to cylinder head.

(4) Compare lengthwise and crosswise measurements to determine out-of-roundness. If measurements differ by more than 0.0025 inch (0.0635 mm), ream guide bore to accommodate oversize valve stem.

(5) Compare valve guide bore diameter measurement with diameter listed in Specifications. If measurement is larger by more than 0.003 inch (0.076 mm), ream guide bore to accommodate oversize valve stem.

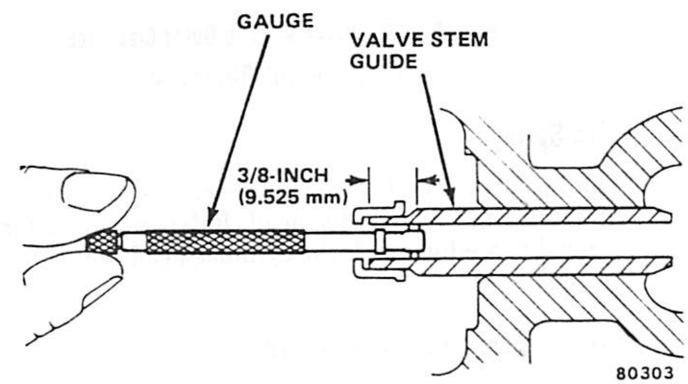

Fig. 1B-107 Measuring Valve Guide Bore with Telescoping Gauge

Alternate Method

Use a dial indicator to measure the lateral movement of the valve stem with the valve installed in its guide and barely off the valve seat (fig. 1B-108). Correct clearance is 0.001 to 0.003 inch (0.025 to 0.076 mm).

Installation

(1) Thoroughly clean valve stems and valve guide bores.

(2) Lightly lubricate stem and install valve in same valve guide bore from where it was originally removed.

(3) Install replacement valve stem oil deflector on valve stem.

(4) Position valve spring and retainer on cylinder head and compress valve spring with compressor tool. Install valve locks and release tool.

(5) Tap valve spring from side to side with light hammer to seat spring properly on cylinder head.

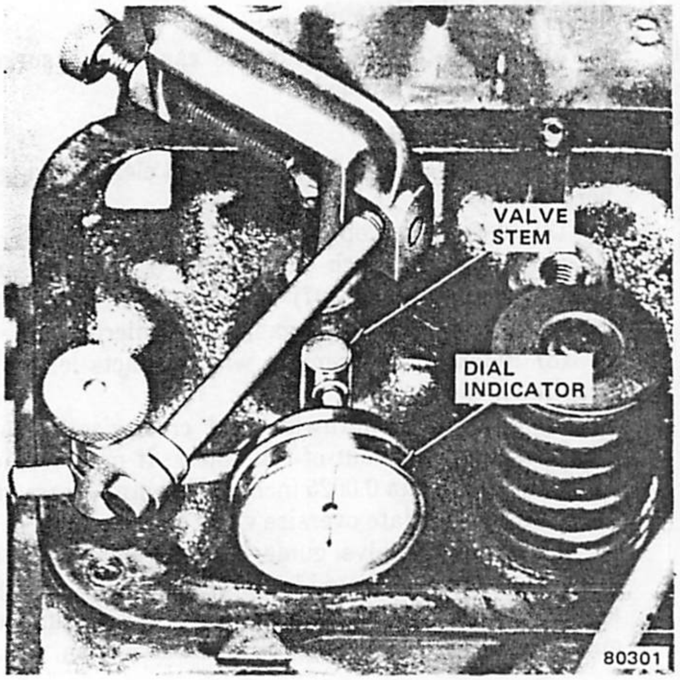

Fig. 1B-108 Valve Stem-to-Guide Clearance Measurement with Dial Indicator

Valve Springs

Valve springs and oil deflectors can be removed without removing the cylinder head. Refer to Valves for the removal procedure with the cylinder head removed from the engine.

Valve Spring and Oil Deflector Removal

The valve spring is held in place on the valve stem by a retainer and a set of valve locks. The locks can be removed only by compressing the valve spring.

(1) Remove cylinder head cover.

(2) Remove bridge and pivot assemblies and rocker arms from valves requiring valve spring or oil deflector removal. Remove two capscrews at each bridge. Alternately loosen capscrews, one turn at a time, to avoid damaging bridge.

(3) Remove push rods.

NOTE: *Retain rocker arms, bridge and pivot assemblies and push rods in the same order as removed.*

(4) Remove spark plug from cylinder that requires valve spring or oil deflector removal.

(5) Install 14 mm (thread size) air adapter in spark plug hole.

NOTE: *An adapter can be constructed by welding an air hose connection to the body of a spark plug having the porcelain removed.*

(6) Connect air hose to adapter and maintain at least 90 psi (620 kPa) in cylinder to hold valves against their seats.

(7) Use Valve Spring Remover and Installer Tools J-22534-1, J-22534-4, and J-22534-5 to compress valve spring. Remove valve locks (fig. 1B-109).

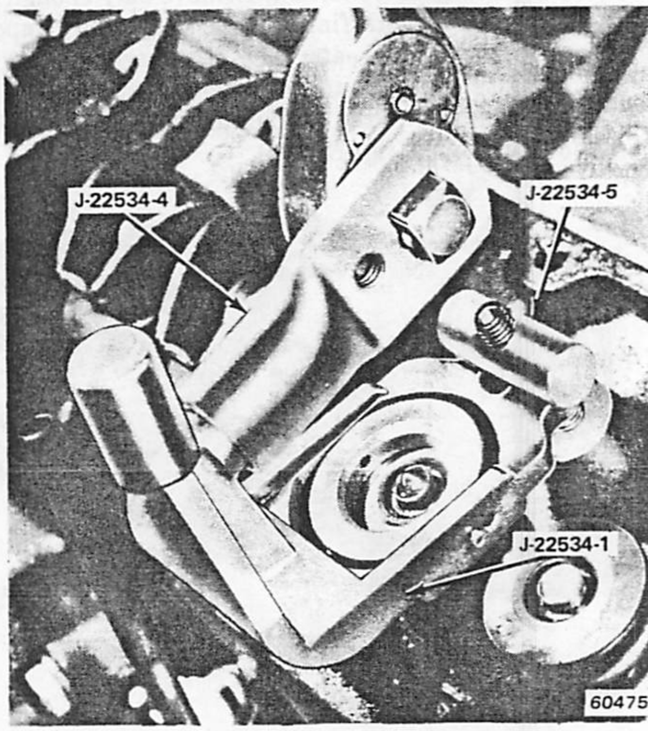

Fig. 1B-109 Valve Spring Removal

(8) Remove valve spring and retainer from cylinder head.

(9) Remove oil deflector.

Valve Spring Tension Test

Use Valve Spring Tester J-8056, or equivalent, to test each valve spring for the specified tension value (fig. 1B-110). Replace springs that are not within specification. Replace springs that bind because of warpage.

Installation

(1) Use 7/16-inch (11 mm) deep socket and hammer to gently tap oil deflector onto valve stem.

NOTE: *A close-coil valve spring is used with all valves. The close-coil end must face the cylinder head when installed.*

(2) Install valve spring and retainer.

(3) Compress valve spring with Valve Spring Remover and Installer Tools J-22534-1, J-22534-4 and J-22534-5. Insert valve locks. Release spring compression and remove tool.

(4) Tap valve spring from side to side with light hammer to ensure spring is seated properly on cylinder head.

(5) Disconnect air hose, remove air adapter from spark plug hole and install spark plug.

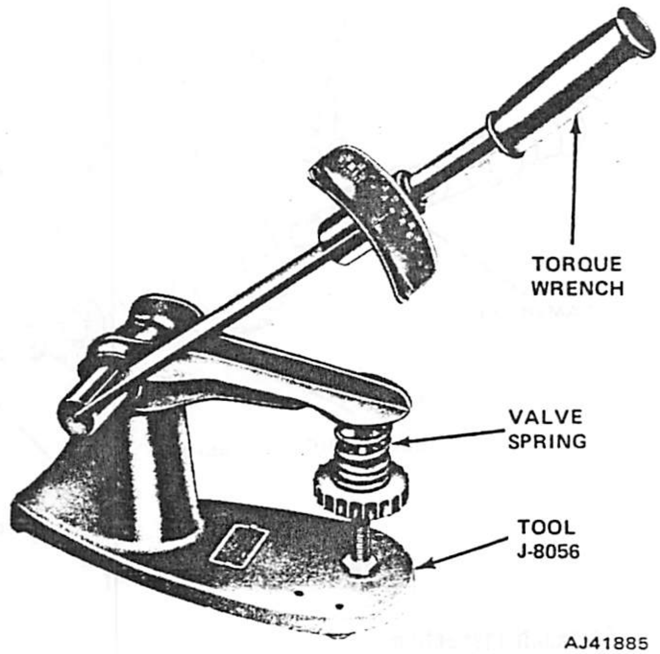

Fig. 1B-110 Valve Spring Tester

(6) Install push rods. Ensure bottom end of each rod is centered in plunger cap of hydraulic valve tappet.

(7) Install rocker arms and bridge and pivot assembly. At each bridge, tighten capscrews alternately, one turn at a time, to avoid damaging bridge. Tighten capscrews with 19 foot-pounds (25 N•m) torque.

(8) Reseal and install cylinder head cover.

(9) Install retaining screws and washers. Tighten screws with 50 inch-pounds (6 N•m) torque.

CAMSHAFT AND BEARINGS

General

The camshaft is supported by five steel-shelled, babbitt-lined bearings pressed into the block and line reamed. The step bored camshaft journals are larger at the front bearing than at the rear to permit easy removal and installation of the camshaft. All camshaft bearings are pressure lubricated.

NOTE: *Do not replace camshaft bearings unless special removal and installation tools are available.*

Camshaft end play is maintained by the load placed on the camshaft by the oil pump and distributor drive gear. The helical cut of the gear holds the camshaft sprocket thrust face against the cylinder block face to maintain zero camshaft end play during engine operation. The rear camshaft bearing journal has two holes drilled through it to relieve pressure that could develop between the journal and camshaft plug and force the camshaft forward.

Cam Lobe Lift Measurement

(1) Remove cylinder head cover and gasket.

(2) Remove bridge and pivot assemblies and rocker arms. Alternately loosen capscrews one turn at a time to avoid damaging bridge.

(3) Remove spark plugs.

(4) Use piece of rubber tubing to secure dial indicator on end of push rod (fig. 1B-111).

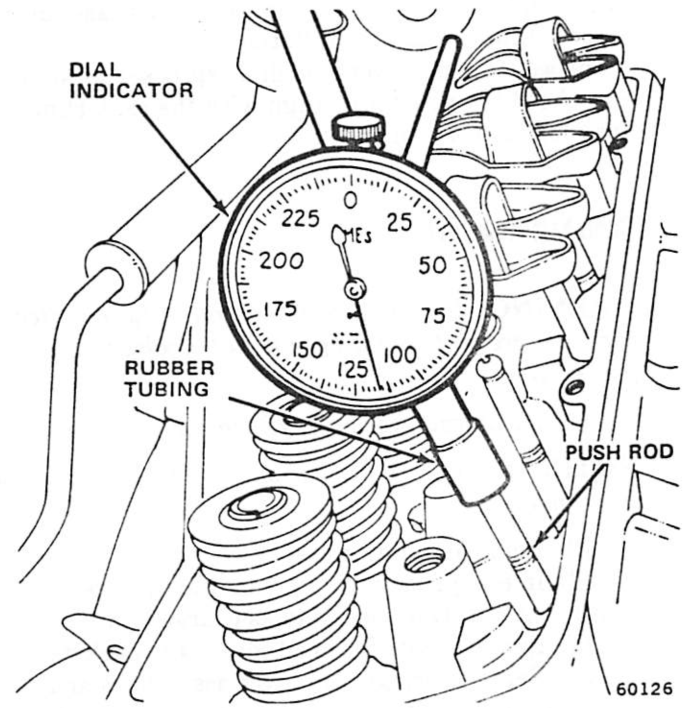

Fig. 1B-111 Cam Lobe Lift Measurement

(5) Rotate crankshaft until cam lobe base circle (push rod down) is under valve tappet.

(6) Set dial indicator to zero.

(7) Rotate crankshaft until point of maximum push rod upward movement occurs.

(8) Note travel on dial indicator. Correct lift is 0.260 to 0.270 inch (6.604 to 6.858 mm).

NOTE: *Rocker arm ratio is 1.6:1. Multiply cam lift by 1.6 to determine valve lift.*

Valve Timing

(1) Remove spark plugs.

(2) Remove cylinder head covers and gaskets.

(3) Remove bridge and pivot assemblies and rocker arms from No. 1 cylinder.

(4) Rotate crankshaft until No. 6 piston is at top dead center (TDC) on compression stroke. This positions No. 1 piston at TDC on exhaust stroke in valve overlap position.

(5) Rotate crankshaft counterclockwise 90° as viewed from front.

(6) Install dial indicator on No. 1 intake valve push rod end. Use rubber tubing to secure stem on push rod.

(7) Set dial indicator at zero.

(8) Rotate crankshaft slowly in direction of normal rotation (clockwise viewed from front) until dial indicator indicates 0.020 inch (0.508 mm).

(9) This should align milled timing mark on vibration damper with TDC mark on timing degree scale. If more than 1/2-inch (13 mm) variation exists in either direction from TDC mark, remove timing case cover and inspect timing chain installation.

Inspect for incorrect camshaft sprocket location. The sprocket keyway should align with the centerline of the first lobe of the camshaft.

Camshaft Removal

WARNING: *If engine has been recently operated, use care to prevent scalding by hot coolant. System is pressurized.*

(1) Drain radiator and cylinder block.

NOTE: *If coolant is reusable, drain into clean container.*

(2) Remove radiator assembly.

(3) If equipped with air conditioning, remove condenser and receiver assembly as charged unit.

(4) Remove cylinder head covers and gaskets.

(5) Remove bridge and pivot assemblies and rocker arms. Alternately loosen capscrews, one turn at a time, to avoid damaging bridge.

(6) Remove push rods.

NOTE: *Retain push rods, rocker arms, bridge and pivot assemblies and tappets in the same order as removed.*

(7) Remove intake manifold assembly.

(8) Remove tappets.

(9) Remove drive belts.

(10) Remove fan and hub assembly.

(11) Remove distributor.

(12) Remove damper pulley and vibration damper.

(13) Remove timing case cover.

(14) Install vibration damper screw with two or more flat washers to provide means of rotating crankshaft.

(15) Rotate crankshaft until timing mark on crankshaft sprocket is closest to and on centerline with timing mark on camshaft sprocket.

(16) Remove retaining screw from camshaft. Remove retaining screw from crankshaft.

(17) Remove distributor drive gear and fuel pump eccentric from the camshaft (fig. 1B-112).

(18) Remove crankshaft sprocket, camshaft sprocket and timing chain as assembly.

(19) Remove hood latch support bracket, front bumper or grille as required and remove camshaft.

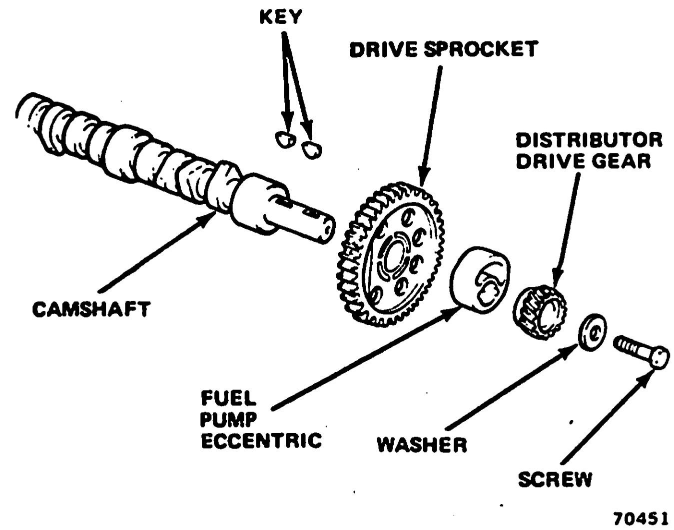

Fig. 1B-112 Camshaft Assembly

Camshaft Inspection

Inspect the camshaft bearing journals for an uneven wear pattern or rough finish. Replace camshaft if either condition exists.

Inspect the distributor drive gear for damage or excessive wear.

Inspect fuel pump eccentric for excessive wear.

Inspect each cam lobe and the associated hydraulic valve tappet for wear. If the face of the tappet(s) is worn concave and the corresponding camshaft lobe(s) is also worn, replace both camshaft and tappet(s).

Camshaft Installation

(1) Lubricate entire camshaft generously with Jeep Engine Oil Supplement (EOS), or equivalent.

(2) Carefully install camshaft into engine block.

(3) Assemble timing chain, crankshaft sprocket and camshaft sprocket with timing marks aligned. Refer to Timing Chain Installation for procedure.

(4) Install oil slinger on crankshaft.

(5) Install fuel pump eccentric and distributor drive gear on camshaft (fig. 1B-112). Tighten retaining screw with 30 foot-pounds (41 N•m) torque.

NOTE: *The fuel pump eccentric has the word "REAR" stamped on it to indicate proper installed position. The camshaft washer (fig. 1B-112) fits into the recess in the distributor drive gear.*

(6) Install replacement timing case cover gasket.

(7) Install timing case cover.

(8) Install replacement oil seal. Apply light film of engine oil to lips of seal.

(9) Install vibration damper.

(10) Install damper pulley with retaining bolts. Tighten bolts with 30 foot-pounds (41 N•m) torque.

(11) Install hydraulic valve tappets lubricated with Jeep Engine Oil Supplement (EOS), or equivalent.

NOTE: *Do not drain the EOS from the engine for at least 1,000 miles (1 609 km) or until the next scheduled oil change.*

(12) Install intake manifold assembly with replacement gasket.
(13) Install push rods.
(14) Install rocker arms and bridge and pivot assemblies. Tighten capscrews alternately, one turn at a time, to avoid damaging bridge. Tighten capscrews with 19 foot-pounds (26 N•m) torque.
(15) Reseal and install cylinder head covers.
(16) Install fuel pump.
(17) Rotate crankshaft until No. 1 piston is at TDC position on compression stroke.

NOTE: *After No. 1 intake valve has closed, TDC can be attained by rotating the crankshaft clockwise as viewed from the front until the timing mark on the vibration damper aligns with the TDC index on the timing degree scale.*

(18) Install distributor so that rotor is aligned with No. 1 terminal of cap when fully seated on block.
(19) Install distributor cap.
(20) Install ignition wires.
(21) If removed, install air conditioner condenser and receiver assembly.

CAUTION: *Both service valves must be open before the air conditioning system is operated.*

(22) Install hood latch support bracket, front bumper or grille, if removed.
(23) Install radiator.
(24) Install fan and hub assembly.
(25) Fill cooling system to specified level.
(26) Install and adjust drive belts to proper tension. Refer to Chapter 1C—Cooling Systems for procedures.

HYDRAULIC VALVE TAPPETS

A hydraulic valve tappet consists of a tappet body, plunger, plunger return spring, check valve assembly, metering disc, plunger cap and lockring (fig. 1B-113).

The tappet operates in a guide bore that has an oil passage drilled into the adjoining oil gallery.

The operating mode of the hydraulic tappet begins when the tappet is on the heel (base circle) of the cam lobe (engine valve closed). A groove in the tappet body aligns with the tappet oil gallery, admitting pressurized oil into the tappet (fig. 1B-114). A hole and groove arrangement admits the oil to the inside of the plunger. Oil is forced past the plunger check valve and fills the chamber between the plunger and tappet body. When the chamber is full, additional oil in the plunger body unseats the metering disc, and a spurt of oil flows up the pushrod to lubricate the rocker arm assembly. These events all take place while the tappet is on the heel of the cam lobe. As the cam turns, the lobe begins exerting force on the tappet body. This force is transferred by the trapped oil in the tappet chamber to the plunger and finally to the pushrod and rocker arm assembly. The engine valve opens. While the valve is open, the trapped oil is subjected to considerable pressure and some of it escapes between the plunger and the tappet body (leakdown). The cycle is completed as the cam lobe rotates back to the starting position and another charging cycle begins. In this way, zero valve lash is maintained and engine noise is reduced.

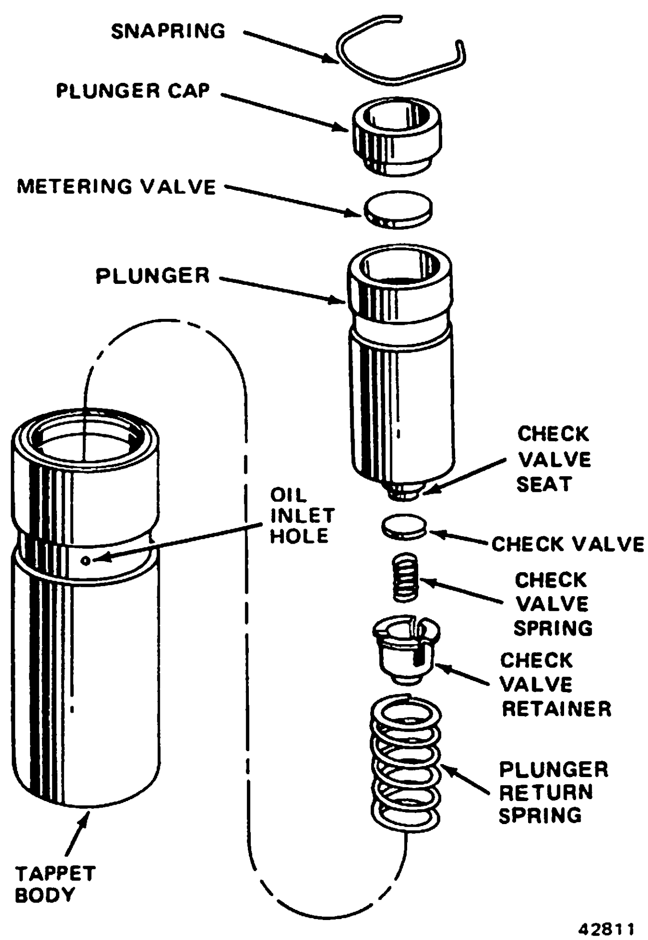

Fig. 1B-113 Hydraulic Tappet Assembly

Removal

(1) Remove cylinder head cover.
(2) Remove bridge and pivot assemblies and rocker arms. Alternately loosen capscrews, one turn at a time, to avoid damaging bridge.
(3) Remove push rods.

NOTE: *Retain bridge and pivot assemblies, rocker arms and push rods in the same order as removed.*

(4) Remove intake manifold.
(5) Remove tappet from guide bore in engine block with Tool J-21884.

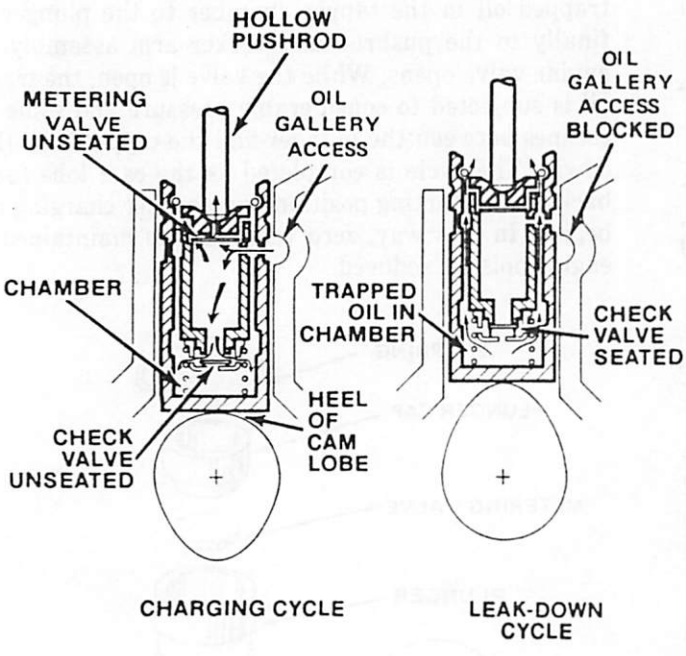

Fig. 1B-114 Hydraulic Tappet Operation

Cleaning and Inspection

(1) Release lockring.

(2) Remove plunger cap, metering disc, plunger assembly and plunger return spring from tappet body.

NOTE: *Retain the tappets and all components in the same order as removed. Do not interchange components.*

(3) Clean all tappet components in cleaning solvent to remove all varnish and gum deposits.

(4) Visually inspect each tappet assembly for evidence of scuffing on side and face of tappet body. Inspect tappet face for wear using straightedge across face. If tappet face is concave and corresponding lobe on camshaft is worn, replace camshaft and tappets.

(5) Replace entire assembly if any component is worn or damaged.

(6) Install plunger return spring, check valve assembly, plunger, metering disc and plunger cap in tappet body.

(7) Use push rod on plunger cap to compress plunger assembly and install lockring.

Hydraulic Tappet Leak-Down Rate Test

After cleaning, inspection and assembly, use Tester J-5790 to test tappet leak-down rate and to ensure zero-lash operating condition (fig. 1B-115).

(1) Swing weighted arm of tester away from ram of tester.

(2) Place 0.312- to 0.313-inch (7.92 to 7.95 mm) diameter ball bearing on plunger cap of tappet.

(3) Lift ram and place tappet with ball bearing inside tester cup.

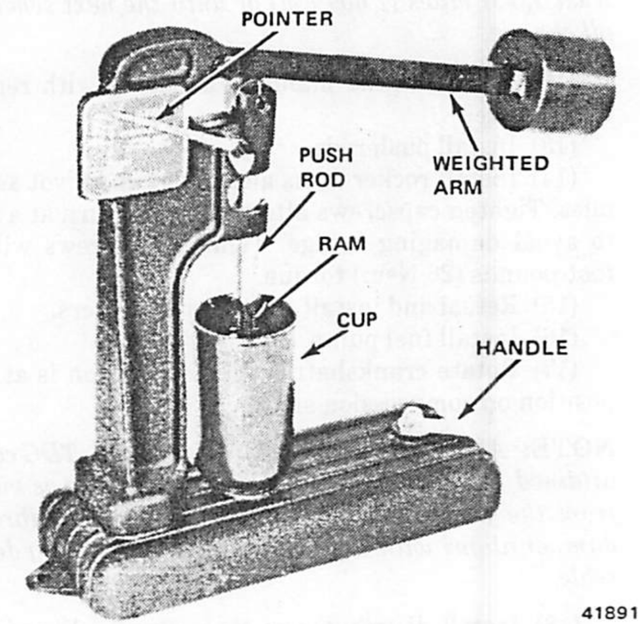

Fig. 1B-115 Hydraulic Tappet Leak-Down Rate Tester J-5790

(4) Lower ram, then adjust nose of ram until it contacts ball bearing.

(5) Fill tester cup with valve tappet test oil J-5268, or equivalent, until tappet is completely covered.

(6) Swing weighted arm onto ram and pump up and down on tappet to remove air. When air bubbles cease, swing weighted arm away and allow plunger to rise to normal position.

(7) Adjust nose of ram to align pointer with SET mark on scale of tester and tighten hex nut.

(8) Slowly swing weighted arm onto ram. Rotate cup by turning handle at base of tester clockwise one revolution every two seconds.

(9) Time leak-down interval from instant pointer aligns with START mark on scale until pointer aligns with 0.125 mark.

(10) Acceptable tappet will require 20 to 110 seconds interval to leak down. Replace tappets with leak-down rate outside this range.

NOTE: *Do not charge the tappet assemblies with engine oil because they will charge themselves within three to eight minutes of engine operation.*

Installation

(1) Dip each tappet assembly in Jeep Engine Oil Supplement (EOS), or equivalent. Install tappet in same bore from where it was originally removed.

(2) Install push rods in same position as removed.

(3) Install rocker arm and bridge and pivot assemblies in same position as removed. Tighten capscrews alternately, one turn at a time, to avoid damaging bridge. Tighten with 19 foot-pounds (26 N•m) torque.

(4) Pour remaining EOS over entire valve train mechanism.

NOTE: *Do not drain the EOS from the engine for at least 1,000 miles (1 609 km) or until the next scheduled oil change.*

(12) Install intake manifold assembly with replacement gasket.

(13) Install push rods.

(14) Install rocker arms and bridge and pivot assemblies. Tighten capscrews alternately, one turn at a time, to avoid damaging bridge. Tighten capscrews with 19 foot-pounds (26 N•m) torque.

(15) Reseal and install cylinder head covers.

(16) Install fuel pump.

(17) Rotate crankshaft until No. 1 piston is at TDC position on compression stroke.

NOTE: *After No. 1 intake valve has closed, TDC can be attained by rotating the crankshaft clockwise as viewed from the front until the timing mark on the vibration damper aligns with the TDC index on the timing degree scale.*

(18) Install distributor so that rotor is aligned with No. 1 terminal of cap when fully seated on block.

(19) Install distributor cap.

(20) Install ignition wires.

(21) If removed, install air conditioner condenser and receiver assembly.

CAUTION: *Both service valves must be open before the air conditioning system is operated.*

(22) Install hood latch support bracket, front bumper or grille, if removed.

(23) Install radiator.

(24) Install fan and hub assembly.

(25) Fill cooling system to specified level.

(26) Install and adjust drive belts to proper tension. Refer to Chapter 1C—Cooling Systems for procedures.

HYDRAULIC VALVE TAPPETS

A hydraulic valve tappet consists of a tappet body, plunger, plunger return spring, check valve assembly, metering disc, plunger cap and lockring (fig. 1B-113).

The tappet operates in a guide bore that has an oil passage drilled into the adjoining oil gallery.

The operating mode of the hydraulic tappet begins when the tappet is on the heel (base circle) of the cam lobe (engine valve closed). A groove in the tappet body aligns with the tappet oil gallery, admitting pressurized oil into the tappet (fig. 1B-114). A hole and groove arrangement admits the oil to the inside of the plunger. Oil is forced past the plunger check valve and fills the chamber between the plunger and tappet body. When the chamber is full, additional oil in the plunger body unseats the metering disc, and a spurt of oil flows up the pushrod to lubricate the rocker arm assembly. These events all take place while the tappet is on the heel of the cam lobe. As the cam turns, the lobe begins exerting force on the tappet body. This force is transferred by the trapped oil in the tappet chamber to the plunger and finally to the pushrod and rocker arm assembly. The engine valve opens. While the valve is open, the trapped oil is subjected to considerable pressure and some of it escapes between the plunger and the tappet body (leak-down). The cycle is completed as the cam lobe rotates back to the starting position and another charging cycle begins. In this way, zero valve lash is maintained and engine noise is reduced.

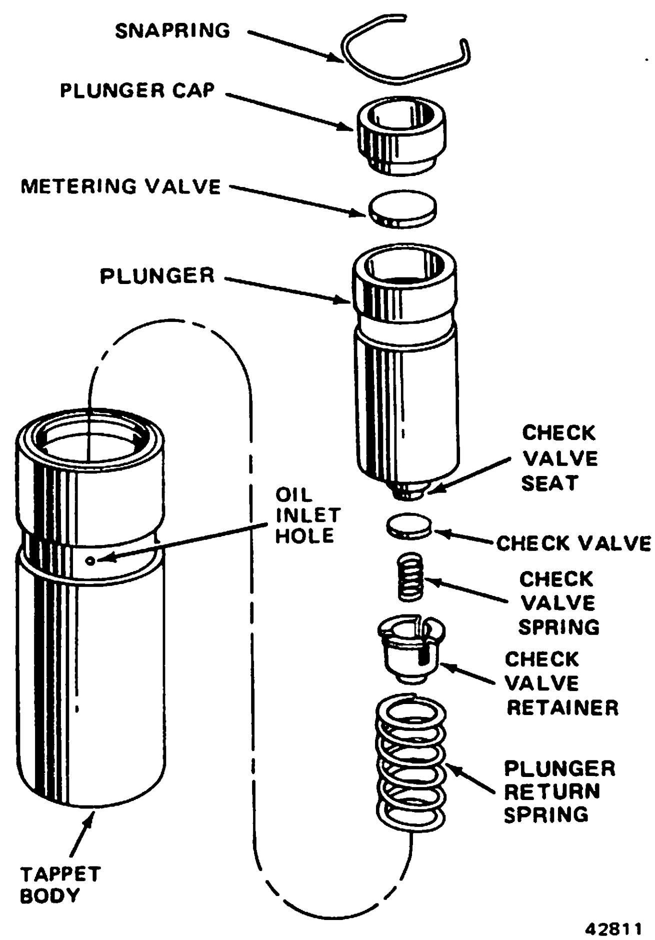

Fig. 1B-113 Hydraulic Tappet Assembly

Removal

(1) Remove cylinder head cover.

(2) Remove bridge and pivot assemblies and rocker arms. Alternately loosen capscrews, one turn at a time, to avoid damaging bridge.

(3) Remove push rods.

NOTE: *Retain bridge and pivot assemblies, rocker arms and push rods in the same order as removed.*

(4) Remove intake manifold.

(5) Remove tappet from guide bore in engine block with Tool J-21884.

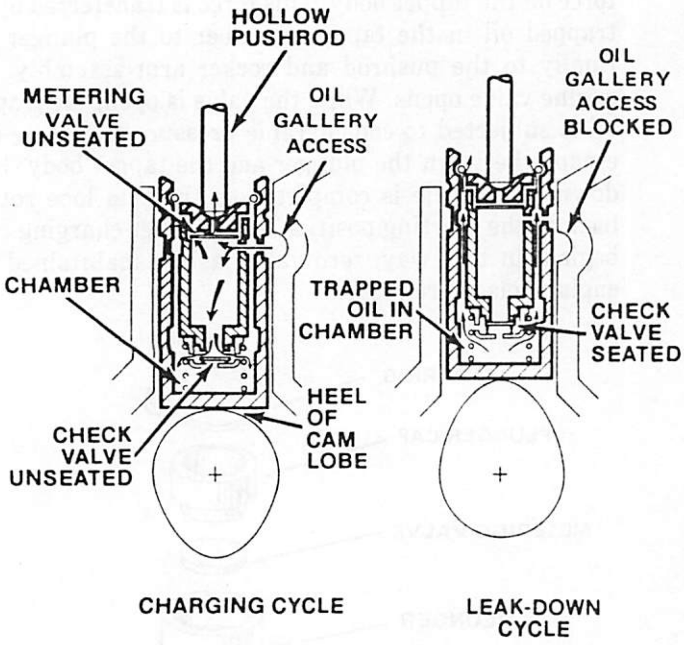

Fig. 1B-114 Hydraulic Tappet Operation

Cleaning and Inspection

(1) Release lockring.

(2) Remove plunger cap, metering disc, plunger assembly and plunger return spring from tappet body.

NOTE: *Retain the tappets and all components in the same order as removed. Do not interchange components.*

(3) Clean all tappet components in cleaning solvent to remove all varnish and gum deposits.

(4) Visually inspect each tappet assembly for evidence of scuffing on side and face of tappet body. Inspect tappet face for wear using straightedge across face. If tappet face is concave and corresponding lobe on camshaft is worn, replace camshaft and tappets.

(5) Replace entire assembly if any component is worn or damaged.

(6) Install plunger return spring, check valve assembly, plunger, metering disc and plunger cap in tappet body.

(7) Use push rod on plunger cap to compress plunger assembly and install lockring.

Hydraulic Tappet Leak-Down Rate Test

After cleaning, inspection and assembly, use Tester J-5790 to test tappet leak-down rate and to ensure zero-lash operating condition (fig. 1B-115).

(1) Swing weighted arm of tester away from ram of tester.

(2) Place 0.312- to 0.313-inch (7.92 to 7.95 mm) diameter ball bearing on plunger cap of tappet.

(3) Lift ram and place tappet with ball bearing inside tester cup.

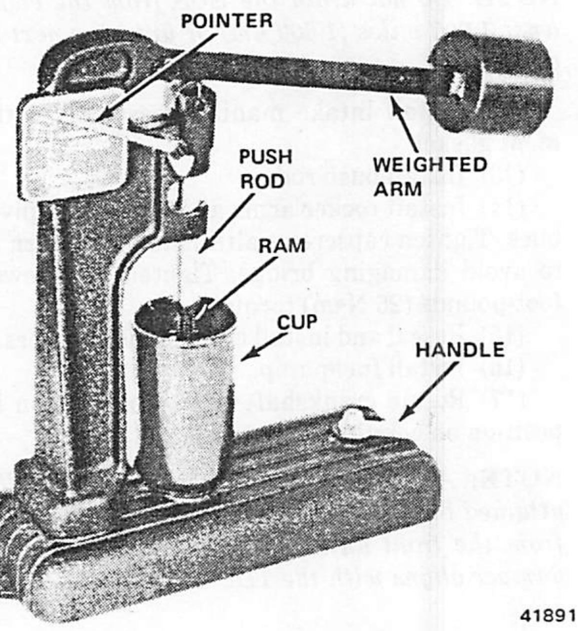

Fig. 1B-115 Hydraulic Tappet Leak-Down Rate Tester J-5790

(4) Lower ram, then adjust nose of ram until it contacts ball bearing.

(5) Fill tester cup with valve tappet test oil J-5268, or equivalent, until tappet is completely covered.

(6) Swing weighted arm onto ram and pump up and down on tappet to remove air. When air bubbles cease, swing weighted arm away and allow plunger to rise to normal position.

(7) Adjust nose of ram to align pointer with SET mark on scale of tester and tighten hex nut.

(8) Slowly swing weighted arm onto ram. Rotate cup by turning handle at base of tester clockwise one revolution every two seconds.

(9) Time leak-down interval from instant pointer aligns with START mark on scale until pointer aligns with 0.125 mark.

(10) Acceptable tappet will require 20 to 110 seconds interval to leak down. Replace tappets with leak-down rate outside this range.

NOTE: *Do not charge the tappet assemblies with engine oil because they will charge themselves within three to eight minutes of engine operation.*

Installation

(1) Dip each tappet assembly in Jeep Engine Oil Supplement (EOS), or equivalent. Install tappet in same bore from where it was originally removed.

(2) Install push rods in same position as removed.

(3) Install rocker arm and bridge and pivot assemblies in same position as removed. Tighten capscrews alternately, one turn at a time, to avoid damaging bridge. Tighten with 19 foot-pounds (26 N•m) torque.

(4) Pour remaining EOS over entire valve train mechanism.

NOTE: *Do not drain the EOS from the engine for at least 1,000 miles (1 609 km) or until the next scheduled oil change.*

(5) Reseal and install cylinder head cover. Tighten retaining screws with 50 inch-pounds (6 N•m) torque.

(6) Install intake manifold using replacement gasket and end seals. Tighten manifold retaining screws with 43 foot-pounds (58 N•m) torque.

(7) Install all pipes, hoses, linkage and wires disconnected from intake manifold.

TIMING CASE COVER

The timing case cover is die-cast aluminum. A crankshaft oil seal is used to prevent oil leakage at the vibration damper hub (fig. 1B-116). The oil seal may be installed from either side of the timing case cover. It is not necessary to remove the cover whenever oil seal replacement is required.

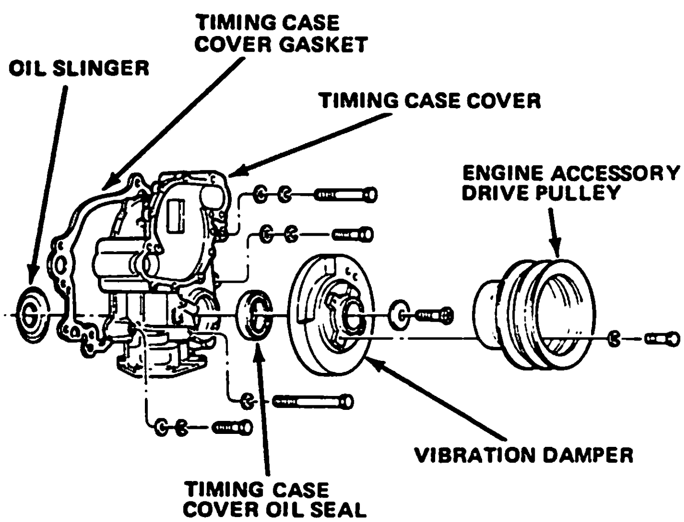

Fig. 1B-116 Timing Case Cover Assembly

A graduated timing degree scale cast in the cover is used for ignition timing. A socket is also provided for timing the ignition with a magnetic timing probe.

The engine oil pump, oil passages and coolant passages are incorporated within the timing case cover casting. The timing case cover casting is also used to mount the fuel pump, distributor and water pump.

Removal

WARNING: *If engine has been recently operated, use care to prevent scalding by hot coolant. System is pressurized.*

(1) Drain radiator and cylinder block.

NOTE: *If coolant is reusable, drain into a clean container.*

(2) Disconnect radiator hoses and bypass hose.

(3) Remove all drive belts.

(4) Remove fan and hub assembly.

(5) If equipped with air conditioner, remove compressor and bracket assembly from engine and move aside. Do not disconnect air conditioner hoses.

(6) Remove alternator, alternator mounting bracket and back idler pulley.

(7) Disconnect heater hose at water pump.

(8) Remove power steering pump and bracket assembly, if equipped. Remove air pump and mounting bracket as assembly. Do not disconnect power steering pump hoses.

(9) Remove distributor cap. Note rotor and housing position.

(10) Remove distributor.

(11) Remove fuel pump.

(12) Remove vibration damper pulley.

(13) Remove vibration damper using tool J-21791.

(14) Remove two front oil pan screws.

(15) Remove screws that secure timing case cover to engine block.

NOTE: *The cover retaining screws are of various lengths and must be installed in the same location as removed.*

(16) Remove cover by pulling forward until clear of locating dowel pins.

(17) Clean gasket contact surface of cover.

(18) Remove oil seal.

NOTE: *Always replace the oil seal whenever the timing case cover is removed. Refer to Oil Seal Replacement for procedure.*

Installation

(1) Remove lower locating dowel pin from engine block.

NOTE: *The dowel pin is required for correct cover alignment. Dowel must be installed after the cover is in position.*

(2) Use sharp knife or razor blade to cut both sides of oil pan gasket flush with engine block.

(3) Apply Permatex No. 2, or equivalent, to both sides of replacement timing case cover gasket. Install gasket on timing case cover.

(4) Install replacement front oil pan seal to bottom of timing case cover.

NOTE: *There are two methods of sealing timing case cover to oil pan where oil pan gaskets were cut off. If replacement oil pan gaskets are used, perform step (5). If room temperature vulcanizing (RTV) silicone is used, perform step (6).*

(5) If oil pan gaskets are used:

(a) Using original gasket pieces as guide, trim replacement gaskets to correspond to amount cut off in step (2) above.

(b) Align tongues of replacement oil pan gasket pieces with oil pan seal and cement into place on cover (fig. 1B-117).

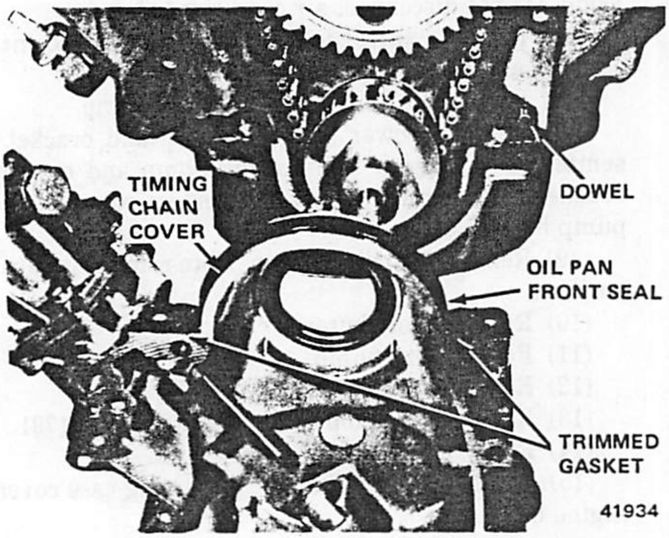

Fig. 1B-117 Oil Pan Front Seal Installation

(c) Apply Permatex No. 2, or equivalent, to cut off edges of original oil pan gaskets.

(d) Place timing case cover in position and install front oil pan screws.

(e) Tighten screws slowly and evenly until cover aligns with upper locating dowel.

(f) Insert lower dowel through cover and drive into corresponding hole in engine block.

(g) Install remaining cover retaining screws in same location as removed. Tighten all screws with 25 foot-pounds (34 N•m) torque.

(h) Proceed to step (7).

(6) If RTV is used:

(a) Apply coating of RTV silicone 1/8-inch (3.175 mm) thick on timing case cover flanges (fig. 1B-117). Use Jeep Gasket-in-a-Tube, or equivalent. Flanges must be clean and dry.

(b) Place cover in position. Align with top dowel.

(c) Loosely install front cover retaining screws in same locations as removed.

(d) Insert lower dowel through cover and drive into corresponding hole in engine block.

(e) Install remaining cover retaining screws and tighten all screws with 25 foot-pounds (34 N•m) torque.

(f) Apply small bead of RTV to joint between pan and cover and force into place with finger.

(g) Apply drop of Loctite, or equivalent, to oil pan screws and tighten until snug. *Do not over-tighten* because oil pan will distort.

(h) Proceed to step (7).

(7) Install vibration damper. Tighten retaining screw with 90 foot-pounds (122 N•m) torque.

(8) Install damper pulley. Tighten retaining bolts with 30 foot-pounds (41 N•m) torque.

(9) Install fuel pump.

(10) Install distributor with rotor and housing in same position as it was prior to removal.

(11) Install distributor cap and connect heater hose.

(12) Install power steering pump, air pump and mount bracket, if removed.

(13) Install alternator, alternator mounting bracket, and back idler pulley assembly.

(14) Install air conditioner compressor and bracket assembly, if removed.

(15) Install fan and hub assembly.

(16) Install all drive belts and adjust to specified tension. Refer to Chapter 1C—Cooling Systems.

(17) Connect radiator hoses and bypass hose.

(18) Fill cooling system to specified level.

WARNING: *Use extreme caution when engine is operating. Do not stand in direct line with fan. Do not put hands near pulleys, belts or fan. Do not wear loose clothing.*

(19) Start engine and inspect for oil and coolant leaks.

(20) Adjust initial ignition timing to specified degrees BTDC. Refer to Chapter 1A—General Service and Diagnosis.

Oil Seal Replacement

(1) Loosen all drive belts.

(2) Remove vibration damper pulley.

(3) Remove vibration damper screw and washer.

(4) Install damper screw in crankshaft to prevent damper puller from damaging screw threads in crankshaft.

(5) Remove vibration damper with Tool J-21791. Remove damper screw.

(6) Remove oil seal using Remover J-9256 (fig. 1B-118).

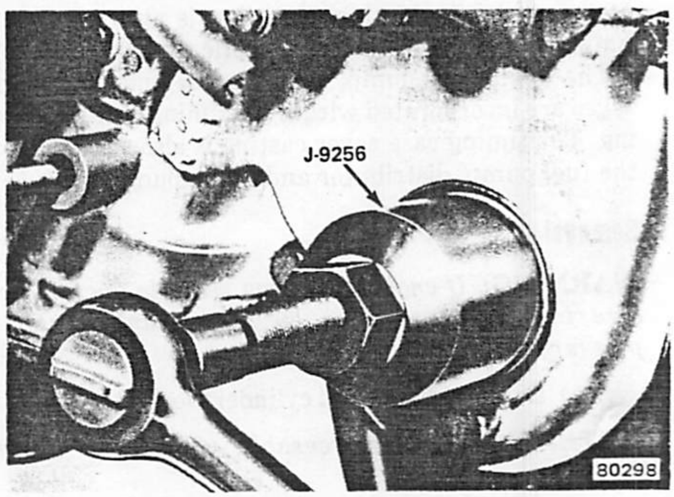

Fig. 1B-118 Removing Timing Case Cover Oil Seal

(7) Wipe crankshaft sealing area clean.

(8) Apply Permatex No. 2, or equivalent, to outer metal surface of replacement seal.

(9) Install seal using Installer Tool J-26562 (fig. 1B-119).

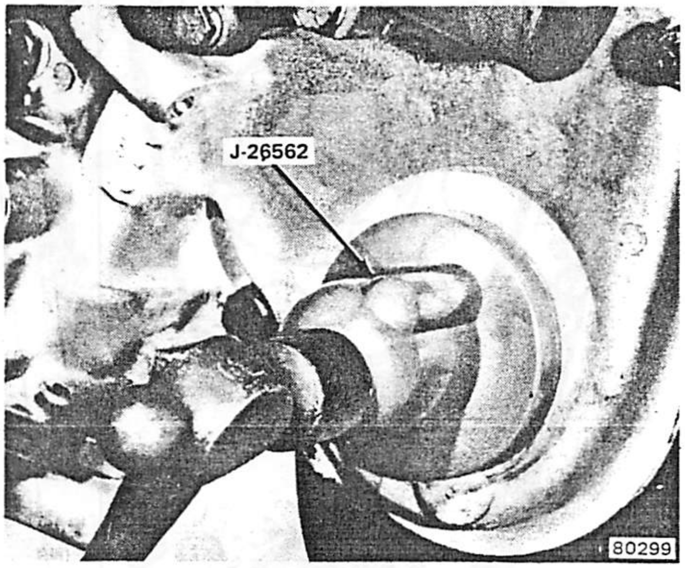

Fig. 1B-119 Installing Timing Case Cover Oil Seal

(10) Apply light coating of engine oil to seal contact surface of damper.

(11) Install damper, flat washer and screw. Tighten with 90 foot-pounds (122 N•m) torque.

(12) Install pulley and belts. Adjust belts to specifications. Refer to Chapter 1C—Cooling Systems.

TIMING CHAIN

To ensure correct valve timing, install the timing chain with the timing marks of the crankshaft and camshaft sprockets correctly positioned.

Timing Chain Wear Measurement

(1) Remove timing case cover. Refer to Timing Case Cover Removal for procedure.

(2) Rotate camshaft or crankshaft sprocket until all slack is removed from right side of chain.

(3) Determine reference point for deflection measurement according to following:

(a) Measure up from dowel on right side of engine 3/4 inch (19 mm) and mark location (fig. 1B-120).

(b) Position straightedge across timing chain from point at lowest root of camshaft sprocket to point marked in step (a) above (fig. 1B-120).

(c) Grasp chain where straightedge dissects chain and use as reference.

(d) Move chain inward toward centerline of engine and mark engine block at point of maximum inward chain deflection (fig. 1B-120).

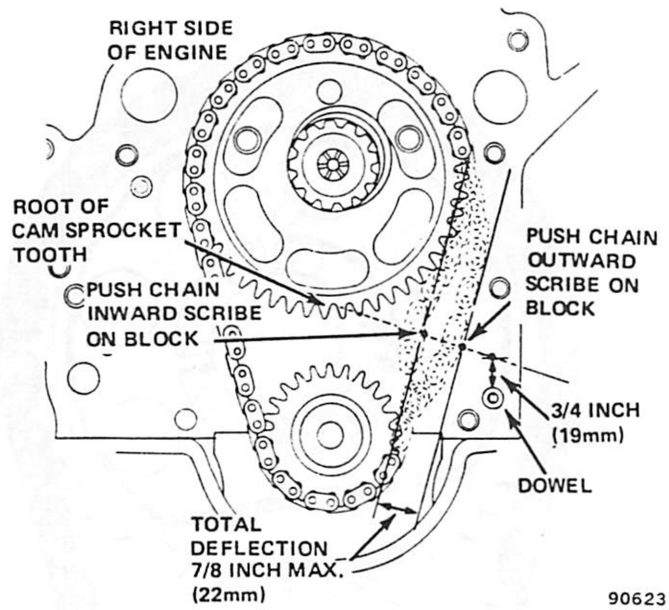

Fig. 1B-120 Timing Chain Wear Measurement

(e) Move chain outward from centerline of engine and mark engine block at point of maximum outward chain deflection (fig. 1B-120).

(f) Measure distance between two marks to determine total deflection.

(g) Replace chain assembly if deflection (wear) exceeds 7/8 inch (22 mm). Refer to Timing Chain Removal and Installation for procedure.

(h) Install timing case cover. Refer to Timing Case Cover Installation for procedure.

Removal

(1) Remove vibration damper pulley, damper, timing case cover and gasket.

(2) Remove crankshaft oil slinger.

(3) Remove camshaft sprocket retaining screw and washer.

(4) Remove distributor drive gear and fuel pump eccentric (fig. 1B-112).

(5) Rotate crankshaft until zero timing mark on crankshaft sprocket is closest to and on centerline with zero timing mark on camshaft sprocket (fig. 1B-121).

(6) Remove crankshaft sprocket, camshaft sprocket and timing chain as assembly.

Installation

(1) Assemble timing chain, crankshaft sprocket and camshaft sprocket with timing marks positioned as depicted in figure 1B-121.

(2) Install chain and sprocket assembly on crankshaft and camshaft.

NOTE: *Install the fuel pump eccentric with the stamped word REAR facing the camshaft sprocket.*

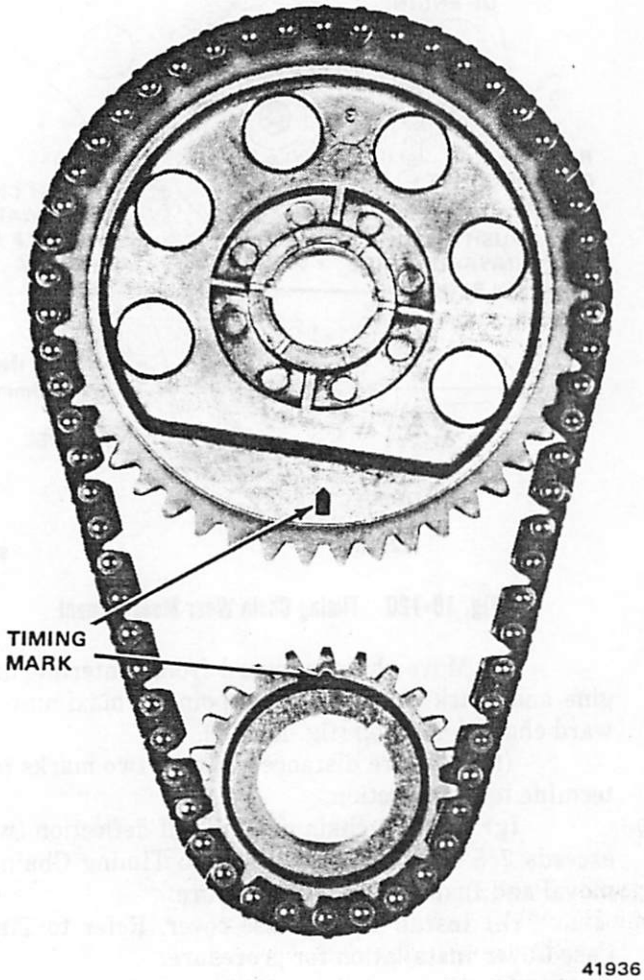

Fig. 1B-121 Timing Chain and Sprocket Alignment

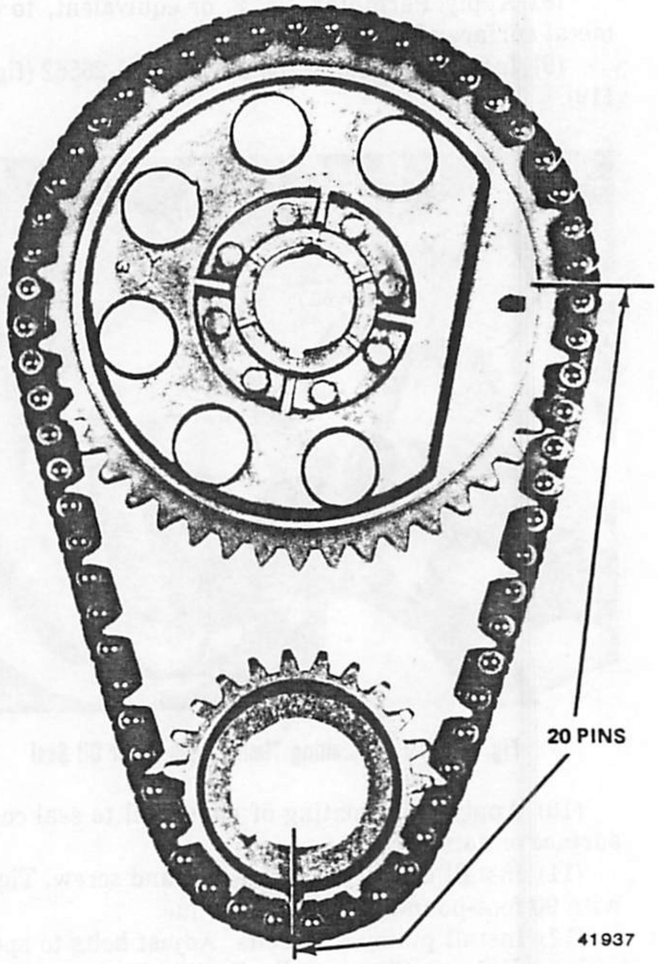

Fig. 1B-122 Correct Timing Chain Installation Verification

(3) Install fuel pump eccentric and distributor drive gear.

(4) Install camshaft washer and retaining screw. Tighten screw with 30 foot-pounds (41 N•m) torque.

(5) To verify correct installation of timing chain:

(a) Rotate crankshaft until timing mark on camshaft sprocket is on horizontal line at 3 o'clock position (fig. 1B-122).

(b) Beginning with pin directly adjacent to camshaft sprocket timing mark, count number of pins downward to timing mark on crankshaft sprocket.

(c) There must be 20 pins between these two points. **The crankshaft sprocket timing mark must be between pins 20 and 21 (fig. 1B-122).**

(6) Install crankshaft oil slinger.

(7) Remove original oil seal from timing case cover.

(8) Install replacement oil seal in timing case cover.

(9) Install timing case cover using replacement gasket. Tighten retaining screws with 25 foot-pounds (34 N•m) torque.

(10) Install vibration damper and pulley.

INTAKE AND EXHAUST MANIFOLDS

Intake Manifold

The cast iron intake manifold is designed to enclose and seal the tappet area between the cylinder heads. A one-piece metal gasket, used to seal the intake manifold to the cylinder heads and block, also serves as an oil splash baffle.

The intake manifold contains coolant passages, a crankcase ventilator passage and an exhaust crossover passage. Passages are also incorporated within the intake manifold for the Exhaust Gas Recirculation (EGR) system.

Induction system passages distribute a uniform fuel and air mixture to the combustion chamber of each cylinder. The left side of the carburetor supplies the fuel/air mixture through passages in the intake manifold to numbers 1, 7, 4 and 6 cylinder intake ports. The right side supplies numbers 3, 5, 2, and 8 cylinder intake ports.

Removal

WARNING: *If engine has been recently operated, use care to prevent scalding by hot coolant. System is pressurized.*

(1) Drain coolant from radiator and cylinder block.

NOTE: *If coolant is reusable, drain into clean container.*

(2) Remove air cleaner assembly.
(3) Disconnect ignition wires.
(4) Remove ignition wire plastic separators from cylinder head cover brackets.
(5) Disconnect radiator upper hose and bypass hose from intake manifold.
(6) Disconnect and move aside wire from coolant temperature gauge sending unit.
(7) Disconnect ignition coil bracket and move coil and bracket assembly aside.
(8) Disconnect heater hose from rear of manifold.
(9) Identify and disconnect all hoses, pipes and wire connectors from carburetor assembly.
(10) Disconnect throttle and throttle valve linkage from carburetor and intake manifold.
(11) Disconnect air hoses from air injection manifolds.
(12) Disconnect diverter valve from air pump output hose and move valve and air hoses aside.
(13) Remove carburetor.
(14) Remove intake manifold, metal gasket and end seals.
(15) Clean gasket mating surfaces of engine block, cylinder head and intake manifold.

Installation

NOTE: *When installing replacement intake manifold, transfer all components (i.e., EGR valve and back-pressure sensor, EGR CTO valve, thermostat housing and coolant temperature gauge sending unit) from original manifold. Clean and tighten as required.*

(1) Apply nonhardening sealer or RTV silicone sealant such as Jeep Gasket-in-a-Tube, or equivalent, to both sides of replacement manifold gasket.
(2) Position gasket by aligning locators at rear of cylinder head. While holding rear of gasket in place, align front locators.
(3) Install two end seals. Apply Permatex No. 2, Jeep Gasket-in-a-Tube, or equivalent, to seal ends.
(4) Install intake manifold and retaining screws. Ensure all screws are properly started before tightening. Tighten with 43 foot-pounds (58 N•m) torque.
(5) Install diverter valve and connect air pump output hose.
(6) Connect air hoses to air injection manifolds.
(7) Identify and connect all disconnected hoses, pipes, linkages and wires to intake manifold and carburetor.
(8) Install ignition coil and bracket assembly.
(9) Connect radiator upper hose and bypass hose.
(10) Install ignition wire plastic separators on cylinder head cover brackets.
(11) Connect ignition wires.
(12) Install air cleaner assembly.
(13) Add coolant as necessary.

Exhaust Manifold

The swept-flow designed cast iron manifold provides efficient removal of exhaust gases and minimizes back pressure. The mating surface of the exhaust manifold and the cylinder head are machined smooth to eliminate the need for a gasket.

All eight-cylinder engines are equipped with an air injection system and have air injection manifolds attached at number 1, 3 and 5 exhaust ports of the left exhaust manifold and numbers 2, 4, 6 and 8 of the right exhaust manifold. Refer to Chapter 1K—Exhaust Systems for description of the air injection system.

Removal

(1) Disconnect ignition wires.
(2) Disconnect air hose at injection manifold.
(3) Disconnect exhaust pipe at exhaust manifold.
(4) Remove exhaust manifold retaining screws.
(5) Separate exhaust manifold from cylinder head.
(6) Remove air injection manifold, fittings and washers.

Installation

(1) Clean mating surfaces of exhaust manifold and cylinder head. **Do not nick or scratch.**
(2) Install air injection manifold on exhaust manifold.

CAUTION: *The correct screws and washers must be used to allow the manifold to expand and prevent cracking.*

(3) Install exhaust manifold and retaining screws. Tighten two center screws with 25 foot-pounds (34 N•m) torque. Tighten four outer screws with 15 foot-pounds (20 N•m) torque.
(4) Connect exhaust pipe using replacement seal, if required. Tighten nuts with 20 foot-pounds (27 N•m) torque.
(5) Connect air hose to air injection manifold.
(6) Connect ignition wires.

CYLINDER HEADS AND COVERS

Cylinder Head Covers

The cylinder head covers are installed with a formed-in-place RTV (room temperature vulcanizing) silicone gasket.

Removal

(1) Remove air cleaner assembly.
(2) Disconnect air hose from air injection manifold.
(3) Left side:
(a) Disconnect power brake vacuum hose at intake manifold, if equipped.
(b) Disconnect throttle stop solenoid wire, if equipped.
(4) Remove thermostatically controlled air cleaner (TAC) hot air hose on right side.
(5) Disconnect ignition wires and remove plastic wire separator from cylinder head cover bracket.
(6) Remove retaining screws and washers. Strike cover with rubber mallet to break loose from cylinder head. Remove cover and gasket.

Installation

(1) Inspect for bent or cracked cover and repair or replace as required.
(2) Thoroughly clean cylinder head cover and cylinder head gasket surface area.

NOTE: *Ensure sealant is fresh (i.e., not stored for longer than one year and storage area temperature less than 80°F (27°C).*

(3) Apply bead of Jeep Gasket-in-a-Tube, or equivalent, to cylinder head and cylinder head cover gasket surface area.
(4) Position cylinder head cover on engine.
(5) Install retaining screws and tighten with 50 inch-pounds (6 N•m) torque.
(6) Connect ignition wires and install plastic wire separator on cylinder head cover bracket.
(7) Install TAC hot air hose.
(8) Left side:
(a) Connect power brake vacuum hose at intake manifold.
(b) Connect throttle stop solenoid wire.
(9) Connect air hose to air injection manifold.
(10) Install air cleaner assembly.

Cylinder Heads

Removal

WARNING: *Use extreme caution when engine is operating. Do not stand in direct line with fan. Do not put hands near pulleys, belts or fan. Do not wear loose clothing.*

(1) Drain cooling system and cylinder block.

NOTE: *If coolant is reuseable, drain into clean container.*

(2) Remove ignition wires and spark plugs.
(3) Remove cylinder head cover and gasket.
(4) Remove bridge and pivot assemblies and rocker arms. Alternately loosen capscrews, one turn at a time, to avoid damaging bridge.
(5) Remove push rods.

NOTE: *Retain rocker arms, bridges, pivots and push rods in the same order as removed to facilitate installation in original locations.*

(6) Remove intake manifold.
(7) Disconnect exhaust manifold from head. It is not necessary to remove exhaust pipe from manifold.
(8) Loosen all drive belts.
(9) Right side:
(a) If equipped with air conditioner, remove compressor mounting bracket and battery negative cable from cylinder head.
(b) Disconnect alternator support brace from cylinder head.
(10) Left side: Disconnect air pump and power steering mount bracket, if equipped, from cylinder head.
(11) Remove cylinder head retaining screws.
(12) Remove cylinder head and gasket.

Cleaning and Inspection

Thoroughly clean the gasket surfaces of the cylinder head and block to remove all foreign material and gasket cement. Remove carbon deposits from the combustion chambers and the top of each piston.

Use a straightedge and feeler gauge to determine the flatness of the cylinder head and block mating surfaces. Refer to Specifications for tolerances.

If the cylinder head is to be replaced and the original valves reused, remove the valves and measure the stem diameters.

NOTE: *Service replacement heads have standard-size valve guide bores. If valves with oversize stems from original head are to be installed in replacement head, ream valve guide bores to appropriate oversize diameter.*

If the original valves are used, remove all carbon deposits and reface the valves as outlined within Valve Refacing. Install the valves in the cylinder head using replacement valve stem oil deflectors. If valves with oversize stems are used, oversize deflectors are also required. Transfer all components from the original head that are not included with the replacement head.

Installation

NOTE: *Wire brush the threads of screws prior to installation. Unclean threads will affect the tightening torque indications. Blow coolant from screw holes to prevent trapping coolant.*

NOTE: *The 360 CID engine uses an aluminum coated laminated steel and asbestos gasket. Retightening head bolts after engine has been operated is not necessary.*

(1) Apply even coat of nonhardening sealing compound to both sides of replacement head gasket.

NOTE: *Do not apply sealing compound to head and block surfaces. Do not allow sealer to enter cylinder bores.*

(2) Position gasket flush on block with stamped word TOP facing upward.

(3) Install cylinder head over gasket.

(4) Tighten cylinder head capscrews evenly with 80 foot-pounds (108 N•m) torque following sequence outlined in figure 1B-123. Then repeat sequence and tighten screws with 110 foot-pounds (149 N•m) torque.

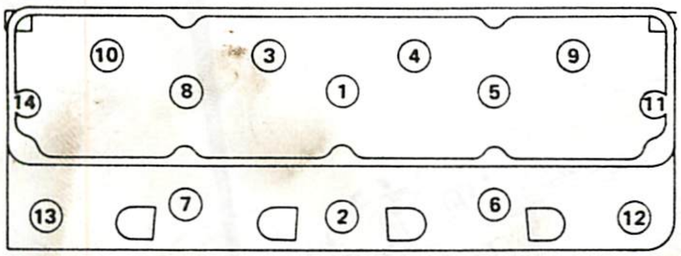

Fig. 1B-123 Cylinder Head Tightening Sequence

(5) Left side: connect air pump mount bracket and power steering pump, if removed, to cylinder head.

(6) Right side:

(a) Connect alternator support bracket to cylinder head.

(b) Install air conditioner compressor mounting bracket, if removed, and battery negative cable on cylinder head.

(7) Adjust all drive belts to specified tension. Refer to Chapter 1C—Cooling Systems.

(8) Install exhaust manifold and tighten retaining screws with 25 foot-pounds (34 N•m) torque.

(9) Install intake manifold. Tighten retaining screws with 43 foot-pounds (58 N•m) torque.

(10) Install all disconnected pipes, hoses, linkage and wires.

(11) Install push rods, rocker arms and bridge and pivot assemblies in original position. Loosely install capscrews through bridges. Tighten capscrews alternately, one turn at a time, to avoid damaging bridges. Tighten capscrews with 19 foot-pounds (26 N•m) torque.

(12) Reseal and install cylinder head cover. Tighten retaining screws with 50 inch-pounds (6 N•m) torque.

(13) Install spark plugs and connect ignition wires.

(14) Fill cooling system to specified level.

LUBRICATION SYSTEM

Oil is pumped from the sump of the oil pan through a pick-up tube and screen assembly to a horizontal oil gallery located at the lower right side of the engine block (fig. 1B-124). A passage in the timing case cover channels oil into the oil pump. Pressure is developed when oil is driven between the gears and pump body.

The oil is forced from the pump through a passage in the oil pump cover to the oil filter (fig. 1B-125).

The oil passes through the filtering element and on to an outlet passage in the oil pump cover. From the oil pump cover passage, the oil enters an adjoining passage in the timing case cover and is channeled into a gallery that extends up the left front of the cylinder block. This gallery channels oil directly to the right main oil gallery, which intersects with a short passage that channels oil to the left main oil gallery.

The left and right main oil galleries extend the length of the cylinder block. The left oil gallery channels oil to each hydraulic tappet on the left bank. The right oil gallery channels oil to each hydraulic tappet on the right bank. In addition, passages extend down from the right oil gallery to the five camshaft bearings and on to the five upper main bearing inserts. The crankshaft is drilled to allow oil to flow from each main journal to adjacent connecting rod journals. A squirt hole in each connecting rod bearing cap distributes oil to the cylinder walls, pistons and piston pins as the crankshaft rotates.

A small passage within the front camshaft bearing journal channels oil through the camshaft sprocket to the timing case cover area where the case and sprockets throw off oil to lubricate the distributor drive gear and fuel pump eccentric (see insert, fig. 1B-124). The oil returns to the oil pan by passing under the front main bearing cap.

Oil for the rocker arm assemblies is metered through the hydraulic valve tappets and routed through hollow push rods to a hole in the corresponding rocker arm. This oil lubricates the valve train, then returns to the oil pan through channels at both ends of the cylinder head.

Oil Filter

A full flow oil filter mounted on the oil pump at the lower right-hand side of the engine is accessible from below the chassis.

A bypass valve in the filter mounting base provides a safety factor in the event the filter should become inoperative as a result of restriction from sludge or foreign material accumulation (fig. 1B-126). Oil Filter Remover Tool J-22700 will facilitate removal.

Before installation, apply a thin film of oil to the filter gasket. **Do not use grease.** Rotate filter until the gasket contacts the seat of the filter base. Tighten by hand only, following instructions on replacement filter. If instructions are not printed on filter, tighten filter until gasket contacts seat and then tighten an additional 3/4 turn. Operate engine at fast idle and inspect for leaks.

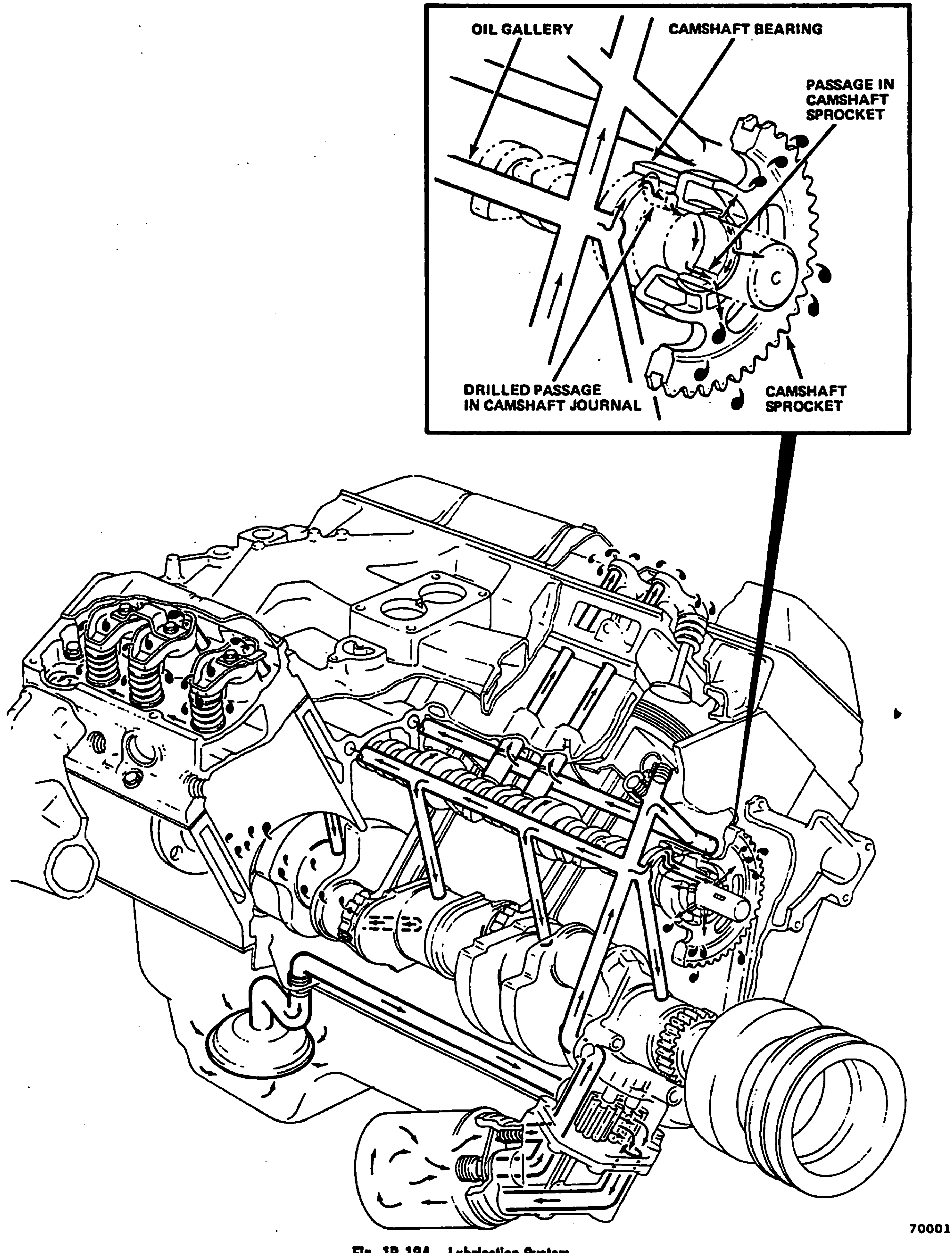

Fig. 1B-124 Lubrication System

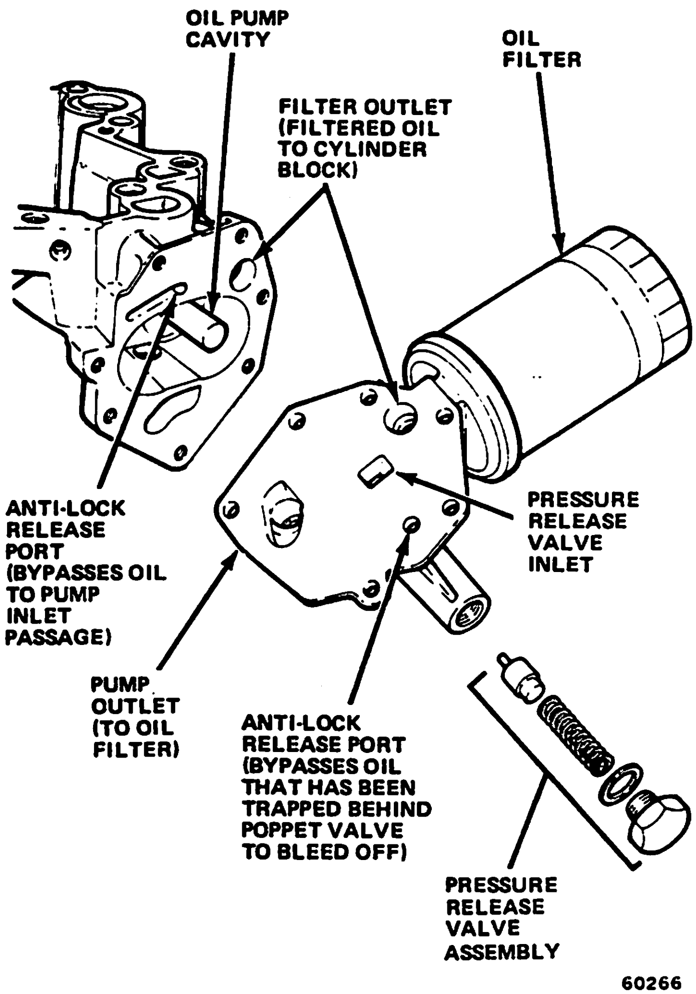

Fig. 1B-125 Oil Pump Cover

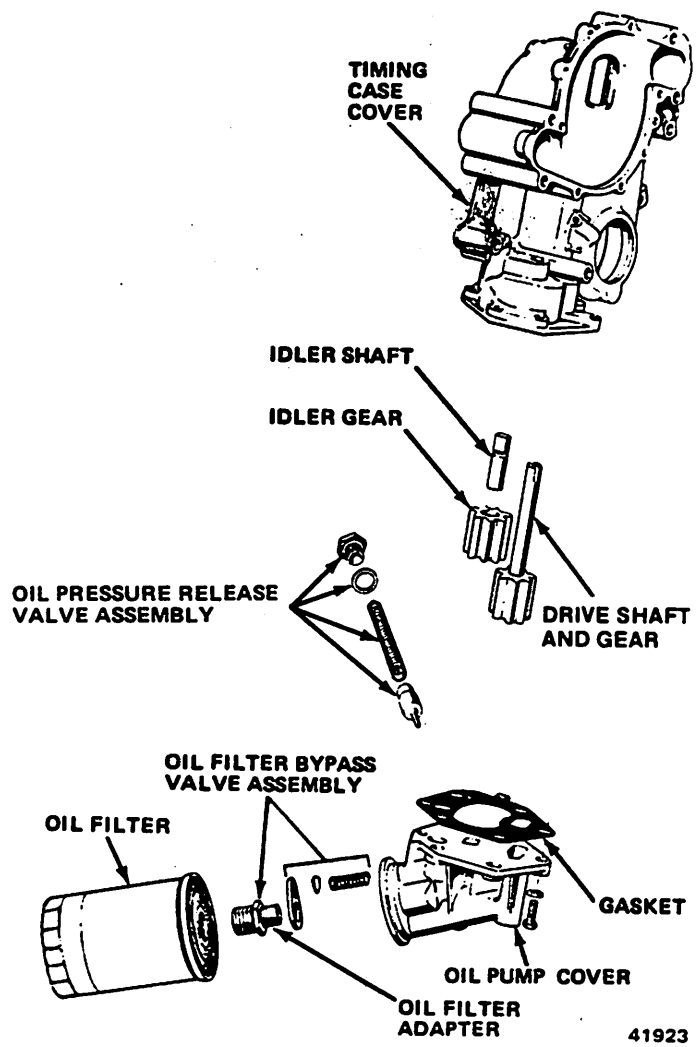

Fig. 1B-126 Oil Pump and Filter Assembly

Oil Pump

The positive-displacement gear-type oil pump is driven by the distributor shaft, which is driven by a gear on the camshaft (fig. 1B-126). The pump is integral with the timing case cover. A cavity in the cover forms the body of the pump. A pressure relief valve regulates maximum oil pressure.

Oil pump removal or replacement will not affect the distributor timing because the distributor drive gear will remain in mesh with the camshaft drive gear.

Oil Pressure Relief Valve

The oil pressure relief valve is not adjustable. The spring tension is calibrated for 75 psi (517 kPa) maximum pressure.

In the relief position, the valve permits oil to bypass through a passage in the pump cover to the inlet side of the pump (fig. 1B-126).

Removal

(1) Remove retaining screws and separate oil pump cover, gasket and oil filter as an assembly from pump body (timing case cover).

(2) Remove drive gear assembly and idler gear by sliding them out of body.

(3) Remove oil pressure relief valve from pump cover for cleaning by removing retaining cap and spring. Clean cover thoroughly. Test operation of relief valve by inserting poppet valve and determining if it slides back and forth freely. If not, replace pump cover and poppet valve.

Gear End Clearance Measurement

This measurement determines the distance between the end of the pump gear and the pump cover. The ideal clearance is as close as possible without binding gears. The pump cover gasket is 0.009- to 0.011-inch (0.229 to 0.279 mm) thick. Symptoms of excessive pump clearance are fair to good pressure when the oil is cold and low or no pressure when the oil is hot.

Preferred Method:

(1) Place strip of Plastigage across full width of each gear (fig. 1B-127).

(2) Install pump cover and gasket. Tighten screws with 55 inch-pounds (6 N•m) torque.

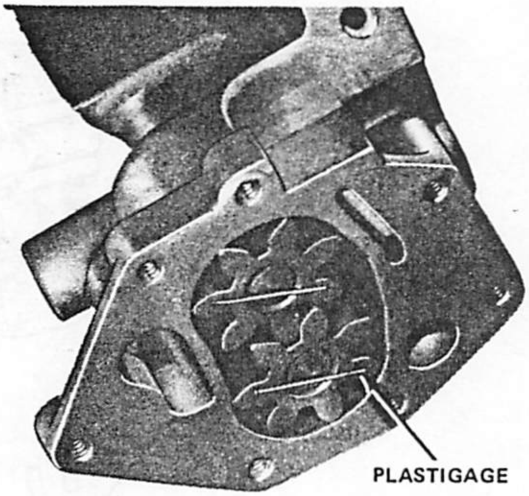

Fig. 1B-127 Oil Pump Gear End Clearance Measurement—Plastigage Method

(3) Remove pump cover and determine amount of clearance by measuring width of compressed Plastigage with scale on Plastigage envelope. Correct clearance by this method is 0.002 to 0.008 inch (0.002 preferred) [0.051 to 0.203 mm (0.051 mm preferred)].

Alternate Method:

(1) Place straightedge across gears and pump body.

(2) Select feeler gauge that will fit snugly but freely between straightedge and pump body (fig. 1B-128). Correct clearance by this method is 0.004 to 0.008 inch (0.008 inch preferred) [0.102 to 0.203 mm (0.203 mm preferred)].

Fig. 1B-128 Oil Pump Gear End Clearance Measurement—Feeler Gauge Method

NOTE: *Ensure gears are up into body as far as possible for measurement.*

If gear end clearance is excessive, measure gear length. If gear length is correct, install thinner gasket. If gear length is incorrect, replace gears and idler shaft.

Gear Tooth-to-Body Clearance

(1) Insert feeler gauge between gear tooth and pump body inner wall directly opposite point of gear mesh. Select feeler gauge that fits snugly but can be inserted freely (fig. 1B-129).

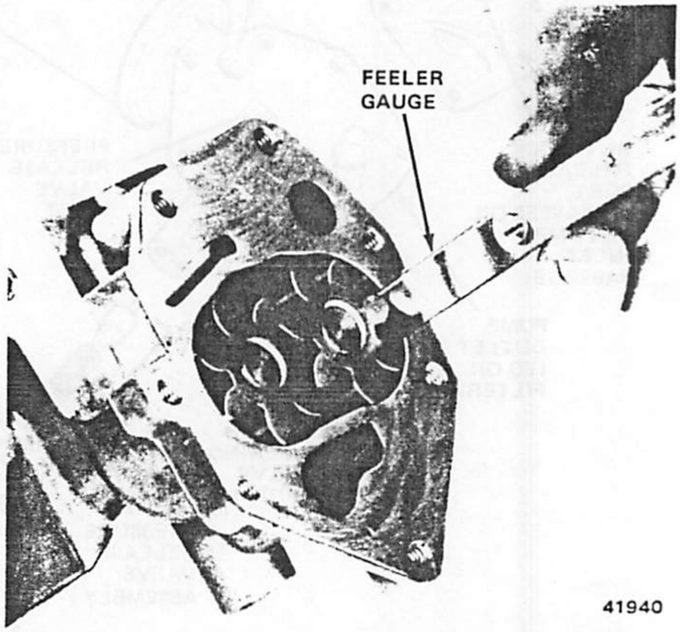

Fig. 1B-129 Gear Tooth-to-Body Clearance Measurement

(2) Rotate gears and measure clearance of each tooth and body in this manner. Correct clearance is 0.0005 to 0.0025 inch (0.0005 inch preferred) or 0.013 to 0.064 mm (0.013 mm preferred).

(3) If gear tooth-to-body clearance is more than specified, measure gear diameter with micrometer. If gear diameter is correct and gear end clearance is correct and relief valve is functioning properly, replace timing case cover. If gear diameter is incorrect, replace gears and idler shaft.

NOTE: *If the oil pump shaft or distributor drive shaft is broken, inspect for loose oil pump gear-to-shaft fit or worn front cover. Oversize pump shafts are not available.*

Installation

(1) Install oil pressure relief valve in pump cover with spring and retaining cap.

(2) Install idler shaft, idler gear and drive gear assembly.

NOTE: *To ensure self-priming of the oil pump, fill pump with petroleum jelly prior to the installation of the oil pump cover.* **Do not use grease of any type.**

(3) Install pump cover and oil filter assembly with replacement gasket. Tighten retaining screws with 55 inch-pounds (6 N•m) torque.

Oil Pan

Removal

(1) Drain engine oil.
(2) Remove starter motor.
(3) On all vehicles, bend tabs down on dust shield, if equipped with manual transmission.
(4) Remove oil pan attaching screws. Remove oil pan.
(5) Remove oil pan front and rear neoprene oil seals.
(6) Thoroughly clean gasket surfaces of oil pan and engine block. Remove all sludge and residue from oil pan sump.

Installation

(1) Install replacement oil pan front seal for timing case cover. Apply generous amount of Jeep Gasket-in-a-Tube (RTV silicone sealant), or equivalent, to end tabs.
(2) Coat inside curved surface of replacement oil pan rear seal with soap or RTV silicone sealant. Apply generous amount of RTV silicone sealant to gasket contacting surface of seal end tabs.
(3) Install seal in recess of rear main bearing cap, ensuring it is fully seated.
(4) Apply RTV silicone sealant to oil pan contacting surface of front and rear oil pan seals.
(5) Cement replacement oil pan side gaskets into position on engine block. Apply generous amount of RTV silicone sealant to gasket ends.
(6) Install oil pan. Tighten 1/4-20 oil pan screws with 7 foot-pounds (9 N•m) torque and 5/16-18 oil pan screws with 11 foot-pounds (15 N•m) torque.
(7) Tighten drain plug securely.
(8) Install starter motor and connect cable.
(9) Fill crankcase to specified level with clean lube oil.

Oil Pressure Gauge

Refer to Chapter 1L—Engine Instrumentation for a description of operation, diagnosis and replacement procedure.

CONNECTING ROD AND PISTON ASSEMBLIES

Use the following procedures to service connecting rods and pistons with the engine installed in the vehicle.

Removal

(1) Remove cylinder head cover(s).
(2) Alternately loosen bridge and pivot assembly capscrews one turn at a time to avoid damaging bridges. Remove bridges, pivots and rocker arms.
(3) Remove push rods.

NOTE: *Retain bridges, pivots, rocker arms and push rods in same order as removed to facilitate installation in original locations.*

(4) Remove intake manifold assembly.
(5) Remove exhaust manifold(s). It is not necessary to disconnect exhaust pipe from manifold.
(6) Remove cylinder head(s) and gasket(s).
(7) Position pistons, one at a time, near bottom of stroke. Use ridge reamer to remove any ridge from top end of cylinder walls.
(8) Drain engine oil.
(9) Remove oil pan.
(10) Remove connecting rod bearing caps and inserts. Retain in same order as removed.

NOTE: *Connecting rods and caps are stamped with the number of the associated cylinder.*

(11) Remove connecting rod and piston assemblies through top of cylinder bores. Ensure that connecting rod bolts do not scratch connecting rod journals or cylinder walls. Short pieces of rubber hose slipped onto rod bolts will provide protection during removal.

Installation

(1) Thoroughly clean cylinder bores. Apply light film of clean engine oil to bores with clean, lint-free cloth.
(2) Arrange spacing of piston ring gaps. Refer to Piston Rings for procedure.
(3) Lubricate piston and ring surfaces with clean engine oil.
(4) Use piston ring compressor tool to install connecting rod and piston assemblies through top of cylinder bores. Ensure that connecting rod bolts do not scratch connecting rod journals or cylinder walls. Short lengths of rubber hose slipped over connecting rod bolts will provide protection during installation.

NOTE: *Squirt holes in connecting rods must face inward (fig. 1B-130).*

(5) Install connecting rod bearing caps and inserts in original positions. Tighten retaining nuts with 33 foot-pounds (45 N•m) torque.
(6) Install engine oil pan using replacement gaskets and seals.

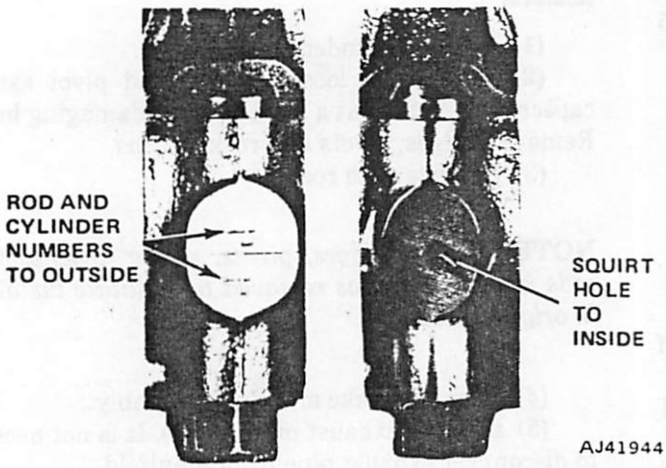

Fig. 1B-130 Rod Number and Squirt Hole Location

(7) Install cylinder head(s) and replacement gasket(s).

(8) Install push rods.

(9) Install rocker arms and bridge and pivot assemblies. Loosely install capscrews through each bridge and alternately tighten, one turn at a time, to avoid damaging bridge. Tighten capscrews with 19 foot-pounds (26 N•m) torque.

(10) Install intake manifold gasket and manifold assembly.

(11) Install exhaust manifold(s).

(12) Reseal and install cylinder head cover(s).

(13) Fill crankcase with clean oil to specified level.

WARNING: *Use extreme caution when engine is operating. Do no stand in direct line with fan. Do not put hands near pulleys, belts or fan. Do not wear loose clothing.*

(14) Start engine inspect for leaks.

CONNECTING RODS

The connecting rods are malleable iron and are independently balanced. The crankshaft end of the connecting rod incorporates a two-piece bearing insert. The number stamped onto the removeable bearing cap and onto the adjacent machined surface of the rod corresponds to the associated cylinder (fig. 1B-130). The piston end of the rod is connected to the piston with a 2000 pound (8.9 kN) press-fitted piston pin.

Have the connecting rod alignment checked by a competent machine shop whenever engine wear patterns or damage indicates probable rod misalignment. Always replace bent connecting rods.

Connecting Rod Side Clearance Measurement

(1) Rotate crankshaft to position where connecting rod journal is at bottom of stroke.

(2) Insert snug fitting feeler gauge between connecting rods (fig. 1B-131).

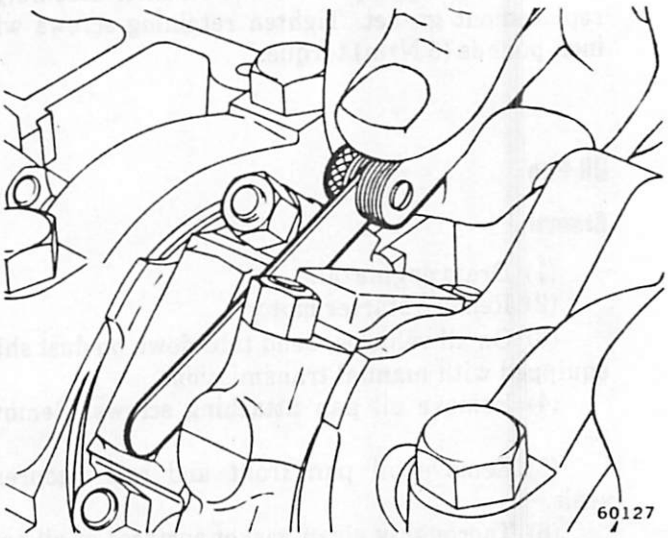

Fig. 1B-131 Connecting Rod Side Clearance Measurement

(3) Compare feeler gauge measurement to specified clearance. Replace rods that are not within specifications.

Connecting Rod Bearings

The connecting rod bearings are precision-type steel-backed aluminum alloy inserts. The connecting rod bearing inserts are selectively fitted to their respective journals to obtain the desired operating clearance. **In production**, the select fit is obtained by using various sized color coded bearing inserts as listed in the Bearing Fitting Chart. The bearing color code appears on the edge of the insert.

NOTE: *Bearing size is not stamped on production inserts.*

The rod journal size is identified **in production** by a color coded paint mark on the adjacent cheek or counterweight toward the flanged (rear) end of the crankshaft. Refer to color codes listed in the Bearing Fitting Chart to identify journal size and select the correct bearing inserts to obtain correct clearances.

CAUTION: *Never use a pair of bearing inserts that are greater than 0.001-inch (0.025 mm) difference in size.*

When required, different sized upper and lower bearing inserts may be used as a pair. A standard size insert is sometimes used in combination with a 0.001-inch (0.025 mm) undersize insert to reduce clearance by 0.0005 inch or 1/2 thousandth of an inch (0.013 mm). Example:

Insert	Correct	Incorrect
Upper	Standard	Standard
Lower	0.001-inch (0.025mm) undersize	0.002-inch (0.051mm) undersize

70242

Connecting Rod Bearing Fitting Chart

Crankshaft Connecting Rod Journal Color Code and Diameter in Inches (Journal Size)	Bearing Color Code — Upper Insert Size	Bearing Color Code — Lower Insert Size
Yellow —2.0955 to 2.0948 (53.2257 - 53.2079 mm) (Standard)	Yellow — Standard	Yellow — Standard
Orange —2.0948 to 2.0941 (53.2079 - 53.1901 mm) (0.0007 Undersize)	Yellow — Standard	Black — 0.001-inch (0.025mm)Undersize
Black —2.0941 to 2.0934 (53.1901 - 53.1723 mm) (0.0014 Undersize)	Black — 0.001-Inch (0.025mm)Undersize	Black — 0.001-inch (0.025mm)Undersize
Red —2.0855 to 2.0848 (52.9717 - 52.9535 mm) (0.010 Undersize)	Red — 0.010-Inch (0.254mm)Undersize	Red — 0.010-inch (0.254mm)Undersize

60270

Service replacement bearing inserts are available in pairs in the following sizes: standard, 0.001-inch (0.025 mm) undersize, 0.002-inch (0.051 mm) undersize, 0.010-inch (0.254 mm) undersize and 0.012-inch (0.305 mm) undersize. The size is stamped on the back of service replacement inserts.

NOTE: *The 0.002-inch (0.051 mm) and 0.012-inch (0.305 mm) undersize inserts are not used for production engine assembly.*

Removal

Use the following procedure to service connecting rod bearings with the engine installed in the vehicle.

(1) Drain engine oil.

(2) Remove oil pan.

(3) Rotate crankshaft as required to position two connecting rods at a time at bottom of their stroke.

(4) Remove bearing caps and lower inserts.

(5) Remove upper insert by rotating insert out of connecting rod.

NOTE: *Do not interchange bearing caps. Connecting rod and corresponding cap are stamped with the associated cylinder number (fig. 1B-130). The numbers are located on a machined surface opposite the squirt holes.*

Inspection

(1) Clean inserts

(2) Inspect linings and backs of inserts for irregular wear pattern. Note any scraping, stress cracks or distortion (fig. 1B-132). If bearing has spun in rod, replace bearing and connecting rod and inspect crankshaft journal for scoring.

(3) Inspect for material imbedded in linings that may indicate abnormal piston, timing gear, distributor gear or oil pump gear wear. Figures 1B-133 and 1B-134 depict common score problems.

(4) Inspect fit of insert locking tab in rod cap. If result of inspection indicates that insert tab may have been pinched between rod and rod cap, replace upper and lower bearing inserts.

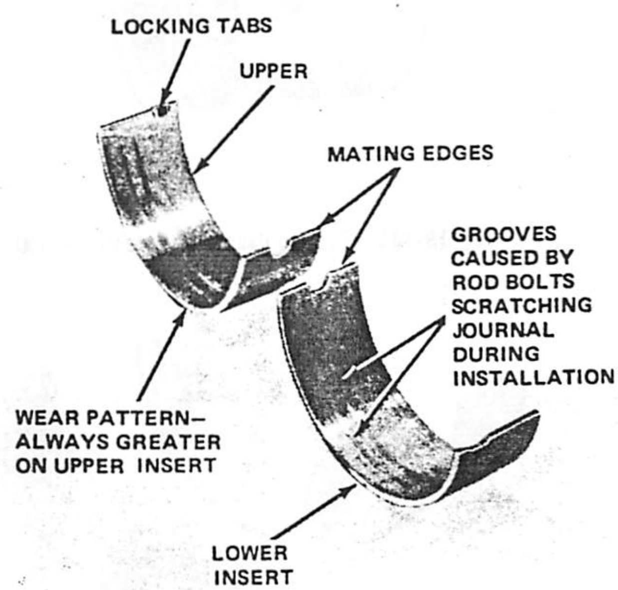

Fig. 1B-132 Connecting Rod Bearing Inspection

Fig. 1B-133 Scoring Caused by Insufficient Lubrication

(5) Inspect contact area of locking tab. Abnormal wear indicates bent tabs or improper installation of inserts (fig. 1B-135).

(6) Replace bearing inserts that are damaged or worn.

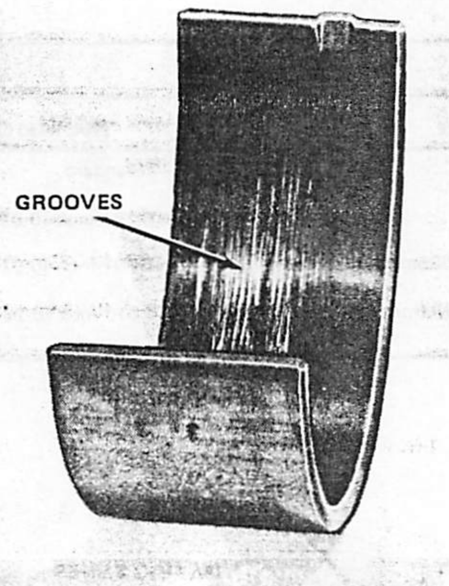

Fig. 1B-134 Scoring Caused by Foreign Material

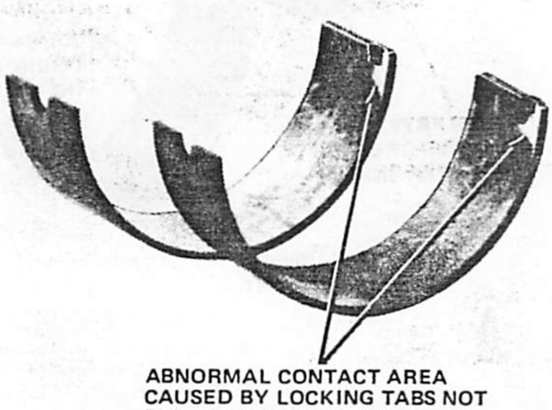

Fig. 1B-135 Locking Tab Inspection

Measuring Bearing Clearance with Plastigage

(1) Wipe bearing inserts and rod journal clean.

(2) Lubricate upper insert and install in rod.

(3) Place strip of Plastigage across full width of lower insert at center of bearing cap. Lower insert must be dry.

(4) Install bearing cap on connecting rod and tighten retaining nuts with 33 foot-pounds (45 N•m) torque.

NOTE: *Do not rotate crankshaft. Plastigage will shift, resulting in inaccurate indication. Plastigage must not crumble. If brittle, obtain fresh stock.*

(5) Remove bearing cap and determine amount of clearance by measuring width of compressed Plastigage with scale on Plastigage envelope (fig. 1B-136).

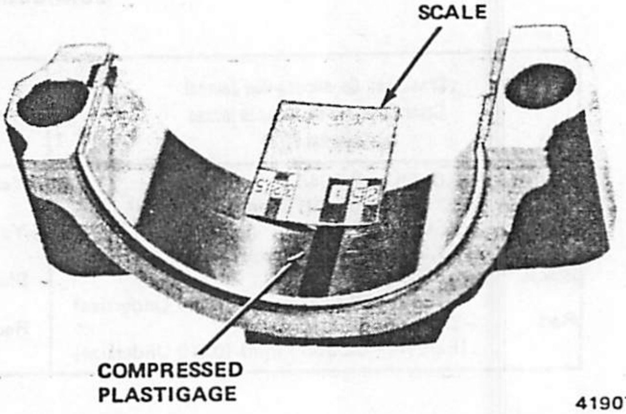

Fig. 1B-136 Connecting Rod Bearing Clearance Measurement with Plastigage

(6) If correct clearance is indicated, bearing fitting is not necessary. Remove Plastigage from crankshaft journal and bearing and proceed to Installation.

NOTE: *Traces of Plastigage left on bearing surfaces will dissolve in hot engine oil after engine is operating.*

(7) If oil clearance exceeds specification, install 0.001-inch (0.025 mm) undersize bearing inserts and measure clearance as described in steps (1) through (5) above.

NOTE: *The measured clearance with 0.001-inch (0.025 mm) undersize bearing inserts installed will determine if a pair of 0.001-inch (0.025 mm) undersize inserts or some other combination are needed to provide the correct clearance. For example, if the initial clearance was 0.003 inch (0.076 mm), 0.001-inch (0.025 mm) undersize inserts will reduce the clearance by 0.001 inch (0.025 mm). The oil clearance will be 0.002 inch (0.051 mm) and within specification. A combination of a 0.002-inch (0.051 mm) undersize insert and a 0.001-inch (0.025 mm) undersize insert will reduce the clearance an additional 0.0005 inch (0.013 mm). The oil clearance will then be 0.0015 inch (0.038 mm).*

CAUTION: *Never use a combination of inserts that differ more than one bearing size as a pair. For example, do not use a standard upper and a 0.002-inch (0.051 mm) undersize lower insert.*

(8) If oil clearance exceeds specification when 0.002-inch (0.051 mm) undersize inserts are installed, measure diameter of connecting rod journal with micrometer. If journal diameter is correct, inside diameter of connecting rod is incorrect and rod must be replaced.

Measuring Connecting Rod Journal with Micrometer

NOTE: *If the journal diameter does not conform to the specification, it may have been ground 0.010-inch (0.254 mm) or more undersize.*

If journal diameter is incorrect, replace crankshaft or grind journal to accept the appropriate undersized bearing insert pair.

(1) Wipe connecting rod journal clean.

(2) Use micrometer to measure journal diameter at two locations 90 degrees apart at each end of journal. Note difference between maximum and minimum diameters.

(3) Refer to Specifications for maximum allowable taper and out-of-roundness. If any rod journal dimension is not within specification, replace crankshaft or recondition crankshaft journals and fit with appropriate undersize bearing inserts.

(4) Compare largest diameter measurement with journal diameters listed in Bearing Fitting Chart.

(5) Select bearing insert pair required to provide specified bearing clearance.

NOTE: *Always measure clearance with Plastigage after installing replacement bearing inserts. Also, measure the clearance of each journal after installing a crankshaft kit (crankshaft supplied with bearings).*

Installation

CAUTION: *Use care when rotating the crankshaft with bearing caps removed. Ensure the connecting rod bolts do not accidentally come in contact with the rod journals and scratch the surface finish, which can cause bearing failure. Short pieces of rubber hose slipped over the rod bolts will provide protection during installation.*

(1) Rotate crankshaft to position connecting rod journal at bottom of stroke.

(2) Lubricate bearing surface of each insert with clean engine oil.

(3) Install bearing inserts, cap and retaining nuts. Tighten with 33 foot-pounds (45 N•m) torque.

(4) Install oil pan using replacement gaskets and seals. Tighten drain plug securely.

(5) Fill crankcase to specified level with clean engine lube oil.

PISTONS

The pistons used with all eight-cylinder engines are aluminum alloy Autothermic pistons. They are steel reinforced for strength and to control expansion.

The pistons are cam-ground and are elliptical in shape. The ring belt area contains three piston rings: two compression rings and one oil control ring located above the piston pin.

The piston pin boss is offset from the piston centerline so that it is nearer the thrust side of the piston. This minimizes piston slap.

To ensure correct installation of the pistons in the bore, two notches are cast in the top perimeter of the pistons. The notches must face forward when installed (fig. 1B-137).

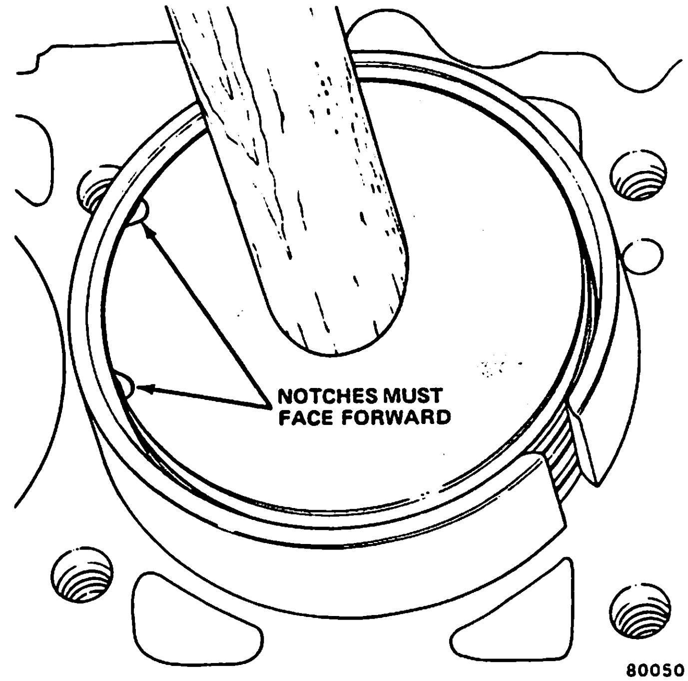

Fig. 1B-137 Installing Piston Assembly Into Cylinder Bore

Piston Measurements

Micrometer Method

(1) Use inside micrometer to measure cylinder bore inside diameter at location 2 5/16 inches (59 mm) below top of bore and crosswise to block.

(2) Measure outside diameter of piston.

NOTE: *Pistons are cam ground and must be measured at a right angle (90 degrees) to piston pin at centerline of pin (fig. 1B-138).*

(3) Difference between cylinder bore diameter and piston diameter dimensions is piston-to-bore clearance. Refer to Specifications.

Feeler Gauge Method

(1) Remove rings from piston.

(2) Insert long 0.0005-inch (0.013 mm) feeler gauge into cylinder bore.

(3) Insert piston (top first) into cylinder bore alongside feeler gauge. With entire piston inserted in cylinder bore, piston should not bind against feeler gauge.

(4) Repeat steps (2) and (3) above with long 0.002-inch (0.051 mm) feeler gauge. Piston should bind.

If the piston binds on the 0.0005-inch (0.013 mm) feeler gauge, either the piston is too large or the cylinder bore is too small. If the piston does not bind on the 0.002-inch (0.051 mm) feeler gauge, the piston may be enlarged by knurling or shot-peening. Replace any piston that is 0.004-inch (0.102 mm) or more undersize.

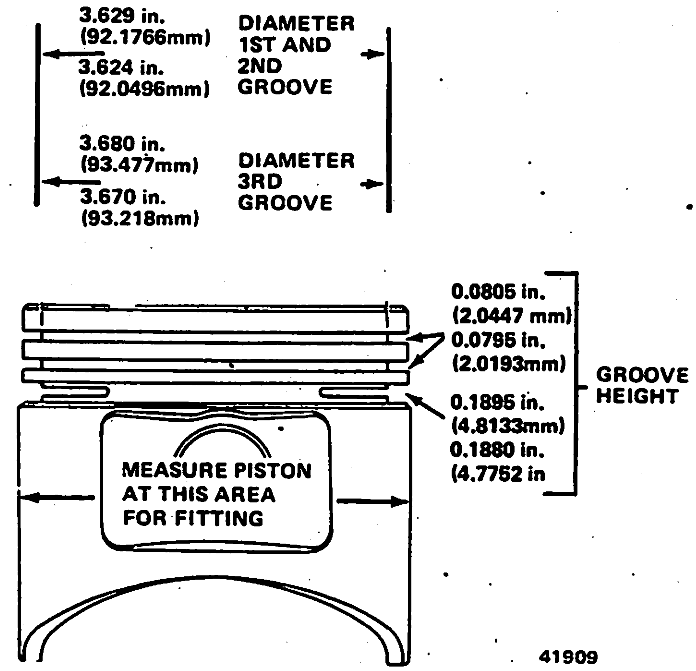

Fig. 1B-138 Piston Measurements

Piston Rings

The top compression ring is constructed of moly-filled iron. The second compression ring is constructed of cast-iron. The oil control ring has a three-piece steel design.

Ring Measurements

CAUTION: *Do not remove metal from grooves or lands. This will change ring groove clearances and will destroy ring-to-land seating.*

(1) Clean carbon deposits from all ring grooves. Ensure oil drain openings in oil ring grooves and pin boss are open.

(2) Measure ring side clearance with correct size feeler gauge that fits snugly between ring land and ring. Slide ring around groove. It must slide freely around circumference of groove (fig. 1B-139). Refer to Specifications for correct ring side clearance.

(3) Place ring in cylinder bore. Use inverted piston to push ring down near lower end of ring travel area. Measure ring gap (clearance) with feeler gauge fitted snugly in ring opening (fig. 1B-140). Refer to Specifications.

NOTE: *Insert each compression ring (not oil control rings) in its respective cylinder bore and measure end gap.*

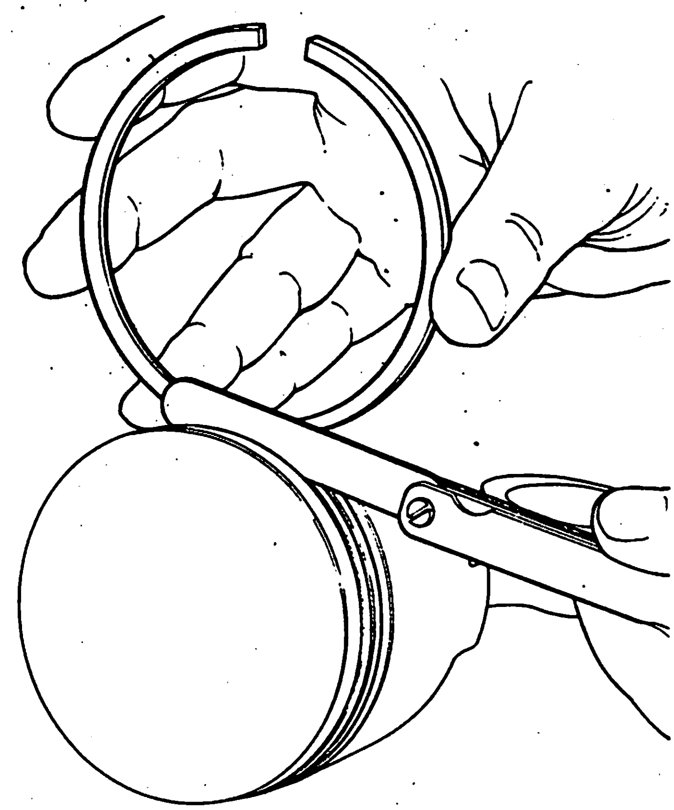

Fig. 1B-139 Ring Side Clearance Measurement

Installation

NOTE: *Ensure top and bottom compression rings are installed properly. Ideally, ring gaps should be spaced 180 degrees from each other. Correct ring gap spacing is depicted in figure 1B-141.*

(1) Install oil control rings according to instructions in package. Roll upper and lower rails into place without use of tool (fig. 1B-142).

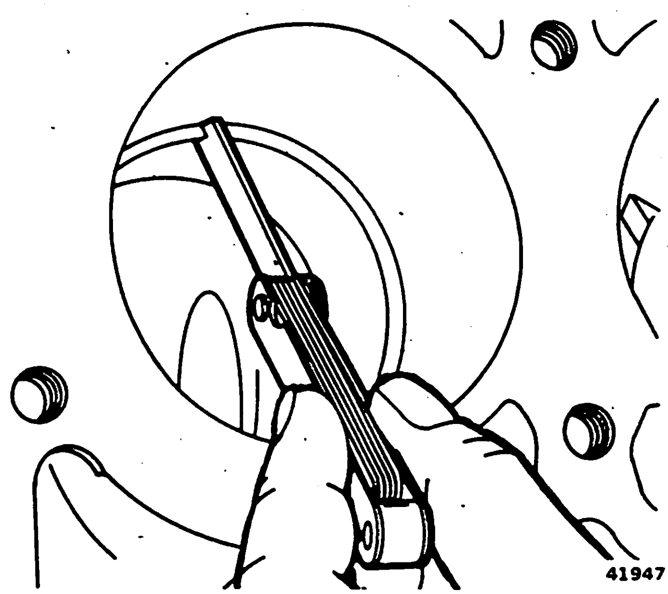

Fig. 1B-140 Compression Ring Gap Measurement

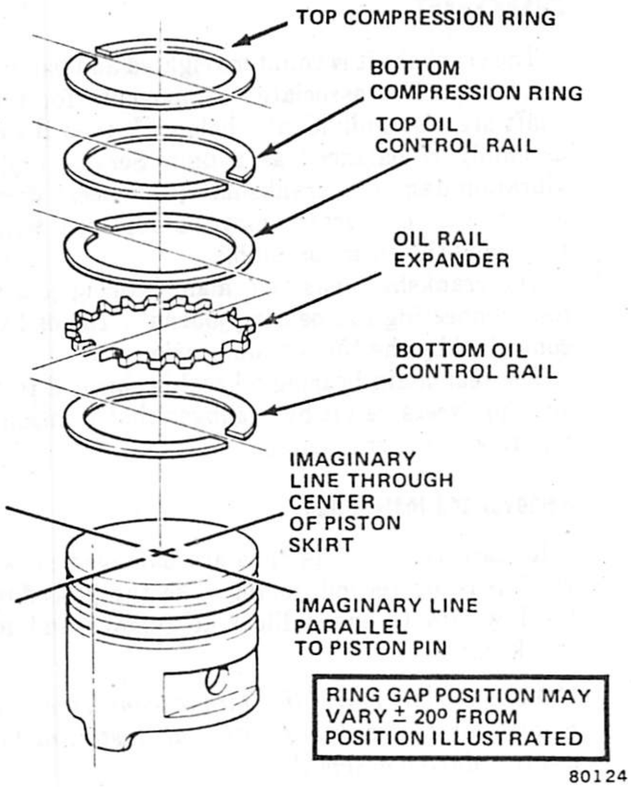

Fig. 1B-141 Ring Gap Spacing

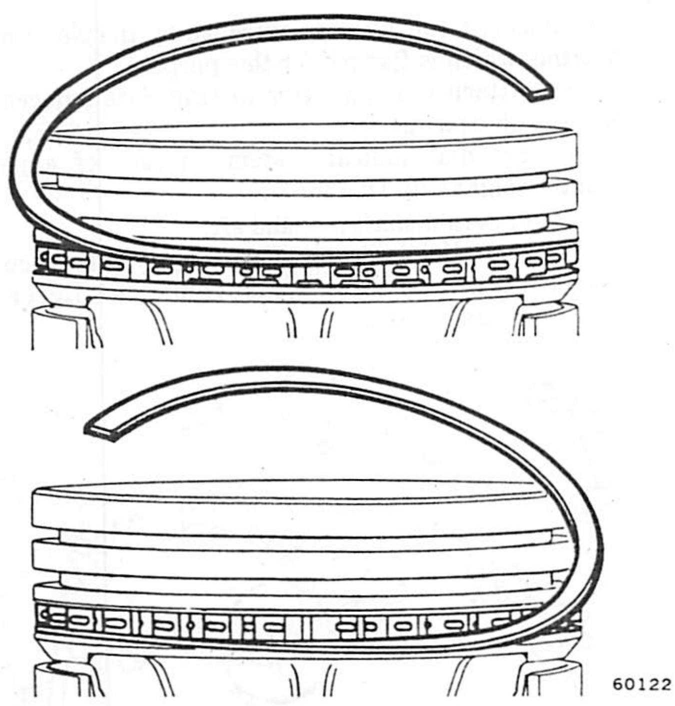

Fig. 1B-142 Installing Oil Control Ring Upper and Lower Rails

(2) Install bottom compression ring using ring installer to expand ring around piston (fig. 1B-143).

NOTE: *Ensure top and bottom compression rings are installed with* **top** *side up. Figure 1B-144 illustrates typical ring marks that indicate the* **top** *side of the ring.*

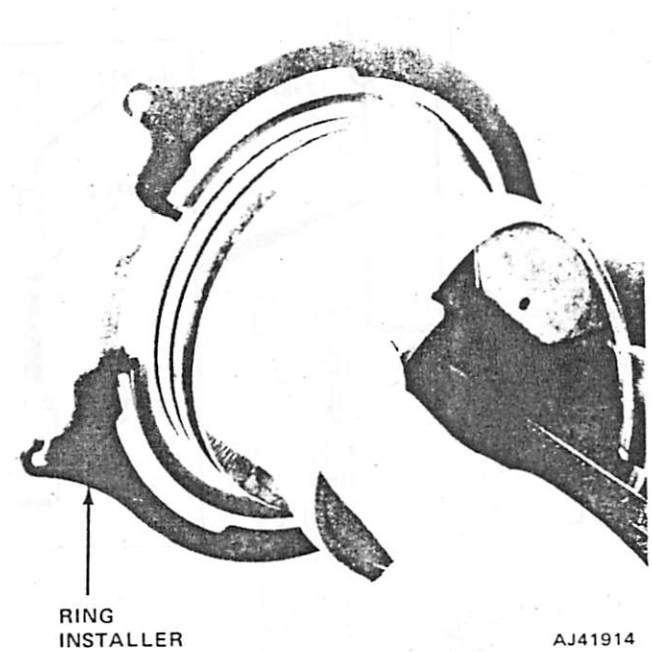

Fig. 1B-143 Compression Ring Installation

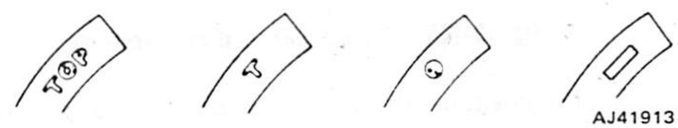

Fig. 1B-144 Typical Compression Ring Marks

(3) Install top compression ring using ring installer to expand ring around piston (fig. 1B-143).

Piston Pins

The piston pins are pressed into the rods with 2000 pounds force (8900 N) and do not require a retaining device.

Removal

(1) Using Piston Pin Remover Tool J-21872 and arbor press, place piston on Remover Support Tool J-21872-1 (fig. 1B-145).

(2) Use Piloted Driver Tool J-21872-3 to press pin completely out of piston and connecting rod. Note position of pin through gauge window of remover support tool.

Pin Fitting

(1) Inspect piston and connecting rod bores for nicks and burrs. Replace rod and piston if necessary.

NOTE: *Never reuse a piston pin after it has been pressed in and out of a connecting rod.*

(2) With pin removed from piston and connecting rod, clean and dry piston pin bores.

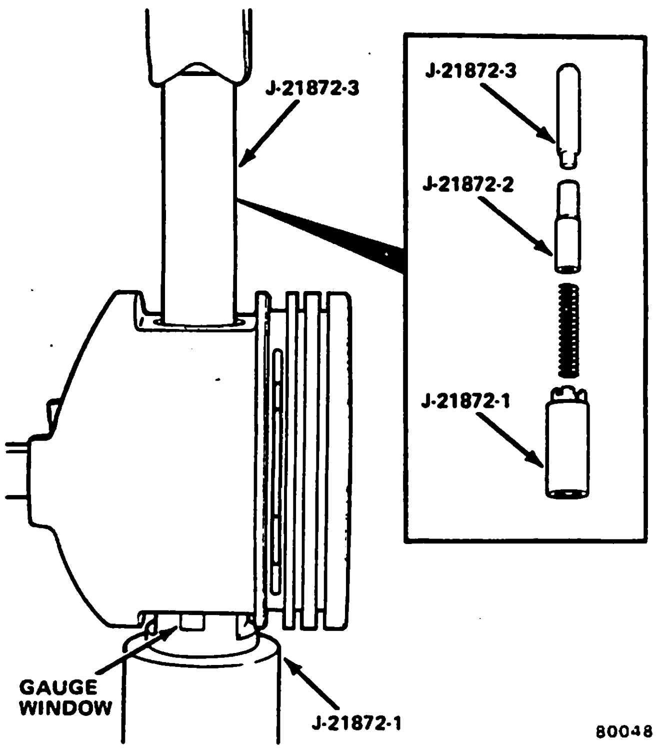

Fig. 1B-145 Piston Pin Removal and Installation

(3) Position piston so that pin bore is in vertical position. Insert replacement pin in bore. At room temperature, replacement pin should slide completely through piston bore without forcing.

(4) Replace piston if pin jams in bore.

Installation

(1) Position piston and connecting rod so that piston notches will face forward and rod squirt hole will face inward when assembly is installed in engine.

(2) Place Pin Pilot Tool J-21872-2 through piston and connecting rod pin bores (fig. 1B-145).

(3) Place pin pilot, piston and connecting rod on Support Tool J-21872-1.

(4) Insert piston pin into piston pin bore and into connecting rod pin bore.

(5) Insert Piloted Driver Tool J-21872-3 into piston pin.

(6) Use arbor press to press piston pin through connecting rod and piston bores until pin pilot indexes with mark on support.

NOTE: *The piston pin requires 2000 pounds force (8900 N) for installation. If insufficient force is required to press piston pin into connecting rod, or if rod slides along pin, replace connecting rod.*

(7) Remove piston and connecting rod assembly from press. Pin should be centered in rod ±1/32 inch (0.787 mm).

CRANKSHAFT

The crankshaft is counterweighted and balanced independently. The associated components for the crankshaft are also individually balanced, then the complete assembly is balanced as a unit. Service replacement vibration dampers, crankshafts, flywheels, drive plates and torque converters may be replaced without rebalancing the entire assembly.

The crankshaft has five main bearing journals and four connecting rod bearing journals. The end thrust is controlled by the No. 3 main bearing.

The rear main bearing oil seal is shielded from exposure to excessive oil by a slinger that is machined integral with the crankshaft.

Removal and Installation

Replace crankshafts that are damaged or worn beyond feasible reconditioning. Use the procedures outlined within Cylinder Block to remove and install a crankshaft.

NOTE: *Scribe mark the torque converter and drive plate prior to crankshaft removal. Install in the same position during assembly.*

Crankshaft End Play Measurement

Crankshaft end play is controlled by the No. 3 main bearing, which is flanged for this purpose.

(1) Attach dial indicator to crankcase adjacent to No. 3 main bearing.

(2) Set dial indicator stem on face of adjacent counterweight (fig. 1B-146).

(3) Pry crankshaft fore and aft.

(4) Note dial indicator. End play is difference between high and low measurements. Refer to Specifications

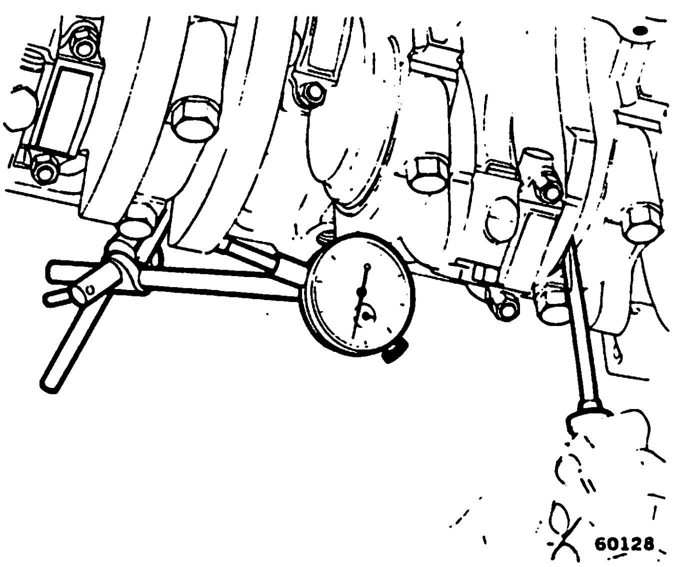

Fig. 1B-146 Crankshaft End Play Measurement

(5) If end play is not within specification, inspect crankshaft thrust faces for wear. If no wear is apparent, replace No. 3 (thrust) main bearing inserts and measure end play. If end play is not within specification, replace crankshaft.

NOTE: *When installing the No. 3 (thrust) main bearing inserts, pry the crankshaft fore and aft to align the thrust faces of the bearing inserts before final tightening.*

Crankshaft Main Bearings

The main bearing inserts are steel-backed aluminum-tin lined. Optional bearing inserts are available with overplated copper-lead linings. The main bearing caps are numbered 1 through 5, front to rear, with an arrow to indicate the forward position. The upper main bearing insert surfaces are grooved. The lower insert surfaces are smooth.

Each bearing insert pair is selectively fitted to its respective journal to obtain the desired operating oil clearance. **In production,** the select fit is obtained by using various-sized color-coded main bearing inserts as listed in the Main Bearing Fitting Chart. The bearing color code appears on the edge of the insert.

NOTE: *The bearing size is not stamped on production inserts.*

The main bearing journal diameter is identified **in production** by a color-coded paint mark on the adjacent cheek toward the flanged (rear) end of the crankshaft, except for the rear main journal. The paint mark that identifies the rear main journal diameter is on the crankshaft rear flange.

Refer to the Main Bearing Fitting Chart to select the proper bearing inserts to obtain the specified bearing clearance. The correct clearance is 0.0015 to 0.0020 inch (0.038 to 0.051 mm) for No. 1 through No. 4 main bearings and 0.0025 to 0.0030 inch (0.064 to 0.076 mm) for the rear main bearing.

When required, use different sized upper and lower bearing inserts as a pair. Use a standard size upper insert in combination with a 0.001-inch (0.025 mm) undersize lower insert to reduce the clearance by 0.0005 inch or 1/2 thousandth of an inch (0.013 mm).
Example:

Insert	Incorrect	Correct
Upper	Standard	Standard
Lower	0.002-inch (0.051 mm) undersize	0.001-inch (0.025 mm) undersize

70242

NOTE: *When installing upper and lower inserts having different sizes, install undersize inserts either all on the top (upper) or all on the bottom (lower). Never use bearing inserts in combination with greater than 0.001-inch (0.025 mm) difference in size.*

Service replacement main bearing inserts are available as pairs in the following sizes: standard, 0.001-inch (0.025 mm) undersize, 0.002-inch (0.051 mm) undersize, 0.010-inch (0.254 mm) undersize, and 0.012-inch (0.305 mm) undersize. The bearing size is stamped on the back of service replacement inserts.

NOTE: *The 0.012-inch (0.305 mm) undersize insert is not used for production engine assembly.*

Removal

The following procedure can be used when the engine is installed in the vehicle.

(1) Drain engine oil and remove oil pan.

(2) Remove main bearing cap and lower insert.

(3) Remove lower insert from bearing cap.

(4) Remove upper insert by loosening all other bearing caps and inserting tool fabricated from cotter pin approximately 1/2-inch (14 mm) into crankshaft oil hole. Fabricate cotter pin as depicted in figure 1B-147.

Main Bearing Fitting Chart

Crankshaft Main Bearing Journal Color Code and Diameter in Inches (mm)		Bearing Color Code			
		Upper Insert Size		Lower Insert Size	
Yellow	–2.7489 to 2.7484 (69.8220-69.8093mm) (Standard)	Yellow	–Standard	Yellow	–Standard
Orange	–2.7484 to 2.7479 (69.8093-69.7966mm) (0.0005 Undersize)	Yellow	–Standard	Black	0.001-inch (0.025mm) Undersize
Black	–2.7479 to 2.7474 (69.7966-69.7839mm) (0.001 Undersize)	Black	0.001-inch (0.025mm) Undersize	Black	0.001-inch (0.025mm) Undersize
Green	–2.7474 to 2.7469 (69.7839-69.7712mm) (0.0015 Undersize)	Black	0.001-inch (0.025mm) Undersize	Green	0.002-inch (0.051mm) Undersize
Red	–2.7389 to 2.7384 (69.5680-69.5553mm) (0.010 Undersize)	Red	0.010-inch (0.254mm) Undersize	Red	0.010-inch (0.254mm) Undersize

60273

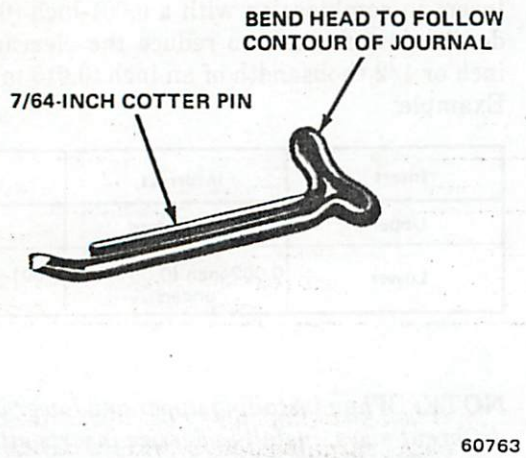

Fig. 1B-147 Fabricated Upper Main Bearing Insert Removal Tool

(5) With cotter pin in place, rotate crankshaft so that upper bearing insert is rotated in direction of its locking tab.

(6) Remove remaining bearings in same manner as outlined above.

Inspection

(1) Wipe inserts clean and inspect for abnormal wear patterns and for metal or other foreign material imbedded in lining. Normal main bearing insert wear patterns are illustrated in figure 1B-148.

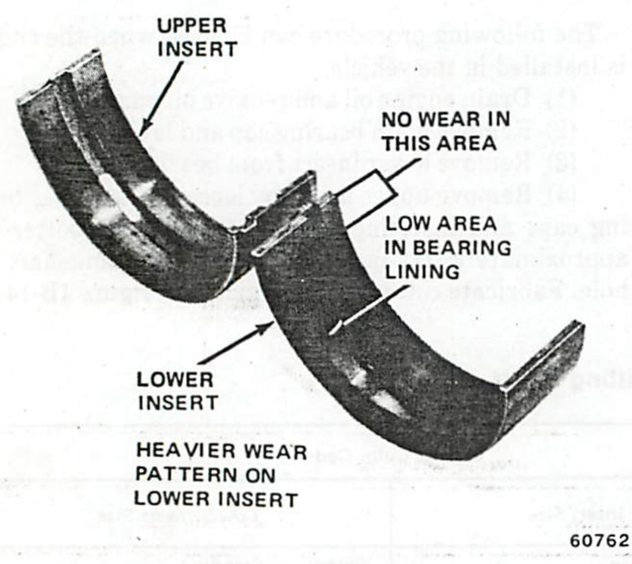

Fig. 1B-148 Normal Main Bearing Insert Wear Patterns

NOTE: *If any of the crankshaft journals are scored, remove the engine for crankshaft repair.*

(2) Inspect back of inserts for fractures, scrapings or irregular wear patterns.

(3) Inspect upper insert locking tabs for damage.

(4) Replace all damaged or worn bearing inserts.

Measuring Main Bearing Clearance with Plastigage (Crankshaft Installed)

(1) Support weight of crankshaft with jack placed under counterweight adjacent to journal being measured.

NOTE: *Measure clearance of one bearing at a time. ALL other bearing caps must remain tightened.*

(2) Remove main bearing cap and lower insert.

(3) Wipe insert and exposed portion of crankshaft journal clean.

(4) Place strip of Plastigage across full width of bearing insert.

NOTE: *Plastigage must not crumble. If brittle, obtain fresh stock.*

(5) Install bearing cap and tighten retaining screws with 100 foot-pounds (136 N•m) torque.

NOTE: *Do not rotate crankshaft. Plastigage will shift, resulting in inaccurate indication.*

(6) Remove bearing cap and determine amount of clearance by measuring width of compressed Plastigage with scale on Plastigage envelope. Correct clearance is 0.0015 to 0.0020 inch (0.038 to 0.051 mm) for No. 1 through No. 4 main bearings and 0.0025 to 0.003 inch (0.064 to 0.076 mm) for rear main bearing (fig. 1B-149).

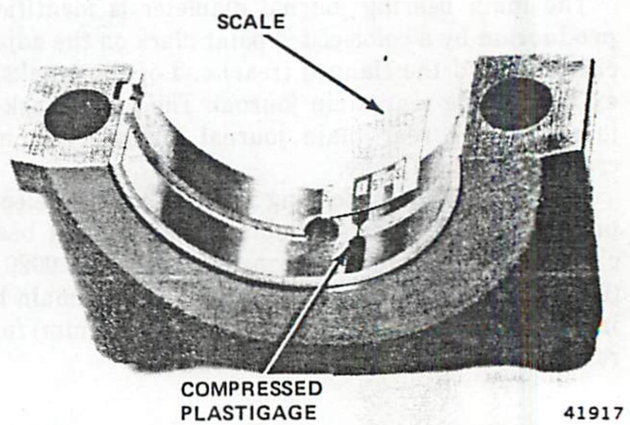

Fig. 1B-149 Measuring Main Bearing Clearance with Plastigage

NOTE: *The compressed Plastigage should maintain the same size across the entire width of the insert. If the size varies, this may indicate either a tapered journal or foreign material trapped behind the insert.*

(7) If correct clearance is indicated, bearing replacement is not necessary. Remove Plastigage from crankshaft and insert. Proceed to Installation.

NOTE: *Small pieces of Plastigage may remain on insert or journal surfaces. If so, they will dissolve in hot engine oil when the engine is operated.*

(8) If oil clearance exceeds specification, install pair of 0.001-inch (0.025 mm) undersize bearing inserts and measure clearance as described in steps (3) through (6) above.

(9) Clearance measured with 0.001-inch (0.025 mm) undersize inserts installed will determine if pair of 0.001-inch (0.025 mm) undersize inserts or some other size combination will provide correct clearance. For example, if clearance was 0.0035-inch (0.089 mm) originally, a pair of 0.001-inch (0.025 mm) undersize inserts will reduce clearance by 0.001 inch (0.025 mm). Oil clearance will be 0.0025 inch (0.064 mm) and within specification. Combination of 0.002-inch (0.051 mm) undersize insert and 0.001-inch (0.025 mm) undersize insert will reduce this clearance additional 0.0005 inch (0.013 mm) and oil clearance will be 0.002 inch (0.051 mm).

CAUTION: *Never use a combination of inserts that have a difference of more than one bearing size. For example, do not use a standard upper and 0.002-inch (0.051 mm) undersize lower insert.*

(10) If oil clearance exceeds specification with pair of 0.002-inch (0.051 mm) undersize inserts, measure crankshaft journal diameter with micrometer. Refer to Specifications. If journal diameter is correct, crankshaft bore in cylinder block may be misaligned, which requires cylinder block replacement. If journal diameter is incorrect, replace or grind crankshaft to standard undersize.

Installation

(1) Lubricate journal contact surface of each insert with clean engine oil.

(2) Loosen all main bearing caps.

(3) Install main bearing upper insert(s).

(4) Install main bearing cap(s) and lower insert(s). Tighten retaining screws evenly with 100 foot-pounds (136 N•m) torque in steps of 30, 60, 90 and 100 foot-pounds (41, 81, 122 and 136 N•m) torque. Rotate crankshaft after each tightening step to determine if it rotates freely. If it does not rotate freely, examine inserts for proper installation and size.

(5) Install oil pan using replacement gaskets and seals. Tighten drain plug securely.

(6) Fill crankcase to specified level with clean lube oil.

Measuring Main Bearing Journals with Micrometer (Crankshaft Removed)

(1) Wipe main bearing journals clean.

(2) Measure each journal diameter with micrometer. Note difference between maximum and minimum diameters of each journal.

(3) Refer to Specifications for maximum allowable taper and out-of-roundness.

(4) Compare measured largest diameter dimensions with journal diameter dimensions listed in Main Bearing Fitting Chart.

(5) Select insert pairs that will provide specified bearing clearance. Correct clearance is 0.0015 to 0.0020 inch (0.038 to 0.051 mm) for No. 1 through No. 4 main bearings and 0.0025 to 0.0030 inch (0.064 to 0.076 mm) for rear main bearing.

Rear Main Bearing Oil Seal

The rear main bearing oil seal consists of a two-piece neoprene single lip seal. Correct installation of the seal is required for leak-free engine operation.

Removal

(1) Drain engine oil.

(2) Remove starter motor.

(3) Remove oil pan.

(4) Remove oil pan front and rear neoprene oil seals.

(5) Remove oil pan side gaskets.

(6) Thoroughly clean gasket mating surfaces of oil pan and engine block. Remove all sludge and residue from oil pan sump.

(7) Remove rear main bearing cap.

(8) Remove and discard lower seal.

NOTE: *To ensure leak-free operation, always replace the upper and lower seal halves as a pair.*

(9) Clean main bearing cap thoroughly to remove all sealer.

(10) Loosen all remaining main bearing capscrews.

(11) Use brass drift and hammer to tap upper seal half until sufficient portion of seal is protruding to permit pulling seal out completely.

Installation

(1) Wipe crankshaft seal surface area clean and apply light film of oil.

(2) Coat block contact surface area of replacement upper seal half with soap and lip of seal with clean engine oil (fig. 1B-150).

(3) Insert upper seal half into engine block.

NOTE: *The lip of the seal must face the front of the engine.*

(4) Coat both sides of replacement lower seal half end tabs with Jeep Gasket-in-a-Tube (RTV silicone), or equivalent. Do not apply sealer to lip of seal.

(5) Coat outer curved surface of lower seal half with soap and lip of seal with clean engine oil.

(6) Insert seal into cap recess and seat firmly.

(7) Apply Jeep Gasket-in-a-Tube (RTV silicone), or equivalent, to both chamfered edges of rear main bearing cap.

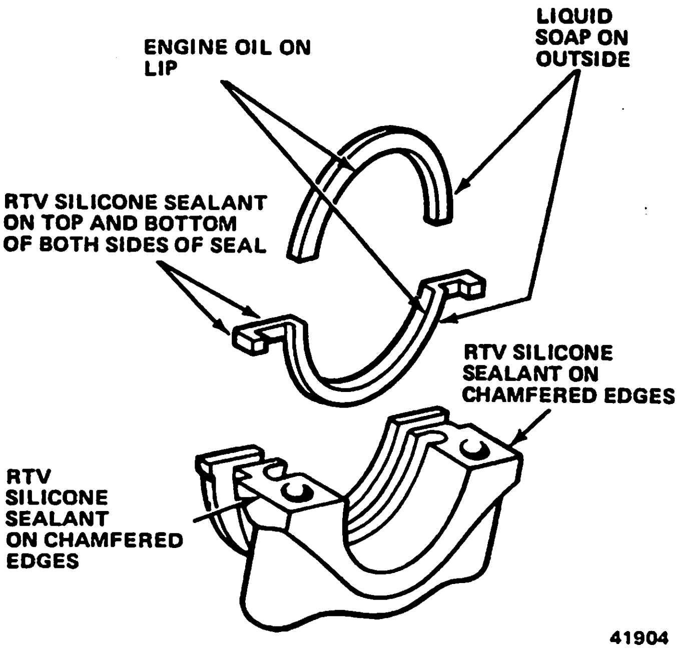

Fig. 1B-150 Rear Main Oil Seal Installation

CAUTION: *Do not apply sealer to the cylinder block mating surface of the rear main cap because bearing clearance could be affected.*

(8) Tighten all main bearing capscrews with 100 foot-pounds (136 N•m) torque.

(9) Install oil pan using replacement gaskets and seals. Tighten drain plug securely.

(10) Install starter motor.

(11) Fill crankcase to specified level with clean engine lube oil.

VIBRATION DAMPER AND PULLEY

The vibration damper is balanced independently and then rebalanced as part of the complete crankshaft assembly.

Do not attempt to duplicate original vibration damper balance holes when installing a service replacement damper. The vibration damper is not repairable and is serviced only as a complete assembly.

Removal

(1) Loosen damper retaining screw.

(2) Loosen alternator drive belt.

(3) Loosen air conditioner compressor drive belt, if equipped, and move aside.

(4) Loosen power steering pump drive belt, if equipped, and move aside.

(5) Remove damper pulley retaining bolts. Remove damper pulley from damper.

(6) Remove damper retaining screw and washer and loosely install screw to prevent damage to screw threads when removal tool is used.

(7) Use Vibration Damper Removal Tool J-21791 to remove damper from crankshaft (fig. 1B-151).

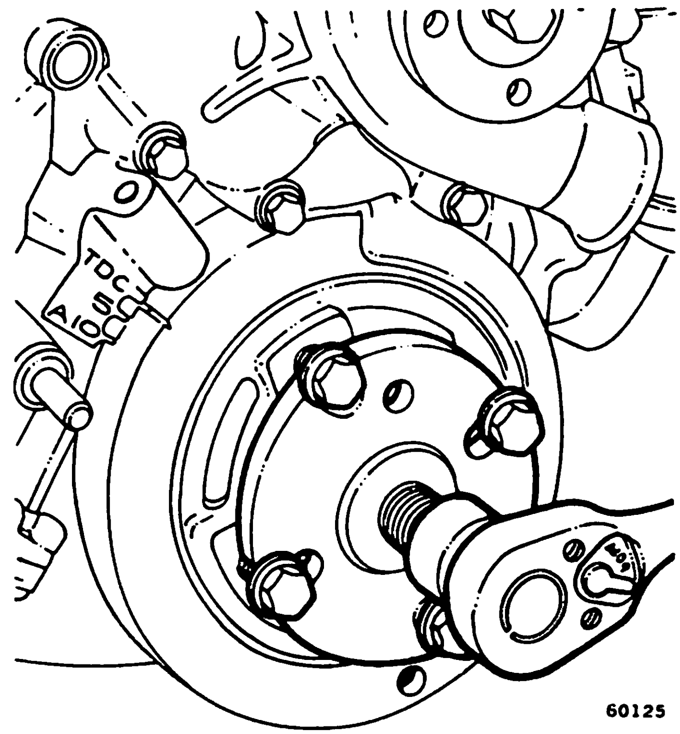

Fig. 1B-151 Vibration Damper Removal

Installation

(1) Polish damper hub with crocus cloth to prevent seal damage.

(2) Apply light film of engine oil to seal contact surface area of damper.

(3) Align key slot in damper hub with crankshaft key way.

(4) Position damper on end of crankshaft.

(5) Lubricate screw threads and washer with engine oil.

(6) Install damper retaining screw and washer and tighten with 90 foot-pounds (122 N•m) torque.

NOTE: *If crankshaft turns before specified torque is attained, proceed with belt installation. With belts installed, tighten damper retaining screw with 90 foot-pounds (122 N•m) torque.*

(7) Install damper pulley and retaining bolts. Tighten bolts with 30 foot-pounds (41 N•m) torque.

(8) Install drive belts and adjust to specified tension. Refer to Chapter 1C—Cooling Systems.

FLYWHEEL/DRIVE PLATE AND RING GEAR ASSEMBLY

The ring gear can be removed only from engines used with manual transmissions. With automatic transmissions, the ring gear is welded to and balanced as part of the drive plate and is not removeable.

Ring Gear Replacement—Manual Transmission (Flywheel Removed)

(1) Place flywheel on arbor press with steel blocks equally spaced around perimeter and under ring gear.

(2) Press flywheel down through ring gear.

NOTE: *The ring gear can also be removed by breaking it with a chisel.*

(3) Apply heat to expand inside perimeter of replacement ring gear.

(4) Press replacement ring gear onto flywheel.

NOTE: *The flywheel is balanced as an individual component and also as part of the crankshaft assembly. Do not attempt to duplicate original flywheel balance holes when installing a service replacement.*

CYLINDER BLOCK

Disassembly

(1) Drain engine oil.

(2) Remove engine assembly from vehicle as outlined in Engine Removal.

(3) Use engine stand to support engine assembly.

(4) Remove distributor.

(5) Remove cylinder head covers and gaskets.

(6) Remove bridge and pivot assemblies and rocker arms. Alternately loosen capscrews, one turn at a time, to avoid damaging bridge.

(7) Remove push rods.

NOTE: *Retain bridges, pivots, rocker arms, push rods and tappets in cylinder sets to facilitate installation in original locations.*

(8) Remove intake manifold assembly.

(9) Remove valve tappets.

(10) Remove cylinder heads and gaskets.

(11) Position pistons, one at a time, near bottom of stroke. Use ridge reamer to remove ridge, if any, from top end of cylinder walls.

(12) Loosen all drive belts. Remove power steering pump, air pump and air conditioner compressor, if equipped.

(13) Remove damper pulley and vibration damper.

(14) Remove timing case cover.

(15) Remove oil pan.

(16) Remove camshaft.

(17) Remove connecting rod bearing caps and inserts and retain in same order as removed.

NOTE: *Connecting rods and caps are stamped with the number of the associated cylinder.*

(18) Remove connecting rod and piston assemblies through top of cylinder bores. Ensure that connecting rod bolts do not scratch connecting rod journals or cylinder walls. Short pieces of rubber hose slipped over rod bolts will provide protection during removal.

(19) Remove oil pickup tube and screen assembly.

(20) Remove main bearing caps and inserts.

(21) Remove crankshaft.

Cylinder Bore Reconditioning

Cylinder Bore Measurement

Use a bore gauge to measure the cylinder bores (fig. 1B-152). If a bore gauge is not available, use an inside micrometer.

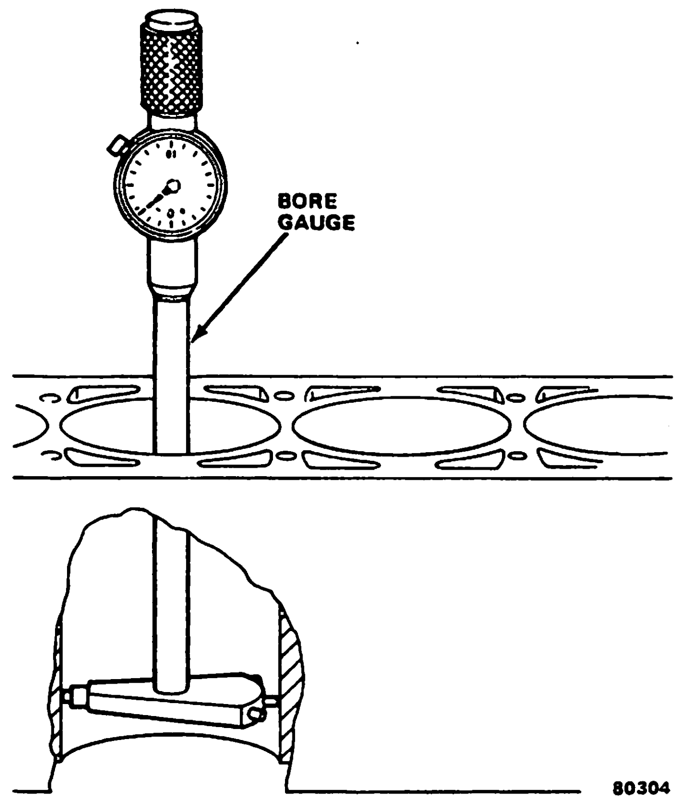

Fig. 1B-152 Measuring Cylinder Bore with Bore Gauge

(1) Measure cylinder bore crosswise to block near top of bore. Repeat measurement at bottom of bore.

(2) Determine taper by subtracting smaller dimension from larger dimension.

(3) Turn measuring device 120° and repeat step (1). Then turn another 120° and repeat measurements.

(4) Determine out-of-roundness by comparing difference between measurements taken 120° apart.

If the cylinder taper does not exceed 0.005 inch (0.127 mm) and the out-of-roundness does not exceed 0.003 inch (0.076 mm), true the cylinder bore by honing. If the cylinder taper or out-of-round condition exceeds these limits, bore and then hone cylinder for an oversize piston.

Resurfacing Cylinder Bore

CAUTION: *Do not use rigid type hones to remove cylinder glaze. A slight amount of taper always exists in cylinder walls after the engine has been in service for a period of time.*

(1) Use expanding hone to true cylinder bore and to remove glaze for faster ring seating. Move hone up and down at sufficient speed to produce uniform 60° angle crosshatch pattern on the cylinder walls. Do not use more than ten strokes per cylinder. A stroke is one down-and-up motion.

CAUTION: *Protect engine bearings and lubrication system from abrasives.*

(2) Scrub cylinder bores clean with solution of hot water and detergent.

(3) Immediately apply light engine oil to cylinder walls. Wipe with clean, lint-free cloth.

NOTE: *If crankshaft is not removed from block, cover connecting rod journals with clean cloths during cleaning operation.*

Assembly

(1) Install and lubricate upper main bearing inserts and rear main upper seal half. Lubricate seal lip.

(2) Install crankshaft.

(3) Install main bearing caps and inserts. If replacement bearings are installed, measure each bearing clearance with Plastigage.

(4) Install replacement oil pickup tube and screen assembly. Do not attempt to install original pickup tube. Ensure plastic button is inserted in bottom of replacement screen.

(5) Install camshaft.

(6) Position piston rings on pistons. Refer to Piston Rings for procedure.

(7) Lubricate piston and ring surfaces with clean engine oil.

(8) Use piston ring compressor tool to install connecting rod and piston assemblies through top of cylinder bores. Ensure that connecting rod bolts do not scratch connecting rod journals or cylinder walls. Short lengths of rubber hose slipped over connecting rod bolts will provide protection during installation.

(9) Install connecting rod bearing caps and inserts in same location as removed. Tighten nuts with 33 foot-pounds (45 N•m) torque.

(10) Install camshaft and crankshaft sprockets and timing chain as an assembly.

(11) Install timing case cover and gaskets. Refer to Timing Case Cover for procedure.

(12) Install engine oil pan using replacement gaskets and seals. Tighten drain plug securely.

(13) Install vibration damper and damper pulley.

(14) Install cylinder heads with replacement gaskets.

(15) Install valve tappets.

(16) Install intake manifold with replacement gasket.

(17) Install push rods.

(18) Install rocker arms and bridge and pivot assemblies. Loosely install capscrews through each bridge and then alternately tighten capscrews, one turn at a time, to avoid damaging bridge. Tighten capscrews with 19 foot-pounds (26 N•m) torque.

(19) Turn crankshaft to position No. 1 piston at TDC on compression stroke.

(20) Reseal and install cylinder head covers.

(21) Install power steering pump, air pump and air conditioner compressor.

(22) Install distributor.

(a) Point rotor at No. 1 spark plug firing position.

(b) Turn oil pump drive shaft with long screw driver to engage with distributor shaft.

(c) With rotor pointing at No. 1 spark plug firing position, rotate distributor housing counterclockwise until leading edge of trigger wheel segment is aligned with center of sensor. Tighten distributor hold-down clamp.

NOTE: *When engine is installed and operating, check ignition timing as outlined in Chapter 1A—General Service and Diagnosis.*

(23) Remove engine from stand.

(24) Install engine assembly as outlined in Engine Installation.

SPECIFICATIONS

Eight-Cylinder Engine Specifications

	(USA) Inches Unless Otherwise Specified	(METRIC) Millimeters Unless Otherwise Specified
Bore	4.08	103.63
Stroke	3.44	87.38
Displacement	360 cu. in.	6 liter
Compression Ratio	8.25:1	
Compression Pressure	120-140 psi (min)	827-1034 kPa
Maximum Variation Between Cylinders	30 psi	206 kPa
Taxable Horsepower	53.27	39.72 kW
Fuel	unleaded	
Camshaft		
Fuel Pump Eccentric Diameter	2.182-2.192	55.423-55.677
Tappet Clearance	Zero lash (hydraulic tappets)	
End Play	Zero (engine operating)	
Bearing Clearance	0.001-0.003 (0.0017-0.0020 preferred)	0.0254-0.0762 (0.0432-0.0508 preferred)
Bearing Journal Diameter		
No. 1	2.1195-2.1205	53.835-53.861
No. 2	2.0895-2.0905	53.073-53.099
No. 3	2.0595-2.0605	52.311-52.337
No. 4	2.0295-2.0305	51.549-51.575
No. 5	1.9995-2.0005	50.787-50.813
Maximum Base Circle Runout	0.001	0.0254
Cam Lobe Lift	0.266	6.7564
Intake Valve Timing		
Opens	14.75° BTDC	
Closes	68.75° BTDC	
Exhaust Valve Timing		
Opens	56.75° BBDC	
Closes	26.75° ATDC	
Valve Overlap	41.50°	
Intake Duration	263.50°	
Exhaust Duration	263.50°	
Connecting Rods		
Total Weight (Less Bearings)	681-689 grams	
Total Length (Center-to-Center)	5.873-5.877	149.17-149.28
Bearing Clearance	0.001-0.003 (0.0020-0.0025 preferred)	0.03-0.08 (0.051-0.064 preferred)
Side Clearance	0.006-0.018	0.15-0.46
Maximum Twist	0.0005 per inch	0.013 per 25.4 mm
Maximum Bend	0.001 per inch	0.03 per 25.4 mm

	(USA) Inches Unless Otherwise Specified	(METRIC) Millimeters Unless Otherwise Specified
Crankshaft		
End Play	0.003-0.008	0.08-0.20
Main Bearing Journal Diameter		
No. 1, 2, 3, 4	2.7474-2.7489	69.784-69.822
Rear Main	2.7464-2.7479	69.759-69.797
Main Bearing Journal Width		
No. 1	1.2635-1.2695	32.093-32.250
No. 2	1.246-1.248	31.65-31.70
No. 3	1.273-1.275	32.33-32.39
No. 4	1.246-1.248	31.65-31.70
No. 5	1.215-1.217	30.86-30.91
Main Bearing Clearance		
No. 1, 2, 3, 4	0.001-0.003 (0.0017-0.0020 preferred)	0.03-0.08 (0.04-0.05 preferred)
Rear Main		
No. 5	0.002-0.004 (0.0025-0.003 preferred)	0.05-0.10 (0.06-0.08 preferred)
Connecting Rod Journal Diameter	2.0934-2.0955	53.172-53.266
Connecting Rod Journal Width	1.998-2.004	50.75-50.90
Connecting Rod Bearing		
Clearance	0.001-0.003 (0.0020-0.0025 preferred)	0.03-0.08 (0.051-0.064 preferred)
Maximum Taper (All Journals)	0.0005	0.013
Maximum Out-of-Round (All Journals)	0.0005	0.013
Cylinder Block		
Deck Height	9.205-9.211	233.81-233.96
Deck Clearance	0.0145 (below block)	0.368 (below block)
Maximum Cylinder Taper	0.005	0.13
Maximum Cylinder Out-of-Round	0.003	0.08
Tappet Bore Diameter	0.9055-0.9065	22.999-23.025
Cylinder Block Flatness	0.001/1-0.002/6 0.008 (max)	0.03/25-0.05/152 0.20 (max)
Cylinder Head		
Combustion Chamber Volume	58.62-61.62 cc	
Valve Arrangement	EI-IE-EI-IE	
Valve Guide ID (Integral)	0.3735-0.3745	0.487-9.512
Valve Stem-to-Guide Clearance	0.001-0.003	0.03-0.08
Intake Valve Seat Angle	30°	
Exhaust Valve Seat Angle	44.5°	
Valve Seat Width	0.040-0.060	1.02-1.52
Valve Seat Runout	0.0025 (max)	0.064 (max)
Cylinder Head Flatness	0.001/1-0.002/6 0.008 (max)	0.03/25-0.05/152 0.20 (max)

60271A

Eight-Cylinder Engine Specifications (Continued)

	(USA) Inches Unless Otherwise Specified	(METRIC) Millimeters Unless Otherwise Specified
Lubrication System		
Engine Oil Capacity	4 quarts (add 1 quart with filter change)	3.8 liters (add 0.9 liters with filter change)
Normal Operating Pressure	13 psi at 600 rpm 37-75 psi at 1600+ rpm	90 kPa at 600 rpm 255-517 kPa at 1600+ rpm
Oil Pressure Relief	75 psi (max)	517 kPa (max)
Gear-to-Body Clearance	0.0005-0.0025 (0.0005 preferred)	0.013-0.064 (0.013 preferred)
Gear End Clearance, Feeler Gauge	0.004-0.008 (0.009 preferred)	0.010-0.2 (0.10 preferred)
Gear End Clearance, Plastigage	0.002-0.008 (0.002 preferred)	
Pistons		
Weight (Less Pin)	1.32-1.33 lbs.	601-605 grams
Piston Pin Bore CL-to-Piston Top	1.599-1.603	40.62-40.72
Piston-to-Bore Clearance	0.0012-0.0020 (0.0016 preferred)	0.030-0.051 (0.041 preferred)
Piston Ring Gap Clearance		
No. 1 and No. 2	0.010-0.020 (0.010-0.012 preferred)	0.25-0.51 (0.25-0.305 preferred)
Oil Control Steel Rail	0.015-0.045 (0.010-0.020 preferred)	0.38-1.14 (0.25-0.51 preferred)
Piston Ring Side Clearance		
No. 1	0.0015-0.003 (0.0015 preferred)	0.038-0.076 (0.038 preferred)
No. 2	0.0015-0.0035 (0.0015 preferred)	0.038-0.089 (0.038 preferred)
Oil Control	0.000-0.007	0.000-0.18

	(USA) Inches Unless Otherwise Specified	(METRIC) Millimeters Unless Otherwise Specified
Piston Ring Groove Height		
No. 1 and No. 2	0.0795-0.0805	2.019-2.045
Oil Control	0.1880-0.1895	4.775-4.813
Piston Ring Groove Diameter		
No. 1 and No. 2	3.624-3.629	92.05-92.18
Oil Control	3.624-3.635	92.05-92.33
Piston Pin Diameter	0.9308-0.9313	23.649-23.655
Piston Pin Bore Diameter	0.9288-0.9298	23.592-23.617
Piston-to-Pin Clearance	0.0003-0.0005 (0.005 preferred) loose	0.008-0.013 (0.013 preferred) loose
Piston Pin-to-Connecting Rod Fit	2000 lbf Press-Fit	8900 N Press-Fit
Rocker Arms, Push Rods, and Tappets		
Rocker Arm Ratio	1.6:1	
Push Rod Length	7.790-7.810	197.87-198.37
Push Rod Diameter	0.312-0.315	7.93-8.00
Hydraulic Tappet Diameter	0.9040-0.9045	22.962-22.974
Tappet-to-Bore Clearance	0.001-0.0025	0.025-0.064
Valves		
Valve Length (Tip-to-Gauge Dim. Line)	4.7895-4.8045	121.653-122.034
Valve Stem Diameter	0.3715-0.3725	9.436-9.462
Stem-to-Guide Clearance	0.001-0.003	0.03-0.08
Intake Valve Head Diameter	2.020-2.030	51.31-51.56
Intake Valve Face Angle	29°	
Exhaust Valve Head Diameter	1.675-1.685	42.55-42.80
Exhaust Valve Face Angle	44°	
Valve Springs		
Free Length	1.99	50.55
Spring Tension		
Valve Closed	64-72 lbf at 1.786	282-317 N at 45.36
Valve Open	202-220 lbf at 1.356	889-968 N at 34.44
Inside Diameter (All)	0.948-0.968	24.08-24.59

60271B

Torque Specifications

Service Set-To Torques should be used when assembling components. Service In-Use Recheck Torques should be used for checking a pre-tightened item.

	USA (ft-lbs)		Metric (N·m)	
	Service Set-To Torque	Service In-Use Recheck Torque	Service Set-To Torque	Service In-Use Recheck Torque
Air Injection Tube-to-Manifold	38	30-45	52	41-61
Air Pump-to-Bracket Pivot Screw	20	15-22	27	20-30
Air Pump Brackets-to-Engine—AC Compressor or Pedestals	25	18-28	34	24-38
Air Pump Adjusting Strap-to-Pump	20	15-22	27	20-30
Alternator Pivot Bolt or Nut	28	20-35	38	27-47
Alternator Adjusting Bolt	18	15-20	24	20-27
Alternator Mounting Bracket Bolt-to-Engine	28	23-30	38	31-41
Alternator Pivot Mounting Bolt-to-Head	33	30-35	45	41-47
Block Heater Nut, T-Screw Type	20 in-lbs	17-25 in-lbs	2	2-3
Camshaft Gear Retainer Screw	30	25-35	41	34-47
Carburetor Adapter-to-Manifold Screws—2V	14	12-15	19	16-20
Carburetor Holddown Nuts	14	12-15	19	16-20
Connecting Rod,Bolt Nuts	33	30-35	45	41-47
Crankshaft Pulley-to-Damper	23	18-28	31	24-38
Cylinder Head Capscrews	110	100-120	149	136-163
Cylinder Head Cover Screws	50 in-lbs	42-58 in-lbs	6	5-7
Distributor Clamp Screw	20	18-24	18	14-24
Drive Plate-to-Converter Screw	22	20-25	30	27-34
EGR Valve-to-Manifold	13	9-18	18	12-24
Exhaust Manifold Screws				
Center (2)	25	20-30	34	27-41
Outer (4)	15	12-18	20	16-24
Exhaust Pipe-to-Manifold Nuts	20	15-25	27	20-34
Fan and Hub Assembly Bolts	18	12-25	24	16-34
Flywheel or Drive Plate-to-Crankshaft	105	95-115	142	129-156
Front Support Cushion Bracket-to-Block Screw	35	25-40	47	34-54
Front Support Cushion-to-Bracket-to-Frame	37	30-45	50	41-61
Fuel Pump Screws	16	13-19	22	18-26
Idler Pulley Bearing Shaft-to-Bracket Nut	33	28-38	45	38-52
Idler Pulley Bracket-to-Front Cover Nut	7	4-9	9	5-12
Intake Manifold Screws	43	37-47	58	50-64
Main Bearing Capscrews	100	90-105	136	122-142
Oil Pump Cover Screws	55 in-lbs	45-65 in-lbs	6	5-7
Oil Pan Screws				
1/4 inch - 20	7	5-9	9	7-12
5/16 inch - 18	11	9-13	15	12-18
Oil Pressure Release Valve Cap	28	22-35	38	30-47
Power Steering Pump Adapter Screw	23	18-28	31	24-38
Power Steering Pump Bracket Screw	43	37-47	58	50-64
Power Steering Pump Mounting Screw	28	25-35	38	34-47
Rear Crossmember-to-Side Sill Nut	30	20-35	41	27-47
Rear Insulator Bracket-to-Trans. Screw	33	27-38	45	37-52
Rear Support Insulator-to-Bracket Nut	48	40-55	65	54-75
Rear Support Cushion-to-Crossmember Screw Nut	18	12-25	24	16-34
Rocker Arm Capscrew	19	16-26	26	22-35
Spark Plugs	28	22-33	38	30-45
Starter Motor-to-Converter Flywheel Housing Screws	18	13-25	24	18-34
Thermostat Housing Screw	13	10-18	18	14-24
Throttle Valve Rod Adjusting Screw	40 in-lbs	30-50 in-lbs	5	3-6
Timing Case Cover-to-Block	25	18-33	34	24-45
Vibration Damper Screw (Lubricated)	90	80-100	122	108-136
Water Pump Screws	48 in-lbs	40-55 in-lbs	5	5-6

All Torque values given in foot-pounds and newton-meters with dry fits unless otherwise specified.
Refer to the Standard Torque Specifications and Capscrew Markings Chart in Chapter A of this manual for any torque specifications not listed above.

60272

Eight-Cylinder Engine Firing Order

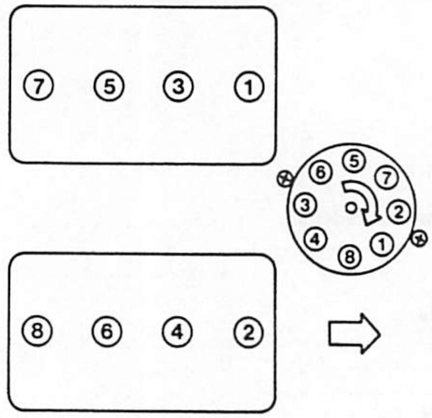

Tools

Four-Cylinder Engine

J-21054-1
HANDLE (CAMSHAFT BUSHING REMOVER AND INSTALLER) (USE WITH J-21473-1)

J-5569
PISTON RING COMPRESSOR (4 INCH)

J-5830
VALVE GUIDE REAMER SET

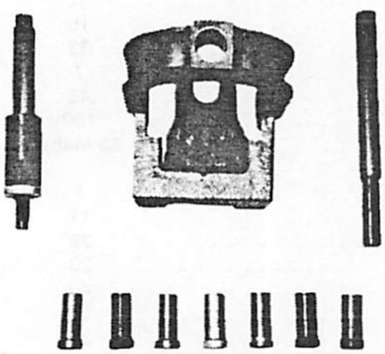

J-24086
BT-7612
PISTON PIN TOOL

J-23042
TIMING COVER SEAL ALIGNER AND INSTALLER

J-22794
AIR LINE ADAPTER

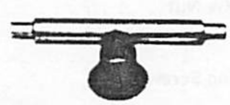

J-22330
VALVE SEAL INSTALLER AND TESTER

J-5892-1
VALVE SPRING COMPRESSOR

J-21054-1
ADAPTER

J-21473-1
CAMSHAFT BUSHING REMOVER & INSTALLER ADAPTER (USE WITH J-21054-1)

J-3049
VALVE LIFTER REMOVER

J-4160
HYDRAULIC VALVE LIFTER PLUNGER REMOVER

50428B

Six- and Eight-Cylinder Engine

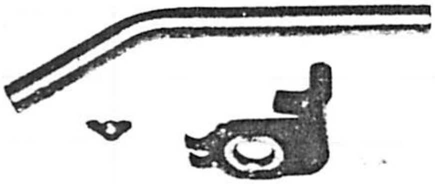

J-22534-1
VALVE SPRING
REMOVER AND
INSTALLER

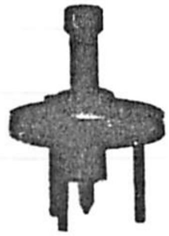

J-21791
VIBRATION DAMPER
REMOVER

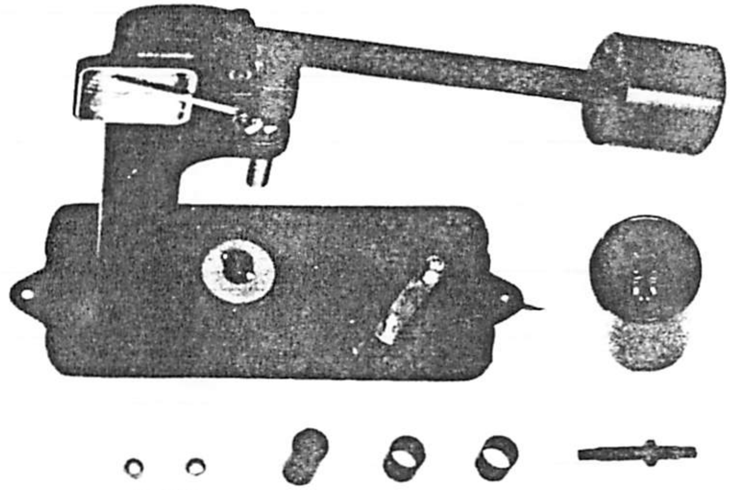

J-21872
PISTON PIN REMOVER AND INSTALLER

J-26562
TIMING CASE COVER
OIL SEAL INSTALLER

J-5790
HYDRAULIC VALVE LIFTER TESTER

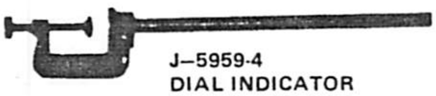

J–5959-4
DIAL INDICATOR
CLAMP AND ROD

J-26562
OIL SEAL INSTALLER

J–6042-1, 4, 5
VALVE GUIDE REAMERS

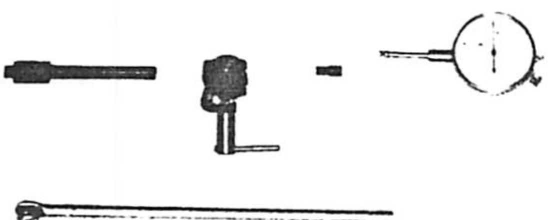

J–8520
DIAL INDICATOR SET
(0-1 INCH .001 INCH GRADUATION)

J–22700
OIL FILTER WRENCH

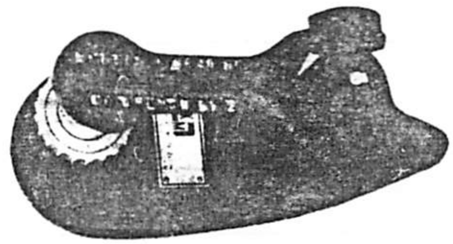

J–8056
VALVE AND CLUTCH
SPRING TESTER

J-22248
TIMING CASE COVER
ALIGNMENT TOOL AND
SEAL INSTALLER

J-5601
PISTON RING
COMPRESSOR 3-3/4"

SCREW, TIMING CASE
COVER CRANKSHAFT
SEAL INSTALLER
PART OF TOOL J-9163

J-21882
OIL PUMP INLET
TUBE INSTALLER

J-9256 TIMING CASE COVER
OIL SEAL REMOVER

J-22794
AIR LINE ADAPTER

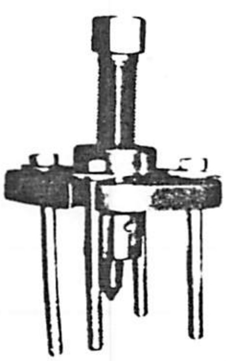

J-21791 VIBRATION
DAMPER REMOVER
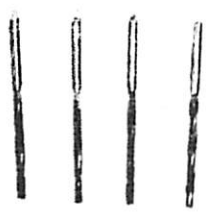
J-6042-1,4,5
VALVE GUIDE
REAMER SET

J-21884 HYDRAULIC VALVE TAPPET
REMOVER AND INSTALLER

TOOL J-22534-1
VALVE SPRING REMOVER
AND INSTALLATION TOOL

TOOL
J-22534-4

TOOL
J-22534-5

J-22534 VALVE SPRING REMOVER AND INSTALLATION TOOL

90197

NOTES

COOLING SYSTEMS 1C

INDEX

GENERAL

The cooling system regulates engine operating temperature by allowing the engine to reach normal operating temperature as soon as possible, maintaining normal operating temperature and preventing overheating (figs. 1C-1, 1C-2 and 1C-3). The cooling system also provides a means of heating the passenger compartment and cooling the automatic transmission fluid.

The cooling system is pressurized and uses a centrifugal water pump to circulate coolant throughout the system.

COOLING SYSTEM OPERATION

For four- and six-cylinder engines (with the engine operating), the belt-driven water pump forces coolant into the front of the cylinder block (adjacent to number one cylinder) where water jackets route it around all the cylinders. The coolant then passes upwards through holes in the cylinder head gasket into the cylinder head to cool the valve seats and valves. The coolant exits at the front of the cylinder head into the thermostat housing. If the coolant temperature is below 195°F (90°C), the thermostat is closed and all coolant flows to the front and through the intake manifold to assist fuel vaporization. Coolant flows out the rear of the intake manifold to the heater valve and (if open) to the heater core. The coolant returns to the water pump from either the heater core or heater valve (if closed) to be recirculated.

Below 195°F (90°C) coolant does not flow through the thermostat but flows to the front and through the intake manifold. Above 195°F (90°C) part of the coolant flows through the thermostat to the radiator and returns to the pump inlet from the bottom of the radiator.

Heat from the coolant is used to warm the intake manifold and assist fuel vaporization.

NOTE: *The exhaust gas recirculating coolant temperature override (EGR CTO) valve and vacuum advance CTO valve sensors are in contact with engine coolant.*

For eight-cylinder engines, coolant is forced from the center of the engine timing case cover through side outlets into both banks of the cylinder block. It flows through the water jackets around all cylinders and up through holes in the cylinder block and head gaskets into the cylinder heads to cool the valve seats and valves. Coolant then flows through the cylinder heads to passages at the front of the heads and through the intake manifold to the thermostat. In the right cylinder head, coolant is forced into an intake manifold passage at the rear corner and out to the heater valve and heater core, through the heater core (if the valve is open), and back to the water pump. Below 195°F (91°C), the thermostat is closed and coolant flows out the bypass port through the hose to the water pump, where it is recirculated.

For all engines, the recirculation cycle continues until the coolant temperature reaches the thermostat calibration temperature and the thermostat begins to open. A portion of coolant then flows to the radiator inlet tank, through the cooling tubes and into the outlet tank. The radiator fan and vehicle motion cause air to flow past the cooling fins to remove heat from the coolant. As the

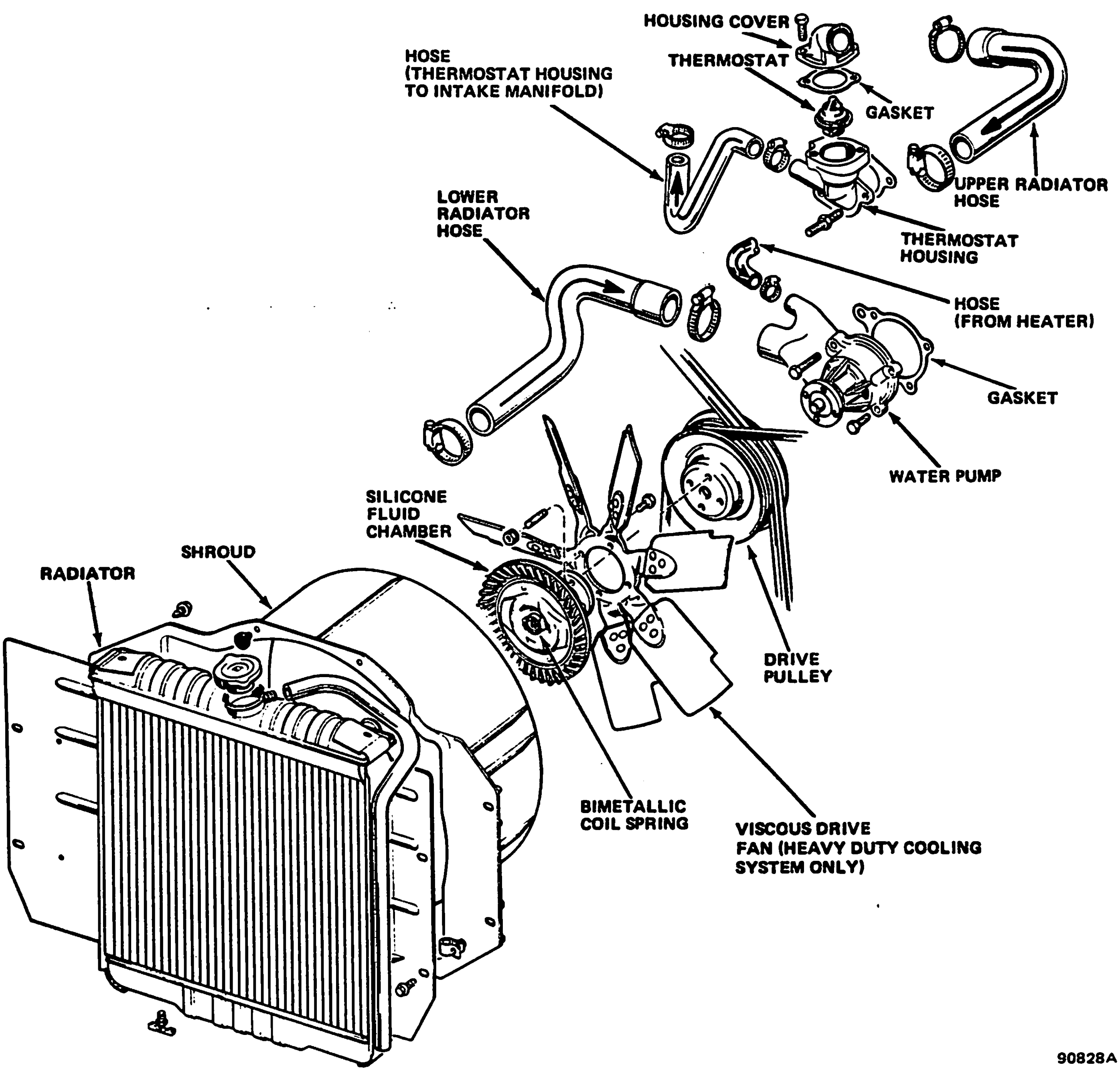

Fig. 1C-1 Four-Cylinder Engine Cooling System Components

coolant flows through the outlet tank, it passes the automatic transmission fluid cooler, if equipped, and cools the automatic transmission fluid. Coolant is then drawn through the lower radiator hose into the water pump inlet to restart the cycle.

As the thermostat continues to open, it allows more coolant flow to the radiator. When it reaches its maximum open position, maximum coolant flows through the radiator.

Heat causes the coolant to expand and increase the system pressure, which raises the boiling point of the coolant. The pressure cap maintains a pressure of 12 to 15 psi (42.7 to 103.4 kPa). At 15 psi (103.4 kPa), the relief valve in the cap allows pressurized coolant to escape through the filler neck overflow tube to the coolant recovery system bottle or to the road.

NOTE: *Immediately after shutdown, the engine enters a condition known as "heat soak." This is when the coolant is no longer circulating but engine temperature is still high. If the coolant temperature rises above the boiling point, expansion and pressure may force some coolant out of the radiator overflow tube. Normal engine operation will not usually cause this to happen.*

As engine temperature drops, the coolant loses heat and contracts, forming a partial vacuum in the system. The radiator cap vacuum valve allows air (via atmospheric pressure) to enter the system to equalize the pressure.

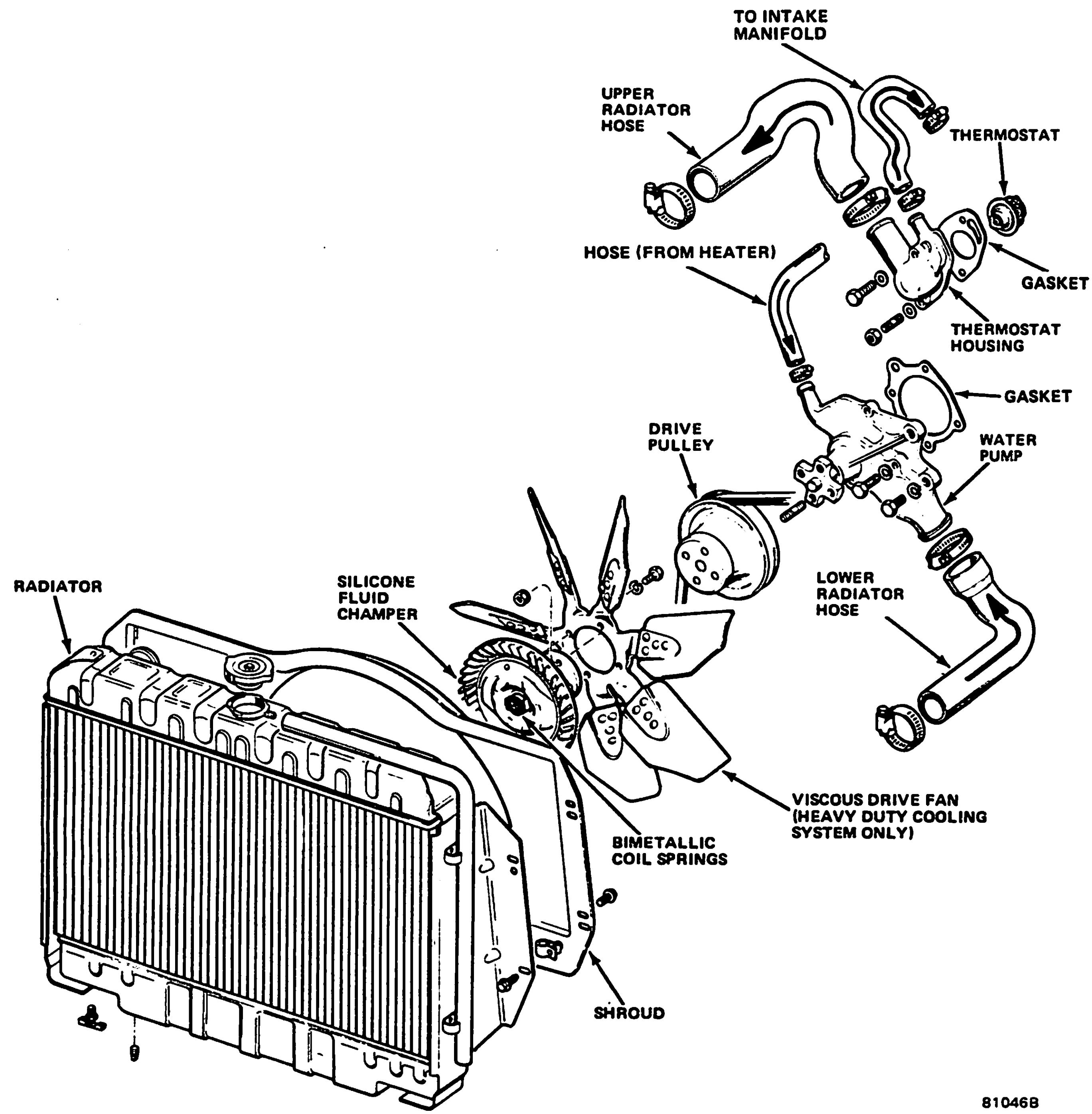

Fig. 1C-2 Six-Cylinder Engine Cooling System Components

During operation, the coolant temperature is detected by the temperature sending unit. The sending unit electrical resistance varies as temperature changes, causing the coolant temperature gauge to indicate accordingly.

The sender responds to temperature changes and, with high torque engine operation or on hot days, the coolant will be hotter and the gauge will indicate a higher engine temperature. Unless the gauge pointer moves past the high end of the band or coolant loss occurs, this is normal.

COOLANT

The coolant is a mixture of low mineral content water and ethylene glycol-based antifreeze. The addition of antifreeze to water alters several physical characteristics of water that are important to cooling system performance. The freezing point is lowered, the boiling point is raised and tendencies for corrosion and foaming are reduced. The lowered freezing point protects the engine and cooling system components from damage

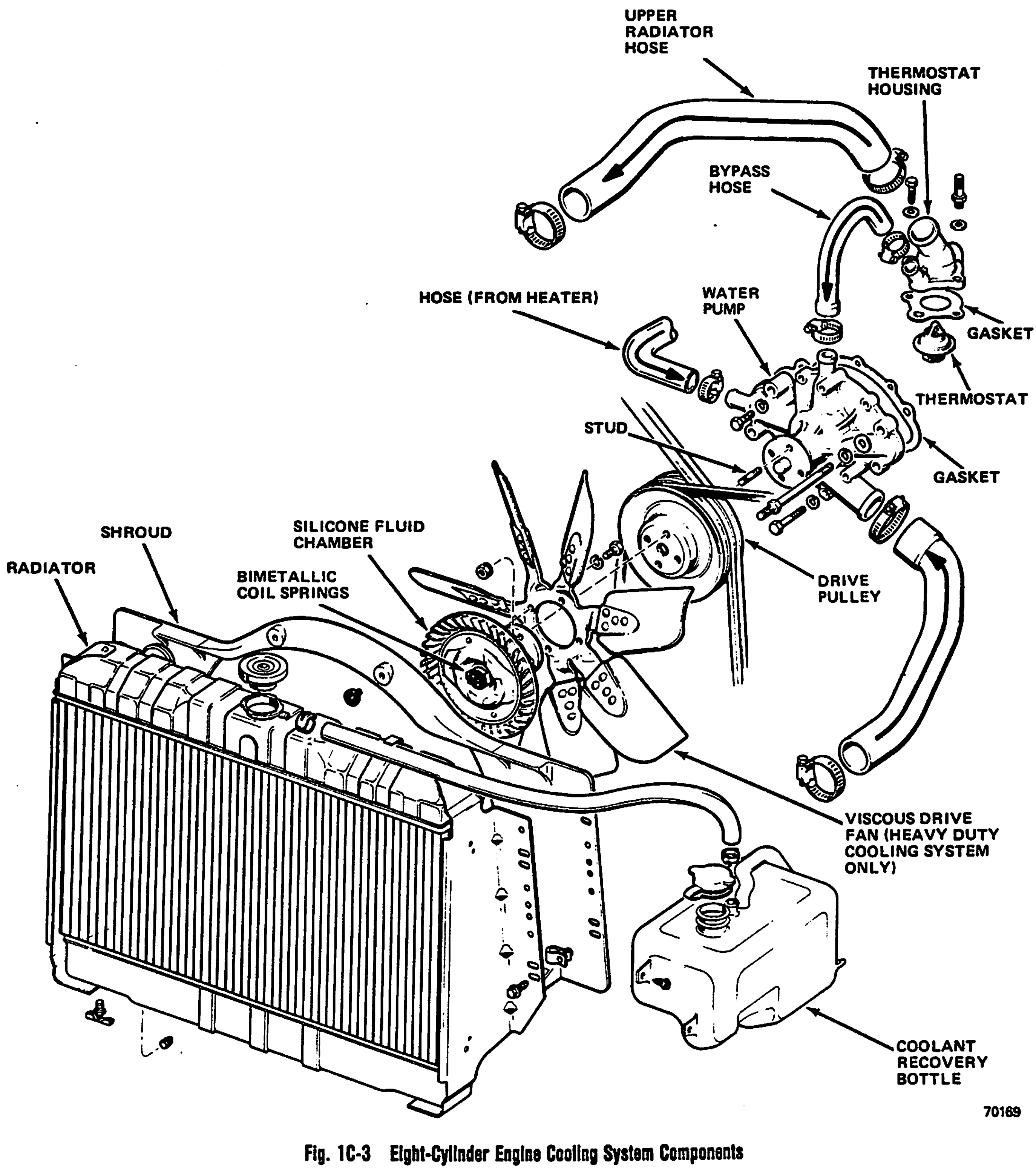

Fig. 1C-3 Eight-Cylinder Engine Cooling System Components

caused by the expansion of water as it freezes. The raised boiling point contributes to more efficient heat transfer. Reduced corrosion and reduced foaming permit unobstructed coolant flow for more efficient cooling. During "heat-soak" conditions after engine shutdown, the higher boiling point helps prevent coolant loss because of boilover. The higher boiling point also helps minimize damage caused by cavitation.

NOTE: *Cavitation is the formation of a partial vacuum by moving a solid body (pump impeller) swiftly through a liquid (coolant). The vacuum reduces the boiling point of the liquid and allows the formation of vapor bubbles, which burst when contacting a hard surface. If enough bubbles burst in a localized area, metal can be eroded, causing leakage.*

Vehicles manufactured at Toledo have an antifreeze concentration (50 percent) that protects against freezing down to -34°F (-36.6° C).

Coolant Level

Maintain the coolant level with a mixture of ethylene glycol-based antifreeze and low mineral content water.

CAUTION: *The antifreeze mixture should always be maintained to satisfy local climatic requirements, or 50 percent, whichever is greater. Maximum protection against freezing is provided with a 68 percent antifreeze mixture, which prevents freezing down to -90°F (-68°C). A higher percentage will freeze at a warmer temperature. For example, 100 percent antifreeze freezes at -8°F (-22°C). In addition, a higher percentage of antifreeze can cause the engine to overheat because the specific heat of antifreeze is lower than that of water. The antifreeze concentration MUST ALWAYS be a minimum of 50 percent, year-round and in all climates. If the percentage is lower, engine parts may be eroded by cavitation.*

CAUTION: *Do not use coolant additives that are claimed to improve engine cooling.*

Coolant Level—Without Coolant Recovery

For four-cylinder engines, the coolant level when cold should be maintained 1 to 1-1/4 inches (25 to 32 mm) below the rear edge of the radiator filler neck sealing surface. When the engine is at normal operating temperature, the coolant level should be 1/4 to 1/2 inch (6 to 13 mm) below the sealing surface.

For six- and eight-cylinder engines the coolant level when cold should be 1-1/2 to 2 inches (38 to 51 mm) below the rear of the radiator filler neck sealing surface, and at normal operating temperature it should be 1/2 to 1 inch (13 to 25 mm) below this surface.

WARNING: *With the engine hot and removing the radiator cap, coolant can spray out and scald hands, body and face. If necessary to check the level, allow the engine to idle for a few moments. Use a heavy rag or towel wrapped over the cap and turn the cap slowly to the first notch to relieve the pressure, then push down to disengage the locking tabs and remove the cap. If the engine is overheated, operate it above curb idle speed for a few moments with the hood up, then shut the engine Off and let it cool 15 minutes before removing the cap. Pressure can also be reduced during cooldown by spraying the radiator with cool water.*

Coolant Level—With Coolant Recovery

The coolant level in the recovery bottle should be checked only with the engine at normal operating temperature. It should be between the FULL and ADD marks on the coolant recovery bottle.

NOTE: *Do not add coolant unless level is below the ADD mark with the engine at normal operating temperature.*

When adding coolant during normal maintenance, add only to the recovery bottle, not to the radiator.

NOTE: *Remove the radiator cap only for testing or when refilling the system after service. Removing the cap unnecessarily can cause loss of coolant and allow air to enter the system, which produces corrosion.*

Draining Coolant

NOTE: *DO NOT WASTE reusable coolant. If solution is clean and is being drained only to service the engine or cooling system, drain coolant into a clean container for reuse.*

WARNING: *DO NOT remove block drain plugs or loosen radiator draincock with the system hot and under pressure because serious burns from coolant can occur.*

NOTE: *If equipped with a coolant recovery system, do not remove the radiator cap when draining coolant from the recovery bottle. Open the radiator draincock and when the bottle is empty, remove the radiator cap. The coolant need not be removed from the bottle unless the system is being refilled with a fresh mixture.*

Drain the coolant from the radiator by loosening the draincock on the bottom tank.

On four-cylinder engines, drain the cylinder block by removing the drain plug at the left-rear of the cylinder block.

On six-cylinder engines, drain the coolant from the cylinder block by removing the two drain plugs located on the left side of the block (plugs may have been replaced by one or two CTO valves).

On eight-cylinder engines, drain the coolant from the cylinder block by removing the centrally located plugs on each side of the block.

Replacing Coolant

Before filling, tighten radiator draincock and all cylinder block drain plugs. Add the proper mixture of coolant to satisfy local climatic requirements for freeze and cooling protection.

CAUTION: *The antifreeze concentration must always be a minimum of 50 percent, year-round and in all climates. If the percentage is lower, engine parts may be eroded by cavitation.*

Fill the radiator to the correct coolant level. On vehicles with a coolant recovery system, fill the radiator to the top and install the radiator cap. Add sufficient coolant to the recovery bottle to raise the level to the FULL mark.

After refilling the system or when air pockets are suspected, purge the cooling system of excess air.

Purging Air from Cooling System

Trapped air will hamper or stop coolant flow, or cause burping of engine coolant out of the radiator overflow tube.

Move the heater control to the HEAT position and the heater temperature control to the full WARM or HIGH position.

On vehicles without a coolant recovery system, purge air by operating the engine (with a properly filled cooling system) with the radiator cap off until coolant has completely circulated throughout the engine, or until normal operating temperature is attained. Add coolant if necessary, and install radiator cap.

On vehicles with a coolant recovery system, fill the system with coolant and operate the engine with all coolant caps in place. After coolant has reached normal operating temperature, shut engine off and allow to cool. Add coolant to recovery bottle as necessary.

NOTE: *This procedure may have to be repeated several times to maintain the correct coolant level at normal operating temperature.*

NOTE: *With some models, it may be necessary to remove a heater hose to provide an escape for trapped air when filling the system.*

Coolant Freezing Point Test

Check coolant freezing point, or freeze protection, with an antifreeze hydrometer to determine protection level.

Removing Coolant from Crankcase

If coolant leaks into the lubricating system, **it will clog the oil passages and cause the pistons to seize. Severe damage to the engine will result.** If coolant has leaked into the lubricating system, locate the source of the coolant leak(s), such as a faulty head gasket or cracked block, and make the necessary repairs. After repairing the source of the leak(s), use Jeep Crankcase Cleaner, or equivalent, to flush engine.

WATER PUMP

A centrifugal water pump circulates the coolant through the water jackets, passages, intake manifold, radiator core, rubber hoses and heater core. The pump is driven from the engine crankshaft by a V-type belt (two belts for certain eight-cylinder engines). A single serpentine drive belt is used for certain six-cylinder engines (refer to Cooling System Components chart). The water pump impeller is pressed onto the rear of a shaft that rotates in bearings pressed into the housing. The housing has a small hole to allow seepage to escape. The water pump seals are lubricated by the antifreeze in the coolant. No additional lubrication is necessary.

Water Pump Pulley Replacement

(1) Disconnect fan shroud from radiator, if equipped.

(2) Loosen all belts routed around water pump pulley.

(3) Remove fan or Tempatrol drive attaching screws. Refer to Fan Replacement

(4) Remove fan and spacer or Tempatrol fan and drive. Remove shroud. Refer to Fan Replacement.

(5) Remove pulley.

(6) Install pulley.

NOTE: *For four-cylinder engines, the fan assembly and pulley must be installed with the drive belt in position on the pulley. Tighten attaching nuts with 18 foot-pounds (24 N•m) torque.*

(7) Position fan, spacer and shroud.

(8) Install and tighten belts. Refer to Drive Belt Adjustments.

(9) Install fan attaching screws and tighten.

(10) Install shroud attaching screws and tighten.

Water Pump Replacement

The water pump impeller is pressed on the rear of the pump shaft and bearing assembly. The water pump is serviced only as a complete assembly.

NOTE: *DO NOT WASTE reusable coolant. If solution is clean and being drained only to service the cooling system, drain into a clean container for reuse.*

WARNING: *DO NOT remove cylinder block drain plugs or loosen radiator draincock with the system hot and under pressure because serious burns from coolant can occur.*

Removal—Four-Cylinder Engine

(1) Drain coolant. Observe WARNING and NOTE stated above.

(2) Remove drive belt and fan. Refer to Fan Replacement.

(3) Disconnect lower radiator and heater hoses from water pump.

(4) Remove attaching bolts and water pump.

Installation—Four-Cylinder Engine

(1) Scrape and clean gasket surface area on cylinder block.

(2) Position replacement gasket.

(3) Install water pump on cylinder block. Tighten bolts with 25 foot-pounds (30 N•m) torque.

(4) Connect lower radiator and heater hoses.

(5) Install coolant. Use correct mixture.

(6) Install fan and drive belt. Tighten drive belt. Refer to Drive Belt Adjustments.

NOTE: *The fan assembly and pulley must be installed with the drive belt in position on the pulley. Tighten attaching nuts with 18 foot-pounds (24 N•m) torque.*

WARNING: *Use extreme caution when engine is operating. Do not stand in direct line with fan. Do not put hands near pulleys, belts or fan. Do not wear loose clothing.*

(7) Operate engine and inspect for leaks.

Removal—Six-Cylinder Engine

The following procedure applies to all vehicles with or without power steering, air injection and air conditioning.

(1) Drain cooling system. Observe WARNING and NOTE stated above.

(2) Disconnect radiator and heater hoses from pump.

(3) Remove drive belts.

(4) Remove fan shroud attaching screws from radiator, if equipped.

(5) Remove fan assembly and remove fan shroud. Refer to Fan Replacement.

NOTE: *On some models, fan removal may be easier if the fan shroud is rotated 1/2 turn.*

(6) Remove water pump and gasket.

Installation—Six-Cylinder Engine

CAUTION: *Six-cylinder engines with a serpentine (single) drive belt have a reverse rotating water pump and viscous (Tempatrol) fan drive assembly. The components are identified by the words "REVERSE" stamped on the cover of the viscous drive and inner side of the fan, and "REV" cast into the water pump body. Do not install components that are intended for non-serpentine drive belts.*

Before installing pump, clean gasket mating surfaces and (if original pump) remove deposits and other foreign material from impeller cavity. Inspect cylinder block surface for erosion or other faults.

(1) Install replacement gasket and water pump. Tighten bolts with 13 foot-pounds (18 N•m) torque. Rotate shaft by hand to ensure impeller turns freely.

(2) Position shroud against front of engine, if removed, and install fan and hub assembly. Tighten screws with 18 foot-pounds (24 N•m) torque.

(3) Install fan shroud on radiator.

(4) Install drive belts and tighten to specified tension. Refer to Drive Belt Adjustments.

(5) Connect hoses to water pump.

(6) Fill system with coolant. Use correct mixture.

WARNING: *Use extreme caution when engine is operating. Do not stand in direct line with fan. Do not put hands near pulleys, belts or fan. Do not wear loose clothing.*

(7) Operate engine with heater control valve open and radiator cap off until thermostat opens to purge air from cooling system.

(8) Check coolant level and add as required.

Removal—Eight-Cylinder Engine

(1) Disconnect battery negative cable.

WARNING: *DO NOT remove cylinder block drain plugs with system hot and under pressure because serious scalding from coolant can occur.*

(2) Drain radiator and disconnect upper radiator hose at radiator.

(3) Loosen all drive belts.

(4) If vehicle is equipped with fan shroud, separate shroud from radiator.

(5) Install one radiator/shroud screw to retain radiator.

(6) Remove fan and hub from water pump. Remove fan and shroud, if equipped, from engine compartment.

(7) If vehicle is equipped with air conditioning, install double nut on air conditioning compressor bracket-to-water pump stud and remove stud (fig. 1C-4).

NOTE: *Removal of this stud eliminates the necessity of removing compressor mounting bracket.*

(8) Remove alternator and mount bracket assembly and place aside. Do not disconnect wires.

(9) If equipped with power steering, remove two nuts that attach power steering pump to rear half of pump mounting bracket.

(10) Remove two screws that attach front half of bracket to rear half.

(11) Remove remaining upper screw from inner air pump support brace, loosen lower bolt and drop brace away from power steering front bracket (fig. 1C-4).

(12) Remove front half of power steering bracket from water pump mounting stud.

(13) Disconnect heater hose, bypass hose and lower radiator hose at water pump.

(14) Remove water pump and gasket from timing case cover.

(15) Clean all gasket material from gasket mating surface of timing case cover.

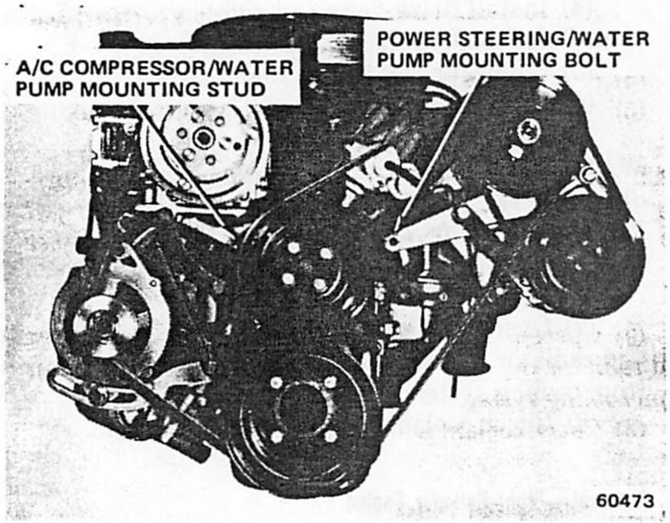

Fig. 1C-4 Water Pump Removal—Eight-Cylinder Engine with A/C

Installation—Eight-Cylinder Engine

NOTE: *Check timing case cover for erosion damage caused by cavitation.*

(1) Install water pump and replacement gasket on timing case cover.

(2) Tighten retaining screws to specified torque.

(3) If removed, install front section of power steering mount bracket, power steering pulley and drive belt.

(4) Tighten drive belt to specified tension, then tighten pulley retaining nut with 55 to 60 foot-pounds (75 to 81 N•m) torque.

(5) Install air pump drive belt, if removed, and tighten to specified tension.

(6) Install alternator and mount bracket assembly.

(7) Connect heater hose, bypass hose and lower radiator hose to water pump.

CAUTION: *Ensure the wire coil (spring) is installed in the lower radiator hose. Failure to install this coil will result in the hose collapsing when the engine is operating with high rpm.*

(8) Position shroud against front of engine and install engine fan and hub assembly. Tighten retaining screws to specified torque.

(9) Position shroud on radiator and install with attaching screws.

(10) Install alternator drive belt and tighten to specified tension.

(11) Connect upper radiator hose to radiator.

(12) Connect battery negative cable.

(13) Fill cooling system with correct mixture of Jeep All-Season Coolant, or equivalent, and water. Operate engine with heater control valve open until thermostat opens. Shut off engine, recheck coolant level and add as necessary.

(14) Reset clock, if equipped.

Water Pump Tests

Loose Impeller

NOTE: *DO NOT WASTE reusable coolant. If solution is clean and is being drained only to service the cooling system, drain coolant into a clean container for reuse.*

WARNING: *DO NOT remove cylinder block drain plugs or loosen radiator draincock with system hot and under pressure because serious burns from coolant can occur.*

(1) Drain cooling system.

(2) Loosen fan belt.

(3) Disconnect lower radiator hose from water pump.

(4) Bend stiff clothes hanger or welding rod (fig. 1C-5).

(5) Position rod in water pump inlet and attempt to hold impeller while turning fan blades. If impeller is loose and can be held with rod while fan blades are turning, pump is defective. If impeller turns, pump is OK.

NOTE: *If equipped with a Tempatrol fan, turn water pump shaft with socket and breaker bar attached to a mounting flange nut.*

(6) Connect hose and install coolant, or proceed with further repairs.

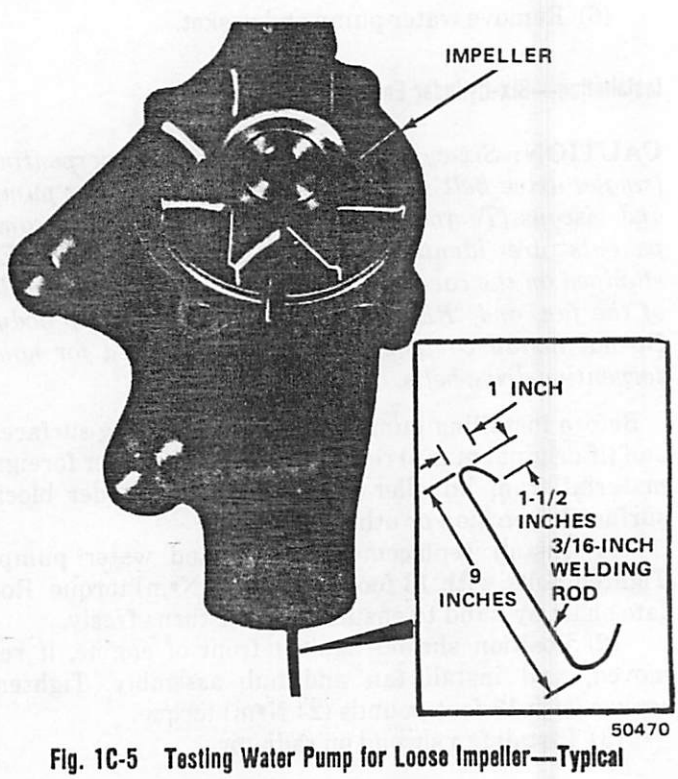

Fig. 1C-5 Testing Water Pump for Loose Impeller—Typical

Inspecting for Inlet Restrictions

With six- and eight-cylinder engines, poor heater performance may be caused by a casting restriction in the water pump heater hose inlet.

NOTE: *This procedure does not apply to the four-cylinder engine.*

(1) Drain sufficient coolant from radiator to permit removal of heater hose from water pump.
(2) Remove heater hose.
(3) Check inlet for casting flash or other restrictions.

NOTE: *Remove pump from engine before removing restriction to prevent contamination of coolant with debris. Refer to Water Pump Removal.*

INTAKE MANIFOLD—SIX-CYLINDER ENGINE

Coolant Flow Test

If restricted coolant flow is suspected, perform the following test procedure.

NOTE: *DO NOT WASTE reusable coolant. If solution is clean and being drained only to service the cooling system, drain into a clean container for reuse.*

WARNING: *DO NOT loosen radiator draincock with system hot and under pressure because serious burns from coolant can occur.*

(1) Drain coolant from radiator to level below intake manifold and remove coolant hoses from front and rear fittings on intake manifold.
(2) Install 12-inch (305 mm) length of 5/8-inch (16 mm) inside diameter (ID) heater hose on intake manifold front fitting and place funnel in hose. Funnel must have minimum outlet size of 3/8-inch (9.5 mm) inside diameter (ID).
(3) Fill clean container with 1/2 gallon (1.9 liter) of water.
(4) Begin pouring water into funnel and, with time device in view, time water flow through manifold when water starts flowing down funnel.
(5) Continue pouring water into funnel until container is empty and continue timing water flow until funnel is empty.
(6) If water flows through intake manifold coolant passage in 25 seconds or less, flow interval is correct and passage is not restricted.
(7) If water takes longer than 25 seconds to flow through intake manifold, inspect manifold coolant inlet and outlet for casting flash or other restrictions, correct as necessary and proceed to next step.
(8) Check length of each hose fitting extending into intake manifold coolant passages. Extension must not be so excessive in length that coolant flow is restricted. Replace fitting(s) if length is excessive.
(9) If intake manifold coolant passages are restricted and cannot be cleared, replace intake manifold. Refer to replacement procedure in Chapter 1B.

HOSES

Rubber hoses route coolant to and from the radiator core and heater core. A heater coolant control valve is installed in the heater core inlet hose to control coolant flow to the heater core.

The lower radiator hose on all engines is reinforced with a wire coil (stiffener) to prevent collapse caused by water pump suction.

Hose Inspection

Inspect hoses at regular intervals. Replace hoses that are cracked, feel brittle when squeezed or swell excessively when under pressure.

In areas where specific routing clamps are not provided, ensure hoses are positioned to clear exhaust manifold and pipe, fan blades and drive belts. Otherwise, improperly positioned hoses will be damaged, resulting in coolant loss and engine overheating.

The lower radiator hose on all engines is fitted with an internal wire coil (stiffener) to prevent hose collapse. When performing a hose inspection, check for proper position of the wire coil.

THERMOSTAT

A pellet-type thermostat controls the operating temperature of the engine by controlling the amount of coolant flow to the radiator. On all engines, the thermostat is closed below 195°F (90°C). Above this temperature, coolant is allowed to flow to the radiator. This provides quick engine warmup and overall temperature control. An arrow or the words TO RAD is stamped on the thermostat to indicate the proper installed position. The same thermostat is used for winter and summer seasons. An engine should not be operated without a thermostat, except for servicing or testing. Operating without a thermostat causes longer engine warmup time, unreliable warmup performance and crankcase condensation that can result in sludge formation.

Thermostat Replacement

NOTE: *DO NOT WASTE reusable coolant. If solution is clean and is being drained only to service the cooling system, drain coolant into a clean container for reuse.*

WARNING: *DO NOT loosen radiator draincock with system hot and under pressure because serious burns from coolant can occur.*

(1) Drain coolant from radiator until level is below thermostat housing.

(2) Four- and eight-cylinder engines: remove upper radiator hose, thermostat housing cover, gasket and thermostat.

(3) Six-cylinder engine: remove upper radiator and intake manifold hoses, thermostat housing, gasket and thermostat.

(4) Clean gasket mating surfaces.

(5) Install replacement thermostat, gasket, housing cover (four- and eight-cylinder engines) or housing (six-cylinder engines).

NOTE: *For four-cylinder engines, install the replacement thermostat with the pellet inside the thermostat housing. Insert replacement gasket between thermostat and housing cover. For six- and eight-cylinder engines, install the replacement thermostat so that the pellet, which is encircled by a coil spring, faces the engine. All thermostats are marked on the outer flange to indicate the proper installed position.*

CAUTION: *Observe the recess in the cylinder head (six- and eight-cylinder engines) and position the thermostat in the groove (figs. 1C-6 and 1C-7). Next, install the gasket and thermostat housing or cover. Tightening the housing unevenly or with the thermostat out of its recess will result in a cracked housing.*

Fig. 1C-6 Thermostat Recess—Six-Cylinder Engine

(6) Four-cylinder engine: tighten housing cover bolts with 22 foot-pounds (30 N•m) torque. Six- and eight-cylinder engines: tighten bolts with 13 foot-pounds (18 N•m) torque.

(7) Install hoses. Ensure radiator draincock is tightly closed.

(8) Fill cooling system to correct level with required coolant mixture. Refer to Coolant.

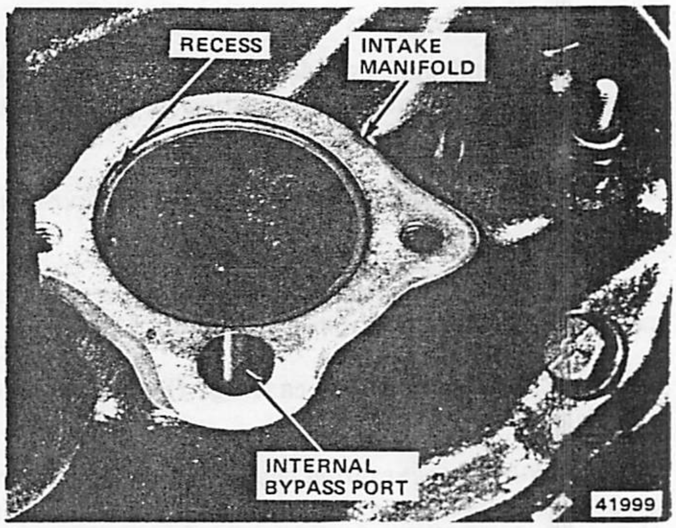

Fig. 1C-7 Thermostat Recess—Eight-Cylinder Engine

Thermostat Testing

(1) Remove thermostat. Refer to Thermostat Replacement.

(2) Insert 0.003-inch (0.076-mm) feeler gauge, with wire or string attached, between valve and seat (fig. 1C-8).

WARNING: *Antifreeze is poisonous. Keep out of reach of children.*

(3) Submerge thermostat in container of pure antifreeze and suspend it so that it does not touch sides or bottom of container.

(4) Suspend thermometer in solution so that is does not touch container.

WARNING: *Do not breathe antifreeze vapor.*

(5) Heat solution.

(6) Apply slight tension on feeler gauge while solution is heated. When valve opens 0.003-inch (0.076-mm), feeler gauge will slip free from valve. Note temperature. Refer to Thermostat Calibrations chart below. If faulty, replace thermostat.

(7) Install thermostat. Refer to Thermostat Replacement.

RADIATOR

All vehicles have downflow, tube and spacer-type radiators. A top tank and a bottom tank are soldered to vertical cooling tubes. The radiator cap and filler neck are located on the inlet tank. The bottom, or outlet, tank contains the draincock. It also contains the transmission fluid cooler for vehicles with an automatic transmission.

Certain vehicles have a plastic fan shroud attached to the radiator to funnel air more directly through the radiator for improved engine cooling during engine idle and low rpm speeds.

Certain vehicles are equipped with air baffle seals between the radiator and various body structures. This

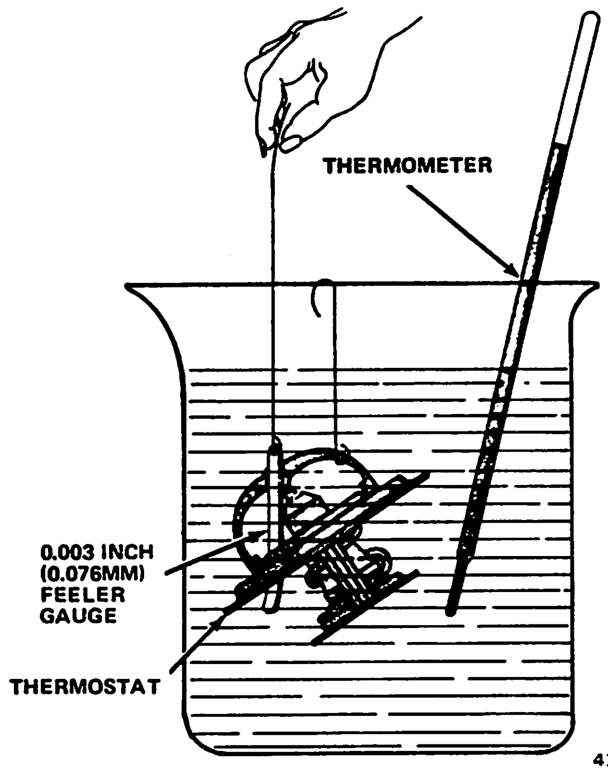

41959

Fig. 1C-8 Testing Thermostat

Thermostat Calibrations

	4-, 6- and 8-Cyl
Must Be Open 0.003-Inch (0.076 mm)	90°C 195°F
Must Be Fully Open	103°C 218°F

80399

prevents air from flowing forward around the radiator and recirculating through the core.

Radiator Identification

Radiators are identified by a Jeep part number and the vendor build code number embossed on the upper tank. Certain Cherokee, Wagoneer and Truck models have the code located at the radiator right side support.

Radiator Maintenance

NOTE: *To test a radiator for leaks or pressure loss, refer to Cooling System Leakage Tests.*

The radiator should be free from any obstruction of airflow. This includes bugs, clogged bug screens, leaves, mud, emblems, flags, fog or driving lamps, improperly mounted license plates, large, nonproduction bumper guards or collision damage.

NOTE: *Remove dirt and other debris by blowing compressed air from the engine side of the radiator through the cooling fins.*

Radiator Identification

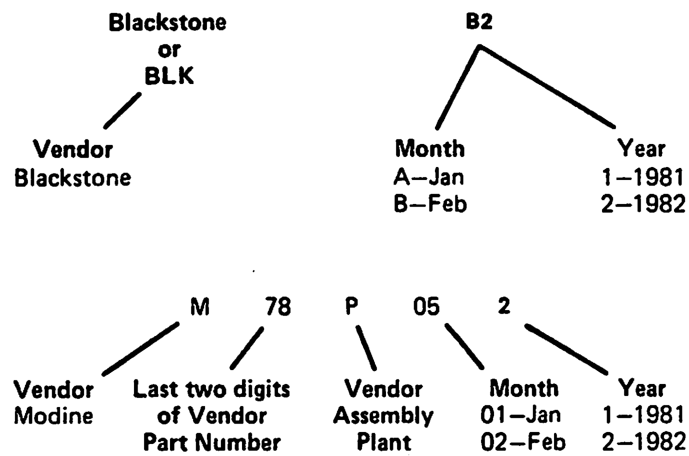

60336

Any one of several faults or defects can affect radiator operation:

- bent or damaged tubes,
- corrosion deposits restricting coolant flow,
- cooling tubes restricted because of improper soldering.

Repair damaged tubes that affect proper operation. Coolant leaks can be detected by applying 3 to 5 psi (21 to 34 kPa) air pressure to the radiator while it is submerged in water. Cover leak holes or fractures with solder. Clean a clogged radiator with solvent or by reverse flushing. Refer to Cooling System Maintenance.

Replacement—All Models

NOTE: *DO NOT WASTE reusable coolant. If solution is clean and is being drained only to service the cooling system, drain into a clean container for reuse.*

WARNING: *DO NOT remove cylinder block drain plugs or loosen radiator draincock with system hot and under pressure because serious burns from coolant can occur.*

(1) Position drain pan under radiator and remove draincock. Observe WARNING above.
(2) Remove radiator cap.
(3) Disconnect upper radiator hose.
(4) Disconnect coolant recovery hose, if equipped.
(5) For certain four-cylinder engine models, it may be necessary to remove charcoal canister and bracket.
(6) Remove fan shroud screws, if equipped.
(7) Remove top radiator attaching screws.
(8) Remove lower hose.
(9) Disconnect and plug transmission fluid cooler pipes, if equipped with automatic transmission.
(10) Remove bottom radiator attaching screws.
(11) Remove radiator.
(12) Install replacement radiator.

(13) Install radiator attaching screws.

(14) Install charcoal canister and bracket, if removed.

(15) Position fan shroud and install screws, if removed.

(16) Install draincock.

(17) Remove plugs and connect transmission fluid cooler pipes, if disconnected.

(18) Install lower radiator hose using replacement clamp.

(19) Install upper hose using replacement clamp.

(20) Install coolant. Use correct mixture.

(21) Connect coolant recovery hose, if removed.

(22) Install radiator cap.

Radiator Pressure Cap

The radiator cap consists of a pressure valve and a vacuum valve (fig. 1C-9). The cap has several functions:

- prevents coolant loss when the vehicle is in motion;
- prevents impurities from entering the system and this minimizes corrosion;
- allows atmospheric pressure to eliminate the vacuum that occurs in the system during cooldown;
- seals cooling system pressure up to 12 to 15 psi (82.7 to 103.4 kPa), which raises the coolant boiling point approximately 2-1/2°F per psi (0.20°C per kPa) of pressure.

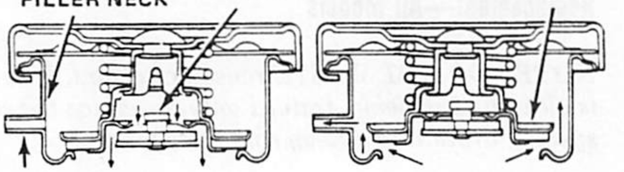

Fig. 1C-9 Radiator Cap Operation

Testing

(1) Remove cap from radiator.

(2) Ensure seating surfaces are clean.

(3) Wet rubber gasket with water and install cap on tester (fig. 1C-10)

(4) Operate tester pump and observe gauge pointer at its highest point. Cap release pressure should be 12 to 15 psi (82.7 kPa to 103.4 kPa).

NOTE: *Cap is satisfactory when constant pressure is maintained or pressure is maintained within the 12 to 15 psi (82.7 to 103.4 kPa) range for 30 seconds or more. If gauge pointer drops quickly, replace cap.*

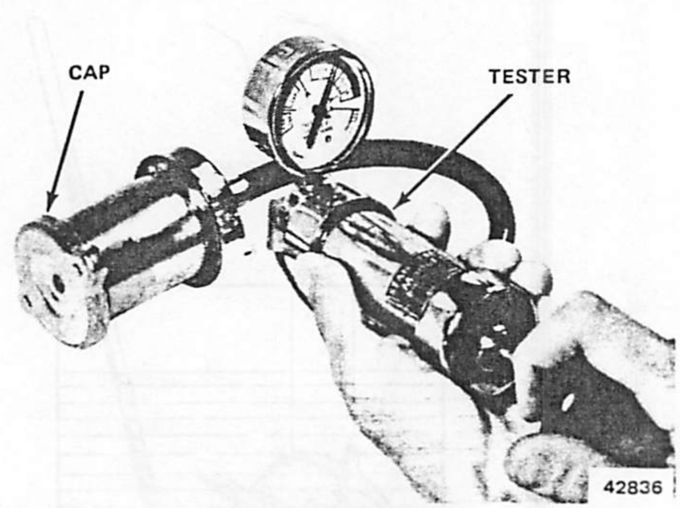

Fig. 1C-10 Radiator Cap Pressure Test

FAN ASSEMBLY

Refer to the Cooling System Components chart for specific applications.

There are several types of metal fans available for all engines. Most engines with a standard cooling system use a four-bladed rigid fan. Certain engines are fitted with standard-equipment multi-bladed viscous drive (Tempatrol) fans for noise reduction. All air-conditioned vehicles have a viscous drive (Tempatrol) fan (fig. 1C-11).

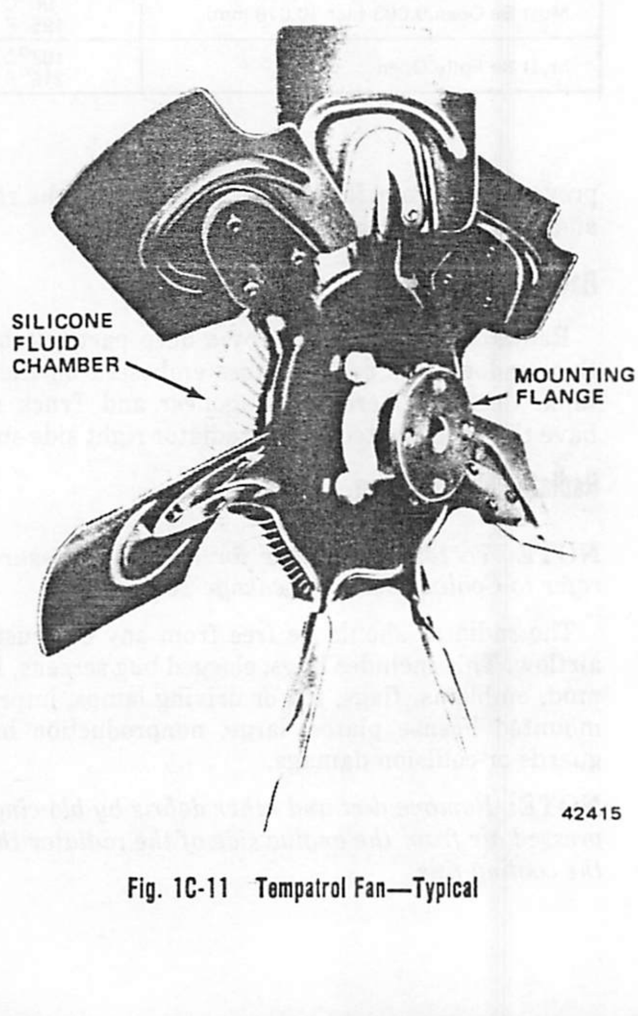

Fig. 1C-11 Tempatrol Fan—Typical

The Tempatrol fan viscous drive is a torque- and temperature-sensitive clutch unit that automatically increases or decreases fan speed to provide proper engine cooling.

The Tempatrol fan viscous drive clutch is essentially a silicone-fluid-filled coupling connecting the fan assembly to the fan/water pump pulley. The coupling allows the fan to be driven in a normal manner at low engine speeds while limiting the top speed of the fan to a predetermined maximum level at higher engine speeds. A bimetallic spring coil is located on the front face. This spring coil reacts to the temperature of the radiator discharge air and engages the drive clutch for higher fan speed if the air temperature from the radiator rises above a predetermined temperature. Until additional engine cooling is necessary, the fan will remain at a reduced rpm regardless of the engine speed. Only when sufficient heat is present in the air flowing through the radiator core to cause a reaction from the bimetallic coil will the Tempatrol drive clutch engage and increase fan speed to provide the necessary additional engine cooling.

Once maximum fan speed is attained, the fan will not rotate faster regardless of increased engine speed. When the necessary engine cooling has been accomplished and the degree of heat in the air flowing through the radiator core has been reduced, the bimetallic coil again reacts and the fan speed is reduced to the previous disengaged speed.

Rigid fan blades are fastened by rivets. The fan is mounted on an aluminum spacer to provide the proper distance between the fan and radiator.

WARNING: *Do not stand in direct line with the fan when the engine is operating, particularly at speeds above idle.*

Cherokees, Wagoneers and Trucks equipped with air conditioning (or heavy-duty cooling) are equipped with a Tempatrol (viscous drive) fan assembly. Six-cylinder engines not equipped with air conditioning or heavy-duty cooling have a rigid metal, four-bladed fan.

Fan blade assemblies are balanced within 0.25 in. oz. and should not be altered in any way. Replace a damaged or bent fan. Do not attempt repair. Refer to the Cooling System Components chart for fan applications.

CAUTION: *Fans are designed to be compatible with certain applications only. DO NOT attempt to increase cooling capacity by installing a fan not intended for a given engine. Fan or water pump damage and noise may result.*

Replacement—All Models

(1) Disconnect fan shroud from radiator, if equipped.

(2) Remove fan attaching bolts.

(3) Remove fan, spacer and shroud.

NOTE: *If equipped with a Tempatrol fan assembly, remove attaching nuts and remove fan and drive as a unit.*

(4) Position replacement fan, spacer and shroud, if equipped.

(5) Install fan attaching bolts (or nuts) and tighten.

(6) Install shroud attaching screws and tighten, if removed.

Tempatrol Fan Blade and Drive Unit Replacement

CAUTION: *Six-cylinder engines with a serpentine (single) drive belt have a reverse rotating water pump and viscous (Tempatrol) fan drive assembly. The components are identified by the words "REVERSE" stamped on the cover of the viscous drive and inner side of the fan, and "REV" cast into the water pump body. Do not install components that are intended for non-serpentine drive belts.*

The Tempatrol drive unit should be replaced if there is an indication of a fluid leak, noise, or if roughness is detected when turning by hand. If the drive cannot be turned by hand, or if the leading edge of the fan can be moved more than 1/4 inch (6.35 mm) front to rear, replace the drive unit.

If it necessary to replace either the Tempatrol fan blade unit or the drive unit separately, use the following procedure.

(1) Remove fan shroud attaching screws.

(2) Remove nuts attaching fan assembly and pulley to water pump. Remove drive belt.

(3) Move shroud rearward and remove fan assembly.

CAUTION: *To prevent silicone fluid from draining into fan drive bearing and contaminating the lubricant, do not place Tempatrol fan unit on work bench with rear mounting flange facing downward.*

(4) Remove bolts attaching fan blade unit to drive unit.

(5) Attach replacement unit. Tighten bolts with 13 foot-pounds (18 N•m) torque.

(6) Install fan assembly and pulley on water pump. Tighten nuts with 18 foot-pounds (24 N•m) torque.

NOTE: *If a four-cylinder engine, the fan assembly and pulley must be installed with the drive belt in position on pulleys.*

Tempatrol Fan Test

In an engine overheating situation, the Tempatrol drive unit can be statically tested for proper operation by observing movement of the bimetallic spring coil and shaft. To test, disconnect end of bimetallic spring coil from slot (fig. 1C-12) and rotate it counterclockwise until a stop is felt.

NOTE: *Do not force beyond stop.*

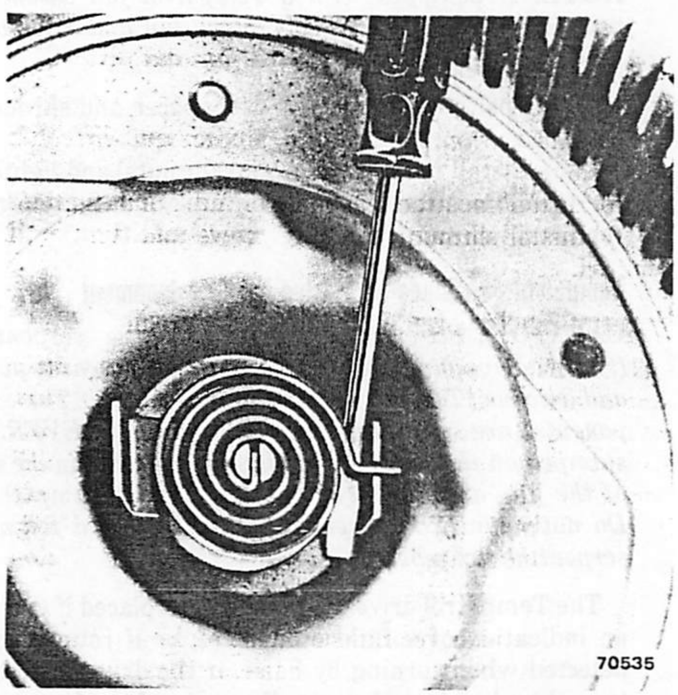
70535

Fig. 1C-12 Disconnecting Tempatrol Spring Coil

Gap between end of coil and clip on housing should be approximately 1/2 inch (13 mm). Replace unit if shaft does not rotate with coil. After test, connect end of coil in slot.

Dynamic Test

CAUTION: *Ensure there is adequate fan blade clearance before drilling.*

(1) Drill 1/8-inch (3.18-mm) diameter hole in top center of shroud.

CAUTION: *Ensure there is adequate clearance from fan blades.*

(2) Insert dial thermometer (0° to 220°F [-18° to 105°C]) with 8-inch stem, or equivalent, through hole in shroud.

(3) Connect tachometer and engine ignition timing light (to be used as strobe light). Refer to Chapter 1A for procedures.

(4) Block airflow through radiator by securing sheet of plastic in front of radiator (or air conditioning condenser). Tape shut at top to secure plastic and ensure airflow is blocked.

NOTE: *Ensure air conditioner, if equipped, is turned off.*

WARNING: *Use extreme caution when engine is operating. Do not stand in direct line with fan. Do not put hands near pulleys, belts or fan. Do not wear loose clothing.*

(5) Start engine and operate at 2400 rpm with timing light aimed at fan blades (strobe light).

(6) Within ten minutes air temperature (indicated on dial thermometer) should be 190°F (88°C). Satisfactory operation of fan drive requires that it engage before or at 190°F (88°C). Engagement is distinguishable by definite increase in audible fan airflow noise. Timing light will also indicate increase in speed of fan.

(7) When air temperature reaches 190°F (88°C), remove plastic sheet. Satisfactory operation of Tempatrol fan requires air temperature to drop 20°F (11°C) or more. Definite decrease of audible fan airflow noise should be noticed. Replace defective fan assemblies.

NOTE: *The cooling system must be in good condition prior to performing the test outlined above to ensure against excessively high coolant temperature.*

FAN SHROUD

In some extreme situations, the engine fan blades may contact the shroud. An examination for proper engine mounting should isolate the problem. If not, examine the shroud position. To compensate for normal engine movement, loosen the shroud attaching screws and reposition shroud to prevent fan-to-shroud contact. Inspect the fan for bent blades and replace fan if necessary.

COOLANT RECOVERY SYSTEM

The coolant recovery system consists of a special pressure radiator cap, an overflow tube and a plastic coolant recovery bottle (fig. 1C-13). Refer to the Cooling System Components chart for specific applications.

The radiator cap used with the recovery system has a gasket to prevent air leakage at the filler neck. The cap has very short finger grips (to discourage unnecessary removal) and has a mark on top that aligns with the overflow tube to indicate the proper installed position. The overflow tube fits into the top of the plastic bottle and extends to the bottom. The overflow tube must always be submerged in coolant.

Coolant Recovery Operation

As engine temperature increases, the coolant expands. The radiator cap pressure vent valve (normally open) slowly allows transfer of expanding coolant to the coolant recovery bottle. Any air trapped in the system will also be expelled during this period.

If ambient temperature is high, the system continues heating until vapor bubbles form. These vapor bubbles pass rapidly through the radiator cap vent valve, causing it to close. Further expansion of the coolant pressurizes the system up to 14 psi (96.5 kPa). Above 14 psi (96.5 kPa) the relief valve in the cap allows pressurized coolant to escape to the coolant recovery system.

As engine temperature drops, the coolant loses heat and contracts, forming a partial vacuum in the system. The radiator cap vacuum valve then opens and allows atmospheric pressure to force coolant from the recovery

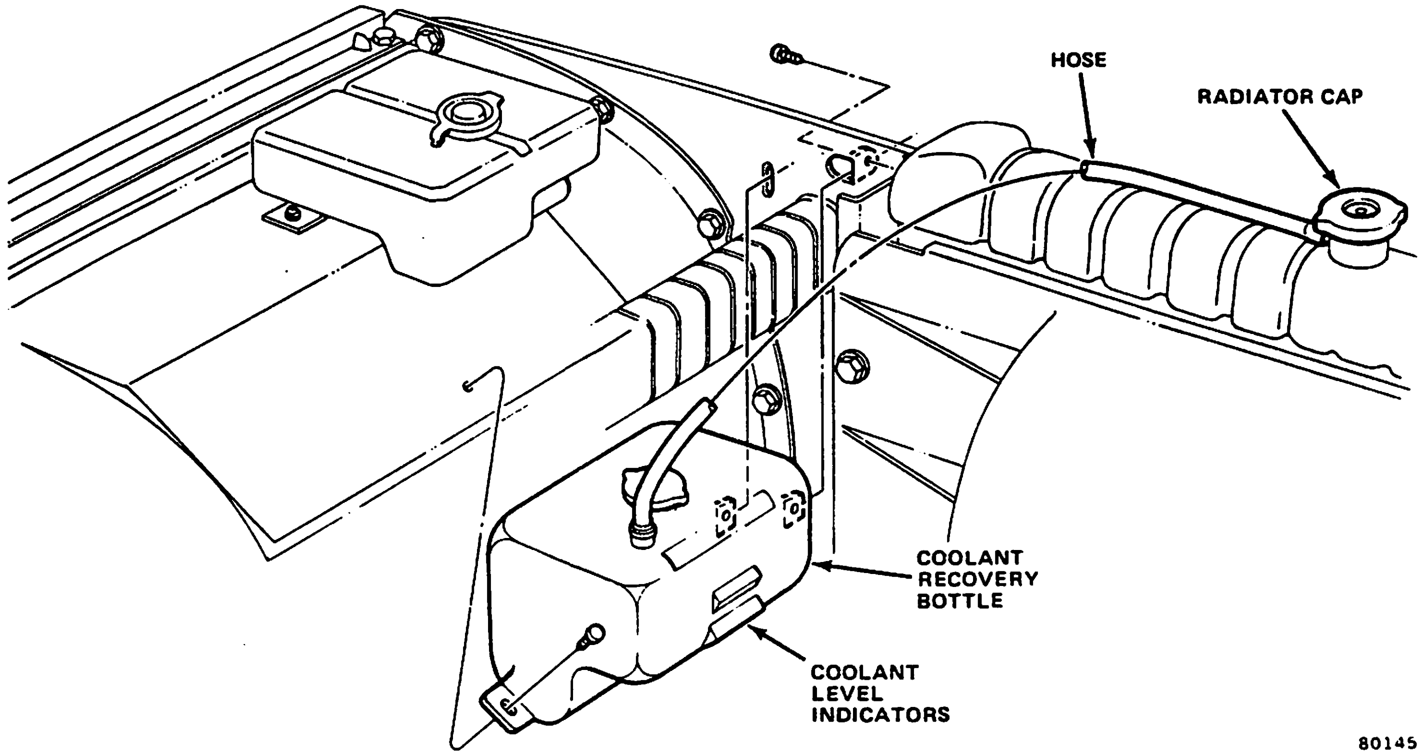

Fig. 1C-13 Coolant Recovery System—Typical

bottle into the system to equalize the pressure. Air is not admitted as long as the overflow tube remains submerged in the recovery bottle.

Coolant Recovery Bottle Replacement—All Models

(1) Remove tube from radiator filler neck fitting.
(2) Remove bottle from radiator support panel.
(3) Pour coolant into clean container for reuse.
(4) Remove tube from bottle.
(5) Install tube in replacement bottle and clamp tube to bottle with replacement clamp.
(6) Install bottle on radiator support panel.
(7) Connect tube to radiator filler neck fitting and secure with clamp.
(8) Install coolant in bottle. Ensure tube is submerged in coolant.

COOLANT TEMPERATURE GAUGE

All vehicles are equipped with a coolant temperature gauge. Refer to Chapter 1L—Engine Instrumentation for operation, diagnosis and repair of the coolant temperature gauge system.

CYLINDER BLOCK HEATER

A factory-installed cylinder block heater is optional. It consists of a 600W, 120V heater element fitted into a core plug hole in the cylinder block, a power cord and nylon tie straps.

Cylinder Block Heater Installation

NOTE: *DO NOT WASTE reuseable coolant. If solution is clean and is being drained only to service the engine or cooling system, drain coolant into a clean container for reuse.*

WARNING: *DO NOT remove cylinder block drain plugs or loosen radiator draincock with system hot and under pressure because serious burns from coolant can occur.*

(1) Drain coolant from engine. Refer to NOTE and WARNING above.
(2) Remove core plug and install cylinder block heater (fig. 1C-14). Tighten T-bolt type with 20 inch-pounds (2.3 N•m) torque.

CAUTION: *Use care when tightening cylinder block heater attaching components. Improper tightening may damage seal or allow heater to loosen, resulting in coolant loss and engine damage.*

(3) From front of vehicle, route heater (female) end of power cord through hole in front panel, along wire harness and connect to cylinder block heater.
(4) Use nylon straps furnished to secure cord to wire harness and to inside of grille. Allow cord to extend outside of grille.
(5) Refill radiator with coolant. Use correct mixture.

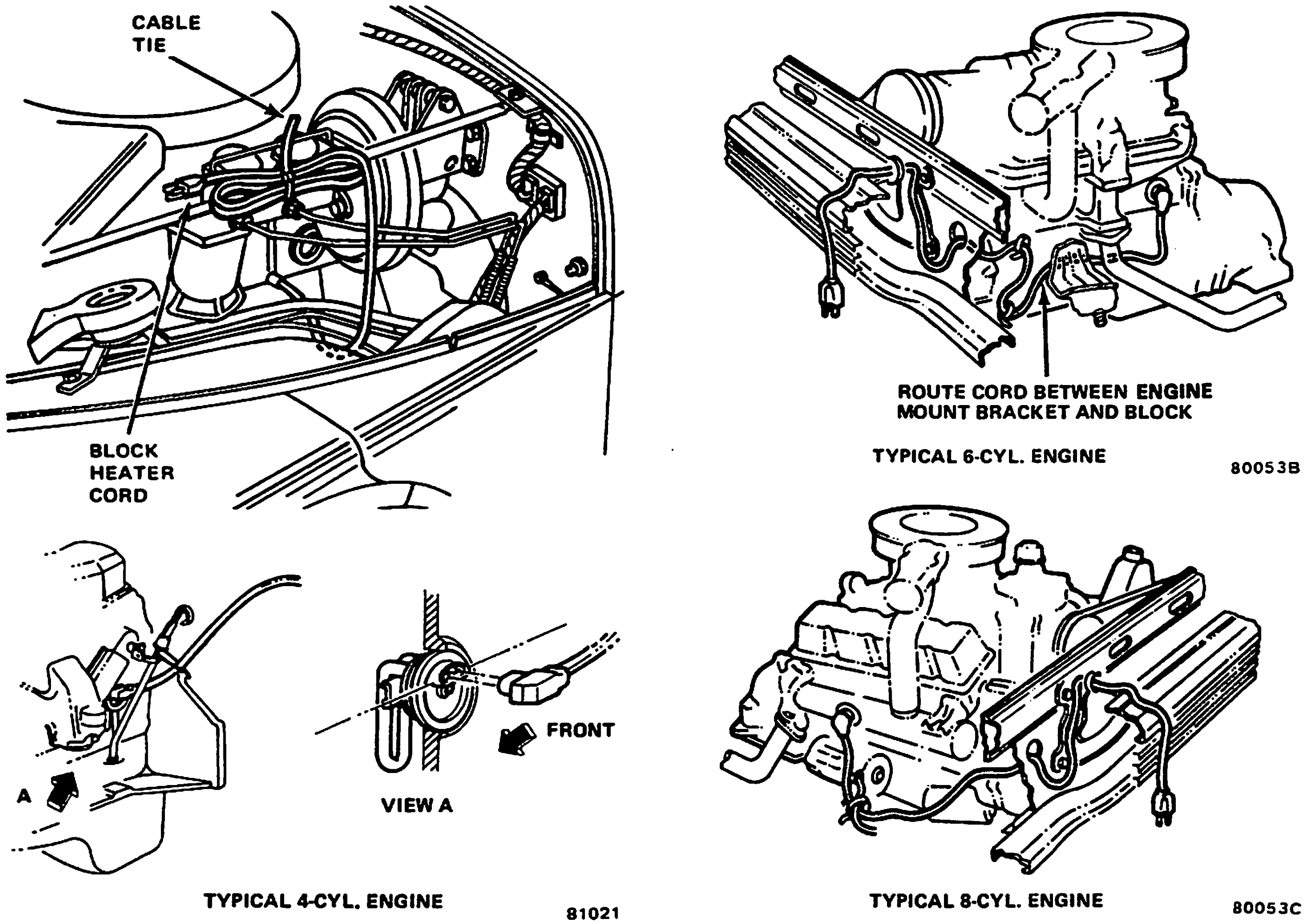

Fig. 1C-14 Cylinder Block Heater Installation

COOLING SYSTEM MAINTENANCE

CAUTION: *The cooling system normally operates at 12 to 15 psi (83 to 103 kPa) pressure. Exceeding this pressure may damage the radiator, heater core, or hoses.*

Engine Flushing

(1) Remove thermostat housing cover (four- and eight-cylinder engine) or housing (six-cylinder engines) and thermostat. Install thermostat housing cover or housing.

(2) Disconnect upper radiator hose from radiator and attach flushing gun to hose.

(3) Disconnect lower radiator hose from water pump and attach leadaway hose to water pump inlet fitting.

CAUTION: *Ensure heater control valve is closed (heat off). This will prevent coolant flow with scale and other deposits from entering heater core.*

(4) Connect water supply and air supply hoses to flushing gun.

(5) Allow engine to fill with water.

(6) When engine is filled, apply air in short blasts, allowing system to fill between air blasts. Continue until clean water flows through leadaway hose. Remove leadaway hose, flushing gun, water supply hose and air supply hose.

(7) Remove thermostat housing cover or housing and install thermostat. Install thermostat housing cover or housing with replacement gasket.

(8) Connect radiator hoses.

(9) Refill cooling system with correct antifreeze-water mixture.

Solvent Cleaning

In some instances, the use of a radiator cleaner (Jeep Radiator Kleen, or equivalent) before flushing will soften scale and deposits and aide the flushing operation.

CAUTION: *Ensure instructions on the container are followed.*

Radiator Reverse Flushing

(1) Disconnect radiator hoses from radiator fittings.

(2) Attach section of radiator hose to radiator bottom outlet fitting and insert flushing gun.

(3) Connect water supply hose and air supply hose to flushing gun. Note excess pressure caution above.

(4) Allow radiator to fill with water.

(5) When radiator is filled, apply air in short blasts, allowing radiator to refill between blasts.

Continue this reverse flushing until clean water flows out through radiator upper fitting. If flushing fails to clear radiator cooling tube passages, have the radiator cleaned more extensively by a radiator repair shop.

Transmission Fluid Cooler Repairs

Because of the high pressure applied to the fluid cooler, do not attempt conventional soldering to repair fractures/holes. **All repairs must be silver soldered or brazed.**

Core Plugs

Prior to "hot tanking" for cylinder block cleaning, remove casting flash causing hot spots or coolant flow blockage. Remove core plugs with hammer, chisel and prying tool. Apply a sealer to edges of replacement plugs and position plugs with lip toward outside of cylinder block. Install with hammer and suitable tool. Refer to Core Plug Sizes chart.

Core Plug Sizes

Location	Diameter	
	inches	mm
Four-Cylinder Head (rear inside water jacket)	0.637	16
Four-Cylinder Head (rear)	1.9	48.5
Four-Cylinder Block (3 on side)	1.6	41.5
Four Cylinder Block (1 on rear)	1.9	48.3
Six-Cylinder Head (3 left side)	0.875	22
Six-Cylinder Head (rear)	2.0	51
Six-Cylinder Block (3 left, 1 rear)	2.0	51
Eight-Cylinder Heads (outer sides, 2 each)	1.0	25.4
Eight-Cylinder Blocks (3 each side)	1.5	38.1
Eight-Cylinder Heads (1 each end)	1.5	38.1

81105

COOLING SYSTEM DIAGNOSIS

If the cooling system requires frequent addition of coolant to maintain the correct level, inspect all units and connections in the cooling system for evidence of leakage. Perform the inspection with the cooling system cold. Small leaks, which may appear as dampness or dripping, can easily escape detection if they are rapidly evaporated by engine heat. Telltale stains of a grayish white or rusty color, or dye stains from antifreeze, may appear at connecting joints (e.g., water pump, thermostat housing and cylinder head) in the cooling system. These stains are almost always a sure indication of small leaks, though there may appear to be no defects.

Air may be drawn into the cooling system through incomplete sealing at the water pump seal or through incomplete sealing in the coolant recovery system. Combustion pressure may be forced into the cooling system through a fracture in the cylinder head gasket, though the passage is too small to allow coolant to enter the combustion chamber. Refer to the applicable diagnosis chart for specific cooling system faults.

Cooling System Leakage Tests

NOTE: *Engine should be warm. Recheck system cold if cause of coolant loss is not located during warm engine examination.*

WARNING: *Hot, pressurized coolant can cause injury by scalding.*

(1) Carefully remove radiator pressure cap from filler neck and check coolant level.

NOTE: *Push down on the cap to disengage from the stop tabs.*

(2) Wipe inside of filler neck and examine lower inside sealing seat for nicks, cracks, paint, dirt and solder residue.

(3) Inspect overflow tube for internal obstructions. Insert a wire through tube to ensure it is not obstructed.

(4) Inspect cams on outside of filler neck. If cams are bent, seating of pressure cap valve and tester seal will be affected. Bent cams can be reformed if done carefully.

(5) Attach pressure tester to filler neck (fig. 1C-15). **Do not force.**

(6) Operate tester pump to apply 15 psi (103.4 kPa) pressure to system. If hoses swell excessively while testing, replace as necessary.

(7) Observe gauge pointer and determine condition of cooling system according to following criteria.

(a) **Holds Steady:** if pressure remains constant for two minutes, there are no serious leaks in the system.

NOTE: *There may be an internal leak that does not appear with normal system pressure. If it is certain that coolant is being lost and no leaks can be detected, inspect for internal leakage or perform Combustion Leakage Test.*

(b) **Drops Slowly:** indicates small leaks or seepage is occurring. Examine all connections for seepage or slight leakage with a flashlight. Inspect radiator, hose, gasket edges and heater. Seal small holes or fractures with AMC Sealer Lubricant, or equivalent. Repair sources of leaks and recheck system.

Service Diagnosis

Condition	Possible Cause	Correction
HIGH TEMPERATURE INDICATION-OVERHEATING	(1) Coolant level low.	(1) Replenish coolant level.
	(2) Fan belt loose.	(2) Adjust fan belt.
	(3) Radiator hose(s) collapsed.	(3) Replace hose(s).
	(4) Radiator blocked to airflow.	(4) Remove restriction (bugs, paper, etc.)
	(5) Faulty radiator cap.	(5) Replace cap.
	(6) Vehicle overloaded.	(6) Reduce load or shift to lower gear.
	(7) Ignition timing incorrect.	(7) Adjust ignition timing.
	(8) Idle speed low.	(8) Adjust idle speed.
	(9) Air trapped in cooling system.	(9) Purge air.
	(10) Vehicle in heavy traffic.	(10) Operate at fast idle intermittently in neutral gear to cool engine.
	(11) Incorrect cooling system component(s) installed.	(11) Install proper component(s).
	(12) Faulty thermostat.	(12) Replace thermostat.
	(13) Water pump shaft broken or impeller loose.	(13) Replace water pump.
	(14) Radiator tubes clogged.	(14) Flush radiator.
	(15) Cooling system clogged.	(15) Flush system.
	(16) Casting flash in cooling passages.	(16) Repair or replace as necessary. Flash may be visible by removing cooling system components or removing core plugs.
	(17) Brakes dragging.	(17) Repair brakes.
	(18) Excessive engine friction.	(18) Repair engine.
	(19) Antifreeze concentration over 68%.	(19) Lower antifreeze content.
	(20) Missing air seals between hood and radiator.	(20) Replace air seals.

NOTE: *Immediately after shutdown, the engine enters a condition known as heat soak. This is caused by the cooling system being inoperative while engine temperature is still high. If coolant temperature rises above boiling point, expansion and pressure may push some coolant out of the radiator overflow tube. If this does not occur frequently, it is considered normal.*

70170A

Service Diagnosis (Continued)

Condition	Possible Cause	Correction
	(21) Faulty gauge.	(21) Repair or replace gauge.
	(22) Loss of coolant flow caused by leakage or foaming.	(22) Repair leak, replace coolant.
	(23) Tempatrol fan inoperative.	(23) Perform Tempatrol fan test. Repair as necessary.
COOLANT LOSS—BOILOVER	Refer to Overheating Causes in addition to the following:	
	(1) Overfilled cooling system.	(1) Reduce coolant level to proper specification.
	(2) Quick shutdown after hard (hot) run.	(2) Allow engine to run at fast idle prior to shutdown.
	(3) Air in system resulting in occasional "burping" of coolant.	(3) Purge system.
	(4) Insufficient antifreeze allowing coolant boiling point to be too low.	(4) Add antifreeze to raise boiling point.
	(5) Antifreeze deteriorated because of age or contamination.	(5) Replace coolant.
	(6) Leaks because of loose hose clamps, loose nuts, bolts, drain plugs, faulty hoses, or defective radiator.	(6) Pressure test system to locate leak then repair as necessary.
	(7) Faulty head gasket.	(7) Replace head gasket.
	(8) Cracked head, manifold, or block.	(8) Replace as necessary.
COOLANT ENTRY INTO CRANKCASE OR CYLINDER(S)	(1) Faulty head gasket.	(1) Replace head gasket.
	(2) Crack in head, manifold or block.	(2) Replace as necessary.
COOLANT RECOVERY SYSTEM INOPERATIVE	(1) Coolant level low.	(1) Replenish coolant to FULL mark.
	(2) Leak in system.	(2) Pressure test to isolate leak and repair as necessary.
	(3) Pressure cap not tight or gasket missing or leaking.	(3) Repair as necessary.

70170B

Service Diagnosis (Continued)

Condition	Possible Cause	Correction
	(4) Pressure cap defective.	(4) Replace cap.
	(5) Overflow tube clogged or leaking.	(5) Repair as necessary.
	(6) Overflow tube kinked .	(6) Repair as necessary.
	(7) Recovery bottle vent plugged.	(7) Remove restriction.
NOISE	(1) Fan contacting shroud.	(1) Reposition shroud and check engine mounts.
	(2) Loose water pump impeller.	(2) Replace pump.
	(3) Dry fan belt.	(3) Apply silicone or replace belt.
	(4) Loose fan belt.	(4) Adjust fan belt.
	(5) Rough surface on drive pulley.	(5) Replace pulley.
	(6) Water pump bearing worn.	(6) Remove belt to isolate. Replace pump.
	(7) Belt alignment.	(7) Check for improper pulley locations. Shim power steering pump.
LOW TEMPERATURE INDICATION— UNDERCOOLING	(1) Thermostat stuck open.	(1) Replace thermostat.
	(2) Faulty gauge.	(2) Repair or replace gauge.
	(3) Tempatrol fan drive constantly engaged.	(3) Perform fan test. Repair as necessary.
NO COOLANT FLOW THROUGH HEATER CORE	(1) Plugged return hose to water pump.	(1) Remove obstruction.
	(2) Heater hose collapsed or plugged.	(2) Remove obstruction or replace hose.
	(3) Plugged heater core.	(3) Remove obstruction or replace core.
	(4) Plugged outlet at thermostat housing.	(4) Remove flash or obstruction.
	(5) Heater bypass hole in cylinder head plugged.	(5) Remove obstruction.
	(6) Heater tubes assembled on core incorrectly.	(6) Mount tubes correctly.

70170C

Low Engine Temperature Diagnosis Guide

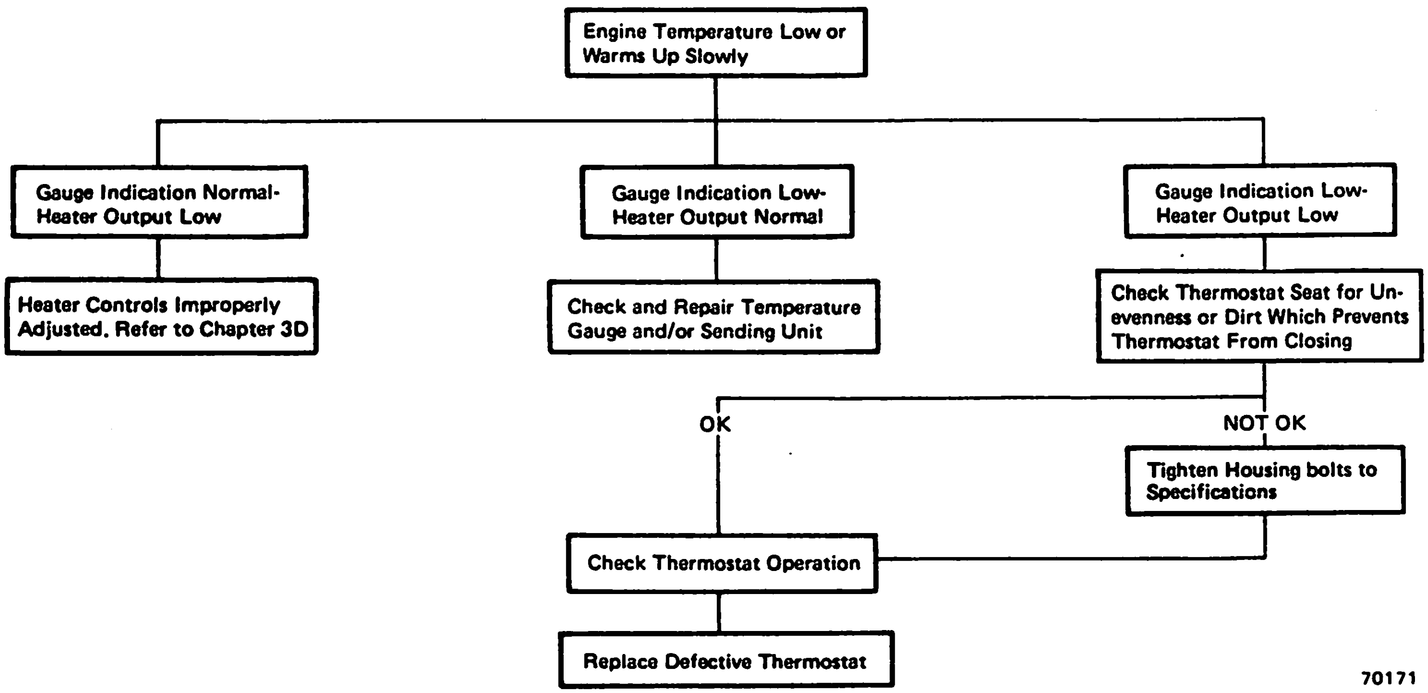

70171

Engine Overheating Diagnosis Guide

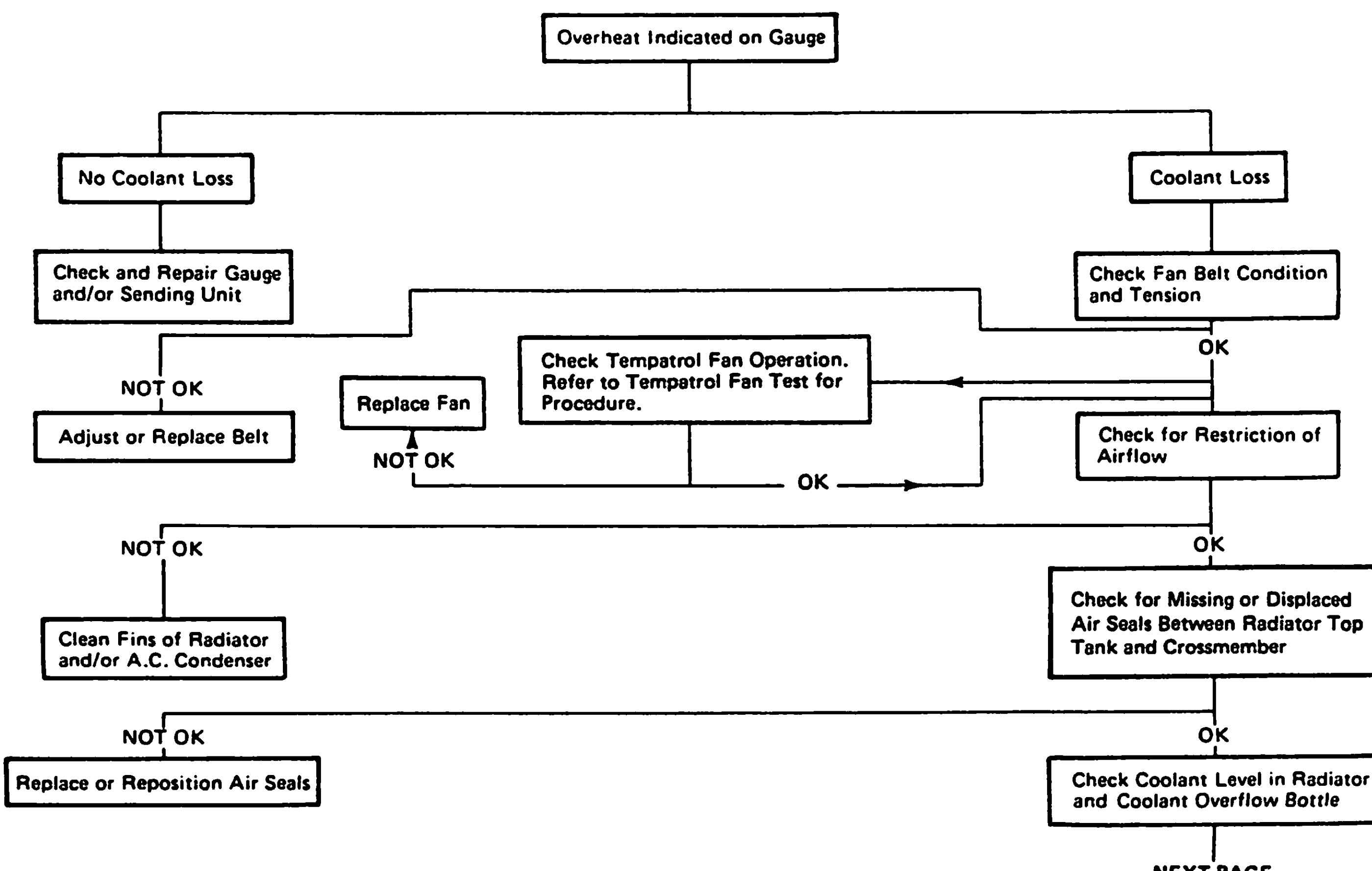

70172A

Engine Overheating Diagnosis Guide (Continued)

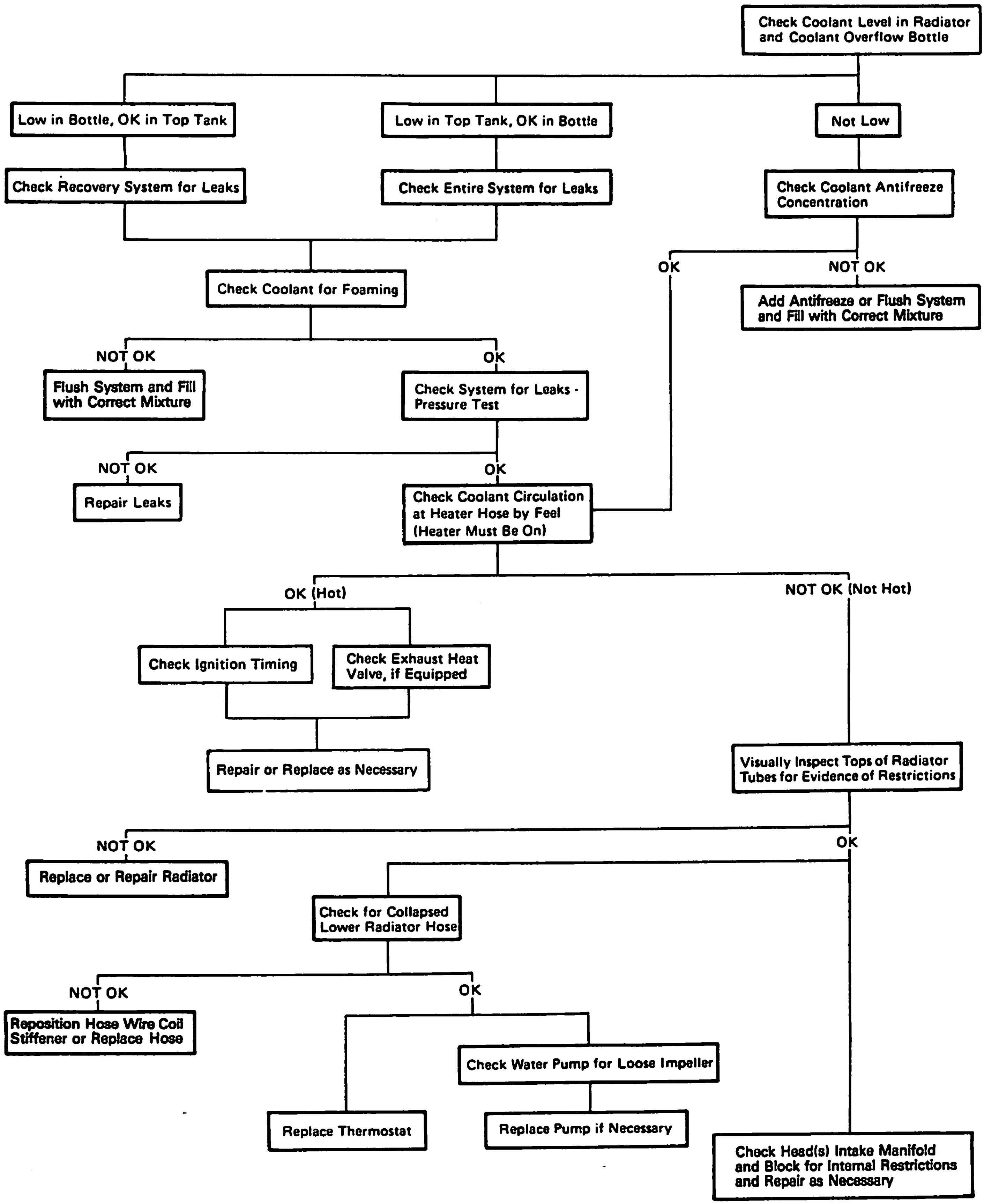

701728

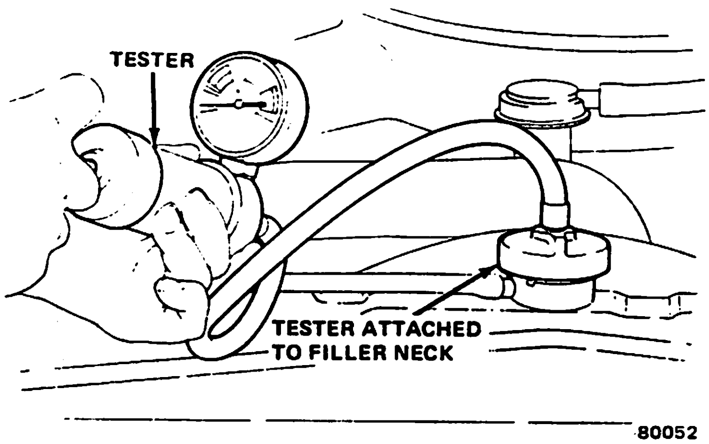

Fig. 1C-15 Cooling System Pressure Test

(c) **Drops Quickly:** indicates that serious leakage is occurring. Examine system for serious external leakage. If no leaks are visible, inspect for internal leakage.

NOTE: *Large radiator holes or fractures should be repaired by a reputable radiator repair shop.*

Internal Leakage Inspection

(1) Remove oil pan drain plug and drain small amount of engine oil (coolant, being heavier, should drain first), or operate engine to churn oil, then examine dipstick for water globules or foam.

(2) Inspect transmission dipstick for water globules.

(3) Inspect transmission fluid cooler for leakage. Refer to Transmission Fluid Cooler Leakage Test.

WARNING: *Use extreme caution when engine is operating. Do not stand in direct line with fan. Do not put hands near pulleys, belts or fan. Do not wear loose clothing.*

(4) Operate engine without pressure cap on radiator until thermostat opens.

(5) Attach Pressure Tester to filler neck. If pressure builds up quickly, combustion/compression leak exists as result of faulty cylinder head gasket, or cracked cylinder head or block. Repair as necessary.

WARNING: *Do not allow pressure to exceed 15 psi (103.4 kPa). Turn engine Off. To release pressure, rock tester from side to side. When removing tester, do not turn tester more than 1/2 turn if system is under pressure.*

(6) If there is no immediate pressure increase, pump Pressure Tester until indicated pressure is within system range. Vibration of gauge pointer indicates compression or combustion leakage into cooling system.

CAUTION: *Do not disconnect spark plug wires while engine is operating.*

CAUTION: *Do not operate engine with spark plug shorted for more than a minute, otherwise catalytic converter may be damaged.*

(7) Isolate compression leak by shorting each spark plug to cylinder block. Gauge pointer should stop or decrease vibration when spark plug for leaking cylinder is shorted to cylinder block because of the absence of combustion pressure.

Combustion Leakage Test (without Pressure Tester)

NOTE: *DO NOT WASTE reusable coolant. If solution is clean and is being drained only to service the cooling system, drain coolant into a clean container for reuse.*

WARNING: *DO NOT remove cylinder block drain plugs or loosen radiator draincock with system hot and under pressure because serious burns from coolant can occur.*

(1) Drain sufficient coolant to allow thermostat removal. Refer to Thermostat Replacement

(2) Disconnect water pump drive belt.

(3) **Four- and Eight-Cylinder Engine:** remove thermostat housing cover and remove thermostat.

Six-Cylinder Engine: disconnect upper radiator hose from thermostat housing, remove housing and thermostat, and install thermostat housing on cylinder head.

(4) Add coolant to engine to bring level within 1/4 inch (6.3 mm) of top of thermostat housing.

CAUTION: *Avoid overheating. Do not operate engine for an excessive period of time. Open draincock immediately after test to eliminate boilover.*

(5) Start engine and accelerate rapidly to approximately 3000 rpm three times while observing coolant. If any internal engine combustion gases are leaking into cooling system, bubbles will appear in coolant. If bubbles do not appear, there are no internal combustion gas leakage.

Transmission Fluid Cooler Leakage Test

Transmission Fluid cooler leaks can be detected by the presence of transmission fluid in the coolant. If fluid appears in the coolant, check the fluid level of the automatic transmission. If the fluid level is low, test the fluid cooler according to the following procedure:

(1) Remove transmission-to-cooler pipes at radiator.

(2) Plug one cooler fitting.

(3) Remove radiator cap and ensure radiator is filled with coolant.

(4) Apply shop air pressure (50 to 100 psi [344 to 690 kPa]) to other cooler fitting.

CAUTION: *Because of high fluid pressure, conventional soldering must not be used for fluid cooler repair. All repairs must be silver-soldered or brazed.*

Bubbles in coolant at filler neck indicate a leak in fluid cooler. If a transmission fluid cooler leak is discovered, remove radiator for cooler repair. Unsolder outlet tank for access to fluid cooler.

DRIVE BELT ADJUSTMENTS

General

After the need for adjustment has been determined, drive belts are adjusted by pivoting the driven component in its mount to achieve the specified tension. In some applications, a belt may either drive several components or, with certain six-cylinder engines, a single drive belt (serpentine) is used to drive all the components. For adjustment it is necessary to loosen and pivot only one component.

(1) Locate drive belt that is to be tested for correct tension.

(2) Test tension with Gauge J-23600 or J-29550 if accessibility is limited (fig. 1C-16).

(3) If necessary, adjust drive belt.

(4) Re-test tension after adjustment.

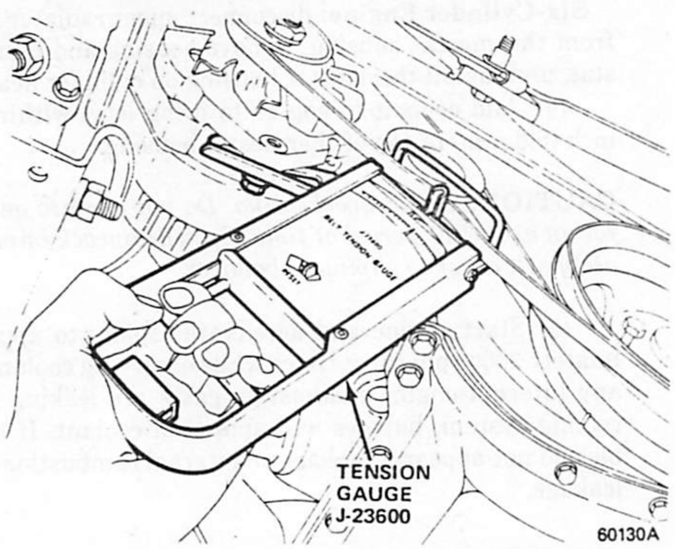

Fig. 1C-16 Drive Belt Tension Test—Typical

Four-Cylinder Engine

Alternator and Fan (without Air Conditioner)

(1) Position Tension Gauge J-23600 or J-29550 on upper section of belt midway between alternator pulley and fan pulley. Test belt tension according to manufacturer's instructions.

(2) Adjust belt tension to specification if less than 90 pounds-force (400 N).

(3) Adjustment (fig. 1C-17).

(a) Loosen alternator pivot and adjusting bolts.

(b) Tighten belt with pry bar. Pry on alternator front housing only.

(c) Tighten adjusting bolt with 28 foot-pounds (38 N•m) torque and pivot bolt with 20 foot-pounds (27 N•m) torque.

(d) Re-test tension.

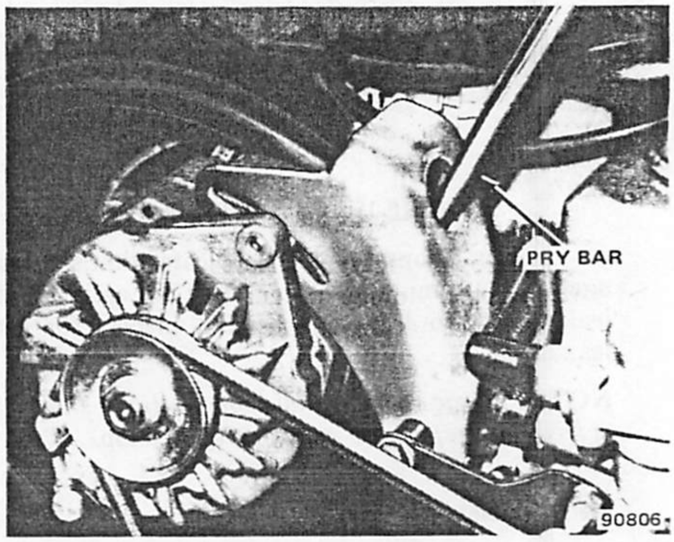

Fig. 1C-17 Four-Cylinder Engine Alternator Drive Belt Adjustment

Power Steering Pump

(1) Position Tension Gauge J-23600 or J-29550 on upper section of belt midway between pump pulley and fan pulley. Test belt tension according to manufacturer's instructions.

(2) Adjust belt tension to specification if less than 90 pounds-force (400 N).

(3) Adjustment (fig. 1C-18).

(a) Loosen pump-to-mounting bracket locknuts.

(b) Loosen pivot bolts.

(c) Insert drive lug of 1/2-inch drive ratchet into adjustment hole and pivot pump to tighten belt.

(d) Tighen nuts and pivot bolt with 28 foot-pounds (38 N•m) torque.

(e) Re-test tension.

Six- and Eight-Cylinder Engine

Alternator and Fan (Six-Cylinder Engine without Air Conditioner and All Eight-Cylinder Engines)

(1) Position Tension Gauge J-23600 or J-29550 on upper section of belt midway between alternator pulley and fan pulley. Test belt tension according to manufacturer's instructions.

(2) Adjust belt tension to specification if less than 90 pounds-force (400 N).

(3) Adjustment (figs. 1C-19 and 1C-20).

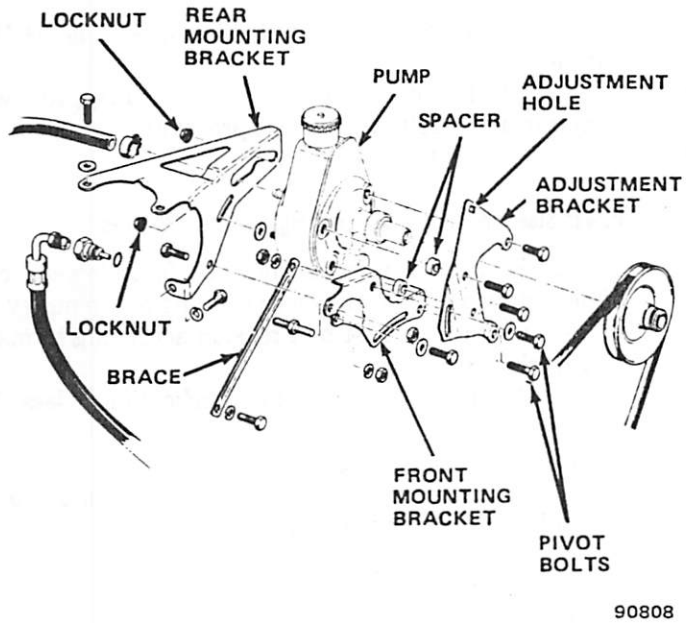

Fig. 1C-18 Four-Cylinder Engine Power Steering Pump Drive Belt Adjustment

(a) Loosen alternator pivot and adjusting bolts.

(b) Tighten belt with pry bar. Pry on alternator front housing only.

(c) Tighten adjusting bolt with 18 foot-pounds (24 N•m) torque. Tighten pivot bolt with 28 foot-pounds (38 N•m) torque.

(d) Re-test tension.

Fig. 1C-19 Six-Cylinder Engine (w/o A/C) Alternator Drive Belt Adjustment

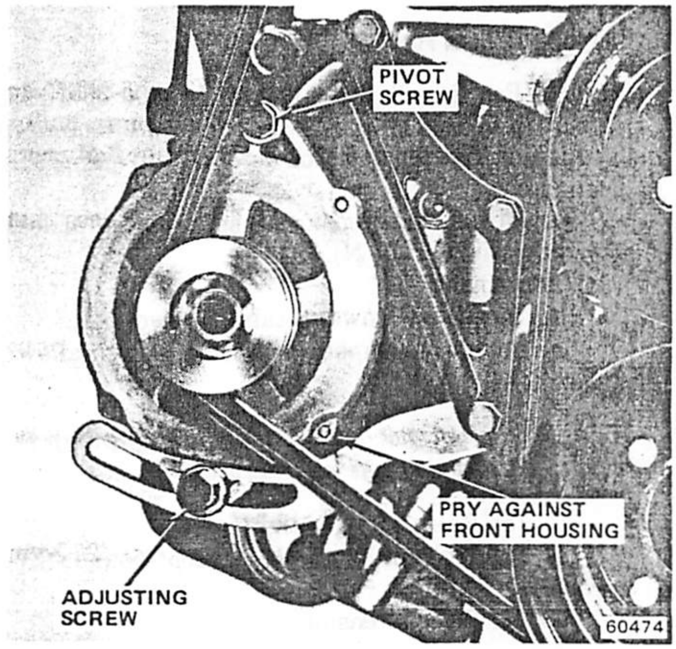

Fig. 1C-20 Eight-Cylinder Engine Alternator Drive Belt Adjustment

Alternator and Fan (Six-Cylinder Engine with Air Conditioner)

(1) Position Tension Gauge J-23600 or J-29550 on section of belt adjacent to inner fender panel. Test belt tension according to manufacturer's instructions.

(2) Adjust belt tension to specification if less than 90 pounds-force (400 N).

(3) Adjustment (fig. 1C-21).

(a) From underside of engine compartment, loosen lower mounting bracket pivot nut and adjusting bolt.

(b) Insert pry bar into hole in bottom of bracket and pry to tighten belt.

(c) Tighten adjusting bolt with 18 foot-pounds (24 N•m) torque. Tighten pivot nut with 28 foot-pounds (38 N•m) torque.

(d) Re-test tension.

Fig. 1C-21 Six-Cylinder Engine (w/A/C) Alternator Drive Belt Adjustment

Air Pump (without Power Steering)

(1) Position Tension Gauge J-23600 or J-29550 on upper section of belt midway between air pump pulley and fan pulley. Test tension according to manufacturer's instructions.

(2) Adjust belt tension to specification if less than 60 pounds-force (267 N).

(3) Adjustment.

(a) Loosen lower retaining/pivot bolt.

(b) Loosen upper adjusting bolt to allow pump to be moved.

CAUTION: *Do not pry against sides of pump because internal pump damage may result.*

(c) Raise pump to tighten belt.

(d) Tighten bolts with 20 foot-pounds (27 N•m) torque.

(e) Re-test tension.

Air Pump (with Power Steering)

(1) Remove flexible tube attached to air cleaner snorkel.

(2) Position Tension Gauge J-23600 or J-29550 on outer section of belt (adjacent to inner fender panel) midway between power steering pump pulley and air pump pulley. Test belt tension according to manufacturer's instructions.

(3) Adjust belt tension to specification if less than 60 pounds-force (267 N).

(4) Adjustment.

(a) Loosen upper adjusting bolt.

(b) Loosen lower pivot nut to allow pump to be moved.

CAUTION: *Do not pry against sides of pump because internal pump damage may result.*

(c) Raise pump to tighten belt.

(d) Tighten adjusting bolt with 20 foot-pounds (27 N•m) torque. Tighten pivot nut with 15 foot-pounds (20 N•m) torque.

(e) Re-test tension.

Air Conditioner Compressor

(1) Position Tension Gauge J-23600 or J-29550 on upper section of belt midway between compressor pulley and either idler pulley or alternator pulley. Test belt tension according to manufacturer's instructions.

(2) Adjust belt tension to specification if less than 90 pounds-force (400 N).

(3) Adjustment.

(a) If equipped with idler pulley, loosen clamp bolt and idler pulley bracket pivot bolt.

(b) Insert drive lug of 1/2-inch drive ratchet into adjustment hole in idler pulley bracket and pivot bracket to tighten belt.

(c) Tighten bolts with 18 foot-pounds (24 N•m) torque.

(d) If not equipped with idler pulley, follow alternator drive belt adjustment procedure.

(e) Re-test tension.

Power Steering Pump—Six- and Eight-Cylinder Engines

(1) Position Tension Gauge J-23600 on lower section of belt midway between power steering pump pulley and crankshaft pulley. Test belt tension according to manufacturer's instuctions.

(2) Adjust belt tension to specification if less than 90 pounds-force (400 N).

(3) Adjustment (figs. 1C-22 and 1C-23).

(a) Loosen air pump drive belt (refer to Air Pump Drive Belt Adjustment).

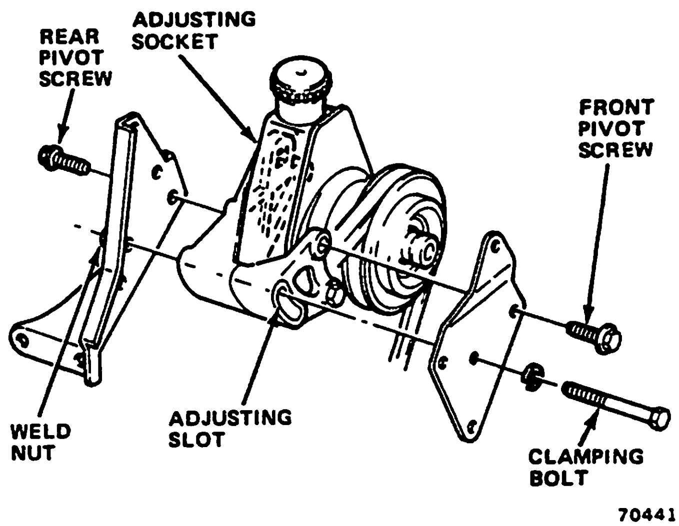

Fig. 1C-22 Six-Cylinder Engine Power Steering Pump Drive Belt Adjustment

(b) Loosen adjusting bolts that attach power steering pump bracket to adaptor plates.

NOTE: *The bolt that attaches pump bracket to rear adaptor plate is located behind rear adaptor plate flange.*

(c) Insert drive lug of 1/2-inch drive ratchet into adjustment hole in bracket and pivot bracket to tighten belt.

(d) Tighten bolts with 30 foot-pounds (41 N•m) torque.

(e) Re-test tension.

(f) Adjust air pump drive belt (refer to Air Pump Drive Belt Adjustment).

Serpentine Drive Belt

(1) Position Tension Gauge J-23600-B on largest accessible span of belt (fig. 1C-24). Test belt tension according to manufacturer's instructions.

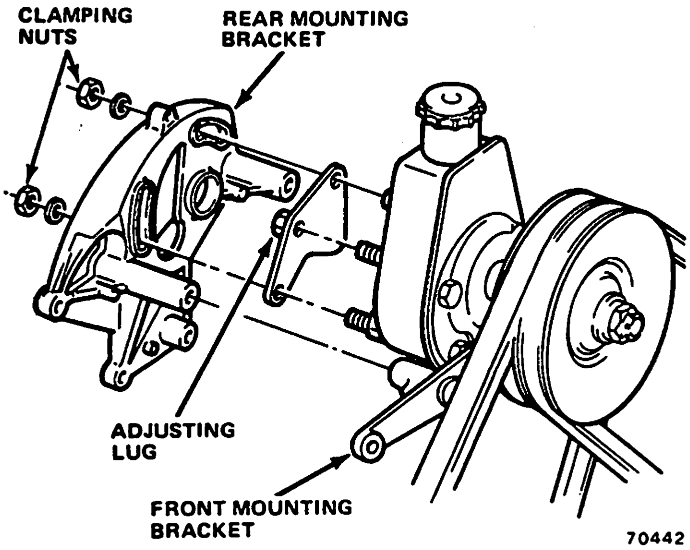

Fig. 1C-23 Eight-Cylinder Engine Power Steering Pump Drive Belt Adjustment

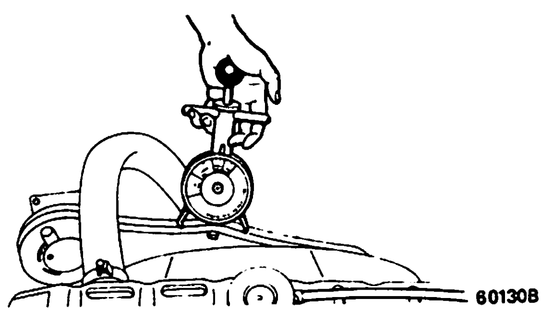

Fig. 1C-24 Serpentine Drive Belt Tension Test

(2) Adjust belt tension to specification if less than 140 pounds-force (623 N).

(3) Adjustment.

(a) Loosen alternator adjustment and pivot bolts.

CAUTION: *Maintain a clearance of at least 1.2 inches (30.5 mm) between power steering pump body and air pump body. A 1.2-inch (30.5 mm) block gauge may prove useful to rapidly establish clearance between pumps. Do not use power steering pump to increase belt tension.*

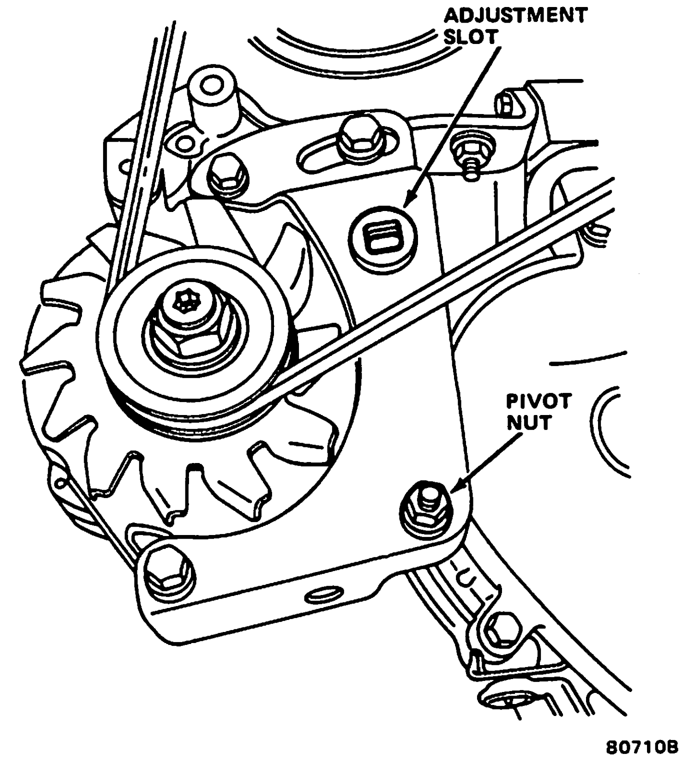

Fig. 1C-25 Serpentine Drive Belt Adjustment

(b) Insert drive lug of 1/2-inch drive ratchet or breaker bar into adjustment hole in alternator bracket and pivot bracket to tighten belt.

(c) Tighten adjustment and pivot bolts with 28 foot-pounds (38 N•m) torque.

(d) Re-test tension.

NOTE: *Because of the higher tension required for serpentine drive belts, a helper may be necessary for belt adjustment.*

SERPENTINE DRIVE BELT DIAGNOSIS

Refer to the diagnosis chart when servicing serpentine drive belts.

Serpentine Drive Belt Diagnosis

Condition	Possible Cause	Correction
TENSION SHEETING FABRIC FAILURE (WOVEN FABRIC ON OUTSIDE CIRCUMFERENCE OF BELT HAS CRACKED OR SEPARATED FROM BODY OF BELT)	(1) Grooved or backside idler pulley diameters are less than minimum recommended.	(1) Replace pulley(s) not conforming to specification.
	(2) Tension sheeting contacting stationary object.	(2) Correct rubbing condition.
	(3) Excessive heat causing woven fabric to age.	(3) Replace belt.
	(4) Tension sheeting splice has fractured.	(4) Replace belt.
NOISE (OBJECTIONAL SQUEAL, SQUEAK, OR RUMBLE IS HEARD OR FELT WHILE DRIVE BELT IS IN OPERATION)	(1) Belt slippage.	(1) Adjust belt.
	(2) Bearing noise.	(2) Locate and repair.
	(3) Belt misalignment.	(3) Align belt/pulley(s).
	(4) Belt-to-pulley mismatch.	(4) Install correct belt.
NOISE (OBJECTIONAL SQUEAL, SQUEAK, OR RUMBLE IS HEARD OR FELT WHILE DRIVE BELT IS IN OPERATION) (Continued)	(5) Driven component induced vibration.	(5) Locate defective driven component and repair.
	(6) System resonant frequency induced vibration.	(6) Vary belt tension within specifications. Replace belt.
RIB CHUNKING (ONE OR MORE RIBS HAS SEPARATED FROM BELT BODY)	(1) Foreign objects imbedded in pulley grooves.	(1) Remove foreign objects from pulley grooves.
	(2) Installation damage.	(2) Replace belt.
	(3) Drive loads in excess of design specifications.	(3) Adjust belt tension.
	(4) Insufficient internal belt adhesion.	(4) Replace belt.
RIB OR BELT WEAR (BELT RIBS CONTACT BOTTOM OF PULLEY GROOVES)	(1) Pulley(s) misaligned.	(1) Align pulley(s).
	(2) Mismatch of belt and pulley groove widths.	(2) Replace belt.
	(3) Abrasive environment.	(3) Replace belt.
	(4) Rusted pulley(s).	(4) Clean rust from pulley(s).
	(5) Sharp or jagged pulley groove tips.	(5) Replace pulley.
	(6) Rubber deteriorated.	(6) Replace belt.

81102A

Serpentine Drive Belt Diagnosis

Condition	Possible Cause	Correction
LONGITUDINAL BELT CRACKING (CRACKS BETWEEN TWO RIBS)	(1) Belt has mistracked from pulley groove.	(1) Replace belt.
	(2) Pulley groove tip has worn away rubber to tensile member.	(2) Replace belt.
BELT SLIPS	(1) Belt slipping because of insufficient tension.	(1) Adjust tension.
	(2) Belt or pulley subjected to substance (belt dressing, oil, ethylene glycol) that has reduced friction.	(2) Replace belt and clean pulleys.
	(3) Driven component bearing failure.	(3) Replace faulty component bearing.
	(4) Belt glazed and hardened from heat and excessive slippage.	(4) Replace belt.
"GROOVE JUMPING" (BELT DOES NOT MAINTAIN CORRECT POSITION ON PULLEY, OR TURNS OVER AND/OR RUNS OFF PULLEYS)	(1) Insufficient belt tension.	(1) Adjust belt tension.
	(2) Pulley(s) not within design tolerance.	(2) Replace pulley(s).
	(3) Foreign object(s) in grooves.	(3) Remove foreign objects from grooves.
	(4) Excessive belt speed.	(4) Avoid excessive engine acceleration.
	(5) Pulley misalignment.	(5) Align pulley(s).
	(6) Belt-to-pulley profile mismatched.	(6) Install correct belt.
	(7) Belt cordline is distorted.	(7) Replace belt.
BELT BROKEN (NOTE: IDENTIFY AND CORRECT PROBLEM BEFORE NEW BELT IS INSTALLED)	(1) Excessive tension.	(1) Replace belt and adjust tension to specification.
	(2) Tensile members damaged during belt installation.	(2) Replace belt.
	(3) Belt turnover.	(3) Replace belt.
	(4) Severe misalignment.	(4) Align pulley(s).
	(5) Bracket, pulley, or bearing failure.	(5) Replace defective component and belt.

81102B

Serpentine Drive Belt Diagnosis

Condition	Possible Cause	Correction
CORD EDGE FAILURE (TENSILE MEMBER EXPOSED AT EDGES OF BELT OR SEPARTED FROM BELT BODY)	(1) Excessive tension.	(1) Adjust belt tension.
	(2) Drive pulley misalignment.	(2) Align pulley.
	(3) Belt contacting stationary object.	(3) Correct as necessary.
	(4) Pulley irregularities.	(4) Replace pulley.
	(5) Improper pulley construction.	(5) Replace pulley.
	(6) Insufficient adhesion between tensile member and rubber matrix.	(6) Replace belt and adjust tension to specifications.
SPORADIC RIB CRACKING (MULTIPLE CRACKS IN BELT RIBS AT RANDOM INTERVALS)	(1) Ribbed pulley(s) diameter less than minimum specification.	(1) Replace pulley(s).
	(2) Backside bend flat pulley(s) diameter below minimum.	(2) Replace pulley(s).
	(3) Excessive heat condition causing rubber to harden.	(3) Correct heat condition as necessary.
	(4) Excessive belt thickness.	(4) Replace belt.
	(5) Belt overcured.	(5) Replace belt.
	(6) Excessive tension.	(6) Adjust belt tension.

81102C

SPECIFICATIONS

Cooling System Specifications

	Four-Cylinder Engine		Six-Cylinder Engine		Eight-Cylinder Engine	
	USA	Metric	USA	Metric	USA	Metric
Radiator Cap Relief Pressure	15 psi	103 kPa	15 psi	103 kPa	15 psi	103 kPa
Thermostat						
Rating	195°F	91°C	195°F	91°C	195°F	91°C
Must be open 0.003 inch (0.076mm) at	192°-198°F	89°-92°C	192-198°F	89-92°C	192-198°F	89-92°C
Fully open	218°F	103°C	218°F	103°C	218°F	103°C
Water Pump						
Type	Centrifugal		Centrifugal		Centrifugal	
Drive	V-Belt		V-Belt or Serpentine		V-Belt	
Radiator						
Type	Tube & Spacer		Tube & Spacer		Tube & Spacer	
Cooling System Capacities (includes 1 quart for heater)	7.8 qts.	7.1 liters	10.5 qts.	9.9 liters	14.0 qts.	13.2 liters
Fan						
Number of Blades	Refer to Cooling System Components Chart					
Diameter	Refer to Cooling System Components Chart					
V-Drive Belt						
Angle of V	36°		38°		38°	
Width—top of groove	0.38 in.	9.65mm	0.391-0.453 in.	9.931-11.506 mm	0.391-0.453 in.	9.931-11.506 mm
Type (plain or cogged)	plain		plain		plain	
Serpentine Drive Belts						
Number of Ribs			6			
Rib Angle			40°			
Rib Width			0.14 in.	3.56mm		

60570

Cooling System Components

Model	Cooling Package			Engine			Transmission		Radiator		Fan				Shroud	Coolant Recovery System
	STD	HD	AC	151	258	360	Man.	Auto.	Fins Per Inch	Rows of Tubes	Diam. (Inches)	No. of Blades	Spacer (Inches)	Tempa-trol		
CJ-5	●②				●		●		8	2	16.25	4	0.88			
85	●②				●			●①	9	2	16.25	4	0.88			
		●			●		●		17	2	19.50③	7		●	●	●
CJ-7		●			●			●①	17	2	19.50③	7		●	●	●
87			●		●		●		17	2	19.50③	7		●	●	●
			●		●			●①	17	2	19.50③	7		●	●	●
Scrambler 88	●			●			●		11	2	15.00	4	1.70		●	
		●		●			●		13	2	16.00	7		●	●	●
	●②				●		●		9	2	16.25	4	0.88			
	●②				●			●	10	2	16.25	4	0.88			
Wagoneer		●			●		●		15	2	19.50③	7		●	●	●
15		●			●			●	15	2	19.50③	7		●	●	●
			●		●		●		15	2	19.50③	7		●	●	●
Cherokee			●		●			●	15	2	19.50③	7		●	●	●
16, 17, 18	●					●	●		11.5	2	19.50	7		●		
	●					●		●	12.5	2	19.50	7		●		
Truck		●				●	●		16	2	19.50	7		●	●	●
25, 26, 27④		●				●		●	16	2	19.50	7		●	●	●
			●			●	●		16	2	19.50	7		●	●	●
			●			●		●	16	2	19.50	7		●	●	●

NOTE: All radiator caps are rated at 15 psi (103 kPa)
① Not applicable to CJ-5 vehicles
② Not available in California
③ Reverse Rotation if equipped with Serpentine Drive
④ Not available for 6-258 engine

60875

Engine Drive Belt Tension

	Initial Pounds-Force New Belt	Reset Pounds-Force Used Belt	Initial Newtons New Belt	Reset Newtons Used Belt
Air Conditioner				
All	125-155	90-115	556-689	400-512
Air Pump				
All except six-cylinder w/PS	125-155	90-115	556-689	400-512
Six-Cylinder w/PS (3/8-inch belt)	65-75	60-70	289-334	267-311
Fan And Alternator	125-155	90-115	556-689	400-512
Power Steering Pump	125-155	90-115	556-689	400-512
Serpentine Drive Belt (Six-Cylinder engine only)	180-200	140-160	800-890	623-712

60253

Engine Drive Belt Arrangements

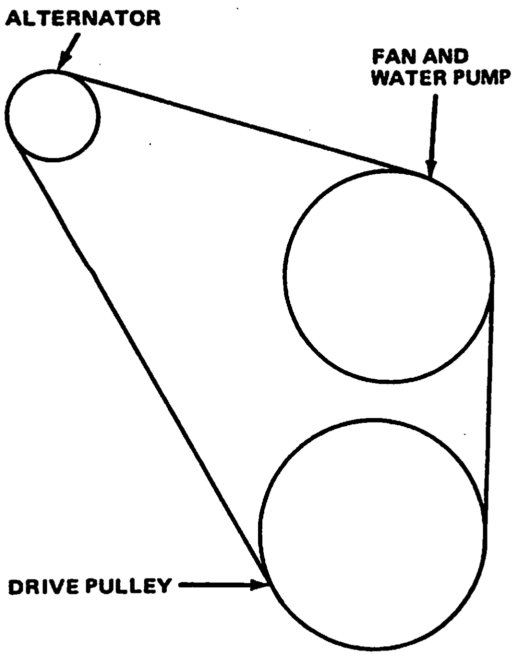

FOUR-CYLINDER ENGINE
BASIC BELT ARRANGEMENT

70708A

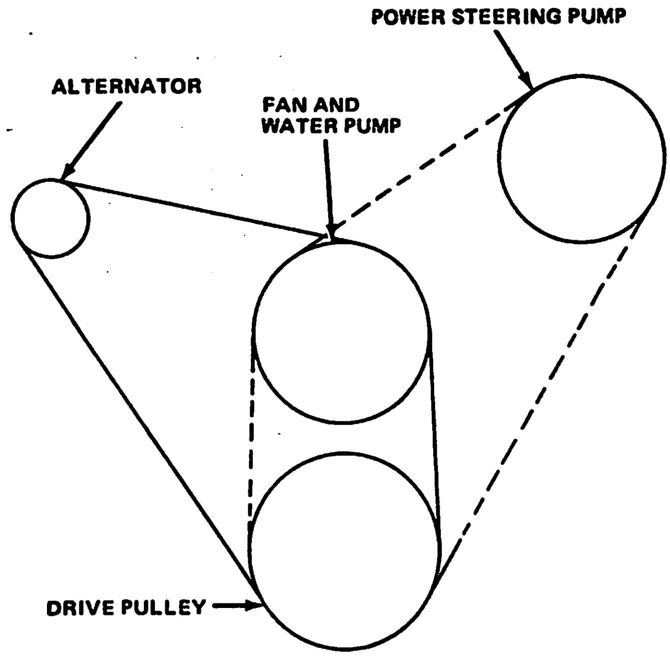

FOUR-CYLINDER ENGINE WITH
ALTERNATOR AND POWER STEERING

70708B

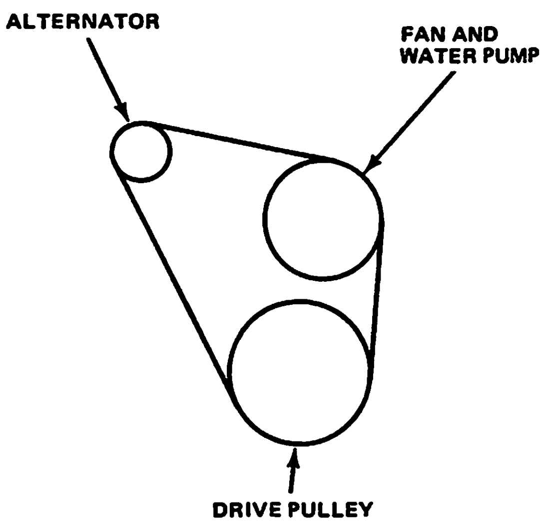

SIX-CYLINDER ENGINE
BASIC BELT ARRANGEMENT

80415A

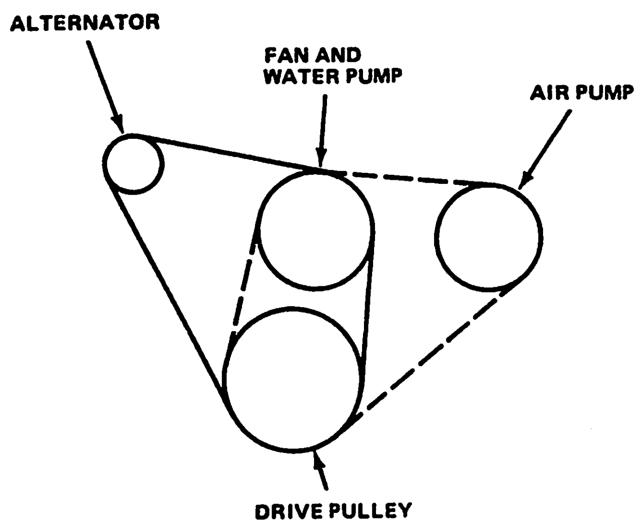

SIX-CYLINDER ENGINE WITH
ALTERNATOR AND AIR PUMP

80415B

LEGEND
FRONT BELT ————
MIDDLE BELT —— – ——
REAR BELT — — — — —

Engine Drive Belt Arrangements

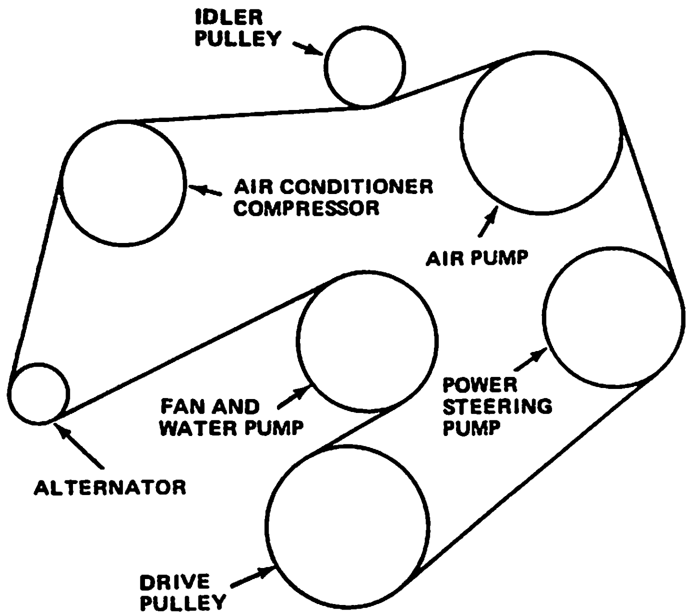

SIX-CYLINDER ENGINE WITH SERPENTINE DRIVE, ALTERNATOR, AIR CONDITIONING, POWER STEERING AND AIR PUMP

80415M

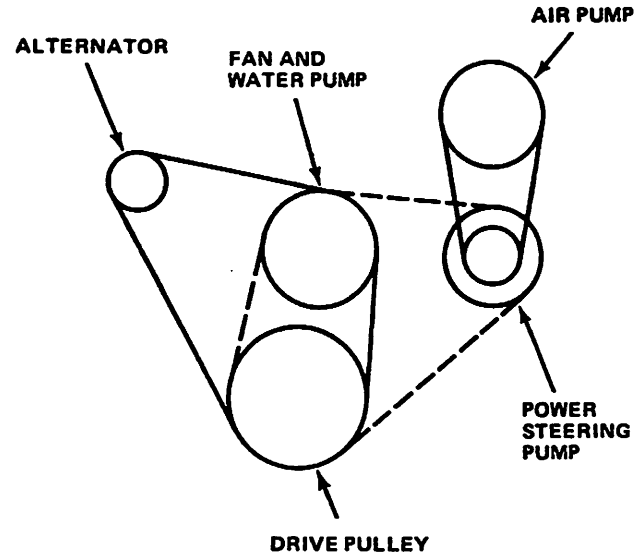

SIX-CYLINDER ENGINE WITH ALTERNATOR POWER STEERING AND AIR PUMP

80415D

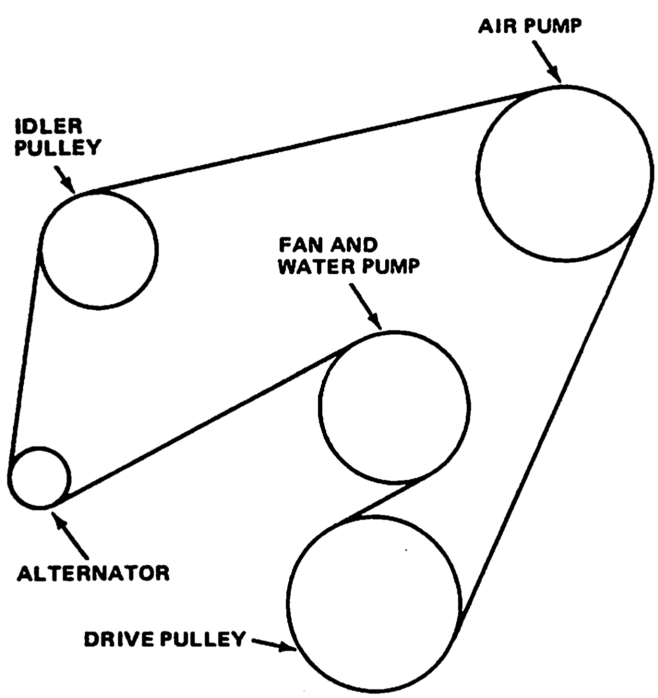

SIX-CYLINDER ENGINE WITH SERPENTINE DRIVE, ALTERNATOR AND AIR PUMP

80415J

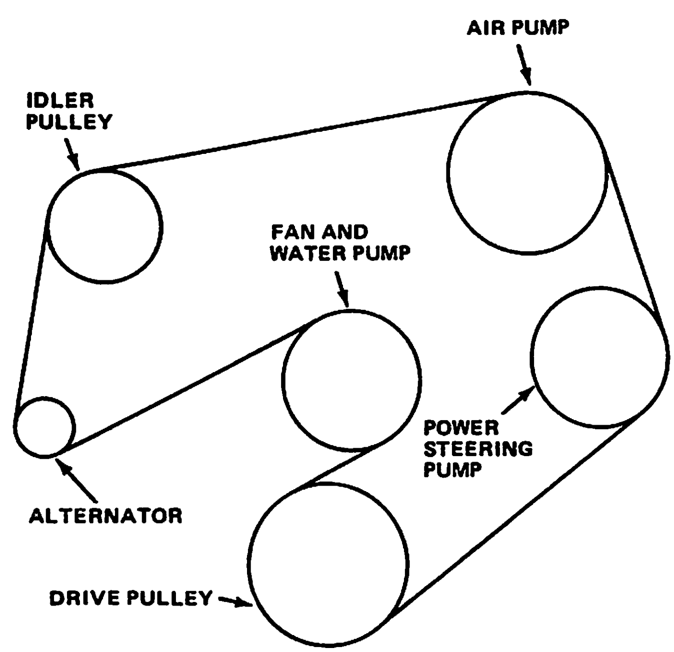

SIX-CYLINDER ENGINE WITH SERPENTINE DRIVE, ALTERNATOR, POWER STEERING AND AIR PUMP

80415K

LEGEND
FRONT BELT ————
MIDDLE BELT —— - ——
REAR BELT — — — —

Engine Drive Belt Arrangements

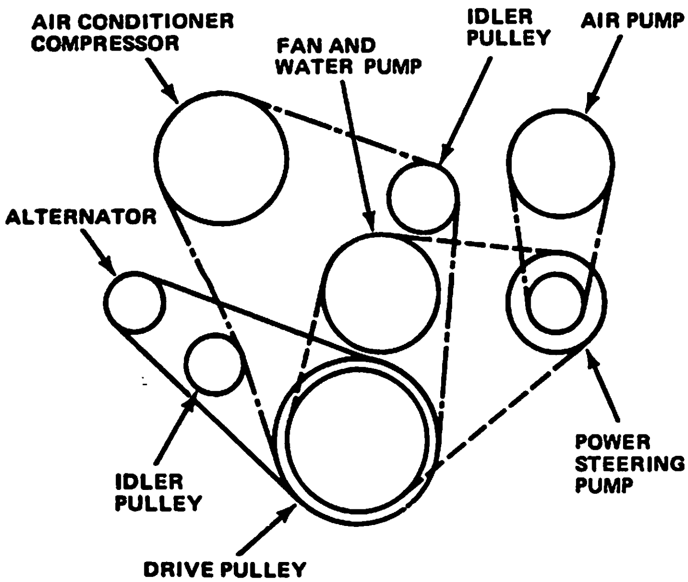

SIX-CYLINDER ENGINE WITH ALTERNATOR,
POWER STEERING, AIR PUMP AND AIR CONDITIONING

90977B

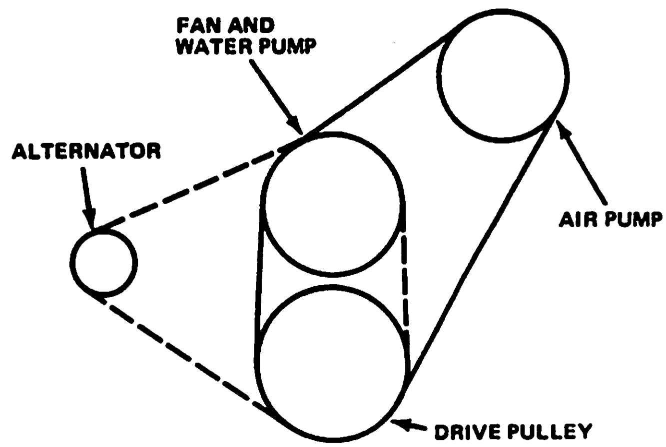

EIGHT-CYLINDER ENGINE WITH
ALTERNATOR AND AIR PUMP

NOTE: 10 SI ALTERNATOR - 1 BELT
15 SI ALTERNATOR - 2 BELTS

90977E

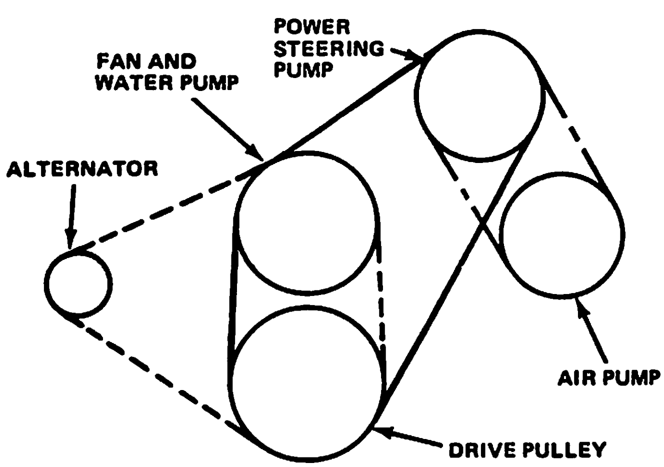

EIGHT-CYLINDER ENGINE WITH ALTERNATOR
AIR PUMP AND POWER STEERING

NOTE: 10 SI ALTERNATOR – 1 BELT
15 SI ALTERNATOR – 2 BELTS

90977F

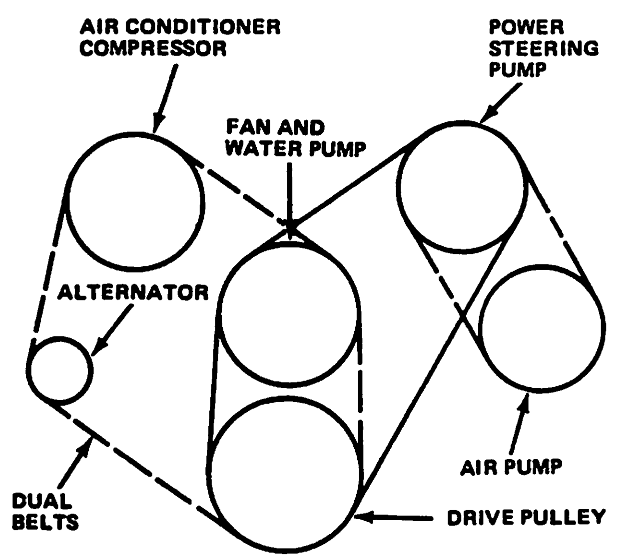

EIGHT-CYLINDER ENGINE WITH ALTERNATOR,
AIR PUMP, AIR CONDITIONER, AND POWER STEERING

90977G

LEGEND
FRONT BELT
MIDDLE BELT
REAR BELT

Torque Specifications

Service Set-To Torque should be used when assembling components. Service In-Use Recheck Torque should be used for checking a pre-tightened item.

	USA (ft-lbs)		Metric (N·m)	
	Service Set-To Torque	Service In-Use Recheck Torque	Service Set-To Torque	Service In-Use Recheck Torque
Accessory Drive Pulley Screws (Six-Cylinder)	18	12-25	24	16-34
Air Conditioning Idler Pulley Bracket-to-Timing Case Cover Nut	7	4-9	10	5-12
Air Pump-to-Bracket Screws	20	15-22	27	20-30
Air Pump Bracket-to-Engine Screws	25	18-28	34	24-38
Air Pump Adjusting Strap-to-Pump	20	15-22	27	20-30
Alternator Adjusting Bolt (Six- and Eight-Cylinder)	18	15-20	24	20-27
Alternator Adjusting Bolt (Four-Cylinder)	20	15-25	27	20-34
Alternator Mounting Bracket-to-Engine Bolt	28	23-30	38	31-41
Alternator Pivot Bolt or Nut	28	20-35	38	27-48
Alternator Pivot Mounting Bolt (to Head)	33	30-35	45	41-48
A/T Fluid Cooler Pipe-to-Radiator Fitting	15	10-30	20	14-41
Crankshaft Pulley-to-Damper Screw	23	18-28	31	24-38
Cylinder Block Heater Nut - T-Bolt Type	20 in-lbs	17-25 in-lbs	2	2-3
Fan Blades and Pulley-to-Hub Screw	18	12-25	24	16-34
Idler Pulley Bearing Shaft-to-Bracket Nut	33	28-38	45	38-52
Idler Pulley Bracket-to-Front Cover Nut	7	4-9	10	5-12
Power Steering Pump-to-Bracket (Four-Cylinder)	28	24-32	38	32-44
Power Steering Pump Adapter Screw	23	18-28	31	24-38
Power Steering Pump Bracket Screw	43	37-47	58	50-64
Power Steering Pump Mounting Screw	28	25-35	38	34-48
Power Steering Pump Pressure Line Nut	30	30-45	41	41-61
Power Steering Pump Pulley Nut	58	40-69	79	54-94
Thermostat Housing (Six- and Eight-Cylinder)	13	10-18	18	14-24
Thermostat Housing (Four-Cylinder)	22	17-25	30	24-33
Timing Case Cover-to-Block (Eight-Cylinder) (through Water Pump)	25	18-33	34	24-45
Water Pump-to-Block Screws (Six-Cylinder)	13	9-18	18	12-24
Water Pump-to-Block (Four- and Eight-Cylinder)	25	18-33	34	24-45
Water Pump-to-Timing Case Cover Screen (Eight-Cylinder)	48 in-lbs	40-55 in-lbs	5	5-6

All Torque values given in foot-pounds and newton meters with dry fits unless otherwise specified.

Refer to Standard Torque Specifications and Capscrew Markings Chart in Section A of this manual for any torque specifications not listed above.

60250

Tools

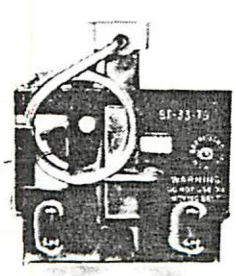

J-29555
BELT TENSION
GAUGE

J-23600
BELT TENSION GAUGE

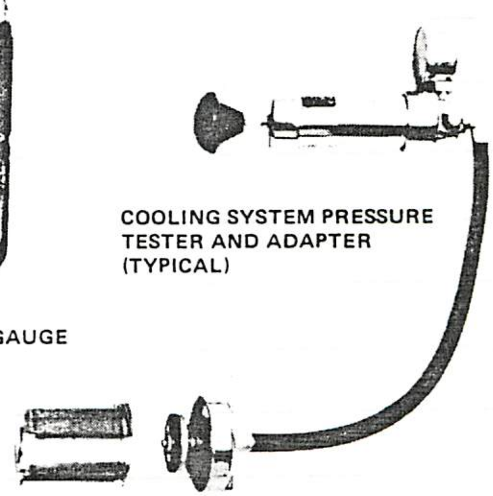

COOLING SYSTEM PRESSURE
TESTER AND ADAPTER
(TYPICAL)

J-23600-B
BELT TENSION
GAUGE

42005

NOTES

BATTERIES 1D

INDEX

GENERAL

The batteries for 1982 Jeep vehicles are lightweight and have low-antimony/lead compound plates. In addition to helping reduce overall vehicle weight, they require less frequent electrolyte level inspections, have a decreased self-discharge rate from local action and have a longer shelf life. Electrolyte level inspections are required only at the beginning of each winter season and every 15,000 miles (24 000 km).

In addition to the standard equipment 380 cold crank amps battery, a 450 cold crank amps battery is optionally available for vehicles equipped with heavy-duty equipment. Both batteries are 12-volt, lead-acid units.

The vehicle battery tray has a removable spacer that, when removed, will permit the installation of a substitute conventional size group 24 battery in the event a lightweight replacement battery is not available.

NOTE: *A 440 Cold Crank Amps with 135-Minute Reserve Capacity is optionally available for 1982 J-Series vehicles equipped with a Police Package.*

BATTERY CLASSIFICATIONS, RATINGS AND CODES

Group Size Classification

The group size classification provides, by reference to Battery Council International listings or applicable SAE standard, the physical characteristics and electrical criteria for the applicable battery.

Reserve Capacity Minutes Rating

Reserve capacity minutes is defined as the number of minutes a fully charged battery at 80°F (26.7°C) can be discharged at a steady 25 ampere rate until a terminal voltage equivalent to 1.75 volts per cell (10.50 volts total battery voltage) is indicated. The reserve capacity rating for each Jeep battery is either listed on a label or stamped into the battery case. The batteries are also color coded to denote the rating.

Cold Crank Amps Rating

The cold crank amps rating specifies the minimum amps a fully charged battery can deliver at 0°F (-17.7°C) for thirty seconds without the battery terminal voltage dropping below 7.2 volts. The cold crank amps rating is either listed on a label or stamped in the battery case.

Battery Ratings

Group Size	Cold Crank Amps	Reserve Capacity Min.
55-380	380	75
56-450	450	90
24-440	440	135

90962

Battery Codes

Each battery is date coded at the time of shipment from the manufacturer. This code is stamped into the edge of the plastic case cover (fig. 1D-1). A second code number stamped on the side of the battery case represents manufacturing data and may be ignored.

The date code is decoded as follows:

- **month:** Jan., Feb., etc.
- **year:** 81—1981, 82—1982

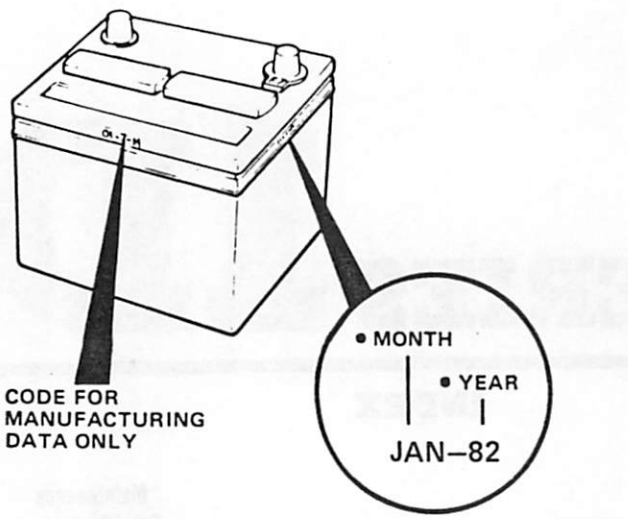

Fig. 1D-1 Date Code Location—Typical

BATTERY REPLACEMENT

Removal

(1) Loosen cable clamps.

(2) Use puller to remove cables if necessary. Remove positive cable first.

WARNING: *Use extreme care to prevent dropping battery and splattering the electrolyte because it can cause severe eye injury and skin burns. Rubber gloves, rubber aprons, protective eye shields and steel-toed shoes will decrease the hazards of this type accident. Immediate first aid is required for electrolyte splashed into the eyes and on the skin. Electrolyte spills should be immediately neutralized with a solution of sodium bicarbonate (baking soda) and water and then thoroughly rinsed with water.*

(3) Loosen holddowns and remove battery.

(4) Inspect cables for corrosion and damage. Remove corrosion using wire brush or post and terminal cleaner and soda solution. Replace cables that have damaged or deformed terminals.

(5) Inspect battery tray and holddowns for corrosion. Remove corrosion using wire brush and soda solution. Paint exposed bare metal. Replace damaged components.

(6) Clean outside of battery case if original battery is to be installed. Clean top cover with a diluted ammonia soda solution to remove acid film. Flush with clean water. Ensure soda solution does not enter cells. Remove corrosion from terminals with wire brush or post and terminal cleaner. Inspect case for cracks or other damage that would result in leakage of electrolyte.

Installation

(1) Refer to Specifications to determine if battery has correct rating for vehicle.

(2) Use hydrometer to test battery electrolyte. Charge if necessary.

CAUTION: *Ensure battery tray is clear of loose hardware or debris that could damage battery case.*

(3) Position battery in tray. Ensure positive and negative terminals are correctly located. Cables must reach their respective terminals without stretching.

(4) Ensure tang at battery base is positioned in tray properly before tightening holddown.

CAUTION: *It is imperative that the cables are connected to the battery positive-to-positive and negative-to-negative. Reverse polarity will damage alternator diodes and radios.*

(5) Connect and tighten positive cable first. Then connect and tighten negative cable.

NOTE: *The tapered positive terminal is 1/16 inch (1.6 mm) larger in diameter than the negative terminal. The opening in the positive cable clamp is correspondingly larger.*

(6) Apply thin coating of petroleum jelly or chassis grease to cable terminals and battery posts.

(7) Inspect negative cable connections on engine and vehicle body for condition, security and electrical continuity.

MAINTENANCE

Always observe the correct polarity when connecting a charger to a battery. Reversed battery connections will damage the alternator diodes and radios. The NEGATIVE battery terminal is grounded to the engine and body.

WARNING: *Explosive gases are present within and around the battery at all times. Avoid open flames and sparks. The danger of battery explosion is compounded by the fact that the acid would be splattered in every direction. Wear protective eye shields and clothing when servicing any battery. Ensure battery has adequate ventilation when charging.*

It is important that the battery be fully charged when a new vehicle is delivered. Maintaining a battery at partial charge could shorten its life.

Inspect electrolyte level in the battery at 15,000 mile (24 000 km) intervals and at the beginning of the winter season. Add distilled water to each cell until the level reaches the bottom of the vent well. DO NOT OVERFILL. Operate the engine immediately after adding water (particularly in cold weather) to assure proper mixing of the water and electrolyte.

Inspect to determine the external condition of the battery and the cables periodically.

The holddown should be tight enough to prevent the battery from vibrating or shifting position and cause damage to the battery case.

CAUTION: *Keep filler caps tight to prevent the neutralizing solution from entering the cells.*

Take particular care to ensure that the top of the battery is free of acid film and dirt between the battery terminals. For best results when cleaning the battery, wash with a diluted ammonia or soda solution to neutralize any acid present and flush with clean water.

To ensure good electrical contact, the battery cables must be tight on the battery posts. Ensure the terminal clamps have not stretched. This could cause the clamp ends to become butted together without actually being tight on the post. If the battery posts or cable terminals are corroded, disconnect the cables by loosening the terminal clamp bolts and remove the terminals with the aid of a puller. Do not twist, hammer or pry on a terminal to free it from the battery post. Clean the terminals and posts with a soda solution and wire brush or post and terminal cleaner. Connect the cable terminal clamps (positive terminal first) to the battery posts and apply a thin coat of petroleum jelly or grease. Inspect the battery negative cable and body ground cable for condition and good electrical continuity with engine and body.

Frozen Electrolyte

WARNING: *Do not attempt to charge or use a booster on a battery with frozen electrolyte. The frozen battery may explode!*

A 75 percent charged battery will not freeze. Maintain batteries at 75 percent charge or more, especially during winter weather.

Replace the battery if the electrolyte becomes either slushy or frozen. A battery in this condition, depending on the severity of the freeze, may accept and retain a charge, and even perform satisfactorily under a load test. However, after 120 to 150 days in service, a reduction in storage capacity and service life will become apparent as the individual plates lose their active material.

Electrolyte Freezing Temperature

Specific Gravity (Corrected to 80° F)	Freezing Temperature
1.270	− 84°F (− 64°C)
1.250	− 62°F (− 52°C)
1.200	− 16°F (− 27°C)
1.150	+ 05°F (− 15°C)
1.100	+ 19°F (− 7°C)

60339

Battery Storage

All wet cell batteries will discharge slowly from local action when stored. Batteries discharge faster when warm than when cold. For example, at 100°F (37.8°C), a normal self-discharge rate of 0.0024 specific gravity per day can be expected. At 50°F (10°C), a discharge rate of 0.0003 specific gravity per day is normal. Refer to Self-Discharge Rate chart.

Before storage, clean the battery case with a solution of sodium bicarbonate (baking soda) and water, rinse and wipe the case dry. When storing a battery, charge fully (no change in specific gravity after three tests taken at one hour intervals) and store in a cool, dry location. Refer to Charging and Testing.

Fully charge a stored battery before putting it into service. Refer to Charging for procedure. Refer to Battery Replacement for installation procedure.

Self-Discharge Rate

Temperature	Approximate Allowable Self-Discharge Per Day For First Ten Days
100°F (37.8°C)	0.0024 Specific Gravity
80°F (26.7°C)	0.0009 Specific Gravity
50°F (10°C)	0.0003 Specific Gravity

60338

CHARGING

General

A battery stores electrical energy in the form of chemical energy. When it is used to power an electrical device (e.g., a starter motor), the stored energy is released, or discharged, in the form of electrical energy.

The more cells and plate area a battery has, the greater its capacity for storing energy. When the maximum amount of energy is being stored, a battery is commonly said to be "fully charged." The relative amount of charge or stored energy is directly proportional to the specific gravity value of the electrolyte. This allows the use of a hydrometer to determine the state of charge or energy storage level of a battery in relation to the maximum possible charge (full charge).

Dry Charge Battery

WARNING: *Before activating a dry-charged battery, carefully read the instructions and poison/danger warning on the electrolyte carton.*

Do not remove seals until battery is to be activated. Once the seals are removed, the battery must be activated immediately. Discard seals after removal.

Activation Procedure

(1) Fill each cell with battery electrolyte to bottom of well, observing handling precautions listed on electrolyte carton.

(2) After cells are filled, tilt battery from side to side to release air bubbles.

(3) Recheck electrolyte level in each cell and add as necessary.

NOTE: *Uneven filling of cells will affect the battery capacity and service life.*

(4) Install caps supplied with battery.

(5) Inspect battery case for leakage to ensure no damage occurred in handling.

(6) Boost charge battery for 15 minutes at 30 amps or slow charge until battery electrolyte is gassing freely.

(7) Install battery in vehicle. Refer to Battery Replacement-Installation.

NOTE: *Because the apparent state of charge of a battery as indicated by a hydrometer is depressed for the first few cycles, load testing is the only valid test at the time of activation. Hydrometer testing may be used after the battery has been cycled in service.*

The specific gravity of a newly installed Jeep battery will be approximately 1.225 (±0.010). The specific gravity will normally rise to 1.250 to 1.265 after a few days in service.

NOTE: *Electrolyte is composed of sulfuric acid and water. Approximately 35 percent by weight or 24 percent by volume is acid.*

WARNING: *Never add pure acid to a battery.*

Slow Charge

WARNING: *Battery charging generates hydrogen gas, which is highly flammable and explosive. Hydrogen gas is present within and around a battery at all times, even when a battery is in a discharged condition. Keep open flames and sparks (including cigarettes, cigars, pipes) away from the battery. Always wear eye protection when handling, testing or charging a battery.*

Slow charging is the preferred method of recharging a battery. The slow charge method may be safely used, regardless of charge condition of the battery, provided the electrolyte is at the proper level in all cells and is not frozen.

WARNING: *Do not attempt to charge or use a booster on a battery with frozen electrolyte because it can cause the frozen battery to explode.*

The normal charging rate for a lightweight battery is 3 to 5 amps. A minimum period of 24 hours is required when charging at this rate. Charge time is inversely proportional to the temperature of the electrolyte.

A battery may be fully charged by the slow charge method unless it is not capable of accepting a full charge. **A battery is in a maximum charged condition when all cells are gassing freely and three corrected specific gravity tests, taken at one-hour intervals, indicate no increase in specific gravity.**

Fast Charge

CAUTION: *Always disconnect the battery cables before using a fast charger.*

A battery may be charged at any rate that does not cause the electrolyte temperature of any cell to exceed 125°F (51.7°C) and does not cause excessive gassing and loss of the electrolyte.

A fast charger cannot be expected to fully charge a battery within an hour, but will charge the battery sufficiently so that it may be returned to service. The battery will be fully charged by the vehicle charging system, provided the engine is operated a sufficient length of time.

Booster Charging

WARNING: *If the battery electrolyte is not visible or frozen, do not attempt to jump-start because the battery could rupture or explode. The battery must be warmed up to 40°F (4.4°C) and water added if necessary before it can be safely charged or the engine jump-started.*

The correct method for starting an engine with a discharged battery requires either a portable starting unit or a booster battery. When using either method, it is essential that connections be made correctly.

When using a portable starting unit, the voltage must not exceed 16 volts or damage to the battery, alternator, or starter may result. Because of the accompanying high voltage, a fast charger must not be used for jump-starting engines.

(1) Remove vent caps from booster battery and cover cap openings with dampened cloth.

CAUTION: *If the engine is being jump-started with a battery located in another vehicle, the vehicles must not contact each other.*

(2) Connect jumper cable between positive posts of batteries. Positive post has "+" stamped into it. POS is also embossed on battery cover in 1/8-inch letters adjacent to battery post.

(3) Connect one end of second jumper cable to negative terminal of booster battery. NEG is embossed on battery cover in 1/8-inch letters adjacent to battery post. Ensure cable clamps have good electrical contact with posts. **DO NOT CONNECT OTHER END OF JUMPER CABLE TO NEGATIVE TERMINAL OF DISCHARGED BATTERY.** Connect cable to screw, bracket, nut or other good ground connection on engine. Do not connect cable to carburetor, air cleaner or fuel line. Keep cable clear of fan, belts and pulleys.

WARNING: *Use extreme caution when engine is operating. Do not stand in direct line with fan. Do not put hands near pulleys, belts or fan. Do not wear loose clothing.*

(4) When engine starts, remove jumper cables. Disconnect cable from engine first.

(5) Discard cloth used to cover cap openings because it has been exposed to sulfuric acid.

(6) Install battery caps.

TESTING

General

NOTE: *A complete battery test includes cleaning the top of the battery case, cleaning posts and cable terminals and performing hydrometer and heavy load tests.*

The condition of a battery may be determined from the results of two tests—state of charge (hydrometer test) and ability to supply current (heavy load test). Refer to Battery Diagnosis and Repair Simplification (DARS) chart.

Perform the hydrometer test first. If specific gravity indicates less than 1.225, the battery must be charged before proceeding to further testing. A battery that will not accept a charge is defective and further testing is not necessary.

NOTE: *A battery with sulfated plates may require an overnight slow charge to determine if the sulfate coating is thin enough to be eliminated by a charge.*

A battery that is fully charged and does not pass the heavy load test is defective.

If a battery discharges and no apparent cause can be found, the battery should be fully charged and allowed to stand on a shelf for three to seven days to determine if the self-discharge is excessive. The Self-Discharge Rate chart lists allowable self-discharge for the first ten days of standing after a battery has been fully charged. A battery is fully charged when all cells are gassing freely and three corrected specific gravity tests, taken at one-hour intervals, indicate no increase in specific gravity.

Hydrometer Test

NOTE: *Periodically disassemble the hydrometer and wash components with soap and water. Inspect the float for possible leaks. If the paper inside has turned brown, the float is defective.*

Prior to testing, visually inspect the battery for any damage (cracked container, cover, loose post, etc.) that would cause the battery to be unserviceable. To interpret the hydrometer correctly, hold it with the top surface of the electrolyte in the hydrometer at eye level (fig. 1D-2). Disregard the curvature of the liquid where the surface rises against the float because of surface cohesion. Draw in only enough electrolyte to keep the float off the bottom of the hydrometer barrel with the bulb released. Keep the hydrometer in a vertical position while drawing in the electrolyte and observing the specific gravity. Exercise care when inserting the tip of the hydrometer into a cell to avoid damage to separators. Damaged separators can result in premature battery failure.

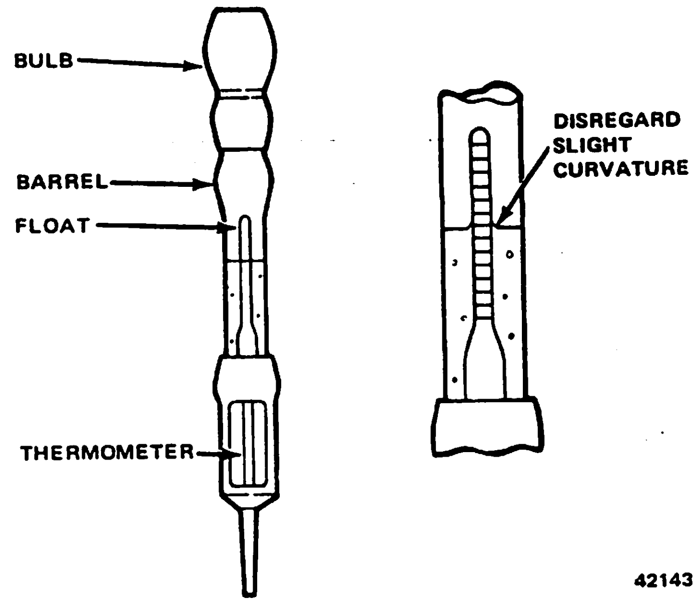

Fig. 1D-2 Hydrometer

Hydrometer floats are generally calibrated to indicate the specific gravity correctly at only one fixed temperature, 80°F (26.6°C). When testing the specific gravity at any other temperature, a correction factor is required. The correction factor is approximately a specific gravity value of 0.004, referred to as 4 points of gravity. For each 10°F above 80°F (5.5°C above 26.6°C), add 4 points. For each 10°F below 80°F (5.5°C below 26.6°C), subtract 4 points. Always correct the specific gravity for temperature variation. Test the specific gravity of the electrolyte in each battery cell.

Example: A battery is tested at 10°F and has a specific gravity of 1.240. The actual specific gravity is determined as follows:

Number of degrees above or below 80°F equals 70 degrees (80 minus 10).

70° divided by 10° (each 10° difference) equals 7.

7 multiplied by 0.004 (temperature correction factor) equals 0.028.

Temperature is below 80°F, therefore temperature correction is subtracted.

Temperature corrected specific gravity is 1.212 (1.240 minus 0.028).

A fully charged battery should have a temperature corrected specific gravity of 1.250 to 1.265.

If the specific gravity of all cells is above 1.235, but the variation between cells is more than 50 points (0.050), it is an indication that the battery is unserviceable. Remove the battery from the vehicle for additional testing.

If the specific gravity of one or more cells is less than 1.235, recharge the battery at a rate of approximately 5 amperes until 3 consecutive specific gravity tests, at one-hour intervals, are constant.

If the cell variation is more than 50 points (0.050) at the end of the charge period, replace the battery.

When the specific gravity of all cells is above 1.235 and variation between cells is less than 50 points, the battery may be tested under load.

Specific Gravity

State of Charge	Specific Gravity (Cold and Temperate Climates)
Fully Charged	1.265
75% Charged	1.225
50% Charged	1.190
25% Charged	1.155
Discharged	1.120

60340

Heavy Load Test

NOTE: *The following instructions refer to Amserv Battery-Alternator-Regulator Tester, Model 21-307.*

(1) Before performing heavy load test, battery must be fully charged. Refer to Slow Charge.

(2) Turn carbon pile rheostat knob of battery tester to **OFF** position (fig. 1D-3).

(3) Turn selector knob to **AMP** position.

(4) Connect test leads as illustrated in figure 1D-3.

(5) Turn carbon pile rheostat knob clockwise until ammeter indicates correct test amperage:

- 135 amperes for 55-380 battery (75 reserve capacity minutes, 380 cold crank amps).
- 180 amperes for 56-450 battery (90 reserve capacity minutes, 450 cold crank amps).
- 230 amperes for 24-440 battery (135 reserve capacity minutes, 440 cold crank amps).

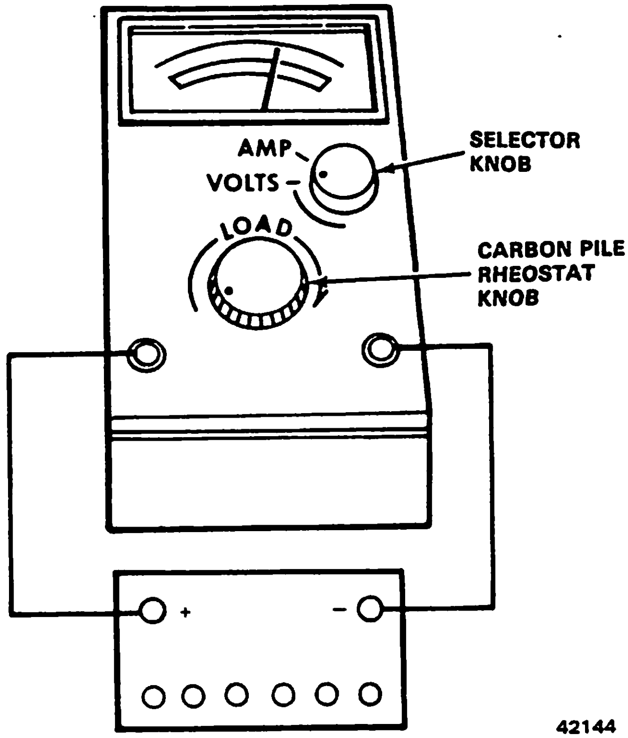

Fig. 1D-3 Heavy Load Test

(6) Maintain load for 15 seconds. Turn selector switch to **VOLTS**, and note voltage.

If the voltmeter indicates 9.6 volts or higher with the battery temperature at a minimum of 70°F (21°C), the battery is in good condition. If less than 9.6 volts, replace the battery.

TROUBLE DIAGNOSIS

When an engine will not start because the starter motor is inoperative, follow the steps outlined in the DARS charts to determine if the battery or the starting system is the cause of the malfunction.

BATTERY DIAGNOSIS AND REPAIR SIMPLIFICATION (DARS) CHART

Note: Refer to Chapter A – General Information for details on how to use this DARS chart.

PROBLEM: STARTER MOTOR INOPERATIVE

Chart 1

STEP	SEQUENCE	RESULT
1	CHECK FOR:	

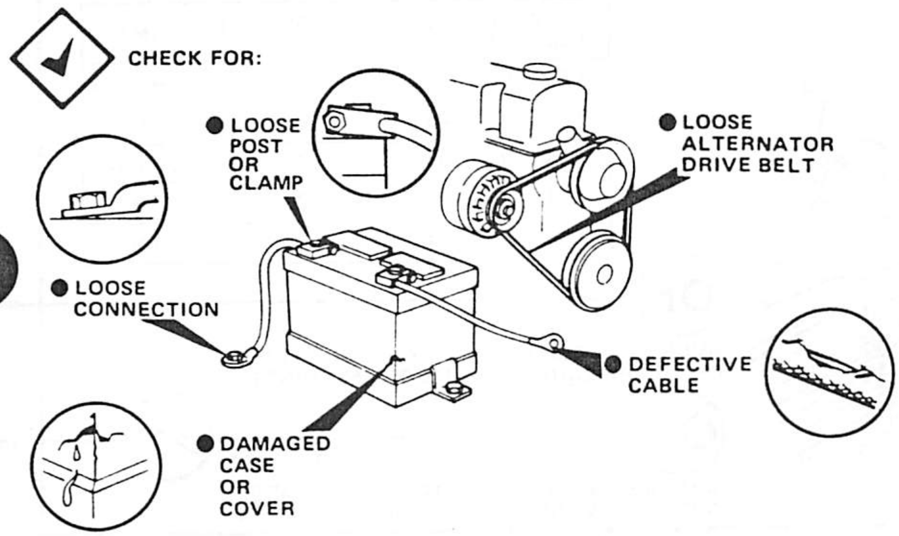

REPAIR OR REPLACE IF NECESSARY → 2

2

● CHECK ELECTROLYTE LEVEL AND TEST SPECIFIC GRAVITY IN EACH CELL AND RECORD.

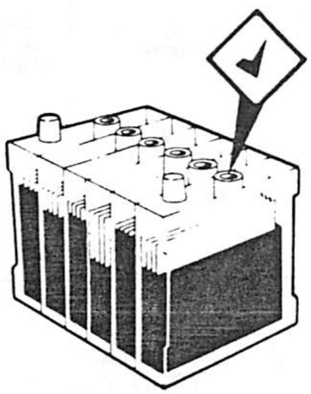

ELECTROLYTE LEVEL TOO LOW FOR SPECIFIC GRAVITY TEST–ADD WATER. CHARGE BATTERY FOR 10 MIN. AT 20 AMP RATE. TEST SPECIFIC GRAVITY

OK → 5
AVERAGE SPECIFIC GRAVITY 1.225 OR MORE CELLS ARE EQUAL WITHIN 0.050 (50 POINTS)

NOT OK → REPLACE BATTERY → 6
AVERAGE SPECIFIC GRAVITY 1.225 OR MORE BUT CELLS VARY 0.050 (50 POINTS) OR MORE

NOT OK → 3
AVERAGE SPECIFIC GRAVITY BELOW 1.225

3

- CONNECT BATTERY CHARGER AND VOLTMETER
- CHARGE BATTERY FOR 3 MINUTES AT 40 AMP RATE
- AT THE END OF 3 MINUTES OBSERVE VOLTMETER WHILE CHARGER IS STILL CHARGING

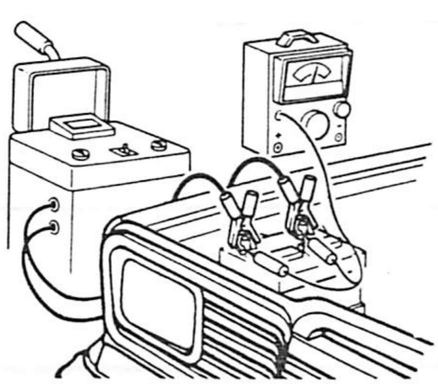

OK → 4
VOLTAGE IS 15.5 VOLTS OR LESS

NOT OK → SLOW CHARGE BATTERY AT 3 TO 4 AMPS FOR 48 TO 72 HOURS → 5
VOLTAGE ABOVE 15.5 VOLTS

70060A

STEP | **SEQUENCE** | **RESULT**

4

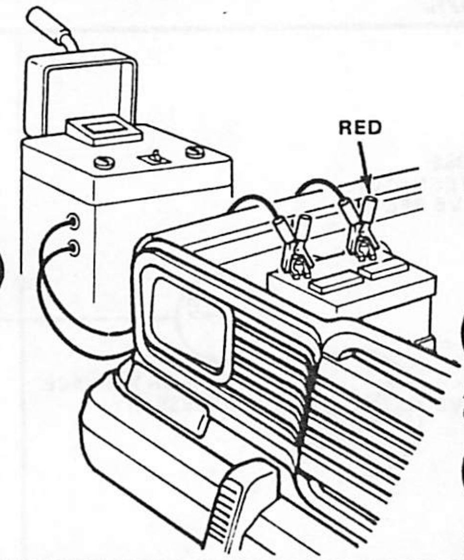

CHARGE BATTERY AS INDICATED IN CHART, AFTER CHARGE IS COMPLETED, RECHECK SPECIFIC GRAVITY.

AVERAGE SPECIFIC GRAVITY	CHARGE RATE (AMPS)	TIME
LESS THAN 1.125	5	12 HOURS
1.125 TO 1.149	20	90 MIN.
1.150 TO 1.174	20	70 MIN.
1.175 TO 1.199	20	50 MIN.
1.200 TO 1.224	20	30 MIN.

OK — AVERAGE SPECIFIC GRAVITY 1.225 OR MORE CELLS ARE EQUAL WITHIN 0.050 (50 POINTS) → 5

~~OK~~ — AVERAGE SPECIFIC GRAVITY 1.225 OR MORE BUT CELLS VARY 0.050 (50 POINTS) OR MORE → REPLACE BATTERY → 6

5

- CLEAN BATTERY POSTS AND CABLE TERMINALS
- CONNECT HEAVY LOAD TESTER
- DETERMINE HEAVY LOAD AMPS FROM CHART
- ADJUST TESTER FOR LOAD AMPS
- HOLE LOAD FOR 15 SECONDS
- NOT VOLTS

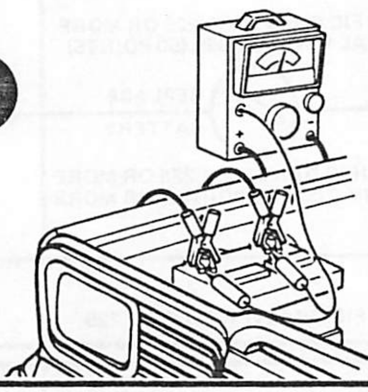

HEAVY LOAD OUTPUT TEST

HEAVY LOAD CHART

GROUP SIZE	COLOR CODE	RESERVE CAPACITY (MINUTES)	COLD CRANK AMPS	HEAVY LOAD (AMPS)
55-380	Green	75	380	135
56-450	Red	90	450	180
24-440	Yellow	135	440	230

- VOLTAGE 9.6 OR MORE → 6
- VOLTAGE LESS THAN 9.6 → REPLACE BATTERY → 6

6

OK — ENGINE STARTS → STOP

~~OK~~ — ENGINE DOES NOT START → PERFORM STARTER MOTOR DIAGNOSIS LISTED IN STARTING SYSTEMS CHAPTER IF

70060B

SPECIFICATIONS

Battery Specifications

ENGINE	Group Size	Rating
151, 258, and 360 CID	55-380	380 amps, 75 min.
Optional, Factory Installed	56-450	450 amps, 90 min.
Optional, Police	24-440	440 amps, 135 min.

80380

Torque Specifications

Service Set-To Torques should be used when assembling components. Service In-Use Recheck Torques should be used for checking a pre-tightened item.

	USA (in-lbs)		Metric (N·m)	
	Service Set-To Torque	Service In-Use Recheck Torque	Service Set-To Torque	Service In-Use Recheck Torque
Battery Box Screw	145	95-180	16	11-20
Battery Holddown Screw	75	50-95	8	6-11
Battery Cable Clamp	75	60-90	8	7-10

All Torque values given in inch-pounds and Newton-meters with dry fits unless otherwise specified.

Refer to the Standard Torque Specifications and Capscrew Markings Chart in Section A of this manual for any torque specifications not listed above.

70405

Tools

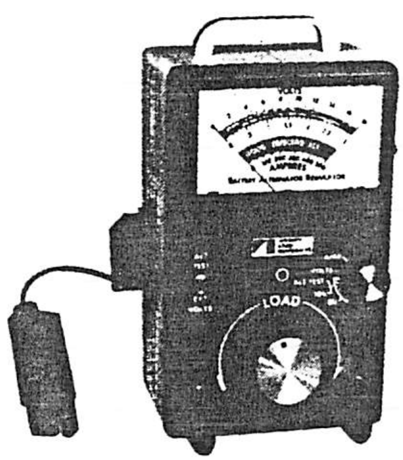

AMA 21-317
CIRCUIT TESTER

NOTES

CHARGING SYSTEM 1E

INDEX

GENERAL

A Delco charging system is installed on all vehicles. This negative-ground system consists of two primary components: an alternator with an integral regulator and a battery. The non-repairable, non-adjustable regulator is a solid-state device located within the alternator housing.

The standard equipment alternator is rated at 42 amps and the optional, heavy-duty alternators are rated at 55, 63, 70 and 85 amps.

COMPONENTS

Alternator

The alternator (fig. 1E-1) is belt-driven by the engine. Its major components are front and rear housings, stationary windings (stator), rotating field winding (rotor), rectifying diodes and regulator.

The rotor assembly is supported in the front (drive end) housing by a ball bearing and in the rear (slip ring end) housing by a roller bearing. The bearings have sufficient lubricant for the life of the alternator and do

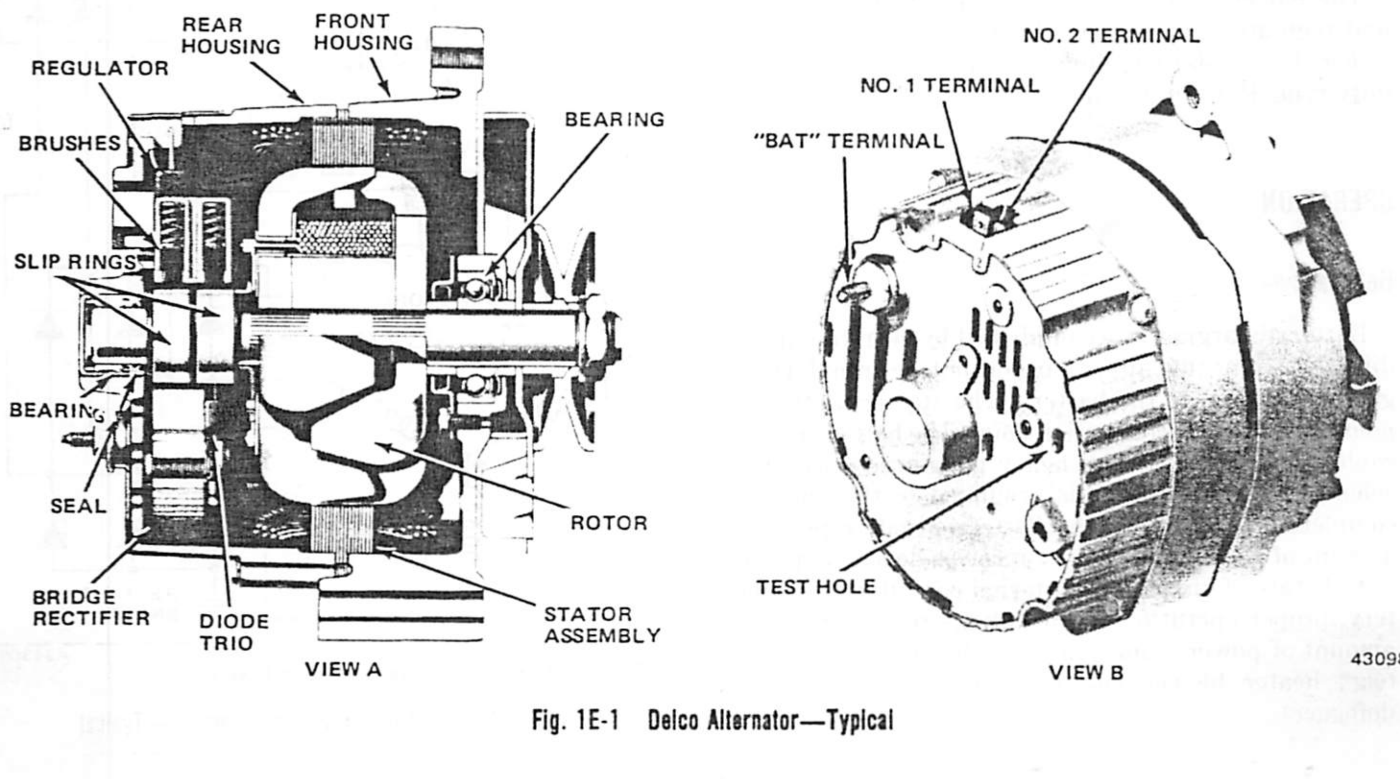

Fig. 1E-1 Delco Alternator—Typical

not require periodic lubrication. Two brushes provide current through two slip rings to and from the field coil. The brushes are designed for long periods of attention-free service. Other than a regularly-scheduled drive belt tension adjustment, the alternator assembly requires no periodic adjustments or maintenance.

The stator windings are wound on the inside of a laminated core that is also part of the alternator frame. The bridge rectifier connected to the stator winding output is comprised of six diodes molded into a single assembly. The bridge rectifier converts the three-phase alternating current output to direct current for the vehicle electrical system.

Battery discharge through the alternator is prevented by the one-way current flow action of the diodes. This eliminates the need for a conventional cutout relay. Alternator field current is supplied through a diode trio that is also connected to the stator windings.

A capacitor, or condenser, located in the end housing, protects the bridge rectifier and diode trio from high surge voltages and suppresses radio interference noise.

NOTE: *All bolt and screw threads are in metric dimensions.*

Voltage Regulator

The voltage regulator utilizes an integrated circuit to regulate the excitation current supplied to the field (rotor) winding. All regulator components are encapsulated in a solid mold and, along with the brush holder assembly, is attached to the rear housing of the alternator. The voltage regulator is not adjustable or repairable.

Battery

The battery used in conjunction with the alternator and regulator to complete the charging system will be either the standard equipment type or an optional heavy duty type. Refer to Chapter 1D—Batteries.

OPERATION

General

Battery charging is accomplished by current supplied directly from the alternator output terminal (heavy gauge red wire) to the battery. The starter motor solenoid is used as the connection point. The battery positive cable is connected to the heavy gauge red wire at the solenoid. The alternator is grounded to the engine to complete the circuit to the battery negative post. The amount of charge the battery receives depends upon the initial state of charge and internal condition of the battery, proper operation of the voltage regulator and the amount of power being consumed by the electrical load (e.g., heater blower motor, lamps and rear window defogger).

Energizing the System

When the ignition switch is turned to the **On** position (fig. 1E-2), positive battery voltage is applied to the regulator and current flows from ground to the regulator. The regulator controls the amount of excitation current allowed to flow through the field winding. The battery voltage provides the initial excitation that results in a large electromagnetic field around the rotor and a faster build-up of output voltage.

Within the regulator, TR1 and its associated biasing network controls the amount of field excitation current and, in so doing, the amplitude of the output voltage. As long as the rotor is stationary (i.e., no alternator output), all the current flows through the field winding, resistance wire and ammeter to the battery positive terminal. The ammeter will indicate negative (-) current flow (no alternator output).

NOTE: *Sometimes, without a battery installed in a vehicle (or if the battery is completely discharged), there will be no alternator output because there will be no*

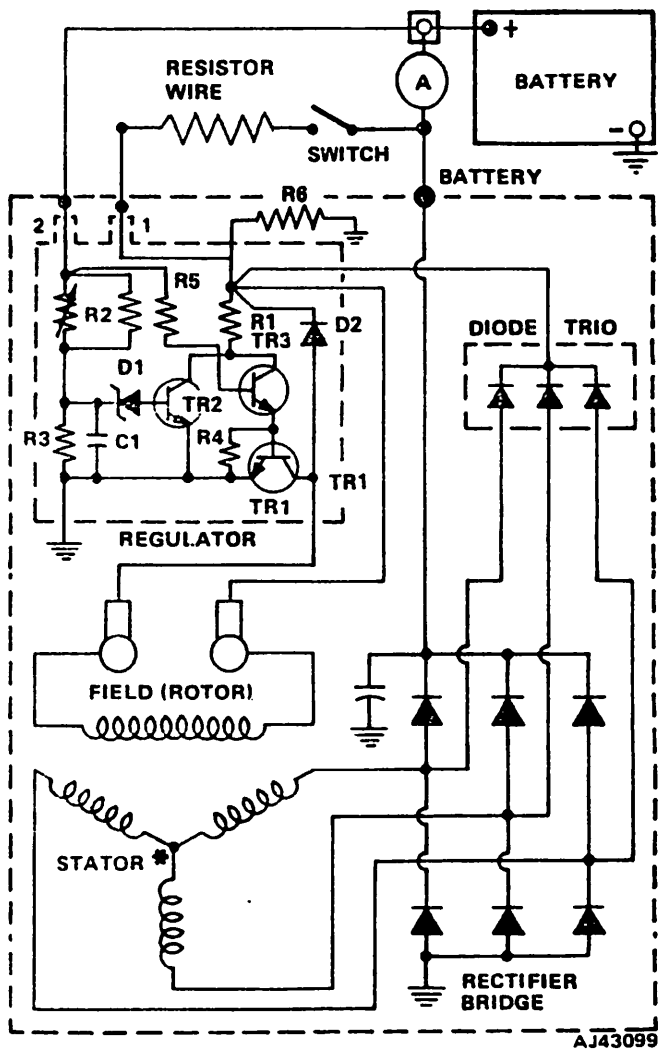

*15-SI Alternator Has Delta Wound Stators

Fig. 1E-2 Charging System Schematic—Typical *energizing excitation current. In most instances the rotor will have sufficient residual magnetism to create a magnetic field and induce a voltage into the stator when the rotor is turned.*

Voltage Output

When the rotor starts turning, the rotating electromagnetic field is cut by the stator windings. This action induces an AC voltage into the stator windings. The induced stator voltage is higher than the battery voltage and becomes the primary voltage source for excitation current flow through the field winding. The diode trio rectifies the current that flows from ground through TR1 and the field winding to the stator windings.

The six diodes in the bridge rectifier convert the stator AC voltage to DC output voltage. As alternator rotor rpm increases, increased power is generated for charging the battery and operating the electrical accessories. Because the voltage amplitude is higher on the alternator side of the ammeter, the current will flow through the ammeter to the alternator BAT terminal. The ammeter will indicate positive (+) current flow (charge).

Regulation

The No. 2 terminal on the alternator is always connected to the battery, but the discharge current is limited to a negligible value by the high resistances of R2 and R3.

As the alternator rotor rpm and stator voltage increase, the voltage across R3 increases to a level that causes zener diode D1 to conduct. Transistor TR2 is forward biased and conducts, and TR3 is reverse biased Off, which turns TR1 Off. With TR1 Off, the field current and system voltage decrease. When the voltage across R3 decreases, D1 stops conducting. Transistor TR2 is then reverse biased Off and transistors TR3 and TR1 forward biased On. In turn, the field current and output voltage increase. This cycle repeats many times per second to limit the alternator output to a preset value.

Capacitor C1 prevents abrupt voltage changes across R3, R4 prevents excessive back current through TR1 at high temperatures, and D2 protects TR1 by preventing a high induced voltage in the field winding when TR1 is turned Off. Resistor R2 is a thermistor that causes the regulated voltage to vary inversely with temperature, providing the optimum voltage over a wide temperature range for charging the battery.

TROUBLESHOOTING

Close adherence to the following procedures in the order presented will result in locating and correcting charging system malfunctions in the shortest possible time.

Figure 1E-3 depicts a basic wiring diagram for the charging system.

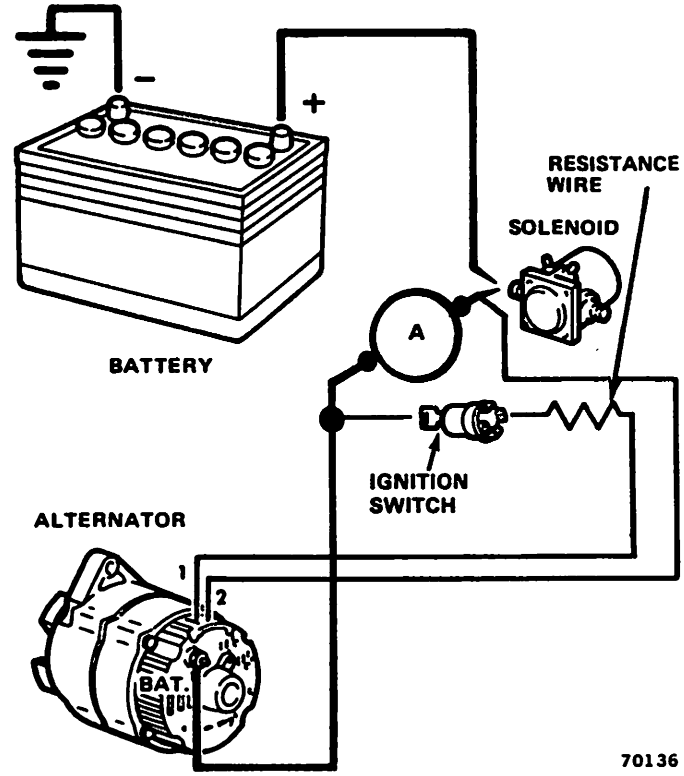

Fig. 1E-3 Basic Wire Connections

To avoid damage to the charging system, always observe the following precautions:

- Do not attempt to polarize the regulator.
- Do not short across or ground any of the terminals in the charging system except as specifically instructed.
- NEVER drive the alternator with the engine when the output terminal circuit is open and No. 1 and No. 2 wire terminals are connected to the alternator.
- Ensure the alternator and battery have the same ground polarity.
- When connecting a charger or a booster battery to the battery, connect negative to negative and positive to positive.

NOTE: *An ammeter is used on Cherokee, Wagoneer and Truck models to indicate the charging rate. CJ models are equipped with a voltmeter.*

Malfunction of the charging system is usually indicated by one or more of the following symptoms:

- Faulty ammeter (or voltmeter) operation.
- An undercharged battery, indicated by slow engine cranking and battery electrolyte having low specific gravity.
- An overcharged battery, indicated by excessive water usage.

Prior to performing any electrical tests, visually inspect all charging system components and wiring for obvious discrepancies.

Visual Inspection

Inspect for clean and tight cable terminal connections at the battery posts, engine block, and starter motor solenoid. Inspect for corrosion and loose wire terminal connections at the alternator, starter motor solenoid, dash panel connector and the charging system indicator (i.e., ammeter or voltmeter). Inspect all wires for cracked or broken insulation. Ensure the alternator mounting screws are tight and that it is properly grounded. Inspect the electrolyte level in the battery and add water if necessary. Test the alternator drive belt tension.

Alternator Noise

Unusual alternator noise may be caused by any one or more of the following conditions:

- Loose mounting bolts.
- Loose or misaligned pulley.
- Worn or dirty bearings.
- Out-of-round or rough slip rings.
- Defective brushes.
- Shorted rectifier diode(s) (indicated by a high frequency whine).

Noise from the cooling system can also sound like alternator noise. Disconnect and plug the heater hoses to eliminate the possibility of the alternator bracket reproducing heater core noises.

Faulty Ammeter or Voltmeter Operation

Diagnosis of the instrumentation circuits is described in Chapter 1L—Power Plant Instrumentation.

Overcharged/Undercharged Battery

For battery undercharged-overcharged diagnosis, refer to DARS charts 1 and 2.

Battery Discharge Through Alternator

If the alternator is suspected of discharging the battery because of excessive current leakage, perform the following test procedure with a No. 158 bulb and bulb socket with attached jumper wires.

WARNING: *Failure to disconnect battery negative cable before disconnecting alternator output wire can result in injury.*

(1) Disconnect battery negative cable. Disconnect output wire (red) from alternator.

(2) Connect test bulb jumper wires in series with output wire and alternator output terminal. Connect battery negative cable. Bulb should not light. If bulb lights (even dimly), replace bridge rectifier.

(3) Disconnect battery negative cable and remove jumper wires.

(4) Disconnect wires from No. 1 and 2 terminals of alternator.

(5) Connect test bulb jumper wires in series with No. 1 terminal at alternator and the battery positive post. Connect battery negative cable. Bulb should not light. If bulb lights (even dimly), test diode trio. If diode trio is not defective, replace voltage regulator.

(6) Connect test bulb jumper wires in series with No. 2 terminal at alternator and battery positive post. Bulb should not light. If bulb lights (even dimly), replace voltage regulator.

TESTING—OFF-VEHICLE

Rotor (Field) Winding Short-to-Ground Test

To perform this test, remove the rotor and front housing assembly from the stator and rear housing assembly. Refer to Alternator Overhaul for procedure. Perform the test with an ohmmeter set for the x1000 ohm scale or with a 110-volt test lamp.

Touch one test lead probe to rotor shaft and touch other probe to one slip ring (fig. 1E-4). Repeat with the other slip ring. In each test, the ohmmeter should indicate infinite resistance (no pointer movement) or the test lamp should not light.

Test Results

If the ohmmeter indicates other than an infinite resistance or test lamp lights, a short to the rotor shaft exists. Inspect the soldered connections at the slip rings to ensure they are secure and not shorted to the rotor shaft, or that excess solder is not shorting rotor winding to the shaft. Replace the rotor if defective.

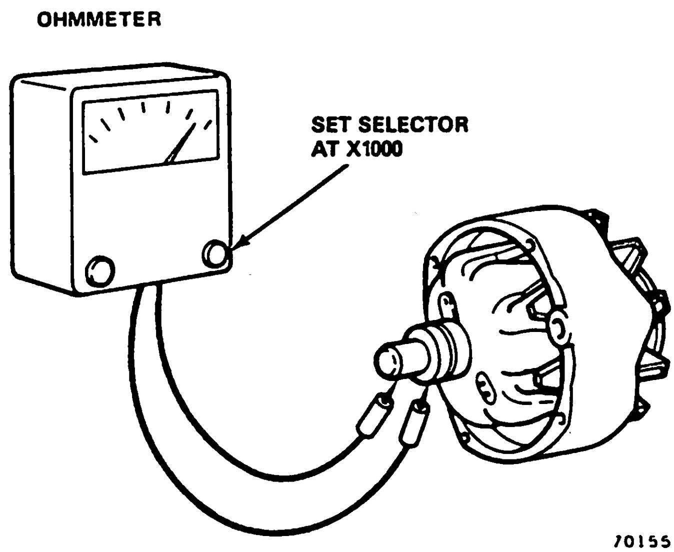

Fig. 1E-4 Rotor (Field) Winding Short-to-Ground Test

Rotor (Field) Winding Open Test

To perform this test, remove the rotor and front housing assembly from the stator and rear housing assembly. Refer to Alternator Overhaul for procedure.

Perform the test with an ohmmeter set for the x1 scale or with a 110-volt test lamp.

Touch one test lead probe to one slip ring and the other test lead probe to the other slip ring (fig. 1E-5). The ohmmeter should indicate 2.2 to 3.0 ohms or test lamp should light.

Test Results

If the ohmmeter indicates infinite resistance or the test lamp fails to light, the rotor winding is open.

Rotor (Field) Winding Internal Short Test

To perform this test, remove the front housing and rotor from the stator and rear housing assembly. Refer to Alternator Overhaul for procedure. This test is performed with a 12-volt battery and an ammeter.

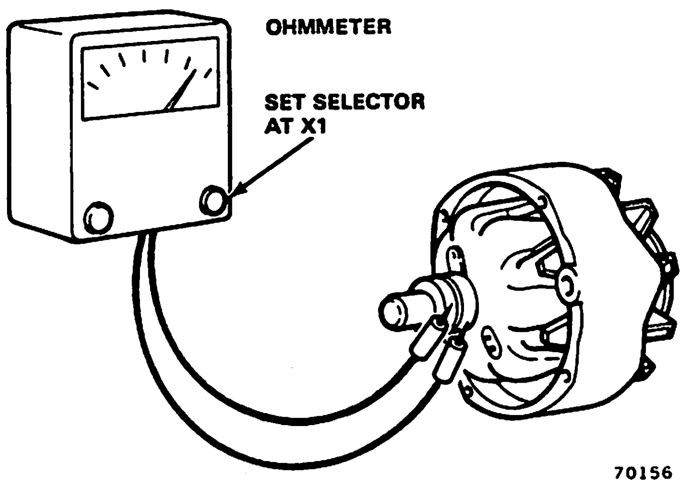

Fig. 1E-5 Rotor (Field) Winding Open Test

Connect battery and ammeter in series with the slip rings (fig. 1E-6). The field current at 12 volts applied at 80°F (27°C) should be between 4.0 and 5.0 amps.

Test Results

Current flow exceeding 5.0 amps indicates a shorted winding.

NOTE: *The winding resistance and ammeter indication will vary slightly with winding temperature changes. A current flow that is less than the specified value indicates excessive winding resistance. An alternate test method is to determine the resistance of the field winding by connecting an ohmmeter to the two slip rings. If the resistance is less than 2.2 ohms at 80°F (27°C), the winding is shorted. If the resistance is more than 3.0 ohms at 80°F (27°C), the winding has excessive resistance.*

Stator Windings Short-to-Ground Test

To perform this test, separate the rear housing and stator from the rotor and front housing assembly. Disconnect the stator windings from the rectifier terminals. Refer to Alternator Overhaul for procedure. The test is performed with an ohmmeter set for the x1000 scale or with a 110-volt test lamp.

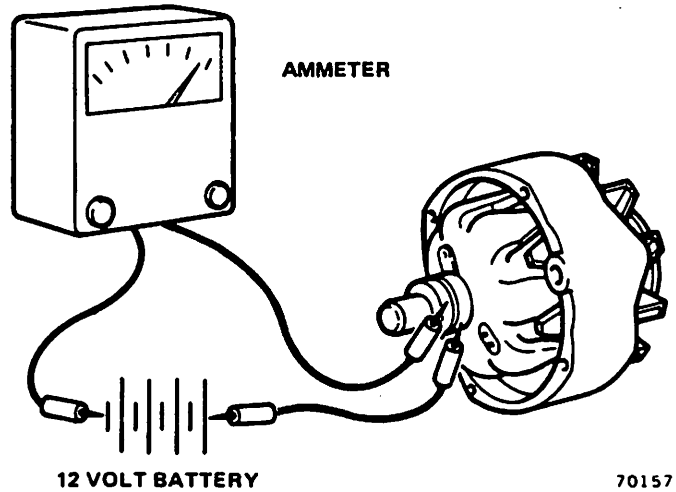

Fig. 1E-6 Rotor (Field) Winding Internal Short Test

Touch one test lead probe to the bare metal surface of the stator core and the other test lead probe to the end of one stator winding (1E-7). Because all three stator windings are soldered together, it is not necessary to test each winding. The ohmmeter should indicate infinite resistance (no pointer movement) or test lamp should not light.

Test Results

If the ohmmeter indicates other than an infinite resistance or test lamp lights, the stator windings are shorted to the core and must be replaced.

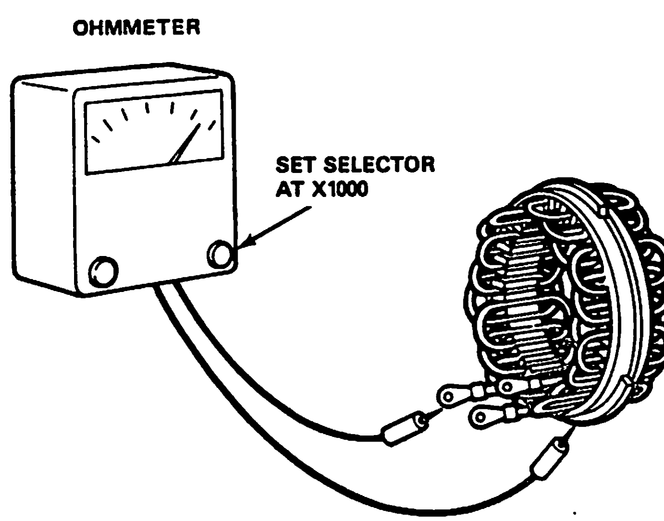

Fig. 1E-7 Stator Windings Short-to-Ground Test

DIAGNOSIS AND REPAIR SIMPLIFICATION (DARS) CHARTS

NOTE: Refer to Chapter A — General Information for details on how to use this DARS chart.

PROBLEM: BATTERY UNDERCHARGED

Chart 1

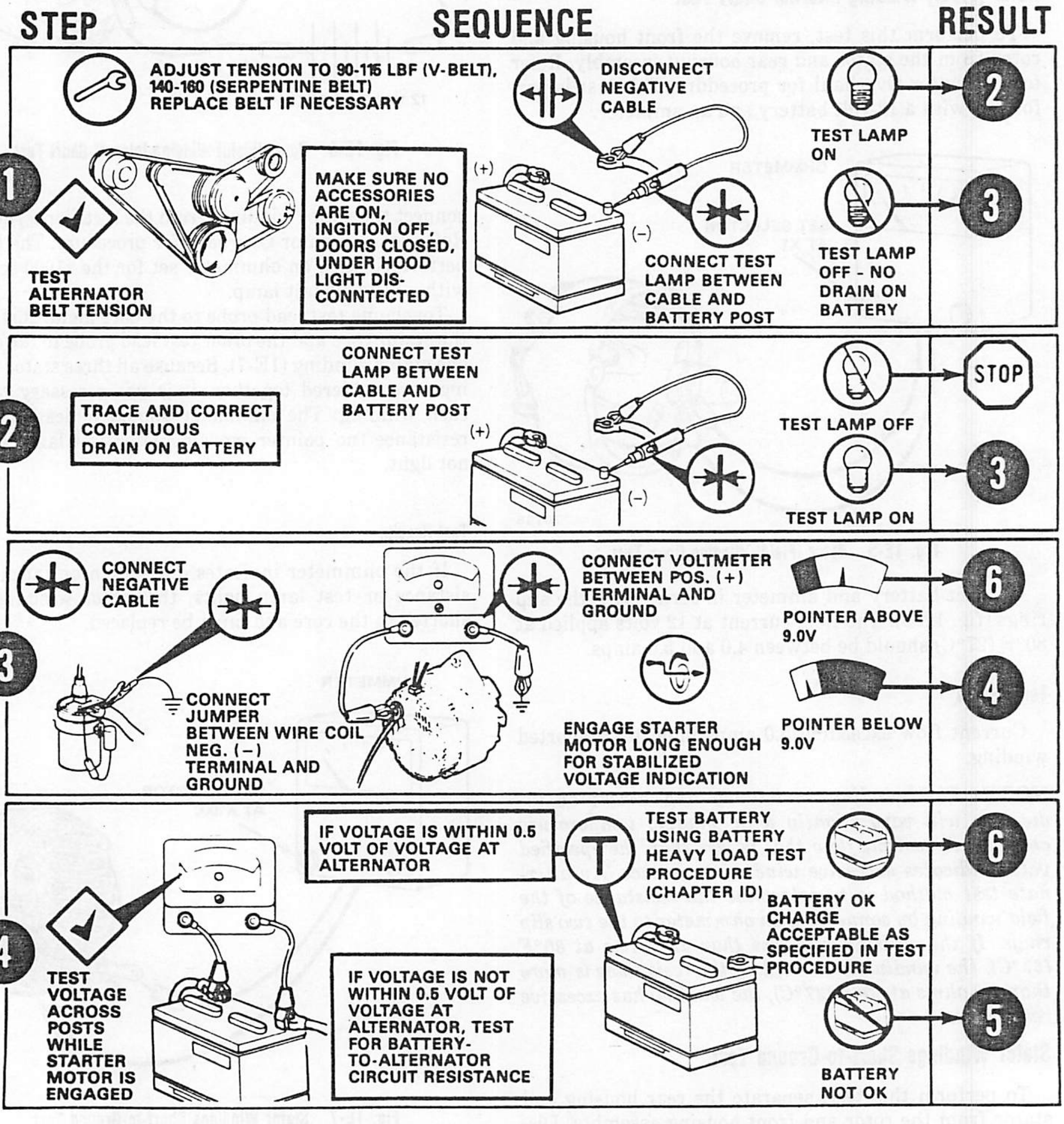

70137D

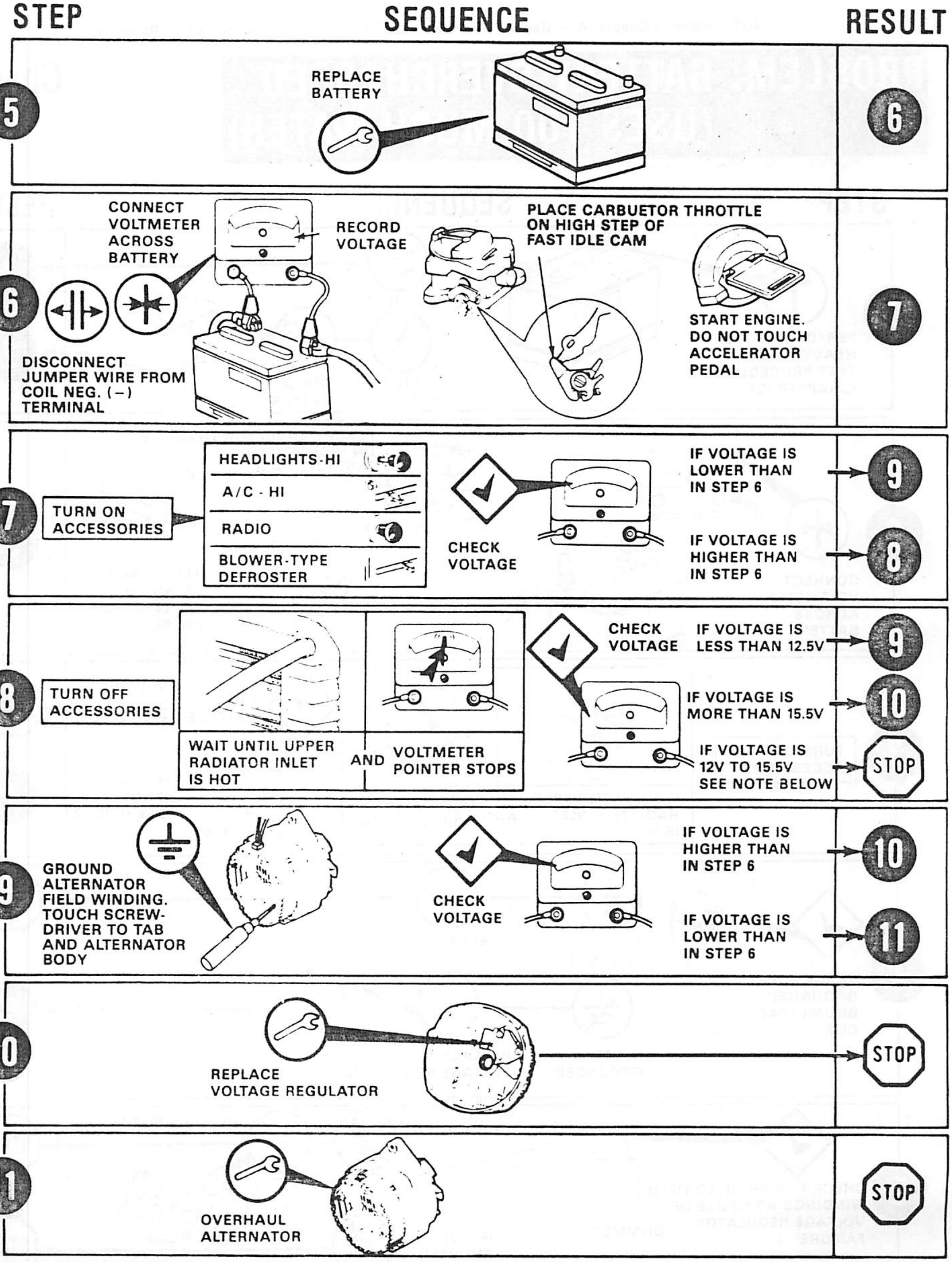

NOTE: IF NO FAULT HAS BEEN FOUND, EXCESSIVE IDLING AND SLOW OR SHORT DISTANCE DRIVING, WITH ALL ACCESSORIES ON, MAY HAVE CAUSED HEAVY DRAIN ON BATTERY – RESULTING IN UNDERCHARGED CONDITION.

70137A

NOTE: Refer to Chapter A – General Information for details on how to use this DARS chart.

PROBLEM: BATTERY OVERCHARGED (USES TOO MUCH WATER)

Chart 2

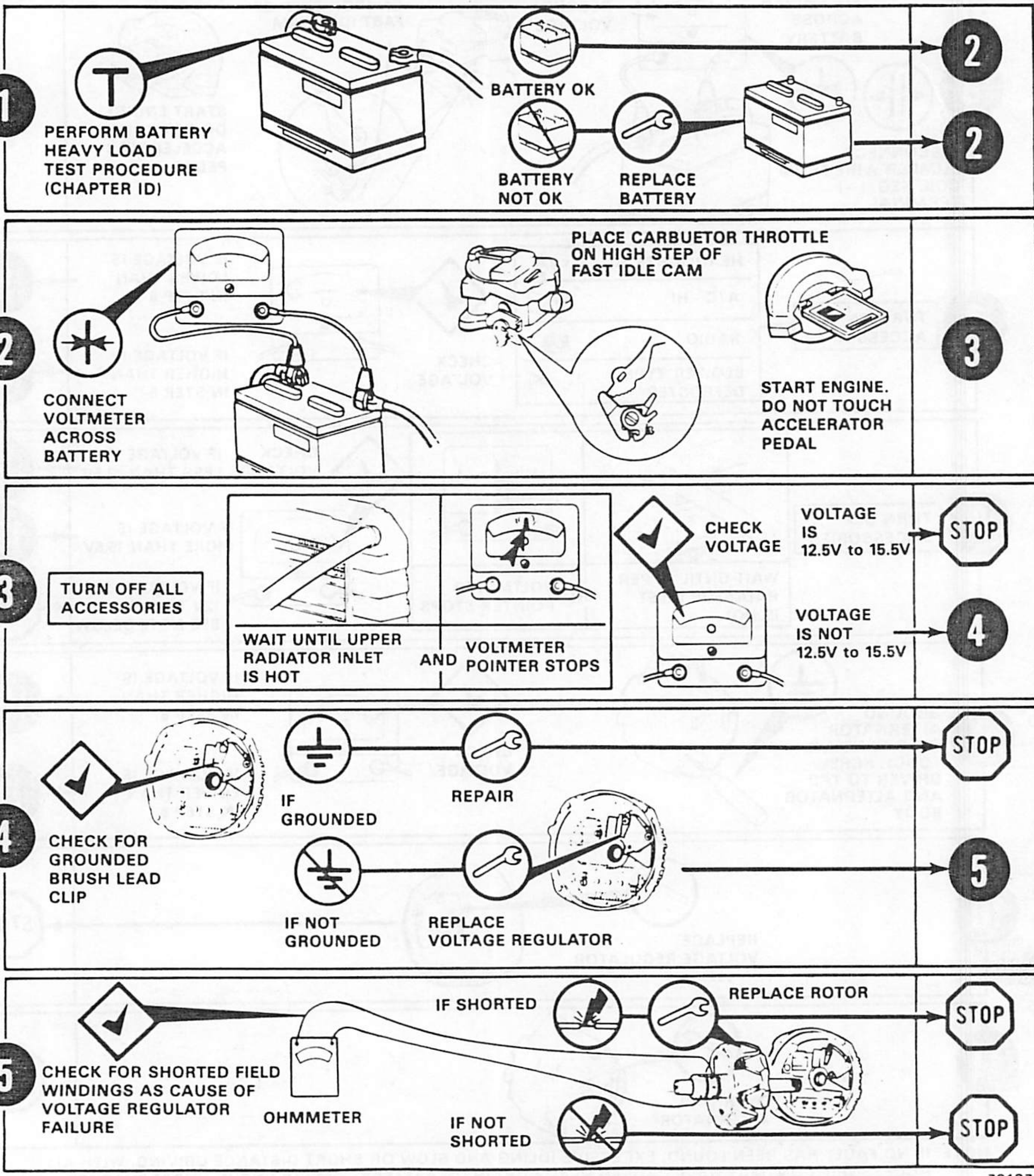

70137F

Stator Windings Continuity Test

NOTE: *The optional 70 and 85 amp alternators (Delco 15-SI) have delta wound stator windings that cannot be tested for open windings with an ohmmeter or test lamp. However, if the results of all other tests are normal and the alternator fails to supply the rated output, open stator windings are probable.*

To perform this test, remove the stator and rear housing assembly from the rotor and front housing assembly. Refer to Alternator Overhaul for procedure. An ohmmeter set for the x1 scale is used to perform the test.

Touch ohmmeter lead probes to any two stator windings and note the resistance (fig. 1E-8). Test all the stator windings in this manner. Equal indications should be obtained for each pair of windings tested.

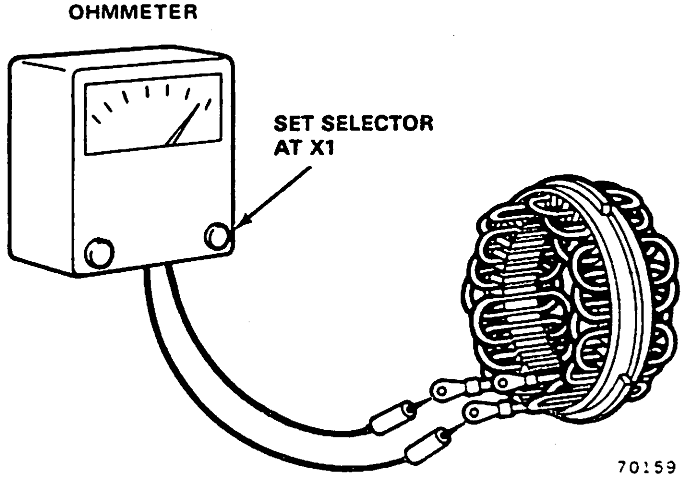

Fig. 1E-8 Stator Windings Continuity Test

Test Results

An infinite resistance (no pointer movement) indicates an open winding. Inspect the neutral junction splice for a poor solder connection. Resolder the connection even if it appears to be good. Retest the continuity. If an open still exists, replace the stator windings.

An indication of more than 1 ohm indicates a possible cold solder joint. Inspect the neutral junction splice and resolder if necessary.

Stator Internal Short Circuit Test

An internal short (e.g., between adjacent windings) is difficult to locate without laboratory test equipment. If all other electrical checks are normal and the alternator fails to supply the rated output, shorted stator windings are probable.

Diode Trio Short Circuit Test

The diode trio is tested in two ways: when installed in the rear housing and when removed from the rear housing.

CAUTION: *Do not use high voltage, such as a 110-volt test lamp, to test the diode trio.*

Test with Diode Trio Installed

(1) Before removing diode trio, connect ohmmeter, with lowest range scale selected, from brush lead clip to rear housing (fig. 1E-9) and note resistance.

(2) Reverse test lead probe connections. If both indications are zero, inspect for grounded brush lead clip caused by absence of insulating washer, absence of insulating sleeve over screw, or damaged insulation (fig. 1E-14).

(3) Remove screws to inspect washers and sleeves. If screw assembly is correct and both ohmmeter observations are same, replace voltage regulator.

Test with Diode Trio Removed

(1) Remove diode trio from rear housing assembly.

(2) Connect ohmmeter having 1-1/2 volt cell to brush terminal and one stator winding terminal (fig. 1E-10). Observe resistance on lowest range scale.

(3) Reverse probes at same two terminals.

(4) Replace diode trio if both resistances are identical. Good diode trio will give one high and one low resistance.

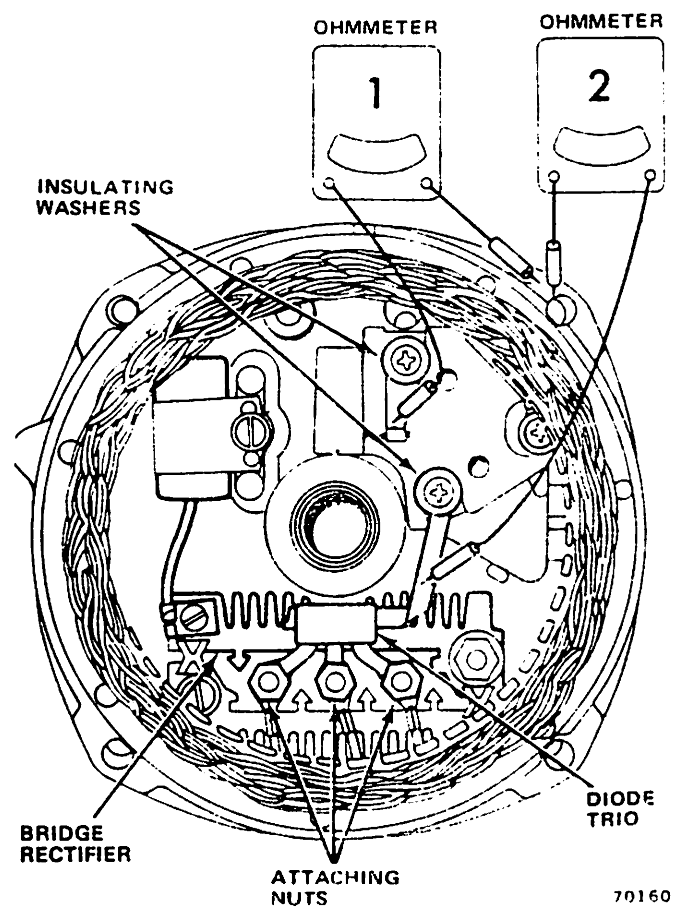

Fig. 1E-9 Rear Housing Assembly

(5) Repeat steps (2), (3), and (4) for each stator winding terminal of diode trio.

(6) Connect ohmmeter to any two stator winding terminals. If resistance is zero, open diode is indicated. Replace diode trio. Repeat test for each combination of stator winding terminals.

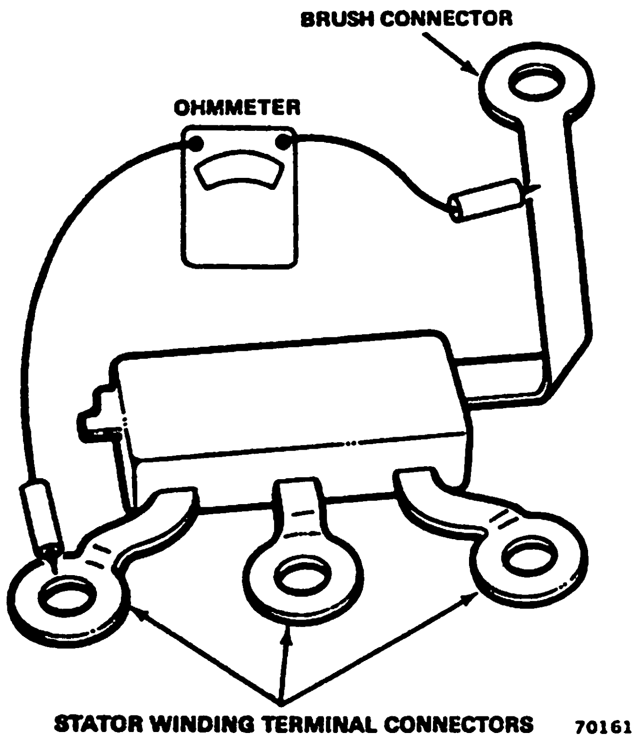

Fig. 1E-10 Testing Diode Trio

Bridge Rectifier Test

The bridge rectifier contains six diodes. If one diode is defective, the entire bridge rectifier must be replaced.

CAUTION: *Do not use high voltage, such as a 110-volt test lamp, to test bridge rectifier.*

(1) Connect ohmmeter to grounded heat sink and any one of three terminals (fig. 1E-11). Note resistance.

(2) Reverse ohmmeter test probe connections to grounded heat sink and same terminal. Note resistance.

(3) Repeat steps (1) and (2) for remaining two terminals.

(4) In same manner as described above, test between insulated heat sink and each of three terminals.

Test Results

Each combination of terminal and heat sink tested should have one high and one low resistance. Replace bridge rectifier if any one pair of resistance indications is the same.

ALTERNATOR REPLACEMENT

Removal

NOTE: *All bolt and screw threads are in metric dimensions.*

WARNING: *Failure to disconnect the battery negative cable before disconnecting the red wire from the alternator can result in injury.*

(1) Disconnect battery negative cable.

(2) Disconnect two-terminal plug and red wire at back of alternator.

(3) Remove mounting and adjusting bolts, washers and nuts.

(4) Remove alternator drive belt from alternator pulley and remove alternator from mounting bracket.

(5) Remove pulley and fan from alternator.

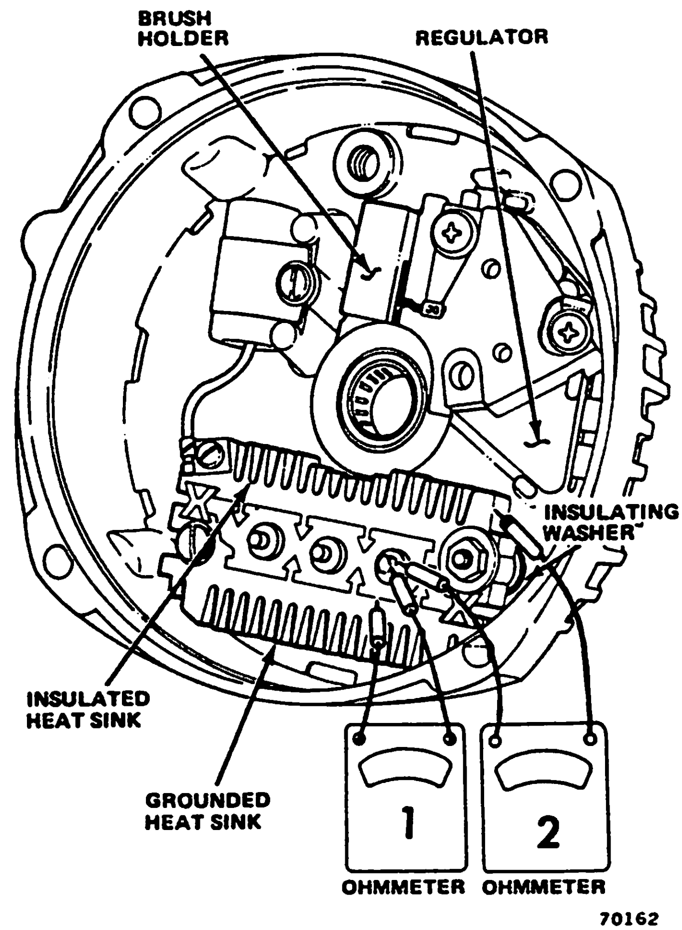

Fig. 1E-11 Testing Bridge Rectifier

Installation

(1) Install original pulley and fan on replacement alternator.

(2) Attach alternator to mounting bracket with washers and bolts. Tighten bolts finger-tight only.

(3) Install alternator drive belt.

(4) Tighten belt to specified tension. Refer to Drive Belt Adjustment for correct belt tightening procedure.

(5) Tighten bolt at sliding slot bracket with 20 foot-pounds (27 N•m) torque. Tighten remaining bolts with 30 foot-pounds (41 N•m) torque.

(6) Install two-terminal plug and red wire on alternator.

(7) Connect battery negative cable.

ALTERNATOR OVERHAUL

Disassembly

CAUTION: *As the rotor and drive end housing assembly is separated from the slip ring housing assembly the brushes will spring out onto the rotor shaft and come in contact with lubricant. Immediately clean brushes that contact shaft to avoid contamination by lubricant, otherwise, they will have to be replaced.*

NOTE: *All bolt and screw threads are in metric dimensions.*

(1) Scribe across front housing, stator frame and rear housing for assembly reference.

(2) Remove four through-bolts that connect rear housing to front housing (fig. 1E-12).

(3) Separate front housing and rotor assembly from rear housing and stator assembly by prying housings apart with screwdriver.

NOTE: *After disassembly, cover the rear housing bearing with tape to prevent entry of dirt and other foreign material. Also, cover the rotor shaft on the slip ring end with tape. Use pressure-sensitive tape and not friction tape, which would leave a gummy deposit on the shaft. If the brushes are to be reused, clean with a soft, dry cloth.*

CAUTION: *Avoid excessive tightening of the rotor in the vise to prevent rotor distortion.*

(4) Place rotor in vise and tighten vise only enough to permit removal of pulley nut.

(5) Alternate pulley nut removal procedure requires use of Allen wrench to prevent rotor from turning while loosening nut with wrench (fig. 1E-13).

(6) Remove pulley nut, lockwasher, pulley, fan, and collar.

(7) Separate front end housing from rotor shaft.

(8) Remove three stator winding attaching nuts and washers and remove stator windings from bridge rectifier terminals.

(9) Separate stator from rear housing.

(10) Remove diode trio strap terminal attaching screw from brush holder and remove diode trio.

(11) Remove capacitor holddown screw.

(12) Disconnect capacitor wire terminal from bridge rectifier. Remove capacitor.

(13) Remove bridge rectifier attaching screws and battery wire terminal screw.

(14) Remove bridge rectifier. Note insulator located between heat sink and rear housing.

(15) Remove two brush holder screws (fig. 1E-14). Note position of all insulator washers to facilitate correct assembly.

(16) Remove brush holder and brushes. Carefully note position of parts for assembly.

(17) Remove voltage regulator.

(18) Remove front bearing retainer plate screws, retainer plate and inner collar.

(19) Press out front bearing and slinger from front housing with suitable tube or collar.

NOTE: *If the bearing is in satisfactory condition, it may be reused.*

(20) Press out rear bearing using tube or collar that fits inside rear housing. Press from inside of housing toward outside.

NOTE: *Replace the bearing in the rear housing if its lubricant supply is exhausted. Do not attempt to lubricate and reuse a dry bearing.*

Cleaning and Inspection

CAUTION: *Do not clean rotor with a degreasing solvent.*

(1) Clean rotor poles by brushing with oleum spirits, or equivalent.

(2) Inspect slip rings for dirt and roughness. Clean with solvent. If necessary, clean and finish slip rings with commutator paper, or 400 grit polishing cloth. **Do not use metal-oxide paper.** Spin rotor in lathe or other support while holding abrasive against rings.

NOTE: *When using an abrasive, support the rotor while spinning to clean slip rings evenly. Cleaning slip rings without support may result in flat spots on slip rings. This will cause brush noise and premature brush wear.*

(3) True rough or out-of-round slip rings in lathe to 0.002 inch (0.051 mm) maximum indicator reading. Remove only enough material to make rings smooth and round. Finish with commutator paper, or 400 grit polishing cloth, and blow away all dust.

CAUTION: *Do not clean stator in degreasing solvent.*

(4) Clean stator by brushing with oleum spirits, or equivalent.

(5) Inspect brush springs for evidence of damage or corrosion. Replace springs if there is any doubt about their condition.

(6) Inspect brushes for wear or contamination. If brushes are to be reused, clean with soft, dry cloth until completely free of lubricant.

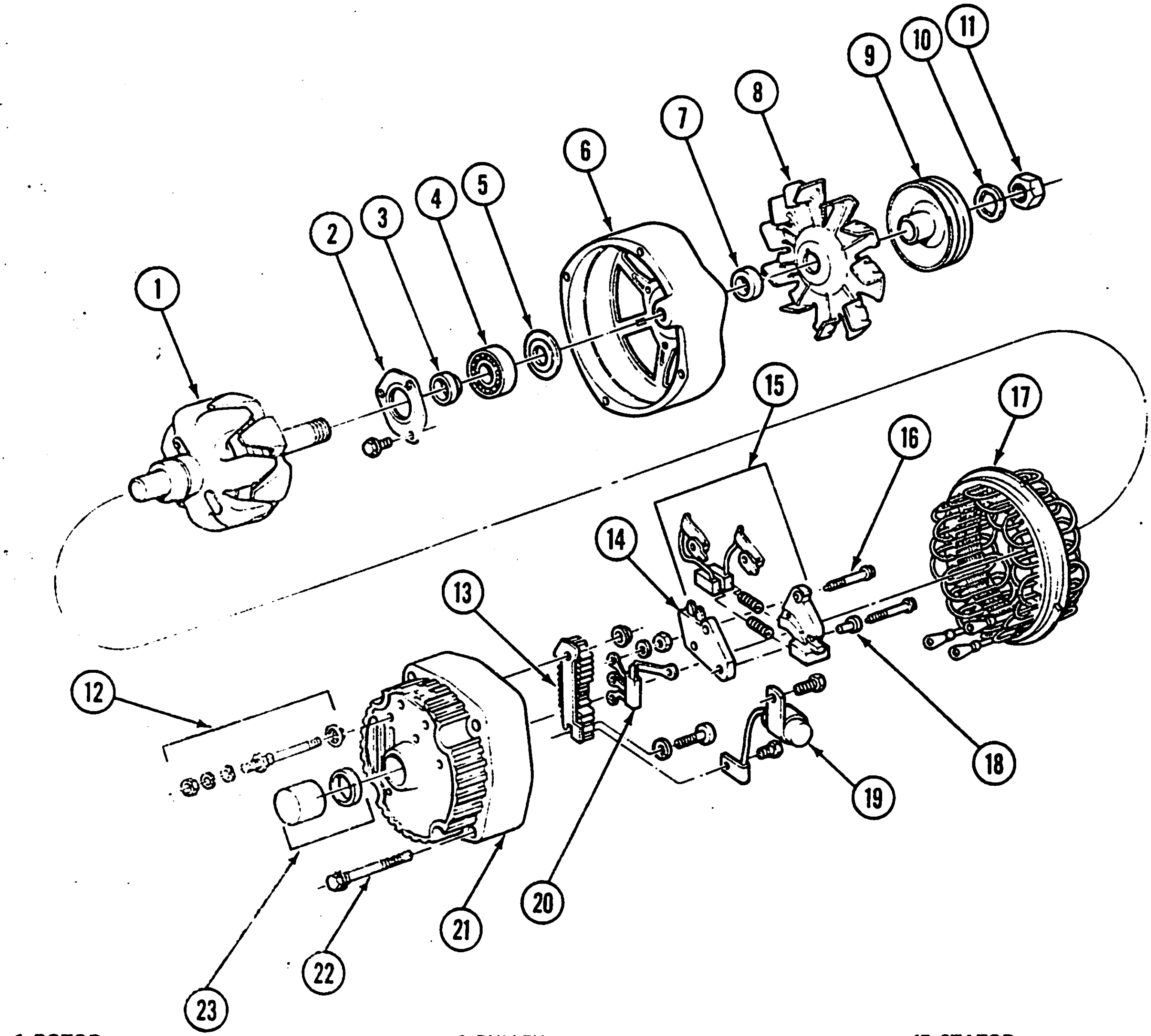

1. ROTOR
2. FRONT BEARING RETAINER PLATE
3. COLLAR (INNER)
4. BEARING
5. SLINGER
6. FRONT HOUSING
7. COLLAR (OUTER)
8. FAN
9. PULLEY
10. LOCKWASHER
11. PULLEY NUT
12. TERMINAL ASSEMBLY
13. BRIDGE RECTIFIER
14. REGULATOR
15. BRUSH ASSEMBLY
16. SCREW
17. STATOR
18. INSULATING WASHER
19. CAPACITOR
20. DIODE TRIO
21. REAR HOUSING
22. THROUGH-BOLT
23. BEARING AND SEAL ASSEMBLY

Fig. 1E-12 Alternator Components 43105

(7) Inspect condition of brush holder screw insulating washers for broken or cracked insulation (fig. 1E-14).

Assembly

CAUTION: *Overfilling may cause the bearing to overheat.*

(1) Fill cavity between retainer plate and bearing one-quarter full with Delco lubricant 1948791, or equivalent.

(2) Assemble bearing and slinger into front housing (fig. 1E-15).

Fig. 1E-15 Front Housing Bearing Assembly 43111

(3) Press bearing in with suitable tube or collar that fits over outer bearing race.

NOTE: *Install a replacement retainer plate if the felt seal in the retainer plate has hardened.*

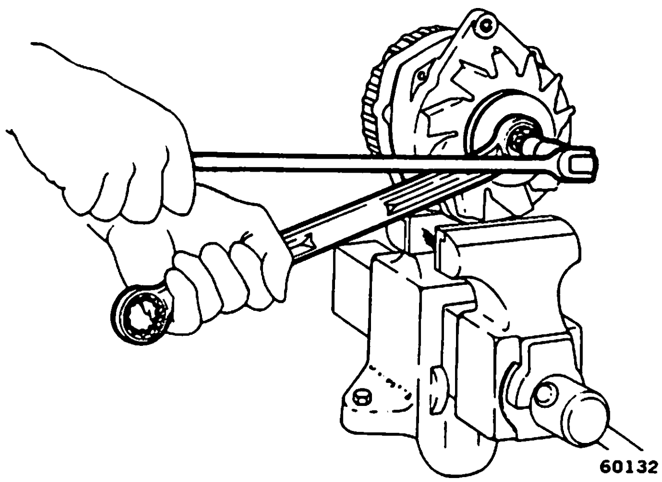

Fig. 1E-13 Removing Pulley Nut

(4) Install inner collars retainer plate and screws.

(5) Position housing, outer collar, fan, pulley and washer on rotor shaft and install pulley nut.

(6) Place rotor in vise. Tighten vise only enough to permit tightening of pulley nut. Tighten nut with 50 foot-pounds (68 N•m) torque.

(7) Alternate method of tightening pulley nut requires use of Allen wrench to prevent rotor from turning while tightening nut with wrench (fig. 1E-16).

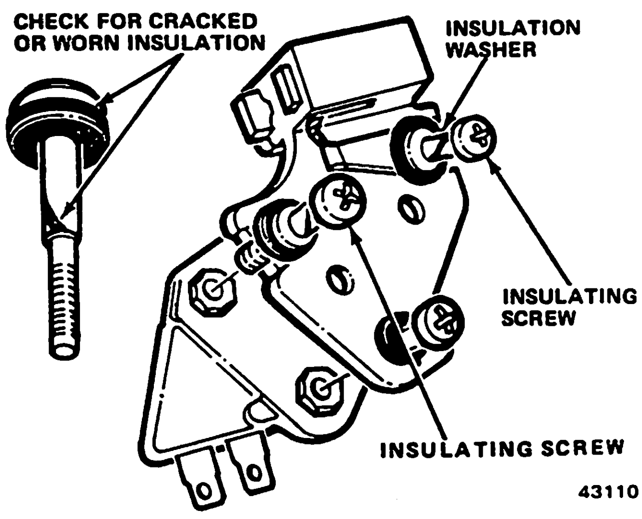

Fig. 1E-14 Brush Holder Assembly

(8) If rear bearing was removed, support inside of rear housing with hollow cylinder.

CAUTION: *Use extreme care to avoid misalignment or placing undue stress on bearing.*

(9) Place flat plate over bearing and press bearing into housing from outside until bearing is flush with housing.

(10) Install replacement bearing seal. Lightly oil lip to facilitate installation of rotor shaft. Press seal in with lip away from bearing.

(11) Install springs and brushes into brush holder. Brushes should slide in and out of brush holder without binding.

NOTE: *Should any of the brush holder assembly parts require replacement, it is necessary to replace the entire brush holder assembly. Individual parts are not serviced.*

(12) Insert straight wooden or plastic toothpick (to prevent scratching brushes) into hole at bottom of holder to retain brushes.

(13) Install voltage regulator.

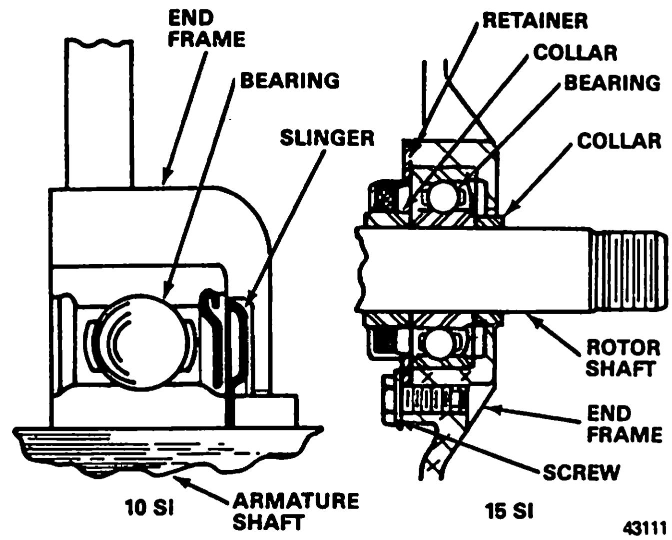

Fig. 1E-15 Front Housing Bearing Assembly

(14) Attach brush holder to rear housing. Carefully note position of insulating washers (fig. 1E-14). Allow toothpick to protrude through hole in rear housing.

(15) Install diode trio terminal strap attaching screw and insulating washer.

(16) Tighten remaining two brush holder screws securely.

(17) Position bridge rectifier on rear housing with insulator inserted between insulated heat sink and rear housing.

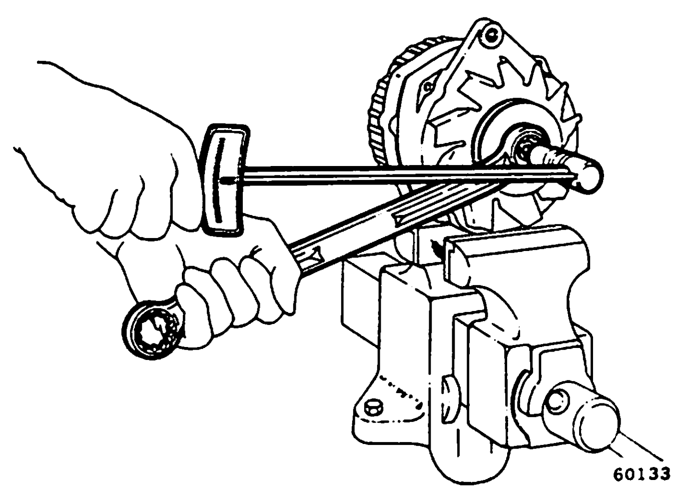

Fig. 1E-16 Tightening Pulley Nut

(18) Install bridge rectifier attaching screw and battery wire terminal screw.

(19) Connect capacitor wire terminal to bridge rectifier and tighten screw securely.

(20) Install capacitor holddown screw.

(21) Position diode trio strap terminals on bridge rectifier terminal studs.

(22) Install stator in rear housing.

(23) Attach stator windings to bridge rectifier terminal studs. Secure with washers and nuts.

(24) Before joining rotor and front housing assembly with stator and rear housing assembly, remove protective tape and ensure that bearing surface of shaft is clean.

(25) Join front housing and rear housing together with scribe mark aligned.

(26) Install four through-bolts and tighten securely.

(27) Remove toothpick from brush holder assembly. Rotate rotor.

DRIVE BELT ADJUSTMENT

If belt has been in service for some time, inspect for general condition of the belt before attempting an adjustment. Replace the belt if it is severely cracked or oil-soaked.

(1) Install Belt Strand Tension Gauge J-23600 on longest accessible span of belt, midway between pulleys (fig. 1E-17).

NOTE: *Eight-cylinder engines with air conditioning use dual drive belts. When testing belt tension, attach Tension Gauge to one belt only. Testing both belts simultaneously will give an inaccurate tension. When using the gauge on a notched belt, position the middle finger of the gauge in the notched cavity of the belt.*

(2) Loosen alternator pivot bolt and adjusting strap bolt.

CAUTION: *Do not pry against the rear housing because the aluminum casting will be damaged.*

(3) Adjust alternator by prying against **front housing**. Use alternator bracket as pivot point (fig. 1E-18).

(4) Rotate alternator on pivot bolt until specified belt tension is obtained. Refer to Specifications.

(5) Tighten adjusting strap bolt and pivot bolt while maintaining specified tension.

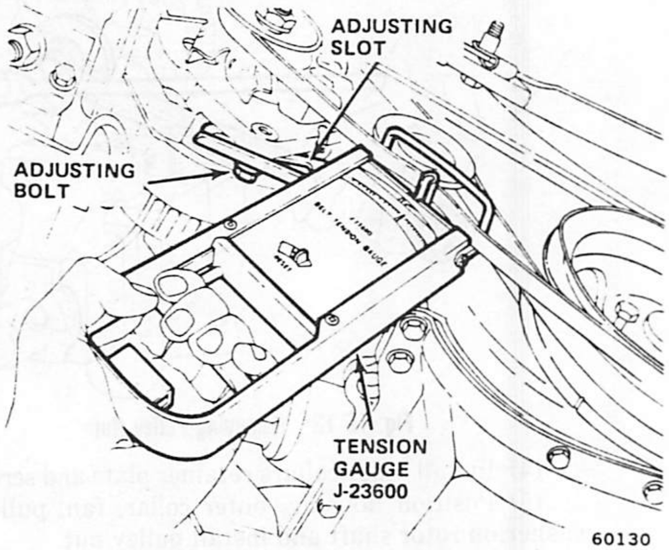

Fig. 1E-17 Testing Belt Tension—Typical

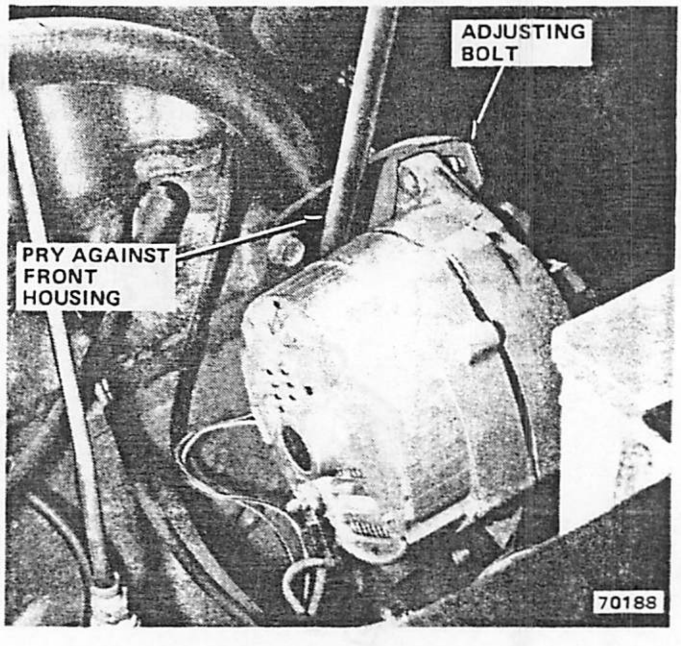

Fig. 1E-18 Adjusting Belt Tension—Typical

SPECIFICATIONS

Delco Charging System Specifications

Alternator

Manufacturer . . . . Delco
Standard (4, 6 and 8 cyl.) . . . . 42 amp
Optional (4, 6 and 8 cyl.) . . . . 63 amp
Optional (6 and 8 cyl.) . . . . 70 amp
Optional (Police) . . . . 85 amp
Field Current . . . . 4.0 to 5.0 amps at 80° (27°C)
Rotation (Viewing Drive End) . . . . Clockwise
Pulley Size . . . . 2.43 in. (6.18 cm)
Belt Tension
- New Belt (V-Belt) . . . . Set to 125-155 pounds-force (559-689 newtons)
- Used Belt (V-Belt) . . Recheck 90-115 pounds-force (400-512 newtons)
- New Belt (Serpentine) . . . . 180-200 pounds-force (800-890 newtons)
- Used Belt (Serpentine) . . . . . 140-160 pounds-force (623-712 newtons)

Regulator

Manufacturer . . . . Delco
Model 1116387
Type . . . . Solid State
Adjustment . . . . None

70138B

Output Voltage Specifications

Ambient Temperature in Degrees Fahrenheit (C)	Acceptable Voltage Range
0-50 (−18 to 10)	14.3-15.3
50-100 (10 to 38)	13.9-14.9
100-150 (38 to 66)	13.4-14.4
150-200 (66to 93)	13.0-14.1

80807

Torque Specifications

Service Set-To Torques should be used when assembling components. Service In-Use Recheck Torques should be used for checking a pre-tightened item.

	USA (ft-lbs)		Metric (N·m)	
	Service Set-To Torque	Service In-Use Recheck Torque	Service Set-To Torque	Service In-Use Recheck Torque
Alternator Adjusting Bolt	18	15-20	24	20-27
Alternator Mounting Strap Bolt	28	23-30	38	31-41
Alternator Pivot Bolt or Nut	28	20-35	38	27-47
Pulley Nut	50	45-55	68	58-78

All Torque values given in newton-meters and foot-pounds with dry fits unless otherwise specified.

70139

Tools

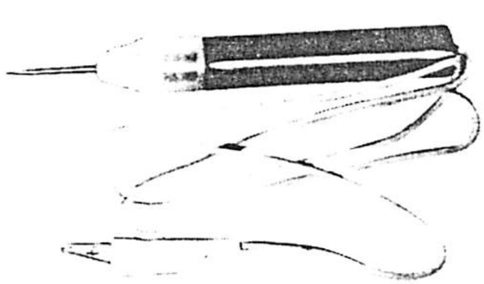

J-21008
CONTINUITY
LIGHT

70271

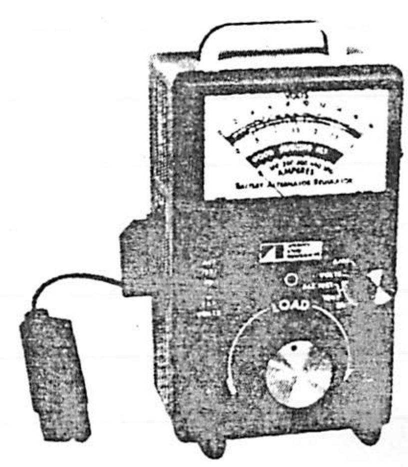

AMA 21-317
CIRCUIT TESTER

NOTES

STARTING SYSTEMS 1F

SECTION INDEX

FOUR-CYLINDER ENGINE STARTING SYSTEM

GENERAL

The four-cylinder engine starter motor system consists of a 5MT starter motor, relay, ignition/start switch, battery and related electrical wiring. In addition, vehicles equipped with an automatic transmission have a neutral safety switch. These components are connected electrically as illustrated in figure 1F-1.

STARTER MOTOR OPERATION

The 5MT starter motor is shown in figure 1F-2. The field windings are permanently mounted in the motor frame. Both the shift lever mechanism and the solenoid plunger are enclosed in the drive housing to protect them from exposure to dirt, icing conditions and water splash.

In the basic circuit illustrated in figure 1F-1, the solenoid is energized when the ignition/starting key switch is closed. The resulting plunger and shift lever movement causes the pinion gear to engage the engine flywheel (or drive plate) ring gear and the solenoid main contacts to close, and engine cranking is initiated. When the engine starts, the pinion gear overrun clutch protects the armature from excessive speed until the switch is opened, at which time the return spring disengages the pinion gear. To prevent excessive overrun, the key switch should be released immediately after the engine starts.

Neutral Safety Switch

The Neutral Safety Switch is a three-connector plunger switch mounted on the automatic transmission case. The outside terminals connect to the back-up lamps, while the center terminal provides a ground path for the starter motor relay circuit. Ground is provided only when the transmission is in Park or Neutral position.

NOTE: *Automobiles equipped with an automatic transmission have a neutral safety switch that provides a ground for the starter motor relay (G-terminal) when the automatic transmission selector is in either the NEUTRAL or PARK position. When the relay is energized, battery voltage is applied to the starter motor solenoid pull-in and hold-in coil windings. If equipped with a manual transmission, a jumper wire attached to the back-up lamp connector provides a ground for the starter motor relay (G-terminal).*

SERVICE DIAGNOSIS

Before removing any unit from the starter motor system for repair, perform the following inspections.

(1) **Battery:** To determine condition of battery, follow testing procedure outlined in Chapter 1D—Batteries.

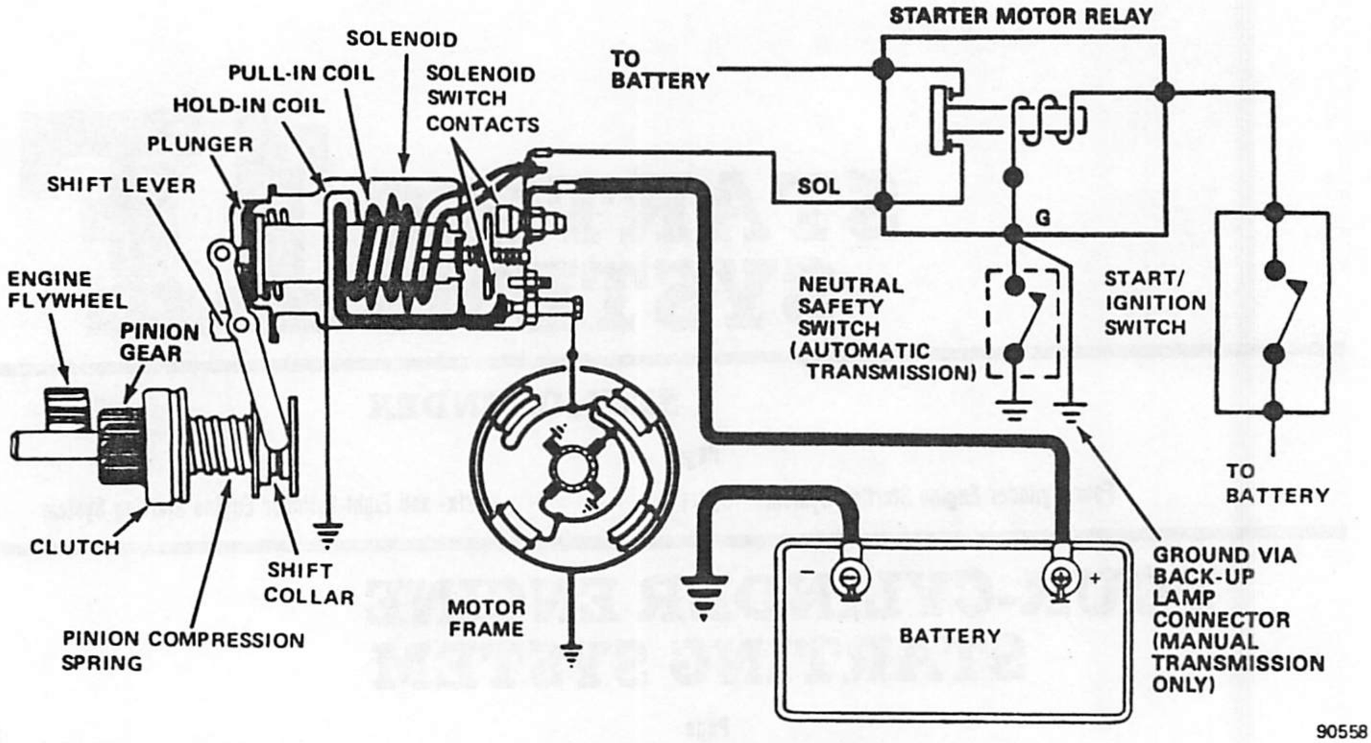

Fig. 1F-1 Four-Cylinder Engine Starter Motor System

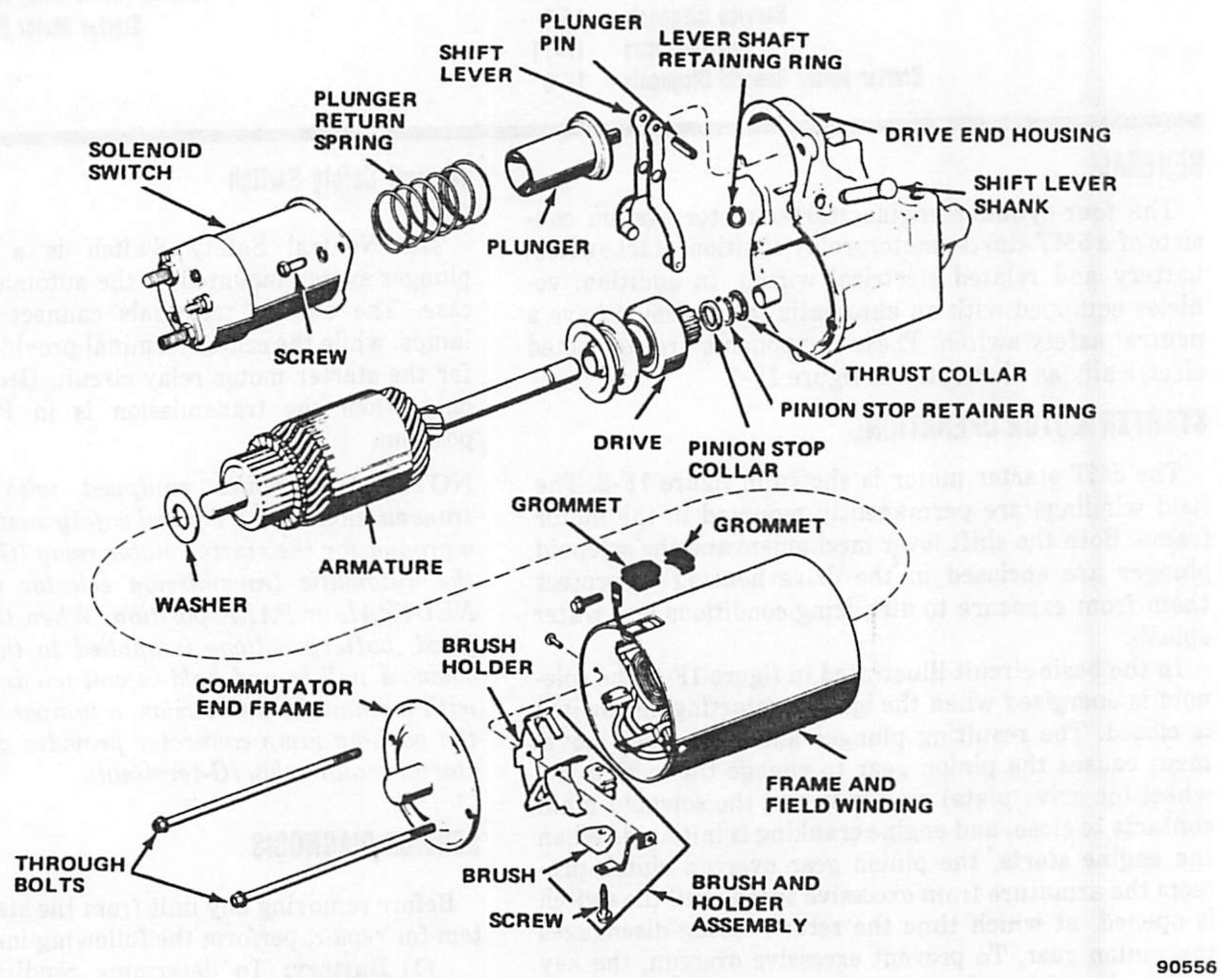

Fig. 1F-2 5MT Starter Motor—Exploded View

(2) **Wiring:** Inspect wiring for damage. Inspect all connections at starter motor solenoid, relay (if equipped), neutral safety switch (if equipped), ignition/start switch, and battery, including all ground connections. Clean and tighten all connections as required.

(3) **Solenoid and Ignition/Start Switch:** Inspect solenoid and switch to determine their condition. Also, if equipped with automatic transmission, inspect condition of starter motor relay.

(4) **Starter Motor Noise:** To correct starter motor noise during starting, use the following procedure:

(a) Refer to Starter Motor Noise Diagnosis Chart to determine problem.

(b) If complaint is similar to first two conditions, correction can be achieved by proper "shimming" as follows.

1. Remove flywheel or drive plate ring gear inspection plate.

2. Inspect flywheel or drive plate and ring gear for damage; i.e., warp, unusual wear and excessive runout. Replace flywheel, ring gear or drive plate as necessary.

3. Disconnect battery negative cable (to prevent inadvertant cranking of engine).

NOTE: *Two shim thicknesses are available. One is 0.015 inch (0.381 mm) and the other 0.045 inch (1.143 mm). If shims are not available, they can be fabricated from plain washers or other suitable material.*

4. If complaint is similar to first condition, starter motor must be moved toward flywheel/drive plate. This can be accomplished by shimming (fig. 1F-3) only outboard starter motor mounting pad. (This is generally condition that causes broken flywheel ring gear teeth or starter motor housings).

5. If complaint is similar to second condition, starter motor must be moved away from flywheel/drive plate. This is accomplished by installing shim(s) (fig. 1F-3). More than one shim may be required.

(c) Conditions 3 and 4 may require starter motor replacement or repair in some instances.

(5) **Starter Motor:** If battery, wiring, switches, solenoid and relay (if equipped) are in satisfactory condition, and engine is known to be functioning properly, remove starter motor and follow test procedures outlined below.

CAUTION: *Never operate the starter motor more than for a 30-second duration without pausing to allow it to cool for at least two minutes. Overheating, caused by excessive cranking, will seriously damage the starter motor.*

Starter Motor Test

A general diagnosis is described at the end of this section. Once a problem has been traced to the starter motor, proceed to the test procedure outlined below.

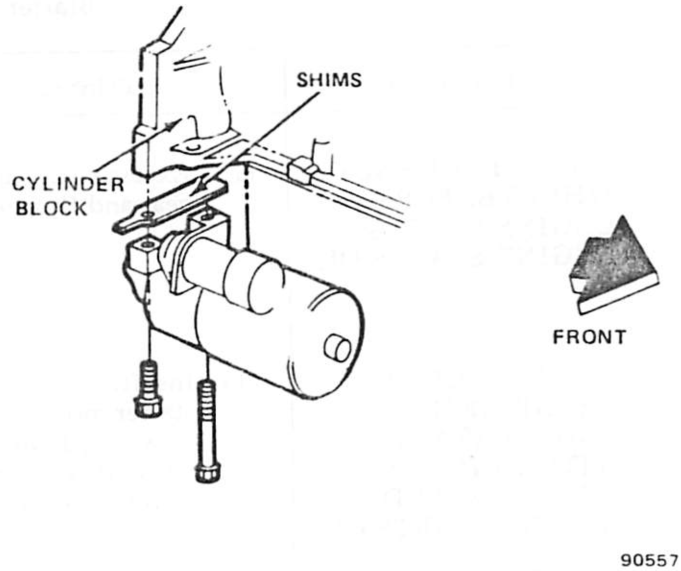

Fig. 1F-3 Starter Motor Shimming and Mounting

Test Procedure

With the starter motor removed from the engine, the pinion gear should be tested for freedom of operation by turning it on the screw shaft. The armature should be tested for freedom of rotation by prying the pinion gear with a screwdriver to engage it with the shaft. Tight bearings, a bent armature shaft, or a bent frame will cause the armature to not rotate freely. If the armature does not rotate freely, the motor should be disassembled immediately. However, if the armature does rotate freely, the motor should be given a no-load test before disassembly.

No-Load Test

Connect a voltmeter (fig. 1F-4) between the motor terminal and the motor frame, and use a tachometer to measure armature speed. Connect the motor and an ammeter in series with a fully charged battery of the specified voltage, and a switch (in the open position) from the solenoid battery terminal to the solenoid switch terminal. Close the switch and compare the rpm, current, and voltage with those listed in the specifications. It is not necessary to obtain the exact voltage specified because an accurate interpretation can be made by recognizing that if the voltage is slightly higher, the rpm will be proportionately higher, with the current remaining the same. However, if the exact voltage is desired, a carbon pile rheostat connected across the battery can be used to reduce the voltage to the specified value. The specified current flow includes the solenoid current flow. Make disconnections only with the switch open. Interpret the test results as follows:

(1) Rated current flow and specified no-load speed indicate normal condition of starter motor.

Starter Motor Noise Diagnosis

CONDITION	POSSIBLE CAUSE	CORRECTION
HIGH FREQUENCY WHINE BEFORE ENGINE STARTS; ENGINE STARTS OK.	(1) Excessive distance between pinion gear and flywheel/drive plate gear.	(1) Shim starter motor toward flywheel /drive plate.
HIGH FREQUENCY WHINE AFTER ENGINE STARTS WITH IGNITION KEY RELEASED. ENGINE STARTS OK.	(1) Insufficient distance between starter motor pinion gear and flywheel/drive plate gear. Flywheel/drive plate runout can cause noise to be intermittent.	(1) Shim starter motor away from flywheel/drive plate. Inspect flywheel/drive plate for damage; bent, unusual wear, and excessive runout. Replace flywheel/drive plate as necessary.
A LOUD "WHOOP" AFTER ENGINE STARTS WHILE STARTER MOTOR IS ENGAGED.	(1) Most probable cause is defective overrunning clutch. Clutch replacement normally corrects this condition.	(1) Replace overrunning clutch or drive assembly.
A "RUMBLE", "GROWL" OR "KNOCK" AS STARTER MOTOR COASTS TO STOP AFTER ENGINE STARTS.	(1) Most probable cause is bent or unbalanced starter motor armature. Armature replacement normally corrects this condition.	(1) Replace starter motor armature.

90804

(2) Low no-load speed and high current flow indicate:

(a) Too much friction—tight, dirty, or worn bearings, bent armature shaft or bent frame causing armature to drag.

(b) Shorted armature winding. This can be further determined on growler after disassembly.

(c) Grounded armature or field windings. Inspect further after disassembly.

(3) No armature rotation and high current flow indicate:

(a) Terminal or field windings shorted to ground.

(b) Seized bearings (this should have been determined by turning armature by hand).

(4) No armature rotation and no current flow indicate:

(a) Open field winding circuit. This can be determined after disassembly by inspecting internal connections and testing circuit with test lamp.

(b) Open armature windings. Inspect commutator for badly burned bars after disassembly.

(c) Broken brush springs, worn brushes, protruding insulation between commutator bars or other causes that would prevent good contact between brushes and commutator.

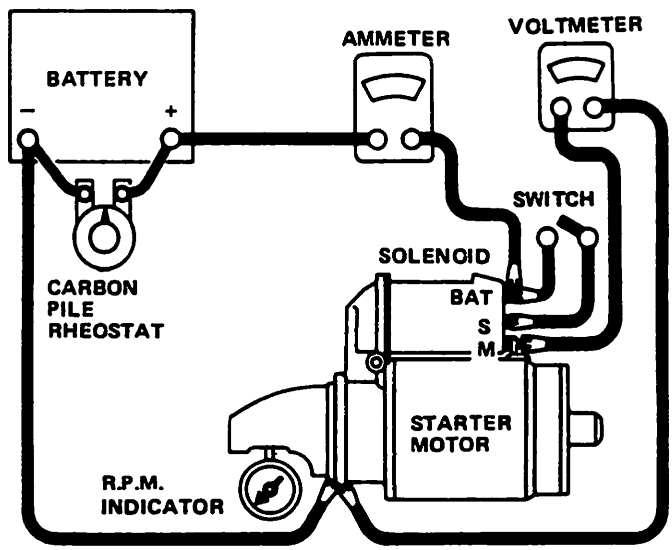

Fig. 1F-4 No-Load Test Connections

(5) Low no-load speed and low current flow indicate high internal resistance because of poor connections, defective wires, dirty commutator and causes listed under step (4) above.

(6) High no-load speed and high current flow usually indicate shorted field windings. If shorted field windings are suspected, replace field winding and frame assembly and retest for improved performance. In some instances, armature winding could also be shorted. Test on growler.

Starter Motor Relay Test

(1) Disconnect wire connectors from I-terminal and G-terminal.

(2) Measure resistance between terminals with ohmmeter. Correct resistance is 23 ohms (approximately).

(3) Measure resistance between either terminal and battery negative post. Resistance should be infinite.

(4) If defective, replace relay. If acceptable, connect wire connectors.

(5) Remove SOL-terminal wire connector and connect voltmeter between terminal and battery negative post.

(6) With ignition/start switch in start position, voltmeter should indicate battery voltage (12 volts).

(7) If defective, replace relay. If acceptable, connect wire connector.

Neutral Safety Switch Test

Disconnect wire connector from switch and test for continuity with ohmmeter between center terminal pin and transmission case. Continuity should exist only when automatic transmission is in Park or Neutral position.

NOTE: *Check linkage adjustment before replacing switch.*

STARTER MOTOR REPLACEMENT

Starter motors do not require lubrication except during overhaul.

When the motor is disassembled for any reason, lubricate as follows:

(1) Armature shaft and drive end and commutator end bushings should be covered with a thin coating of Lubriplate, or equivalent.

(2) Roll type overrunning clutch requires no lubrication. However, drive assembly should be wiped clean. **Do not** clean in degreasing tank or with grease dissolving solvents because this will dissolve lubricant in clutch mechanism. Use silicone grease (General Electric CG321, Dow Corning 33 Medium, or equivalent) on shaft underneath overrruning clutch assembly.

NOTE: *Avoid excessive lubrication.*

Starter Motor Removal

Use the following procedure to remove the starter motor from the engine:

(1) Disconnect battery negative cable at battery.

(2) From beneath vehicle, remove two starter motor-to-engine bolts (fig. 1F-3), and allow starter to drop down.

(3) Disconnect solenoid wires and battery cable, and remove starter motor. To replace, reverse procedure outlined above. Replace any shims that were removed.

Solenoid Removal

Use the following procedure to remove the solenoid from the starter motor:

(1) Disconnect field strap.

(2) Remove solenoid-to-drive housing attaching screws, motor terminal bolt, and remove solenoid by twisting.

(3) Replace by reversing procedure outlined above.

STARTER MOTOR RELAY REPLACEMENT

(1) Disconnect battery negative cable.

(2) Identify, tag and disconnect wires attached to relay.

(3) Remove relay attaching screws and relay from inner fender panel.

(4) Install replacement relay on inner fender panel.

(5) Connect wires to relay.

(6) Connect battery negative cable.

(7) Test relay operation.

NEUTRAL SAFETY SWITCH REPLACEMENT

(1) Disconnect wiring connector and remove switch from transmission. Allow fluid to drain into container.

(2) Move selector lever to Park and Neutral positions. Inspect switch operating lever fingers to ensure they are properly centered in switch opening.

(3) Install switch and seal on transmission case. Tighten switch with 24 foot-pounds (6 N•m) torque.

(4) Test switch continuity.

(5) Correct transmission fluid level as required.

STARTER MOTOR OVERHAUL

If the starter motor does not function correctly (as described in the No-Load Test above), it should be disassembled for further testing of the components. The starter motor should be disassembled only enough to permit repair or replacement of the defective parts. Safety glasses should be worn when disassembling or assembling the starter motor.

Disassembly

The following procedure should be used to disassemble and reassemble the starter motor. Component inspections are also included. Refer to figure 1F-2 and proceed as follows:

(1) Disconnect field winding connection from solenoid terminal.

(2) Remove through-bolts.

(3) Remove commutator end frame and field frame assembly.

(4) Remove armature assembly from drive housing. Remove solenoid and shift lever assembly from drive housing before removing armature assembly.

(5) Remove thrust collar from armature shaft.

(6) Remove pinion gear from armature by sliding metal cylinder onto shaft and by striking metal cylinder against retainer with hammer. Drive retainer toward armature core and off snap ring (fig. 1F-5).

(7) Remove snap ring from groove in armature shaft.

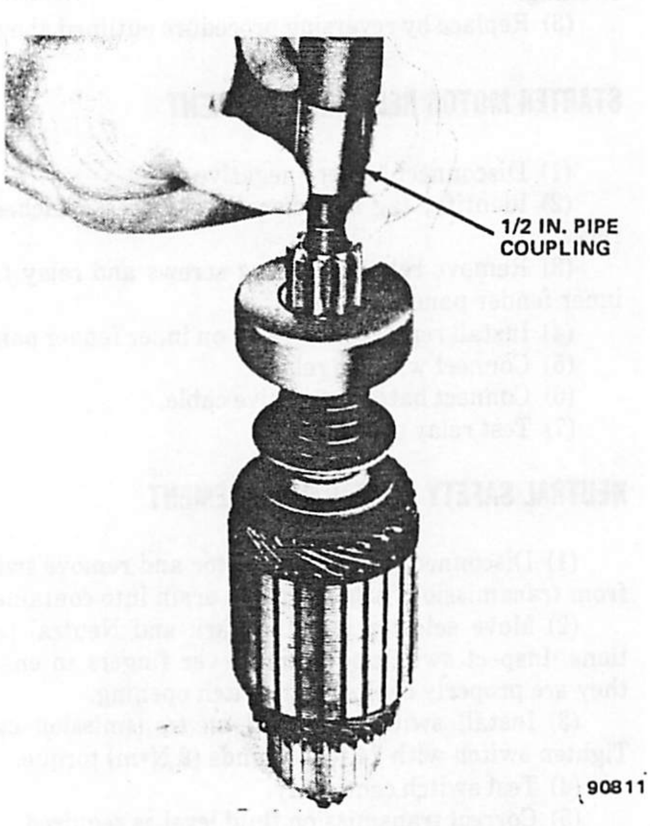

Fig. 1F-5 Removing Retainer From Snap Ring

(8) Roller type clutches are designed to be serviced as a complete unit. Do not disassemble, replace if necessary.

Component Inspection

- **Brushes and Brush Holders**—Inspect the brushes for wear. If they are worn excessively when compared with a new brush, they should be replaced. Ensure the brush holders are clean and the brushes are not binding in the holders. The complete brush surface should ride on the commutator for proper operation. Check by hand to ensure that the brush springs are providing firm contact between the brushes and commutator. If the springs are distorted or discolored, they should be replaced.

- **Armature Windings**—Commutators should not have the insulation undercut, and out-of-round commutators should **not** be turned in a lathe. The armature windings should be tested for internal short circuits, open circuits, and shorts to ground:

(1) Internal short circuits are located by rotating armature in growler with steel strip (e.g., hacksaw blade) held above armature. Steel strip will vibrate when at area of short circuit. Short circuits between commutator bars are sometimes caused by brush dust or copper imbedded between bars. Cleaning dust and copper out of bars may eliminate short circuits.

(2) Open circuits can be located by inspecting connections joining armature windings to commutator bars for looseness. Loose connections cause arcing and burning of commutator bars. If bars are not badly burned, winding connections to bars can be resoldered.

(3) Shorts to ground in armature windings can be detected by use of test lamp. If lamp lights when one test probe is placed on commutator bar and the other test probe on armature core or shaft, armature winding is shorted to ground. Test all windings.

- **Field Windings**—The field windings should be tested for shorts to ground and open circuits with a test lamp. The field winding circuit is illustrated in figure 1F-1.

(1) Shorts to grounds—Disconnect field winding ground connection. Connect one test lamp probe to motor frame and other to field winding connector. If lamp lights, field windings are shorted to ground and must be repaired or replaced. If windings are not shorted, reconnect winding to ground. This test cannot be made if ground connection cannot be disconnected.

(2) Open circuits—Connect test lamp probes to frame and field winding connector. If lamp does not light, field windings are open. If field windings are found to be defective, frame and field winding assembly must be replaced. Windings cannot be replaced separately because of integral frame construction.

- **Solenoid**—A basic solenoid circuit is diagramed in figure 1F-1. Solenoids can be tested electrically by connecting a battery of the specified voltage, a switch, and an ammeter to the two solenoid windings. With all wires disconnected from the solenoid, make test connections to the solenoid switch terminal and to ground to test the hold-in winding (fig. 1F-6). Use the carbon pile rheostat across the battery to decrease the battery voltage to the value listed in specifications. Compare the current flow with the value listed in Specifications. A high current flow indicates a shorted or grounded hold-in winding, and a low current flow indicates excessive resistance.

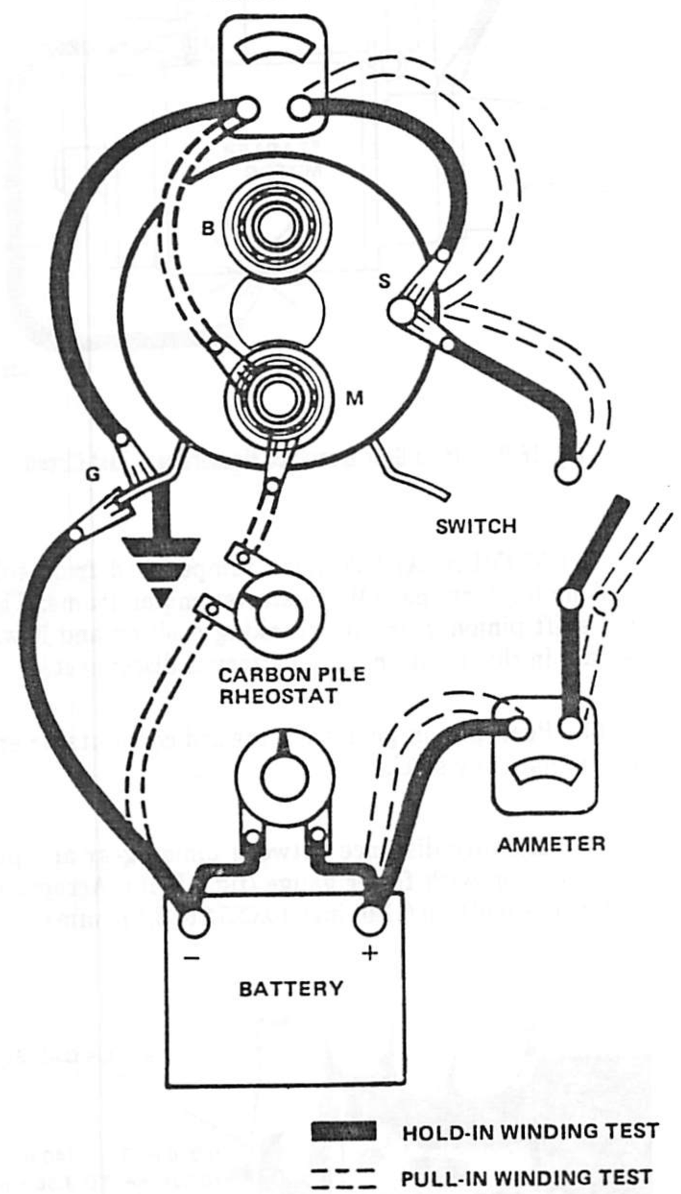

Fig. 1F-6 Solenoid Test Connections

To test the pull-in winding, connect the battery across the solenoid switch (S) terminal and the Solenoid motor (M) terminal. To reduce the voltage to the specified value, connect the carbon pile rheostat between the battery and M-terminal as shown with dashed lines (fig. 1F-6) instead of across the battery as shown with solid lines. If not needed, connect a jumper directly from the battery to the M-terminal.

CAUTION: *To prevent overheating, do not allow the pull-in winding to be energized more than 15 seconds. The current flow will decrease as the winding temperature increases.*

- **Overrunning Clutch**—Test the overrunning clutch action. The pinion gear should turn freely in the overrunning direction. Inspect the pinion gear teeth to ensure that they have not been chipped, cracked, or excessively worn. Replace assembly if necessary. Badly chipped pinion gear teeth indicate possible chipped teeth on the ring gear. The ring gear should be examined and replaced if necessary.

Test the overrunning clutch for slipping with the clutch attached to the armature. Wrap the armature with a shop towel and clamp in a vise. Using a 12-point deep socket and torque wrench, place the socket on the clutch and turn counterclockwise. The clutch should not slip with up to 50 foot-pounds (68 N•m) torque applied. If it does, replace the clutch.

Assembly

(1) Position clutch assembly on armature shaft. To replace snap ring and retainer onto armature:

(a) Position retainer on armature shaft with cupped surface facing snap ring groove.

(b) Position snap ring on end of shaft. With piece of wood on top, force ring over shaft and tap in place (fig. 1F-7), then slide ring down into groove.

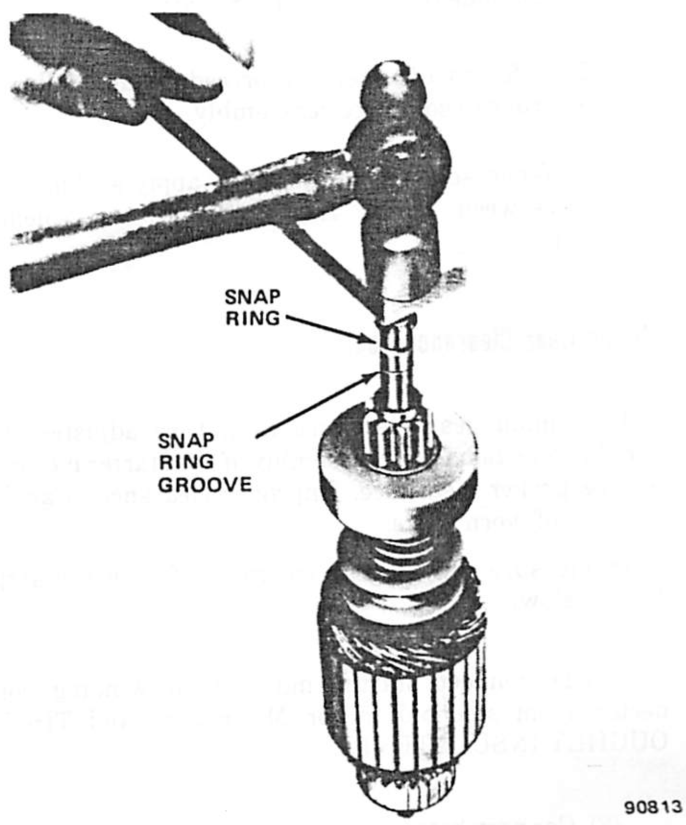

Fig. 1F-7 Forcing Snap Ring Over Shaft

(c) To force retainer over snap ring, place a suitable washer over shaft and squeeze retainer and washer together with pliers (fig. 1F-8).

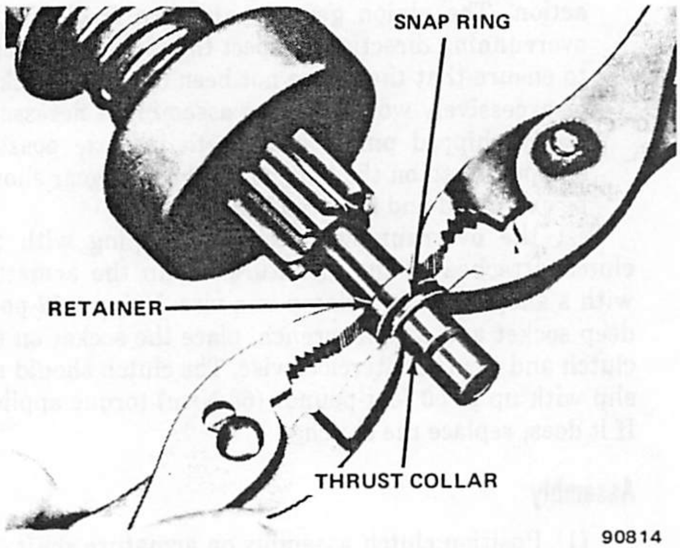

Fig. 1F-8 Forcing Retainer Over Snap Ring

(d) Remove washer.

(e) Slide thrust collar over shaft.

(2) Refer to disassembly procedure and follow in reverse order to complete reassembly.

(3) When solenoid is installed, apply sealing compound between motor frame, flange, and solenoid junction.

Pinion Gear Clearance Test

The pinion gear clearance cannot be adjusted but should be tested after reassembly of the starter motor to ensure proper clearance. Improper clearance is an indication of worn parts.

To measure pinion gear clearance, follow the steps listed below:

(1) Disconnect starter motor field winding connector from solenoid motor M-terminal and THOROUGHLY INSULATE IT.

(2) Connect battery between solenoid switch S-terminal and starter motor frame (fig. 1F-9).

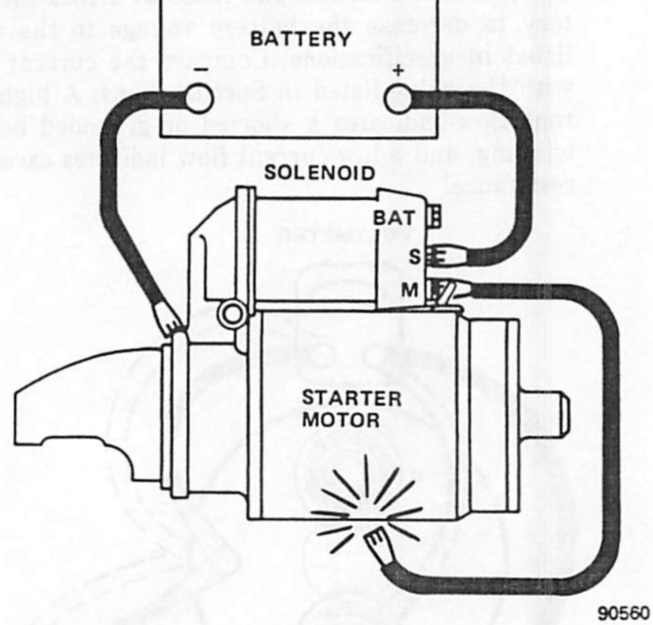

Fig. 1F-9 Pinion Gear Clearance Measurement Test Circuit

(3) MOMENTARILY flash jumper lead from solenoid motor terminal (M) to starter motor frame. This will shift pinion gear into cranking position and it will remain in this position until battery is disconnected.

(4) Push pinion gear back toward commutator end to eliminate any slack.

(5) Measure distance between pinion gear and pinion gear stop with feeler gauge (fig. 1F-10). Acceptable distance is 0.010 to 0.140 inch (0.0254 to 3.556 mm).

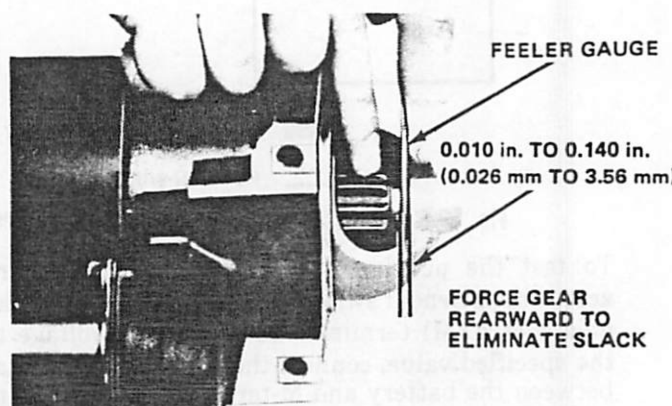

Fig. 1F-10 Measuring Pinion Gear Clearance

Starter Motor General Diagnosis

SOLENOID DOES NOT ENERGIZE

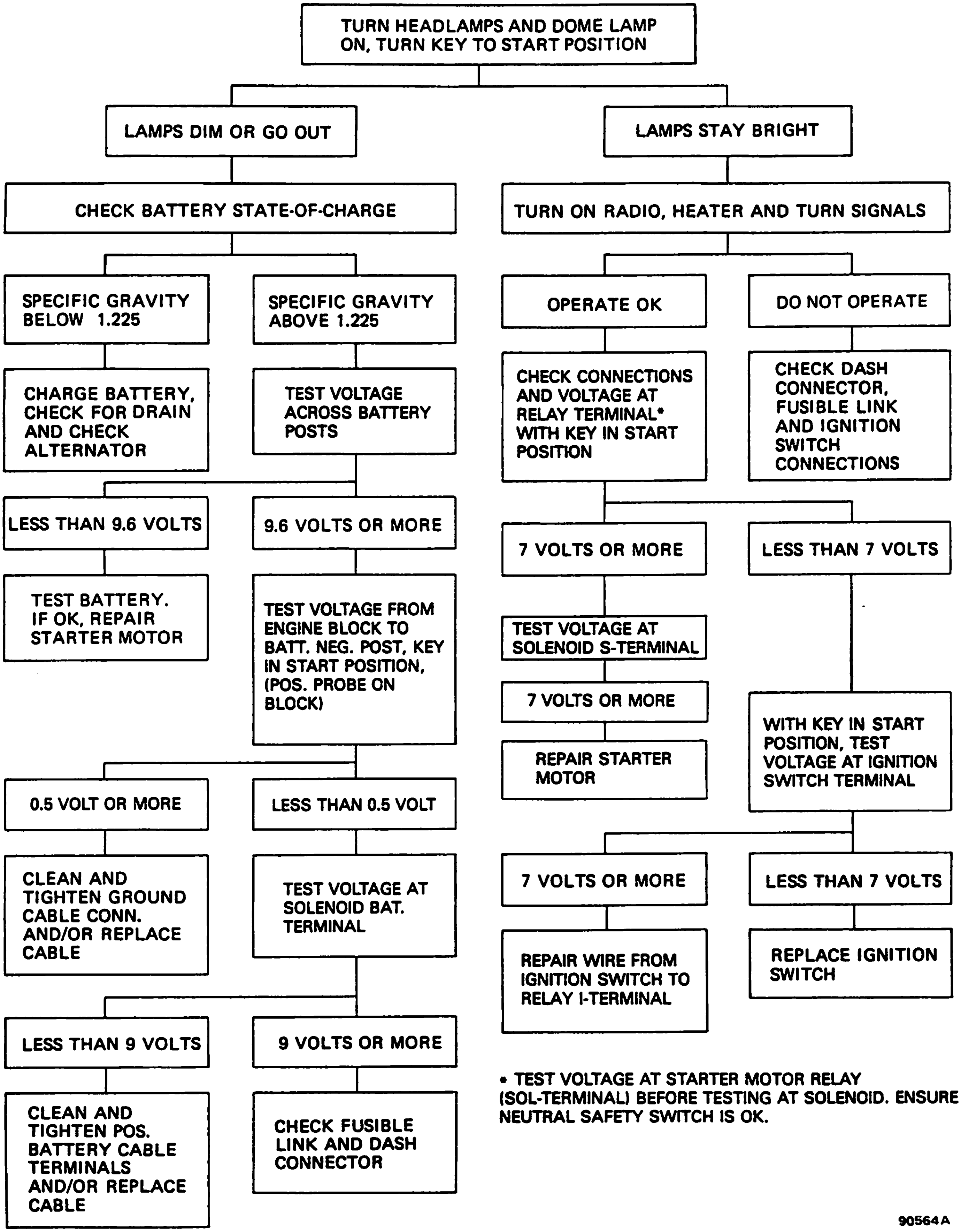

* TEST VOLTAGE AT STARTER MOTOR RELAY (SOL-TERMINAL) BEFORE TESTING AT SOLENOID. ENSURE NEUTRAL SAFETY SWITCH IS OK.

Starter Motor General Diagnosis (Continued)

SLOW MOTOR OPERATION, SOLENOID CLICKS OR CHATTERS

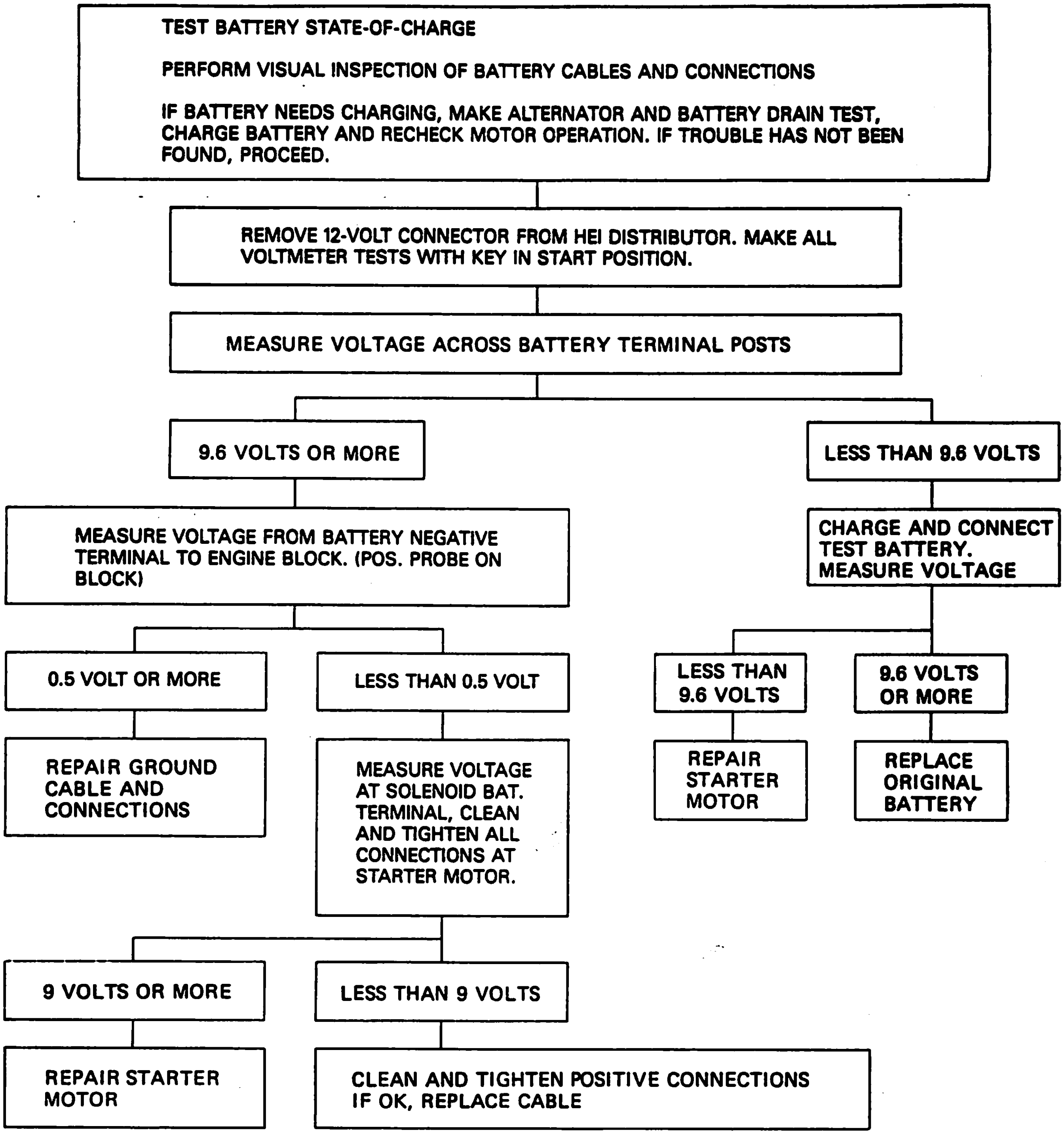

NOTE: THIS DIAGNOSIS IS DESIGNED FOR USE ON ENGINES AND BATTERIES AT ROOM OR NORMAL OPERATING TEMPERATURES. IT IS ALSO NECESSARY THAT THERE BE NO ENGINE DEFECTS THAT WOULD CAUSE STARTER MOTOR PROBLEMS. TO USE IT UNDER OTHER CONDITIONS CAN RESULT IN AN INCORRECT DIAGNOSIS.

905648

SPECIFICATIONS

STARTER MOTOR AND SOLENOID									
ENGINE	STARTER		NO LOAD TEST WITH 9 VOLTS				SOLENOID		
	PART NO.	TYPE	AMPS		RPM		PART NO.	SPECIFICATIONS	
			MIN.	MAX.	MIN.	MAX.		HOLD-IN WINDING AMPS AT 10V	PULL-IN WINDING AMPS AT 5V
151 (2V)	1109526	5MT	45	70	7000	11,900	1114488	15-20	20-30

90565

SIX-AND EIGHT-CYLINDER ENGINE STARTING SYSTEM

GENERAL

The starting system used with all Jeep six- and eight-cylinder engines consists of a lightweight positive engagement starter motor, a starter motor solenoid, an ignition/start switch, circuits protected by fusible links and the battery. Vehicles equipped with an automatic transmission also have a neutral safety switch. The starter motor has a moveable pole shoe and appropriate linkage to engage the drive mechanism. Inside the drive assembly, an overrunning clutch prevents the starter motor from being driven by the ring gear.

COMPONENTS

Starter Motor

Identification

At the time of manufacture, the starter motor identification code is stamped on the frame adjacent to the Jeep part number. The date is decoded as follows:

- Year (1—1981) (2—1982)
- Month (A—Jan., B—Feb., etc.)
- Week (A—first week in month, B—second week, etc.)

Field Windings

Four field windings are used. Each is wound around an iron pole shoe that concentrates the electromagnetic flux created when current flows through the field winding. Three of the field windings have fixed pole shoes, while the fourth winding has a moveable pole shoe. This fourth winding, located at the top of the starter motor, has an additional, smaller winding wound inside of it. This is the hold-in winding.

Drive Assembly

A pinion gear, driven by the starter motor armature, is forced to move into mesh with the engine flywheel (or drive plate) ring gear when the starter motor is actuated. The movement is accomplished by the action of the moveable pole shoe and its drive yoke (fig. 1F-11). As long as the ignition key is held in the **Start** position, the pinion gear remains in mesh with the ring gear. An overrunning (one-way) clutch in the drive assembly permits the starter motor to drive the ring gear, but after the engine starts, the clutch prevents the engine from driving the starter motor before the key is released to the **On** position.

Starter Motor Solenoid

Two different starter motor solenoids are used, one with manual transmissions and the other with automatic transmissions. The solenoids differ only in the method of providing a ground for the solenoid pull-in winding.

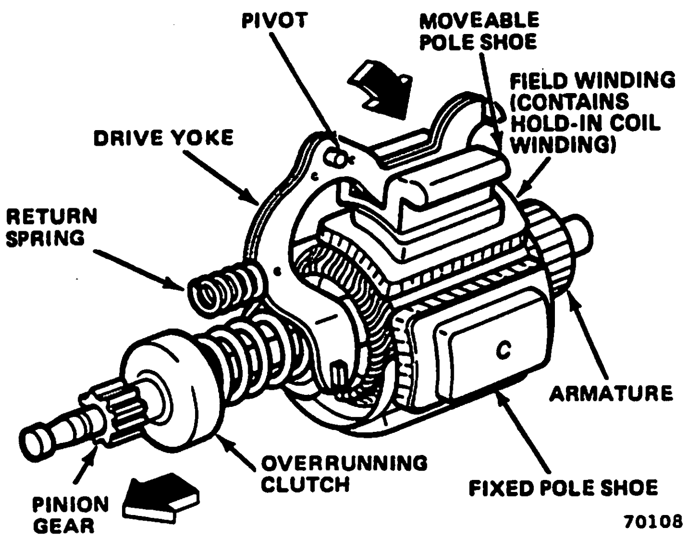

Fig. 1F-11 Moveable Pole Shoe Operation

The ground circuit for the solenoid pull-in winding is completed through the solenoid mounting bracket on manual transmission equipped vehicles.

On vehicles equipped with an automatic transmission, the pull-in winding is grounded through an additional terminal on the bottom of the solenoid. A wire connected to this terminal provides a ground path from the neutral safety switch located on the transmission. The pull-in winding ground circuit is completed at the neutral safety switch only when the automatic transmission gear selector is placed in Neutral or Park.

NOTE: *The neutral safety switch and back-up lamp switch are enclosed in a single housing.*

The starter motor solenoid pull-in winding is energized when battery voltage is applied to the S-terminal of the solenoid and the pull-in winding is grounded. When the solenoid pull-in winding is energized, the contact disc is forced into the closed position. The disc mates with two contacts in the solenoid and this completes the circuit between the battery and the starter motor.

All starter motor solenoids have an I-terminal that is connected to the ignition system. When the starter motor is in operation, the I-terminal provides full battery voltage for the ignition coil. This circuit bypasses the resistance wire that provides voltage for the coil after the engine starts. Refer to Chapter 1G—Ignition Systems for additional information.

CAUTION: *Starter motor solenoids used in previous years (before solid-state ignitions) look similar to the solenoids presently used but are very different internally. Use of the wrong type solenoid can damage the neutral safety switch. Verify the part number stamped on the replacement solenoid before installation.*

CAUTION: *Starter motor solenoids are equipped with both blade terminals and long studs. The blade terminals are attached to the long studs and held in place by retaining nuts. Loosening of the retaining nuts could cause the loss of internal connections and necessitate replacement of the solenoid.*

Neutral Safety Switch

The Neutral Safety Switch is a three-terminal plunger switch mounted on the automatic transmission case. The two outer terminals connect to the back-up lamp circuit, while the center terminal provides a ground path for the starter motor solenoid circuit. Ground is provided only when the automatic transmission is in Park or Neutral position.

Starting System Circuits

The starting system has two electrical circuits, a low current circuit and a high current circuit (fig. 1F-12). The low current circuit is the control circuit. It includes the connections and wires leading from the ignition switch to the S-terminal on the starter motor solenoid, and from the ground terminal of the starter motor solenoid to the neutral safety switch on automatic transmission equipped vehicles. The high current circuit runs from the battery through the starter motor solenoid to the starter motor to ground. This circuit uses heavy gauge cables because of the large current flow required for the starter motor.

Fusible Link

A fusible link is used in the low current starting system circuit (fig. 1F-12). Current flows from the starter motor solenoid battery terminal by cable to the battery positive terminal. From the solenoid battery terminal, voltage is also distributed to other vehicle circuits. A 14-gauge fusible link is connected between the solenoid terminal and the main body wire harness. This fusible link protects the complete vehicle electrical system as well as the solenoid.

Fusible links are covered with a special non-flammable insulation. Each link is manufactured with a specific load rating and is intended for a specific circuit. Replacement links are available from Jeep service parts sources.

OPERATION

The starter motor low current circuit is controlled by the ignition/start switch (fig. 1F-12). The ignition/start switch applies battery voltage to the starter motor solenoid S-terminal when the ignition key is in the **Start** position. This energizes the solenoid pull-in winding, which completes the high current circuit between the battery and the starter motor. The starter motor is

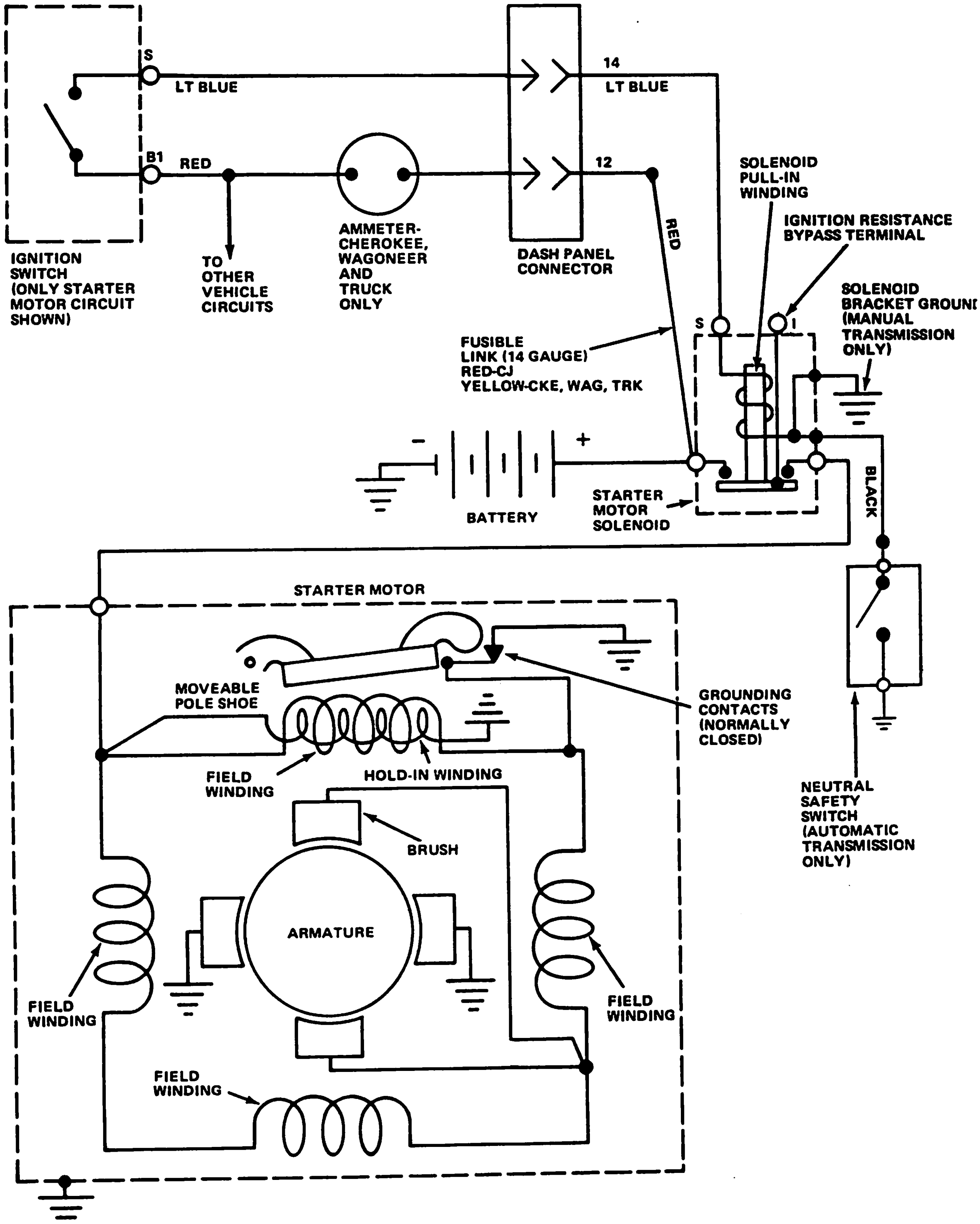

Fig. 1F-12 Six- and Eight-Cylinder Engine Starting System Schematic then actuated and begins rotating the engine crankshaft.

TROUBLESHOOTING

The Service Diagnosis chart may be used to isolate the source of the problem when the starter motor either rotates the engine too slowly, will not rotate the engine, or has abnormal drive engagement.

If the starter motor rotating speed is normal and the drive pinion gear engages properly with the ring gear but the engine does not start, a problem exists either in the fuel system or ignition system.

ON-VEHICLE TESTING

Starter Motor Will Not Rotate

(1) Verify battery and cable condition as outlined in Chapter 1D—Batteries to assure correct voltage is available.

(2) Inspect and tighten battery and starter motor cable connections at starter motor solenoid terminals.

(3) Disconnect wire at solenoid S-terminal.

WARNING: *Place transmission in Neutral (manual) or Park (automatic) position and apply parking brake before conducting solenoid test.*

(4) Connect jumper wire from battery positive post to solenoid S-terminal. If starter motor rotates, solenoid is not defective. Inspect ignition/start switch circuit.

(5) If starter motor does not rotate, connect another jumper wire from battery negative terminal to solenoid mounting bracket (manual transmission only) or ground terminal (automatic transmission only). Ensure good connection is made. If solenoid energizes, it was not properly grounded. Remove rust or corrosion and attach solenoid to inner-fender panel with cadmium-plated screws (manual transmission only) or test operation of neutral safety switch (automatic transmission only).

(6) If starter motor does not rotate, remove jumper wires and connect heavy gauge jumper cable between battery positive post and starter motor terminal on solenoid. If starter motor rotates, solenoid is defective and must be replaced. If starter motor does not rotate, inspect starter motor.

Starter Motor Solenoid Pull-In Winding Test

This test will determine if the solenoid pull-in winding is either shorted or open.

(1) Disconnect S-terminal wire from solenoid.

(2) Connect ohmmeter test probes (fig. 1F-13) to S-terminal and mounting bracket (manual transmission only) or ground terminal (automatic transmission only).

(3) If solenoid fails test, replace solenoid.

NOTE: *A poor solenoid ground can be determined by connecting one ohmmeter lead to the battery negative terminal and other lead to S-terminal. If resistance is greater than in the S-terminal-to-mount bracket test (fig. 1F-13), the solenoid has a poor ground.*

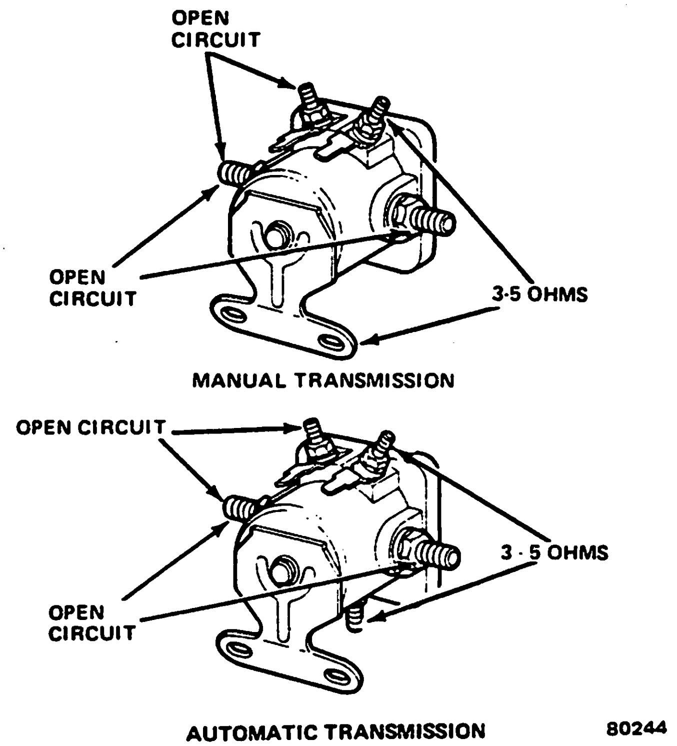

Fig. 1F-13 Ohmmeter Test of Starter Motor Solenoid

Starter Motor Cable and Ground Cable Tests (Voltage Drop)

The results of voltage drop tests will determine if there is excessive resistance in the high current circuit. When performing these tests, it is important that the voltmeter test lead probes be in contact with the terminals that the cables are connected to instead of with the cables themselves. For example, when testing between the battery and solenoid, the voltmeter probes must touch the battery post and the solenoid threaded stud.

Preliminary Preparation for Tests

(1) Remove ignition coil secondary wire from distributor and ground to engine.

(2) Place transmission in Neutral (manual transmission) or Park (automatic transmission) and set parking brake.

(3) Ensure battery is fully charged.

Test Procedure

Follow the steps as outlined in the Starter Motor Voltage Drop Tests DARS charts.

Full Load Current Test

(1) Prior to performing full load current test, battery must be fully charged as described in Chapter 1D—Batteries.

NOTE: *The lower the available voltage, the higher the current flow.*

Service Diagnosis

Condition	Possible Cause	Correction
STARTER MOTOR ROTATES ENGINE SLOWLY	(1) Battery charge low or battery defective.	(1) Charge or replace battery.
	(2) Defective circuit between battery and starter motor.	(2) Clean and tighten, or replace cables.
	(3) Low load current.	(3) Bench-test starter motor. Inspect for worn brushes and weak brush springs.
	(4) High load current.	(4) Bench-test starter motor. Check engine for friction, drag or coolant in cylinders. Check ring gear-to-pinion gear clearance.
STARTER MOTOR WILL NOT ROTATE ENGINE	(1) Battery charge low or battery defective.	(1) Charge or replace battery.
	(2) Faulty solenoid.	(2) Check solenoid ground. Repair or replace as necessary.
	(3) Damaged drive pinion gear or ring gear.	(3) Replace damaged gear(s).
	(4) Starter motor engagement weak.	(4) Bench-test starter motor.
	(5) Starter motor rotates slowly with high load current.	(5) Inspect drive yoke pull-down and point gap, check for worn end bushings, check ring gear clearance.
	(6) Engine seized.	(6) Repair engine.
STARTER MOTOR DRIVE WILL NOT ENGAGE (SOLENOID KNOWN TO BE GOOD)	(1) Defective contact point assembly.	(1) Repair or replace contact point assembly.
	(2) Inadequate contact point assembly ground.	(2) Repair connection at ground screw.
	(3) Defective hold-in coil.	(3) Replace field winding assembly.
STARTER MOTOR DRIVE WILL NOT DISENGAGE	(1) Starter motor loose on flywheel housing.	(1) Tighten mounting bolts.
	(2) Worn drive end bushing.	(2) Replace bushing.
	(3) Damaged ring gear teeth.	(3) Replace ring gear or driveplate.
	(4) Drive yoke return spring broken or missing.	(4) Replace spring.
STARTER MOTOR DRIVE DISENGAGES PREMATURELY	(1) Weak drive assembly thrust spring.	(1) Replace drive mechanism.
	(2) Hold-in coil defective.	(2) Replace field winding assembly.
LOW LOAD CURRENT	(1) Worn brushes.	(1) Replace brushes.
	(2) Weak brush springs.	(2) Replace springs.

70109

STARTER MOTOR VOLTAGE DROP TEST DIAGNOSIS AND REPAIR SIMPLIFICATION (DARS) CHARTS

Note: Refer to Chapter A – General Information for details on how to use this DARS chart.

STARTER MOTOR VOLTAGE DROP TESTS

Chart 1

STEP | **SEQUENCE** | **RESULT**

1

STARTER MOTOR FULL LOAD CURRENT TEST

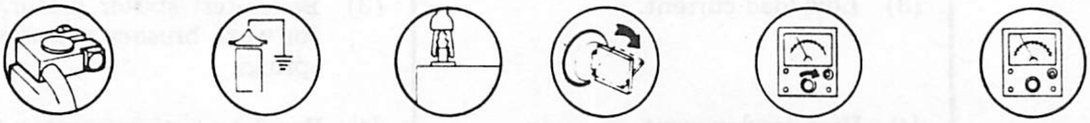

- CLEAN AND CONNECT BATTERY CABLES
- REMOVE COIL WIRE FROM DISTRIBUTOR AND CONNECT TO GROUND
- CONNECT HEAVY LOAD TESTER
- ENGAGE STARTER MOTOR FOR THREE SECONDS AND OBSERVE VOLTMETER
- TURN LOAD CONTROL UNTIL VOLTMETER INDICATES SAME VOLTAGE AS WHEN STARTER MOTOR WAS ENGAGED
- OBSERVE AMMETER. NOTE AMPS FOR USE IN LATER STEPS.

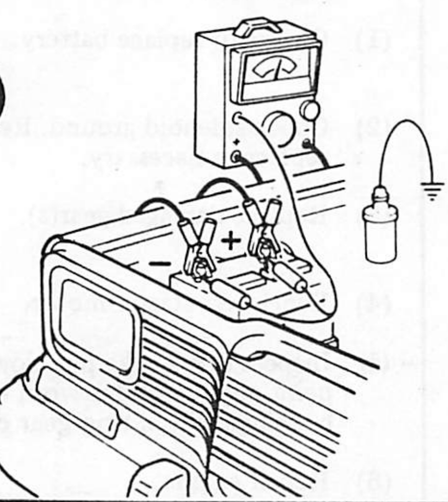

OK
6 CYL. – 150-180 AMPS
8 CYL. – 160-210 AMPS → STOP

NOT OK
6 CYL. – ABOVE 180 AMPS
8 CYL. – ABOVE 210 AMPS
- BATTERY CABLES AND SOLENOID NOT TESTED → 2

OR
- BATTERY CABLE AND SOLENOID REPAIRS COMPLETED → REPAIR STARTER → STOP

2

VOLTAGE DROP TEST
(NOTE TEST POINTS IN ILLUSTRATION)

- GROUND COIL WIRE
- CONNECT VOLTMETER
- ENGAGE STARTER MOTOR
- OBSERVE VOLTMETER
- COMPARE AMPS FROM STEP 1 AND VOLTS TO CHART

MAXIMUM VOLTAGE DROP BY FULL LOAD AMPERAGE				
AMPS	150-210	215-295	300-420	425-600
VOLTS	0.5 V	0.7 V	1.0 V	1.5 V

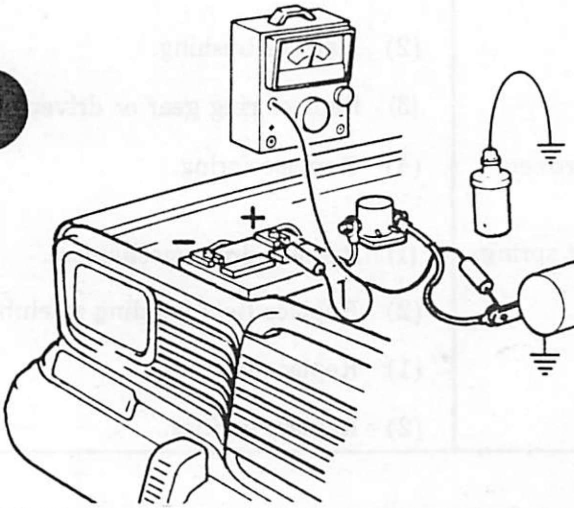

OK
VOLTAGE AT OR BELOW MAXIMUM → 5

NOT OK
VOLTAGE ABOVE MAXIMUM → 3

70066A

STEP	SEQUENCE	RESULT

3 — VOLTAGE DROP TEST
(NOTE TEST POINTS IN ILLUSTRATION)

- GROUND COIL WIRE
- CONNECT VOLTMETER
- ENGAGE STARTER MOTOR
- OBSERVE VOLTMETER
- COMPARE AMPS FROM STEP 1 AND VOLTS TO CHART

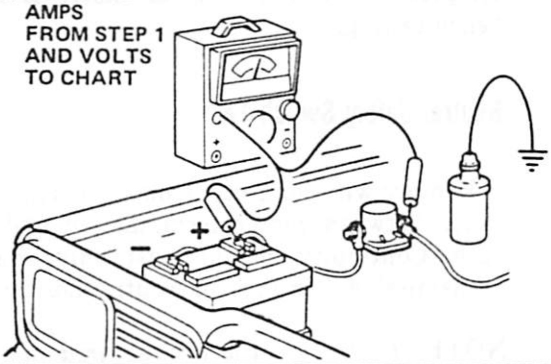

MAXIMUM VOLTAGE DROP BY FULL LOAD AMPERAGE				
AMPS	150-210	215-295	300-420	425-500
VOLTS	0.3 V	0.5 V	0.6 V	0.9 V

OK — VOLTAGE AT OR BELOW MAXIMUM → REPAIR SOLENOID-TO-STARTER MOTOR CABLE → 5

NOT OK — VOLTAGE ABOVE MAXIMUM → 4

4 — VOLTAGE DROP TEST
(NOTE TEST POINTS IN ILLUSTRATION)

- GROUND COIL WIRE
- CONNECT VOLTMETER
- ENGAGE STARTER MOTOR
- OBSERVE VOLTMETER
- COMPARE AMPS FROM STEP 1 AND VOLTS TO CHART

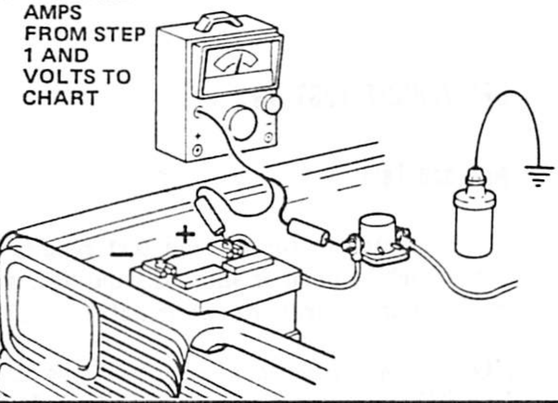

MAXIMUM VOLTAGE DROP BY FULL LOAD AMPERAGE				
AMPS	150-210	215-295	300-420	425-600
VOLTS	0.2V	0.3V	0.4V	0.5V

OK — VOLTAGE AT OR BELOW MAXIMUM → REPAIR SOLENOID → 5

NOT OK — VOLTAGE ABOVE MAXIMUM → REPAIR BATTERY-TO-SOLENOID CABLE → 5

5 — VOLTAGE DROP TEST
(NOTE TEST POINTS IN ILLUSTRATION)

- GROUND COIL WIRE
- CONNECT VOLTMETER
- ENGAGE STARTER MOTOR
- OBSERVE VOLTMETER
- COMPARE AMPS FROM STEP 1 AND VOLTS TO CHART

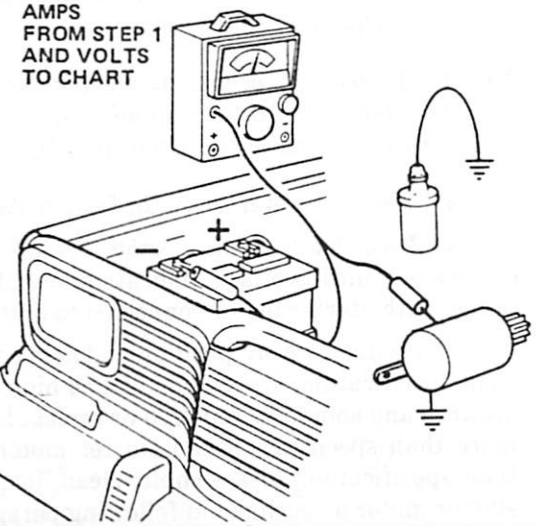

MAXIMUM VOLTAGE DROP BY FULL LOAD AMPERAGE				
AMPS	150-210	215-295	300-420	425-600
VOLTS	0.2V	0.3V	0.4V	0.5V

OK — VOLTAGE AT OR BELOW MAXIMUM

- REPAIRS TO SOLENOID OR CABLES PERFORMED IN A PREVIOUS STEP → 1
- REPAIRS TO SOLENOID OR CABLES NOT REQUIRED IN A PREVIOUS STEP → REPAIR STARTER MOTOR → STOP

NOT OK — VOLTAGE ABOVE MAXIMUM → REPAIR ENGINE-TO-BATTERY CABLE → 1

70066B

(2) Disconnect and ground ignition cóil secondary wire.

(3) Connect remote control starting switch between battery positive terminal and S-terminal on starter solenoid.

NOTE: *Do not consider the initial voltage at the beginning of engine cranking. A very hot or very cold engine may cause a current of 400 to 600 amperes for the first few revolutions. Note the voltage after the starter motor has obtained its maximum rpm.*

CAUTION: *Do not operate for more than 15 seconds.*

(4) Connect battery-alternator-starter motor tester leads as depicted in figure 1F-14. Operate remote control starting switch and note voltage indicated on voltmeter while starter motor is rotating engine.

(5) Release remote control starting switch.

(6) Turn load control knob toward INCREASE (clockwise) until voltmeter indication matches that obtained when starter motor was rotating engine.

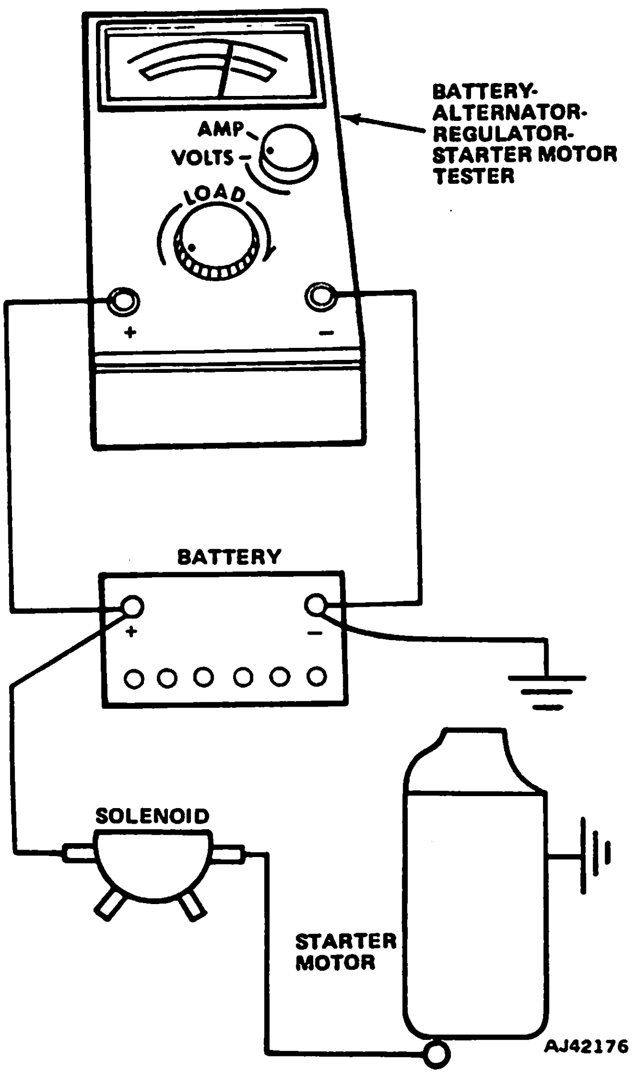

Fig. 1F-14 Starter Motor Full-Load Current Test

(7) Switch to AMP position and note current indicated on ammeter scale. This is current being used by starter motor under full-load conditions. If current is not within 150 to 180 amperes for six-cylinder engines or 160 to 210 amperes for eight-cylinder engines at room temperature, remove starter motor from engine for bench testing.

Neutral Safety Switch Test

Remove wire connector from switch and test for continuity between center terminal pin and transmission case. Continuity should exist only when automatic transmission is in Park or Neutral position.

NOTE: *Probe-type tips are required on ohmmeter test leads. If not available, push cotter pins into switch connector to provide contacts for aligator jaw-type test lead terminals.*

NOTE: *Check linkage adjustment before replacing switch.*

OFF-VEHICLE TESTING

No-Load Test

The starter motor no-load test results will indicate faults such as open or shorted windings, worn bushings (rubbing armature) or bent armature shaft.

NOTE: *The tester load control knob must be in the DECREASE (extreme counterclockwise) position.*

(1) Operate starter motor with test equipment connected as diagramed in figure 1F-15. Note voltage indication.

(2) Determine exact starter motor rpm using mechanical tachometer (not shown).

NOTE: *To use a mechanical tachometer, remove the seal from the end of the drive end housing and clean the grease from the end of the armature shaft.*

(3) Disconnect starter motor from battery.

(4) Turn load control knob toward INCREASE (clockwise) until voltage indication matches that obtained with starter motor connected to battery.

(5) Switch to AMP position and note current. If less than specification, starter motor has high electrical resistance and should be repaired or replaced. If current is more than specification and starter motor rpm is less than specification, disassemble, clean, inspect and test starter motor as outlined in following paragraphs.

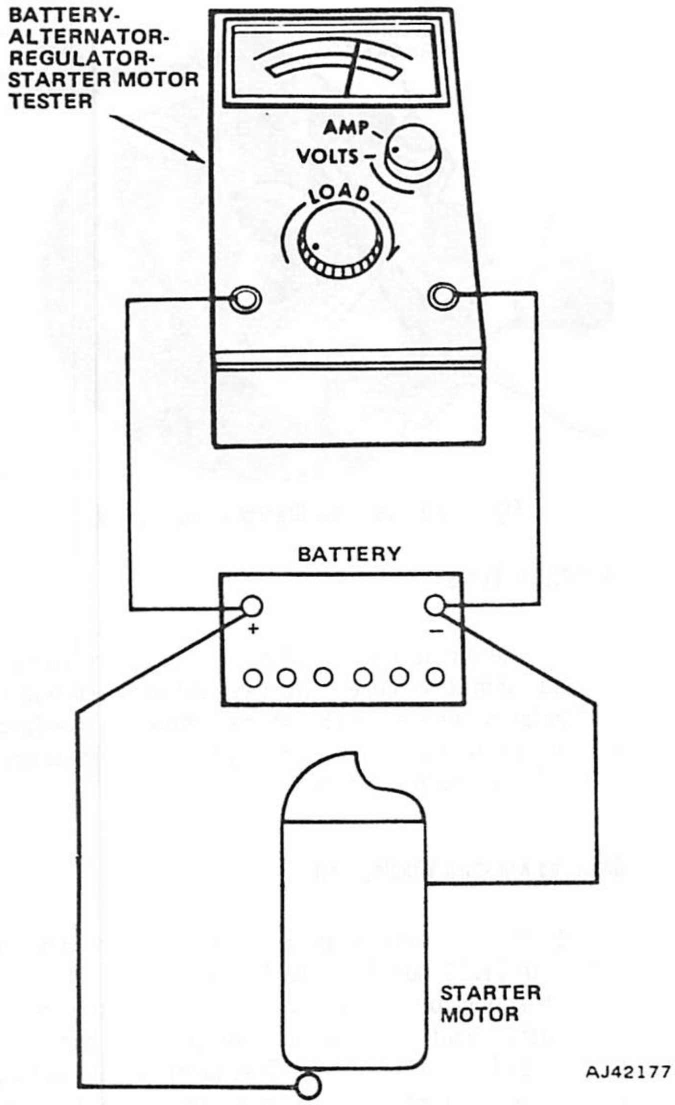

Fig. 1F-15 Starter Motor No-Load Test

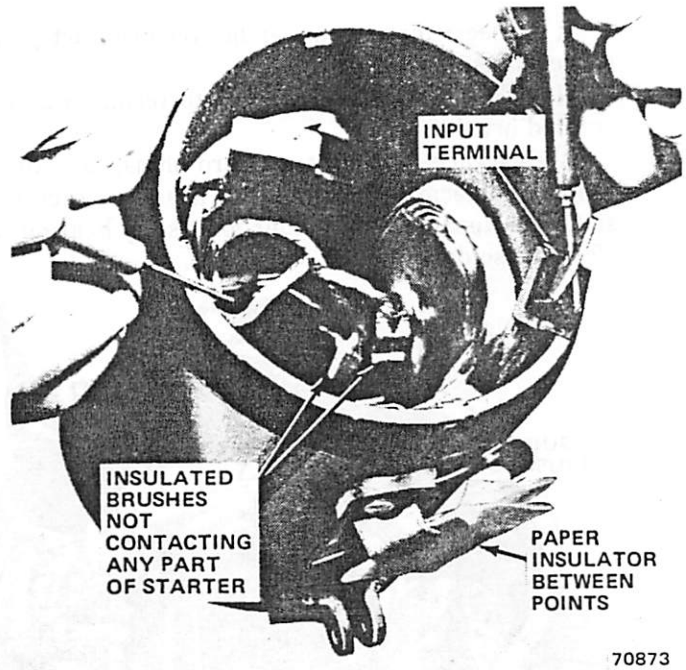

Fig. 1F-16 Hold-In Coil Winding Resistance Test

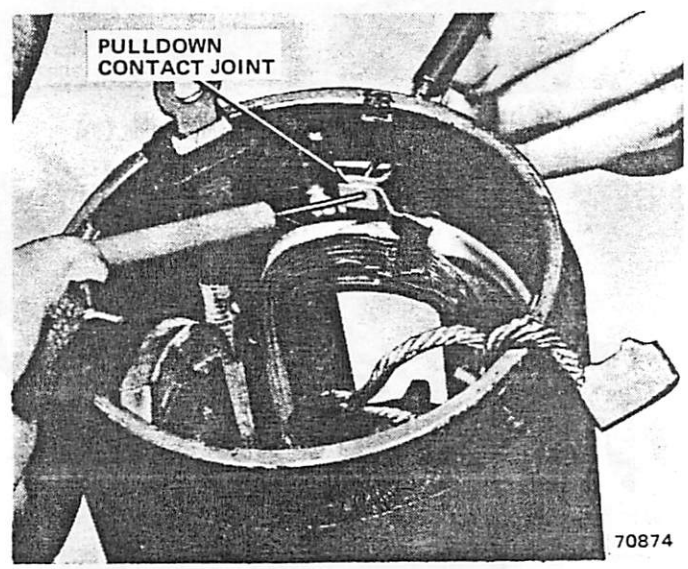

Fig. 1F-17 Solenoid Contact Points Connection Test

Hold-In Coil Winding Resistance Test

The result of this test will determine the resistance of the hold-in winding.

(1) Insert piece of paper between contact points to serve as insulator (fig. 1F-16).

(2) Use ohmmeter to measure resistance between terminal and starter frame.

Resistance should be between 2.0 and 3.5 ohms. If resistance is not within specification, replace field winding assembly.

Solenoid Contact Points Connection Test

The result of this test will determine the quality of the solder joint at the contacts. Use an ohmmeter to measure the resistance through solder joint (fig. 1F-17). If the resistance is more than zero ohms, solder joint has excessive resistance. Repair by heating joint with 600 watt soldering iron.

Insulated Brush Connection Test

The result of this test will determine the quality of the solder joint between the insulated brush braided wire and the field windings. Use an ohmmeter to test the resistance through solder joint by touching probes to brush and to copper bus bar (fig. 1F-18). If resistance is more than zero ohms, solder joint has excessive resistance. Repair by heating joint with 600 watt soldering iron.

Terminal-to-Brush Continuity Test

The result of this test will determine the condition of all field winding solder joints.

(1) Insert piece of paper between contact points to serve as insulator (fig. 1F-19).

(2) Touch ohmmeter probes to terminal and to insulated brush.

If resistance is more than zero ohms, test all solder joints to determine which one(s) has/have excessive resistance. Repair faulty solder joint(s) by heating with a 600 watt soldering iron.

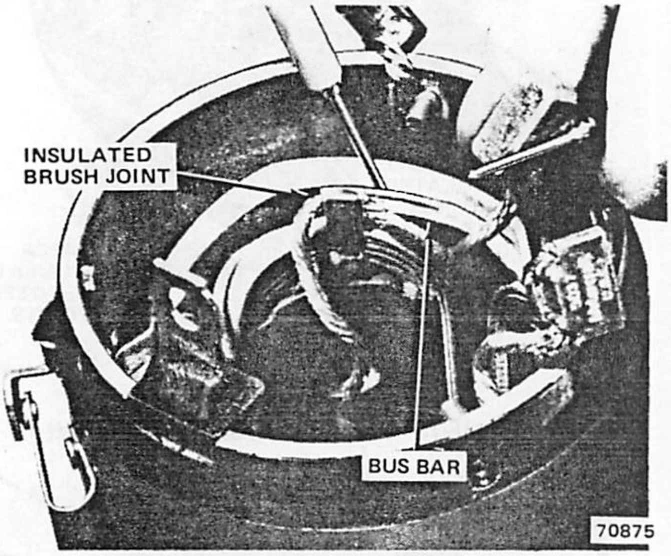

Fig. 1F-18 Insulated Brush Connection Test

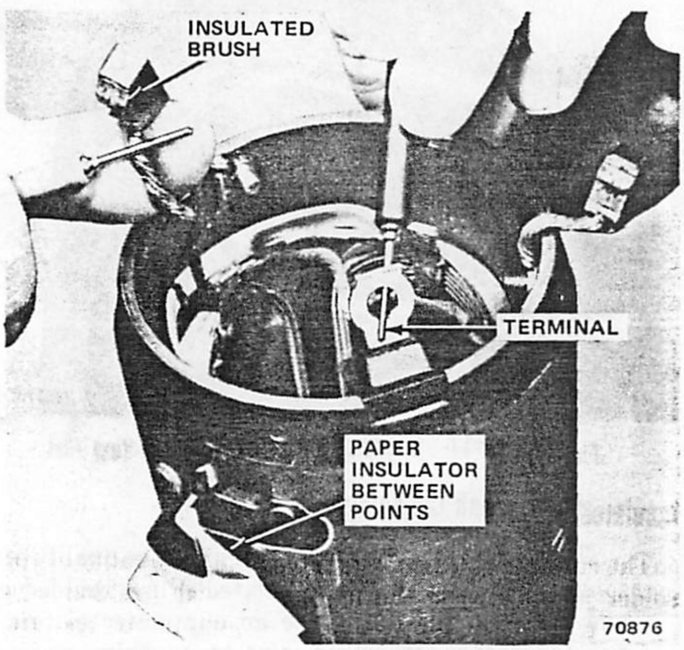

Fig. 1F-19 Terminal-To-Brush Continuity Test

Terminal Bracket Insulation Test

The result of this test will determine if the terminal bracket is properly insulated from the end cap. Use an ohmmeter to test continuity between the bracket and cap (Fig. 1F-20). If the resistance is not infinite, the insulator is faulty. Repair by replacing the end cap.

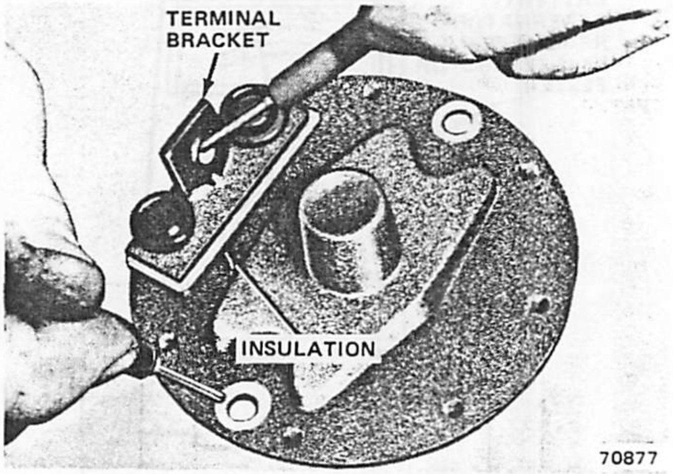

Fig. 1F-20 Terminal Bracket Insulation Test

Armature Tests

Test the armature winding for a short circuit to ground (armature core), short circuit between windings and balance whenever the starter motor is overhauled. Follow the test equipment manufacturer's instructions or the following procedure.

Grounded Armature Winding Test

(1) Place armature in growler jaws and turn power switch to TEST position (fig. 1F-21).

(2) Touch one test lead probe to armature core, touch other lead probe to each commutator bar one at a time and observe test lamp. Test lamp should not light. If test lamp lights on any bar, armature winding is shorted to armature core and armature must be replaced.

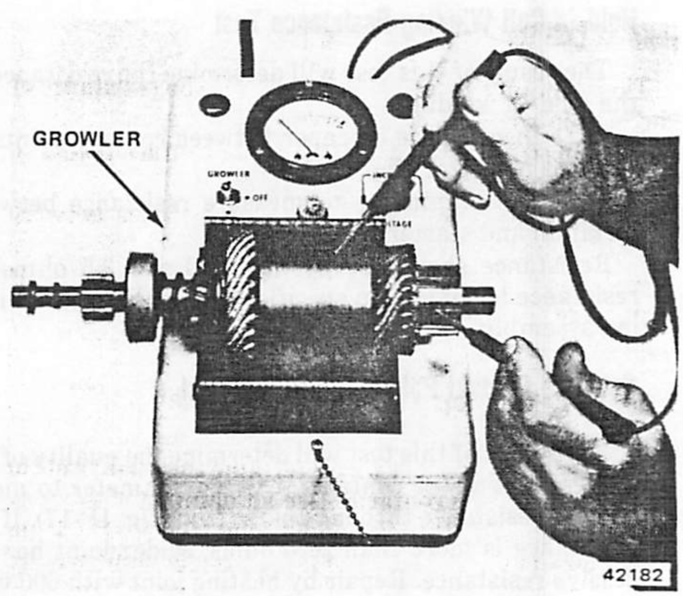

Fig. 1F-21 Grounded Armature Winding Test

Armature Winding Internal Short Test

CAUTION: *Never operate the growler in the growler test position without an armature in the jaws.*

(1) Place armature in growler jaws and turn power switch to GROWLER position (fig. 1F-22).

(2) Hold steel blade parallel to and touching armature core. Slowly rotate armature one or more revolutions in growler jaws. If steel blade vibrates at any area of core, winding is shorted at this area and armature must be replaced.

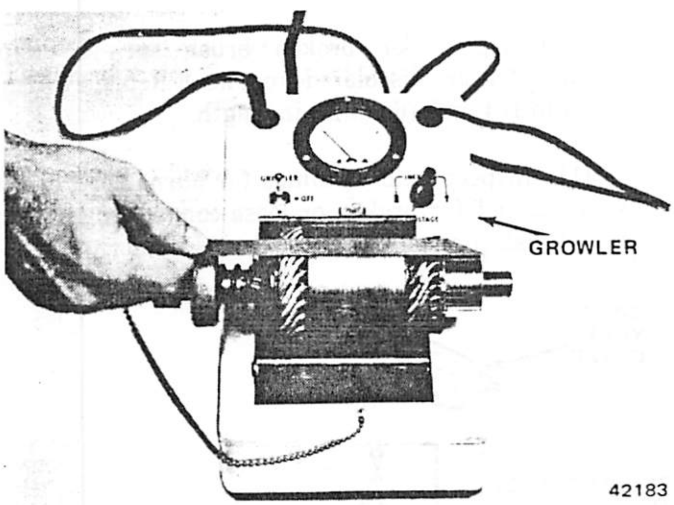

Fig. 1F-22 Armature Winding Internal Short Test

Armature Balance Test

(1) Place armature in growler jaws and turn power switch to GROWLER position (fig. 1F-23).

(2) Place contact fingers of meter test cable across adjacent commutator bars at side of commutator.

(3) Adjust voltage control until pointer indicates highest voltage on scale.

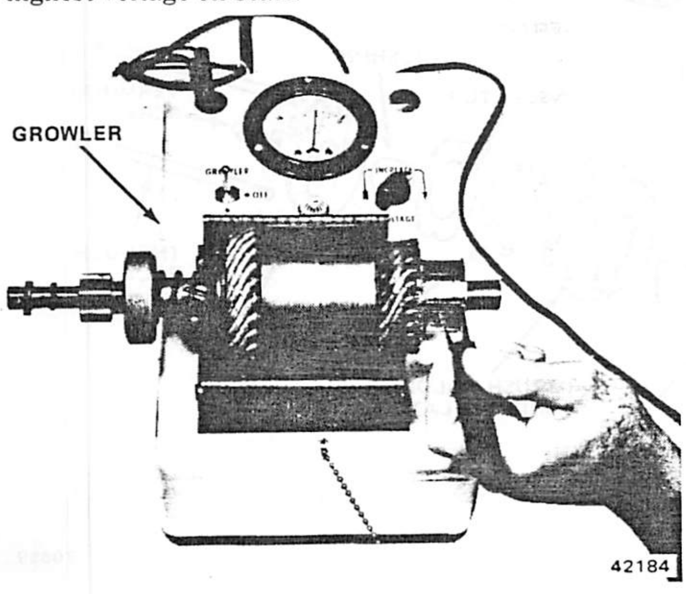

Fig. 1F-23 Armature Balance Test

(4) Test each commutator bar with adjacent bar until all bars have been tested. Zero voltage indicates short circuit between commutator bars.

STARTER MOTOR REPLACEMENT

Removal

(1) Disconnect cable from starter motor terminal.

(2) Remove attaching screws and remove starter motor from flywheel (drive plate) housing.

Installation

(1) Position starter motor on flywheel (drive plate) housing.

NOTE: *Ensure mounting surfaces are free of burrs and debris.*

(2) Install mounting screws and tighten with 18 foot-pounds (24 N•m) torque.

(3) Clean terminal bracket on starter motor and terminal end of cable.

(4) Position cable on terminal bracket. Install screw and tighten with 55 inch-pounds (6 N•m) torque.

NOTE: *Initial torque may exceed this specification if the end plate is new. The terminal screw cuts threads in the terminal during installation.*

STARTER MOTOR OVERHAUL

Refer to figure 1F-24 for parts identification.

Disassembly

(1) Remove drive yoke cover and screw.

(2) Remove through-bolts and remove brush end plate.

(3) Remove brush springs. Pull brushes from brush holder. Remove brush holder from frame.

(4) Remove drive end housing and drive yoke return spring.

(5) Remove pivot pin and starter drive yoke.

(6) Remove drive assembly and armature.

Cleaning and Inspection

(1) Use brush or air to clean starter frame, field windings, armature, drive assembly and drive end housing.

(2) Wash all other parts in solvent and dry.

NOTE: *Do not wash clutch or drive assembly.*

(3) Inspect armature windings for broken or burned insulation and poor connections.

(4) Inspect armature windings for open and short circuits as outlined in Armature Tests.

(5) Clean dirty commutator with commutator paper. **Never use emery cloth to clean commutator.**

(6) If armature commutator is worn, out-of-round (0.005 inch or more), or has insulation protruding from between contacts, turn down on lathe.

(7) Inspect armature shaft and bushings for scoring and excessive wear.

(8) Inspect drive assembly pinion gear for damage. An engine that has repeated starter motor pinion gear failures should be inspected for:

- correct ring gear clearance in relation to the starter motor mounting surface as illustrated in figure 1F-25.
- missing or wrong parts or misaligned flywheel (drive plate) housing.
- wobbling ring gear. Maximum allowable runout is 0.030 inch (0.76 mm). Inspect for broken welds or broken flex plate.
- foreign object such as converter balance weight in drive plate housing.

NOTE: *Inspect the entire circumference of the ring gear for damage when the teeth of the drive assembly pinion gear are damaged. A normal wear pattern will be found in three places on 6-cylinder engine ring gears and four places on 8-cylinder engine ring gears. The normal wear pattern extends approximately two inches along the circumference of the ring gear.*

(9) Inspect drive assembly overrunning clutch by grasping and rotating pinion gear. Gear should rotate freely in one direction and lock in opposite direction.

(10) Inspect for broken brush springs. Replace springs that are discolored from heat. Replace brushes if worn to 1/4 inch (6.4 mm) in length.

(11) Inspect field windings for burned or broken insulation and for broken or loose connections. Examine field brush connections and wire insulation.

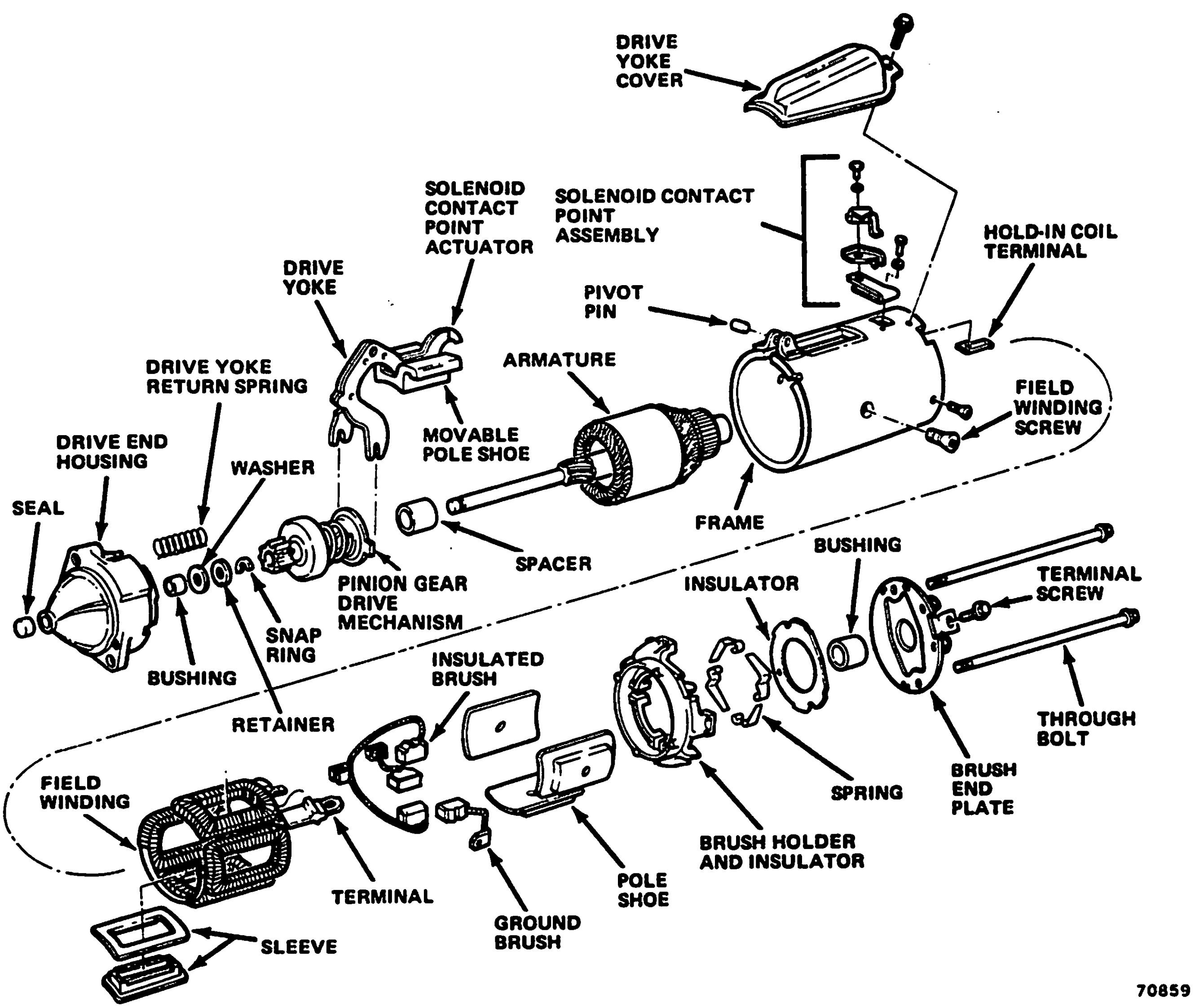

Fig. 1F-24 Parts Identification

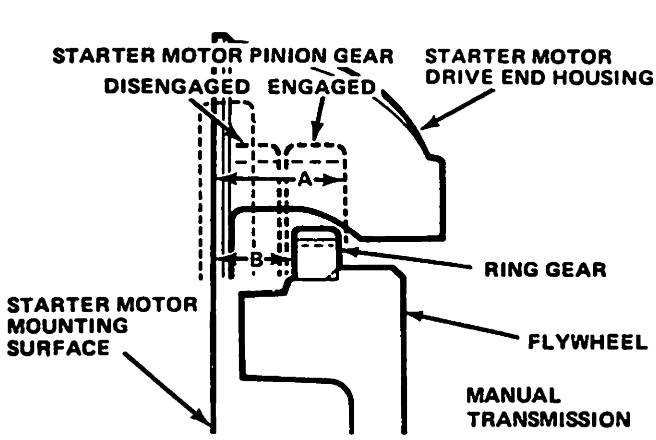

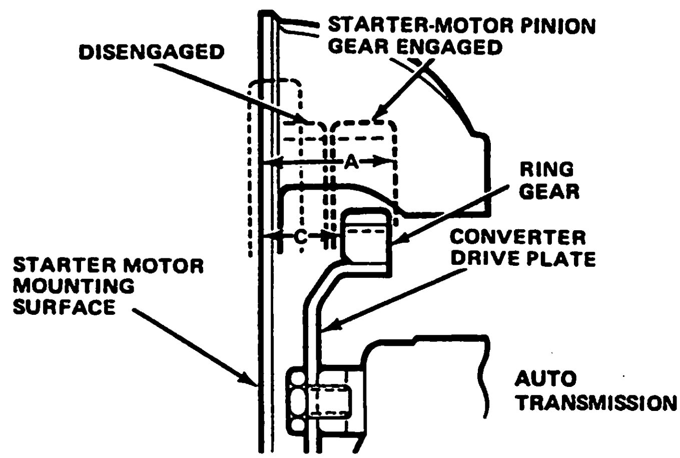

ENGINE	FLYWHEEL (INCHES)			
	A		B	
6-CYLINDER	1.2465 TO 1.2060	1 - 1/4 TO 1 - 13/64	0.8365 TO 0.7660	27/32 TO 49/64
8-CYLINDER	1.2465 TO 1.2035	1 - 1/4 TO 1 - 13/64	0.8365 TO 0.7635	27/32 TO 49/64

60137

ENGINE	DRIVE PLATE (INCHES)			
	A		C	
6-CYLINDER	1.2465 TO 1.2060	1 - 1/4 TO 1 - 13/64	0.8305 TO 0.7700	53/64 TO 49/64
8-CYLINDER	1.2465 TO 1.2035	1 - 1/4 TO 1 - 13/64	0.8305 TO 0.7675	53/64 TO 49/64

60138

Fig. 1F-25 Flywheel/Drive Plate-To-Ring Gear Clearance

Field Winding Replacement

Remove armature and brush holder before proceeding with this procedure.

(1) Remove field winding screws using arbor press and Starter Pole Screw Wrench J-22516. Remove pole shoes.

(2) Cut field winding strap as close as possible to solenoid point contact-to-field winding joint.

CAUTION: *Do not cut solenoid point contact.*

(3) Cut hold-in winding wire at terminal strip.

(4) Straighten tabs of pull-down winding sleeve. Remove sleeve and flange.

(5) Remove field winding assembly from frame.

(6) Clean and tin surfaces of contact tab and field winding strap that are to be soldered.

(7) Install replacement field winding assembly in frame using original pole shoes and screws. Apply drop of Loctite or equivalent to screw threads. Tighten screws using arbor press and Starter Pole Screw Wrench J-22516.

(8) Install pull-down winding sleeve and flange. Have helper hold winding and sleeve assembly against frame while bending retaining tabs.

(9) Wrap hold-in winding wire around terminal strip and solder. Cut off excess wire.

(10) Solder field winding strap to contact strap. Use 600 watt soldering iron and rosin-core solder.

Solenoid Contact Point Assembly Replacement

Remove armature and brush holder before proceeding with this procedure.

(1) Cut upper contact as close as possible to contact point-to-field winding joint.

CAUTION: *Do not cut field winding strap.*

(2) Unsolder hold-in winding wire from terminal strip.

(3) Remove field winding screws using arbor press and Tool J-22516. Remove pole shoes.

(4) Cut rivets inside frame with chisel. Remove contact point assembly.

NOTE: *Ensure holes for second rivet are aligned before upsetting copper rivet.*

(5) Position replacement lower (movable) contact point on frame (fig. 1F-26). Position hold-in winding terminal strip inside frame. Insert *copper* rivet through contact, frame and terminal. Upset rivet.

NOTE: *Ensure upper contact point is positioned on shoulder of plastic insulator before upsetting rivet.*

(6) Install plastic insulator, upper contact point and fiber washer to remaining hole in frame. Insert *aluminum* rivet and upset.

(7) Install field winding assembly, pole shoes and screws. Apply a drop of Loctite or equivalent to each screw.

(8) Solder hold-in winding wire to terminal strip.

(9) Solder field winding strap to upper contact. Use 600 watt soldering iron and rosin-core solder.

Bushing Replacement

Drive End Bushing

(1) Support drive end housing and remove original bushing and seal.

(2) Install replacement bushing using armature and pinion as bushing driver. **Do not** install drive end housing seal at this time.

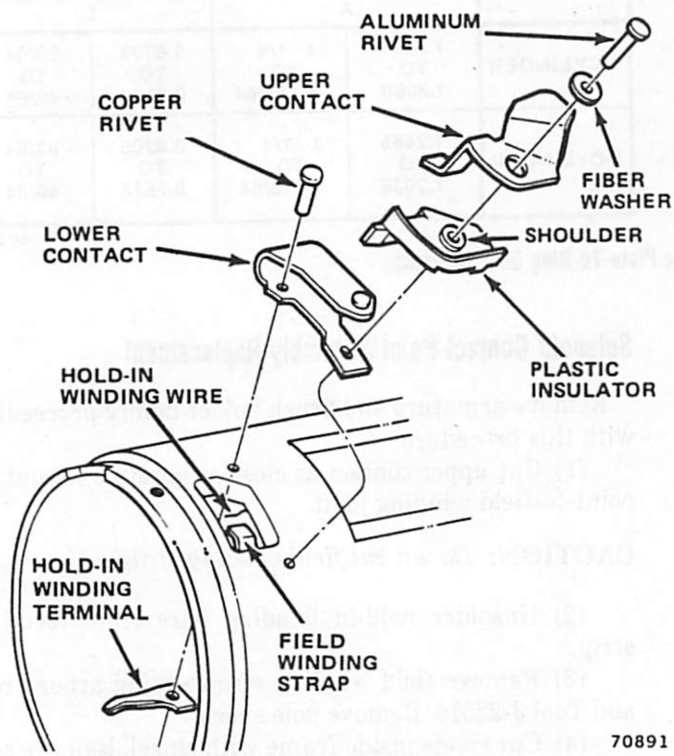

Fig. 1F-26 Solenoid Contact Points Replacement

Commutator End Bushing

(1) Carefully remove original bushing with chisel.

(2) Drive replacement bushing into end plate until seated, using suitable socket or bushing driver.

Drive Assembly Replacement

(1) Pry stop ring off and remove starter motor drive assembly from armature shaft.

(2) Apply grease to armature shaft and end bushings. Service replacement drive assembly is prelubricated.

(3) Apply thin coating of Lubriplate or equivalent on armature shaft splines.

(4) When installing drive assembly, examine snap ring for tight fit on shaft. Slide drive assembly over shaft and install stop ring and original retainer.

Assembly

(1) Insert armature into frame. Install drive yoke and pivot pin. Drive yoke must engage lugs on drive assembly.

(2) Insert drive yoke return spring into recess in drive housing. Join housing to frame.

(3) Install brush holder. Ensure depression in holder aligns with rubber boot on terminal.

(4) Insert brushes into brush holder. Refer to figure 1F-27 for proper wire routing. Install brush springs.

(5) Install end plate. Align hole in terminal with hole in terminal bracket.

(6) Install through-bolts.

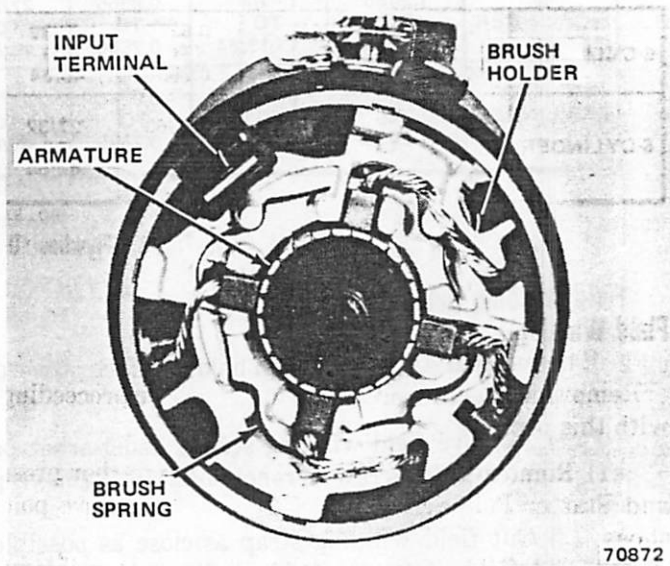

Fig. 1F-27 Brush Wire Routing

(7) Depress movable pole shoe and adjust contact point clearance by bending upper contact as required. Refer to Specifications.

(8) Install drive yoke cover and screw.

NEUTRAL SAFETY SWITCH REPLACEMENT

(1) Disconnect wiring connector and remove switch from transmission. Allow fluid to drain into container.

(2) Move selector lever to Park and Neutral positions. Inspect switch operating lever fingers to ensure they are properly centered in switch opening.

NOTE: *Check linkage adjustment before replacing switch.*

(3) Install switch and seal on transmission case. Tighten switch with 24 foot-pounds (6 N•m) torque.

(4) Test switch continuity.

(5) Correct transmission fluid level as required.

SPECIFICATIONS

Six- and Eight-Cylinder Engine Starter Motor Specifications

Item	Specifications
Frame Diameter	4.5 inches (114.3 mm)
Brush Length	0.5 inches (12.7 mm)
Wear Limit	0.25 inches (6.35 mm)
No Load Test (Free Speed) Volts Amps Min. RPM Max. RPM	 12 67 7380 9356
Contact Point Clearance	0.100 - 0.020 inch (2.5 - 0.5 mm) (0.060 preferred) (1.5 mm)

80253

Torque Specifications

Service Set-To Torques should be used when assembling components. Service In-Use Recheck Torques should be used for checking a pre-tightened item.

	USA (ft-lbs)		Metric (N·m)	
	Service Set-To Torque	Service In-Use Recheck Torque	Service Set-To Torque	Service In-Use Recheck Torque
Neutral Safety Switch-to-Transmission Case	17	14-21	23	19-28
Starter Motor-to-Flywheel/Converter Housing	18	13-25	24	18-34
Starter Terminal Screw	55 in-lbs	40-70 in-lbs	6	4.5-9

All Torque Values given in foot-pounds and newton meters with dry fits unless otherwise specified.

81184

Tools

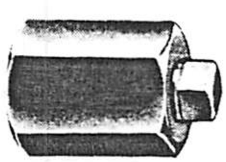

J-22516
STARTER POLE
SCREW WRENCH

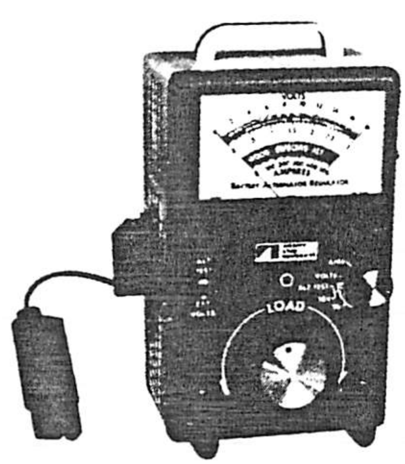

AMA 21-317
CIRCUIT TESTER

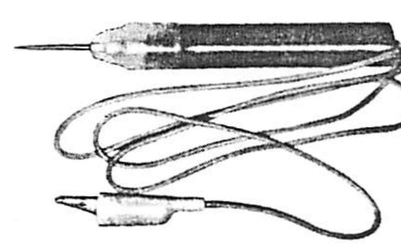

J-21008
CONTINUITY
TEST LAMP

70112

NOTES

IGNITION SYSTEMS 1G

SECTION INDEX

FOUR-CYLINDER ENGINE IGNITION SYSTEM

GENERAL

The four-cylinder engine High Energy Ignition (HEI) System consists of the battery, the distributor with integral electronic module, the ignition coil, the ignition switch, the spark plugs, and the primary and secondary wiring. Refer to Chapter 1D—Batteries for battery information.

HEI SYSTEM COMPONENTS

The High Energy Ignition System distributor combines all ignition components (except the ignition coil) into one unit (figs. 1G-1 and 1G-2). The external connections are for the ignition switch, tachometer, and spark plugs. The ignition switch terminal at the coil has full battery voltage applied when the ignition switch is in the RUN and START positions. There is no ballast resistor or resistance wire between the switch and distributor.

The ignition coil (fig. 1G-3) is attached to the cylinder block adjacent to the distributor.

The High Energy Ignition System functions basically the same as a conventional ignition system, but the electronic module and pickup coil replace the contact points.

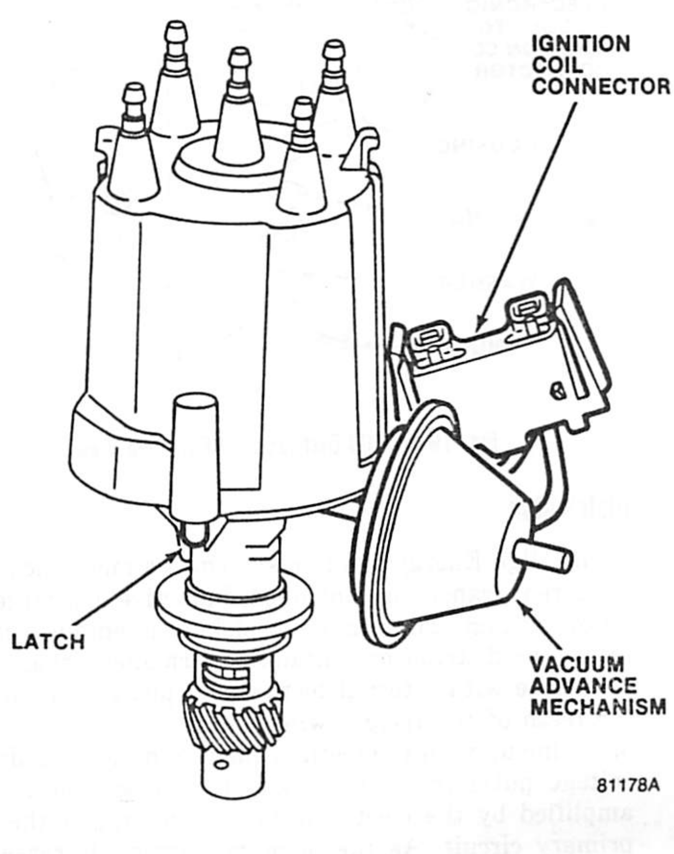

Fig. 1G-1 HEI Distributor

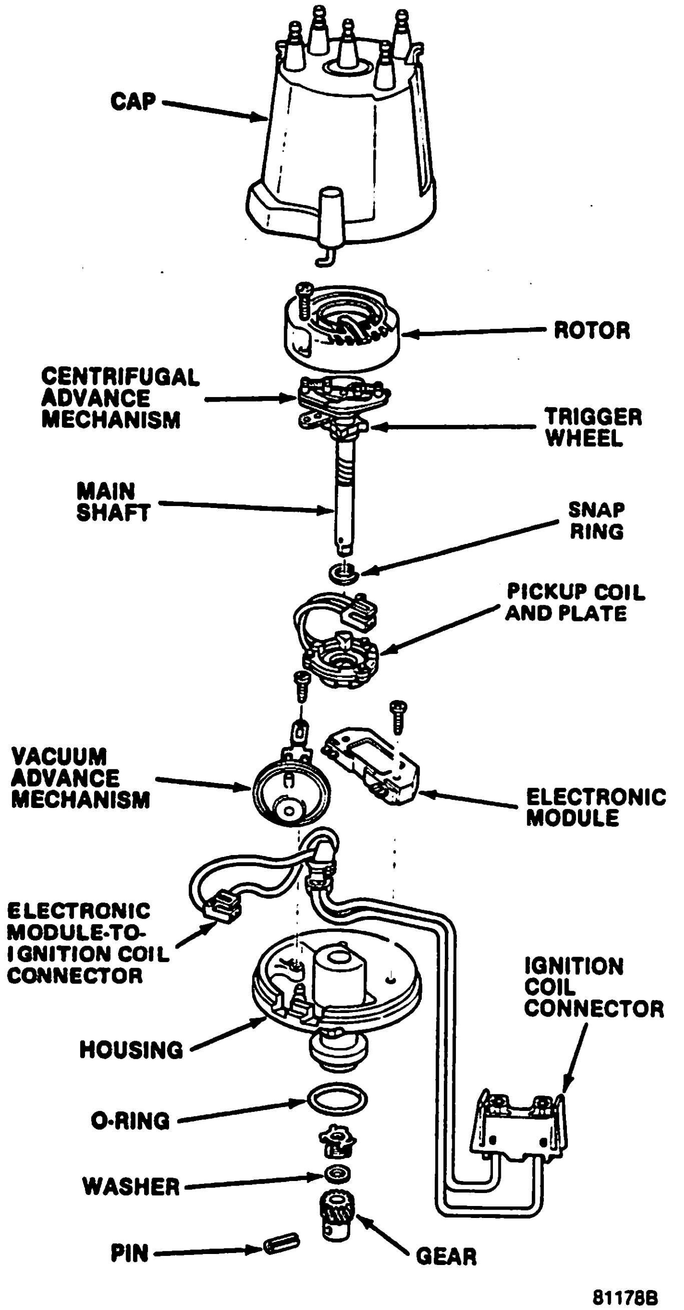

Fig. 1G-2 HEI Distributor—Exploded View

Distributor

The High Energy Ignition system is a magnetic pulse triggered, transistor controlled, inductive discharge ignition system. The magnetic pickup assembly located inside the distributor contains a permanent magnet, a pole piece with internal teeth and a pickup coil. When the teeth of the trigger wheel rotating inside the pole piece line up with the teeth of the pole piece, an induced voltage pulse from the pickup coil is applied to and amplified by the electronic module to trigger the coil primary circuit. As the primary current decreases, a high voltage is induced in the ignition coil secondary winding, which is applied to the rotor and secondary

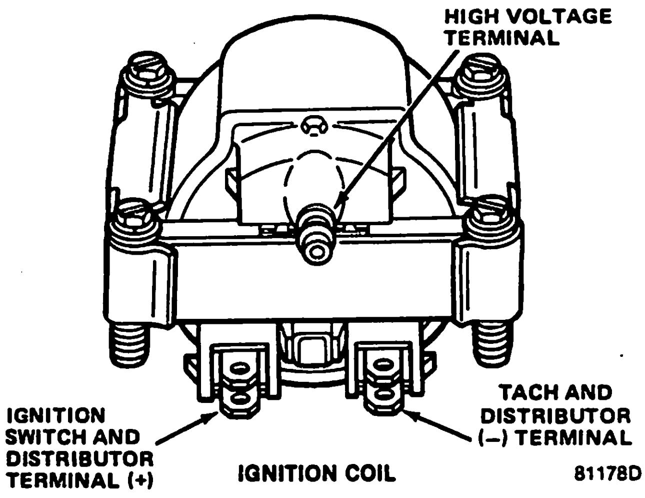

Fig. 1G-3 HEI System Ignition Coil

wires to fire the spark plugs. The capacitor in the distributor is for radio interference noise suppression.

The magnetic pickup assembly mounted over the main bearing on the distributor housing is shifted by the vacuum control unit to provide vacuum advance. The trigger wheel is shifted about the shaft by conventional advance weights to provide centrifugal advance.

The electronic module automatically controls the dwell period, extending it as engine speed is increased. The HEI system also features a longer spark duration that is made possible by the increased amount of electromagnetic energy stored in the coil primary. This is desirable for igniting lean mixtures.

No periodic lubrication is required. Engine oil lubricates the lower bushing and an oil-filled reservoir provides lubrication for the upper bushing.

NOTE: *When conducting cylinder compression tests, disconnect ignition switch connecting wire (yellow) from HEI system.*

Ignition Timing

Timing specifications are listed in Chapter 1A—General Service and Diagnosis and on the Emission Control Information label located in the engine compartment. When using a timing light, connect an adapter between the No. 1 spark plug and the No. 1 spark plug wire, or use a light with an inductive type pick-up. **Do not pierce the spark plug wire.** Once the insulation of a spark plug wire has been broken, the high voltage will cause arcing to the nearest ground, and the spark plug will not fire properly. Always refer to the Emission Control Information label when adjusting the timing. Refer to figure 1G-4 when loosening the distributor holddown clamp.

A magnetic timing probe socket is located on the timing gear cover for use with special electronic timing equipment. Figure 1G-5 depicts the typical magnetic

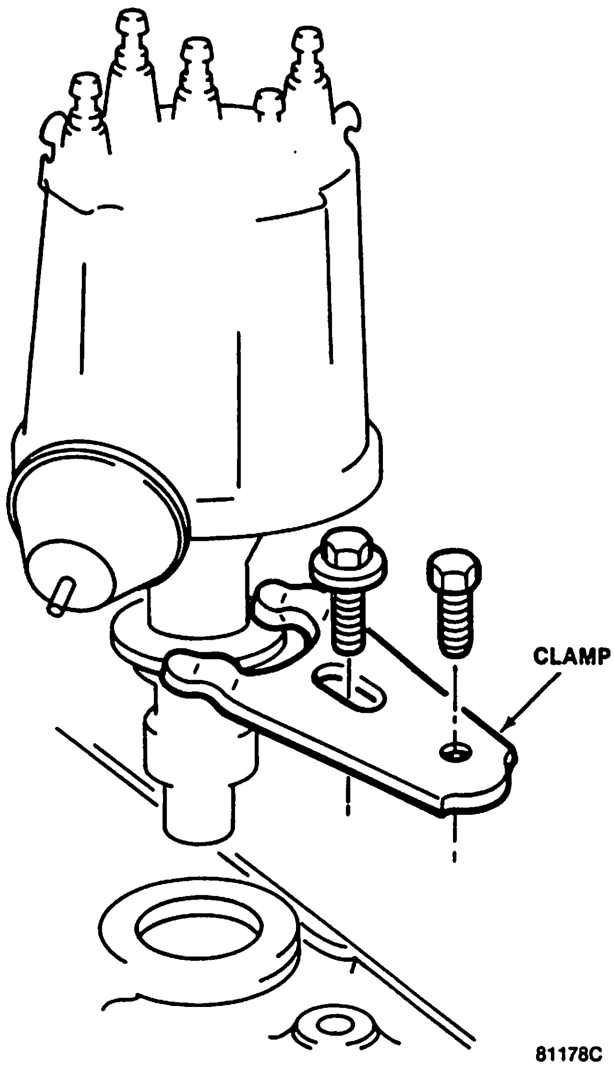

Fig. 1G-4 Distributor Holddown Clamp

timing probe socket. Consult the manufacturer's instructions for use of this type equipment.

Ignition Coil

The ignition coil is oil filled and hermetically sealed. It has two windings wound on a soft iron core. The function of the ignition coil is to transform the battery voltage applied to the primary circuit to high voltage for the secondary circuit.

The ignition coil does not require special service other than maintaining the connector terminals clean.

Secondary Wiring

The spark plug wiring used with the HEI system is a carbon impregnated cord conductor encased in an 0.3125-inch (8 mm) diameter silicone rubber jacket. The silicone rubber jacket will withstand very high temperatures and also provides an excellent insulator for the higher voltage provided by the HEI system. The silicone rubber spark plug boots form a tight seal around the

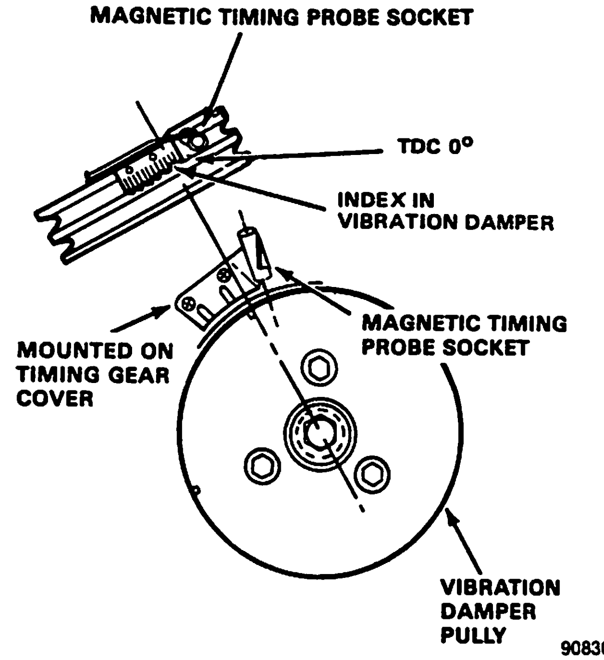

Fig. 1G-5 Magnetic Timing Probe Socket and Timing Degree Scale

plug. **The boot should be twisted 1/2 turn before removing.** Care should also be exercised when connecting a timing light or other test equipment. Do not force anything between the boot and wiring or through the silicone rubber jacket. Connections should be made in parallel using an adapter. DO NOT pull on the wire to remove. Pull on the boot or use a tool designed for this purpose.

Spark Plugs

Resistor type, tapered seat spark plugs are used (fig. 1G-6). No gasket is used with tapered seat plugs. Refer to figure 1G-7 for an explanation of the spark plug code.

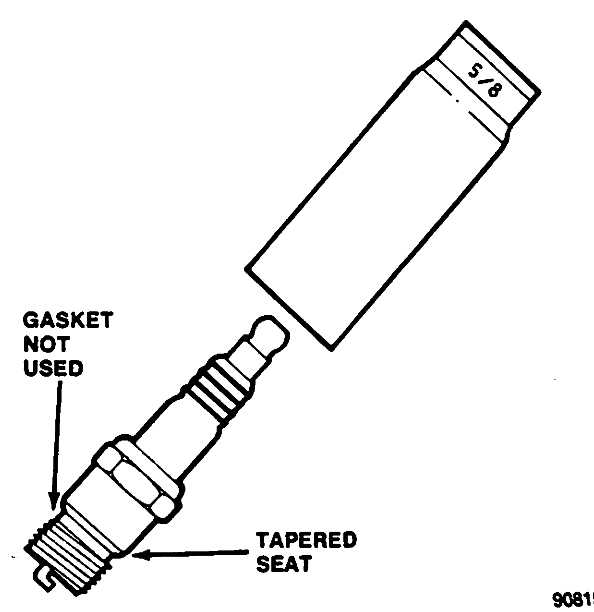

Fig. 1G-6 Tapered Seat Spark Plug

1 2 3 4 5
R 4 4 T S X

1 — R-INDICATES RESISTOR-TYPE PLUG.
2 — 4-INDICATES 14 mm THREADS.
3 — 4-HEAT RANGE.
4 — T-TAPERED SEAT.
S-EXTENDED TIP
5 — X-SPECIAL GAP.

90831

Fig. 1G-7 Spark Plug Code

Refer to the Tune-Up Specifications listed in Chapter 1A for spark plug application and gap sizes. Always replace plugs with the correct plug type listed in the tune-up specifications.

Normal engine operation is usually a combination of idling, slow-speed, and high-speed driving. Occasional high-speed driving is needed for good spark plug performance because it provides increased combustion heat that burns away deposits of carbon or oxide that have built up from frequent idling or continual stop-and-go driving.

The spark plugs are protected by insulating boots made of special heat-resistant silicone rubber that covers the spark plug terminal and extends downward over a portion of the porcelain insulator. These boots prevent arcing, which causes engine misfire. The dirt film that builds up on the exposed portion of the plug will not cause arcing.

NOTE: *Do not mistake corona discharge for arcing or as the result of a shorted insulator. Corona is a steady blue light haze appearing around the insulator, just above the shell crimp. It is the visible evidence of a high electrostatic voltage field and has no effect on ignition performance. Usually it can be detected only in darkness. This discharge may repel dust particles and leave a clear ring on the insulator just above the shell. This ring is sometimes mistakenly regarded as evidence that combustion gases have blown out between shell and insulator.*

Ignition Switch

The mechanical key-controlled ignition switch is located in the steering column on the right-hand side just below the steering wheel. The electrical switching portion of the assembly is separate from the key and lock cylinder and is located on top of the column. Both function together through the action of the actuator rod.

For a complete explanation of the key and lock cylinder, and the actuator rod, refer to Chapter 2H—Steering Column. Refer to Chapter 3R—Lighting Systems for the detailed explanation of the electrical components.

DIAGNOSIS

HEI Distributor and Ignition Coil

Refer to Ignition System Troubleshooting Chart.

Spark Plugs

Faulty or dirty plugs may perform well at idling speed, but at higher speeds they frequently fail. Faulty plugs are identified in a number of ways: poor fuel economy, power loss, loss of speed, hard starting and, in general, poor engine performance.

Spark plugs may also fail because of carbon fouling, excessive gap, or a broken insulator.

Fouled plugs may be verified by inspecting for black carbon deposits. The black deposits are usually the result of slow-speed driving when sufficient engine operating temperature is seldom reached. Worn pistons and rings, faulty ignition, an over-rich air/fuel mixture and the use of spark plugs with too low of a heat range will also result in carbon deposits.

Excessive gap wear, on plugs with low mileage, indicates that the engine has been operating at high speeds continuously or with loads that are greater than normal, or that plugs that have too high of a heat range are being used. Electrode wear may also be the result of the plug being overheated. This can be caused by combustion gases leaking past the threads because of insufficient tightening of the spark plug. An excessively lean air/fuel mixture will also result in abnormal electrode wear.

A broken lower insulator is usually the result of improper installation or carelessness when regapping the plug. Broken upper insulators usually result from a poor fitting wrench or an outside blow. A cracked insulator may not be evident immediately, but will as soon as oil or moisture penetrates the crack. The crack will usually be located just below the crimped part of the shell and may not be visible.

Broken lower insulators usually result from carelessness when regapping and are generally visible. This type of break may also result from the plug operating too "hot," which may occur during periods of extended high-speed operation or with heavy engine loads. When regapping a spark plug, always make the gap adjustment by bending the ground (side) electrode. Spark plugs with broken insulators should always be replaced. Spark plugs should be tightened with 15 to 25 foot-pounds (20 to 34 N•m) torque.

ON-VEHICLE SERVICE

HEI Distributor and Ignition Coil

Precautions and General Information

(1) When performing cylinder compression tests, disconnect ignition switch (BAT) wire at distributor.

Ignition System Troubleshooting Chart

ENGINE WILL NOT START

NOTE: IF A TACHOMETER IS CONNECTED TO THE TACHOMETER TERMINAL, DISCONNECT IT BEFORE PROCEEDING WITH THE TEST.

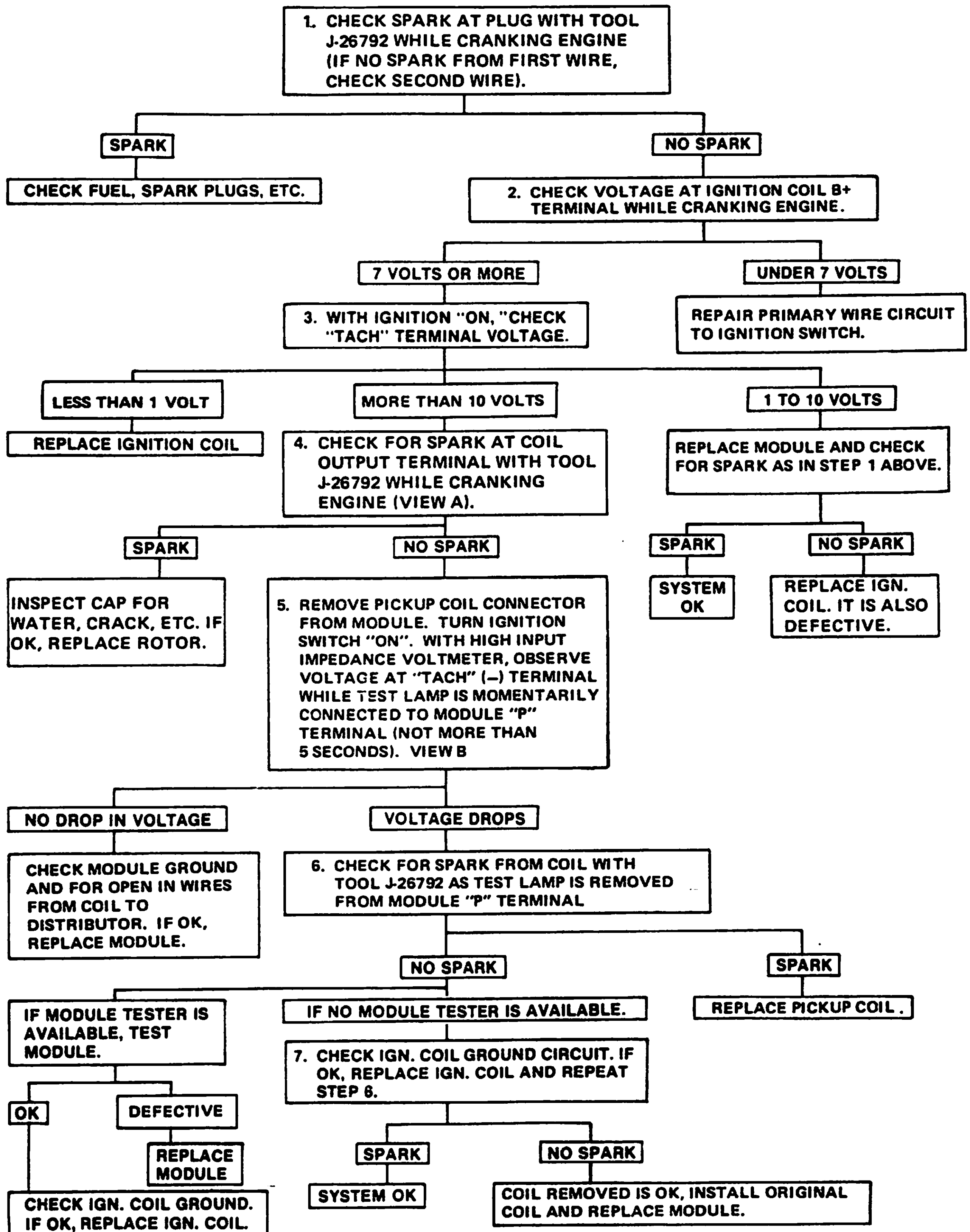

90832A

NOTE: REFER TO VIEWS A AND B.

Ignition System Troubleshooting

INTERMITTENT ENGINE OPERATION OR MISFIRE

- CHECK SPARK AT TWO PLUG WIRES WITH TOOL J-26792
  - SPARK FROM ONE OR BOTH WIRES
    - CHECK PICKUP COIL WITH OHMMETER (VIEW C) REFER TO TESTING PICKUP COIL
      - DEFECTIVE
        - REPLACE
      - GOOD
        - CHECK FOR DWELL INCREASE FROM HIGH TO LOW RPM
          - DWELL INCREASE
            - TROUBLE NOT FOUND
              - CHECK FUEL, COIL AND PLUG WIRES, CAP AND PLUGS
          - DWELL DID NOT INCREASE
            - REPLACE ELECTRONIC MODULE
  - NO SPARK
    - CONTINUE WITH NO START PROCEDURE

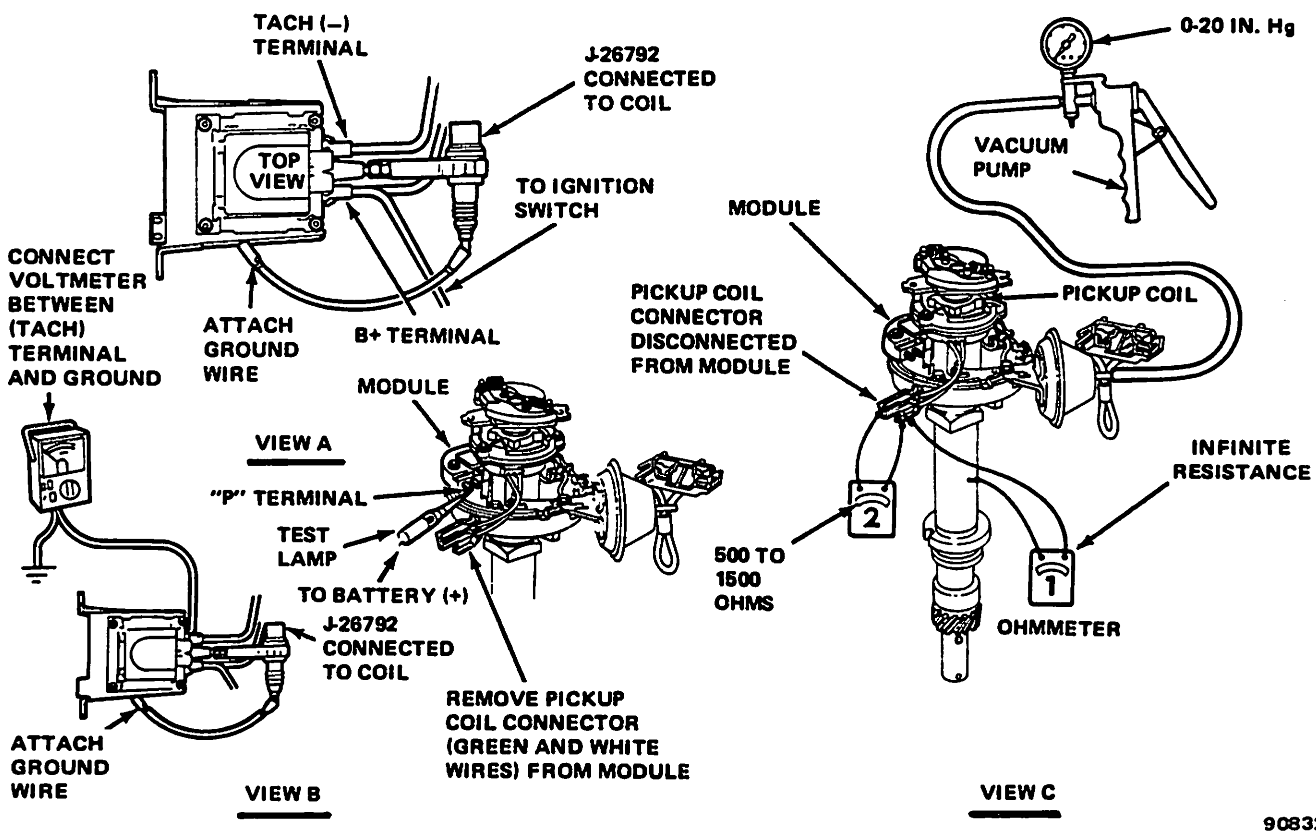

908328

When disconnecting this connector **do not** use a screwdriver or tool to release locking tab because it may break.

(2) No periodic lubrication is required. Engine oil lubricates lower bushing and oil-filled reservoir provides lubrication for upper bushing.

(3) Tachometer (TACH) terminal is located opposite to ignition switch (BAT) terminal on ignition coil.

CAUTION: *The tachometer terminal must NEVER be connected to ground because damage to the electronic module and/or ignition coil can result.*

NOTE: *Some tachometers currently in use may NOT be compatible with the High Energy Ignition System. Consult the manufacturer of the tachometer if unsure.*

(4) Dwell is controlled by electronic module and cannot be manually adjusted.

(5) Centrifugal advance and vacuum advance mechanisms are similar to those used with conventional ignition systems.

(6) Insulating jacket material used to construct spark plug wires is very soft. It will withstand more heat and higher voltage, but is more susceptible to chafing and cutting. Spark plug wires must be routed correctly to prevent chafing or cutting. Refer to Spark Plug Wires. When removing spark plug wire from spark plug, twist boot on spark plug and pull **on boot** to remove wire, or use special tool designed to remove spark plug boots.

Distributor Replacement

(1) Disconnect distributor wire connector from ignition coil. Disconnect "pigtail" wires going to ignition switch and tachometer (if equipped).

(2) Remove distributor cap by turning two latches counterclockwise (requires "stubby" screwdriver). Move cap out of way.

(3) Remove vacuum hose from vacuum advance mechanism.

(4) Remove distributor holddown clamp bolt and clamp (fig. 1G-4).

(5) Note position of rotor, then pull distributor up until rotor stops turning counterclockwise and again note position of rotor.

NOTE: *To ensure correct installation position of the distributor, the distributor must be INSTALLED with the rotor correctly positioned as noted above.*

(6) If crankshaft was accidentally rotated after distributor was removed, use following procedure for installing distributor:

(a) Remove No. 1 spark plug.

(b) Place finger over No. 1 spark plug hole and crank engine slowly until compression is felt.

(c) Align timing mark on vibration damper at 0° on graduated degree scale on timing gear cover.

(d) Turn rotor to point between No. 1 and No. 3 spark plug towers on distributor cap.

(e) Install distributor cap and spark plug wires.

(f) Install distributor and connect wire connector to ignition coil.

(g) Connect ignition switch and tachometer (if equipped) wire connectors.

(h) Check distributor timing (refer to Ignition Timing).

NOTE: *When diagnosing the cause of an oil leak at the rear of the engine, inspect the gasket at the case of the distributor for damage.*

Rotor Replacement

(1) Remove distributor cap as described in Distributor Replacement.

(2) Remove rotor. Rotor is retained by two screws and has a slot that fits over square lug on advance weight base so that rotor can be installed in only one position.

Electronic Module Replacement

It is not necessary to remove the distributor from the engine to replace the module. Refer to figure 1G-8.

(1) Remove distributor cap and rotor.

(2) Remove two module attaching screws and lift module up.

(3) Disconnect pickup coil wire connector from module. (Observe wire colors because connectors must not be interchanged.) Disconnect wire harness connector.

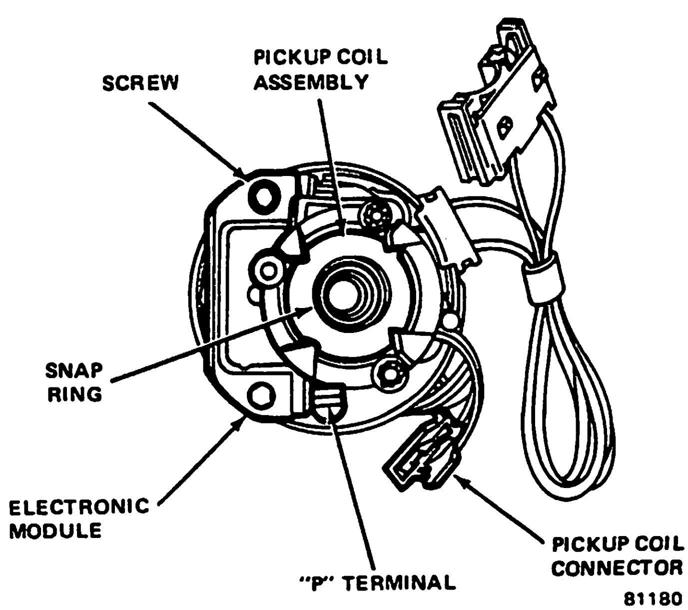

Fig. 1G-8 Distributor Components

(4) Do not wipe grease from module or distributor base if same module is to be installed. If replacement module is to be installed, package of silicone dielectric compound will be included with it. Spread compound on metal face of module and on distributor base where module seats. This compound is necessary for module insulation and cooling.

(5) To install, reverse removal procedure.

PickUp Coil Assembly Replacement

(1) Remove distributor from engine. Scribe distributor shaft and gear so that they may be installed in same position.

(2) Drive out roll pin and remove gear.

(3) Remove distributor shaft with rotor and advance weights.

(4) Remove thin snap ring on top of pickup coil assembly, remove pickup coil wire connector from module, and remove pickup coil assembly. Do not remove three screws.

(5) To install, reverse removal procedure. Note alignment marks when installing gear.

Vacuum Advance Mechanism Replacement

(1) Remove distributor cap and rotor. Refer to Rotor Replacement.

(2) Remove two vacuum advance unit attaching screws.

(3) Turn pickup coil clockwise and push rod end of vacuum advance mechanism down so that it will disengage and clear pickup coil plate.

(4) To install, reverse removal procedure.

Ignition Coil Replacement

(1) Disconnect distributor wire harness connector from ignition coil. Disconnect coil-to-distributor high voltage wire. Twist boot one-half turn and pull on boot only to disconnect wire.

(2) Remove three coil attaching screws and remove ignition coil.

(3) To install, reverse removal procedure.

Spark Plug and Ignition Coil Wire Replacement

Use care when removing spark plug wire boots from spark plugs. Twist the boot 1/2 turn before removing and pull on the **boot only** to remove the wire.

When replacing spark plug wires, route the wires correctly and secure in the proper retainers. Failure to route the wires properly can cause radio to have ignition noise, crossfiring of the plugs or short circuit the wires to ground.

Refer to figure 1G-9 for correct spark plug wire routing.

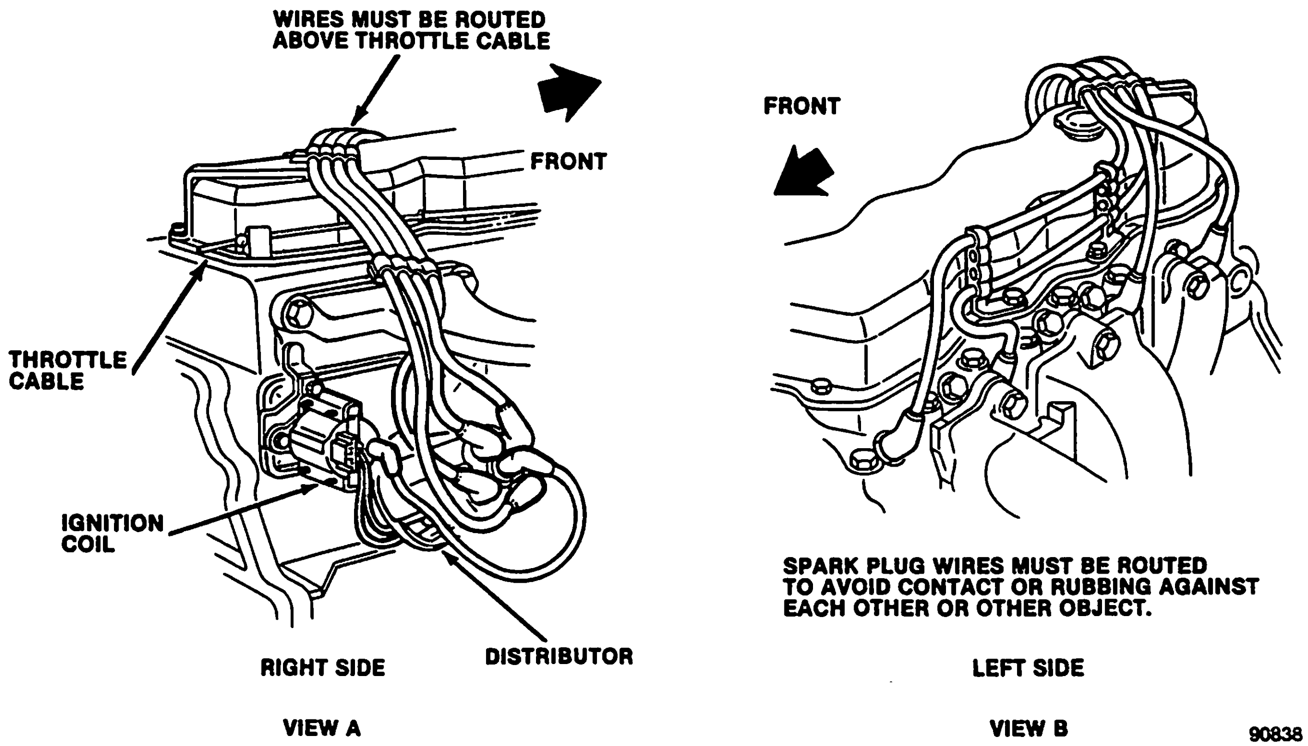

Fig. 1G-9 Spark Plug Wire Routing

TEST PROCEDURES

The procedures listed below are for testing the ignition coil and each component of the distributor separately to identify defective components. The tests can be performed with the distributor and coil installed on the engine or on a repair bench.

Testing Electronic Module

An approved electronic module tester must be used to test the module. Use Tester J-24642, or equivalent. Follow the manufacturer's instructions.

Testing Pickup Coil

Identify the two pickup coil wires. **On most applications, these wires are one green and one white. The pickup coil connector must be disconnected from the module, then an ohmmeter is connected to one connector terminal and to the distributor housing. Next, the ohmmeter is connected to both connector terminals.**

(1) Connect vacuum pump to vacuum advance mechanism. If inoperative, replace mechanism.

(2) Connect ohmmeter (use mid scale) to either pickup coil connector terminal and distributor housing, operate vacuum pump and observe ohmmeter throughout vacuum range.

(3) Ohmmeter should indicate infinite resistance at all times. If not, replace pickup coil.

(4) Connect ohmmeter to both pickup coil connector terminals. Operate vacuum pump and observe ohmmeter throughout vacuum range, and also while flexing wires by hand to locate any intermittent defective connections at pickup coil and at terminals on ends of wires.

(5) Ohmmeter should indicate a constant resistance in 500-1500 ohm range at all times. If not, replace pickup coil.

NOTE: *Operation of the vacuum mechanism may cause a trigger wheel tooth and pickup coil pole piece to align and the ohmmeter pointer to deflect. This deflection should not be interpreted as the result of a faulty pickup coil.*

Testing Ignition Coil

The ignition coil can be tested for shorted and open windings with an ohmmeter.

(1) Connect ohmmeter between positive (+) terminal and coil frame (ground). Use high resistance scale. Ohmmeter should indicate infinite resistance. If not replace coil.

(2) Connect ohmmeter between positive (+) and negative (-) terminals. Use low resistance scale. Ohmmeter should indicate zero (or nearly zero). If not, replace coil.

(3) Connect ohmmeter between negative (-) terminal and high voltage terminal. Use high resistance scale. Ohmmeter should indicate less than infinite resistance. If not, replace coil.

Testing Centrifugal and Vacuum Advance Mechanisms

To test the centrifugal and vacuum advance with the distributor either on or off the vehicle, follow the test equipment manufacturer's instuuctions. Refer to Chapter 1A—General Service and Diagnosis for advance degrees specification. If the advance is not within limits, replace the shaft assembly or vacuum mechanism as required.

Ignition Timing

(1) Refer to Emission Control Information label located in engine compartment and use specifications listed on label.

(2) With ignition off, connect timing light to No. 1 spark plug. Install adapter between spark plug wire and spark plug or use timing light with inductive type pickup. **DO NOT** pierce spark plug wire or attempt to insert jumper wire between boot and spark plug wire. Connect timing light power terminals according to manufacturer's instructions.

WARNING: *Use extreme caution when engine is operating. Do not stand in direct line with fan. Do not put hands near pulleys, belts or fan. Do not wear loose clothing.*

(3) Start engine and aim timing light at timing degree scale. Index on vibration damper will line up with one timing degree mark. If change is necessary, loosen distributor holddown clamp bolt at base of distributor (fig. 1G-4). While observing scale with timing light, slightly rotate distributor until index aligns with correct timing degree mark. Tighten holddown bolt and recheck ignition timing.

(4) Turn off engine and remove timing light. Reconnect No. 1 spark plug wire, if removed.

SPECIFICATIONS

HEI System Schematic

Distributor and Coil Specifications

Distributor Pickup Coil Resistance	500 to 1500 ohms
Ignition Coil	
Primary Resistance	Zero or nearly zero on Low Scale
Secondary Resistance	Less than infinite on High Scale

81112

SPECIFICATIONS

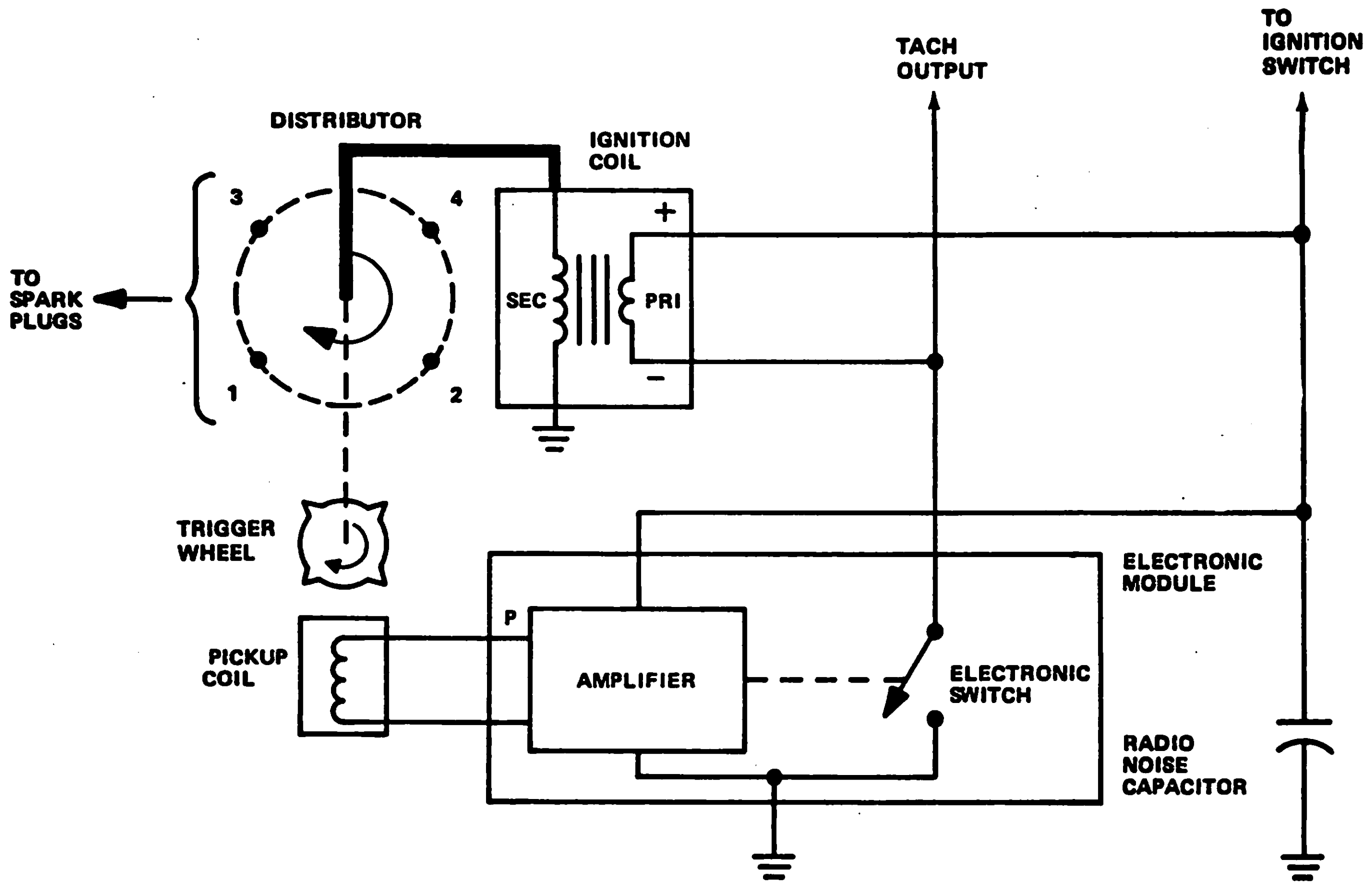

90960

Torque Specifications

Service Set-To Torques should be used when assembling components. Service In-Use Recheck Torques should be used for checking a pre-tightened item.

	USA (ft-lbs)		Metric (N·m)	
	Service Set-To Torque	Service In-Use Recheck Torque	Service Set-To Torque	Service In-Use Recheck Torque
Distributor Clamp Screw	17	15-20	23	20-27
Spark Plugs	11	7-15	15	9-20

All Torque values given in foot-pounds and newton-meters with dry fits unless otherwise specified.

81113

Distributor Wiring Sequence and Engine Firing Order

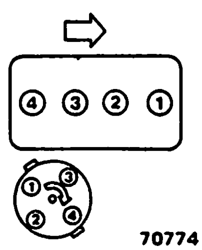

70774

SIX- AND EIGHT-CYLINDER ENGINE IGNITION SYSTEM

GENERAL

The Solid State Ignition (SSI) system is used on all six- and eight-cylinder Jeep engines. This system is easily recognizable by the unique coil connector (fig. 1G-10). The electronic ignition control unit is housed in an unpainted metal container that has unique connectors (fig. 1G-11). The SSI system employs both vacuum (fig. 1G-12) and centrifugal advance mechanisms to advance the ignition timing the correct number of degrees during engine operation. Also, for six-cylinder engines with electronic feedback system, electronic ignition retard is provided via the electronic ignition control unit. This feature delays (retards) the activation of the electronic control unit's normal function a calibrated number of degrees based upon engine operating conditions (i.e., wide open throttle, high engine torque operating condition and cold engine operation).

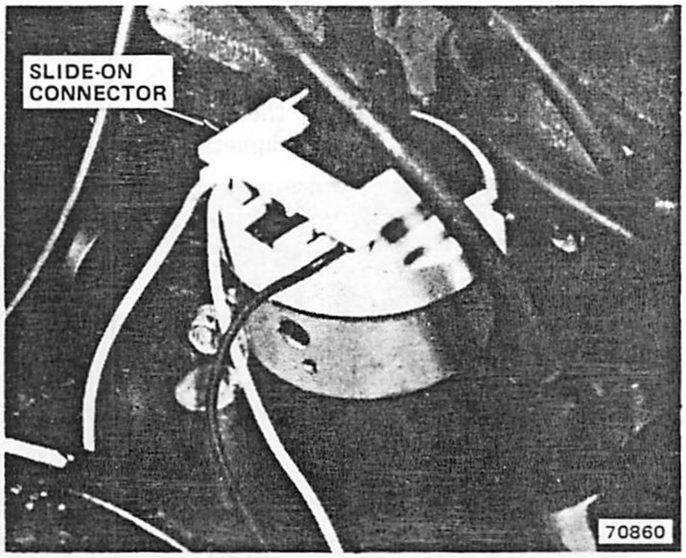

Fig. 1G-10 Coil Connector

COMPONENTS

The SSI system consists of the following major components: ignition switch, electronic ignition control unit, ignition coil, primary resistance wire and bypass, distributor, secondary wires and spark plugs.

NOTE: *When disconnecting SSI system connectors, pull apart with firm, straight pull. Do not attempt to pry apart with a screwdriver. When connecting, press together firmly to overcome hydraulic pressure caused by the silicone dielectric compound.*

NOTE: *If connector locking tabs weaken or break off, do not replace associated component. Bind connectors together with tape or harness tie strap to assure good electrical connection.*

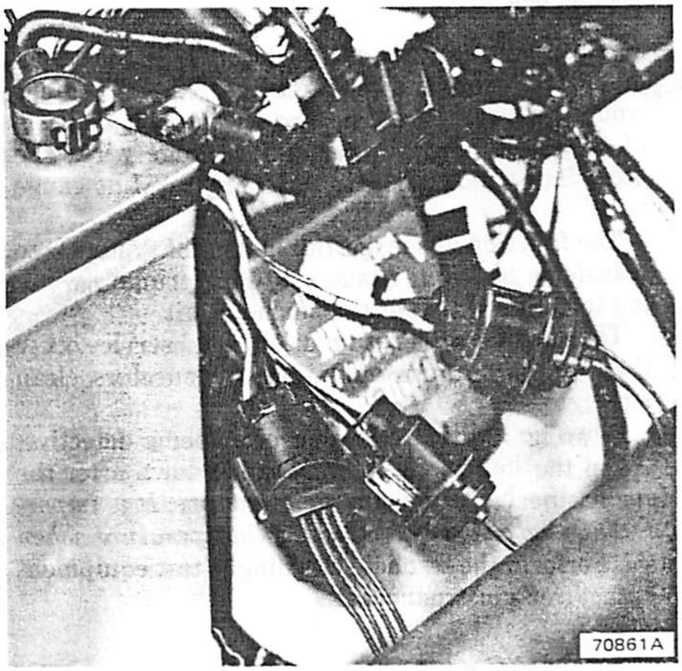

Fig. 1G-11 Electronic Ignition Control Unit

Electronic Ignition Control Unit

The electronic ignition control unit is a solid-state, moisture-resistant module. The component parts are permanently sealed in a potting material to resist vibration and adverse environmental conditions. All connections are weatherproof. The control unit also incorporates reverse polarity and transient voltage protection.

NOTE: *The unit is not repairable and must be replaced as a unit if service is required.*

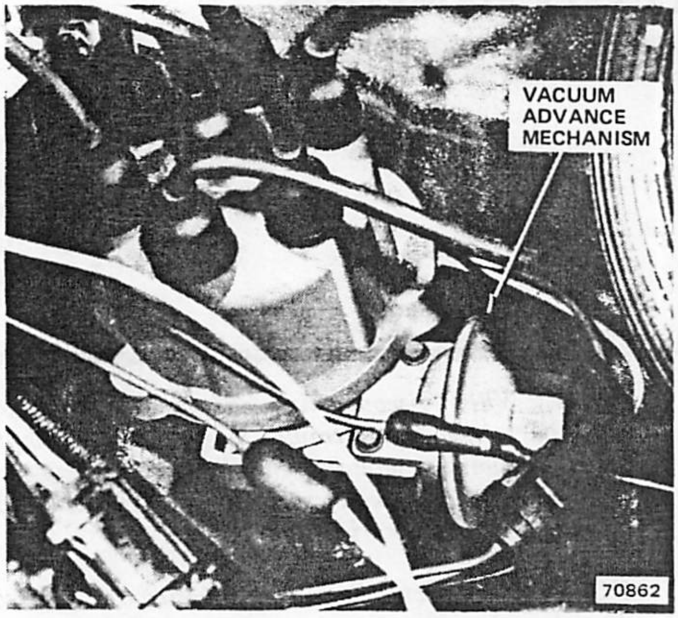

Fig. 1G-12 Distributor Vacuum Ignition Advance Mechanism

Ignition Coil

The ignition coil is oil-filled and hermetically sealed (standard construction). The coil has two windings wound on a soft iron core. The primary winding consists of comparatively few turns of heavy gauge wire. The secondary winding consists of many turns of fine gauge wire.

The function of the ignition coil in the SSI system is to transform battery voltage applied to the primary winding to high voltage for the secondary circuit.

The ignition coil does not require special service other than maintaining the terminals and connectors clean and tight.

When an ignition coil is suspected of being defective, test it on the vehicle. A coil may break down after the engine has heated it to a high temperature. *It is important that the coil be at operating temperature when tested.* Perform the test according to the test equipment manufacturer's instructions.

Ignition Coil Connector

The coil terminals and coil connector are of unique design (fig. 1G-10). The connector is removed from the coil by grasping both sides and pulling connector away from coil (fig. 1G-13).

When a tachometer is required for engine testing or tune-up, connect it using an alligator jaw-type connector as illustrated in figure 1G-14.

Resistance Wire

A wire having 1.35 ± 0.05 ohms resistance is provided in the ignition wiring to supply less than full battery voltage to the ignition coil after the starter motor solenoid is deenergized. During engine starting, the resistance wire is bypassed and full battery voltage is applied to the coil. The bypass is accomplished at the I-terminal on the starter motor solenoid. The bypass switch is energized only while the starter motor circuit is in operation.

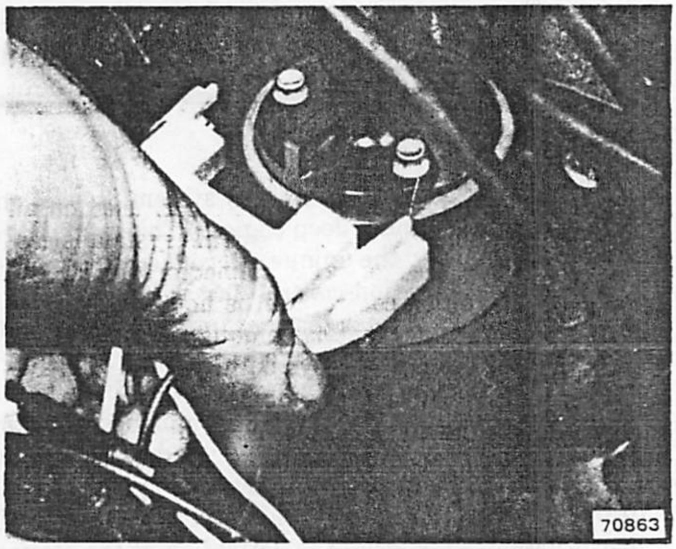

Fig. 1G-13 Removing Coil Connector

Distributor

The distributor consists of three groups of components: pickup coil and trigger wheel, ignition advance mechanism, and cap and rotor.

Pickup Coil and Trigger Wheel

Current flowing through the ignition coil primary winding creates an electromagnetic field around the

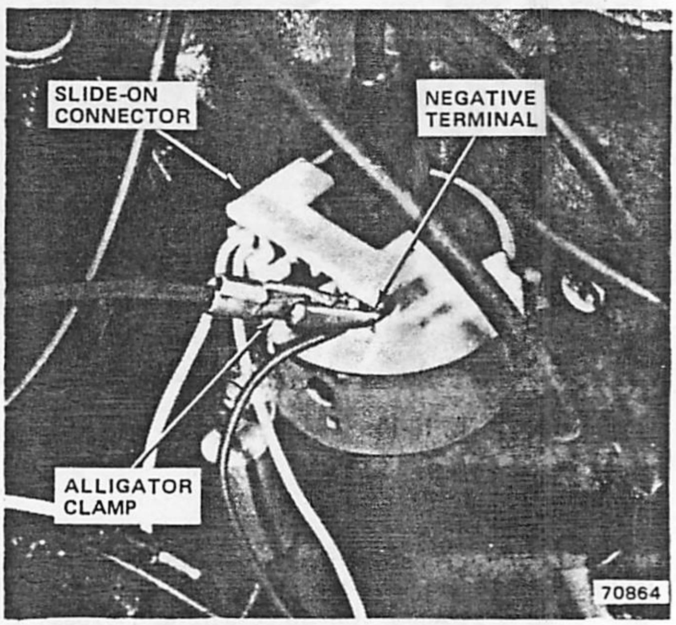

Fig. 1G-14 Tachometer Connection

primary and secondary windings. When the circuit is opened and current flow stops, the electromagnetic field collapses and induces high voltage into the secondary winding. The circuit is opened and closed electronically by the control unit. The distributor pickup coil and trigger wheel provide the input signal for the control unit.

The trigger wheel, mounted on the distributor shaft, has one tooth for each engine cylinder. The wheel is mounted so that the teeth rotate past the pickup coil one at a time.

The pickup coil, a coil of fine gauge wire mounted on a permanent magnet, has a magnetic field that is intensified by the presence of ferrous metal. The pickup coil reacts to the trigger wheel teeth as they pass. As a trigger wheel tooth approaches and passes the pole piece of the pickup coil, it reduces the reluctance (compared to air) to the magnetic field and increases field strength. Field strength decreases as the tooth moves away from the pole piece. This build-up and reduction of field strength induces an alternating current into the pickup coil, which triggers the control unit. The control unit opens and closes the coil primary circuit according to the position of the trigger wheel teeth.

There are no contacting surfaces between the trigger wheel and pickup coil. Because there is no wear, the dwell angle requires no adjustment. The dwell angle is determined electronically by the control unit and is non-adjustable. When the ignition coil primary circuit is switched open, an electronic timer in the control unit keeps the circuit open only long enough for the electromagnetic field to collapse and the induced voltage to discharge. It then automatically closes the coil primary circuit. The period of time the circuit is closed is referred to as *dwell*.

Ignition Advance

Efficient engine operation requires each spark to occur at the correct instant. Varying engine speed or engine load requires the spark to occur either earlier or later than it does for constant speed and load operation.

Centrifugal (mechanical) advance is controlled by engine speed. Flyweights connected to the distributor shaft are thrown outward by centrifugal force. Higher engine rpm throws the weights further out. Calibrated-rate springs are used to control this movement. The outward motion of the flyweights causes the rotor and trigger wheel to be advanced on the distributor shaft several degrees in the direction of normal rotation. This is referred to as *centrifugal ignition advance*.

When the engine is operating with a light load, the carburetor throttle plates restrict airflow. This causes a relatively lean mixture to enter the combustion chambers. Ignition must occur earlier because the lean mixture requires a longer time to burn. The vacuum ignition advance mechanism is used for this purpose. When carburetor ported or manifold vacuum is high, the vacuum advance mechanism moves the pickup coil several degrees opposite to the direction the distributor is rotating. This causes the pickup coil to react to the presence of trigger wheel teeth earlier. This is referred to as *vacuum ignition advance*. With low vacuum operating conditions, such as wide open throttle acceleration, a spring in the vacuum unit pushes the pickup coil back to a position of no advance.

Cap and Rotor

The central tower on the distributor cap is connected directly to the high voltage at the ignition coil. The current flows through the spring-loaded contact on the rotor to the carbon button in the cap. The rotor tip aligns with a contact in the cap that corresponds to the cylinder to be ignited just as the ignition coil output high voltage is applied to the rotor. In this way, each spark plug is "fired" in turn.

OPERATION

The control unit is activated when the ignition switch is in the Start or On position (fig. 1G-15). The primary circuit is closed and current flows through the coil primary winding. When the engine begins turning the distributor, the trigger wheel teeth rotate past the pickup coil. As each tooth aligns with the pickup coil, the resulting pulse triggers the control unit and it closes the primary circuit. A high voltage is then induced in the ignition coil secondary winding and current flows to the distributor cap and rotor. The rotor connects the high voltage to the proper spark plug. The timing of the ignition is constantly changed by the vacuum and centrifugal advance mechanisms according to engine operation.

DIAGNOSIS

For diagnostic purposes, ignition system problems are considered in three categories: complete failure, intermittent failure and spark knock (pre-ignition).

Complete failure is always a no-ignition situation. The engine will not start. If a complete failure occurs when the engine is operating, it will not restart.

Intermittent failure is temporary. The engine may not start on the first try, but will eventually start. If an intermittent failure occurs when the engine is operating, it may falter and possibly stop. If it stalls, it will restart and will continue to operate intermittently.

Spark knock (pre-ignition) is not actually an ignition system failure. The engine will start and will continue to operate. If not corrected, spark knock can cause extensive internal engine component damage.

Complete Failure Diagnosis

The first step to perform is a thorough visual inspection for obvious defects.

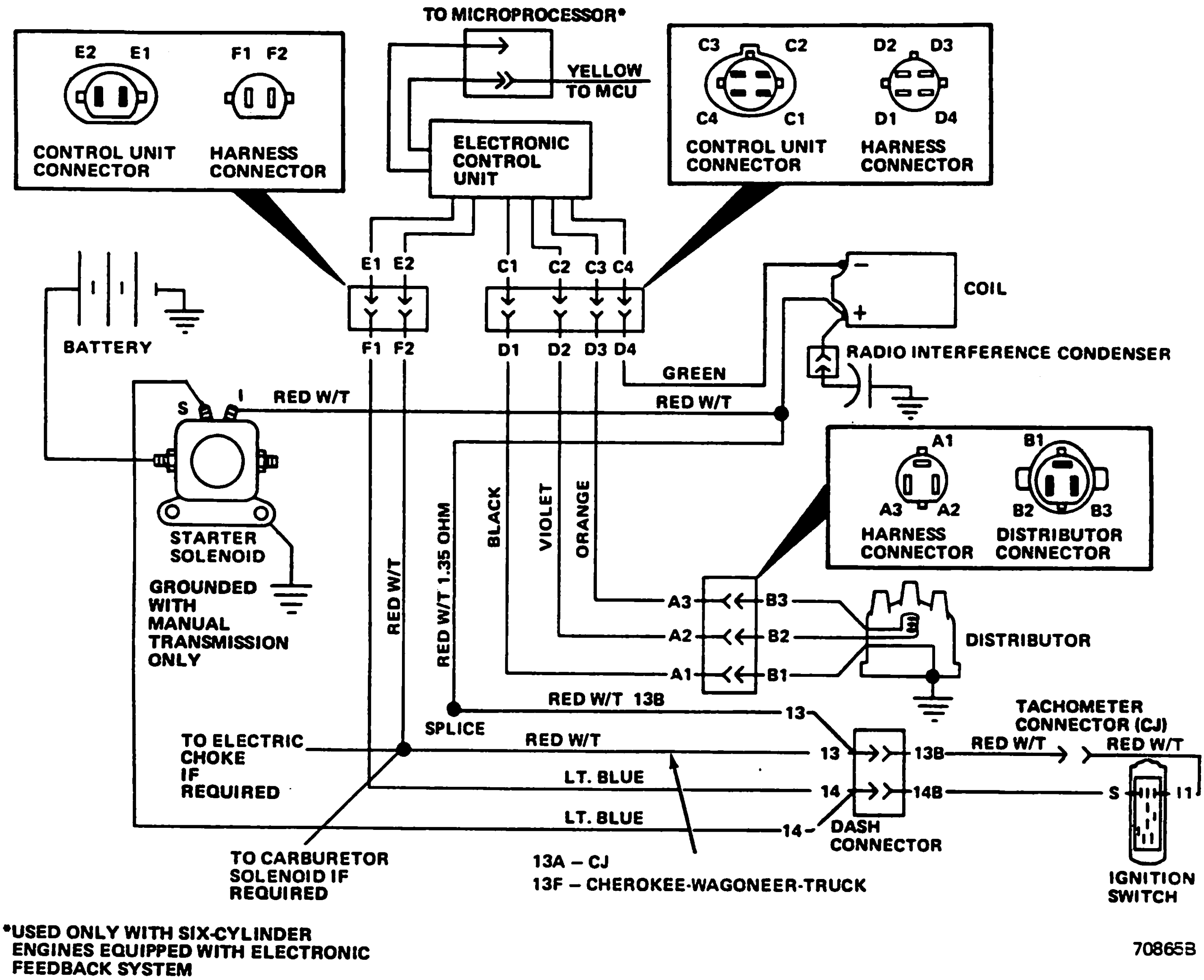

Fig. 1G-15 SSI System Schematic

The next step in diagnosing a failure is to identify the circuit—primary or secondary—at fault.

The primary circuit consists of:

- ignition switch,
- battery-to-ignition coil wiring,
- ignition coil primary winding,
- all wires connected to the electronic ignition control unit and distributor pickup coil,
- electronic ignition control unit, and
- distributor.

The secondary circuit consists of:

- ignition coil secondary winding,
- all high voltage wires connected to the distributor cap, coil and spark plugs,
- distributor cap,
- distributor rotor, and
- spark plugs.

Secondary Circuit Diagnosis

CAUTION: *When disconnecting a high voltage wire from a spark plug or the distributor cap, twist the rubber boot slightly to break it loose. Grasp the boot, not the wire, and pull off with steady, even force.*

(1) Disconnect ignition coil wire from center tower of distributor cap. Use insulated pliers to hold wire terminal approximately 1/2 inch from cylinder block, head or intake manifold.

WARNING: *Use extreme caution when engine is operating. Do not stand in direct line with fan. Do not put hands near pulleys, belts or fan. Do not wear loose clothing.*

(2) Rotate engine with starter motor and observe wire terminal for arc.

(a) If no arc occurs, proceed with step (5).

(b) If arc occurs, proceed with step (3).

CAUTION: *Do not remove wires from spark plugs for cylinders 1 or 5 of a six-cylinder engine or for cylinders 3 or 4 of an eight-cylinder engine when performing this test, otherwise pickup coil may be damaged.*

(3) Connect ignition coil wire to distributor cap. Remove wire from one spark plug.

(4) Use insulated pliers to hold wire 1/2 inch from engine cylinder head or block while rotating engine with starter motor. Observe wire terminal for arc.

(a) If arc occurs, inspect for fuel system problems or incorrect ignition timing.

(b) If no arc occurs, inspect for defective rotor or distributor cap, or defective spark plug wires.

(5) If no arc occurs from ignition coil wire terminal, test coil secondary winding resistance. It should not exceed 10,000 ohms. Replace if required.

(6) Read following notes and proceed to SSI System Diagnosis and Repair Simplification (DARS) Chart 1.

NOTE: *The DARS charts are organized to permit testing of the primary sub-circuit separately and in the most logical sequence. When the problem is located, it is not necessary to perform additional tests.*

NOTE: *If a particular component or sub-circuit is suspected, locate the applicable DARS Chart and follow the procedures outlined. If no particular component or sub-circuit is suspected, begin with Chart 1 and proceed from chart to chart until the problem is located.*

NOTE: *Do not perform Chart 4 tests until after Chart 1 tests have been completed.*

Intermittent Failure Diagnosis

Intermittent failure may be caused by loose or corroded terminals, defective or missing components, poor ground connections or defective wiring. Refer to the Service Diagnosis chart.

Service Diagnosis

Condition	Possible Cause	Correction
ENGINE FAILS TO START (NO SPARK AT PLUGS)	(1) No voltage to ignition system.	(1) Check battery, ignition switch and wiring. Repair as required.
	(2) Electronic Control Unit ground wires inside distributor open, loose or corroded.	(2) Clean, tighten or repair as required.
	(3) Primary wiring connectors not fully engaged.	(3) Clean and fully engage connectors.
	(4) Ignition coil open or shorted.	(4) Test coil. Replace if faulty.
	(5) Electronic Control Unit defective.	(5) Replace Electronic Control Unit.
	(6) Cracked distributor cap.	(6) Replace cap.
	(7) Defective rotor.	(7) Replace rotor.
ENGINE BACKFIRES BUT FAILS TO START	(1) Incorrect ignition timing.	(1) Check timing. Adjust as required.
	(2) Moisture in distributor.	(2) Dry cap and rotor.
	(3) Distributor cap faulty.	(3) Check cap for loose terminals, cracks and dirt. Clean or replace as required.
	(4) Ignition wires not connected in correct firing order.	(4) Connect in correct order.
ENGINE RUNS ONLY WITH KEY IN START POSITION	(1) Open in resistance wire or excessive resistance.	(1) Replace resistance wire and harness assembly.
ENGINE CONTINUES TO RUN WITH KEY OFF	(1) Defective starter motor solenoid.	(1) Replace solenoid.
	(2) Shorted diode in alternator warning lamp circuit.	(2) Replace diode.

70866A

Service Diagnosis (Continued)

Condition	Possible Cause	Correction
ENGINE DOES NOT OPERATE SMOOTHLY AND/OR ENGINE MISFIRES AT HIGH SPEED	(1) Spark plugs fouled or faulty.	(1) Clean and gap plugs. Replace as required.
	(2) Ignition wires faulty (including electronic retard).	(2) Check wires. Replace as required.
	(3) Spark advance system(s) faulty.	(3) Check operation. Repair as required.
	(4) S-terminal shorted to starter S-terminal in solenoid.	(4) Replace solenoid.
	(5) Trigger wheel pin missing.	(5) Install pin.
	(6) Ignition wires not connected in correct firing order.	(6) Connect wires correctly.
	(7) Two plug wires of consecutive firing cylinders routed next to each other.	(7) Re-route plug wires away from each other.
EXCESSIVE FUEL CONSUMPTION	(1) Incorrect ignition timing.	(1) Check timing. Adjust as required.
	(2) Spark advance system(s) faulty.	(2) Check operation. Repair as required.
	(3) MCU (microprocessor) faulty.	(3) Test system. Repair as required.
ERRATIC TIMING ADVANCE	(1) Faulty vacuum advance mechanism.	(1) Check operation. Replace if required.
	(2) Centrifugal advance weights sticking.	(2) Remove dirt, corrosion.
TIMING NOT AFFECTED BY VACUUM	(1) Defective vacuum advance mechanism.	(1) Replace vacuum advance mechanism.
	(2) Vacuum advance mechanism adjusting screw too far counterclockwise.	(2) Turn screw clockwise to bring advance within specifications (Chapter 1A).
	(3) Pickup coil pivot corroded.	(3) Clean pivot.
INTERMITTENT OPERATION	(1) Loose or corroded terminals.	(1) Tighten terminals, remove corrosion, apply electrical grease.
	(2) Defective pickup coil.	(2) Perform pickup coil test.
	(3) Defective control unit.	(3) Perform control unit tests.
	(4) Loose ground connector in distributor.	(4) Clean and tighten ground connection.
	(5) Wires to distributor shorted together or to ground.	(5) Check for frayed, pinched, or burned wires.
	(6) Trigger wheel pin missing.	(6) Install new pin.

70866B

CAUTION: *Do not remove wires from spark plugs for cylinders 1 or 5 of a six-cylinder engine or for cylinders 3 or 4 of an eight-cylinder engine when performing this test, otherwise pickup coil may be damaged.*

(3) Connect ignition coil wire to distributor cap. Remove wire from one spark plug.

(4) Use insulated pliers to hold wire 1/2 inch from engine cylinder head or block while rotating engine with starter motor. Observe wire terminal for arc.

(a) If arc occurs, inspect for fuel system problems or incorrect ignition timing.

(b) If no arc occurs, inspect for defective rotor or distributor cap, or defective spark plug wires.

(5) If no arc occurs from ignition coil wire terminal, test coil secondary winding resistance. It should not exceed 10,000 ohms. Replace if required.

(6) Read following notes and proceed to SSI System Diagnosis and Repair Simplification (DARS) Chart 1.

NOTE: *The DARS charts are organized to permit testing of the primary sub-circuit separately and in the most logical sequence. When the problem is located, it is not necessary to perform additional tests.*

NOTE: *If a particular component or sub-circuit is suspected, locate the applicable DARS Chart and follow the procedures outlined. If no particular component or sub-circuit is suspected, begin with Chart 1 and proceed from chart to chart until the problem is located.*

NOTE: *Do not perform Chart 4 tests until after Chart 1 tests have been completed.*

Intermittent Failure Diagnosis

Intermittent failure may be caused by loose or corroded terminals, defective or missing components, poor ground connections or defective wiring. Refer to the Service Diagnosis chart.

Service Diagnosis

Condition	Possible Cause	Correction
ENGINE FAILS TO START (NO SPARK AT PLUGS)	(1) No voltage to ignition system.	(1) Check battery, ignition switch and wiring. Repair as required.
	(2) Electronic Control Unit ground wires inside distributor open, loose or corroded.	(2) Clean, tighten or repair as required.
	(3) Primary wiring connectors not fully engaged.	(3) Clean and fully engage connectors.
	(4) Ignition coil open or shorted.	(4) Test coil. Replace if faulty.
	(5) Electronic Control Unit defective.	(5) Replace Electronic Control Unit.
	(6) Cracked distributor cap.	(6) Replace cap.
	(7) Defective rotor.	(7) Replace rotor.
ENGINE BACKFIRES BUT FAILS TO START	(1) Incorrect ignition timing.	(1) Check timing. Adjust as required.
	(2) Moisture in distributor.	(2) Dry cap and rotor.
	(3) Distributor cap faulty.	(3) Check cap for loose terminals, cracks and dirt. Clean or replace as required.
	(4) Ignition wires not connected in correct firing order.	(4) Connect in correct order.
ENGINE RUNS ONLY WITH KEY IN START POSITION	(1) Open in resistance wire or excessive resistance.	(1) Replace resistance wire and harness assembly.
ENGINE CONTINUES TO RUN WITH KEY OFF	(1) Defective starter motor solenoid.	(1) Replace solenoid.
	(2) Shorted diode in alternator warning lamp circuit.	(2) Replace diode.

70866A

Service Diagnosis (Continued)

Condition	Possible Cause	Correction
ENGINE DOES NOT OPERATE SMOOTHLY AND/OR ENGINE MISFIRES AT HIGH SPEED	(1) Spark plugs fouled or faulty.	(1) Clean and gap plugs. Replace as required.
	(2) Ignition wires faulty (including electronic retard).	(2) Check wires. Replace as required.
	(3) Spark advance system(s) faulty.	(3) Check operation. Repair as required.
	(4) S-terminal shorted to starter S-terminal in solenoid.	(4) Replace solenoid.
	(5) Trigger wheel pin missing.	(5) Install pin.
	(6) Ignition wires not connected in correct firing order.	(6) Connect wires correctly.
	(7) Two plug wires of consecutive firing cylinders routed next to each other.	(7) Re-route plug wires away from each other.
EXCESSIVE FUEL CONSUMPTION	(1) Incorrect ignition timing.	(1) Check timing. Adjust as required.
	(2) Spark advance system(s) faulty.	(2) Check operation. Repair as required.
	(3) MCU (microprocessor) faulty.	(3) Test system. Repair as required.
ERRATIC TIMING ADVANCE	(1) Faulty vacuum advance mechanism.	(1) Check operation. Replace if required.
	(2) Centrifugal advance weights sticking.	(2) Remove dirt, corrosion.
TIMING NOT AFFECTED BY VACUUM	(1) Defective vacuum advance mechanism.	(1) Replace vacuum advance mechanism.
	(2) Vacuum advance mechanism adjusting screw too far counterclockwise.	(2) Turn screw clockwise to bring advance within specifications (Chapter 1A).
	(3) Pickup coil pivot corroded.	(3) Clean pivot.
INTERMITTENT OPERATION	(1) Loose or corroded terminals.	(1) Tighten terminals, remove corrosion, apply electrical grease.
	(2) Defective pickup coil.	(2) Perform pickup coil test.
	(3) Defective control unit.	(3) Perform control unit tests.
	(4) Loose ground connector in distributor.	(4) Clean and tighten ground connection.
	(5) Wires to distributor shorted together or to ground.	(5) Check for frayed, pinched, or burned wires.
	(6) Trigger wheel pin missing.	(6) Install new pin.

70866B

SSI SYSTEM DIAGNOSIS AND REPAIR SIMPLIFICATION (DARS) CHART

Note: Refer to Chapter A – General Information for details on how to use this DARS chart.

IGNITION COIL PRIMARY CIRCUIT

FUNCTION: PROVIDES BATTERY FEED TO COIL AND COIL GROUND

Chart 1

STEP	SEQUENCE	RESULT
1	REFER TO FIGURE 1G-15 FOR SCHEMATIC ● TURN IGNITION ON ● CONNECT VOLTMETER TO COIL POSITIVE TERMINAL AND TO GROUND	
	VOLTAGE ACCEPTABLE (6V ± .5V) — OK →	2
	VOLTAGE NOT ACCEPTABLE (BATTERY VOLTAGE) — ~~OK~~ →	4
	VOLTAGE NOT ACCEPTABLE (BELOW 6V) — ~~OK~~ → DISCONNECT CAPACITOR WIRE TERMINAL → VOLTAGE ACCEPTABLE (6V ± .5V) — OK → REPLACE CAPACITOR →	STOP
	VOLTAGE NOT ACCEPTABLE — ~~OK~~ →	6
2	● TURN IGNITION SWITCH TO START ● OBSERVE VOLTAGE AT POSITIVE TERMINAL WHILE CRANKING	
	VOLTAGE ACCEPTABLE (BATTERY VOLTAGE) — OK →	STOP
	VOLTAGE NOT ACCEPTABLE (LESS THAN BATTERY VOLTAGE) — ~~OK~~ →	3

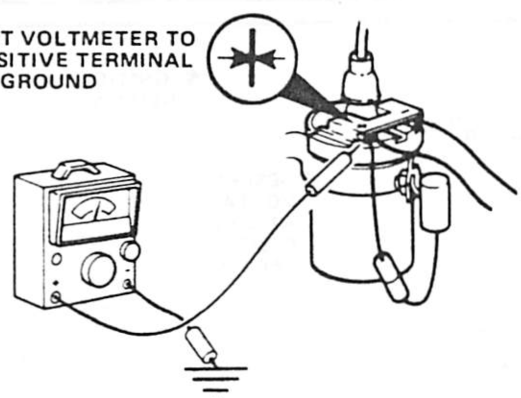

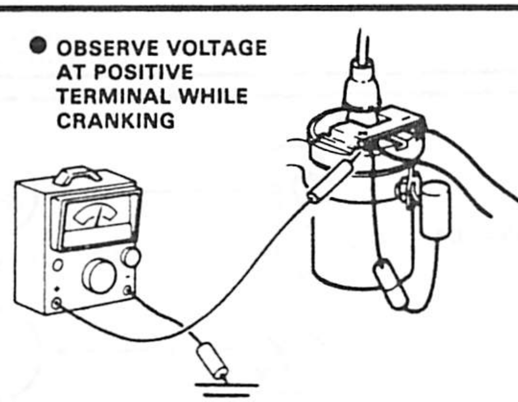

80699A

Chart 1

STEP	SEQUENCE	RESULT

3

- CHECK FOR SHORT OR OPEN IN WIRE ATTACHED TO STARTER SOLENOID I-TERMINAL
- CHECK SOLENOID AS OUTLINED IN CHAPTER 1F

REPAIR AS REQUIRED → STOP

4

DISCONNECT WIRE FROM STARTER SOLENOID I-TERMINAL

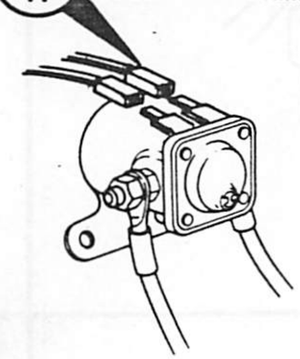

- IGNITION REMAINS ON
- OBSERVE VOLTAGE AT COIL POSITIVE TERMINAL

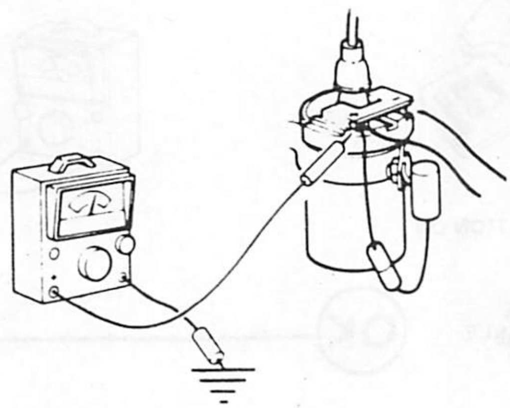

VOLTAGE DROPS TO 6V ± .5V — OK → REPLACE STARTER SOLENOID → STOP

VOLTAGE REMAINS AT BATTERY VOLTAGE — NOT OK → CONNECT JUMPER BETWEEN COIL NEGATIVE TERMINAL AND GROUND
- VOLTAGE DROPS TO 6V ± .5V — OK → 5
- VOLTAGE DOES NOT DROP — NOT OK → REPAIR DEFECTIVE RESISTANCE WIRE → 2

5

CHECK:
- CONTINUITY BETWEEN COIL NEGATIVE TERMINAL AND CONNECT TERMINAL D4
- DI TO GROUND

CONTINUITY OK — OK → REPLACE CONTROL UNIT → STOP

CONTINUITY NOT OK — NOT OK → LOCATE AND REPAIR OPEN → 2

80699B

Chart 1

STEP	SEQUENCE	RESULT

6

- TURN IGNITION OFF

CONNECT OHMMETER BETWEEN COIL POSITIVE TERMINAL AND DASH CONNECTOR 13

RESISTANCE TOO HIGH (1.40 OHMS OR MORE) → REPAIR RESISTANCE WIRE → STOP

OK

RESISTANCE ACCEPTABLE (1.35 ± .05 OHMS) → 7

7

- IGNITION REMAINS OFF

CONNECT OHMMETER BETWEEN DASH CONNECTOR 13 AND IGNITION SWITCH TERMINAL I1

OK

RESISTANCE ACCEPTABLE (LESS THAN 0.1 OHM) → REPLACE IGNITION SWITCH OR REPAIR SWITCH WIRE FROM BATTERY → STOP

RESISTANCE TOO HIGH (MORE THAN 0.1 OHM) →

- POOR TERMINAL CONNECTIONS AT DASH CONNECTOR OR IGNITION SWITCH
- DEFECTIVE WIRING

→ REPAIR DEFECT → STOP

80699C

COIL TEST

Chart 2

STEP | **SEQUENCE** | **RESULT**

1

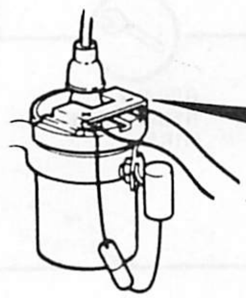

INSPECT COIL FOR OIL LEAKS, OTHER EXTERIOR DAMAGE, AND CARBON TRACKS

- OK → 2
- NOT OK → REPLACE COIL → STOP

2

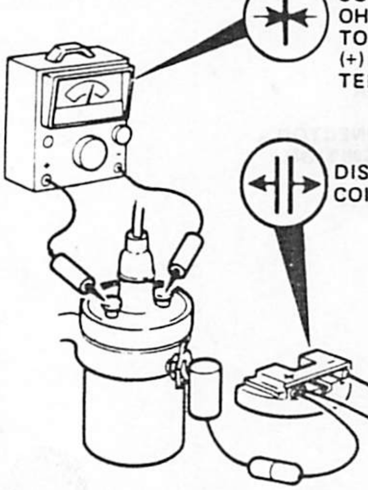

CONNECT OHMMETER TO COIL (+) AND (–) TERMINALS

DISCONNECT COIL CONNECTOR

- OK → 3
  RESISTANCE ACCEPTABLE
  (1.13 TO 1.23 OHMS AT 75°F OR 24°C)
  (1.5 OHMS AT 200°F OR 93°C)
- NOT OK: RESISTANCE NOT WITHIN LIMITS → REPLACE COIL → STOP

3

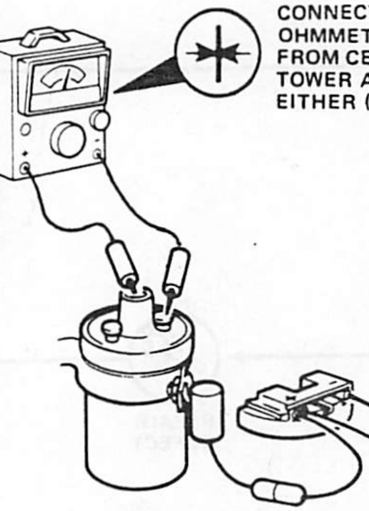

CONNECT OHMMETER FROM CENTER TOWER AND EITHER (+) OR (–)

- OK → STOP
  RESISTANCE ACCEPTABLE
  (7700 - 9300 OHMS @ 75°F OR 24°C)
  (12,000 OHMS @ 200°F OR 93°C)
- NOT OK: RESISTANCE NOT WITHIN LIMITS → REPLACE COIL → STOP

80699D

SENSOR CHECK AND CONTROL UNIT CHECK

Chart 3

STEP | **SEQUENCE** | **RESULT**

1

● TURN IGNITION ON

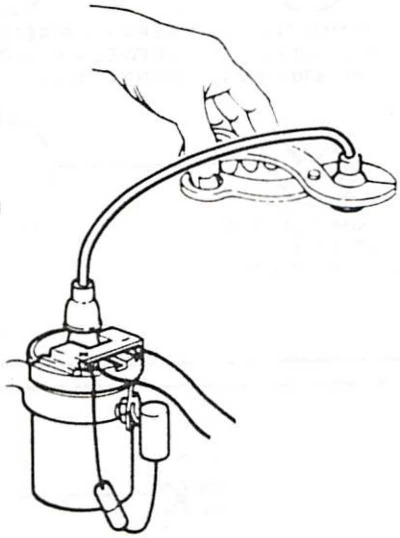

● DISCONNECT COIL WIRE FROM CENTER TOWER OF DISTRIBUTOR AND HOLD 1/2 - INCH FROM ENGINE WITH INSULATED PLIERS

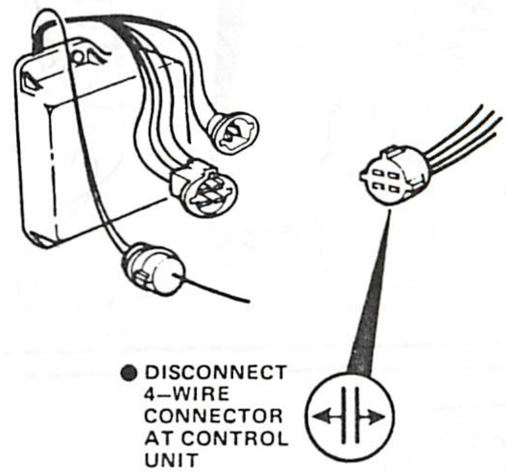

● DISCONNECT 4—WIRE CONNECTOR AT CONTROL UNIT

SPARK AT COIL WIRE (NORMAL) → 2

NO SPARK → 5

2

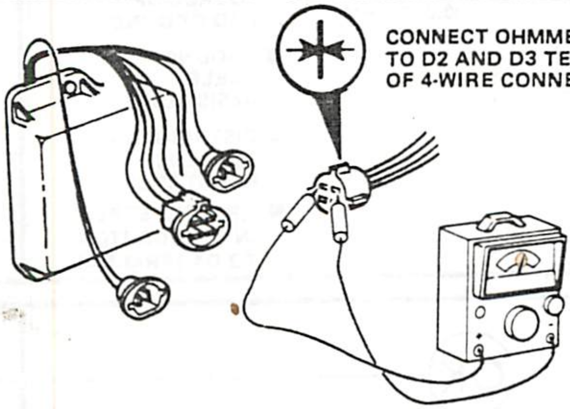

CONNECT OHMMETER TO D2 AND D3 TERMINALS OF 4-WIRE CONNECTOR

OK — OHMMETER INDICATES 400-800 OHMS (NORMAL) → 6

OK (crossed) — OHMMETER DOES NOT INDICATE 400 - 800 OHMS → 3

3

● DISCONNECT AND RECONNECT 3 - WIRE CONNECTOR AT DISTRIBUTOR

OK — OHMMETER NOW INDICATES 400 - 800 OHMS → 6

OK (crossed) — OHMMETER REMAINS OUTSIDE 400 - 800 OHMS → DISCONNECT 3 - WIRE CONNECTOR AT DISTRIBUTOR → 4

80699E

Chart 3

STEP	SEQUENCE	RESULT

4

CONNECT OHMMETER TO B2 AND B3 TERMINALS OF DISTRIBUTOR CONNECTOR

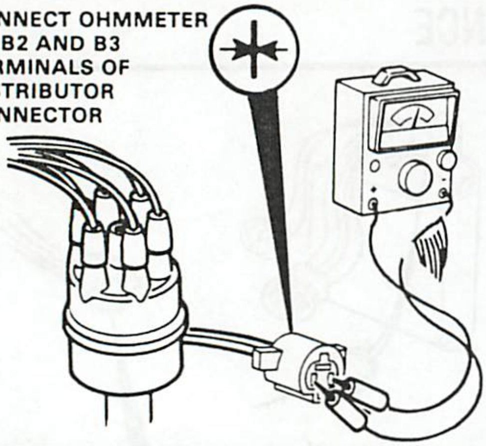

OK — OHMMETER INDICATES 400 - 800 OHMS → REPAIR OR REPLACE HARNESS BETWEEN 3 - WIRE AND 4 - WIRE CONNECTOR → STOP

NOT OK — OHMMETER DOES NOT INDICATE 400 - 800 OHMS → REPLACE PICKUP COIL → STOP

5

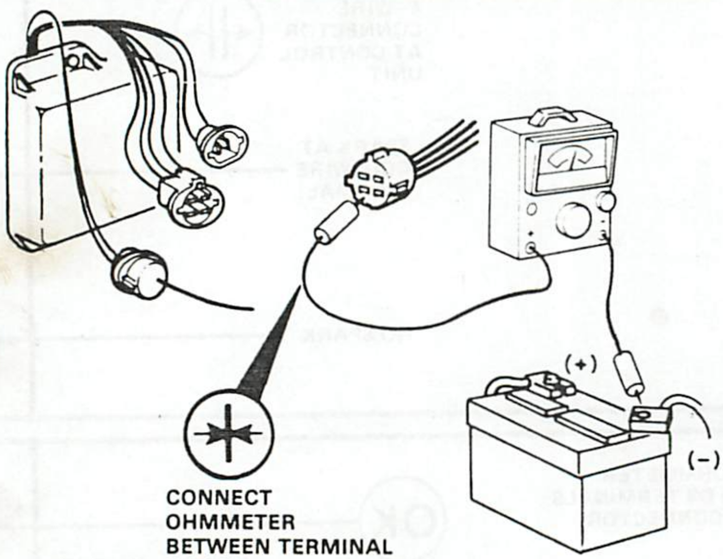

CONNECT OHMMETER BETWEEN TERMINAL D1 AND BATTERY NEGATIVE TERMINAL

OK — OHMMETER INDICATES ZERO (NOT ABOVE 0.002 OHM) → 2

NOT OK — OHMMETER INDICATES ABOVE 0.002 OHM → LOCATE AND REPAIR SOURCE OF BAD GROUND → STOP

- GROUND CABLE RESISTANCE
- DISTRIBUTOR–TO–BLOCK RESISTANCE
- GROUND SCREW IN DISTRIBUTOR TO D1 TERMINAL

6

CONNECT DC VOLTMETER TO D2 AND D3

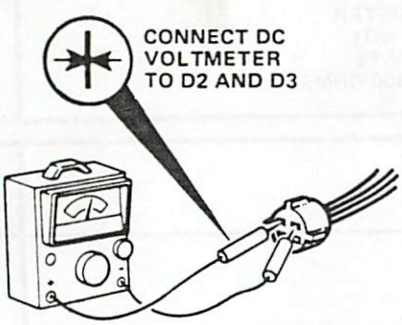

CRANK ENGINE

OK — VOLTMETER FLUCTUATES, INDICATING PROPER PICKUP COIL AND TRIGGER WHEEL OPERATION → STOP

NOT OK — VOLTMETER DOES NOT FLUCTUATE → LOCATE AND REPAIR FAULT → STOP

- DEFECTIVE TRIGGER WHEEL
- DISTRIBUTOR NOT TURNING
- MISSING TRIGGER WHEEL PIN

80699F

IGNITION FEED TO ELECTRONIC CONTROL UNIT

NOTE: DO NOT PERFORM CHART 4 WITHOUT PERFORMING CHART 1

Chart 4

STEP | **SEQUENCE** | **RESULT**

1

● TURN IGNITION ON

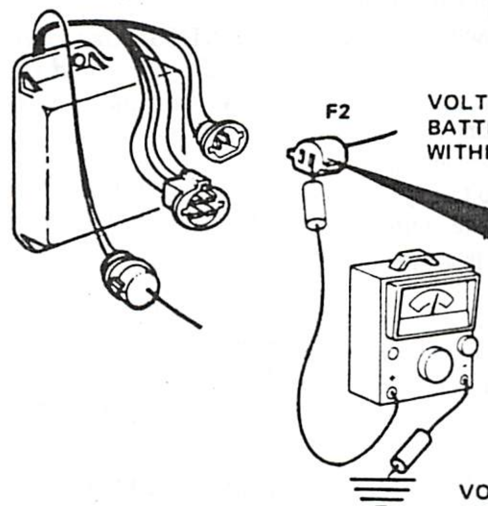

UNPLUG 2-WIRE CONNECTOR AT MODULE AND CONNECT VOLTMETER BETWEEN TERMINAL F-2 AND GROUND

OK — VOLTMETER INDICATES BATTERY VOLTAGE WITHIN 0.2V. → REPLACE CONTROL UNIT → 3

NOT OK — VOLTMETER DOES NOT INDICATE BATTERY VOLTAGE WITHIN 0.2V → 2

2

LOCATE AND REPAIR CAUSE OF VOLTAGE REDUCTION

● CORRODED DASH CONNECTOR

● IGNITION SWITCH

→ OK — SPARK AVAILABLE AT COIL WIRE → STOP

→ NOT OK — SPARK NOT AVAILABLE AT COIL WIRE → REPLACE CONTROL UNIT → STOP

3

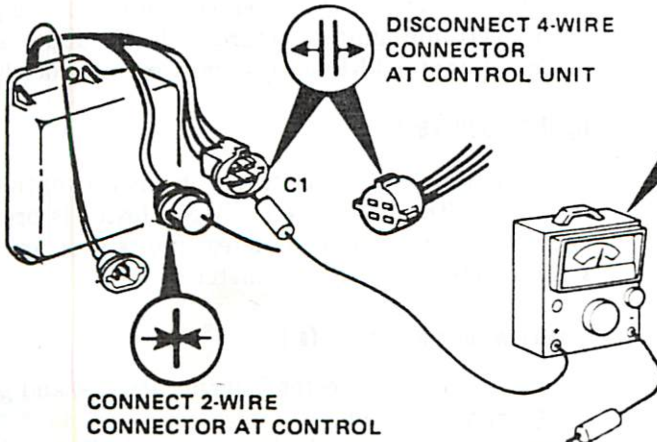

DISCONNECT 4-WIRE CONNECTOR AT CONTROL UNIT

CONNECT 2-WIRE CONNECTOR AT CONTROL UNIT

CONNECT AMMETER BETWEEN TERMINAL C1 AND GROUND

OK — AMMETER INDICATES 1 AMP ± 0.1 → STOP

NOT OK — AMMETER INDICATES HIGHER OR LOWER CURRENT → REPLACE MODULE → STOP

80699G

Engine Spark Knock (Pre-Ignition) Diagnosis

Spark knock (pre-ignition) can be attributed to several factors. The most common are ambient air conditions, such as air temperature, density and humidity.

- **High Underhood Air Temperature**
  Underhood air temperature is increased by the use of air conditioning (especially during long periods of idling), overloading (trailer pulling or operating in too high a gear), and the installation of accessories that restrict airflow.
- **Air Density**
  Air density increases as barometric pressure rises or as the air temperature decreases. A denser than normal mixture of air and fuel drawn into the cylinder has the same effect as increasing the engine compression ratio and this increases the possibility of spark knock.
- **Humidity**
  Low humidity increases the tendency for engine spark knock. High humidity decreases the tendency for spark knock.
- **Fuel Octane Rating**
  Fuels of an equivalent research octane rating may vary in their antiknock characteristics for a given engine. It may be necessary to retard the initial ignition timing (not more than 2 degrees from the specification) or select an alternate source of fuel.
- **Ignition Timing**
  Ignition timing should be checked to ensure it is adjusted to the specification.

NOTE: *The white paint mark on the timing degree scale identifies the specified ignition timing degrees at idle speed, it does not indicate TDC (Top Dead Center).*

- **Combustion Chamber Deposits**
  An excessive build-up of deposits in the combustion chamber may be caused by not using the recommended fuels and lubricants, prolonged engine idling or continuous low speed operation. These deposits can be reduced by the occasional use of Carburetor and Combustion Area Cleaner 8992352, or equivalent, or by operating the engine at high speeds.
- **Distributor Ignition Advance Mechanisms**
  The centrifugal (mechanical) and vacuum ignition advance mechanisms should be inspected to ensure they are operating correctly.
- **Exhaust Manifold Heat Valve**
  This is applicable to eight-cylinder engines only. If the heat valve sticks in the heat ON position, the intake manifold will be heated excessively.

TEST PROCEDURES

Primary and Secondary Circuit Electrical Tests

Refer to Diagnosis for electrical test procedures.

Distributor Ignition Advance Tests

Centrifugal (Mechanical) Ignition Advance Test

(1) Disconnect vacuum hose from vacuum advance mechanism and plug hose opening.

(2) Connect timing light to No. 1 spark plug and tachometer to ignition coil "tach" terminal (fig. 1G-14).

WARNING: *Use extreme caution when engine is operating. Do not stand in direct line with fan. Do not put hands near pulleys, belts or fan. Do not wear loose clothing.*

(3) Start engine and observe timing degree scale and vibration damper index with timing light while engine is idling.

(4) Slowly increase engine speed to 2000 rpm. Timing should advance (increase in degrees BTDC) smoothly as engine speed increases. Refer to Chapter 1A—General Service and Diagnosis for centrifugal (mechanical) advance curve information.

Vacuum Ignition Advance Test

NOTE: *Engine must be warmed up to normal operating temperature.*

(1) Connect vacuum hose to vacuum advance mechanism.

(2) Observe timing degree scale and vibration damper index with timing light while engine is idling.

(3) Slowly increase engine speed to 2000 rpm. With vacuum applied, ignition timing should advance sooner than with centrifugal advance alone. At 2000 rpm, vacuum advance should cause total advance to be more than with centrifugal advance alone. Refer to Chapter 1A—General Service and Diagnosis for vacuum advance curve information.

Electronic Ignition Retard Test

If the vehicle (six-cylinder engine only) is equipped with electronic ignition retard and a feedback system, refer to Chapter 1J-Fuel Systems for test procedure.

Ignition Coil Tests

The ignition coil can be tested on any conventional coil tester or with an ohmmeter. A coil tester is preferable because it can be used to detect faults that are impossible to detect with an ohmmeter.

Primary Winding Resistance Test

(1) Remove connector from negative (-) and positive (+) terminals of coil.

(2) Set ohmmeter for low scale and adjust pointer to zero.

(3) Connect ohmmeter to coil negative (-) and positive (+) terminals. Resistance should be 1.13 to 1.23 ohms at 75°F (24°C). If coil temperature is above 200°F (93°C), 1.50 ohms is acceptable.

Secondary Winding Resistance Test

(1) Remove high voltage ignition wire from high voltage terminal of ignition coil.

NOTE: *Ignition switch must be off.*

(2) Set ohmmeter for x1000 scale and adjust pointer to zero.

(3) Connect ohmmeter to brass contact in high voltage terminal and to either primary winding terminal. Resistance should be 7700 to 9300 ohms at 75°F (24°C). A maximum of 12,000 ohms is acceptable if coil temperature is 200°F (93°C) or more.

Current Flow Test

(1) Remove connector from ignition coil.

(2) Depress plastic barb and withdraw positive (+) terminal wire from connector. Barb is visible from coil side of connector.

(3) Repeat for negative (-) terminal wire.

CAUTION: *Ensure ammeter current rating is sufficient for test.*

(4) Connect ammeter between coil positive (+) terminal and disconnected positive (+) terminal wire.

(5) Connect jumper wire from coil negative (-) terminal to known good engine ground.

(6) Turn ignition switch to ON position.

(7) Current flow should be approximately 7 amps and should not exceed 7.6 amps.

(8) If current flow is more than 7.6 amps, replace ignition coil.

(9) Leave ammeter connected to coil positive (+) terminal. Remove jumper wire from coil negative (-) terminal. Connect coil green wire to coil negative (-) terminal. Current flow should be approximately 4 amps.

If current flow is less than 3.5 amps, inspect for faulty connections in 4-wire (electronic control unit) and 3-wire (distributor) connectors or inadequate ground at ground screw inside distributor. If current flow is greater than 5 amps, the electronic control unit is defective.

WARNING: *Use extreme caution when engine is operating. Do not stand in direct line with fan. Do not put hands near pulleys, belts or fan. Do not wear loose clothing.*

(10) Start engine. Normal current flow with engine operating is 2.0 to 2.4 amps. If current flow is not within specifications, electronic control unit is defective.

Ignition Coil Output Tests

(1) Connect oscilloscope to ignition coil. Refer to test equipment manufacturer's instructions.

WARNING: *Use extreme caution when engine is operating. Do not stand in direct line with fan. Do not put hands near pulleys, belts or fan. Do not wear loose clothing.*

(2) Start engine and observe secondary ignition voltage.

CAUTION: *Do not remove wires from spark plugs for cylinders 1 or 5 of a six-cylinder engine or cylinders 3 or 4 of an eight-cylinder engine when performing the next test because the pickup coil can be damaged.*

CAUTION: *Do not operate engine with spark plug disconnected for more than 30 seconds or catalytic converter can be damaged.*

(3) Remove one spark plug wire from distributor cap. Observe voltage applied to disconnected spark plug wire on oscilloscope. This voltage, referred to as open circuit output voltage, should be 24,000 volts (24 kV) minimum with engine speed of 1000 rpm.

DISTRIBUTOR REPLACEMENT

Removal

(1) Unfasten distributor cap retaining screws. Remove distributor cap with ignition coil and spark plug wires connected and position away from distributor.

(2) Disconnect distributor vacuum advance hose and plug hose opening.

(3) Disconnect distributor primary wire connector.

(4) Scribe mark on distributor housing in line with tip of rotor. Scribe mark on distributor housing near clamp and continue scribe mark on engine block in line with distributor mark. Note position of rotor and distributor housing in relation to surrounding engine parts as reference points for installing distributor.

(5) Remove distributor holddown bolt and clamp.

(6) Withdraw distributor carefully from cylinder block.

Installation

(1) Clean distributor mounting area of block.

(2) Install replacement distributor mounting gasket in counterbore of engine block.

(3) Position distributor shaft in cylinder block. If engine crankshaft was not rotated while distributor was removed, perform the following procedure.

(a) Align rotor tip with mark scribed on distributor housing during removal. Turn rotor approximately 1/8-turn counterclockwise past scribe mark.

CAUTION: *Ensure that the distributor shaft fully engages the oil pump gear shaft. It may be necessary to slightly rotate the engine crankshaft while applying downward hand force on the distributor body to fully engage the distributor shaft with the oil pump drive gear shaft.*

(b) Slide distributor down into cylinder block. Align scribe mark on distributor housing with matching scribe mark on cylinder block.

NOTE: *It may be necessary to move the rotor and shaft slightly to start gear into mesh with camshaft gear and to engage oil pump drive tang, but rotor should align with scribe mark when distributor is down in place.*

(c) Install distributor holddown clamp, bolt and lockwasher, but do not tighten bolt.

(4) If engine crankshaft was rotated while distributor was removed, it will be necessary to establish timing accordingg to following procedure.

(a) Remove No. 1 spark plug. Hold finger over spark plug hole and rotate engine until compression pressure is felt. Slowly continue to rotate engine until timing index on vibration damper pulley aligns with top dead center (TDC) mark on timing degree scale. Always rotate engine in direction of normal rotation. Do not reverse rotate engine to align timing marks.

(b) Turn distributor shaft until rotor tip points in direction of No. 1 terminal in distributor cap. Turn rotor 1/8-turn counterclockwise past position of No. 1 terminal.

(c) Slide distributor shaft down into engine and position distributor vacuum advance mechanism in approximately same location (in relation to surrounding engine parts) as when removed. Align scribe mark on distributor housing with corresponding scribe mark on cylinder block.

NOTE: *It may be necessary to rotate the oil pump shaft with a long, flat-blade screwdriver to engage oil pump drive tang, but rotor should align with the position of No. 1 terminal when distributor shaft is down in place.*

(d) Install distributor holddown clamp, bolt and lockwasher, but do not tighten bolt.

CAUTION: *If distributor cap is incorrectly positioned on distributor housing, cap or rotor may be damaged when engine is rotated.*

(5) Install distributor cap (with ignition wires) on distributor housing. Ensure pickup coil wire rubber grommet in distributor housing aligns with depression in distributor cap and that cap fits on rim of distributor housing.

NOTE: *Two different diameter screws are used to retain distributor cap.*

(6) Apply Jeep Silicone Dielectric Compound, or equivalent, to connector terminal blades and cavities. Connect distributor primary circuit wire connector. Press firmly to overcome hydraulic pressure caused by silicone compound.

NOTE: *If connector locking tabs weaken or break off, bind connectors together with harness tie strap or tape to assure good electrical connection.*

CAUTION: *Do not puncture spark plug wires or boots to make connection. Use proper adapters.*

(7) Connect timing light to No. 1 spark plug.

NOTE: *The timing case cover has a socket adjacent to the timing degree scale for use with a magnetic timing probe. Ignition timing may be checked by inserting the probe through the hole until it rests on the vibration damper. The probe is calibrated to compensate for probe socket location, which is 9.5° ATDC. Eccentricity of the damper will properly space the magnetic probe. The timing degrees are indicated on a meter.*

WARNING: *Use extreme caution when engine is operating. Do not stand in direct line with fan. Do not put hands near pulleys, belts or fan. Do not wear loose clothing.*

(8) Operate engine at specified rpm and observe vibration damper index and timing degree scale with timing light. Rotate distributor housing as needed to align timing index on vibration damper pulley with correct mark on timing degree scale. Refer to Chapter 1A—General Service and Diagnosis and Emission Control Information label for ignition timing procedure and specifications. When ignition timing is correct, tighten distributor holddown bolt and recheck timing to ensure it did not change.

(9) Disconnect timing light and connect vacuum hose to distributor vacuum advance mechanism.

DISTRIBUTOR COMPONENT REPLACEMENT

When replacing the pickup coil, trigger wheel or vacuum advance mechanism, it is not necessary to remove the distributor from the engine. It is necessary to check ignition timing if the pickup coil or vacuum advance mechanism is replaced. Refer to figure 1G-16 for parts identification.

Trigger Wheel and/or Pickup Coil

Removal

(1) Place distributor in appropriate holding device, if removed from engine.

(2) Remove cap.

(3) Remove rotor.

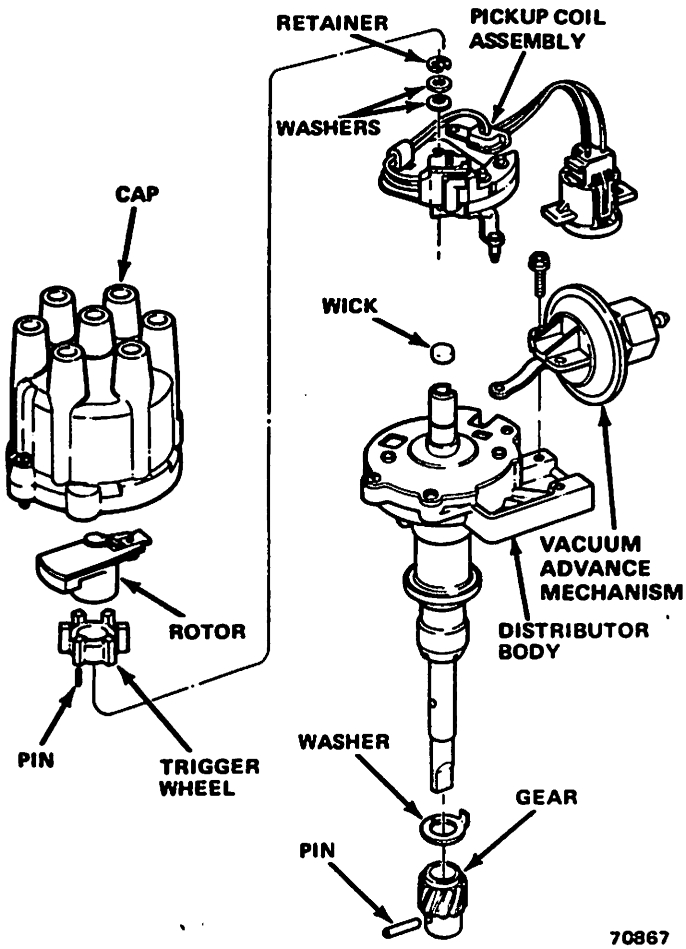

Fig. 1G-16 SSI Distributor Components—Typical

(4) Remove trigger wheel with trigger wheel puller J-28509, or equivalent. Use flat washer to prevent puller from contacting inner shaft. Alternately, two screwdrivers can be used to remove trigger wheel from shaft. Remove pin.

(5) Six-cylinder engine—remove pickup coil retainer and washers from pivot pin on base plate.

(6) Eight-cylinder engine—remove pickup coil snap ring from central shaft. Remove retainer from vacuum advance mechanism-to-pickup coil drive pin and move vacuum advance mechanism lever aside.

(7) Remove ground screw from harness tab.

(8) Lift pickup coil assembly from distributor housing.

(9) If vacuum advance mechanism is to be replaced, remove screws and lift unit out of distributor housing. Do not remove vacuum advance mechanism unless replacement is required.

Installation

(1) If vacuum advance mechanism was removed, install it on distributor housing with attaching screws.

NOTE: *If replacement vacuum advance mechanism is installed, refer to Vacuum Advance Mechanism for calibration procedure.*

(2) Position pickup coil assembly into distributor housing.

(3) Ensure pin on pickup coil is inserted into hole in vacuum advance mechanism link (six-cylinder engines). Attach vacuum advance mechanism lever and retainer to pickup coil pin (eight-cylinder engines).

(4) Install washers and retainer onto pivot pin to secure pickup coil assembly to base plate (six-cylinder engines). Install snap ring (eight-cylinder engines).

(5) Position wiring harness in slot in distributor housing. Install ground screw through tab and tighten.

(6) Install trigger wheel on shaft with hand pressure. Long portion of teeth must be upward. When trigger wheel and slot in shaft are properly aligned, use suitable drift and small hammer to tap pin into locating groove in trigger wheel and shaft. If distributor is not installed in engine, support shaft while installing trigger wheel pin.

(7) Install rotor. Install distributor cap.

Vacuum Advance Mechanism

Removal

(1) Remove vacuum hose from vacuum advance mechanism.

(2) Six-cylinder engine—remove attaching screws and remove vacuum advance mechanism from distributor housing. It is necessary to tilt mechanism to disengage link from pickup coil pin protruding through distributor housing. It may be necessary to loosen base plate screws for necessary clearance.

(3) Eight-cylinder engine—remove distributor cap. Remove retainer from pickup coil pin. Remove attaching screws and lift vacuum advance mechanism from distributor housing.

Installation

(1) If replacement vacuum advance mechanism is to be installed, calibrate according to following procedure.

(a) Insert Allen wrench into vacuum hose fitting of original vacuum advance mechanism. Count number of clockwise turns necessary to bottom adjustment screw.

(b) Turn adjustment screw of replacement vacuum advance mechanism clockwise to bottom. Turn counterclockwise same number of turns counted in step (a).

(2) Six-cylinder engine—install vacuum advance mechanism on distributor housing. Ensure that vacuum advance link is engaged with pickup coil pin. Install retaining screws. Tighten base plate screws, if loosened.

(3) Eight-cylinder engine—install vacuum advance mechanism on distributor housing. Install retaining screws. Position vacuum advance lever onto pickup coil pin and install retainer. Install distributor cap.

(4) Check timing and adjust if required.

(5) Connect vacuum hose to vacuum advance mechanism.

Rotor

Inspect the rotor during precision tune-ups as outlined in Chapter 1A—General Service and Diagnosis.

A unique feature of the SSI system is the silicone dielectric compound applied to the rotor blade during manufacture. Radio interference is greatly reduced by the presence of a small quantity of this dielectric on the rotor blade. After a few thousand miles, the dielectric becomes charred by the high voltage current carried by the rotor (fig. 1G-17). This is normal. Do not scrape the residue from the rotor blade.

When installing a replacement rotor, always apply a thin coat (0.01 to 0.12 inch) of AMC Silicone Dielectric Compound, or equivalent, to the tip of the rotor blade.

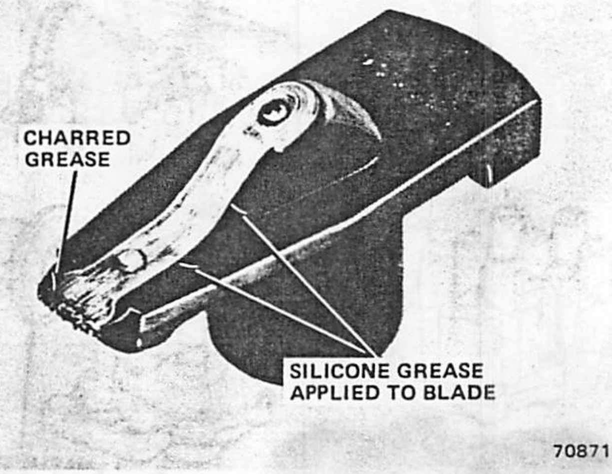

Fig. 1G-17 Rotor Silicone Dielectric Compound Application

SPECIFICATIONS

SSI Distributor and Ignition Coil Specifications

Distributor Pickup Coil Resistance	400 to 800 ohms @ 75°F (24°C)
Ignition Coil	
Primary Resistance	1.13 to 1.23 ohms @ 75°F (24°C)
	1.5 ohms @ 200°F (93°C)
Secondary Resistance	7700 to 9300 ohms @ 75°F (24°C)
	12,000 ohms @ 200°F (93°C)
Minimum Open Circuit Output at 1000 rpm	24 kv
Spark Plugs	
Required Voltage at 1000 rpm	5 to 16 kv
Maximum Variation Between Cylinders	3 to 5 kv

70868

Torque Specifications

Service Set-To Torques should be used when assembling components. Service In-Use Recheck Torques should be used for checking a pre-tightened item.

	USA (ft-lbs)		Metric (N·m)	
	Service Set-To Torque	Service In-Use Recheck Torque	Service Set-To Torque	Service In-Use Recheck Torque
Distributor Clamp Screw	13	10-18	18	13-24
Spark Plugs	28	22-33	38	30-45

All Torque values given in foot-pounds and newton-meters with dry fits unless otherwise specified.

70870

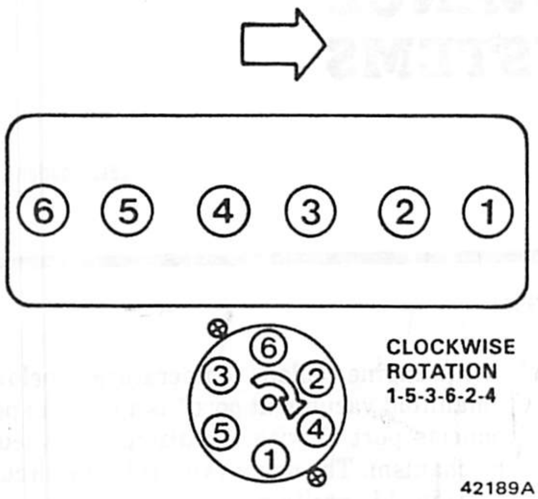

SIX CYLINDER ENGINE

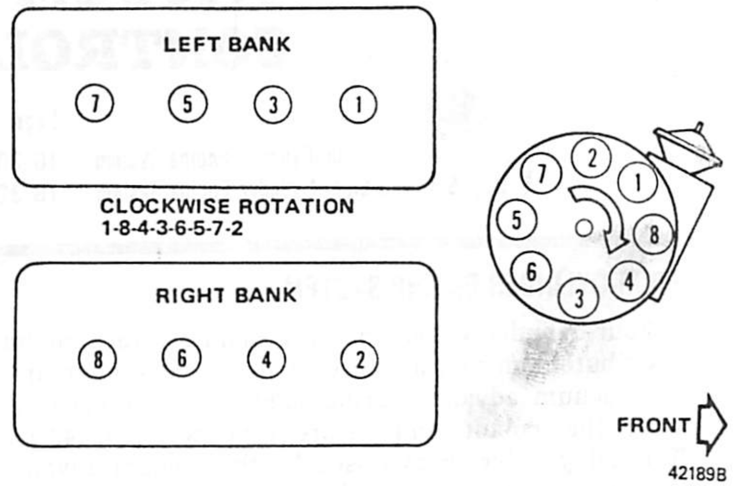

EIGHT CYLINDER ENGINE

Tools

J-26792 HEI
SPARK TESTER

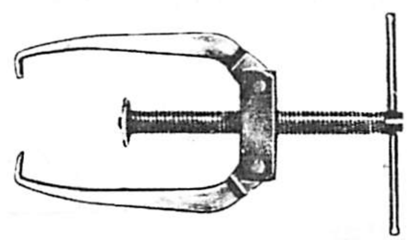

J-28509
TRIGGER WHEEL
PULLER

J-24642 HEI MODULE TESTER

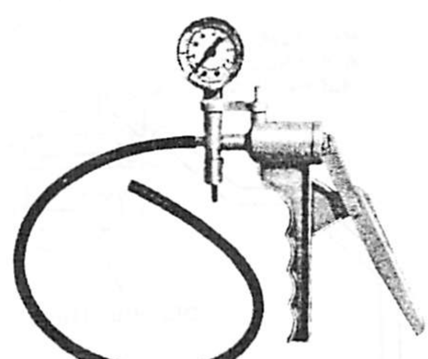

J-23738
HAND OPERATED
VACUUM PUMP

VACUUM ADVANCE CONTROL SYSTEMS

FOUR-CYLINDER ENGINE SYSTEM

Four-cylinder CJ engines use manifold vacuum for distributor ignition advance. A delay valve maintains the vacuum advance during sudden throttle openings when the coolant temperature is below 120°F (49°C). The delay valve is bypassed by the vacuum advance coolant temperature override (CTO) valve when the coolant temperature is above 120°F (49°C). Refer to figure 1G-18 for a diagram of the system.

Vacuum Advance Coolant Temperature Override (CTO) Valve

The CTO valve is screwed into the thermostat housing to allow the thermal sensor to be in contact with the engine coolant. Depending on coolant temperature, the CTO valve (fig. 1G-19) permits manifold vacuum with the delay function or manifold vacuum without the delay function to control the distributor vacuum advance.

Operation

When the engine coolant temperature is below 120°F (49°C), manifold vacuum at port 1 is applied to port D. A hose connects port D with the distributor vacuum advance mechanism. The delay valve is in the circuit when the valve is in this position.

When the engine coolant temperature reaches 120°F (49°C), manifold vacuum at port 2 is also applied to port D but the delay valve is bypassed. This may be considered the normal operating mode. Refer to figure 1G-20.

Functional Test

(1) Disconnect vacuum hose from distributor vacuum advance mechanism. Connect vacuum gauge to vacuum hose.

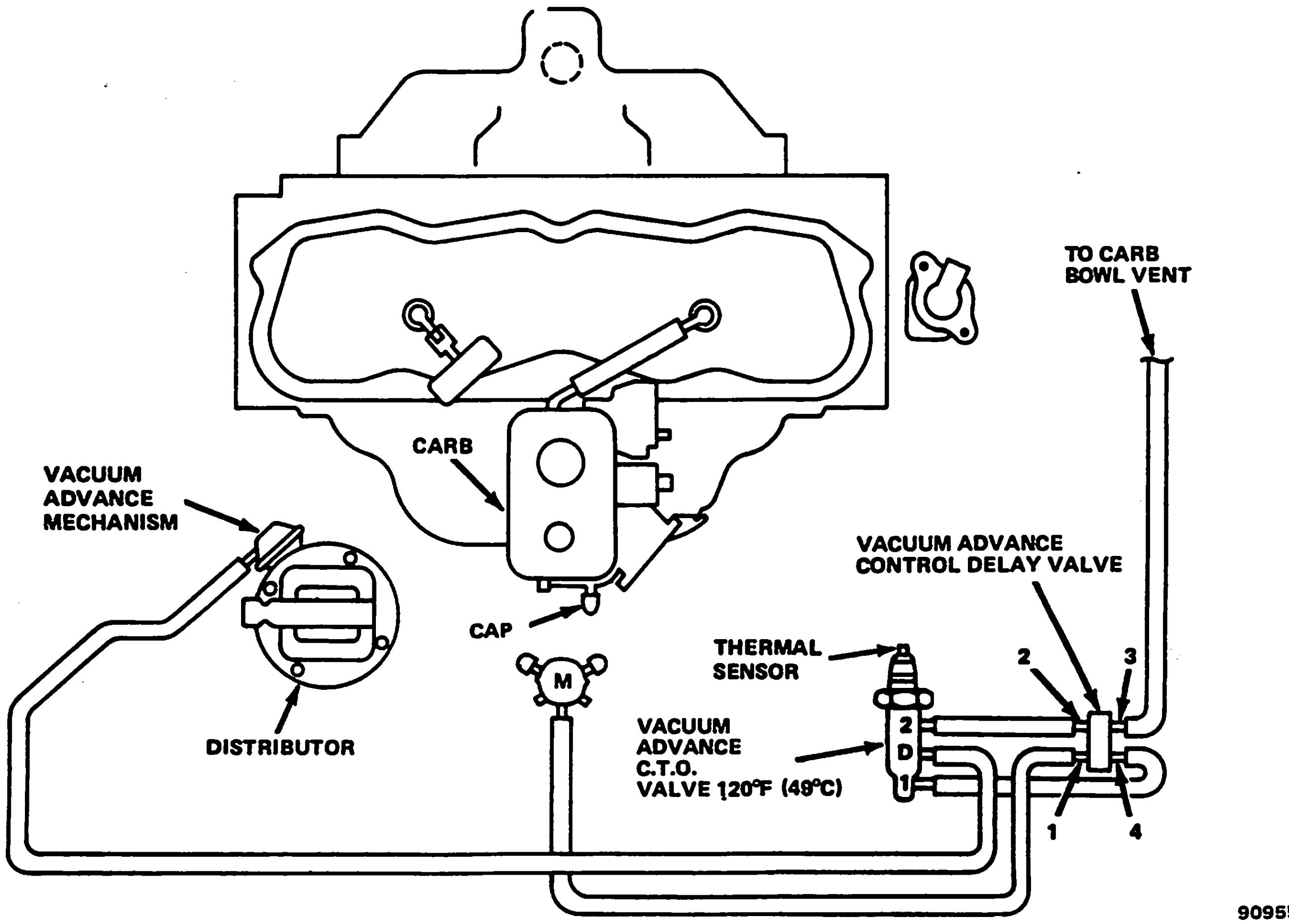

Fig. 1G-18 Vacuum Advance Control System—Four-Cylinder Engines

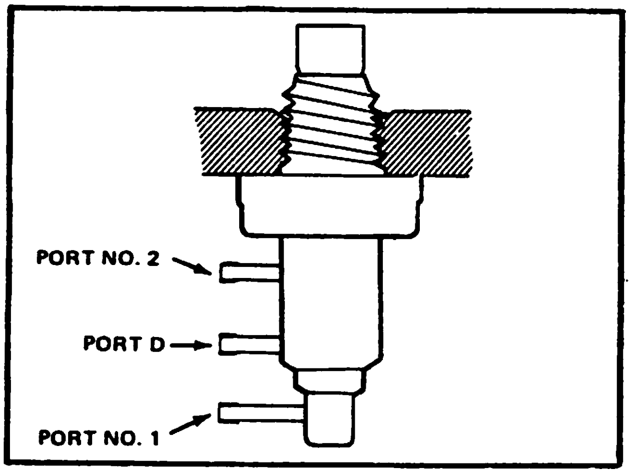

Fig. 1G-19 Vacuum Advance CTO Valve

WARNING: *Use extreme caution when engine is operating. Do not stand in direct line with fan. Do not put hands near pulleys, belts or fan. Do not wear loose clothing.*

(2) Start engine.

(3) With engine coolant temperature below 120°F (49°C), manifold vacuum should be indicated on gauge.

(4) Disconnect vacuum hose from port 4 of delay valve and cap port (air-tight).

(5) Manifold vacuum should not be indicated on gauge with engine coolant temperature below 120°F (49°C).

(6) Allow engine coolant temperature to reach 120°F (49°C). Manifold vacuum should be indicated on gauge.

NOTE: *The 120°F (49°C) CTO valve switching temperature is a nominal value. The actual switching temperature may vary slightly from unit to unit.*

(7) Stop engine.

(8) Remove cap from port 4 of delay valve and connect vacuum hose.

(9) Remove gauge and connect vacuum hose to distributor vacuum advance mechanism.

(10) If defective, replace CTO valve.

Vacuum Advance CTO Valve Replacement

WARNING: *If engine has been recently operated, use care to prevent scalding by hot coolant. System is pressurized.*

(1) Drain coolant from radiator until level is below CTO valve.

(2) Identify, tag and disconnect vacuum hoses from CTO valve.

(3) Place drain pan under engine directly below CTO valve.

(4) With 7/8-inch open end wrench, remove CTO valve from thermostat housing.

(5) Install replacement CTO valve.

(6) Connect vacuum hoses to valve.

(7) Install coolant.

WARNING: *Use extreme caution when engine is operating. Do not stand in direct line with fan. Do not put hands near pulleys, belts or fan. Do not wear loose clothing.*

(8) Start engine and inspect for coolant leaks.

(9) Test CTO valve as outlined in Functional Test.

Vacuum Advance Control Delay Valve

A vacuum advance control delay valve is added to the vacuum advance circuit to provide improved driveability when the engine is cold (fig. 1G-21). Ports 1 and 2, and ports 3 and 4 are connected internally.

When vacuum is greater at port 4 than at port 1 (e.g., sudden acceleration), air must flow through the orifice to equalize the pressure. This creates a momentary delay that prevents a sudden decrease in the vacuum advance. When the vacuum is greater at port 1 than at port 4, air flows freely through the unseated check valve and the pressure is instantly equalized.

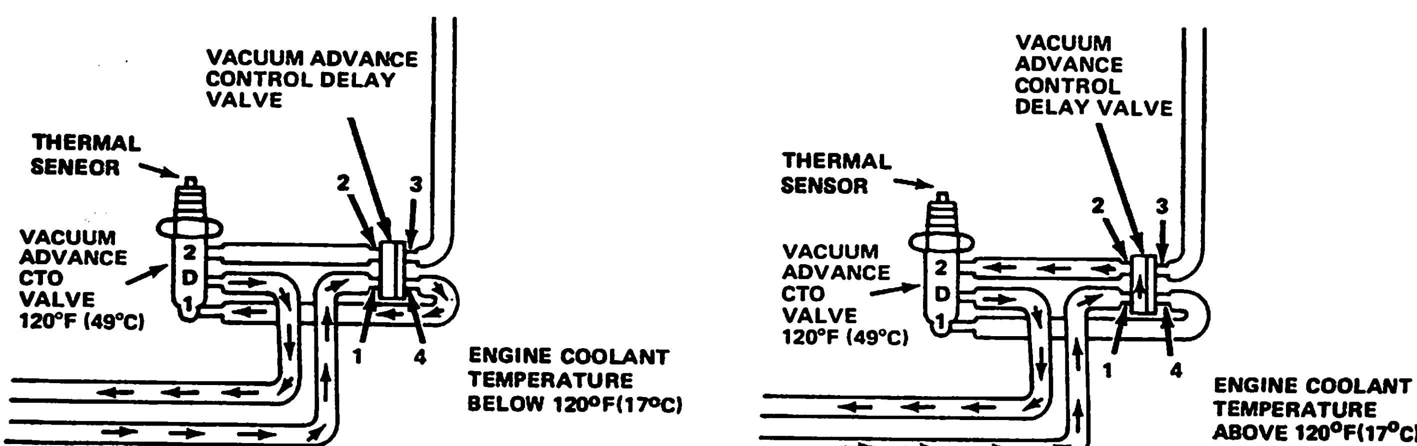

Fig. 1G-20 Vacuum Advance Control System Operation

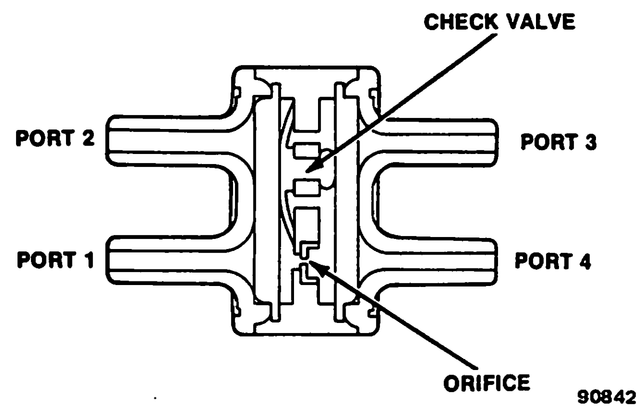

Fig. 1G-21 Vacuum Advance Control Delay Valve

Functional Test

(1) Connect tee fitting at port 1 and port 4.
(2) Connect vacuum gauge to each tee fitting.

WARNING: *Use extreme caution when engine is operating. Do not stand in direct line with fan. Do not put hands near pulleys, belts or fan. Do not wear loose clothing.*

(3) Start engine.
(4) Observe gauges. Vacuum should be equal.
(5) When throttle is suddenly depressed, vacuum at port 1 will instantly decrease but vacuum at port 4 should be maintained momentarily.
(6) Stop engine.
(7) If defective, replace delay valve.
(8) Remove gauges and tee fittings.

VACUUM ADVANCE CONTROL SYSTEM—SIX- AND EIGHT-CYLINDER ENGINES

Manifold vacuum and carburetor ported vacuum are both used for the ignition vacuum spark advance mechanism with six- and eight-cylinder engines. On some engines, a coolant temperature override (CTO) valve determines the appropriate vacuum source, depending upon coolant temperature. On other engines, a nonlinear vacuum regulator (NLVR) valve combines manifold vacuum at idle speed and carburetor ported vacuum at a ratio that is proportional to the amount of throttle opening. Refer to the Emission Components charts in Chapter 1A for applicable engine application.

Vacuum Advance Coolant Temperature Override (CTO) Valve—Standard Cooling System

General

On six- and eight-cylinder engines with a vacuum advance CTO valve, the distributor vacuum advance is controlled by carburetor ported vacuum after the engine coolant warms to a predetermined temperature. Warm-up driveability is improved by controlling the vacuum advance by manifold vacuum while the engine is cold. This is accomplished by the vacuum advance control system (fig. 1G-22). The CTO valve is screwed into the intake manifold coolant passage for six-cylinder engines, and into the thermostat housing or intake manifold coolant passage for eight-cylinder engines. A thermal sensor at the CTO valve tip is in contact with engine coolant (fig. 1G-23). Depending on coolant temperature, the CTO valve permits either manifold vacuum or carburetor ported vacuum to control distributor vacuum advance.

NOTE: *Some engine applications utilize a standard cooling system CTO valve in conjunction with a heavy-duty cooling system CTO valve. Refer to the Vacuum Diagrams for actual applications.*

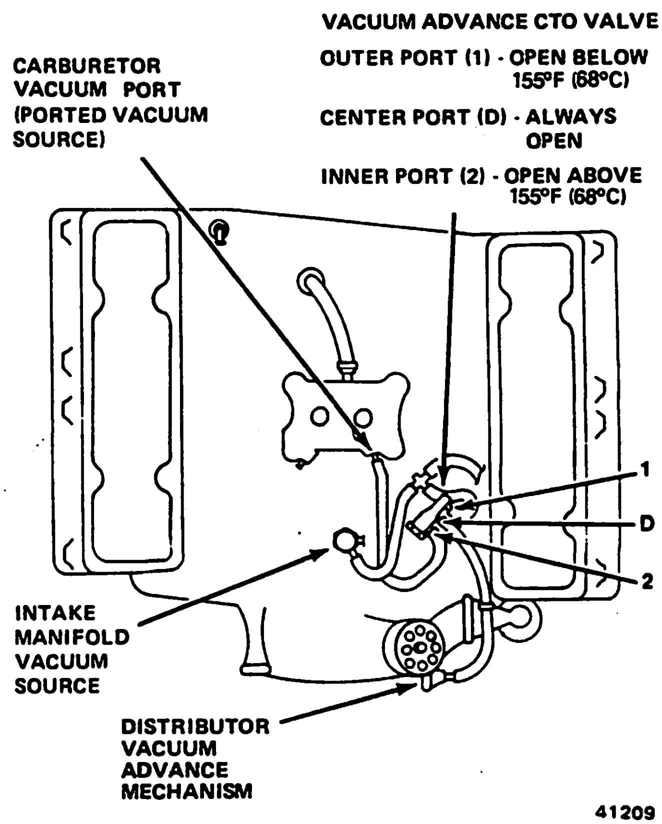

Fig. 1G-22 Vacuum Advance Control System—Typical—Six- and Eight-Cylinder Engines with Standard Cooling System

Operation

When coolant temperature is below 155°F (68°C), manifold vacuum is exposed at port 1 and is applied to port D. A hose connects port D with the distributor vacuum advance mechanism diaphragm. In this operating mode, full vacuum advance is obtained.

When engine coolant reaches 155°F (68°C), the valve is moved upward, blocking manifold vacuum at port 1. Carburetor ported vacuum is exposed at port 2 and is applied to port D. The distributor vacuum advance mechanism diaphragm is now controlled by ported vacuum. This may be regarded as the normal operating mode.

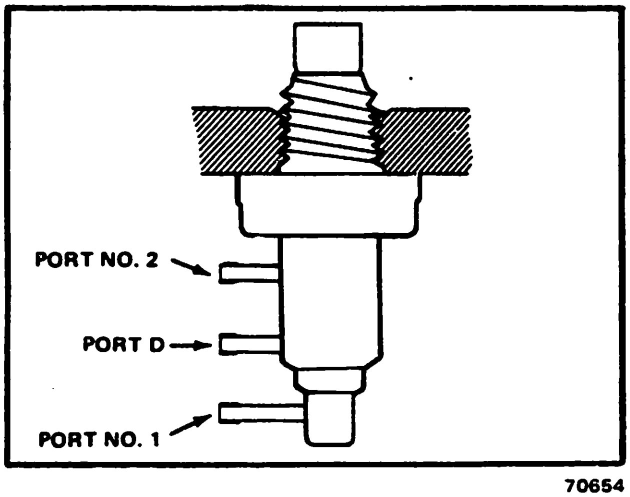

Fig. 1G-23 Vacuum Advance CTO Valve

Functional Test

Connect a vacuum gauge to the center port (D) of the CTO valve. Below 155°F (68°C) manifold vacuum should be indicated on the gauge. Above 155°F (68°C) carburetor ported vacuum should be indicated on gauge. Defective valves must be replaced.

NOTE: *Ported vacuum is not available with the throttle closed. Ported vacuum is only available when the throttle is opened to achieve an engine speed of approximately 1000 rpm.*

Vacuum Advance Coolant Temperature Override (CTO) Valve—Heavy-Duty Cooling System

General

This is a single function valve that is utilized in conjunction with a heavy-duty cooling system to prevent overheating during high ambient temperature operating conditions. It is connected to the engine coolant passage in the same location as the CTO valve that is used with standard cooling systems.

NOTE: *Some engine applications utilize a heavy-duty cooling system CTO valve in conjunction with a standard cooling system CTO valve. Refer to Vacuum Diagrams for actual applications.*

Operation

When the coolant temperature is below the switching temperature (220°F [104°C]), ported vacuum is exposed at port 1 and applied to port D to allow ported vacuum to control the distributor vacuum advance. When the coolant temperature reaches 220°F (104°C), port 1 closes and port 2 is connected to port D to allow manifold vacuum to control the distributor vacuum advance. With manifold vacuum applied to the vacuum advance mechanism, engine idle speed is increased thereby improving engine cooling efficiency and reducing coolant boiling during idle speed engine operation.

Functional Test

(1) Connect vacuum gauge to port D (Dist) of heavy-duty cooling system CTO valve. Below 220°F (104°C), carburetor ported vacuum should be indicated on gauge.

(2) Above 220°F (104°C), port 1 (Carb) closes and port 2 (Manifold) is connected to port D (Dist). Manifold vacuum should now be indicated on gauge.

Vacuum Advance CTO Valve Replacement—Six-Cylinder Engine

WARNING: *If engine has been recently operated, use care to prevent scalding by hot coolant. System is pressurized.*

(1) Drain coolant from radiator. Use clean container so that coolant can be reused.

(2) Identify, tag and disconnect vacuum hoses from CTO valve.

(3) Place drain pan under engine below CTO valve.

WARNING: *Use care to prevent scalding by hot coolant leaking from block when removing the valve.*

(4) Using 7/8-inch open end wrench, remove valve from intake manifold.

Installation—Six-Cylinder

(5) Install replacement CTO valve.

(6) Connect vacuum hoses to valve.

(7) Install coolant.

NOTE: *Remove temperature gauge sending unit from cylinder head to aid in venting air while filling the cooling system.*

Vacuum Advance CTO Valve Replacement—Eight-Cylinder Engine

WARNING: *If engine has been recently operated, use care to prevent scalding by hot coolant. System is pressurized.*

(1) Drain coolant from radiator. Use clean container so coolant can be reused.

(2) Remove air cleaner assembly.

(3) Identify, tag and disconnect vacuum hoses from CTO valve.

(4) Using 7/8-inch open end wrench, remove CTO valve from thermostat housing (or intake manifold).

(5) Install replacement CTO valve in thermostat housing (or intake manifold).

(6) Connect vacuum hoses to valve.

(7) Install air cleaner assembly.

(8) Install coolant.

(9) Purge cooling system of air.

Regulated Vacuum Advance Control System

General

For all six- and eight-cylinder engines with a regulated vacuum advance control system, distributor vacuum advance is primarily controlled by regulated vacuum. The vacuum regulation is accomplished by the use of a non-linear vacuum regulator valve (fig. 1G-24). The ratio of the regulation (fig. 1G-25) is proportional to the engine torque and rpm.

NOTE: *The NLVR valve operates in conjunction with a CTO valve.*

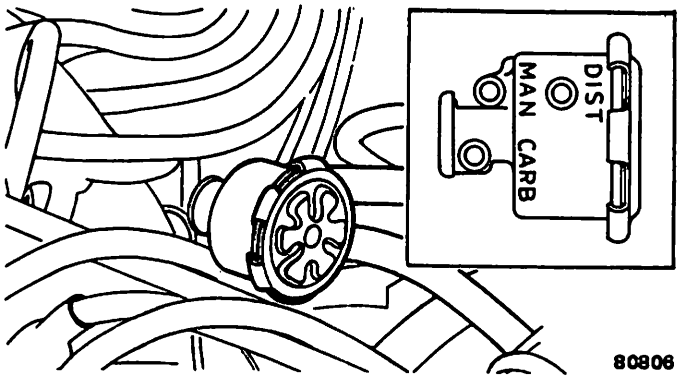

Fig. 1G-24 Non-Linear Vacuum Regulator (NLVR) Valve

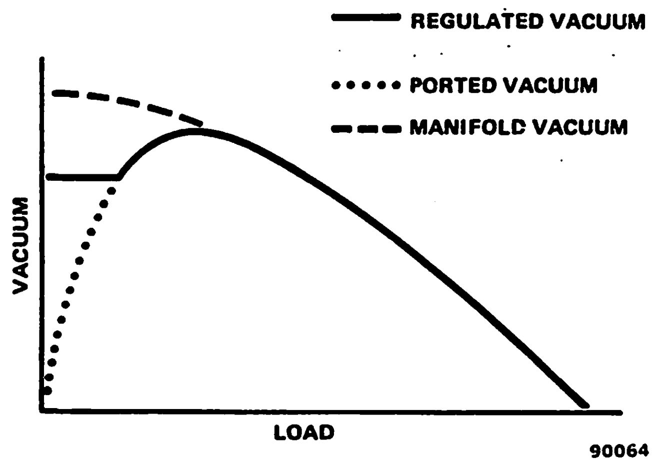

Fig. 1G-25 Non-Linear Vacuum Regulator Valve Operation

Operation

The NLVR valve has two input ports (from manifold vacuum and carburetor ported vacuum sources) and one outlet port (to CTO valve). With no-torque or low-torque engine operating conditions, the NLVR valve provides regulated vacuum (fig. 1G-26). Under these conditions, manifold vacuum is high and ported vacuum is either non-existent or very low. The NLVR valve provides a vacuum level that is somewhere between the two vacuum levels. This is determined by the calibration of the valve. As engine torque increases and ported vacuum increases above the regulated value, the regulator valve switches to ported vacuum.

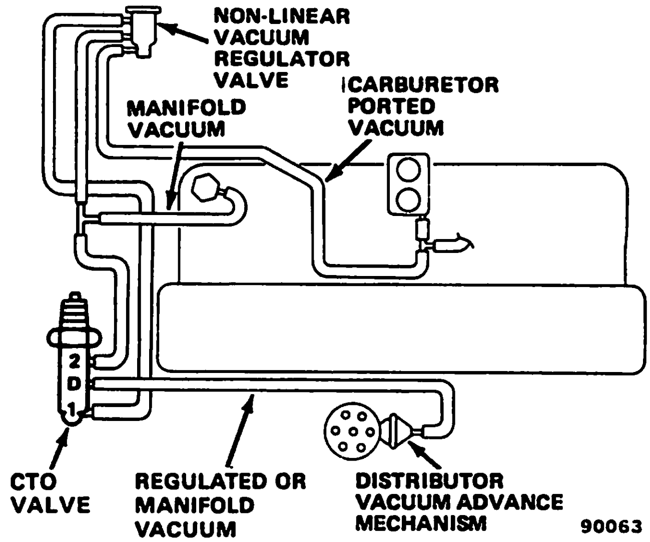

Fig. 1G-26 Regulated Vacuum Advance Control System—Typical

Functional Test

Connect a vacuum gauge to the distributor port (D) of the NLVR valve. With the engine at idle speed, a vacuum level of approximately 7 in. Hg (24 kPa) should be indicated on the gauge. As the throttle is opened and engine speed increases, ported vacuum from the carburetor should be indicated on the vacuum gauge.

Replacement

(1) Identify, tag and disconnect vacuum hoses. Remove NLVR valve.

(2) Connect vacuum hoses to replacement valve.

NOTE: *Ensure vacuum hoses are connected to correct valve ports.*

Forward Delay Valve

Certain engines employ a one-way forward delay valve (fig. 1G-27) in the vacuum advance circuit to improve driveability and also reduce undesirable hydrocarbon (HC) emission.

The valve functions to delay the effects of sudden increases in vacuum during quick throttle closings and thereby prevent sudden ignition advance during engine deceleration.

Functional Test

(1) Connect external vacuum source to port on black side of delay valve.

(2) Connect one end of 24-inch (60 cm) section of rubber hose to vacuum gauge and other end to port on colored side of valve.

(3) With elapsed time device in view and a constant 10 in. Hg (34 kPa) of vacuum applied, note time required for gauge pointer to move from 0 to 8 in. Hg (0 to 27 kPa).

(4) Compare time to acceptable time limits listed in Forward Delay Valve Time Limits chart.

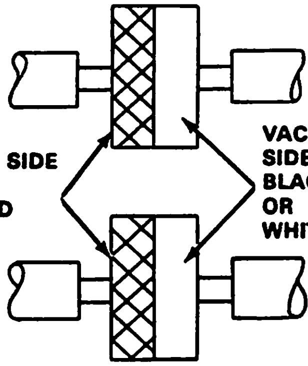

Fig. 1G-27 Delay Valve Code

NOTE: *While testing delay valves use care to prevent oil or other foreign material from entering vacuum ports.*

(5) Replace valve if it fails test, otherwise, install original with black side toward vacuum source.

NOTE: *In addition to the valves listed in the chart, certain engine applications employ a two-way delay valve. The body is orange and the minimum and maximum delay time limits are 0.2 to 0.4 seconds.*

Forward Delay Valve Time Limits

Part Numbers	Time In Seconds	Color and Identification
3230422	200 ± 40	Black/Green
3231118	100 ± 20	Black/Yellow
3231379	63.5 ± 13.5	Black/White
3235261	10 ± 2	Black/Gray
3236284	4 ± 0.8	Black/Purple
3237293	20 ± 4	Black/Brown
3239134	2 ± 0.5	Black/Orange
NOTE:		
Two Way Delay Valve		
3237255	2.0 ± 0.5	Orange/Orange
Four-Part Reverse Delay Valve		
527011	8.0 ± 1.6	Black/Blue
547883	3.0 ± 0.6	Black/Brown

81182B

Reverse Delay Valve

Along with the forward delay valve, a reverse delay valve is used with certain engines to improve cold engine driveability and to reduce undesirable hydrocarbon (HC) emission.

When an engine is started, manifold vacuum applied to the distributor vacuum advance mechanism advances ignition timing. When the engine is accelerated manifold vacuum decreases causing the ignition timing to be retarded. To prevent the sudden retarding of ignition timing during acceleration, a one-way reverse delay valve is inserted in the vacuum line to delay the effects of the decrease in manifold vacuum.

Functional Test

(1) Connect external vacuum source to port on white side of delay valve.

(2) Connect one end of 24-inch (60 cm) section of rubber hose to vacuum gauge and other end to port on colored side of valve.

(3) With elapsed time device in view and a constant 10 in. Hg (34 kPa) of vacuum applied, note time required for gauge pointer to move from 0 to 8 in. Hg (0 to 27 kPa).

(4) Compare time to acceptable time limits listed in Reverse Delay Valve Time Limits chart.

Reverse Delay Valve Time Limits

Part Numbers	Time In Seconds	Color and Identification
3235938	10 ± 2	White/Gray
3235939	20 ± 4	White/Brown
3236285	4 ± 0.8	White/Purple
3237131	375 ± 75	White/Red
3237141	100 ± 20	White/Yellow
3237184	15 ± 3	White/Gold
3239383	2 ± 0.5	White/Orange

81182A

NOTE: *While testing delay valves use care to prevent oil or other foreign matter from entering vacuum ports.*

(5) Replace valve if it fails test, otherwise, install original valve with white side toward vacuum source.

SPECIFICATIONS

Vacuum Advance Control System Specifications

ENGINE	STANDARD COOLING		HEAVY DUTY COOLING	
	1 To D	2 To D	1 To D	2 To D
4-151	Below 120°F (49°C)	Above 120°F (65°C)	———	———
6-258	Below 155°F (68°C)	Above 155°F (68°C)	Below 220°F (104°C)	Above 220°F (104°C)
8-360	Below 155°F (68°C)	Above 155°F (68°C)	Below 220°F (104°C)	Above 220°F (104°C)

NOTE: TEMPERATURES ARE NOMINAL VALUES

81094A

NOTES

CRUISE COMMAND 1H

INDEX

GENERAL

The Jeep six- and eight-cylinder engine electronic Cruise Command operation is limited to speeds above 30 mph (48 km/h). At any speed above 30 mph (48 km/h), the unit will maintain the selected vehicle speed within 3.5 mph (5.6 km/h) on upgrades not exceeding 3 percent (most interstate highways). A change greater than 3.5 mph (5.6 km/h) may be experienced with vehicles having an economy axle ratio or when driving on unusually hilly terrain, or at high altitudes.

To activate the system, slide the control switch to the ON position and accelerate to the desired speed (above 30 mph or 48 km/h). Depress the SET pushbutton on the end of the turn signal switch lever and release. The system will be activated when the SET pushbutton is released.

The driver may regain normal control by sliding the control switch to the OFF position or by lightly depressing the brake pedal (manual and automatic transmission) or clutch pedal (manual transmission). If the brake or clutch method is used to regain control, the previously selected vehicle speed will remain in memory and may be regained by momentarily sliding the control switch to the **RESUME/ACCEL** position when the speed is above 30 mph (48 km/h). The memory is erased by turning the unit Off or by turning the ignition switch Off.

If a lower speed is desired while cruising at a selected speed, depress the SET pushbutton and hold until the vehicle decelerates to the desired speed. When the button is released, the new selected speed will be maintained.

If a higher speed is desired, accelerate to the desired speed, depress the SET pushbutton and release.

A higher speed may also be attained temporarily by sliding the control switch to the **RESUME/ACCEL** position and holding. The vehicle will accelerate until the switch is released. When released, the vehicle will decelerate until the Cruise Command resumes controlling the throttle at the previously set speed. If the Cruise Command is **ON** but not set at a cruise speed, when the control switch is released from the **RESUME/ACCEL** position the vehicle will decelerate as the throttle moves to the curb idle position.

WARNING: *Do not use the Cruise Command when driving on slippery or congested roads.*

COMPONENTS

The Cruise Command is a closed loop electromechanical servo system that consists of the following components: electronic regulator, speed sensor, servo, control switch, vacuum storage can and check valve (fig. 1H-1), and the release mechanisms, which consist of a mechanical vacuum vent valve and brake (and clutch with manual transmission) switch.

Electronic Regulator

The electronic regulator receives an input voltage that represents vehicle speed from the speed sensor, which is driven by the speedometer cable. The regulator (located under the instrument panel) has a low speed circuit that prevents operation below 30 mph (48 km/h).

The regulator is sealed by the manufacturer and cannot be serviced internally, although an external adjustment is possible.

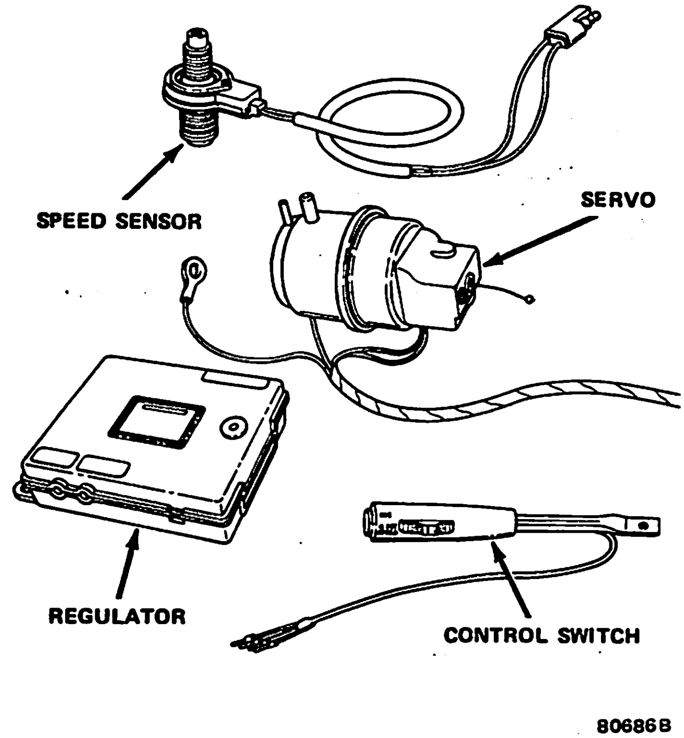

Fig. 1H-1 Electronic Cruise Command Components

Speed Sensor

The speed sensor is a tach-generator installed between upper and lower speedometer cables. It converts speedometer cable revolutions into a speed analog voltage input for the regulator.

Servo

The servo, mounted in the engine compartment, is controlled by the electronic regulator. Manifold vacuum provides the force for diaphragm motion. A bead-link chain connects the servo cable to the throttle linkage.

Control Switch

The control switch is an integral part of the turn signal switch lever. It functions as a communication link between the driver and the regulator assembly.

Release System

The release system deenergizes the Cruise Command by two methods and both are activated when the brake pedal (automatic and manual transmission) or clutch pedal (manual transmission) is depressed. The valves that control vacuum in the servo are electically controlled by the regulator. When the brake (or clutch pedal with manual transmission) is depressed, ground is removed (by action of the switch) from terminal 13 of the electronic regulator to deactivate the servo. The servo charge valve is closed and the servo vent valve is opened to admit atmospheric pressure. To further ensure immediate servo release, a brake or clutch pedal-activated mechanical vacuum vent valve (operating independently of the electronically controlled valves) admits atmospheric pressure into the servo whenever the brake or clutch pedal is depressed. A hissing sound may be heard momentarily.

OPERATION

Servo

The selected vehicle speed is maintained by the servo, which controls the carburetor throttle position according to regulator output. Two solenoid-controlled valves are used to control manifold vacuum applied to the servo (fig. 1H-2). In the deactivated state, the charge valve blocks manifold vacuum, while the vent valve admits atmospheric pressure. The spring relaxes the diaphragm and throttle position is unaffected. When the charge valve solenoid is energized, the valve is opened and manifold vacuum moves the diaphragm to control the throttle position. Throttle position is maintained for any speed above 30 mph (48 km/h) by balancing the amount of vacuum charge and vacuum vent. The control voltage that accomplishes this is provided by the regulator.

NOTE: *Air is removed from the vacuum storage can through the one-way (check) valve whenever the engine is operating. As the Cruise Command depletes the vacuum (replaced by air) in the can, the air is removed as needed. The can functions as a storage reservoir and provides a relatively constant vacuum level even when engine manifold vacuum is decreased during engine acceleration.*

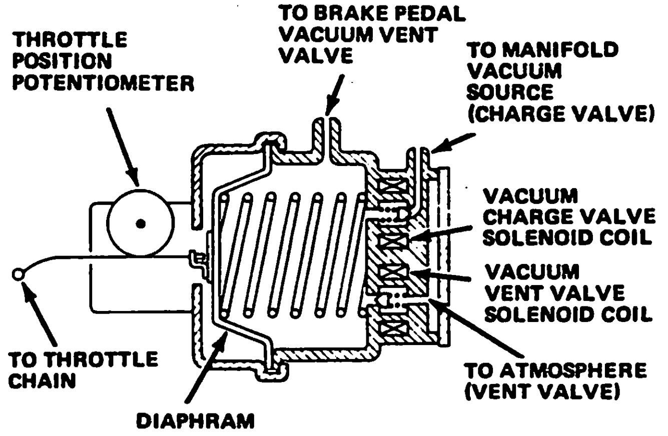

Fig. 1H-2 Servo Assembly

Electronic Regulator

The electronic regulator is a sealed black box that contains several electronic circuits.

The speed sensor, driven by the speedometer cable, is a tach-generator that functions as the source for the vehicle speed analog voltage. The AC voltage generated by the sensor is applied to the amplifier section of the regulator, which amplifies and shapes it. The amplified voltage signal is further modified by the frequency-to-DC converter, which transforms the variable AC voltage into a DC voltage that is proportional to the vehicle speed.

The DC voltage is applied to four circuits in the regulator for further action. The low speed switch circuit compares the amplitude of the DC voltage with a reference voltage that is equivalent to 30 mph (48 km/h). If the DC voltage amplitude is greater than the reference voltage amplitude, the engage/resume/accelerate circuit of the system is activated. The vehicle speed DC voltage is also applied to the high and low comparator circuits and to the memory circuit.

When the SET pushbutton is depressed, the memory circuit stores the amplitude of the DC voltage (equivalent to vehicle speed) for future reference. Two reference voltages are produced by the memory circuit, one represents the set speed plus 1/4 mph (0.4 km/h) and the other represents the set speed minus 1/4 mph (0.4 km/h). The reference plus voltage is applied to the high comparator circuit and the reference minus voltage is applied to the low comparator circuit.

If the DC voltage amplitude from the DC converter (representing vehicle speed) remains between the reference plus and minus voltage amplitudes, the regulator maintains the charge valve in the closed position. The vent valve is also maintained in the closed position. In this condition, the throttle is maintained in a fixed position.

NOTE: *In their closed position, the charge valve solenoid is deenergized and the vent valve solenoid is energized.*

Whenever a road incline is encountered, vehicle speed decreases, speed sensor output decreases and the DC voltage amplitude from the DC converter also decreases a proportional amount. This creates an error voltage that will be detected within the low comparator circuit. When the amplitude of this voltage drops below the low comparator reference voltage (set speed minus 1/4 mph or 0.4 km/h), the charge valve solenoid is energized, the valve opens and the diaphragm moves to pull the chain and throttle cable, and the throttle is opened further. As the throttle moves, a throttle-position sensor (potentiometer) inside the servo is activated to provide feedback voltage to both comparator circuits. Without it, the throttle would continue to be opened further than necessary to maintain the set speed. The throttle-position potentiometer feedback voltage eliminates the error voltage by increasing the DC voltage applied to the comparator circuits. When this voltage is increased to an amplitude that is between the high and low reference voltages, the charge valve solenoid is deenergized (valve closed) and the throttle is maintained in its new position. In this manner, changes in throttle position are proportional to the amount that vehicle speed differs from the set speed. For over-speed conditions (such as descending a hill), the operation is similar, except the high comparator circuit and vent valve are involved. The high comparator circuit detects the DC voltage amplitude increase (error voltage) from the DC converter and deenergizes the vent valve solenoid (valve open), admitting atmospheric pressure. The throttle begins to close. The throttle closing activates the throttle-position potentiometer and the feedback voltage eliminates the error voltage when the vehicle speed decreases to the set speed and the voltage amplitude to the comparator circuits is again between the two speed reference voltage amplitudes.

The high and low comparator circuits operate only when the engage/resume/accelerate circuit is activated. This is accomplished by depressing the SET pushbutton or by sliding the control switch to the RESUME/ACCEL position. When the SET pushbutton is depressed and released, the memory is updated to store the amplitude of the present vehicle speed voltage. The engage/resume/accelerate circuit is deactivated by depressing the brake (or clutch pedal with manual transmission), or by the vehicle speed voltage decreasing to below the low speed reference voltage (30 mph or 48 km/h).

DIAGNOSIS

To diagnose Cruise Command system malfunctions, refer to the Service Diagnosis Chart and Testing.

Refer to Chapter 3C—Instrument Panels and Components for details of speedometer cable and gear replacement.

Service Diagnosis

Condition	Possible Cause	Correction
SYSTEM DOES NOT ENGAGE IN "ON" POSITION	(1) Restricted vacuum hose or no vacuum.	(1) Locate restriction or air leak and repair.
	(2) Control switch defective.	(2) Replace switch.

80693A

Service Diagnosis (Cont'd.)

Condition	Possible Cause	Correction
	(3) Regulator defective.	(3) Replace regulator.
	(4) Speed sensor defective.	(4) Replace sensor.
	(5) Brake lamps defective.	(5) Replace brake lamp bulbs.
	(6) Brake light switch defective.	(6) Replace switch.
	(7) Brake light switch wire disconnected.	(7) Connect wire to switch.
	(8) Open circuit between brake light switch and brake lamps.	(8) Repair open circuit.
	(9) Mechanical vent valve position improperly adjusted.	(9) Adjust vent valve position.
RESUME FEATURE INOPERATIVE	(1) Defective servo ground connection.	(1) Check servo ground wire connection and repair as necessary.
	(2) Control switch defective.	(2) Replace switch.
ACCELERATE FUNCTION INOPERATIVE	(1) Accelerate circuit in regulator inoperative.	(1) Replace Regulator
	(2) Control Switch Defective	(2) Replace Switch
SYSTEM RE-ENGAGES WHEN BRAKE (OR CLUTCH) PEDAL IS RELEASED	(1) Regulator defective.	(1) Replace regulator.
	(2) Mechanical vent valve not opening.	(2) Adjust position or replace valve.
	(3) Kink in mechanical vent valve hose.	(3) Reroute hose to remove kink.
	(4) Brake light or clutch switch defective.	(4) Adjust or replace switch.
CARBURETOR THROTTLE DOES NOT RETURN TO IDLE POSITION	(1) Improper linkage adjustment.	(1) Adjust properly.
	(2) Improper chain adjustment.	(2) Adjust chain.
ROAD SPEED CHANGES MORE THAN 2 MPH (3.2 km/h) WHEN SETTING SPEED	(1) Centering adjustment set wrong.	(1) Adjust centering screw.
ENGINE ACCELERATES WHEN STARTED	(1) No slack in bead chain.	(1) Adjust chain.
	(2) Vacuum hose connections reversed at servo.	(2) Check connection and correct.
	(3) Servo defective.	(3) Replace servo.
SYSTEM DISENGAGES ON LEVEL ROAD WITHOUT APPLYING BRAKE (OR CLUTCH)	(1) Loose wire connection.	(1) Repair connection.
	(2) Loose vacuum hose connection.	(2) Check vacuum hose connection and repair as necessary.
	(3) Servo linkage broken.	(3) Repair linkage.
	(4) Defective brake light or clutch switch.	(1) Repair connection.
ERRATIC OPERATION	(1) Reverse polarity.	(1) Check position of speed sensor wires at connector.
	(2) Servo defective.	(2) Replace servo.
	(3) Regulator defective.	(3) Replace regulator.

80693B

Circuitry Tests

Perform the following tests as part of the service diagnosis to determine the cause and correction of a Cruise Command system malfunction. Refer to figure 1H-4 for the wiring diagram.

Regulator Wire Harness Connector

(1) Disconnect wire harness connector at regulator. Use suitable thin tool to depress tab inside hole on regulator identified by "Terminal Release."

(2) Verify that each wire is installed in correct location according to color. Refer to figures 1H-4 and 1H-5.

Speed Sensor Test

(1) Disconnect speed sensor wire harness connector.

(2) Connect voltmeter set on low AC scale to speed sensor wire connector terminals.

(3) Raise front and rear wheels of vehicle off ground and support vehicle with jack stands.

(4) Operate engine (wheels spinning freely) at 30 mph (48 km/h) and note voltage. Voltage should be approximately 0.9 volt. Increases of 0.1 volt per each 10 mph (16 km/h) increase in speed should also be indicated.

(5) Turn off engine and slowly halt wheels.

(6) Disconnect voltmeter.

(7) Replace speed sensor if defective. Refer to Chapter 3C.

(8) Connect speed sensor wire harness connector.

(9) Remove jack stands and lower vehicle.

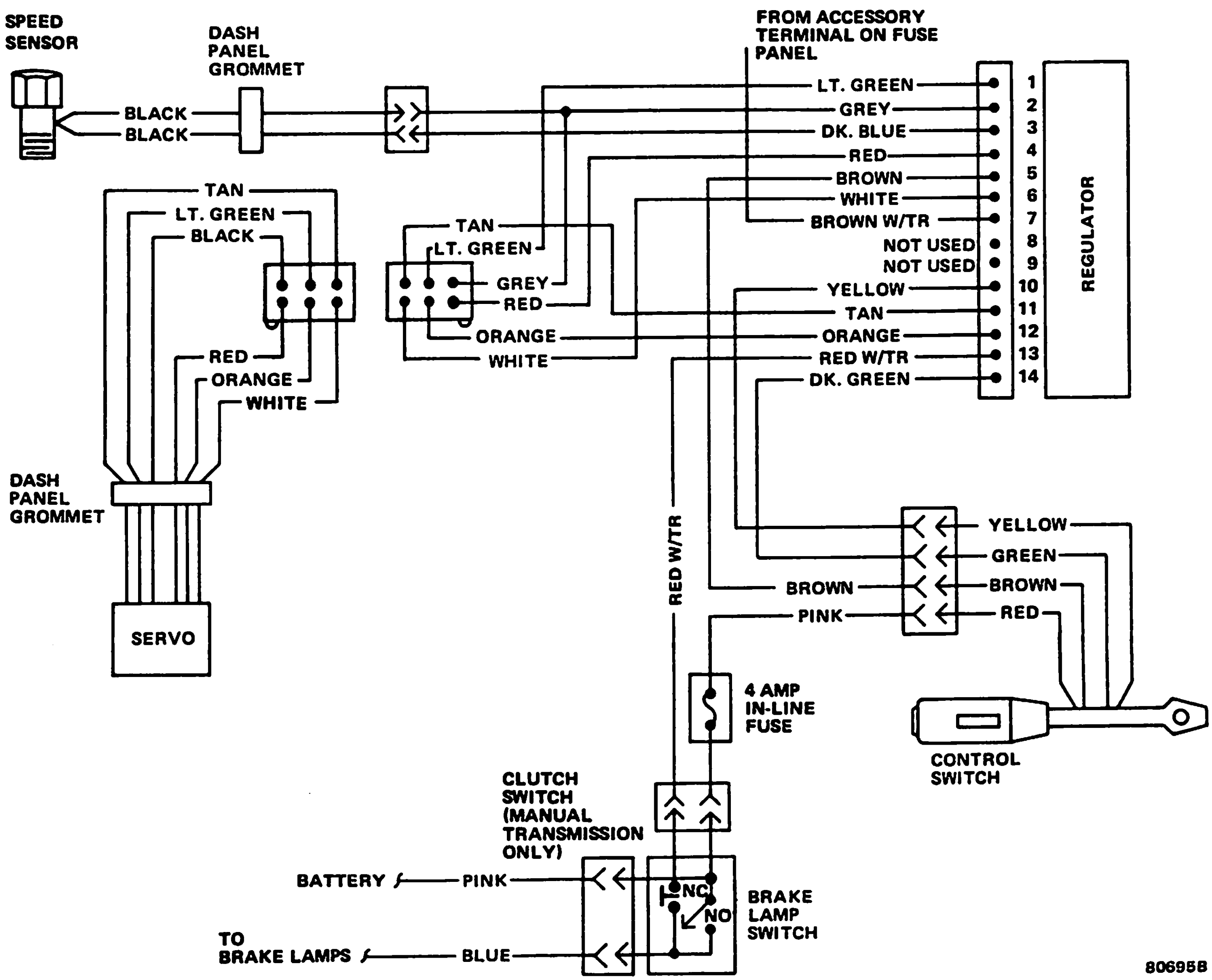

Fig. 1H-4 Cruise Command Wiring Diagram

Service Diagnosis (Cont'd.)

Condition	Possible Cause	Correction
VEHICLE CONTINUES TO ACCELERATE WHEN SET BUTTON IS RELEASED	(1) Servo defective. (2) Regulator defective.	(1) Replace servo. (2) Replace regulator.
SYSTEM ENGAGES BUT SLOWLY LOSES SET SPEED	(1) Air leak at vacuum hose connections or in hoses. (2) Air leak at vent valve on brake or clutch pedal.	(1) Check hoses and connections. Repair as necessary. (2) Replace vent valve.

80693C

TESTING

Perform the following tests as part of the service diagnosis to determine the cause of a malfunction and the correction required.

Control Switch Continuity Test

Use a 12-volt test lamp to test control switch continuity. Connect the tester to the wires as indicated in the Control Switch Test illustration (fig. 1H-3).

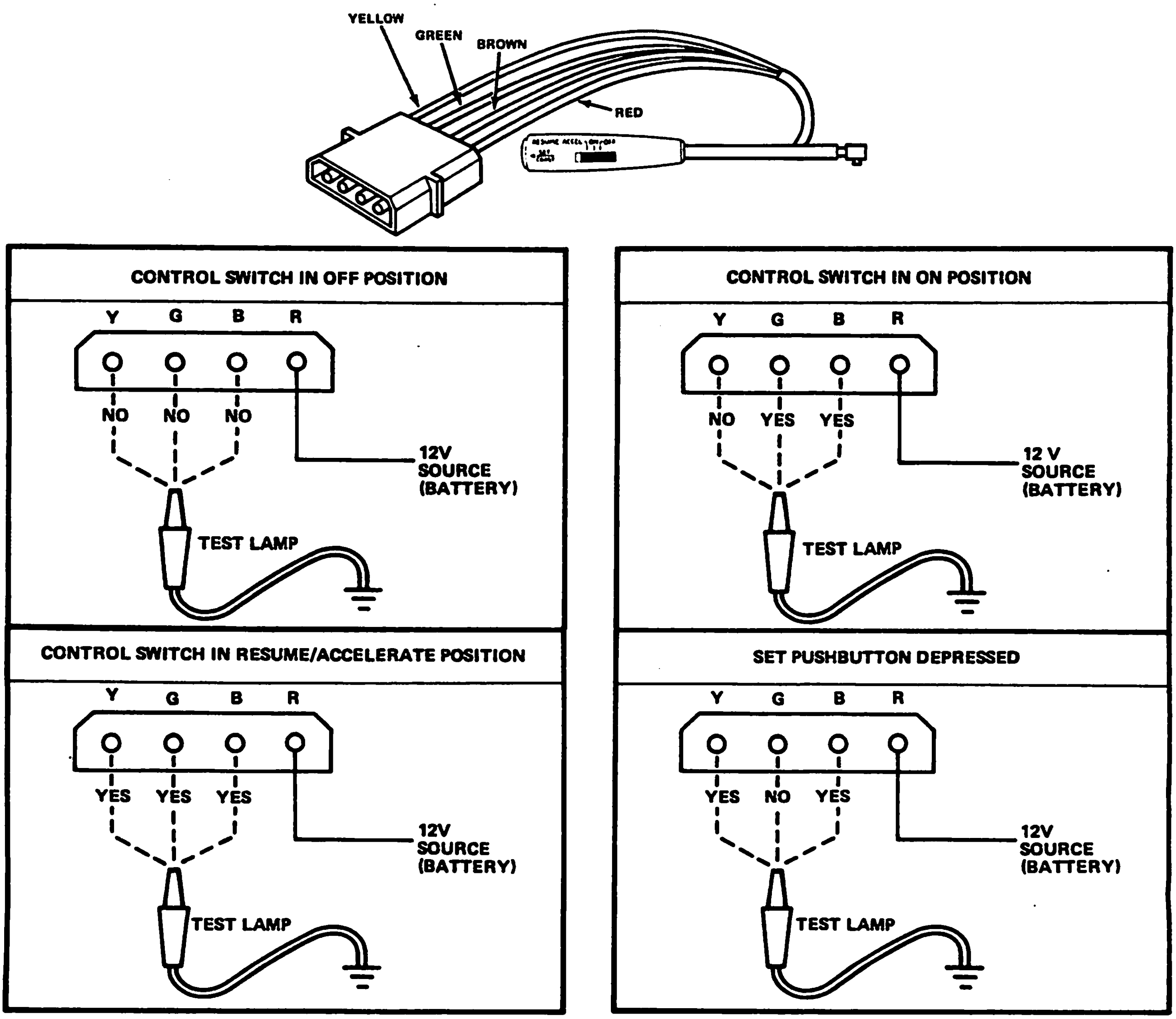

Fig. 1H-3 Control Switch Test

80694

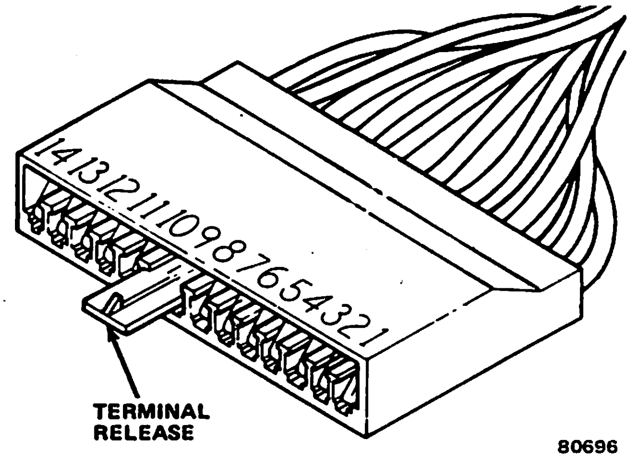

Fig. 1H-5 Harness Connector at Reguulator

Cruise Command System Test

A Cruise Command System test can be quickly and accurately performed with the Cruise Command Tester (AM-PC-1-R).

(1) Remove wire harness connector from regulator.

(2) Connect Cruise Command System Tester to wire harness connector.

Perform the five tests listed in the Cruise Command Diagnosis Chart for a rapid diagnosis of the Cruise Command System.

Tester AM-PC-1-R

The tester lamps are associated with the following components, circuits, etc.

- Lamp 1—Power source, fuse and ground, and **ON-OFF** and **SET-SPEED** contacts in control switch.
- Lamp 2—Speed sensor, associated wiring harness and terminals and connectors.
- Lamp 6—Servo charge valve solenoid, **RESUME/ACCEL** contacts in control switch, and associated wiring harness, terminals and connectors.
- Lamp 4—Throttle position potentiometer (feedback voltage), and associated wiring harness, terminals and connectors.
- Lamp 5—Servo vent valve solenoid, **RESUME/ACCEL** contacts in the control switch, and associated wiring harness, terminals and connectors.
- Lamp 3—Brake or clutch pedal switch adjustment, and associated wiring harness, terminals and connectors.

Cruise Command Diagnosis Chart

TEST AND CONDITIONS	TEST LAMP RESULTS	CHECK—REPAIR
(1) Test for Correct Power Source Connection	All Lamps Off	None
Ignition Switch—Off Control Switch—Off	One or More Lamps On	Remove brown wire (5) at regulator connector from direct source of voltage or repair defective control switch.
(2) Test for System Electrical Continuity	Lamps 1, 2, 3, & 4 On, Lamps 5 & 6 Off	None
Ignition Switch—On Control Switch—On	Lamp 1 Off	Check for blown fuse in brake light switch to control switch circuit. Check red, brown & green wires at control switch connector for continuity to switch. Check dark green wire (14) at regulator connector for continuity to regulator.
	Lamp 2 Off	Check speed sensor for correct output voltage. Check grey & dark blue wire at speed sensor connector for continuity to regulator connector. Check terminals 2, 3, 5 & 7 at regulator connector for proper connection to wires.
	Lamp 3 Off	Check brake light (and clutch, if equipped) switch adjustment. Check brown, light blue & dark green wire connections for continuity between connectors.

90799A

Cruise Command Diagnosis Chart (continued)

TEST AND CONDITIONS	TEST LAMP RESULTS	CHECK—REPAIR
	Lamp 4 Off	Check for defective connection at terminals 2 & 11 on regulator connector. Check operation of throttle position feedback potentiometer on servo.
(3) Test for Servo Charge Valve Solenoid Continuity Ignition Switch—On Control Switch—On Set Speed Switch - Depressed WARNING: If engine is operating, servo will move throttle to wide open position.	Lamp 2, 3, 4, 5 & 6 On Lamp 1 Off Lamp 4 will dim when servo moves throttle to wide open position with engine operating.	None
	Lamp 2 Off	Refer to Test 2, Lamp 2 Off.
	Lamp 3 Off	Refer to Test 2, Lamp 3 Off.
	Lamp 4 Off	Refer to Test 2, Lamp 4 Off.
	Lamp 5 Off	Check for defective connections at terminals 6 & 12 on regulator connector. Replace defective servo.
	Lamp 6 Off	Check for defective connection at terminals 4 & 12 on regulator connector. Replace defective servo.
	All lamps Off after depressing set speed switch or moving control switch to resume/acceleration position.	Check for blown fuse. Check for short circuits in red, pink & brown wire circuits at control switch. Replace defective servo.
(4) Test for System Disengagement with Brake or Clutch Pedal Depressed Ignition Switch—On Control Switch—On Brake Pedal Depressed	Lamps 1, 2 & 4 On Lamps 3, 5 & 6 Off Lamp 3 On when brake or clutch pedal is released.	None
	Lamp 1 Off	Refer to Test 2, Lamp 1 Off.
	Lamp 2 Off	Refer to Test 2, Lamp 2 Off.
	Lamp 4 Off	Refer to Test 2, Lamp 4 Off.
	Lamp 3 Off when brake or clutch pedal is released.	Refer to Test 2, Lamp 3 Off.

907998

Cruise Command Diagnosis Chart (continued)

TEST AND CONDITIONS	TEST LAMP RESULTS	CHECK—REPAIR
(5) Test Resume/Acceleration Function of Control Switch Ignition Switch—On Control Switch—On	All Lamps On Lamp 4 will dim when servo moves throttle to wide open position with engine operating.	None
Move control switch to resume/acceleration position. WARNING: If engine is operating, servo will move throttle to wide open position.	Lamp 1 Off	Refer to Test 2, Lamp 1 Off.
	Lamp 2 Off	Refer to Test 2, Lamp 2 Off.
	Lamp 3 Off	Refer to Test 2, Lamp 3 Off.
	Lamp 4 Off	Refer to Test 2, Lamp 4 Off.
	Lamp 5 Off	Refer to Test 3, Lamp 5 Off.
	Lamp 6 Off	Refer to Test 3, Lamp 6 Off.
	All Lamps Off	Refer to Test 3, All Lamps Off.

90799C

ADJUSTMENTS

Centering Adjustment

Adjustment is made by turning the centering adjustment screw on the regulator (fig. 1H-6).

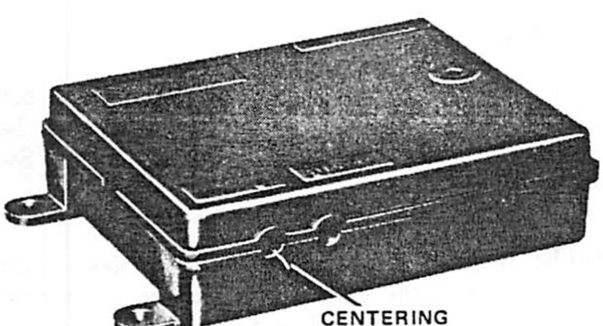

Fig. 1H-6 Centering Adjustment Screw Location

If the speed control engages at two or more mph (3.2 or more km/h) higher than the selected vehicle speed, turn the centering adjusting screw counterclockwise a small amount. If engagement speed is two or more mph (3.2 or more km/h) below selected speed, turn the centering adjusting screw clockwise a small amount (fig. 1H-6).

NOTE: *Check for proper centering adjustment on a level road after each adjustment.*

Vacuum (Mechanical) Vent Valve

(1) Depress brake or clutch pedal and hold in depressed position.

(2) Move vacuum vent valve toward bracket on pedal as far as possible.

(3) Release brake or clutch pedal.

REGULATOR REPLACEMENT

The regulator is mounted on a bracket under the instrument panel near the headlamp switch. Remove screws and disconnect connector. Insert suitable thin tool to depress tab inside hole on regulator identified by "Terminal Release." To install, insert connector into regulator and install screws.

SERVO REPLACEMENT

Removal

(1) Remove retaining nuts and cable housing from servo.

(2) Spread clip connecting cable to servo and remove.

(3) Disconnect vacuum hoses from servo.

(4) Remove retaining nut and servo from bracket. Note position of ground cable.

(5) Disconnect wire harness connector under instrument panel. Carefully maneuver harness through dash panel and remove servo.

Installation

(1) Attach servo and nut to bracket. Tighten with 60 inch-pounds (7 N•m) torque. Ensure ground cable is positioned on stud.

(2) Maneuver wire harness through dash panel and connect connector.

(3) Install cable on servo and squeeze clip to retain cable.

NOTE: *Mounting studs are not equally spaced from hole in servo. Ensure housing is installed correctly.*

(4) Connect vacuum hoses.

SERVO CHAIN REPLACEMENT

(5) Open tabs retaining servo cable.

(6) Disconnect chain from bellcrank pin. Remove chain.

(7) Attach replacement chain to servo cable, allowing seven beads outside tabs. Squeeze tabs together.

(8) Connect replacement chain to bellcrank pin.

SERVO CABLE REPLACEMENT

Removal

(1) Remove clip from pin on bellcrank and remove chain.

(2) Squeeze tabs that retain cable housing in bracket and remove cable from bracket.

(3) Remove retaining nuts and cable housing from servo.

(4) Spread clip that connects cable to servo and remove.

(5) Spread tabs on chain end of cable and remove chain.

Installation

(1) Connect chain to cable and squeeze tabs. Allow seven beads to remain outside cable tab.

NOTE: *Beads must be free to rotate.*

(2) Attach cable to servo and squeeze clip to retain cable.

(3) Install cable housing on servo.

NOTE: *Mounting studs are not equally spaced from hole in servo. Ensure housing is installed correctly.*

(4) Attach cable housing to bracket. Ensure tabs are locked in bracket.

(5) Place chain on bellcrank pin and install lock clip. Seven beads must be visible between bellcrank lock clip and cable clip.

CONTROL SWITCH REPLACEMENT

The Cruise Command control switch is integral with the turn signal switch lever. The switch is not repairable. The switch and wire harness assembly can be replaced only as a complete unit.

Removal

(1) Remove following items.
- (a) Horn button insert
- (b) Steering wheel
- (c) Anti-theft cover
- (d) Locking plate and horn contact

(2) Remove turn signal switch lever and control switch assembly (allow handle to hang loose outside steering column).

(3) Remove four-way flasher knob.

(4) Remove holddown screws and turn signal switch.

(5) Remove trim piece from under steering column.

(6) Disconnect four-wire connector.

(7) *Tilt Column*—**Remove wires from plastic connector. Fold back and tape two of four wires to wire harness. Tie or tape string to wire harness.**

(8) *Standard Column*—**Tie or tape string to plastic connector.**

(9) Remove lever and wire harness assembly from column.

Installation

(1) Test replacement Cruise Command control switch by connecting to wire harness connector before installing in steering column. Refer to Control Switch Continuity Test.

NOTE: *When installing, the wire harness must be routed through the turn signal switch lever opening because the handle will not fit through the lever opening.*

(2) Remove wires from connector. Fold back and tape two of four wires to wire harness. Tie or tape wire harness to string that was attached to original wire harness before removal.

(3) Pull replacement wire harness down through steering column. On tilt column, harness must pass through hole on left side of steering shaft.

NOTE: *It may be necessary to loosen steering column mounting screws for easier routing of harness.*

NOTES

(4) Install turn signal switch and four-way flasher knob.

(5) Install turn signal switch lever and control switch assembly.

(6) Install horn contact, locking plate and lock ring anti-theft cover.

(7) Install steering wheel and horn button insert.

(8) Install trim on steering column.

(9) Test Cruise Command operation.

Tools

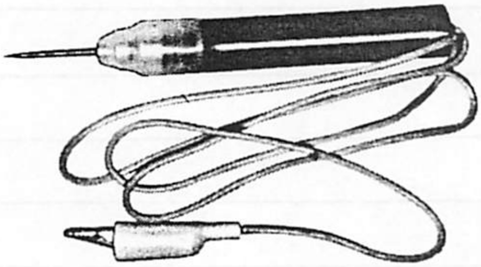

J-21008
CONTINUITY
TEST LAMP

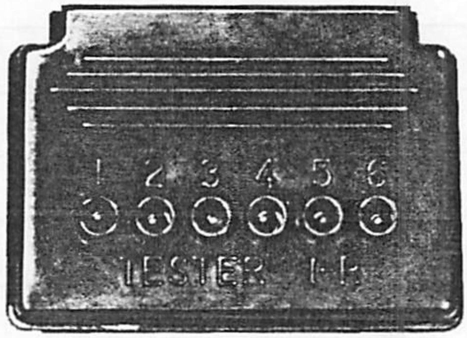

AM PC-1-R

70271

FUEL SYSTEMS 1J

SECTION INDEX

GENERAL INFORMATION

AIR CLEANERS

An air cleaner is necessary to protect the fuel system, as well as the moving parts of the engine, from the abrasive and clogging effects of dust, dirt and sediment normally present in the intake air supply.

The lower portion of the air cleaner is designed to reduce the noise emitted by air rushing through the carburetor to the intake system. The air cleaner also serves as a flame arrester in the event of a backfire up through the carburetor.

A replaceable filter element (paper-type) is used as standard equipment (figs. 1J-1 and 1J-2).

Replace the air cleaner filter element at the intervals listed in the Maintenance Schedule. More frequent replacement is advisable when the vehicle is operated in dusty areas or on unpaved roads.

The air cleaner intake duct contains the air valve for the Thermostatically Controlled Air Cleaner (TAC) System and trap door (if equipped). The operation and diagnosis of both systems are described within Thermostatically Controlled Air Cleaner (TAC) System section of this chapter. The thermal sensor is located on the inside base of the air cleaner housing.

Service

To clean the paper filter element, shake out accumulated dirt—**DO NOT WASH**. Use compressed air to carefully blow through the element from the inside toward the outside, opposite the direction of normal airflow.

Replace the air cleaner filter element more frequently than specified in the Maintenance Schedule if there is any apparent damage or evidence of being clogged.

FUEL FILTERS

All Jeep six- and eight-cylinder engine fuel systems are protected from the entry of dirt and other foreign matter through the carburetor fuel inlet by a replaceable 15-micron, pleated paper filter located in the carburetor fuel inlet pipe and secured by two short rubber hoses and clamps. Replace the filter at the intervals outlined in the Maintenance Schedule.

All vehicles with six- and eight-cylinder engines have a fuel return system that requires an extra nipple on the fuel filter to route fuel back to the fuel tank. The filter must be installed with the return nipple upward. Refer to Fuel Return System.

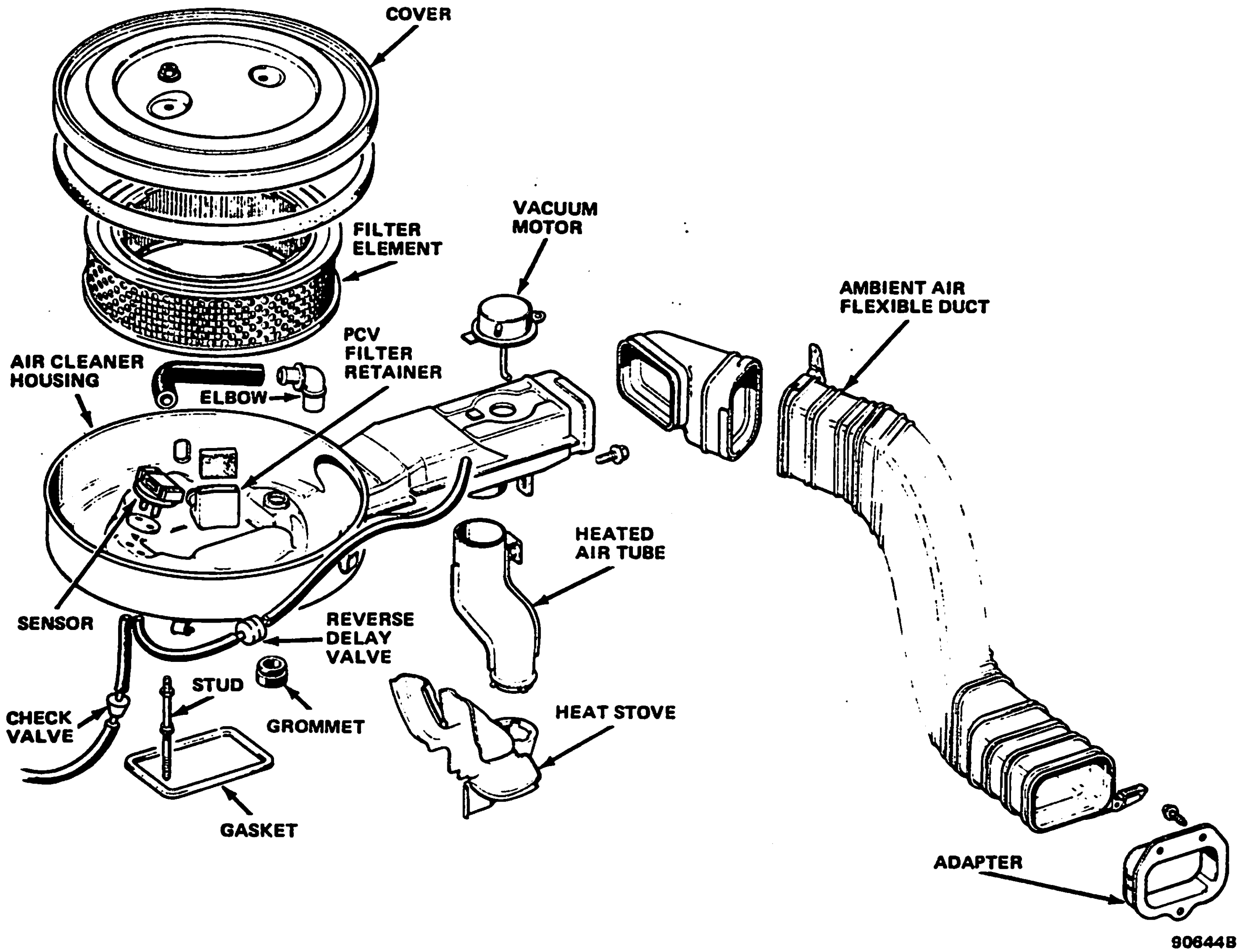

Fig. 1J-1 Carburetor Air Cleaner—Four-Cylinder Engines

The fuel filter for four-cylinder engines is located inside the carburetor. If allowed to become plugged, the result will be restricted fuel flow and loss of engine power. To replace the fuel filter follow the procedure listed below.

NOTE: *Four-cylinder engines have no fuel return to the fuel tank. The sending unit fuel return nipple is capped.*

Replacement—Four-Cylinder Engine

WARNING: *Battery negative cable must be removed to prevent a potential fire hazard when fuel pipe is disconnected.*

(1) Disconnect battery negative cable.
(2) Disconnect fuel pipe at fuel inlet filter fitting.
(3) Remove fuel inlet filter fitting from carburetor.
(4) Remove filter element and spring (fig. 1J-3).
(5) Install replacement filter element and spring with hole in filter element toward fitting.
(6) With new gasket on fitting, install fuel inlet fitting and tighten with 25 foot-pounds (34 N•m) torque.
(7) Install fuel pipe and tighten with 18 foot-pounds (24 N•m) torque while holding fuel inlet fitting with wrench.
(8) Connect battery negative cable.

WARNING: *Use extreme caution when engine is operating. The fan, pulleys and belts can cause serious personal injury. Do not wear loose clothing. Do not stand in direct line with fan blades.*

(9) Start engine and inspect for leaks.

Fuel Tank Filter

All vehicles use a woven Saran sleeve-type filter that is attached to the end of the fuel outlet tube inside the fuel tank. This filter is rated at 65 microns and repels water. Under normal conditions, it requires no maintenance or service.

FUEL TANKS

NOTE: *All reference to CJ vehicles also pertains to Scrambler vehicles.*

The fuel tank on all models is protected by a shield. Cherokee, Wagoneer and CJ models have two tank vents

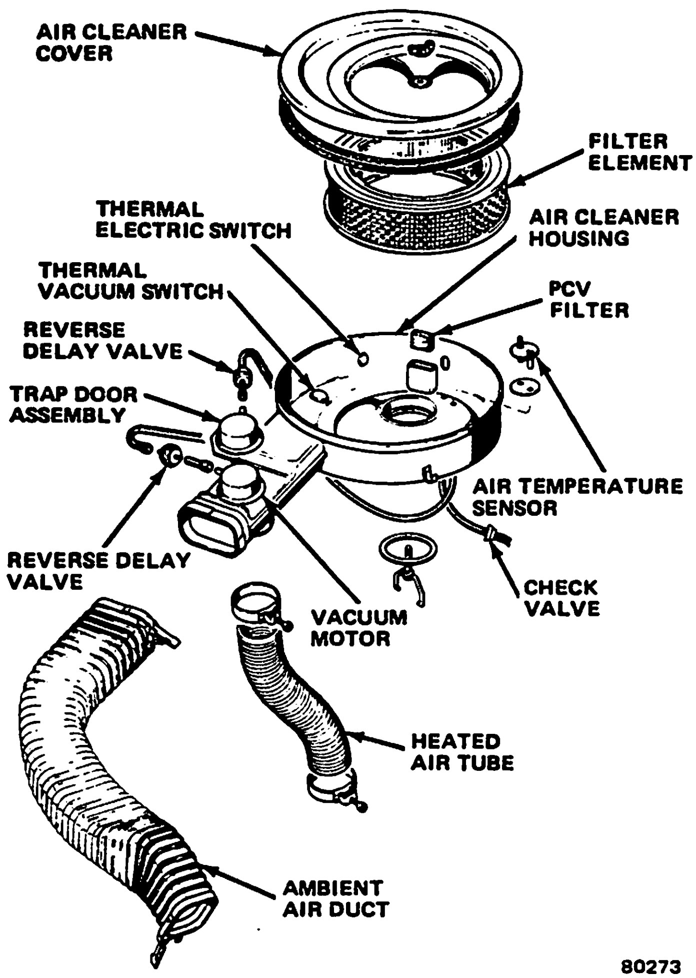

Fig. 1J-2 Typical Carburetor Air Cleaner—Six- and Eight-Cylinder Engines

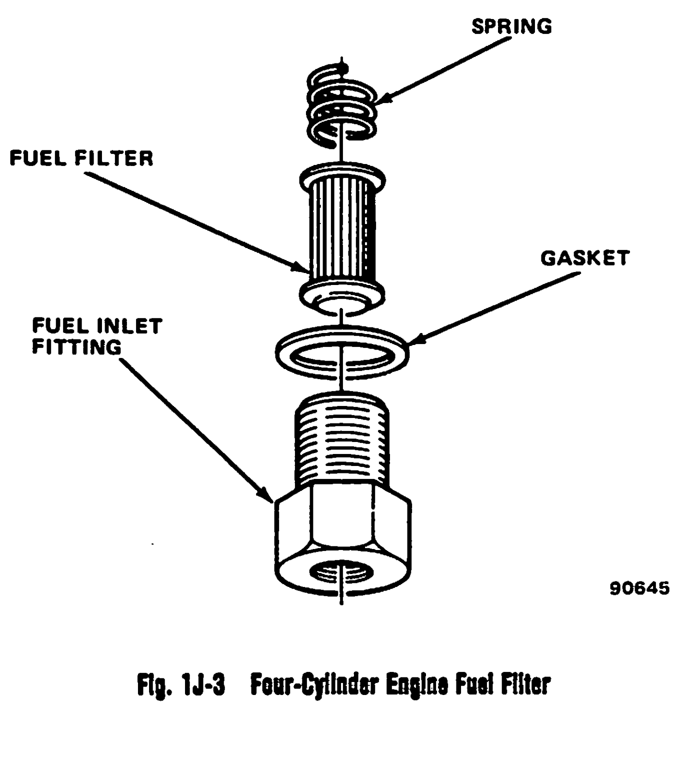

Fig. 1J-3 Four-Cylinder Engine Fuel Filter

while Truck models have one vent. The various fuel tank and venting arrangements are illustrated in figures 1J-4, 1J-5 and 1J-6.

The fuel tanks are external expansion types that are vented by vapor hoses routed to the vapor canister. Refer to Fuel Vapor Control System.

Fuel Tank Replacement

Removal—CJ Vehicles

(1) Position jack under shield and remove screws.

(2) Disconnect fuel outlet and return hoses, fuel filler hose and filler vent hose.

(3) Partially lower shield and tank and disconnect tank vapor vent hoses.

(4) Disconnect fuel gauge sending unit wires, lower tank and remove.

Installation—CJ Vehicles

(1) Position shield and tank on jack and partially raise.

(2) Install fuel outlet hose, return hose, fuel gauge sending unit wires and tank vapor vent hoses.

(3) Raise shield and tank to installation position, install screws and tighten.

(4) Install fuel filler hose and filler vent hose.

Removal—Cherokee-Wagoneer Vehicles

(1) Remove parking brake cable guide clips.

(2) Disconnect one brake cable at connector.

(3) Disconnect fuel filler hose.

(4) Disconnect front drive shaft and position aside to allow clearance for tank removal.

(5) Place jack under shield and tank and remove attaching hardware.

(6) Lower shield and tank. Disconnect fuel gauge sending unit wires, fuel outlet hose and return hose.

Installation—Cherokee-Wagoneer Vehicles

(1) Place shield and tank on jack. Connect fuel gauge sending unit wires, fuel outlet hose and return hose.

(2) Raise shield and tank to installation position and secure with attaching hardware.

(3) Connect fuel filler hose.

(4) Connect parking brake cable.

(5) Connect front drive shaft.

Removal—Truck Vehicles

(1) Disconnect fuel filler hose, filler vent hose and tank vapor vent hose.

(2) Place jack under shield and tank.

(3) Loosen straps and lower shield and tank.

(4) Disconnect fuel gauge sending unit wires, fuel outlet hose and fuel return hose.

(5) Remove shield and tank.

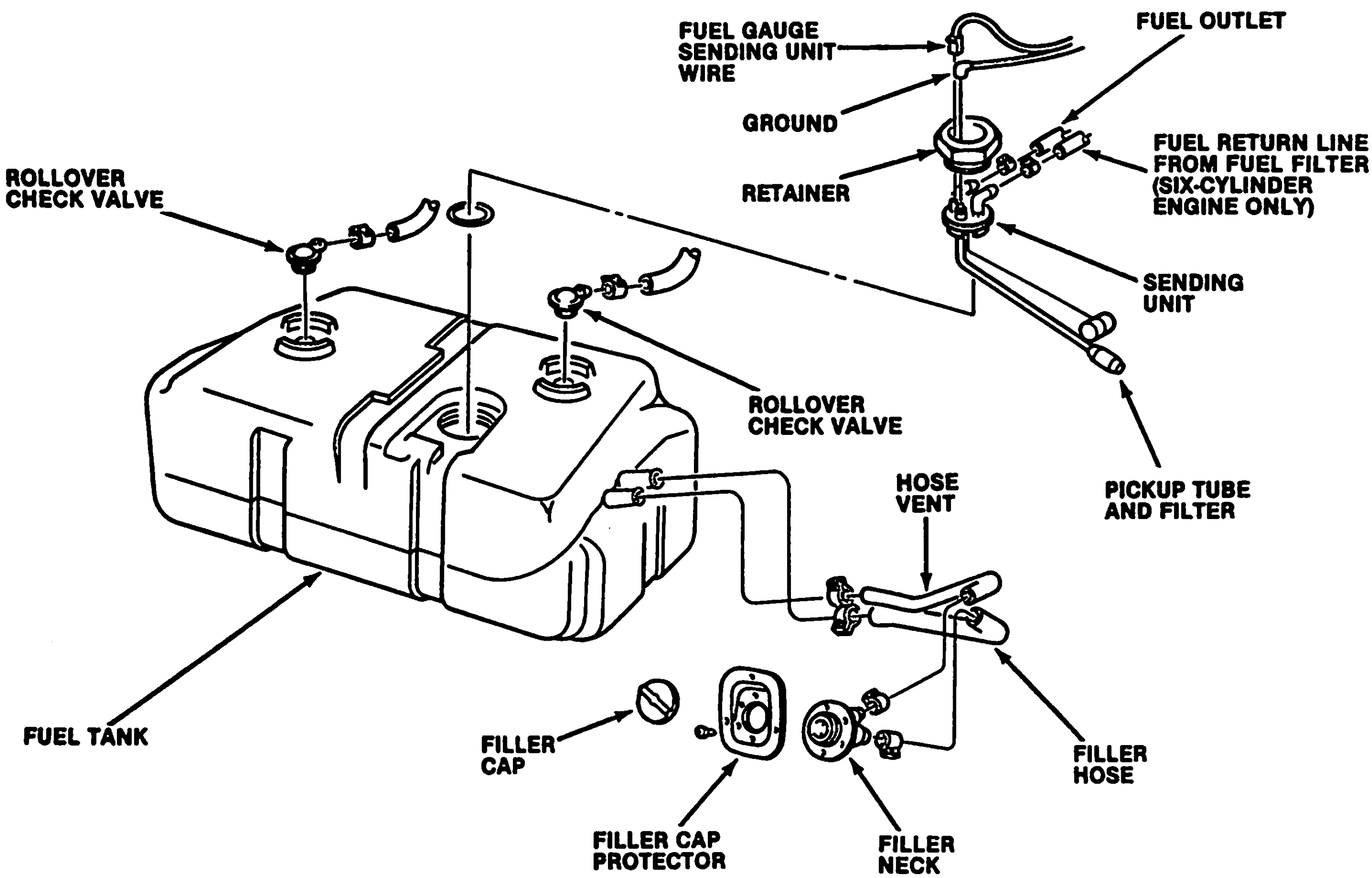

Fig. 1J-4 Fuel Tank and Associated Fuel System Components—CJ Vehicles

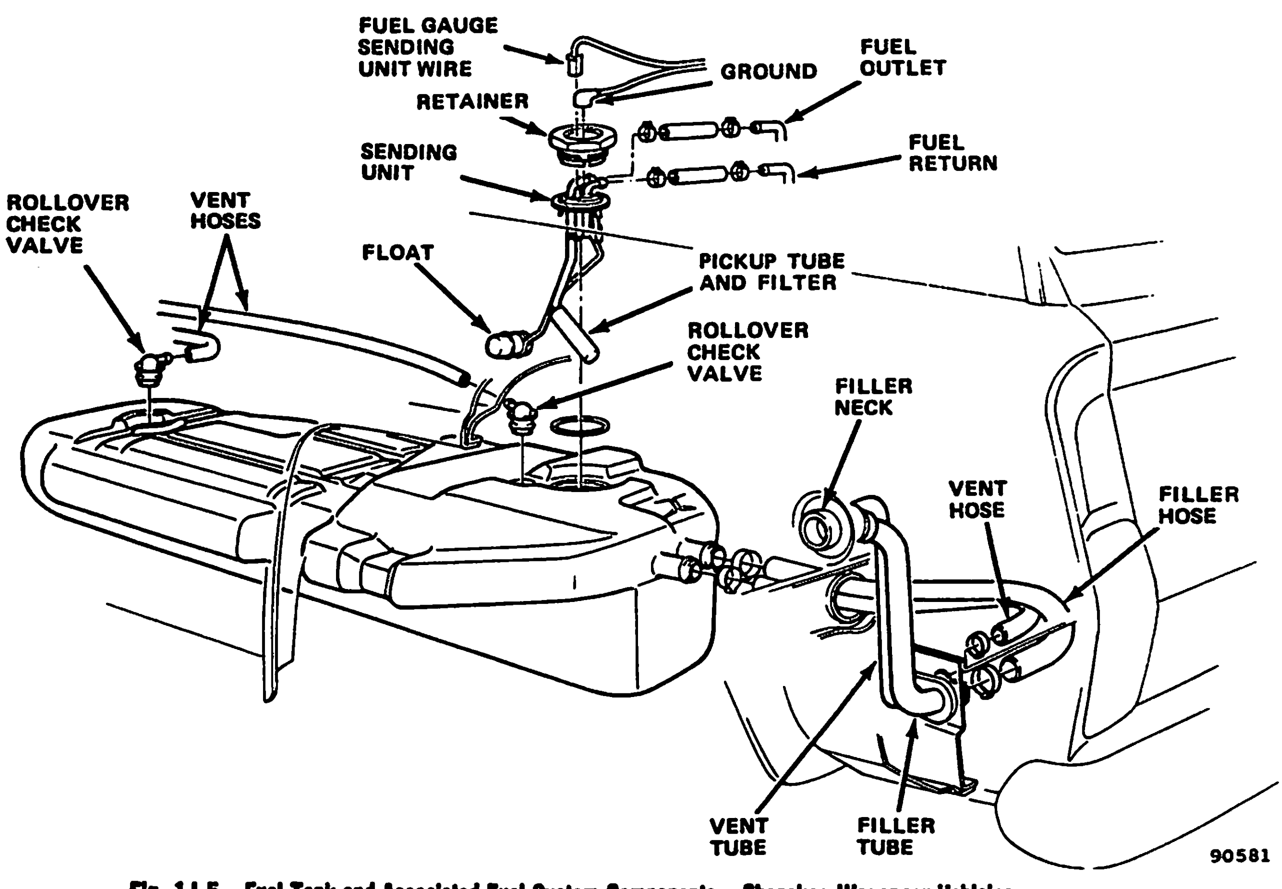

Fig. 1J-5 Fuel Tank and Associated Fuel System Components—Cherokee-Wagoneer Vehicles

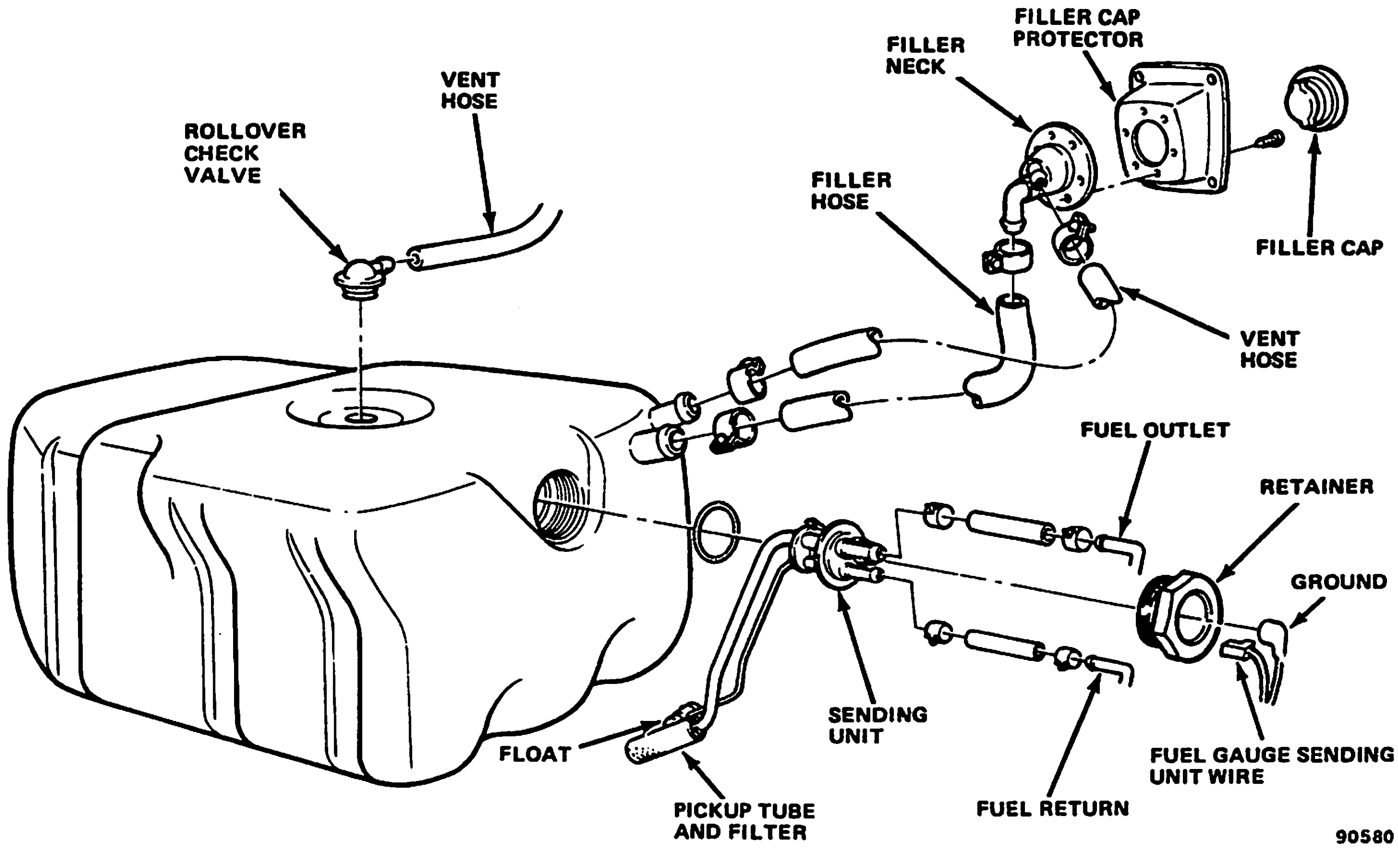

Fig. 1J-6 Fuel Tank and Associated Fuel System Components—Truck Vehicles

Installation—Truck Vehicles

(1) Install replacement clamps on filler and vent hoses and fuel outlet and return hoses.

(2) Position shield and tank on jack.

(3) Connect fuel outlet and return hoses and sending unit wires.

(4) Raise shield and tank and install straps.

(5) Connect filler and vent hoses to tank.

Fuel Gauge Sending Unit

The sending unit assembly utilizes a float that pivots on a variable resistance element.

The fuel pickup, fuel system nipples and the sending unit assembly are an integral unit that is mounted on a flanged opening on the fuel tank. For all vehicles, it is secured with a threaded retainer that must be tightened with a torque of 14 to 18 foot-pounds (19 to 24 N·m).

Removal—All Vehicles

(1) Remove fuel tank according to removal procedures previously outlined.

(2) With Tool J-23726, turn threaded retainer counterclockwise and remove.

(3) Remove sending unit assembly (figs. 1J-4, 5 and 6).

Installation—All Vehicles

(1) Position sending unit assembly in opening on top of tank (figs. 1J-4, 5 and 6).

NOTE: *Ensure O-ring is properly positioned in groove. Replace improperly fitting ring.*

(2) Position threaded retainer, turn clockwise and, with Tool J-23726, tighten with a torque of 14 to 18 foot-pounds (19 to 24 N·m).

(3) Install fuel tank according to installation procedures previously outlined.

NOTE: *Ensure the sending unit fuel gauge and ground wires have a good electrical connection.*

Fuel Tank Filler Neck

The fuel filler neck on all models has been designed to provide for vapor control during refilling and to improve the fill rate.

The filler neck for all models incorporates a restrictor to prevent entry of nozzles used with leaded fuel gasoline pumps. The restrictor reduces the size of the filler neck to a small opening that is covered by a trap door. The small diameter unleaded fuel pump nozzle will pass through the restrictor opening and push open the restrictor trap door to allow the fuel tank to be refilled. This protects the catalytic converter from contamination by leaded fuel.

The filler neck opening is located on the right rear body panel on CJ vehicles. On Cherokee and Wagoneer vehicles, the filler neck opening is located on the left rear quarter panel. On Truck vehicles, it is located on the left side of the pickup box.

The filler neck is connected to the fuel tank inlet by a hose secured with clamps.

All fuel tanks are equipped with a filler vent hose that extends from a fitting on top of the tank to the filler neck. This vent relieves the air displaced as the tank is filled.

Fuel Tank Filler Cap

The filler cap incorporates a two-way relief valve that is closed to the atmosphere during normal operating conditions. The relief valve is calibrated to open only when a pressure of 0.75 to 1.5 psi (5 to 10 kPa) or a vacuum of 1.1 to 1.8 in. Hg (4 to 6 kPa) occurs within the tank. When the pressure or vacuum is relieved, the valve returns to the normally closed position.

FUEL VAPOR CONTROL SYSTEMS

The fuel vapor control system prevents raw fuel vapor from escaping into the atmosphere. Fuel vapor from the fuel tank and carburetor bowl are collected in a canister and are metered into the intake manifold for combustion. On all vehicles, rollover check valves in the vent system prevent fuel from flowing out of the vent hoses if the vehicle is accidentally rolled over. The various typical components, depicted in figure 1J-7, are described below.

NOTE: *The systems used with CJ and Truck vehicles are similar to that illustrated in figure 1J-7.*

Components

Vapor Canister

This component is used on all vehicles. The canister is filled with granules of activated charcoal. Vapor entering the canister is absorbed by the granules.

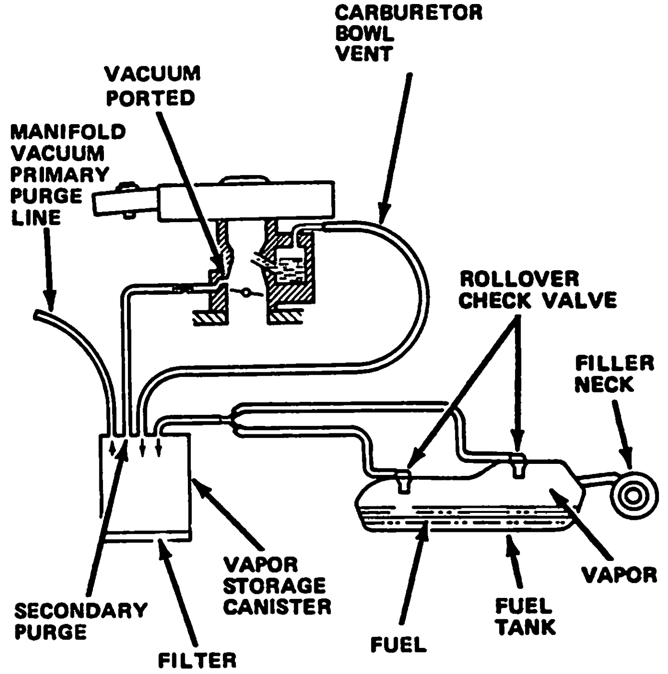

Fig. 1J-7 Fuel Vapor Control System—Cherokee-Wagoneer

The canister has a staged dual purge feature (fig. 1J-8). Two inlets are provided, one for fuel tank vapor and one for carburetor bowl vapor. The outlet is connected to an intake manifold vacuum source. The fourth nipple is connected to the carburetor spark port (ported vacuum).

When the engine is operating, fresh air enters through the inlet filter in the bottom of the canister and purges the stored vapor. When the ported vacuum reaches 12 in. Hg (41 kPa), the secondary purge circuit is opened, and the canister is purged at a much higher rate.

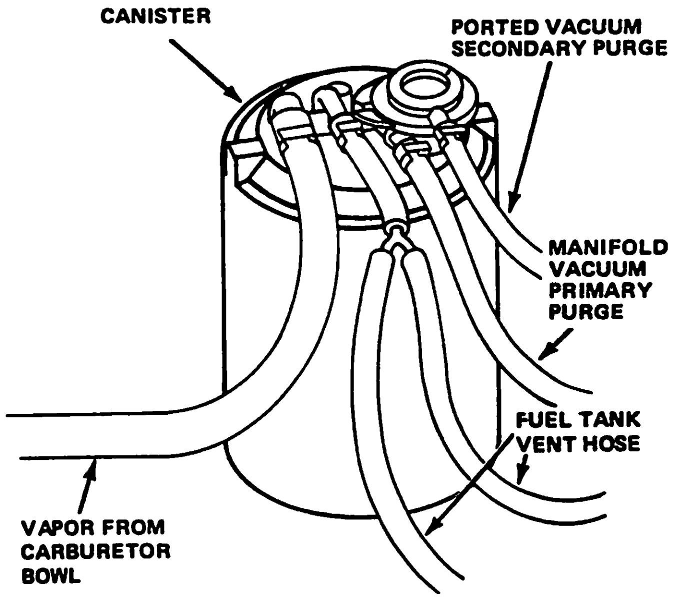

Fig. 1J-8 Fuel Vapor Control Canister and Hoses—Typical

Rollover Check Valve

This component is used on all Jeep vehicles. The rollover check valve prevents fuel flow from the fuel tank through the vent hoses in the event of vehicle rollover. The check valve consists of a plunger and a stainless steel ball (figs. 1J-9 and 1J-10). When inverted, the stainless steel ball pushes the plunger against its seat. A properly functioning rollover valve will hold 3 psi (21 kPa) of air pressure on the inlet side when inverted.

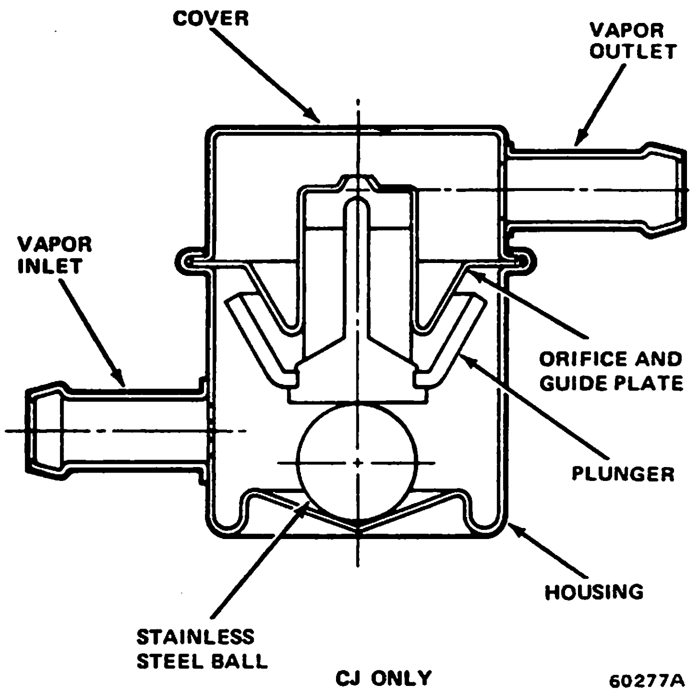

Fig. 1J-9 Rollover Check Valve—CJ Vehicles

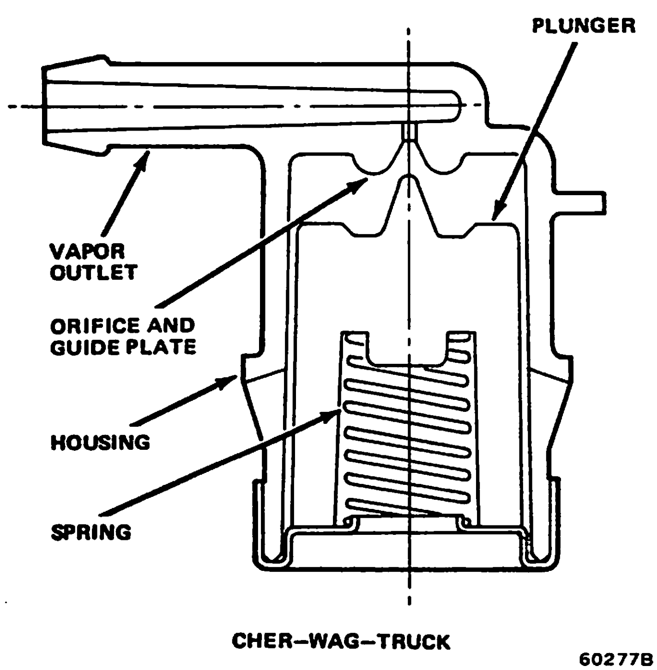

Fig. 1J-10 Rollover Check Valve—Cherokee-Wagoneer-Truck Vehicles

Carburetor External Bowl Vent

This component is used on all carburetors. The carburetor external bowl vent provides an outlet for fuel vapor when the engine is not operating (fig. 1J-11). If the vent were not provided, raw fuel vapor would enter the atmosphere. Some would also enter the intake manifold and cause difficult hot restarts. When the engine is operating, the fuel bowl must be vented to the inside of the air cleaner for proper fuel flow. This is accomplished by automatically closing the external bowl vent by a mechanical link from the throttle. Refer to Float Circuit in the applicable carburetor section for specific operating principles.

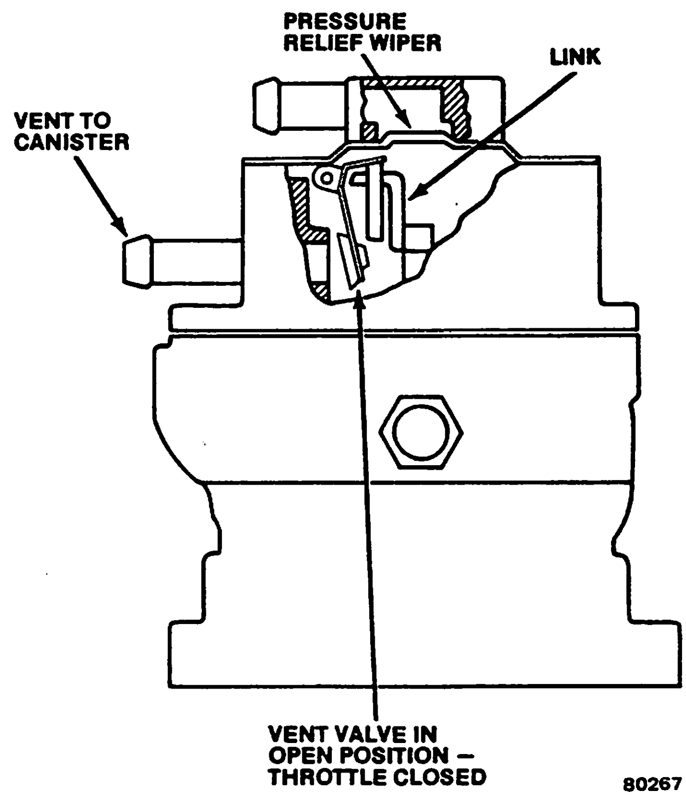

Fig. 1J-11 External Bowl Vent—Typical

Fuel Vapor Control Integrity Test

NOTE: *This procedure is for six- and eight-cylinder engines only.*

(1) If a manometer is not available, one may be fabricated (fig. 1J-12).

(a) Attach a 6-foot length of 3/8-inch clear plastic tubing (Tygon or equivalent) to a 4-foot x 6-inch x 1-inch board.

(b) Fill tube with water to a height of 15 inches.

(2) Visually inspect fuel vapor control system for loose or damaged hoses, clamps, etc. Repair as necessary.

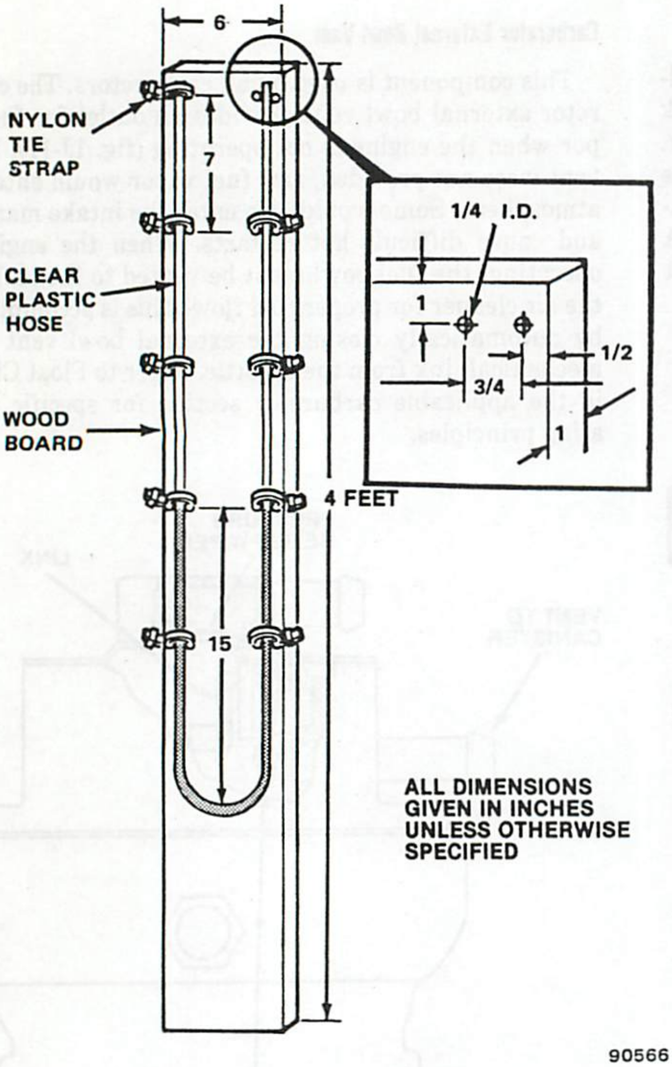

Fig. 1J-12 Fabricated Manometer

(3) Remove fuel return hose (six- and eight-cylinder engines only) from fuel filter (engine compartment) and plug opening in filter.

(4) Remove fuel tank vapor hose from charcoal canister.

(5) Connect plastic tube or rubber hose between manometer and fuel tank vapor hose.

NOTE: *Fuel tank must be no more than 3/4 full.*

CAUTION: *Do not pressurize the fuel vapor control system more than 1.5 psi or 10.3 kPa (41.5 inches of water).*

(6) With bicycle tire air pump (suggested maximum pump size is 15 inches in length, 1 inch plunger diameter), pressurize system at fuel return hose until column of water in manometer rises 15 inches (1.1 in. Hg or 3.7 kPa) from no-pressure position.

(7) With soap and water solution, inspect all fuel vapor control system connections for leaks (bubbles). Repair as necessary.

(8) Connect fuel tank vapor hose to canister and fuel return hose to fuel filter.

FUEL RETURN SYSTEM

All Jeep vehicles with six- and eight-cylinder engines employ a fuel return system to reduce the possibility of high temperature fuel vapor problems. The fuel return system is comprised of a fuel filter with a return nipple and a return line to the fuel tank (fig. 1J-13).

The fuel return line is routed to the fuel tank, where it connects to a nipple on the fuel tank sending unit. During normal operation, a small portion of liquid fuel is returned to the tank. During periods of high under hood temperatures, vaporized fuel is also returned to the tank and not passed to the carburetor.

The return line nipple on the fuel filter must be positioned upward to ensure proper fuel system operation.

Some engine/carburetor combinations are equipped with an inline check valve in the fuel return system near the fuel filter. The valve eliminates any possibility of fuel returning to the carburetor through the fuel return line. The check valve has a stainless steel, spring-assisted check ball that closes the orifice (fig. 1J-14). The valve is secured by a clamp. Pressure of 0.1 to 0.6 psi (0.68 to 4.13 kPa) at the fuel filter end opens the check valve and permits normal operation of the fuel system.

The check valve is marked with an arrow that indicates the direction of normal fuel flow. If it is reversed, the fuel return system will not function.

FUEL GAUGE

Refer to Chapter 1L—Engine Instrumentation for operation, malfunction diagnosis and replacement procedures. Service of the sending unit is described within Fuel Tank in this chapter.

FUEL PUMP

A single-action, stamped fuel pump is used for all engine applications. The fuel pump is comprised of an actuating lever, a diaphragm and spring, an inlet valve and an outlet valve (fig. 1J-15). An eccentric on the engine camshaft operates the fuel pump lever, which is linked to the pump diaphragm. The lever pulls the diaphragm to its extended position to pump fuel into the inlet valve. Spring pressure pushes the diaphragm toward its relaxed position to force fuel out of the outlet valve. When the carburetor float needle valve closes, fuel pump output is limited to the amount that returns back to the fuel tank through the fuel return line. The fuel accumulated in the fuel pump chamber prevents the diaphragm from relaxing. The actuating lever continues to move up and down, but is prevented from operating the diaphragm, which is held in its extended position by fuel pressure. Fuel flow from the pump remains halted

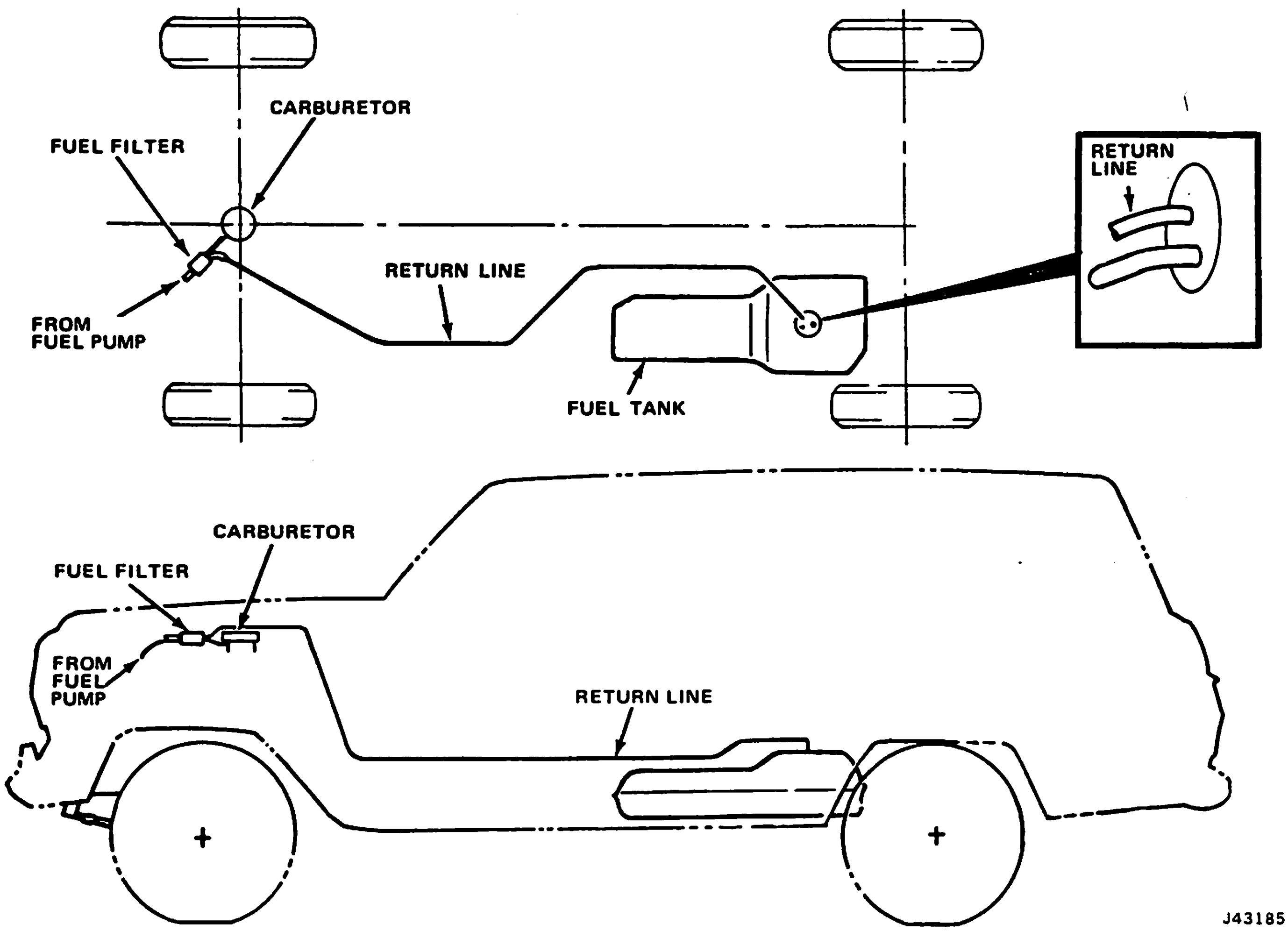

Fig. 1J-13 Fuel Return System—Typical

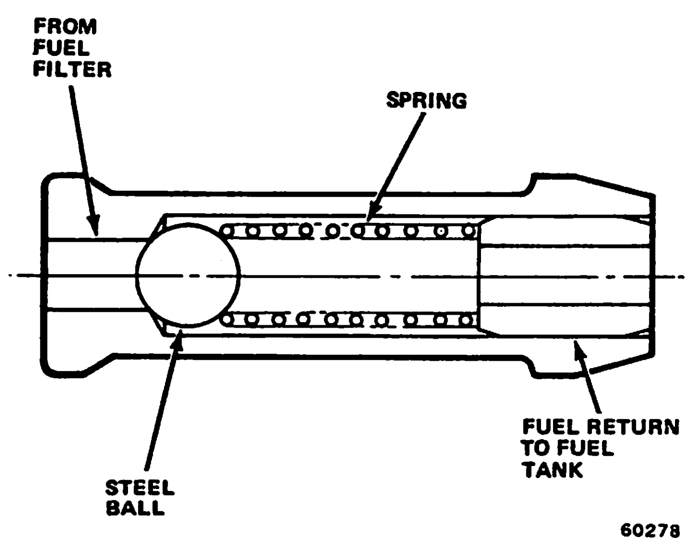

Fig. 1J-14 In-Line Check Valve

until excess pressure is released through the fuel return line or the carburetor needle opens. This process continues as long as the engine is operating.

Fuel pumps cannot be overhauled. Replace a fuel pump if it fails any of the following tests.

NOTE: *Before performing tests, ensure the in-line fuel filter (six- and eight-cylinder engines) is not clogged.*

Pressure Test

(1) Remove air cleaner assembly.

(2) Disconnect fuel inlet fitting or fuel filter at carburetor.

(3) Disconnect fuel return hose at fuel filter and plug nipple on filter.

NOTE: *Remove any spilled fuel from engine.*

(4) Connect pressure gauge, restrictor and flexible hose between fuel filter and carburetor (fig. 1J-16).

(5) Position flexible hose and restrictor so fuel can be discharged into suitable graduated container.

WARNING: *Use extreme caution when engine is operating. Do not stand in direct line with fan. Do not put hands near pulleys, belts or fan. Do not wear loose clothing.*

(6) Operate engine at curb idle rpm and discharge fuel into container by momentarily opening hose restrictor.

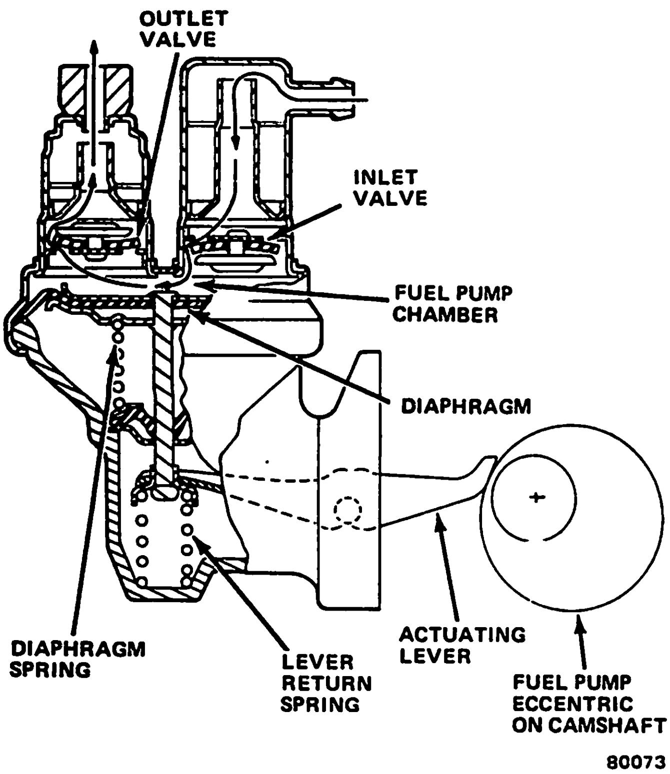

Fig. 1J-15 Fuel Pump—Typical

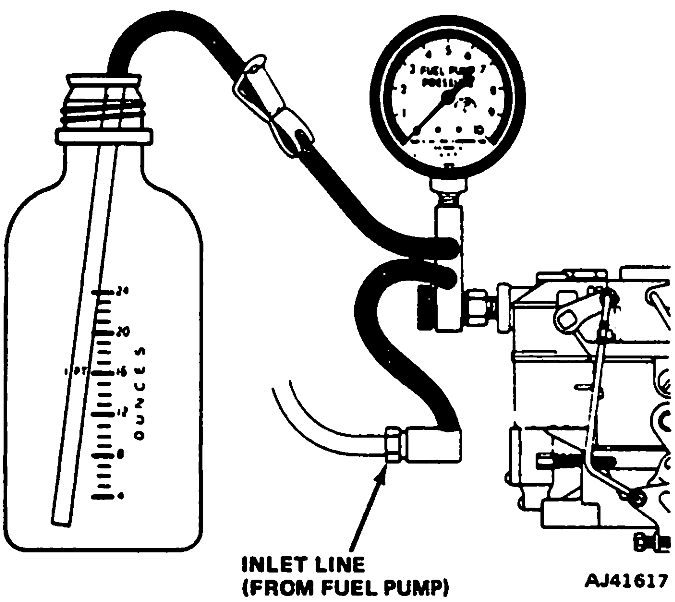

Fig. 1J-16 Fuel Pump Pressure and Volume Test

(7) Close hose restrictor, allow pressure to stabilize, and not pressure. Gauge should indicate 6.5 to 8 psi (45 to 55 kPa) for four-cylinder engines, 4 to 5 psi (28 to 34 kPa) for six-cylinder engines, and 5 to 6.5 psi (34 to 45 kPa) for eight-cylinder engines.

If the pump pressure is not within specification and the fuel lines and filter are in satisfactory condition, the pump is defective and should be replaced. If the pump pressure is within specification, perform the capacity and vacuum tests.

Capacity (Volume) Test

Test the capacity (volume) as follows:

WARNING: *Use extreme caution when engine is operating. Do not stand in direct line with fan. Do not put hands near pulleys, belts or fan. Do not wear loose clothing.*

(1) Operate engine at curb idle rpm.

(2) Open hose restrictor and allow fuel to discharge into graduated container for 30 seconds, then close restrictor.

At least one pint (0.47 liters) of fuel should have been discharged. If pump volume is less than one pint, (0.47 liters) repeat test using an auxiliary fuel supply and a replacement fuel filter (six- and eight-cylinder engines). If the pump volume conforms to the specification while using the auxiliary fuel supply, inspect for a restriction in the fuel supply line from the tank and for proper tank venting.

Vacuum Tests

Two vacuum tests can be performed on the fuel pump. In the direct connection test, the vacuum test gauge is connected directly to the fuel pump inlet. This tests the pump's ability to create a vacuum. In the indirect connection test, a vacuum gauge is connected by a T-fitting into the pump inlet line. This test will indicate if an obstruction exists in the fuel line or the in-tank fuel filter.

Direct Connection Test

(1) Disconnect fuel inlet pipe at fuel pump.

(2) Connect vacuum gauge to fuel pump inlet.

WARNING: *Use extreme caution when engine is operating. Do not stand in direct line with fan. Do not put hands near pulleys, belts or fan. Do not wear loose clothing.*

(3) Operate engine at curb idle rpm and note vacuum gauge indication. Gauge should indicate a vacuum of 10 in. Hg (34 kPa). If the pump vacuum is not within specification, the pump is defective and should be replaced.

NOTE: *Gauge will not indicate a vacuum until fuel in carburetor float bowl has been consumed and pump begins to operate at full capacity.*

Indirect Connection Test

(1) Disconnect fuel inlet pipe at fuel pump.

(2) Install T-fitting between disconnected fitting and fuel pump inlet. Connect vacuum gauge to T-fitting.

WARNING: *Use extreme caution when engine is operating. Do not stand in direct line with fan. Do not put hands near pulleys, belts or fan. Do not wear loose clothing.*

(3) Operate engine at 1500 rpm for 30 seconds. Vacuum should not exceed 3 in. Hg (10 kPa).

(4) If vacuum exceeds 3 inches of mercury, check fuel line for restriction. A partially clogged in-tank fuel filter can also cause excess vacuum.

NOTE: *Gauge will not indicate a vacuum until fuel in carburetor float bowl has been consumed and pump begins to operate at full capacity.*

Fuel Pump Specification Chart

Engine	Volume (30 seconds)	Pressure PSI (kPa)	Vacuum in. Hg(kPa)	
			Direct	Indirect
Four-Cylinder	1 pint (0.47 liters)	6.5 to 8 (44 to 55)	10 (33.77kPa)	3 (10.13kPa)
Six-Cylinder	1 pint (0.47 liters)	4 to 5 (28.58 to 34.47)	10 (33.77kPa)	3 (10.13kPa)
Eight-Cylinder	1 pint (0.47 liters)	5 to 6.5 (34 to 45)	10 (33.77kPa)	3 (10.13kPa)

80262B

Fuel Pump Replacement

Removal

(1) Disconnect fuel pipe fittings from fuel pump.
(2) Remove retaining screws.
(3) Remove pump and gasket.

Installation

(1) Install pump and replacement gasket.

NOTE: *Ensure actuating lever is positioned properly on camshaft eccentric.*

(2) Install retaining screws.
(3) Connect fuel pipe fittings to fuel pump.

FUEL ECONOMY TESTS

When testing fuel economy for six- and eight-cylinder engines, connect the testing device between the **fuel filter** and the **carburetor**. Do not block off the fuel return line because this may cause an erronious miles-per-gallon indication.

SPECIFICATIONS

Fuel Tank Capacity

Vehicle	Gallons
CJ	14.8 (56.0 liters) Optional: 20 (75.6 liters)
Cherokee Wagoneer	21.5 (81.4 liters)
Truck	18.2 (68.9 liters)

80708

CARBURETOR MODEL 2SE — 2 VENTURI

GENERAL

The model 2SE carburetor is a two venturi, two stage, down draft type carburetor (figs. 1J-17 and 1J-18). To reduce weight, aluminum castings are used for the air horn, float bowl and throttle body. A heat insulator gasket is located between the throttle body and float bowl to reduce heat transfer to the float bowl.

The primary stage has a triple venturi with a small 35 mm bore that provides efficient fuel metering control during idle and partial throttle operation.

The secondary stage has a larger 46 mm bore that provides the additional air supply necessary for higher engine power requirements. An air valve with a single tapered metering rod is used in the secondary stage.

An integral one-inch pleated-paper fuel filter with check valve is located between the front of the float bowl and the fuel inlet fitting. The check valve prevents fuel flow to the carburetor in the event of vehicle rollover.

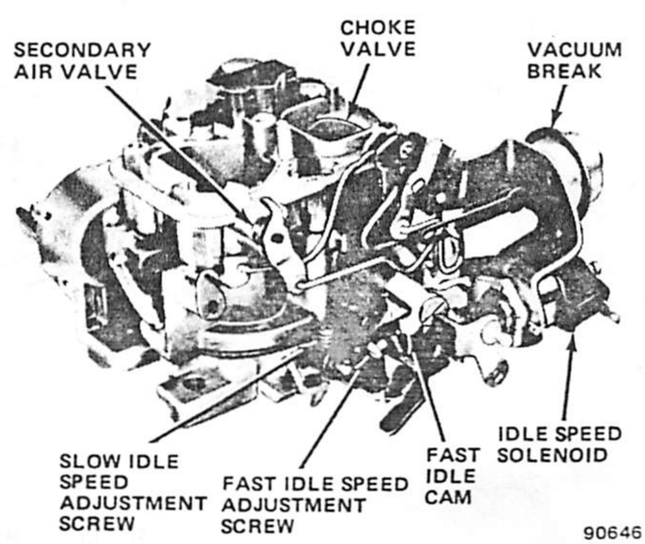

Fig. 1J-17 Model 2SE Carburetor

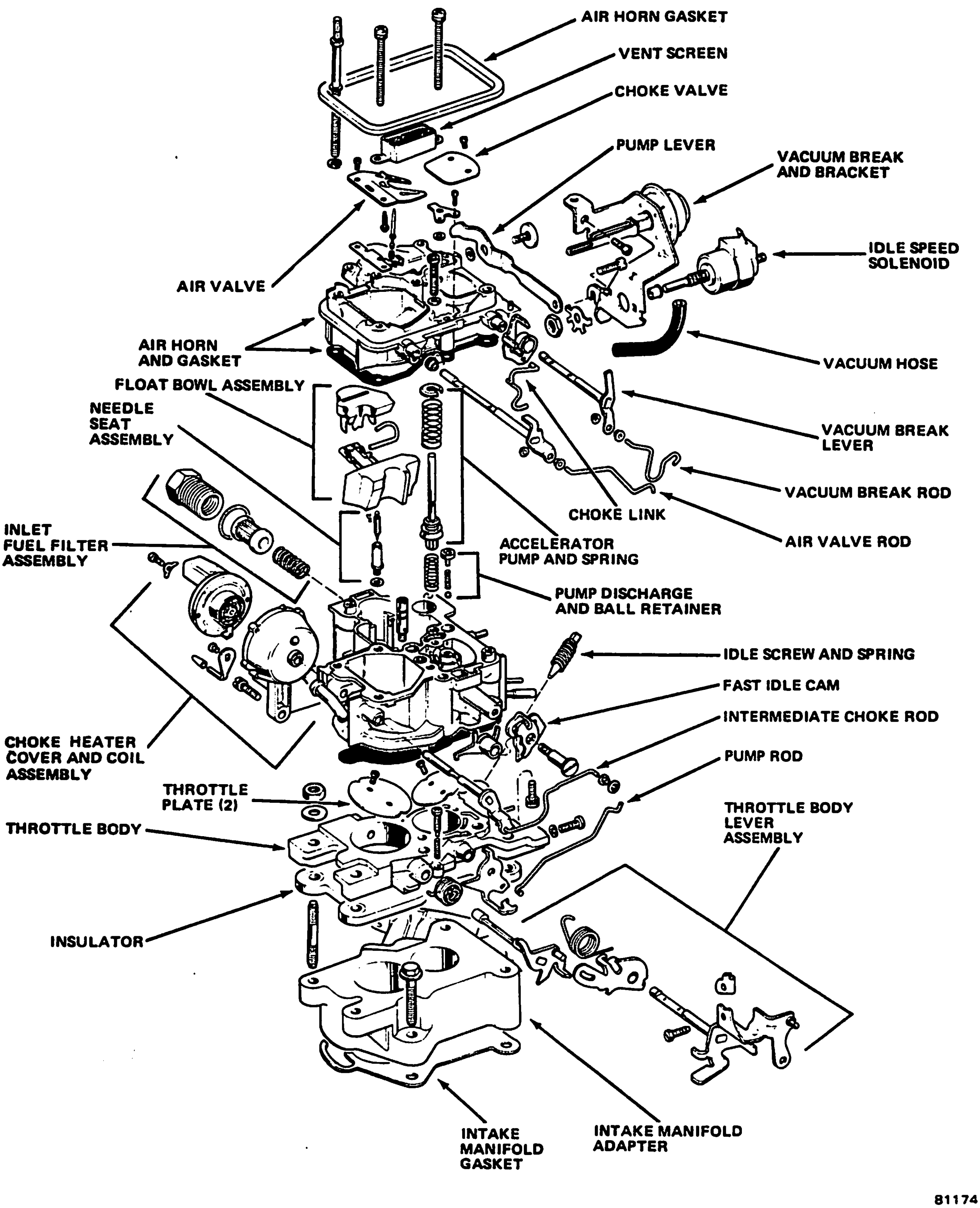

Fig. 1J-18 Model 2SE Carburetor—Exploded View

Identification

The carburetor model identification is stamped vertically on the float bowl in a flat area adjacent to the vacuum tube (fig. 1J-19). When replacing the float bowl, follow the manufacturer's instructions contained in the service package and ensure that the identification number is transferred to the new float bowl.

Refer to the part number on the bowl when servicing the carburetor.

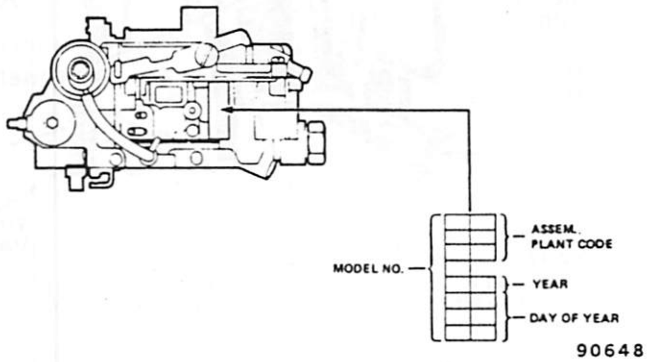

Fig. 1J-19 Model 2SE Carburetor Identification

CARBURETOR CIRCUITS

Model 2SE carburetor has six basic circuits. They are:

- Float
- Idle
- Main Metering
- Power Enrichment
- Pump
- Choke

Float Circuit

The float chamber is located adjacent to the primary and secondary bores (figs. 1J-20 and 1J-21). This feature assures adequate fuel supply to both carburetor venturi bores during all standard engine operations.

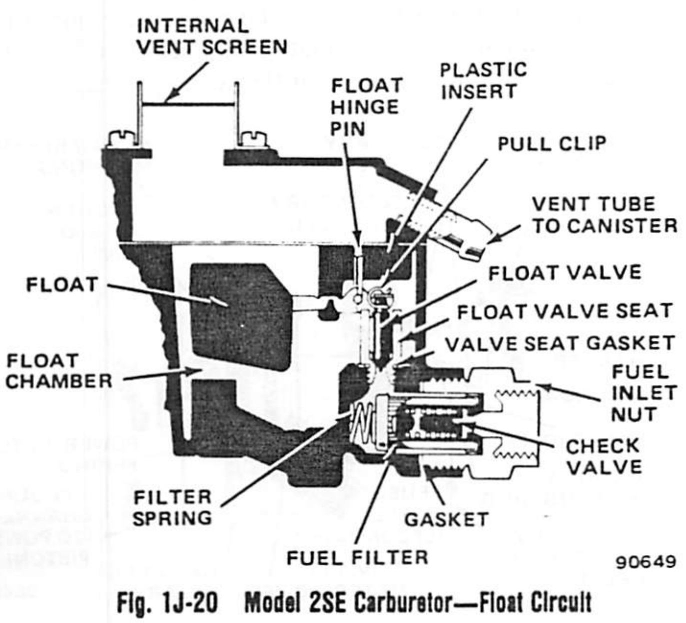

Fig. 1J-20 Model 2SE Carburetor—Float Circuit

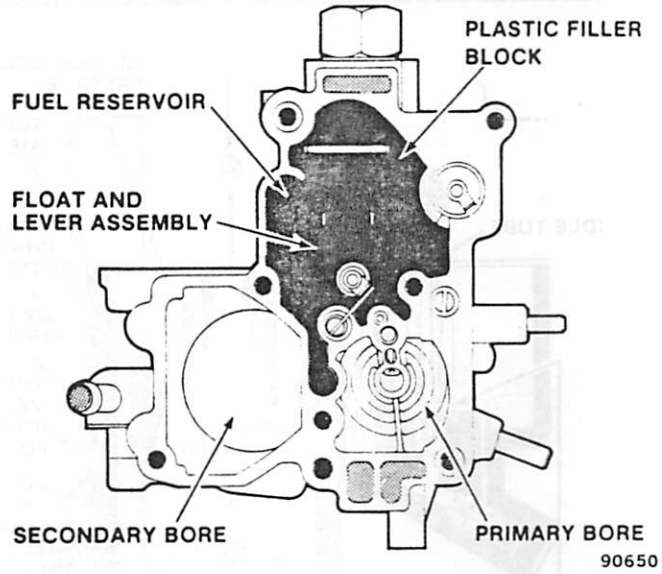

Fig. 1J-21 Model 2SE Carburetor—Fuel Reservoir

A single pontoon float, brass needle seat, and a rubber tipped float needle with pull clip are used to control the fuel level in the float chamber. The float chamber is internally vented through a vertical vent cavity in the air horn. Above this vent cavity is a removable vent stack assembly that has a small meshed screen at its top. This vent stack provides the correct height for the internal vent.

The float chamber is also externally vented through a tube (fig. 1J-18) in the air horn. A hose connects this tube directly to a vacuum operated vapor vent valve located at the vapor canister. When the engine is not operating, the canister vapor vent valve is open, allowing fuel vapor from the float chamber to flow into the canister where it is stored until purged. The venting of fuel vapor from the carburetor float bowl to the canister conforms to evaporative emission requirements and improves hot engine starting.

Idle Circuit

Fuel for engine idle and partial throttle operation is controlled by the idle circuit. Fuel flows through the main metering jet into the idle tube and continues to and through the idle cross-over passage where it is mixed with air entering from the lower idle air bleed (fig. 1J-22).

A partial throttle adjustment screw in the float bowl aids in refinement of the fuel mixture for good emission control. This screw is **preset** during factory assembly and a plug is installed to prevent indiscriminate tampering and to seal against any fuel leaks. The plug should not be removed nor the screw adjusted during normal service. If it becomes necessary to replace the float bowl, the new service float bowl will include an adjustable partial throttle (APT) screw that has been preset and plugged as required.

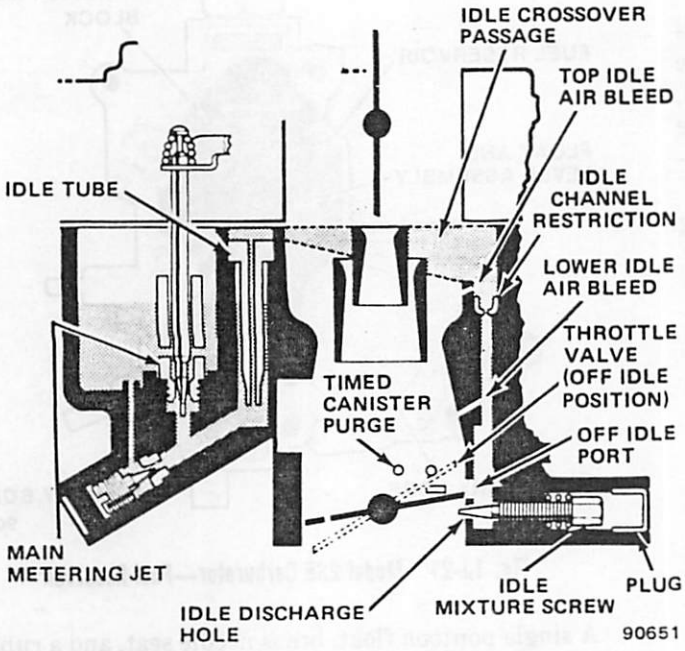

Fig. 1J-22 Model 2SE Carburetor—Idle Circuit

A hot idle compensator assembly (when used) is located in the air horn casting. The opening and closing of the hot idle compensator valve is controlled by a bimetallic strip that is calibrated for a specific temperature. When the valve opens, additional air is allowed to bypass the throttle valves and enter the intake manifold to prevent rough idle during periods of hot engine operation.

The idle mixture screw is recessed in the throttle body casting and sealed with a hardened steel plug to discourage indiscriminate tampering with the factory adjusted mixture setting, which could cause excessive undesirable exhaust emissions. The plug must not be removed, nor the idle mixture screw readjusted, unless required because of major carburetor overhaul or throttle body replacement. Adjustment requires special service procedures.

Main Metering Circuit

At partial throttle and cruising rpm, increased airflow creates a low pressure area in the venturi. Because air above the fuel level in the bowl is at normal pressure, fuel flows to the lower pressure area created by the venturi and amplified by the booster venturi.

The fuel flow moves through the main jets to the main well. Air enters through the main well air bleeds. The resulting mixture of fuel and air is lighter than raw fuel, responds more quickly to changes in venturi vacuum, and is more readily vaporized when discharged into the venturi (fig. 1J-23).

Power Enrichment Circuit

During heavy load or high speed operation the air/fuel ratio must be enriched to provide the necessary increase in engine power.

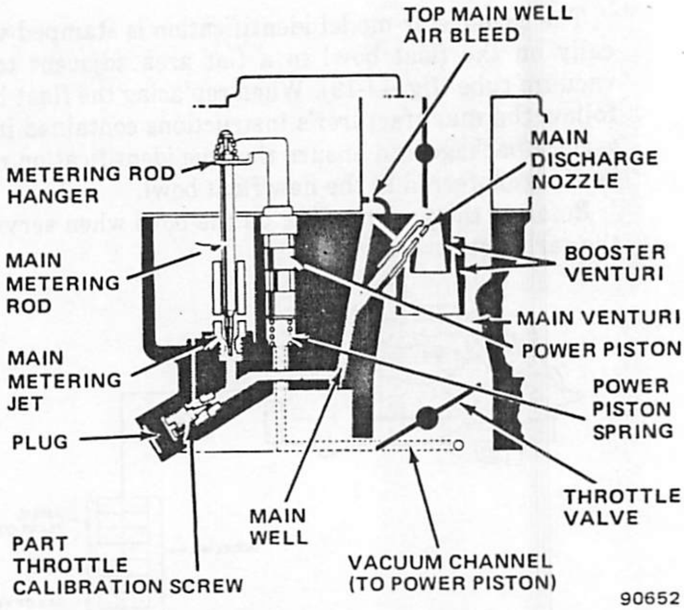

Fig. 1J-23 Model 2SE Carburetor—Main Metering Circuit

Power enrichment is accomplished by means of a calibrated metering rod yoked to a single manifold vacuum actuated piston (fig. 1J-24).

The metering rod piston rests on a calibrated spring that functions to maintain the piston at the top of its cylinder. This allows only the smallest diameter of the tapered metering rods to extend into the main metering jets and permits maximum fuel flow through the jets to the main well cavities.

At idle, partial throttle or cruise conditions, when manifold vacuum is high, the piston is forced down into the vacuum cylinder against the calibrated spring tension and the larger diameters of the metering rods extend into the main metering jets. This restricts the fuel flow to the main well cavities. An additional control is provided by the rod lifter on the accelerator pump rod. This establishes a direct relationship between the metering rod position and the throttle valve opening.

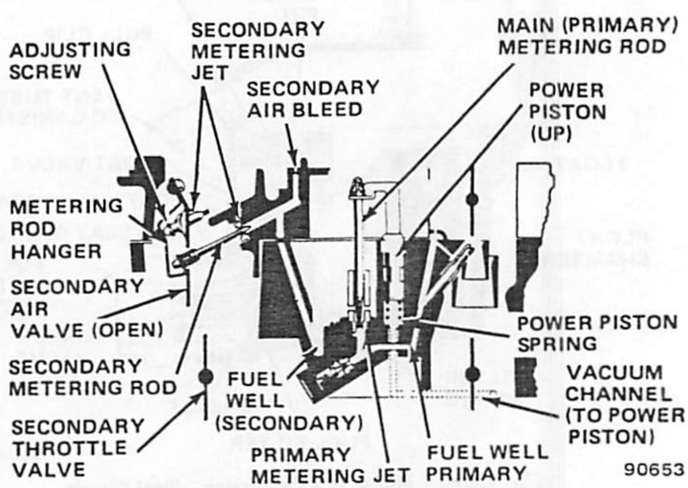

Fig. 1J-24 Model 2SE Carburetor—Power Enrichment Circuit

Pump Circuit

When the throttle is opened suddenly, airflow response through the carburetor is almost immediate. There is a brief time lag before fuel inertia is overcome. This lag causes the desired air/fuel ratio to be leaned-out.

A piston-type accelerating pump assembly mechanically supplies the fuel necessary to overcome this deficiency (fig. 1J-25). Fuel is forced into the pump cylinder from the fuel bowl past the pump piston on the upward movement of the accelerator pump shaft. As the throttle lever is moved, the pump link, operating through a system of levers and assisted by the pump drive spring, pushes the pump piston down. Fuel is forced through a passage, past the pump discharge check ball, and out the pump discharge jets in the venturi cluster.

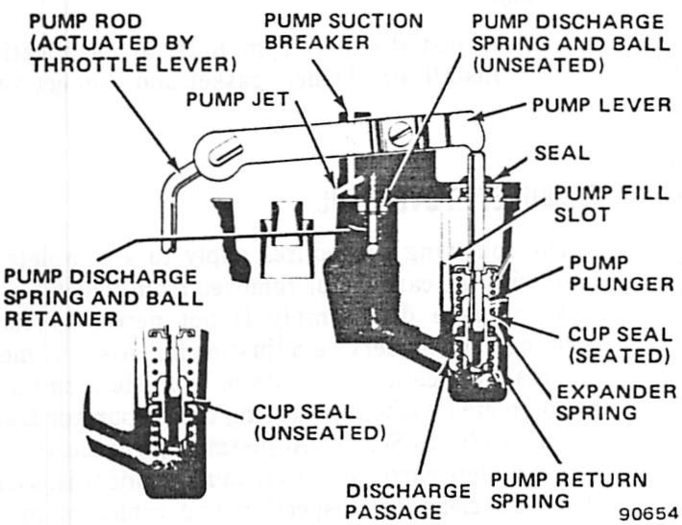

Fig. 1J-25 Model 2SE Carburetor—Pump Circuit

Choke Circuit

The choke valve, located in the air horn assembly, provides a high vacuum, both above and below the throttle valves, when it is closed. During engine starting, vacuum above the throttle valve causes fuel to flow from the main metering and idle circuits and provides the richer air/fuel mixture ratio needed for cold engine starting (fig. 1J-26).

The choke shaft is connected by linkage to a bimetallic coil located within the choke cover. This coil winds up (contracts) when cold and unwinds (expands) when heated. When cold, the tension of the coil holds the choke valve closed. When the engine starts, manifold vacuum is applied to the diaphragm assembly to open the choke valve slightly. This is referred to as the initial choke valve clearance.

The carburetor has an adjustment screw located in the primary throttle lever for fast idle speed adjustment. A separate adjustment screw, located in the throttle body, is used to adjust the curb, or base (depending upon application), idle speed (solenoid de-energized).

NOTE: *Special rivets and conventional retainers are used to maintain the factory adjustment of the bimetallic choke coil. They provide a tamper-resistant enclosure to discourage indiscriminate readjustment in the field.*

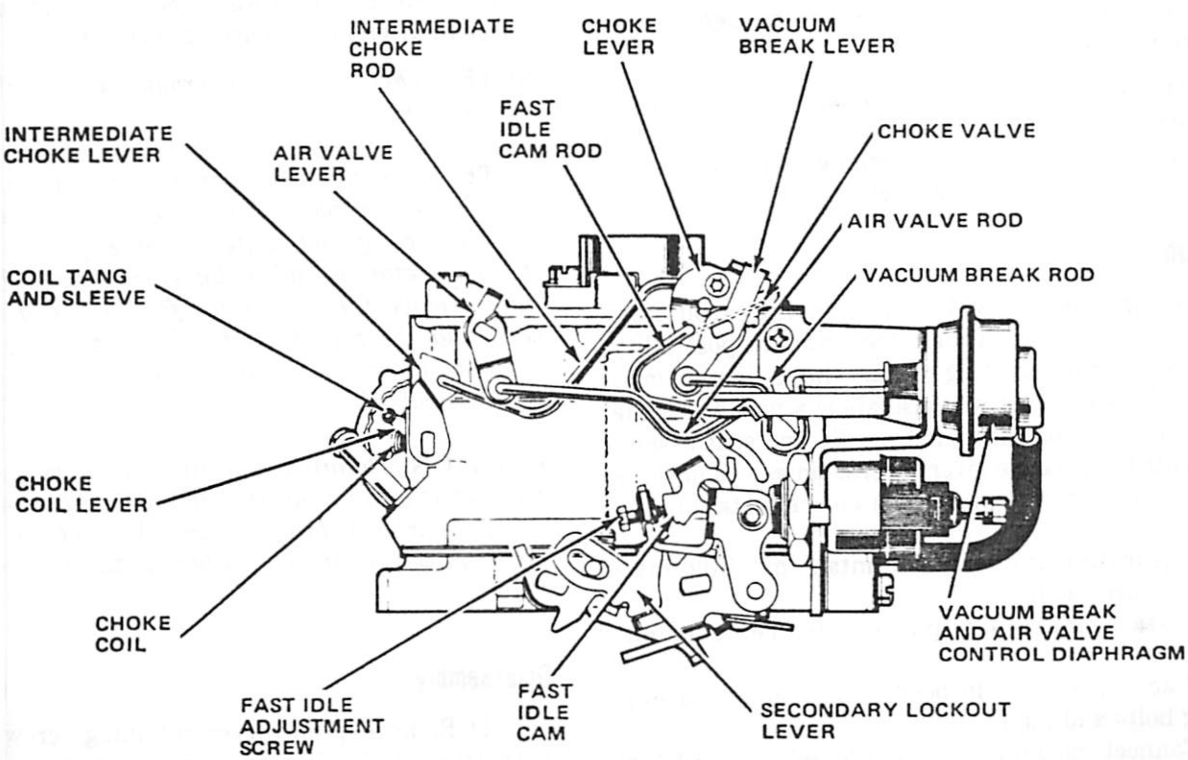

Fig. 1J-26 Model 2SE Carburetor—Choke Circuit

SEALED IDLE MIXTURE SCREW

The idle mixture screw is recessed in the throttle body and sealed with a hardened steel plug to prevent changing the factory assembly adjustment of the air/fuel mixture ratio. **Do not remove the plug and readjust the idle mixture screw unless involved in a major carburetor overhaul, throttle body replacement or the presence of high idle CO has been determined by a competent authority.**

CARBURETOR REPLACEMENT

Removal

Flooding, hesitation on acceleration and other performance complaints are, in many instances, caused by the presence of dirt, water or other foreign matter in the carburetor. To aid in diagnosis, the carburetor should be carefully removed from the engine without draining fuel from the bowl. The contents of the fuel bowl can then be examined for contamination as the carburetor is disassembled. Also, the filter should be examined to determine if it should be replaced.

WARNING: *Battery negative cable must be removed to prevent a potential fire hazard when the fuel pipe fitting is disconnected.*

(1) Remove battery negative cable.

(2) Remove vacuum hoses, air cleaner and gasket.

(3) Disconnect fuel pipe fitting and vacuum hoses from carburetor.

NOTE: *Identify and tag vacuum hoses before disconnecting them.*

(4) Disconnect throttle linkage and electrical connectors.

(5) Remove carburetor attaching bolts and nuts, and remove carburetor and gasket.

Installation

Fill the carburetor bowl before installing carburetor. This reduces the strain on the battery and the possibility of backfire when attempting to start the engine. A small quantity of no-lead fuel will also allow a pre-test of the operation of the float and inlet needle and seat assembly. Operate the throttle lever several times and observe the discharge from the pump jets before installing the carburetor.

(1) Ensure throttle body and intake manifold mating surfaces are clean.

(2) Install manifold gasket on replacement carburetor.

(3) Place carburetor in position and loosely install attaching bolts and nuts.

(4) Connect vacuum hoses and loosely connect fuel pipe fitting.

(5) Tighten attaching bolts and nuts with 12 foot-pounds (16 N•m) torque.

(6) Tighten fuel pipe fitting with 25 foot-pounds (34 N•m) torque.

(7) Connect throttle linkage and electrical connectors.

(8) Connect battery negative cable.

NOTE: *Plug disconnected vacuum hoses.*

WARNING: *Use extreme caution when engine is operating. Do not stand in direct line with fan. Do not put hands near pulleys, belts or fan. Do not wear loose clothing.*

(9) Adjust idle speed rpm. Refer to Specifications.

(10) Install air cleaner, gasket and connect vacuum hoses.

CARBURETOR OVERHAUL

The following procedures apply to a complete overhaul with the carburetor removed from the engine.

A complete disassembly is not necessary for performing routine service adjustments. Also, in most instances, service adjustments of individual circuits can be completed without removing the carburetor from the engine. Refer to Service Adjustment Procedures.

A complete carburetor overhaul includes disassembly, thorough cleaning, inspection and replacement of all gaskets and worn or damaged parts. It also includes idle speed adjustment, idle mixture adjustment (if removal of adjustment screws was necessary) and fast idle adjustment after the carburetor is reinstalled.

NOTE: *When using an overhaul kit, use all parts included in the kit.*

NOTE: *Flooding, hesitation on acceleration, and other performance problems are in many instances caused by the presence of dirt, water, or other foreign matter in the carburetor. To aid in diagnosing the problem, carefully remove the carburetor from the engine without removing the fuel from the bowl. Examine the bowl contents and filter for contamination as the carburetor is disassembled.*

CAUTION: *Before performing any service on the carburetor, it is essential that the carburetor be placed on an appropriate holding fixture. Without the use of the holding fixture, it is possible to damage the throttle valves.*

Disassembly

(1) Remove pump lever retaining screw from air horn (fig. 1J-27). Rotate pump lever to remove from pump rod.

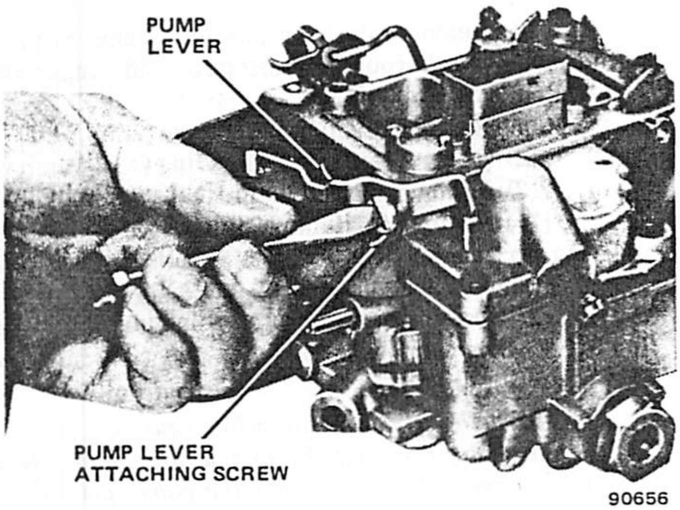

Fig. 1J-27 Model 2SE Carburetor—Pump Lever Removal

(2) Remove hose from vacuum break assembly.

(3) Remove idle speed solenoid-vacuum break bracket attaching screws from air horn and throttle body (fig. 1J-28). Rotate bracket to remove vacuum break rod and air valve rod from vacuum break diaphragm plunger and remove bracket assembly from float bowl. If not removed previously, solenoid may be removed from bracket.

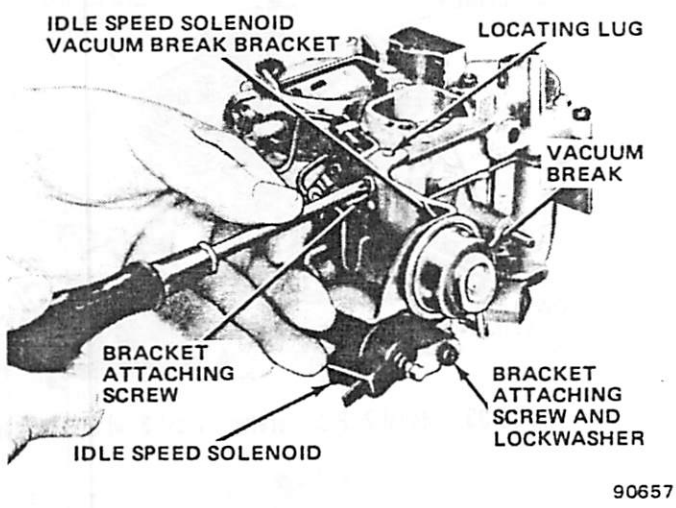

Fig. 1J-28 Model 2SE Carburetor—Vacuum Break Removal

CAUTION: *Do not immerge vacuum break assembly and solenoid in carburetor cleaning solution.*

(4) Remove and discard retaining clip from intermediate choke rod at choke lever (fig. 1J-29). A new retaining clip is required for reassembly. Remove choke rod and plastic bushing from choke lever.

The plastic bushing will be loose and should be retained for reassembly.

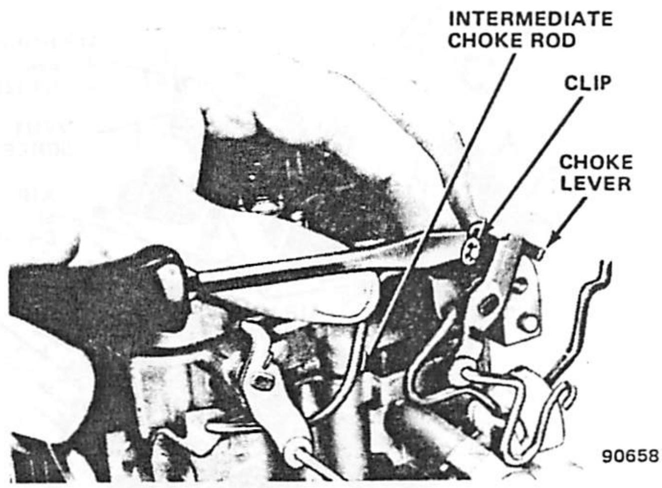

Fig. 1J-29 Model 2SE Carburetor—Choke Rod Removal

(5) If equipped, remove two small screws that retain hot idle compensator valve (fig. 1J-30). Remove valve and seal from air horn, discard seal. Hot idle compensator valve must be removed to gain access to short air horn-to-bowl attaching screw.

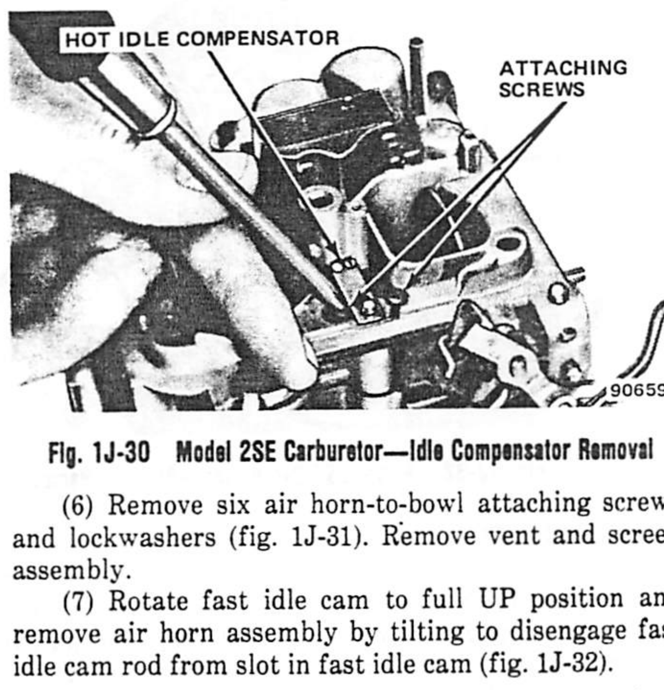

Fig. 1J-30 Model 2SE Carburetor—Idle Compensator Removal

(6) Remove six air horn-to-bowl attaching screws and lockwashers (fig. 1J-31). Remove vent and screen assembly.

(7) Rotate fast idle cam to full UP position and remove air horn assembly by tilting to disengage fast idle cam rod from slot in fast idle cam (fig. 1J-32).

NOTE: *DO NOT remove fast idle cam and screw from float bowl. These components are not serviced separately and must remain permanently in place as installed during manufacturing assembly. The new service replacement float bowl will include the secondary lock-out lever, fast idle cam and screw installed as required.*

(8) Further disassembly of the air horn is not required for cleaning purposes. If component replacement is required, remove staking on two choke valve attaching screws. Remove screws, choke valve and shaft from air horn.

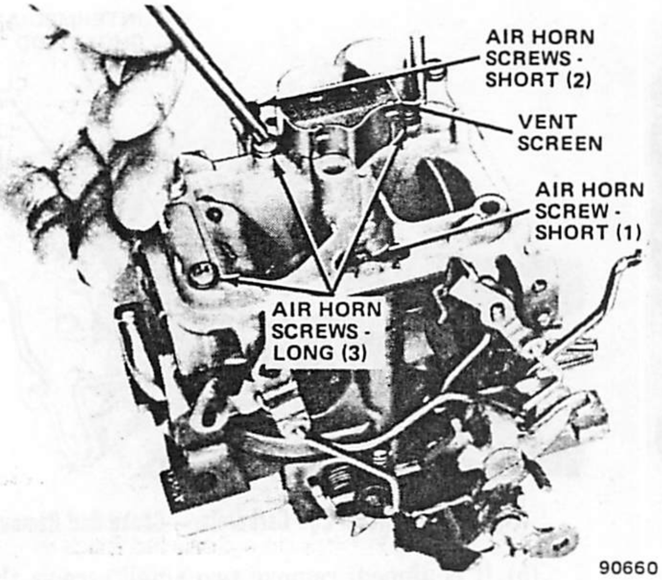

Fig. 1J-31 Model 2SE Carburetor—Air Horn Attaching Screws and Vent Screen

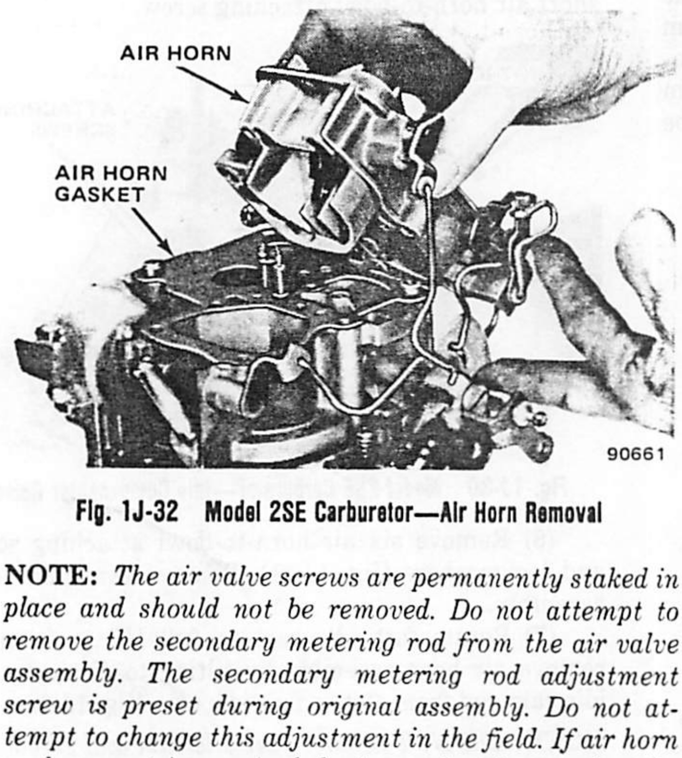

Fig. 1J-32 Model 2SE Carburetor—Air Horn Removal

NOTE: *The air valve screws are permanently staked in place and should not be removed. Do not attempt to remove the secondary metering rod from the air valve assembly. The secondary metering rod adjustment screw is preset during original assembly. Do not attempt to change this adjustment in the field. If air horn replacement is required during carburetor service, the new service air horn will include a preadjusted secondary metering rod-air valve assembly. It is not necessary to remove the vacuum break rod, fast idle cam rod or air valve rod from the levers in the air horn unless replacement of the rods is necessary. The plastic bushings used with the levers can be cleaned with carburetor cleaning solution.*

(9) If necessary to replace vacuum break rod, fast idle cam rod or air valve rod, remove retaining clips from end of rods. Remove plastic bushing on rods and retain for reassembly.

(10) Remove air horn gasket. Gasket is precut for easy removal around metering rod and hanger assembly (fig. 1J-33).

(11) Remove pump plunger from pump well.

(12) Remove pump return spring from pump well.

(13) Remove plastic filler block over float valve.

(14) Remove float assembly and float needle by pulling up on retaining pin. Remove inlet needle seat and gasket with Seat Remover J-22769 (fig. 1J-34).

(15) Remove power piston and metering rod assembly by depressing piston stem and allowing it to snap free (fig. 1J-35).

NOTE: *The power piston, when equipped, can be easily removed by pressing the piston down and releasing it with a snap. This will cause the power piston spring to snap the piston up against the plastic retainer. This procedure may have to be repeated several times.*

CAUTION: *Do no remove power piston by using pliers on metering rod holder. Remove the power piston spring from the piston bore. If necessary, metering rod can be removed from power piston hanger by compressing spring on top of metering rod and aligning groove on rod with slot in holder (fig. 1J-36). Use extreme care in handling the metering rod to prevent damage to metering rod tip.*

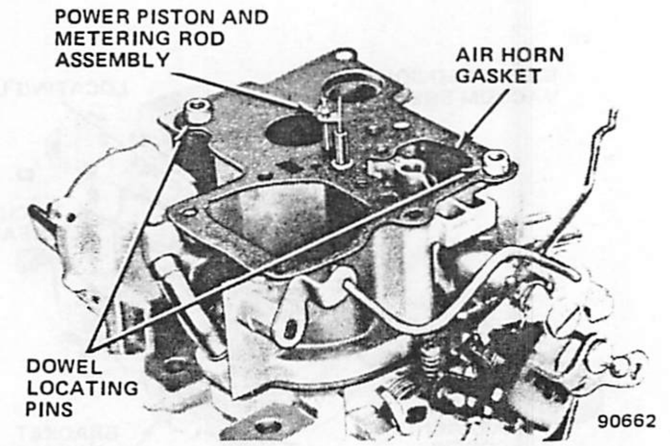

Fig. 1J-33 Model 2SE Carburetor—Float Bowl Disassembly

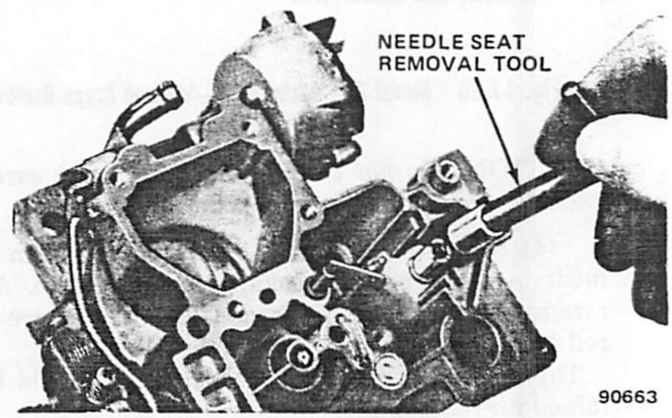

Fig. 1J-34 Model 2SE Carburetor—Inlet Needle Seat Removal

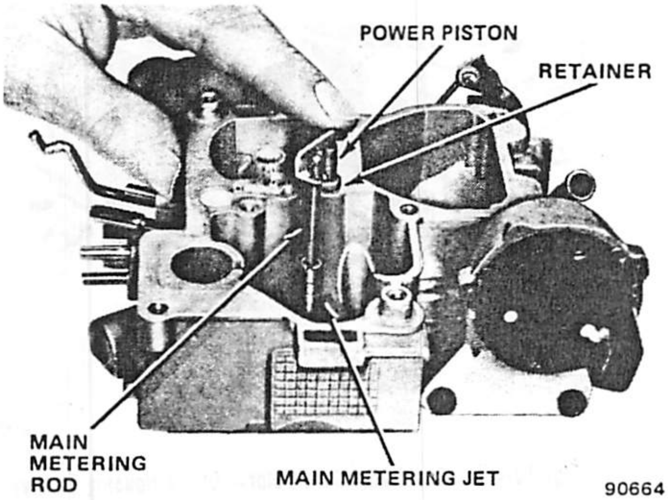

Fig. 1J-35 Model 2SE Carburetor—Power Piston Removal

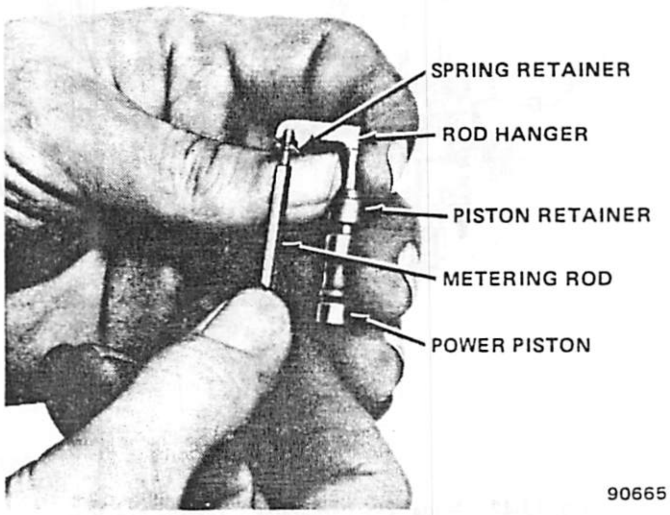

Fig. 1J-36 Model 2SE Carburetor—Removing Metering Rod from Piston Holder

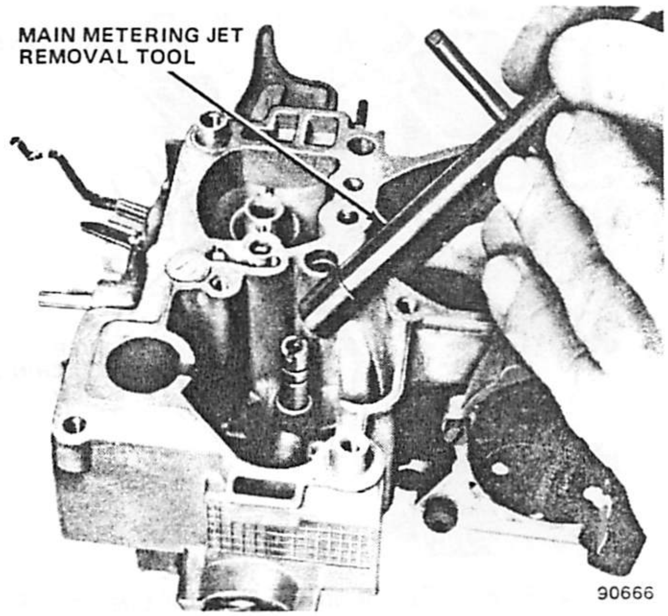

Fig. 1J-37 Model 2SE Carburetor—Main Metering Jet Removal

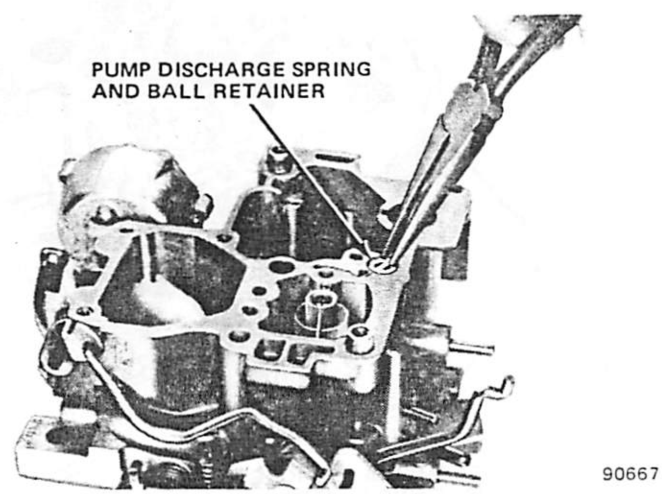

Fig. 1J-38 Model 2SE Carburetor—Pump Discharge Retainer Removal

(16) Remove main metering jet with Tool J-22769 or suitable screwdriver. Screwdriver must fully fit slot in top of jet to prevent damage to jet (fig. 1J-37).

CAUTION: *To prevent damage to pump discharge check ball spring, insert ends of needlenose pliers in plastic retainer only far enough to grasp the head of the retainer for removal. Turn bowl upside down and catch pump discharge spring and check ball in palm of hand.*

(17) Use needlenose pliers to remove plastic retainer holding pump discharge spring and check ball in place (fig. 1J-38). Discard plastic retainer (a new retainer is required for assembly).

(18) Remove three attaching rivets and retainers from choke cover and coil assembly. Pull straight outward and remove cover and coil assembly from choke housing.

NOTE: *The tamper-resistant choke cover design is used to discourage indiscriminate readjustment of the choke cover and coil assembly in the field. However, it is necessary to remove the cover and coil assembly during normal carburetor disassembly for cleaning and overhaul. With a small chisel and hammer carefully cut off each rivet head. Use a small drift and hammer to drive remainder of rivets out of choke housing and remove cover and coil assembly. Use care to prevent damage to choke cover and housing.*

(19) Remove screw from end of intermediate choke shaft inside choke housing (fig. 1J-39). Remove choke coil lever from shaft.

(20) Remove intermediate choke shaft and lever assembly from float bowl by sliding rearward out of throttle lever side (fig. 1J-40).

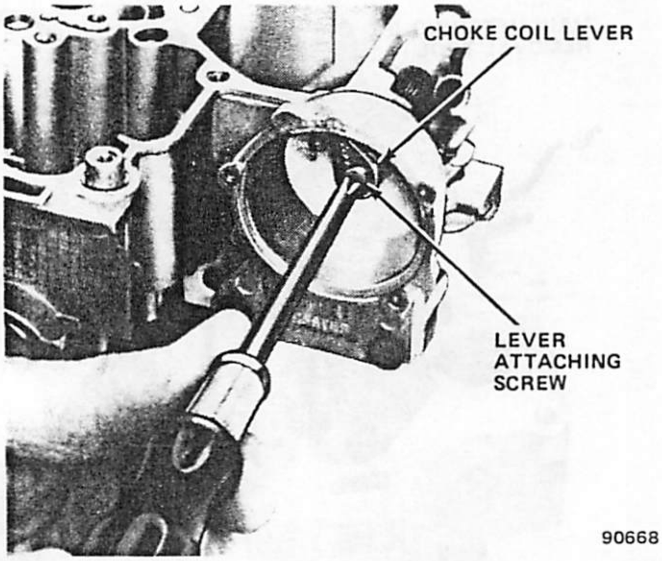

Fig. 1J-39 Model 2SE Carburetor—Choke Coil Lever Screw Removal

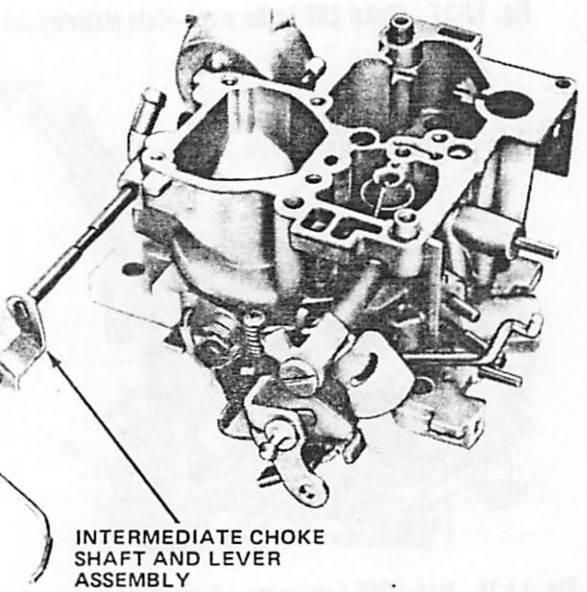

Fig. 1J-40 Model 2SE Carburetor—Intermediate Choke Shaft Removal

(21) Remove choke housing by removing two attaching screws in throttle body (fig. 1J-41).

(22) Remove fuel inlet fitting, gasket, check valve/filter assembly and spring.

(23) Disassemble remaining throttle body components.

(a) Remove four throttle body-to-bowl attaching screws and lockwashers and remove throttle body assembly (fig. 1J-42).

CAUTION: *Place throttle body assembly on carburetor holding fixture (Tool J-9789-118) to avoid damaging throttle valves.*

(b) Hold primary throttle lever wide-open and disengage pump rod from throttle lever by rotating rod until squirt on rod aligns with slot in lever.

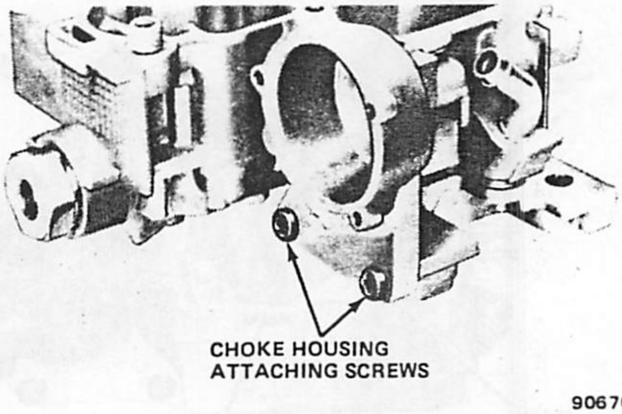

Fig. 1J-41 Model 2SE Carburetor—Choke Housing Screws

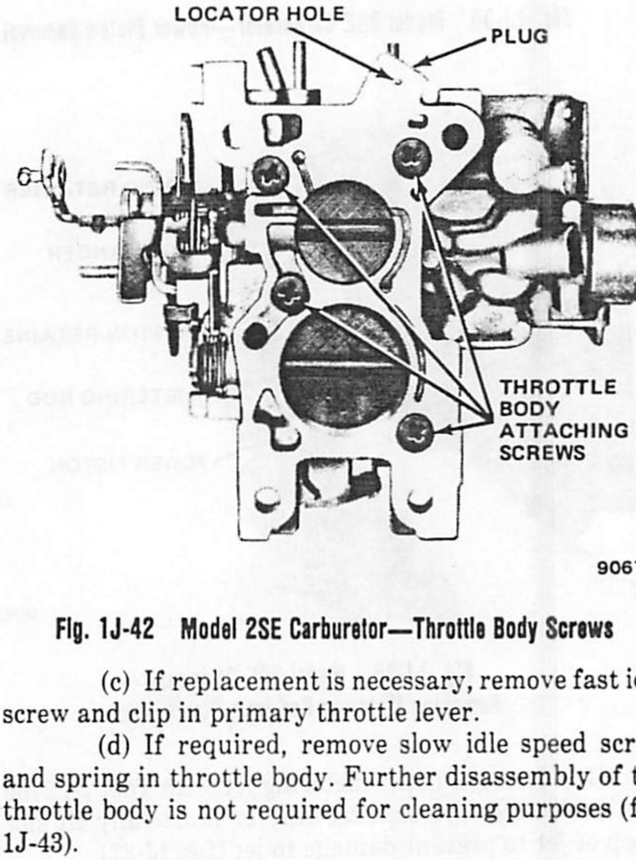

Fig. 1J-42 Model 2SE Carburetor—Throttle Body Screws

(c) If replacement is necessary, remove fast idle screw and clip in primary throttle lever.

(d) If required, remove slow idle speed screw and spring in throttle body. Further disassembly of the throttle body is not required for cleaning purposes (fig. 1J-43).

NOTE: *The primary and secondary throttle valve screws are permanently staked in place and must not be removed. The throttle body is serviced as a complete assembly.*

NOTE: *Do not remove the plug concealing the idle mixture screw unless it is necessary to replace the mixture screw or normal soaking and air pressure fails to clean the idle mixture passages.*

CAUTION: *The idle mixture should be adjusted only if required at time of major carburetor overhaul, for throttle body replacement or for the presence of high idle carbon monoxide (CO) when determined by authorized competent officials.*

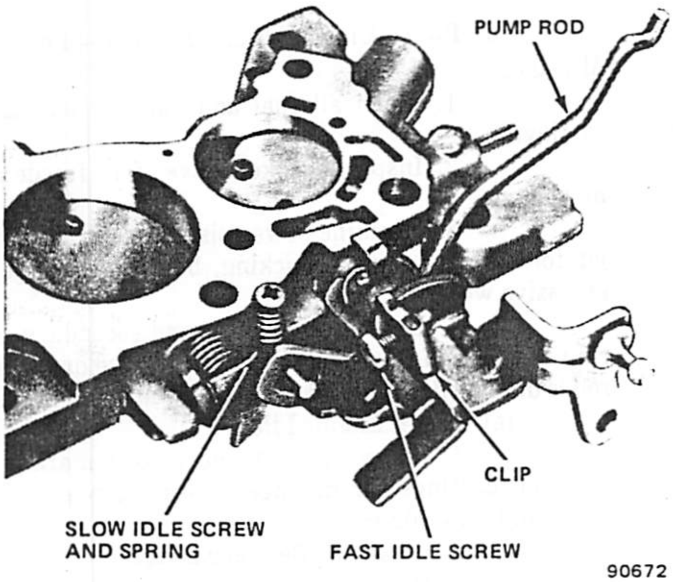

Fig. 1J-43 Model 2SE Carburetor—Throttle Body Assembly

(24) Remove idle mixture screw and plug as follows:

(a) Position punch in locator hole in throttle body beneath idle mixture screw plug (manifold side) (fig. 1J-44). Holding punch vertical, drive punch through locator until hardened steel plug shatters. Holding punch at 45 degree angle, breakout throttle body casting to gain access to mixture screw plug.

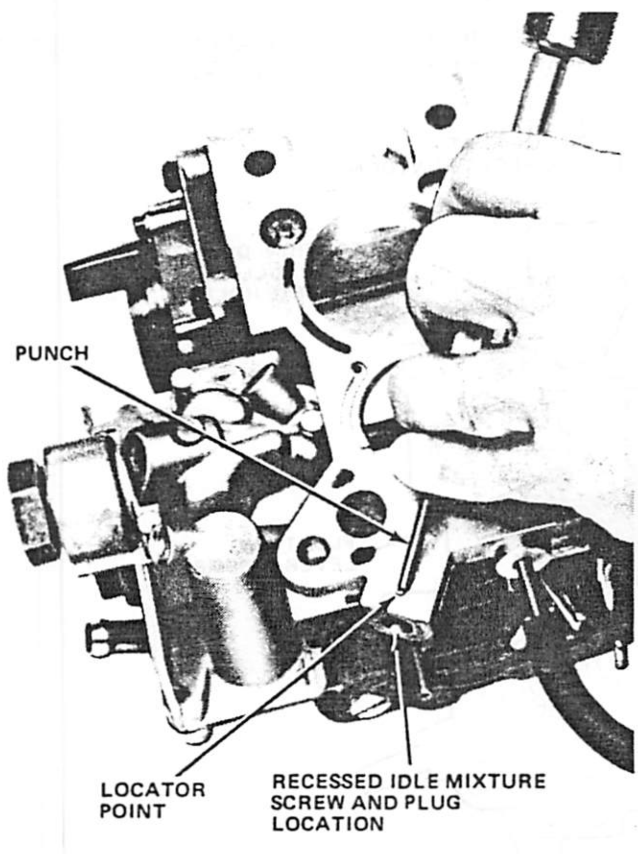

Fig. 1J-44 Model 2SE Carburetor—Idle Mixture Screw Plug Removal

NOTE: *Hardened plug will shatter rather than remaining intact. It is not necessary to remove the plug completely; instead, remove loose pieces to allow use of Idle Mixture Adjusting Tool J-29030.*

(b) Using Tool J-29030, remove idle mixture screw, washer (if used), and spring from throttle body (fig. 1J-45).

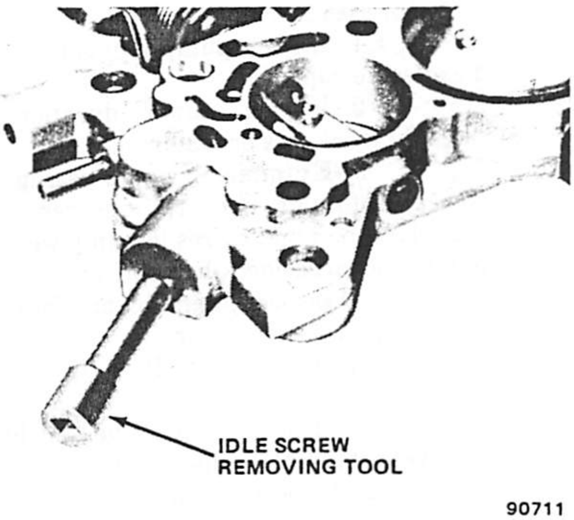

Fig. 1J-45 Model 2SE Carburetor—Idle Mixture Screw Removal

Cleaning and Inspection

The carburetor components should be cleaned in a cold immersion-type carburetor cleaning solution.

CAUTION: *The solenoid, choke cover and coil assembly, rubber parts, plastic parts, diaphragms, pump plunger, and plastic filler block should NOT be immersed in carburetor cleaning solution because they will swell, harden or distort. The plastic bushings located at the end of the vacuum break rod, fast idle cam rod and air valve rod can be cleaned with carburetor cleaning solution.*

(1) Thoroughly clean all metal parts and blow dry with compressed air. Ensure all fuel passages and metering components are free of burrs and foreign matter. Do not insert drill bits or wires into jets and passages.

(2) Inspect upper and lower surface of carburetor castings for damage.

(3) Inspect holes in levers for excessive wear or out of round conditions. If worn, levers should be replaced. Inspect plastic bushings for damage and excessive wear. Replace as required.

(4) Inspect, repair or replace components if following problems are encountered.

(a) Flooding:

1. Inspect float needle and seat for debris, deep wear grooves, scores and improper seating.

2. Inspect float needle pull clip for proper installation (fig. 1J-46). Use care to prevent bending needle pull clip.

3. Inspect float, float arms and hinge pin for distortion, binding and burrs. Check density of material in float; if heavier than normal, replace float.

4. Clean or replace fuel inlet filter/check valve.

(b) Hesitation:

1. Inspect pump plunger for cracks, scores and excessive cup wear.

2. Inspect pump duration and return springs for weakness or distortion.

3. Examine all pump passages and jets for presence of foreign matter, improper seating of discharge check ball and scores in pump well and condition of pump discharge check ball spring.

4. Inspect pump linkage for excessive wear; repair or replace as necessary.

(c) Hard Starting—Poor Cold Engine Operation:

1. Inspect choke valve and linkage for excessive wear, binding or distortion.

2. Inspect choke vacuum diaphragm for leaks.

3. Clean or replace carburetor fuel inlet filter/check valve.

4. Inspect inlet needle for improper seating, debris, etc. Also examine items listed within Flooding above.

(d) Poor Engine Performance—Poor Gas Mileage:

1. Clean all fuel and vacuum passages in castings.

2. Inspect choke valve for freedom of movement.

3. Examine power piston, metering rod and jet for foreign matter, sticking, binding, damage and excessive wear.

4. Examine air valve and secondary metering rod for binding conditions. If air valve or metering rod is damaged, the air horn assembly must be replaced.

(e) Rough Engine Idle:

1. Inspect gasket and gasket mating surfaces on castings for damage to sealing beads, nicks, burrs and other defects.

2. Clean all idle fuel passages.

3. If removed, inspect idle mixture screw tip for ridges, burrs and distortion.

4. Inspect throttle lever and valves for binding, nicks and other defects.

5. Examine all diaphragms for possible ruptures and leaks.

6. Clean plastic components with clean, soft, dry cloth.

Assembly

(1) Install slow idle speed screw and spring, if removed, in throttle body (fig. 1J-43).

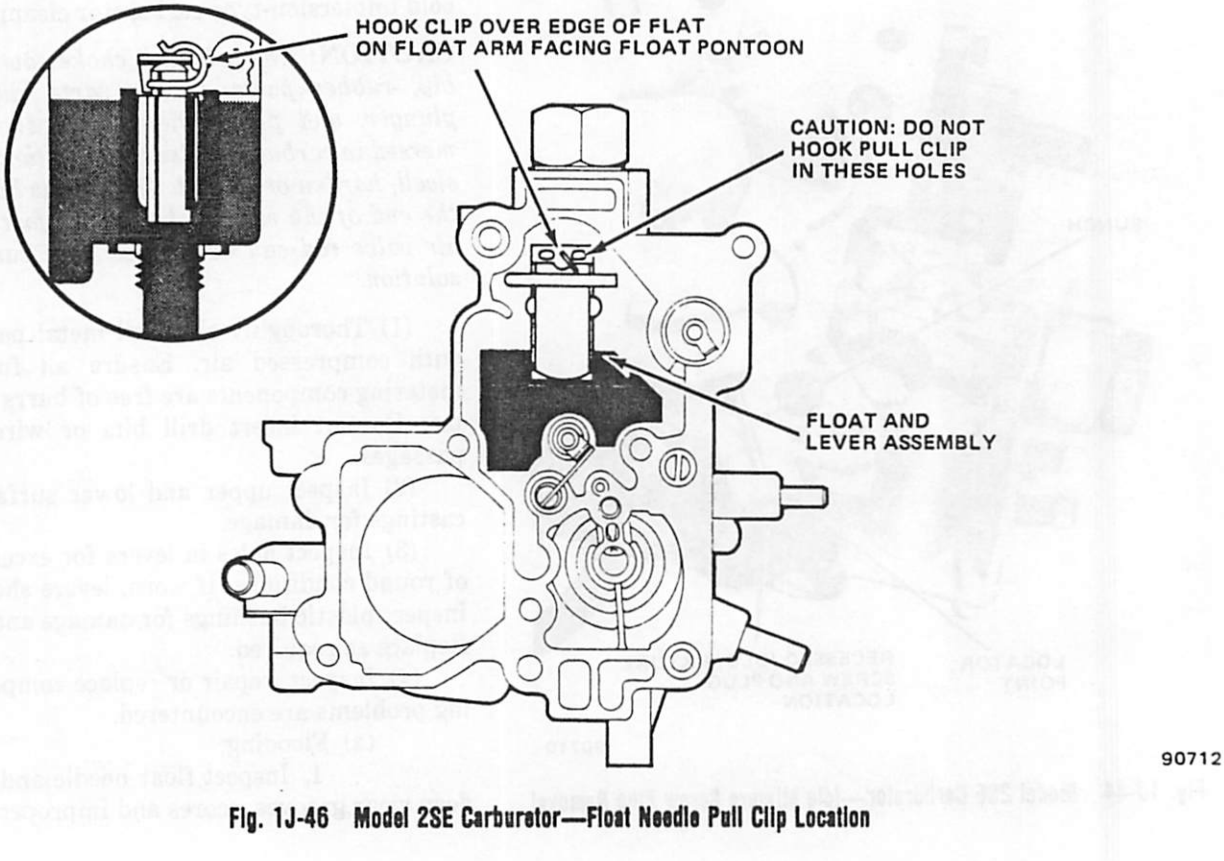

Fig. 1J-46 Model 2SE Carburetor—Float Needle Pull Clip Location

(2) If removed, install fast idle adjustment screw and clip in primary throttle lever (fig. 1J-43).

(3) Holding primary throttle lever wide open, install lower end of pump rod in throttle lever by aligning notch on rod with slot in lever. End of rod should point outward toward throttle lever.

(4) If removed, install idle mixture screw, washer (if used), and spring with Tool J-29030 (fig. 1J-45). Lightly seat screw and back out three turns for preliminary idle mixture adjustment. Final idle mixture adjustment must be with carburetor installed on engine using procedures described within Idle Mixture Adjustment.

NOTE: *If a new float bowl assembly is used, stamp or engrave the model number on the new float bowl (fig. 1J-19).*

(5) Install new throttle body-to-bowl insulator gasket over two locating dowels on bowl.

(6) Holding fast idle cam so that cam steps face fast idle adjustment screw on throttle lever when properly installed, install throttle body ensuring it is properly located over dowels on float bowl (fig. 1J-47). Install four throttle body-to-bowl screws and lockwashers and tighten securely (fig. 1J-42).

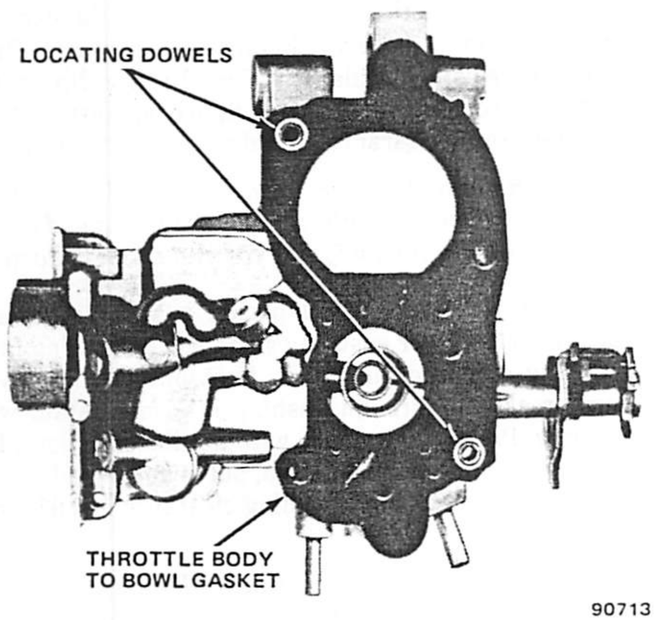

Fig. 1J-47 Model 2SE Carburetor—Throttle Body-to-Bowl Insulator Gasket

NOTE: *Inspect linkage to ensure lockout tang is located properly to permit engaging slot in secondary lockout lever and that linkage moves freely.*

(7) Place carburetor on proper holding fixture (J-9789-118).

CAUTION: *When properly installed, hole in filter faces toward inlet. Ribs on closed end of filter element prevent filter from being installed incorrectly unless forced. Tightening in excess of specified torque can damage nylon gasket and cause fuel leak.*

(8) Install fuel inlet filter spring, check valve and filter assembly, new gasket and inlet fitting. Tighten fitting with 25 foot-pounds (34 N•m) torque.

CAUTION: *When installing a service replacement filter, ensure the filter is the type that includes a check valve that conforms to U.S. Motor Vehicle Safety Standards.*

(9) Install choke housing on throttle body, ensuring raised boss and locating lug on rear of housing fit into recesses in float bowl casting (fig. 1J-41). Install two choke housing attaching screws and lockwashers in throttle body and tighten screws evenly and securely.

(10) Install intermediate choke shaft and lever assembly in float bowl by pushing through from throttle lever side (fig. 1J-40).

(11) With intermediate choke lever in UP (12 o'clock) position, install bimetallic coil lever inside choke housing onto flats on intermediate choke shaft. Coil is properly aligned when coil pick-up tang is at top (12 o'clock) position (fig. 1J-48). Install inside lever retaining screw into end of intermediate choke shaft and tighten securely.

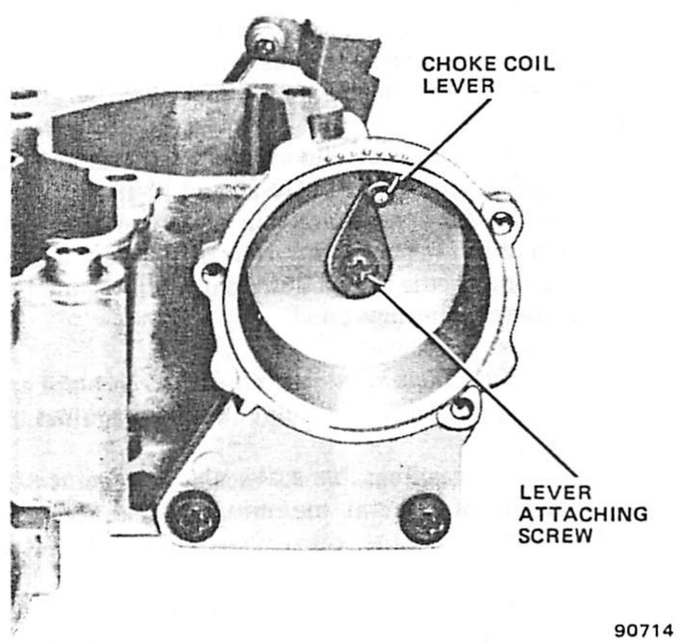

Fig. 1J-48 Model 2SE Carburetor—Installed Choke Coil Lever

NOTE: *Do not install choke cover and bimetallic coil assembly in housing until inside coil lever is adjusted (refer to Service Adjustment Procedures).*

(12) Install pump discharge steel check ball and spring in passage adjacent to float chamber (fig. 1J-49). Insert end of replacement plastic retainer into end of spring and install retainer in float bowl. Tap lightly in place until top of retainer is flush with bowl casting surface.

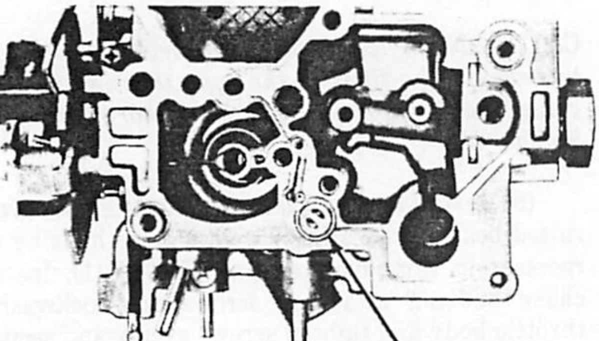

Fig. 1J-49 Model 2SE Carburetor—Pump Discharge Retainer Installed

(13) Using Tool J-22769 or screwdriver that fully fits slot in top, install main metering jet into bottom of float chamber. Tighten jet securely.

(14) Install inlet needle seat assembly with gasket using Tool J-22769 (fig. 1J-34).

(15) For easier adjustment, carefully bend float arm inward at notch in arm before assembly.

(16) Install float needle onto float arm by sliding float lever under needle pull clip. Correct installation of needle pull clip is to hook clip over edge of float on float arm facing float pontoon (fig. 1J-20 and 1J-46).

(17) Install float retaining pin into float arm with end of loop of pin facing pump well. Install float assembly by aligning needle in seat and float retaining pin into locating channels in float bowl.

(18) Adjust float level:

(a) Hold float retaining pin firmly in place and push down lightly on float arm at outer end against top of float needle.

(b) Using adjustable "T" scale, at a point 3/16 inch from end of float at toe, measure distance from float bowl top surface (gasket removed) to top of float at toe.

(c) Bend float arm as necessary for proper adjustment by pushing on pontoon (refer to Specifications).

(d) Visually inspect float alignment after adjustment.

(19) Install power piston spring into piston bore.

(20) If removed, attach metering rod to holder on power piston. Spring must be on top of arm when assembled correctly (fig. 1J-36).

(21) Install power piston and metering rod assembly into float bowl and main metering jet. Use care installing metering rod into jet to prevent damaging metering rod tip. Press down firmly on plastic power piston retainer to ensure retainer is seated in recess in bowl and top is flush with top of bowl casting. If necessary, tap retainer lightly in place using drift and small hammer.

(22) Install plastic filler block over float needle by pressing downward until properly seated (flush with bowl casting surface).

(23) Install air horn gasket on float bowl by carefully sliding slit portion of gasket over two dowel locating pins on float bowl.

(24) Install pump return spring in pump well.

(25) Install pump plunger assembly in pump well.

CAUTION: *Inspect choke valve for freedom of movement and proper alignment before staking screws in place.*

(26) If removed, install choke shaft, choke valve and two attaching screws. Tighten screws securely and stake lightly in place.

(27) If removed, install plastic bushing in lower hole in choke lever ensuring small end of bushing faces retaining clip when installed. With inner choke coil lever at 12 o'clock position, insert end of fast idle cam rod through bushing in lever. Retain with new clip. Press clip in place using needlenose pliers. Ensure clip has full contact on rod, but is not seated tightly against bushing. Rod-to-bushing clearance should be 0.030 inch (0.8 mm).

NOTE: *Retaining clip is "dished." Install clip on rod with outward bend of self-locking lugs facing end of rod. Ensure that clip fully engages rod and is not distorted.*

(28) If removed, install plastic bushing in hole in vacuum break lever ensuring small end of bushing faces retaining clip when installed. Next, insert end of vacuum break rod through bushing in lever. Retain with new clip. Press clip in place with needlenose pliers. Ensure clip has full contact on rod, but is not seated tightly against bushing. Rod-to-bushing clearance is 0.030 inch (0.8 mm).

NOTE: *Retaining clip is "dished." Install clip on rod with outward bend of self-locking lugs facing end of rod. Ensure that clip fully engages rod and is not distorted.*

(29) If removed, install plastic bushing in hole in air valve lever. Ensure small end of bushing faces retaining clip when installed. Next, insert end of air valve rod through bushing in lever. Retain with new clip. Press clip in place with needlenose pliers. Ensure clip has full contact on rod, but is not seated tightly against bushing. Rod-to-bushing clearance is 0.030 inch (0.8 mm).

NOTE: *Retaining clip is "dished." Install clip on rod with outward bend of self-locking lugs facing end of rod. Ensure that clip fully engages rod and is not distorted.*

(30) Rotate fast idle cam to full UP position and tilt air horn assembly to engage fast idle cam rod in slot in fast idle cam (fig. 1J-32). Next, holding down on pump plunger assembly, carefully lower air horn assembly onto float bowl while guiding pump plunger stem through hole in air horn casting.

NOTE: *Do not force air horn assembly onto bowl.*

(31) Install vent screen assembly on air horn assembly (fig. 1J-31) and install six air horn-to-bowl attaching screws and lockwashers.

NOTE: *Three medium long air horn screws are installed in the primary and secondary venturi area. The two longer screws hold the vent screen assembly in place. The two short screws are installed on the fuel inlet side. One short screw is installed in the area beneath the hot idle compensator valve. All air horn screws must be tightened evenly and securely. Refer to figure 1J-50 for proper tightening sequence.*

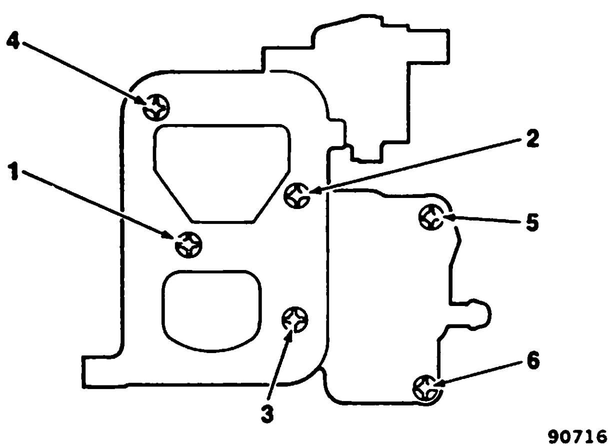

Fig. 1J-50 Model 2SE Carburetor— Air Horn Screw Tightening Sequence

(32) If equipped, install replacement seal in recess of float bowl. Install hot idle compensator valve and retain with two small attaching screws. Tighten screws securely.

(33) Install plastic bushing in hole in choke lever. Ensure small end of bushing faces retaining clip when installed. With inner choke coil lever at 12 o'clock position, insert intermediate choke rod in bushing. Retain rod with replacement clip using needlenose pliers.

NOTE: *Retaining clip is "dished." Install clip on rod with outward bend of self-locking lugs facing end of rod. Ensure that clip fully engages rod and that clip is not distorted.*

CAUTION: *Use care when tightening nut to avoid damaging vacuum break diaphragm plunger.*

(34) If removed, install solenoid in hole on bracket with large lockwasher and retaining nut. Tighten nut securely and bend back two retaining tabs on lockwasher and position in slots in bracket.

(35) Rotate solenoid bracket and insert end of vacuum break rod into inner slot and end of air valve rod into outer slot of vacuum break diaphragm plunger. Install bracket over locating lugs on air horn. Install tapered-seat screw in air horn and screw with lockwasher in throttle body. Tighten screws securely (fig. 1J-28).

NOTE: *Do not connect vacuum break hose until after vacuum break adjustment is completed (refer to Service Adjustment Procedures).*

(36) Insert pump rod in hole in pump lever by rotating lever (fig. 1J-27). Install retaining screw in pump lever, then washer. While holding down on pump plunger stem, install pump lever on air horn. Ensure shoulder on screw seats in hole in lever and washer is positioned between lever and air horn casting. Tighten screw securely.

NOTE: *The vacuum break and choke rod (fast idle cam) adjustments must be completed, and the bimetallic coil lever inside the choke housing must be indexed properly before the choke bimetallic coil and cover assembly are installed. Refer to the Service Adjustment Procedures.*

(37) Place fast idle screw on highest step of fast idle cam.

(38) Install cover and bimetallic coil assembly on choke housing, aligning notch in cover with raised casting projection on housing cover flange. Ensure coil pickup tang engages inside choke coil lever.

(39) Install three choke cover retainers with three drive rivets.

(40) With small punch and hammer, drive rivet pin into each rivet to expand and seat rivets in place.

NOTE: *Ground contact for the choke electric heater is provided by a metal plate located at the rear of the choke assembly. Do not install a gasket between the choke cover assembly and the choke housing. The choke heater will not operate unless properly grounded.*

SERVICE ADJUSTMENT PROCEDURES

Float Level Adjustment

With the air horn removed:

(1) Hold retainer pin firmly in place and push float down lightly against needle (fig. 1J-51).

(2) Using adjustable "T" scale, at a point 3/16 inch (4.8 mm) from end of float at toe, measure distance from float bowl top surface (gasket removed) to top of float at toe (fig. 1J-51).

(3) Remove float and bend float arm as necessary to adjust. Refer to Specifications.

(4) Visually check float alignment after adjustment.

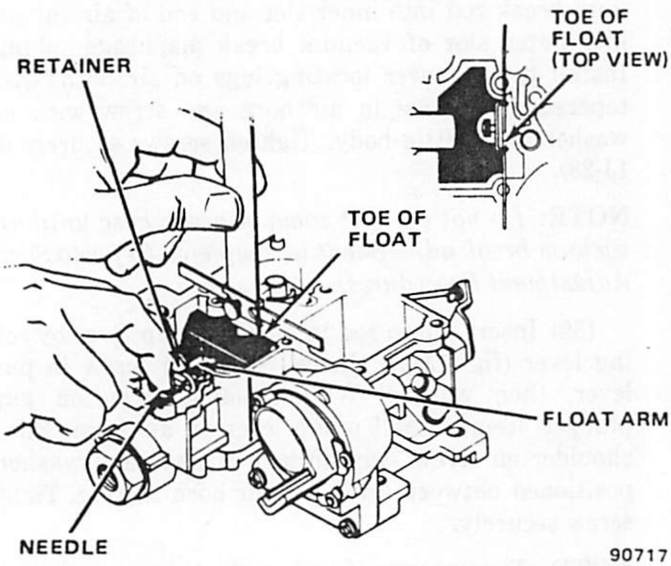

Fig. 1J-51 Model 2SE Carburetor—Float Adjustment

Accelerator Pump Adjustment

The pump adjustment should not be changed from the original factory assembly adjustment unless measurement indicates it is not within the specification. The pump lever is hardened steel and bending it is very difficult. Do not attempt to bend unless absolutely necessary.

(1) With throttle valves completely closed and fast idle adjustment screw off fast idle cam step, measure distance from air horn casting to top of pump stem. Refer to Specifications.

(2) If adjustment is necessary, remove pump lever retaining screw and lever by rotating from pump rod.

CAUTION: *Do not bend lever sideways or twist it.*

(3) Place lever in soft jawed vise and bend end of lever as necessary to obtain correct dimension.

(4) Install pump lever and retaining screw.

(5) Check adjustment and if correct tighten retaining screw securely.

(6) Open and close throttle valves to test linkage for freedom of movement and lever for correct alignment.

Fast Idle Adjustment

(1) Position fast idle adjustment screw on highest fast idle cam step.

(2) Turn fast idle adjustment screw in or out the specified number of turns. Refer to Specifications.

Choke Coil Lever Adjustment

Do not remove the rivets and retainers securing the choke cover and coil assembly unless it is necessary to inspect the choke coil lever adjustment. If the rivets and cover are removed, a choke cover retainer kit is required for assembly.

(1) Remove rivets, retainers and choke cover and coil assembly following instructions contained in choke cover retainer kit.

(2) Position fast idle adjustment screw on highest fast idle cam step.

(3) Push on intermediate choke lever and close choke valve.

(4) Insert specified plug gauge in hole adjacent to coil lever (see Specifications). Edge of lever should barely contact plug gauge (fig. 1J-52).

(5) Bend intermediate choke rod with Adjusting Wrench J-28692 to adjust clearance between lever and plug gauge (fig. 1J-52).

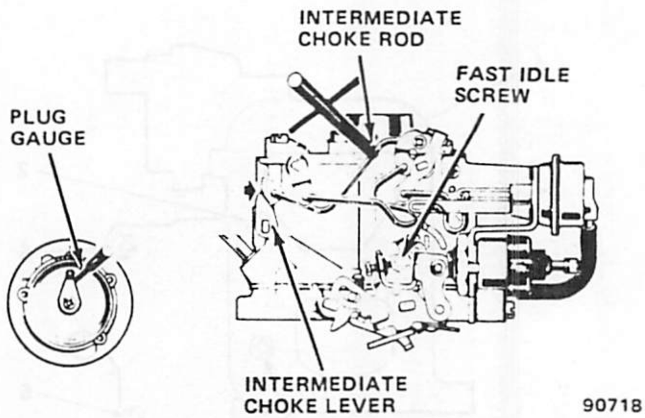

Fig. 1J-52 Model 2SE Carburetor—Choke Coil Lever Adjustment

Fast Idle Cam Position Adjustment

The choke coil lever adjustment must be correct and the fast idle adjustment must be completed before proceeding (fig. 1J-53).

(1) Rotate degree scale of Carburetor Choke Angle Gauge J-26701-A to position zero degree mark opposite pointer.

(2) With choke valve completely closed, position magnet squarely on top of choke valve. Rotate bubble until it is centered.

(3) Rotate degree scale until degree mark specified for adjustment is opposite pointer. Refer to Specifications.

(4) Position fast idle screw on second cam step adjacent to rise of high step.

(5) Close choke valve by pushing on intermediate choke lever.

(6) Push vacuum break lever toward open choke position until lever is against rear tang on choke lever.

(7) Adjust by bending fast idle cam rod with Bending Tool J-9789-111 until bubble is centered.

(8) Remove gauge.

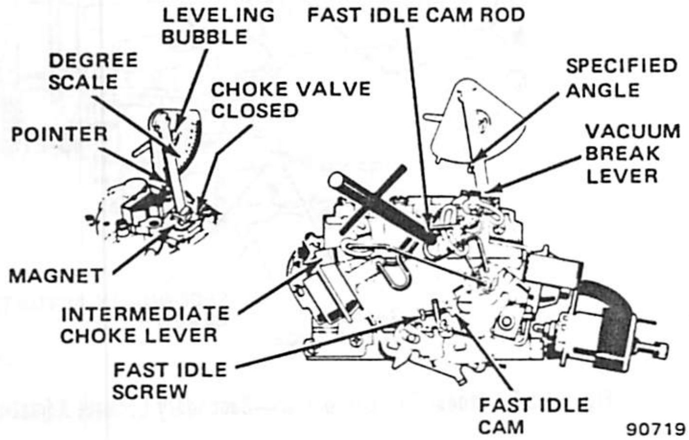

Fig. 1J-53 Model 2SE Carburetor—Fast Idle Cam Position Adjustment

Air Valve Rod Adjustment

Refer to figure 1J-54.

(1) Rotate degree scale of Carburetor Choke Angle Gauge J-26701-A to position zero degree mark opposite pointer.

(2) Close air valve and place magnet on top of it.

(3) Rotate bubble until it is centered.

(4) Rotate degree scale until specified degree mark (refer to Specifications) is opposite pointer.

(5) Seat vacuum diaphragm using external vacuum source.

NOTE: *Plug end cover with tape if purge bleed hole is used. Remove tape after adjustment.*

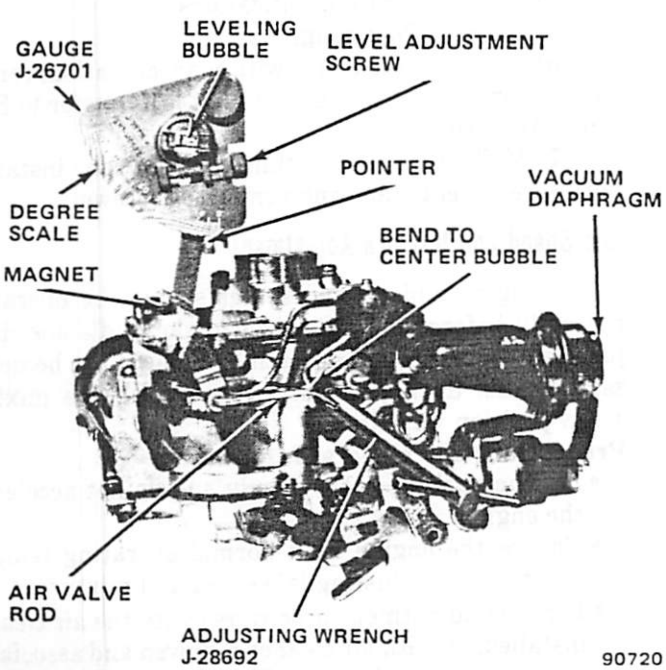

Fig. 1J-54 Model 2SE Carburetor—Air Valve Rod Adjustment

(6) Apply light pressure to air valve shaft in direction to open valve to ensure all slack is removed between air valve rod and plunger slot.

(7) Bend air valve rod with Bending Tool J-9789-111 until bubble is centered.

(8) Remove gauge.

Primary Side Vacuum Break Adjustment

Refer to figure 1J-55.

(1) Rotate degree scale of Carburetor Choke Angle Gauge J-26701-A until zero degree mark is opposite pointer.

(2) Completely close choke valve and place magnet squarely on top of it.

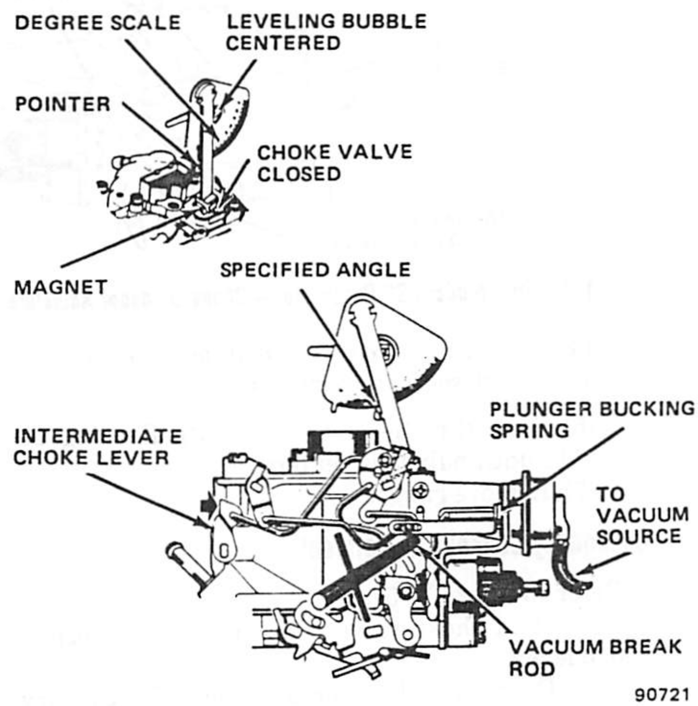

Fig. 1J-55 Model 2SE Carburetor—Primary Side Vacuum Break Adjustment

(3) Rotate bubble until it is centered.

(4) Rotate degree scale to position specified degree mark (refer to Specifications) opposite pointer.

(5) Seat choke vacuum diaphragm using external vacuum source.

(6) Hold choke valve at closed position by pushing on intermediate choke lever. Ensure plunger backing spring (if used) is compressed and seated.

(7) Bend vacuum break rod with Bending Tool J-9789-111 to center bubble.

(8) Remove gauge.

Choke Unloader Adjustment

Refer to figure 1J-56.

(1) Rotate degree scale of Carburetor Choke Angle Gauge J-26701-A until zero degree mark is opposite pointer.

(2) Close choke valve completely and set magnet squarely on top of it.

(3) Rotate bubble until it is centered.

(4) Rotate degree scale to position specified degree mark (refer to Specifications) opposite pointer.

(5) Hold primary throttle valve wide open.

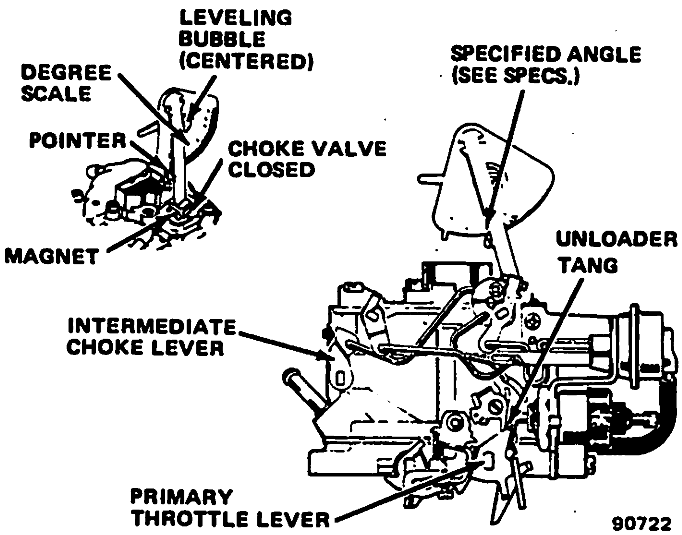

Fig. 1J-56 Model 2SE Carburetor—Choke Unloader Adjustment

NOTE: *If engine is warm it may be necessary to hold choke valve closed with a rubber band.*

(6) Bend throttle lever tang with Bending Tool J-9789-111 until bubble is centered.

(7) Remove gauge.

Secondary Lockout Adjustment

Refer to figure 1J-57.

(1) Hold choke valve wide open with intermediate choke lever.

(2) Open throttle lever until end of secondary actuating lever is opposite toe of lockout lever.

(3) Measure clearance (refer to Specifications) between toe of lockout lever and secondary actuating lever.

(4) If adjustment is necessary, bend lockout lever tang contacting fast idle cam with Bending Tool J-9789-111.

Float Level Measurement

NOTE: *The float level should be determined before disassembling a carburetor for overhaul if a malfunctioning float is suspected of affecting engine performance.*

NOTE: *The fuel level in the carburetor bowl can be affected by fuel pump pressure as well as by an improperly adjusted float.*

To determine if the float requires adjustment, measure the float level according to the following procedure.

(1) Remove vent stack screws and vent stack.

(2) Remove air horn screw located adjacent to vent stack.

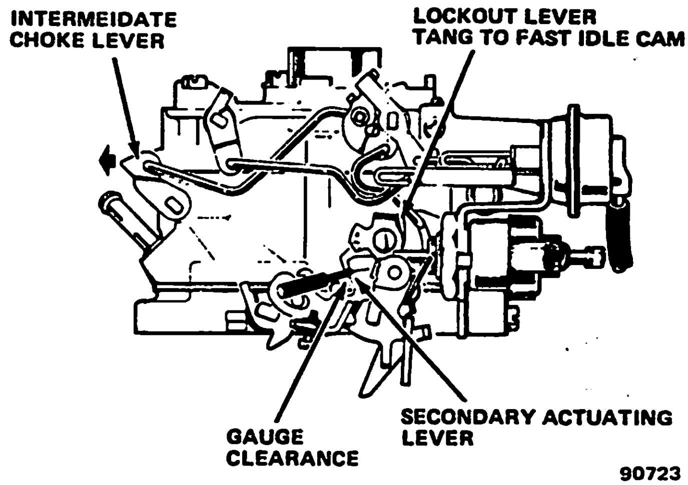

Fig. 1J-57 Model 2SE Carburetor—Secondary Lockout Adjustment

WARNING: *Use extreme caution when engine is operating. Do not stand in direct line with fan. Do not put hands near pulleys, belts or fan. Do not wear loose clothing.*

(3) With engine at idle speed and choke valve completely open, carefully insert float gauge in air horn screw hole and vent hole. Allow gauge to rest freely on float.

NOTE: *Use Gauge J-9789-138 (blue) for model 2SE carburetor.*

CAUTION: *Do not press down on gauge because engine may flood or float may be damaged.*

(4) With gauge at eye level observe mark on gauge that aligns with top of casting at vent hole. Float level should be within ± 1.5 mm (± 0.06 inch) of float level specification. Refer to Specifications.

(5) Remove float gauge.

(6) If float level is not within specification, remove carburetor air horn and adjust float level. Refer to Float Level Adjustment.

(7) If float level is within specification, install air horn screw, vent stack and vent stack screws.

Idle Speed and Mixture Adjustment

The engine and related systems must be operating normally before performing curb (slow) idle speed adjustment. Idle mixture adjustment should not be necessary unless, during carburetor overhaul, the mixture screw position was altered.

Precautions and General Information

- Set the parking brake firmly and do not accelerate the engine.
- Ensure the engine is at normal operating temperature before adjusting idle speed and mixture.
- Perform adjustment procedures with the air cleaner installed, or with air cleaner removed and associated vacuum hoses plugged. Choke must be open and deceleration valve supply hose plugged.

- Do not idle the engine more than three minutes at a time.
- If the mixture adjustment procedure requires more than three minutes, operate the engine at 2000 rpm for one minute.
- Ensure the ignition timing is correct before adjusting idle speed.
- Use extreme caution around fan, belts and other moving parts when the engine is operating. Do not wear loose clothing. Do not stand in direct line with the fan blades.

Curb (Slow) Idle Speed Adjustment

(1) Disconnect and plug purge vacuum hose at vapor canister.

NOTE: *Use a tachometer with an expanded scale of 400 to 800 or 0 to 1000 rpm. Inspect tachometer periodically to ensure accuracy within two percent.*

(2) Connect tachometer.

WARNING: *Use extreme caution when engine is operating. Do not stand in direct line with fan. Do not put hands near pulleys, belts or fan. Do not wear loose clothing.*

(3) Start engine and warm to normal operating temperature.
(4) Set parking brake firmly.
(5) Place manual transmission into Neutral.
(6) Adjust idle speed by turning solenoid idle screw to obtain specified idle speed.
(7) Disconnect solenoid wire connector. Adjust curb idle screw to obtain 500 rpm.
(8) Connect solenoid wire connector.
(9) Stop engine. Disconnect tachometer. Install air cleaner (if removed) and connect vacuum hoses (if disconnected). Connect canister purge hose and deceleration valve supply hose (if disconnected).

Carburetor Model 2SE Idle Speed Adjustment Specifications

Engine	Transmission	RPM
4-Cylinder	Manual	900 (± 100) ①

①Idle speed with solenoid de-energized is 500 rpm. 90978

Fast Idle Speed Adjustment

(1) Connect tachometer.
(2) Set parking brake and place manual transmission in Neutral.
(3) Connect tachometer.

WARNING: *Use extreme caution when engine is operating. Do not stand in direct line with fan. Do not put hands near pulleys, belts or fan. Do not wear loose clothing.*

(4) Start and warm engine to normal operating temperature.
(5) Disconnect and plug EGR valve vacuum hose.
(6) Open throttle slightly and rotate fast idle cam until adjustment screw is against highest step of cam.
(7) Adjust fast idle speed to specification.
(8) Quickly open throttle slightly and allow engine to return to slow idle speed.
(9) Connect EGR valve vacuum hose.
(10) Disconnect tachometer.

Idle Mixture Adjustment

Idle mixture adjustment should only be performed if the mixture adjustment screw position was disturbed or replaced during carburetor overhaul.

(1) Position manual transmission in Neutral position. Set parking brake.

WARNING: *Use extreme caution when engine is operating. Do not stand in direct line with fan. Do not put hands near pulleys, belts or fan. Do not wear loose clothing.*

(2) Connect tachometer, start engine and warm to operating temperature.

NOTE: *Use a tachometer with an expanded scale of 400 to 800 or 0 to 1000 rpm. Inspect tachometer periodically to ensure accuracy within two percent.*

(3) Adjust idle speed as described above.
(4) Turn idle mixture adjustment screw lean (clockwise) until perceptible loss of rpm is noted.
(5) Turn idle mixture adjustment screw rich (counterclockwise) until highest rpm is attained. Do not turn screw any further than position where highest rpm is first attained. This is referred to as lean best idle.

NOTE: *Engine speed will increase above idle speed an amount that corresponds approximately to the lean drop specification obtained in step (6).*

(6) As final adjustment, turn idle mixture adjustment screw clockwise in increments until specified drop is attained. Refer to Idle Drop Specification.

NOTE: *If the final rpm differs more than ± 30 rpm from the originally adjusted idle speed, readjust idle speed to specification and repeat steps (6) and (7).*

Carburetor Model 2SE Idle Mixture Adjustment Idle Drop

Engine	Transmission	RPM Drop
4-Cylinder	M	100

90979

Choke Mechanism Service

Test the choke mechanism and vacuum break for proper operation at the recommended maintenance intervals. Any binding condition that may have developed because of petroleum gum formation on the choke shaft or from damage should be corrected. Inspect the vacuum break hose for proper connection, cracks, abrasion and general deterioration. Correct or replace as necessary.

General Inspection

(1) Remove air cleaner. With engine off, hold throttle half open. Open and close choke several times. Observe linkage and ensure all links are connected and that there are no indications of damage.

(2) If choke or linkage binds, sticks or moves sluggishly, clean with AMC Choke and Linkage Cleaner, or equivalent. Use cleaner as directed on can. If cleaning does not correct the problem, replace malfunctioning parts.

(3) Visually inspect carburetor and ensure all vacuum hoses are connected. Inspect hoses for cracks, abrasion, hardness or indications of general deterioration. Replace or correct as necessary.

(4) Ensure vacuum break diaphragm shafts are fully extended when engine is off. If shafts are not fully extended, replace vacuum break assembly. Start engine; primary vacuum break diaphragm shaft should fully retract. If unit fails to retract, replace vacuum break assembly.

Electric Choke Heater

If the choke fails to operate properly, perform the following tests.

(1) Measure voltage at choke heater wire connection with engine operating. If voltage is between 12 and 15 volts, replace choke unit.

(2) If voltage is low or zero, inspect all wires and connections. If connection at oil pressure switch is faulty, low pressure warning light may also be inoperative with ignition on and engine not started. Repair wires and connections as necessary.

(3) If tests in steps (1) and (2) have normal results, replace oil pressure switch.

Carburetor Model 2SE Specifications

	17082380	17082381
Pri. Throttle Bore	35 mm	35 mm
Sec. Throttle Bore	46 mm	46 mm
Pri. Venturi Diameter	28 mm	28 mm
Sec. Venturi Diameter	Var. Air Valve	Var. Air Valve
Fuel Inlet Seat Diameter	(.093")	(.093")
Idle Bypass	2.20 mm	2.20 mm
Idle Tube	0.825 mm	0.80 mm
Side Idle Air Bleed	1.32 mm	1.32 mm
Lower Idle Air Bleed	1.32 mm	1.32 mm
Spark Port Size	1.14mm x 3.84mm	1.14mm x 3.84mm
Main Jet	No. 159 (1.59 mm)	No. 150 (1.50 mm)
Pri. Metering Rod No.	17057856	17057-855
Sec. Metering Rod No.	17071356	17071356
Top Well Bleed	1.78 mm	1.78 mm
Side Well Bleed	2.44 mm	2.44 mm
Power Valve Timing	6 to 2" Hg.	4 to 1" Hg.
Accelerator Nozzle Dia.	0.50 mm	0.50 mm

4-Cylinder Engine		Carburetor Number	Float Level mm(inches)	Pump Stem Height mm(inches)	Fast Idle Cam Adj.②	Fast Idle Speed ±100 rpm	Air Valve Link①	Vac. Break Pri.	Unloader	Choke	Secondary Lockout	Choke Coil Lever Plug Gauge
CJ (49 State)	Man. Trans.	17082380	4.5 (.169)	3.25 (.128)	18°	2400	2°	21°	34°	TR	1.27-2.03mm (.050-.080in.)	1.27-2.03mm (.050-.080in.)
CJ Hi-Alt.	Man. Trans.	17082381	4.5 (.169)	3.25 (.128)	18°	2400	2°	21°	34°	TR	1.27-2.03mm (.050-.080in.)	1.27-2.03mm (.050-.080in.)

① Maximum Degree Setting
TR Tamper Resistant
② Second Step of Cam

90981A

CARBURETOR MODEL E2SE— 2 VENTURI

GENERAL

The Model E2SE carburetor is a two-venturi, two-stage carburetor of down draft design (fig. 1J-58) for four-cylinder engines installed in CJ vehicles manufactured for sale in California.

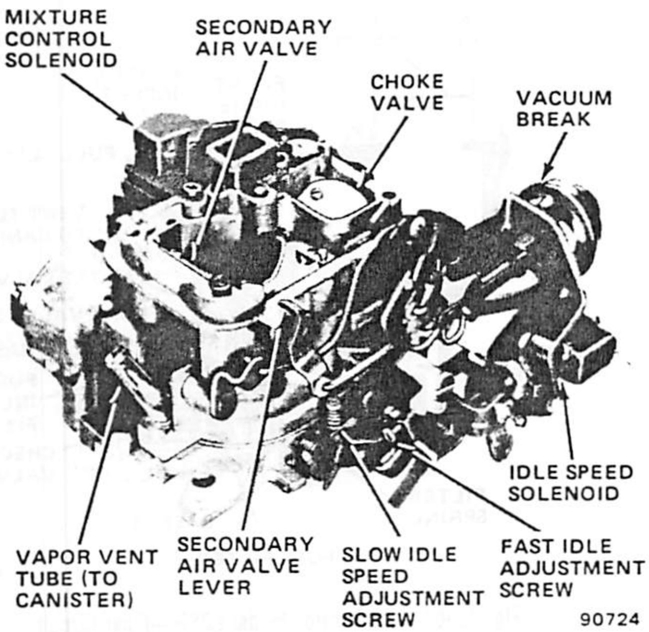

Fig. 1J-58 Model E2SE Carburetor

NOTE: *All reference to CJ vehicles also pertains to Scrambler vehicles.*

When used with the C4 system, the Model E2SE carburetor includes special design features for optimum air/fuel mixture control during all ranges of engine operation. An electrically operated mixture control solenoid, located in the air horn, is used to control air and fuel metered to the idle and main metering systems of the carburetor. A plunger in the end of the solenoid is submerged in fuel in the fuel chamber of the float bowl. The solenoid is turned on and off (or "pulsed") by the Electronic Control Module (ECM). The ECM, responding to the amplitude of the voltage at the oxygen sensor in the exhaust manifold and other engine operating conditions, energizes the solenoid to move the plunger down to the lean position or, de-energizes it to the rich position to control fuel delivery to the idle and main metering circuits. The ECM energizes the solenoid by providing a ground to complete the path for current flow. The solenoid has 12 volts (battery voltage) applied to it at all times while the ignition switch is on. When the plunger is in the down (lean) position, fuel metering is controlled by a factory adjusted lean mixture screw located in the float bowl. When the plunger is in the up (rich position), additional fuel is metered to the main fuel well through the factory adjusted rich mixture screw located at the end of the fuel supply channel in the float bowl.

In addition, air metered to the idle circuit is controlled by the up and down movement of the mixture control solenoid plunger. The plunger either increases or decreases air supplied to the idle circuit, which is further metered by a factory adjusted idle air bleed screw.

The movement (or "cycling") of the solenoid plunger, up or down, occurs ten times per second. The ratio (duty cycle) of "on" to "off" time, or dwell period, is varied by the ECM according to the engine operating conditions. This varies the fuel and air mixture to achieve, as near as possible, optimum air/fuel mixture ratios. The exhaust gas mixture oxygen content (lean or rich), and other engine operating conditions, are constantly monitored by the C4 system microprocessor (ECM) and the air/fuel mixture is adjusted accordingly for improved exhaust emission control and good engine performance.

Identification

The carburetor model identification is stamped vertically into the float bowl at a flat area adjacent to the vacuum tube (fig. 1J-59). When replacing the fuel bowl, follow the manufacturer's instructions contained in the service repair package and ensure that the identification number is transferred to the new float bowl. Refer to the bowl part number when servicing the carburetor.

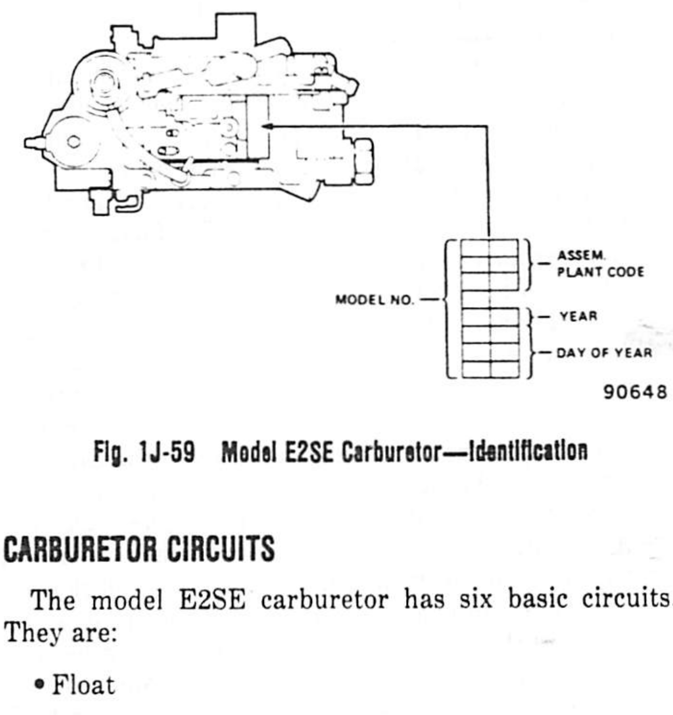

Fig. 1J-59 Model E2SE Carburetor—Identification

CARBURETOR CIRCUITS

The model E2SE carburetor has six basic circuits. They are:

- Float
- Idle
- Main Metering
- Power Enrichment
- Pump
- Choke

Float Circuit

The float chamber is located next to the primary and secondary bores (fig. 1J-60). This feature assures adequate fuel supply to both carburetor venturi bores during all normal engine operations.

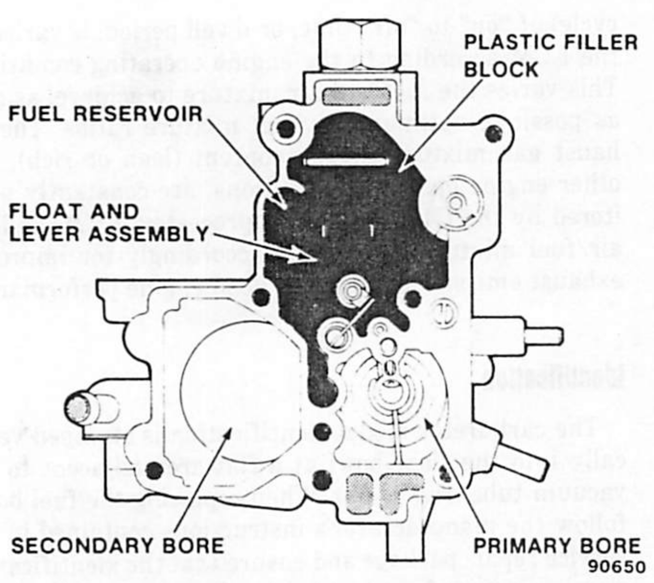

Fig. 1J-60 Model E2SE Carburetor—Float and Fuel Reservoir

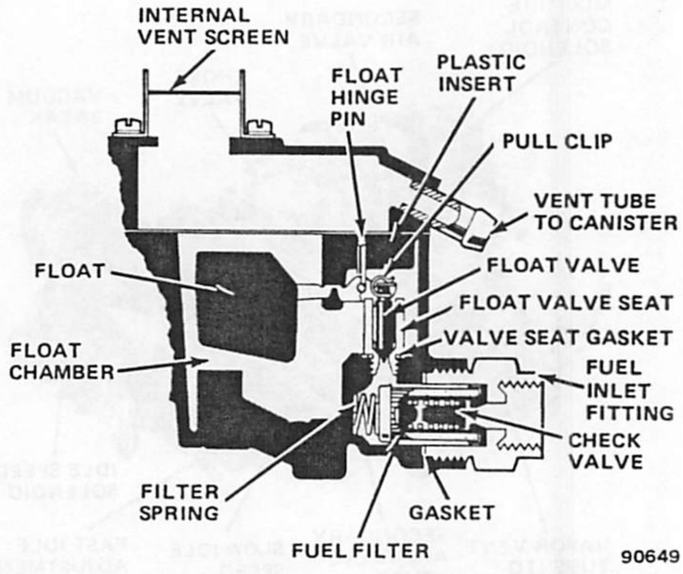

Fig. 1J-61 Carburetor Model E2SE—Float Circuit

A single pontoon float, brass needle seat, and rubber tipped float valve with pull clip are used to control the fuel level in the float chamber. The float chamber is internally vented through a vertical vent cavity in the air horn. Above this vent cavity is a removable vent stack assembly that has a small meshed screen for its top. The vent stack provides the correct height for the internal vent of the float chamber. The float chamber is also externally vented through a tube (fig. 1J-61) in the air horn. A hose connects this tube directly to a vacuum operated vapor vent valve located in the vapor canister. When the engine is not operating, the canister vapor vent valve is open, allowing fuel vapor from the float chamber to pass into the canister where it is stored until purged. The venting of fuel vapor from the carburetor float bowl to the canister conforms to evaporative emission requirements and improves hot engine starting.

A hot idle compensator assembly (when used) is located in the air horn casting. The opening and closing of the hot idle compensator valve is controlled by a bimetallic strip that is calibrated for a specific temperature. When the valve opens, additional air is allowed to bypass the throttle valves and enter the intake manifold to prevent rough idle during periods of hot engine operation.

An integral one-inch pleated-paper fuel filter, with check valve, is front mounted in the float bowl inward from the fuel inlet fitting to provide good filtration of incoming fuel (fig. 1J-61). The check valve shuts off fuel flow to the carburetor and prevents fuel leaks should vehicle roll-over occur.

Idle Circuit

Fuel for idle and partial throttle engine operation is provided by the idle circuit. Fuel flows from the main well area into the idle tube and continues through the idle cross-over passage where it is mixed with air that enters via the lower idle air bleed (fig. 1J-62).

The idle mixture adjustment screw is recessed in the throttle body casting and sealed with a hardened steel plug to discourage indiscriminate change of the factory assembly mixture adjustment, which could raise undesirable exhaust emission to a level that is beyond acceptable standards.

Main Metering Circuit

At partial throttle and cruising speed, increased airflow through the venturi creates a low pressure area in the venturi. Because air above the fuel level in the bowl is at normal pressure, fuel flows to the lower pressure area created by the venturi and amplified by the booster venturi.

The fuel flow moves past the mixture control solenoid to the main well. Air enters through the main well air bleeds. The resulting mixture of fuel and air is lighter than raw fuel, responds more quickly to changes in venturi vacuum, and is more readily vaporized when discharged into the venturi (fig. 1J-63).

Power Enrichment Circuit

Power enrichment for heavy load or high speed operation is provided by the power enrichment circuit in the secondary stage. The air/fuel mixture enrichment is accomplished by the mixture control solenoid being in the upward (rich) position the majority of the time (low dwell) and allowing fuel flow through the secondary stage of the carburetor (fig. 1J-64).

Pump Circuit

When the throttle is opened suddenly, airflow response through the carburetor is almost immediate.

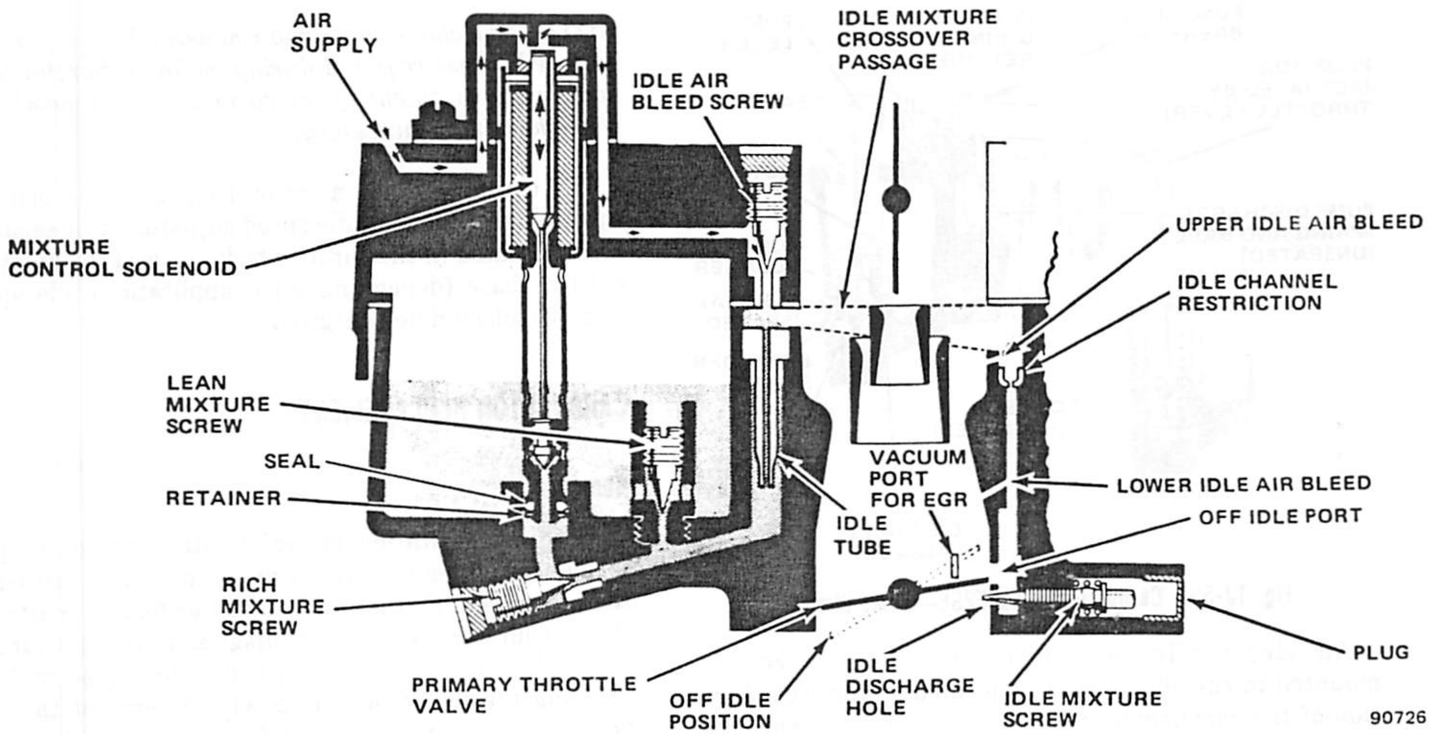

Fig. 1J-62 Carburetor Model E2SE—Idle Circuit

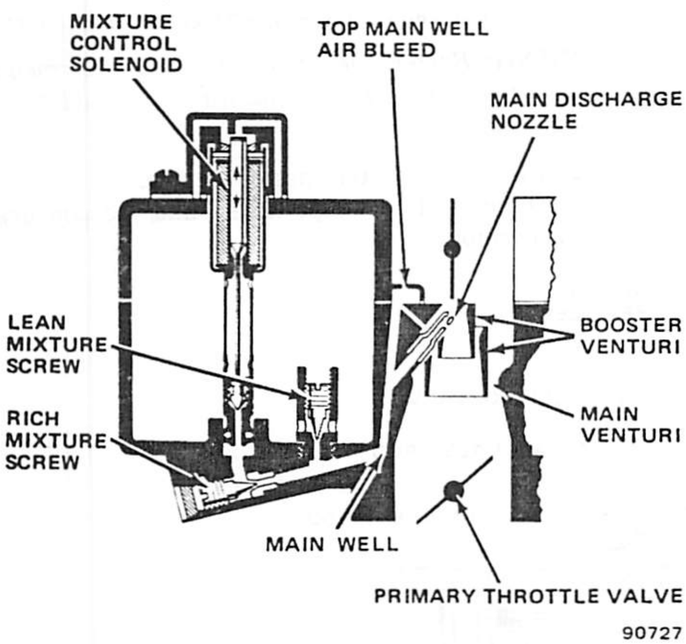

Fig. 1J-63 Carburetor Model E2SE—Main Metering Circuit

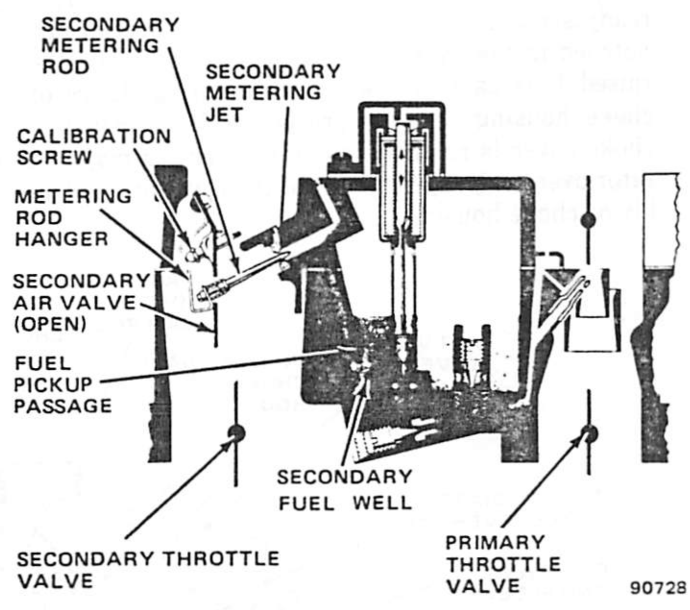

Fig. 1J-64 Carburetor Model E2SE—Power Enrichment Circuit

There is a brief time lag before fuel inertia is overcome. This lag causes the desired air/fuel ratio to be leaned out. A piston-type accelerating pump system mechanically supplies the fuel necessary to overcome this deficiency (fig. 1J-65). Fuel is drawn into the pump cylinder from the fuel bowl, past the pump piston on the upward movement of the accelerator pump shaft. As the throttle lever is moved, the pump link, operating through a system of levers and assisted by the pump drive spring, pushes the pump piston down. Fuel is forced through a passage, past the pump discharge check ball, and out the pump discharge jets in the venturi cluster.

Choke Circuit

The choke circuit in the model E2SE carburetor (fig. 1J-66) employs a single vacuum break unit that is mounted on the idle speed solenoid bracket located on the primary side of the carburetor.

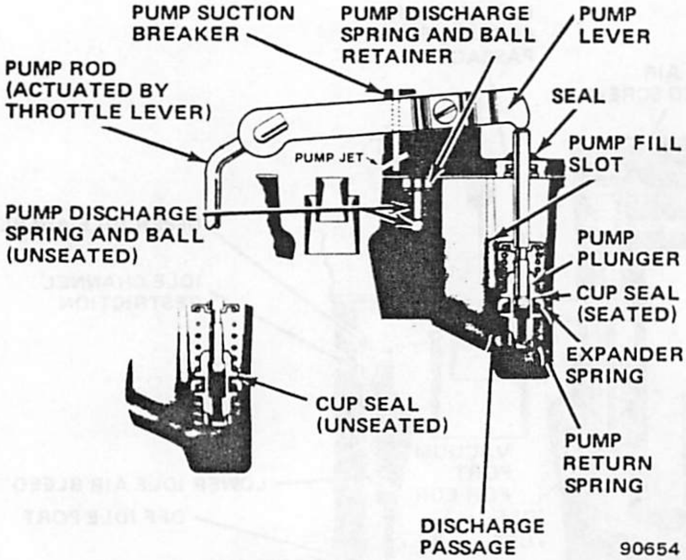

Fig. 1J-65 Carburetor Model E2SE—Pump Circuit

An electrically heated bimetallic choke coil is mounted in the choke housing located on the secondary side of the carburetor. Special rivets, and conventional retainers, are installed to retain the factory assembly adjustment of the bimetallic choke coil. They provide a tamper-resistant enclosure to discourage indiscriminate readjustment in the field. In addition, a special cutout is notched in the choke cover that must be indexed with a raised boss cast in the cover mounting flange on the choke housing. A new procedure for removal of the choke cover is required when performing major carburetor overhaul, replacement of the cover and coil assembly or choke housing.

NOTE: *The choke cover and coil assembly must not be removed unless required during major carburetor overhaul, or replacement of the cover and coil assembly or choke housing is necessary.*

The carburetor has a screw located in the primary throttle lever for fast idle speed adjustment. A separate screw, located in the throttle body, is used to adjust the curb or base (depending upon application) idle speed setting (solenoid de-energized).

CARBURETOR REPLACEMENT

Removal

Flooding, hesitation on acceleration and other performance complaints are, in many instances, caused by the presence of debris, water or other foreign matter in the carburetor. To aid in diagnosis, the carburetor should be carefully removed from the engine without draining the fuel from the bowl. Contents of the fuel bowl may then be examined for contamination as the carburetor is disassembled. Also, the filter should be examined for contamination.

(1) Remove vacuum hoses, air cleaner and gasket.

WARNING: *Battery negative cable must be removed to prevent a potential fire hazard when fuel line is disconnected.*

(2) Disconnect battery negative cable.

(3) Disconnect fuel pipe fitting and vacuum hoses from carburetor.

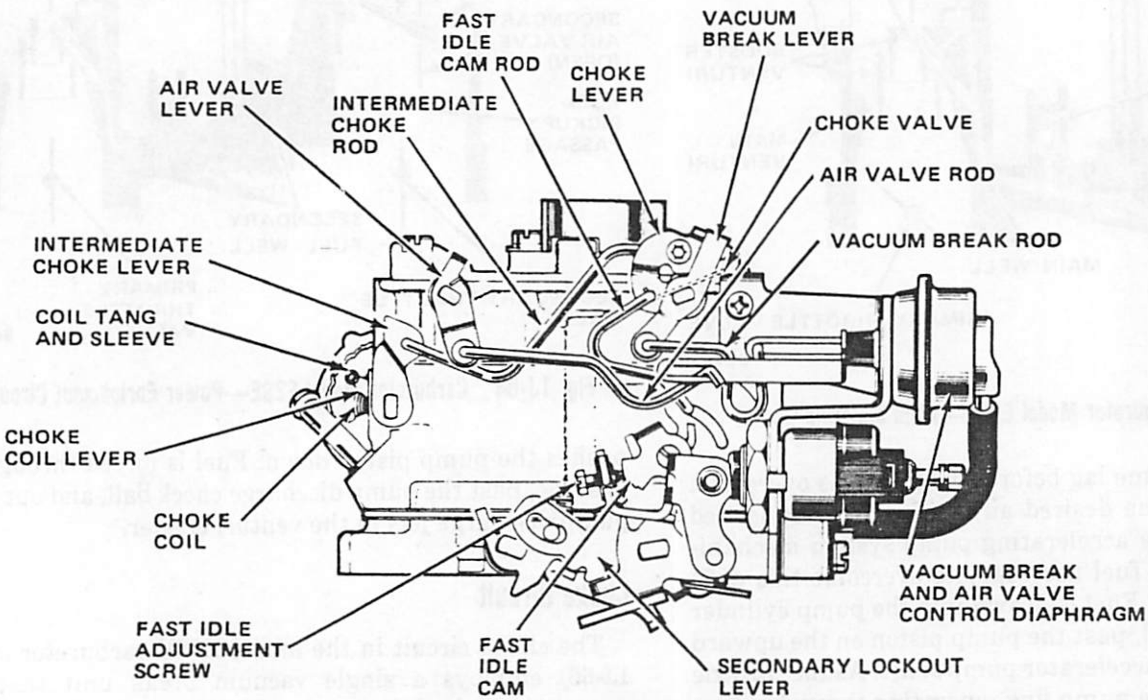

Fig. 1J-66 Carburetor Model E2SE—Choke Circuit

(4) Disconnect throttle linkage and electrical connectors.

(5) Remove carburetor attaching bolts and nuts, and remove carburetor and gasket.

Installation

Fill the carburetor bowl with fuel before installing the carburetor. This reduces strain on the starter motor and battery, and reduces the possibility of backfire while attempting to start the engine. A small supply of no-lead fuel will also enable the carburetor float and inlet needle and seat assembly operation to be tested. Operate throttle lever several times and observe discharge from pump jets before installing carburetor.

(1) Ensure throttle body and intake manifold sealing surfaces are clean.

(2) Install manifold gasket on replacement carburetor.

(3) Place carburetor in position and loosely install attaching bolts and nuts.

(4) Install vacuum hoses and loosely connect fuel pipe fitting.

(5) Tighten attaching bolts and nuts with 145 inch-pounds (16 N•m) torque.

(6) Tighten fuel pipe fitting with 18 foot-pounds (24 N•m) torque.

(7) Connect throttle linkage and electrical connectors.

(8) Connect battery negative cable.

NOTE: *Plug disconnected vacuum hoses.*

WARNING: *Use extreme caution when engine is operating. Do not stand in direct line with fan. Do not put hands near pulleys, belts or fan. Do not wear loose clothing.*

(9) Adjust idle speed. Refer to Specifications.

(10) Install air cleaner, gasket and vacuum hoses.

CARBURETOR OVERHAUL

The following procedures apply to a complete overhaul with the carburetor removed from the engine.

A complete disassembly is not necessary for performing routine service adjustments. In most instances, service adjustments of the individual circuits can be performed without removing the carburetor from the engine. Refer to Service Adjustment Procedures.

A complete carburetor overhaul includes disassembly, thorough cleaning, inspection and replacement of the gaskets and worn or damaged parts. It also includes idle speed and mixture adjustment (if necessary) and fast idle adjustment after the carburetor is installed.

NOTE: *When using an overhaul kit, use all parts included in the kit.*

NOTE: *Flooding, hesitation on acceleration, and other performance problems are in many instances caused by the presence of debris, water, or other foreign matter in the carburetor. To aid in diagnosing a problem, carefully remove the carburetor from the engine without removing the fuel from the bowl. Examine the bowl contents and filter for contamination as the carburetor is disassembled.*

CAUTION: *Before performing any service on the carburetor, it is essential that it be placed on a holding fixture. Without the use of the holding fixture, it is possible to damage the throttle valves.*

Disassembly

(1) If clip is used to secure pump rod, remove clip and remove pump rod from hole in pump lever.

NOTE: *Do not remove pump lever retaining screw, pump lever, and washer from air horn assembly.*

(2) If clip is **not** used to secure pump rod (clipless design), remove pump lever retaining screw and washer from air horn (fig. 1J-67). Rotate pump lever to remove from pump rod.

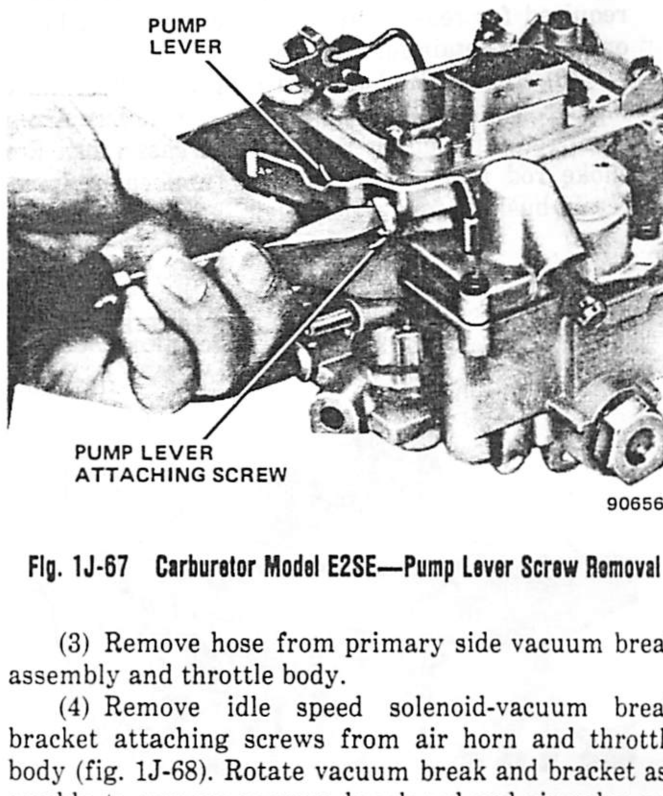

Fig. 1J-67 Carburetor Model E2SE—Pump Lever Screw Removal

(3) Remove hose from primary side vacuum break assembly and throttle body.

(4) Remove idle speed solenoid-vacuum break bracket attaching screws from air horn and throttle body (fig. 1J-68). Rotate vacuum break and bracket assembly to remove vacuum break rod and air valve rod from vacuum break diaphragm plunger. If not removed previously, remove idle speed solenoid from bracket.

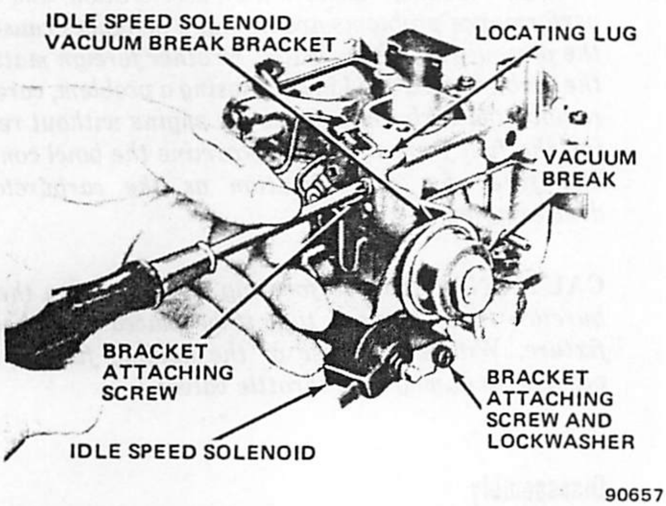

Fig. 1J-68 Carburetor Model E2SE—Vacuum Break Removal

CAUTION: *Do not place vacuum break assembly and solenoid in carburetor cleaning solution. Immersion in solution will damage vacuum break diaphragm and solenoid.*

(5) It is not necessary to remove the secondary side vacuum break rod from linkage unless replacement of vacuum rod is necessary. If necessary to replace secondary side vacuum break rod, remove and discard retaining clip from end of rod. A replacement retaining clip is required for reassembly. Remove plastic bushing used on rod and retain for reassembly.

(6) Remove and discard retaining clip from intermediate choke rod at choke lever (fig. 1J-69). A replacement retaining clip is required for reassembly. Remove choke rod and plastic bushing from choke lever and retain bushing for reassembly.

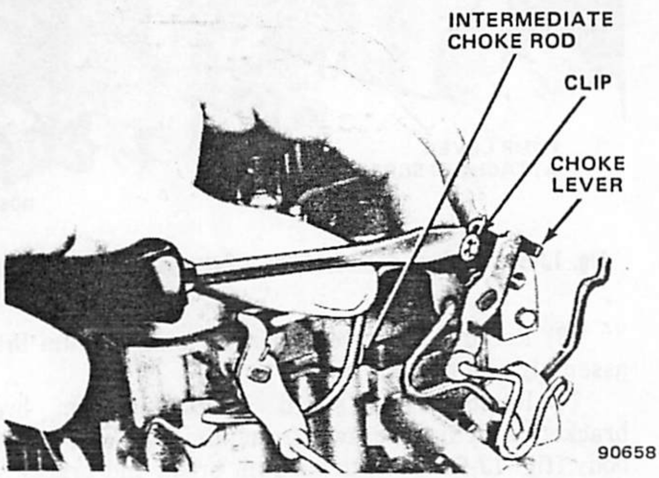

Fig. 1J-69 Carburetor Model E2SE—Intermediate Choke Rod and Clip Removal

(7) Remove three mixture control solenoid screws in air horn. Using slight twisting motion, carefully lift solenoid out of air horn (fig. 1J-70). Remove and discard solenoid gasket.

(8) Remove seal retainer and rubber seal from end of solenoid plunger. Do not damage or nick end of solenoid plunger. Discard seal and retainer.

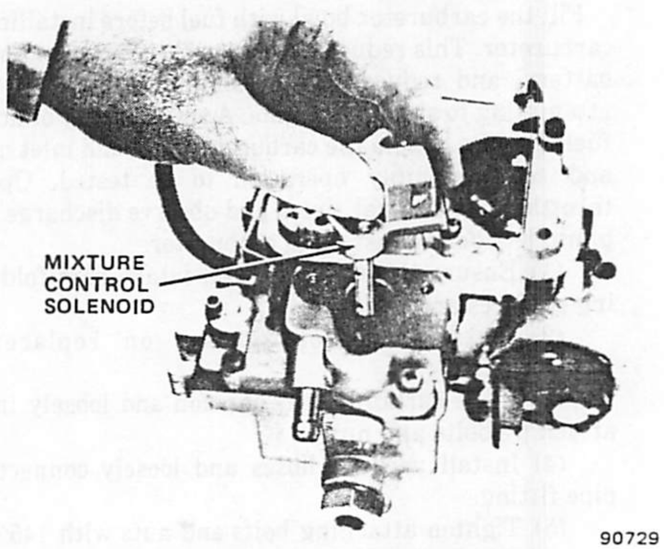

Fig. 1J-70 Carburetor Model E2SE—Mixture Control Solenoid Removal

(9) If equipped, remove two small screws that retain hot idle compensator valve (fig. 1J-71). Remove valve and seal from air horn. Discard seal. Hot idle compensator valve must be removed to gain access to short air horn-to-bowl attaching screw.

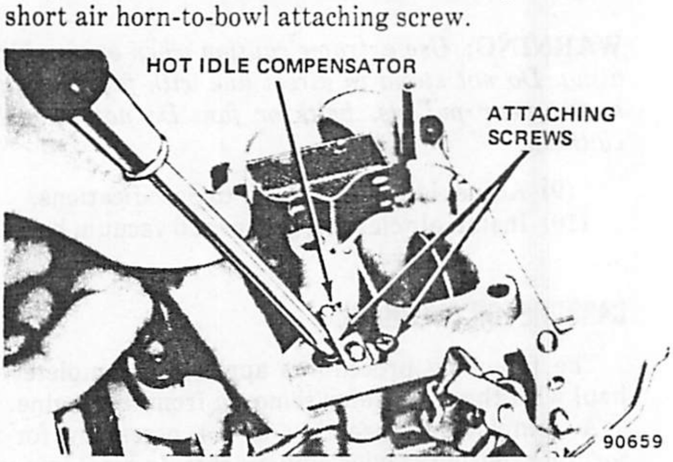

Fig. 1J-71 Carburetor Model E2SE—Hot Idle Compensator Valve Removal

(10) Remove six air horn-to-bowl attaching screws and lockwashers (fig. 1J-72).

(11) Rotate fast idle cam to full UP position and remove air horn assembly by tilting to disengage fast idle cam rod from slot in fast idle cam (fig. 1J-73). Air horn gasket should remain on float bowl for removal later. Do not remove fast idle cam screw and cam from float bowl.

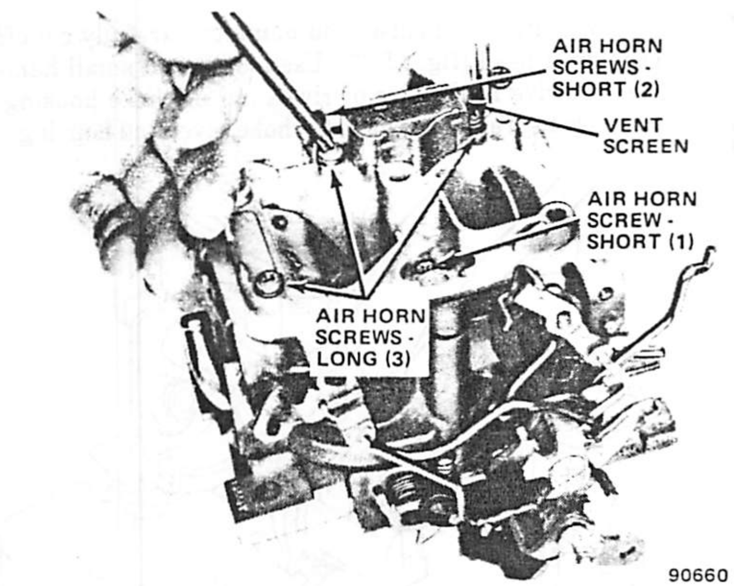

Fig. 1J-72 Carburetor Model E2SE—Air Horn Screws and Vent Screen

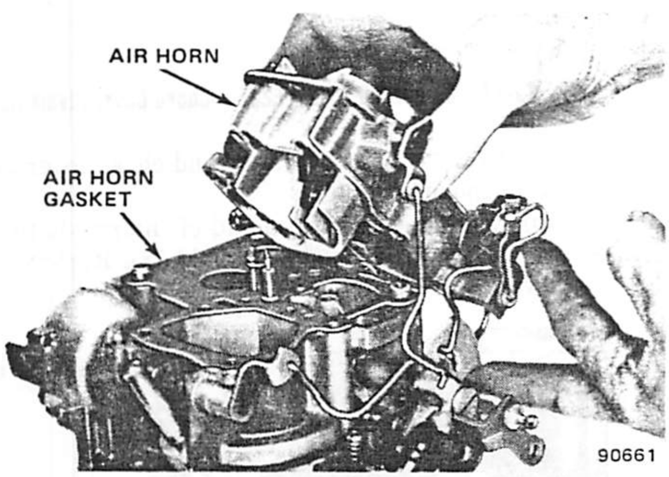

Fig. 1J-73 Carburetor Model E2SE—Air Horn Removal

NOTE: *These parts are not serviced separately and are to remain permanently in place as installed during original assembly. The new service replacement float bowl will include the secondary lockout lever, fast idle cam and screw installed as required.*

(12) Remove fast idle cam rod from choke lever by rotating rod to align tang on rod with small slot in lever.

(13) If necessary, remove two small screws and remove vent/screen assembly.

(14) Further disassembly of air horn is not required for cleaning purposes. If component replacement is required, remove staking on two choke valve attaching screws. Remove screws, choke valve, and shaft from air horn.

NOTE: *The air valve screws are permanently staked in place and should not be removed. Do not attempt to remove the secondary metering rod from the air valve assembly. Also, do not remove the plugs covering the idle air bleed screw during routine servicing. This adjustment screw is preset during original assembly and no attempt should be made to change the adjustment in the field except during air horn or float bowl replacement, at which time service instructions must be followed carefully. If air horn replacement is required during carburetor service, the new service air horn assembly will include the secondary metering rod-air valve assembly preset as required.*

(15) It is not necessary to remove vacuum break rod, or air valve rod from levers in air horn unless replacement of rods is necessary. Plastic bushings on levers may be cleaned in carburetor cleaning solution.

NOTE: *If necessary to replace the vacuum break rod, or air valve rod, remove and discard retaining clips from end of rods. Replacement retaining clips are required for reassembly. Remove plastic bushing used on rods and retain for reassembly.*

(16) Remove pump plunger from pump well.

(17) Remove pump return spring from pump well.

(18) Remove plastic filler block located over float valve.

(19) Remove float assembly and float valve by pulling up on retaining pin. Remove float valve seat and gasket with Seat Remover Tool J-22769 (fig. 1J-74).

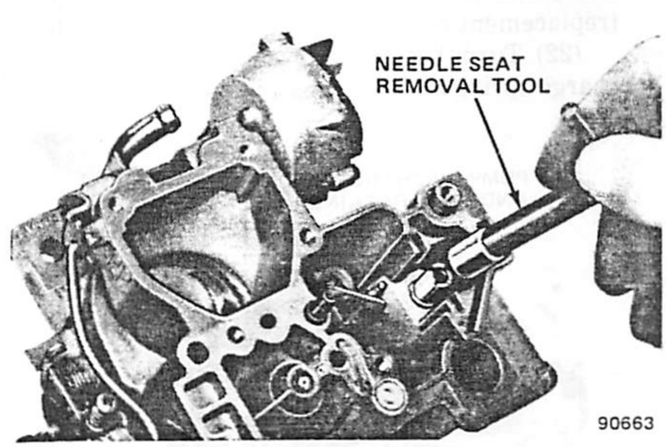

Fig. 1J-74 Carburetor Model E2SE—Inlet Needle Seat Removal

(20) With removal Tool J-22769 or a wide-blade screwdriver that fully fits slot in top of jet, remove extended main metering jet from float bowl (fig. 1J-75).

NOTE: *Do not remove or change adjustment of the small calibration screw located deep inside the metering jet during routine servicing. The adjustment screw is preset during original assembly and no attempt should be made to change this adjustment in the field except during air horn or float bowl replacement, at which time service instructions must be followed carefully.*

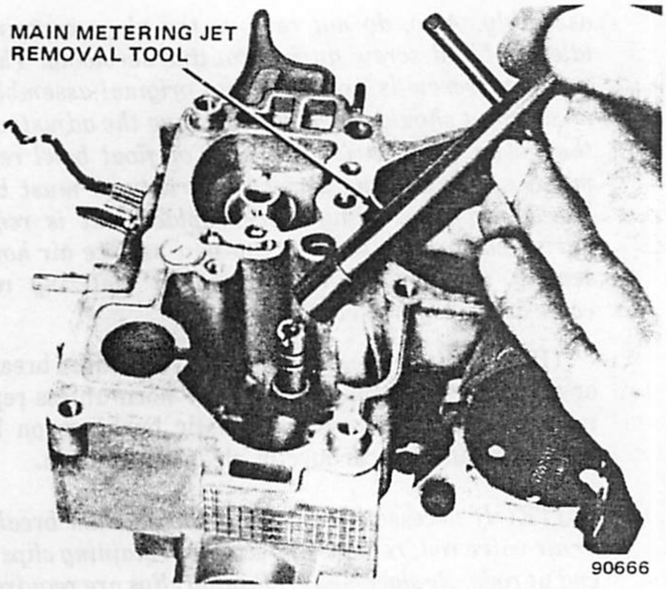

Fig. 1J-75 Carburetor Model E2SE—Extended Main Metering Jet Removal

CAUTION: *Do not attempt to remove plastic retainer by prying out with a tool such as a punch or screwdriver. This will damage the sealing beads on the bowl casting surface and necessitate complete float bowl replacement.*

(21) Using needlenose pliers, or equivalent, remove plastic retainer holding pump discharge spring and check ball in place (fig. 1J-76). Discard plastic retainer (replacement retainer is required for reassembly).

(22) Turn bowl upside down and catch pump discharge spring and check ball in palm of hand.

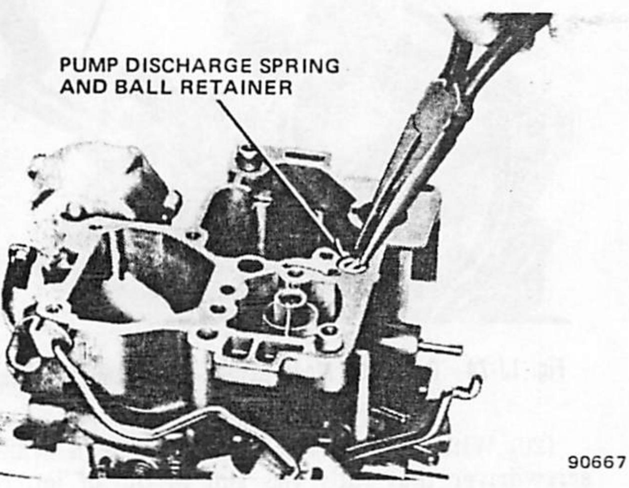

Fig. 1J-76 Carburetor Model E2SE—Pump Discharge Retainer Removal

NOTE: *The tamper-resistant choke cover design is used to discourage indiscriminate readjustment of the choke cover and coil assembly in the field. However, it is necessary to remove the cover and coil assembly during normal carburetor disassembly for cleaning and overhaul.*

(23) With small chisel and hammer, carefully cut off each rivet head (fig. 1J-77). Use a drift and small hammer to drive remainder of rivets out of choke housing. Use care to prevent damage to choke cover and housing.

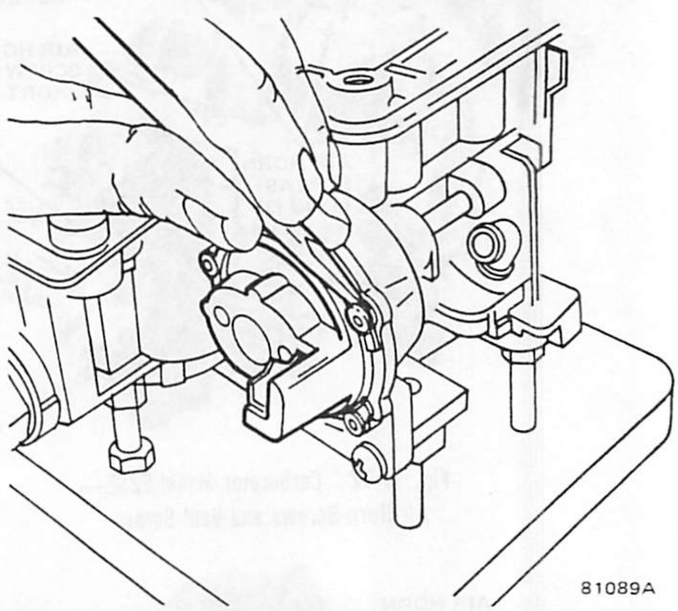

Fig. 1J-77 Carburetor Model E2SE—Choke Cover Rivets Removal

(24) Remove three retainers and choke cover assembly from choke housing.

(25) Remove screw from end of intermediate choke shaft inside choke housing (fig. 1J-78). Remove choke coil lever from shaft.

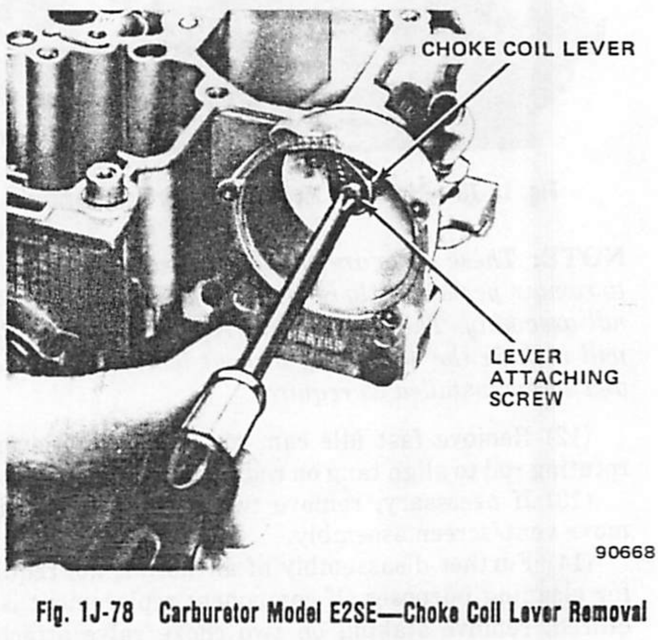

Fig. 1J-78 Carburetor Model E2SE—Choke Coil Lever Removal

(26) Remove intermediate choke shaft and lever assembly from float bowl by sliding rearward out throttle lever side (fig. 1J-79).

(27) Remove choke housing by removing two attaching screws in throttle body (fig. 1J-80).

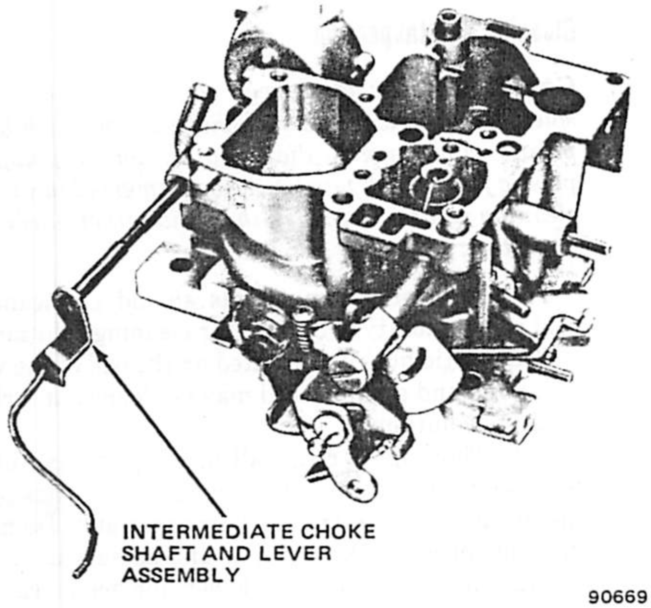

Fig. 1J-79 Carburetor Model E2SE—Intermediate Choke Shaft Removal

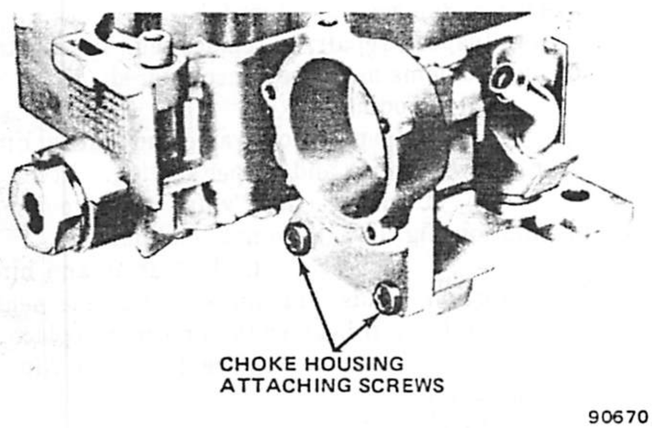

Fig. 1J-80 Carburetor Model E2SE—Choke Housing Screws

(28) Remove fuel inlet fitting, gasket, check valve/filter assembly, and spring.

(29) Remove four throttle body-to-bowl attaching screws and lockwashers and remove throttle body assembly (fig. 1J-81).

(30) Remove throttle body-to-bowl insulator gasket.

(31) Hold primary throttle lever wide-open and disengage pump rod from throttle lever by rotating rod until tang on rod aligns with slot in lever.

(32) If replacement is necessary, remove fast idle adjustment screw and clip in primary throttle lever.

(33) If required, remove curb or base idle speed adjustment screw and spring from throttle body.

NOTE: *Further disassembly of the throttle body is not required for cleaning purposes. The primary and secondary throttle valve screws are permanently staked in place and should not be removed. The throttle body is serviced as a complete assembly (fig. 1J-82).*

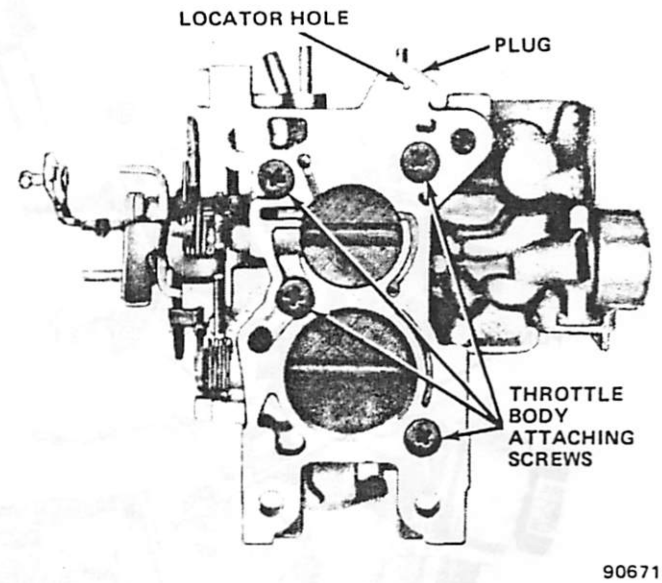

Fig. 1J-81 Carburetor Model E2SE—Throttle Body Screws

NOTE: *DO NOT remove plug covering idle mixture adjustment screw unless it is necessary to replace it or normal soaking and air pressure fail to clean the idle mixture passages.*

(34) Remove idle mixture plug and screw as follows:

(a) Invert throttle body and place on carburetor holding fixture—manifold side up.

(b) Place a punch in locator hole in throttle body beneath idle mixture screw plug (manifold side). Refer to figure 1J-83 for locating hole. Holding punch vertical, drive punch through locator until hardened steel plug breaks. Holding punch at 45 degree angle, break out throttle body casting to gain access to mixture screw plug. Drive out plug.

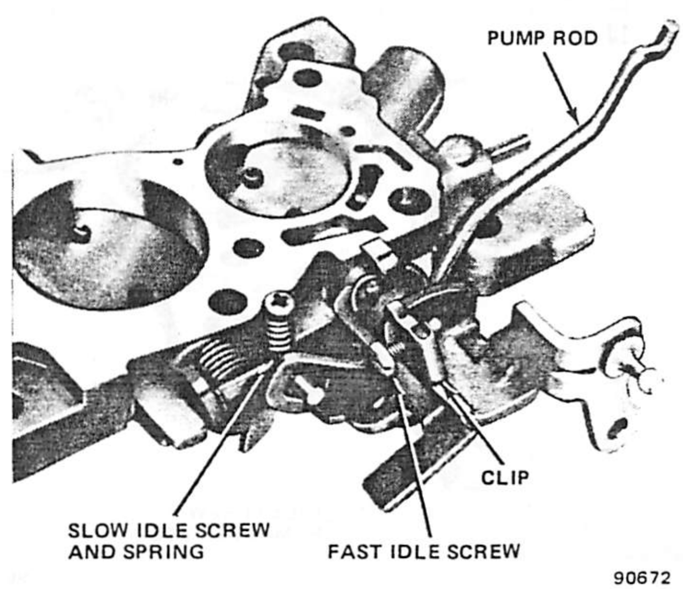

Fig. 1J-82 Carburetor Model E2SE—Throttle Body Assembly

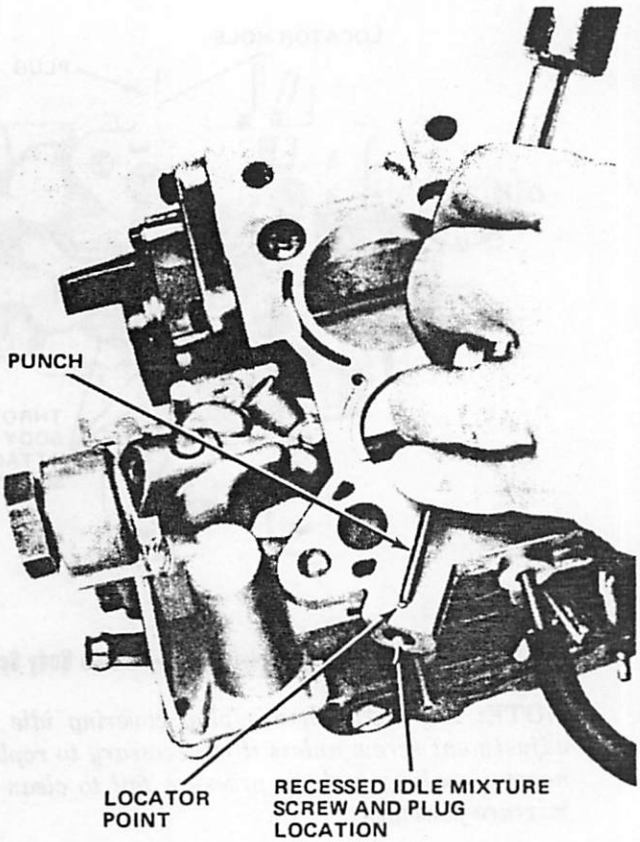

Fig. 1J-83 Carburetor Model E2SE—Idle Mixture Screw Plug Removal

NOTE: *The hardened plug will break rather than remain intact. It is not necessary to remove the plug completely; instead, remove loose pieces to allow use of Idle Mixture Adjusting Tool J-29030, or equivalent.*

(c) Using Tool J-29030, or equivalent, remove idle mixture screw and spring from throttle body (fig. 1J-84).

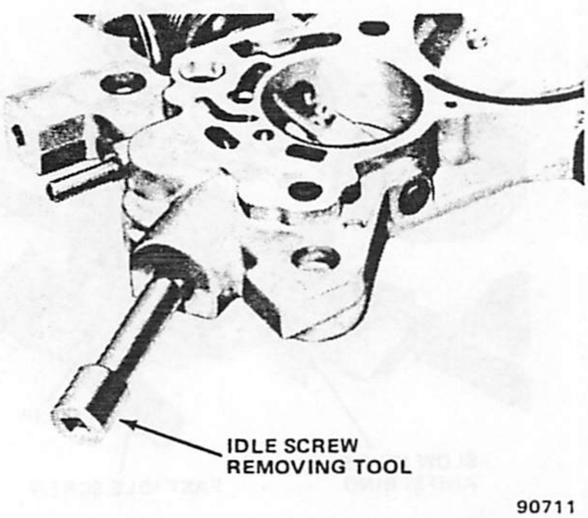

Fig. 1J-84 Carburetor Model E2SE—Idle Mixture Screw Removal

Cleaning and Inspection

CAUTION: *The idle speed solenoid, mixture control solenoid, electrically heated choke assembly, rubber and plastic components, diaphragms, pump plunger and plastic filler block must NOT be immersed in carburetor cleaning solution because they will either harden, swell or distort.*

The carburetor components should be cleaned in a cold immersion-type carburetor cleaning solution.

The plastic bushings located on the end of the vacuum break rod and air valve rod may be cleaned in carburetor cleaning solution.

(1) Thoroughly clean all metal parts and blow dry with compressed air. Ensure all fuel passages and metering parts are free of burrs and dirt. Do not pass drill bits or wires through jets and passages.

(2) Inspect upper and lower surface of carburetor castings for damage.

(3) Inspect holes in levers for excessive wear or out of round conditions. If worn, levers should be replaced. Inspect plastic bushings on levers for damage and excessive wear. Replace as required.

(4) Inspect, repair, or replace indicated parts if following problems have been encountered.

(a) Flooding:

1. Inspect float valve and seat for dirt, deep wear grooves, scores and proper seating.
2. Inspect float valve pull clip for proper installation (fig. 1J-85). Do not bend pull clip.
3. Inspect float, float arms and hinge pin for distortion, binds and burrs. Determine density of material in float; if heavier than normal, replace float.
4. Clean or replace fuel inlet filter-check valve assembly.

(b) Hesitation:

1. Inspect pump plunger for cracks, scores or excessively worn cup. A previously used pump cup will shrink when dry. If dried out, soak in fuel for eight hours before testing.
2. Inspect pump duration and return springs for weakness or distortion.
3. Examine all pump passages and jet for debris, improper seating of discharge check ball and scores in pump well. Examine condition of pump discharge check ball spring.
4. Inspect pump linkage for excessive wear; repair or replace as necessary.

(c) Hard Starting—Poor Cold Engine Operation:

1. Examine choke valve and linkage for excessive wear, binding or distortion.
2. Inspect choke vacuum diaphragm(s) for leaks.
3. Clean or replace carburetor fuel filter.
4. Inspect float valve for sticking condition, debris, etc.

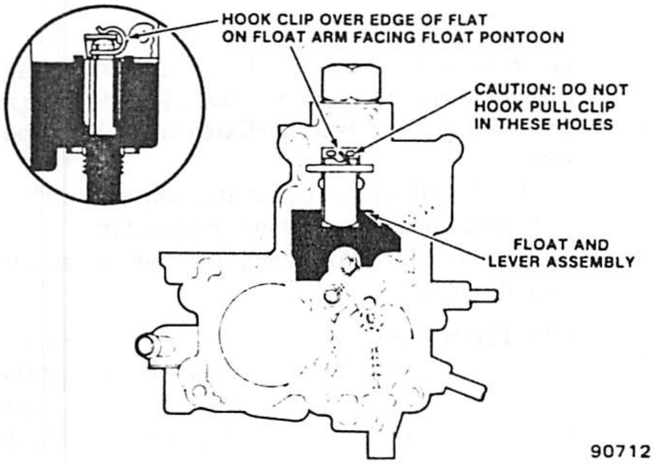

Fig. 1J-85 Carburetor Model E2SE—Float Valve Pull Clip

5. Also inspect items listed under Flooding (4a) above.

(d) Poor Engine Performance—Poor Fuel Economy:

1. Clean all fuel and vacuum passages in castings.

2. Inspect choke valve for freedom of movement.

CAUTION: *DO NOT attempt to readjust the lean mixture screw located inside the extended main metering jet during routine servicing. The screw is adjusted during carburetor flow testing and misadjustment can affect carburetor calibration.*

3. Inspect main metering jet for debris, looseness or damage.

4. Inspect air valve and secondary metering rod for binding condition. If air valve or metering rod is damaged or metering rod adjustment has been changed from original factory assembly setting, air horn assembly must be replaced.

5. Examine mixture control solenoid for sticking condition, binding or leakage. Refer to testing procedure listed below.

(e) Rough Idle:

1. Inspect gasket and gasket mating surfaces on castings for damage to sealing beads, nicks, burrs and other defects.

2. Clean all idle fuel passages.

3. If removed, inspect idle mixture screw for ridges, burrs or being bent.

4. Inspect throttle lever and valves for binding, nicks and other damage.

5. Examine all diaphragms for possible ruptures or leaks.

CAUTION: *Clean plastic parts only in a low volatile cleaning solvent—never in gasoline.*

Testing Mixture Control (MC) Solenoid

If the mixture control solenoid is suspected of either sticking, binding or leaking, test according to the following procedure (fig. 1J-86).

(1) Connect one end of jumper wire to either terminal of MC solenoid connector and other end to positive (+) terminal of 12 volt battery source.

(2) Connect one end of second jumper wire to other terminal of MC solenoid connector and other end to known good ground.

(3) With rubber seal and retainer removed from end of MC solenoid stem, attach hose from hand vacuum pump.

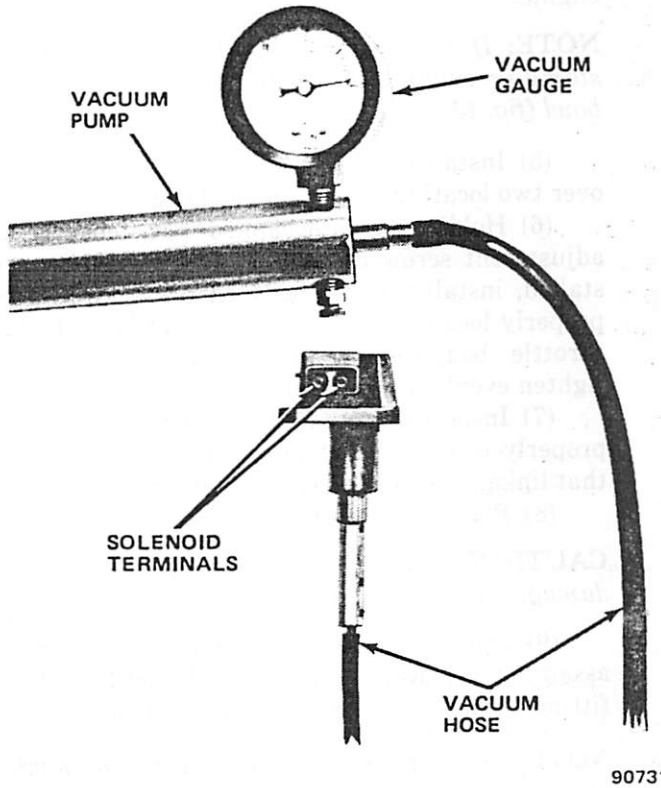

Fig. 1J-86 Carburetor Model E2SE—Testing Mixture Control Solenoid

(4) With MC solenoid energized (lean position), apply at least 25 in. Hg (84 kPa) of vacuum and time leak-down rate from 20 in. Hg (67 kPa) to 15 in. Hg (51 kPa). Leak-down rate should not exceed 5 in. Hg (17 kPa) in 5 seconds. If leakage exceeds that amount, replace MC solenoid.

(5) To test solenoid for sticking in down (de-energised) position, remove jumper wire connected to 12 volt source and observe hand vacuum pump gauge pointer. It should move to zero in less than one second. If not, replace MC solenoid.

Assembly

CAUTION: *Place throttle body assembly on carburetor holding fixture to avoid damaging throttle valves.*

(1) Install curb or base idle speed adjustment screw and spring, if removed, in throttle body (fig. 1J-82).

(2) If removed, install fast idle adjustment screw and clip in primary throttle lever (fig. 1J-82).

(3) Holding primary throttle lever wide open, install lower end of pump rod in throttle lever by aligning tang on rod with slot in lever. End of rod should point outward toward throttle lever.

(4) If removed, install idle mixture adjustment screw and spring with Tool J-29030 (fig. 1J-84). Lightly seat screw and then back out three turns for a preliminary idle mixture adjustment. Final idle mixture adjustment must be performed with carburetor installed on engine.

NOTE: *If a replacement float bowl assembly is used, stamp or engrave the model number on the new float bowl (fig. 1J-59).*

(5) Install throttle body and bowl insulator gasket over two locating dowels on bowl (fig. 1J-81).

(6) Holding fast idle cam so that steps face fast idle adjustment screw on throttle lever when properly installed, install throttle body ensuring throttle body is properly located over dowels on float bowl. Install four throttle body-to-bowl screws and lockwashers and tighten evenly and securely.

(7) Inspect linkage to ensure lockout tang is located properly to engage slot in secondary lockout lever and that linkage moves freely and does not bind.

(8) Place carburetor on proper holding fixture.

CAUTION: *Tightening beyond specified torque can damage nylon gasket and cause fuel leak.*

(9) Install fuel inlet filter spring, check valve-filter assembly, replacement gasket and inlet fitting. Tighten fitting with 300 inch-pounds (34 N•m) torque.

NOTE: *When installing a service replacement filter, ensure the filter is the type that includes a check valve that conforms to U.S. Motor Vehicle Safety Standards (M.V.S.S.).*

NOTE: *When properly installed, hole in filter faces toward inlet fitting. Ribs on closed end of filter element prevent filter from being installed incorrectly unless forced.*

(10) Install choke housing on throttle body. Ensure raised boss and locating lug on rear of housing fit into recesses in float bowl casting (fig. 1J-80). Install two choke housing attaching screws and lockwashers in throttle body and tighten screws evenly and securely.

(11) Install intermediate choke shaft and lever assembly in float bowl by pushing through from throttle lever side (fig. 1J-79).

(12) With intermediate choke lever in UP (12 o'clock) position, install bimetallic coil lever inside choke housing onto flats on intermediate choke shaft. Coil lever is properly aligned when coil pickup tang is at top (12 o'clock) position (fig. 1J-87). Install inside lever retaining screw into end of intermediate choke shaft and tighten securely.

(13) Install choke cover and coil assembly on choke housing according to following procedure.

(a) Place fast idle adjustment screw on highest step of fast idle cam.

CAUTION: *Ground contact for the choke electric heater is provided by a metal plate located at the rear of the choke cover assembly. Do not install a gasket between the choke cover assembly and the choke housing.*

(b) Install cover and bimetallic coil assembly on choke housing. Align notch in cover with raised casting projection on housing cover flange. Ensure coil pickup tang engages inside choke coil lever.

(c) Install three cover retainers and rivets.

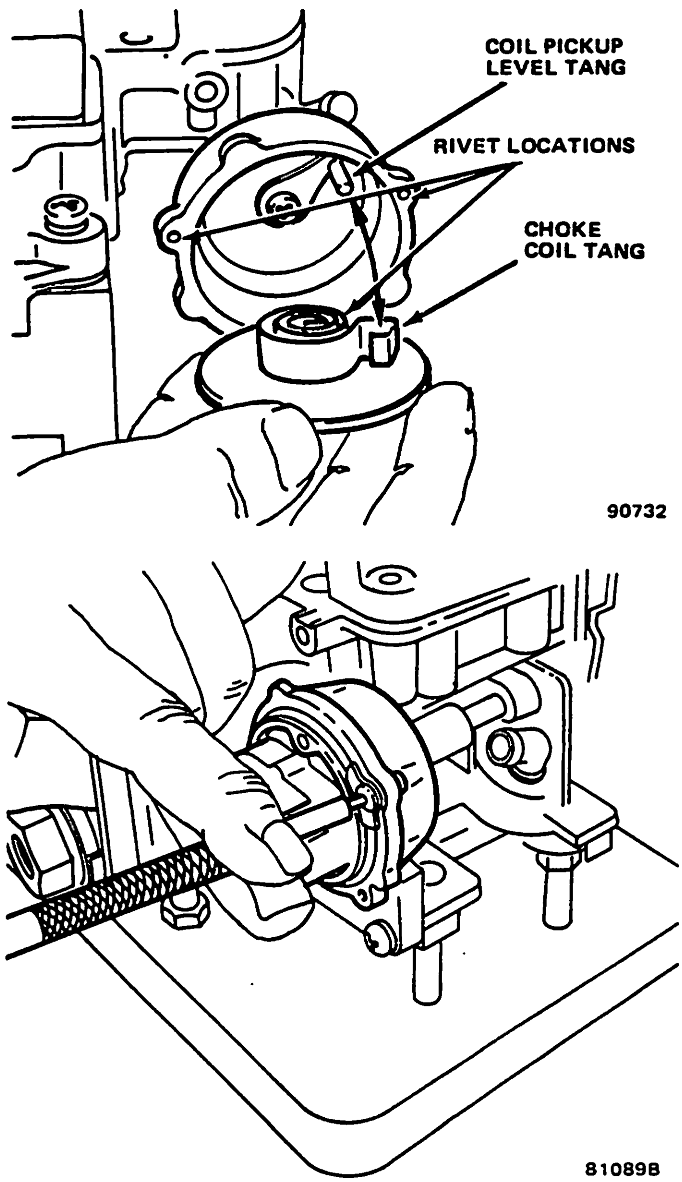

Fig. 1J-87 Carburetor Model E2SE—Choke Coil and Cover Installation

(14) Install pump discharge steel check valve ball and spring in passage next to float chamber. Insert end of replacement plastic retainer into end of spring and install retainer in float bowl. Tap lightly in place until top of retainer is flush with bowl casting surface.

(15) Using Tool J-22769 or a screwdriver that fully fits slot in top, install extended main metering jet into bottom of float chamber. Tighten jet securely.

(16) Install inlet needle seat assembly, with gasket, using Seat Installer Tool J-22769 (fig. 1J-74).

(17) For easier adjustment, carefully bend float arm upward at notch in arm before assembly.

(18) Install float valve onto float arm by sliding float lever under pull clip. Correct installation of pull clip is to hook clip over edge of float on float arm facing float pontoon (fig. 1J-85).

(19) Install float retaining pin into float arm with end of loop of pin facing pump well. Install float assembly by aligning valve in seat and float retaining pin into locating channels in float bowl.

(20) Adjust float level:

(a) Refer to figure 1J-88. Hold float retaining pin firmly in place and push down lightly on float arm at outer end against top of float valve.

(b) Using adjustable "T" scale, measure from top of float bowl casting surface (air horn gasket removed) to top of float at toe. Measuring point is 3/16 inch back from end of float at toe.

(c) Bend float arm as necessary for proper adjustment by pushing on pontoon (refer to Specifications).

(d) Visually inspect float alignment after adjustment.

(21) Install plastic filler block over float valve by pressing downward until properly seated (flush with bowl casting surface).

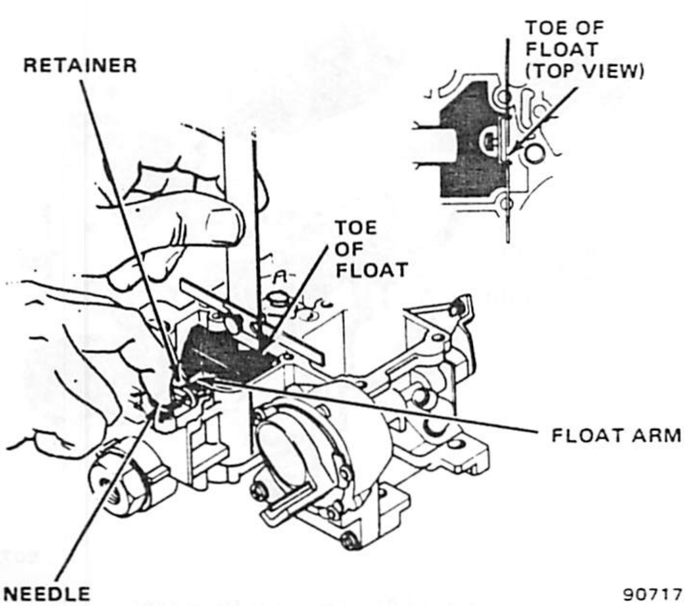

Fig. 1J-88 Carburetor Model E2SE—Float Level Adjustment

(22) Install air horn gasket on float bowl. Locate gasket over two dowel locating pins on bowl.

(23) Install pump return spring in pump well.

(24) Install pump plunger assembly in pump well.

(25) If removed, install vent/screen assembly and two small attaching screws. Tighten screws securely.

CAUTION: *Test choke valve for freedom of movement and proper alignment before staking screws in place.*

(26) If removed, install choke shaft, choke valve, and two attaching screws. Tighten screws securely and stake lightly in place.

(27) If used, install new pump plunger stem seal and retainer in air horn casting. Lightly stake seal retainer in three places. Choose locations that are different from original staking positions.

(28) Install fast idle cam rod in lower hole of choke lever. Align tang on rod with small slot in lever.

(29) If removed, install plastic bushing in hole in vacuum break lever. Ensure small end of bushing faces retaining clip when installed. Insert end of vacuum break rod through bushing in lever. Retain rod with replacement clip. Press clip in place using needlenose pliers. Ensure clip has full contact on rod but is not seated tightly against bushing. Rod-to-bushing clearance should be 0.030 inch (0.8 mm). Retaining clip is "dished." Install clip on rod with outward bend of self-locking clip facing end of rod. Ensure that clip fully engages rod and that it is not distorted.

(30) If removed, install plastic bushing in hole in air valve lever. Ensure small end of bushing faces retaining clip when installed. Insert end of air valve rod through bushing in lever. Retain with replacement clip. Press clip in place with needlenose pliers. Ensure clip has full contact on rod but is not seated tightly against bushing. Rod-to-bushing clearance should be 0.030 inch (0.8 mm). Retaining clip is "dished." Install clip on rod with outward bend of self-locking clip facing end of rod. Ensure that clip fully engages rod and that it is not distorted.

(31) Prior to installing air horn on float bowl, apply a light coat of silicone grease or light weight engine oil to stem on pump plunger in bowl to aid insertion of stem through seal on air horn.

CAUTION: *Do not force air horn assembly onto bowl, gently lower in place.*

(32) Rotate fast idle cam to full UP position and tilt air horn assembly to engage lower end of fast idle cam rod in slot in fast idle cam. Holding down on pump plunger assembly, carefully lower air horn assembly onto float bowl. Guide pump plunger stem through seal in air horn casting.

(33) Install six air horn to bowl attaching screws and lockwashers. Three long air horn screws are located in primary and secondary venturi area. Two short screws are located on fuel inlet side and one short screw is located in area beneath hot idle compensator valve. All

air horn screws must be tightened evenly and securely. Refer to figure 1J-89 for proper tightening sequence.

(34) If equipped, install replacement seal in recess of float bowl. Install hot idle compensator valve and retain with two small attaching screws. Tighten screws securely.

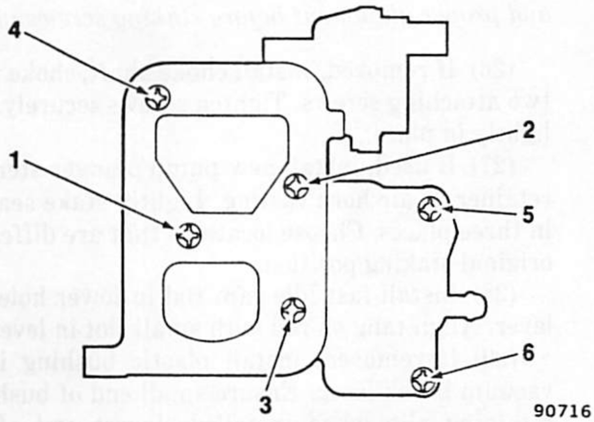

Fig. 1J-89 Carburetor Model E2SE— Air Horn Screw Tightening Sequence

(35) If not tested previously, test mixture control solenoid for sticking, binding and leakage following procedure listed within Cleaning and Inspection. Install replacement rubber seal on mixture control solenoid stem. Position seal up against boss on solenoid stem. Using 3/16-inch socket and small hammer, carefully drive retainer on stem (fig. 1J-90). Drive retainer on stem only far enough to retain rubber seal on stem. Leave small clearance between retainer and seal to allow for seal expansion.

CAUTION: *A slight twisting motion of the solenoid is required during installation to ensure rubber seal on stem is guided into recess in the bottom of the bowl and to prevent distortion or damage to the rubber seal.*

(36) Prior to installing mixture control solenoid, lightly coat rubber seal on end of solenoid stem with silicone grease or light weight engine oil. With replacement mounting gasket, install mixture control solenoid on air horn. Carefully align solenoid stem with recess in bottom of bowl (fig. 1J-91).

(37) Install three solenoid attaching screws and tighten securely.

(38) Install plastic bushing in hole in choke lever. Ensure small end of bushing faces retaining clip when installed.

(39) With inner coil lever and intermediate choke lever at 12 o'clock position, install intermediate choke rod in bushing. Retain rod with replacement clip. Press lip securely in place with needlenose pliers. Ensure clip has full contact on rod but is not seated tightly against bushing. Rod-to-bushing clearance should be 0.030 inch

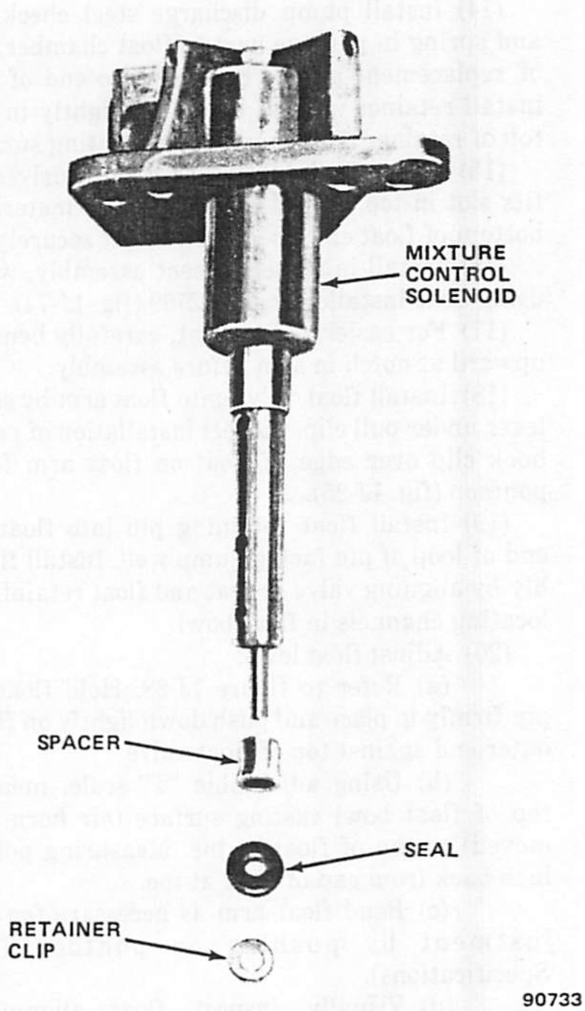

Fig. 1J-90 Carburetor Model E2SE— Mixture Control Solenoid Seal and Retainer

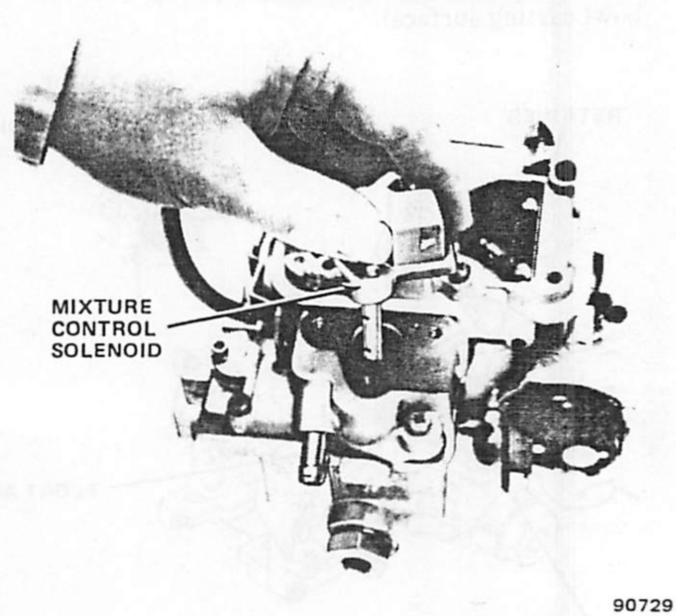

Fig. 1J-91 Carburetor Model E2SE— Installing Mixture Control Solenoid

(0.8 mm). Retaining clip is "dished." Install clip on rod with outward bend of self-locking clip facing end of rod. Ensure that clip fully engages rod and that it is not distorted.

CAUTION: *Use care when tightening idle speed solenoid retaining nut with wrench to avoid damaging vacuum break plunger.*

(40) If removed, install idle speed solenoid, lockwasher and retaining nut on primary side vacuum bracket. Tighten nut securely. Bend back two retaining tabs on lockwasher to fit in slots in bracket.

(41) Rotate vacuum break bracket and insert end of vacuum break rod into inner slot of vacuum break diaphragm plunger and end of air valve rod into outer slot of vacuum break diaphragm plunger. Install bracket over locating lugs on air horn with taper-seat screw in air horn and screw with lockwasher in throttle body. Tighten screws securely.

(42) Insert pump rod in hole in pump lever by rotating lever. Install retaining screw in pump lever, then install washer. Holding down on pump plunger stem, install pump lever on air horn. Ensure shoulder on screw seats in hole in lever and washer is between lever and air horn casting. Tighten screw securely.

SERVICE ADJUSTMENT PROCEDURES

Refer to Service Adjustment Procedures within Model 2SE Carburetor section and to General Service and Diagnosis—Chapter 1A.

Float Level Measurement

NOTE: *The float level should be determined before disassembling a carburetor for overhaul if a malfunctioning float is suspected of affecting engine performance.*

NOTE: *The fuel level in the carburetor bowl can be affected by fuel pump pressure as well as by an improperly adjusted float.*

To determine if the float requires adjustment, measure the float level according to the following procedure.

(1) Remove vent stack screws and vent stack.

(2) Remove air horn screw located adjacent to vent stack.

WARNING: *Use extreme caution when engine is operating. Do not stand in direct line with fan. Do not put hands near pulleys, belts or fan. Do not wear loose clothing.*

(3) With engine at idle speed and choke valve completely open, carefully insert float gauge in air horn screw hole and vent hole. Allow gauge to rest freely on float.

NOTE: *Use Gauge J-9789-136 (white) for model E2SE carburetor.*

CAUTION: *Do not press down on gauge because engine may flood or float may be damaged.*

(4) With gauge at eye level observe mark on gauge that aligns with top of casting at vent hole. Float level should be within ± 1.5 mm (± 0.06 inch) of float level specification. Refer to Specifications.

(5) Remove float gauge.

(6) If float level is not within specification, remove carburetor air horn and adjust float level. Refer to Float Level Adjustment.

(7) If float level is within specification, install air horn screw, vent stack and vent stack screws.

Idle Speed Adjustments

The engine and related systems must be performing properly before initiating the idle speed adjustments.

Precautions and General Information.

- Place manual transmission in neutral. Set the parking brake firmly and do not accelerate the engine.
- Ensure the engine is at normal operating temperature before adjusting the idle speed.
- Perform the procedure with the air cleaner installed or with air cleaner removed and associated vacuum hoses plugged, choke open and deceleration valve supply hose plugged.
- Do not idle the engine more than three minutes at a time.
- If the idle speed adjustment procedure requires more than three minutes, operate the engine at 2000 rpm for one minute.
- Ensure the ignition timing is correct before adjusting idle speed.
- Use extreme caution around fan, belts and other moving parts when the engine is operating. Do not wear loose clothing. Do not stand in direct line with the fan blades.

Slow (Curb) Idle Speed Adjustment Procedure

(1) Disconnect and plug purge vacuum hose at vapor canister.

(2) Connect dwell meter to single light blue wire taped to mixture control solenoid wires at carburetor. Set dwell meter on "6-cylinder" scale. Connect tachometer at distributer side of filter.

NOTE: *Use a tachometer with an expanded scale of 400 to 800 or 0 to 1000 rpm. Inspect tachometer periodically to ensure accuracy within two percent.*

(3) Set parking brake firmly. Manual transmission in neutral position.

WARNING: *Use extreme caution when engine is operating. Do not stand in direct line with fan. Do not put hands near pulleys, belts or fan. Do not wear loose clothing.*

(4) Start engine and warm to normal operating temperature. Dwell meter pointer should now be oscillating. Pointer should be generally located between 10 and 50 degrees with maximum sweep of pointer oscillation covering a segment of 15 degrees. If not, refer to C4 System Operational Test.

(5) Open throttle momentarily to ensure idle speed solenoid is fully extended. Adjust idle speed by turning solenoid idle adjustment screw to obtain specified idle speed. Refer to Specifications.

(6) Disconnect solenoid wire. Adjust curb idle to 500 rpm.

(7) Connect solenoid wire.

(8) Stop engine. Disconnect and remove dwell meter and tachometer. Install air cleaner and connect vacuum hoses, if removed. Connect canister purge vacuum hose and deceleration valve supply hose.

Model E2SE Carburetor Idle Speed Adjustment Specifications

Transmission	RPM
Manual	900 (± 100) ①

①Idle speed with solenoid de-energized is 500 rpm.

90984

Fast Idle Speed Adjustment Procedure

(1) Connect tachometer at distributor side of filter.

(2) Set parking brake. Place manual transmission in neutral position.

WARNING: *Use extreme caution when engine is operating. Do not stand in direct line with fan. Do not put hands near pulleys, belts or fan. Do not wear loose clothing.*

(3) Start and warm engine to normal operating temperature.

(4) Disconnect and plug EGR valve vacuum hose.

(5) Open throttle slightly and rotate fast idle cam until screw is against highest step of cam.

(6) Adjust fast idle speed to specified rpm.

(7) Quickly open throttle slightly and allow engine to return to slow idle speed.

(8) Connect EGR valve vacuum hose.

Idle Mixture Adjustment

Refer to Carburetor Model E2SE Idle Mixture Adjustment procedure listed within Feedback System section.

Idle mixture adjustment should not normally be necessary; only after carburetor overhaul and if original mixture screw adjustment has been altered.

Choke Mechanism Service

Refer to Service Adjustment Procedures within Model 2SE Carburetor section.

SPECIFICATIONS

Model E2SE Carburetor Specifications

List Number	17082389
Pri. Throttle Bore	35 mm
Sec. Throttle Bore	46 mm
Pri. Venturi Diameter	28 mm
Sec. Venturi Diameter	Var. Air Valve
Fuel Inlet Seat Diameter	2.36 mm
Idle Bypass	1.78 mm
Idle Tube	0.80 mm
Side Idle Air Bleed	1.17 mm
Lower Idle Air Bleed	1.32 mm
Spark Port Size	1.14 mm x 3.84 mm
Main Jet	No. 4 (1.752 mm)
Pri. Metering Rod. No.	N/A
Sec. Metering Rod No.	DX12905-37
Top Well Bleed	0.90 mm
Side Well Bleed	1.02 mm
Power Valve Timing	N/A
Accelerator Nozzle Diameter	0.50 mm

90736

4-Cylinder Engine		Carburetor Number	Float Level mm (inches)	Pump Stem Height mm (inches)	Fast Cam Adj. 2nd Step	Fast Idle Speed ±100 rpm	Air Valve Link ①	Vac. Break Pri.	Unloader	Choke	Secondary Lockout	Choke Coil Lever Plug Gauge
CJ (Calif. only)	Man. Trans.	17082389	4.3 (0.169)	3.25 (.128)	18°	2400	2°	19°	34°	TR	1.27-2.03 mm (.050-.080 in.)	1.27-2.03 mm (.050-.080 in.)

① Maximum Degree Setting
TR Tamper Resistant

90735

CARBURETOR MODEL BBD-2 VENTURI

GENERAL

The Carter Model BBD two-venturi carburetor incorporates three lightweight aluminum assemblies, the air horn, main body and throttle body (fig. 1J-92).

The air horn contains the choke valve assembly, mechanical linkage for accelerator pump and metering rods, and bowl vent.

The main body contains the fuel bowl, accelerator pump, vacuum piston and metering rod assembly, venturi assembly and solenoid.

The throttle body contains throttle valves and levers, choke housing, choke vacuum diaphragm and idle mixture adjustment screws.

Identification

The carburetor is identified by a code number and build date. Both are stamped on the identification tag. Each carburetor build month is coded alphabetically beginning with the letter A in January and ending with the letter M in December (the letter I is not used). The tag is attached to the carburetor and must remain with the carburetor to assure proper identification (fig. 1J-93).

CARBURETOR CIRCUITS

Five conventional circuits are used:

- Float (fuel inlet)
- Idle (low speed) Metering
- Main (high speed) Metering
- Pump (acceleration)
- Choke

Float (Fuel Inlet) Circuit

The float circuit maintains the specified fuel level in the bowl to provide sufficient fuel to the metering circuits for all engine operating conditions (fig. 1J-94).

Fuel flows into the bowl through a needle and seat assembly controlled directly by dual floats hinged to the float fulcrum pin.

When the fuel in the bowl fills to the proper level, the float lever pushes the needle toward its seat and restricts incoming fuel, admitting only enough to replace that being used.

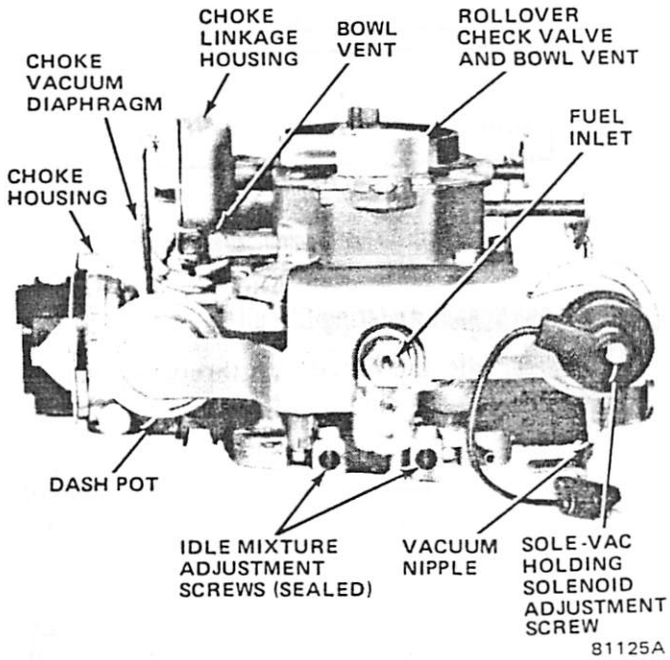

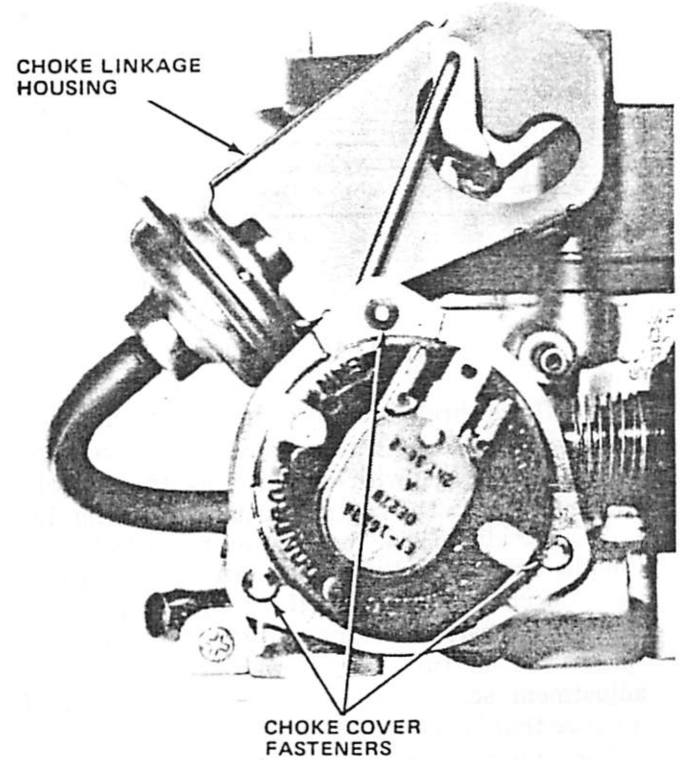

Fig. 1J-92 Model BBD Carburetor Assembly

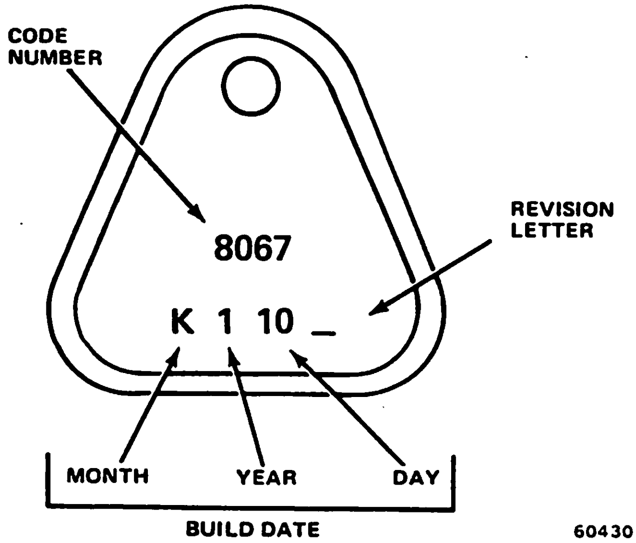

Fig. 1J-93 Identification Tag

Idle (Low Speed) Metering Circuit

Fuel for idle and initial part-throttle operation is metered through the idle circuit.

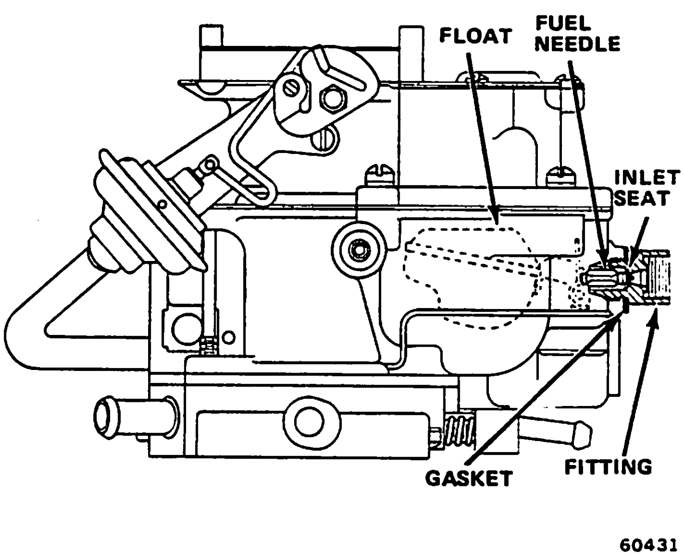

Fig. 1J-94 Float Circuit

Fuel flows through main metering jets into the main wells and continues through the idle fuel pickup tube where fuel mixes with air entering through idle air bleeds located in the venturi cluster screws (fig. 1J-95).

At curb idle speed, the air/fuel mixture flows down the idle channel and is further mixed with air entering the idle channel through the transfer slot, which is above the position of the throttle valve at curb idle speed. The mixture then flows past the idle mixture adjustment screw, which controls the volume of the mixture that is discharged below the throttle valve.

During low speed operation, the throttle valve moves to expose the transfer slot as well as the idle port. This

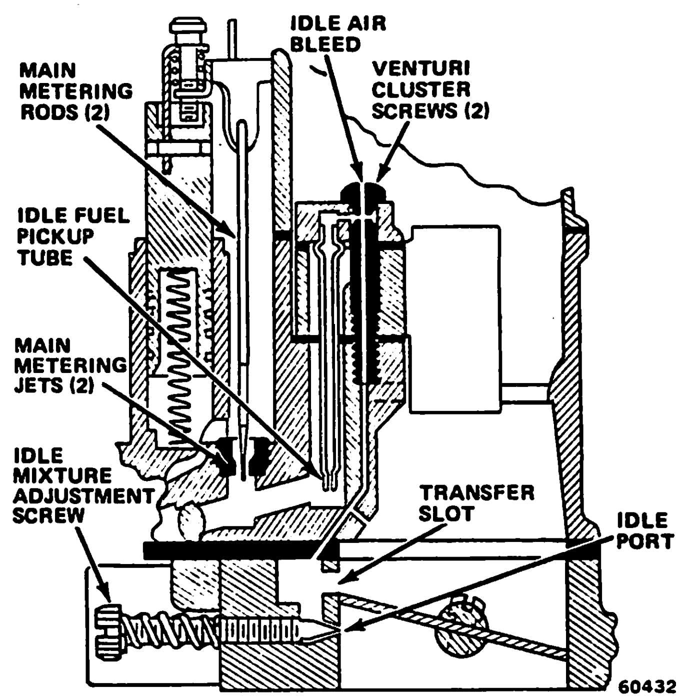

Fig. 1J-95 Idle Circuit

increased airflow creates a low pressure in the venturi and the main metering system begins to discharge fuel.

Main (High Speed) Metering Circuit

At partial throttle and cruising speed increased air flow through the venturi creates a low pressure area in the venturi. Because the air above the fuel in the bowl is at atmospheric pressure, fuel is forced to the lower pressure area that was created by the venturi and amplified by the booster venturi.

The fuel flow moves through the main jets to the main well. Air enters through the main well air bleeds. The resulting mixture of air and fuel is lighter than raw fuel, responds more quickly to changes in venturi vacuum, and is more readily vaporized when discharged into the venturi (fig. 1J-96).

Main Metering Circuit Enrichment

During heavy load or high speed operation, the air/fuel ratio must be enriched to provide increased engine power.

Fuel enrichment is accomplished by means of two calibrated metering rods connected to a single manifold vacuum actuated piston (fig. 1J-96). The metering rod piston rides on a calibrated spring that functions to maintain the piston at the top of its cylinder. This allows only the smallest diameter of the tapered metering rods to extend into the main metering jets and permits maximum fuel flow through the jets to the main well cavities.

At idle, partial throttle or cruise conditions when manifold vacuum is high, the piston is drawn down into

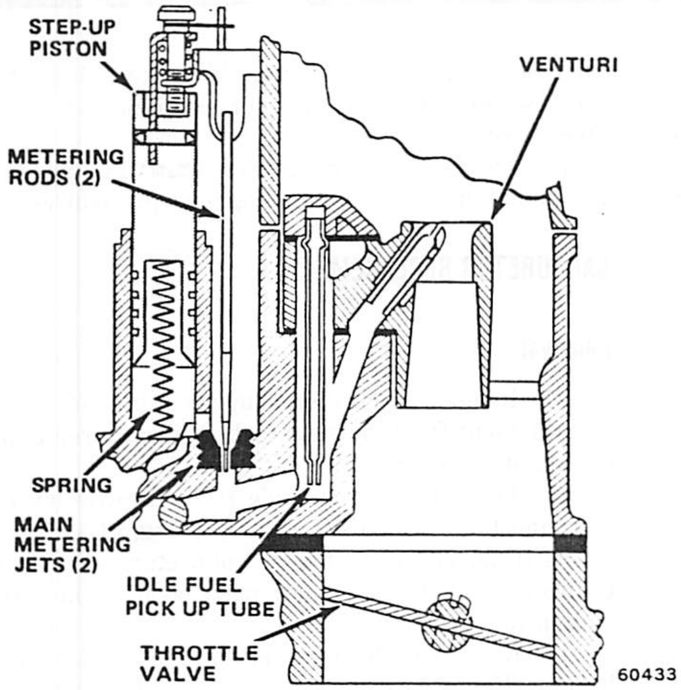

Fig. 1J-96 Main Metering Circuit

the vacuum cylinder against calibrated spring tension and the larger diameters of the metering rods extend into the main metering jets, restricting the fuel flow to the main well cavities. An additional control is provided by the rod lifter on the accelerator pump rod. This provides a direct relationship between metering rod position and throttle valve opening.

Pump (Acceleration) Circuit

When the throttle is opened suddenly, airflow response through the carburetor is almost immediate. There is a brief time lag before fuel inertia can be overcome. This lag causes the desired air/fuel ratio to be leaned out.

A piston-type accelerating pump system mechanically supplies the fuel necessary to compensate for this deficiency (fig. 1J-97).

Fuel is forced into the pump cylinder from the fuel bowl past the pump piston on the upward movement of the accelerator pump shaft. When the engine is turned off, fuel vapors in the pump cylinder vent through the area between the pump rod and pump piston.

As the throttle lever is moved, the pump link, operating through a system of levers and assisted by the pump drive spring, pushes the pump piston down. Fuel is forced through a passage, past the pump discharge check valve ball, and out the pump discharge jets in the venturi cluster.

Choke Circuit

The choke valve, located in the air horn assembly, provides a high vacuum both above and below the

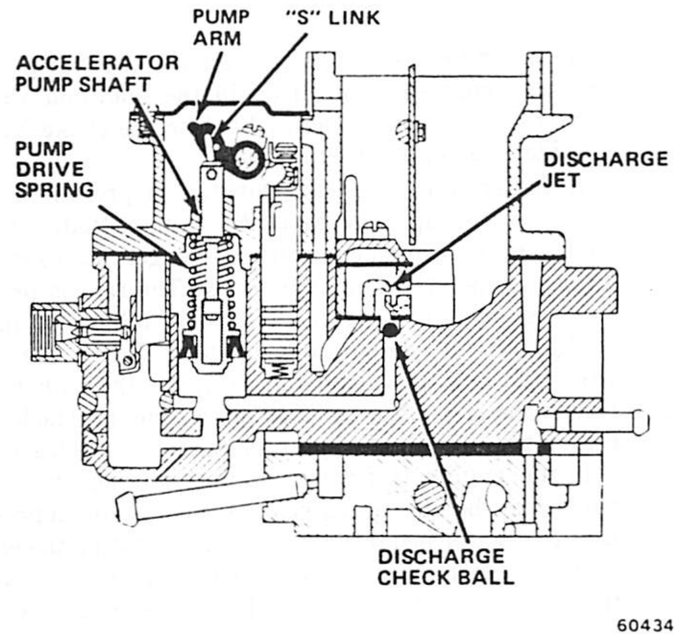

Fig. 1J-97 Pump Circuit

throttle valves when closed. During engine start, vacuum above the throttle valve causes fuel to flow from the main metering and idle circuits and provides the richer air/fuel mixture ratio needed for cold engine starting (fig. 1J-98).

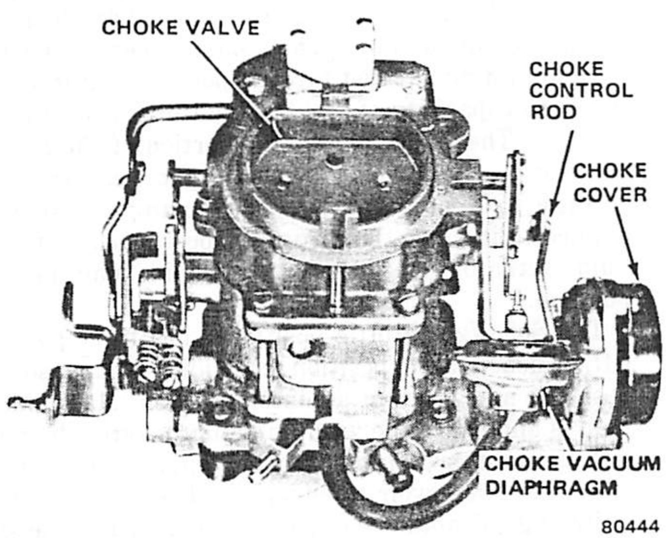

Fig. 1J-98 Choke Circuit Components

The choke shaft is connected by linkage to a bimetallic coil located within the choke cover, which winds up (contracts) when cold and unwinds (expands) when heated. When the engine is cold, the tension of the coil holds the choke valve closed. When the engine starts, manifold vacuum is applied to the diaphragm assembly to open the choke valve slightly. This is referred to as the initial choke valve clearance.

As the coil is warmed by the electric heater, it expands and exerts pressure to further open the choke valve, keeping it fully open at normal engine operating temperature.

If the engine is accelerated during the warm-up period, the corresponding drop in the manifold vacuum allows the coil to momentarily close the choke valve to provide a richer air/fuel mixture.

A faster idle speed is provided to prevent stalling during warm-up. The fast idle cam, actuated by the choke shaft through connecting linkage, rotates into position against the fast idle screw. The cam is progressively stepped to provide the correct idle speed in proportion to the choke valve opening. When the choke valve reaches its fully open position, the cam rotates free of the fast idle screw and allows the throttle lever to return to the curb idle speed position when released.

If the engine is flooded during starting, the choke valve may be opened to vent excess fuel by depressing the accelerator pedal to the floor and rotating the engine with the starter motor. With the accelerator linkage in this position, a tang on the throttle lever contacts the fast idle cam and causes the choke rod to move upward to open the choke valve a predetermined distance.

IDLE SPEED CONTROL

The idle speed control Sole-Vac throttle positioner is part of the BBD carburetor assembly. It is activated in two ways, by an electric holding solenoid and by a pneumatic vacuum actuator. The holding solenoid is capable of maintaining a preset throttle position, but it does not have the capability of moving the throttle out to a new position. The vacuum actuator portion of the Sole-Vac throttle positioner, however, is capable of moving the throttle to a new position when manifold vacuum is applied to it. Once the throttle is positioned by the vacuum actuator, the holding solenoid maintains the position.

The Sole-Vac throttle positioner has three positions: Off, or deactivated, position (curb idle); holding solenoid position; and vacuum actuator position. Manifold vacuum is applied to the vacuum actuator through an electric vacuum switching solenoid that allows vacuum stored in a reservoir to engage it. The electric vacuum switching solenoid is controlled either by the idle speed controller (non-feedback) or by the CEC system microprocessor.

The holding solenoid is energized if either the intake manifold (EFE) heater, air conditioner or rear window defogger are in use; the vacuum actuator is engaged if the air cleaner air temperature is below approximately 60°F (16°C). When the air temperature is above 60°F (16°C), the vacuum actuator is engaged when the engine idle speed drops below calibrated minimum speed (AT: 435 ± rpm, MT: 462.5 ± 10 rpm). The vacuum actuator moves the throttle position (via the electric vacuum switching solenoid) until a calibrated maximum speed (AT: 1050 ± 100 rpm, MT: 1175 ± 150 rpm) has been reached, at which time it permits the throttle to close (i.e., to decrease speed), either to the holding solenoid position (if the intake manifold heater, A/C or rear window defogger are in use) or to the normal curb idle speed position.

Refer to Feedback Systems within this chapter for additional information and diagnosis procedures.

CARBURETOR REPLACEMENT

Removal

(1) Remove air cleaner. Plug vacuum hoses.

(2) Identify all hoses attached to carburetor for aid during installation.

(3) Remove throttle cable from throttle lever and disconnect vacuum hoses, return spring, PCV hose, fuel pipe fitting, choke heat wire connector, solenoid wire connector and stepper motor wire harness connector, if equipped.

(4) Remove carburetor retaining nuts. Remove carburetor. Remove carburetor gasket from spacer.

Installation

(1) Clean gasket mounting surface of spacer. Install replacement gasket on spacer. Position carburetor on spacer and gasket and install nuts. To prevent leakage, distortion or damage to carburetor body flange, alternately tighten nuts in crisscross pattern.

(2) Connect fuel pipe fitting, throttle cable, choke heater wire connector, PCV hose, return spring, all vacuum hoses, solenoid wire connector and stepper motor wire harness connector, if equipped.

WARNING: *Use extreme caution when engine is operating. Do not stand in direct line with fan. Do not put hands near pulleys, belts or fan. Do not wear loose clothing.*

(3) Adjust engine curb idle speed. Refer to Chapter 1A—General Service and Diagnosis.

(4) Install air cleaner and vacuum hoses.

CARBURETOR OVERHAUL

The following procedure applies to a complete overhaul with the carburetor removed from the engine.

A complete disassembly is not necessary when performing routine service adjustments. In most instances, service adjustments of individual circuits can be accomplished without removing the carburetor from the engine. Refer to Service Adjustment Procedures.

A complete carburetor overhaul includes disassembly, thorough cleaning, inspection and replacement of all gaskets and worn or damaged parts. It also includes curb idle speed adjustment, mixture adjustment (if mixture adjustment screws have been removed) and fast idle adjustment after the carburetor is installed. Refer to figure 1J-99 for parts identification.

Stepper Motor

The stepper motor used with feedback carburetors has two tapered metering pins that interact with two air cavities located inside the main body of the carburetor.

The air intake for the feedback air input is located behind the main cluster inside the carburetor.

When the stepper motor "steps" to the rich "rail," each metering pin is moved the maximum distance into an air cavity.

When the stepper motors "steps" to the "lean" rail, each metering pin is pulled the maximum distance out of an air cavity.

Refer to Computerized Emission Control (CEC) System for additional information.

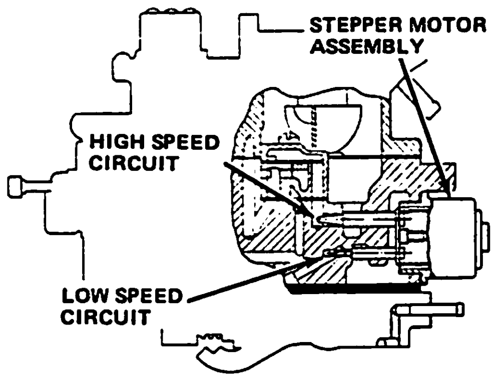

Metering Pins in Cavities (Rich)

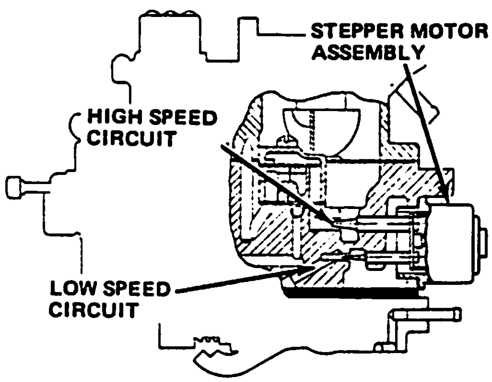

Metering Pins Out of Cavities (Lean)

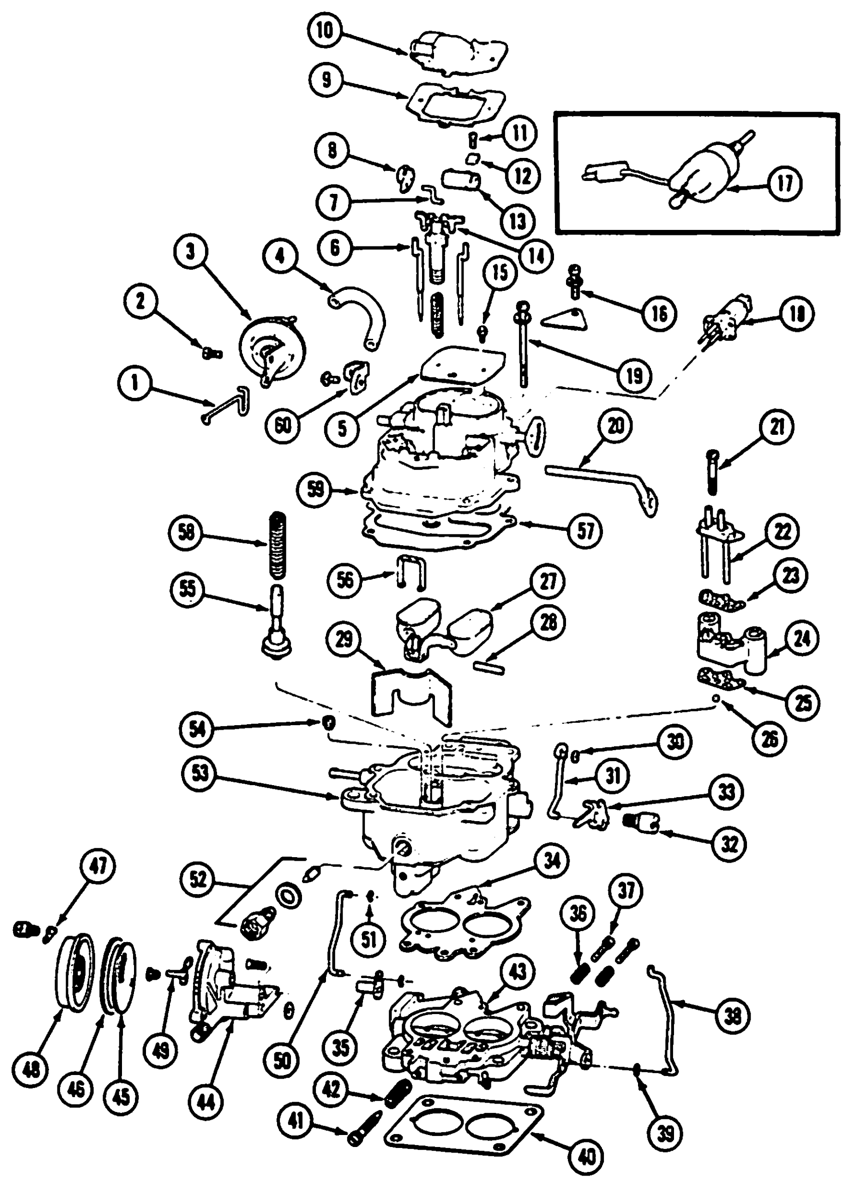

1. DIAPHRAGM CONNECTOR LINK
2. SCREW
3. CHOKE VACUUM DIAPHRAGM
4. HOSE
5. VALVE
6. METERING ROD
7. S-LINK
8. PUMP ARM
9. GASKET
10. ROLLOVER CHECK VALVE
11. SCREW
12. LOCK
13. ROD LIFTER
14. VACUUM PISTON
15. PISTON
16. AIR HORN RETAINING SCREW (SHORT)
17. SOLENOID
18. STEPPER MOTOR
19. AIR HORN RETAINING SCREW (LONG)
20. PUMP LEVER
21. VENTURI CLUSTER SCREW
22. IDLE FUEL PICKUP TUBE
23. GASKET
24. VENTURI CLUSTER
25. GASKET
26. CHECK BALL (SMALL)
27. FLOAT
28. FULCRUM PIN
29. BAFFLE
30. CLIP
31. CHOKE LINK
32. SCREW
33. FAST IDLE CAM
34. GASKET
35. THERMOSTATIC CHOKE SHAFT
36. SPRING
37. SCREW
38. PUMP LINK
39. CLIP
40. GASKET
41. MIXTURE SCREW
42. SPRING
43. THROTTLE BODY
44. CHOKE HOUSING
45. BAFFLE
46. GASKET
47. RETAINER
48. CHOKE COIL
49. LEVER
50. CHOKE ROD
51. CLIP
52. NEEDLE AND SEAT ASSEMBLY
53. MAIN BODY
54. MAIN METERING JET
55. ACCELERATOR PUMP PLUNGER
56. FULCRUM PIN RETAINER
57. GASKET
58. SPRING
59. AIR HORN
60. LEVER

Fig. 1J-99 Parts Identification—Carter Model BBD Carburetor

NOTE: *When using an overhaul kit, use all parts included in the kit.*

NOTE: *Flooding, hesitation on acceleration, and other performance problems are in many instances caused by the presence of debris, water, or other foreign matter in the carburetor. To aid in diagnosing the problem, carefully remove the carburetor from the engine without removing the fuel from the bowl. Examine the bowl contents for contamination as the carburetor is disassembled.*

Disassembly

(1) Place carburetor on repair stand to protect throttle valves from damage and to provide stable work base. Remove stepper motor, if equipped.

(2) Remove retaining clip from accelerator pump arm link and remove link (fig. 1J-100).

(3) Remove cover and gasket from top of air horn.

(4) Remove screws and locks from accelerator pump arm and vacuum piston rod lifter. Slide pump lever out of air horn. Remove pump arm and rod lifter. Lift vacuum piston and metering rod assembly straight up and out of air horn. Remove vacuum piston spring (fig. 1J-101).

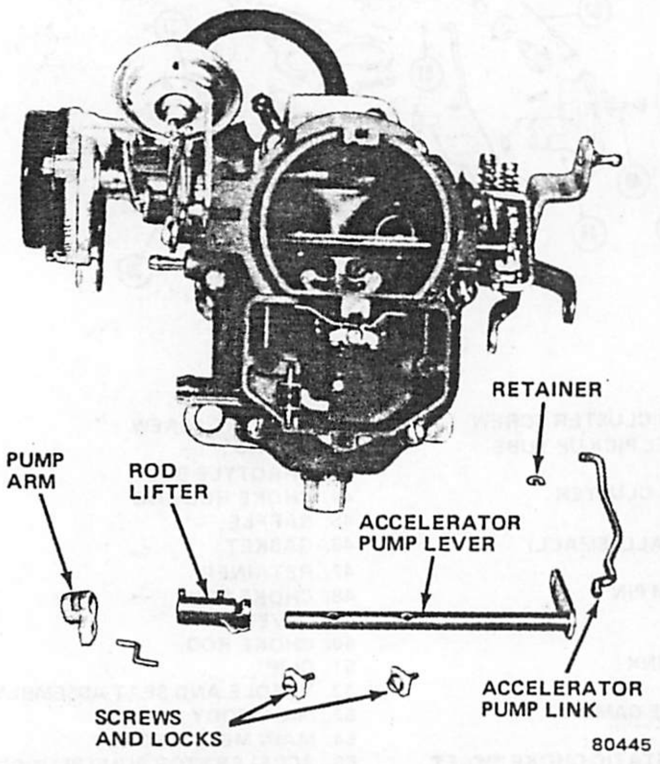

Fig. 1J-100 Accelerator Pump and Lever

(5) Disconnect clips and remove choke rod from choke housing lever and choke lever.

(6) Remove screw and lever from choke shaft.

(7) Remove vacuum hose from carburetor main body and choke vacuum diaphragm. Remove choke diaphragm, linkage and bracket assembly. Place diaphragm aside to be cleaned separately.

(8) Remove fast idle cam retaining screw. Remove fast idle cam, choke link and clip.

(9) Grind off head of torque-head screws and remove choke cover assembly and housing from throttle body.

NOTE: *When cover is removed from housing, remove remaining portion of screws from housing by twisting counterclockwise with locking pliers.*

(10) Remove air horn retaining screws and lift air horn straight up away from main body. Remove solenoid, if equipped. Discard gasket (fig. 1J-102).

(11) Invert air horn and compress accelerator pump drive spring. Remove S-link from pump shaft. Remove pump assembly.

(12) Remove fuel inlet needle valve, seat and gasket from main body.

(13) Remove float fulcrum pin retainer and baffle. Remove floats and fulcrum pin (fig. 1J-103).

(14) Remove main metering jets (fig. 1J-104).

(15) Remove venturi cluster screws. Remove venturi cluster and gaskets from main body. Discard gaskets. Do not remove idle orifice tubes or main vent tubes from cluster.

(16) Invert carburetor main body and drop out accelerator pump discharge check valve ball (fig. 1J-105).

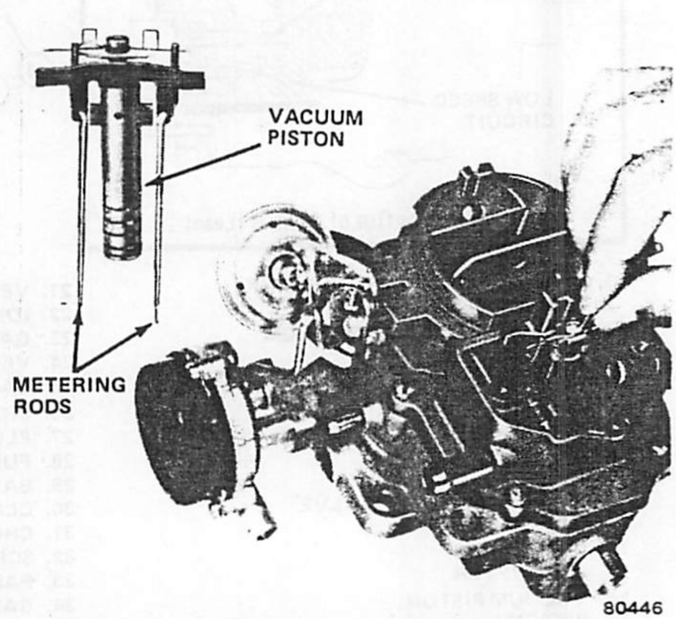

Fig. 1J-101 Removing Piston and Metering Rods

The cleaning and inspection procedure listed below does not include those parts contained in the carburetor overhaul repair kit. Install all gaskets and parts included in the repair kit when the carburetor is assembled. Discard original gaskets and replaced parts.

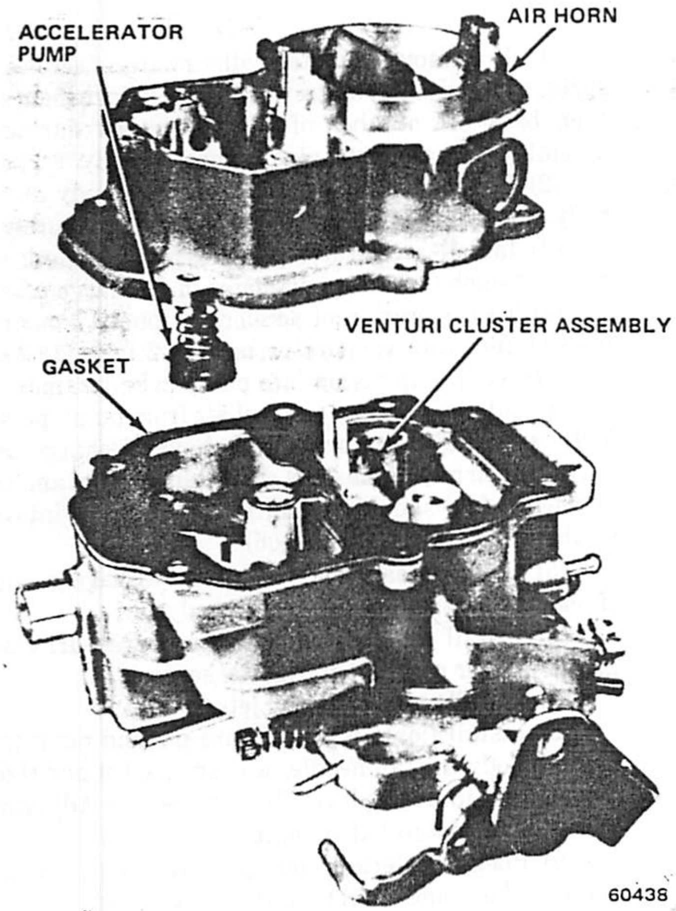

Fig. 1J-102 Removing Air Horn

CAUTION: *Do not use a wire brush to clean any part. Do not use a drill or wire to clean openings or passages. This may enlarge the passages and alter the calibration of the carburetor.*

NOTE: *If it is necessary to remove idle mixture adjustment screws because air pressure or soaking did not sufficiently clean the air passages, remove dowel pins with drill and punch.*

(17) Remove screws attaching throttle body to main body and separate bodies. Discard gasket.

(18) Count number of turns required to lightly seat each mixture adjustment screw and record for assembly reference. Remove idle mixture screws and springs from throttle body.

Cleaning and Inspection

Debris, gum, water, or carbon contamination in the carburetor or on exterior moving parts is often responsible for unsatisfactory engine performance. Efficient carburetion depends upon careful cleaning and inspection.

Wash all parts, except vacuum diaphragm, in clean commercial carburetor cleaning solvent. If a commercial solvent is not available, use mineral spirits, lacquer thinner or denatured alcohol.

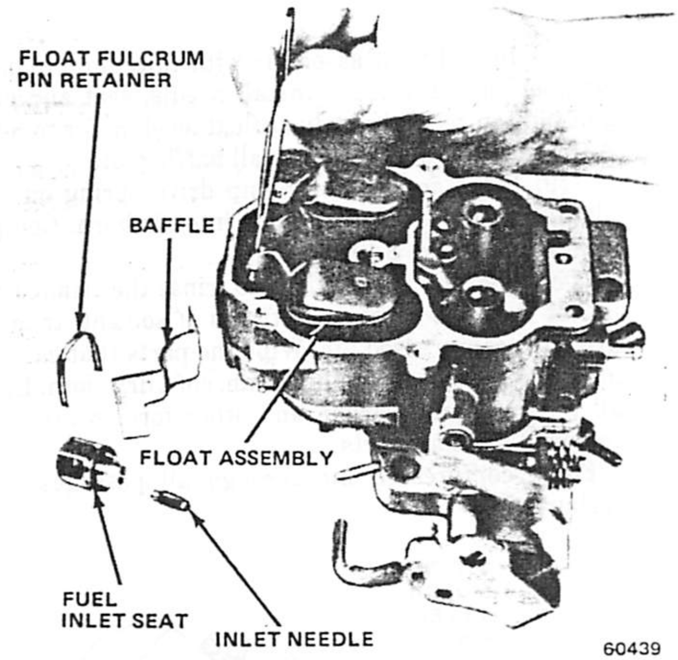

Fig. 1J-103 Float Assembly

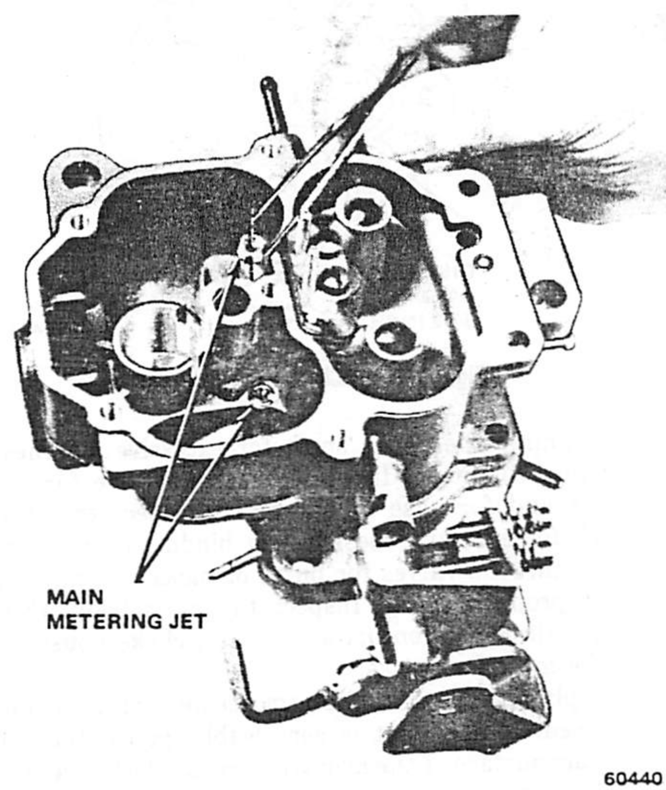

Fig. 1J-104 Main Metering Jets

(5) Clean passages and ball seat if leakage is evident. If leakage persists, replace main body.

(6) Install replacement gaskets on venturi cluster, install cluster screws and tighten securely.

(7) Install main metering jets.

(8) Install float assembly with fulcrum pin and pin retainer in main body. Install needle, seat and gasket and tighten securely. Adjust float level. Refer to Service Adjustment Procedures. Install baffle plate.

(9) Place accelerator pump drive spring on pump plunger shaft and insert shaft into air horn. Compress spring and insert S-link.

If commercial solvent is used, rinse the cleaned parts in hot water to remove all traces of solvent, then blow dry with compressed air. Wipe the parts that cannot be immersed in solvent with a clean, soft, dry cloth. Ensure all residue, gum, carbon and other foreign matter are removed from all parts.

Force compressed air through all passages of the carburetor.

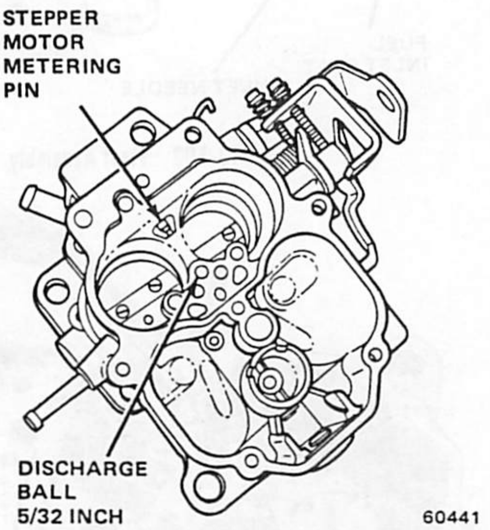

Fig. 1J-105 Check Valve Ball Location

Examine the choke shaft for excessive looseness or binding condition. Inspect the choke valve for nicked edges and for ease of operation. Inspect the throttle shaft for excessive looseness or binding in its bore. Inspect throttle valves for burrs or nicks that might prevent proper closing. Inspect the main body, throttle body, air horn, venturi assemblies, choke housing and choke cover for cracks.

Replace the float if the arm needle contact surface is grooved. If the float is serviceable, polish the needle contact surface of the arm with crocus cloth or an equivalent material. Replace float shaft if worn. Replace all damaged screws and nuts and all distorted or broken springs. Inspect all gasket mating surfaces for nicks or burrs. Replace any parts that have damaged gasket surfaces.

Assembly

NOTE: *Ensure all holes in the replacement gaskets have been correctly punched and that no foreign material has adhered to the gaskets.*

(1) If removed, install idle mixture screws and springs in body. Turn screws lightly against their seats, then back off number of turns recorded during disassembly. Install dowel pins in throttle body.

(2) Invert main body, place throttle body on main body, and align. Install screws and tighten securely.

(3) Install accelerator pump discharge check valve ball 5/32-inch (3.96 mm) diameter in discharge passage.

(4) Test operation of accelerator pump. Pour clean no-lead fuel into carburetor bowl 1/2 inch (12.7 mm) deep. Insert pump piston into pump cylinder, move piston up and down gently to expel air from pump passage. With suitable clean brass rod, hold discharge check valve ball firmly against its seat. Raise piston and press down. No fuel should be emitted from either intake or discharge passages (fig. 1J-106).

(5) Clean passage and ball seat if leakage is evident. If leakage persists, replace main body.

(6) Install replacement gaskets on venturi cluster, install cluster screws and tighten securely.

(7) Install main metering jets.

(8) Install floats with fulcrum pin and pin retainer in main body. Install needle, seat and gasket and tighten securely. Adjust float level. Refer to Service Adjustment Procedures. Install baffle plate.

(9) Place accelerator pump drive spring on pump plunger shaft and insert shaft into air horn. Compress spring and insert S-link.

(10) Place vacuum piston spring in vacuum piston bore. Position replacement gasket on main body and install air horn. Install solenoid. Tighten retaining screws alternately one turn at a time to compress gasket evenly.

(11) Measure vacuum piston gap. Refer to Service Adjustment Procedures and figure 1J-107. Carefully install step-up piston and metering rod assembly into its bore in air horn. Ensure metering rods are in main metering jets. Ensure metering rod springs are installed properly (fig. 1J-107).

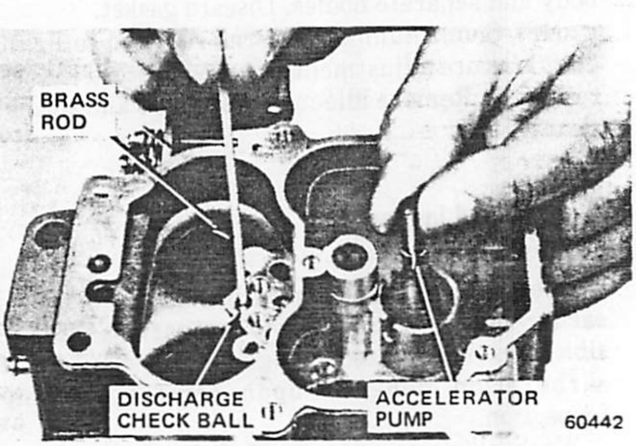

Fig. 1J-106 Accelerator Pump Test

(12) Position two lifting tangs of plastic rod lifter under piston yoke. Slide shaft of accelerator pump lever through rod lifter and pump arm. Install locks and adjusting screws, but do not tighten.

(13) Install fast idle cam and linkage. Tighten retaining screw securely.

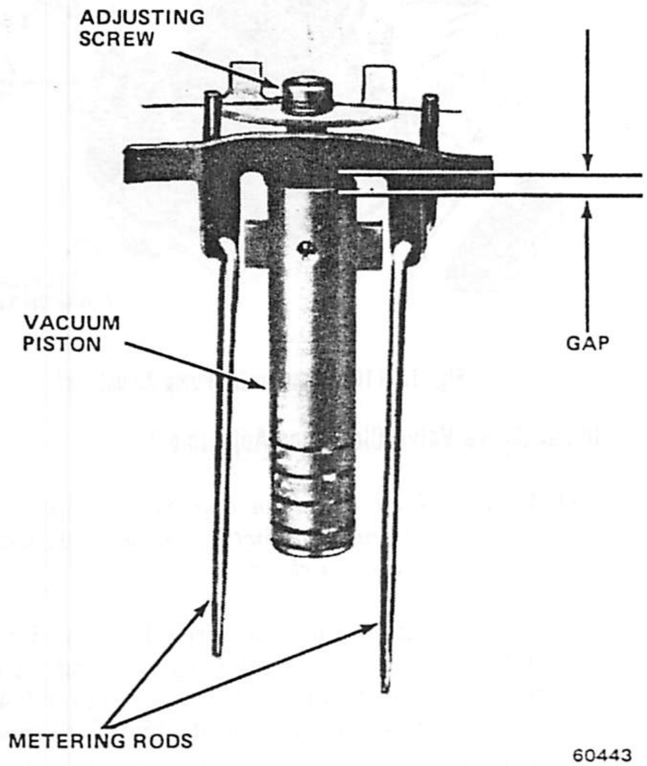

Fig. 1J-107 Vacuum Piston and Metering Rod Assembly

(14) Connect accelerator pump linkage to pump lever and throttle lever. Install retaining clip.

(15) Adjust vacuum piston and accelerator pump. Refer to Service Adjustment Procedures.

(16) Install dust cover, using replacement gasket.

(17) Install diaphragm assembly and secure with attaching screws. Do not connect vacuum hose to diaphragm fitting until initial choke valve clearance has been adjusted. Refer to Service Adjustment Procedures.

(18) Engage diaphragm link with slot in choke lever. Install choke lever and screw on choke shaft.

(19) Install choke housing on throttle body.

(20) Install baffle, gasket and cover on housing. Turn cover 1/4 turn rich (clockwise) and retain in position with one straight-slot screw.

(21) Install link and retainer between choke lever and choke housing lever.

(22) Connect link and retainer to fast idle cam and choke lever.

(23) Adjust initial choke valve clearance. Refer to Service Adjustment Procedures.

(24) Adjust fast idle cam clearance. Refer to Service Adjustment Procedures.

(25) Adjust choke unloader clearance. Refer to Service Adjustment Procedures.

(26) Remove straight-slot screw that is retaining choke cover and adjust cover index to specified notch (refer to Specifications).

(27) Install replacement torque-head (break off) screws to retain cover.

NOTE: *Heads of screws will break off when tightened beyond the calibrated torque.*

(28) Install stepper motor (if equipped) with replacement gasket.

SERVICE ADJUSTMENT PROCEDURES

Float Level Adjustment

(1) Remove air horn.

(2) Raise float **gently** against needle and hold (fig. 1J-108).

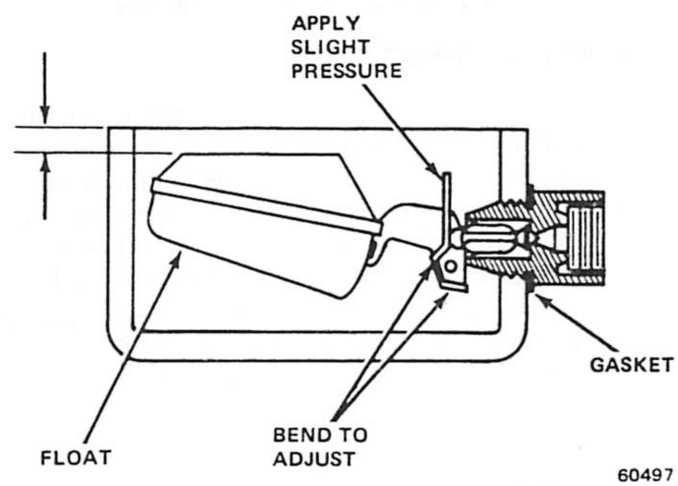

Fig. 1J-108 Float Level Adjustment

(3) Place straightedge across float bowl to measure float level. Refer to Specifications.

CAUTION: *Never bend float lever while it is resting against needle. Pressure may damage synthetic tip and cause a misadjustment.*

(4) If adjustment is necessary, release float and bend float lever.

(5) Install air horn.

Vacuum Piston Gap Adjustment

The vacuum piston gap is a critical adjustment (fig. 1J-109). Turning the adjusting screw clockwise richens the air/fuel mixture. Turning the adjusting screw counterclockwise leans the air/fuel mixture. Turn adjusting screw to adjust gap. Refer to Specifications.

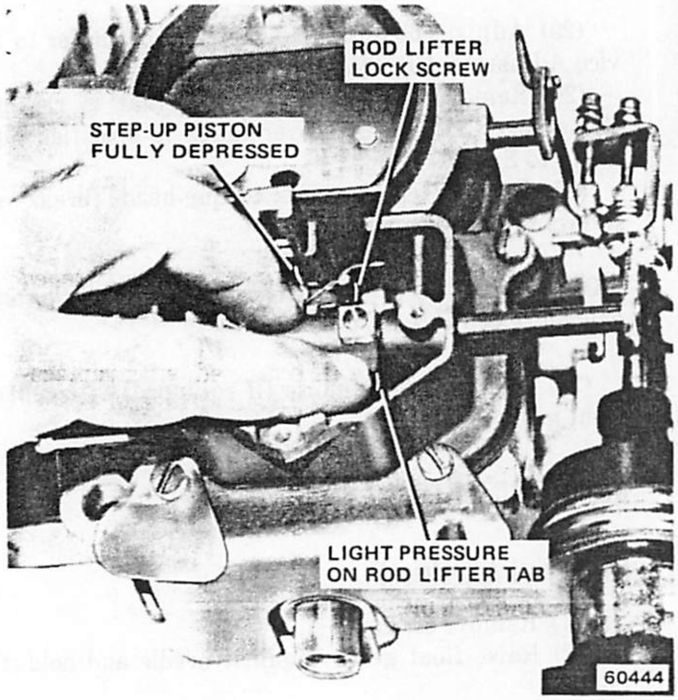

Fig. 1J-109 Vacuum Piston Adjustment

Vacuum Piston Adjustment

(1) Adjust gap in vacuum piston to specification.

(2) Back off idle speed adjustment screw until throttle valves are completely closed. Count number of turns and note so that screw can be returned to original position. Turn idle speed adjustment screw until it barely contacts stop, then turn one full turn further.

(3) Fully depress vacuum piston while holding moderate pressure on rod lifter tab. While in this position, tighten rod lifter lock screw (fig. 1J-109).

(4) Release piston and rod lifter.

(5) Adjust accelerator pump as outlined below.

(6) Return idle speed adjustment screw to its original position.

(7) Install dust cover.

Accelerator Pump Adjustment

(1) Remove dust cover.

(2) Back off idle speed adjustment screw to completely close throttle valves. Open choke valve so that fast idle cam allows throttle valves to seat in bores.

(3) Turn idle speed adjustment screw in until it barely contacts stop. Then continue two complete turns.

(4) Measure distance between surface of air horn and top of accelerator pump shaft (fig. 1J-110). Refer to Specifications for correct dimension.

(5) Loosen pump arm adjustment lock screw and rotate sleeve to adjust pump travel to correct distance. Tighten lock screw.

(6) Install cover and screws.

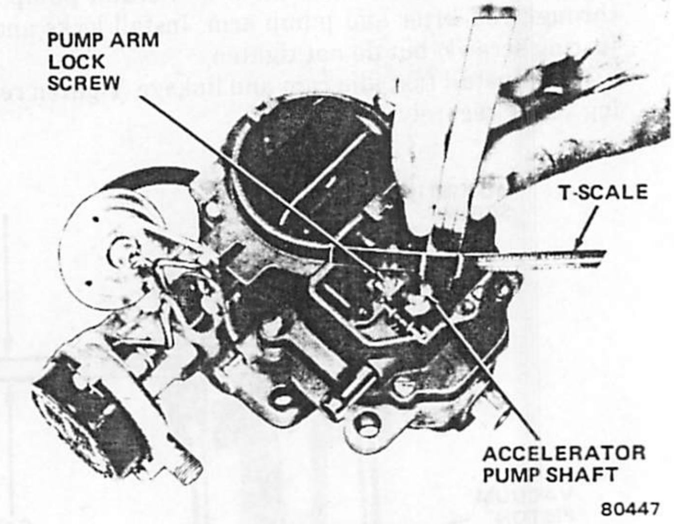

Fig. 1J-110 Accelerator Pump Adjustment

Initial Choke Valve Clearance Adjustment

NOTE: *The choke should not normally require readjustment from the original factory assembly adjustment except after a major overhaul.*

(1) Grind off torque-head screw heads and remove remaining portions of screws by turning counterclockwise with locking pliers. Turn choke cover 1/4 turn rich. Retain in position with one straight-slot screw.

(2) Open throttle valve slightly to place fast idle screw on high step of cam.

(3) Use Tool J-23738 or any vacuum source that holds at least 19 inches of mercury (19 in. Hg/64 kPa) to pull in diaphragm against stop.

(4) Measure clearance between choke plate and air horn wall. Refer to Specifications.

(5) Adjust clearance by bending diaphragm connector link (fig. 1J-111).

(6) Remove straight-slot screw and adjust cover index to specified notch. Install replacement torque-head (break off) screws.

NOTE: *Head of screws will break off when tightened beyond the calibrated torque.*

Fast Idle Cam Position Adjustment

(1) Remove torque-head screws and position choke cover 1/4 turn rich. Retain with one straight-slot screw.

(2) Open throttle slightly and place fast idle screw on second step of cam.

(3) Measure distance between choke plate and air horn wall (fig. 1J-112). Refer to Specifications for correct dimension.

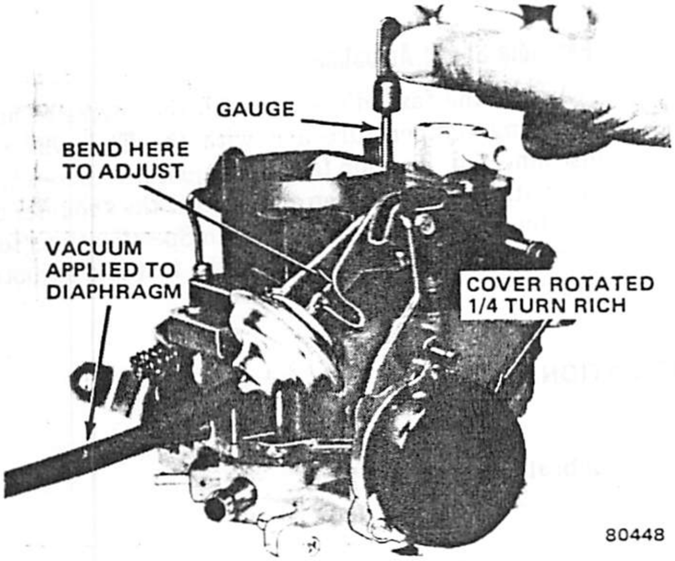

Fig. 1J-111 Initial Choke Valve Clearance

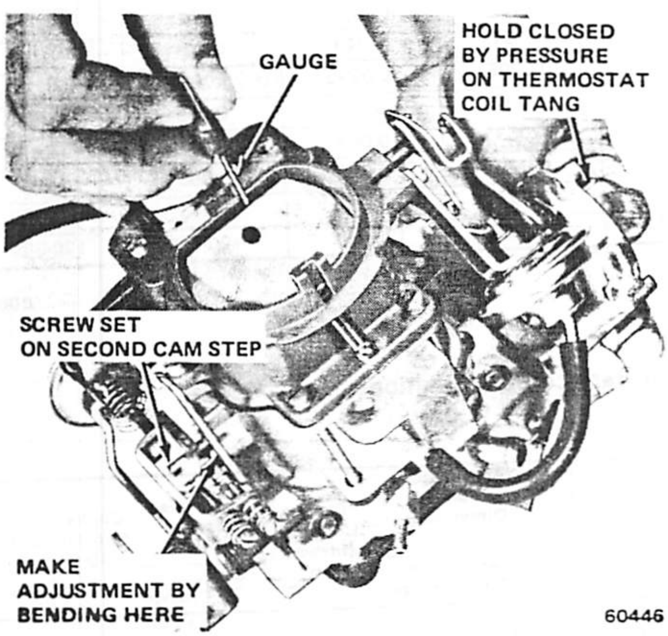

Fig. 1J-112 Fast Idle Cam Adjustment

(4) Adjust by bending fast idle cam link down to increase distance or up to decrease distance.

(5) Remove choke cover screw and adjust index to specified notch. Install replacement torque-head screws.

Choke Unloader Adjustment

(1) Hold throttle wide open (fig. 1J-113).

(2) Apply light pressure to choke plate and hold in closed position.

(3) Measure distance between choke plate and air horn wall. Refer to Specifications.

(4) Adjust by bending unloader tang. Do not bend tang so that it binds or interferes with any other part.

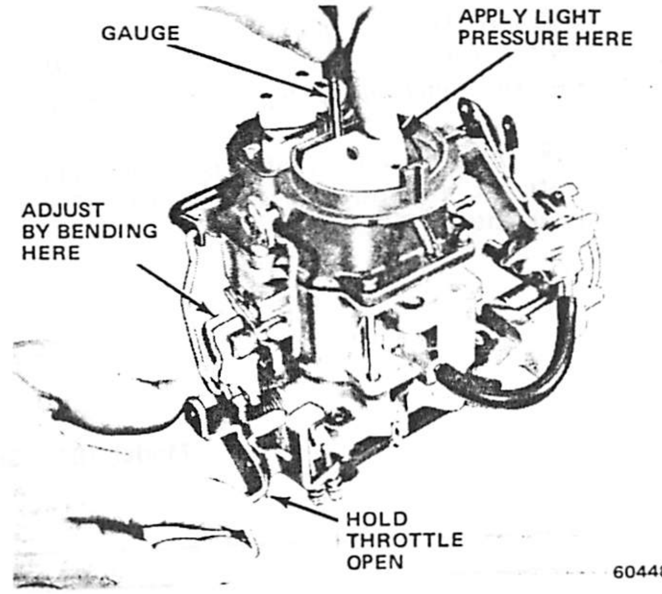

Fig. 1J-113 Choke Unloader Adjustment

Automatic Choke Adjustment (On or Off Vehicle)

The automatic choke adjustment is made by loosening the housing cover retaining screws and rotating cover in the required direction. Rich and lean are indicated by the arrow on the face of the cover. Refer to Specifications for the correct position. The specified position will be satisfactory for most driving conditions.

Idle Speed and Mixture Adjustment

Refer to idle speed adjustment procedure outlined in Chapter 1A—General Service and Diagnosis.

Idle Mixture Adjustment

(1) Install carburetor, fuel pipe, vacuum hoses, etc.

(2) Connect tachometer, start engine and warm to operating temperature.

(3) Position gear selector: manual—Neutral, automatic—Drive. Set parking brake firmly.

(4) Adjust idle speed.

(5) Adjust mixture screw(s) leaner (clockwise) until perceptible loss of rpm is noted.

(6) Turn mixture screw(s) richer (counterclockwise) until highest rpm indication is obtained. Do not turn screw(s) any further than point at which highest rpm is first obtained. This is referred to as lean best idle.

NOTE: *Engine speed will increase above curb idle speed an amount that corresponds approximately to the lean drop specification to be obtained in step (7).*

(7) As final adjustment, turn mixture screws clockwise (leaner) to obtain 50 rpm drop in engine speed. Turn both idle mixture screws in small, equal amounts until specified drop is achieved.

NOTE: *If the final rpm differs more than ± 30 rpm from the original curb idle rpm, adjust curb idle speed to specification and repeat steps (6) and (7) above.*

(8) Install dowel pins after performing idle mixture adjustment. Use care to prevent disturbing mixture adjustments.

Fast Idle Speed Adjustment

Adjust the fast idle speed with the engine at normal operating temperature and with the EGR valve hose disconnected. Position fast idle adjustment screw in contact with the second step and against the shoulder of the top step of fast idle cam. Refer to Specifications for the correct rpm. Adjust by turning the fast idle adjustment screw.

SPECIFICATIONS

Model BBD Carburetor Calibrations (Inches)

	8338	8339	8340	8341	8349	8351
Throttle Bore Size	1.44	1.44	1.44	1.44	1.44	1.44
Main Venturi Size	1.0625	1.0625	1.0625	1.0625	1.0625	1.19
Fuel Inlet Diameter	0.101	0.101	0.101	0.101	0.101	0.101
Low Speed Jet (Tube)	0.0295	0.0295	0.0295	0.0295	0.0295	0.0295
Economizer	0.057	0.057	0.057	0.055	0.059	0.057
Idle Air Bleed	0.067	0.067	0.067	0.067	0.063	0.063
Main Jet Size	0.092	0.092	0.092	0.092	0.086	0.089
Accelerator Pump Jet	0.033	0.033	0.033	0.033	0.033	0.033
Main Metering Jet Number	120-392	120-392	120-392	120-392	120-386	120-389

80608

Model BBD Carburetor Service Specifications

List Number	Application	Float Level (Inches)		Vacuum Piston Gap (Inches)		Initial Choke Valve Clearance (Inches)		Fast Idle Cam Setting (Inches)		Automatic Choke Cover Setting (Notches Rich)		Accelerator Pump Dimensions (Inches)		Choke Unloader (Inches)	Fast Idle Speed ①		Choke Bimetal ID	Choke
		Set To	OK Range	Set To	OK Range	Set To	OK Range	Set To	OK Range	Set To	OK Range	Set To	OK Range		Set To	OK Range		
8338	258 (Auto) CJ Cal. Alt	0.25	0.218 to 0.282	0.035	0.020 to 0.050	0.140	0.125 to 0.155	0.095	0.030 to 0.110	1 NR	1/2 to 1-1/2	0.520	0.500 to 0.540	0.280	1850	1750 to 1950	ET	TR
8339	258 (Man.) CJ California	0.25	0.218 to 0.282	0.035	0.020 to 0.050	0.140	0.125 to 0.155	0.095	0.080 to 0.110	1 NR	1/2 to 1-1/2	0.520	0.500 to 0.540	0.280	1700	1600 to 1800	ET	
8340	258 (Auto) Cke,Wag,Trk 50S	0.25	0.218 to 0.282	0.035	0.020 to 0.050	0.150	0.135 to 0.165	0.110	0.070 to 0.100	1 NR	1/2 to 1-1/2	0.520	0.500 to 0.540	0.280	1700	1600 to 1800	ET	
8341	258 (Man.) Cke,Wag,J-10 50S	0.25	0.218 to 0.282	0.035	0.020 to 0.050	0.150	0.135 to 0.165	0.150	0.080 to 0.110	1 NR	1/2 to 1-1/2	0.520	0.500 to 0.540	0.280	1700	1600 to 1800	ET	
8349	258 (Man.) CJ 49 State	0.25	0.218 to 0.282	0.035	0.020 to 0.050	0.128	0.113 to 0.143	0.095	0.080 to 0.110	2 NR	1-1/2 to 2-1/2	0.500	0.480 to 0.520	0.280	1700M 1850A	1600/1800 1750/1950	ET (B1)	
8351	258 (Man.) CJ Altitude	0.25	0.218 to 0.282	0.035	0.020 to 0.050	0.130	0.115 to 0.145	0.095	0.080 to 0.110	0 NR	−1/2 to +1-1/2	0.520	0.500 to 0.540	0.280	1700	1600 to 1800	ER 3	

①Hot with EGR valve hose disconnected.

TR — Tamper Resistant

90536

CARBURETOR MODEL 2150-2 VENTURI

GENERAL

The Motorcraft Model 2150 carburetor (with altitude compensation) is a two-venturi carburetor that incorporates two lightweight aluminum assemblies, the air horn and the main body.

The air horn assembly serves as the main body cover and also contains the choke assembly and fuel bowl vents.

The throttle shaft assembly and all components of the fuel metering circuits are contained in the main body assembly. The automatic choke assembly and the solenoid are attached to the main body (fig. 1J-114).

The Model 2150 carburetor with altitude compensation uses an additional choke valve to aid cold weather engine start up.

This carburetor features a compensation circuit that mixes a metered amount of additional air into the air/fuel mixture to prevent an over-rich condition at higher altitudes. An automatic device (aneriod) reacts to atmospheric pressure and overrides the compensation feature at lower altitudes.

NOTE: *With extremely low barometric pressure conditions, the aneroid may open the vent valve at sea level. This is normal and does not indicate a faulty component.*

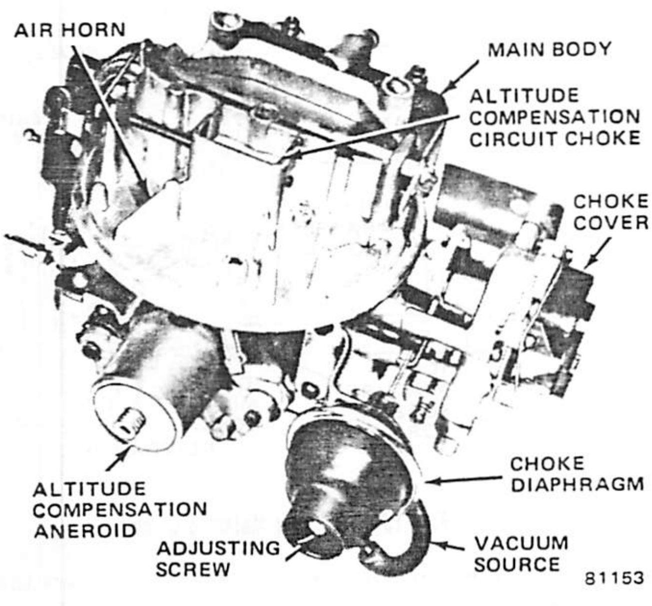

Fig. 1J-114 Model 2150 Carburetor Assembly

Identification

Each carburetor is identified by a code number and build date that is stamped on an identification tag. Each carburetor build month is coded alphabetically beginning with the letter A for January and ending with the letter M for December (the letter I is not used). The tag is attached to the carburetor and must remain with it to assure proper identification (fig. 1J-115).

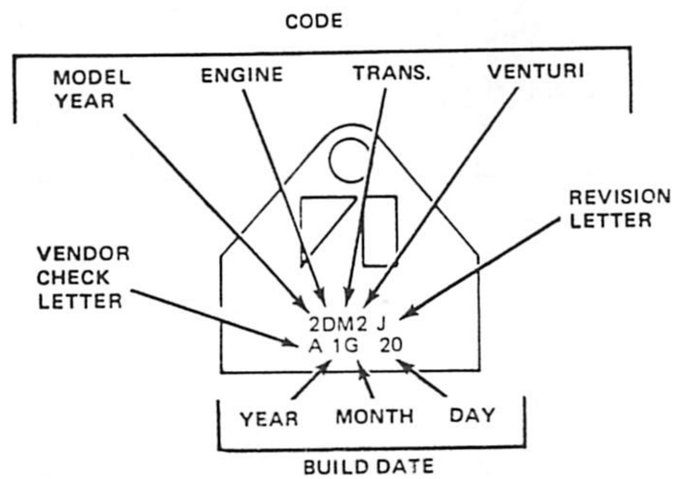

Fig. 1J-115 Identification Tag

CARBURETOR CIRCUITS

The Model 2150 carburetor utilizes six circuits: Float (Fuel Inlet), Idle Metering (Low Speed), Main Metering (High Speed), Pump, Choke and Altitude Compensation.

Float (Fuel Inlet) Circuit

Pressurized fuel enters the fuel bowl through the fuel inlet fitting in the main body. The Viton-tipped fuel inlet needle is controlled by the float and lever assembly, which is hinged on the float shaft. A wire retainer is hooked over grooves on opposite ends of the float shaft and into a groove behind the fuel inlet needle seat. The retainer holds the float shaft firmly in the fuel bowl guides and also centers the float assembly in the fuel bowl. An integral retaining clip is hooked over the end of the float lever and attached to the fuel inlet needle. This assures reaction of the fuel inlet needle during downward movement of the float (fig. 1J-116).

The float circuit maintains the correct fuel level in the bowl. This enables the fuel metering circuits to deliver the proper air/fuel mixture to the combustion chambers. The amount of fuel entering the bowl is regulated by the distance the fuel inlet needle is raised off its seat. The float drops as the fuel level drops and allows the fuel inlet needle to move off its seat. This permits additional fuel to enter the bowl. When the fuel reaches the preset level, the fuel inlet needle is lowered and admits only enough fuel to replace that being used.

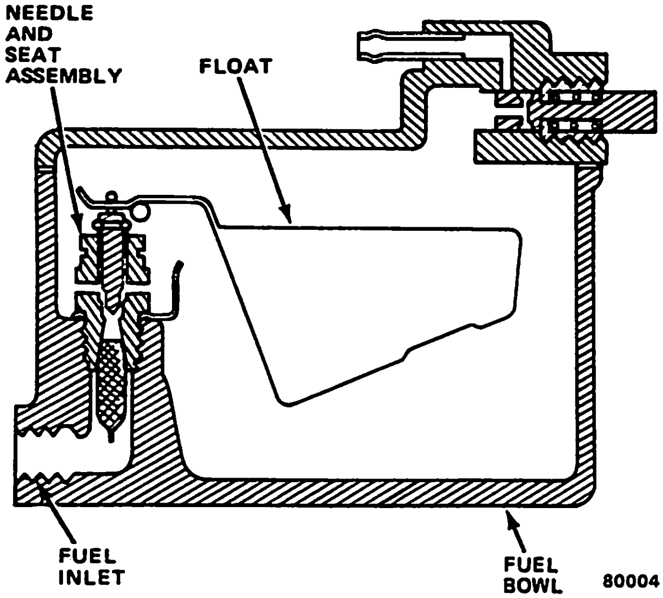

Fig. 1J-116 Float Circuit

Bowl Vent

Two bowl vents are required. The internal vent is used to balance air pressure in the fuel bowl when the engine is operating. The external vent provides a method of controlling fuel vapor in the bowl when the engine is not operating.

The external fuel bowl vent permits vapor to move from the carburetor to the fuel vapor storage canister. A bell crank attached to the accelerator pump housing actuates the bowl vent (fig. 1J-117). At idle or solenoid Off position (if equipped), the vent opens, permitting vapor to pass. At any throttle position above idle, the vent is mechanically closed.

Idle Metering (Low Speed) Circuit

Fuel for idle and low speed operation flows from the fuel bowl through the main jets into the main wells. From the main wells, the fuel is metered as it passes through calibrated restrictions at the lower end of the idle tubes. After flowing through the idle tubes, the fuel enters diagonal passages above the tubes. The fuel is metered again as it flows downward through restrictions at the lower end of the diagonal passages and then enters the idle passages in the main body (fig. 1J-118).

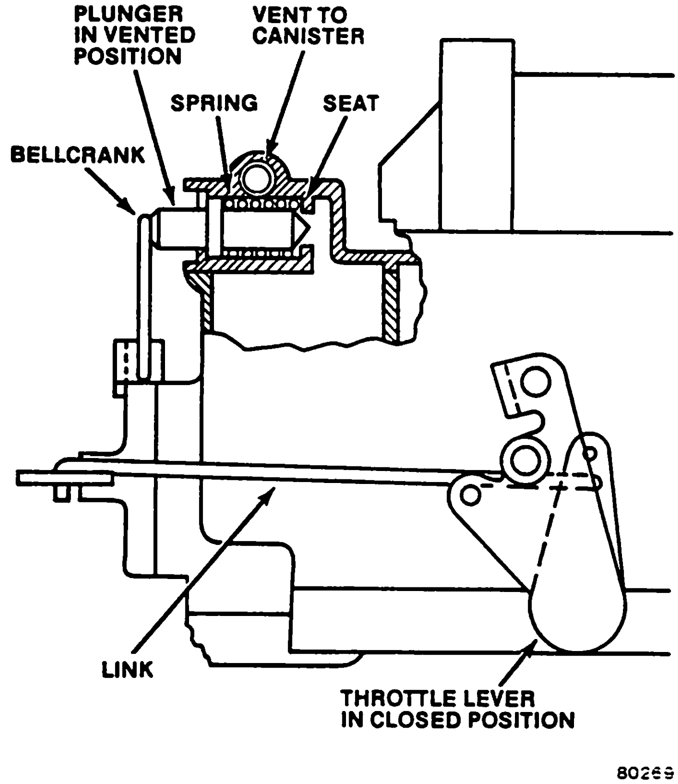

Fig. 1J-117 External Bowl Vent

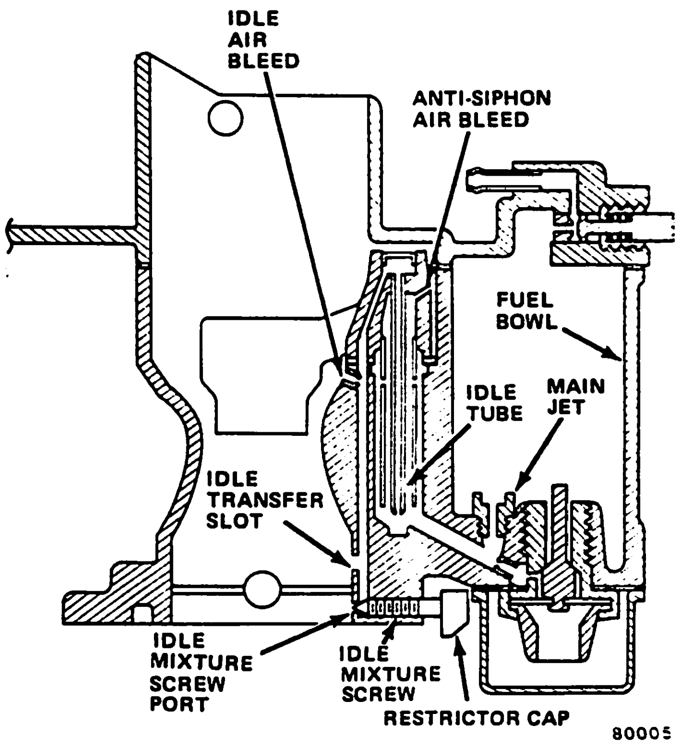

Fig. 1J-118 Idle Metering Circuit

Air enters the idle circuit through air inlets that are located in the main body directly below the booster venturi. The air inlets serve as anti-siphon vents during off-idle, high speed operation and when the engine is stopped.

The air/fuel mixture moves down the idle passages past the idle transfer slots, which serve as additional air inlets during curb idle operation. The air/fuel mixture then moves past the idle mixture adjustment screw tips, which control the amount of discharge. From the adjustment screw ports, the air/fuel mixture moves through short horizontal passages and is discharged below the throttle valves.

At speeds slightly above idle, the idle transfer slots begin discharging the air/fuel mixture as the throttle valves expose them to manifold vacuum. As the throttle valves continue opening and engine speed increases, the airflow through the carburetor increases proportionately. This increased airflow creates a vacuum in the venturi and the main metering circuit begins discharging the air/fuel mixture. The discharge from the idle circuit tapers off as the main metering circuit begins discharging.

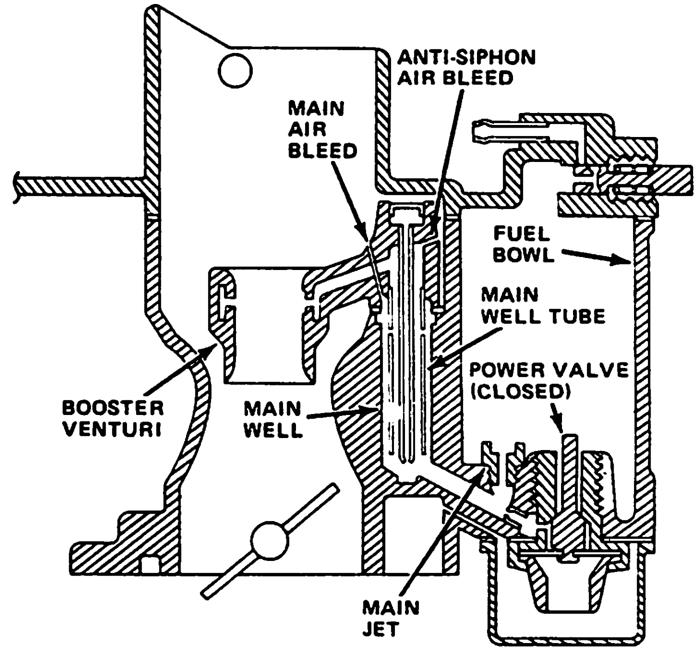

Fig. 1J-119 Main Metering Circuit

Main Metering (High Speed) Circuit

As engine speed increases, the air velocity through the booster venturi creates a low pressure area. Fuel flow through the main metering circuit is caused by atmospheric pressure in the fuel bowl and a lower pressure at the main discharge ports. Fuel flows from the fuel bowl, through the main jets and into the main wells. The fuel then moves up the main well tubes where it is mixed with air. The air, supplied through the main air inlets, mixes with the fuel through small holes in the sides of the main well tubes. The main air inlets meter an increasing amount of air, whenever venturi vacuum increases, to maintain the proper air/fuel mixture ratio. The mixture of fuel and air, being lighter than raw fuel, responds quickly to changes in venturi vacuum. It also atomizes more readily than raw fuel.

The air/fuel mixture moves from the main well tubes to the discharge ports and is discharged into the booster venturi (fig. 1J-119).

Anti-siphon air vents, located near the top of the main well tubes, prevent siphoning of fuel from the main well when decelerating.

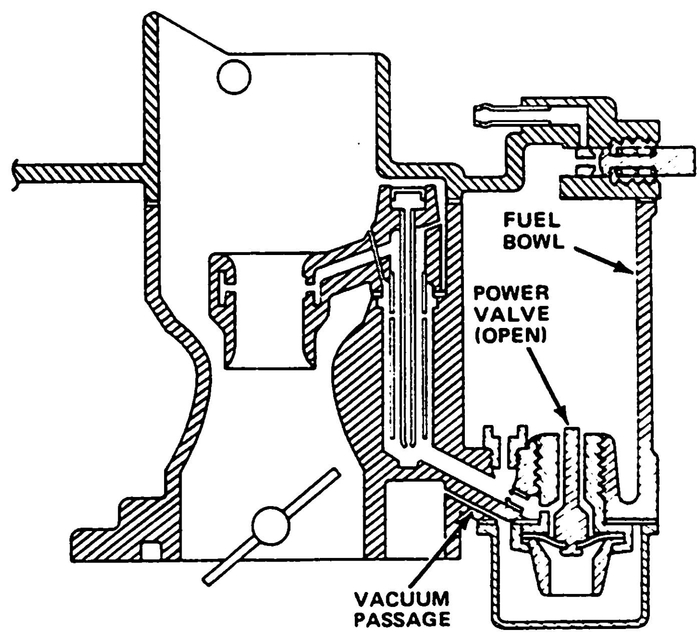

Fig. 1J-120 Power Enrichment Valve

Power Enrichment

During heavy load conditions or high speed operation, the air/fuel mixture ratio must be increased to provide higher engine power output. The power enrichment valve supplies extra fuel during this period. It is controlled by intake manifold vacuum (fig. 1J-120).

Manifold vacuum is applied to the power valve diaphragm from an opening in the base of the main body, through a passage in the main body and power valve chamber to the power valve diaphragm. During engine idle and cruise speed conditions, manifold vacuum is high enough to overcome the power valve spring tension and holds the valve closed. When higher engine power output is required, the increased load on the engine results in decreased manifold vacuum. The power valve spring opens the first stage of the power valve when manifold vacuum drops below a predetermined value and a small amount of fuel flows through the valve.

When manifold vacuum drops to a lower value, the power valve spring opens the second stage of the power valve and allows a greater amount of fuel to flow through the valve. The fuel that flows through the power valve is added to the fuel in the main metering circuit to enrich the mixture. As engine load requirements decrease, manifold vacuum increases and overcomes the tension of the power valve spring, closing the power valve.

Pump Circuit

When the throttle valves are opened quickly, the airflow through the carburetor responds almost immediately. Because fuel is heavier than air, there is a brief lag in time before the fuel flow can gain sufficient velocity to maintain the proper air/fuel mixture ratio. During this lag, the pump circuit supplies the required fuel until the proper air/fuel mixture ratio can be maintained by the other metering circuits (fig. 1J-121).

The pump is charged when the throttle valves are closed. The diaphragm return spring exerts force against the diaphragm and pushes it against the cover.

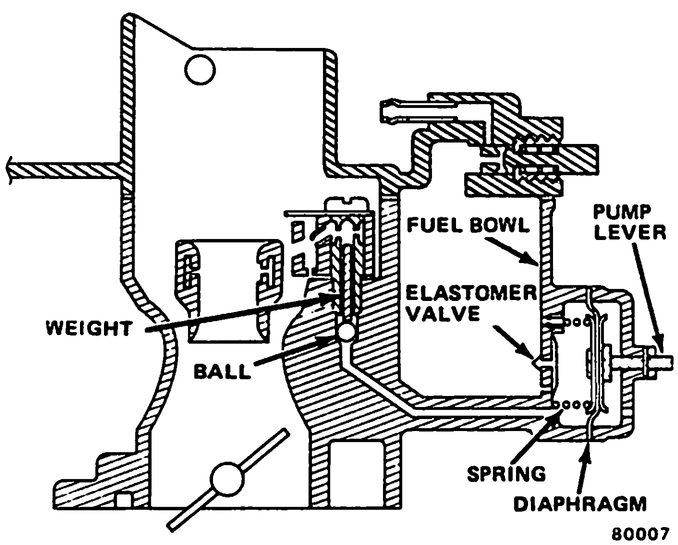

Fig. 1J-121 Pump Circuit

Fuel is drawn through the inlet, past the elastomer valve, and into the pump chamber. A discharge check ball and weight prevents air from being drawn into the pump chamber.

When the throttle valves are opened, the diaphragm rod is pushed inward forcing fuel from the pump chamber into the discharge passages. The elastomer valve seals the inlet hole during pump discharge preventing fuel from returning to the fuel bowl. Fuel under pressure unseats the discharge check ball and weight and is forced through the pump discharge screw. The fuel is then sprayed into the main venturi through discharge ports.

A vent is provided in the pump chamber to prevent vapor accumulation and pressure buildup.

Choke Circuit

The choke valve, located in the air horn assembly, provides a high vacuum above as well as *below the* throttle valves when closed. During cranking, vacuum above the throttle valves causes fuel to flow from the main and idle metering circuits. This provides the richer air/fuel mixture required for cold engine starting.

The choke shaft is connected by linkage to a bimetallic coil that winds up (contracts) when cold and unwinds (expands) when warm.

The position of the choke valve is controlled by the action of a vacuum modulator that exerts force against the tension of the bimetallic coil.

The altitude compensation circuit has a separate nonadjustable choke valve that is linked directly with the primary choke valve.

When the engine is cold, tension of the bimetallic coil holds the choke valve closed. When the engine is started, manifold vacuum is channeled through an opening at the base of the carburetor through a passage on the bottom side of the modulator diaphragm assembly, to move the diaphragm downward against the setscrew. At the same time, the modulator arm contacts a tang on the choke shaft. The downward movement of the diaphragm assembly compresses the piston spring and exerts a pulling force on the modulator arm, causing the choke valve to open slightly. This opening is referred to as initial choke valve clearance.

The bimetallic coil is warmed by electric heater element and, as the engine begins to warm up, heated air routed from the exhaust crossover through a heat tube to the choke housing. A thermostatically controlled bypass valve, which is an integral part of the choke heat tube, helps prevent premature choke valve opening during the early part of the engine warmup period. The valve regulates the temperature of the hot airflow to the choke housing by allowing outside unheated air to enter the heat tube. A thermostatic disc is incorporated in the valve. It is calibrated to close the valve at 75°F (24°C) and open it at 55°F (13°C).

The electric heater element and heated air entering the choke housing cause the bimetallic coil to begin unwinding and decrease the closing tension exerted against the choke valve. The coil gradually loses its tension and allows the choke valve to open.

When the engine reaches normal operating temperature, the bimetallic coil continues unwinding and exerts pressure against the choke linkage, forcing the choke valve fully open. A continual flow of heated air passes through the choke housing and is exhausted into the intake manifold. The bimetallic coil remains heated and the choke valve remains fully open until the engine is stopped and allowed to cool.

Air flowing through the choke housing must be filtered to minimize contamination of the choke coil and associated parts. The filtered air is supplied through a tube that originates inside the air cleaner.

A fast speed idle is required to prevent engine stalling during the warmup period. The fast idle cam, actuated by the choke rod, contacts the fast idle speed adjustment screw and increases engine speed in proportion to the choke valve opening. When the choke valve reaches the fully open position, the fast idle cam rotates free of the fast idle speed adjustment screw and allows the throttle lever to return to the curb idle speed position.

If the engine is accelerated during the warmup period, the resulting drop in manifold vacuum allows the bimetallic coil to momentarily close the choke valve. This provides a richer air/fuel mixture to prevent engine stalling.

If the engine is "flooded" during the starting operation, the choke valve may be opened manually to purge excess fuel from the intake manifold. This is accomplished by depressing the accelerator pedal to the floor and rotating the engine with the starter motor. With the throttle linkage in this position, a tang on the fast idle lever contacts the fast idle cam and causes the choke valve to open a predetermined amount. This is referred to as the choke unloader clearance.

Altitude Compensation Circuit

The altitude compensation circuit supplies the extra air necessary to lean out the air/fuel mixture at high altitudes. The compensation circuit parallels the main carburetor intake circuit (fig. 1J-122). At the top, a small choke valve controls the airflow when the main choke is

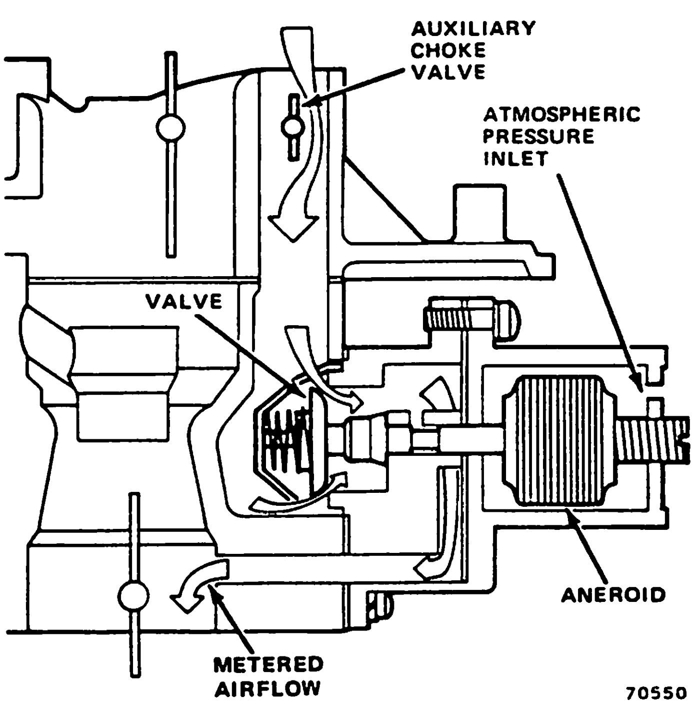

Fig. 1J-122 Altitude Compensation Circuit

closed. Air flows down through a passage in the main body into a plenum chamber located adjacent to the two main venturi bores. A spring-loaded valve regulates the amount of air passed from the plenum into the compensator body. Air flows from the compensator body through two air passages bored into the main venturi tubes.

The opening and closing of the valve in the compensator body is controlled by an aneroid that reacts to the atmospheric pressure. At the lower atmospheric pressure of higher altitudes, the aneroid pushes on the end of the compensator valve stem, opening the valve. At lower altitudes, the aneroid relaxes, automatically closing the valve.

The aneroid is calibrated during factory assembly and is not adjustable. Do not tamper with the hex-head plug on the aneroid.

CARBURETOR REPLACEMENT

Removal

(1) Remove air cleaner.

(2) Remove throttle cable from throttle lever. Disconnect vacuum hoses, pullback spring, choke filtered air tube, choke heater element wire connector, solenoid wire connector, PCV valve hose, inline fuel filter and choke heated air tube at carburetor.

(3) Remove carburetor retaining nuts. Remove carburetor and gasket from intake manifold.

Installation

(1) Clean gasket mounting surfaces of spacer and carburetor. Position gasket on intake manifold. Position carburetor on spacer and gasket and install nuts. To prevent leakage, distortion or damage to carburetor body flange, alternately tighten nuts in crisscross pattern.

(2) Connect in-line fuel filter, throttle cable, choke heated air tube, PCV valve hose, pullback spring, choke heater element wire connector, solenoid wire connector, choke filtered air tube and vacuum hoses.

(3) Adjust engine idle speed. Refer to Chapter 1A—General Service and Diagnosis for procedures.

CARBURETOR OVERHAUL

The following procedure applies to a complete overhaul with the carburetor removed from the engine.

A complete disassembly is not necessary when performing routine service adjustments. In most instances, service adjustments of individual circuits may be accomplished without removing the carburetor from the engine. Refer to Service Adjustment Procedures.

A complete carburetor overhaul includes disassembly, thorough cleaning, inspection, and replacement of all gaskets and worn or damaged parts. Refer to figure 1J-123 for parts identification.

1. MODULATOR COVER (IF EQUIPPED)
2. MODULATOR RETAINING SCREW (3) (IF EQUIPPED)
3. PIVOT PIN
4. MODULATOR ARM
5. CHOKE VALVE RETAINING SCREW (2)
6. CHOKE VALVE
7. CHOKE SHAFT
8. AIR HORN
9. AIR HORN RETAINING SCREW (4)
10. AIR HORN GASKET
11. FLOAT AND LEVER ASSEMBLY
12. FLOAT SHAFT RETAINER
13. FLOAT SHAFT
14. NEEDLE RETAINING CLIP
15. CURB IDLE ADJUSTING SCREW
16. CURB IDLE ADJUSTING SCREW SPRING
17. THROTTLE SHAFT AND LEVER ASSEMBLY
18. DASHPOT
19. DASHPOT LOCKNUT
20. DASHPOT BRACKET
21. DASHPOT BRACKET RETAINING SCREW
22. ADJUSTING SCREW
23. CARRIAGE
24. ELECTRIC SOLENOID
25. MOUNTING BRACKET
26. THROTTLE VALVE RETAINING SCREW (4)
27. THROTTLE VALVE (2)
28. NEEDLE AND SEAT ASSEMBLY
29. NEEDLE SEAT GASKET
30. MAIN JET (2)
31. MAIN BODY
32. ELASTOMER VALVE
33. PUMP RETURN SPRING
34. PUMP DIAPHRAGM
35. PUMP LEVER PIN
36. PUMP COVER
37. PUMP ROD
38. PUMP ROD RETAINER
39. PUMP LEVER
40. BOWL VENT BELLCRANK
41. FUEL INLET FITTING
42. POWER VALVE GASKET
43. POWER VALVE
44. POWER VALVE COVER GASKET
45. POWER VALVE COVER
46. POWER VALVE COVER RETAINING SCREW (4)
47. IDLE LIMITER CAP (2)
48. IDLE MIXTURE SCREW (2)
49. IDLE MIXTURE SCREW SPRING (2)
50. RETAINER
52. FAST IDLE LEVER RETAINING NUT
53. FAST IDLE LEVER PIN
54. RETAINER
55. LEVER AND SHAFT
56. FAST IDLE CAM ROD
57. CHOKE SHIELD
58. CHOKE SHIELD RETAINING SCREW (2)
59. PISTON PASSAGE PLUG
60. HEAT PASSAGE PLUG
61. CHOKE COVER RETAINING CLAMP
62. CHOKE COVER RETAINING SCREW (3)
63. CHOKE COVER AND COIL
64. CHOKE COVER GASKET
65. COIL LEVER RETAINING SCREW
66. COIL LEVER
67. CHOKE HOUSING RETAINING SCREW (3)
68. CHOKE HOUSING
69. CHOKE SHAFT BUSHING
70. FAST IDLE SPEED ADJUSTING SCREW
71. FAST IDLE LEVER
72. FAST IDLE CAM
73. CHOKE HOUSING GASKET
74. PUMP DISCHARGE CHECK BALL
75. PUMP DISCHARGE WEIGHT
76. BOOSTER VENTURI GASKET
77. BOOSTER VENTURI ASSEMBLY
78. AIR DISTRIBUTION PLATE
79. PUMP DISCHARGE SCREW
80. RETAINER
81. CHOKE ROD
82. CHOKE LEVER RETAINING SCREW
83. CHOKE PLATE LEVER
84. CHOKE ROD SEAL
85. STOP SCREW
86. MODULATOR RETURN SPRING (IF EQUIPPED)
87. MODULATOR DIAPHRAGM ASSEMBLY (IF EQUIPPED)

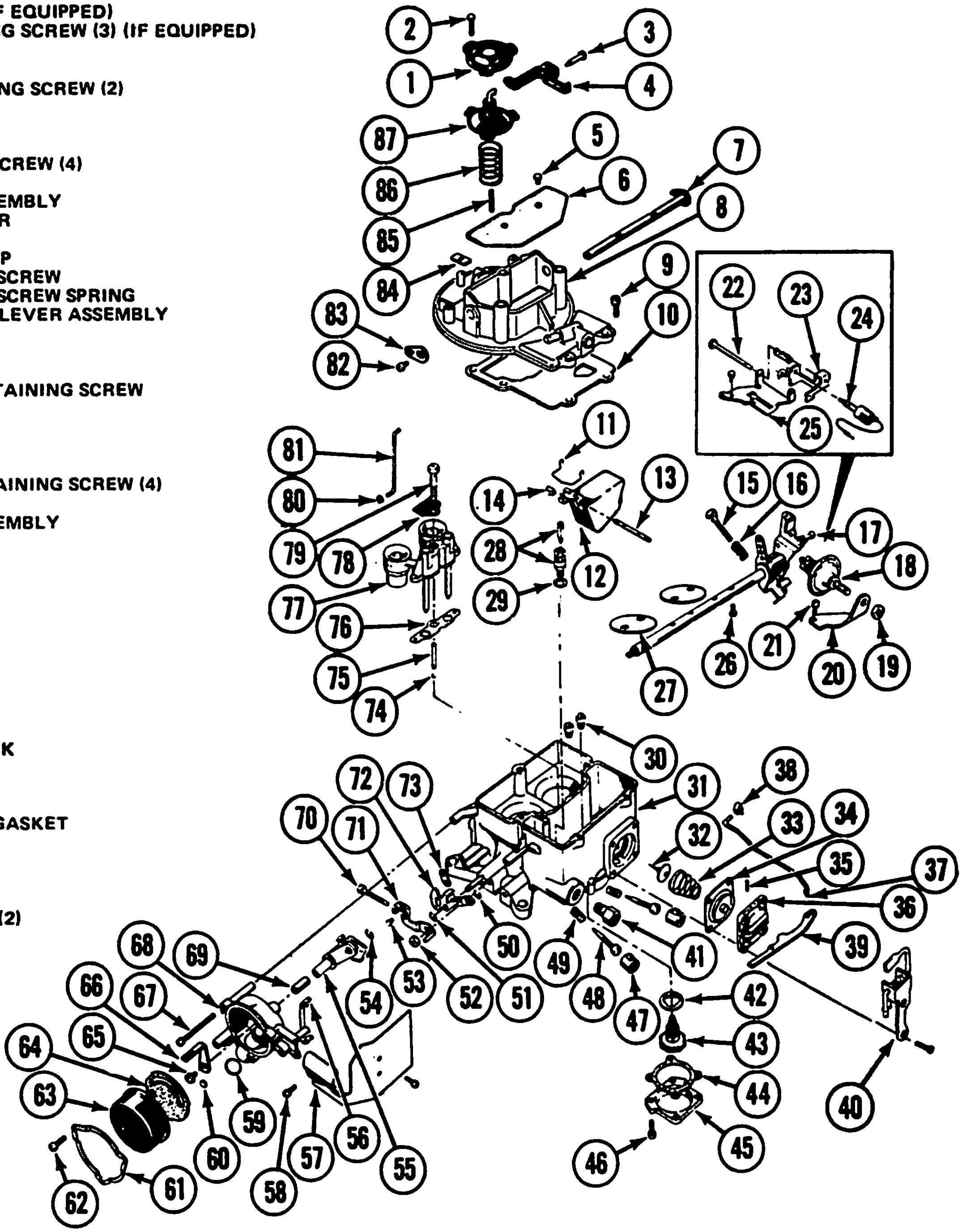

41648

Fig. 1J-123 Parts Identification—Motorcraft Model 2150 Carburetor

NOTE: *When using an overhaul kit, use all parts included in the kit.*

NOTE: *Flooding, hesitation on acceleration, and other performance problems are in many instances caused by the presence of debris, water, or other foreign matter in the carburetor. To aid in diagnosing the cause of a problem, carefully remove the carburetor from the engine without removing the fuel from the bowl. Examine the contents of the bowl for contamination as the carburetor is disassembled.*

Disassembly

(1) Remove air cleaner anchor screw.

(2) Remove automatic choke rod retainer from choke shaft lever.

(3) Remove air horn attaching screws, lockwashers and carburetor identification tag. Remove air horn and air horn gasket.

(4) Remove choke rod by loosening screw that secures choke shaft lever to choke shaft. Remove rod and plastic dust seal from air horn.

(5) Remove choke modulator assembly, if equipped.

(6) Remove fast idle cam retainer (fig. 1J-124).

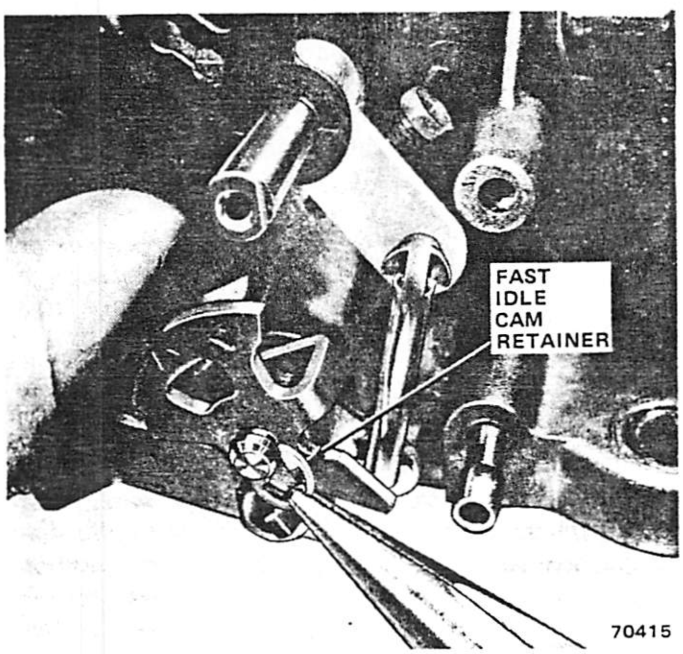

Fig. 1J-124 Fast Idle Cam Retainer

(7) Remove choke shield.

(8) Remove choke housing cover retaining screws and clamp, cover with coil and gasket.

(9) Remove fast idle cam rod from fast idle cam lever.

(10) Remove choke housing assembly retaining screws, housing assembly and gasket.

(11) Remove fast idle cam.

(12) Remove thermostat lever retaining screw and washer. Remove choke shaft and fast idle cam lever from choke housing.

(13) Pry float shaft retainer from fuel inlet seat (fig. 1J-125). Remove float, float shaft retainer and fuel inlet needle assembly. Remove retainer and float shaft from float lever.

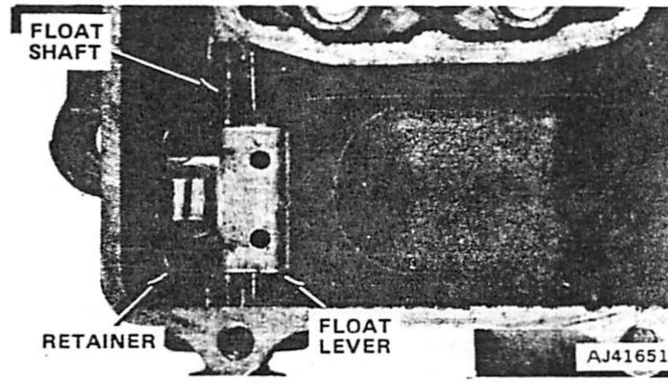

Fig. 1J-125 Float Assembly

(14) Remove fuel inlet needle seat and gasket. Remove main jets with Main Metering Jet Removal Tool J-10174-01 (fig. 1J-126).

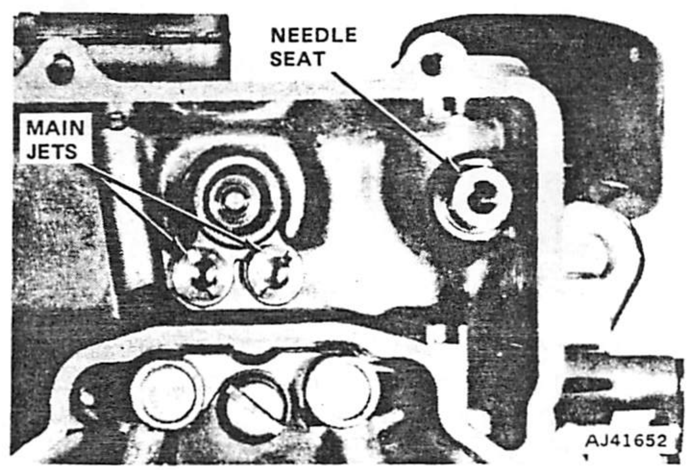

Fig. 1J-126 Interior View of Fuel Bowl

(15) Remove accelerator pump discharge screw, air distribution plate, booster venturi and gasket (fig. 1J-127). Do not attempt to remove tubes from venturi assembly. Invert main body and catch accelerator pump discharge weight and ball.

(16) Disconnect accelerator pump operating rod from overtravel lever. Remove rod and retainer.

(17) Remove accelerator pump cover attaching screws. Remove bowl vent bell crank and bracket assembly, accelerator pump cover, diaphragm assembly and spring (fig. 1J-128).

(18) Remove elastomer valve by grasping firmly and pulling out.

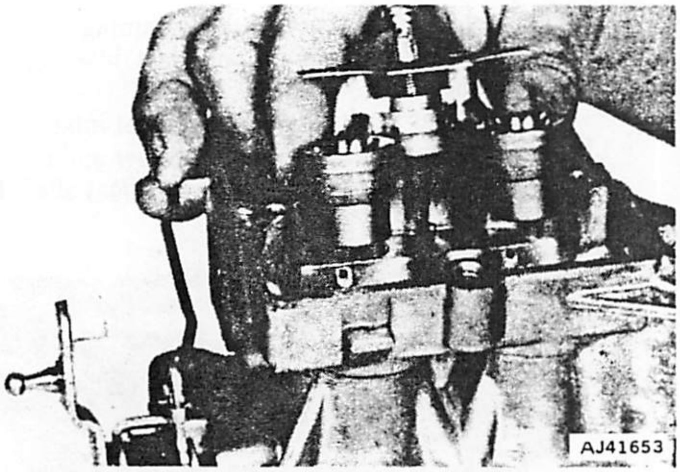

Fig. 1J-127 Booster Venturi Assembly

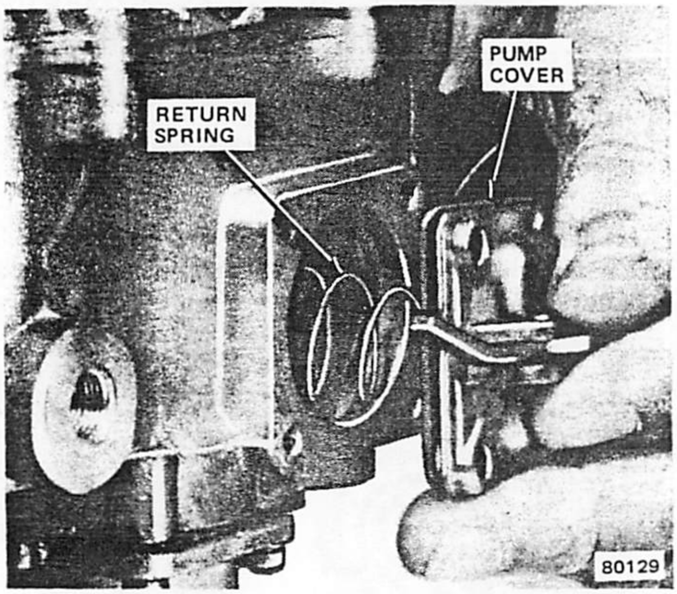

Fig. 1J-128 Accelerator Pump Assembly

NOTE: *If the elastomer valve tip breaks off during removal, ensure the tip is removed from the fuel bowl. The elastomer valve must be replaced whenever it has been removed from the carburetor.*

(19) Invert main body and remove power valve cover, gasket and screws. Remove power valve (fig. 1J-129). Remove and discard power valve gasket.

(20) Remove attaching screws and remove compensation assembly and gasket from carburetor body.

(21) Remove aneroid-to-chamber screws. Remove gasket and aneroid from chamber.

NOTE: *If it is necessary to remove the idle mixture screws because air pressure and soaking did not completely clean the air passages, remove caps concealing screws. Count and record number of turns necessary to lightly seat mixture screws for assembly reference. Remove idle mixture screws.*

(22) Remove solenoid.

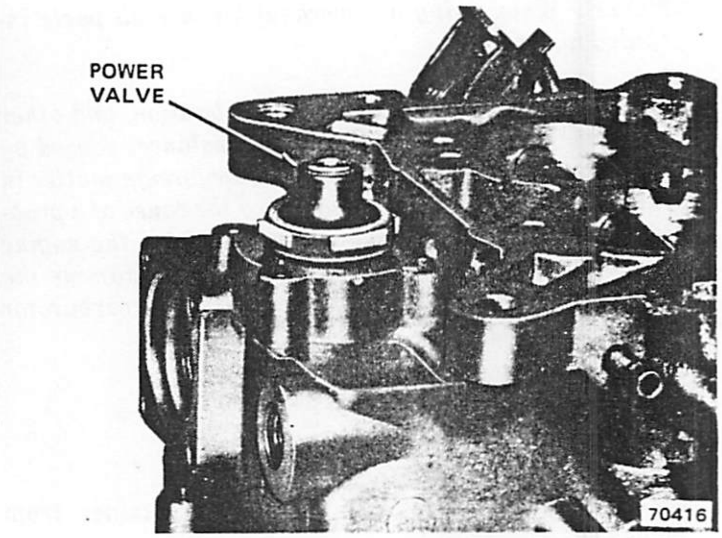

Fig. 1J-129 Power Valve

Cleaning and Inspection

Debris, gum, water and carbon contamination in the carburetor or on the exterior moving parts of the carburetor are often responsible for unsatisfactory engine performance. Efficient carburetion depends upon careful cleaning and inspection.

The cleaning and inspection procedure listed below does not involve the replacement parts included in the carburetor overhaul/repair kit. Install all gaskets and parts included in the repair kit when the carburetor is assembled. Discard the original gaskets and replaced parts.

CAUTION: *Do not use a wire brush to clean any parts. Do not use a drill or wire to clean any openings or passages in the carburetor. A drill or wire may enlarge the hole or passage and change the calibration of the carburetor.*

CAUTION: *Do not immerse any part of the altitude compensation assembly in cleaning solvent. Wipe all parts with clean, lint-free cloths.*

Wash all the carburetor parts except accelerator pump diaphragm, power valve, vacuum modulator diaphragm dashpot assembly and altitude compensation assembly in clean commercial carburetor cleaning solvent. If a commercial solvent is not available, use lacquer thinner or denatured alcohol. If a commercial cleaner is used, rinse the parts in hot water to remove all traces of the cleaning solvent, then dry them with compressed air. Wipe all parts that cannot be immersed in solvent with a clean, soft, dry cloth. Ensure all sediment, gum, carbon and other foreign matter is removed from all parts. Force compressed air through all passages of the carburetor.

Examine the choke shaft for wear and excessive looseness or a binding condition. Inspect the choke shaft and polish with fine crocus cloth or equivalent material.

Inspect the choke valve for nicked edges and for ease of operation and repair if necessary. Ensure all carbon and foreign residue has been removed from the automatic choke housing. Examine the throttle shaft for excessive

With the aneroid removed from the chamber, spring tension should fully close the air valve. Examine the position of the spring in the retainer and ensure it is properly seated (fig. 1J-130). Inspect the rubber seal on the valve stem. Examine the aneroid assembly and ensure that the atmospheric pressure inlet hole is free of debris.

looseness or binding in its bore. Examine the throttle valves for burrs that could prevent proper closure. Inspect the main body, air horn, booster venturi assemblies, choke housing and choke cover, power valve cover and accelerator pump cover for cracks. Replace the float if the arm needle contact surface is grooved. If the float is serviceable, polish the needle contact surface of the arm with crocus cloth or equivalent material. Replace float shaft if worn. Replace all screws and nuts that have stripped threads. Replace all distorted or broken springs. Inspect all gasket mating surfaces for nicks and burrs. Repair or replace any parts that have a damaged gasket surface.

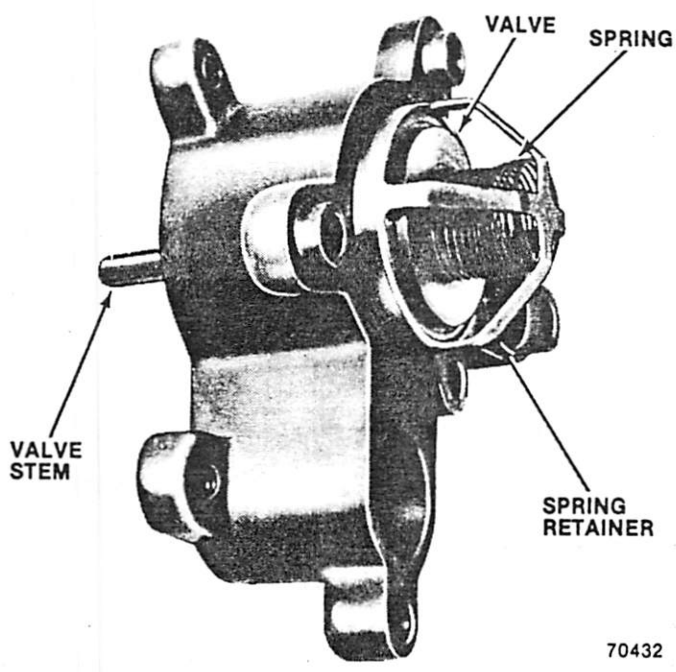

Fig. 1J-130 Altitude Compensator

Assembly

Refer to figure 1J-123 for parts identification.

NOTE: *Ensure all holes in the replacement gaskets have been properly punched and that no foreign material has adhered to the gaskets. Inspect vacuum diaphragms for tears or cuts.*

(1) Install fast idle speed adjustment screw and spring on fast idle lever.

(2) Install solenoid.

(3) Place fast idle lever assembly on throttle shaft and install retaining washer and nut.

(4) Lubricate tip of replacement elastomer valve and insert tip into accelerator pump cavity center hole.

(a) Using needlenose pliers, grasp valve tip from inside fuel bowl.

(b) Pull valve in until it seats in pump cavity wall. Cut off tip forward of retaining shoulder.

(c) Remove tip from bowl.

(5) Install accelerator pump diaphragm return spring in chamber depression. Insert diaphragm assembly in cover, place cover and diaphragm assembly into position on main body and install two right-side cover screws.

(6) Position bowl vent bell crank and bracket assembly over accelerator pump cover left-side holes. Ensure vent lever is positioned behing pump lever. Install retaining screws.

(7) Insert accelerator pump operating rod into inboard hole of accelerator pump actuating lever.

(8) Position accelerator pump operating rod retainer over hole 3 in overtravel lever.

(9) Invert main body and install power valve and replacement gasket. Tighten valve securely.

(10) Install power valve cover and replacement gasket.

NOTE: *Install the power valve cover with the extensions adjacent to the main body to provide entry for the slots on the idle mixture adjustment screw caps.*

(11) If removed, install idle mixture adjustment screws and springs. Turn screws in gently with fingers until they lightly seat, then back off number of turns recorded during removal for preliminary idle fuel mixture adjustment.

NOTE: *Do not install idle mixture screw caps at this time.*

(12) Install main jets.

(13) Install fuel inlet seat and replacement gasket. Install fuel inlet needle assembly in fuel inlet seat. Fuel inlet needles and seats are matched assemblies. Ensure correct needle and seat are assembled together.

(14) Slide float shaft into float lever. Position float shaft retainer on float shaft.

(15) Install float damper spring with short wire under float lever (fig. 1J-131).

(16) Insert float assembly into fuel bowl and hook float lever tab under fuel inlet needle assembly. Insert float shaft into its guides at sides of fuel bowl.

(17) Press float shaft retainer into groove on fuel inlet needle seat and adjust float level. Refer to Service Adjustment Procedures.

(18) Drop accelerator pump discharge ball into passage in main body.

(19) Position replacement booster venturi gasket and booster venturi in main body.

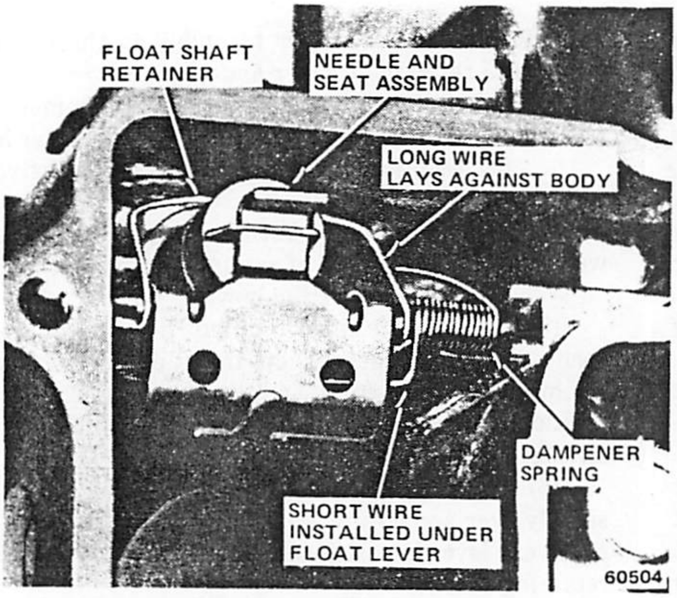

Fig. 1J-131 Damper Spring Installation

(20) Drop accelerator pump discharge weight into booster on top of discharge ball.

(21) Install air distribution plate and accelerator pump discharge screw and tighten screw.

(22) Position fast idle cam lever on choke shaft. Install retainer.

NOTE: *The bottom of the fast idle cam lever adjustment screw must rest against the tang on the choke shaft.*

(23) Insert choke shaft into the rear of choke housing. Position choke shaft so that hole in shaft is on left side of choke housing.

(24) Install fast idle cam rod on fast idle cam lever.

(25) Install fast idle cam and retainer to hub on main body.

(26) Place choke housing vacuum pickup port-to-main body gasket on choke housing flange.

(27) Wipe choke shaft bushing clean (small piece of plastic material), and install in choke shaft bore in choke housing.

(28) Position choke housing on main body and install choke housing attaching screws.

(29) Install retainer to fast idle cam rod at fast idle cam.

(30) Install coil lever.

(31) Install choke housing cover, gasket, retainer and screws. Turn choke cover 1/4 turn rich and tighten one retaining screw.

(32) Install choke shield.

(33) Insert choke rod into choke valve lever. Lower end of rod must protrude through air horn.

(34) Install choke valve lever on choke shaft and tighten screw.

(35) Install plastic dust shield on choke rod.

(36) Position main body gasket on main body.

(37) Position air horn on main body and gasket so that choke valve rod fits through opening in main body. Ensure plastic shield is free to slide.

(38) Insert end of choke valve rod into choke valve lever.

(39) Install air horn attaching screws and carburetor identification tag. Tighten attaching screws.

(40) Attach choke valve rod and retainer on choke shaft lever.

(41) Install air cleaner anchor screw.

(42) If equipped, install modulator diaphragm return spring in recess of air horn. Position modulator cover over diaphragm assembly and engage piston rod with keyed slot of modulator arm. Place diaphragm and cover over return spring and install cover retaining screws.

(43) Adjust initial choke valve clearance. Refer to Service Adjustment Procedures.

(44) Adjust fast idle cam linkage. Refer to Service Adjustment Procedures.

(45) Adjust choke unloader clearance. Refer to Service Adjustment Procedures.

(46) Loosen choke housing cover screw and align cover index with specified notch. Refer to Specifications. Tighten all cover screws.

(47) Position aneroid on chamber with replacement gasket. Install screws.

(48) Position assembly on carburetor body with replacement gasket. Install screws.

NOTE: *There are no adjustments for the altitude compensator assembly.* ***Do not*** *attempt to turn the fitting on the aneroid. It is adjusted and sealed during factory assembly.*

SERVICE ADJUSTMENT PROCEDURES

Float Level Adjustment—Dry

(1) Remove air horn assembly and gasket. Raise float by pressing down on float tab until fuel inlet needle is lightly seated.

(2) Use T-scale to measure distance from fuel bowl machined top surface to flat surface on either corner of float at free end. Refer to Specifications for correct dimension.

(3) Bend float tab to adjust. Hold fuel inlet needle off its seat while adjusting to prevent damage to Viton-tipped needle (fig. 1J-132).

Float Level Adjustment—Wet

WARNING: *Exercise extreme caution when performing this procedure. Fuel vapor is present when carburetor air horn is removed. Extinguish cigarettes and other smoking materials.*

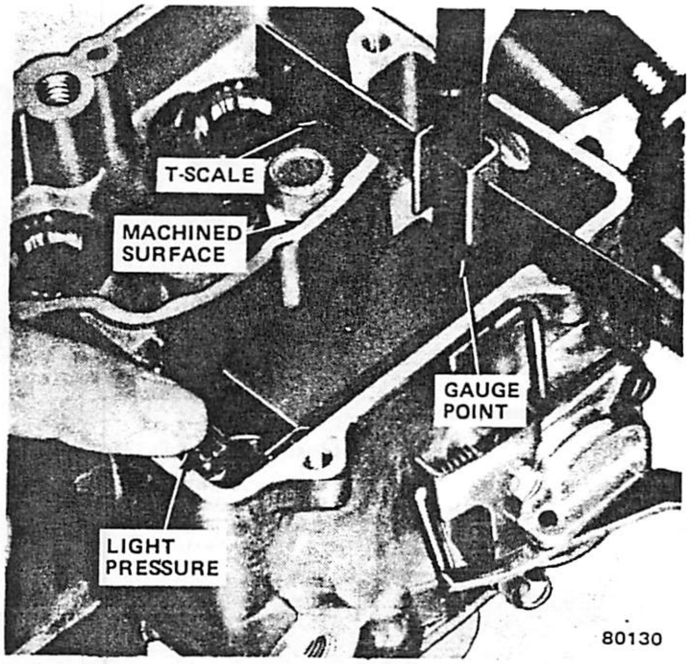

Fig. 1J-132 Float Level Adjustment—Dry

(1) Position vehicle on flat, level surface and warm engine to normal operating temperature. Turn engine off. Remove carburetor air cleaner assembly and anchor screw.

(2) Remove air horn attaching screws and carburetor identification tag. Temporarily place air horn and gasket in position on carburetor main body and start engine. Let engine idle one minute, then turn engine off and move air horn aside. Remove air horn gasket to provide access to float assembly.

(3) Use T-scale to measure vertical distance from top machined surface of carburetor main body to level of fuel in fuel bowl (fig. 1J-133). Measure at least 1/4 inch away from vertical surface to assure accurate indication because top surface of fuel is concave (higher at edges than in center). Measure fuel level at exact point of contact between scale and fuel. Refer to Specifications for correct fuel level (wet) dimension.

(4) To adjust fuel level, bend float tab (contacting fuel inlet valve) upward in relation to original position to raise fuel level, and downward to lower it. Each time adjustment is made to float tab to alter fuel level, place gasket and air horn on carburetor, start engine and permit to idle one minute to stabilize fuel level. Turn engine off and measure fuel level after each adjustment until specified level is obtained.

(5) Install replacement air horn gasket, air horn assembly, carburetor identification tag and attaching screws. Ensure plastic dust seal on choke operating rod is positioned correctly and does not cause rod to bind. Tighten screws. Install air cleaner anchor screw and tighten.

(6) Adjust idle speed. Refer to Idle Speed Adjustment.

(7) Install air cleaner.

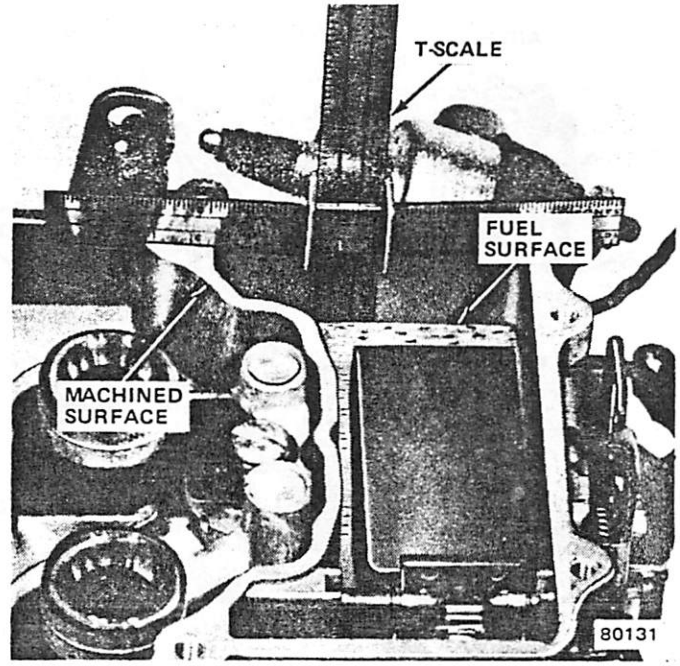

Fig. 1J-133 Float Level Adjustment—Wet

Initial Choke Valve Clearance and Fast Idle Cam Linkage Adjustments

(1) Loosen choke cover retaining screws.

(2) Open throttle and rotate choke cover until choke valve is held closed. Tighten one retaining screw.

(3) Close throttle with fast idle speed adjustment screw on top step of cam.

(4) Apply vacuum to hold choke diaphragm against setscrew. Do not press on links.

NOTE: *If vacuum is applied to the choke diaphragm with a hand pump, an air leak may be noticed. This is normal.*

(5) Measure clearance between lower edge of choke valve and air horn (fig. 1J-134).

(6) Adjust clearance by turning screw located at rear of diaphragm housing.

(7) Push down on fast idle cam lever until fast idle speed adjustment screw is in contact with second step (index) and against shoulder of high step.

(8) Measure clearance between upper edge of choke valve and air horn wall. Refer to Specifications for correct dimension.

(9) Adjust by turning fast idle cam lever screw (fig. 1J-135).

(10) Loosen choke cover retaining screw and adjust choke by turning cover until index is aligned with correct notch on housing. Refer to Specifications.

(11) Position choke cover shield and install retaining screws.

Choke Unloader Adjustment

(1) Hold throttle fully open and apply pressure on choke valve toward closed position.

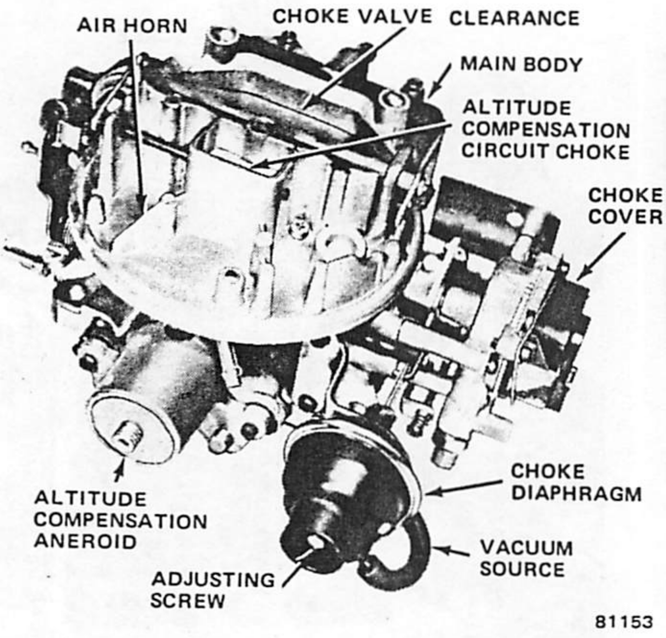

Fig. 1J-134 Initial Choke Valve Clearance Adjustment

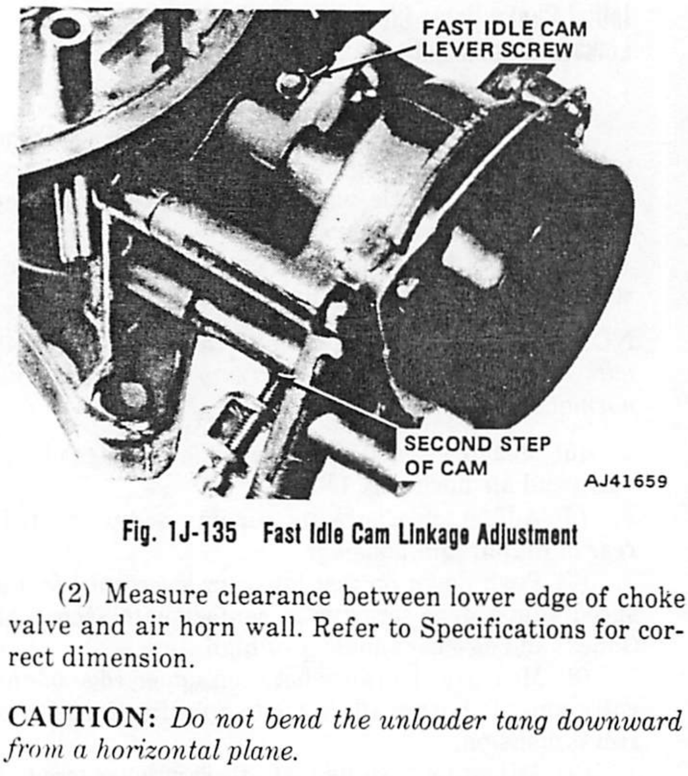

Fig. 1J-135 Fast Idle Cam Linkage Adjustment

(2) Measure clearance between lower edge of choke valve and air horn wall. Refer to Specifications for correct dimension.

CAUTION: *Do not bend the unloader tang downward from a horizontal plane.*

(3) Adjust by bending unloader tang that contacts fast idle cam (fig. 1J-136). Bend toward cam to increase clearance and away from cam to decrease clearance.

(4) After completing adjustment, open throttle until unloader tang is directly below fast idle cam pivot. There must be exactly 0.070-inch (1.8 mm) clearance between unloader tang and edge of fast idle cam (fig. 1J-137).

(5) Operate throttle and inspect unloader tang to ensure it does not bind, contact or stick on any part of

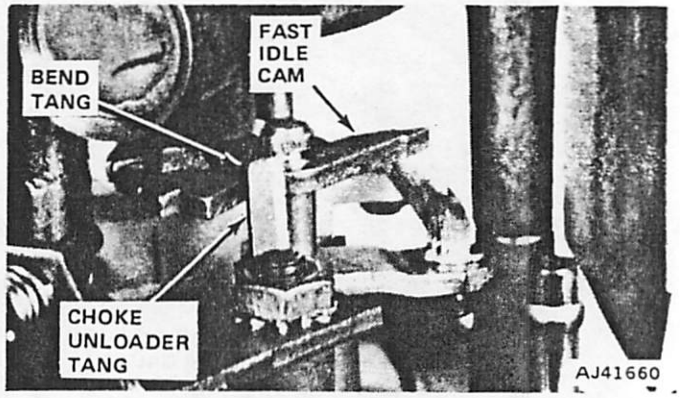

Fig. 1J-136 Choke Unloader Adjustment

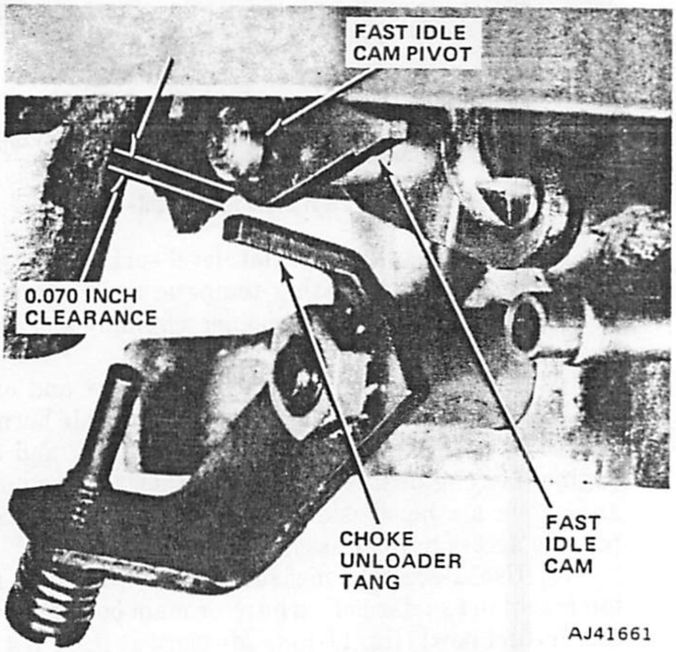

Fig. 1J-137 Unloader—Fast Idle Cam Clearance

carburetor casting or linkage. After carburetor installation, inspect for full throttle opening when throttle is operated from inside vehicle. If full throttle opening is not obtainable, it may be necessary to remove excess padding under floormat or reposition throttle cable bracket located on engine.

Automatic Choke Adjustment

Loosen choke housing cover retaining screws and rotate cover in the desired direction as indicated by the arrow on the face of the cover. Refer to Specifications for the correct position (notch). The specified position will be satisfactory for most driving conditions.

NOTE: *The richer the choke setting the longer the coil tension exerts force against the linkage and holds the choke in a closed position. As heated incoming air and the electric heater warm the coil, the tension is reduced and fast idle cam weight gradually moves the choke linkage in the opposite direction.*

Accelerator Pump Stroke Adjustment

The specified accelerator pump stroke has been selected to help maintain the exhaust emission level of the engine within regulations. The unused adjustment holes permit adjusting the stroke for a specific engine application and ambient location. The primary throttle shaft lever (overtravel lever) has four holes and the accelerator pump link has two holes (fig. 1J-138).

For normal operating conditions, the accelerator pump operating rod should be in the third hole (away from the lever pivot) of the overtravel lever and the inboard hole (closest to the pump plunger) in the accelerator pump lever. In extremely hot climate regions, the pump stroke may be shortened to provide smoother acceleration by placing the pump rod in the second hole of the overtravel lever. In extremely cold climate regions, the pump stroke may be increased to provide smoother acceleration by placing the pump rod in the fourth hole of the overtravel lever.

(1) Remove retaining clip from operating rod.

(2) Position clip over specified hole in overtravel lever. Insert operating rod end through clip and overtravel lever. Snap release clip over rod end.

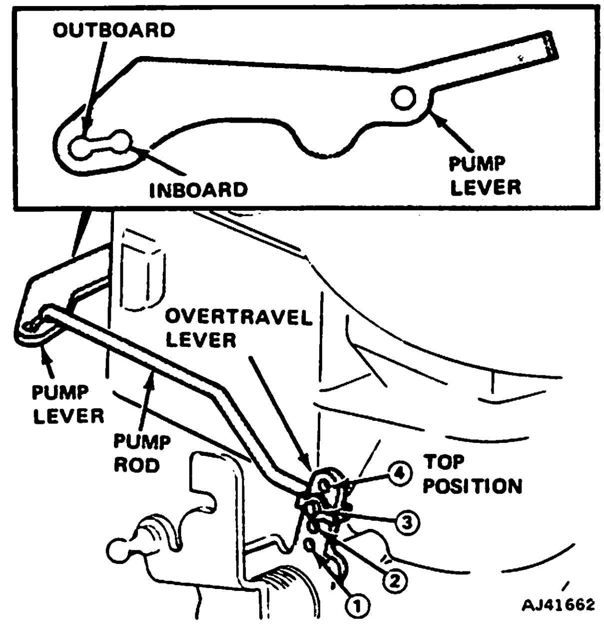

Fig. 1J-138 Accelerator Pump Stroke Adjustment

Idle Speed and Mixture Adjustments

Idle Speed Adjustment

NOTE: *When adjusting idle speed, put manual transmission in Neutral. Put automatic transmission in Drive.*

WARNING: *Set parking brake firmly. Do not accelerate engine.*

(1) Connect tachometer, start engine and warm to normal operating temperature. Choke must be off.

WARNING: *Use extreme caution when engine is operating. Do not stand in direct line with fan. Do not put hands near pulleys, belts or fan. Do not wear loose clothing.*

(2) Turn hex-head screw on solenoid carriage to obtain 600 rpm.

(3) Disconnect solenoid wire connector and adjust curb idle screw to obtain 500 rpm curb idle speed.

(4) Connect solenoid wire connector.

(5) If equipped with dashpot: with throttle at curb idle position, fully depress dashpot stem and measure clearance between stem and throttle lever. Clearance should be 0.032 inch (0.813 mm). Adjust by loosening locknut and turning dashpot.

Idle Mixture Adjustment

NOTE: *The idle mixture should be adjusted only if the mixture screws were removed or altered during major carburetor overhaul.*

(1) Connect tachometer. Start engine and warm to normal operating temperature.

NOTE: *Use a tachometer with an expanded scale of 400-800 or 0-1000 rpm. Inspect tachometer periodically to ensure accuracy within two percent.*

(2) Position automatic transmission in Drive, manual in Neutral.

(3) Adjust idle speed to specified rpm. Use Set-To value.

(4) Turn mixture adjustment screws leaner (clockwise) until perceptible loss of rpm is noted.

(5) Turn mixture screws richer (counterclockwise) until highest rpm is obtained. Do not turn screws any further than position where highest rpm is first obtained. This is referred to as lean best idle.

NOTE: *Engine speed will increase above curb idle speed an amount that corresponds approximately to the lean drop specification.*

(6) As final adjustment, turn both idle mixture screws clockwise in small, equal amounts until specified drop is achieved.

NOTE: *If the final rpm differs more than ± 30 rpm from the originally adjusted curb idle speed, adjust curb idle to specification and repeat steps (5) and (6).*

(7) Install mixture screw caps removed during overhaul. Use care to prevent disturbing mixture adjustment while installing caps.

Model 2150 Carburetor Idle Drop

Engine	Transmission	Idle Drop RPM
360 2V	Manual Automatic	50 20

81154

Fast Idle Speed Adjustment

Adjust the fast idle speed with the engine at normal operating temperature and with the EGR valve disconnected. Position the fast idle adjustment screw in contact with second step and against the shoulder of the high step of the fast idle cam. Refer to Specifications for the correct engine rpm. Adjust by turning the fast idle adjustment screw.

Bowl Vent Adjustment

This is not a precise adjustment. It is necessary to ensure that the mechanical bowl vent is open at idle and closed at greater throttle openings. It may be performed with the carburetor installed or removed from the engine.

(1) If installed on engine, turn ignition off. Ensure fast idle adjustment screw is not in contact with fast idle cam.

(2) Manually depress stem of bowl vent valve and insert gauge between valve stem and flat on end of bellcrank. Refer to Specifications for clearance dimension.

(3) If clearance is not correct, bend bellcrank as required. Do not bend lever on accelerator pump.

CHOKE MECHANISM SERVICE

The choke mechanism may be serviced without removing the carburetor from the engine. If the choke or linkage binds, sticks, or does not operate smoothly, perform the following.

(1) Disconnect heater wire connector and remove choke cover.

(2) Remove choke lever screw and lever.

(3) Remove choke housing. Slide out choke shaft. Remove thin plastic bushing.

(4) Polish shaft with crocus cloth. Wipe bushing clean and insert into housing.

(5) Wipe fast idle cam clean.

(6) Install choke housing over choke shaft and install housing screws.

(7) Install choke lever and screw.

(8) Install choke cover, connect heater connector wire and adjust to specification.

SPECIFICATIONS

Model 2150 Carburetor Calibrations (Inches)

	2RHM2	2RHA2
Throttle Bore Size	1.562	1.562
Main Venturi Size	1.21	1.21
Fuel Inlet Diameter	0.101	0.101
Low Speed Jet (Tube)	0.033	0.036
Economizer	0.052	0.061
Idle Air Bleed	0.086	0.086
Main Jet Number	55	55
High Speed Bleed	0.055	0.055
Power Valve Timing (inches of Hg) —First Stage —Second Stage	9.0 5.0	9.0 5.0
Accelerator Pump Jet	0.024	0.024
Vacuum Spark Port —Height —Width	0.050 0.085	0.050 0.085
Choke Heat Bypass	0.114	0.114
Choke Heat Inlet Restriction	0.076	0.076
Choke Vacuum Restriction	0.089	0.089

80600

Model 2150 Carburetor Specifications

List Number	Application	Float Level (Wet) (Inches)		Float Level (Dry)	Initial Choke Valve Clearance (Inches)		Fast Idle Cam Setting (Inches)		Automatic Choke Cover Setting (Notches Rich)		Choke Unloader (Inches)	Fast Idle Speed ①		Bowl Vent Clearance	Choke Bimetal ID
		Set To	OK Range		Set To	OK Range	Set To	OK Range	Set To	OK Range		Set To	OK Range		
2RHM2	360 Manual 49 State	0.93	0.868 to 0.992	Measure from machined surface to a point on float 1/8-inch from tip. Needle Seated.	0.116	0.098 to 0.140	0.076	0.061 to 0.091	1	1/2 to 1-1/2	0.350 min.	1500	1400 to 1600	0.120	KJ
2RHA2	360 Automatic 49 State	0.93	0.868 to 0.992	21/64 in. ± 1/32 in.	0.116	0.098 to 0.140	0.076	0.061 to 0.091	1	1/2 to 1-1/2	0.350 min.	1600	1500 to 1700	0.120	KJ

①Hot with EGR valve disconnected.

80601

EXHAUST GAS RECIRCULATION (EGR) SYSTEM

GENERAL

The EGR system used on all Jeep vehicles reduces the production of oxides of nitrogen (NOx) by introducing a metered amount of exhaust gas into the combustion chambers. Exhaust gas is inert (will not burn), therefore combustion temperature is lowered and less NOx is produced at the lower combustion temperature.

EGR action does not occur until the engine coolant temperature has reached a calibrated level and the engine load is sufficient to permit proper EGR operation (figs. 1J-139. 140 and 141).

The EGR coolant temperature override (CTO) valve prevents EGR action until engine coolant temperature reaches a calibrated level, and the back-pressure sensor permits EGR action only at increased engine loads, improving driveability.

Depending on model applications, the following components may be used either seperately or together. The Thermal Vacuum Switch (TVS) is located in the air cleaner and is controlled by air cleaner air temperature. The TVS controls the vacuum passage between the EGR CTO valve and the EGR valve. At air temperatures below the calibrated value, the TVS limits the effects of vacuum on the EGR valve. This prohibits EGR valve operation and improves cold engine driveability. The EGR Vacuum Dump Valve is connected between the EGR vacuum source and the EGR valve. At the calibrated vacuum level, the vacuum to the EGR valve is interrupted, thereby preventing EGR operation. This valve is used to eliminate the EGR function at relatively low intake manifold vacuum levels.

EGR VALVE

The EGR valve mounts on a spacer plate located beneath the carburetor for four-cylinder engines, on the side of the intake manifold for six-cylinder engines and on a machined surface at the rear of the intake manifold on eight-cylinder engines. Exhaust gas enters the intake manifold via the cross flow cast into the cylinder head on four-cylinder engines, is drawn from the center of the exhaust manifold via a flexible tube on six-cylinder engines and from the exhaust crossover passage on eight-cylinder engines.

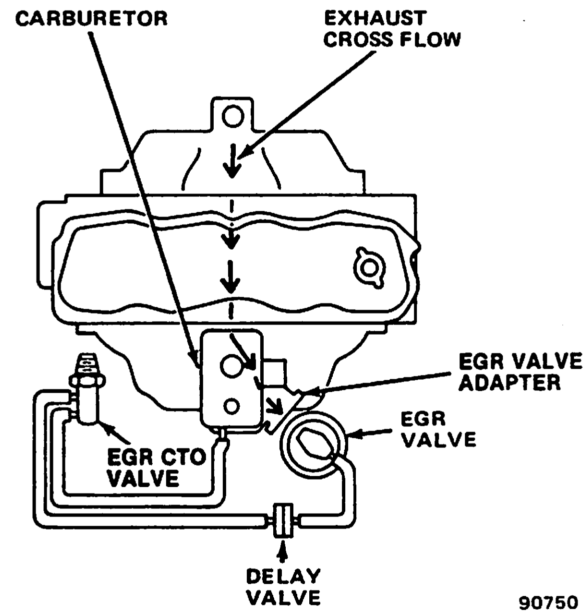

Fig. 1J-139 EGR System—Four-Cylinder Engine—Typical

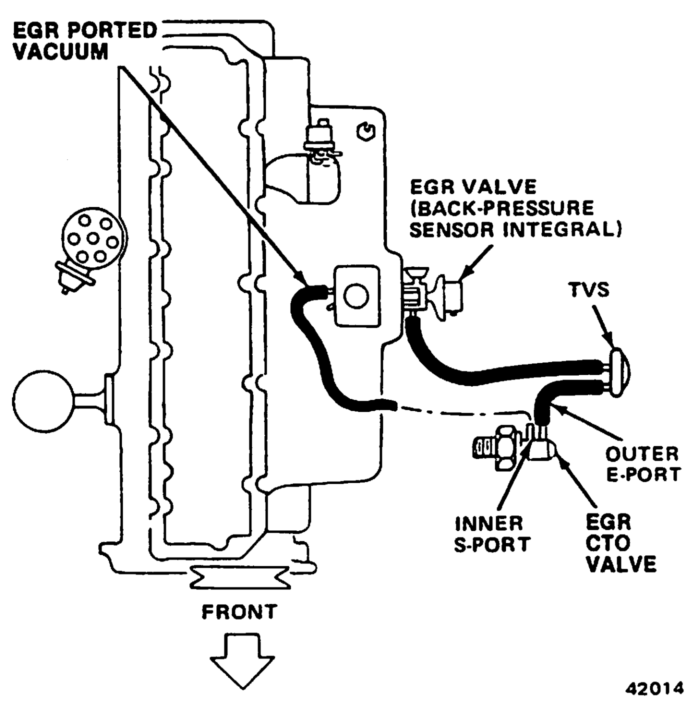

Fig. 1J-140 EGR System—Six-Cylinder Engine—Typical

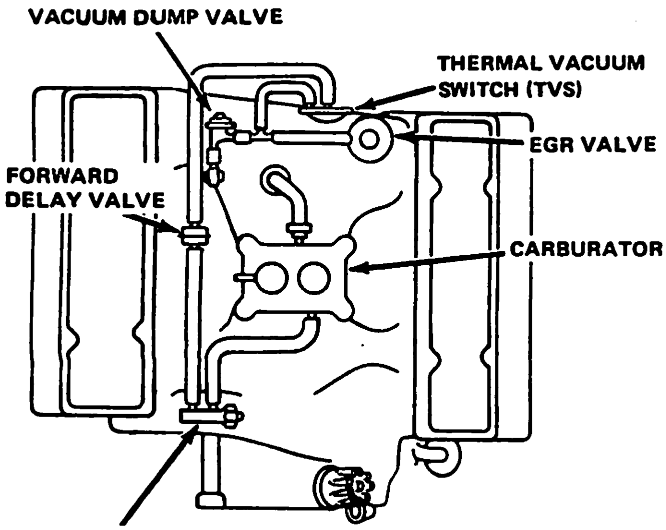

Fig. 1J-141 EGR System—Eight-Cylinder Engine—Typical

An integral back-pressure sensor is incorporated in the EGR valve for all engines. Calibration is accomplished by the selective use of different diaphragm spring loads and flow control orifices. The unit combines the functions of the EGR valve and back-pressure sensor.

The flow (recirculation) of exhaust gas is controlled by a movable pintle within the valve (fig. 1J-142). In the relaxed position, spring pressure holds the pintle against its seat, confining exhaust gases to the exhaust manifold. Carburetor ported vacuum is available at the power diaphragm to force the pintle from its seat, but this cannot occur while the air inlet valve in the power diaphragm is open.

Exhaust gas exerts pressure (back-pressure) inside the exhaust manifold whenever the engine is operating. This pressure is conducted through the hollow pintle stem into the control diaphragm chamber. If this pressure is great enough to overcome control spring pressure, the control diaphragm is moved against the air inlet valve. Full vacuum is now applied to the power diaphragm and the pintle moves off its seat. EGR action now begins. If the back-pressure drops sufficiently, the control diaphragm moves away from the air inlet valve, the power diaphragm again relaxes and EGR action stops.

When system vacuum remains constant, within the range of the unit, recirculation is primarily a function of the exhaust manifold back-pressure level. EGR operation is then dependent on exhaust back-pressure and exhaust gas is a fixed percentage of the incoming charge.

EGR Valve Functional Tests

The mechanical condition of the exhaust system may affect the operation of an EGR valve with a back-pressure sensor. Excessive back-pressure from exhaust system restrictions may create driveability problems.

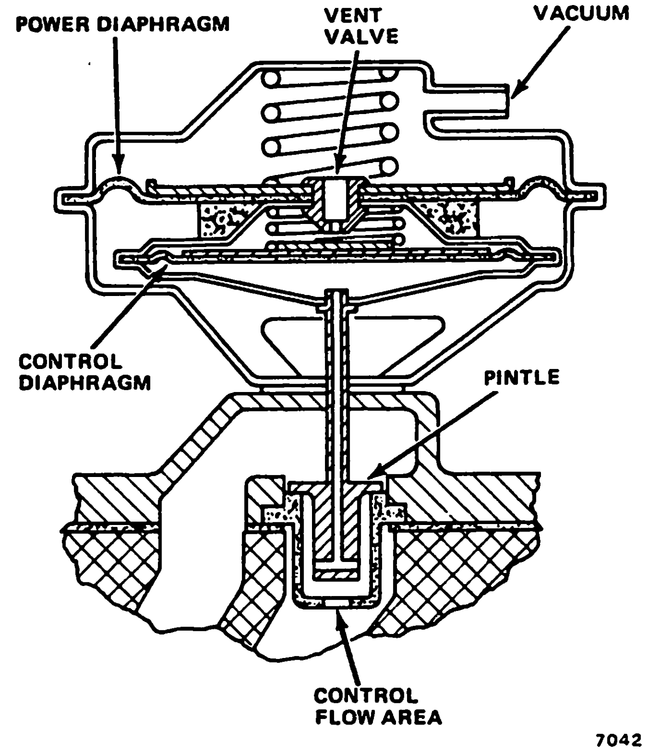

Fig. 1J-142 EGR Valve with Back-Pressure Sensor

Refer to Chapter 1K—Exhaust Systems for Restricted Exhaust System Diagnosis. Leaks from the exhaust system may decrease back-pressure enough to prevent proper EGR operation. This will increase undesirable exhaust emissions. Visually inspect the exhaust system if leaks are suspected.

Valve Opening Test

WARNING: *Use extreme caution when engine is operating. Do not stand in direct line with fan. Do not put hands near pulleys, belts or fan. Do not wear loose clothing.*

With the engine at normal operating temperature and at curb idle speed, rapidly open and close the throttle. The throttle should be opened sufficiently for the engine speed to attain 1500 rpm. A definite movement should be observed in the EGR valve diaphragm. If the diaphragm does not move, the probable causes are: faulty vacuum hose to the EGR valve, defective EGR valve diaphragm or defective back-pressure sensor diaphragm. Inspect vacuum hoses for air leaks.

Valve Closing Test

With the engine at normal operating temperature and at curb idle speed, manually depress the EGR valve diaphragm. This should cause an immediate decrease in engine speed, indicating that the EGR valve had been properly preventing the flow of exhaust gas during idle. If there is no change in engine rpm and the engine is idling properly, exhaust gases are not entering the combustion chamber. The probable cause is a plugged passage between the EGR valve and the intake manifold.

If the engine idles improperly and the rpm is not noticeably affected by compressing the EGR diaphragm, the EGR valve is not preventing the flow of exhaust gas during idle. There is either a defect in the vacuum hoses, hose routings or the valve itself.

EGR Valve Replacement

Removal

(1) For four- and eight-cylinder engines, remove air cleaner assembly.
(2) Disconnect vacuum hoses.
(3) Remove two retaining screws/nuts from manifold.
(4) Remove EGR valve and gasket.
(5) Clean EGR pintle, if necessary. Refer to EGR Valve Maintenance.
(6) Discard gasket and clean all gasket mating surfaces.

Installation

(1) Install gasket and EGR valve.
(2) Install retaining screws/nuts and tighten.
(3) Connect vacuum hoses and install air cleaner assembly, if removed.

NOTE: *For correct vacuum hose routings, refer to figures 1J-139, 1J-140 and 1J-141.*

EGR Valve Maintenance

Remove all carbon deposits from the stainless steel metering pintle of the valve with a wire brush. After cleaning, depress the diaphragm, cap the vacuum inlet and repeatedly open the EGR valve manually by pressing down on the diaphragm and releasing. Pintle should remain retracted. If it does not, diaphragm has a leak and valve must be replaced.

On six-cylinder engines, carbon deposits will collect more rapidly in the exhaust gas discharge passage (upper hole). If the deposits cannot be removed with a spiral-type wire brush, a 9/16-inch (14 mm) drill bit may be used. Coat the tip of the drill bit with heavy grease and use locking pliers to rotate it in the discharge passage.

EGR CTO VALVE

The EGR CTO valve is located in the coolant passage at the right rear of the cylinder head for four-cylinder engines, on the intake manifold for six-cylinder engines and either on the intake manifold adjacent to the oil filler tube or at the right rear corner of the engine adjacent to the EGR valve for eight-cylinder engines. The inner port(s) connects by hose to the EGR port at the carburetor (ported vacuum), the outer port (E) connects to the EGR valve (or to the TVS for four-cylinder engines, fig. 1J-139).

When the coolant temperature is below the calibrated switching temperature of the CTO valve there is no vacuum applied to the EGR valve. The EGR CTO valve opens at 100°F (38°C) for four-cylinder engines and at 115°F (46°C) for six- and eight-cylinder engines, and can be identified by its black body or a black paint dab.

EGR CTO Valve Functional Test

NOTE: *Engine coolant temperature must be 10°F (5.6°C) below the calibrated opening temperature.*

(1) Inspect vacuum hoses for air leaks and correct routings (figs. 1J-139, 140 and 141).
(2) Disconnect vacuum hose at EGR valve. Connect hose to vacuum gauge.

WARNING: *Use extreme caution when engine is operating. Do not stand in direct line with fan. Do not put hands near pulleys, belts or fan. Do not wear loose clothing.*

(3) Operate engine at 1500 rpm. No vacuum should be indicated on gauge. If vacuum is indicated, replace EGR CTO valve.
(4) Idle engine until coolant temperature exceeds 100°F (38°C) for four-cylinder engines and 115°F (46°C) for six- and eight-cylinder engines.

NOTE: *The coolant temperature gauge pointer will be approximately midway between the cold mark and the beginning of the normal operating temperature band when the engine coolant temperature is 115°F (46°C).*

(5) Accelerate engine to 1500 rpm. Carburetor ported vacuum should be indicated on vacuum gauge. If not, replace EGR CTO valve.

EGR CTO Valve Replacement

Removal—Four-Cylinder Engine

WARNING: *Serious burns can result if pressure is not released and if hot coolant is not drained before removing valve.*

(1) Drain coolant from radiator.
(2) Disconnect vacuum hoses.
(3) Use open-end wrench to remove valve from right rear side of cylinder head.

Installation—Four-Cylinder Engine

(1) Install EGR CTO valve on cylinder head.
(2) Connect vacuum hoses.
(3) Install coolant and purge air from cooling system.

Removal—Six-Cylinder Engine

WARNING: *Serious burns can result if pressure is not released and if hot coolant is not drained before removing valve from block.*

(1) Drain Coolant from radiator.
(2) Disconnect vacuum hoses.
(3) Use open-end wrench to remove valve from intake manifold.

Installation—Six-Cylinder Engine

(1) Install EGR CTO valve on intake manifold.
(2) Connect vacuum hoses.
(3) Install coolant and purge air from cooling system.

Removal—Eight-Cylinder Engine

WARNING: *Serious burns can result if pressure is not released and if hot coolant is not drained before removing valve from intake manifold.*

(1) Drain coolant from radiator.
(2) Remove air cleaner assembly.
(3) If necessary, remove ignition coil bracket attaching screw and tip coil away from EGR CTO valve.
(4) Disconnect vacuum hoses from CTO valve.
(5) Using open-end wrench, remove valve from intake manifold or engine, as applicable.

Installation—Eight-Cylinder Engine

(1) Install EGR CTO valve in intake manifold or engine, as applicable.
(2) If removed, install ignition coil and bracket with attaching screw.
(3) Connect vacuum hoses to valve.
(4) Install air cleaner assembly.
(5) Install coolant and purge cooling system of air.

THERMAL VACUUM SWITCH (TVS)

The Thermal Vacuum Switch (TVS) is located in the air cleaner and functions as an **On-Off** switch controlled by air cleaner air temperature (fig. 1J-143). The TVS controls the vacuum passage between the EGR CTO Valve and the EGR Valve. At air temperatures below 40° to 50°F (4.4° to 10°C), the TVS limits the vacuum applied to the EGR valve and, by doing so, prevents EGR operation. This improves cold engine driveability.

NOTE: *A TVS is also used with other systems whose operation is dependent on air cleaner air temperature.*

TVS Functional Test

(1) Cool air cleaner air below TVS operational temperature limits: 40° to 50°F (4.4° to 10°C).

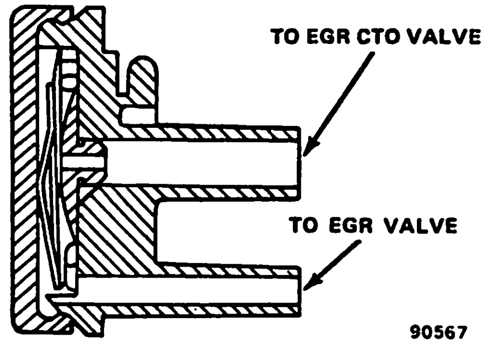

Fig. 1J-143 Thermal Vacuum Switch (TVS)

(2) Disconnect vacuum hoses from TVS and connect external vacuum source to one nipple and vacuum gauge to other nipple (fig. 1J-143).
(3) Apply vacuum to TVS. Vacuum should not be indicated on gauge through TVS when air temperature is below 40° to 50°F (4.4° to 10°C). If vacuum is indicated through TVS, replace it.
(4) Start engine and warm air cleaner air above 50°F (10°C). Vacuum should be indicated on gauge through TVS when air temperature exceeds 50°F (10°C). If vacuum is not indicated on gauge through TVS, replace it.

TVS Replacement

Removal

(1) Remove air cleaner.
(2) Remove filter element.
(3) Remove retaining clip(s) attaching TVS to air cleaner.
(4) Remove vacuum hoses.

Installation

(1) Position TVS in air cleaner.
(2) Install retaining clip(s).
(3) Install vacuum hoses.
(4) Install filter element.
(5) Install air cleaner.

EGR VACUUM DUMP VALVE

The EGR Vacuum Dump Valve is connected in parallel with the EGR vacuum source and the EGR valve for eight-cylinder engines. It functions to stop EGR operation when intake manifold vacuum drops to a level of 3 to 5 in. Hg (10 to 17 kPa), thereby effectively "dumping" the vacuum controlling EGR operation.

Vacuum Dump Valve Functional Test

WARNING: *Use extreme caution when engine is operating. Do not stand in direct line with fan. Do not put hands near pulleys, belts or fan. Do not wear loose clothing*

(1) Start engine and warm to normal operating temperature.

(2) Remove vacuum dump valve vacuum hose from connection at intake manifold and plug/cap manifold connection.

(3) Accelerate engine to 2000 rpm. Vacuum should be present at exhaust ports on bottom of valve. If not, replace valve.

(4) Connect vacuum dump valve vacuum hose to manifold. With engine speed at 2000 rpm, no vacuum should be present at exhaust ports on bottom of valve. If present, replace valve.

Vacuum Dump Valve Replacement

Removal

(1) Remove vacuum hoses from vacuum dump valve.

(2) Remove valve.

Installation

(1) Connect manifold vacuum hose to port "A" (fig. 1J-144).

(2) Connect EGR valve vacuum hose to port "B" (fig. 1J-144).

EGR DELAY VALVES

Forward Delay Valve

A forward delay valve is located between the EGR CTO valve and the EGR valve for certain engine applications (refer to Vacuum Diagrams for exact location). Its purpose is to modify the initial vacuum applied to the EGR valve by delaying the full effects of the vacuum. With gradual vacuum applied to the EGR valve, a harsh, sudden activation of the EGR system is avoided.

The black side of the valve is installed toward the EGR vacuum source.

Reverse Delay Valve

A reverse delay valve is located between the EGR CTO valve and the manifold vacuum source for certain engine applications (refer to Vacuum Diagrams for exact location). The purpose of the valve is to retain the manifold vacuum applied to the distributor vacuum advance mechanisim when the engine is cold and is rapidly accelerated. This prevents retardation of the ignition timing. When the engine coolant temperature is heated to the calibrated temperature switching point, the CTO valve switches to ported vacuum.

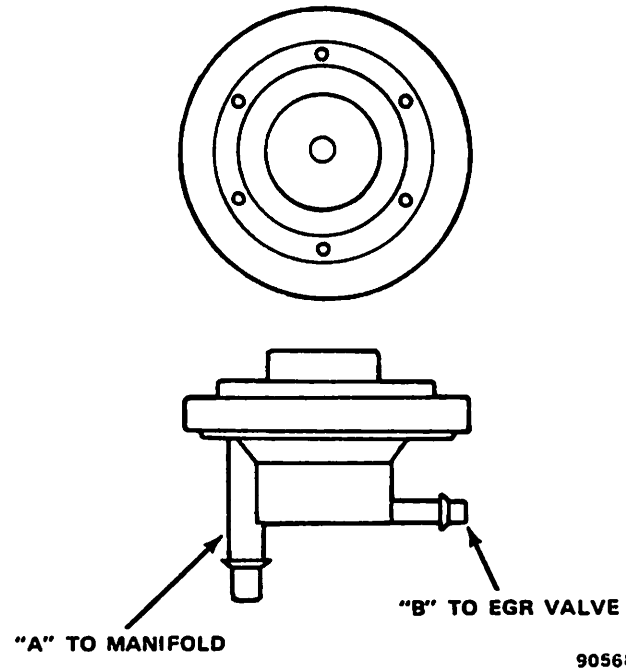

Fig. 1J-144 EGR Vacuum Dump Valve

POSITIVE CRANKCASE VENTILATION (PCV) SYSTEM

GENERAL

The PCV system functions to prevent crankcase vapor from entering the atmosphere. Filtered air is routed into the crankcase and vapor forced into the intake manifold and burned during the engine combustion process.

In addition to controlling crankcase vapor, the system also constantly ventilates the crankcase, which helps to prevent the formation of sludge.

COMPONENTS

The PCV system is comprised of an air inlet filter, a flow-control (PCV) valve and associated hoses (figs. 1J-145, 146 and 147). The air inlet filter is located inside the air cleaner housing on four- and six-cylinder engines. It is located in the oil filler cap on eight-cylinder engines.

Positive Crankcase Ventilation (PCV) Valve

Three PCV valves with different flow rates are used. Flow rate is measured in cubic feet per minute (cfm) or liters per second (l/s). Refer to the Jeep Parts Catalog for the correct PCV valve when replacing.

Replace the PCV valve at the intervals specified in the Maintenance Schedule. Inspect all hoses in the PCV system at the same time for leaks or restrictions and clean or replace as required. PCV valve replacement may be required more often under adverse operating conditions.

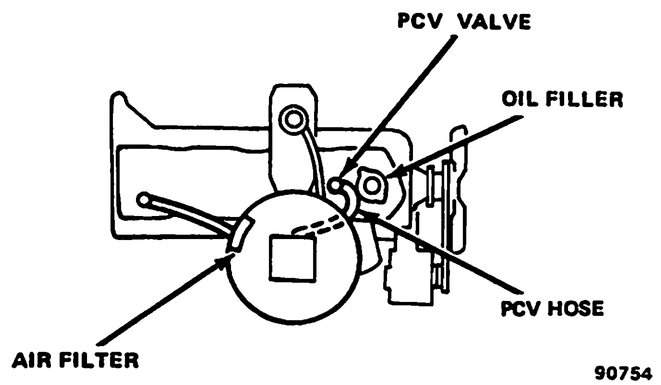

Fig. 1J-145 PCV System—Four-Cylinder Engine

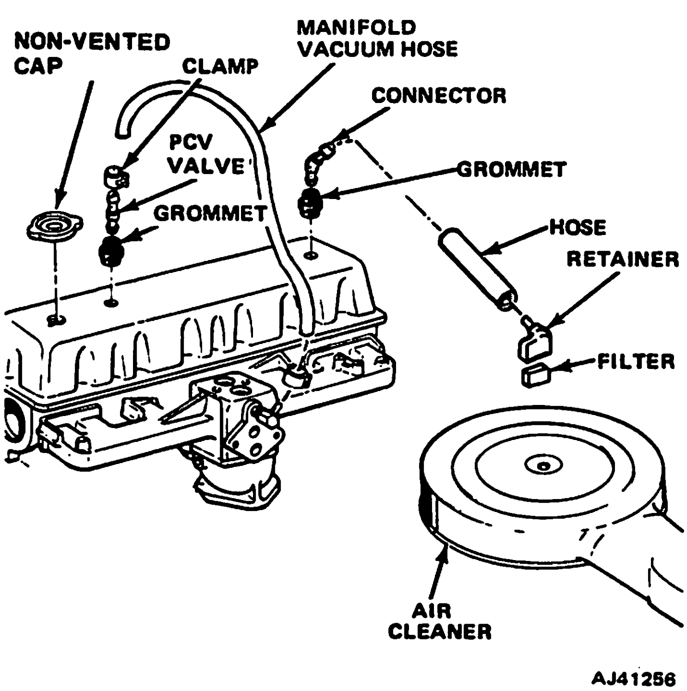

Fig. 1J-146 PCV System—Six-Cylinder Engine

OPERATION—PCV SYSTEM

Airflow through the PCV system is controlled primarily by manifold vacuum. There are two basic operating modes. When manifold vacuum is relatively high, as at idle or at cruising speed, fresh air is drawn through the air intake filter into the crankcase. After circulating through the crankcase, the vapor-filled air is forced through the PCV valve into the intake manifold. The vapor mixes with the air/fuel mixture and is burned in the combustion chambers. The PCV valve is calibrated to control airflow at a rate acceptable to the intake system.

If crankcase vapor pressure (blowby) exceeds the flow capacity of the PCV valve, airflow in the system reverses. Crankcase vapor is forced through the air cleaner element and carburetor and burned along with the air/fuel mixture.

PCV VALVE FUNCTIONAL TEST

Test the valve at idle speed for correct flow rate (cfm or l/s) providing the engine manifold vacuum is at least 14 in. Hg (45 kPa). When testing the vacuum, connect the gauge to a fitting that is as centrally located as possible on the intake manifold.

(1) Remove valve from grommet in cylinder head cover (four- and six-cylinder engines) or manifold vacuum source hose (eight-cylinder engine). Connect plastic hose of PCV Valve Tester J-23111 to valve (fig. 1J-148).

NOTE: *The PCV valve must be held in a horizontal position and tapped lightly during the test. Hold the tester in a vertical position.*

(2) Start engine and operate at idle speed. Observe flow rate (cfm or l/s). Refer to PCV Valve Flow Chart. With low vacuum, it may be necessary to load engine while testing flow rate.

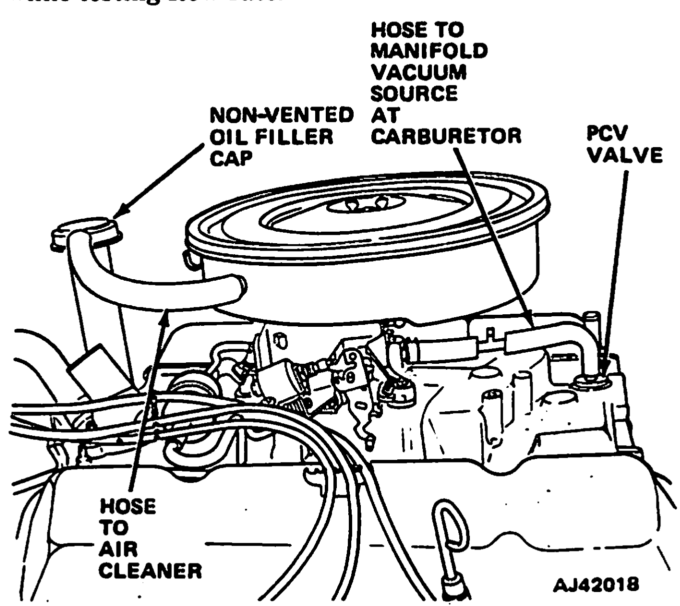

Fig. 1J-147 PCV System—Eight-Cylinder Engine

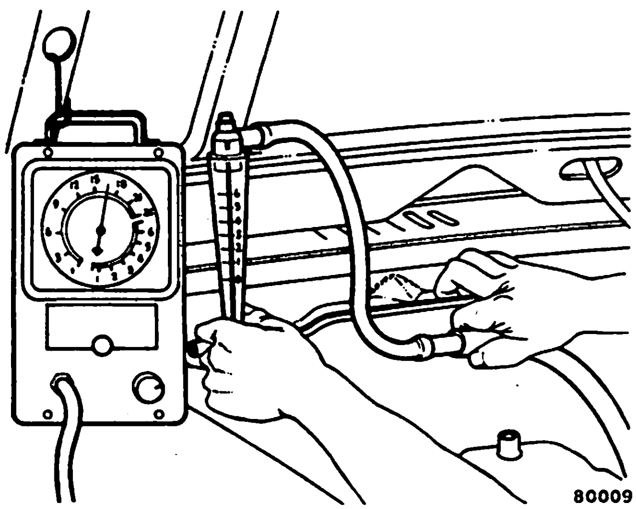

Fig. 1J-148 PCV Valve Test

(3) Replace valve having flow rate above or below specification. Ensure correct PCV valve is used for replacement.

PCV Valve Flow Rate Chart

Engine Manifold Vacuum (in. Hg.)	Air Flow CFM (liters/second)		
	Black Four-Cylinder	Yellow Six-Cylinder	Black Eight-Cylinder
15	0.5-1.0 (.236-.472)		
16			1.34-1.63 (.003-.004)
13		1.30-1.90 (.003-.005)	
6	1.05-1.85 (.496-.873)		
7			2.70-3.79 (.007-.010)
5		1.21-2.26 (.003-.006)	
3	1.5-2.5 (.708-1.18)		3.30-4.39 (.009-.012)
2		1.28-2.56 (.003-.007)	

80586

PCV VALVE AIR INLET FILTER MAINTENANCE

Perform PVC valve air inlet filter maintenance at the intervals specified in the Maintenance Schedule listed in Chapter B.

Four- and Six-Cylinder Engines

A polyester non-woven felt PCV air inlet filter is located in a filter retainer in the air cleaner.

(1) Rotate retainer to remove from air cleaner (fig. 1J-149).

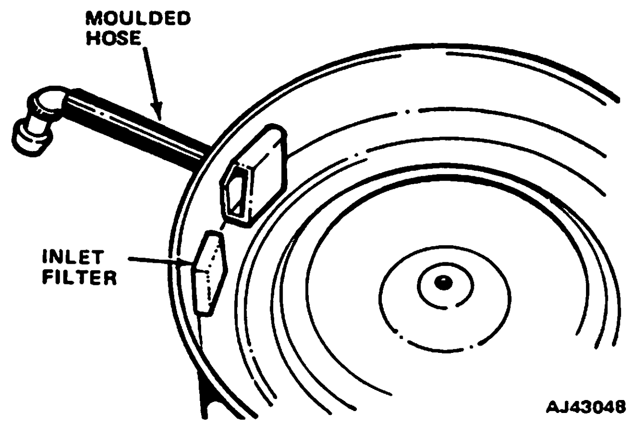

Fig. 1J-149 PCV Air Inlet Filter—Four- and Six-Cylinder Engines

(2) Clean filter in kerosene.

(3) Install filter and retainer in air cleaner.

Eight-Cylinder Engine

A polyester non-woven felt PCV air inlet filter is located in the sealed oil filler cap.

(1) Remove oil filler cap from engine.

(2) To clean, apply light air pressure in reverse direction of normal flow (through filler tube opening of cap).

(3) Install oil filler cap and connect hose from air cleaner to oil filler cap.

NOTE: *Replace the filler cap if filter is deteriorated.*

THERMOSTATICALLY CONTROLLED AIR CLEANER (TAC) SYSTEM

GENERAL

The Thermostatically Controlled Air Cleaner (TAC) System provides heated air for the carburetor during engine warm-up when the outside (ambient) air temperature is low. Warm intake air permits the carburetor to have a leaner air/fuel mixture, reducing hydrocarbon emissions. It also improves engine performance during warm-up and minimizes carburetor icing.

All Jeep vehicles are equipped with a vacuum-operated TAC system. In addition, vehicles with six-cylinder engines have air cleaners with trap doors that close off the air cleaner air intake duct when the engine is turned off. This prevents fuel vapor, etc., from escaping to the atmosphere during the time the engine is inoperative.

The TAC system is comprised of a heat stove that is either fully encloses the exhaust manifold (four-cylinder engines) or partially encloses the exhaust manifold (six- and eight-cylinder engines), a heated air tube, an air cleaner assembly equipped with a thermal sensor, and a vacuum motor and air valve assembly (figs. 1J-150 and 151). The air cleaner duct is attached by a flexible duct to the ambient air inlet at the front of the engine compartment.

OPERATION—TAC SYSTEM

The position of the air valve is controlled by manifold vacuum opposing spring tension. Manifold vacuum is controlled by a thermal sensor located in the air cleaner housing.

The sensor incorporates a vent valve that regulates the vacuum applied to the vacuum motor and thereby controls the air valve position. The air supply is either all heated air, a mixture of heated and ambient air or all ambient air from outside the vehicle. The result is that the inlet air to the carburetor is maintained at the correct temperature (fig. 1J-152).

During engine warm-up, the thermal sensor passes vacuum to the TAC vacuum motor. The air valve is held in the heat **On** position. Exhaust manifold-heated air flows to the air cleaner. As the temperature of the incoming air approaches the calibrated temperature, the

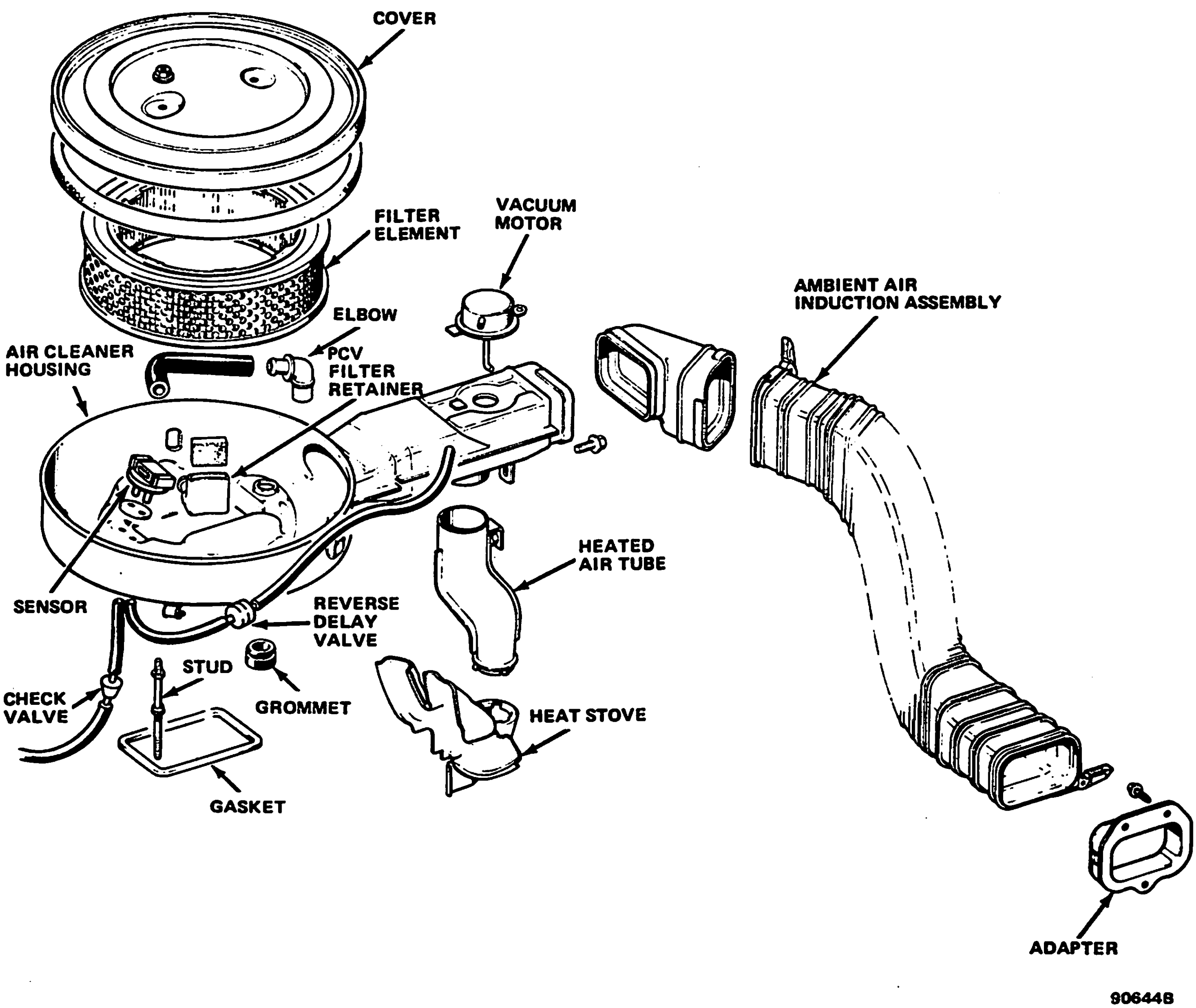

Fig. 1J-150 TAC System—Four-Cylinder Engine

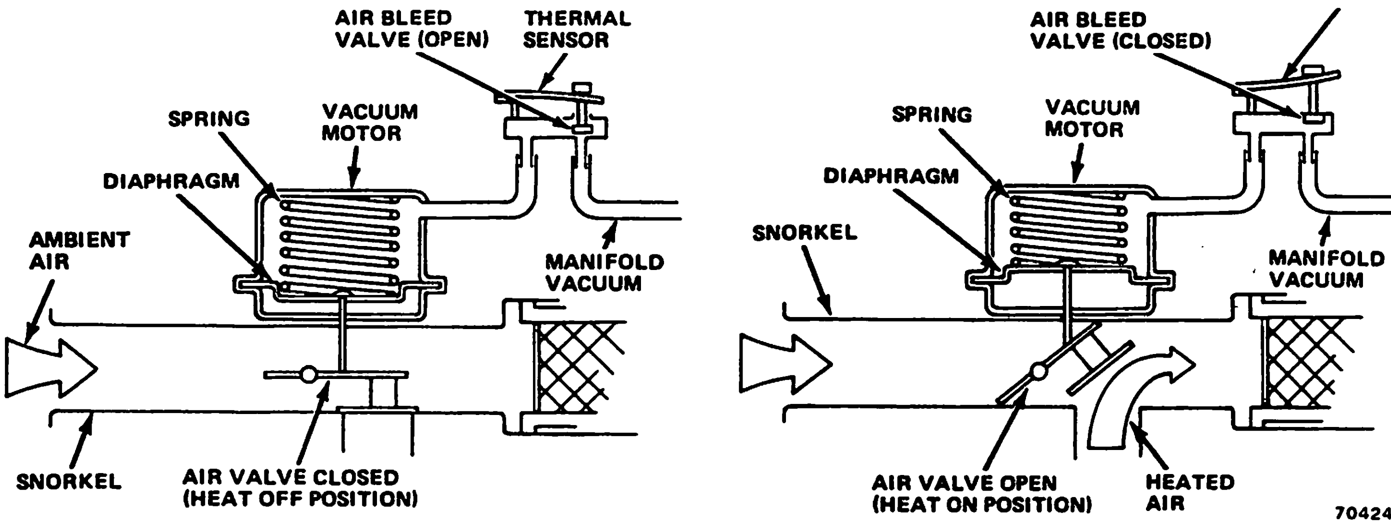

Fig. 1J-151 TAC System—Typical—Six- and Eight-Cylinder Engines

thermal sensor opens the vacuum to the atmosphere. This allows spring pressure to force the valve to the heat **Off** position. In this position, air flows from outside the vehicle, through the ambient air duct, to the air cleaner.

During hard acceleration, manifold vacuum drops. This causes the air valve to move to the heat **Off** position, regardless of air temperature, to provide maximum airflow.

TESTING—TAC SYSTEM

(1) Remove air cleaner assembly from carburetor and allow to cool to room temperature.

(2) After cooling, sight through air cleaner duct to observe position of air valve. It should be fully open to outside ambient air (heat **Off** position).

(3) Install air cleaner assembly on carburetor and connect heated air tube and manifold vacuum hose.

WARNING: *Use extreme caution when engine is operating. Do not stand in direct line with fan. Do not put hands near pulleys, belts or fan. Do not wear loose clothing.*

(4) Start engine and observe position of air valve. It should be fully closed to outside (ambient) air (heat **On** position).

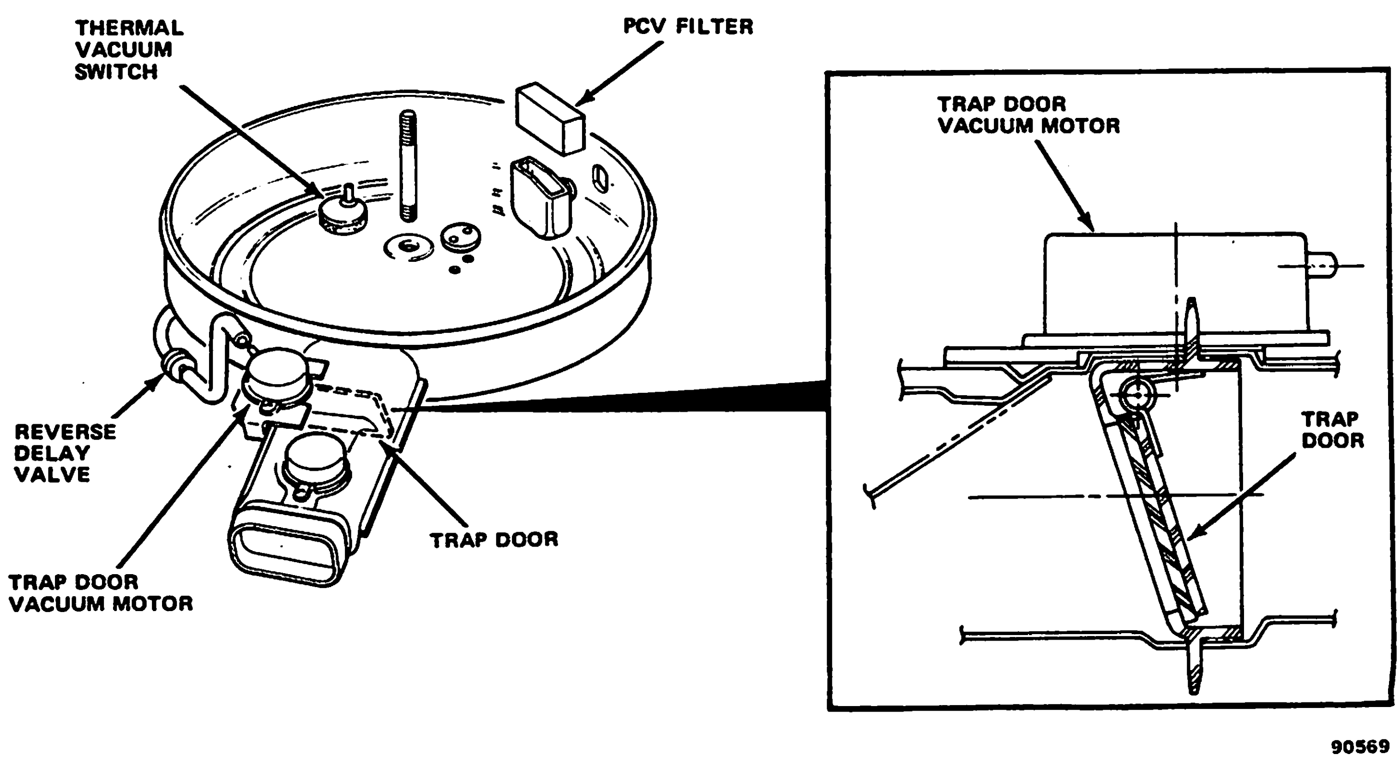

Fig. 1J-152 Air Cleaner with Trap Door

(5) Move the throttle lever rapidly to approximately 1/2 to 3/4 opening and release. Air valve should open and then close again.

(6) Allow engine to warm to normal operating temperature and observe position of air valve. It should be fully open to ambient air (heat **Off** position).

If valve does not move to heat **On** position at temperatures below 83°F (28°C) with vacuum applied, inspect for a mechanical bind in the duct, disconnected vacuum motor linkage or air leaks in vacuum hoses at connections on the vacuum motor, thermal sensor and intake manifold.

If the air valve mechanism is operating freely and no air leaks are detected, connect a hose directly from an intake manifold vacuum source to the vacuum motor.

If the valve now moves to the heat **On** position, replace thermal sensor.

If the valve remains in the heat **Off** position, replace the vacuum motor assembly.

THERMAL SENSOR

Replacement

(1) Remove air cleaner and disconnect vacuum hoses from sensor.

(2) Break vacuum nipples off sensor. Remove sensor and gasket from air cleaner.

(3) Install replacement sensor and gasket. Press retainers over vacuum nipples.

(4) Connect vacuum hoses and install air cleaner.

AIR CLEANER TRAP DOOR

Operation

Vehicles with six- and eight-cylinder engines are equipped with air cleaners that have spring-loaded trap doors to close-off the air cleaner/carburetor when the engine is inoperative. The door is actuated by a vacuum motor; when the engine is started, intake manifold vacuum causes the door to open and allow air to enter the air cleaner (fig. 1J-152).

A reverse delay valve is connected in the vacuum hose to prevent the trap door from closing during low engine vacuum periods (i.e., engine acceleration). The valve also functions to prevent abrupt closings of the trap door when the engine is turned off by gradually allowing atmospheric pressure to enter the vacuum motor. A check valve is also connected in the vacuum hose.

Functional Tests

Trap Door

(1) With the engine off, remove air cleaner cover and observe position of trap door. It should be closed.

(2) Remove vacuum hose from intake manifold vacuum source and apply an external vacuum source of approximately 2 to 4 in. Hg (6.75 to 13.50 kPa). Trap door should open.

(3) If door does not open, apply vacuum directly to vacuum motor on air cleaner intake duct.

(a) If door does not open, inspect for binding/distortion, adjust as necessary.

(b) Replace motor if door swings freely.

(4) If door opens during step (3) above, examine vacuum hose for obstruction, cracks and kinks. Correct as necessary and retest as outlined in step (2) above.

(5) If vacuum hose is not defective, remove reverse delay valve, join vacuum hose and retest as outlined in step (2) above. If door opens, replace reverse delay valve.

Reverse Delay Valve

The reverse delay valve provides approximately 9 seconds delay before allowing the trap door to completely close. Test valve according to the following procedure.

(1) Remove vacuum hose from red end of valve and apply an external vacuum source of approximately 2 to 4 in. Hg (6.75 to 13.50 kPa).

(2) With elapsed time indicator available in view, note time required for atmospheric pressure to pass through valve and eliminate vacuum.

(3) Replace valve if time required to eliminate vacuum is less than 4.5 seconds or more than 13.2 seconds.

NOTE: *Install replacement reverse delay valve with red end toward trap door vacuum motor.*

Replacement—Trap Door Vacuum Motor

Removal

(1) Disconect vacuum hoses, heated and ambient air ducts, and remove air cleaner.

(2) Remove vacuum motor attaching rivet from bracket.

(3) Lift motor away from bracket, rotate to clear door arm and remove.

Installation

(1) Rotate motor to clear door arm and lower into bracket.

(2) Secure motor to bracket with rivet.

(3) Install air cleaner, air ducts and vacuum hoses.

FEEDBACK SYSTEMS

GENERAL

Two different feedback systems are used with Jeep vehicles, one for four-cylinder engines and one for six-cylinder engines. Each system is designed to achieve the same objective: reduce undesirable exhaust emissions, in conjunction with either a three-way catalytic (TWC) converter or dual bed (TWC and COC) converter, while maintaining fuel economy and good engine performance.

With both systems, the primary feedback data is provided by an oxygen sensor located in the exhaust system. This sensor provides a voltage that is proportional to the amount of oxygen present in the exhaust gas. This data is used by each system microprocessor to regulate and optimize the air/fuel mixture.

The C-4 system incorporates a self-diagnostic feature that enables service personnel to localize system malfunctions.

C4 SYSTEM (FOUR-CYLINDER ENGINE)

This system is used with four-cylinder engines installed in CJ vehicles manufactured for sale in California.

NOTE: *All reference to CJ vehicles also pertains to Scrambler vehicles.*

Electronic Control Module (ECM)

The ECM (microprocessor) is the "brains" of the C4 System. It is programmed to determine the correct air/fuel mixture necessary for each engine operating mode. This is accomplished via the several data inputs and the standard data stored in the read-only-memory (ROM) circuit.

The ECM also contains a Programmable Read Only Memory (PROM) circuit (calibration unit) that has stored data unique to the vehicle.

CAUTION: *To ensure the internal components and connectors do not get wet when the passenger compartment is washed, it is advisable not spray water directly on the ECM housing because it is not completely waterproof.*

Oxygen Sensor

This component of the system provides a variable voltage (100 to 900 mv) for the microprocessor (ECM) that is actually a voltage analog for the oxygen content in the exhaust gas. As the oxygen content increases (lean mixture), the voltage output from the sensor decreases proportionally and as the oxygen content decreases (rich mixture), the voltage output increases proportionally. The microprocessor uses the voltage data to control the mixture control (MC) solenoid in the model E2SE carburetor and maintain an optimum air/fuel mixture.

NOTE: *The engine must be warmed to a predetermined temperature before the oxygen sensor voltage output is accepted by the microprocessor.*

NOTE: *The oxygen sensor must be replaced after 30,000 miles (48 000 km) of engine operation. The* ***Emission Maintenance*** *lamp will be illuminated to indicate the necessity for replacement. Refer to Chapter 1L—Engine Instrumentation for additional information.*

C4 System Data Senders

In addition to the oxygen sensor, the following data senders are used to provide the microprocessor with engine operation data.

- Adaptive Vacuum Switch—Closed during engine idle and partial throttle engine operation (Adaptive Mode of Operation).

NOTE: *In the Adaptive Mode, the mixture control (MC) solenoid is regulated to produce predetermined air/fuel mixture ratios. During acceleration from idle to partial throttle and deceleration from partial throttle to idle the oxygen sensor cannot react fast enough to the changes in the air/fuel mixture. As a consequence, high HC and CO exhaust gases would be emitted momentarily unless the system switched to predetermined (programmed) air/fuel mixture ratios.*

- Wide Open Throttle (WOT) Vacuum Switch—When a wide open throttle condition occurs, the decreased manifold vacuum (at 5 in. Hg, 17 kPa) closes the WOT switch, which results in the mixture control (MC) solenoid being regulated to provide the rich air/fuel mixture necessary for the increased airflow (WOT Mode of Operation).
- Engine rpm (tach) Voltage from Distributor—The mixture control (MC) solenoid is deenergized until the voltage is equivalent to 200 rpm. The result is a rich air/fuel mixture for engine starting (Inhibit or Starting Mode of Operation).

- Coolant Temperature Sensor—During engine warm-up, below 150°F (66°C), the electrical impedance of the coolant temperature sensor is high. The result is the ECM (microprocessor) does not accept the oxygen sensor voltage output and a fixed air/fuel mixture is maintained (Open Loop Mode of Operation).

In addition to the above data input to the ECM, the ECM also determines the temperature of the oxygen sensor from its electrical impedance. Until the oxygen sensor is heated to a temperature of 600°F (320°C), a fixed air/fuel mixture is maintained (Open Loop Mode of Operation).

Mixture Control (MC) Solenoid

The MC solenoid is an electro-mechanical device integral with the model E2SE carburetor that regulates the air/fuel mixture according to "commands" from the ECM.

One terminal of the MC solenoid is connected to 12v (battery voltage) and the other is connected to the ECM. The ECM functions as a switch that provides either a ground for current flow to energize the MC solenoid or an open circuit to deenergize the MC solenoid. The ECM switches the MC solenoid **ON** and **OFF** ten times a second.

When the MC solenoid is energized the needle is inserted into the jet and the result is a lean air/fuel mixture. When the solenoid is deenergized the needle is withdrawn from the jet and the result is a rich air/fuel mixture.

The average or effective air/fuel mixture is determined by the length of time the solenoid is either energized or deenergized (period of dwell) during each **ON—OFF** cycle (fig. 1J-153).

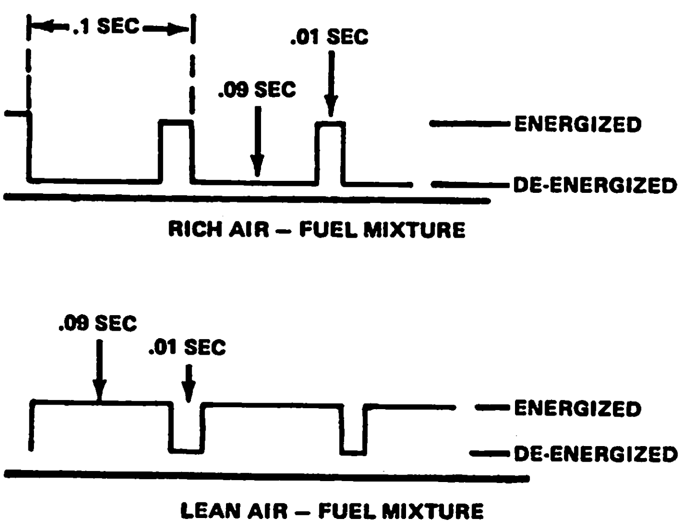

Fig. 1J-153 MC Solenoid ON—OFF Cycle

C4 System Malfunction Test Bulb

The C4 System has provision for connecting a test bulb that will inform a technician of the need for service. If a malfunction exists, the bulb will illuminate. The ECM also incorporates a diagnostic program that will flash a trouble code that identifies the malfunction when this function is activated.

Three-Way Catalytic (TWC) Converter

The TWC converter functions three ways to convert:

- HC to water vapor and carbon dioxide (CO_2).
- CO to carbon dioxide (CO_2) and oxygen.
- NOx and CO to nitrogen (N_2) and carbon dioxide (CO_2).

Refer to Exhaust Systems—Chapter 1K for service information.

COMPUTERIZED EMISSION CONTROL (CEC) SYSTEM (SIX-CYLINDER ENGINE)

This system is used with all six-cylinder engines installed in CJ vehicles manufactured for sale in California and all six-cylinder engines installed in Cherokee, Wagoneer and Truck vehicles to control the carburetor air/fuel mixture and the air injection system (i.e., switching air either upstream or downstream).

Micro Computer Unit (MCU)

The MCU is a microprocessor that monitors the oxygen sensor voltage and, based upon the mode of operation, generates an output control signal for the model BBD carburetor stepper motor.

If the system is in the closed loop mode of operation, the air/fuel mixture will vary according to the oxygen content in the exhaust gas and current engine operation.

If the system is in the open loop mode of operation, the air/fuel mixture will be based on a predetermined ratio that is dependent on several engine operating parameters.

Oxygen Sensor

This component of the system provides a variable analog voltage (millivolts) for the microprocessor (MCU) that is proportional to the oxygen content in the exhaust gas.

NOTE: *A "lean" air/fuel mixture causes the exhaust gas to have a greater oxygen content. A "rich" air/fuel mixture causes the exhaust gas to have less oxygen content. The optimum air/fuel ratio is 14.7:1.*

Data Senders

In addition to the oxygen sensor, the following data senders are used to provide the microprocessor (MCU) with engine operation data.

Two vacuum (4 in. Hg and 10 in. Hg) operated electric switches, one mechanically operated electric switch, one engine coolant operated switch (dual function) and one air temperature operated switch are used to detect and send engine operating data to the MCU. They detect the following engine operating conditions.

- Cold Engine Start-up and operation
- Wide open throttle (WOT)
- Idle (closed throttle)
- Partial and deep throttle

Components

- Thermal Electric Switch (TES)—The TES is attached to the inside of the air cleaner to provide either a ground circuit for the microprocessor to indicate the necessity for a cold weather engine start-up (when the air temperature is below the calibrated value) or an open circuit to indicate normal engine start-up (when the air temperature is above the calibrated temperature).
- Coolant Temperature Switch—This dual function switch is controlled by the engine coolant temperature and is integral with the intake manifold heater control switch. When open, the switch indicates the engine is cold (i.e., temperature less than 160°F or 71°C).
- 4 in. Hg Vacuum Switch—This switch is controlled by carburetor ported vacuum and has a normally closed (NC) electrical contact that indicates a closed throttle condition. The switch is opened by 4 in. Hg (13 kPa) vacuum level.
- 10 in. Hg Vacuum Switch—This switch is controlled by manifold vacuum. When open, the switch indicates a deep throttle condition (i.e., non-cruise engine operating condition).
- Wide Open Throttle (WOT) Switch—This mechanically operated electrical switch (located at the base of the carburetor) is controlled by throttle position to indicate a wide open throttle condition.

NOTE: *For the system to operate properly, **all** associated components and related systems must be intact and operational. This includes EGR valves, EGR related componentry, correct ignition advance vacuum hose routing, etc.*

Engine RPM (Tach) Voltage

This voltage is supplied from the "tach" terminal on the distributor. Until a voltage equivalent to a predetermined rpm is received by the MCU, the system remains in the Open Loop Mode of Operation. The result is a fixed rich air/fuel mixture for engine starting purposes.

Stepper Motor

The Stepper Motor is integral with the model BBD carburetor. It controls the metering pins that vary the size of the idle and main air inlet orifices located in the carburetor body. The motor moves the pins in and out of the orifices in steps according to the control signal generated by the MCU. The motor has a range of 100 steps, but the normal operating area is mid-range (e.g., 40 to 60 steps).

When the metering pins are stepped in the direction of the orifices, the air/fuel mixture becomes richer; when stepped away from the orifices, the mixture becomes leaner.

Dual Bed (TWC and COC) Catalytic Converter

This type converter has "downstream" air injection. Whether air is injected "upstream" (i.e., directly into the exhaust manifold) or "downstream" (i.e., into the converter) is a function of the MCU (microprocessor).

Refer to Exhaust Systems—Chapter 1K for service information concerning the dual bed (TWC and COC) converter.

SYSTEM OPERATION

There are two primary modes of operation for both the C4 and CEC Systems:

- open loop
- closed loop

Open Loop Mode of Operation

In general terms, each system will be in the open loop mode of operation (or a variation of) whenever the engine operating conditions do not conform with the programmed criteria for closed loop operation.

During open loop operation the air/fuel mixture is maintained at a programmed ratio that is dependent on the type of engine operation involved. The oxygen sensor data is not accepted by either system microprocessor during this mode of operation. The following conditions involve open loop operation (fig. 1J-154).

- Engine Start-Up
- Coolant or Air Temperature Too Low
- Oxygen Sensor Temperature Too Low
- Engine at Idle Speed
- Wide Open Throttle (WOT)
- Battery Voltage Too Low

Closed Loop Mode of Operation

When all input data conforms with the programmed criteria for closed loop operation, the oxygen content output voltage from the oxygen sensor is accepted by the microprocessor. This results in an air/fuel mixture that will be optimum for the current engine operating condition and also will correct any pre-existing too "lean" or too "rich" mixture condition (fig. 1J-154).

NOTE: *A high oxygen content in the exhaust gas indicates a "lean" air/fuel mixture. A low oxygen content indicates a "rich" air/fuel mixture. The optimum air/fuel mixture ratio is 14.7:1.*

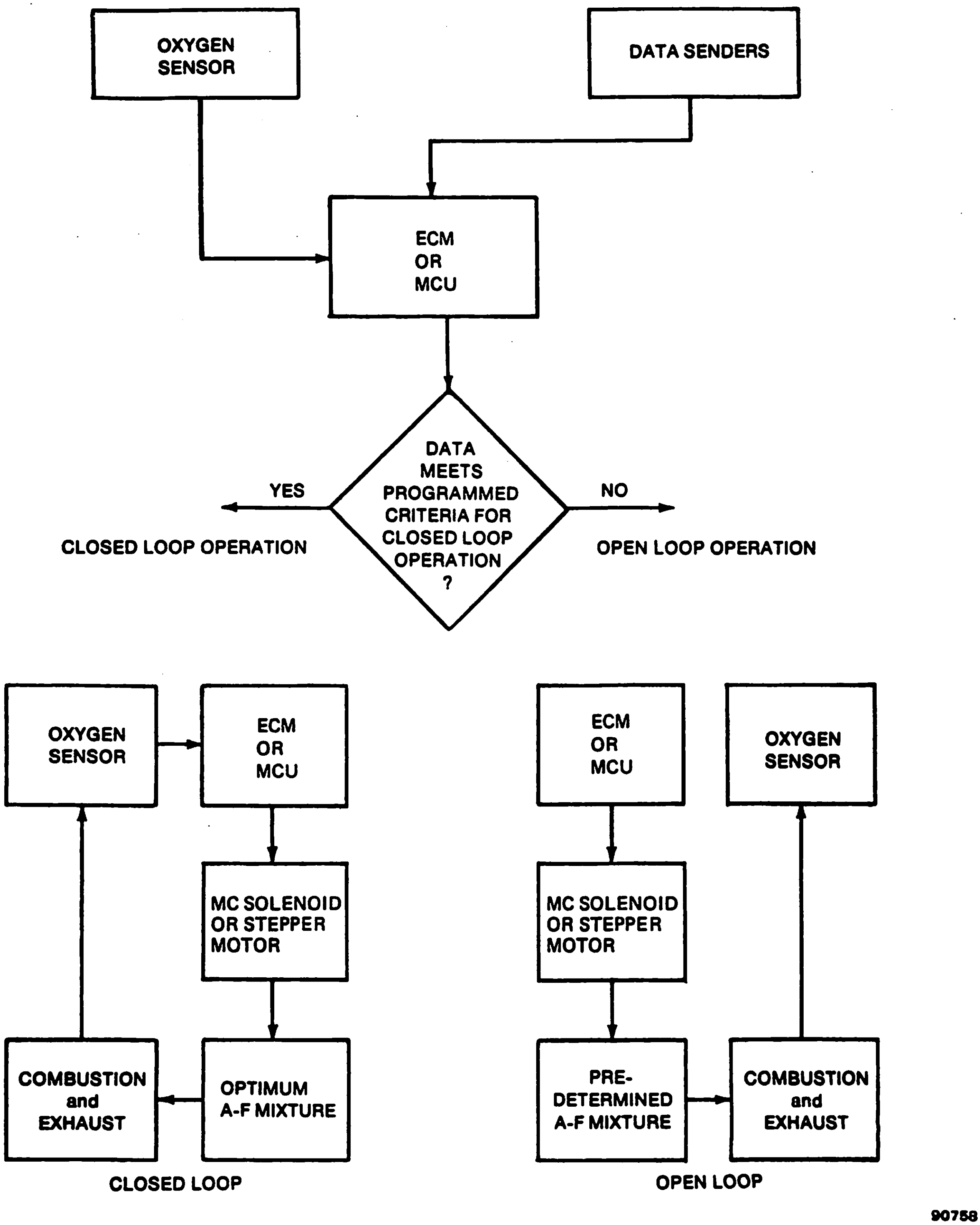

Fig. 1J-154 Open and Closed Loop Modes of Operation

COMPONENT REPLACEMENT

Oxygen Sensor

(1) Disconnect wire connector.
(2) Remove sensor from exhaust manifold.

NOTE: *Use Tool J-29533 to remove oxygen sensors from four-cylinder engines.*

(3) Clean threads in manifold.
(4) Coat replacement sensor threads with antiseize compound.
(5) Install sensor.
(a) Four-cylinder engine: using Tool J-29533, tighten sensor with 20 to 25 foot-pounds (27 to 34 N•m) torque.
(b) Six-cylinder engine: tighten sensor with 31 foot-pounds (42 N•m) torque.

CAUTION: *Ensure that wire terminal ends are properly seated in connector prior to connecting connector.*

(6) Connect wire connector.

NOTE: *Do not push rubber boot down on sensor body beyond 1/2 inch above base.*

NOTE: *Oxygen Sensor pigtail wires cannot be spliced or soldered. If broken, replace sensor.*

Vacuum Switches

(1) Identify and tag vacuum hoses, and disconnect from switches.
(2) Disconnect wire harness connector(s).

NOTE: *The six-cylinder engine (CEC) system has one connector and the four-cylinder engine (C4) system has two connectors.*

(3) Remove vacuum switch and bracket assemblyfrom right inside fender panel.

NOTE: *The vacuum switches are not serviced individually. The complete assembly must be replaced as a unit.*

(4) Install replacement vacuum switch and bracket assembly.
(5) Connect wire harness connector(s).
(6) Connect vacuum hoses.

ECM—MCU

The C4 system microprocessor (CJ vehicles only) is located in the passenger compartment on the left-hand kick panel (fig. 1J-155). The six-cylinder engine microprocessor is located in the engine compartment on the left-hand inner fender panel.

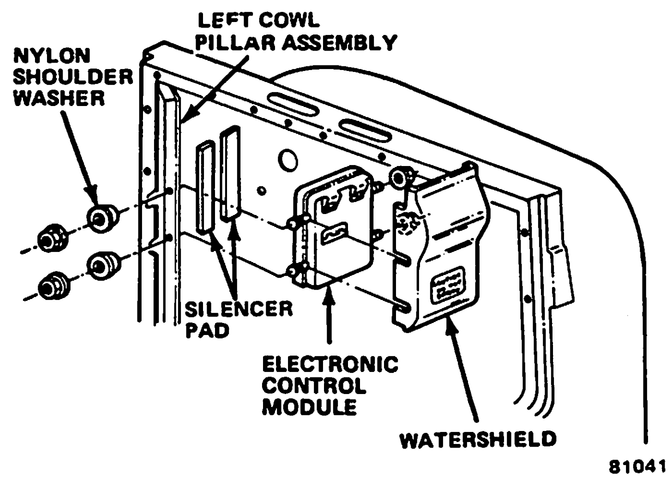

Fig. 1J-155 ECM Installation—CJ Vehicles

(1) Remove microprocessor.
(a) Remove ECM from mounting bracket.
(b) Remove MCU attaching bolts.
(2) Disconnect wire harness connector.

CAUTION: *Ensure that the connector terminals are not forced out of position or bent when connecting connector.*

(3) Connect wire harness connector to replacement unit.
(4) Install replacement unit.
(a) Install ECM in mounting bracket.

CAUTION: *ECM bracket is insulated from chassis ground. Do not ground bracket!*

(b) Install MCU with attaching bolts.

Mixture Control (MC) Solenoid (Model E2SE Carburetor)

(1) Remove air cleaner.
(2) Disconnect solenoid wire connector.
(3) Remove retaining screws.
(4) Remove unit from carburetor.
(5) Coat rubber seal (on end of stem) on replacement solenoid with silicone grease or light engine oil.

CAUTION: *Solenoid stem must be accurately aligned in recess at bottom of bowl.*

(6) Using new gasket, install replacement MC solenoid in carburetor.
(7) Connect solenoid wire connector.
(8) Install air cleaner.

Stepper Motor (Model BBD Carburetor)

(1) Remove air cleaner.
(2) Disconnect motor wire connector.

CAUTION: *Avoid dropping metering pins and spring when removing motor.*

(3) Remove retaining screw and unit from carburetor.

(4) Install replacement motor on carburetor with retaining screw. Tighten with 25 inch-pounds (2.8 N•m) torque.

(5) Connect wire connector.

(6) Install air cleaner.

Coolant Temperature Switch (or Sensor)

NOTE: *For six-cylinder engines, the coolant temperature switch is integral with the intake manifold heater coolant temperature control switch. The switch is located at the rear of the intake manifold. For four-cylinder engines, the sensor is located at the left rear of the cylinder block.*

(1) Disconnect wire connector.

(2) Remove switch.

(3) Install replacement switch. Tighten with 72 inch-pounds (7 N•m) torque.

(4) Connect wire connector.

DIAGNOSTIC PROCEDURES FOR C4 SYSTEM

The C4 System should be considered as a possible source of trouble for engine performance, fuel economy and exhaust emission complaints only after normal tests and inspections that would apply to a vehicle without the C4 system have been performed. An integral self-diagnostic subsystem within the ECM detects the problems that are most likely to occur.

The diagnostic system will illuminate a test bulb if a fault exists. If the trouble code test pigtail wire is manually connected to ground (located under the dash), the system will flash a trouble code if a fault has been detected.

As a routine system test, the test bulb will also be illuminated when the ignition switch is first turned on and the engine not started. If the test lead is grounded, the system will flash a trouble code 12, which indicates that the diagnostic system is functioning normal (i.e., no engine rpm voltage to the ECM). This consists of **one flash** followed by a pause and then **two flashes**. After a longer pause, the code will be repeated two more times. The cycle will repeat itself until the engine is either started or the ignition switch turned off. When the engine is started, the bulb will remain illuminated for a few seconds.

If the test lead is grounded with the engine operating and a fault has been detected by the system, the trouble code will be flashed three times. If more than one fault has been detected, the second trouble code will be flashed three times after the first code is flashed. The series of code flashes will then be repeated.

A trouble code indicates a problem within a specific circuit, for example, code 14 indicates a problem in the coolant temperature sensor circuit. This includes the coolant temperature sensor, wire harness, and electronic control module (ECM). The procedure for determining which of the three is at fault is located in the Trouble Code 14 chart. For other trouble codes, refer to the applicable charts.

Because the self-diagnostic subsystem does not detect all possible faults, the absence of a flashed code does not always indicate that there is no problem with the system. To determine this, a system operational test is necessary. This test should be performed when the test bulb does not flash a trouble code but the C4 System is suspected because no other reason can be determined for a specific complaint. In addition to the test bulb, a dwell meter, test lamp, digital volt-ohmmeter, tachometer, vacuum gauge and jumper wires are required to diagnose system problems. A test lamp rather than a voltmeter should be used when so instructed. **Although most dwell meters should be acceptable, if one causes a change in engine operation when it is connected to the mixture control (MC) solenoid dwell pigtail wire connector, it should not be used.** The following models of older Sun tach/dwell units should not be used: G, GA, TDT1, 2, 5, 216 and 216-1.

The dwell meter, set for the six-cylinder engine scale and connected to a pigtail wire connector from the mixture control (MC) solenoid in the carburetor, is used to determine the air/fuel mixture dwell. When the dwell meter is connected, do not allow the terminal to contact any engine component that is connected to engine ground. This includes hoses because they may be electrically conductive. With a normally operating engine, the dwell at both idle speed and partial throttle will be between 10 degrees and 50 degrees and will be varying. Varying means the pointer continually moves back and forth across the scale. The amount it varies is not important, only the fact that it does vary. This indicates closed loop operation, meaning the mixture is being varied according to the input voltage to the ECM from the oxygen sensor. With wide open throttle (WOT) or cold engine operation, the air/fuel mixture ratio will be fixed and the pointer will not vary. This is open loop operation, meaning the oxygen sensor output has no effect on the air/fuel mixture. If there is a question whether or not the system is in closed loop operation, richening or leaning the mixture will cause the dwell to vary if the system is in closed loop operation.

NOTE: *Normally, system tests should be performed with the engine warm (upper radiator hose hot).*

Trouble Code Memory

When a fault is detected in the system, the test bulb will be illuminated and a trouble code will be set in the memory of the ECM. However, if the fault is intermittent, the test bulb will be extinguished when the fault no longer exists, but the trouble code will remain in the ECM memory.

Long Term Memory

The ECM (for CJ vehicles) has long term memory. With this provision, trouble codes are not lost when the ignition switch is turned off. Certain troubles may not appear until the engine has been operated 5 to 18 minutes at partial throttle. For this reason, and for intermittant troubles, a long term memory is desirable. To clear the long term memory, disconnect and connect the battery negative cable.

NOTE: *Long term memory causes approximately a 13 ma battery drain with the ignition switch off.*

Trouble Codes

The test bulb will only be illuminated under the conditions listed below when a malfunction exists. When the malfunction is eliminated, the bulb will be extinguished and the trouble code will be reset, except for one fault, code 12. If the bulb is illuminated intermittently, but no trouble code is flashed, refer to this symptom within Driver Complaints.

- Trouble Code 12—No rpm (tach) voltage to the ECM.
- Trouble Code 13—Oxygen sensor circuit. The engine has to operate for approximately five minutes at partial throttle before this code will be flashed.
- Trouble Code 14—Shorted coolant temperature sensor circuit. The engine has to operate two minutes before this code will be flashed.
- Trouble Code 15—Open coolant temperature sensor circuit. The engine has to operate for approximately five minutes at partial throttle before this code will be flashed.
- Trouble Codes 21 and 22 (at same time)—Grounded WOT switch circuit.
- Trouble Code 22—Grounded adaptive vacuum or WOT switch circuit.
- Trouble Code 23—Open or grounded carburetor MC solenoid circuit.
- Trouble Code 44—Voltage input to ECM from oxygen sensor indicates continuous "lean" mixture. MC solenoid is regulated to produce continuous "rich" mixture. The engine has to operate approximately five minutes at partial throttle with a torque load and the C4 System in closed loop operation before this code will be flashed.
- Trouble Codes 44 and 45 (at same time)—Faulty oxygen sensor.
- Trouble Code 45—Voltage input to ECM from oxygen sensor indicates continuous "rich" mixture. MC solenoid is regulated to produce continuous "lean" mixture. The engine has to operate approximately five minutes at partial throttle with a torque load and the C4 System in closed loop operation before this code will be flashed.
- Trouble Code 51—Faulty calibration unit (PROM) or installation.
- Trouble Codes 52 and 53—Test bulb off, intermittent ECM problem. Test bulb on, faulty ECM.
- Trouble Code 54—Faulty MC Solenoid and/or ECM.
- Trouble Code 55—Faulty oxygen sensor circuit or ECM.

When the test bulb is not illuminated with the engine operating, but a trouble code can be obtained, the situation must be evaluated to determine if the fault is intermittent or because of engine operating conditions.

For all troubles, except codes 13, 44, and 45, the test bulb should be illuminated with the engine speed below 800 rpm after five minutes of operation.

If codes other than 13, 44, and 45 can be obtained with the test bulb off, the diagnostic charts cannot be used because the system is operating normally. All that can be performed is a physical inspection of the circuit indicated by the trouble code. It should be inspected for poor wire connections, frayed wires, etc., then the System Operational Test should be performed.

Faults 13, 44, and 45 require engine operation at partial throttle with an engine load for an extended period of time before a code will be flashed. Trouble code 15 requires five minutes of operation before it will be flashed. The diagnostic chart should be used if these codes are obtained even though the test bulb is not illuminated at idle.

Calibration Unit (PROM)

The microprocessor has a calibration unit called a PROM that is programmed with specific instructions pertaining to the engine. It is not a replaceable assembly.

Trouble code 51 indicates the PROM has been installed improperly or is defective. When code 51 is flashed, the ECM (microprocessor) should be replaced (fig. 1J-156).

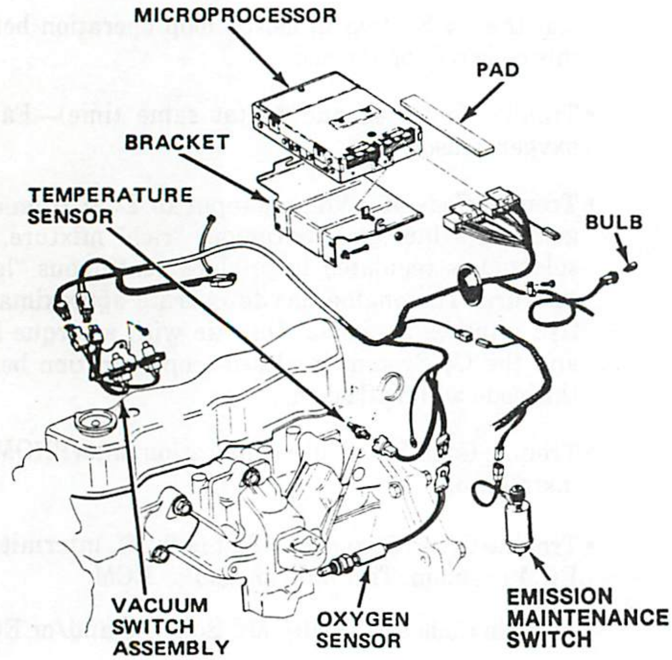

Fig. 1J-156 C4 System

CAUTION: *If trouble code 51 was caused by the PROM (Calibration Unit) being installed backwards, replace ECM with another unit. Whenever the Calibration Unit is installed backwards and the ignition switch is turned on,* ***the unit is destroyed.***

Carburetor Model E2SE Idle Mixture Adjustment

The idle mixture is calibrated during factory assembly and should normally not need adjustment in the field. However, if necessary because of results of C4 System diagnosis, contamination, overhaul, replacement of parts, etc., it can be adjusted according to the procedure outlined below. Because the C4 System is very complex, the procedure must be followed precisely.

The dwell indication from the MC Solenoid is used for the adjustment. During engine idle, it is normal for the dwell to increase and decrease fairly consistently over a relatively narrow range, such as 5 degrees. However, it may occasionally vary by as much as 10 degrees to 15 degrees momentarily because of temporary abrupt mixture changes. The dwell specified in the procedure is the average for the most consistent variation.

The engine must be allowed to stabilize at idle or 800 rpm, as applicable, before the dwell is acceptable as a reference for adjustment.

NOTE: *The mixture control solenoid dwell is an indication of the ratio of "on" to "off" time (i.e., solenoid energized time-to-deenergized time ratio).*

(1) If idle mixture plug has not been removed, remove according to following procedure.

(a) Remove air cleaner and gasket.

WARNING: *Battery negative cable must be removed to prevent a potential fire hazard when fuel pipe is disconnected.*

(b) Disconnect battery negative cable.

(c) Disconnect fuel pipe and vacuum hoses from carburetor. Identify and tag hoses.

(d) Disconnect throttle linkage and electrical connectors.

(e) Remove carburetor attaching bolts and nuts, and remove carburetor and mounting gasket.

(f) Invert carburetor and drain fuel in container.

(g) Place inverted carburetor on suitable holding fixture manifold side up.

CAUTION: *Use care to avoid damaging linkage, tubes, and parts protruding from air horn.*

(2) Remove idle mixture screw plug.

(a) Using a punch between two locator points in throttle body beneath idle mixture screw plug (manifold side) break out throttle body to gain access to idle mixture screw plug. Drive out hardened steel plug concealing mixture screw.

NOTE: *Hardened plug will shatter rather than remaining intact. It is not necessary to remove plug completely; instead, remove loose pieces to allow use of Idle Mixture Adjusting Tool J-29030.*

(b) Lightly seat screw and back out 2-1/2 turns for preliminary idle mixture adjustment. Final adjustment must be performed after carburetor is installed.

(c) If plug in air horn covering idle air bleed screw has been removed, turn air bleed screw in until lightly seated, then back out 1-1/4 turns. If plug is in place, removal and adjustment is not required.

(3) Install carburetor on engine. Install battery negative cable. Do not install air cleaner and gasket.

(4) Disconnect bowl vent hose at carburetor.

(5) Disconnect EGR valve and canister purge vacuum hoses at carburetor and plug carburetor ports.

(6) Connect tachometer to distributor "tach" wire connector located at vicinity of heater blower motor. Connect dwell meter to mixture control solenoid dwell test wire connector (fig. 1J-157).

(7) Place transmission in Neutral and set parking brake.

memory of the ECM. However, if the fault is intermittent, the test bulb will be extinguished when the fault no longer exists, but the trouble code will remain in the ECM memory.

Long Term Memory

The ECM (for CJ vehicles) has long term memory. With this provision, trouble codes are not lost when the ignition switch is turned off. Certain troubles may not appear until the engine has been operated 5 to 18 minutes at partial throttle. For this reason, and for intermittant troubles, a long term memory is desirable. To clear the long term memory, disconnect and connect the battery negative cable.

NOTE: *Long term memory causes approximately a 13 ma battery drain with the ignition switch off.*

Trouble Codes

The test bulb will only be illuminated under the conditions listed below when a malfunction exists. When the malfunction is eliminated, the bulb will be extinguished and the trouble code will be reset, except for one fault, code 12. If the bulb is illuminated intermittently, but no trouble code is flashed, refer to this symptom within Driver Complaints.

- Trouble Code 12—No rpm (tach) voltage to the ECM.
- Trouble Code 13—Oxygen sensor circuit. The engine has to operate for approximately five minutes at partial throttle before this code will be flashed.
- Trouble Code 14—Shorted coolant temperature sensor circuit. The engine has to operate two minutes before this code will be flashed.
- Trouble Code 15—Open coolant temperature sensor circuit. The engine has to operate for approximately five minutes at partial throttle before this code will be flashed.
- Trouble Codes 21 and 22 (at same time)—Grounded WOT switch circuit.
- Trouble Code 22—Grounded adaptive vacuum or WOT switch circuit.
- Trouble Code 23—Open or grounded carburetor MC solenoid circuit.
- Trouble Code 44—Voltage input to ECM from oxygen sensor indicates continuous "lean" mixture. MC solenoid is regulated to produce continuous "rich" mixture. The engine has to operate approximately five minutes at partial throttle with a torque load and the C4 System in closed loop operation before this code will be flashed.
- Trouble Codes 44 and 45 (at same time)—Faulty oxygen sensor.
- Trouble Code 45—Voltage input to ECM from oxygen sensor indicates continuous "rich" mixture. MC solenoid is regulated to produce continuous "lean" mixture. The engine has to operate approximately five minutes at partial throttle with a torque load and the C4 System in closed loop operation before this code will be flashed.
- Trouble Code 51—Faulty calibration unit (PROM) or installation.
- Trouble Codes 52 and 53—Test bulb off, intermittent ECM problem. Test bulb on, faulty ECM.
- Trouble Code 54—Faulty MC Solenoid and/or ECM.
- Trouble Code 55—Faulty oxygen sensor circuit or ECM.

When the test bulb is not illuminated with the engine operating, but a trouble code can be obtained, the situation must be evaluated to determine if the fault is intermittent or because of engine operating conditions.

For all troubles, except codes 13, 44, and 45, the test bulb should be illuminated with the engine speed below 800 rpm after five minutes of operation.

If codes other than 13, 44, and 45 can be obtained with the test bulb off, the diagnostic charts cannot be used because the system is operating normally. All that can be performed is a physical inspection of the circuit indicated by the trouble code. It should be inspected for poor wire connections, frayed wires, etc., then the System Operational Test should be performed.

Faults 13, 44, and 45 require engine operation at partial throttle with an engine load for an extended period of time before a code will be flashed. Trouble code 15 requires five minutes of operation before it will be flashed. The diagnostic chart should be used if these codes are obtained even though the test bulb is not illuminated at idle.

Calibration Unit (PROM)

The microprocessor has a calibration unit called a PROM that is programmed with specific instructions pertaining to the engine. It is not a replaceable assembly.

Trouble code 51 indicates the PROM has been installed improperly or is defective. When code 51 is flashed, the ECM (microprocessor) should be replaced (fig. 1J-156).

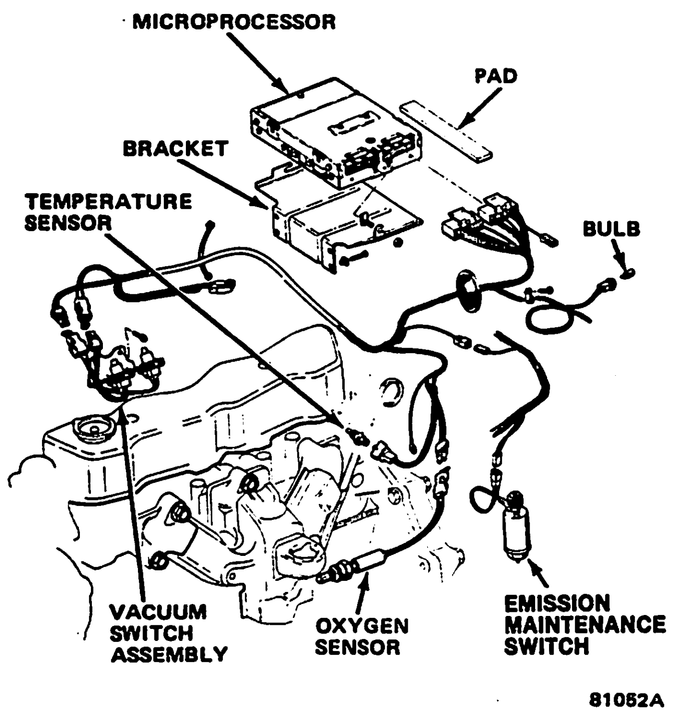

Fig. 1J-156 C4 System

CAUTION: *If trouble code 51 was caused by the PROM (Calibration Unit) being installed backwards, replace ECM with another unit. Whenever the Calibration Unit is installed backwards and the ignition switch is turned on,* ***the unit is destroyed.***

Carburetor Model E2SE Idle Mixture Adjustment

The idle mixture is calibrated during factory assembly and should normally not need adjustment in the field. However, if necessary because of results of C4 System diagnosis, contamination, overhaul, replacement of parts, etc., it can be adjusted according to the procedure outlined below. Because the C4 System is very complex, the procedure must be followed precisely.

The dwell indication from the MC Solenoid is used for the adjustment. During engine idle, it is normal for the dwell to increase and decrease fairly consistently over a relatively narrow range, such as 5 degrees. However, it may occasionally vary by as much as 10 degrees to 15 degrees momentarily because of temporary abrupt mixture changes. The dwell specified in the procedure is the average for the most consistent variation.

The engine must be allowed to stabilize at idle or 800 rpm, as applicable, before the dwell is acceptable as a reference for adjustment.

NOTE: *The mixture control solenoid dwell is an indication of the ratio of "on" to "off" time (i.e., solenoid energized time-to-deenergized time ratio).*

(1) If idle mixture plug has not been removed, remove according to following procedure.

(a) Remove air cleaner and gasket.

WARNING: *Battery negative cable must be removed to prevent a potential fire hazard when fuel pipe is disconnected.*

(b) Disconnect battery negative cable.

(c) Disconnect fuel pipe and vacuum hoses from carburetor. Identify and tag hoses.

(d) Disconnect throttle linkage and electrical connectors.

(e) Remove carburetor attaching bolts and nuts, and remove carburetor and mounting gasket.

(f) Invert carburetor and drain fuel in container.

(g) Place inverted carburetor on suitable holding fixture manifold side up.

CAUTION: *Use care to avoid damaging linkage, tubes, and parts protruding from air horn.*

(2) Remove idle mixture screw plug.

(a) Using a punch between two locator points in throttle body beneath idle mixture screw plug (manifold side) break out throttle body to gain access to idle mixture screw plug. Drive out hardened steel plug concealing mixture screw.

NOTE: *Hardened plug will shatter rather than remaining intact. It is not necessary to remove plug completely; instead, remove loose pieces to allow use of Idle Mixture Adjusting Tool J-29030.*

(b) Lightly seat screw and back out 2-1/2 turns for preliminary idle mixture adjustment. Final adjustment must be performed after carburetor is installed.

(c) If plug in air horn covering idle air bleed screw has been removed, turn air bleed screw in until lightly seated, then back out 1-1/4 turns. If plug is in place, removal and adjustment is not required.

(3) Install carburetor on engine. Install battery negative cable. Do not install air cleaner and gasket.

(4) Disconnect bowl vent hose at carburetor.

(5) Disconnect EGR valve and canister purge vacuum hoses at carburetor and plug carburetor ports.

(6) Connect tachometer to distributor "tach" wire connector located at vicinity of heater blower motor. Connect dwell meter to mixture control solenoid dwell test wire connector (fig. 1J-157).

(7) Place transmission in Neutral and set parking brake.

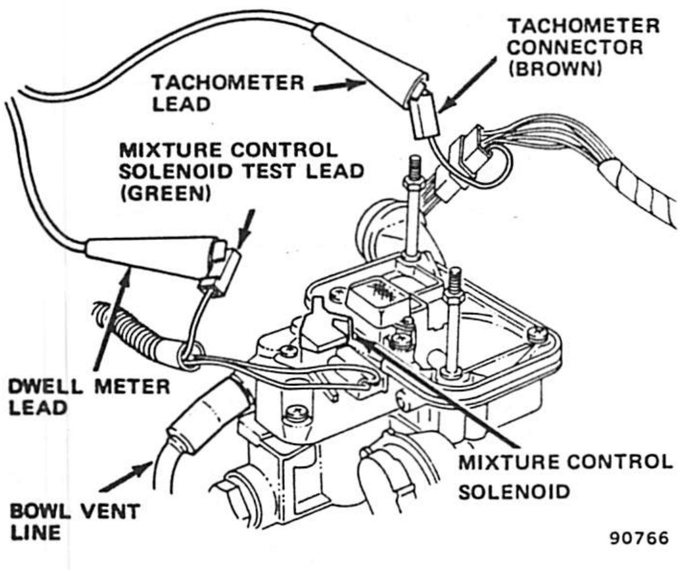

Fig. 1J-157 Idle Mixture Adjustment Preparation

WARNING: *Use extreme caution when performing adjustment while engine is operating. The fan, pulleys and belts can cause serious personal injury. Avoid wearing loose clothing. Do not stand in direct line with fan.*

(8) Start engine and operate at fast idle for at least three minutes to allow C4 System to switch to Closed Loop Operation.

NOTE: *Adjusting Tool J-29030 is required for adjustments.*

(9) Return engine to idle and adjust idle speed to 700 rpm.

(10) Adjust idle mixture screw (fig. 1J-158) to obtain an average dwell as specified in Specifications. If dwell is too low, slowly back screw out. If too high, slowly turn in. Allow time for dwell to stabilize after each adjustment. Adjustment is very sensitive. Make final dwell check with adjusting tool removed. If unable to adjust to specification, inspect idle circuit for leaks, restrictions, etc.

(11) Disconnect MC solenoid wire connector and observe tachometer for an engine speed change of at least 50 rpm. If speed does not change enough, inspect idle air bleed circuit for restrictions, leaks, etc. Connect MC Solenoid wire connector.

(12) Connect purge and bowl vent hoses, EGR valve hose, and adjust idle speed according to Emission Control Information label instructions. Remove tachometer and dwell meter.

C4 System Tests and Trouble Code Diagnosis

The self-diagnostic system does not detect all possible faults. The absence of a trouble code does not indicate there is not a malfunction with the system. To determine whether or not a system problem exists, an operational test is necessary. Refer to figure 1J-159 for terminal identification.

NOTE: *The System Operational Test should also be performed after all repairs on the C4 System have been completed.*

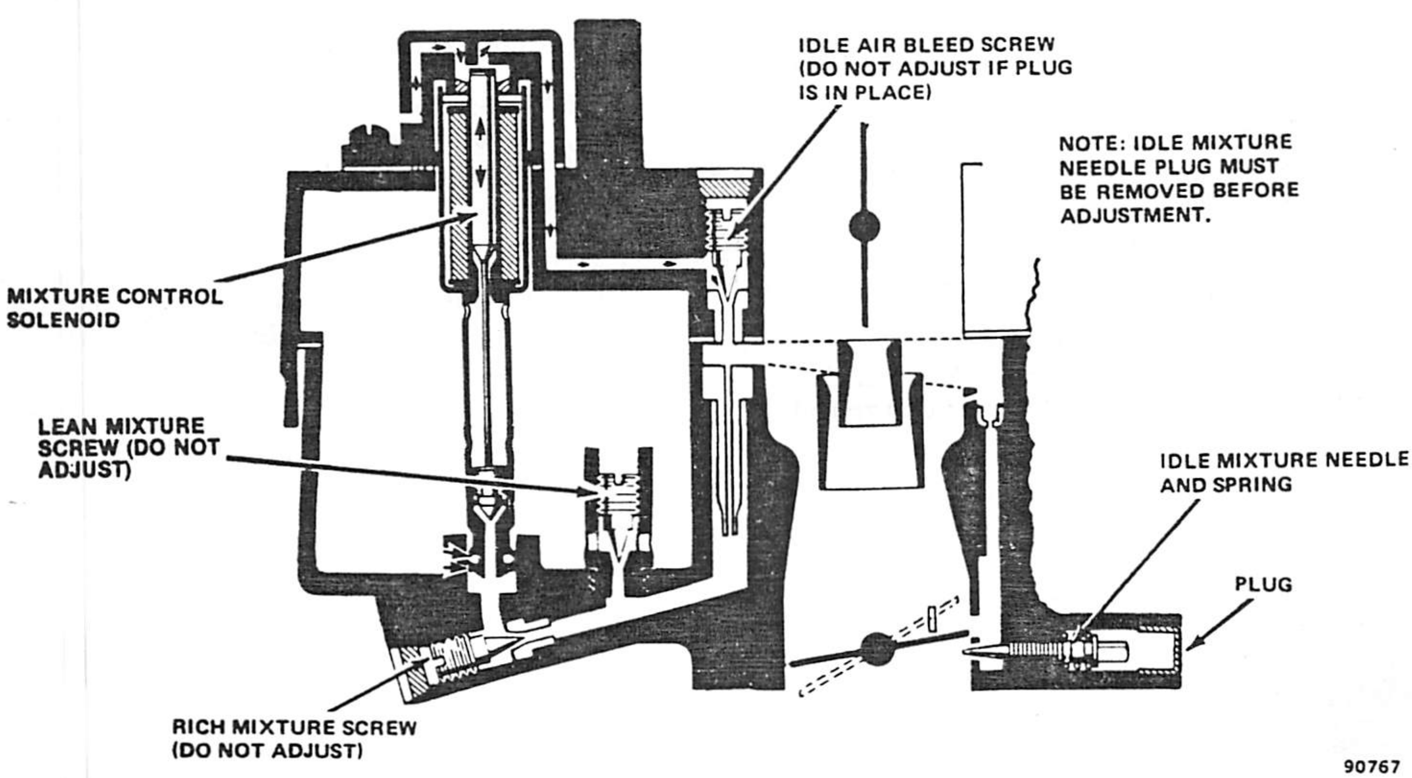

Fig. 1J-158 Model E2SE Carburetor Adjustment Screws

Carburetor Model E2SE Idle Mixture Adjustment Specifications

Transmission	Carburetor Number	Idle Mixture Screw		Idle Air Bleed Screw Preset Turns
		Preset Turns	Dwell	
Manual	17082389	2-1/2	25°	1 - 1/4

90989

Driver Complaints

- **Poor Engine Performance or Fuel Economy**

If the test bulb is not illuminated, normal tests that would be performed on vehicles not equipped with the C4 System should be performed before proceeding to the Operational Test.

- **Alternator Warning Lamp or Coolant Temperature Hot**

If the alternator warning lamp is illuminated or coolant temperature is excessively high along with the test bulb being illuminated, diagnose those problems first. Inspect for faulty connections at coolant temperature sensor, alternator, MC solenoid, etc., and defective or loose vacuum hoses and fittings. Repair as necessary.

- **Intermittent Test Bulb Display**

If the test bulb illuminates intermittently but a trouble code cannot be obtained, inspect the following items.

NOTE: *If for any reason engine speed drops below 200 rpm, the test bulb will be illuminated until the speed exceeds 200 rpm.*

(1) Poor connection in circuit from distributor tach terminal to ECM terminal A, ignition terminal 1 to ECM, and ECM terminal T to ground.

(2) Tach filter resistance should be 14,000 to 18,000 ohms between distributor and ECM terminals (with one end disconnected) and an open circuit to ground.

(3) Low battery voltage (under 9 volts).

(4) Loss of long term memory. Momentarily grounding MC solenoid dwell wire connector with engine idling should cause trouble code 23, which should be retained after engine is stopped and restarted. If voltage is present at long term memory terminal but code was not flashed, ECM is defective.

- **Acceleration Stumble**

Perform Adaptive Vacuum Switch Circuit Test, Chart 7.

- **All Other Complaints**

For all other driver complaints, perform the C4 System Operational Test with engine at normal operating temperature (upper radiator hose hot).

NOTE: *Anytime an engine is first started, even if warm, it must be operated at partial throttle for three minutes or until the tachometer pointer (dwell) starts to vary before proceeding with any test.*

WARNING: *Use extreme caution when engine is operating. Do not stand in direct line with fan. Do not put hands near pulleys, belts or fan. Do not wear loose clothing.*

CAUTION: *The wire leading from the distributor tach terminal to the ECM has an in-series filter. The tachometer must be connected* ***only*** *to the distributor side of the filter.*

NOTE: *Install test bulb before performing tests.*

ECM Terminal Connections

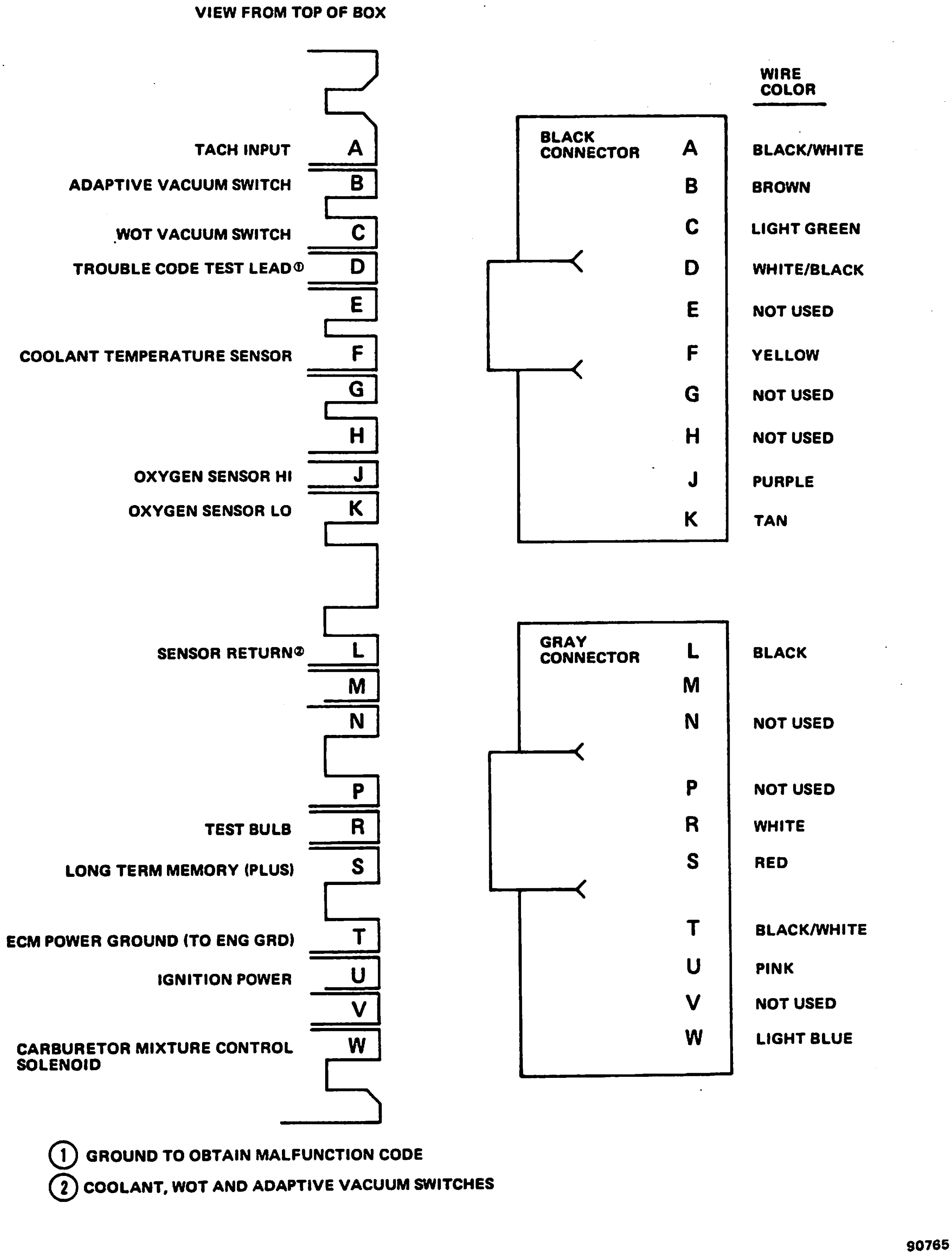

Fig. 1J-159 ECM Terminal Connections

C4 SYSTEM TESTS AND TROUBLE CODE DIAGNOSIS

Chart 1—C4 System Operational Test

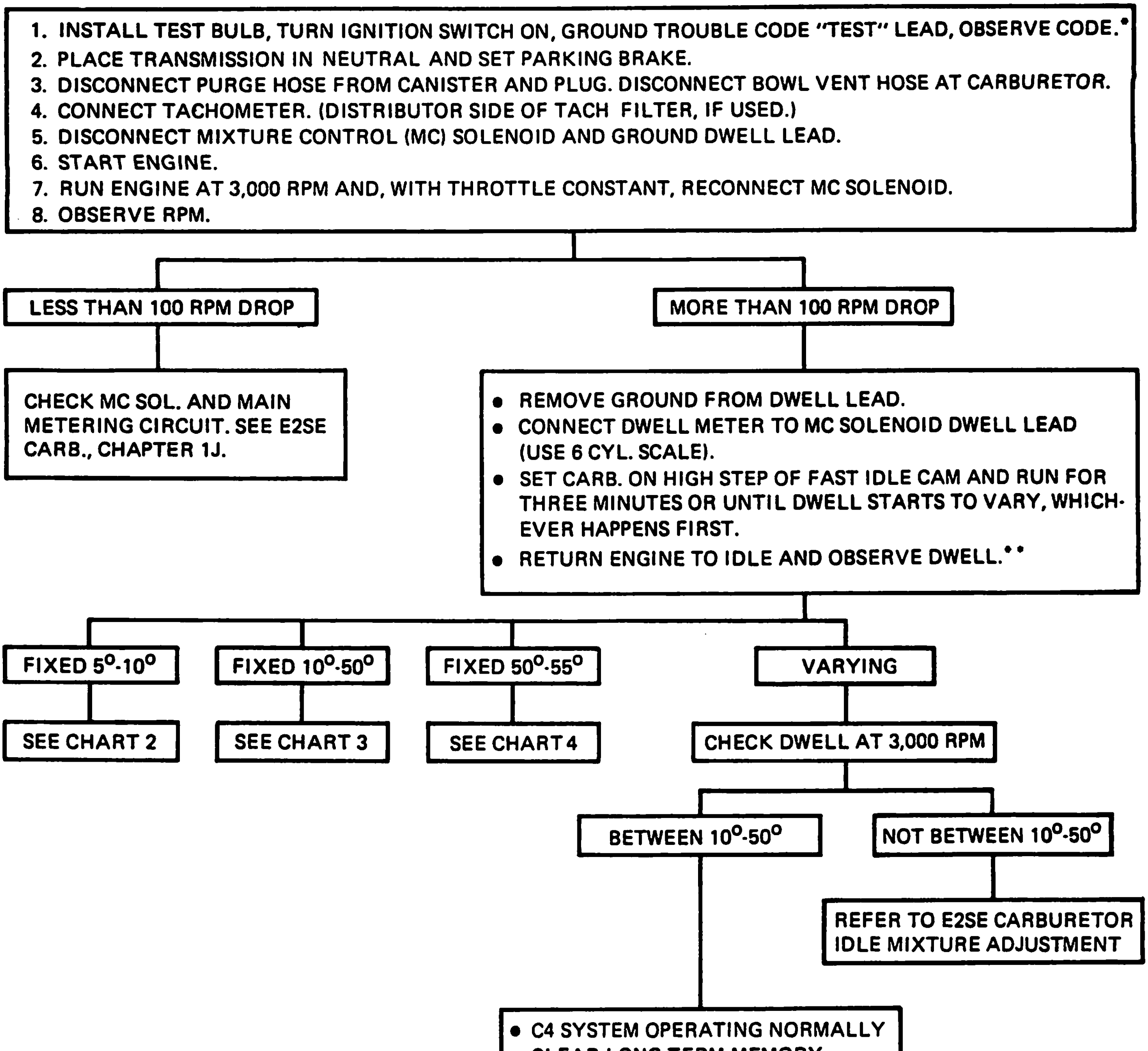

* IF TEST BULB IS NOT ILLUMINATED, SEE CHART 6.

**OXYGEN SENSOR TEMPERATURE MAY COOL AT IDLE CAUSING THE DWELL TO CHANGE FROM VARYING TO A FIXED INDICATION BETWEEN 10°-50°. IF THIS HAPPENS, RUN THE ENGINE AT FAST IDLE TO HEAT THE SENSOR.

90769A

Chart 2—Dwell Fixed Between 5 Degrees and 10 Degrees

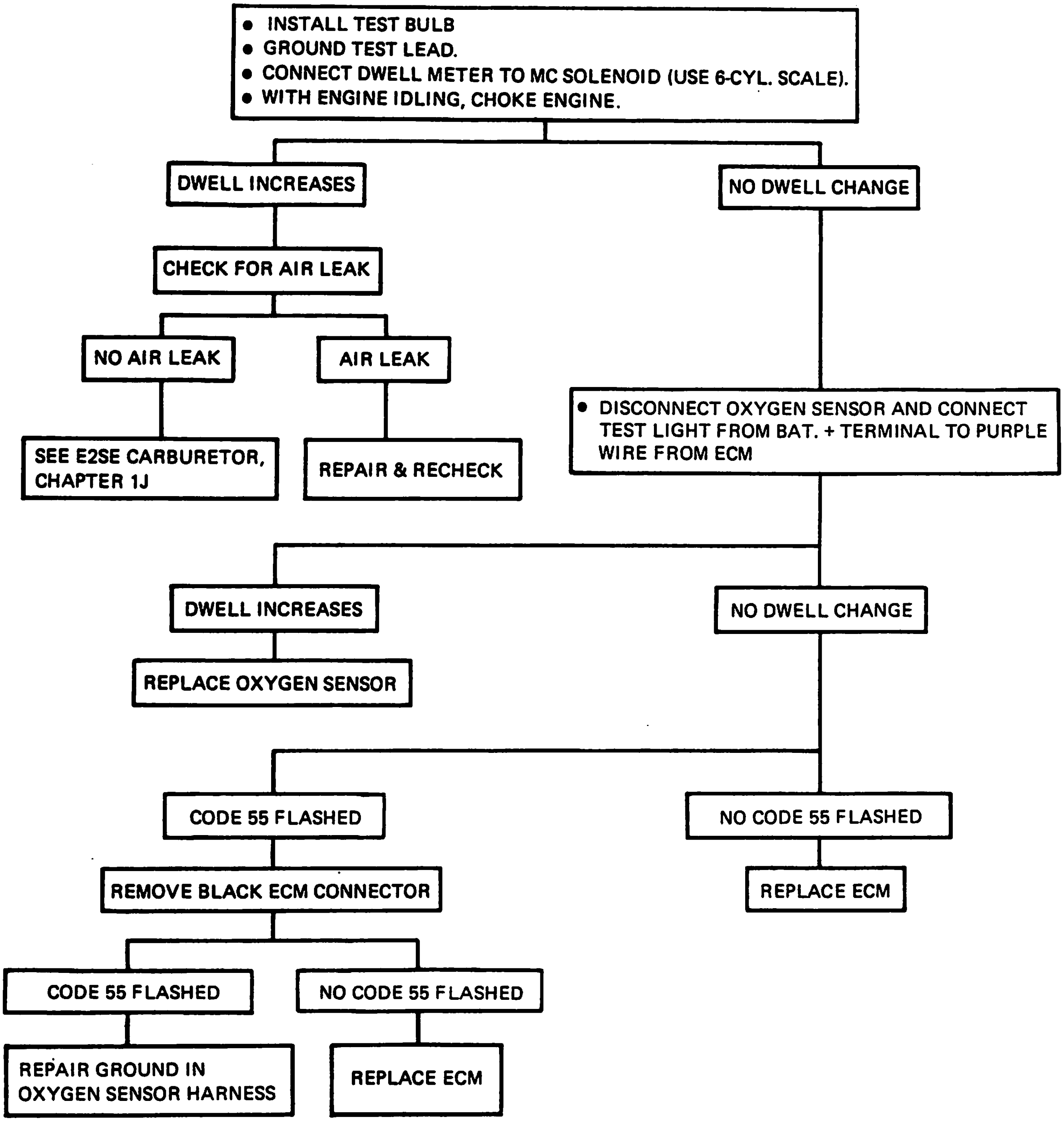

90769 B

Chart 3—Dwell Fixed Between 10 Degrees and 50 Degrees

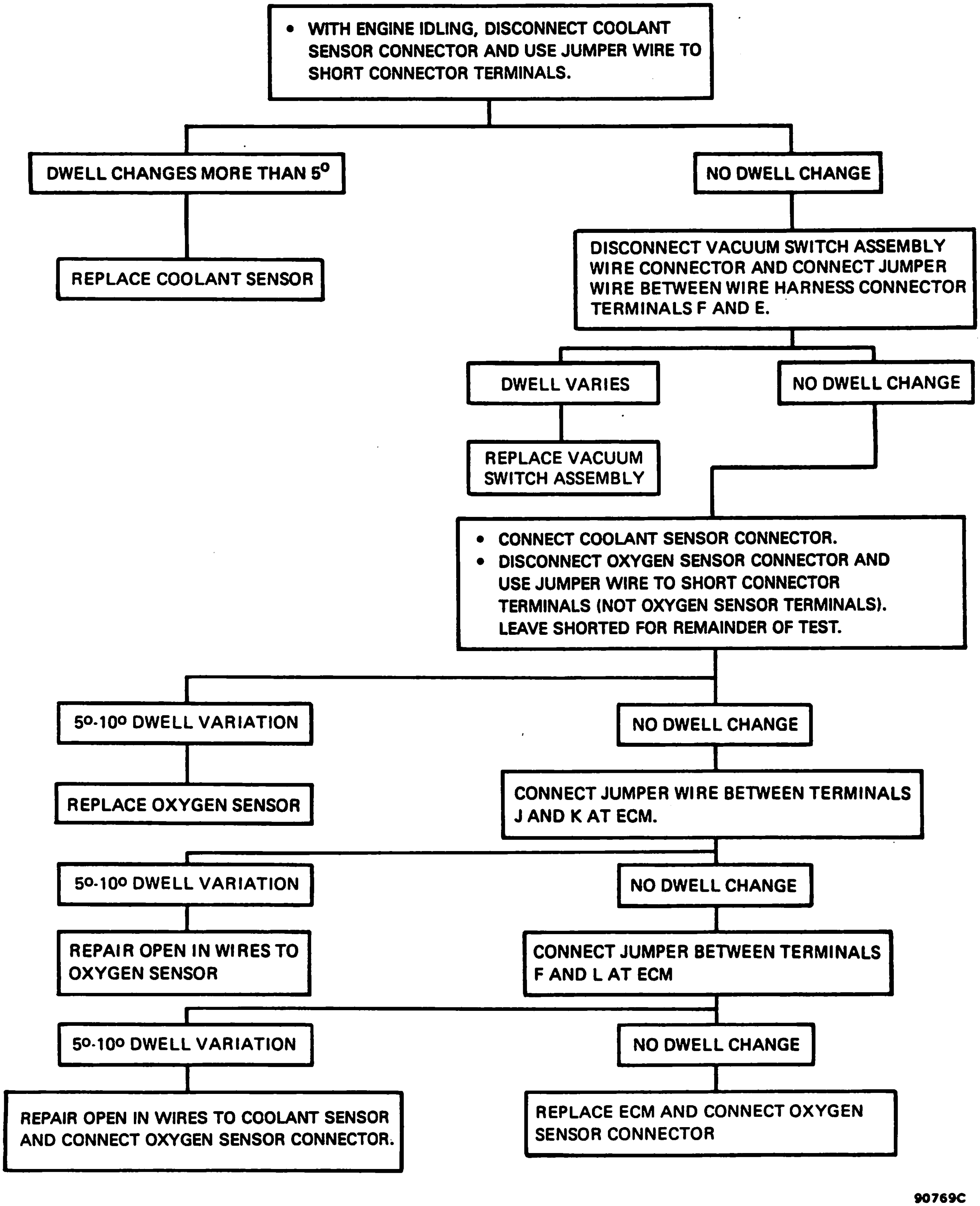

Chart 4—Dwell Fixed Between 50 Degrees and 55 Degrees

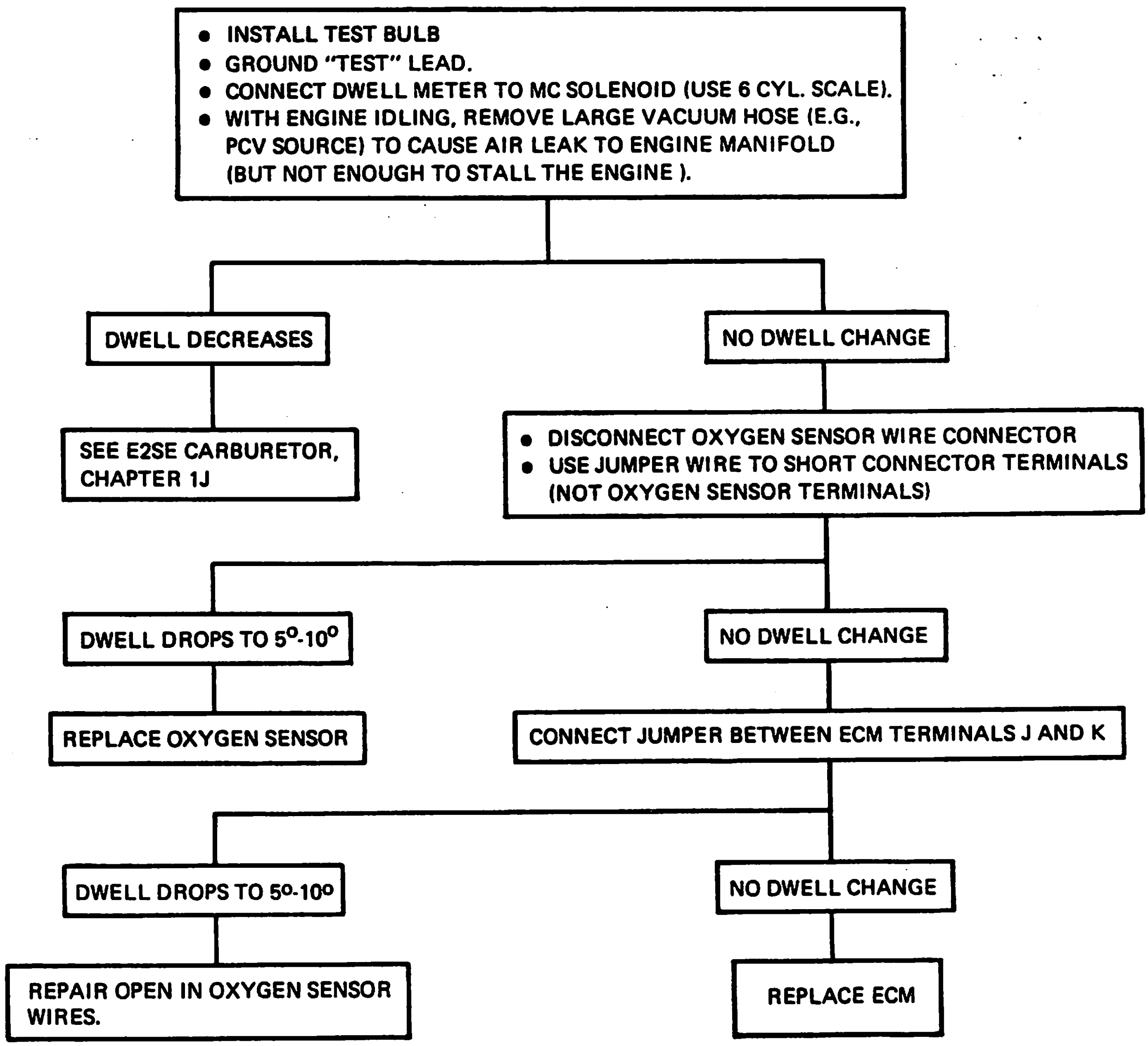

90769D

Chart 5—Self-Diagnostic Circuit Test

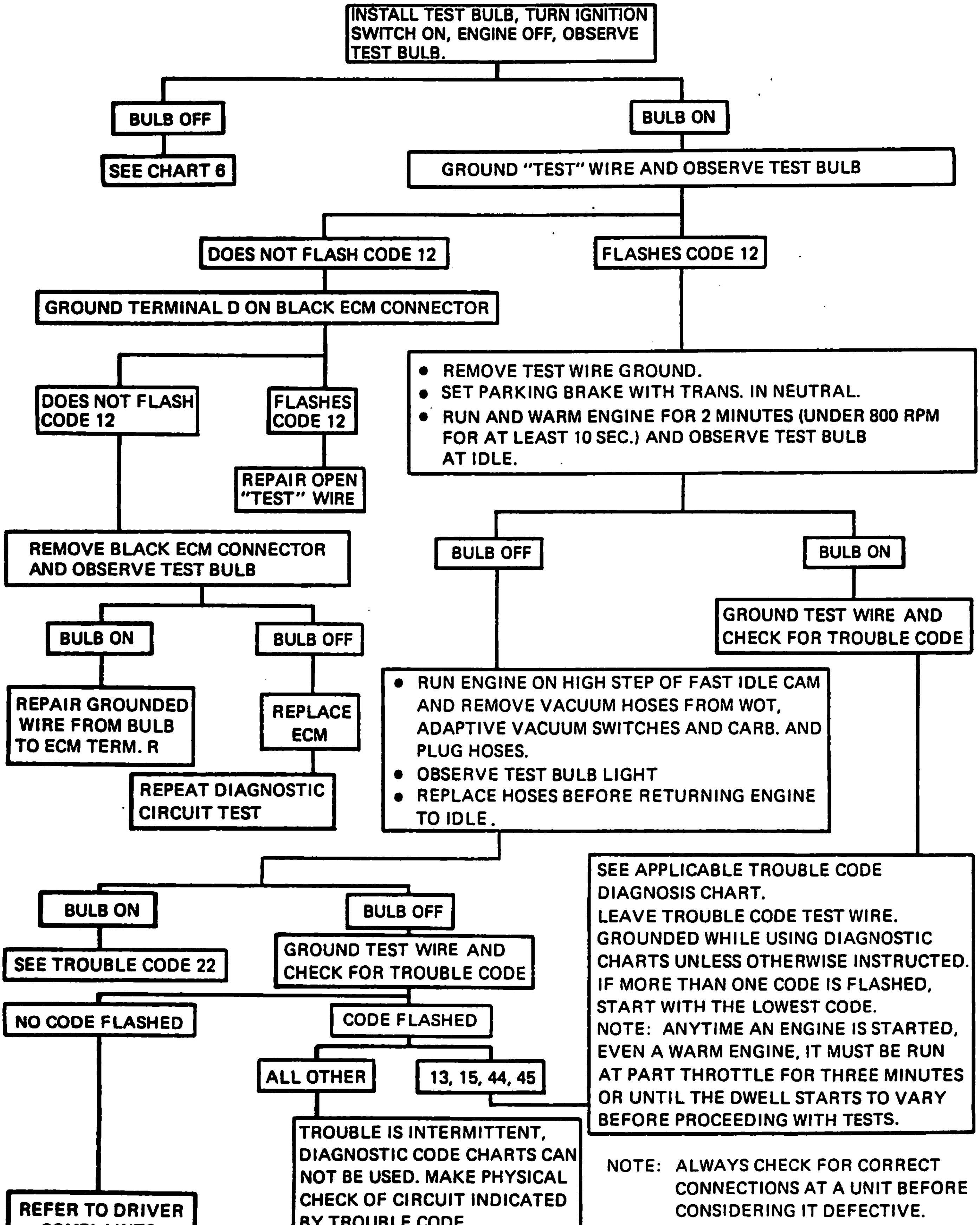

90769E

Chart 6—Test Bulb Circuit Inoperative

NOTE: BULB WILL NOT BE ILLUMINATED IF "TEST" WIRE IS GROUNDED BEFORE THE IGNITION IS TURNED ON. THE MC SOLENOID WILL ALSO CLICK.

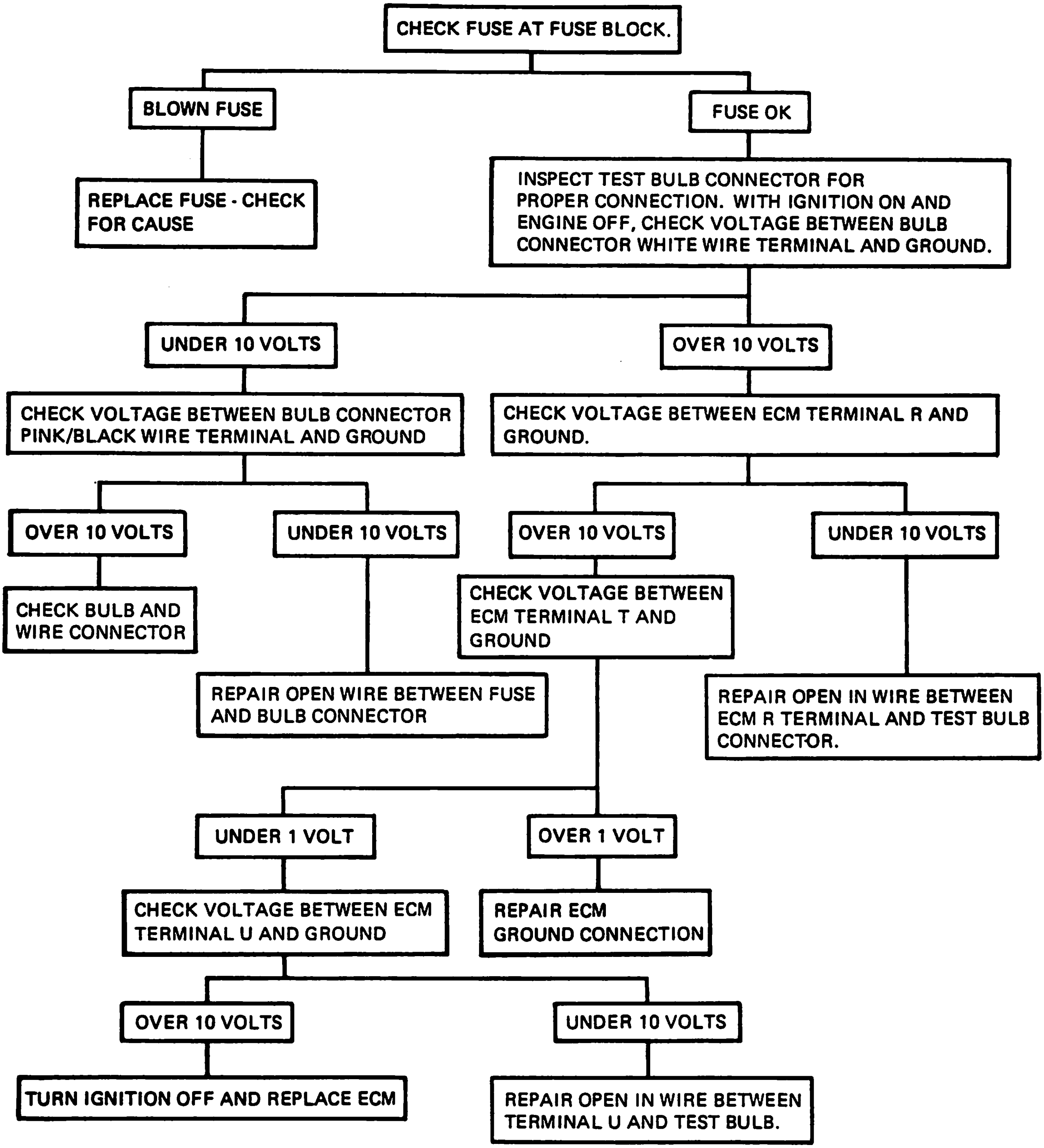

90769F

Chart 7—Adaptive Vacuum Switch Circuit Test

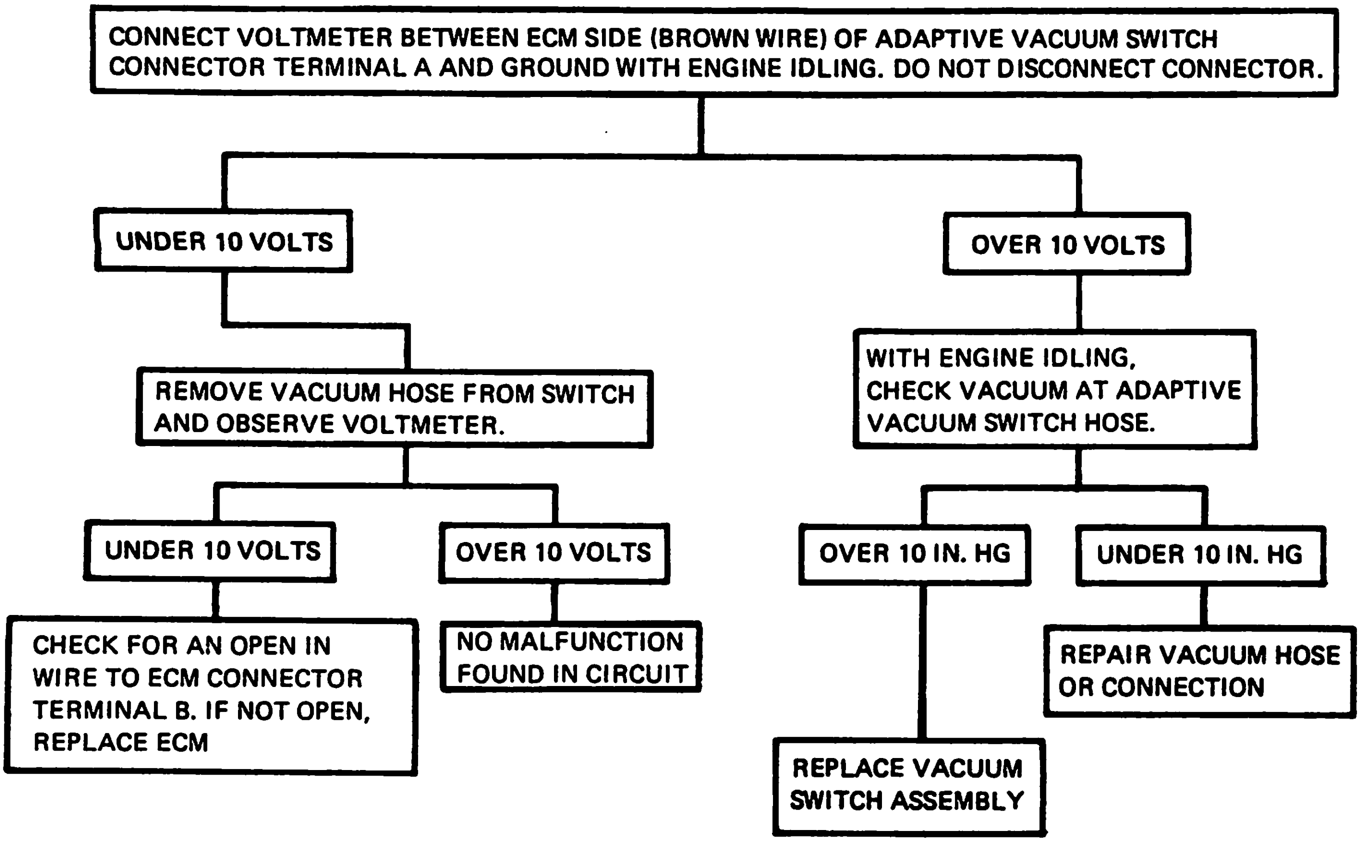

90769G

TROUBLE CODE 12

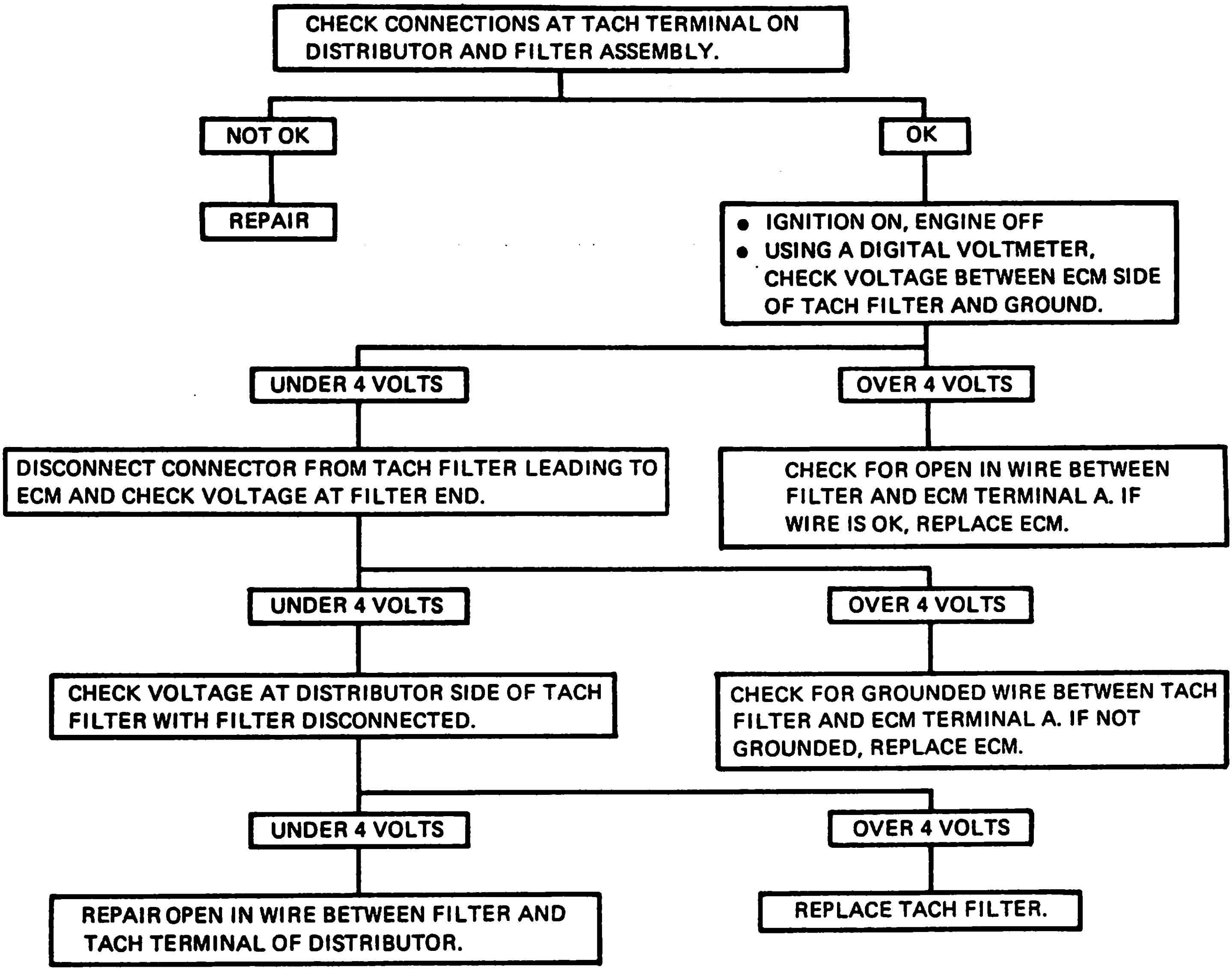

90769H

TROUBLE CODE 13

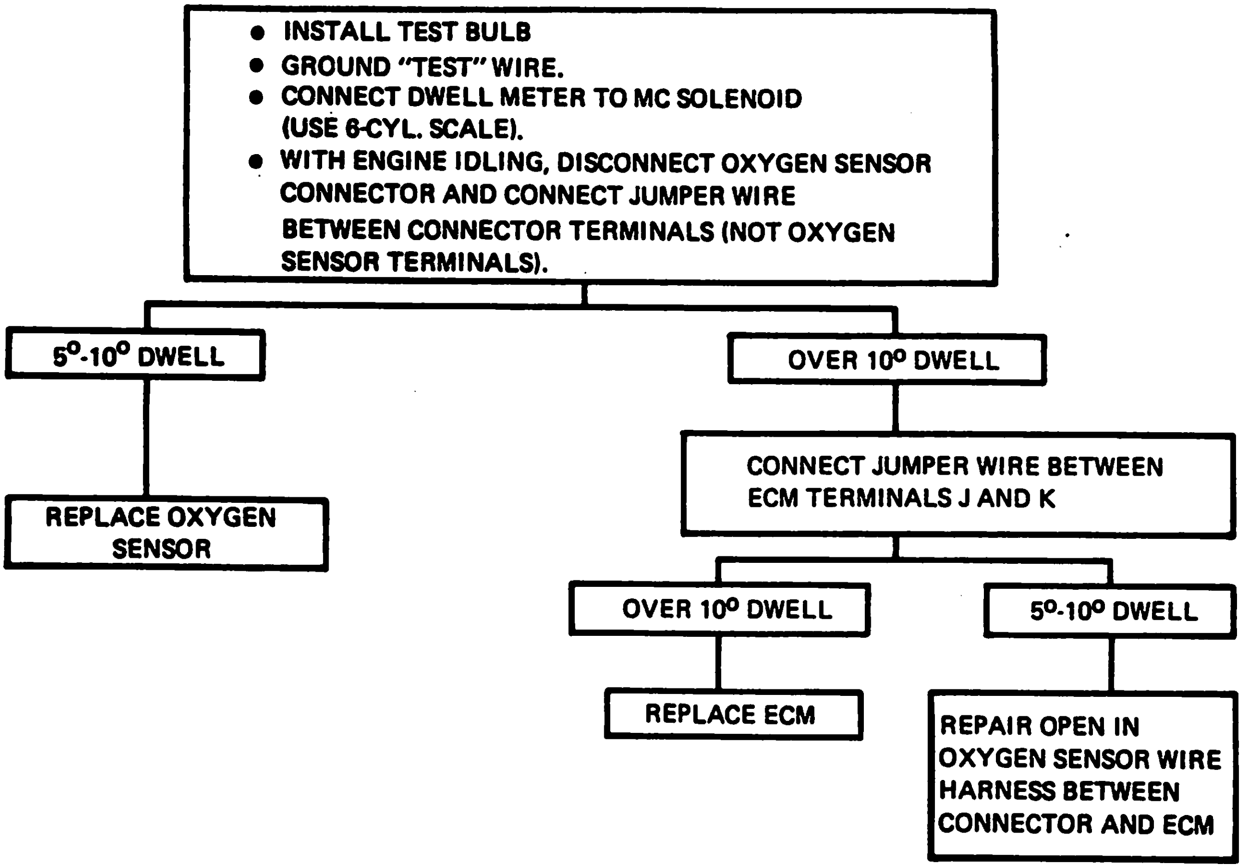

90769J

TROUBLE CODE 14

NOTE: IF THE ENGINE COOLANT IS EXCESSIVELY HOT, CHECK FOR CAUSE OF OVERHEATING CONDITION BEFORE PERFORMING THE FOLLOWING TEST.

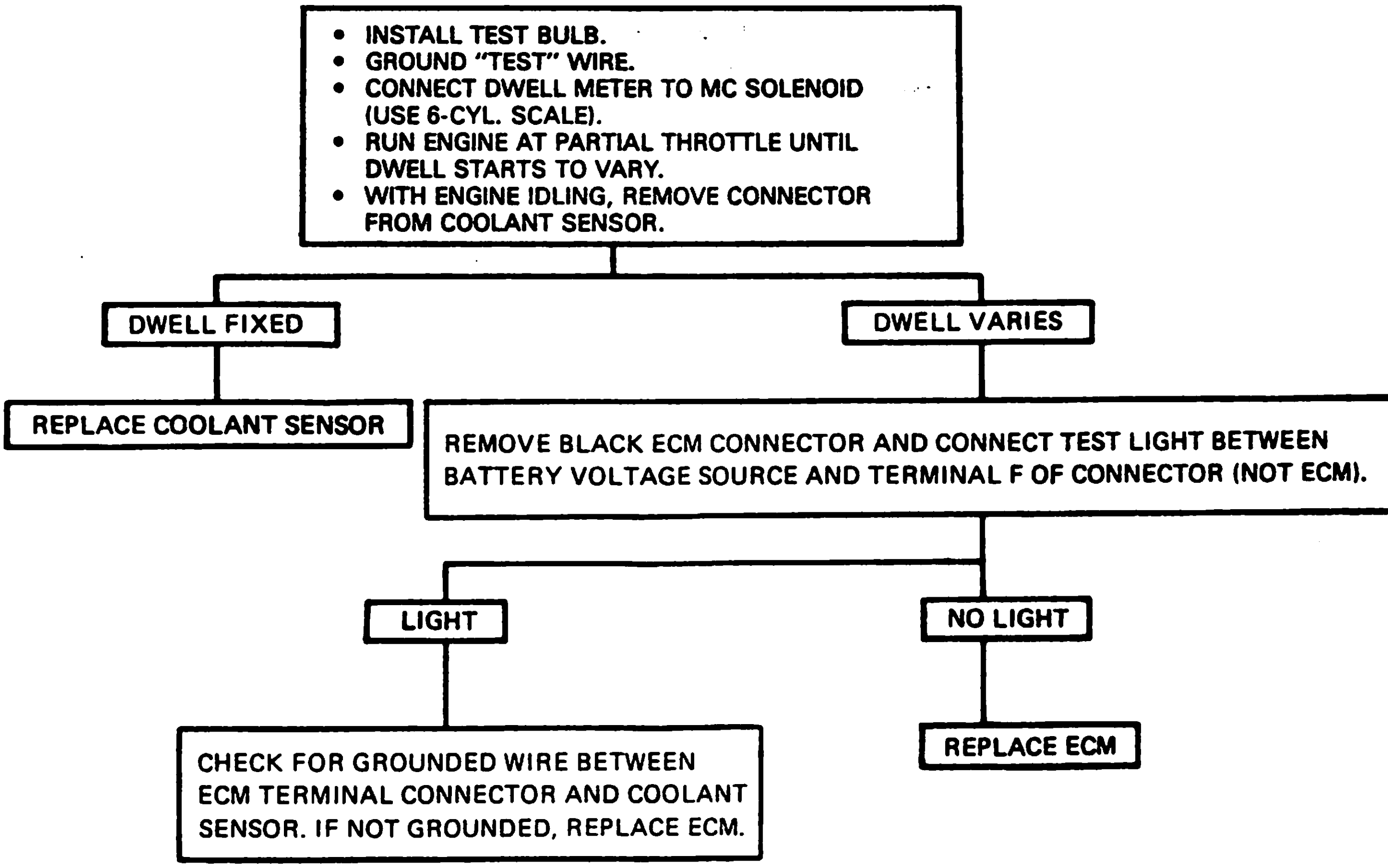

90769K

TROUBLE CODE 15

- INSTALL TEST BULB
- GROUND "TEST" WIRE.
- CONNECT DWELL METER TO MC SOLENOID (USE 6 CYL. SCALE)
- STOP AND START ENGINE AND RUN AT PARTIAL THROTTLE FOR 3 MINUTES AND OBSERVE DWELL.
- WITH ENGINE IDLING, REMOVE CONNECTOR FROM COOLANT SENSOR AND CONNECT JUMPER WIRE BETWEEN CONNECTOR TERMINALS.

DWELL VARIES
- CHECK COOLANT SENSOR CONNECTION. IF OK, REPLACE SENSOR.

DWELL UNCHANGED
- DISCONNECT VACUUM SWITCH ASSEMBLY WIRE CONNECTOR AND CONNECT JUMPER WIRE BETWEEN WIRE HARNESS CONNECTOR TERMINALS F AND E.
  - **DWELL VARIES**
    - REPLACE VACUUM SWITCH ASSEMBLY
  - **DWELL FIXED**
    - GROUND ECM TERMINAL F
      - **DWELL VARIES**
        - REPAIR OPEN CIRCUIT IN COOLANT TEMPERATURE SENSOR WIRES OR ENRICHMENT VACUUM SWITCH WIRES.
      - **DWELL FIXED**
        - REPLACE ECM

90769L

TROUBLE CODE 21 AND 22 TOGETHER

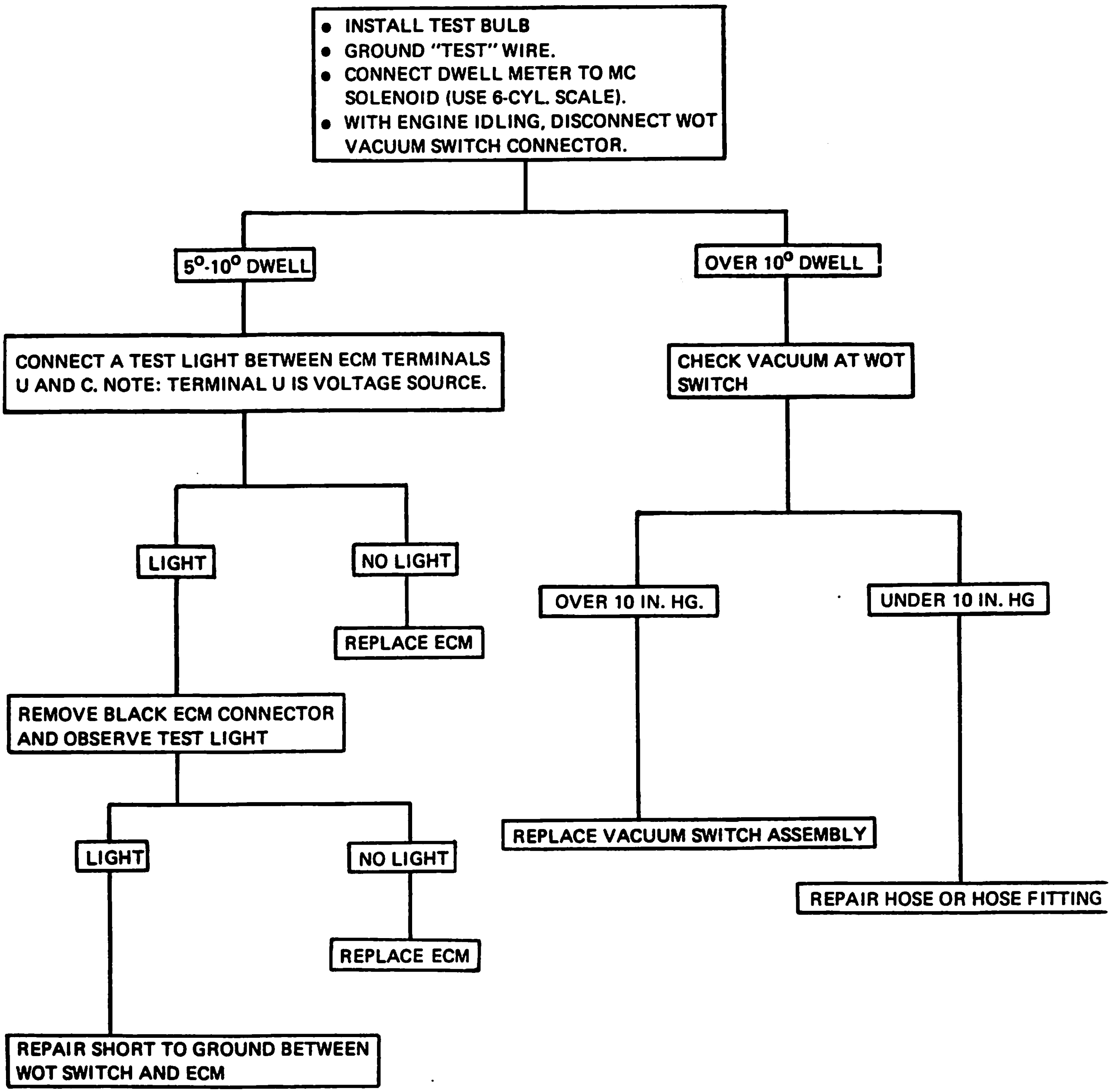

90769M

TROUBLE CODE 22

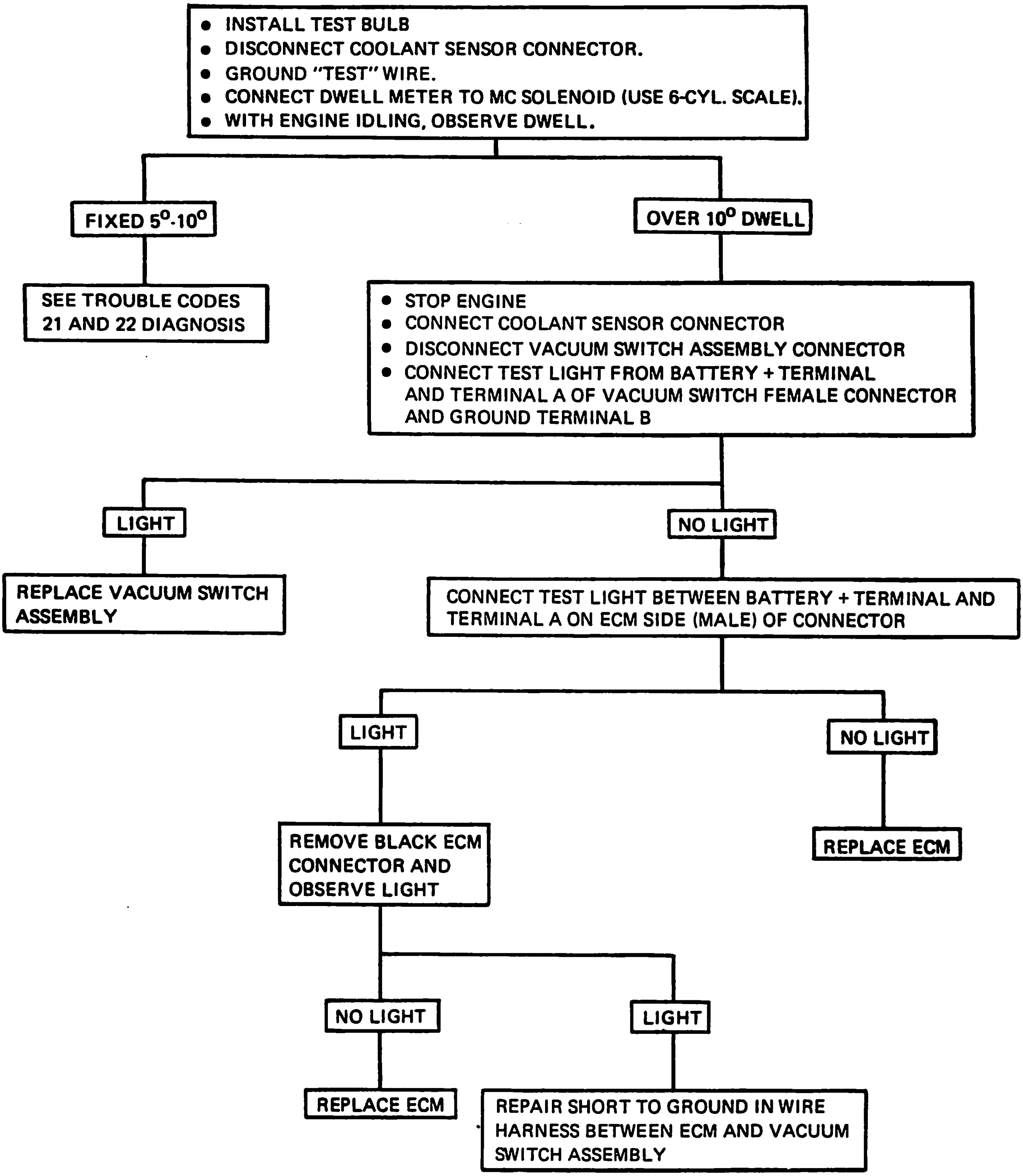

*OXYGEN SENSORS MAY COOL OFF AT IDLE AND THE DWELL CHANGE FROM VARYING TO FIXED BETWEEN 10°-50°. IF THIS OCCURS, RUNNING THE ENGINE AT FAST IDLE WILL WARM IT UP AGAIN.

90769N

TROUBLE CODE 23

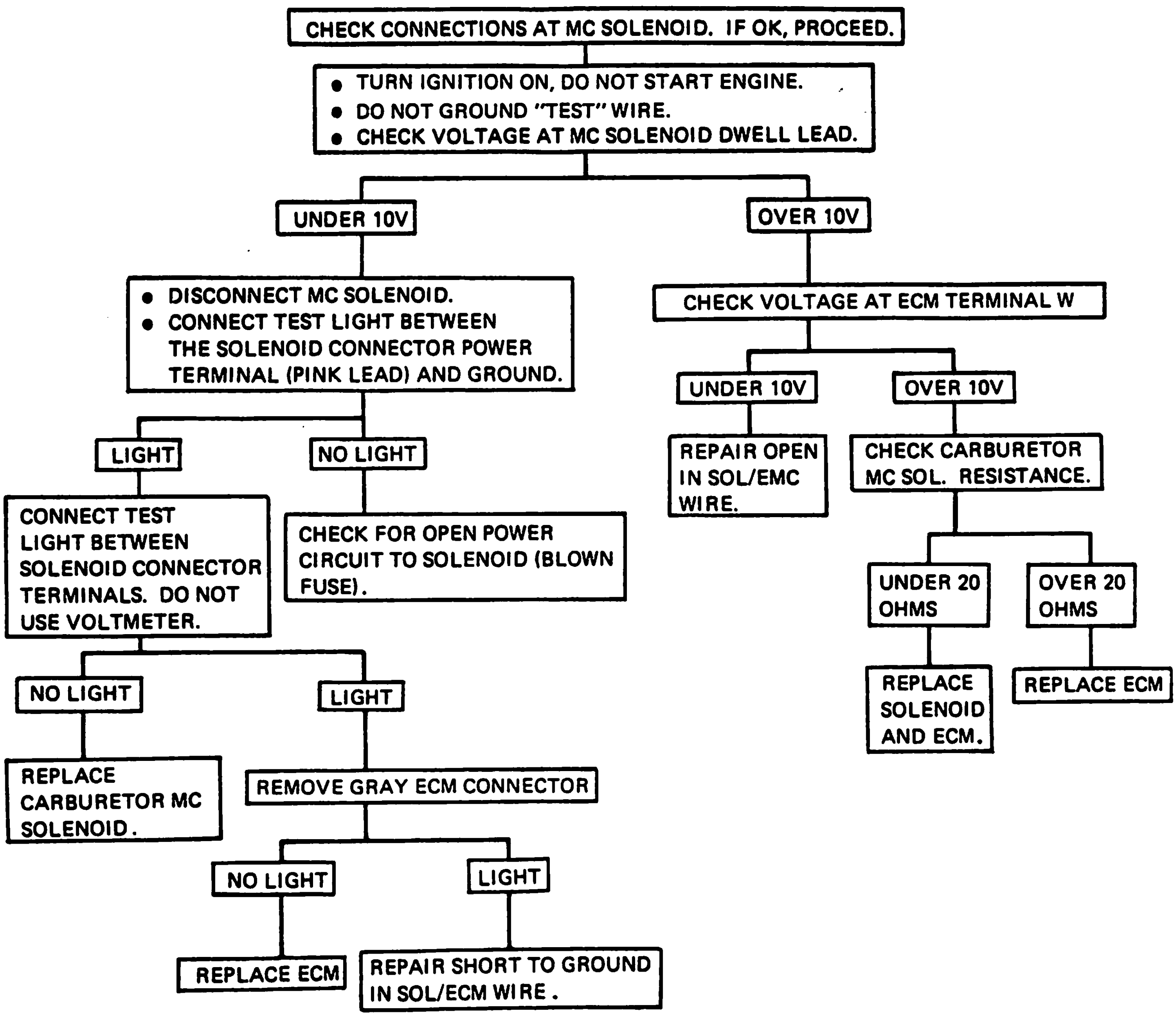

90769P

TROUBLE CODE 44

NOTE: IF CODES 44 AND 55 ARE BOTH FLASHED, REPLACE OXYGEN SENSOR AND PERFORM SYSTEM OPERATIONAL TEST.

- INSTALL TEST BULB
- GROUND "TEST" WIRE.
- CONNECT DWELL METER TO MC SOLENOID (USE-6 CYL. SCALE).
- RUN ENGINE ON HIGH STEP OF FAST IDLE CAM AND OBSERVE DWELL.

- **BETWEEN 10°-50°**
  - REPLACE OXYGEN SENSOR
- **5°-10°**
  - WITH ENGINE IDLING, CHOKE ENGINE.
    - **DWELL INCREASES**
      - CHECK FOR AIR LEAK IN VACUUM HOSES
        - **NO LEAK**
          - SEE E2SE CARBURETOR, CHAPTER IJ
        - **LEAK**
          - REPAIR AND RECHECK
    - **NO DWELL CHANGE**
      - DISCONNECT OXYGEN SENSOR CONNECTOR AND CONNECT TEST LIGHT BETWEEN BATTERY + TERMINAL AND TAN WIRE TERMINAL IN CONNECTOR (NOT OXYGEN SENSOR TERMINALS)
        - **DWELL INCREASES**
          - CONNECT TEST LIGHT BETWEEN BATTERY + TERMINAL AND PURPLE LEAD TERMINAL IN CONNECTOR
            - **LIGHT**
              - CHECK FOR GROUNDED PURPLE WIRE TO ECM TERMINAL J. IF NOT GROUNDED, REPLACE ECM.
            - **NO LIGHT**
              - REPLACE OXYGEN SENSOR
        - **NO DWELL CHANGE**
          - CHECK FOR SHORT TO GROUND IN TAN WIRE TO ECM TERMINAL K. IF NOT GROUNDED, REPLACE ECM.

90769R

TROUBLE CODE 45

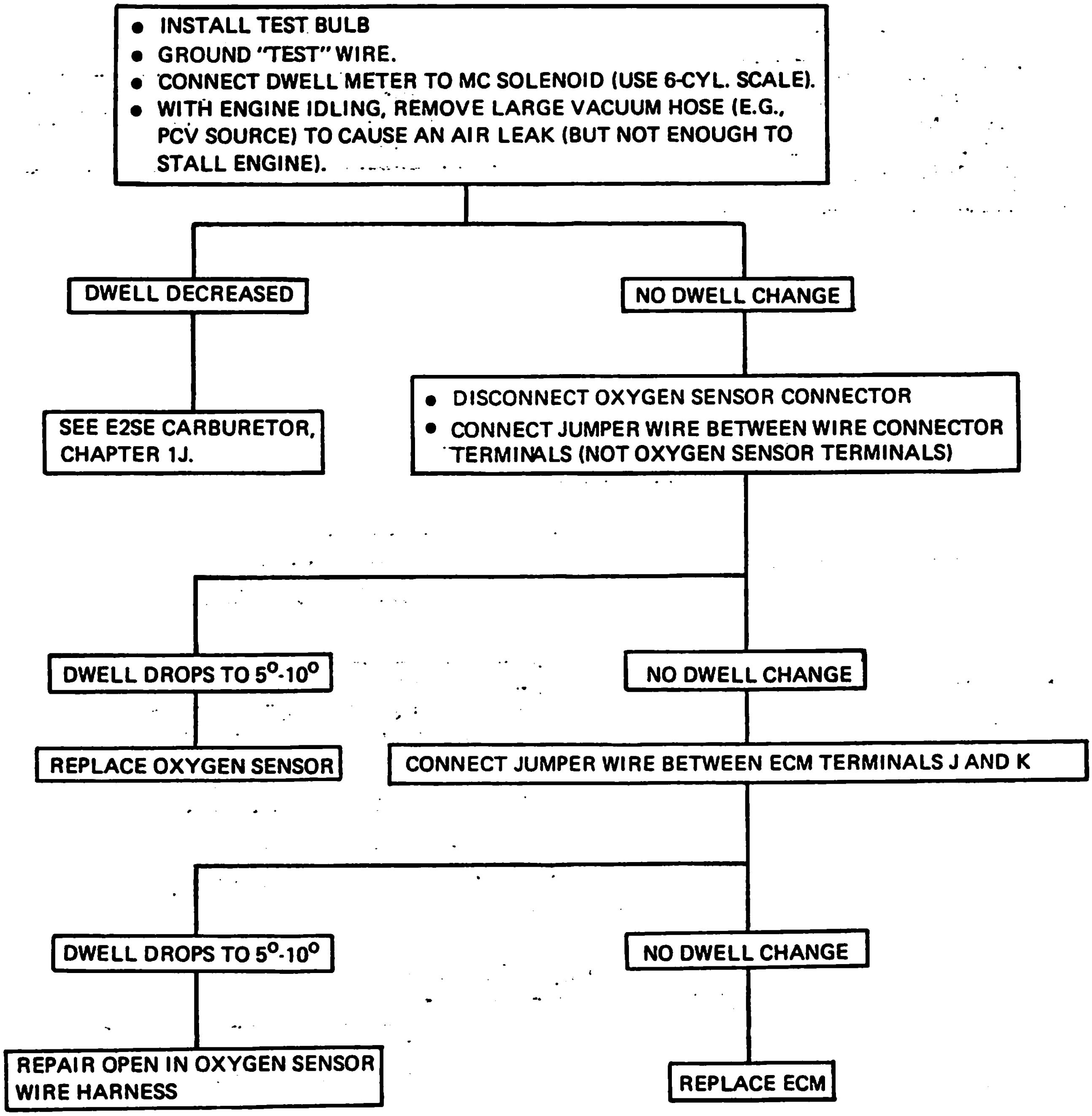

90769S

TROUBLE CODE 51-55

TROUBLE CODE 51

CHECK TO ENSURE ALL CALIBRATION UNIT PINS ARE FULLY INSERTED IN THE SOCKET AND ALIGNMENT IS CORRECT. IF OK, REPLACE ECM.

TROUBLE CODES 52-53

REPLACE ECM IF TEST BULB ILLUMINATED. NO TEST BULB LIGHT, INTERMITTENT ECM MALFUNCTION.

TROUBLE CODE 54

CHECK MC SOLENOID RESISTANCE

- LESS THAN 20 OHMS
  - • REPLACE MC SOLENOID
    • CLEAR MEMORY
    • START ENGINE. OBSERVE TEST BULB
    - NO LIGHT
      - PERFORM SYSTEM OPERATIONAL TEST
    - LIGHT
      - GROUND TEST WIRE AND OBSERVE CODE
        - SEE APPLICABLE CODE DIAGNOSIS
- MORE THAN 20 OHMS
  - • IGNITION ON, ENGINE NOT STARTED
    • DISCONNECT MC SOLENOID CONNECTOR
    • CONNECT TEST LIGHT FROM GROUND TO DWELL LEAD ON MC SOLENOID
    • DISCONNECT GRAY ECM CONNECTOR
    - NO LIGHT
      - REPLACE ECM
    - LIGHT
      - REPAIR SHORT TO POWER SOURCE IN BLUE WIRE LEADING TO ECM TERMINAL W
        CLEAR MEMORY AND CHECK FOR OTHER TROUBLE CODES.

TROUBLE CODE 55

CHECK FOR AN OPEN IN OXYGEN SENSOR RETURN WIRE TO ECM TERMINAL K. IF OK, REPLACE ECM.

90769T

DIAGNOSTIC PROCEDURES FOR CEC SYSTEM

General

The open loop mode of operation occurs when:

- starting engine, engine is cold or air cleaner air is cold,
- engine is at idle speed,
- carburetor is either at or near wide open throttle (WOT).

When any of these conditions occur, the metering pins are driven to a predetermined programmed position for each condition. Because the positions are predetermined and no feedback from the oxygen sensor relative to the results is accepted, this type of operation is referred to as open loop operation. The five open loop operations are characterized by the metering pins being driven to a position where they are stopped and remain stationary.

Operational Priorities

Each operation (except closed loop) has a specific metering pin position and because more than one of the operation selection conditions can be present at one time, the MCU (microprocessor) is programmed with a priority ranking for the operations. It complies with the conditions that pertain to the operation having the highest priority. The priorities are as listed below.

- Cold Weather Engine Start-up and Operation

If the air cleaner air temperature is below the calibrated value of the thermal electric switch (TES), the stepper motor is positioned a predetermined number of steps rich of the initialization position and air injection is switched upstream. Lean air/fuel mixtures are not permitted for a preset period following a cold weather start-up.

- Open Loop 2, Wide Open Throttle (WOT)

Open Loop 2 is selected whenever the air cleaner air temperature is above the calibrated value of the TES and the WOT switch has been engaged.

When the Open Loop 2 mode is selected, the stepper motor is driven to a calibrated number of steps rich of initialization and the air control valve routes air downstream. However, if the "lean limit" (altitude) jumper wire is installed, the air is instead routed upstream. The WOT timer is activated whenever OL2 is selected and it remains active for a preset period of time. The WOT timer remains inoperative if the "lean limit" (altitude) jumper wire is installed.

- Open Loop 4

Open Loop 4 is selected whenever manifold vacuum falls below a predetermined level. During OL4 operation, the stepper motor is positioned at the initialization position. Air injection is switched upstream during OL4 operation. However, air is diverted downstream if the extended OL4 timer is activated and if the "lean limit" (altitude) jumper wire is not installed. Air is also diverted downstream if the WOT timer is activated.

- Open Loop 3

Open Loop 3 is selected when the ignition advance vacuum level falls below a predetermined level.

When the OL3 mode is selected, the engine rpm is also determined. If the rpm (tach) voltage is greater than the calibrated value, an engine deceleration condition is assumed to exist. If the rpm (tach) voltage is less than the calibrated value, an engine idle speed condition is assumed to exist.

- Open Loop 1

Open Loop 1 will be selected if the air cleaner air temperature is above a calibrated value and Open Loop 2, 3 or 4 is not selected, and if the engine coolant temperature is below the calibrated value.

The OL1 mode operates in lieu of normal closed-loop operation during a cold engine operating condition. If OL1 operation is selected, one of two predetermined stepper motor positions are chosen, dependent on whether or not the altitude circuit (lean limit) jumper wire is installed.

With each engine start-up, a start-up timer is activated. During this interval, if the engine operating condition would otherwise trigger normal closed loop operation, OL1 operation is selected.

- Closed Loop

Closed loop operation is selected after either OL1, OL2, OL3 or OL4 modes have been selected and the start-up timer has timed out. Air injection is routed downstream during closed loop operation. The predetermined lean mixture ceiling is selected for a preset length of time at the onset of closed loop operation.

Open Loop Operation Predetermined Position Variation

An additional function of the MCU is to correct for a change in ambient conditions (e.g., high altitude). During closed loop operation the MCU stores the number of steps and direction that the metering pins are driven to correct the oxygen content of the exhaust. If the movements are consistently to the same position, the MCU will vary all open loop operation predetermined metering pin positions a corresponding amount. This function allows the open loop air/fuel mixture ratios to be "tailored" to the existing ambient condition during each uninterrupted use of the system. This optimizes emission control and engine performance for the ambient operating condition involved.

Closed Loop Operation

The CEC system controls the air/fuel ratio with movable air metering pins, visible from the top of the carburetor air horn, that are driven by the stepper motor. The stepper motor moves the metering pins in increments or small steps via electrical impulses generated by the MCU. The MCU causes the stepper motor to drive the metering pins to a richer or leaner position in reaction to the voltage input from the oxygen sensor located in the exhaust manifold. The oxygen sensor voltage varies in reaction to changes in oxygen content present in the exhaust gas. Because the content of oxygen in the exhaust gas indicates the completeness of the combustion process, it is a reliable indicator of the air/fuel mixture that is entering the combustion chamber.

Because the oxygen sensor only reacts to oxygen, any air leak or malfunction between the carburetor and sensor may cause the sensor to provide an erroneous voltage output. This could be caused by a fouled spark plug, manifold air leak or malfunctioning secondary air check valve.

The engine operation characteristics never quite permit the MCU to compute a single metering pin position that constantly provides the optimum air/fuel mixture. Therefore, closed loop operation is characterized by constant movement of the metering pins because the MCU is forced constantly to make small corrections in the air/fuel mixture in an attempt to create an optimum air/fuel mixture ratio.

Idle Speed Control System

The idle speed control system (fig. 1J-161) is interrelated with the CEC System and must be diagnosed in conjunction with CEC System. Refer to Diagnostic Tests 6, 7 and 8, and Chapter 1K if a malfunction occurs.

Electronic Ignition Retard

The electronic ignition retard function of the ignition control module is interrelated with the CEC System and must be diagnosed in conjunction with the CEC System. Refer to Diagnostic Test 4 if a malfunction occurs.

Air Injection System

The air injection system is interrelated with the CEC System and must be diagnosed in conjunction with the CEC System. Refer to Diagnostic Tests 6, 7 and 8, and Chapter 1K if a malfunction occurs.

Initialization

When the ignition system is turned off, the MCU is also turned off. It has no long term memory circuit for prior operation. As a result, it has an initialization function that is activated when the ignition switch is turned On.

The MCU initialization function moves the metering pins to the predetermined starting position by first driving them all the way to the rich end stop and then driving them in the lean direction by a predetermined number of steps. No matter where they were before initialization, they will be at the correct position at the end of every initialization period.

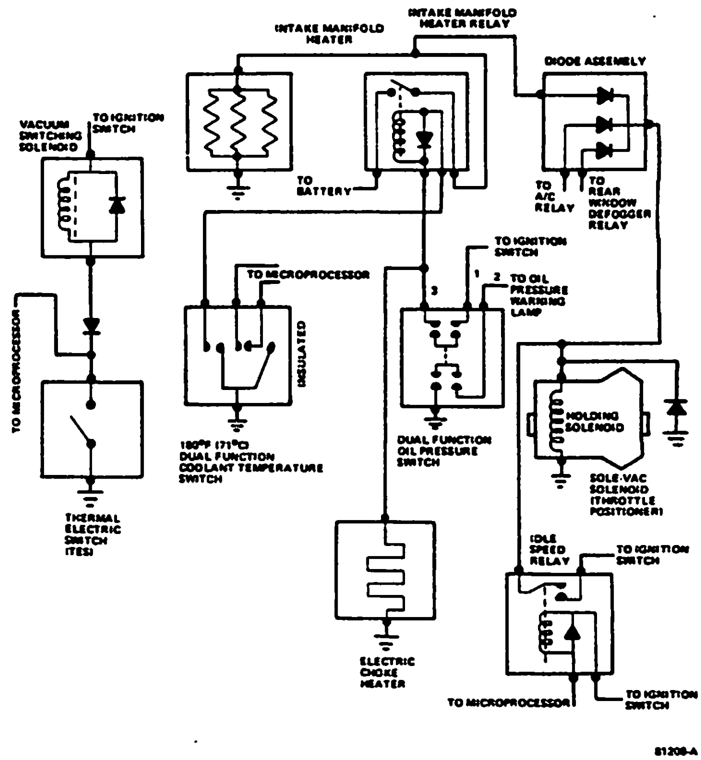

Fig. 1J-161 Idle Speed Control System Diagram

Because each open loop operation metering pin position is dependent on the initialization function, this function is the first test in the diagnostic procedure.

Diagnostic Tests

The CEC System should be considered as a possible source of trouble for engine performance, fuel economy and exhaust emission complaints only after normal tests that would apply to a vehicle without the system have been performed.

The steps in each test will provide a systematic evaluation of each component that could cause the operational malfunction.

After completing a repair, repeat the test to ensure the malfunction has been eliminated.

The equipment required to perform the tests is a tachometer, a hand vacuum pump, a digital volt-ohmmeter (DVOM) with a minimum ohms-per-volt input impedance of 10 meg-ohms and jumper wires.

WARNING: *When performing system diagnostic tests, the following safety precautions **must** be followed:*

(1) *Shape a sheet of clear acrylic plastic at least 0.250-inch thick and 15 inches x 15 inches, as depicted in figure 1J-162.*

(2) *Secure acrylic sheet with air cleaner wing nut after top of air cleaner has been removed.*

(3) *Wear eye protection whenever performing tests.*

(4) *When engine is operating, keep hands and arms clear of fan, drive pulleys and belts. Do not wear loose clothing. Do not stand in direct line with fan blades.*

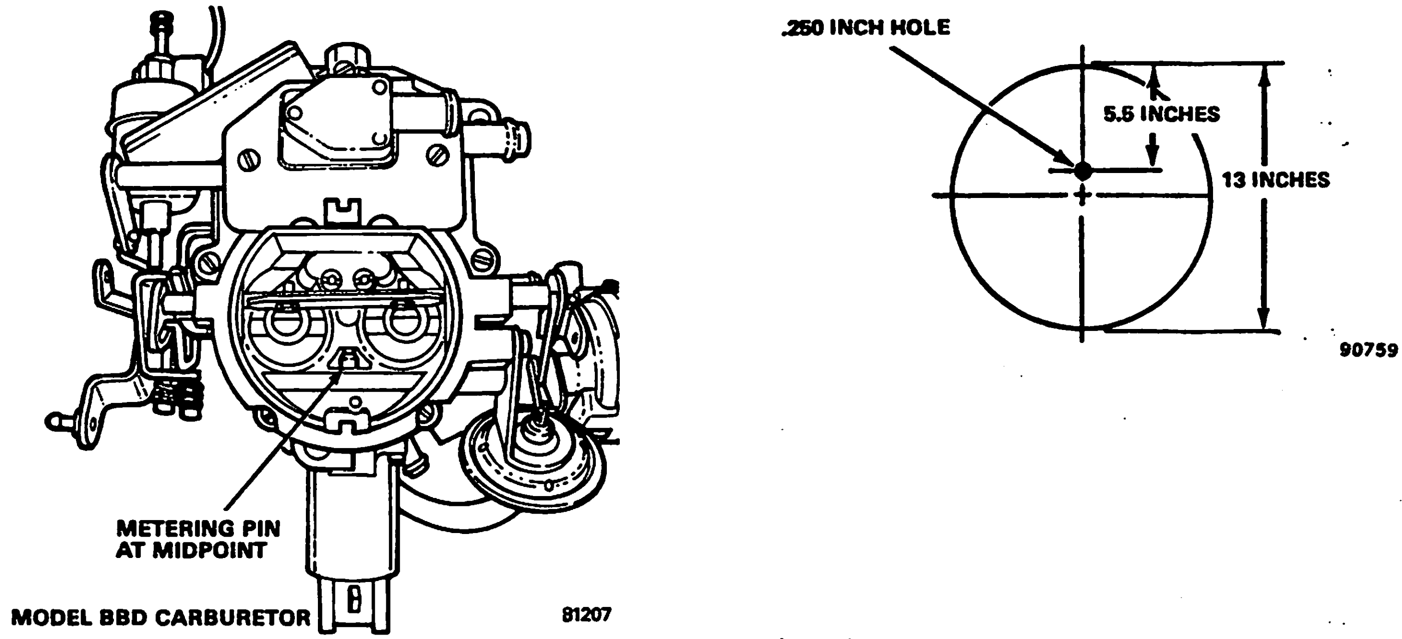

Fig. 1J-162 Air Cleaner Cover and Metering Pin Location

Diagnostic Test 1: Initialization

(1) Remove air cleaner cover. Observe WARNING above. Follow test procedure outlined in Test 1. Refer to figures 1J-163, 1J-164, 1J-165, 1J-166, 1J-167, and 1J-168.

NOTE: *The metering pins operate in tandem. Only the upper pin is visible.*

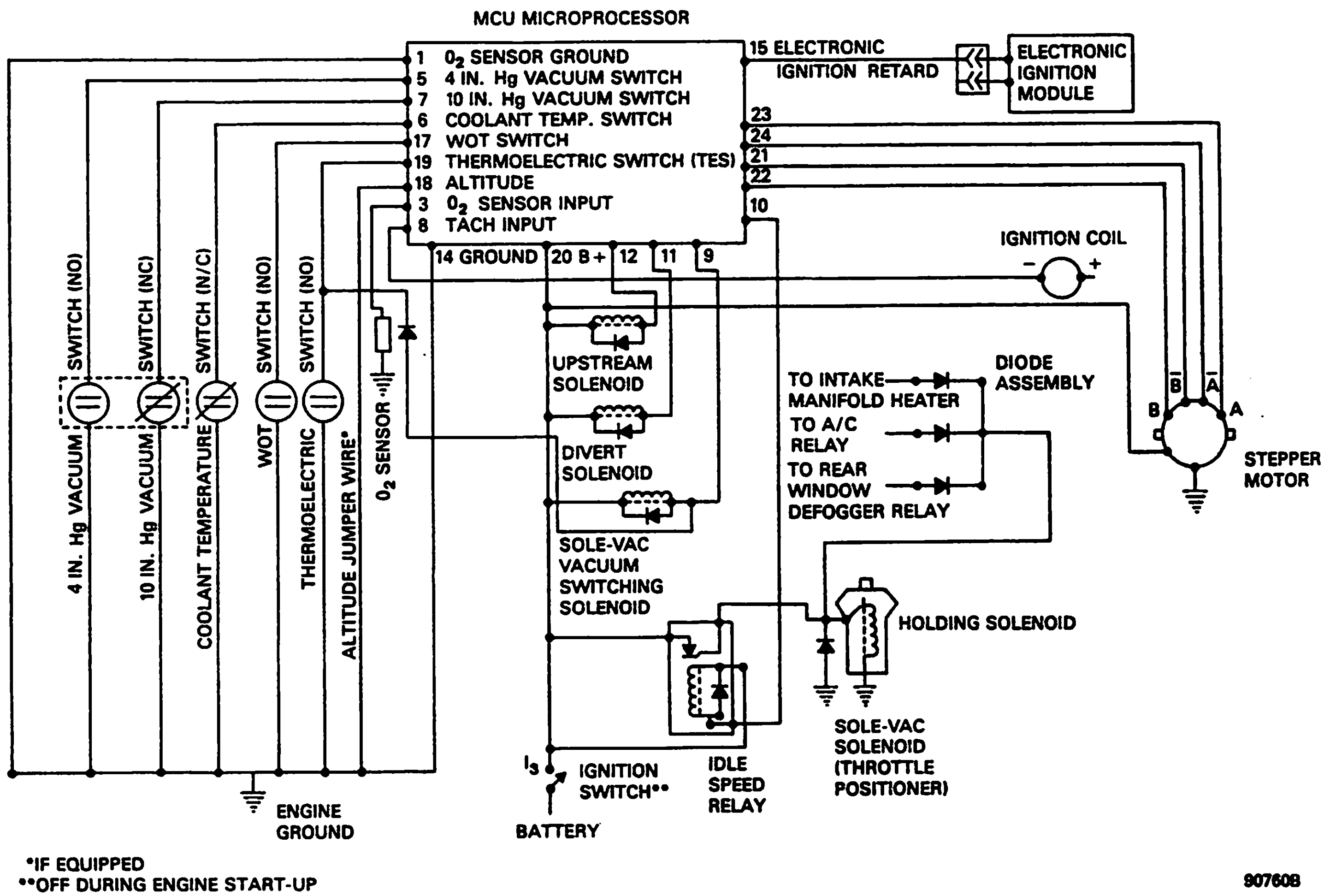

Fig. 1J-163 CEC System Wiring Diagram

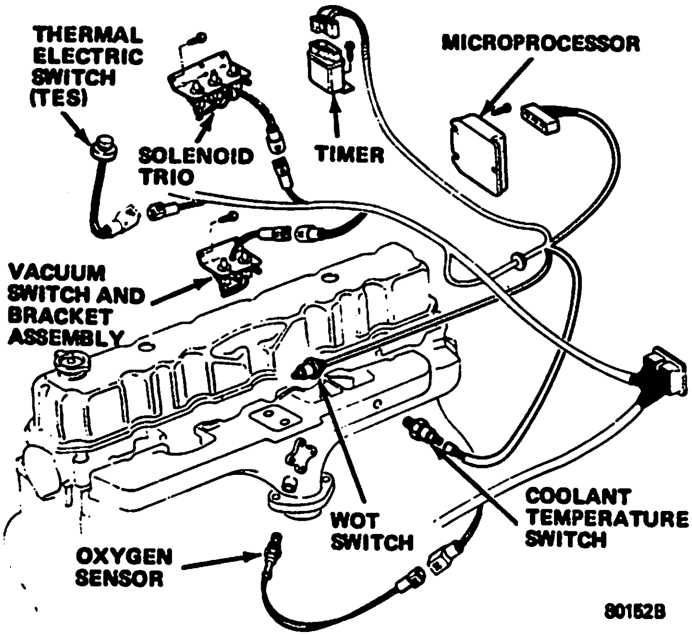

Fig. 1J-164 CEC System

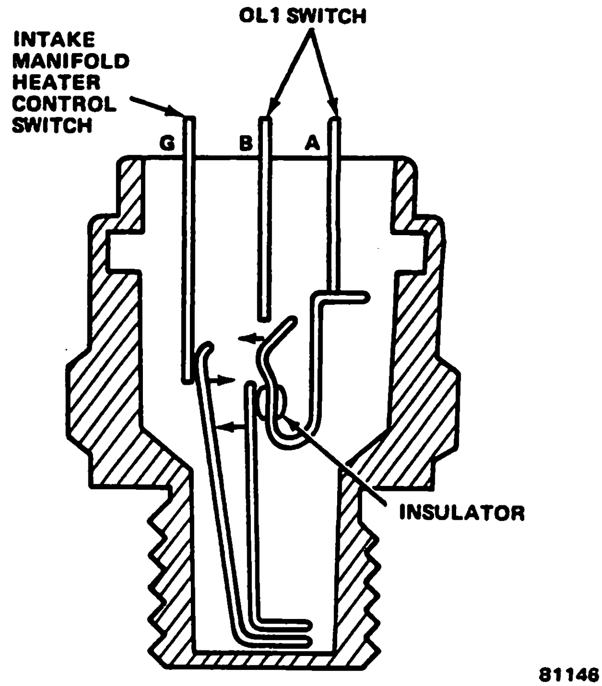

Fig. 1J-166 Coolant Temperature Switch

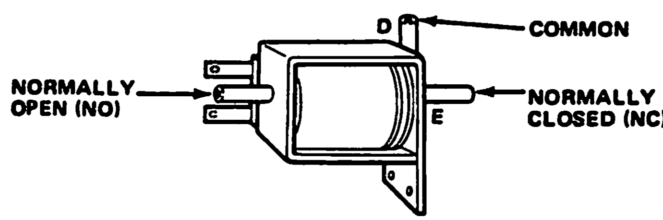

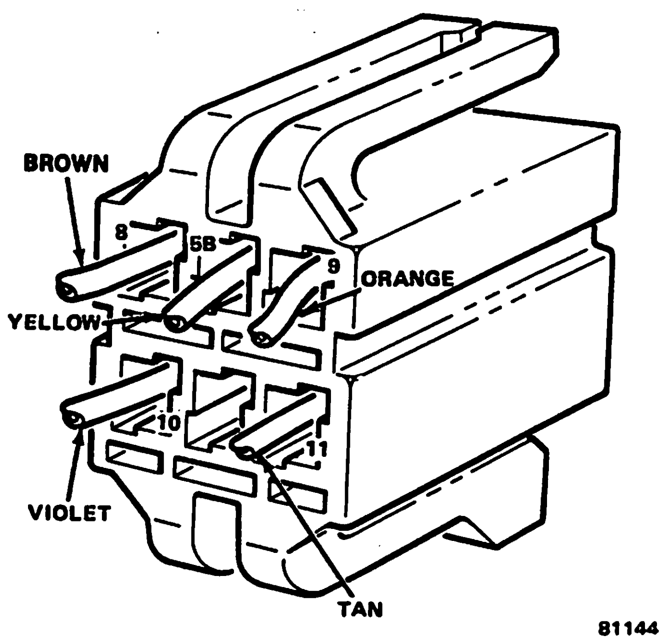

Fig. 1J-165 Stepper Motor Connector

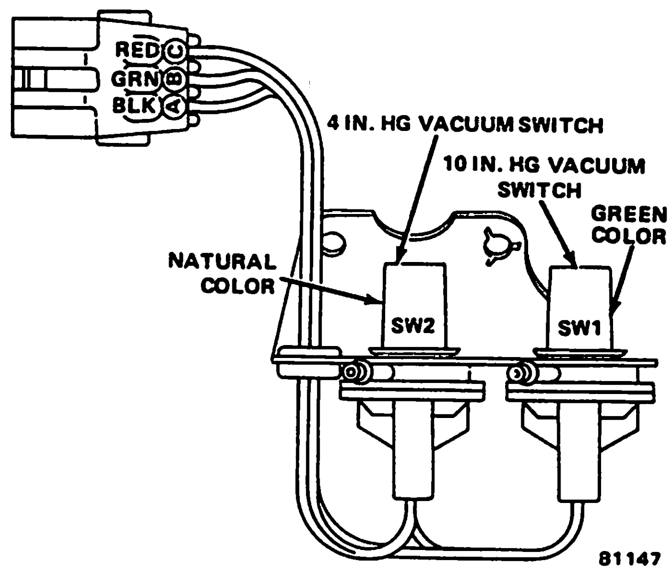

Fig. 1J-167 Vacuum Switch Assembly

Test Results

If after completing the **Tests** the problem persists, other engine associated systems that can affect air/fuel mixture, combustion efficiency or exhaust gas composition can be causing the fault. These systems include:

- basic carburetor adjustments;
- mechanical engine operation (i.e., plugs, valves, rings);
- ignition System;
- gaskets (intake manifold, carburetor or base plate);
- loose vacuum hoses or fittings.

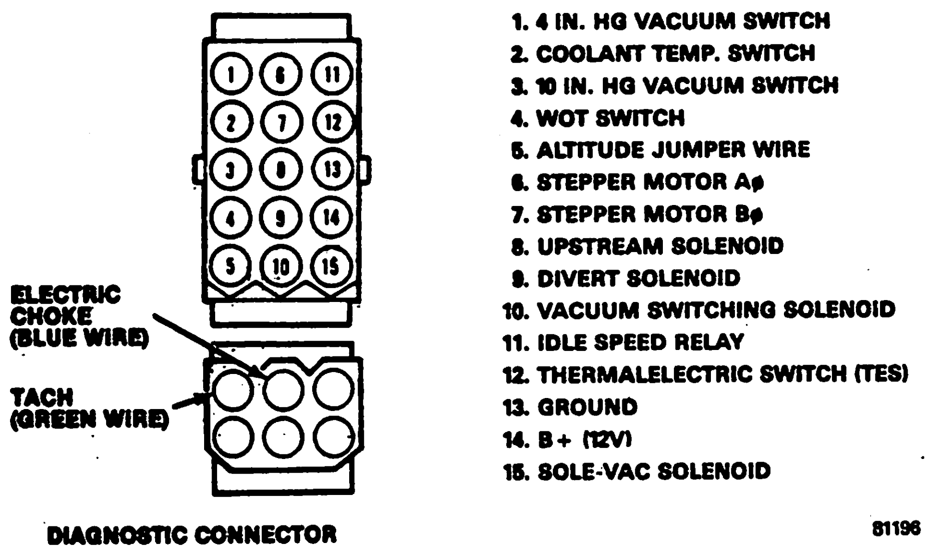

Fig. 1J-168 Diagnostic Connector

DIAGNOSTIC TEST 1

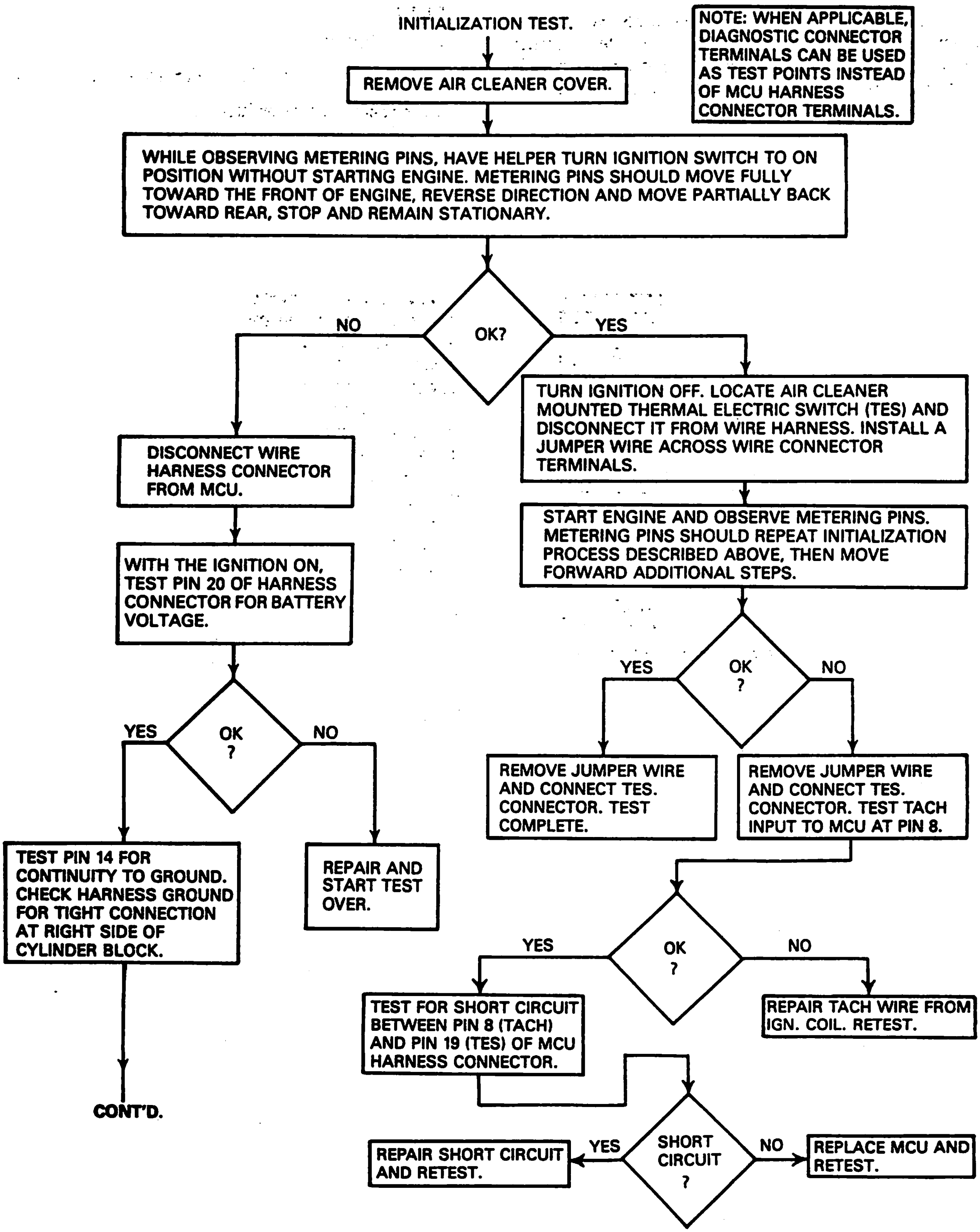

81132A

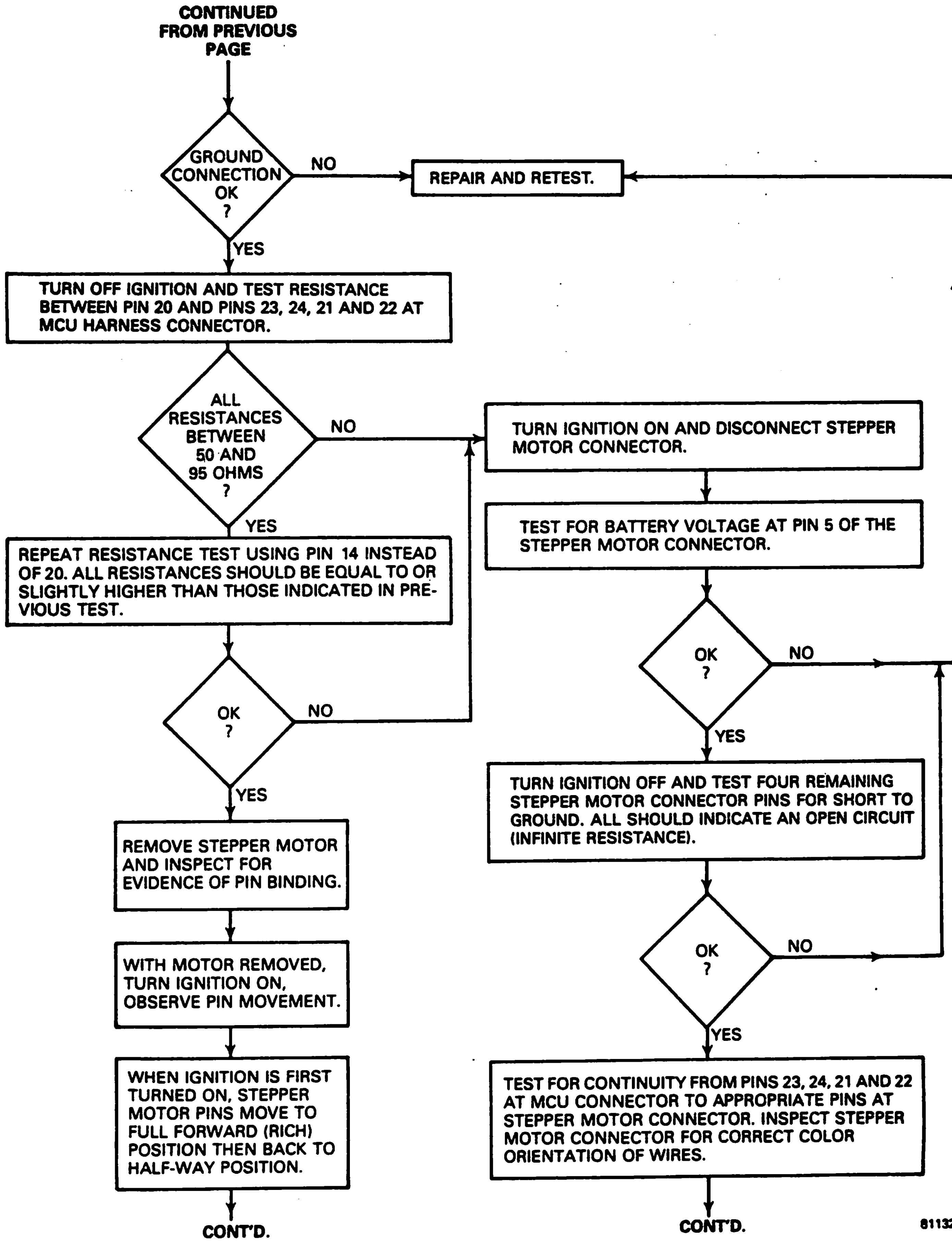
CONTINUED FROM PREVIOUS PAGE
GROUND CONNECTION OK ?
NO
REPAIR AND RETEST.
YES
TURN OFF IGNITION AND TEST RESISTANCE BETWEEN PIN 20 AND PINS 23, 24, 21 AND 22 AT MCU HARNESS CONNECTOR.
ALL RESISTANCES BETWEEN 50 AND 95 OHMS ?
NO
TURN IGNITION ON AND DISCONNECT STEPPER MOTOR CONNECTOR.
TEST FOR BATTERY VOLTAGE AT PIN 5 OF THE STEPPER MOTOR CONNECTOR.
YES
REPEAT RESISTANCE TEST USING PIN 14 INSTEAD OF 20. ALL RESISTANCES SHOULD BE EQUAL TO OR SLIGHTLY HIGHER THAN THOSE INDICATED IN PREVIOUS TEST.
OK ?
NO
YES
OK ?
NO
YES
TURN IGNITION OFF AND TEST FOUR REMAINING STEPPER MOTOR CONNECTOR PINS FOR SHORT TO GROUND. ALL SHOULD INDICATE AN OPEN CIRCUIT (INFINITE RESISTANCE).
REMOVE STEPPER MOTOR AND INSPECT FOR EVIDENCE OF PIN BINDING.
WITH MOTOR REMOVED, TURN IGNITION ON, OBSERVE PIN MOVEMENT.
OK ?
NO
YES
WHEN IGNITION IS FIRST TURNED ON, STEPPER MOTOR PINS MOVE TO FULL FORWARD (RICH) POSITION THEN BACK TO HALF-WAY POSITION.
TEST FOR CONTINUITY FROM PINS 23, 24, 21 AND 22 AT MCU CONNECTOR TO APPROPRIATE PINS AT STEPPER MOTOR CONNECTOR. INSPECT STEPPER MOTOR CONNECTOR FOR CORRECT COLOR ORIENTATION OF WIRES.
CONT'D.
CONT'D.

811328

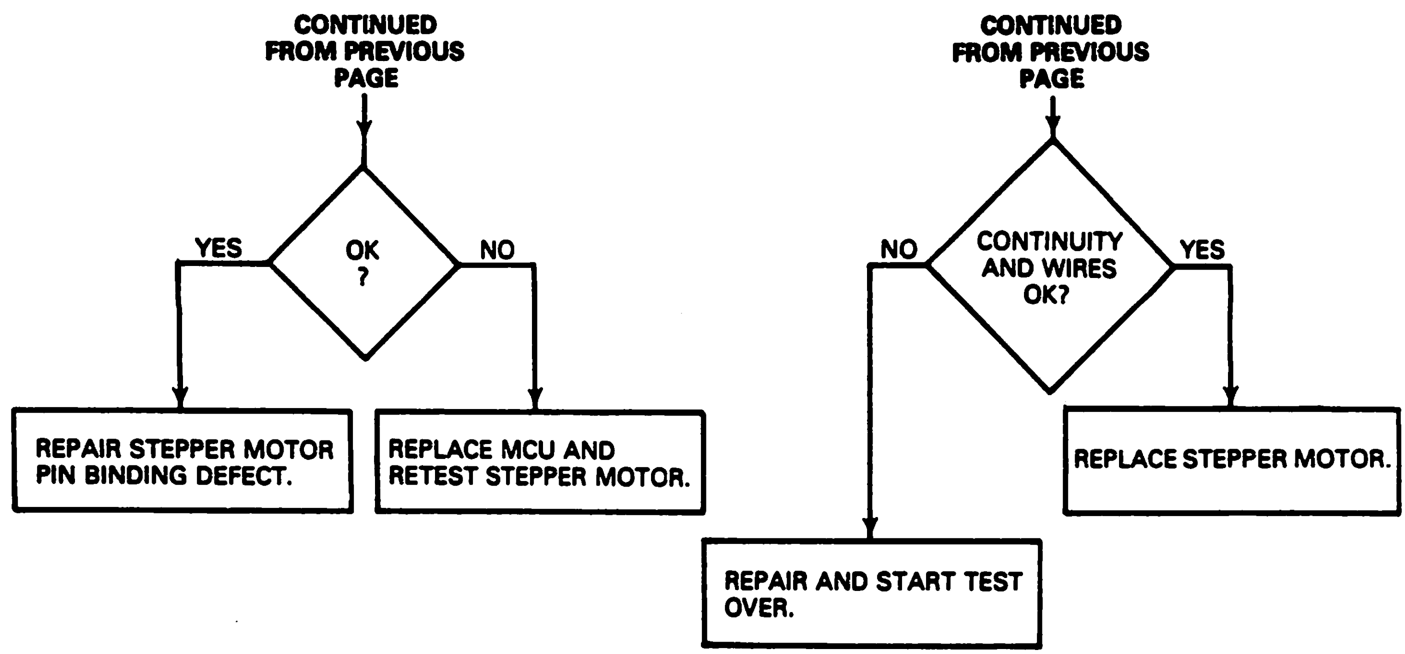
CONTINUED FROM PREVIOUS PAGE
OK ?
YES
NO
REPAIR STEPPER MOTOR PIN BINDING DEFECT.
REPLACE MCU AND RETEST STEPPER MOTOR.
CONTINUED FROM PREVIOUS PAGE
CONTINUITY AND WIRES OK?
NO
YES
REPLACE STEPPER MOTOR.
REPAIR AND START TEST OVER.

81132C

NOTE: ENGINE SHOULD BE AT NORMAL OPERATING TEMPERATURE.

DIAGNOSTIC TEST 2

NOTE: CONTINUITY TESTING WITH MCU CONNTECTED TO THE SYSTEM SHOULD INDICATE 2 OHMS. WHEN THE MCU IS DISCONNECTED FROM THE SYSTEM, ALL CONTINUITY SHOULD INDICATE LESS THAN 1 OHM. WHEN APPLICABLE, DIAGNOSTIC CONNECTOR TERMINALS CAN BE USED AS TEST POINTS INSTEAD OF MCU HARNESS CONNECTOR TERMINALS.

OPEN LOOP SWITCH TEST

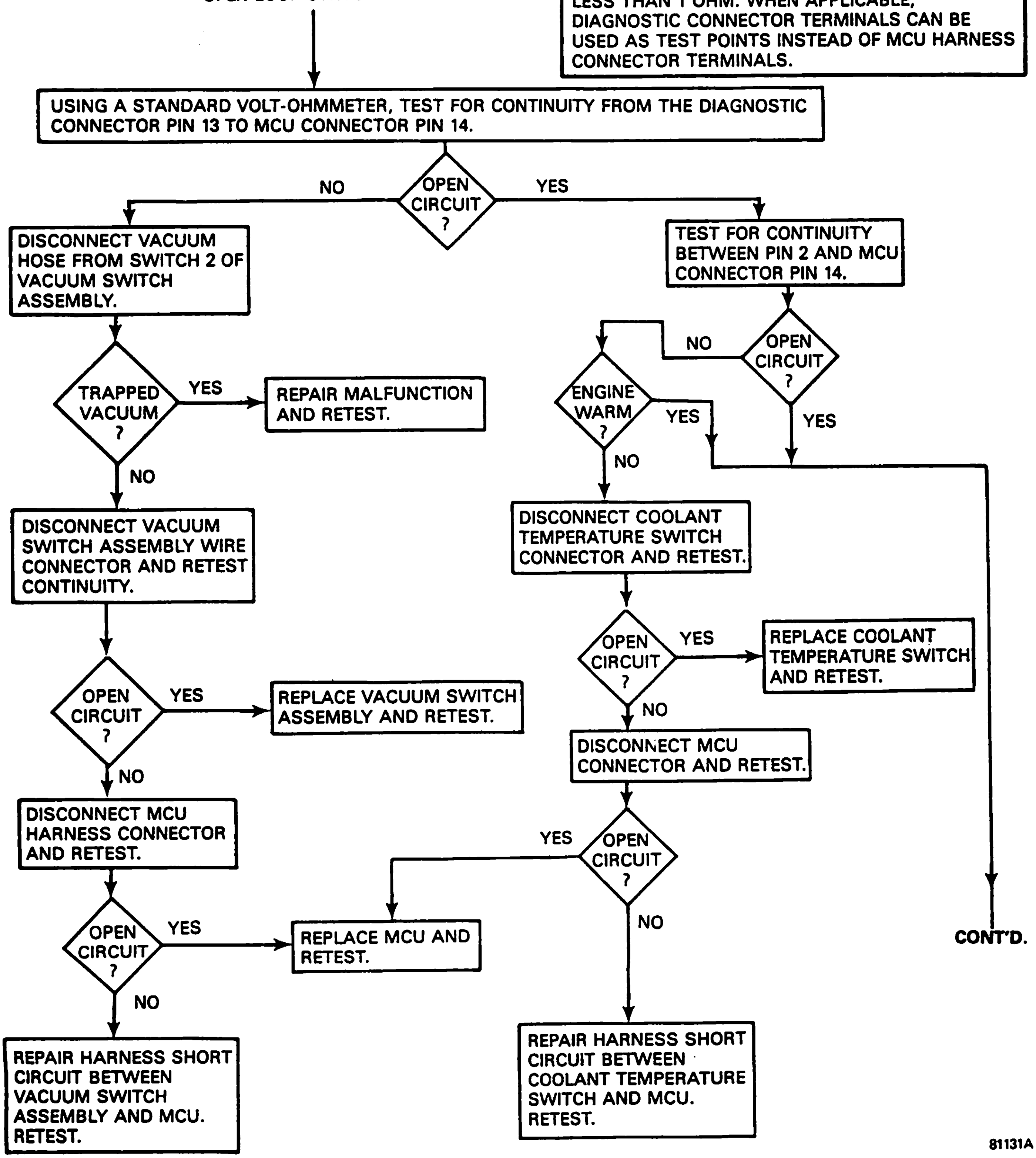

81131A

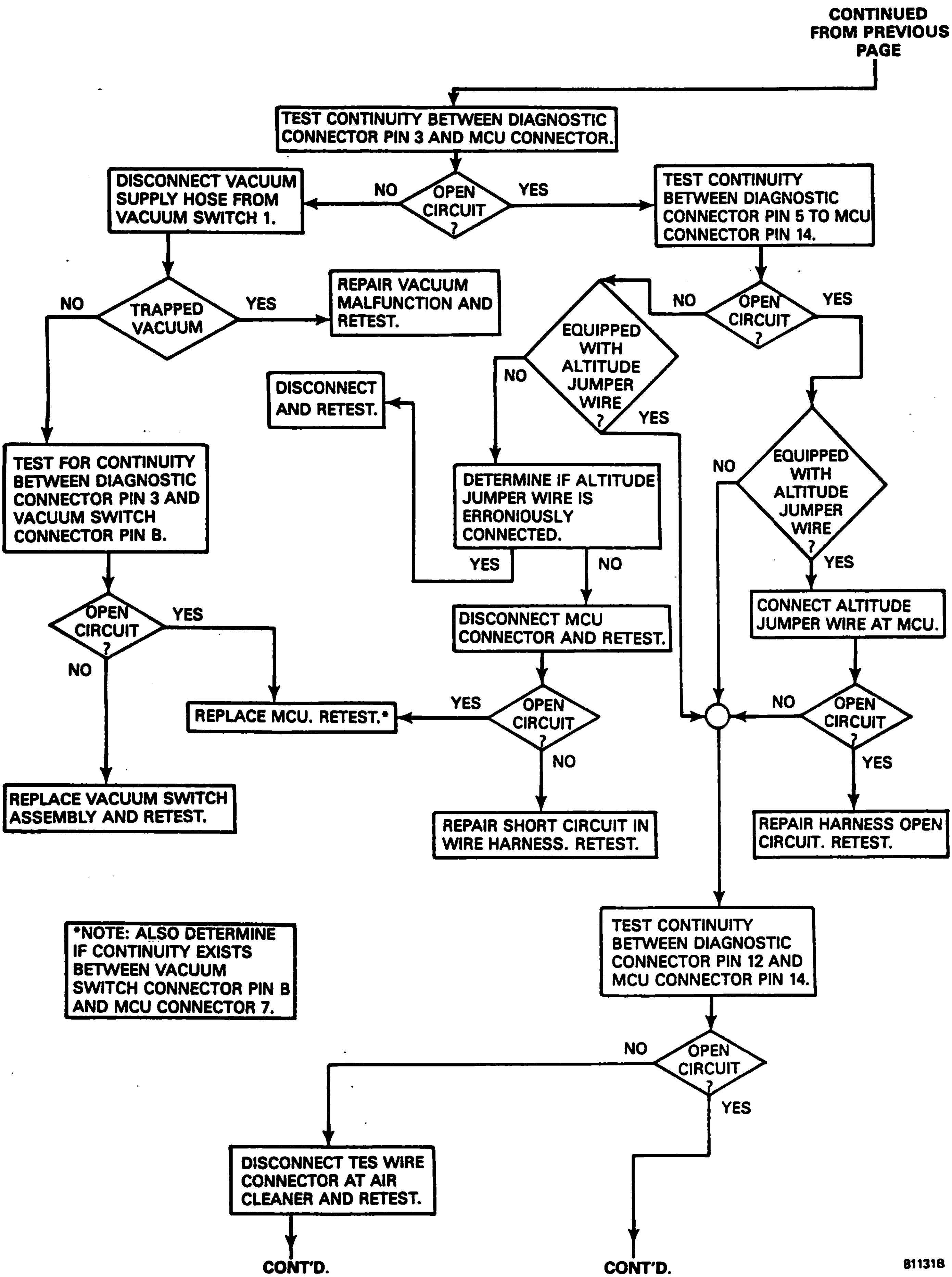
CONTINUED FROM PREVIOUS PAGE
TEST CONTINUITY BETWEEN DIAGNOSTIC CONNECTOR PIN 3 AND MCU CONNECTOR.
OPEN CIRCUIT ?
NO
YES
DISCONNECT VACUUM SUPPLY HOSE FROM VACUUM SWITCH 1.
TEST CONTINUITY BETWEEN DIAGNOSTIC CONNECTOR PIN 5 TO MCU CONNECTOR PIN 14.
TRAPPED VACUUM
NO
YES
REPAIR VACUUM MALFUNCTION AND RETEST.
OPEN CIRCUIT ?
NO
YES
EQUIPPED WITH ALTITUDE JUMPER WIRE ?
NO
YES
DISCONNECT AND RETEST.
TEST FOR CONTINUITY BETWEEN DIAGNOSTIC CONNECTOR PIN 3 AND VACUUM SWITCH CONNECTOR PIN B.
DETERMINE IF ALTITUDE JUMPER WIRE IS ERRONIOUSLY CONNECTED.
YES
NO
EQUIPPED WITH ALTITUDE JUMPER WIRE ?
NO
YES
OPEN CIRCUIT ?
YES
NO
DISCONNECT MCU CONNECTOR AND RETEST.
CONNECT ALTITUDE JUMPER WIRE AT MCU.
REPLACE MCU. RETEST.*
YES
OPEN CIRCUIT ?
NO
NO
OPEN CIRCUIT ?
YES
REPLACE VACUUM SWITCH ASSEMBLY AND RETEST.
REPAIR SHORT CIRCUIT IN WIRE HARNESS. RETEST.
REPAIR HARNESS OPEN CIRCUIT. RETEST.
*NOTE: ALSO DETERMINE IF CONTINUITY EXISTS BETWEEN VACUUM SWITCH CONNECTOR PIN B AND MCU CONNECTOR 7.
TEST CONTINUITY BETWEEN DIAGNOSTIC CONNECTOR PIN 12 AND MCU CONNECTOR PIN 14.
NO
OPEN CIRCUIT ?
YES
DISCONNECT TES WIRE CONNECTOR AT AIR CLEANER AND RETEST.
CONT'D.
CONT'D.
81131B

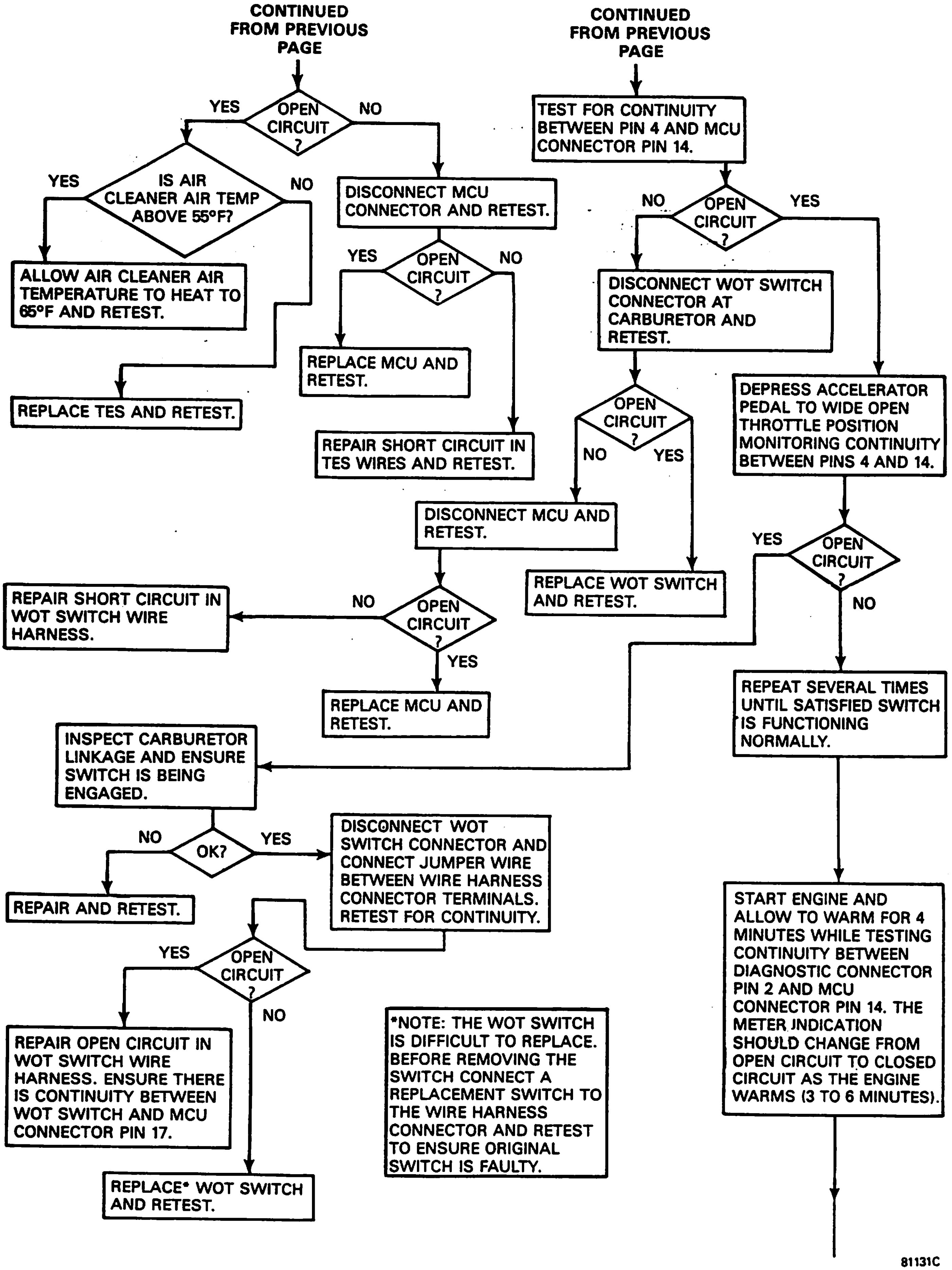
CONTINUED FROM PREVIOUS PAGE
OPEN CIRCUIT ?
YES
NO
IS AIR CLEANER AIR TEMP ABOVE 55°F?
YES
NO
ALLOW AIR CLEANER AIR TEMPERATURE TO HEAT TO 65°F AND RETEST.
REPLACE TES AND RETEST.
DISCONNECT MCU CONNECTOR AND RETEST.
OPEN CIRCUIT ?
YES
NO
REPLACE MCU AND RETEST.
REPAIR SHORT CIRCUIT IN TES WIRES AND RETEST.
CONTINUED FROM PREVIOUS PAGE
TEST FOR CONTINUITY BETWEEN PIN 4 AND MCU CONNECTOR PIN 14.
OPEN CIRCUIT ?
NO
YES
DISCONNECT WOT SWITCH CONNECTOR AT CARBURETOR AND RETEST.
OPEN CIRCUIT ?
NO
YES
DISCONNECT MCU AND RETEST.
REPLACE WOT SWITCH AND RETEST.
OPEN CIRCUIT ?
NO
YES
REPAIR SHORT CIRCUIT IN WOT SWITCH WIRE HARNESS.
REPLACE MCU AND RETEST.
DEPRESS ACCELERATOR PEDAL TO WIDE OPEN THROTTLE POSITION MONITORING CONTINUITY BETWEEN PINS 4 AND 14.
OPEN CIRCUIT ?
YES
NO
REPEAT SEVERAL TIMES UNTIL SATISFIED SWITCH IS FUNCTIONING NORMALLY.
INSPECT CARBURETOR LINKAGE AND ENSURE SWITCH IS BEING ENGAGED.
OK?
NO
YES
REPAIR AND RETEST.
DISCONNECT WOT SWITCH CONNECTOR AND CONNECT JUMPER WIRE BETWEEN WIRE HARNESS CONNECTOR TERMINALS. RETEST FOR CONTINUITY.
OPEN CIRCUIT ?
YES
NO
REPAIR OPEN CIRCUIT IN WOT SWITCH WIRE HARNESS. ENSURE THERE IS CONTINUITY BETWEEN WOT SWITCH AND MCU CONNECTOR PIN 17.
REPLACE* WOT SWITCH AND RETEST.
*NOTE: THE WOT SWITCH IS DIFFICULT TO REPLACE. BEFORE REMOVING THE SWITCH CONNECT A REPLACEMENT SWITCH TO THE WIRE HARNESS CONNECTOR AND RETEST TO ENSURE ORIGINAL SWITCH IS FAULTY.
START ENGINE AND ALLOW TO WARM FOR 4 MINUTES WHILE TESTING CONTINUITY BETWEEN DIAGNOSTIC CONNECTOR PIN 2 AND MCU CONNECTOR PIN 14. THE METER INDICATION SHOULD CHANGE FROM OPEN CIRCUIT TO CLOSED CIRCUIT AS THE ENGINE WARMS (3 TO 6 MINUTES).
81131C

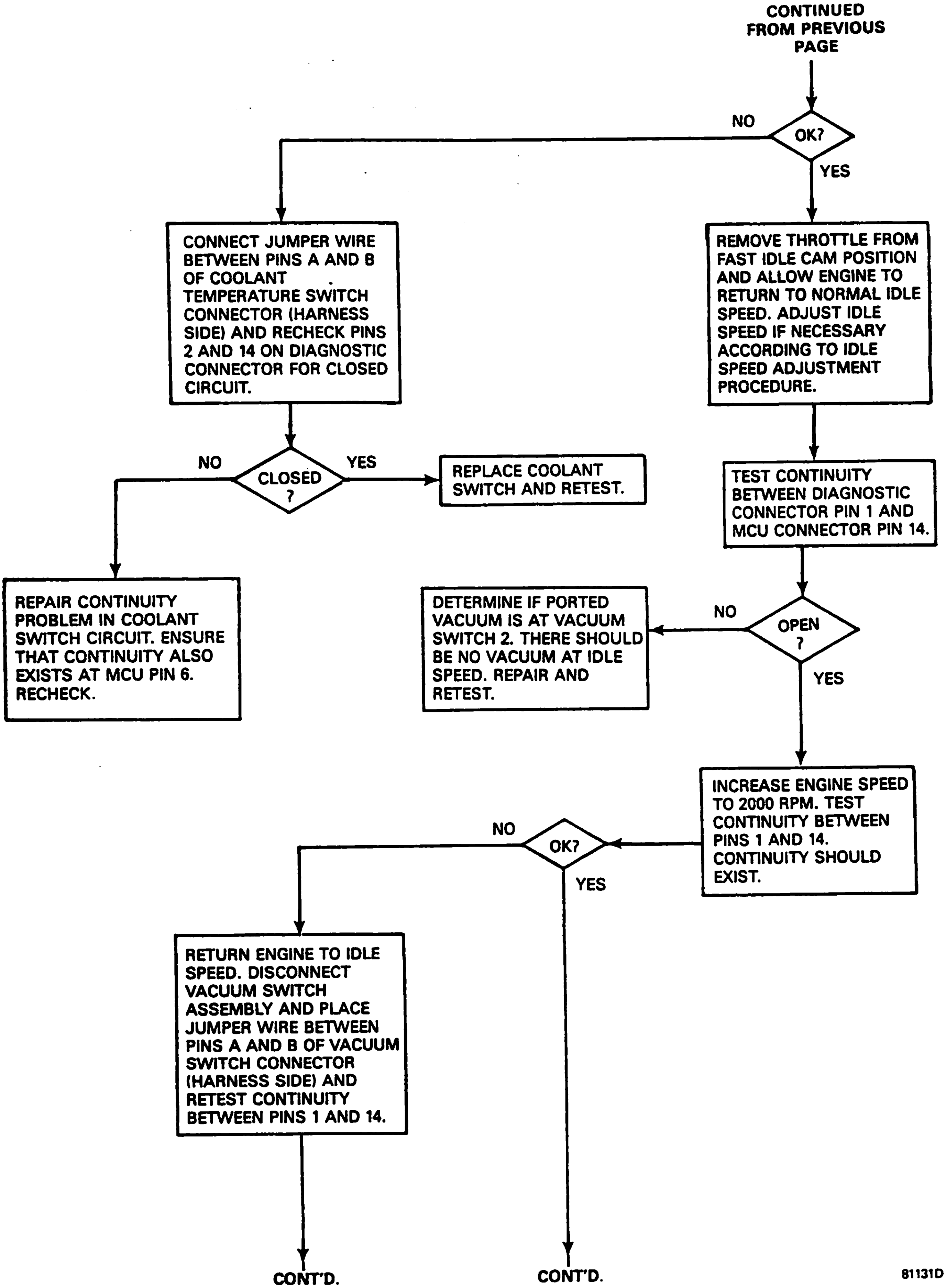
CONTINUED FROM PREVIOUS PAGE
OK?
NO
YES
CONNECT JUMPER WIRE BETWEEN PINS A AND B OF COOLANT TEMPERATURE SWITCH CONNECTOR (HARNESS SIDE) AND RECHECK PINS 2 AND 14 ON DIAGNOSTIC CONNECTOR FOR CLOSED CIRCUIT.
REMOVE THROTTLE FROM FAST IDLE CAM POSITION AND ALLOW ENGINE TO RETURN TO NORMAL IDLE SPEED. ADJUST IDLE SPEED IF NECESSARY ACCORDING TO IDLE SPEED ADJUSTMENT PROCEDURE.
CLOSED ?
NO
YES
REPLACE COOLANT SWITCH AND RETEST.
TEST CONTINUITY BETWEEN DIAGNOSTIC CONNECTOR PIN 1 AND MCU CONNECTOR PIN 14.
REPAIR CONTINUITY PROBLEM IN COOLANT SWITCH CIRCUIT. ENSURE THAT CONTINUITY ALSO EXISTS AT MCU PIN 6. RECHECK.
DETERMINE IF PORTED VACUUM IS AT VACUUM SWITCH 2. THERE SHOULD BE NO VACUUM AT IDLE SPEED. REPAIR AND RETEST.
OPEN ?
NO
YES
INCREASE ENGINE SPEED TO 2000 RPM. TEST CONTINUITY BETWEEN PINS 1 AND 14. CONTINUITY SHOULD EXIST.
OK?
NO
YES
RETURN ENGINE TO IDLE SPEED. DISCONNECT VACUUM SWITCH ASSEMBLY AND PLACE JUMPER WIRE BETWEEN PINS A AND B OF VACUUM SWITCH CONNECTOR (HARNESS SIDE) AND RETEST CONTINUITY BETWEEN PINS 1 AND 14.
CONT'D.
CONT'D.

81131D

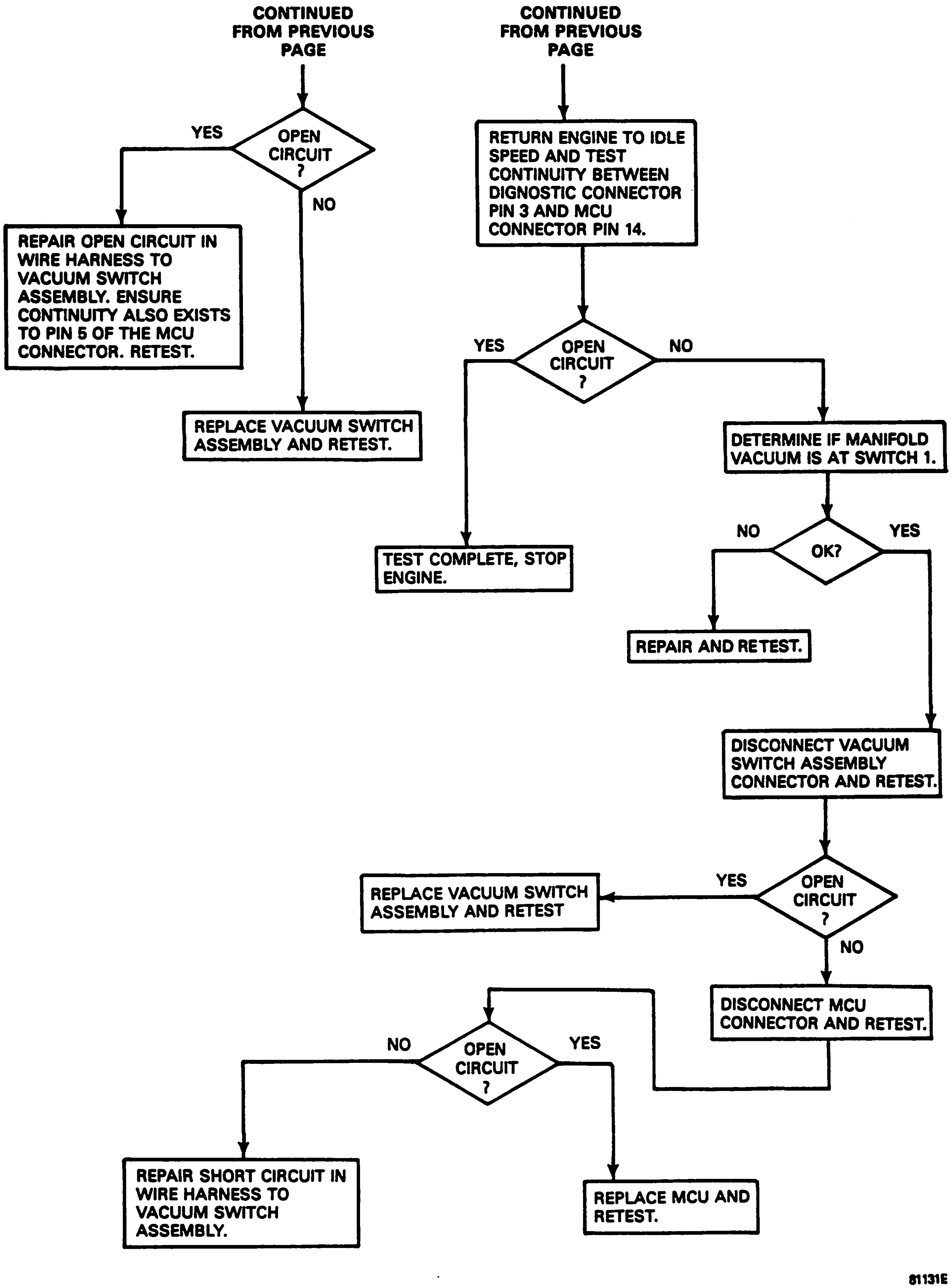
CONTINUED FROM PREVIOUS PAGE
OPEN CIRCUIT ?
YES
NO
REPAIR OPEN CIRCUIT IN WIRE HARNESS TO VACUUM SWITCH ASSEMBLY. ENSURE CONTINUITY ALSO EXISTS TO PIN 5 OF THE MCU CONNECTOR. RETEST.
REPLACE VACUUM SWITCH ASSEMBLY AND RETEST.
CONTINUED FROM PREVIOUS PAGE
RETURN ENGINE TO IDLE SPEED AND TEST CONTINUITY BETWEEN DIGNOSTIC CONNECTOR PIN 3 AND MCU CONNECTOR PIN 14.
OPEN CIRCUIT ?
YES
NO
TEST COMPLETE, STOP ENGINE.
DETERMINE IF MANIFOLD VACUUM IS AT SWITCH 1.
OK?
NO
YES
REPAIR AND RETEST.
DISCONNECT VACUUM SWITCH ASSEMBLY CONNECTOR AND RETEST.
OPEN CIRCUIT ?
YES
NO
REPLACE VACUUM SWITCH ASSEMBLY AND RETEST
DISCONNECT MCU CONNECTOR AND RETEST.
OPEN CIRCUIT ?
NO
YES
REPAIR SHORT CIRCUIT IN WIRE HARNESS TO VACUUM SWITCH ASSEMBLY.
REPLACE MCU AND RETEST.
81131E

DIAGNOSTIC TEST 3

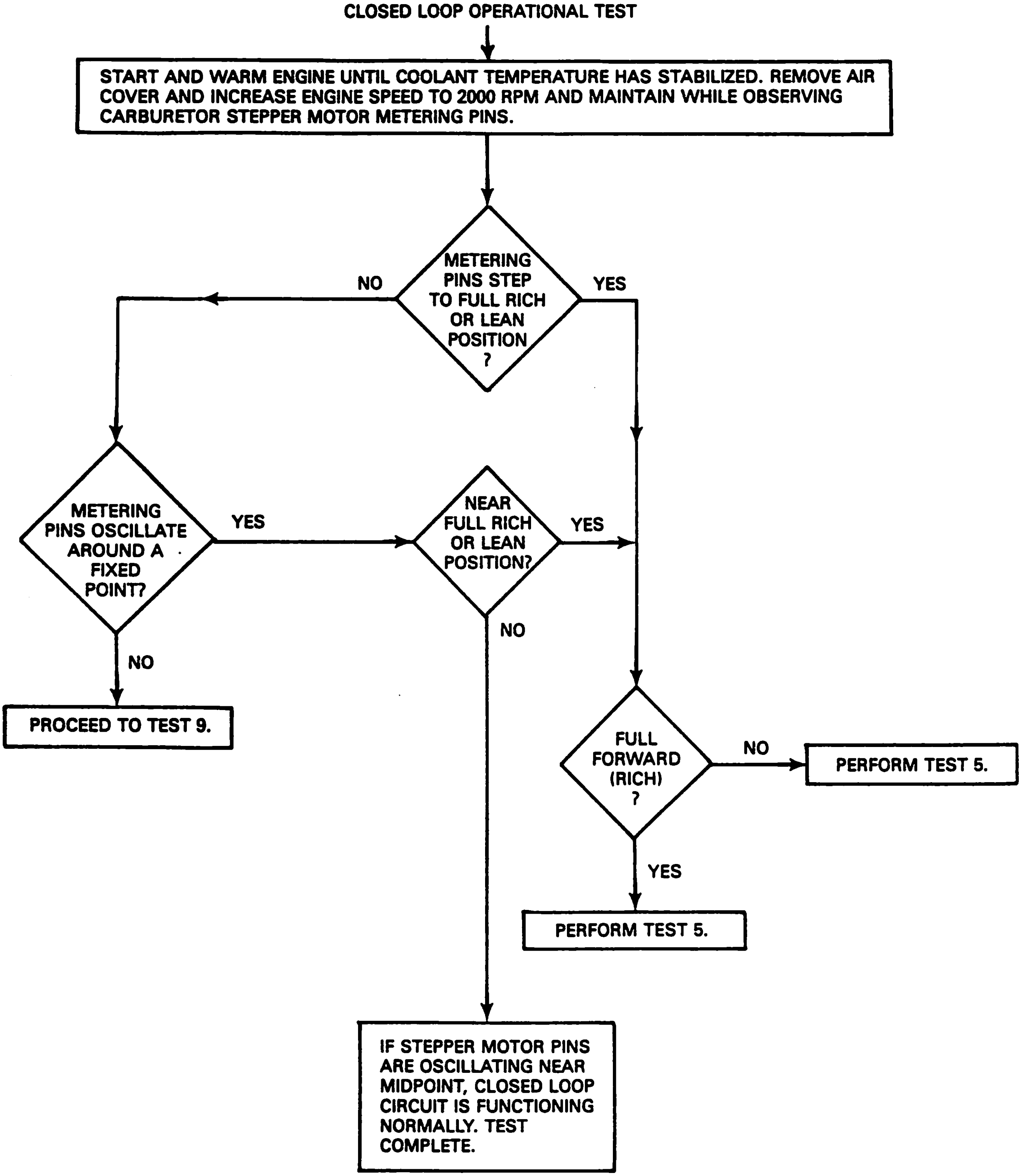

81133

DIAGNOSTIC TEST 4

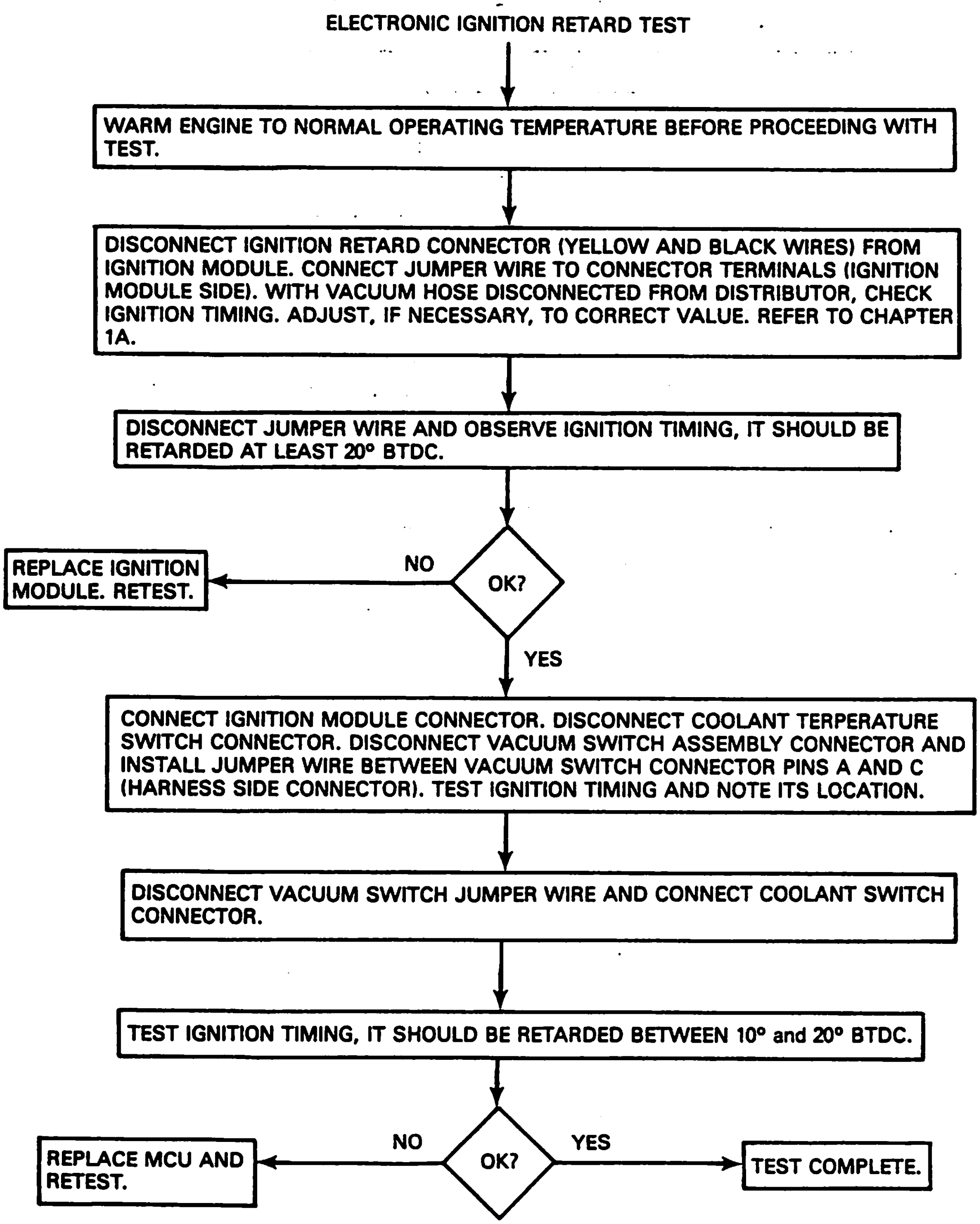

81134

DIAGNOSTIC TEST 5

OXYGEN SENSOR AND CLOSED LOOP TEST

WITH ENGINE OFF, REMOVE AIR CLEANER AND PLUG ALL VACUUM HOSES.

TURN IGNITION SWITCH ON FOR 4 SECONDS, THEN TURN OFF.

DISCONNECT MCU CONNECTOR. START ENGINE AND OPERATE UNTIL TEMPERATURE GAUGE POINTER IS AT MIDRANGE (OR 4 MINUTES).

CONNECT POSITIVE PROBE OF DIGITAL VOLTMETER (OR VOLTMETER WITH GREATER THAN 1 MEGOHM INPUT IMPEDANCE) TO PIN 3 AT HARNESS SIDE OF MCU CONNECTOR AND NEGATIVE PROBE TO PIN 14 (GROUND).

INCREASE ENGINE SPEED TO APPROXIMATELY 1200 RPM AND MAINTAIN. CLOSE CHOKE VALVE AND OBSERVE VOLTMETER. (CLOSE VALVE FOR AT LEAST 15 SECONDS BUT DO NOT EXCEED 30 SECONDS.)

GREATER THAN 0.6 VOLTS ?

YES

TURN ENGINE OFF AND CONNECT MCU CONNECTOR. START ENGINE AND OPERATE FOR A MINIMUM OF 1 MINUTE.

INCREASE ENGINE SPEED TO MORE THAN 1200 RPM. HOLD THE CHOKE VALVE CLOSED FOR AT LEAST 20 SECONDS AND TURN IGNITION OFF WITH VALVE CLOSED.

CONT'D.

NO

TURN ENGINE OFF. DISCONNECT AND PLUG AIR HOSE CONNECTED TO EXHAUST AIR INJECTION MANIFOLD.

START ENGINE AND OPERATE FOR 1 MINUTE. TEST OXYGEN SENSOR VOLTAGE (PIN 3 OF MCU CONNECTOR).

CONT'D.

81135A

BASIC ENGINE TEST

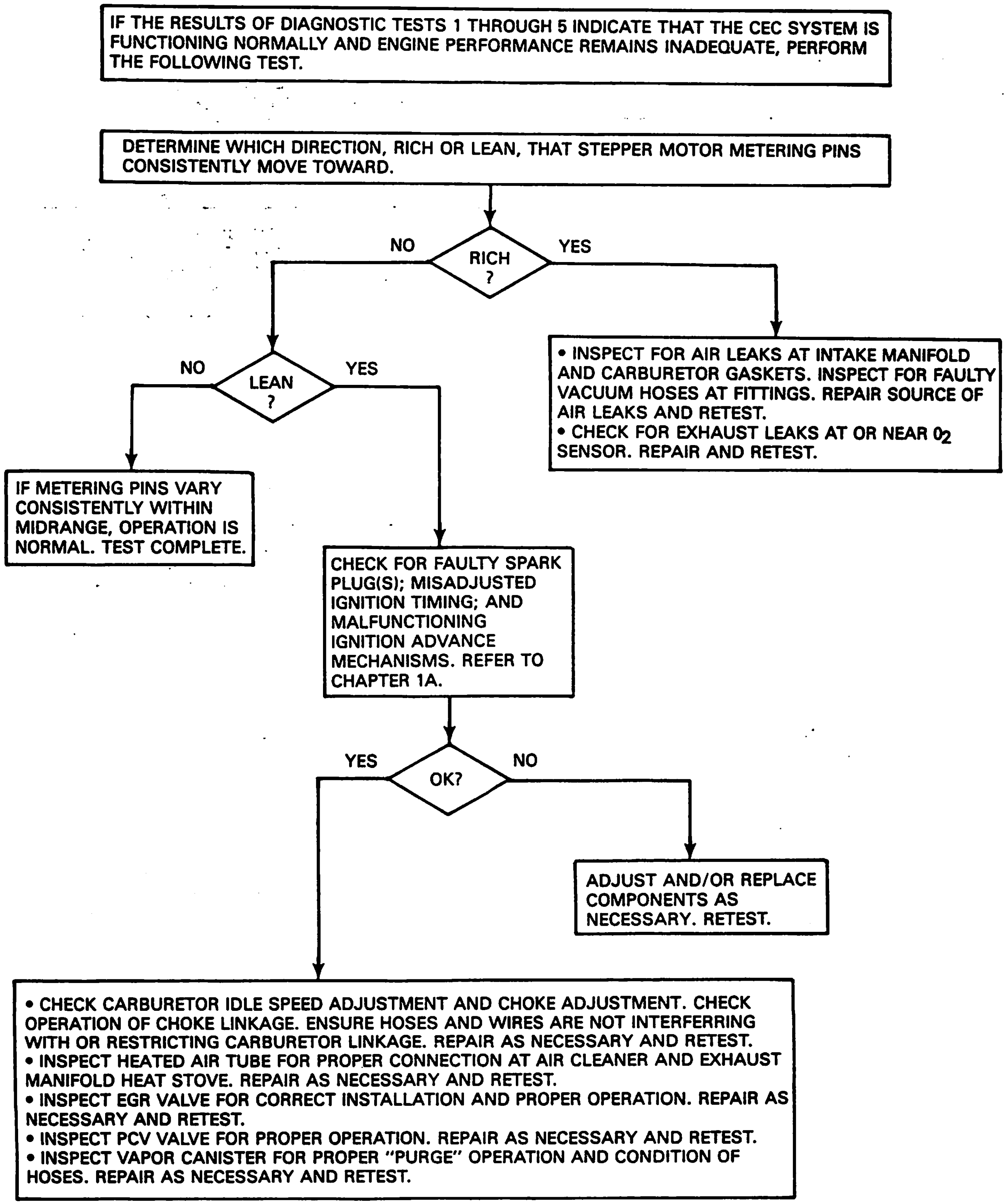

81209

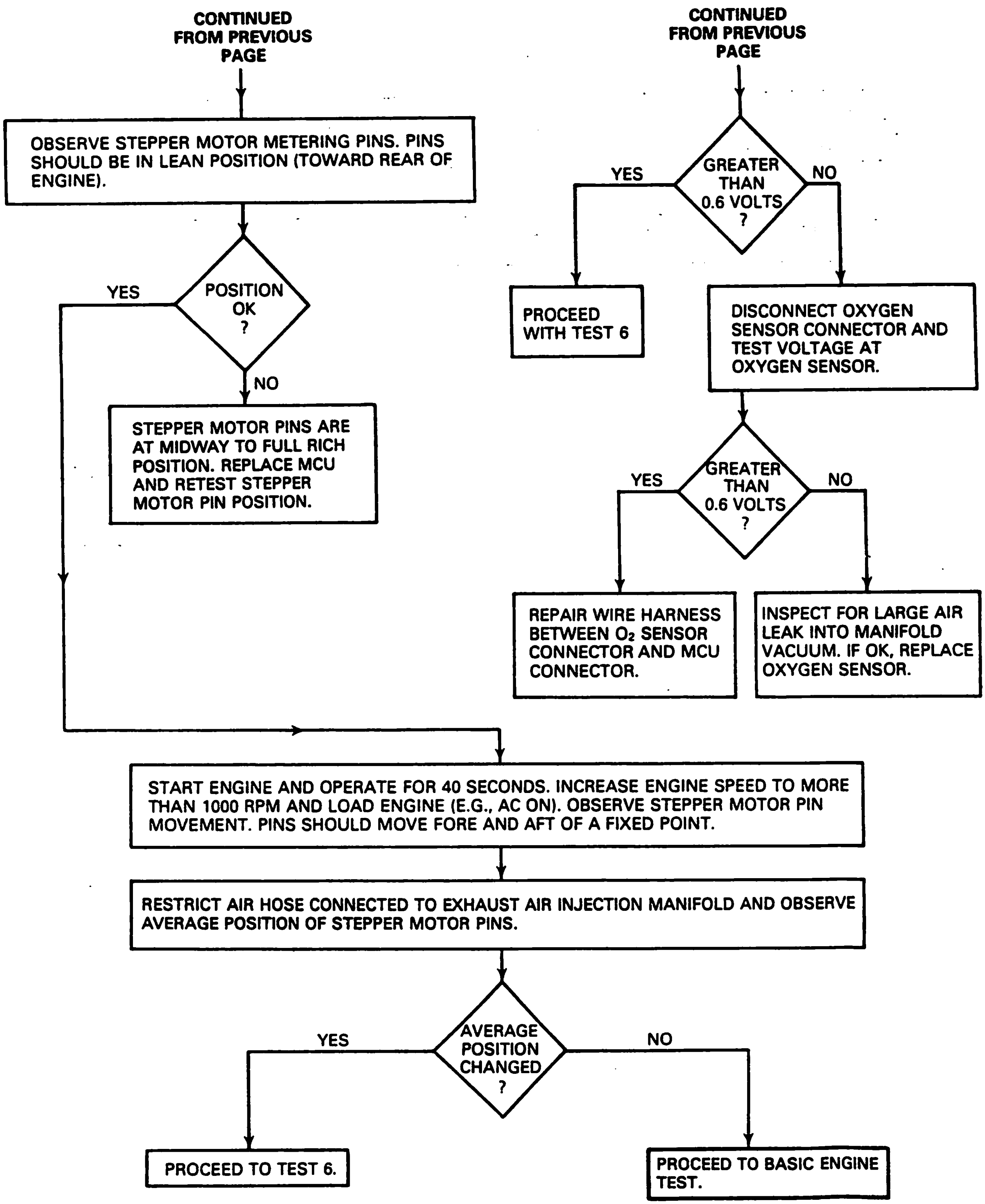
CONTINUED FROM PREVIOUS PAGE
OBSERVE STEPPER MOTOR METERING PINS. PINS SHOULD BE IN LEAN POSITION (TOWARD REAR OF ENGINE).
POSITION OK ?
YES
NO
STEPPER MOTOR PINS ARE AT MIDWAY TO FULL RICH POSITION. REPLACE MCU AND RETEST STEPPER MOTOR PIN POSITION.
CONTINUED FROM PREVIOUS PAGE
GREATER THAN 0.6 VOLTS ?
YES
NO
PROCEED WITH TEST 6
DISCONNECT OXYGEN SENSOR CONNECTOR AND TEST VOLTAGE AT OXYGEN SENSOR.
GREATER THAN 0.6 VOLTS ?
YES
NO
REPAIR WIRE HARNESS BETWEEN O2 SENSOR CONNECTOR AND MCU CONNECTOR.
INSPECT FOR LARGE AIR LEAK INTO MANIFOLD VACUUM. IF OK, REPLACE OXYGEN SENSOR.
START ENGINE AND OPERATE FOR 40 SECONDS. INCREASE ENGINE SPEED TO MORE THAN 1000 RPM AND LOAD ENGINE (E.G., AC ON). OBSERVE STEPPER MOTOR PIN MOVEMENT. PINS SHOULD MOVE FORE AND AFT OF A FIXED POINT.
RESTRICT AIR HOSE CONNECTED TO EXHAUST AIR INJECTION MANIFOLD AND OBSERVE AVERAGE POSITION OF STEPPER MOTOR PINS.
AVERAGE POSITION CHANGED ?
YES
NO
PROCEED TO TEST 6.
PROCEED TO BASIC ENGINE TEST.

81135B

DIAGNOSTIC TEST 6

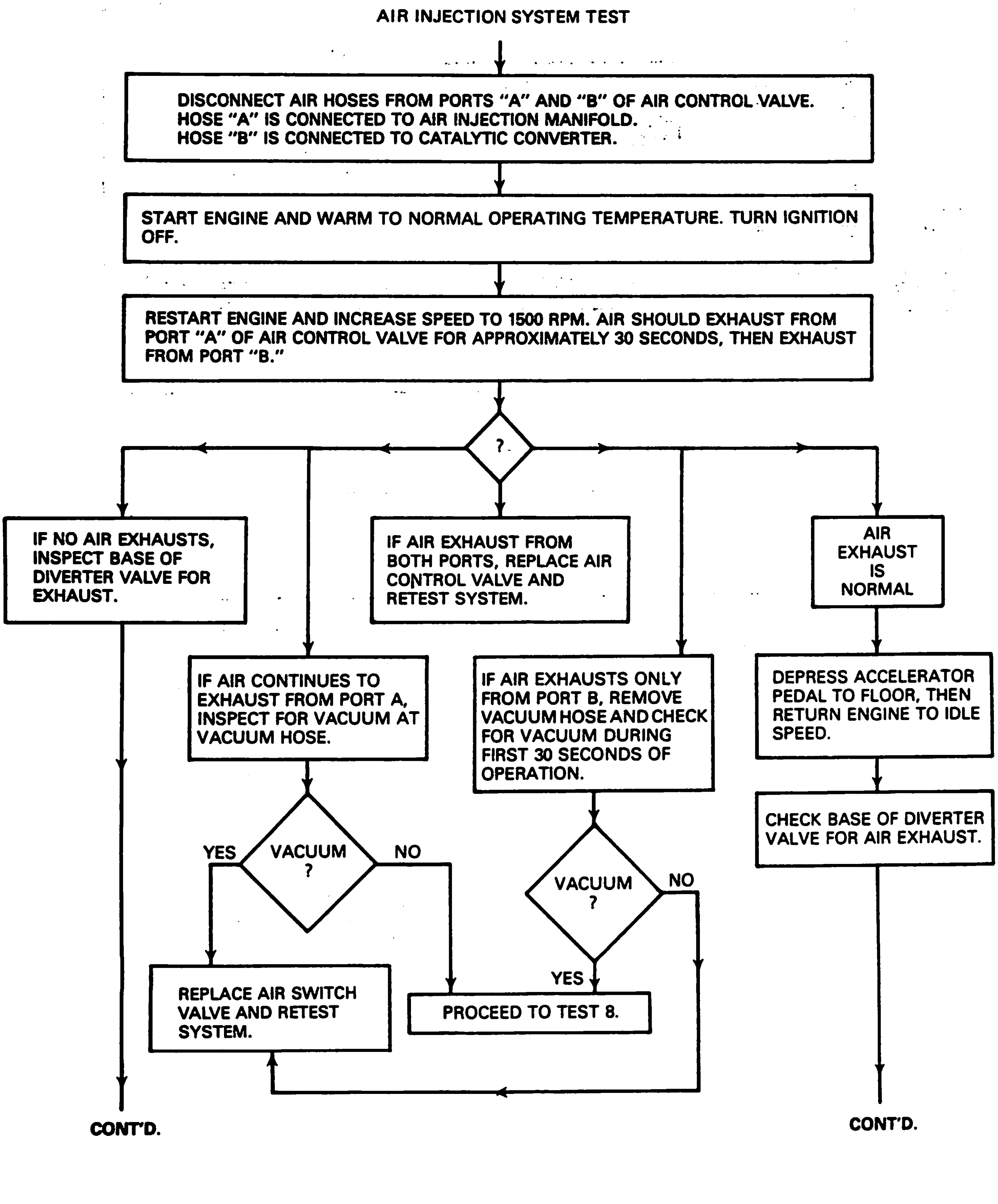

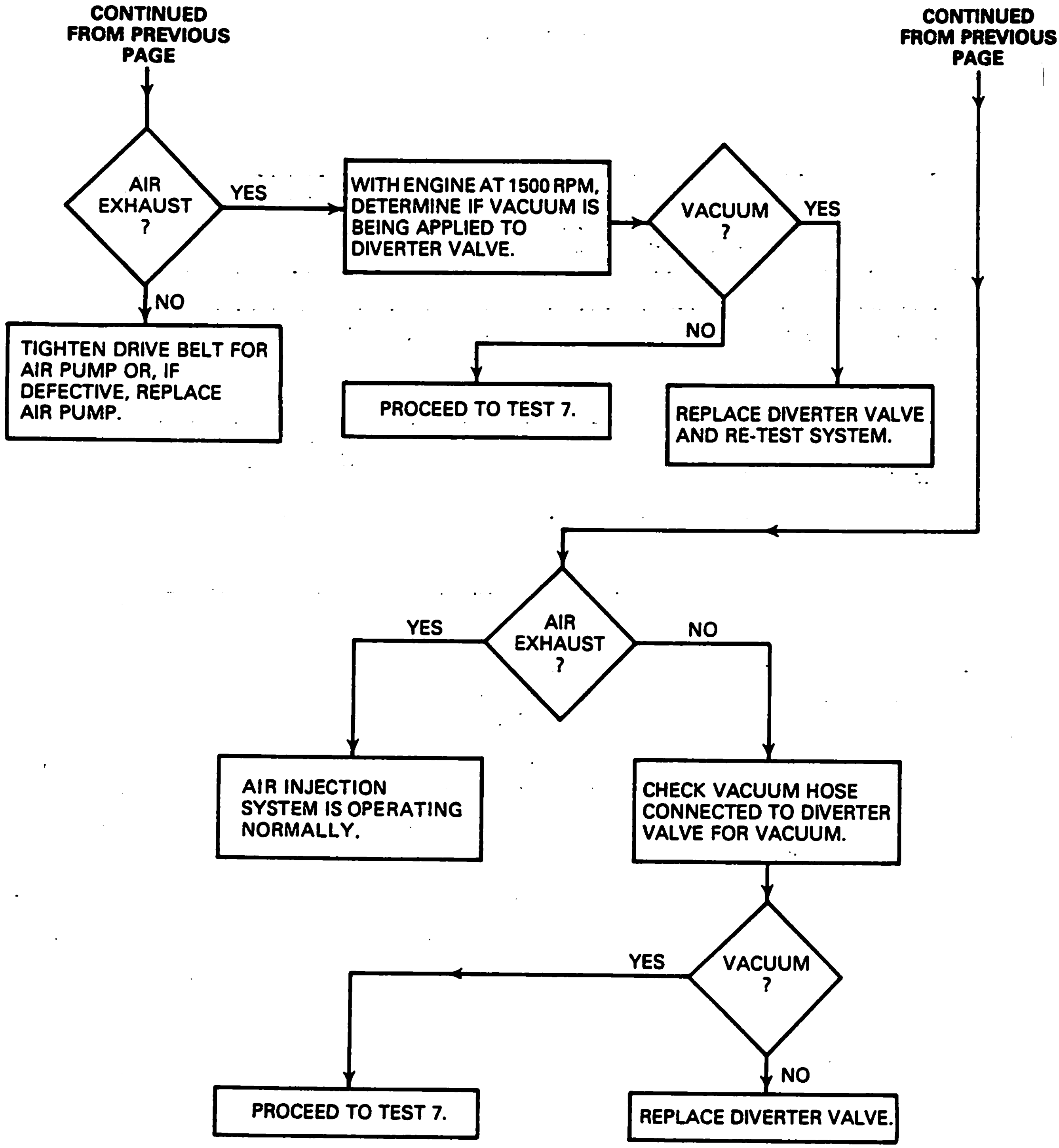
CONTINUED FROM PREVIOUS PAGE
AIR EXHAUST ?
YES
NO
WITH ENGINE AT 1500 RPM, DETERMINE IF VACUUM IS BEING APPLIED TO DIVERTER VALVE.
VACUUM ?
YES
NO
TIGHTEN DRIVE BELT FOR AIR PUMP OR, IF DEFECTIVE, REPLACE AIR PUMP.
PROCEED TO TEST 7.
REPLACE DIVERTER VALVE AND RE-TEST SYSTEM.
CONTINUED FROM PREVIOUS PAGE
AIR EXHAUST ?
YES
NO
AIR INJECTION SYSTEM IS OPERATING NORMALLY.
CHECK VACUUM HOSE CONNECTED TO DIVERTER VALVE FOR VACUUM.
VACUUM ?
YES
NO
PROCEED TO TEST 7.
REPLACE DIVERTER VALVE.

811368

NOTE: WHEN APPLICABLE, DIAGNOSTIC CONNECTOR TERMINALS CAN BE USED AS TEST POINTS INSTEAD OF MCU CONNECTOR TERMINALS.

DIAGNOSTIC TEST 7

DIVERT SOLENOID TEST

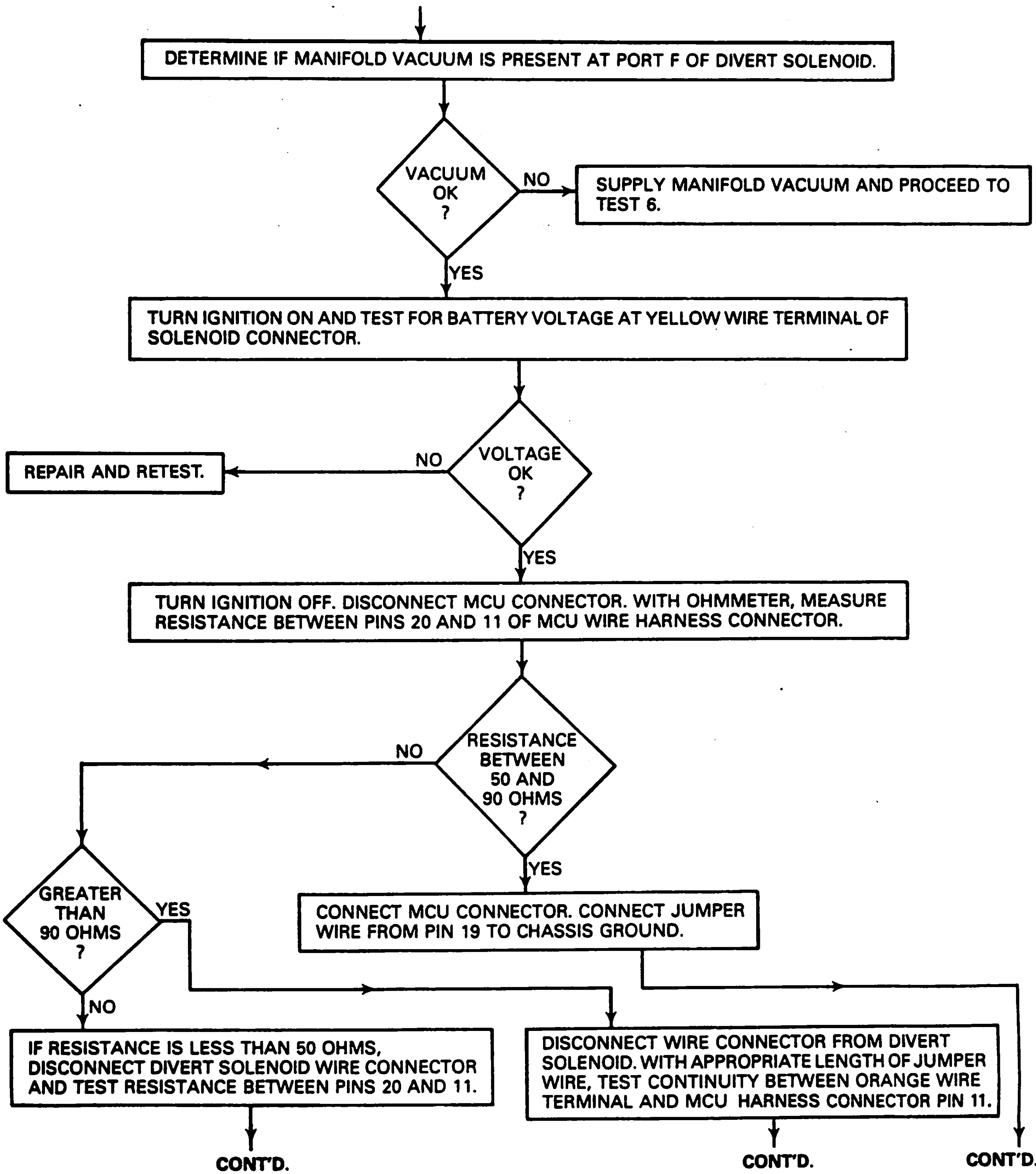

81137A

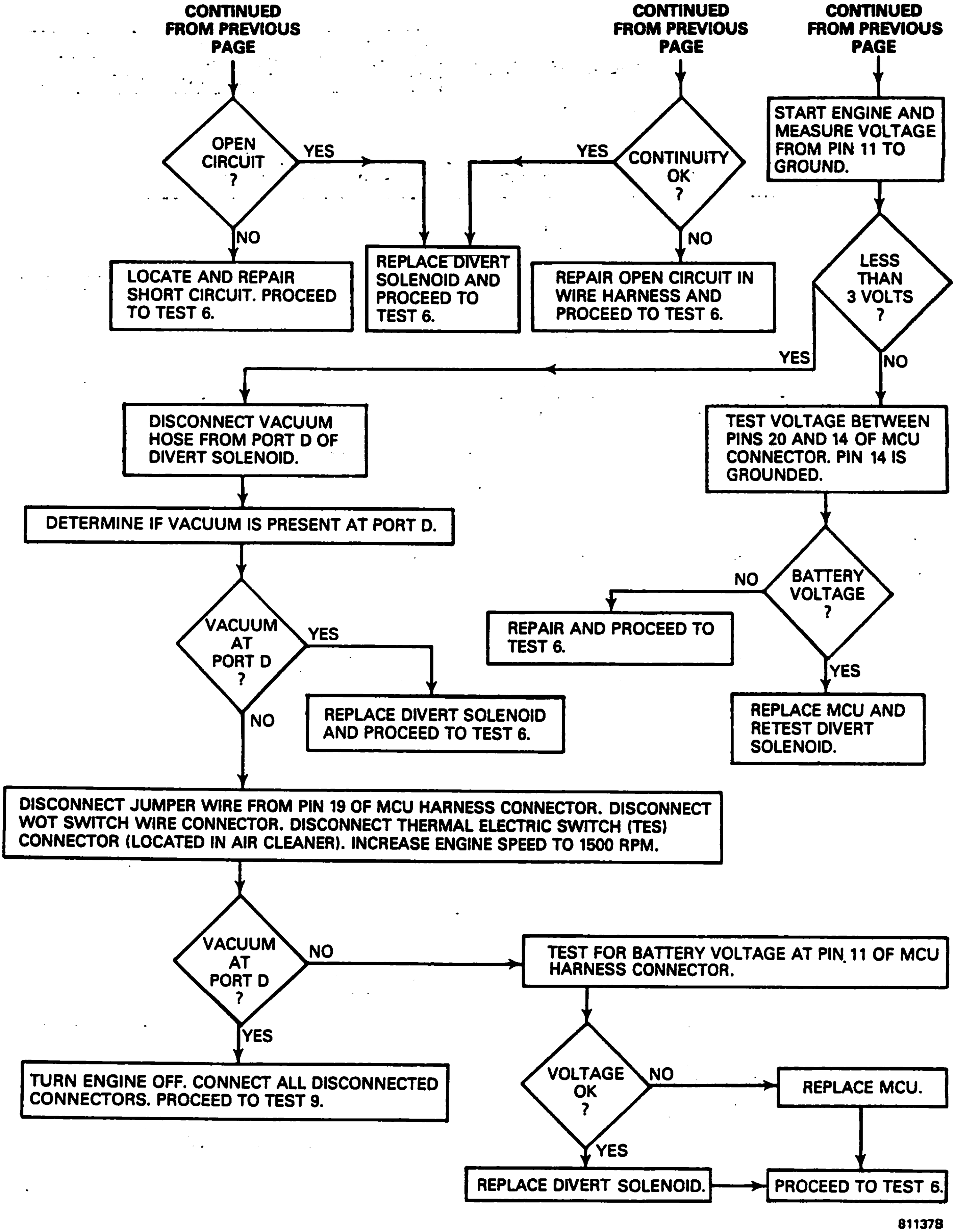
CONTINUED FROM PREVIOUS PAGE
OPEN CIRCUIT ?
YES
NO
LOCATE AND REPAIR SHORT CIRCUIT. PROCEED TO TEST 6.
REPLACE DIVERT SOLENOID AND PROCEED TO TEST 6.
CONTINUED FROM PREVIOUS PAGE
CONTINUITY OK ?
YES
NO
REPAIR OPEN CIRCUIT IN WIRE HARNESS AND PROCEED TO TEST 6.
CONTINUED FROM PREVIOUS PAGE
START ENGINE AND MEASURE VOLTAGE FROM PIN 11 TO GROUND.
LESS THAN 3 VOLTS ?
YES
NO
DISCONNECT VACUUM HOSE FROM PORT D OF DIVERT SOLENOID.
DETERMINE IF VACUUM IS PRESENT AT PORT D.
VACUUM AT PORT D ?
YES
NO
REPLACE DIVERT SOLENOID AND PROCEED TO TEST 6.
TEST VOLTAGE BETWEEN PINS 20 AND 14 OF MCU CONNECTOR. PIN 14 IS GROUNDED.
BATTERY VOLTAGE ?
NO
YES
REPAIR AND PROCEED TO TEST 6.
REPLACE MCU AND RETEST DIVERT SOLENOID.
DISCONNECT JUMPER WIRE FROM PIN 19 OF MCU HARNESS CONNECTOR. DISCONNECT WOT SWITCH WIRE CONNECTOR. DISCONNECT THERMAL ELECTRIC SWITCH (TES) CONNECTOR (LOCATED IN AIR CLEANER). INCREASE ENGINE SPEED TO 1500 RPM.
VACUUM AT PORT D ?
NO
YES
TEST FOR BATTERY VOLTAGE AT PIN 11 OF MCU HARNESS CONNECTOR.
TURN ENGINE OFF. CONNECT ALL DISCONNECTED CONNECTORS. PROCEED TO TEST 9.
VOLTAGE OK ?
NO
YES
REPLACE MCU.
REPLACE DIVERT SOLENOID.
PROCEED TO TEST 6.
81137B

DIAGNOSTIC TEST 8

UPSTREAM SOLENOID TEST

NOTE: WHEN APPLICABLE, DIAGNOSTIC CONNECTOR TERMINALS CAN BE USED AS TEST POINTS INSTEAD OF MCU CONNECTOR TERMINALS.

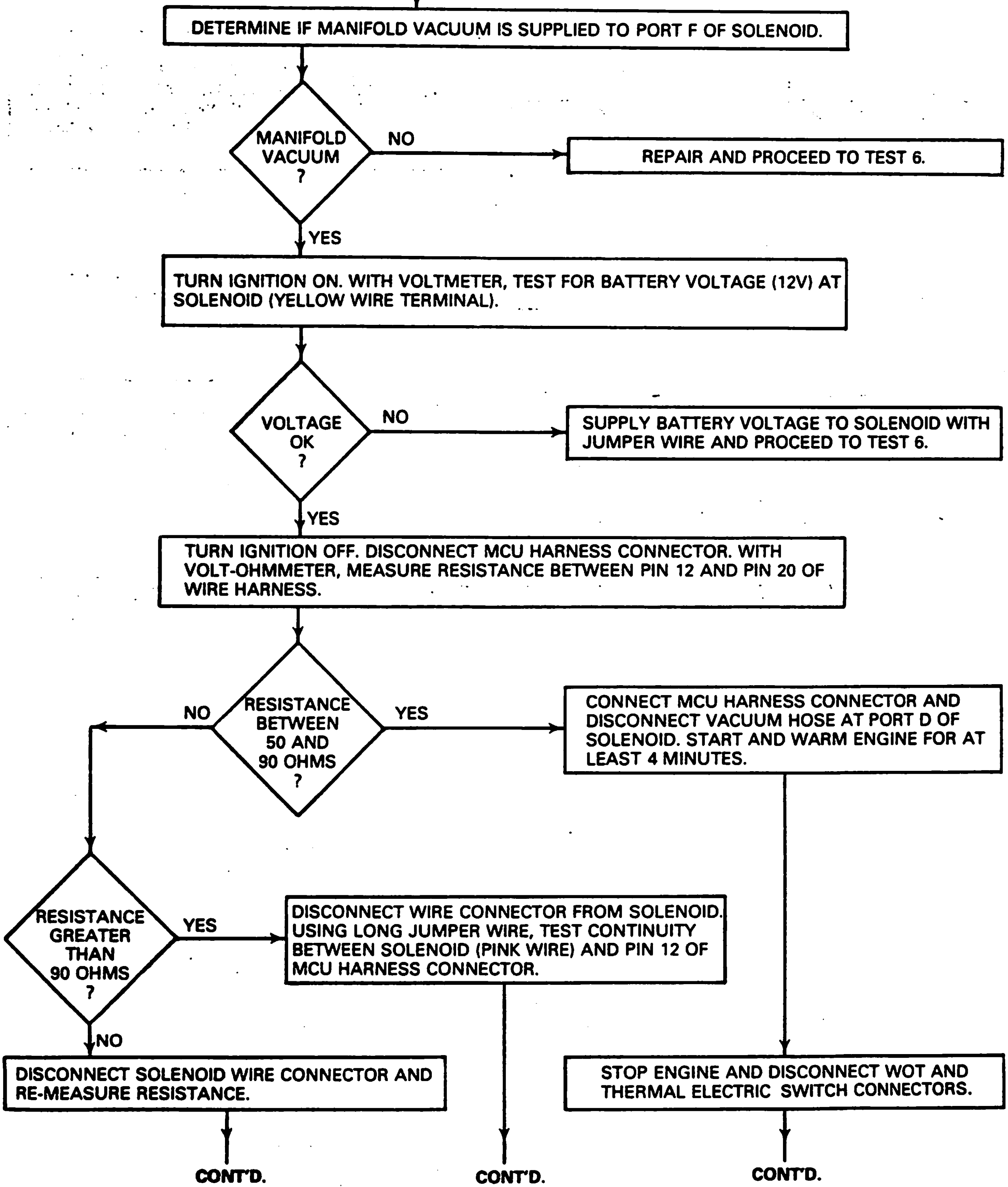

81138A

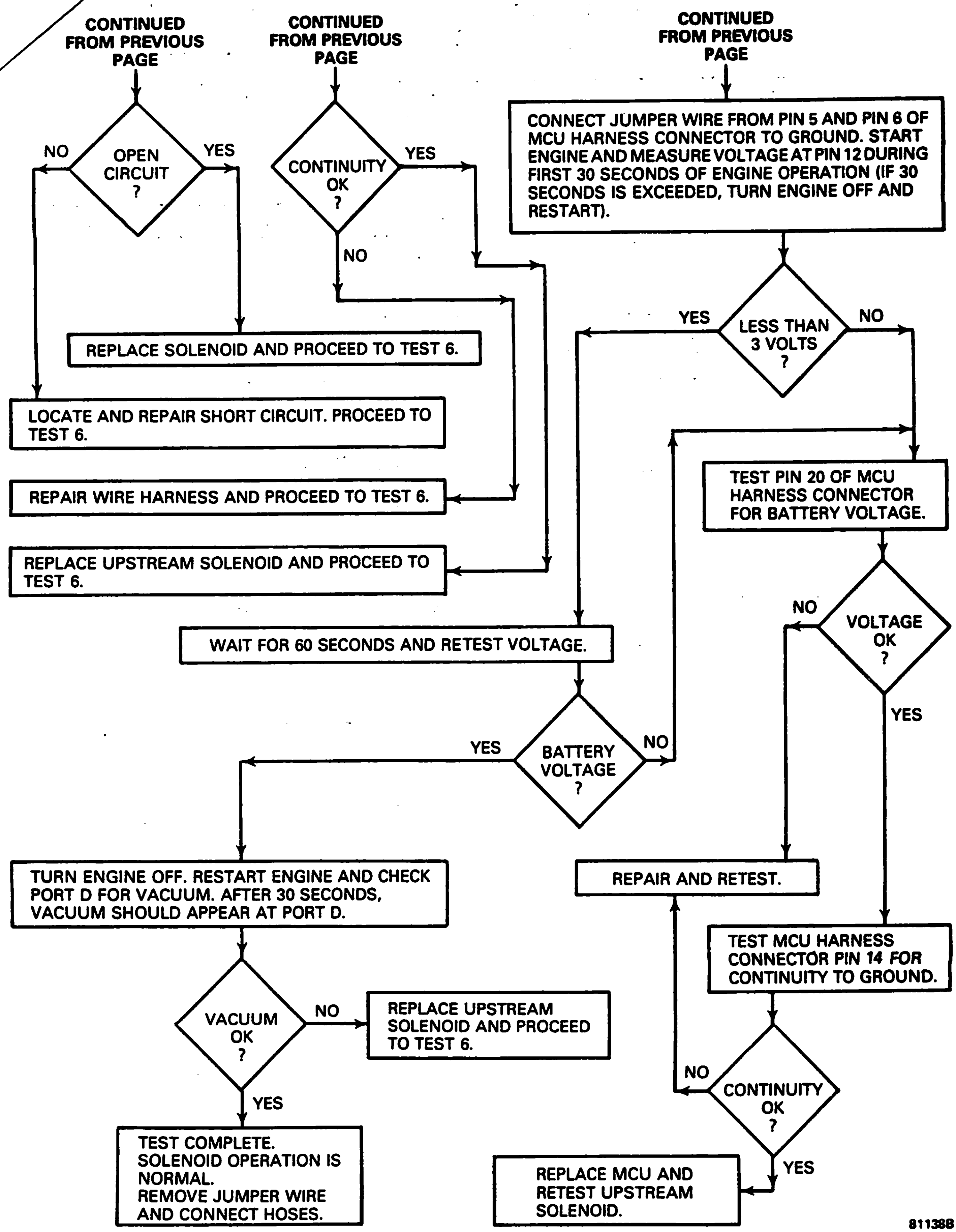
CONTINUED FROM PREVIOUS PAGE
OPEN CIRCUIT ?
NO
YES
CONTINUED FROM PREVIOUS PAGE
CONTINUITY OK ?
YES
NO
CONTINUED FROM PREVIOUS PAGE
CONNECT JUMPER WIRE FROM PIN 5 AND PIN 6 OF MCU HARNESS CONNECTOR TO GROUND. START ENGINE AND MEASURE VOLTAGE AT PIN 12 DURING FIRST 30 SECONDS OF ENGINE OPERATION (IF 30 SECONDS IS EXCEEDED, TURN ENGINE OFF AND RESTART).
LESS THAN 3 VOLTS ?
YES
NO
REPLACE SOLENOID AND PROCEED TO TEST 6.
LOCATE AND REPAIR SHORT CIRCUIT. PROCEED TO TEST 6.
REPAIR WIRE HARNESS AND PROCEED TO TEST 6.
REPLACE UPSTREAM SOLENOID AND PROCEED TO TEST 6.
TEST PIN 20 OF MCU HARNESS CONNECTOR FOR BATTERY VOLTAGE.
VOLTAGE OK ?
NO
YES
WAIT FOR 60 SECONDS AND RETEST VOLTAGE.
BATTERY VOLTAGE ?
YES
NO
TURN ENGINE OFF. RESTART ENGINE AND CHECK PORT D FOR VACUUM. AFTER 30 SECONDS, VACUUM SHOULD APPEAR AT PORT D.
REPAIR AND RETEST.
TEST MCU HARNESS CONNECTOR PIN 14 FOR CONTINUITY TO GROUND.
VACUUM OK ?
NO
YES
REPLACE UPSTREAM SOLENOID AND PROCEED TO TEST 6.
CONTINUITY OK ?
NO
YES
TEST COMPLETE. SOLENOID OPERATION IS NORMAL. REMOVE JUMPER WIRE AND CONNECT HOSES.
REPLACE MCU AND RETEST UPSTREAM SOLENOID.
81138B

DIAGNOSTIC TEST 9

NOTE: TEST MUST BE PERFORMED WITH ENGINE AT NORMAL OPERATING TEMPERATURE AND AFTER CEC SYSTEM DIAGNOSTIC TESTS ARE COMPLETED.

IDLE SPEED CONTROL SYSTEM TEST

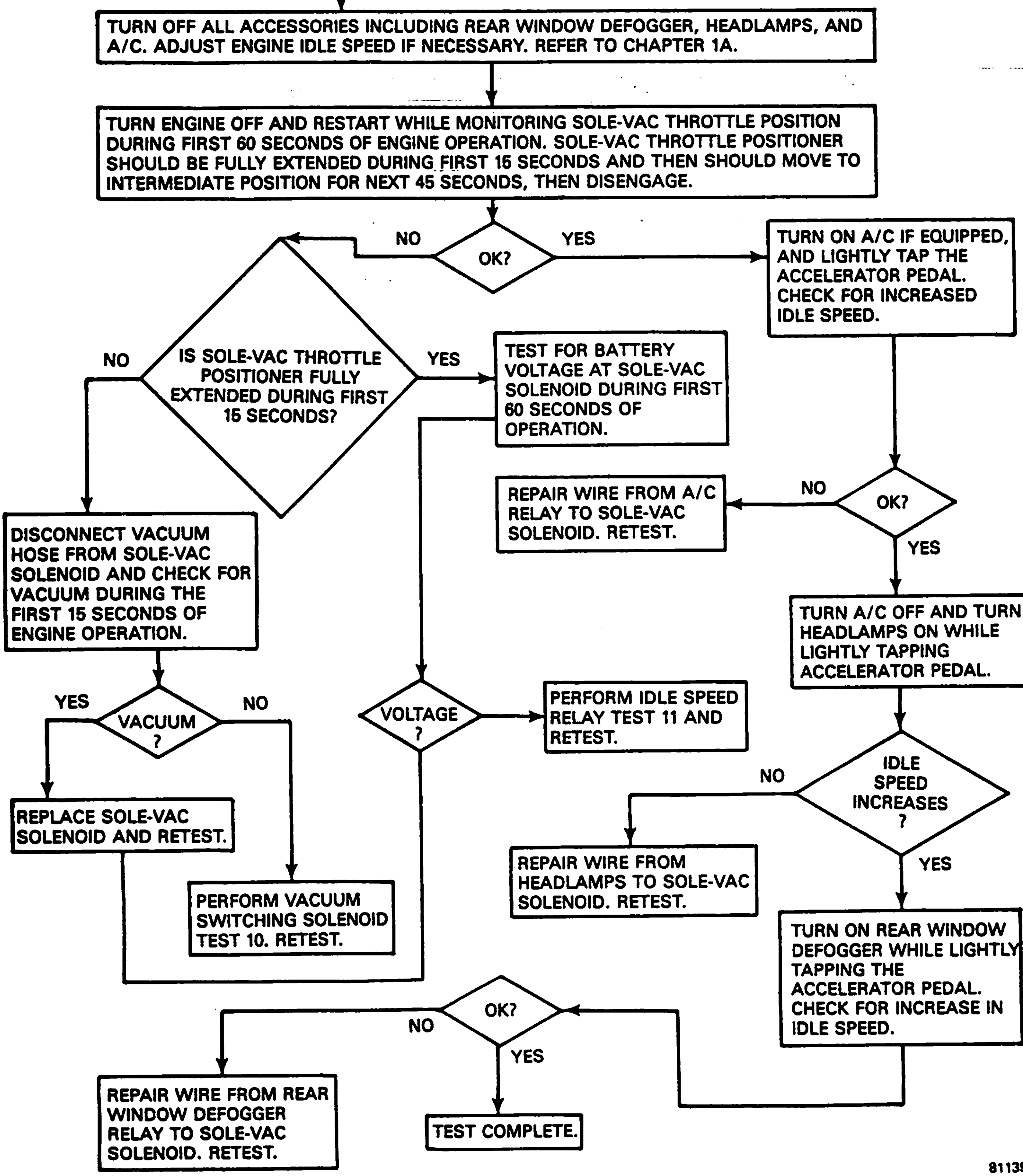

81139A

DIAGNOSTIC TEST 10

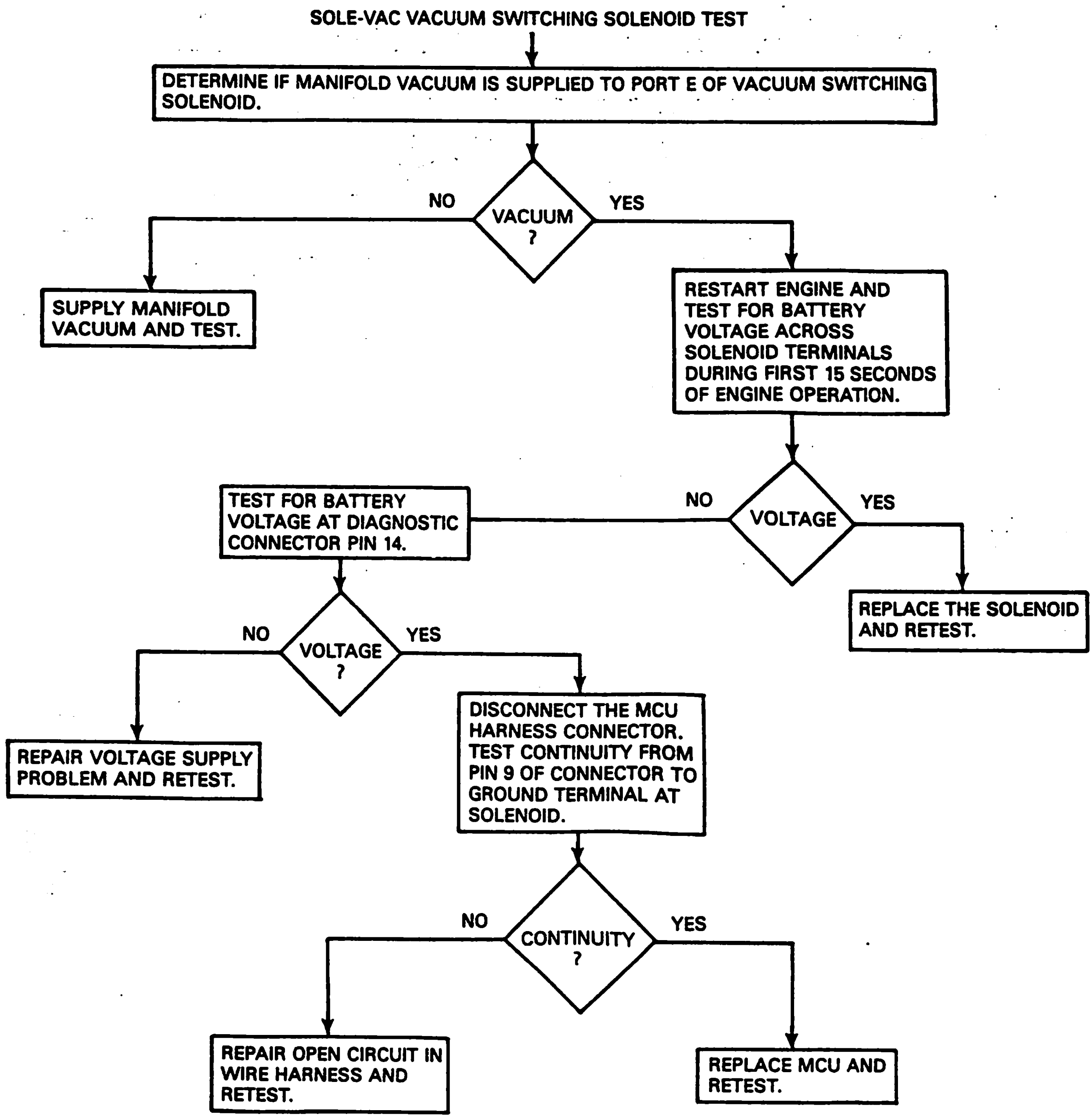

81140

DIAGNOSTIC TEST 11

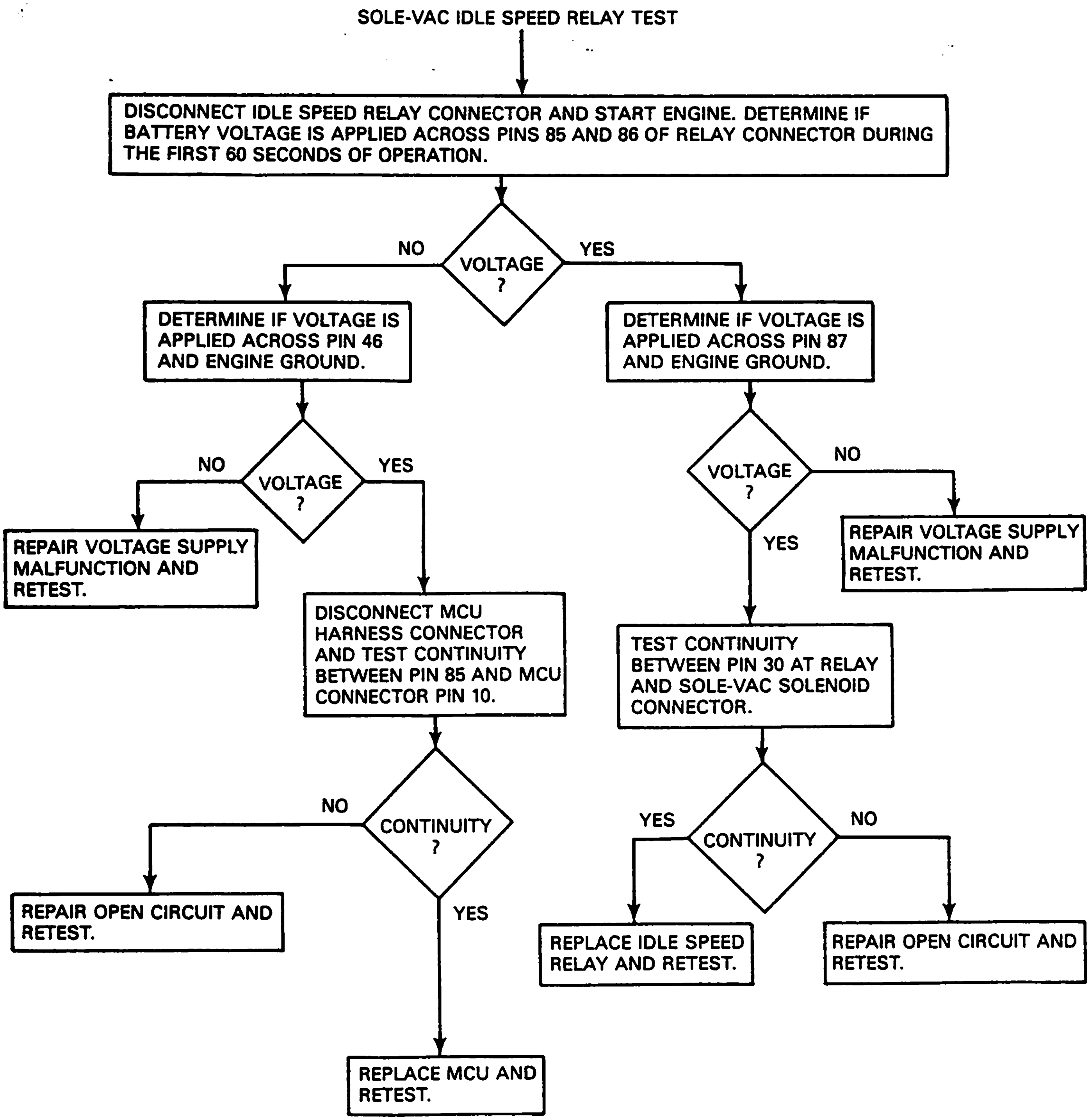

81141

Tools

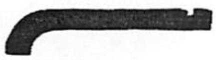

J-1137
BENDING TOOL

J-10174-01
MAIN JET REMOVER
AND INSTALLER

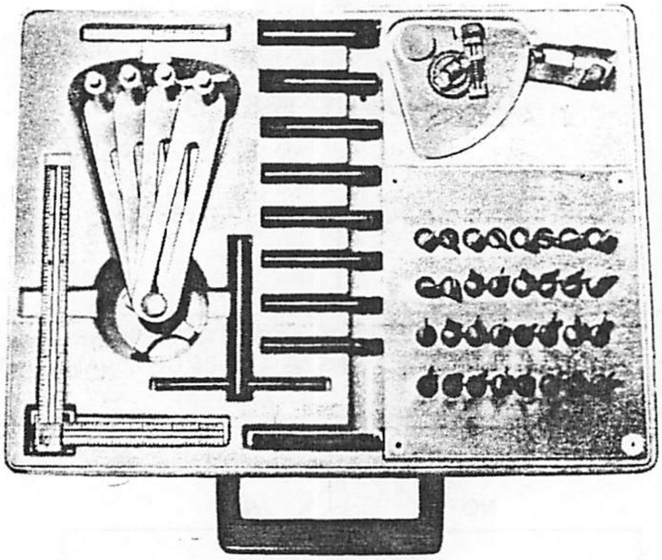

J-9789-C
UNIVERSAL CARBURETOR
GAUGE SET

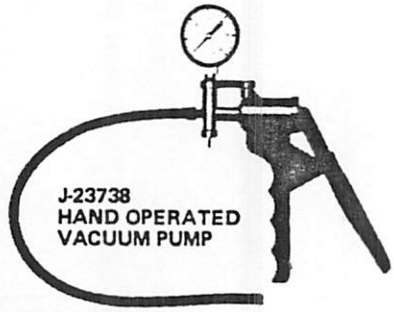

J-23738
HAND OPERATED
VACUUM PUMP

EXHAUST SYSTEMS 1K

SECTION INDEX

EXHAUST MANIFOLDS, MUFFLERS AND PIPES

GENERAL

The basic exhaust system for all Jeep vehicles consists of exhaust manifold(s), front exhaust pipe, catalytic converter, muffler and tailpipe.

NOTE: *All reference to CJ vehicles includes Scrambler vehicles.*

CJ vehicles with four- or six-cylinder engines that are designated 49-State use a conventional oxidizing catalytic (COC) pellet-type converter (figs. 1K-1 and 1K-2). Four-cylinder engine CJ vehicles manufactured for sale in California use a three-way catalytic (TWC) pellet-type converter. Six-cylinder engine CJ vehicles manufactured for sale in California and all six-cylinder engine Cherokee, Wagoneer and Truck vehicles use a dual bed (COC and TWC) monolithic-type converter with "downstream" air injection (figs. 1K-2 and 1K-3).

Eight-cylinder engine Cherokee, Wagoneer and Truck vehicles designated 49-State use a conventional oxidizing catalytic (COC) pellet-type converter (fig. 1K-4).

The exhaust system must be properly aligned to prevent stress, leakage and chassis contact. If the system contacts any body panel, it may amplify objectionable noises originating from the engine or the body. When inspecting an exhaust system, inspect for cracked or loose joints, stripped screw threads, and corrosion damage. Inspect for worn or broken hangers. Replace all components that are badly corroded or damaged. Do not attempt to repair.

RESTRICTED EXHAUST SYSTEM DIAGNOSIS

A restricted or blocked exhaust system usually results in loss of power or backfire up through the carburetor. Verify that the condition is not caused by ignition timing or other ignition system malfunctions, then perform a visual inspection of the exhaust system. If the restriction cannot be located by visual inspection, perform the following test procedure.

(1) Attach vacuum gauge to intake manifold.

(2) Connect tachometer.

WARNING: *Use extreme caution when engine is operating. Do not stand in direct line with fan. Do not put hands near pulleys, belts or fan. Do not wear loose clothing.*

(3) Start engine and observe vacuum gauge. Gauge should indicate 16 to 21 in. Hg (54 to 71 kPa) of vacuum.

(4) Increase engine speed to 2,000 rpm and observe vacuum gauge. Vacuum will decrease when engine speed is increased rapidly, but should settle at 16 to 21 in. Hg (54 to 71 kPa) and remain steady. If vacuum decreases

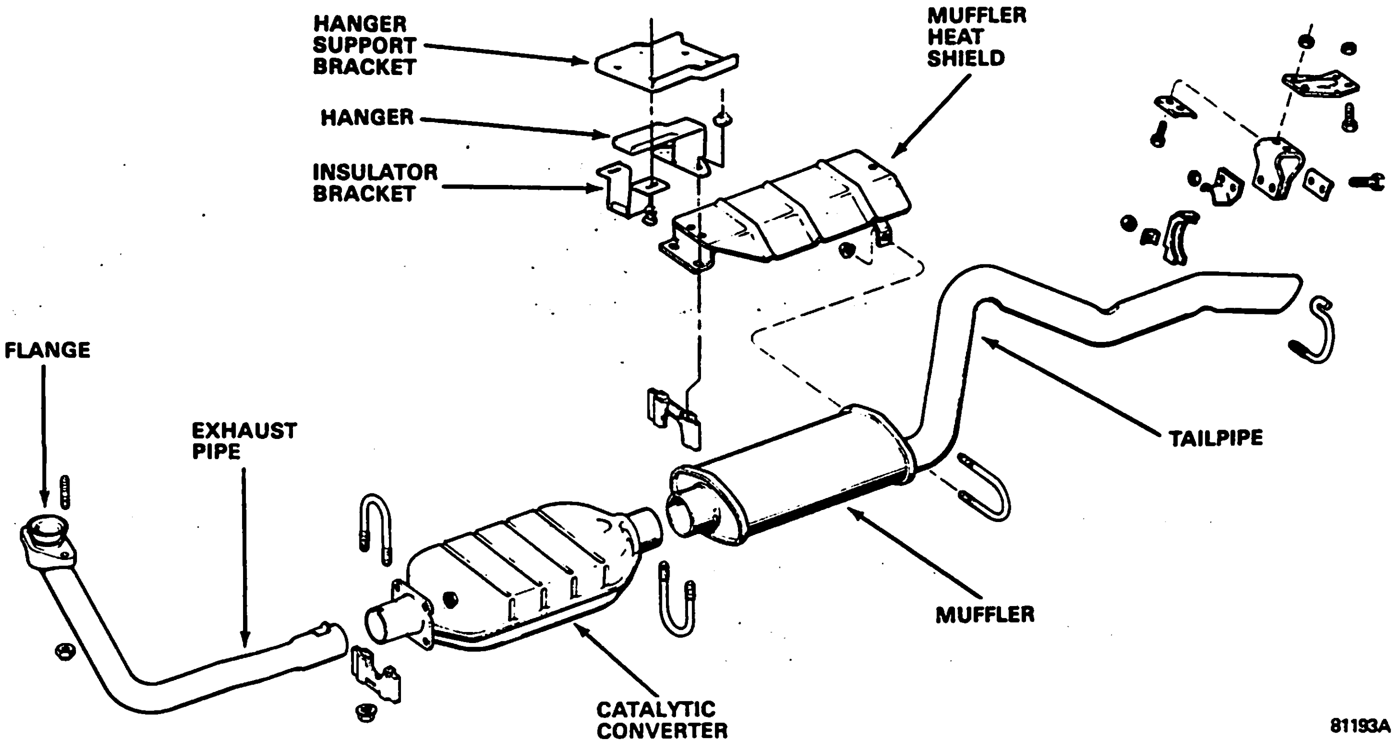

Fig. 1K-1 Four-Cylinder Engine Exhaust System—CJ Vehicles

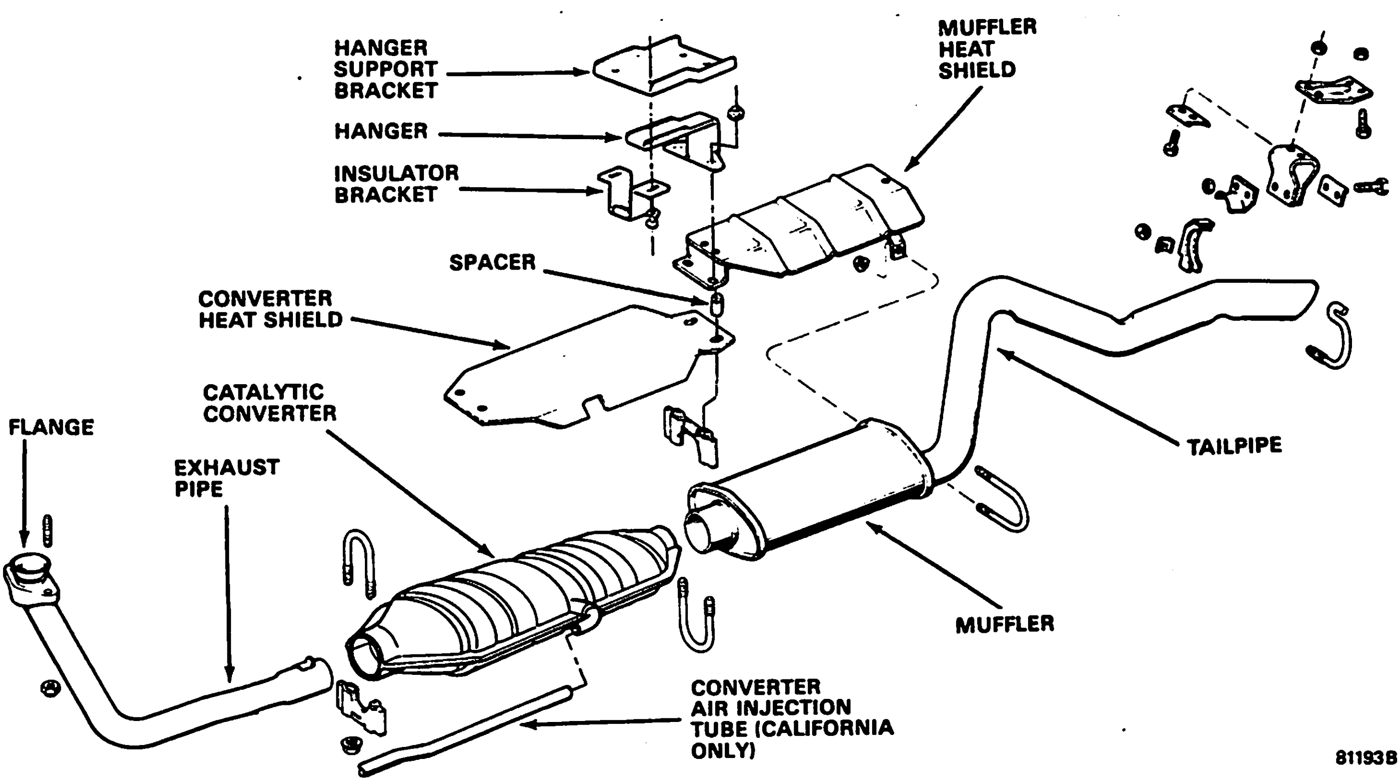

Fig. 1K-2 Six-Cylinder Engine Exhaust System—CJ Vehicles

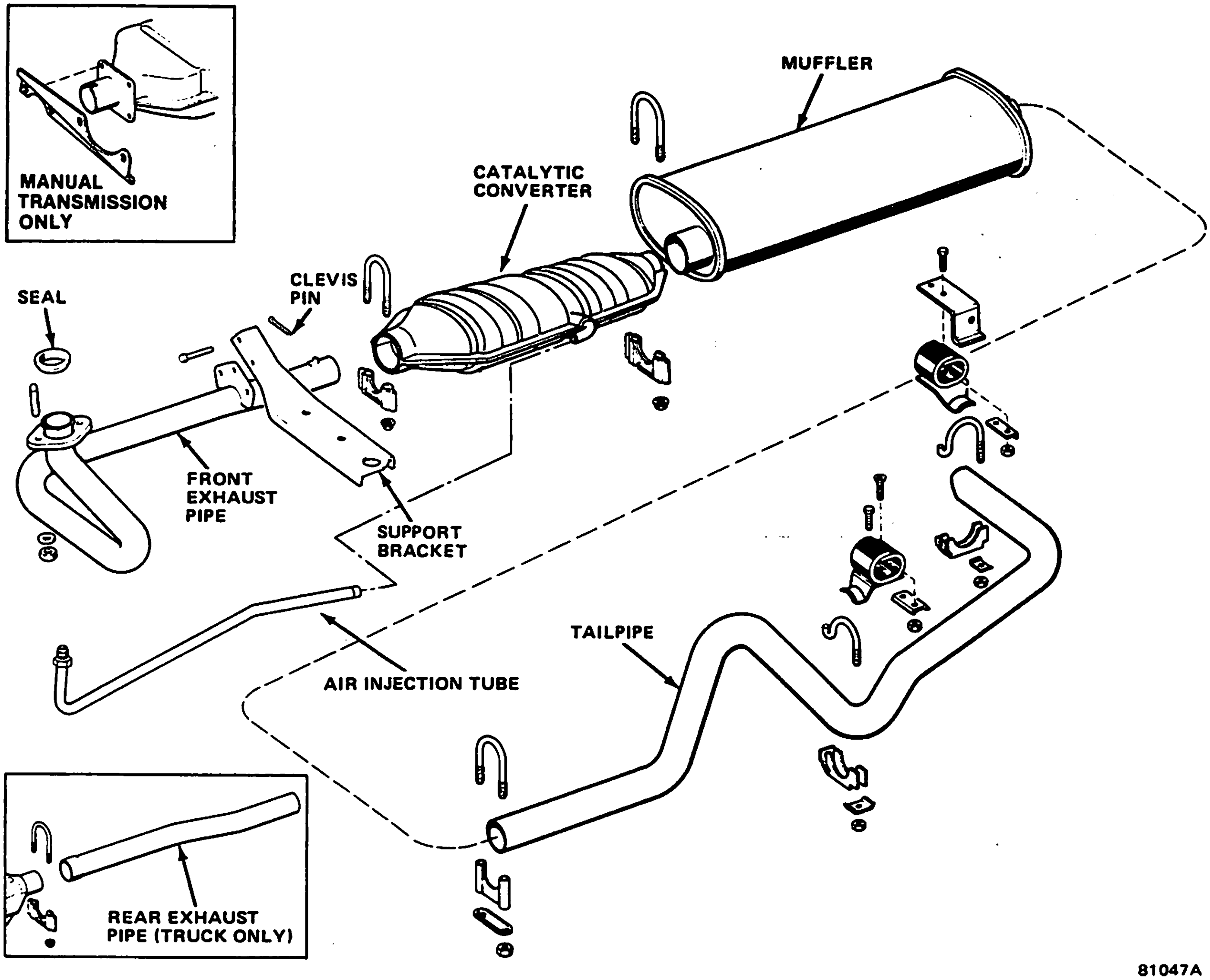

Fig. 1K-3 Six-Cylinder Engine Exhaust System—Cherokee-Wagoneer-Truck

below 16 in. Hg (54 kPa), exhaust system is restricted or blocked. Stop engine and proceed to step (5).

(5) Disconnect exhaust pipe at manifold.

(6) Start engine and increase speed to 2,000 rpm. Observe vacuum gauge.

(a) If vacuum settles at 16 to 21 in. Hg (54 to 71 kPa), restriction or blockage is in exhaust pipe, catalytic converter or muffler.

(b) If vacuum decreases below 16 in. Hg (54 kPa) with exhaust pipe disconnected, exhaust manifold is restricted.

(7) Connect exhaust pipe, remove muffler, start engine and observe vacuum gauge.

(a) If vacuum decreases below 16 in. Hg (54 kPa), restriction or blockage is in catalytic converter.

(b) If vacuum is normal, muffler is restricted.

NOTE: *If the converter has failed, always inspect the muffler to determine if converter debris has entered it.*

(8) Stop engine.

(9) Disconnect tachometer and vacuum gauge.

(10) For four- and six-cylinder engines, remove exhaust manifold. For eight-cylinder engines, remove both exhaust manifolds.

(11) Inspect exhaust manifold ports for casting flash by dropping length of chain into each port.

NOTE: *Do not use a wire or a light to inspect ports. The restricted opening may be large enough for wire or light to pass through but small enough to cause excessive back pressure at high engine rpm.*

(12) Remove casting flash. If flash is at lower end of port, it can usually be chipped out. If flash cannot be removed, replace manifold.

(13) Install exhaust manifold(s).

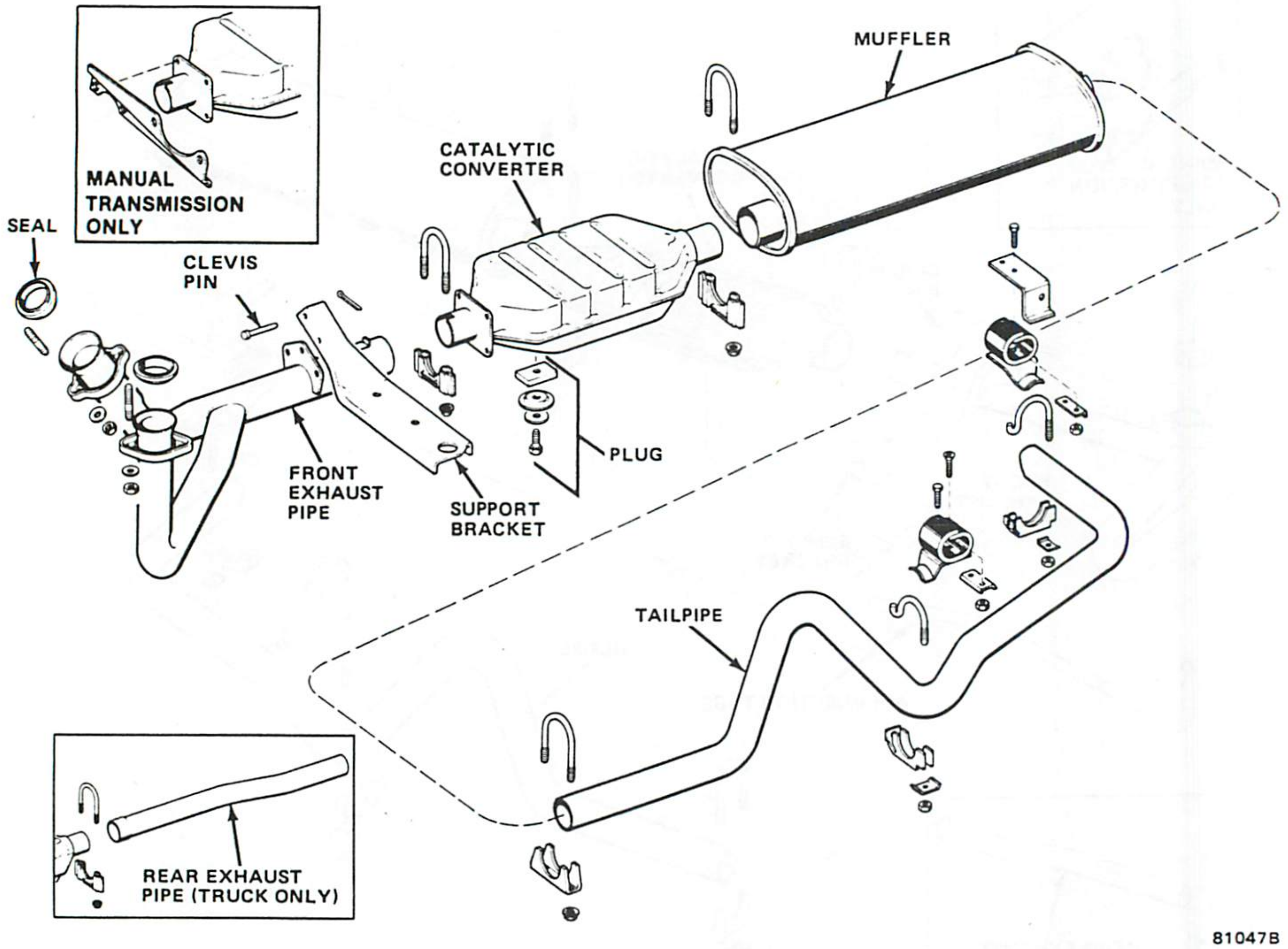

Fig. 1K-4 Eight-Cylinder Engine Exhaust System—Cherokee-Wagoneer-Truck

EXHAUST MANIFOLD REPLACEMENT

Four-Cylinder Engine

The exhaust manifold is located on the left hand side of the engine (fig. 1K-5). Refer to Chapter 1B—Engines for replacement procedure.

Six-Cylinder Engine

The intake and exhaust manifolds are attached with common bolts and nuts to the cylinder head on the left side of the engine. A gasket is used between the intake manifold and the cylinder head. No gasket is used between the exhaust manifold and cylinder head or between exhaust manifold and exhaust pipe (fig. 1K-6). Refer to Chapter 1B—Engines for replacement procedure.

Eight-Cylinder Engine

Refer to Chapter 1B—Engines for replacement procedure.

EXHAUST MANIFOLD HEAT VALVE

Four- and six-cylinder engines are not equipped with heat valves.

Eight-Cylinder Engine

A thermostatically controlled heat valve mounted between the right exhaust manifold and exhaust pipe directs exhaust heat to the intake manifold for rapid fuel vaporization during engine warmup. When the counterweight is in the horizontal position, the valve is in the heat **On** position, directing exhaust heat through the intake manifold crossover passage (fig. 1K-7). The exhaust heat crosses through the intake manifold and discharges into the left exhaust manifold until the engine attains normal operating temperature. At this time, the heated bimetallic spring loses its tension, the counterweight moves downward and the valve moves to the heat **Off** position. This allows the exhaust heat to discharge completely through the right exhaust pipe.

Examine the manifold heat valve for freedom of movement and lubricate every 30,000 miles (48 000 km) with Jeep Heat Valve Lubricant, or equivalent.

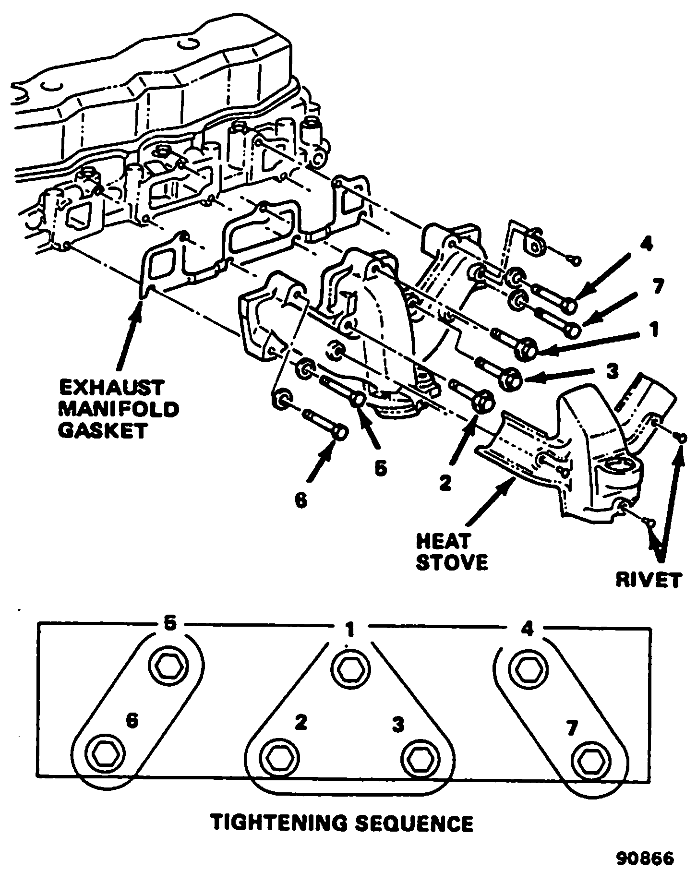

Fig. 1K-5 Exhaust Manifold—Four-Cylinder Engine

Replacement

(1) Disconnect and lower exhaust pipe.

(2) Replace manifold heat valve and gasket.

(3) Replace exhaust pipe gasket.

(4) Position exhaust pipe and connect to exhaust manifolds.

MUFFLER REPLACEMENT

Removal

(1) Remove front and rear muffler clamps.

(2) Support rear of vehicle by side rails and allow axle to hang free.

(3) Remove tailpipe hanger clamp.

(4) Insert tool between tailpipe and muffler at several places to loosen pipe from muffler.

(5) Disconnect rear hanger, if equipped.

(6) Heat catalytic converter or rear exhaust pipe-to-muffler joint with oxyacetylene torch until cherry red.

(7) Place block of wood against front of muffler and drive muffler rearward to disengage.

(8) Drive muffler off tailpipe.

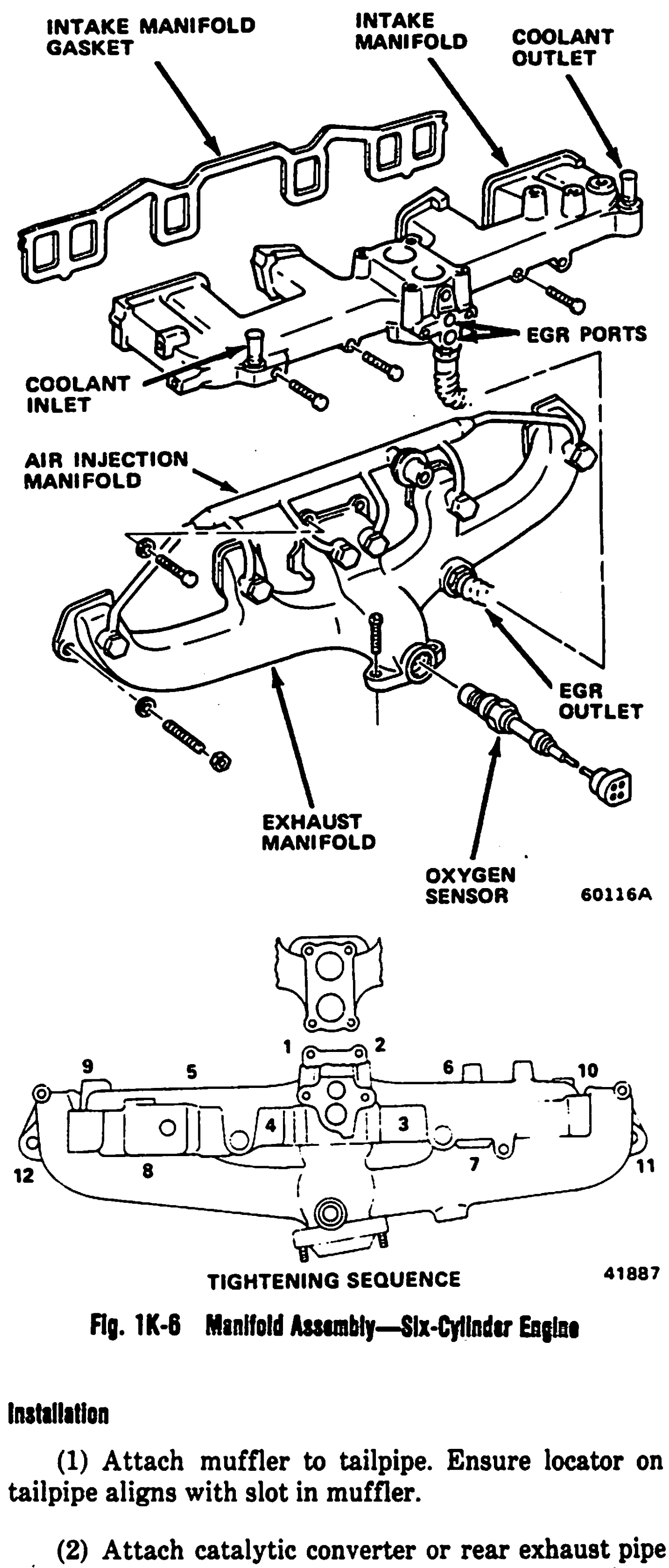

Fig. 1K-6 Manifold Assembly—Six-Cylinder Engine

Installation

(1) Attach muffler to tailpipe. Ensure locator on tailpipe aligns with slot in muffler.

(2) Attach catalytic converter or rear exhaust pipe to muffler. Ensure pipe has sufficient clearance from floorpan.

(3) Install clamps and hangers.

(4) Start engine and inspect for exhaust leaks and contact with body panels.

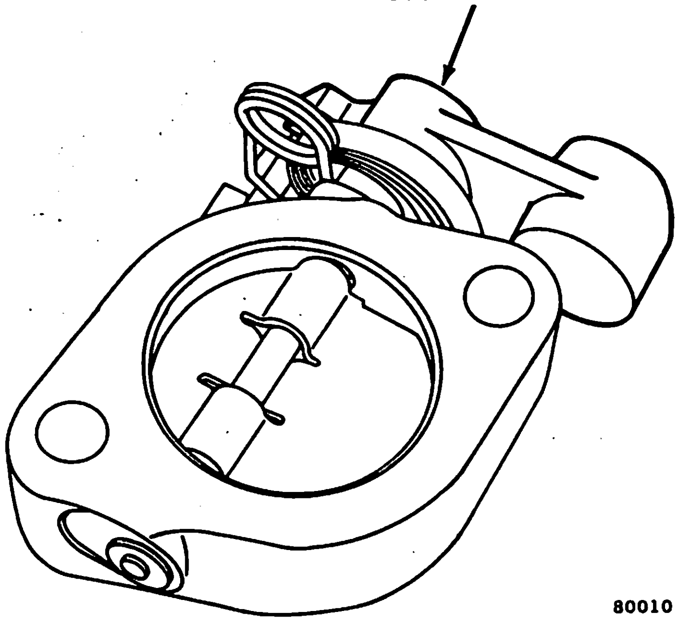

Fig. 1K-7 Exhaust Manifold Heat Valve in Heat On Position—Eight-Cylinder Engine

PIPE REPLACEMENT

Front Exhaust Pipe

Removal

(1) Disconnect exhaust pipe from manifold.
(2) Disconnect mounting bracket and/or clamp.

(3) Heat exhaust pipe-to-converter joint with oxyacetylene torch until cherry red. Twist exhaust pipe back and forth to disengage.

Installation

(1) Connect exhaust pipe to converter.

(2) Clean mating surface(s) at manifold(s). Attach exhaust pipe to manifold(s) but do not tighten. Use replacement gasket(s) if necessary.

(3) Align exhaust pipe. Tighten clamp or mounting bracket at rear of exhaust pipe. Tighten flange(s) on manifold(s).

Tailpipe

When replacing a tailpipe, support the vehicle with frame rails.

Removal

To remove a tail pipe attached to the muffler, cut the pipe close to the muffler. Collapse the part remaining in the muffler and remove.

Installation

To install a tailpipe, disconnect the mounting bracket and lower the front of the muffler. Install the tail pipe. Position the mounting bracket and tighten.

SPECIFICATIONS

Torque Specifications

Service Set-To Torques should be used when assembling components. Service In-Use Recheck Torques should be used for checking a pre-tightened item.

	USA (ft.-lbs)		Metric (N-m)	
	Service Set-To Torque	Service In-Use Recheck Torque	Service Set-To Torque	Service In-Use Recheck Torque
Exhaust Manifold Screws Four-Cylinder Engine	37	34-40	50	47-53
Exhaust and Intake Manifold Screws and Nuts Six-Cylinder Engine	23	18-28	31	24-38
Exhaust Manifold Screws — Eight-Cylinder Engine				
Center (2)	25	20-30	34	27-41
Outer (4)	15	12-18	20	20-34
Exhaust Pipe-to-Manifold Nuts	20	27	15-25	20-34

All torque values given in foot-pounds and newton-meters with dry fits unless otherwise specified. 70295

AIR INJECTION SYSTEMS

GENERAL

The basic air injection system for both six- and eight-cylinder Jeep engines incorporates a belt-driven air pump, a vacuum controlled diverter (bypass) valve, air injection manifold(s) with check valve(s) and connecting hoses (figs. 1K-8 and 1K-9).

NOTE: *Four-cylinder Jeep engines are not equipped with an air injection system.*

Air is discharged from the air pump to the diverter valve, which either directs it to the air distribution manifold(s) or vents it to the atmosphere through a bypass vent, depending on engine operating conditions. System air pressure is maintained at approximately 5 psi (35 kPa) by a relief valve located within the diverter valve assembly.

Air is routed through the air injection manifold(s) into the engine exhaust port areas. The air mixes with hot exhaust and promotes additional burning of the mixture. This reduces hydrocarbon and carbon monoxide emission to the atmosphere.

There are two Air Systems used with six-cylinder Jeep engines, the basic (single) air injection system (used for 49-State CJ vehicles) and a dual air injection system (used for California CJ vehicles and all Cherokee, Wagoneer and Truck vehicles).

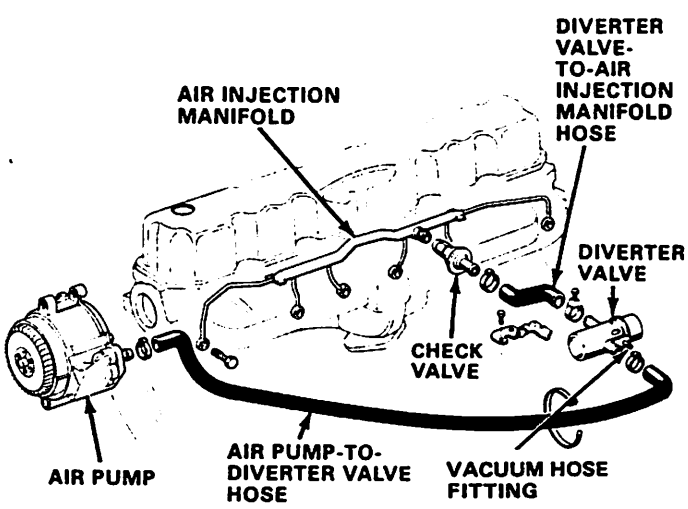

Fig. 1K-8 Basic Air Injection System—Six-Cylinder Engine

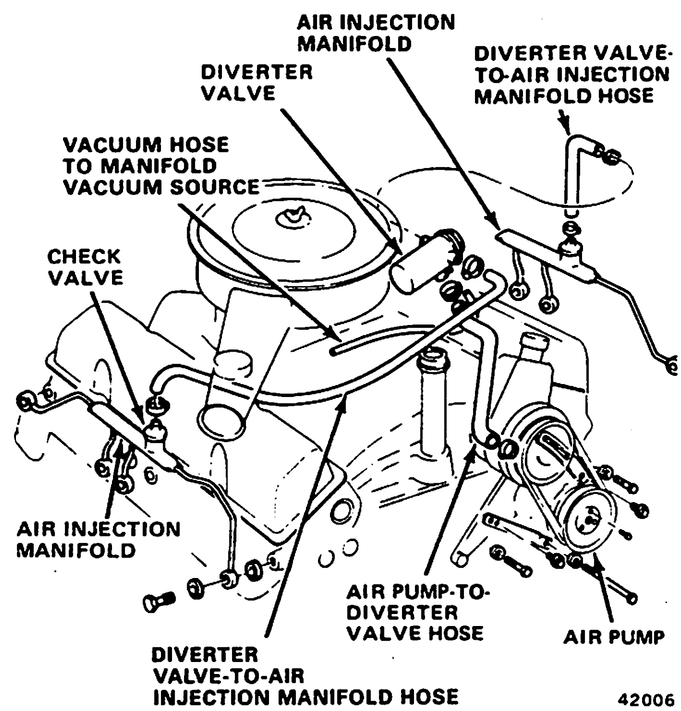

Fig. 1K-9 Air Injection System—Eight-Cylinder Engine

The dual air input is comprised of a belt driven air pump, diverter valve, air control valve, divert and upstream solenoids, reverse and two-way delay valves, coolant temperature switch, air injection manifold, "downstream" air injection tube and connecting hoses (fig. 1K-10). The two air inputs into the exhaust system are:

- upstream air injection via the air injection manifold attached to the exhaust manifold;
- downstream air injection to the dual bed (COC and TWC) converter.

SINGLE AIR INJECTION SYSTEM

Air Pump

The same air pump is used for both six- and eight-cylinder engines. The major components of the air pump are enclosed in a die-cast aluminum housing. A filter fan assembly, rotor shaft and drive hub are visible on the pump exterior (fig. 1K-11).

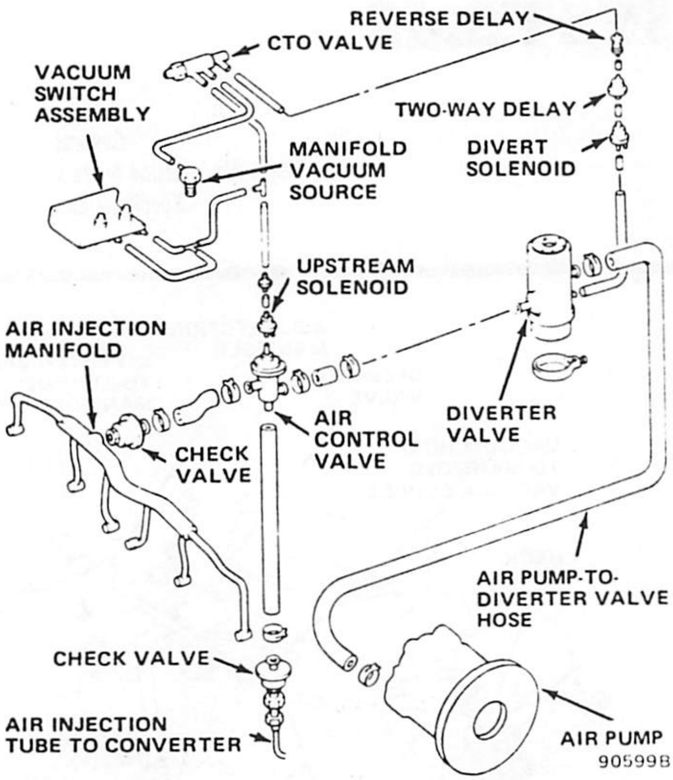

Fig. 1K-10 Dual Air System—Six-Cylinder Engine

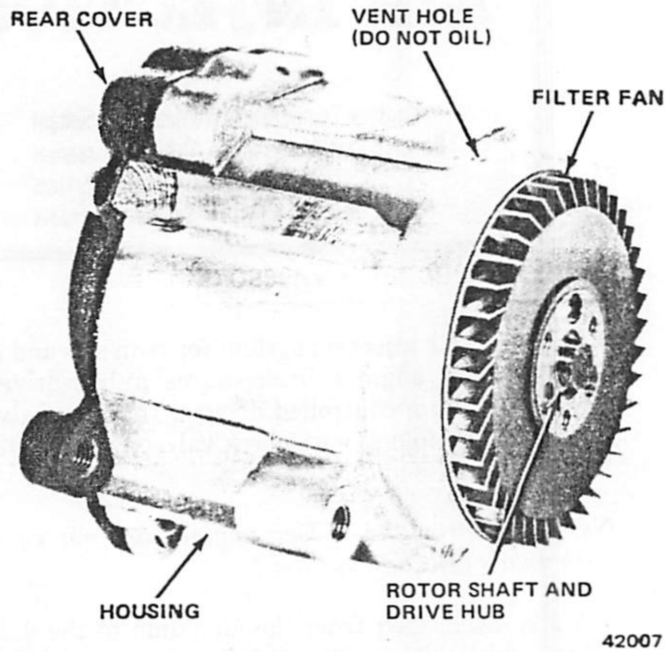

Fig. 1K-11 Air Pump

The pump is designed for long life and is serviceable only by replacement. Do not remove the rear housing cover for any reason. The internal components of the pump are not serviceable.

The aluminum housing has cavities for air intake, compression and exhaust and a bore for enclosing the front bearing. The housing also includes cast metering areas that reduce the noise of intake and compression. Mounting bosses are located on the housing exterior.

NOTE: *The pressure relief valve is located within the diverter valve assembly. If defective, replace the diverter valve assembly.*

The front bearing supports the rotor shaft. The bearing is secured in position by plastic injected around grooves in the housing and outer bearing race.

The rear cover supports the vane pivot pin, rear inner bearing race and exhaust tube. Dowel pins pressed into the housing correctly position the end cover, which is fastened by four screws.

The rotor positions and drives the two vanes. A stamped steel liner supports the carbon shoes and shoe springs that seal the vanes and rotor. The two plastic vanes are molded to hubs that support the bearings, which rotate on the pivot pin. The pulley drive hub is pressed onto the rotor shaft, and threaded holes in the hub provide for attachment of the pulley.

Operation

The pump vanes are located 180° apart and rotate around the pivot pin, which is located on the centerline of the pump housing. The rotor that drives the vanes rotates off the centerline of the pump housing. This creates changes in the distance between the outside of the rotor and the inner wall of the pump housing during rotor rotation. As the leading vane moves past the intake opening, it is moving from a small area to a large area. This creates a partial vacuum that forces air to enter the pump. As the vanes and rotor continue to rotate, the trailing vane passes the intake and traps the air between the vanes. The vanes and rotor move the air into a smaller area to compress it. Compression continues until the leading vane passes the exhaust opening. There the compressed air passes out of the pump to be either distributed or vented.

Noise Diagnosis

The air pump is not completely noiseless. Under normal conditions, noise will rise in pitch as the engine speed increases. Allow for normal break-in wear of the pump prior to replacement for excessive noise.

A chirping or squeaking noise normally originates from vane rub in the housing bore and is noticeable at low speed intermittently. Vane chirping is often eliminated at increased pump speeds or with additional wear in time. A chirping noise may also be caused by the drive belt slipping on the pulley of a seized pump.

Bearing noise, **a rolling sound noticeable at all speeds,** is easily distinguished from vane chirping. It does not necessarily indicate bearing failure. If bearing noise reaches an objectionable level at certain speeds, the pump may have to be replaced.

Failure of a rear bearing is identified by **a continuous knocking noise** and replacement of the pump is required.

Service Precautions

The following list of service precautions are for preventing damage to the air pump.

- Do not attempt to prevent the pulley from rotating by inserting tools into the centrifugal filter fan.
- Do not operate an engine with the pump belt removed or disconnected except for noise diagnosis.
- Do not attempt to lubricate any part of the pump.
- Do not clean the centrifugal filter.
- Do not disassemble the pump or remove the rear cover.
- Do not exceed 20 foot-pounds (27 N•m) torque when tightening the mounting bolts.
- Do not pry on the aluminum housing to adjust the belt tension.
- Do not clamp the pump in a vise.
- Do not permit liquids to enter the pump when steam or water pressure-cleaning the engine.

Removal—Six-Cylinder Engine with V-Belts

(1) Disconnect air pump output hose at back of air pump.

(2) Remove adjustment bolt and remove drive belt.

(3) Remove front mounting bracket.

(4) Remove adjustment bracket from cylinder head.

(5) Slide pump from pivot stud.

Installation—Six-Cylinder Engine with V-Belts

(1) Slide pump onto pivot stud.

(2) Install front mounting bracket.

(3) Install adjustment bracket and install adjustment screw.

CAUTION: *Adjust the belt tension by hand only.*

(4) Install drive belt and adjust to specified tension. Tighten pivot stud nut.

(5) Connect air pump output hose to back of pump.

Removal—Six-Cylinder Engine with Serpentine Belt

(1) Release belt tension by loosening alternator adjustment and pivot bolts.

(2) Disconnect air pump output hose from back of pump.

(3) Remove air pump mounting bolts/nuts and air pump.

Installation—Six-Cylinder Engine with Serpentine Belt

(1) Position air pump and secure with mounting bolts/nuts.

(2) Connect output hose to back of pump.

(3) Tighten belt to specified tension. Refer to Chapter 1C—Cooling Systems for tension specification.

Removal—Eight-Cylinder Engine

(1) Disconnect air pump output hose at pump.

(2) Loosen mount bracket-to-pump attaching screw and bolt. Remove drive belt.

(3) Remove pivot screw and brace screws.

(4) Remove pump.

Installation—Eight-Cylinder Engine

(1) Position pump at mounting location and install pivot and brace attaching screws. Do not tighten.

CAUTION: *Adjust the belt tension by hand only.*

(2) Install drive belt and adjust to specified tension.

(3) Tighten mounting screws and adjusting strap screw with 20 foot-pounds (27 N•m) torque.

Diverter (Bypass) Valve

A diverter valve is used with all air injection applications. The valves for six- and eight-cylinder engines differ only in the number of outlets. The six-cylinder engine diverter valve has one outlet. The eight-cylinder engine diverter valve has two outlets. A high flow diverter valve is used on some applications where greater airflow is required for emission control.

The valve momentarily diverts air pump output from the exhaust manifold(s) and vents it to the atmosphere during rapid deceleration. The valve also functions as a pressure release valve for excessive air pump output. An internal silencer is also incorporated in the diverter valve housing to muffle the airflow.

Operation

In a rapid deceleration situation, high intake manifold vacuum is applied to the diaphragm in the diverter valve. When the vacuum is 20 in. Hg (68 kPa) or more, the spring tension of the diaphragm is overcome. This moves the metering valve down against its upper seat and away from its lower seat. This diverts and vents air pump output pressure to the atmosphere (fig. 1K-12). Air pump output is diverted only momentarily because of a vent hole in the diaphragm. This hole allows atmospheric pressure to quickly equalize on both sides of the diaphragm and the diaphragm spring returns the metering valve to its normal position.

If the air pump develops excessive output pressure, the excessive pressure overcomes the diaphragm spring tension and pushes the metering valve down. Pump output pressure is diverted and vented to the atmosphere. When pump output pressure returns to normal, the metering valve moves up from the upper seat and against the lower seat, returning to its normally open position. Pump output pressure is then directed to the exhaust manifold(s).

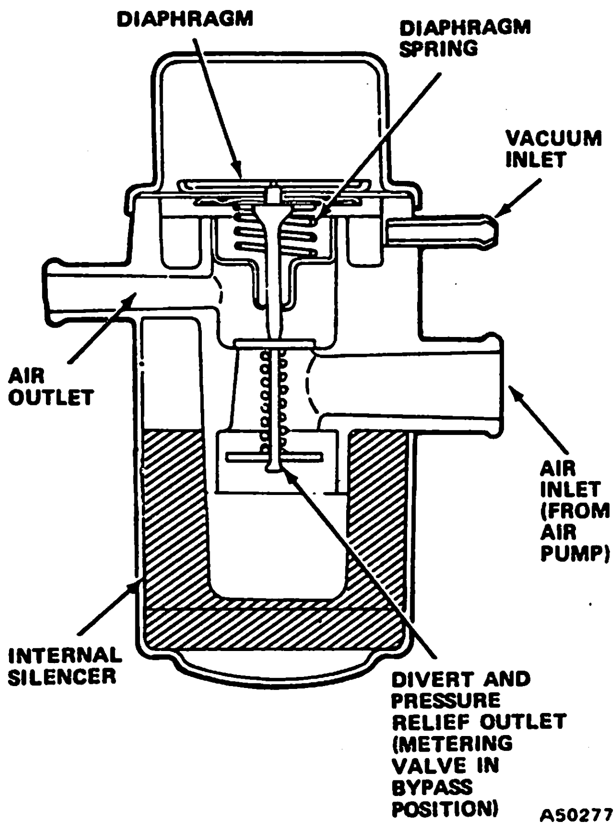

Fig. 1K-12 Diverter Valve—Typical

Functional Test

WARNING: *Use extreme caution when engine is operating. Do not stand in direct line with fan. Do not put hands near pulleys, belts or fan. Do not wear loose clothing.*

(1) Start engine and operate at idle.

(2) Examine diverter valve vent. Little or no air should flow from vent.

(3) Accelerate engine to 2000-3000 rpm and rapidly close throttle. A strong flow of air should pass from diverter valve vent for approximately three seconds. If air does not flow or if engine backfire occurs, ensure vacuum hose has vacuum and there is no air leak.

NOTE: *The diverter valve diverts and vents air pump output when a manifold vacuum of 20 in. Hg (68 kPa) or more is applied to the diaphragm. The diverter valve also operates when pump output exceeds 5 psi (35 kPa). Some applications require 8 psi (55 kPa).*

(4) Slowly accelerate engine. Between 2500 and 3500 rpm air should begin to flow from diverter valve vent.

Replacement

The diverter valve is not serviceable and must be replaced if defective. The valve is either attached to a bracket or suspended by the hoses between the air pump and air injection manifold(s). Removal involves disconnecting the air hoses, vacuum hose and bracket clamp, if used. Installation entails connecting the air hoses, vacuum hose and bracket clamp, if used.

Air Injection Manifolds

Air injection manifolds are constructed of cold-rolled steel with zinc plating. They distribute air via the diverter valve from the air pump to each of the exhaust manifold inlet ports.

A check valve, incorporating a stainless steel spring plunger and an asbestos seat, is integral with the air injection manifold. Its function is to prevent the reverse flow of exhaust gas to the pump during pump or belt failure, or diverter valve bypass operation. Reverse exhaust gas flow would damage the air pump and connecting hoses.

The distribution tubes of the air injection manifold are connected directly to the exhaust manifold. The hollow attaching fittings route airflow into the exhaust manifold inlet ports.

Check Valve Functional Test

To test the air injection manifold check valve for proper operation, disconnect the air supply hose at the injection manifold. With the engine operating above idle speed, listen and feel for exhaust leakage from the check valve. A slight leak is normal.

Removal—Six-Cylinder Engine

(1) Disconnect air delivery hose at check valve.

(2) Remove distribution tube fittings from exhaust manifold inlet ports.

NOTE: *Some resistance to turning may be encountered because of carbon build-up on the threads.*

(3) Remove air injection manifold.

Installation—Six-Cylinder Engine

(1) Connect air injection manifold with fittings to exhaust manifold. Tighten fittings with 20 foot-pounds (27 N•m) torque.

(2) Connect air delivery hose.

Removal—Eight-Cylinder Engine

(1) Disconnect air delivery hose at check valve.

(2) Remove distribution tube fittings from exhaust manifold inlet ports.

NOTE: *Some resistance to turning may be encountered because of carbon build-up on the threads.*

(3) Remove air injection manifold.

(4) Remove sealing gaskets from air injection manifold.

NOTE: *Duplicate the procedure for the other air injection manifold.*

Installation—Eight-Cylinder Engine

(1) Install air injection manifold using replacement sealing gasket on either side of each inlet port.

(2) Install distribution tube fittings and injection manifold on exhaust manifold. Tighten fittings with 38 foot-pounds (52 N•m) torque.

(3) Connect air delivery hose to check valve.

NOTE: *Duplicate the procedure for the other air injection manifold.*

DUAL AIR INJECTION SYSTEM

The additional components used with the dual air injection system are:

- divert and upstream solenoids,
- air control valve,
- coolant temperature switch,
- reverse and two-way delay valves,
- downstream air injection tube.

NOTE: *Diverter valve and air pump operation with the dual air injection system is basically the same as it is with the single air injection system.*

NOTE: *The dual air injection system is inter-related with the feedback system and must be diagnosed in conjunction with the feedback system. Refer to Chapter 1J-Fuel Systems.*

Air Control Circuit Operation

Air Control Valve

The air control valve is located between the diverter valve and the air injection manifold. The air control valve is controlled by vacuum regulated by the upstream solenoid.

The air control valve directs system air pressure either "upstream" (into the air injection manifold attached to the exhaust manifold) when vacuum is applied to it or "downstream" (directly into the dual bed monolithic-type converter) when vacuum is not applied to it.

The air mixes with the hot exhaust when it enters the "upstream" input and causes a further burning of the mixture. This reduces hydrocarbons (HC) and carbon monoxide (CO) emission to the atmosphere.

During "downstream" operation, the additional air reacts with hydrocarbons (HC) and carbon monoxide (CO) in the catalytic converter (rear half) to create carbon dioxide (CO_2) and water vapor and reduce undesirable emission into the atmosphere.

Upstream Solenoid

The air control valve circuit vacuum is controlled by the "upstream" solenoid (mounted at the rear of the cylinder head cover). The solenoid is grounded through the feedback (CEC) system.

When current is allowed to flow through the circuit and energize the "upstream" solenoid, it opens the air control valve vacuum to the atmosphere and the air control valve directs system air pressure "upstream" to the exhaust manifold.

When the vacuum is allowed to pass through the "upstream" solenoid (deenergized condition) to the air control valve, air system pressure is directed "downstream" to the rear half of the dual bed catalytic converter.

Air Bypass Circuit Operation

The controlling vacuum for air bypass is regulated by the divert solenoid, Open Loop 3 (OL3) vacuum switch (CEC system) and two-way and reverse delay valves.

Divert Solenoid

The divert solenoid is grounded via the feedback (CEC) system.

When current flows through the circuit, the energized solenoid allows atmospheric pressure to displace the vacuum, which allows the diverter (bypass) valve to release system air pressure to the atmosphere.

Two-Way and Reverse Delay Valves

Two-way and reverse delay valves are used to prevent a sudden loss of vacuum during a rapid vacuum decrease caused by engine acceleration.

Coolant Temperature Switch

The coolant temperature switch is located at the rear of the intake manifold. This switch controls the upstream solenoid operation.

NOTE: *The coolant switch (dual function) also provides a ground for the intake manifold heater.*

Operation

Manifold vacuum should be present at the air control valve via the upstream solenoid when the coolant temperature is lower than 160°F (71°C) (approximately) and should not be present if the coolant temperature is above 160°F (71°C) (approximately). If the coolant temperature is lower than 160°F (71°C) and vacuum is not present, inspect the vacuum hoses for air leaks and proper routing. Repair as necessary. If no fault is found, replace the switch or microprocessor.

DUAL AIR INJECTION SYSTEM DIAGNOSIS

General

The dual air injection system should be diagnosed in conjunction with the CEC System. Refer to Chapter 1J—Fuel Systems.

Diverter Valve

Test the diverter valve as outlined in Single Air Injection System Components.

NOTE: *If the engine is at normal operating temperature, manifold vacuum will have to be temporarily connected to the valve during the test because the control valve circuit will be in operation.*

Air Bypass Circuit

Functional Test

(1) Disconnect air hoses from ports A and B of air control valve. Hose A is connected to air injection manifold. Hose B is connected to catalytic converter.

WARNING: *Use extreme caution when engine is operating. Do not stand in direct line with fan. Do not put hands near pulleys, belts or fan. Do not wear loose clothing.*

(2) Start engine and warm to normal operating temperature. Turn ignition off.

(3) Restart engine and increase speed to 1500 rpm. Air should exhaust from port A of air control valve for approximately 30 seconds, then exhaust from port B.

(a) If no air exhausts, inspect diverter valve vents for air exhaust.

1. If air is being exhausted, increase engine speed to 1500 rpm and determine if vacuum is being applied to diverter valve.

2. If vacuum is present, replace diverter valve and retest. If no vacuum is present, refer to Chapter 1J—Fuel Systems and test divert solenoid.

3. If air is not being exhausted, inspect air pump for proper operation.

(b) If air exhaust from air control valve is normal, depress accelerator pedal to floor, return engine to idle and inspect diverter valve vents for air exhaust.

1. If air is exhausted, circuit is operating normally.

2. If air is not exhausted, check diverter valve vacuum hose for vacuum. If no vacuum, replace diverter valve. If vacuum is present, refer to Chapter 1J—Fuel Systems and test divert solenoid.

Air Control Circuit

NOTE: *Engine must be at normal operating temperature.*

Functional Test

(1) Disconnect air hoses from ports A and B of air control valve. Hose A is connected to air injection manifold. Hose B is connected to catalytic converter.

WARNING: *Use extreme caution when engine is operating. Do not stand in direct line with fan. Do not put hands near pulleys, belts or fan. Do not wear loose clothing.*

(2) Start engine and warm to normal operating temperature . Turn ignition off.

(3) Restart engine and increase speed to 1500 rpm. Air should exhaust from port A of air control valve for approximately 30 seconds, then exhaust from port B.

(a) If no air exhausts, inspect diverter valve vents for air exhaust.

1. If air is exhausted, with engine at 1500 rpm, determine if vacuum is being applied to diverter valve.

2. If vacuum is present, replace diverter valve and retest.

3. If vacuum is not present, refer to Chapter 1J—Fuel Systems and test divert solenoid.

4. If air is not exhausted, inspect air pump for proper operation.

(b) If air exhausts from both ports, replace air control valve and retest system.

(c) If air exhausts only from port B, remove vacuum hose and check for vacuum during first 30 seconds of operation.

1. If vacuum is not present, replace air control valve and retest.

2. If vacuum is present, refer to Chapter 1J—Fuel Systems and test upstream solenoid.

(d) If air exhaust is normal, depress accelerator pedal to floor, return engine to idle and inspect diverter valve vents for air exhaust.

1. If air is exhausted, system is operating normally.

2. If air is not exhausted, check diverter valve vacuum hose for vacuum. If no vacuum, replace diverter valve. If vacuum is present, refer to Chapter 1J—Fuel Systems and test divert solenoid.

COOLANT TEMPERATURE SWITCH REPLACEMENT

WARNING: *Serious burns can result if hot coolant is not drained before removing the switch from the intake manifold.*

(1) Drain coolant from radiator.

(2) Disconnect wire connector.

(3) Use open-end wrench to remove switch from intake manifold.

(4) Install replacement valve in intake manifold.

(5) Connect wire connector.

(6) Install coolant and purge air from cooling system. Refer to Chapter 1C—Cooling Systems.

DOWNSTREAM AIR INJECTION TUBE REPLACEMENT

(1) Disconnect air delivery hose at check valve.

NOTE: *Remove check valve if it is to be reused.*

(2) Remove clamp connecting "downstream" air injection tube to catalytic converter nipple.

NOTE: *It may be necessary to heat the joint for removal.*

(3) Attach injection tube to catalytic converter nipple.

(4) Install check valve, if removed, and tighten with 25 foot-pounds (34 N•m) torque minimum.

(5) Connect air delivery hose to check valve.

(6) Install clamp to secure "downstream" air injection tube to catalytic converter nipple. Tighten clamp with 3 to 4 foot-pounds (4 to 5 N•m) torque.

SPECIFICATIONS

Torque Specifications

Service Set-To Torques should be used when assembling components. Service In-Use Recheck Torques should be used for checking a pre-tightened item.

	USA (ft.-lbs)		Metric (N-m)	
	Service Set-To Torque	Service In-Use Recheck Torque	Service Set-To Torque	Service In-Use Recheck Torque
Air Pump Mounting Screws	20	15-22	27	20-30
Air Injection Manifold Fittings				
Six-Cylinder Engine	20	15-22	27	20-27
Eight-Cylinder Engine	38	30-45	52	41-61

All Torque values given in foot-pounds and newton-meters with dry fits unless otherwise specified.

70296

CATALYTIC CONVERTER SYSTEMS

GENERAL

NOTE: *All reference to CJ vehicles also pertains to Scrambler vehicles.*

All CJ vehicles with four-cylinder engines utilize a pellet-type catalytic converter to reduce undesirable exhaust gas emissions. Vehicles designated 49-State use a conventional oxidizing catalytic (COC) converter and vehicles designated for sale in California use a three-way catalytic (TWC) converter. There is no scheduled maintenance required for either type converter.

A COC pellet-type catalytic converter is used with all eight-cylinder engine exhaust systems. All Cherokee, Wagoneer and Truck vehicles with six-cylinder engines and CJ vehicles with six-cylinder engines manufactured for sale in California use a dual bed (COC and TWC) monolithic-type converter with "downstream" air injection.

CAUTION: *The use of leaded fuel destroys catalytic converters and oxygen sensors.*

All Jeep vehicles are designed for unleaded fuel and are equipped with a fuel filler neck restrictor that prevents the insertion of the larger leaded fuel-filler hose nozzle.

CONVENTIONAL OXIDIZING CATALYTIC (COC) PELLET-TYPE CONVERTER

The **pellet-type conventional oxidizing catalytic (COC) converter** contains beads of alumina coated with platinum and palladium catalyzing agents. Thousands of pellets are contained in a steel canister. A plug is provided in the converter to permit replacement of the pellets should they become ineffective.

This type converter promotes the oxidation of incompletely burned fuel (HC) and carbon monoxide (CO). The chemical process involved changes HC and CO into harmless carbon dioxide (CO_2) and water (H_2O) vapor before the exhaust gas is emitted into the atmosphere. The catalysts that cause the chemical changes are platinum and palladium.

With pellet-type COC converters, all exhaust gases flow through the catalytic converter.

The temperature inside a converter is somewhat higher than the temperature of the exhaust gases when they are exhausted from the engine. Insulation in the pellet-type converter keeps the outside skin of the converter at approximately the same temperature as the muffler. Because of its larger mass, the converter stays hot much longer than the muffler.

The steel catalytic converter body is designed to last the life of the vehicle. Excessive heat can result in bulging or other distortion, but excessive heat will not be the fault of the converter. A carburetor, air pump or ignition problem that permits unburned fuel to enter the converter will usually cause overheating. If a converter is heat-damaged, the carburetor, air pump, or ignition problem should be corrected at the same time the converter is replaced. All other components of the exhaust system should also be inspected for heat damage.

THREE-WAY CATALYTIC (TWC) PELLET-TYPE CONVERTER

This type converter utilizes rhodium in addition to platinum and palladium as oxidizing agents. Rhodium is a catalyst for oxides of nitrogen (NO_x) and changes it and carbon monoxide (CO) into nitrogen (N_2) and carbon dioxide (CO_2).

Operationally, as the air/fuel mixture is leaned out, the converter efficiency for changing HC and CO is increased but is decreased for changing NO_x. Enrichening the mixture increases converter efficiency for changing NO_x but decreases it for HC and CO. For this reason, to optimize the simultaneous conversion of all three, the carburetor must provide an air/fuel mixture ratio of approximately 14.7:1 (fig. 1K-13). This is the primary function of the C4 System that is used in conjunction with the Three-Way Catalytic (TWC) Converter.

DUAL BED (COC AND TWC) MONOLITHIC-TYPE CONVERTER

The dual bed monolithic-type converter used with six-cylinder engines is two converters in one container. The rear half is a conventional oxidizing catalytic (COC) converter. The front half is a three-way catalytic (TWC) converter.

As with the TWC pellet-type converter (above), maintaining high conversion efficiency for this type converter requires that the carburetor provide an air/fuel mixture ratio of approximately 14.7:1 (fig. 1K-13). This is the primary function of the Feedback System used in conjunction with the converter.

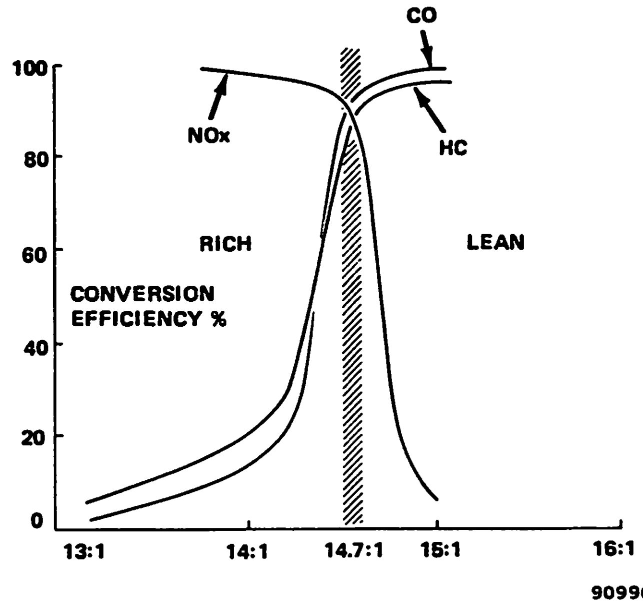

Fig. 1K-13 Optimum Air/Fuel Ratio for Conversion Efficiency

CATALYST REPLACEMENT

Dual Bed (COC and TWC) Monolithic-Type Converter

This type converter is not serviceable. The entire unit must be replaced if defective. Remove by disconnecting the air injection tube and detaching converter from the front exhaust pipe and the muffler (or rear exhaust pipe, if equipped). Install replacement converter.

COC and TWC Pellet-Type Converter

The pressed-in plug must be removed to replace the pellets. A replacement plug (fig. 1K-14) is required to seal the converter after the pellets have been replaced.

On-vehicle servicing is the only factory approved method of replacing pellets because catalytic converters are difficult to remove from most vehicles, especially after a large number of miles have accumulated, without damaging the converter assembly or exhaust connections.

The catalyst replacement tool includes an emptying and fill mechanism, a vacuum aspirator and two hand tools used for removal of the converter drain plug. The emptying and fill mechanism clamps directly to the

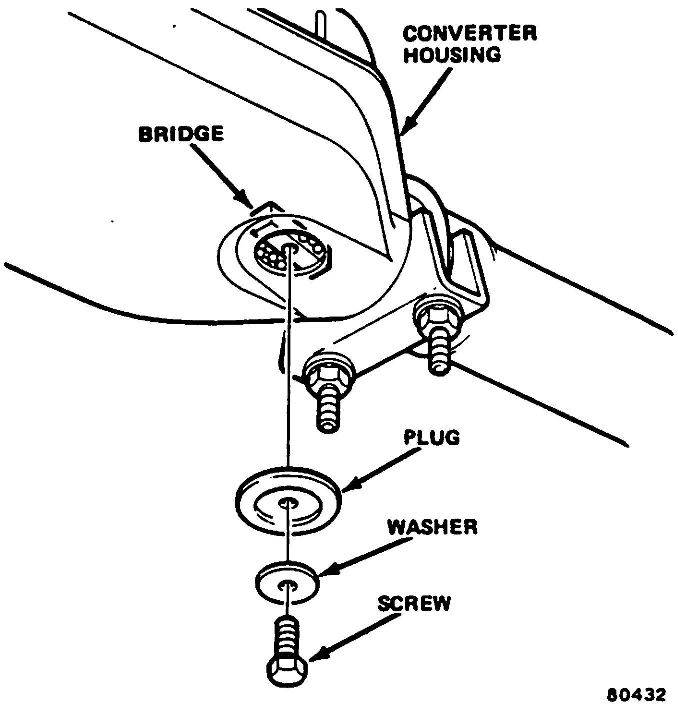

Fig. 1K-14 COC and TWC Pellet-Type Converter Plug

catalytic converter and consists of an air turbine vibrator unit and discharge-fill container. The vibrator induces a rotary motion to the catalytic converter case causing the catalyst pellets to flow out the drain port and into the attached container.

An adapter is included to adapt the exchanger to the newer-type converters, which have an unthreaded (pressed-in) access plug.

(1) Raise vehicle.

(2) Clamp vacuum aspirator (part of Tool J-25077-01) on tailpipe outlet (fig. 1K-15).

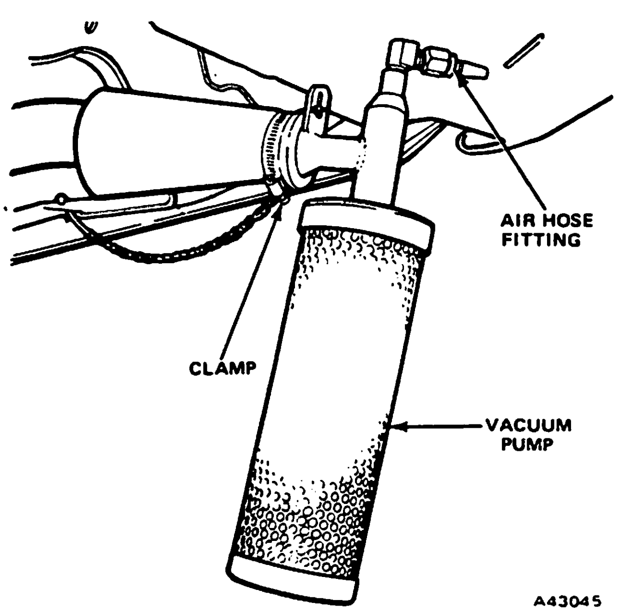

Fig. 1K-15 Vacuum Aspirator

(3) Connect air hose (80 psi minimum) to fitting on vacuum aspirator.

NOTE: *Vacuum aspirator must be in operation prior to removing plug to prevent pellets from spilling out on shop floor.*

CAUTION: *Use care to prevent damaging converter housing when removing plug. If the drain-fill hole cannot be sealed with the replacement plug, the converter must be replaced.*

(4) Remove plug from bottom of converter with removal tools provided with Tool Kit J-25077-01.

(5) Clamp container-vibrator unit (using Adapter J-25077-6) on converter (fig. 1K-16).

(6) Remove air hose from vacuum aspirator.

(7) Connect air hose (80 psi or 550 kPa minimum) to fitting on vibrator. Approximately ten minutes is required to empty pellets from converter.

(8) Disconnect air hose, remove container and discard pellets.

(9) Fill container with replacement pellets and attach to converter.

(10) Connect air hose (80 psi or 550 kPa minimum) to fitting on vacuum aspirator. Pellets will be forced into converter and packed in place.

NOTE: *If any pellets pass through the converter and into the tailpipe, the converter is defective and must be replaced.*

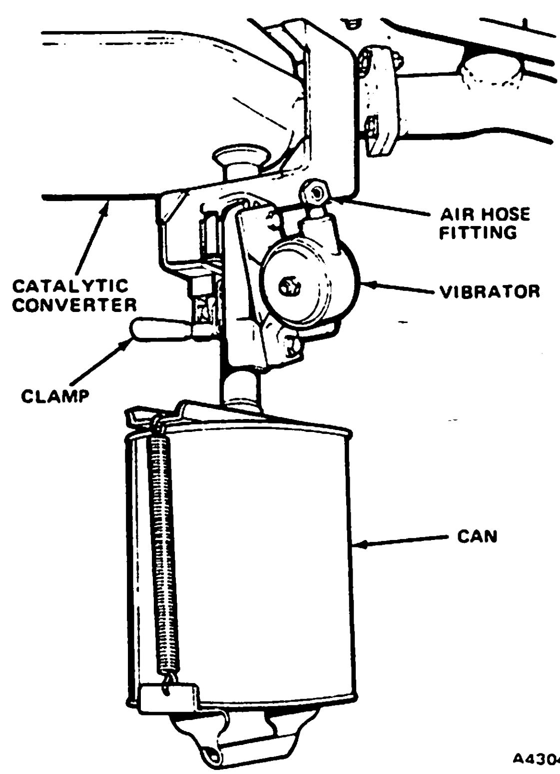

Fig. 1K-16 Container-Unit Vibrator

(11) When full of pellets, remove container-vibrator unit from converter. Maintain air pressure at vacuum aspirator.

(12) Plug converter with replacement plug (fig. 1K-15).

(a) Thread screw into bridge and position bridge inside opening. Remove screw without disturbing bridge position.

(b) Insert screw through washer and plug.

(c) Carefully thread screw into bridge and tighten sufficiently to create an air-tight seal.

(13) Disconnect air hose from fitting on vacuum aspirator. Remove vacuum aspirator from tailpipe. Lower vehicle

Tools

J-25077
CATALYTIC CONVERTER
CATALYST CHANGER

70452

ENGINE INSTRUMENTATION 1L

SECTION INDEX

GENERAL INFORMATION

GENERAL

This chapter is divided into three sections. The first section, General Information, contains descriptions of all instrumentation, theory of operation, test procedures and replacement procedures. The second section, Diagnosis and Repair Simplification (DARS) Charts, contains pictorial guides for diagnosing instrumentation malfunctions. The third section, Specifications, contains specifications, instrument cluster illustrations, instrument cluster and printed circuit board schematics and separate schematics for each gauge, meter and lamp circuit.

Engine instrumentation includes all instrument panel gauges, meters and lamps used to monitor the engine-related systems included in part one of this manual. Refer to Chapter 3C—Instrument Panels and Components for speedometer, odometer, clock, illumination lamps, turn signal indicator lamps and high beam indicator lamp. The instrumentation included in this chapter involves: ammeter, voltmeter, constant voltage regulator (CVR), fuel gauge, oil pressure gauge, tachometer, and coolant temperature gauge (figs. 1L-1 and 1L-2). These devices are all electrically operated.

NOTE: *All reference pertaining to CJ vehicles includes Scrambler vehicles.*

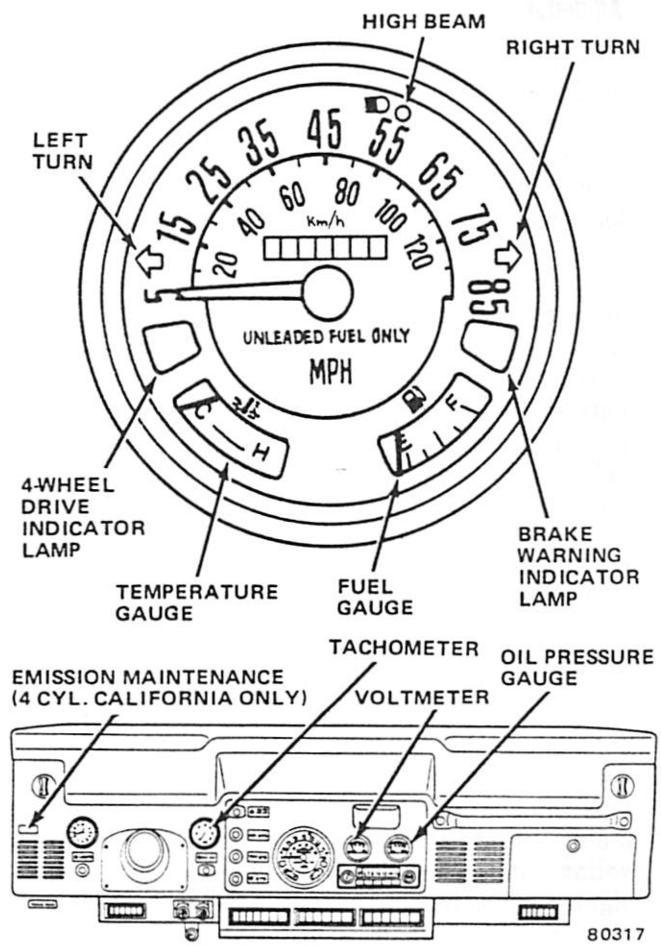

Fig. 1L-1 CJ Instrumentation

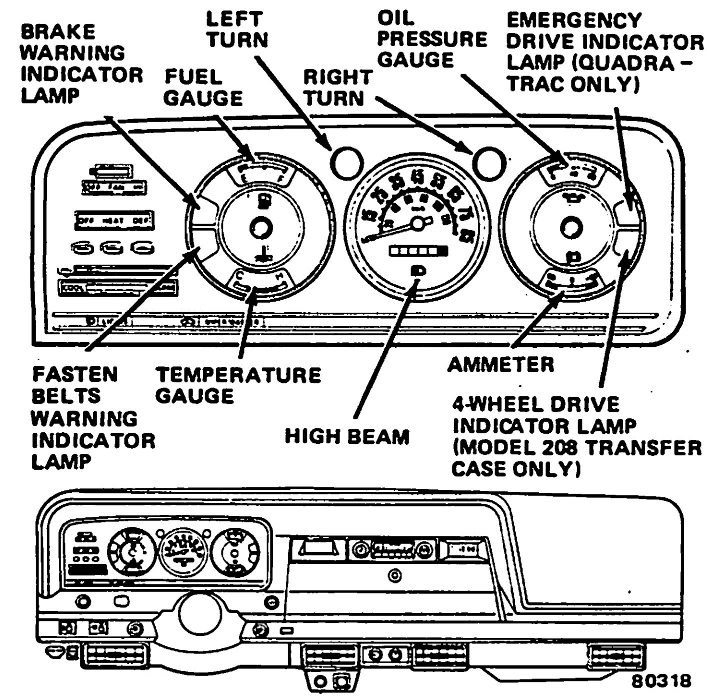

Fig. 1L-2 Cherokee-Wagoneer-Truck Instrumentation

OPERATION

Ammeter

Ammeters are standard equipment for Cherokee, Wagoneer and Truck vehicles. They are not available for CJ vehicles.

An ammeter is an instrument used to indicate current flow into or out of the battery. Whenever the electrical load caused by the vehicle electrical devices is greater than the alternator can supply, current flows from the battery, and the ammeter indicates a discharge (-). Whenever alternator output is greater than the electrical load, the excess current is available to charge the battery, and the ammeter indicates a charge (+). If the battery is fully charged, the integral voltage regulator reduces alternator output to supply only enough for the vehicle electrical load. When this occurs, the ammeter indicates no charge.

The ammeter is connected in series between the battery and the alternator to indicate the current flow into and out of the battery.

Voltmeter

A voltmeter is standard equipment for CJ vehicles only and is not available for other Jeep vehicles. The voltmeter indicates alternator output voltage. This provides an indication of the charging system's ability to maintain the battery in a charged condition. Continuous voltage indications in either the high or low red bands signify either improper regulation, a broken or slipping alternator drive belt, shorted alternator diode(s) or a defective battery. Low voltage indications in the green band are normal at idle or after prolonged engine starter motor operation. Continuous voltage indications in the low green band with the engine above idle speed signify faulty alternator operation.

Constant Voltage Regulator (CVR)

Several vehicle gauges are designed to operate on low voltage. The constant voltage regulator (CVR) provides approximately 5 volts for this purpose. Battery voltage is supplied to the CVR. The CVR contains a small heating coil and thermostatically operated points. With battery voltage applied to the CVR, the points vibrate at a rate that produces an average of 5 volts for the gauges. The CVR is an integral part of the fuel gauge for CJ vehicles and the coolant temperature gauge for Cherokee, Wagoneer and Truck vehicles. An external circuit is used to apply the CVR voltage to the other gauges.

Fuel Gauge

Fuel gauges for all vehicles operate on regulated voltage provided by the constant voltage regulator (CVR). The fuel gauge system consists of a gauge, a variable-resistance sending unit located in the fuel tank, appropriate wiring and the CVR.

The gauge pointer is attached to a bimetallic coil that responds to temperature changes. A heating coil wrapped around the bimetallic coil provides heat that causes the bimetal to expand. Current flows from the sending unit in the fuel tank through the heating coil to the CVR (B +). The sending unit has high resistance at low fuel level and very low resistance at high fuel level.

Oil Pressure Gauge

An oil pressure gauge is standard equipment for all Jeep vehicles.

CJ Vehicles

The oil pressure gauge system consists of an electromagnetic-type gauge, a variable-resistance sending unit and appropriate wiring. Battery voltage is applied to the two coils in the gauge. One coil is connected directly to ground. The other coil is connected to the sending unit. The variable resistance in the sending unit is controlled by the oil pressure. Electromagnetic fields expand around both coils in the gauge. The pointer is influenced greater by the coil having the most current flow and the resulting more intense electromagnetic field.

Cherokee-Wagoneer-Truck

The oil pressure gauge system consists of a gauge, a variable-resistance sending unit, appropriate wiring and the constant voltage regulator (CVR). The gauge pointer is attached to a bimetallic strip that reacts to temperature changes. A heating coil wrapped around the bimetallic coil provides heat that causes the bimetal to expand. Current flows from the sending unit (connected to the cylinder block) through the heating coil to the CVR (B +).

Tachometer

Tachometers are optional instruments available for CJ vehicles only.

Tachometers are wired in series between the ignition switch terminal and the ignition coil negative terminal. The current flow through the coil is turned on and off by the ignition system and the tachometer integrates the interruptions. The engine rpm is directly proportional to the integrated voltage amplitude.

Coolant Temperature Gauge

A coolant temperature gauge is standard equipment for all vehicles.

All temperature gauges operate on regulated voltage provided by the constant voltage regulator (CVR). The temperature gauge system consists of a gauge, a variable-resistance sending unit, appropriate wiring and the CVR.

The gauge pointer is attached to a bimetallic coil that reacts to temperature changes. A heating coil wrapped around the bimetallic coil provides heat that causes the bimetal to expand. Current flows from the sending unit (connected to the engine) through the heating coil to the CVR (B +). The sending unit has high resistance at low engine coolant temperature and very low resistance at high engine coolant temperature.

Emission Maintenance Indicator Lamp

The emission maintenance indicator lamp is used only with four-cylinder engine vehicles (CJ) manufactured for sale in California. This lamp is illuminated at 30,000 miles (48 280 km) to indicate required service for the oxygen sensor (C4 System). Refer to Maintenance—Chapter B and Exhaust Systems—Chapter 1K for additional information

After performing the service, the emission maintenance switch must be reset by turning the reset screw on the switch body. The switch is located under the hood between the upper and lower speedometer cables on the left side of the dash panel. Turn the spring loaded reset screw approximately 1/4 turn counterclockwise to the reset detent position.

INSTRUMENTATION DIAGNOSIS

General

Improper operation of electrical gauges or meters can be usually traced to either faulty electrical wiring continuity (including printed circuit boards), improperly calibrated components or high resistance caused by loose or corroded connections.

A common diagnostic procedure is to bypass a suspected component, wire, printed circuit, or connection with a jumper wire. If the gauge or meter functions normally with the jumper wire installed, the problem usually is within the bypassed printed circuit, wire, connection or component.

Test Equipment

Several gauge tests require the use of Universal Gauge Tester J-24538. This instrument provides a wide range of variable resistance. If the tester is not available, a suitable substitute can be constructed with an accurate ohmmeter and a spare fuel gauge sending unit.

(1) Attach one ohmmeter test probe to sending unit terminal.

(2) Attach other ohmmeter test probe to sending unit ground wire.

(3) Refer to applicable Sending Unit Resistance (Ohms) chart for resistance values that apply to gauge being tested. Charts are included in Specifications. To calibrate, move float arm and mark appropriate resistance values on sending unit case.

(4) Remove ohmmeter probes. Attach jumper wire to sending unit terminal. Tester is now calibrated and ready for use.

Printed Circuit Board Test

The following procedure is used to locate suspected breaks or short circuits in the conducting foil.

(1) Remove instrument cluster from vehicle and remove all bulbs, gauges and meters. Refer to Instrument Cluster Replacement for procedure.

CAUTION: *When using ohmmeter, disconnect power from circuit being tested. Otherwise ohmmeter internal circuits will be destroyed.*

(2) Connect one ohmmeter test probe to applicable pin terminal for circuit to be tested. Trace each circuit from pin terminal to bulb, gauge or meter terminal in circuit with other test probe.

NOTE: *Set ohmmeter for the low resistance scale (0 to 10 ohms) and zero meter pointer.*

(3) Test for continuity at each uncoated position in circuit. Ohmmeter should indicate zero ohms at each position.

NOTE: *When circuit tracing, time can be saved by starting at the middle of the circuit. This will isolate circuit defects to one half of the circuit.*

(4) Trace circuit leading away from bulb or gauge terminal to ground terminal pin or ground screw.

(5) Connect one ohmmeter probe to ground terminal pin and other probe to cluster metal case. Ohmmeter should indicate zero ohms.

(6) Replace printed circuit board if ohmmeter indicates other than zero ohms on any test.

(7) Test for short circuits between circuits. With probe connected to applicable pin for circuit to be tested, move other probe to all other pin terminals on cluster. Ohmmeter should indicate infinite resistance between circuits.

Ammeter Diagnosis

The accuracy of an ammeter may be determined by comparing indications with those of a test ammeter of known accuracy.

(1) Turn ignition switch off.

(2) Disconnect battery positive cable from terminal on starter motor solenoid.

CAUTION: *Test ammeter must be an actual ammeter, not a voltmeter with a calibrated ammeter scale. Connecting a voltmeter in series will destroy its internal circuitry.*

(3) Connect test ammeter in series between solenoid terminal and disconnected cable.

(4) Turn ignition switch to On position. Do not start engine. Turn headlamps on. Turn heater blower motor to high speed.

(5) Compare current flow (amps) indication of test ammeter with that of ammeter installed in vehicle.

(6) Turn headlamps and heater blower motor off. Start engine and operate at high idle. Compare current flow (amps) indication of test ammeter with that of ammeter installed in vehicle.

(7) Replace ammeter if current flow (amps) indications of vehicle ammeter and test ammeter vary more than calibration tolerance listed in Specifications.

Voltmeter Diagnosis

(1) Connect test voltmeter of known accuracy across battery terminals.

(2) Turn ignition switch on.

(3) Compare voltage indication of test voltmeter with that of voltmeter installed in vehicle. Replace voltmeter if voltage indications vary more than calibration tolerance listed in Specifications.

Fuel Gauge Diagnosis

Movement of the fuel in the tank can occur when driving up or down hills, driving on rough surfaces or by rapid acceleration or sudden braking. Erratic up and down motion of the fuel gauge sending unit float may temporarily cause the fuel gauge pointer to fluctuate and indicate incorrectly. Ensure that all these possibilities are considered before suspecting an actual abnormal condition in the fuel level indicating system.

Abnormal conditions all result from variations of four basic malfunctions:

- pointer does not move,
- pointer moves but indicates a fuel level that does not correspond with the actual fuel level,
- pointer moves to the top of the scale and remains there,
- pointer pulsates.

Refer to DARS chart 1 for a systematic method of locating the causes of these abnormal conditions. Charts 2 and 3 provide additional procedures that should be used only as directed in chart 1.

Oil Pressure Gauge Diagnosis

An oil pressure gauge malfunction can result in any one of the following conditions:

- pointer does not move,
- pointer moves but indicates an oil pressure that does not correspond with the actual oil pressure,
- pointer moves to the top of the scale and remains there,
- pointer pulsates.

Refer to DARS chart 4 or 5 for a systematic method of locating the causes of these abnormal conditions.

Calibration Test

If an oil pressure gauge is suspected of indicating pressure that does not correspond with the actual oil pressure, perform a calibration test before performing electrical diagnosis procedures in DARS chart 4 (CJ) or 5 (Cherokee, Wagoneer and Truck).

(1) Remove oil pressure sending unit from cylinder block. Install T-fitting in cylinder block. Connect sending unit to T-fitting.

(2) Connect oil pressure test gauge to T-fitting.

(3) Start engine. Compare pressure indicated on vehicle gauge with that on test gauge. Conduct comparison at idle and at higher engine speeds. If both gauge indications are same (within 10 percent), vehicle gauge is acceptable. If gauge is not within specification, perform gauge test as outlined in DARS chart 4 or 5.

(4) After performing test, remove T-fitting, install sending unit and inspect for oil leaks.

Tachometer Diagnosis

Test the accuracy of a tachometer by comparing with rpm indications of a test tachometer of known accuracy. A service (TACH) terminal is located on the ignition coil connector for the test tachometer connection. Refer to Chapter 1G—Ignition Systems. Tachometers are not adjustable. Replace if defective.

NOTE: *Some test tachometers may not be compatible with the High Energy Ignition (HEI) System used with four-cylinder engines. Consult the manufacturer of the test tachometer if problems arise.*

Coolant Temperature Gauge Diagnosis

Before performing a coolant temperature gauge diagnosis, ensure the cooling system is functioning normally. Overheating can be caused by low coolant level, restrictions, loose or broken drive belt(s), defective water pump or incorrect ignition timing. Undercooling can be caused by a stuck thermostat (in open position). Consider these possibilities before suspecting an actual malfunction in the coolant temperature gauge system. A coolant temperature gauge malfunction can result in any one of the following conditions:

- pointer does not move,
- pointer moves but indicates a coolant temperature that does not correspond with the actual coolant temperature,
- pointer moves to the top of the scale and remains there,
- pointer pulsates.

Refer to DARS chart 6 for a systematic method of locating the causes of these abnormal conditions. Charts 2 and 3 provide additional procedures that should be used only as directed in chart 6.

INSTRUMENT CLUSTER REPLACEMENT

CJ Vehicles

Removal

(1) Disconnect battery negative cable.
(2) Disconnect speedometer cable from speedometer.
(3) Remove four attaching nuts and pull cluster from mounting studs.
(4) Note positions of all lamps. Note wire colors for reference during installation.
(5) Remove gauge/meter wires and lamps.

Installation

(1) Install gauge and meter wires and lamps in cluster.
(2) Position cluster on mounting studs and install attaching nuts.
(3) Connect speedometer cable.
(4) Connect battery negative cable.
(5) Reset clock, if equipped.

Cherokee-Wagoneer-Truck Vehicles

Removal

(1) Disconnect battery negative cable.
(2) Remove cluster retaining screws.
(3) Disconnect speedometer cable at cluster.
(4) Disconnect cluster terminal pin plug by pulling straight off.
(5) Disconnect four-terminal connector.
(6) Identify and tag ammeter wires for installation reference. Disconnect ammeter wires.
(7) Disconnect blower motor wire connector.
(8) Disconnect vacuum hoses from heater control.

NOTE: *Tag each hose according to its numbered location to ensure proper connection when installing cluster.*

(9) Remove heater control panel lamps.
(10) Disconnect heater temperature control wire from lever.
(11) Remove cluster assembly.

Installation

(1) Connect wiring harness connectors and install lamps in heater control.
(2) Connect heater temperature control wire to lever.
(3) Connect vacuum hoses to heater control.
(4) Connect cluster wire connectors.
(5) Install ammeter wires at original locations. If wires are reversed, ammeter will indicate in reverse (i.e., discharge instead of charge). Ensure wire terminal nuts are tight, otherwise electrical system failure will result.
(6) Connect speedometer cable.
(7) Position cluster on instrument panel and install screws.
(8) Connect battery negative cable.
(9) Reset clock, if equipped.

GAUGE AND METER REPLACEMENT

Ammeter—Cherokee-Wagoneer-Truck Vehicles

(1) Remove cluster.
(2) Remove printed circuit board and gauge assembly from bezel.
(3) Remove mask from oil pressure gauge and ammeter.

CAUTION: *Use care to prevent scratching paint on mask.*

(4) Remove attaching nuts and remove ammeter.
(5) Install replacement ammeter, connect wires and tighten nuts. If nuts are not properly tightened electrical failure will result.
(6) Install mask and screws.
(7) Install printed circuit board and gauge assembly on bezel.
(8) Install cluster.
(9) Start engine and observe ammeter for proper operation.

Voltmeter—CJ Vehicles

(1) Disconnect illumination lamp and wire connectors. Note wire locations for installation reference.
(2) Remove retaining nuts and bracket behind instrument panel.
(3) Remove gauge from instrument panel.
(4) Position replacement gauge in instrument panel opening.
(5) Install bracket and nuts.
(6) Connect wires to original locations and install lamp.
(7) Start engine and observe voltmeter for proper operation.

Fuel Gauge—CJ Vehicles

(1) Remove cluster.
(2) Carefully uncrimp lip of outer bezel. Remove outer bezel, glass and glass retaining bezel.
(3) Remove attaching screws from speedometer housing. Remove speedometer and face plate assembly.
(4) Remove attaching nuts, insulator and fuel gauge.

NOTE: *It may be necessary to carefully move lamp guard aside.*

(5) Install replacement fuel gauge, insulator and attaching nuts. Place toothed lockwasher on A-terminal. Ensure gauge is properly centered in face plate opening, then tighten nuts.
(6) Inspect all lamp guards for correct position. Install speedometer and face plate assembly. Install attaching screws and washers.
(7) Examine glass for fingerprints and debris. Clean as necessary.
(8) Install glass, glass retaining bezel and outer bezel. Crimp outer bezel lip four places.
(9) Install cluster.
(10) With ignition switch On, observe fuel gauge for proper operation.

Fuel Gauge—Cherokee-Wagoneer-Truck Vehicles

(1) Remove cluster.
(2) Remove printed circuit board and gauge assembly from bezel.
(3) Remove mask from fuel gauge and coolant temperature gauge.

CAUTION: *Use care to prevent scratching paint on mask.*

(4) Remove attaching nuts and fuel gauge.
(5) Install replacement fuel gauge and tighten nuts.
(6) Install mask and screws.
(7) Install printed circuit board and gauge assembly on bezel.
(8) Install cluster.
(9) With ignition switch On, observe fuel gauge for proper operation.

Oil Pressure Gauge—CJ Vehicles

(1) Remove illumination lamp and disconnect wire connectors.
(2) Remove retaining nuts and bracket behind instrument panel.
(3) Remove gauge from instrument panel.
(4) Position replacement gauge in instrument panel opening.
(5) Install bracket and nuts.
(6) Connect wire connectors and install lamp.
(7) Start engine and observe oil pressure gauge for proper operation.

Oil Pressure Gauge—Cherokee-Wagoneer-Truck Vehicles

(1) Remove cluster.
(2) Remove printed circuit board and gauge assembly from bezel.
(3) Remove mask from oil pressure gauge and ammeter.

CAUTION: *Use care to prevent scratching paint on mask.*

(4) Remove attaching nuts and remove oil pressure gauge.
(5) Install replacement oil pressure gauge and tighten nuts.
(6) Install mask and screws.
(7) Install printed circuit board and gauge assembly on bezel.
(8) Install cluster.
(9) Start engine and observe oil pressure gauge for proper operation.

Tachometer—CJ Vehicles

(1) Disconnect following wire connectors.
(a) Black ground wire.
(b) Orange illumination lamp wire.
(c) Red and red with tracer wires (six-cylinder engines) or three-terminal connector (four-cylinder engines).
(2) Remove screw and retaining cup.
(3) Remove tachometer from instrument panel.

NOTE: *It is possible to start engine with tachometer removed. With jumper wire, connect harness wire connectors (that were originally connected to tachometer) together.*

(4) Install replacement tachometer, cup and screw.
(5) Connect wire connectors and ground wires.
(6) Start engine and observe tachometer for proper operation.

Coolant Temperature Gauge—CJ Vehicles

(1) Remove cluster.

(2) Carefully uncrimp lip of outer bezel. Remove outer bezel, glass and glass retaining bezel.

(3) Remove attaching screws from speedometer housing. Remove speedometer and face plate assembly.

(4) Remove attaching nuts and remove insulator and coolant temperature gauge.

NOTE: *It may be necessary to carefully move lamp guard aside.*

(5) Install replacement gauge, insulator and attaching nuts. Place toothed lockwasher on S-terminal. Ensure gauge is properly centered in face plate opening, then tighten nuts.

(6) Inspect all lamp guards for correct position. Install speedometer and face plate assembly. Install attaching screws and washers.

(7) Examine glass for fingerprints and debris. Clean as necessary.

(8) Install glass, glass retaining bezel and outer bezel. Crimp outer bezel four places.

(9) Install cluster.

(10) Start engine and observe coolant temperature gauge for proper operation.

Coolant Temperature Gauge—Cherokee-Wagoneer-Truck Vehicles

(1) Remove cluster.

(2) Remove printed circuit board and gauge assembly from bezel.

(3) Remove mask from fuel gauge and coolant temperature gauge.

CAUTION: *Use care to prevent scratching paint on mask.*

(4) Remove attaching nuts and remove coolant temperature gauge.

(5) Install replacement gauge and tighten nuts.

(6) Install mask and screws.

(7) Install printed circuit board and gauge assembly on bezel.

(8) Install cluster.

(9) Start engine and observe coolant temperature gauge for proper operation.

PRINTED CIRCUIT BOARD REPLACEMENT

Only Cherokee, Wagoneer and Truck vehicles are equipped with a printed circuit board. CJ vehicles have conventional wiring for all gauges, meters and cluster illumination lamps.

Removal

(1) Remove instrument cluster.

(2) Remove radio noise suppressor (connector strip if not equipped with radio).

(3) Remove all illumination lamps from cluster. Turn counterclockwise to remove.

(4) Remove printed circuit board and gauge/meter assembly.

(5) Remove retaining nuts from ammeter and oil pressure gauge.

(6) Lift ammeter, oil pressure gauge and plate out of cluster as assembly.

(7) Remove retaining nuts from fuel and coolant temperature gauges. Remove large ground screw from printed circuit board above speedometer.

(8) Remove speedometer, fuel gauge, and coolant temperature gauge as assembly.

Installation

(1) Install printed circuit board. Ensure blue illumination lamp diffusers are correctly positioned. Install ground screw and gauge retaining nuts.

(2) Install ammeter and oil pressure gauge assembly on circuit board. Ensure blue lamp diffuser is correctly positioned. Install retaining nuts. Stamped nuts are used for oil pressure gauge. Plain nuts and lockwashers are used for ammeter. Ensure ammeter wire terminal nuts are properly tightened, otherwise electrical failure will result.

(3) Examine gauge lenses for fingerprints and debris. Clean as necessary.

(4) Install printed circuit board and gauge assembly on bezel.

(5) Install illumination lamps.

(6) Install radio noise suppressor or connector strip.

(7) Install cluster.

(8) Start engine and observe all gauge, meters and lamps for proper operation.

CONSTANT VOLTAGE REGULATOR (CVR) REPLACEMENT

CJ Vehicles

The CVR is contained in the fuel gauge housing. If the CVR is defective, replace the fuel gauge. Refer to Fuel Gauge Replacement.

Cherokee-Wagoneer-Truck Vehicles

The CVR is contained in the coolant temperature gauge housing. If the CVR is defective, replace the coolant temperature gauge. Refer to Coolant Temperature Gauge Replacement.

DIAGNOSIS AND REPAIR SIMPLIFICATION (DARS) CHARTS

Note: Refer to Chapter A — General Information for details on how to use this DARS chart.

PROBLEM: FUEL GAUGE NOT FUNCTIONING PROPERLY

Chart 1

STEP | SEQUENCE | RESULT

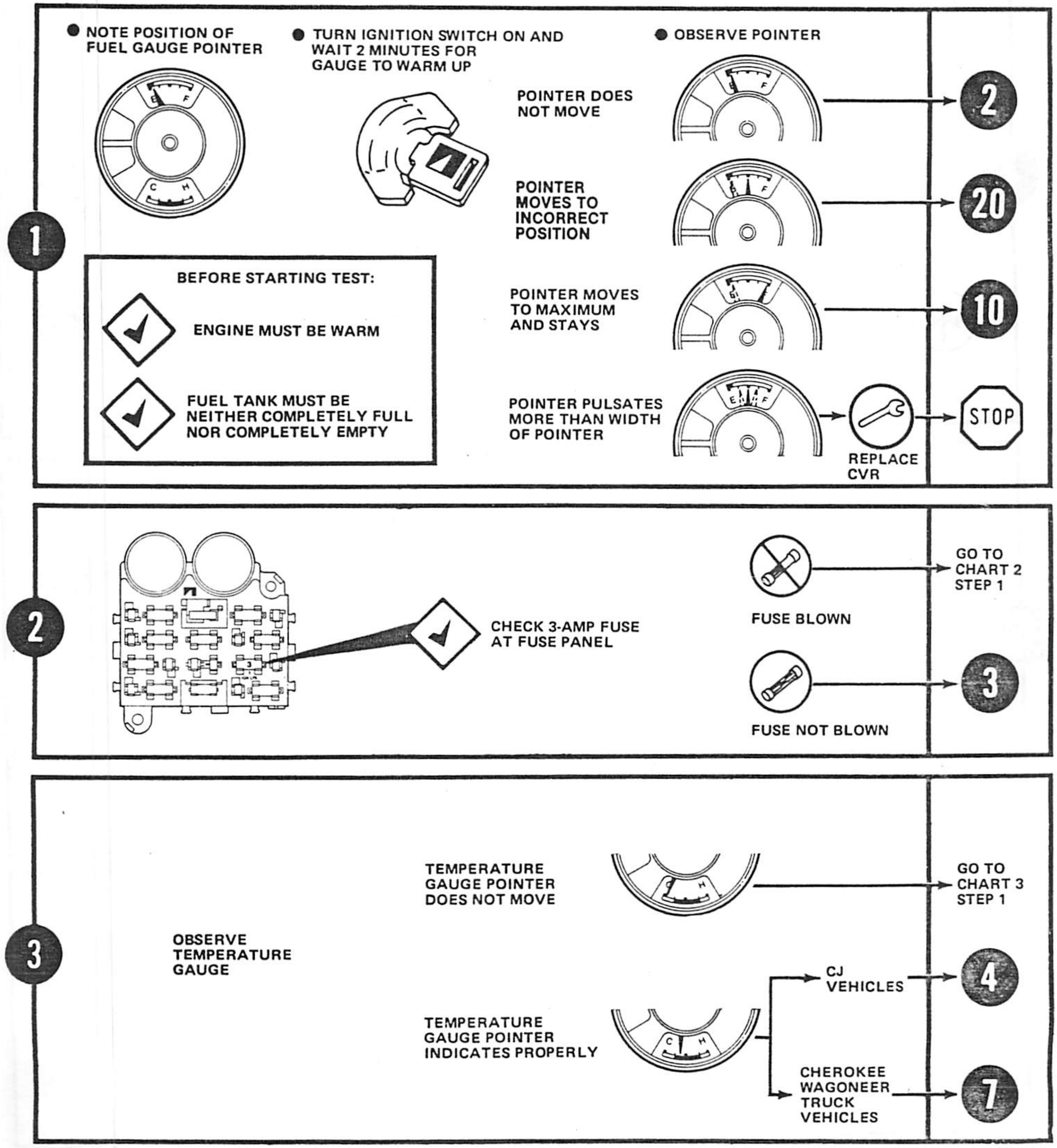

80311A

Chart 1

STEP | **SEQUENCE** | **RESULT**

4

- REMOVE CLUSTER
- DO NOT DISCONNECT WIRES

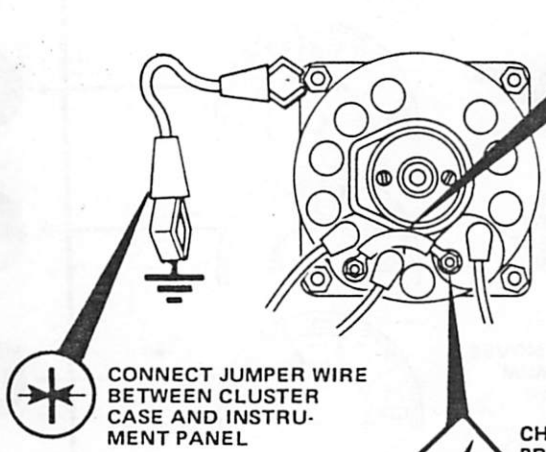

CHECK GAUGE NUTS FOR LOOSENESS AND CORROSION

CONNECT JUMPER WIRE BETWEEN CLUSTER CASE AND INSTRUMENT PANEL

CHECK FOR PRESENCE OF VOLTAGE AT GAUGE INPUT

VOLTAGE NOT PRESENT → LOCATE AND REPAIR FAULT IN JUMPER STRAP → STOP

VOLTAGE PRESENT → 5

5

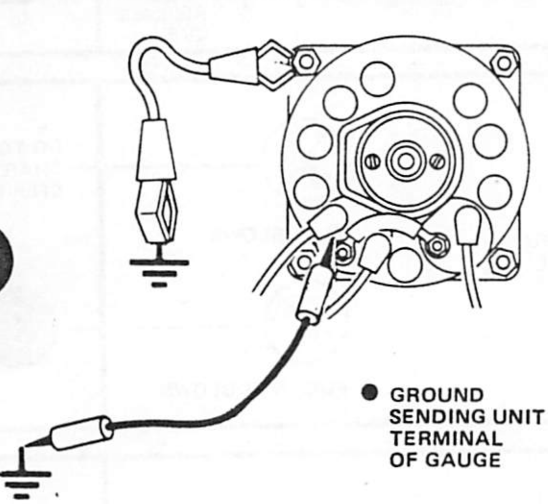

- GROUND SENDING UNIT TERMINAL OF GAUGE

POINTER MOVES → 6

POINTER DOES NOT MOVE → REPLACE GAUGE → STOP

6

LOCATE AND REPAIR OPEN CIRCUIT IN SENDING UNIT WIRE → STOP

80311B

Chart 1

STEP — SEQUENCE — RESULT

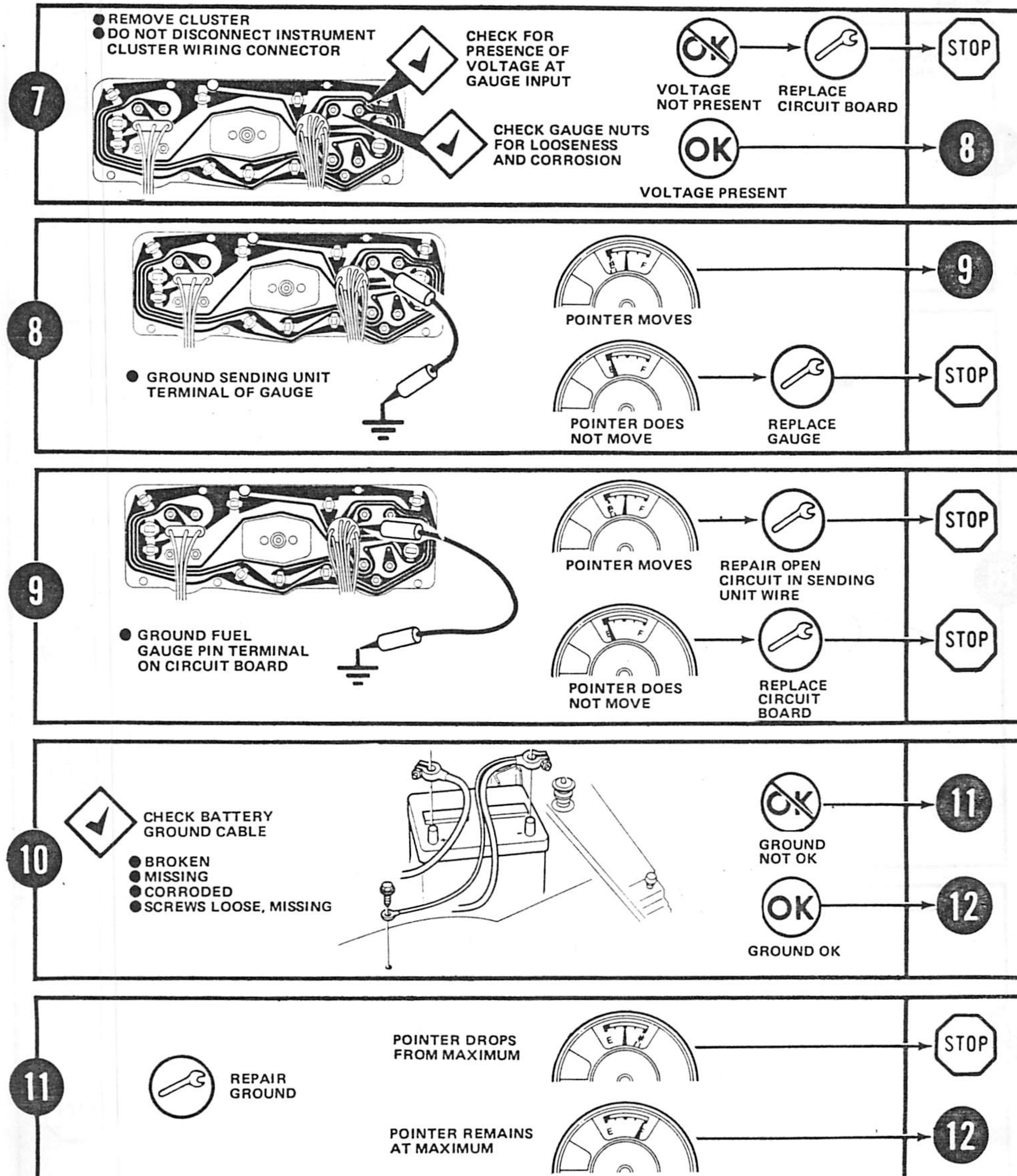

80311C

Chart 1

STEP | **SEQUENCE** | **RESULT**

12

DISCONNECT SENDING UNIT WIRE FROM SENDING UNIT

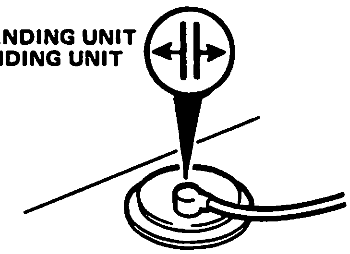

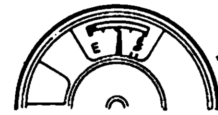

POINTER DROPS FROM MAXIMUM → 13

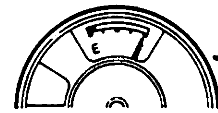

POINTER REMAINS AT MAXIMUM → 17

13

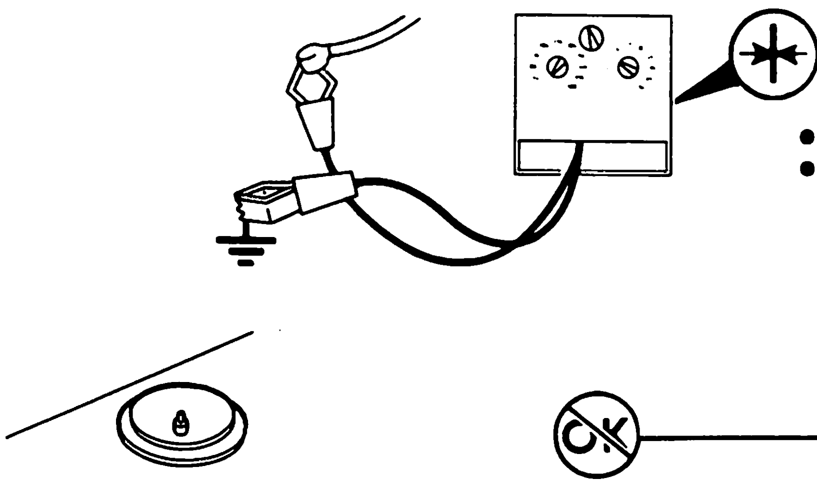

CONNECT ONE TESTER LEAD TO GROUND AND ONE LEAD TO SENDING UNIT WIRE

- TURN IGNITION SWITCH ON
- ADJUST TESTER TO SELECT OHM VALUES LISTED IN SENDING UNIT RESISTANCE CHART.

OBSERVE FUEL GAUGE INDICATION AT EACH OHM SETTING.

OK (crossed out): GAUGE INDICATIONS NOT ACCURATE AT EACH OHM SETTING → 14

OK: GAUGE INDICATIONS ACCURATE AT EACH OHM SETTING → 15

14

- OBSERVE TEMPERATURE GAUGE

TEMPERATURE GAUGE POINTER IS AT MAXIMUM

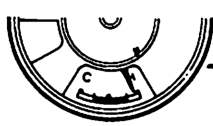

→ REPAIR CLUSTER GROUND OR REPLACE CVR → STOP

TEMPERATURE GAUGE POINTER INDICATES NORMALLY

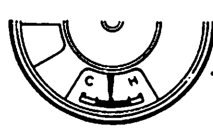

→ REPLACE FUEL GAUGE → STOP

80311D

Chart 1

STEP	SEQUENCE	RESULT
15	CHECK FUEL TANK FOR DEFORMATION 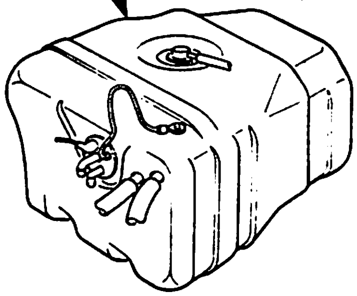 OK: FUEL TANK NOT DEFORMED →	16
	NOT OK: FUEL TANK DEFORMED → REPAIR OR REPLACE FUEL TANK →	STOP
16	CHECK SENDING UNIT AND TANK FOR LOOSE SOLDER 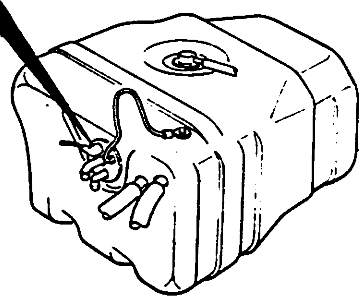 OK: NO LOOSE SOLDER → REPLACE SENDING UNIT →	STOP
	NOT OK: LOOSE SOLDER PRESENT → REMOVE LOOSE SOLDER →	STOP
17	DISCONNECT BATTERY NEGATIVE CABLE 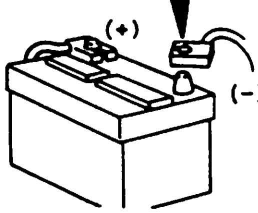 REMOVE INSTRUMENT CLUSTER. DO NOT DISCONNECT WIRE HARNESS; CONNECT JUMPER WIRE BETWEEN CLUSTER GROUND AND BODY 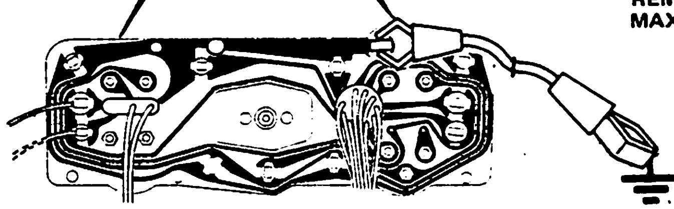 CONNECT BATTERY NEGATIVE CABLE	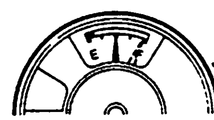 POINTER DROPS FROM MAXIMUM → 18
		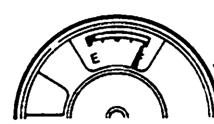 POINTER REMAINS AT MAXIMUM → 19
18	REPAIR INSTRUMENT PANEL GROUND →	STOP

80311E

Chart 1

STEP	SEQUENCE	RESULT

19

DISCONNECT SENDING UNIT WIRE FROM CLUSTER

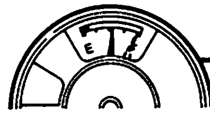

POINTER DROPS FROM MAXIMUM → REPAIR OR REPLACE SENDING UNIT WIRE → STOP

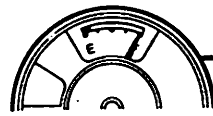

POINTER REMAINS AT MAXIMUM → REPLACE GAUGE (CJ) → STOP

POINTER REMAINS AT MAXIMUM → REPLACE CIRCUIT BOARD (CHEROKEE, WAGONEER, TRUCK) → STOP

20

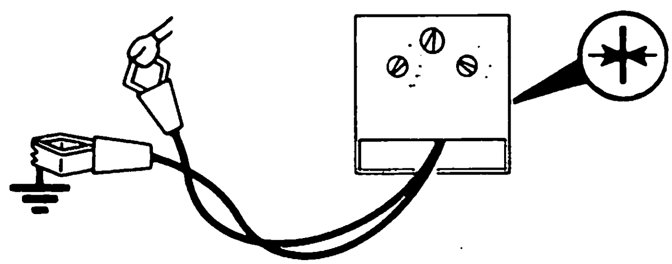

CONNECT ONE TESTER LEAD TO GROUND AND ONE LEAD TO SENDING UNIT WIRE

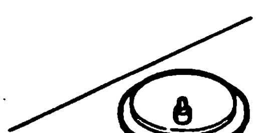

- TURN IGNITION SWITCH ON
- ADJUST TESTER TO SELECT OHM VALUES LISTED IN SENDING UNIT RESISTANCE CHART. OBSERVE FUEL GAUGE INDICATION AT EACH OHM SETTING.

OK (crossed) GAUGE INDICATIONS NOT ACCURATE AT EACH OHM SETTING → 21 CJ / 22 CHEROKEE WAGONEER TRUCK

OK GAUGE INDICATIONS ACCURATE AT EACH OHM SETTING → REPLACE SENDING UNIT → STOP

80311F

Chart 1

STEP | SEQUENCE | RESULT

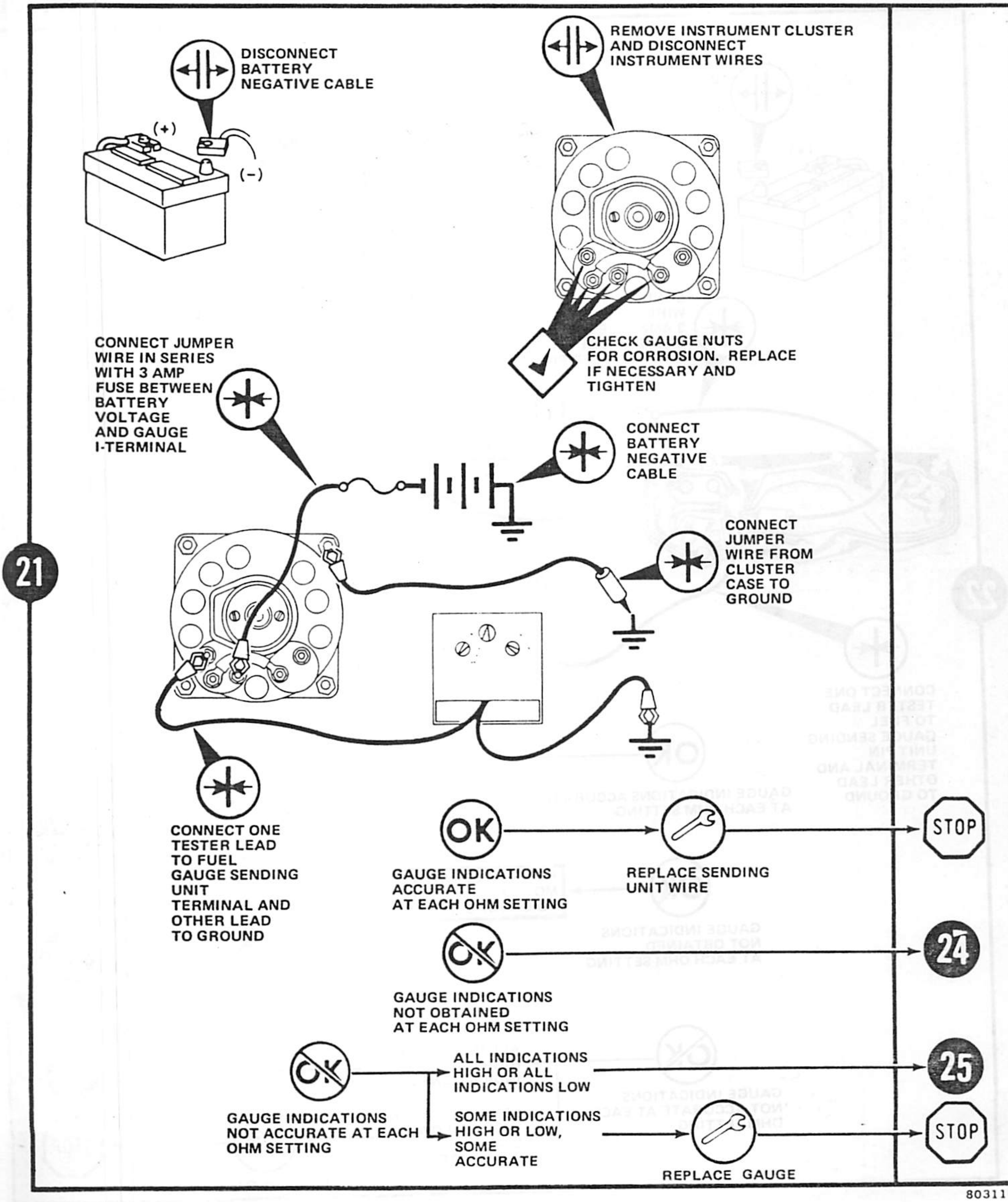

80311G

Chart 1

STEP **SEQUENCE** **RESULT**

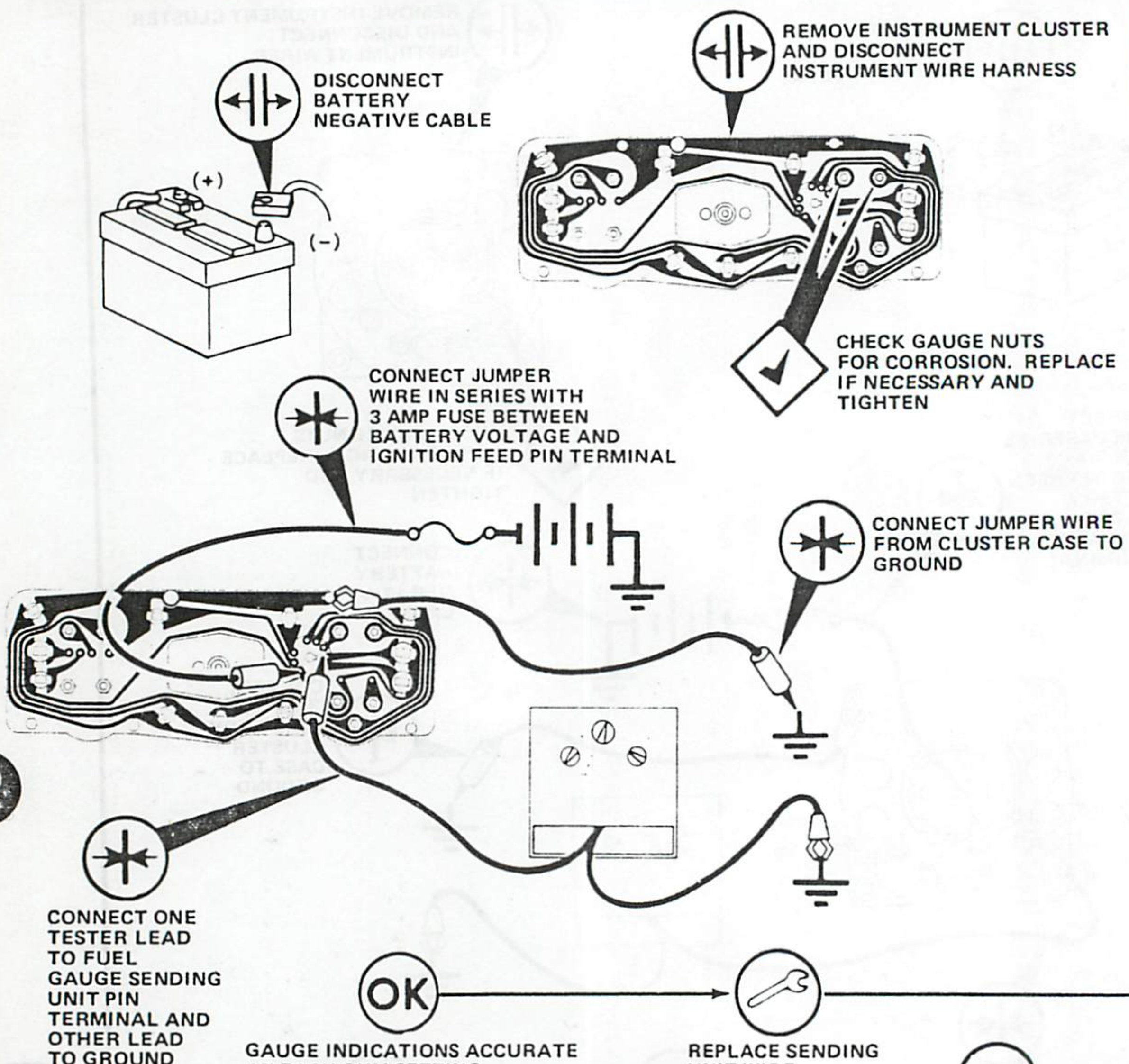

22

OK — GAUGE INDICATIONS ACCURATE AT EACH OHM SETTING → REPLACE SENDING UNIT WIRE → STOP

NOT OK — GAUGE INDICATIONS NOT OBTAINED AT EACH OHM SETTING → REPEAT TEST WITH LEAD MOVED FROM PIN TERMINAL TO GAUGE S- TERMINAL

- OK — GAUGE INDICATIONS ACCURATE AT EACH OHM SETTING → 23
- NOT OK — GAUGE INDICATIONS NOT ACCURATE AT EACH OHM SETTING → 24

NOT OK — GAUGE INDICATIONS NOT ACCURATE AT EACH OHM SETTING

- ALL INDICATIONS HIGH OR ALL INDICATIONS LOW → 25
- SOME INDICATIONS HIGH OR LOW, SOME ACCURATE → REPLACE GAUGE → STOP

80311H

Chart 1

STEP	SEQUENCE	RESULT
23	REPLACE CIRCUIT BOARD 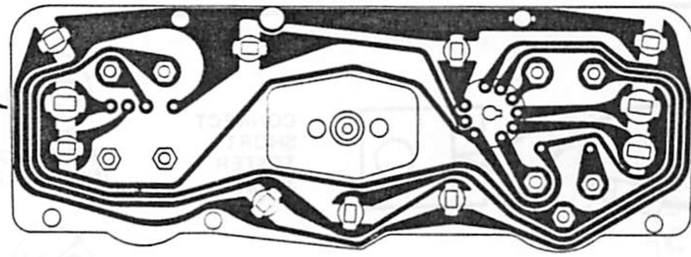	STOP
24	REPLACE GAUGE 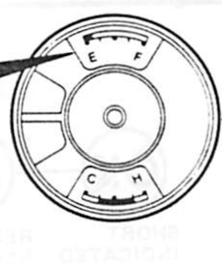	STOP
25	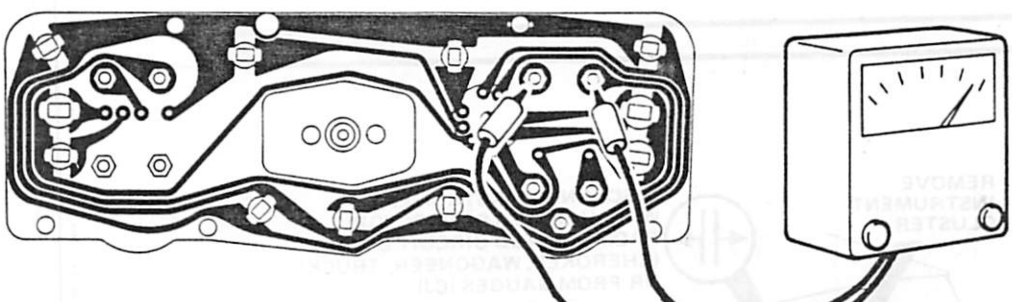 OHMMETER CONNECT OHMMETER LEADS TO GAUGE INPUT TERMINAL AND GAUGE SENDING UNIT TERMINAL ● COMPARE OHMMETER INDICATIONS WITH VALUES LISTED IN GAUGE RESISTANCE CHART OK — GAUGE RESISTANCE CORRECT → REPLACE CVR NOT OK — GAUGE RESISTANCE INCORRECT → REPLACE GAUGE	STOP STOP

80311J

PROBLEM: GAUGE FUSE BLOWN

Chart 2

STEP | **SEQUENCE** | **RESULT**

1

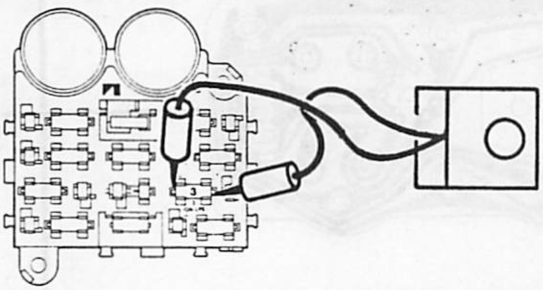

CONNECT SHORT TESTER J-8681

OK — SHORT NOT INDICATED → 2

SHORT INDICATED → 3

2

CHECK FOR INTERMITTENT SHORT

- RED IGNITION WIRE TO GAUGES

SHORT INDICATED → REPAIR AS NECESSARY → STOP

3

DISCONNECT BATTERY NEGATIVE CABLE

REMOVE INSTRUMENT CLUSTER

DISCONNECT INSTRUMENT WIRE HARNESS CONNECTOR FROM PRINTED CIRCUIT BOARD (CHEROKEE, WAGONEER, TRUCK) OR FROM GAUGES (CJ)

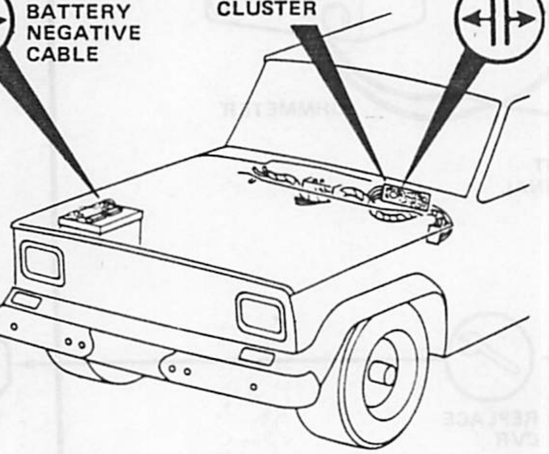

CHECK FOR SHORT AT GAUGE FUSE

CONNECT BATTERY NEGATIVE CABLE

SHORT INDICATED → 5

OK — SHORT NOT INDICATED:
- CHEROKEE WAGONEER TRUCK → 6
- CJ → 7

Chart 2

STEP | **SEQUENCE** | **RESULT**

4

CHECK WIRING WITH SHORT TESTER TO FIND SHORT

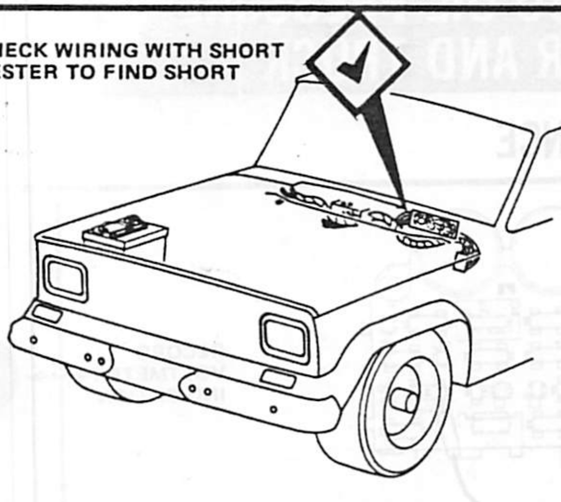

REPLACE SHORTED WIRE HARNESS → STOP

5

CHECK CIRCUIT BOARD FOR OBVIOUS DAMAGE

OK — CIRCUIT BOARD NOT DAMAGED → REPLACE CVR → STOP

NOT OK — CIRCUIT BOARD DAMAGED → DETERMINE CAUSE OF DAMAGE: CVR OR GAUGE FAULTY

REPLACE CIRCUIT BOARD AND FAULTY COMPONENT → STOP

6

CHECK INSTRUMENT CLUSTER AND INDIVIDUAL GAUGES FOR OBVIOUS DAMAGE

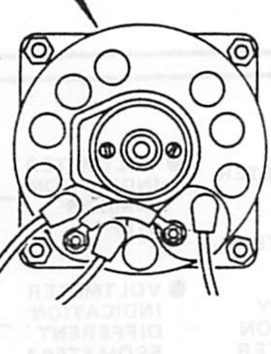

OK — DAMAGE NOT EVIDENT → REPLACE CVR → STOP

NOT OK — DAMAGE EVIDENT → REPLACE DAMAGED COMPONENT → STOP

80312B

PROBLEM: FUEL GAUGE AND COOLANT TEMPERATURE GAUGE BOTH MALFUNCTION (ALSO OIL PRESSURE GAUGE ON CHEROKEE, WAGONEER AND TRUCK

Chart 3

STEP | **SEQUENCE** | **RESULT**

1

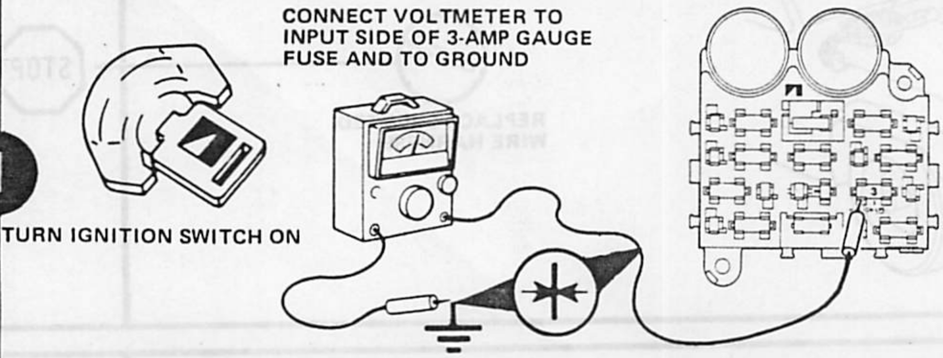

RECORD VOLTMETER INDICATION → 2

2

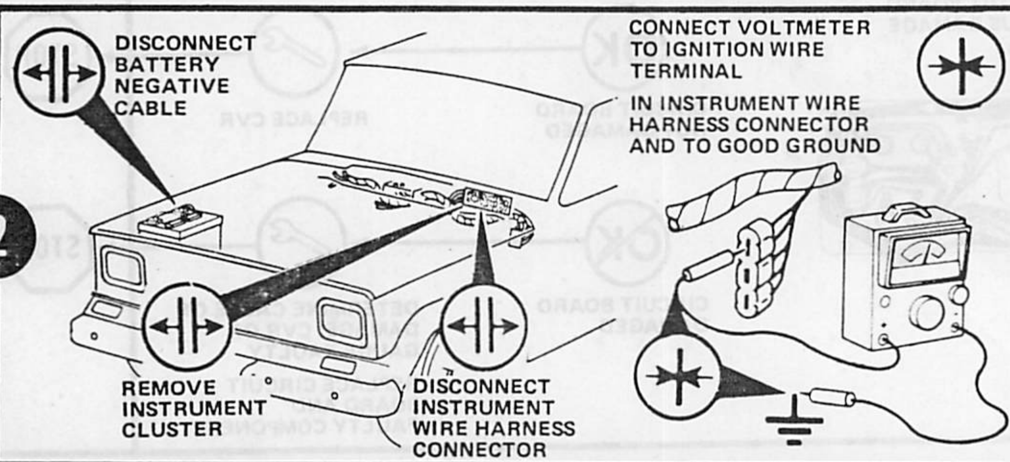

- VOLTMETER INDICATION DIFFERENT FROM STEP 1 → 3
- VOLTMETER INDICATION SAME AS STEP 1
  - CHEROKEE WAGONEER TRUCK → 4
  - CJ → 7

3

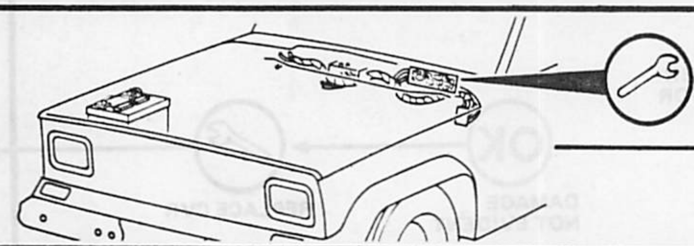

→ STOP

4

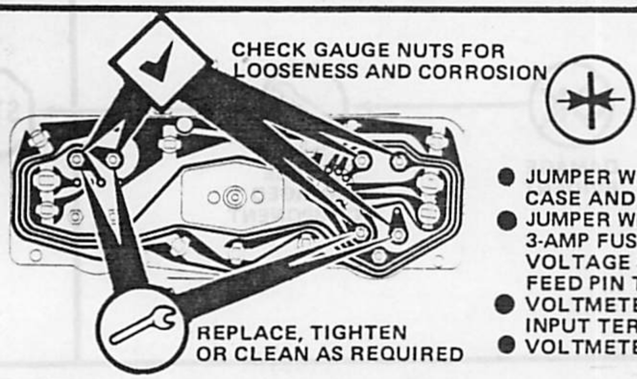

CONNECT JUMPER WIRES AND VOLTMETER

- JUMPER WIRE BETWEEN CLUSTER CASE AND GROUND
- JUMPER WIRE IN SERIES WITH 3-AMP FUSE BETWEEN BATTERY VOLTAGE SOURCE AND IGNITION FEED PIN TERMINAL ON CLUSTER
- VOLTMETER LEAD TO CVR INPUT TERMINAL
- VOLTMETER LEAD TO GROUND

- VOLTMETER INDICATION SAME AS STEP 1 → 5
- VOLTMETER INDICATION DIFFERENT FROM STEP 1 → 6

80313A

Chart 3

STEP	SEQUENCE	RESULT
5	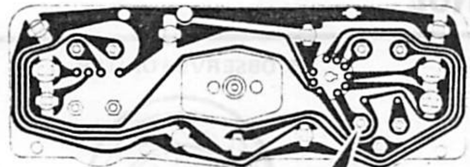 REPLACE CVR (INTEGRAL WITH TEMPERATURE GAUGE)	STOP
6	CHECK RADIO NOISE SUPPRESSOR OR CONNECTOR STRIP FOR PROPER ATTACHMENT USING SAME TEST SET-UP AS STEP 4, MOVE VOLTMETER CONNECTOR FROM CVR TERMINAL TO RADIO NOISE SUPPRESSOR OR CONNECTOR STRIP OUTPUT TERMINAL 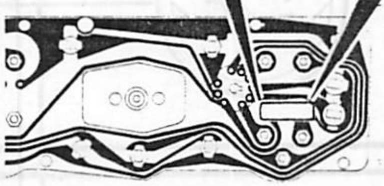	VOLTMETER INDICATION SAME AS STEP 1 → 8 VOLTMETER INDICATION DIFFERENT FROM STEP 1 → 9
7	REPLACE CVR (INTEGRAL WITH FUEL GAUGE) 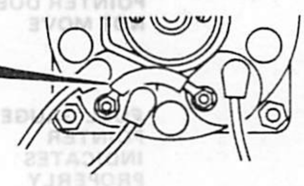	STOP
8	REPLACE CIRCUIT BOARD	STOP
9	REPLACE RADIO NOISE SUPPRESSOR OR CONNECTOR STRIP	STOP

80313B

PROBLEM: OIL PRESSURE GAUGE NOT FUNCTIONING PROPERLY (CJ)

Chart 4

STEP **SEQUENCE** **RESULT**

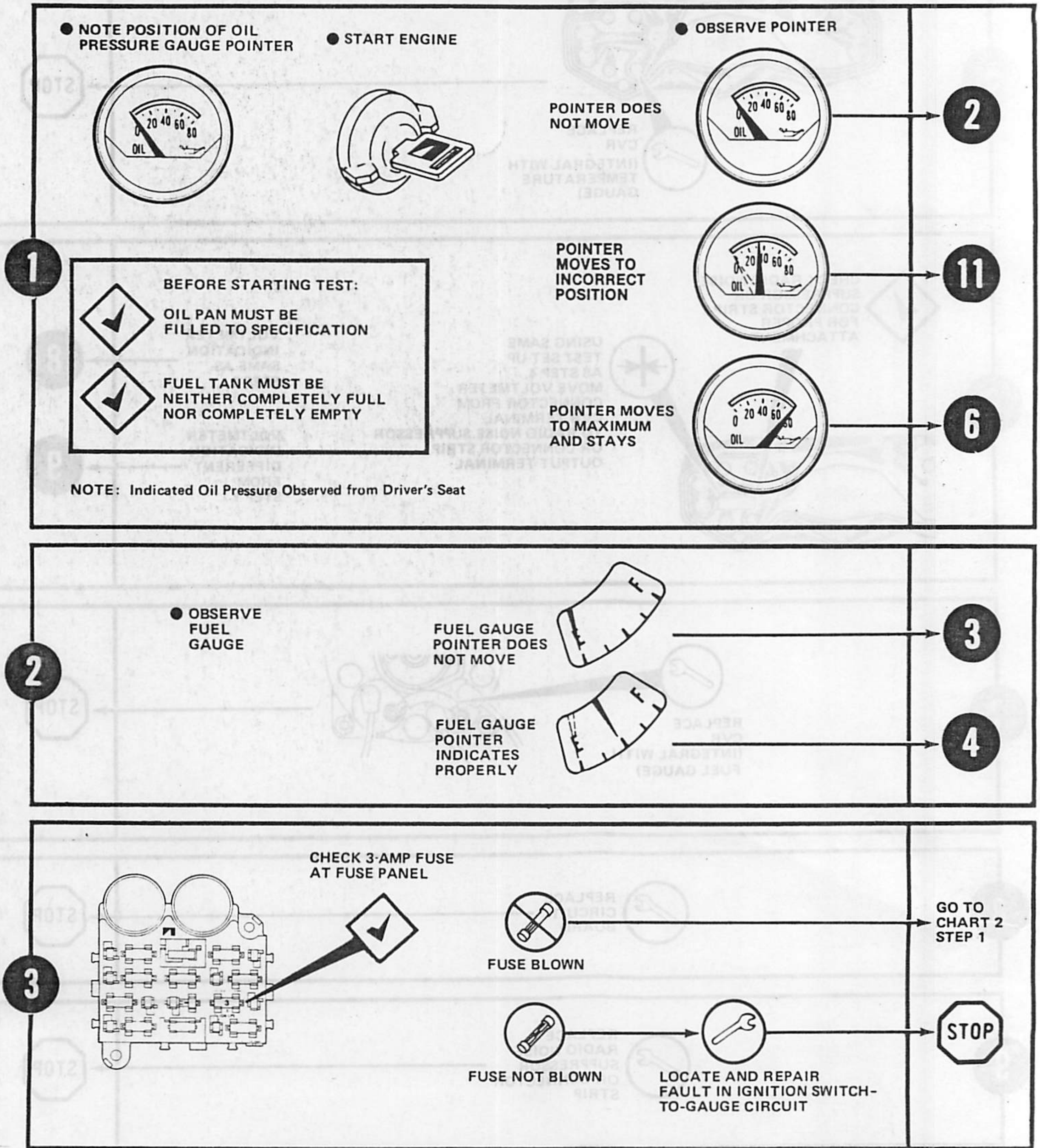

80314A

Chart 4

STEP | SEQUENCE | RESULT

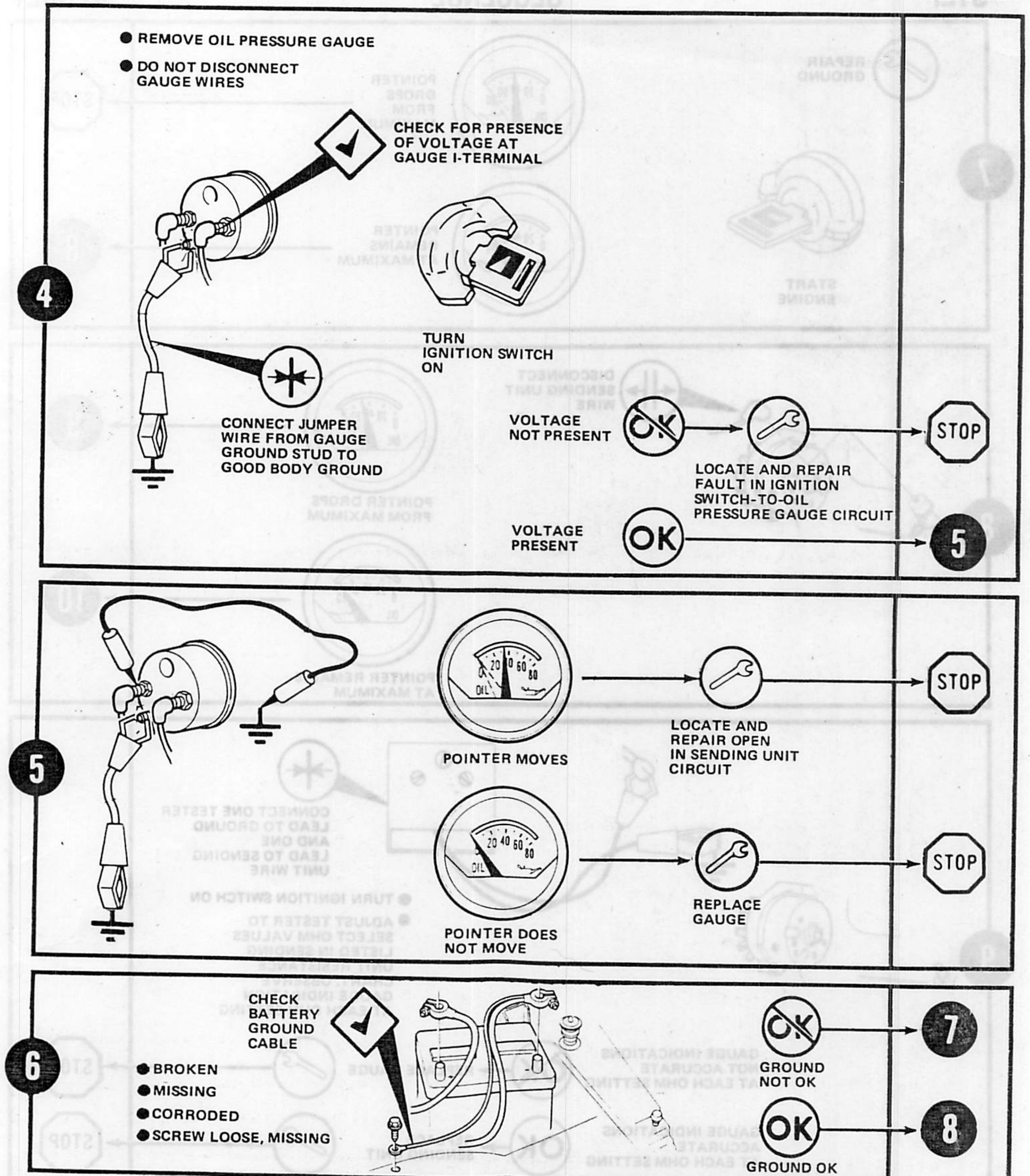

80314B

Chart 4

STEP | SEQUENCE | RESULT

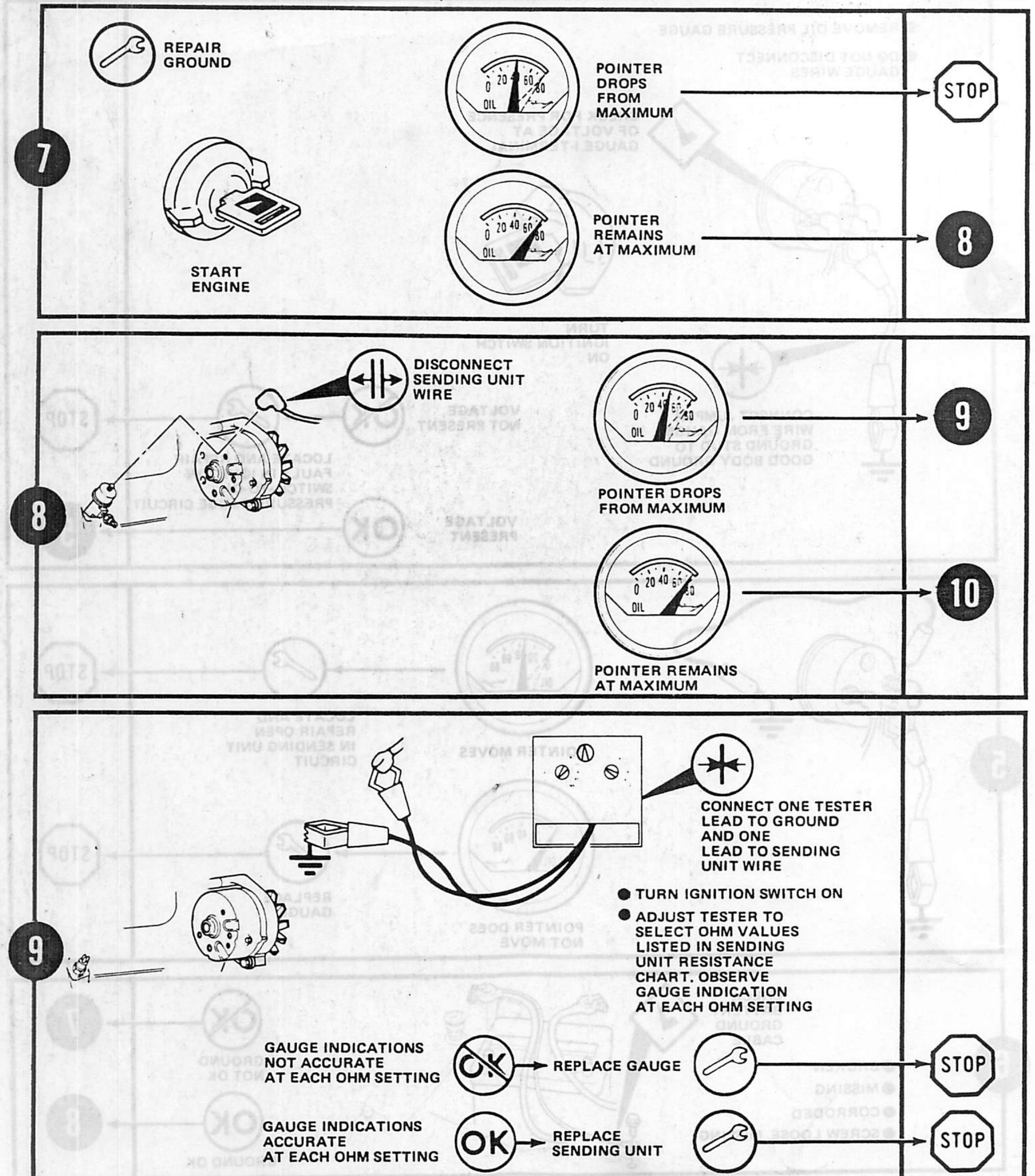

80314C

Chart 4

STEP **SEQUENCE** **RESULT**

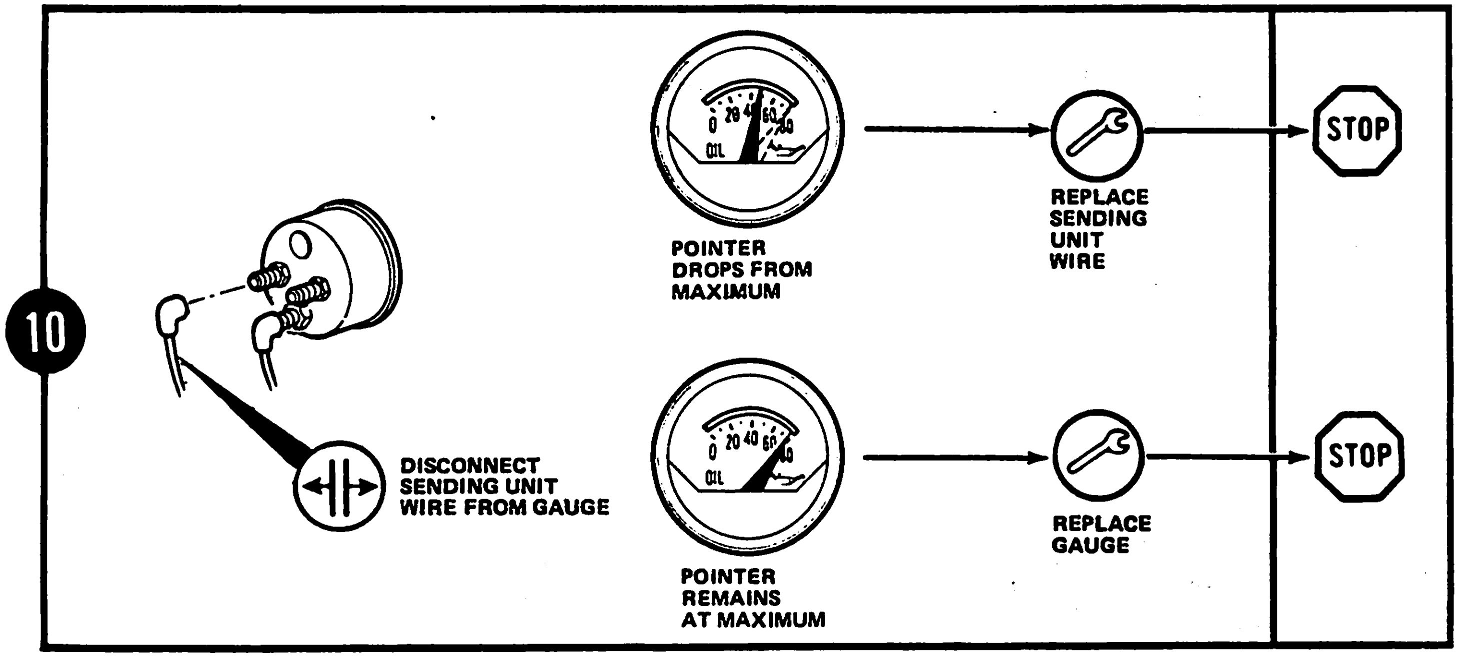

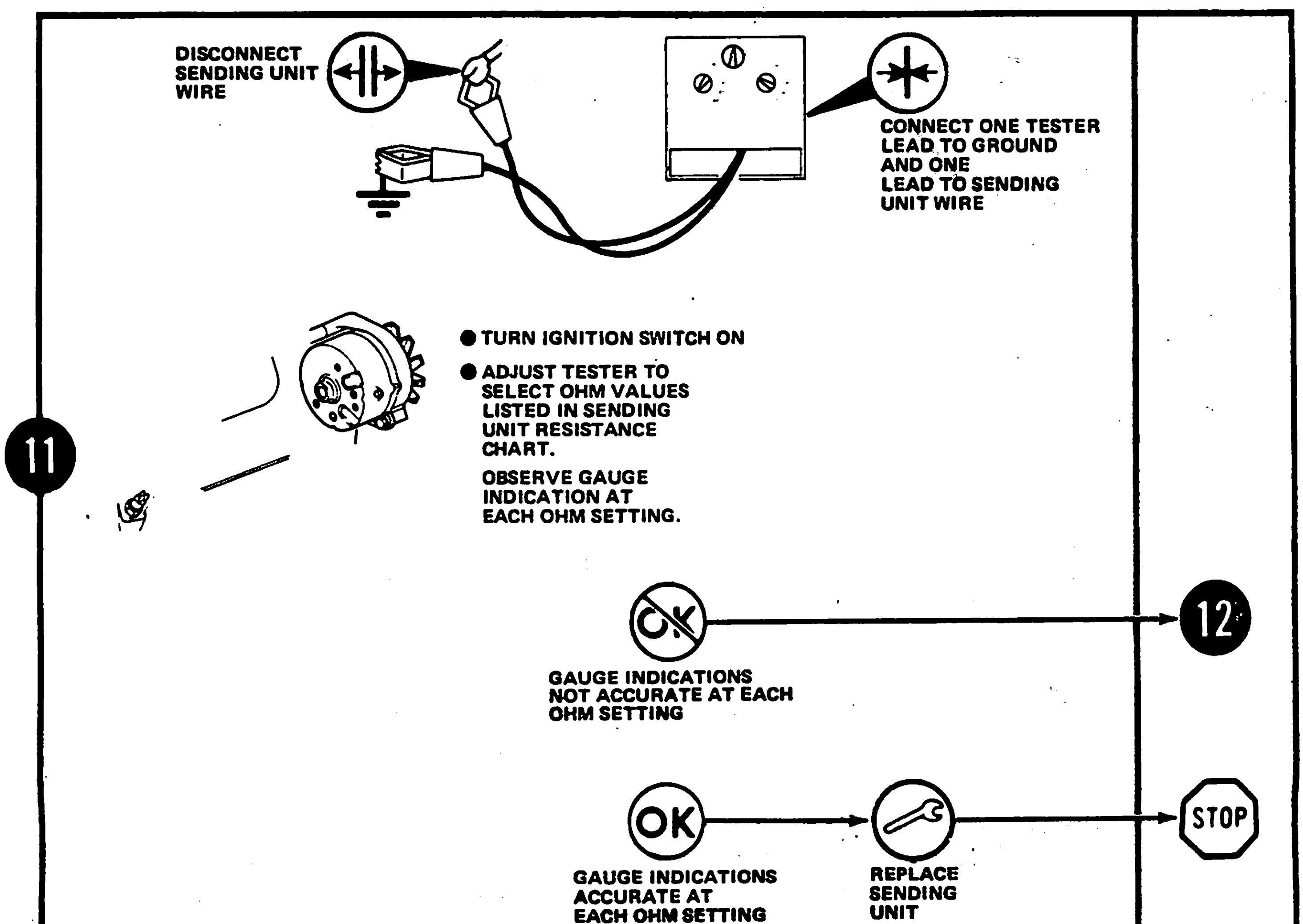

80314D

Chart 4

STEP | **SEQUENCE** | **RESULT**

12

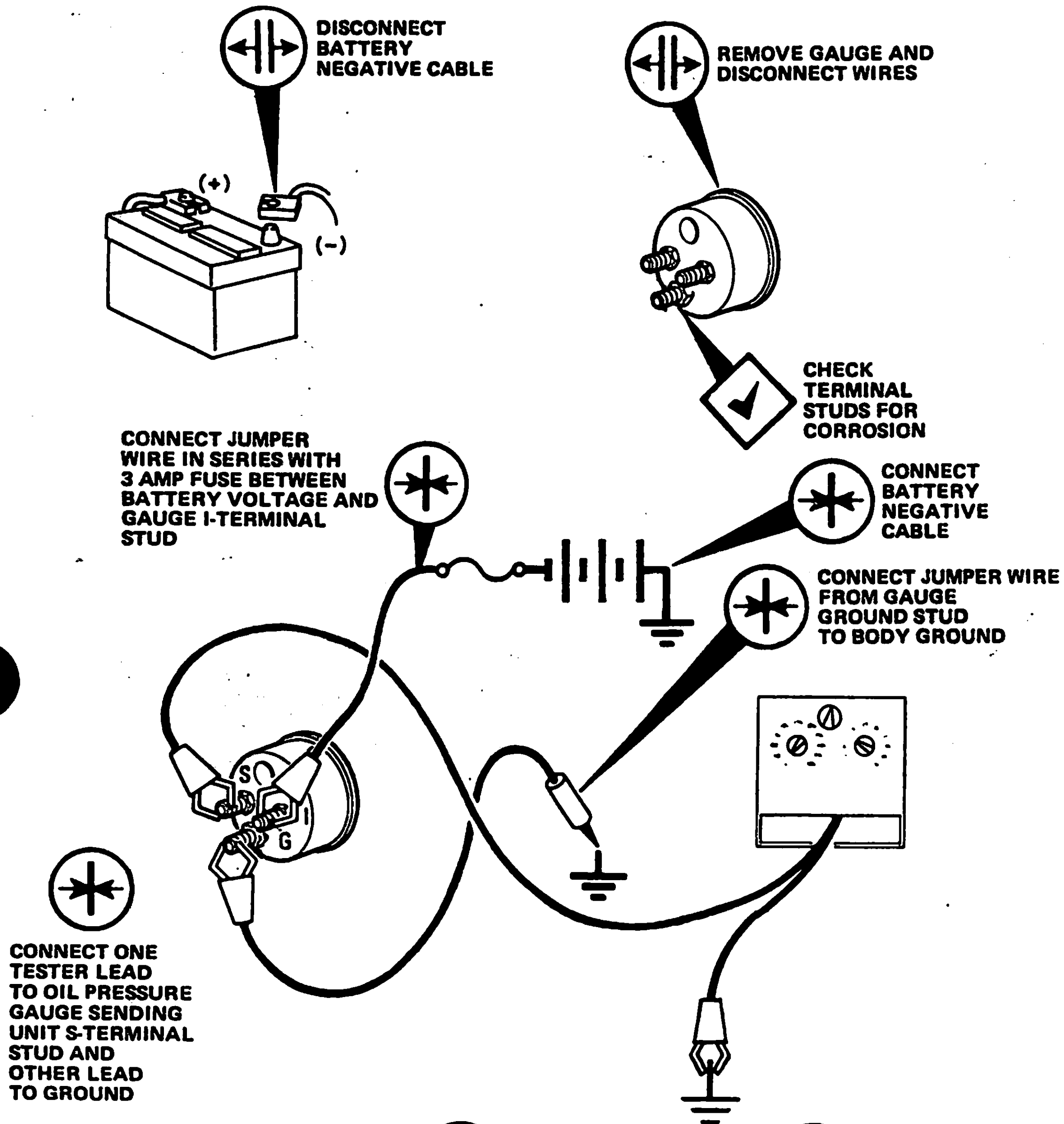

GAUGE INDICATIONS NOT OBTAINED AT EACH OHM SETTING — OK → REPLACE SENDING UNIT WIRE → STOP

GAUGE INDICATIONS ACCURATE AT EACH OHM SETTING — ~~OK~~ → REPLACE WIRE TO "I" TERMINAL → STOP

GAUGE INDICATIONS NOT ACCURATE AT EACH OHM SETTING — ~~OK~~ → REPLACE GAUGE → STOP

80314E

PROBLEM: OIL PRESSURE GAUGE NOT FUNCTIONING PROPERLY CHEROKEE, WAGONEER AND TRUCK

Chart 5

STEP | **SEQUENCE** | **RESULT**

1

- NOTE POSITION OF OIL PRESSURE GAUGE POINTER
- START ENGINE AND WAIT 2 MINUTES FOR GAUGE TO WARM UP

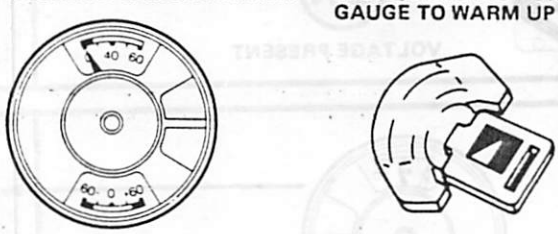

BEFORE STARTING TEST:

- OIL PAN MUST BE FILLED TO SPECIFICATION
- FUEL TANK MUST BE NEITHER COMPLETELY FULL NOR COMPLETELY EMPTY

- OBSERVE POINTER

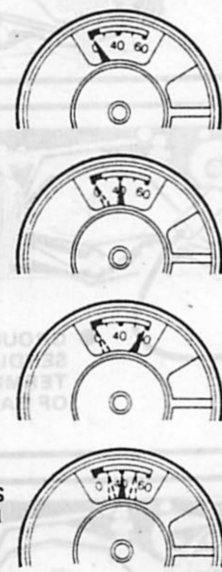

- POINTER DOES NOT MOVE → 2
- POINTER MOVES TO INACCURATE POSITION → 15
- POINTER MOVES TO MAXIMUM AND STAYS → 7
- POINTER PULSATES MORE THAN WIDTH OF POINTER → REPLACE CVR → STOP

2

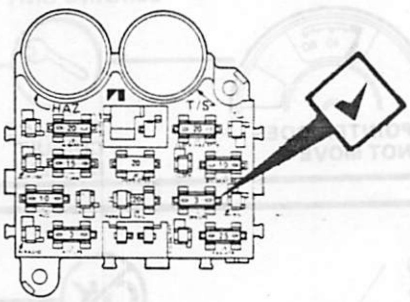

CHECK 3-AMP FUSE AT FUSE PANEL

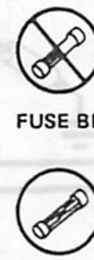

- FUSE BLOWN → GO TO CHART 2 STEP 1
- FUSE NOT BLOWN → 3

3

- OBSERVE FUEL GAUGE

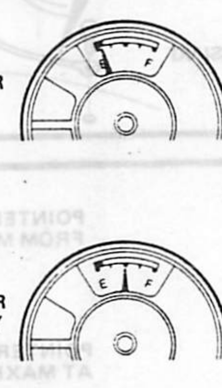

- FUEL GAUGE POINTER DOES NOT MOVE → GO TO CHART 3 STEP 1
- FUEL GAUGE POINTER INDICATES PROPERLY → 4

80315A

Chart 5

STEP	SEQUENCE	RESULT

4

- REMOVE CLUSTER
- DO NOT DISCONNECT INSTRUMENT CLUSTER WIRING CONNECTOR
- CHECK GAUGE NUTS FOR LOOSENESS AND CORROSION

CHECK FOR PRESENCE OF VOLTAGE AT GAUGE INPUT

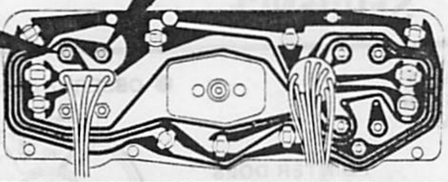

- VOLTAGE NOT PRESENT → REPLACE CIRCUIT BOARD → STOP
- VOLTAGE PRESENT (OK) → 5

5

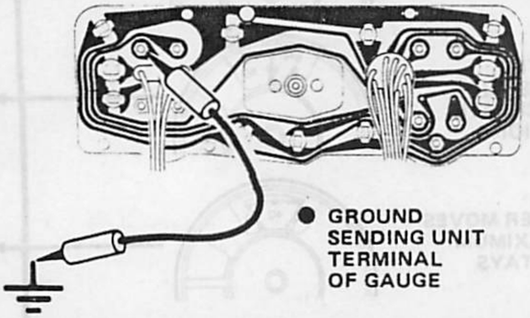

- GROUND SENDING UNIT TERMINAL OF GAUGE

- POINTER MOVES → 6
- POINTER DOES NOT MOVE → REPLACE GAUGE → STOP

6

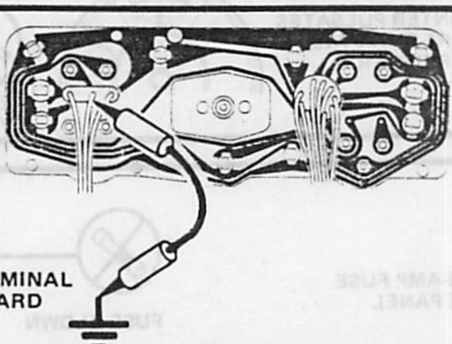

- GROUND GAUGE PIN TERMINAL ON CIRCUIT BOARD

- POINTER MOVES → REPAIR OPEN CIRCUIT IN SENDING UNIT WIRE → STOP
- POINTER DOES NOT MOVE → REPLACE CIRCUIT BOARD → STOP

7

CHECK BATTERY GROUND CABLE

- BROKEN
- MISSING
- CORRODED
- SCREWS LOOSE, MISSING

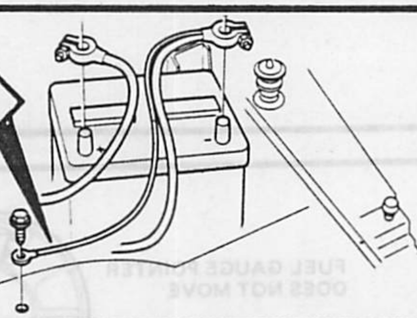

- GROUND NOT OK → 8
- GROUND OK → 9

8

REPAIR GROUND

- POINTER DROPS FROM MAXIMUM → STOP
- POINTER REMAINS AT MAXIMUM → 9

80315B

Chart 5

STEP	SEQUENCE	RESULT
9	DISCONNECT SENDING UNIT WIRE FROM SENDING UNIT — POINTER DROPS FROM MAXIMUM	10
	POINTER REMAINS AT MAXIMUM	12
10	CONNECT ONE TESTER LEAD TO GROUND AND ONE LEAD TO SENDING UNIT WIRE. ● TURN IGNITION SWITCH ON ● ADJUST TESTER TO SELECT OHM VALUES LISTED IN SENDING UNIT RESISTANCE CHART. OBSERVE GAUGE INDICATION AT EACH OHM SETTING. — GAUGE INDICATIONS NOT ACCURATE AT EACH OHM SETTING	11
	GAUGE INDICATIONS ACCURATE AT EACH OHM SETTING — REPLACE SENDING UNIT	STOP
11	● OBSERVE FUEL GAUGE — FUEL GAUGE POINTER IS AT MAXIMUM — REPAIR CLUSTER GROUND OR REPLACE CVR (INTEGRAL WITH TEMPERATURE GAUGE)	STOP
	FUEL GAUGE POINTER INDICATES NORMALLY — REPLACE OIL PRESSURE GAUGE	STOP

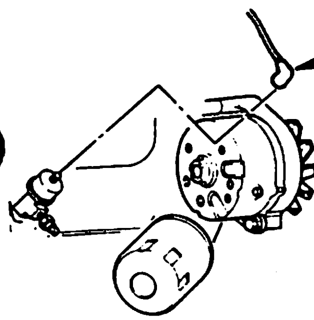

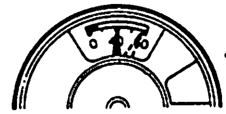

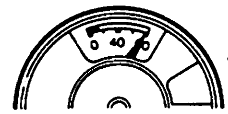

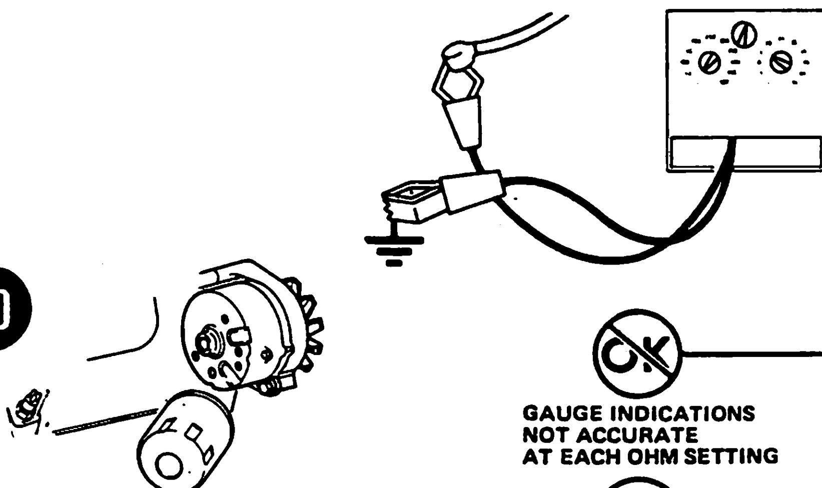

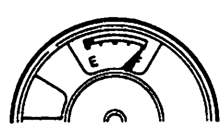

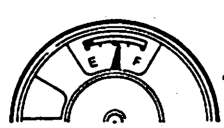

80315C

Chart 5

STEP	SEQUENCE	RESULT

12

DISCONNECT BATTERY NEGATIVE CABLE

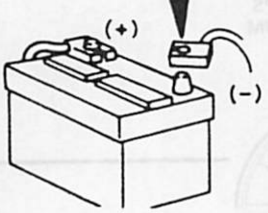

REMOVE INSTRUMENT CLUSTER. DO NOT DISCONNECT WIRE HARNESS

CONNECT JUMPER WIRE BETWEEN CLUSTER GROUND AND BODY

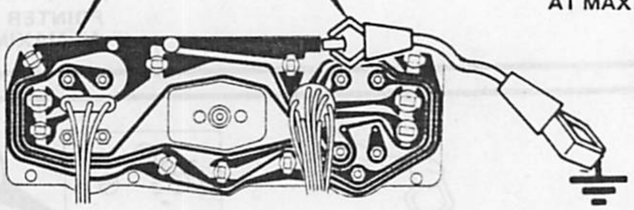

CONNECT BATTERY NEGATIVE CABLE

POINTER DROPS FROM MAXIMUM → 13

POINTER REMAINS AT MAXIMUM → 14

13

REPAIR INSTRUMENT PANEL GROUND → STOP

14

DISCONNECT SENDING UNIT WIRE FROM CLUSTER

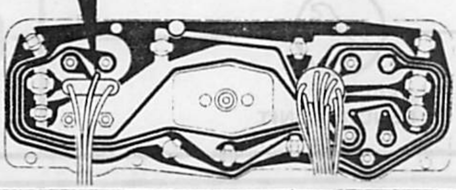

POINTER DROPS FROM MAXIMUM → REPAIR OR REPLACE SENDING UNIT WIRE → STOP

POINTER REMAINS AT MAXIMUM → REPLACE CIRCUIT BOARD → STOP

15

DISCONNECT SENDING UNIT WIRE

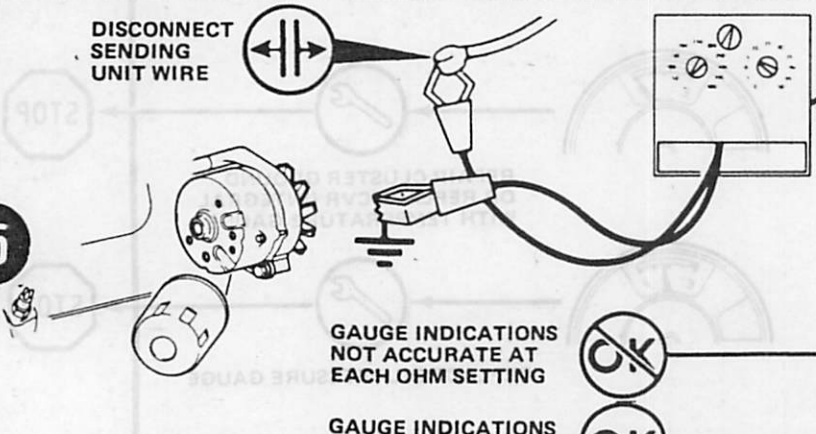

CONNECT ONE TESTER LEAD TO GROUND AND ONE LEAD TO SENDING UNIT WIRE

- TURN IGNITION SWITCH ON
- ADJUST TESTER TO SELECT OHM VALUES LISTED IN SENDING UNIT RESISTANCE CHART. OBSERVE FUEL GAUGE INDICATION AT EACH OHM SETTING.

GAUGE INDICATIONS NOT ACCURATE AT EACH OHM SETTING → ~~OK~~ → 16

GAUGE INDICATIONS ACCURATE AT EACH OHM SETTING → OK → REPLACE SENDING UNIT → STOP

80315D

Chart 5

STEP | **SEQUENCE** | **RESULT**

16

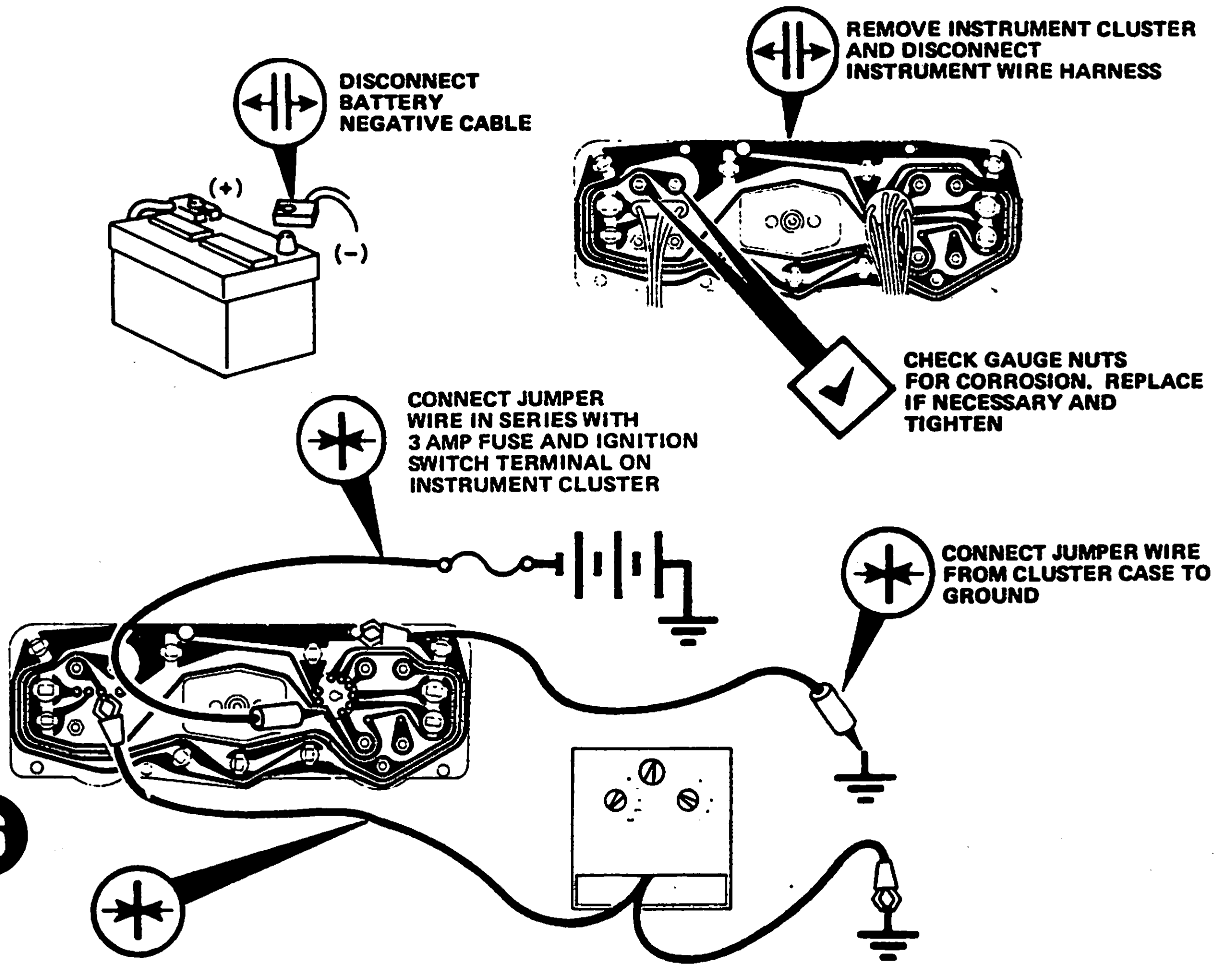

CONNECT ONE TESTER LEAD TO OIL PRESSURE GAUGE SENDING UNIT PIN TERMINAL AND OTHER LEAD TO GROUND

- OK — GAUGE INDICATIONS ACCURATE AT EACH OHM SETTING → REPLACE SENDING UNIT WIRE → STOP
- NOT OK — GAUGE INDICATIONS NOT OBTAINED AT EACH OHM SETTING → REPEAT TEST WITH LEAD MOVED FROM PIN TERMINAL TO GAUGE S- TERMINAL
  - OK — GAUGE INDICATIONS ACCURATE AT EACH OHM SETTING → 17
  - NOT OK — GAUGE INDICATIONS NOT ACCURATE AT EACH OHM SETTING → 18
- NOT OK — GAUGE INDICATIONS NOT ACCURATE AT EACH OHM SETTING
  - ALL INDICATIONS HIGH OR ALL INDICATIONS LOW → 19
  - SOME INDICATIONS HIGH OR LOW, SOME ACCURATE → REPLACE GAUGE → STOP

80315E

Chart 5

STEP | **SEQUENCE** | **RESULT**

17

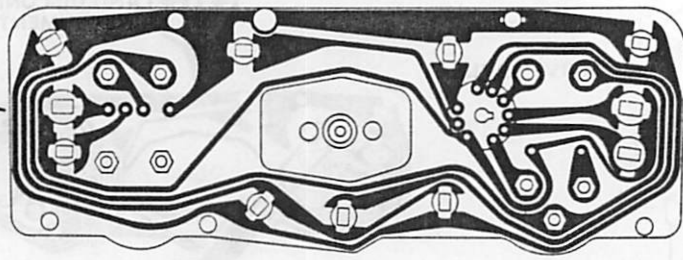

REPLACE CIRCUIT BOARD → STOP

18

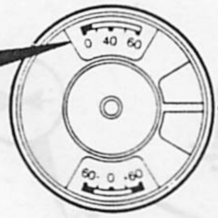

REPLACE GAUGE → STOP

19

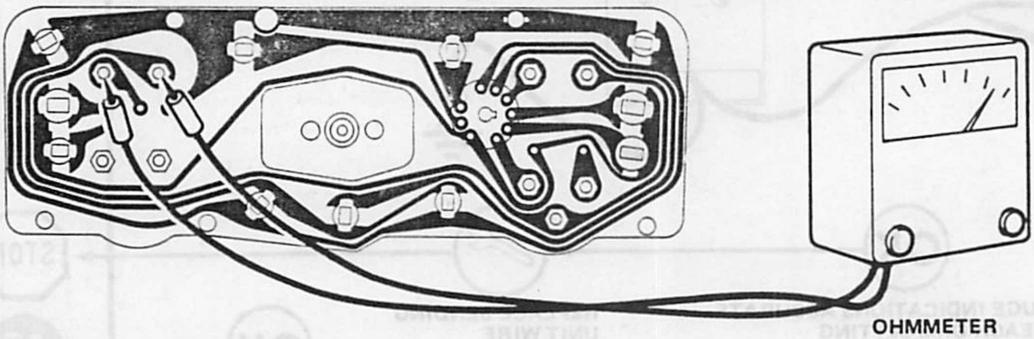

CONNECT OHMMETER LEADS TO GAUGE INPUT TERMINAL AND GAUGE SENDING UNIT TERMINAL

- COMPARE OHMMETER INDICATIONS WITH VALUES LISTED IN GAUGE RESISTANCE CHART

OK — GAUGE RESISTANCE CORRECT → REPLACE CVR → STOP

NOT OK — GAUGE RESISTANCE INCORRECT → REPLACE GAUGE → STOP

80315F

Chart 6

STEP	SEQUENCE	RESULT

4

- REMOVE CLUSTER
- DO NOT DISCONNECT INSTRUMENT WIRES

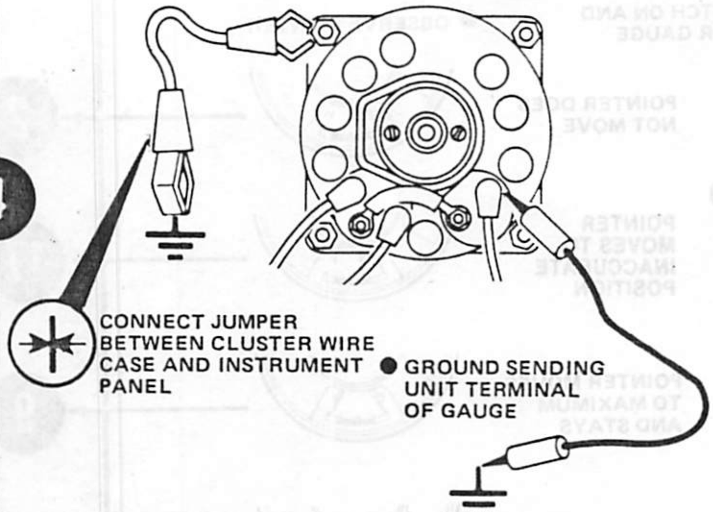

CONNECT JUMPER BETWEEN CLUSTER WIRE CASE AND INSTRUMENT PANEL

- GROUND SENDING UNIT TERMINAL OF GAUGE

POINTER MOVES → 5

POINTER DOES NOT MOVE → REPLACE GAUGE → STOP

5

LOCATE AND REPAIR OPEN CIRCUIT IN SENDING UNIT WIRE → STOP

6

- REMOVE CLUSTER
- DO NOT DISCONNECT INSTRUMENT CLUSTER WIRING CONNECTOR

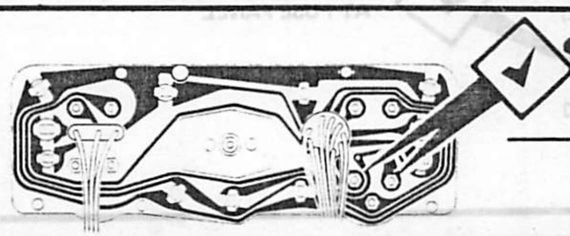

- CHECK GAUGE NUTS FOR LOOSENESS AND CORROSION

→ 7

7

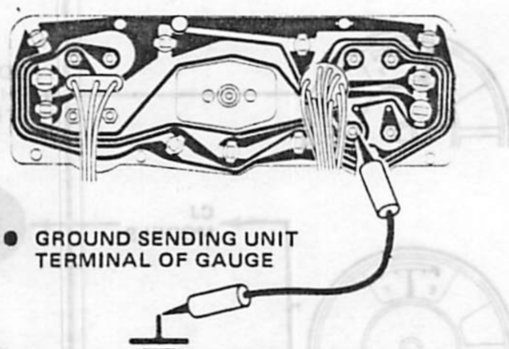

- GROUND SENDING UNIT TERMINAL OF GAUGE

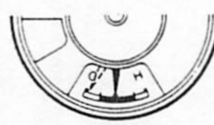

POINTER MOVES → 8

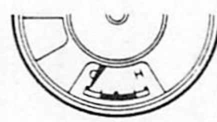

POINTER DOES NOT MOVE → REPLACE GAUGE → STOP

80316B

PROBLEM: COOLANT TEMPERATURE GAUGE NOT FUNCTIONING PROPERLY

Chart 6

STEP **SEQUENCE** **RESULT**

1

- NOTE POSITION OF COOLANT TEMPERATURE GAUGE POINTER

- TURN IGNITION SWITCH ON AND WAIT 2 MINUTES FOR GAUGE TO WARM UP

BEFORE STARTING TEST:

- ENGINE MUST BE WARM
- FUEL TANK MUST BE NEITHER COMPLETELY FULL NOR COMPLETELY EMPTY

- OBSERVE POINTER

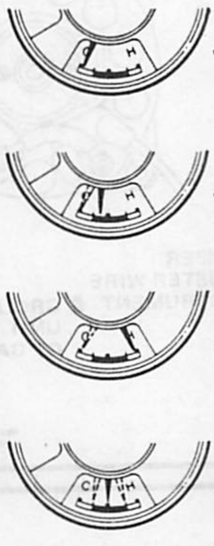

- POINTER DOES NOT MOVE → 2
- POINTER MOVES TO INACCURATE POSITION → 17
- POINTER MOVES TO MAXIMUM AND STAYS → 9
- POINTER PULSATES MORE THAN WIDTH OF POINTER → REPLACE CVR → STOP

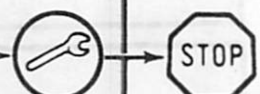

2

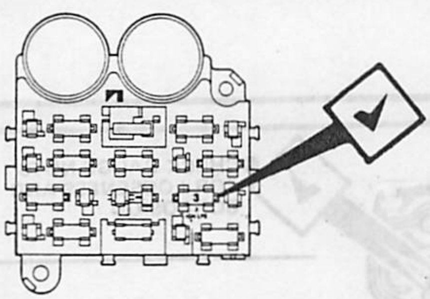

CHECK 3-AMP FUSE AT FUSE PANEL

- FUSE BLOWN → GO TO CHART 2 STEP 1
- FUSE NOT BLOWN → 3

3

- OBSERVE FUEL GAUGE

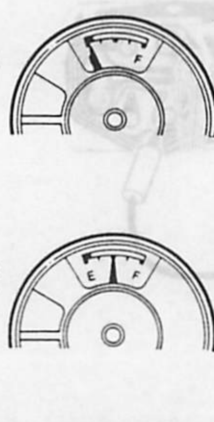

- FUEL GAUGE POINTER DOES NOT MOVE → GO TO CHART 3 STEP 1
- FUEL GAUGE POINTER INDICATES PROPERLY
  - CJ MODELS → 4
  - CHEROKEE WAGONEER TRUCK MODELS → 6

80316A

Chart 6

STEP	SEQUENCE	RESULT
8	● GROUND GAUGE PIN TERMINAL ON CIRCUIT BOARD — POINTER MOVES → REPAIR OPEN CIRCUIT IN SENDER WIRE	STOP
	POINTER DOES NOT MOVE → REPLACE CIRCUIT BOARD	STOP
9	CHECK BATTERY GROUND CABLE ● BROKEN ● MISSING ● CORRODED ● SCREWS LOOSE, MISSING — GROUND NOT OK	10
	GROUND OK	11
10	REPAIR GROUND — POINTER DROPS FROM MAXIMUM	STOP
	POINTER REMAINS AT MAXIMUM	11
11	DISCONNECT SENDING UNIT WIRE FROM SENDING UNIT — POINTER DROPS FROM MAXIMUM	12
	POINTER REMAINS AT MAXIMUM	14

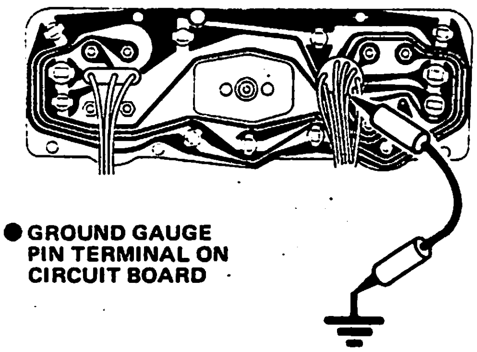

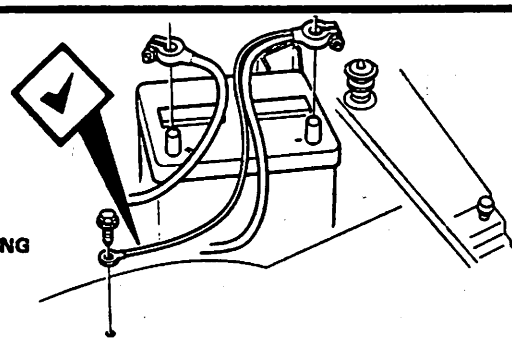

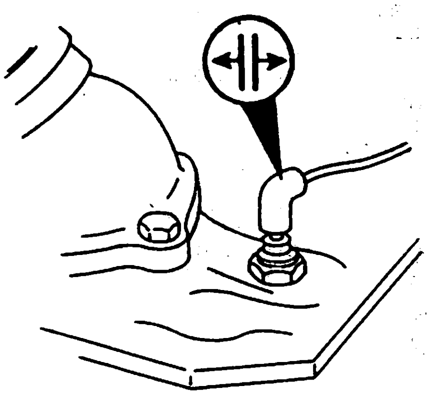

80316C

Chart 6

STEP | **SEQUENCE** | **RESULT**

12

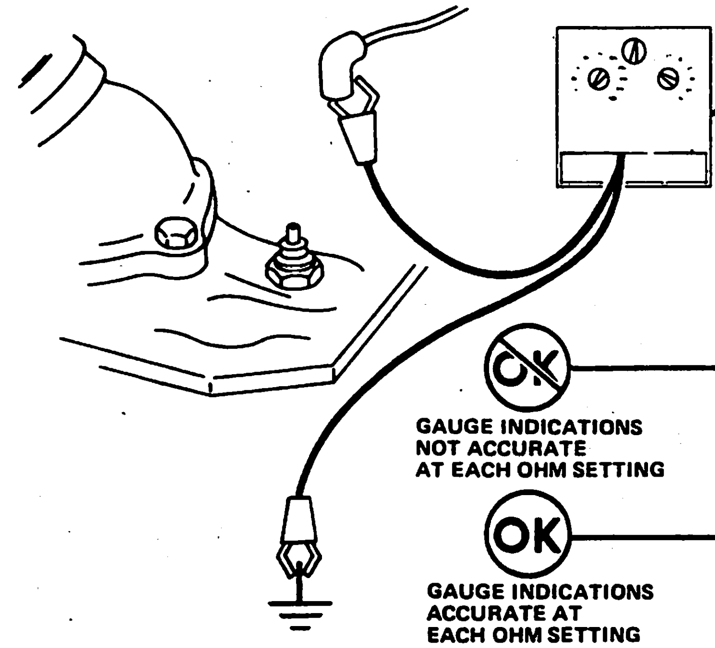

CONNECT ONE TESTER LEAD TO GROUND AND ONE LEAD TO SENDING UNIT WIRE

- TURN IGNITION SWITCH ON
- ADJUST TESTER TO SELECT OHM VALUES LISTED IN SENDING UNIT RESISTANCE CHART. OBSERVE GAUGE INDICATION AT EACH OHM SETTING.

GAUGE INDICATIONS NOT ACCURATE AT EACH OHM SETTING → 13

OK: GAUGE INDICATIONS ACCURATE AT EACH OHM SETTING → REPLACE SENDING UNIT → STOP

13

- OBSERVE FUEL GAUGE

FUEL GAUGE POINTER IS AT MAXIMUM

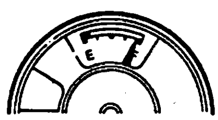

→ REPAIR CLUSTER GROUND OR REPLACE CVR (INTEGRAL WITH TEMPERATURE GAUGE) → STOP

FUEL GAUGE POINTER INDICATES NORMALLY

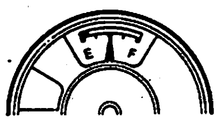

→ REPLACE TEMPERATURE GAUGE → STOP

14

DISCONNECT BATTERY NEGATIVE CABLE

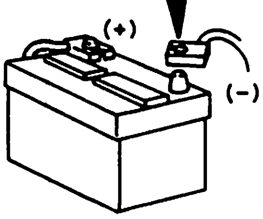

REMOVE INSTRUMENT CLUSTER. DO NOT DISCONNECT WIRE HARNESS

CONNECT BATTERY NEGATIVE CABLE

CONNECT JUMPER WIRE BETWEEN CLUSTER GROUND AND BODY

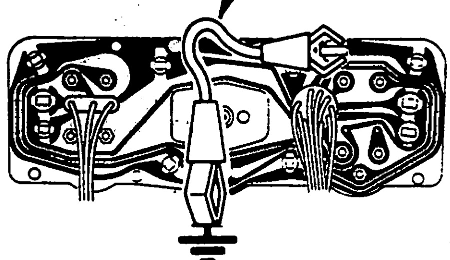

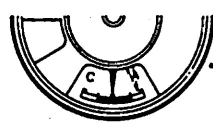

POINTER DROPS FROM MAXIMUM → 15

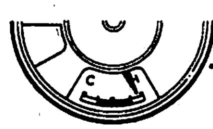

POINTER REMAINS AT MAXIMUM → 16

80316D

Chart 6

STEP	SEQUENCE	RESULT
15	REPAIR INSTRUMENT PANEL GROUND	STOP

Step 16

DISCONNECT SENDING UNIT WIRE FROM CLUSTER

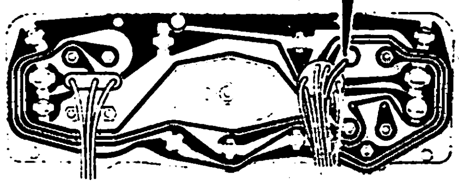

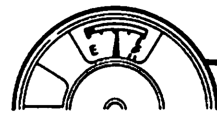

POINTER DROPS FROM MAXIMUM → REPAIR OR REPLACE SENDING UNIT WIRE → STOP

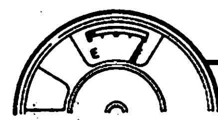

POINTER REMAINS AT MAXIMUM → REPLACE GAUGE (CJ) → STOP

POINTER REMAINS AT MAXIMUM → REPLACE CIRCUIT BOARD (CHEROKEE, WAGONEER, TRUCK) → STOP

Step 17

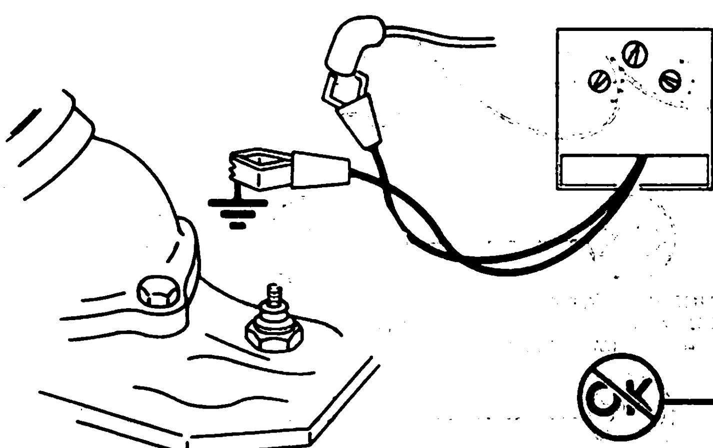

CONNECT ONE TESTER LEAD TO GROUND AND ONE LEAD TO SENDING UNIT WIRE

- TURN IGNITION SWITCH ON
- ADJUST TESTER TO SELECT OHM VALUES LISTED IN SENDING UNIT RESISTANCE CHART. OBSERVE GAUGE INDICATION AT EACH OHM SETTING

GAUGE INDICATIONS NOT ACCURATE AT EACH OHM SETTING → CJ → 18

GAUGE INDICATIONS NOT ACCURATE AT EACH OHM SETTING → CHEROKEE WAGONEER TRUCK → 19

OK: GAUGE INDICATIONS ACCURATE AT EACH OHM SETTING → REPLACE SENDING UNIT → STOP

80316E

Chart 6

STEP **SEQUENCE** **RESULT**

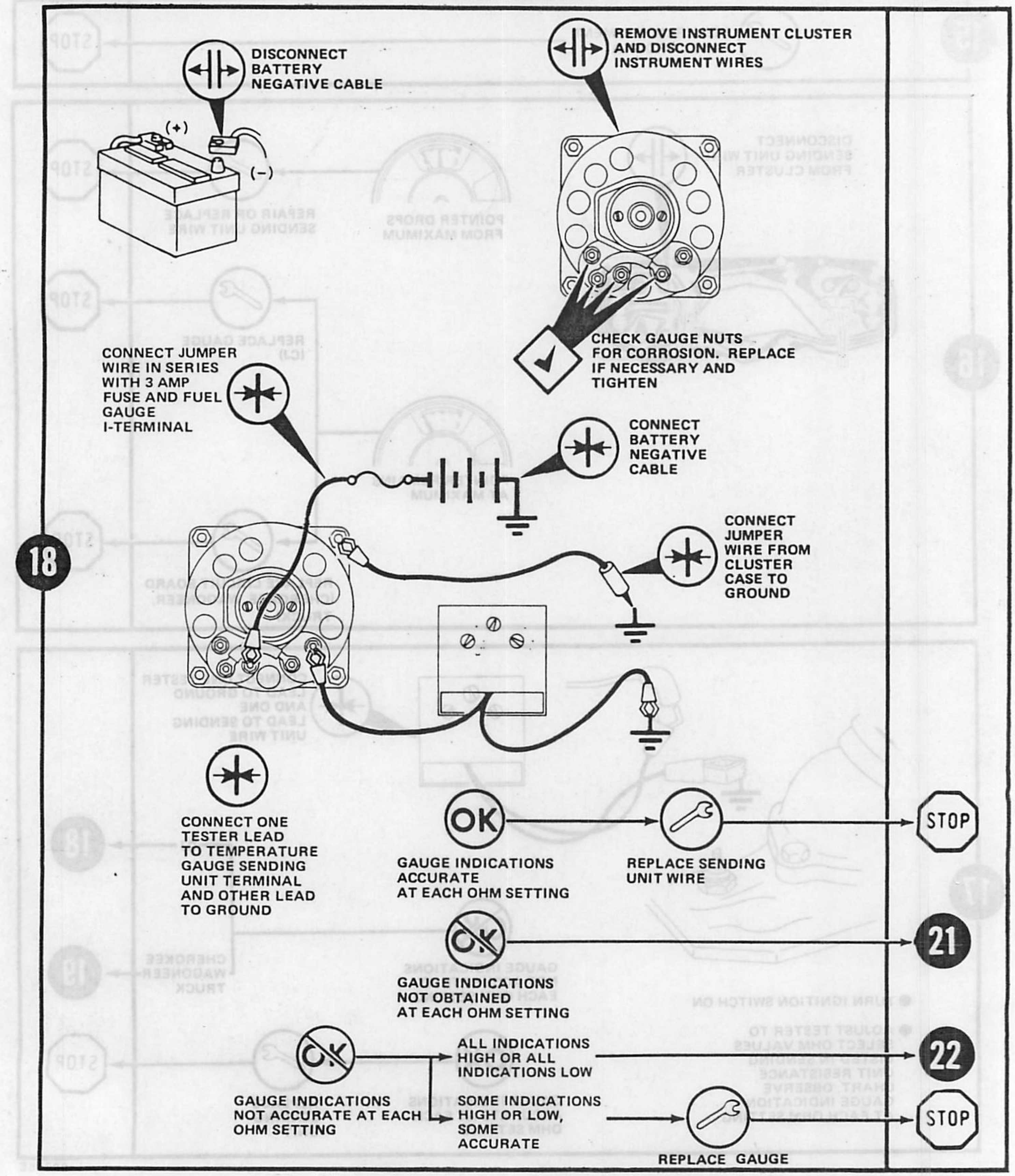

80316F

Chart 6

STEP | **SEQUENCE** | **RESULT**

19

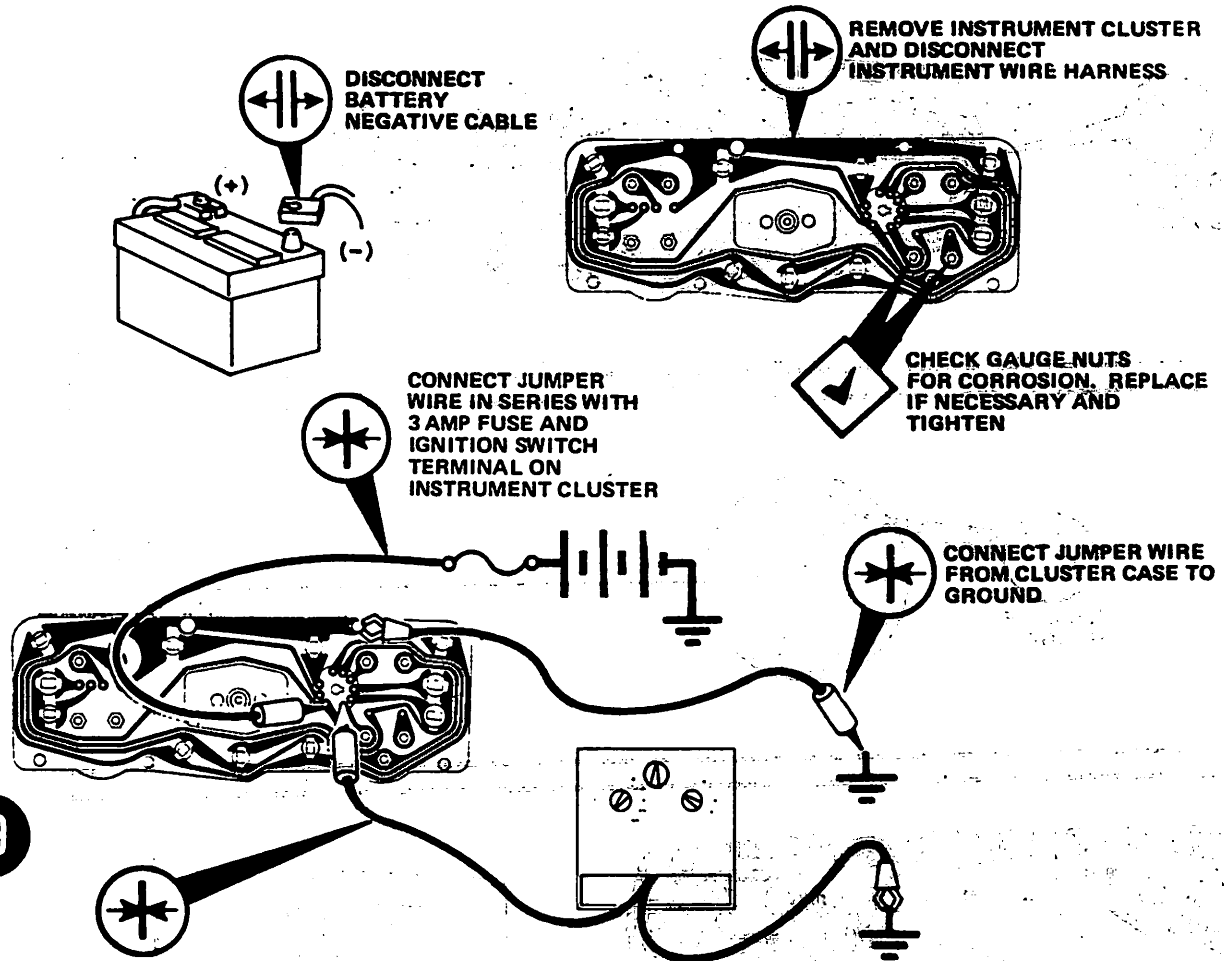

OK — GAUGE INDICATIONS ACCURATE AT EACH OHM SETTING → REPLACE SENDING UNIT WIRE → STOP

NOT OK — GAUGE INDICATIONS NOT OBTAINED AT EACH OHM SETTING → REPEAT TEST WITH LEAD MOVED FROM PIN TERMINAL TO GAUGE S- TERMINAL
- OK — GAUGE INDICATIONS ACCURATE AT EACH OHM SETTING → 20
- NOT OK — GAUGE INDICATIONS NOT ACCURATE AT EACH OHM SETTING → 21

NOT OK — GAUGE INDICATIONS NOT ACCURATE AT EACH OHM SETTING
- ALL INDICATIONS HIGH OR ALL INDICATIONS LOW → 22
- SOME INDICATIONS HIGH OR LOW, SOME ACCURATE → REPLACE GAUGE → STOP

80316G

Chart 6

STEP SEQUENCE RESULT

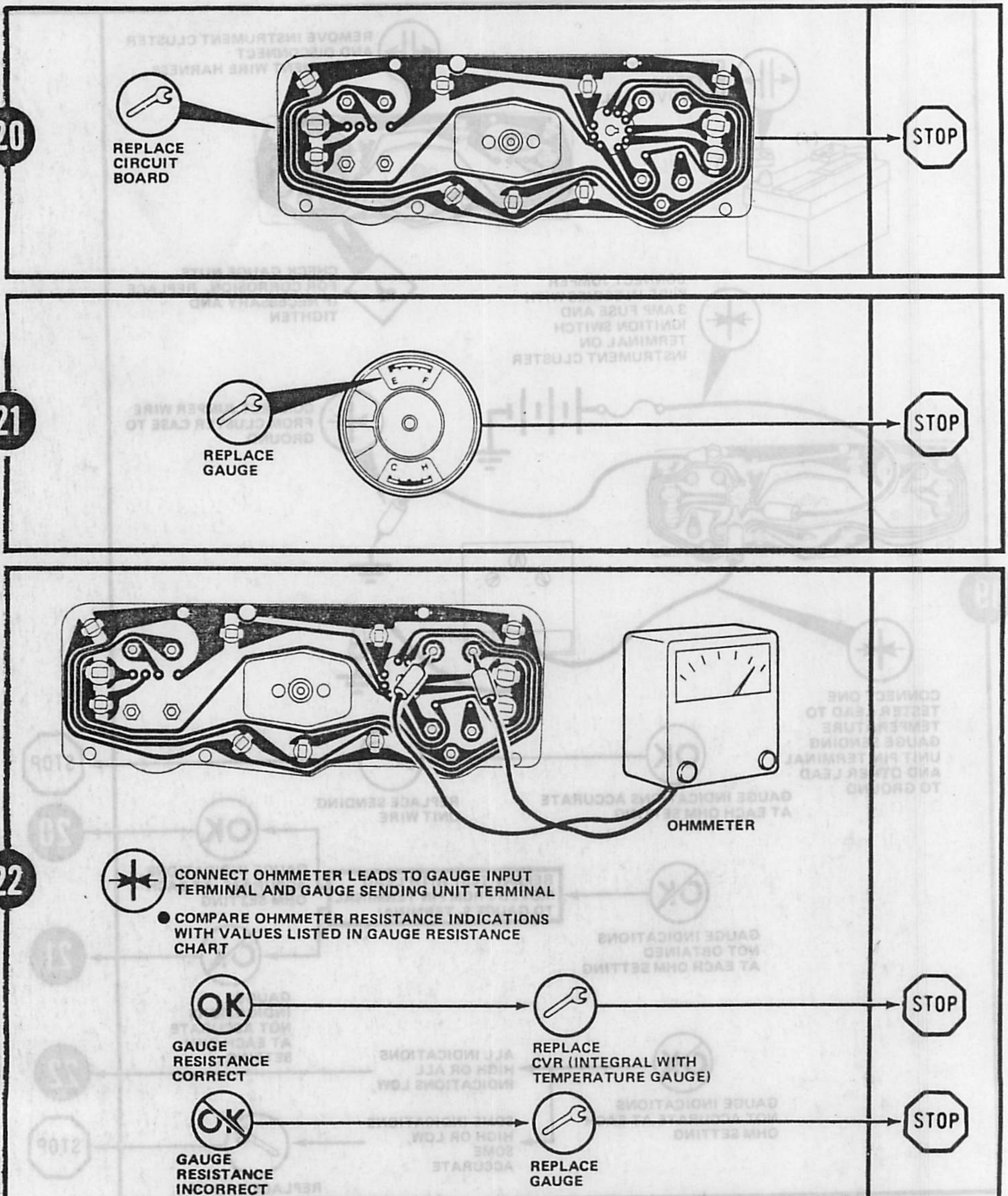

80316H

SPECIFICATIONS

SPECIFICATIONS—CJ VEHICLES

Fuel Gauge Sending Unit Resistance (Ohms)

E	1/2	F
73	23	10

80670

Coolant Temperature Gauge Sending Unit Resistance (Ohms)

C	BEGINNING OF BAND	END OF BAND	H
73	36	13	9

80674

Fuel Gauge Resistance (Internal)

TEST POINTS	OHMS
S to Ground	68 to 72
S to I	19 to 21
S to A	19 to 21
I to A	ZERO
I to Ground	49 to 51
A to Ground	49 to 51

80671

Tachometer Calibrations (RPM)

ACTUAL	INDICATED
500	380 to 620
1500	1380 to 1620
4500	4330 to 4620

80675

Oil Pressure Gauge Sending Unit Resistance (Ohms)

PSI	0	20	40	60	80
OHMS	234-246	149-157	100.5-105.5	65-69	32.5-34.5

80672

Voltmeter Calibrations (Volts)

ACTUAL	INDICATED
12.4	11.7 to 12.3
14.4	13.8 to 14.2

NOTE: Indicated Voltage Observed from Drivers Seat

80676

Coolant Temperature Gauge Resistance (Internal)

S to A	19 to 21 ohms

80673

SCHEMATICS—CJ VEHICLES

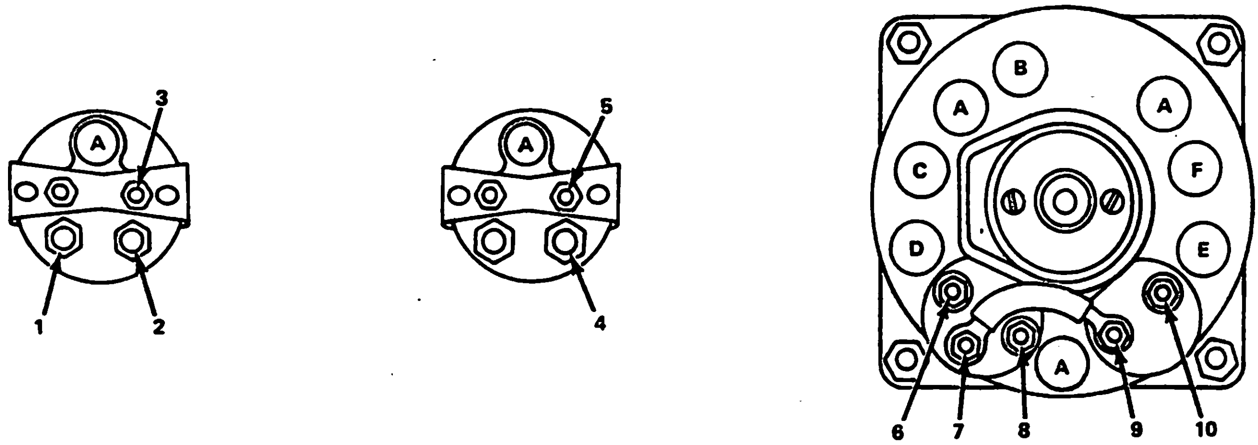

OIL PRESSURE GAUGE

VOLTMETER

FUEL GAUGE (WITH INTEGRAL CVR)

COOLANT TEMPERATURE GAUGE

TERMINAL STUDS

1. OIL PRESSURE GAUGE S-TERMINAL
2. OIL PRESSURE GAUGE I-TERMINAL
3. OIL PRESSURE GAUGE GROUND
4. VOLTMETER +-TERMINAL
5. VOLTMETER GROUND
6. FUEL GAUGE S-TERMINAL
7. FUEL GAUGE A-TERMINAL
8. FUEL GAUGE I-TERMINAL
9. COOLANT TEMPERATURE GAUGE S-TERMINAL
10. COOLANT TEMPERATURE GAUGE A-TERMINAL

LAMPS

A ILLUMINATION
B HIGH BEAM
C RIGHT TURN
D FOUR-WHEEL DRIVE
E BRAKE
F LEFT TURN

80125

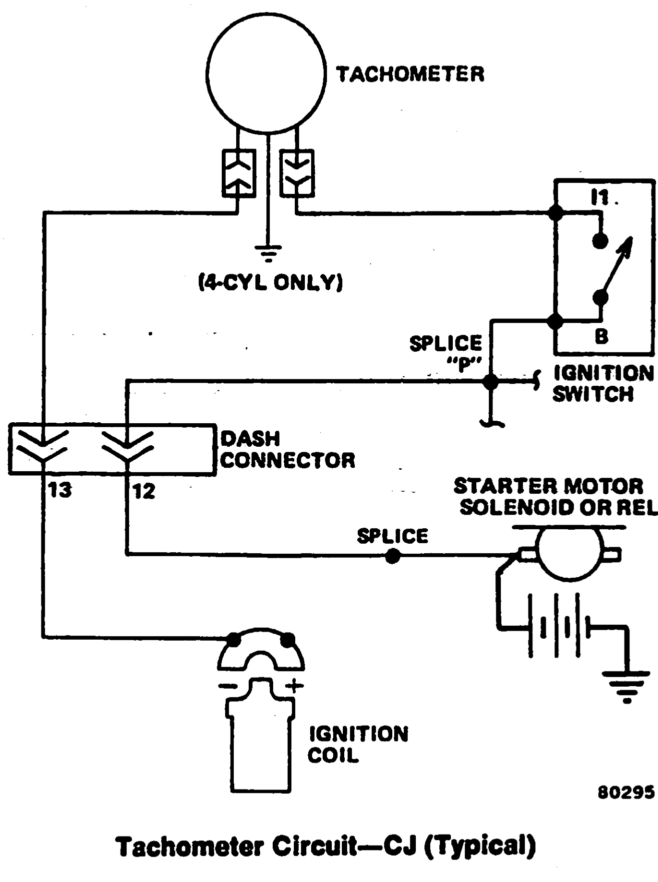

*FOUR-CYLINDER ENGINE

80295

Tachometer Circuit—CJ (Typical)

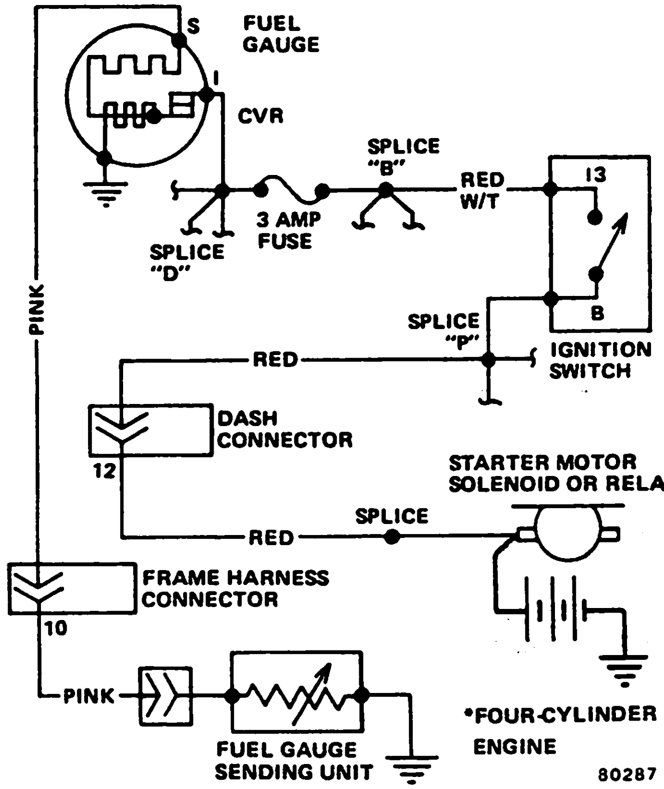

Fuel Gauge Circuit—CJ

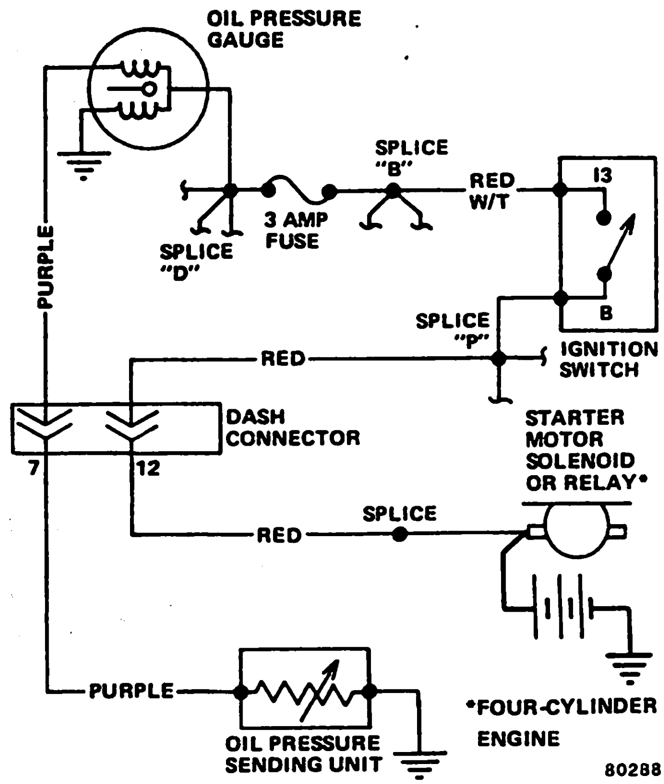

Oil Pressure Gauge Circuit—CJ

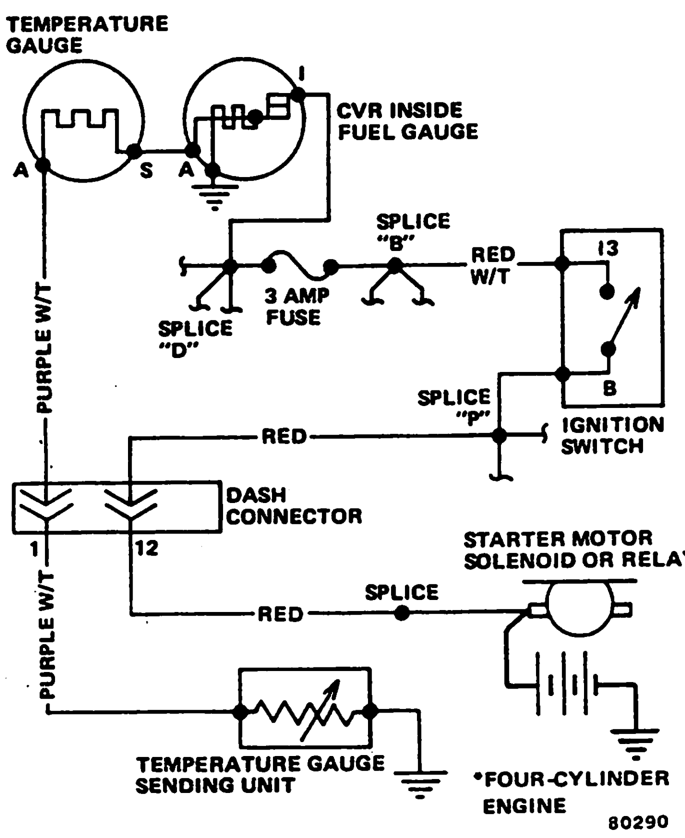

Coolant Temperature Gauge Circuit—CJ

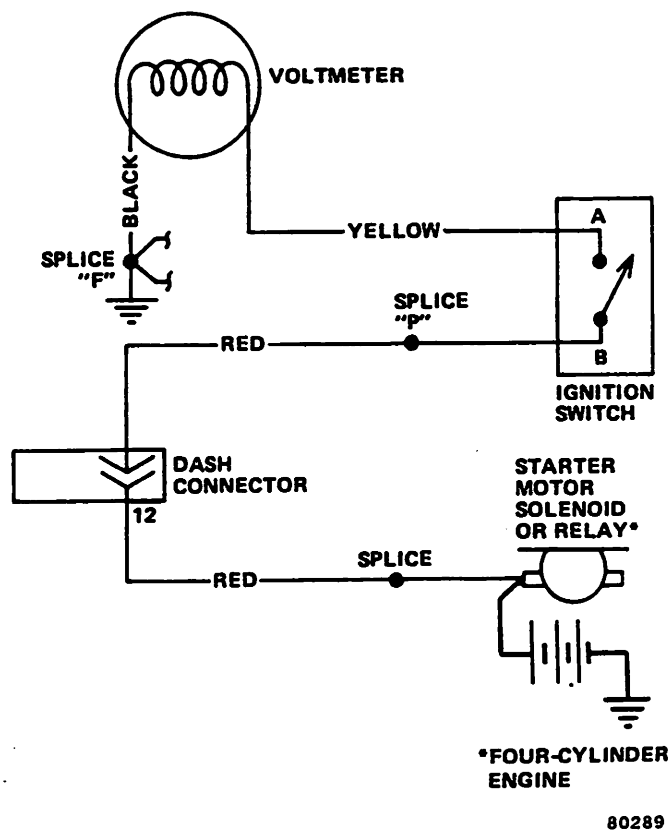

Voltmeter Circuit—CJ

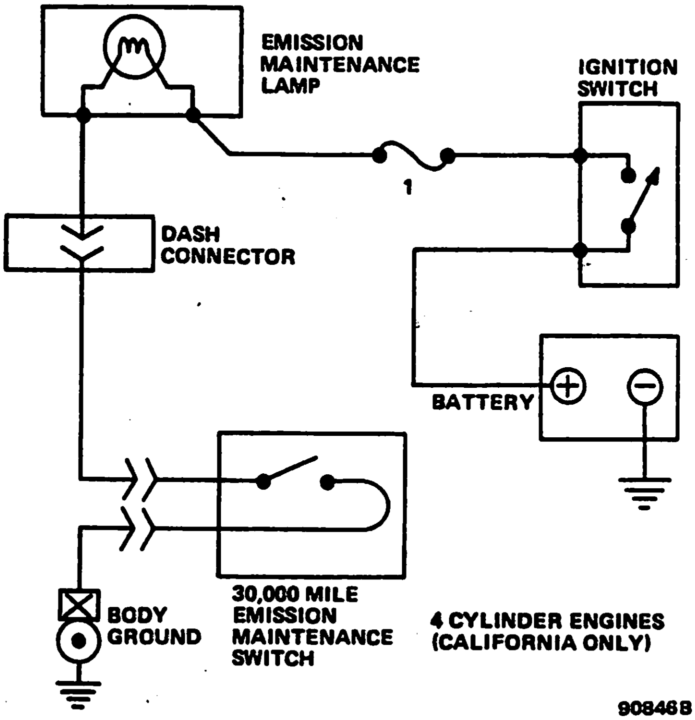

Emission Maintenance Indicator Lamp Circuit—CJ

SPECIFICATIONS—CHEROKEE-WAGONEER-TRUCK VEHICLES

Ammeter Calibrations

ACTUAL	INDICATED
-60 AMPS	-48 to -72 AMPS
0 AMPS	0± Pointer Width
+60 AMPS	+48 to +72 AMPS

80677

Fuel Gauge Sending Unit Resistance (Ohms)

E	1/2	F
61	23	10.3

80670

Fuel Gauge Resistance (Internal)

S to A	19 to 21 ohms

80673

Oil Pressure Gauge Sending Unit Resistance (Ohms)

PSI	0	10	60	80
OHMS	69-77	35-38	13-15	9.5-10.5

80678

Coolant Temperature Gauge Sending Unit Resistance (Ohms)

C	BEGINNING OF BAND	END OF BAND	H
73	36	13	9

80674

Coolant Temperature Gauge Resistance (Internal)

TEST POINTS	OHMS
S to Ground	68 to 72
S to I	19 to 21
S to A	19 to 21
I to A	ZERO
I to Ground	49 to 51
A to Ground	49 to 51

80671

SCHEMATICS—CHEROKEE-WAGONEER-TRUCK VEHICLES

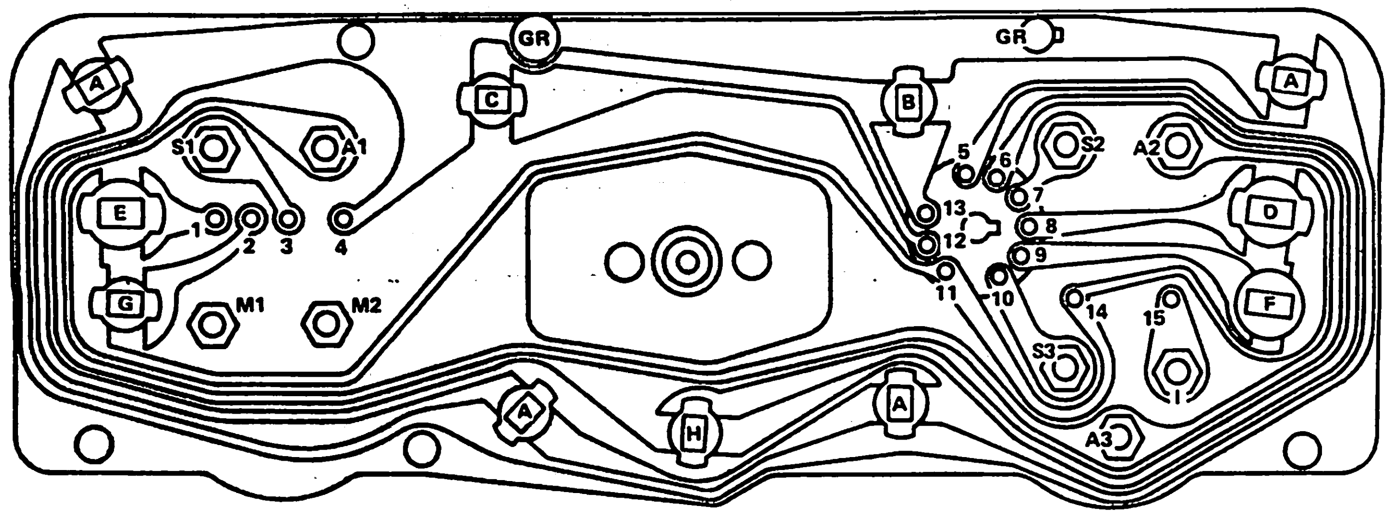

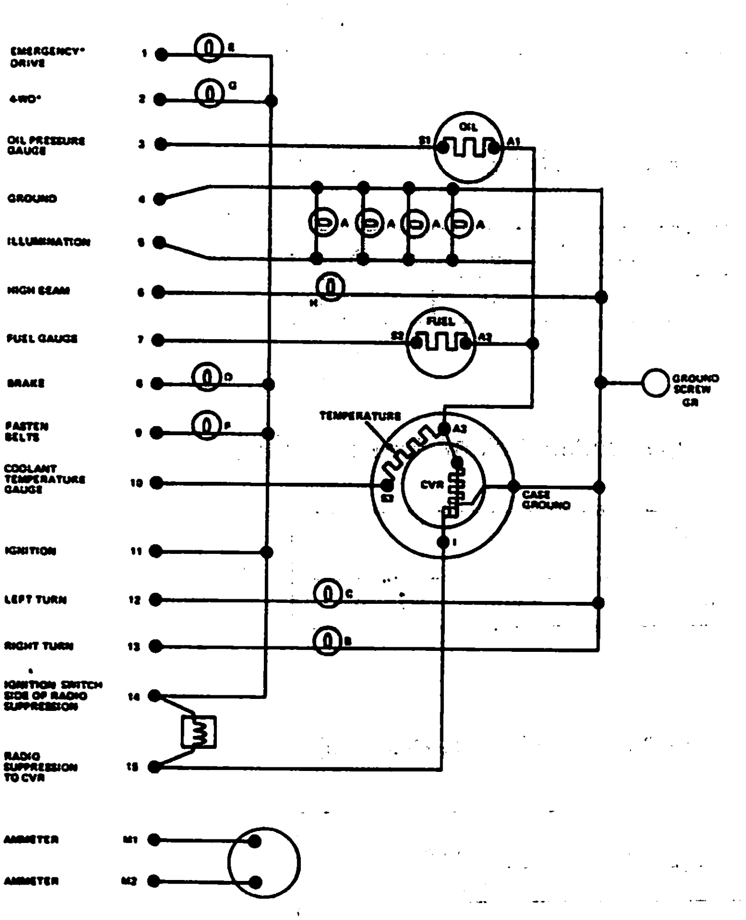

80127

PIN TERMINALS

1. EMERGENCY DRIVE *
2. 4-WHEEL DRIVE *
3. OIL PRESSURE GAUGE
4. GROUND
5. ILLUMINATION
6. HIGH BEAM
7. FUEL GAUGE
8. BRAKE
9. FASTEN BELTS
10. COOLANT TEMPERATURE GAUGE
11. IGNITION
12. LEFT TURN
13. RIGHT TURN
14. IGNITION SWITCH SIDE OF RADIO SUPPRESSION
15. RADIO SUPPRESSION TO CVR

LAMPS

A ILLUMINATION
B RIGHT TURN INDICATOR
C LEFT TURN INDICATOR
D BRAKE INDICATOR
E EMERGENCY DRIVE INDICATOR* (QUADRA-TRAC)
F FASTEN BELT INDICATOR
G 4-WD INDICATOR* (MODEL 208)
H HIGH BEAM INDICATOR

OTHER

A1 OIL GAUGE A TERMINAL
S1 OIL GAUGE S TERMINAL
A2 FUEL GAUGE A TERMINAL
S2 FUEL GAUGE S TERMINAL
A3 TEMPERATURE GAUGE A TERMINAL
S3 TEMPERATURE GAUGE S TERMINAL
I CVR I TERMINAL (CVR INSIDE TEMPERATURE GAUGE)
M1 AMMETER STUD
M2 AMMETER STUD
GR GROUND SCREW

*Light used determined by type of transfer case installed. Lamp is plugged into applicable socket.

80126

Instrument Printed Circuit Board Cluster and Schematic—Cherokee-Wagoneer-Truck

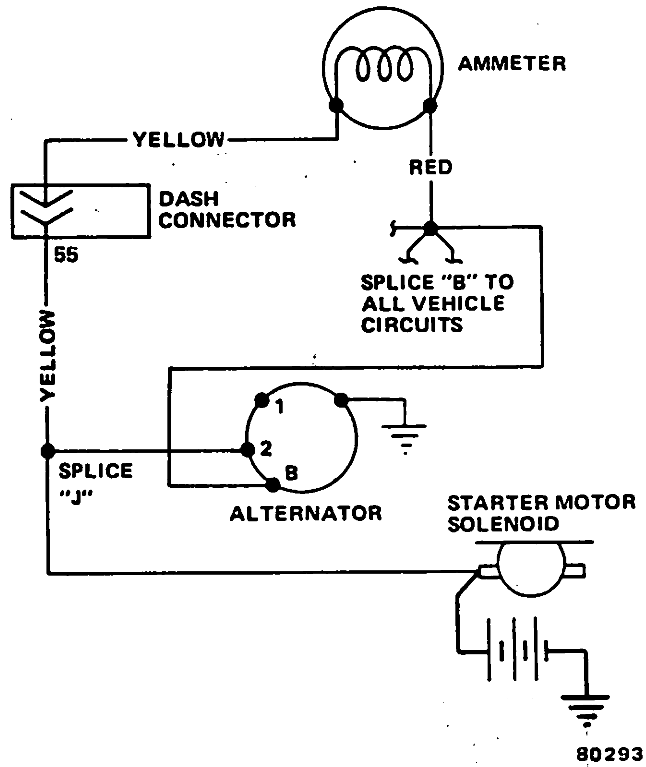

Ammeter Circuit—Cherokee-Wagoneer-Truck

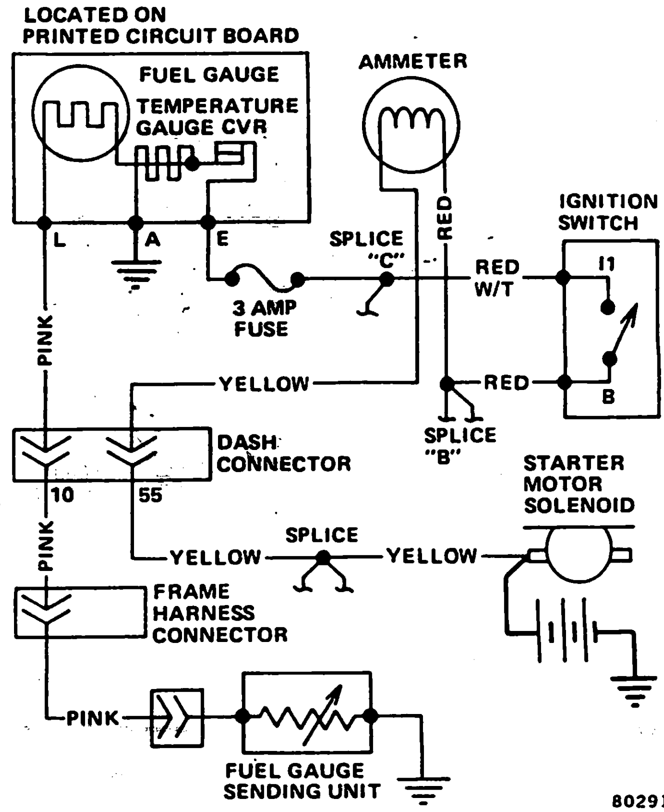

Fuel Gauge Circuit—
Cherokee-Wagoneer-Truck

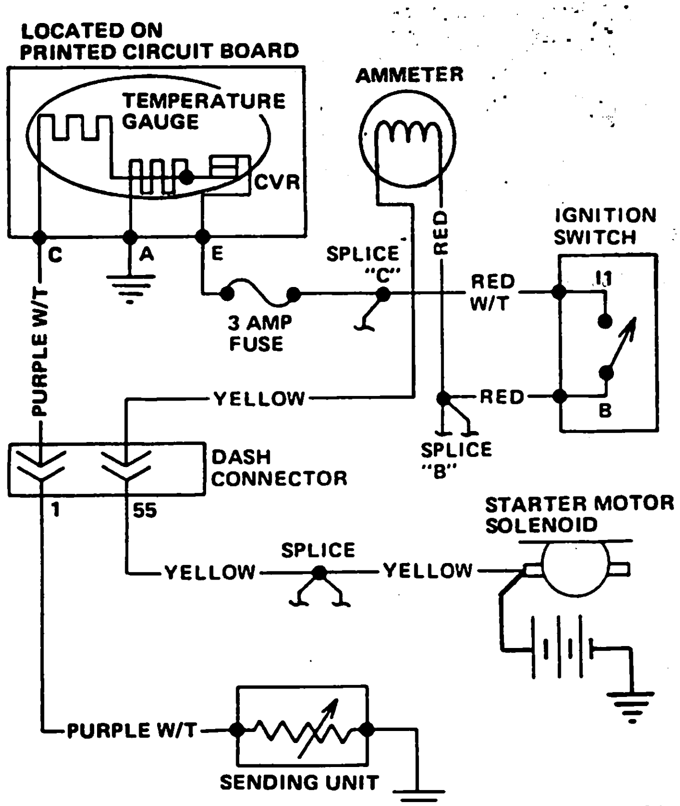

Coolant Temperature Gauge Circuit—
Cherokee-Wagoneer-Truck

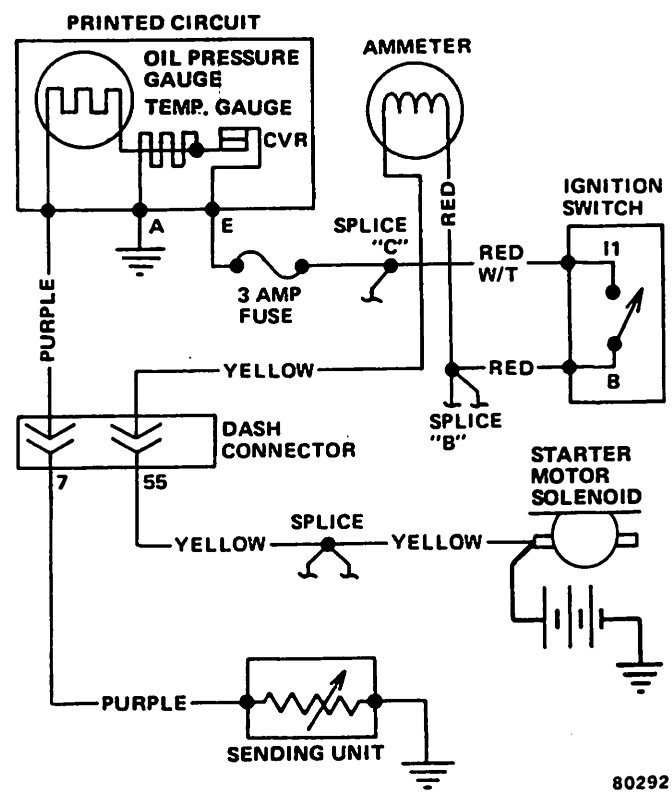

Oil Pressure Gauge Circuit—
Cherokee-Wagoneer-Truck

Tools

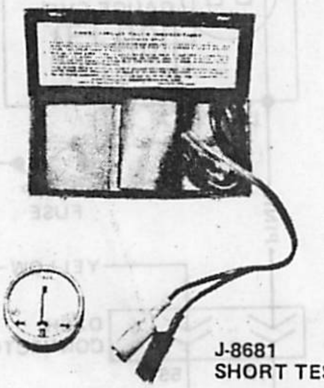

J-8681
SHORT TESTER

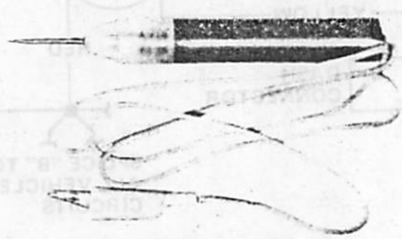

J-21008
CONTINUITY TEST LAMP

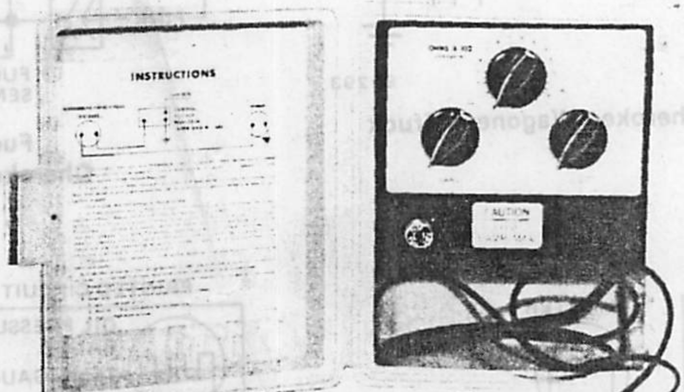

J-24538
UNIVERSAL
GAUGE TESTER